CITY OF AUSTIN

MAYOR
STEVE ADLER

FIRE CHIEF
RHODA MAE KERR

CITY MANAGER
MARC A. OTT

EMS CHIEF
ERNESTO RODRIGUEZ

CITY COUNCIL

MAYOR PRO-TEM/DIST. 9: KATHIE TOVO
DISTRICT 1: ORA HOUSTON
DISTRICT 2: DELIA GARZA
DISTRICT 3: SABINO "PIO" RENTERIA
DISTRICT 4: GREGORIO "GREG" CASAR
DISTRICT 5: ANN KITCHEN
DISTRICT 6: DON ZIMMERMAN
DISTRICT 7: LESLIE POOL
DISTRICT 8: ELLEN TROXCLAIR
DISTRICT 10: SHERI GALLO

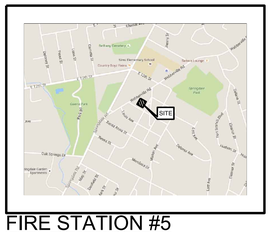

FIRE STATION #5
1201 Webberville Road

FIRE STATION #26
6702 Wentworth Drive

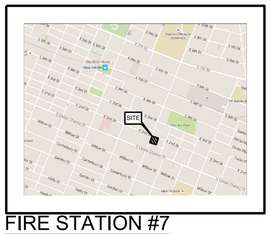

FIRE STATION #7
201 Chicon Street

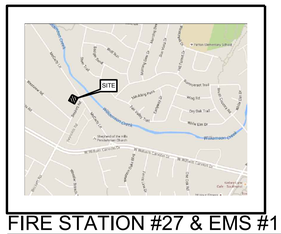

FIRE STATION #27 & EMS #11
5401 McCarty Lane

FIRE STATION #22
5309 East Riverside Drive

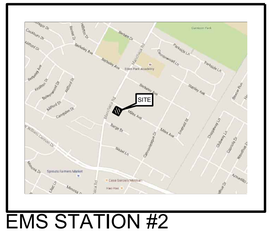

EMS STATION #2
6601 Manchaca Road

FIRE STATION #24
5810 Nuckols Crossing Road

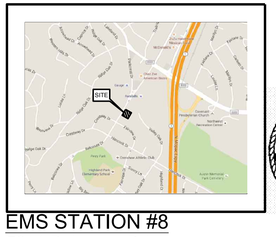

EMS STATION #8
5211 Balcones Drive

AUSTIN FIRE DEPARTMENT
PHASE V: WOMEN'S LOCKER ROOM ADDITIONS
(CIP: 6064.005) AND
AUSTIN - TRAVIS COUNTY EMS DEPT.
VEHICLE BAY EXPANSION & GEN. RENOVATION
(CIP: 7074.001)
SOLICITATION CLMB324
ISSUED SEPTEMBER 12, 2016

FIRE STATIONS

FS/EMS0 PROJECT COMMON SHEETS

FS/EMS0-A000	PROJECT COVER
FS/EMS0-A005	GENERAL CONSTRUCTION NOTES AND DETAILS
FS/EMS0-A010	ABBREVIATIONS & ADA DETAILS
FS/EMS0-A020	SCHEDULES
FS/EMS0-A030	WINDOW / DOOR TYPES, SCHD'S & DOOR DETAILS
FS/EMS0-A040	STANDARD DETAILS
FS/EMS0-A050	STANDARD DETAILS
FS/EMS0-A060	ROOF DETAILS
FS/EMS0-C010	CIVIL DETAILS
FS/EMS0-M000	MECHANICAL ABBR., SYM., LEGEND & GEN. NOTES
FS/EMS0-P000	PLUMBING ABBR., SYM., LEGEND & GEN. NOTES
FS/EMS0-E000	ELECTRICAL ABBR., SYM., LEGEND & GEN. NOTES
FS/EMS0-S1.0	STRUCTURAL GENERAL NOTES
FS/EMS0-S1.1	STRUCTURAL GENERAL NOTES
FS/EMS0-S1.2	STRUCTURAL GENERAL NOTES
FS/EMS0-S3.0	TYPICAL FOUNDATION DETAILS
FS/EMS0-S3.1	TYPICAL DEVELOPMENT SPLICES
FS/EMS0-S3.2	TYPICAL FOUNDATION DETAILS
FS/EMS0-S3.3	FOUNDATION DETAILS
FS/EMS0-S4.0	TYPICAL WOOD FRAMING DETAILS
FS/EMS0-S4.1	TYPICAL WOOD FRAMING DETAILS
FS/EMS0-S5.0	SCHEDULES

FIRE STATION #5

FS5-C050	SITE PLAN
FS5-A010	CODE SUMMARY AND KEY PLAN
FS5-A100	DEMOLITION PLAN
FS5-A110	FLOOR PLAN
FS5-A120	REFLECTED CEILING PLAN
FS5-A130	ROOF PLAN
FS5-A200	DEMOLITION ELEVATIONS
FS5-A210	BUILDING ELEVATIONS
FS5-A300	BUILDING AND WALL SECTIONS
FS5-A400	INTERIOR ELEVATIONS
FS5-M110	MECHANICAL PLAN
FS5-M210	MECHANICAL SCHD., & DETAILS
FS5-P110	PLUMBING PLAN
FS5-P210	PLUMBING SCHD., & DETAILS
FS5-E110	ELECTRICAL PLAN
FS5-E210	ELECTRICAL SCHD., & DETAILS
FS5-S2.0	FOUNDATION PLAN
FS5-S2.1	ROOF & CEILING FRAMING PLAN

FIRE STATION #7

FS7-C050	SITE PLAN
FS7-A010	CODE SUMMARY AND KEY PLAN
FS7-A100	DEMOLITION PLAN
FS7-A110	FLOOR PLAN
FS7-A120	REFLECTED CEILING PLAN
FS7-A130	ROOF PLAN
FS7-A210	BUILDING ELEVATIONS
FS7-A300	BUILDING SECTIONS
FS7-A400	INTERIOR ELEVATIONS
FS7-M110	MECHANICAL PLAN
FS7-M210	MECHANICAL SCHD., & DETAILS
FS7-P110	PLUMBING PLAN
FS7-P210	PLUMBING SCHD., & DETAILS
FS7-E110	ELECTRICAL PLAN
FS7-E210	ELECTRICAL SCHD., & DETAILS
FS7-S2.0	FOUNDATION PLAN
FS7-S2.1	ROOF & CEILING FRAMING PLAN

FIRE STATION #22

FS22-C050	SITE PLAN
FS22-A010	CODE SUMMARY AND KEY PLAN
FS22-A100	DEMOLITION PLAN
FS22-A110	FLOOR PLAN
FS22-A120	REFLECTED CEILING PLAN
FS22-A130	ROOF PLAN
FS22-A200	DEMOLITION ELEVATIONS
FS22-A210	BUILDING ELEVATIONS
FS22-A300	BUILDING SECTIONS
FS22-A400	INTERIOR ELEVATIONS
FS22-M110	MECHANICAL PLAN
FS22-M210	MECHANICAL SCHD., & DETAILS
FS22-P110	PLUMBING PLAN
FS22-P210	PLUMBING SCHD., & DETAILS
FS22-E110	ELECTRICAL PLAN
FS22-E210	ELECTRICAL SCHD., & DETAILS
FS22-S2.0	FOUNDATION PLAN
FS22-S2.1	ROOF & CEILING FRAMING PLAN

FIRE STATION #24

FS24-C050	SITE PLAN
FS24-A050	CODE SUMMARY AND KEY PLAN
FS24-A100	DEMOLITION PLAN
FS24-A110	FLOOR PLAN
FS24-A120	REFLECTED CEILING PLAN
FS24-A130	ROOF PLAN
FS24-A200	DEMOLITION ELEVATIONS
FS24-A210	BUILDING ELEVATIONS
FS24-A300	BUILDING SECTIONS
FS24-A400	INTERIOR ELEVATIONS
FS24-M110	MECHANICAL PLAN
FS24-M210	MECHANICAL SCHD., & DETAILS
FS24-P110	PLUMBING PLAN
FS24-P210	PLUMBING SCHD., & DETAILS
FS24-E110	ELECTRICAL PLAN
FS24-E210	ELECTRICAL SCHD., & DETAILS
FS24-S2.0	FOUNDATION PLAN
FS24-S2.1	ROOF & CEILING FRAMING PLAN

FIRE STATION #26

FS26-C050	SITE PLAN
FS26-A010	CODE SUMMARY AND KEY PLAN
FS26-A100	DEMOLITION PLAN
FS26-A110	FLOOR PLAN
FS26-A120	REFLECTED CEILING PLAN
FS26-A130	ROOF PLAN
FS26-A200	DEMOLITION ELEVATIONS
FS26-A210	BUILDING ELEVATIONS
FS26-A300	BUILDING SECTIONS
FS26-A400	INTERIOR ELEVATIONS
FS26-M110	MECHANICAL PLANS
FS26-M210	MECHANICAL SCHD., & DETAILS
FS26-P110	PLUMBING PLANS
FS26-P210	PLUMBING SCHD., & DETAILS
FS26-E110	ELECTRICAL PLANS
FS26-E210	ELECTRICAL SCHD., & DETAILS
FS26-S2.0	FOUNDATION PLAN
FS26-S2.1	ROOF & CEILING FRAMING PLAN

EMS STATIONS

EMS STATION #2

SHEET #	SHEET TITLE
EMS2-C050	SITE PLAN
EMS2-A/C125	SPOT ELEVATION SLAB PLAN
EMS2-A010	CODE SUMMARY AND KEY PLAN
EMS2-A100	DEMOLITION PLAN
EMS2-A110	FLOOR PLAN
EMS2-A120	ENLARGED FLOOR & REFLECTED CEILING PLAN
EMS2-A130	ROOF PLAN
EMS2-A210	BUILDING ELEVATIONS
EMS2-A300	BUILDING SECTIONS
EMS2-A400	INTERIOR ELEVATIONS
EMS2-M110	MECHANICAL PLAN
EMS2-M210	MECHANICAL SCHD., & DETAILS
EMS2-P110	PLUMBING PLAN
EMS2-P210	PLUMBING SCHD., & DETAILS
EMS2-E110	ELECTRICAL PLAN (1 OF 2)
EMS2-E120	ELECTRICAL PLAN (2 OF 2)
EMS2-E210	ELECTRICAL SCHD., & DETAILS
EMS2-S2.0	FOUNDATION PLAN
EMS2-S2.1	ROOF & CEILING FRAMING PLAN

EMS STATION #8

EMS8-C050	SITE PLAN
EMS8-A/C125	SPOT ELEVATION SLAB PLAN
EMS8-A010	CODE SUMMARY AND KEY PLAN
EMS8-A100	DEMOLITION PLAN
EMS8-A110	FLOOR PLAN
EMS8-A120	ENLARGED FLOOR & RC PLANS
EMS8-A130	ROOF PLAN
EMS8-A210	BUILDING ELEVATIONS
EMS8-A300	BUILDING SECTIONS
EMS8-A400	INTERIOR ELEVATIONS
EMS8-M110	MECHANICAL PLAN
EMS8-M210	MECHANICAL SCHD., & DETAILS
EMS8-P110	PLUMBING PLAN
EMS8-P210	PLUMBING SCHD., & DETAILS
EMS8-E100	ELECTRICAL DEMOLITION PLAN
EMS8-E110	ELECTRICAL PLAN
EMS8-E120	LIGHTING PLAN
EMS8-E210	ELECTRICAL SCHD., & DETAILS
EMS8-S2.0	FOUNDATION PLAN
EMS8-S2.1	ROOF & CEILING FRAMING PLAN

FS & EMS STATION (at same site)

FIRE STATION #27 / EMS STATION #11

FS27 EMS11-C050	SITE PLAN
FS27 EMS11-A/C125	EMS 11 SPOT ELEVATION SLAB PLAN
FS27 EMS11-A010	CODE SUMMARY AND KEY PLAN
FS27 EMS11-A100	FS27 & EMS11 DEMOLITION PLANS
FS27 EMS11-A110	FS27 FLOOR PLAN
FS27 EMS11-A120	EMS11 FLOOR PLAN
FS27 EMS11-A130	EMS11 2ND & ENLARGED FLOOR PLANS
FS27 EMS11-A140	FS27 REFLECTED CEILING PLAN
FS27 EMS11-A150	EMS11 REFLECTED CEILING PLAN
FS27 EMS11-A160	ROOF PLANS & EMS 11 DEMO ROOF PLAN
FS27 EMS11-A200	FS27 & EMS11 DEMOLITION ELEVATIONS
FS27 EMS11-A210	FS27 BUILDING ELEVATION
FS27 EMS11-A220	EMS11 BUILDING ELEVATIONS
FS27 EMS11-A300	FS27 BUILDING SECTIONS
FS27 EMS11-A310	EMS11 BUILDING SECTIONS
FS27 EMS11-A400	FS27 INTERIOR ELEVATIONS
FS27 EMS11-A410	EMS11 INTERIOR ELEVATIONS
FS27-M110	MECHANICAL PLANS
FS27-M210	MECHANICAL SCHD., & DETAILS
FS27-P110	PLUMBING PLANS
FS27-P210	PLUMBING SCHD., & DETAILS
FS27-E110	ELECTRICAL PLANS
FS27-E210	ELECTRICAL SCHD., & DETAILS
FS27-S2.0	FOUNDATION PLAN
FS27-S2.1	ROOF & CEILING FRAMING PLAN
EMS11-M110	MECHANICAL PLAN
EMS11-M210	MECHANICAL SCHD., & DETAILS
EMS11-P110	PLUMBING PLAN
EMS11-P210	PLUMBING SCHD., & DETAILS
EMS11-E010	ELECTRICAL DEMO PLAN
EMS11-E110	ELECTRICAL PLAN
EMS11-E120	LIGHTING PLAN
EMS11-E210	ELECTRICAL SCHD., & DETAILS
EMS11-S2.0	FOUNDATION PLAN
EMS11-S2.1	ROOF & CEILING FRAMING PLAN

REGISTERED ARCHITECT W. OWEN HARROD 18348 STATE OF TEXAS 30 AUG 2016

mwm DesignGroup

Architect:
Owen Harrod, Ph.D, AIA
MWM DesignGroup, Inc.
305 East Huntland Dr. Ste. 200
Austin, TX 78752
P: (512)453-0767
F: (512)453-1734
E: owenh@mwmdesigngroup.com

Jose I. Guerra, Inc.
Consulting Engineers
Civil • Structural • Mechanical • Electrical

Structural Engineer:
John C. Rojas, P.E.
Guerra Engineering, Inc.
310 South St. Mary's, Ste. 825
San Antonio, TX 78205
P: (210)802-0922
F: (210)8020923
E: jrojas@guerra.com

ENCOTECH
We shape the world you live in.

MEP Engineer:
Lynn Brown, P.E.
Encotech Engineering Consultants, Inc.
8500 Bluffstone Cove
Austin, TX 78759
P: (512)338-1101
F: (512)338-1160

FS/EMS0-A000 MWM FS PROJECT No. 02367D
MWM EMS PROJECT No. 02381

GENERAL NOTES.-

1. THE INFORMATION SHOWN ON THESE DRAWINGS INDICATING TYPE AND LOCATION OF UNDERGROUND, SURFACE, AND AERIAL UTILITIES IS NOT GUARANTEED TO BE EXACT OR COMPLETE. CONTRACTOR IS RESPONSIBLE FOR DETERMINING THE EXACT TYPE AND LOCATION OF ALL UTILITIES AFFECTED BY CONSTRUCTION FOR THIS PROJECT. CONTRACTOR SHALL a) IMMEDIATELY ARRANGE FOR REPAIR AND RESTORATION OF CONTRACTOR-DAMAGED UTILITIES, AND b) PAY FOR SAME AT NO EXTRA COST TO THE OWNER.

2. CONTRACTOR SHALL BE RESPONSIBLE FOR PROTECTING ALL EXISTING CONDITIONS NOT INDICATED TO BE DEMOLISHED, AND FOR REPAIRING ANY DAMAGE CAUSED BY CONSTRUCTION ACTIVITIES TO SUCH CONDITIONS AT NO EXTRA COST TO OWNER.

3. THE BIDDER (CONTRACTOR AFTER AWARD) SHALL IMMEDIATELY NOTIFY THE ENGINEER OF ANY UNREPORTED OBSTACLES OR DISCREPANCIES THAT MAY IMPEDE OR PREVENT THE PROPER CONSTRUCTION OF THIS PROJECT.

4. ALL WORK AND MATERIAL MUST MEET THE APPLICABLE CITY OF AUSTIN STANDARD SPECIFICATIONS AND CITY OF AUSTIN STANDARDS, LATEST REVISIONS.

5. CONTRACTOR SHALL MAINTAIN THE JOB SITE IN A SAFE, NEAT AND WORKMANLIKE MANNER AT ALL TIMES. JOB SITE SAFETY SHALL NOT BE COMPROMISED.

6. BEFORE DISCONNECTING ANY WATER LINE OR GAS LINE, CONTRACTOR MUST PROVIDE TWENTY-FOUR (24) HOUR NOTICE TO THE OWNER EXCEPT IN THE CASE OF A BONA FIDE EMERGENCY.

7. CONTRACTOR MUST RESTORE ALL PAVEMENT MARKINGS DISTURBED DURING CONSTRUCTION. CONTRACTOR SHALL OBSERVE ALL APPLICABLE MATERIALS, SPECIFICATIONS, AND INSTALLATION REQUIREMENTS INCLUDING SPECIAL ATTENTION TO MAINTAINING PROPER DIMENSIONS AND ALIGNMENT.

8. ALL HOLES, TRENCHES, AND OTHER HAZARDOUS AREAS SHALL BE ADEQUATELY PROTECTED BY BARRICADES, FENCING, LIGHTS, AND/OR OTHER PROTECTIVE DEVICES AT ALL TIMES.

9. REMOVAL OF EXCAVATED MATERIALS AND DAILY CLEANUP OPERATIONS SHALL BE PERFORMED TO THE SPECIFICATIONS AND TO THE SATISFACTION OF THE OWNER AND ENGINEER.

10. THE CONTRACTOR SHALL BE RESPONSIBLE FOR INSTALLATION OF TEMPORARY EROSION CONTROL, REVEGETATION AND TREE PROTECTION.

11. DEMOLISHED DEBRIS COLLECTION AND DISPOSAL SHALL COMPLY WITH STANDARD CONSTRUCTION SPECIFICATION SECTION 01505, CONSTRUCTION WASTE MANAGEMENT. PERMISSIBLE STAGING AND SPOILS AREA TO BE LOCATED ON SITE, AFTER COORDINATION WITH OWNER, FOR SPECIFIC LOCATION TO MINIMIZE DISRUPTION OF DRIVEWAY AND BUILDING OPERATIONS, TYP.

FLOOR PLAN NOTES.-

1. THIS DRAWING WAS BASED IN PART ON RECORD INFORMATION THAT MAY NOT HAVE BEEN COMPLETELY ACCURRATE, PARTICULARLY WITH RESPECT TO HIDDEN CONDITIONS. UPON COMMENCEMENT OF DEMOLITION ACTIVITIES FIELD VERIFY EXISTING CONDITIONS AND BRING ANY DISCREPANCIES TO THE ATTENTION OF THE PROJECT ARCHITECT. MINOR REVISIONS TO THE PROPOSED BUILDING ADDITION, INCLUDING SPECIFICALLY THE DETAILING OF THE PROPOSED ROOF AND CEILING FRAMING, WILL BE ALLOWED WHERE NECESSITATED BY EXISTING CONSTRUCTION AND APPROVED BY THE ARCHITECT. WHERE SUCH DETAILS ARE AMENDED, PRIORITY SHOULD BE GIVEN TO MAINTAINING ADEQUATE CEILING HEIGHTS IN THE NEW ADDITIONS.

2. ALL SIDEWALKS ARE TO BE ACCESSIBLE, 36 INCHES MIN. WIDTH, SHALL NOT EXCEED RUNNING SLOPE OF 5%. ALL EXCEEDING SLOPES SHALL BE CONSIDERED A RAMP WITH A SLOPE OF 8.33% MAX. AND RISE OF 30 INCHES MAX. ALL CROSS SLOPES SHALL NOT EXCEED 2%

3. ALL NEW, WOOD OR LIGHT GUAGE STEEL, FRAMED WALLS SHALL BE INSULATED WITH 'ROXUL' RIS BATT INSULATION, OR APPROVED EQUAL

4. WALL FINISHES - TILE:- WALL FINISH SHALL BE CERAMIC TILE OVER CEMETITIOUS HALF INCH BACKER BD., LAYERED WITH SCHLUTER WATERPROOFING MEMBRANE SYSTEMS. PAINT:- WALL FINISH SHALL BE MOISTURE AND MOLD RESISTANT GYPSUM BOARD, TAPED, FLOATED, PRIMED AND PAINTED. SEE A400'S FOR DETAILS

5. REFER TO SHEET A010'S FOR A.D.A. NOTES, SYMBOLS, DIMENSIONS, ABBREVIATIONS, FINISH, WASHROOM, KITCHEN SCHEDULES

6. PATCH AND REPAIR ALL VOIDS OR CAVITY'S FROM ITEMS REMOVED OR DEMOLISH. MATCH EXISTING FINISHES OR AS SPECIFIED IN PROJECT DRAWINGS

7. ALL DIMENSIONS TO FINISHED WALL SURFACE, EXCEPT WHERE OTHERWISE NOTED

8. ALL EMERGENCY ESCAPE RESCUE (EGRESS) OPENINGS SHALL COMPLY WITH IRC 2012 CODE, 44" MAX. SILL HEIGHT, 5.7 S.F. MIN. OPENING, 24" MIN. OPENING HEIGHT, 20" MIN. OPENING WIDTH, TYP.

RCP NOTES.-

1. THIS DRAWING WAS BASED IN PART ON RECORD INFORMATION THAT MAY NOT HAVE BEEN COMPLETELY ACCURATE, PARTICULARLY WITH RESPECT TO HIDDEN CONDITIONS. UPON COMMENCEMENT OF DEMOLITION ACTIVITIES FIELD VERIFY EXISTING CONDITIONS AND BRING ANY DISCREPANCIES TO THE ATTENTION OF THE PROJECT ARCHITECT. MINOR REVISIONS TO THE PROPOSED BUILDING ADDITION, INCLUDING SPECIFICALLY THE DETAILING OF THE PROPOSED ROOF AND CEILING FRAMING, WILL BE ALLOWED WHERE NECESSITATED BY EXISTING CONSTRUCTION AND APPROVED BY THE ARCHITECT. WHERE SUCH DETAILS ARE AMENDED, PRIORITY SHOULD BE GIVEN TO MAINTAINING ADEQUATE CEILING HEIGHTS IN THE NEW ADDITIONS.

2. ALL DIMENSIONS ARE APPROXIMATE AND THE LOCATION OF FIXTURES ARE TO BE ADJUSTED TO COORDINATE WITH THE FRAMING PLAN.

3. ARCHITECT ILLUSTRATES PARTIAL LIST OF LIGHTING FIXTURE MODEL AND LOCATION (SEE FS/EMS0-A010), REFER TO MEP FOR FIXTURES NOT SHOWN
4. COORDINATE LOCATION OF CLG. ACCESS PANELS WITH ARCHITECT AND MEP REGARDING WATER SHUT-OFF VALVE LOCATIONS AT ALL STATIONS, TYP.

SECTION NOTES.-

1. ALL NEW, WOOD OR LIGHT GUAGE STEEL, FRAMED WALLS AND CEILINGS, FOR CONDITIONED SPACES, SHALL BE INSULATED WITH NON-FIBERGLASS RIS BATT INSULATION, OR APPROVED EQUAL, TYP.

2. WALL FINISHES - TILE:- WALL FINISH SHALL BE CERAMIC TILE OVER CEMETITIOUS HALF INCH BACKER BD., LAYERED WITH WATERPROOFING MEMBRANE SYSTEM. PAINT:- WALL FINISH SHALL BE MOISTURE AND MOLD RESISTANCE GYPSUM BOARD, TAPED, FLOATED, PRIMED AND PAINTED. SEE A400'S FOR INTERIOR ELEVATION DETAILS

3. REFER TO SHEET A010'S FOR A.D.A. NOTES, SYMBOLS, DIMENSIONS, ABBREVIATIONS, FINISH, WASHROOM, KITCHEN SCHEDULES

4. PATCH AND REPAIR ALL VOIDS OR CAVITY'S FROM ITEMS REMOVED OR DEMOLISH. MATCH EXISTING FINISHES OR AS SPECIFIED IN PROJECT DRAWINGS

5. ALL DIMENSIONS TO FINISHED WALL SURFACE, EXCEPT WHERE OTHERWISE NOTED

6. REFER TO STRUCTURAL PLANS FOR FOUNDATION, WALL AND ROOF ASSEMBLY REQUIREMENTS, TYP.

7. REFER TO MEP PLANS TO COORDINATE LOCATION OF MECHANICAL EQUIPMENT, ELECTRICAL AND PLUMBING IN WALL AND CEILING CAVITIES, TYP.

BID DOCUMENTS

REGISTERED ARCHITECT
DAVID OWEN HARTSOE
16346
STATE OF TEXAS
8-31-2016

mwm Design Group
305 East Huntland Drive
Suite 200
Austin, Texas 78752
p: 512.453.0767
f: 512.453.1734

TBAE FIRM REGISTRATION NO.: 1452
TBPE FIRM REGISTRATION NO.: F-1416
TBPLS FIRM REGISTRATION NO.: 10065600

NO.	DATE	DESCRIPTION	BY

0 1"
The bar above measures one inch on the original drawing. Adjust scales accordingly.

GENERAL CONSTRUCTION NOTES & DETAILS

CITY OF AUSTIN, AFD WOMEN'S LOCKER RM. ADDN., PHASE V
AND EMS VEHICLE BAY EXPANSIONS & GEN. RENOVATIONS
AUSTIN, TEXAS

PLOTTED: 8/31/2016
JOB NO: 023-79D

FS/EMS0
A005

File: Y:\023-79D_WomensLockerRooms\CAD\Fire & EMS Station 0\sheets\FS EMS0-A005 NOTES.dwg 24x36

ABBREVIATIONS

ABBR.	MATERIAL	ABBR.	MATERIAL
ACT	ACOUSTICAL CEILING TILE	O/U5D	OPEN TO UNDERSIDE OF DECK (NO CEILING)
AL, ALUM	ALUMINUM	OH	OVERHEAD OBJECT/LINE
ANOD	ANNODIZED	PLWD	PLYWOOD
CA	COLOR ANODIZED FINISH	PT	PAINTED
CL	CLOSET	(R)	REFURBISHED
CLA	CLEAR ANODIZED FINISH	SC	CLEAR WOOD SEALER
CLG	CEILING	SC	CONCRETE WITH PENETRATING SEALER
CONC	CONCRETE	SCW	SOLID CORE WOOD
(E)	EXISTING	STL	STEEL
EXT	EXTERIOR	STN	STAINED
GA	GUAGE	(S)	SIMILAR
GC	GENERAL CONTRACTOR	(T)	TEMPERED GLASS
GL, GLZ	GLAZING (WINDOW, GLASS)	TP	THERMOSET POLYESTER FINISH AAMA 6Ø.8
GYP BD	GYPSUM BOARD	T & G	TOUNGE AND GROVE WOOD PLANKS
HM	HOLLOW METAL	TRAN	TRANSOM WINDOW
INS	INSULATED (REFER TO GLAZING SPECIFICATIONS)	VYL	VINYL
INT	INTERIOR	VCT	VINYL COMPOSITION TILE
MFG	MANUFACTURER	WP/GYP	WATER PROOF/GYPSUM BOARD (WHERE APPLICABLE)
MS	MOP SINK	WD	WOOD
MTL	METAL	--	NO APPLIED FINISH / NOT APPLICABLE
(N)	NEW		

1 / A010 ABBREVIATIONS
SCALE: NTS

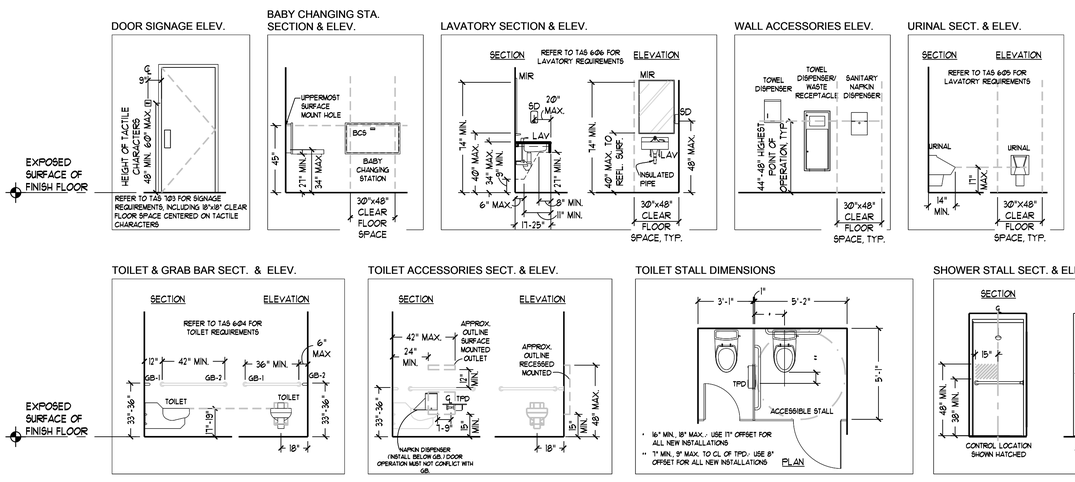

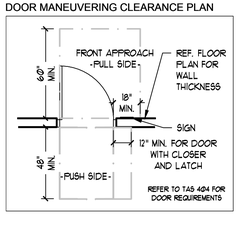

NOTES:
1. THESE DRAWINGS ARE PROVIDED FOR INFORMATION ONLY, REFER TO THE 2010 ADA STANDARDS FOR ACCESSIBLE DESIGN AND 2012 TEXAS TEXAS ACCESSIBILITY STANDARDS (T.A.S.) FOR SPECIFIC REQUIREMENTS
2. WHERE STANDARDS INCLUDE A PERMISSIBLE RANGE OF HEIGHTS OR DISTANCES, CONTRACTOR SHALL EMPLOY A VALID DIMENSION IN COORDINATION WITH OTHER ELEMENTS OF CONSTRUCTION TO MINIMIZE THE NUMBER OF CUTS OR OTHER FILED MODIFICATIONS REQUIRED IN FINISH MATERIALS.
3. DISCRETIONARY DIMENSIONS SHALL BE EMPLOYED CONSISTENTLY IN ALL STATIONS INCLUDED IN THIS PROJECT.
4. CLEAR FLOOR SPACE FOR ADJACENT UNITS MAY OVERLAP

2 / A010 PARTIAL LIST OF ADA COMPLIANT MEASUREMENTS
SCALE: 1/4" = 1'-0"

BID DOCUMENTS

REGISTERED ARCHITECT KIM OWEN HARFORD 18346 STATE OF TEXAS
30 Aug 2016

mwm Design Group
305 East Huntland Drive
Suite 200
Austin, Texas 78752
p: 512.453.0767
f: 512.453.1734
TBAE FIRM REGISTRATION NO.: 1452
TBPE FIRM REGISTRATION NO.: F-1416
TBPLS FIRM REGISTRATION NO.: 10065600

NO.	DATE	DESCRIPTION	BY

0 1"
The bar above measures one inch on the original drawing. Adjust scales accordingly.

ABBREVIATIONS AND ADA DETAILS

CITY OF AUSTIN, AFD WOMEN'S LOCKER RM. ADDN., PHASE V
AND EMS VEHICLE BAY EXPANSIONS & GEN. RENOVATIONS
AUSTIN, TEXAS

PLOTTED: 8/31/2016
JOB NO: 023-79D

FS EMS0
A010

File: X:\023-79D_WomensLockerRooms\CAD\Fire & EMS Station O\sheets\FS EMS0-A010 ABBR & SYMB.dwg 24x36

ACCESSORY SCHEDULE

ID	DESCRIPTION	REPRESENTATIVE SPECIFICATION
PTD	ROLLED PAPER TOWEL DISPENSER PROVIDED BY OWNER	LOCATE ACCESSORY AS NOTED ON FIRE STATION INTERIOR ELEVATION SHEETS, TYP.
HD	HAND DRYER	SURFACE MOUNTED HAND DRYER, 11-13/16"W X 26-3/8"H X 8-5/8"D.: MITSUBISHI ELECTRIC HAND DRYER MODEL JT-SB116JH-G-NA. JET STREAMING AIR, AT 215-235 M.P.H., REGULAR WATER TANK DRAINING AND AIR FILTER REPLACEMENT, REQUIRED. DRIES HANDS IN 9-15 SECONDS, OFFERS CLEAN SANITARY ENVIRONMENT, AND LOW NOISE OPERATION, 58-61 dB. ADA/TAS-COMPLIANT DESIGN (ACCESSIBLE UTILIZATION, DOES NOT CONSTITUTE A PROTRUDING OBJECT).
MIR-1	FRAMED MIRROR WITH SHELF	MIRROR, ONE-PIECE, 24" W X 36" H, 1/2" X 1/2" X 3/8", CHANNEL-FRAME. MITERED CORNERS. FRAME SCREW PERMITS EASY REPLACEMENT OF GLASS. NO. 1 QUALITY, 1/4" (6MM) GLASS MIRROR‡ WARRANTED AGAINST SILVER SPOILAGE FOR 15 YEARS. GALVANIZED STEEL BACK. SECURED TO CONCEALED WALL HANGER WITH THEFT-RESISTANT MOUNTING. TYPE 304 SATIN-FINISH STAINLESS STEEL SHELF. SHELF PROJECTS 5" (127MM) WITH 3/8" (10MM) RETURN ON FRONT AND SIDES‡ FRONT RETURN EDGE HEMMED FOR RIGIDITY AND SAFETY. BOBRICK MODEL NO. B-166 2436
MIR-2	FRAMED FULL LENGTH MIRROR	FULL LENGTH MIRROR, ONE-PIECE, 24" W X 72" H, ROLL-FORMED 3/4" X 3/4" ANGLE-FRAME. CORNERS HELIARC WELDED, GROUND AND POLISHED SMOOTH. BEVELED FRAME EDGE AT MIRROR FOR IMPROVED APPEARANCE. NO. 1 QUALITY, 1/4" (6MM) GLASS. MIRROR WARRANTED AGAINST SILVER SPOILAGE FOR 15 YEARS. GALVANIZED STEEL BACK. SECURED TO CONCEALED WALL HANGER WITH THEFT-RESISTANT MOUNTING. BOBRICK MODEL NO. B-290 2472
MIR-3	FRAMED MIRROR	MIRROR, ONE-PIECE, 36"X 36" H. 1/2" X 1/2" X 1/2" 20 GAUGE STAINLESS STEEL CHANNEL IS A ONE PIECE ROLL FORMED MEMBER THAT ENCASES MIRROR AND BACKING REVEALING A TIGHT MITERED CORNER. MIRROR IS INSTALLED ON TWO WALL BRACKETS AND HELD SECURE BY THEFT RESISTANT SCREW. HAND DRYERS AND MORE DOT COM, AMERICAN SPECIALTIES MODEL NO. HDM-ASI-M0620
MIR-4	FRAMED MIRROR	MIRROR, ONE-PIECE, 36" H X 48" W, ONE-PIECE, 1/2" X 1/2" X 3/8" CHANNEL-FRAME. MITERED CORNERS. FRAME SCREW PERMITS EASY REPLACEMENT OF GLASS. NO. 1 QUALITY, 1/4" (6MM) GLASS MIRROR‡ WARRANTED AGAINST SILVER SPOILAGE FOR 15 YEARS. GALVANIZED STEEL BACK. SECURED TO CONCEALED WALL HANGER WITH THEFT-RESISTANT MOUNTING. BOBRICK MODEL NO. B-165 4836
SD	SOAP DISPENSER	SURFACE-MOUNTED SOAP DISPENSER SHALL BE TYPE-304 STAINLESS STEEL WITH SATIN-FINISH. CORROSION-RESISTANT VALVE SHALL DISPENSE COMMERCIALLY MARKETED ALL-PURPOSE HAND SOAPS. TO PREVENT CORROSION OF THE TANK, USE ONLY CHLORIDE-FREE PH-NEUTRAL LIQUID SOAPS. VALVE SHALL BE OPERABLE WITH ONE HAND AND WITH LESS THAN 5 POUNDS OF FORCE (22.2 N) TO COMPLY WITH BARRIER-FREE ACCESSIBILITY GUIDELINES (INCLUDING ADAAG IN THE U.S.A.). CONTAINER SHALL BE EQUIPPED WITH A CLEAR ACRYLIC REFILL-INDICATOR WINDOW WITH A LOCKED, HINGED STAINLESS STEEL LID FOR TOP FILLING, AND SHALL HAVE A CAPACITY OF 40-FL OZ (1.2-L). UNIT SHALL HAVE CONCEALED, VANDAL-RESISTANT MOUNTING. BOBRICK MODEL B-2111 OR APPROVED EQUAL
TPD	TOILET PAPER DISPENSER	PARTITION-MOUNTED COMBINATION UNIT SHALL INCLUDE TOILET TISSUE DISPENSER, AND NAPKIN DISPOSAL, AND BE FABRICATED OF, HEAVY GAUGE STAINLESS STEEL WITH SEAMLESS EXPOSED SURFACES IN SATIN FINISH. DOOR AND BACK PANEL SHALL BE 18 GAUGE, DOOR SHALL HAVE PIANO HINGE AND TUMBLER LOCK. OVERALL DIMENSIONS: 17 1/8"W X 20"H X 41/2"D. BRADLEY MODEL 5941 OR APPROVED EQUAL.
TD	TOWEL DISPENSER	14"W X 56"H X 3½"D, RECESSED COMBINATION TOWEL DISPENSER AND WASTE RECEPTACLE SHALL BE FABRICATED OF 22 GAUGE STAINLESS STEEL WITH EXPOSED SURFACES IN SATIN FINISH. DOORS OF NONFLEXING CONSTRUCTION, EQUIPPED WITH HEAVY DUTY PIANO HINGES AND LOCKS. TOWEL DISPENSER CAPACITY 1000 SINGLE-FOLD, 700 MULTI-FOLD OR 400 C-FOLD TOWELS. REMOVABLE 4.9 GAL. LEAKPROOF MOLDED PLASTIC INSERT FOR WASTE RECEPTACLE. BRADLEY MODEL 2252 (SEMI-RECESSED)
TPR	TOILET PAPER SPINDLE	SURFACE-MOUNTED TOILET TISSUE DISPENSER AND UTILITY SHELF SHALL BE TYPE-304 STAINLESS STEEL WITH SATIN FINISH. SHELF SHALL HAVE 1/2" (13MM) RETURN EDGES WITH FRONT EDGE HEMMED FOR SAFE HANDLING. •SPINDLES SHALL BE CHROME-PLATED PLASTIC WITH HEAVY-DUTY INTERNAL SPRING AND SHALL HOLD STANDARD-CORE TOILET TISSUE ROLLS UP TO 5-1/2". BOBRICK MODEL B-2840 OR APPROVED EQUAL.
SN	SANITARY NAPKIN DISPOSAL	SURFACE MOUNTED NAPKIN DISPOSAL WITH SHELF SHALL BE FABRICATED OF 22 GAUGE STAINLESS STEEL WITH EXPOSED SURFACES IN SATIN FINISH. TOP ATTACHED BY PIANO HINGE. BOTTOM HINGED FOR EASY SERVICING. OVERALL DIMENSIONS: 16"W X 11-1/4"H X 4-1/8", BRADLEY MODEL 4791-15 OR APPROVED EQUAL.
WR	SURFACE-MOUNTED WASTE RECEPTACLE	SATIN-FINISH STAINLESS STEEL. CAPACITY: 12.75 GALLON. TOP EDGES ARE HEMMED AND BOTTOM OF WASTE RECEPTACLE HAS RECESSED FINGER GRIP FOR SAFE HANDLING. UNIT 15 1/8" W, 23" H, 8 1/2" D
HK	SINGLE ROBE HOOK	SURFACE-MOUNTED ACCESSORY SHALL BE FABRICATED OF HEAVY GAUGE NO. 4 SATIN FINISH STAINLESS STEEL, MOUNTED TO WALL SURFACE OR ON PAINTED WOOD 1X, WHERE NOTED. BRADLEY MODEL 9114-US OR APPROVED EQUAL.
HCH	HAT AND COAT HOOK	SURFACE-MOUNTED HAT AND COAT HOOK SHALL BE TYPE-304 STAINLESS STEEL WITH SATIN FINISH, FLANGE AND SUPPORT ARM SHALL BE 22 GAUGE (0.8MM) AND EQUIPPED WITH A CONCEALED, 16 GAUGE (1.6MM) MOUNTING BRACKET THAT IS SECURED TO A CONCEALED, 16-GAUGE (1.6MM) WALL PLATE, WITH A STAINLESS STEEL SETSCREW, OR 1X PAINTED WOOD SLAT, AS NOTED. HOOK SHALL BE 12 GAUGE (2.8MM), WELDED TO THE SUPPORT ARM. BOBRICK MODEL B-682 OR APPROVED EQUAL.
PPC	PROTECTIVE PIPE COVER	ADA-CONFORMING, MOLDED VINYL, ANTIMICROBIAL UNDERSINK PROTECTIVE P-TRAP AND ANGLE VALVE COVERS. COVERS SHALL BE SECURED WITH FLUSH REUSABLE FASTENERS, ANGLE STOPS SHALL HAVE LOCKING ACCESS COVERS.
GB-1 GB-2 GB-S	GRAB BAR -36" GRAB BAR -42" GRAB BAR -SHOWER	ADA AND TAS COMPLIANT 1 ¼" DIAMETER, 18 GAUGE STAINLESS STEEL GRAB BAR FABRICATED TO MEET THE REQUIREMENTS OF ASTM F446-85 WITH 1-1/2" CLEARANCE AND COMPLY WITH ANSI A117.1-1986. PROVIDE WOOD BLOCKING IN WALLS AS REQUIRED.
LAV	UNDER-MOUNT BATHROOM SINK	UNDER-MOUNT SINK OF VITREOUS CHINA, OVERFLOW, NO FAUCET HOLES, COMPLY WITH ASME A112.19.2, ADA-CONFORMING. DIMENSIONS 19-7/8" X 15-5/16"X 7-1/2" KOHLER MODEL, ARCHER K-2355 WHITE OR APPROVED EQUAL.
LAV2	SEMI-RECESSED SURFACE MOUNTED	DROP-IN/SEMI-RECESSED SINK VITREOUS/ FIRE CLAY, 22" WIDTH, 17-7/8" FRONT TO BACK, 7-1/4" BOWL DEPTH, ODEON MODEL, K-11160-4, WHITE COLOR, OR APPROVED EQUAL
CT	COUNTER TOP	HANSTONE NATURAL QUARTZ WITH HIGH QUALITY POLYMER RESIN AND PIGMENT, NON-POROUS, NO SEALING REQUIRED, STAIN RESISTANT, HEAT-RESISTANT, CERTIFIED BY NATIONAL SANITATION FOR FOOD SAFETY NSF 51 CERT., 2 MM THICK, SIMILAR MATERIAL FOR 4" BACKSPLASH. MANUFACTURER PROVIDES A 10 YR WARRANTY, MODEL BIANCO CANVAS OR APPROVED EQUAL
PART	TOILET PARTITION	COLOR-THRU PHENOLIC WITH A TOTAL, THROUGH AND THROUGH, PLASTIC UNIT (HIGH DENSITY POLYETHYLENE (HDPE), IMPACT, SCRATCH, MILDEW RESISTANT, FLOOR AND OVERHEAD-BRACED FOR HEAVY TRAFFIC, WITH 3" CONCRETE FLOOR ANCHORS. GLOBAL PARTITIONS MODEL: CHARCOAL 9237 OR APPROVED EQUAL.

1 / A020 RESTROOM ACCESSORIES SCHEDULE
SCALE: NTS

ACCESSORY SCHEDULE, CON'T

ID	DESCRIPTION	REPRESENTATIVE SPECIFICATION
SHH	ACCESSIBLE TRANSFER SHOWER UNIT	TRANSFER SHOWER STALL MOLDED FROM A SINGLE SHEET OF LUCITE CAST ACRYLIC WITHOUT ANY JOINTS OR SEAMS. ENCLOSURE INSIDE DIMENSIONS ARE 36"W X 36"D X 78"H. OUTSIDE DIMENSIONS ARE 41"W X 37"D X 84"H. THE ENTIRE UNIT IS INSTALLED IN GROUT. THE 3/4" THRESHOLD UNIT ALLOWS FOR A SLAB APPLICATION. HOWEVER, THE FINISHED FLOOR DETAIL MUST COMPLY WITH ADA COMPLIANCE AND SHOULD NOT EXCEED MORE THEN 1/2" FROM FINISHED FLOOR TO TOP OF THRESHOLD. MEETS ANSI Z124.2, ANSI A117.1, ADA GUIDELINES, AND A BACKSIDE FLAME SPREAD OF LESS THAN 30 (CLASS B). AQUA BATH MODEL C4136BF-FUS 3/4", WITH HAND-HELD SHOWER SET AND FACTORY DRILLED FOR DOME LIGHT. OPTIONAL, AQUATIC TRANSFER SHOWER MODEL 1363BFS, SEE MEP FOR SPECS.
SH	SHOWER STALL	BUILD OUT CERAMIC TILE A.D.A. SHOWER THAT ABSOLUTELY MEETS ALL A.D.A. ACCESSIBILITY STANDARDS, TYP. FOLLOW INSTRUCTIONS FOR FRAMING, BLOCKING, WATER-PROOFING, ETC., DESCRIBED ON STANDARD DETAILS FS/EMS0-A040. REFER TO MEP PLANS FOR UTILITY COORDINATION, TYP.
WC	STANDARD STALL TOILET	KOHLER WELLWORTH FLUSHOMETER BOWL WITH TOUCHLESS 1.6 OR 1.28 GPF FLUSHOMETER WITH TRIPOINT FLUSHING PERFORMANCE OF WATER PRESSURES. ECO-FRIENDLY KOHLER TOILET MEETS LEED, MODEL K-4406, OR APPROVED EQUAL, DIMENSIONS: 14"L X 14-7/8"W X 15"H, 1-1/2" TOP SPUD, ELONGATED BOWL, 10" OR 12" ROUGH-IN, SEE MEP FOR SPECS.
WCH	ACCESSIBLE STALL TOILET	KOHLER HIGHLINE FLUSHOMETER BOWL WITH TOUCHLESS 1.6 OR 1.28 GPF FLUSHOMETER WITH TRIPOINT, MEETS ADA SPECS, MODEL K-4405, OR APPROVED EQUAL, DIMENSIONS: 28-1/4"L X 14-7/8"W X 17-1/8"H, 1-1/2" TOP SPUD, ELONGATED BOWL, 10" OR 12" ROUGH-IN, LEED GREEN BUILDING RATING SYSTEM. SEE MEP FOR SPECS.

1 / A020 RESTROOM ACCESSORIES SCH'D, CONT.
SCALE: NTS

MILLWORK & APPLIANCE SCHEDULE

ID	DESCRIPTION	REPRESENTATIVE SPECIFICATION
CT-2	COUNTER TOP	HANSTONE NATURAL QUARTZ WITH HIGH QUALITY POLYMER RESIN AND PIGMENT, NON-POROUS, NO SEALING REQUIRED, STAIN RESISTANT, HEAT-RESISTANT, CERTIFIED BY NATIONAL SANITATION FOR FOOD SAFETY NSF 51 CERT., 3 MM THICK, SIMILAR MATERIAL FOR 4" BACKSPLASH. MANUFACTURER PROVIDES A 10 YR WARRANTY, MODEL BIANCO CANVAS OR APPROVED EQUAL
SINK	S.S. KITCHEN SINK	TOP MOUNT STAINLESS STEEL 33-, 4-HOLE, DOUBLE BOWL, 22-GUAGE SINK, ELKAY MODEL NEPTUNE ALL-IN-ONE, UNIT SIZE IS 33"W x 22"D x 7" BOWL DEPTH, HOME DEPOT MODEL HD34896ILFR OR APPROVED EQUAL.
MS	MOP SINK	JAXPRO, 16 GUAGE, 304 STAINLESS STEEL, FLOOR MOP SINK, MODEL NO. MS162012, UNIT SIZE IS 25"Wx21"Dx16"H, WITH A 12" DEEP BOWL, OR APPROVED EQUAL.
MSF	MOP SINK FAUCET	DELTA TWO HANDLE 8" WALL-MOUNT SERVICE SINK, CAST BRASS FAUCET, MODEL NO. 28T9, INCLUDE IN ACCESSORIES THE STAINLESS STEEL MOP HANGER MODEL NO. 28T910, AND HEAVY DUTY REINFORCED HOSE AND S.S. HANGER BRACKET MODEL NO. 284911, OR APPROVED EQUAL.
HOOD	RANGE HOOD VENT	BROAN F40000 SERIES 24" STAINLESS STEEL CONVERTIBLE RANGE HOOD, HOME DEPOT MODEL NO. F402404, ASSEMBLED UNIT SIZE IS 17.5"D x 6"H x 24"W
ICE	ICE MAKER	APPLIANCE TO BE PROVIDED BY OWNER. A PRODUCT USED AS A PLACE-HOLDER TO SIZE THE MILLWORK FOR THE UNIT WAS WHYNTHER STAINLESS STEEL BUILT-IN ICE MAKER, HOME DEPOT MODEL NO. UIM-155, UNIT SIZE IS 18"Dx25"Hx15"W.
DW	DISHWASHER	APPLIANCE TO BE PROVIDED BY OWNER. A PRODUCT USED AS A PLACE-HOLDER TO SIZE THE MILLWORK FOR THE UNIT WAS AMANA, FRONT CONTROL STAINLESS STEEL DISHWASHER, HOME DEPOT MODEL NO. ADB1100AWS, CUT-OUT UNIT SIZE IS 24"Dx34"Hx24"W.
REF	REFRIGERATOR	APPLIANCE TO BE PROVIDED BY OWNER. A PRODUCT USED AS A PLACE-HOLDER TO SIZE THE MILLWORK FOR THE UNIT WAS SAMSUNG, 28.07 CU. FT., FRENCH DOOR, STAINLESS STEEL REFRIGERATOR, HOME DEPOT MODEL NO. RF28HFEDBSR, ASSEMBLED UNIT SIZE IS 36"Dx70"Hx35.75"W.
RANGE	ELECTRIC RANGE	FREE STANDING RANGE AND 5.0 CU. FT. OVEN, SELF CLEANING, WITH BOTTOM STORAGE DRAWER, GE MODEL NO. JB255GJ, ASSEMBLED UNIT SIZE IS 26"D x 47"H x 29 7/8"W

2 / A020 KITCHEN ACCESORY SCHEDULE
SCALE: NTS

LIGHTING FIXTURE SCHEDULE

ID	PHYSICAL		REPRESENTATIVE MANUFACTURER	REPRESENTATIVE MODEL	LAMPING				DRIVER TYPE	DESCRIPTION
	TYPE	SIZE			QTY.	WATTS	TYPE	TEMP.		
A	PENDANT	10"	WAC LIGHTING	NIVEOUS, PD-52310	2	14W	LED	2700K	DIMMER	GLOBE PENDANT WITH 54" MAX. EXTENSION RODS
B	PENDANT	13-3/4"	WAC LIGHTING	NIVEOUS, PD-52313	2	14W	LED	2700K	DIMMER	GLOBE PENDANT WITH 54" MAX. EXTENSION RODS
C	PENDANT	3.2"x9"	TECH LIGHTING	TETRA, 700 MPTETWS-LEDS830	31	12W	LED	3000K	DIMMER	RECTILINEAR FROST GLASS SHADE, 6 FT. EXTENSION CABLE, SATIN NICKEL FINISH
D	CEILING SURFACE MOUNT	6"	TECH LIGHTING	CIRQUE CEILING, 700CQSS	33	12W	LED3	3000K	DIMMER	SATIN NICKEL FINISH, GLASS SHADE W/ DIE-CAST BASE, SUITABLE FOR WET LOCATIONS, ADA COMPLAINT
E	CEILING SURFACE MOUNT	11"	TECH LIGHTING	CIRQUE CEILING, 700CQLS	33	12W	LED3	3000K	DIMMER	SATIN NICKEL FINISH, GLASS SHADE W/ DIE-CAST BASE, SUITABLE FOR WET LOCATIONS, ADA COMPLAINT
F	CEILING FAN	52"	MINKA AIRE	LIGHT WAVE, F844-WH	10	10W (BULB) 66.4W (FAN)	LED	2700K	DIMMER	52" CEILING FAN, LED LAMP, WHITE, WALL MOUNT CONTROL
G	UNDER CABINET LIGHTING	12 L.F.	ARAMCOST LIGHTING	RF3528060-12WWD	4	75W	LED	3000K	DIMMER	18 LED'S PER FOOT, DC POWER SUPPLY SEPARATE, LINKABLE, TWO-SIDED TAPE LIGHTS
H	NEON BALLAST	48"	REFER TO MEP	REFER TO MEP	5	----	NEON BALLAST	----	----	REFER TO MEP FOR SPECS., MAY USE EXISTING LIGHTING FOR STA. FS27/EMS11

3 / A020 LIGHTING FIXTURE SCHEDULE
SCALE: NTS

ROOM FINISH SCHEDULE

PROJECT	ROOM ID	REPRESENTATIVE FLOOR MFG.					REPRESENTATIVE WALL MFG.						REPRESENTATIVE BASE MFG.				REPRESENTATIVE CEILING MFG.			REMARKS
		PORCELAIN TILE: DALTILE, KIMONA SILK, MORNING DOVE P325, 12"x12"	RUBBER TILE: ROPPE, SMOOTH SERIES, 3/16" THICK, SMOKE 174, 12x12"	CARPET TILE: KINETEX, FLASH 1818, ROJO 1723, 2'x2'	PORCELAIN TILE: DALTILE, KEYSTONES MOSAIC SHEET, ARTIC WHITE D617, 2"x2"	CONCRETE: STRUCTURAL SLAB	PAINT: SHERWIN WILLIAMS, HONEST BLUE SW 6520	PAINT: SHERWIN WILLIAMS, ELDER WHITE, SW 7014	PAINT: SHERWIN WILLIAMS, MINDFUL GRAY, SW 7016	CERAMIC TILE: DALTILE, ELEVARE GLAZED CERAMIC TILE, MATTE LUNAR EL47, 6"x18"	PLYWOOD: 3/4" FINISH GRADE, PRIME PAINTED, SEE INT. ELEV. FOR DIMENSIONS	SEALANT: CMU CLEAR COAT SEALANT	CERAMIC TILE: DALTILE, ELEVARE GLAZED CERAMIC TILE, MATTE LUNAR EL47, 6"x18"	RUBBER: ROPPE, 100 SERIES, SMOKE 174, 4"x1/8"	RUBBER: ROPPE, 100 SERIES, CHARCOAL 123, 4"x1/8"	NONE:	PAINT: SHERWIN WILLIAMS, CEILING BRIGHT WHITE, SW 7001	CERAMIC TILE: DALTILE, MATTE, ARTIC WHITE 0790, 6"x6"	NONE/EXPOSED TO STRUCTURE ABOVE:	
FIRE STATIONS	LOCKER ROOM	●					●			●			●				●			
	SHOWER STALLS			●						●								●		
	CLOSET		●					●						●			●			
	VESTIBULE	●						●						●			●			
	TELECOM ROOM					●		●			●					●	●			
EMS STATIONS	ENTRANCE, DAY ROOM, KITCHEN, CORRIDOR, AIR LOCK, STUDY, MULTI. ROOM, CLOSET, STAIRS		●					●						●			●			
	SLEEPING ROOMS			●				●	●						●		●			PAINT GRAY SW 7016 ON ACCENT WALL, ONLY, OPPOSITE ENTRY DOOR
	UTILITY ROOMS		●			●		●						●			●			CONCRETE FLOOR IN UNCONDITIONED UTILTIY AREAS/ROOMS
	STORAGE		●					●						●			●		●	CONCRETE FLOOR IN UNCONDITIONED STORAGE AREAS/ROOMS
	RESTROOMS	●					●			●			●				●			
	SHOWER STALLS				●					●						●		●		
	VEHICLE BAY					●						●		●					●	

4 / A020 ROOM FINISH SCHEDULE
SCALE: NTS

BID DOCUMENTS

REGISTERED ARCHITECT W. OWEN HARROD 16348 STATE OF TEXAS
30 Aug 2016

mwm Design Group
305 East Huntland Drive
Suite 200
Austin, Texas 78752
p: 512.453.0767
f: 512.453.1734

TBAE FIRM REGISTRATION NO.: 1452
TBPE FIRM REGISTRATION NO.: F-1416
TBPLS FIRM REGISTRATION NO.: 10065600

NO.	DATE	DESCRIPTION	BY

0 1"
The bar above measures one inch on the original drawing. Adjust scales accordingly.

SCHEDULES

CITY OF AUSTIN, AFD WOMEN'S LOCKER RM. ADDN., PHASE V
AND EMS VEHICLE BAY EXPANSIONS & GEN. RENOVATIONS
AUSTIN, TEXAS

PLOTTED: 8/31/2016
JOB NO: 023-79D

FS EMS0
A020

File: Y:\023-79D_WomensLockerRooms\CAD\Fire & EMS Station 0\sheets\FS EMS0-A020 SCHD.dwg 24x36

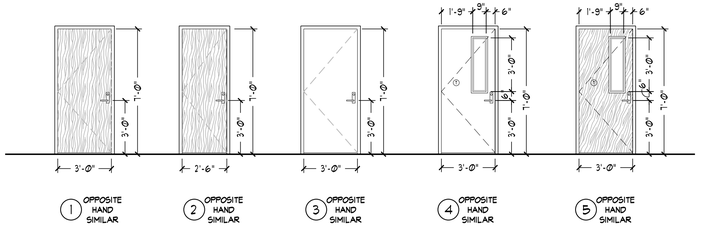

1 OPPOSITE HAND SIMILAR
2 OPPOSITE HAND SIMILAR
3 OPPOSITE HAND SIMILAR
4 OPPOSITE HAND SIMILAR
5 OPPOSITE HAND SIMILAR

1 / FS0-A030 DOOR TYPES

SCALE: 1/4"=1'-0"

DOOR SCHEDULE

DOOR NO.	QUANTITY	TYPE	DOOR NOMINAL SIZE WIDTH	HEIGHT	THICK-NESS	MATERIAL	FINISH	GLAZING	FRAME	DETAILS HEAD	JAMB	SILL	REMARKS	HARDWARE
1	3	3'-0"	7'-0"	1-3/4"	MTL				HM	3	4	14		-
2														-
3	26 m	2'-0"	7'-0"	1-3/4"	SCW				AL	1	2	-		-
4	1	3'-0"	7'-0"	1-3/4"	SCW				AL	1	2	-	5/8" MARBLE THRESHOLD WITH BEVELED EDGES	-
5	4	3'-0"	7'-0"	1-3/4"	MTL				HM	3	4	13		
6	3	3'-0"	7'-0"	1-3/4"	MTL				HM	3	4	14		
7	1	3'-0"	7'-0"	1-3/4"	SCW				HM	5	6	15		
8	3	3'-0"	7'-0"	1-3/4"	MTL				HM	3	4	14		
9	1	3'-0"	7'-0"	1-3/4"	SCW				AL	1	2	-	5/8" MARBLE THRESHOLD WITH BEVELED EDGES	
10	2	2'-6"	7'-0"	1-3/4"	SCW				AL	1	2	-	5/8" MARBLE THRESHOLD WITH BEVELED EDGES	
11	4	3'-0"	7'-0"	1-3/4"	MTL				HM	7 s m	4	13		
12	4	3'-0"	7'-0"	1-3/4"	MTL				HM	3	4	15		
13	1	3'-0"	7'-0"	1-3/4"	SCW				AL	1	2	-	5/8" MARBLE THRESHOLD WITH BEVELED EDGES	
14	1	3'-0"	7'-0"	1-3/4"	SCW				AL	3	4	14		
15	1	3'-0"	7'-0"	1-3/4"	SCW				AL	1	2	-	5/8" MARBLE THRESHOLD WITH BEVELED EDGES	
16	REUSE EXISTING DOOR								HM	3	4	14		
17	1	3'-0"	7'-0"	1-3/4"	SCW	STN			AL	1	2	-	5/8" MARBLE THRESHOLD WITH BEVELED EDGES	
18	4	3'-0"	7'-0"	1-3/4"	MTL	PT	T		HM	3	4	13		
19	1	3'-0"	7'-0"	1-3/4"	SCW	STN			AL	1	2	-		
20	26 m	2'-0"	7'-0"	1-3/4"	SCW	STN			AL	1	2	-		
21	5	3'-0"	7'-0"	1-3/4"	SCW	STN	T		AL	1	2	-		
22	1	3'-0"	7'-0"	1-3/4"	SCW	STN			AL	1	2	-		
23	4	3'-0"	7'-0"	1-3/4"	MTL	PT	T		HM	5 6 m	6 6 m	13		
24	1	3'-0"	7'-0"	1-3/4"	SCW	STN			AL	1	2	-		
25	1	3'-0"	7'-0"	1-3/4"	SCW	STN			AL	1	2	-	5/8" MARBLE THRESHOLD WITH BEVELED EDGES	
26	6	5'-0"	7'-0"	1-3/4"	SCW	STN			AL	1	2	-		
27	2	2'-6"	7'-0"	1-3/4"	SCW	STN			AL	1	2	-	5/8" MARBLE THRESHOLD WITH BEVELED EDGES	
28	4	3'-0"	7'-0"	1-3/4"	MTL	PT	T		HM	5 6 m	6 6 m	13		
29	M	14'-0"	14'-0"	2"	MTL									
30	1	3'-0"	7'-0"	1-3/4"	SCW	STN			AL	1	2	-		
31	4	3'-0"	7'-0"	1-3/4"	MTL	PT	T		HM	3	4	13		
32	M	14'-0"	14'-0"	2"	MTL									
33	4	3'-0"	7'-0"	1-3/4"	MTL	PT	T		HM	5 6 m	6 6 m	13		
34	1	3'-0"	7'-0"	1-3/4"	SCW	STN			AL	1	2	-		
35	26 m	2'-8"	7'-0"	1-3/4"	SCW	STN			AL	1	2	-	5/8" MARBLE THRESHOLD WITH BEVELED EDGES	
36	1	3'-0"	7'-0"	1-3/4"	SCW	STN			AL	1	2	-	5/8" MARBLE THRESHOLD WITH BEVELED EDGES	
37	1	3'-0"	7'-0"	1-3/4"	SCW	STN			AL	1	2	-		
38	1	3'-0"	7'-0"	1-3/4"	SCW	STN			AL	1	2	-		
39	4	3'-0"	7'-0"	1-3/4"	MTL	PT	T		HM	5 6 m	6 6 m	13		
40	5	3'-0"	7'-0"	1-3/4"	SCW	STN			AL	1	2	-		
41	M	14'-0"	14'-0"	2"	MTL									
42	1	3'-0"	7'-0"	1-3/4"	SCW	STN			AL	1	2	-		
43	1	3'-0"	7'-0"	1-3/4"	SCW	STN			AL	1	2	-		
44	1	3'-0"	7'-0"	1-3/4"	SCW	STN			AL	1	2	-	5/8" MARBLE THRESHOLD WITH BEVELED EDGES	
45	1	3'-0"	7'-0"	1-3/4"	SCW	STN			AL	1	2	-	5/8" MARBLE THRESHOLD WITH BEVELED EDGES	
46	4	3'-0"	7'-0"	1-3/4"	MTL	PT	T		HM	5 6 m	6 6 m	13		
47	1	3'-0"	7'-0"	1-3/4"	SCW	STN			AL	1	2	-	5/8" MARBLE THRESHOLD WITH BEVELED EDGES	
48	6	5'-0"	7'-0"	1-3/4"	SCW	STN			AL	1	2	-		

2 / A030 DOOR SCHEDULE

NTS

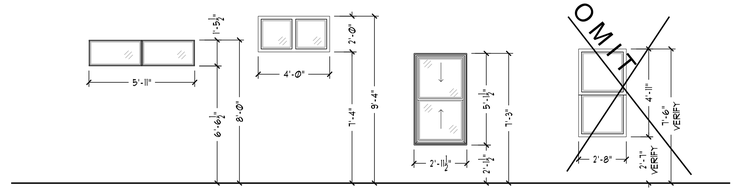

A FIXED
B FIXED
C DBL. HUNG
D DBL. HUNG

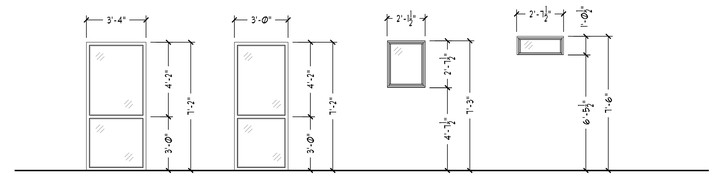

E FIXED
F FIXED
G FIXED
H CASEMENT
I FIXED

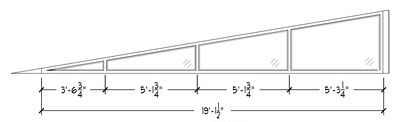

J OPPOSITE HAND SIMILAR

NOTE: COORDINATE WITH FABRICATION DRAWINGS FOR ROOF FRAMING

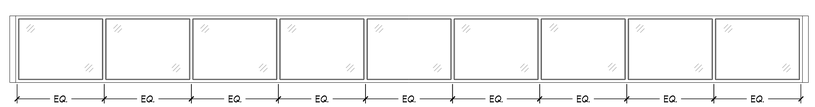

K

NOTE: COORDINATE WITH FABRICATION DRAWINGS FOR ROOF FRAMING

3 / A030 WINDOW TYPES

SCALE: 1/4"=1'-0"

WINDOW SCHEDULE

WINDOW NO	QUANTITY	NOMINAL SIZE WIDTH	HEIGHT	THICK-NESS	HEAD	JAMB	SILL	REMARKS
A		5'-11"	1'-5 1/2"		7	9	8	
B		4'-0"	2'-0"		10	9	8	
C		2'-8"	4'-3 1/2"		10	9	8	EGREES WINDOW R310.1. MIN. CLEAR OPENING 5.7 SF (AT GRADE LEVEL = 5.0 S.F.) CLEAR
D		2'-8"	4'-11"		12	5 6 m	8	OPENING HT+24", CLEAR OPENING WIDTH+20"
E		3'-4"	1'-2"		7	9	11	
F		3'-0"	1'-2"		10	9	11	
G		2'-1 1/2"	2'-7 1/2"		10	9	8	
H		2'-1 1/2"	2'-7 1/2"		10	9	8	CASEMENT
I		2'-7 1/2"	1'-0 1/2"		10	9	8	
J								STOREFRONT WINDOW SYSTEM: COORDINATE DIMENSIONS WITH AS-BUILT CONDITIONS
K								STOREFRONT WINDOW SYSTEM: COORDINATE DIMENSIONS WITH AS-BUILT CONDITIONS

ALL NEW WINDOWS SHALL BE PROVIDED WITH INSULATED GLAZING, UNLESS OTHERWISE NOTED.

4 / A030 WINDOW SCHEDULE

NTS

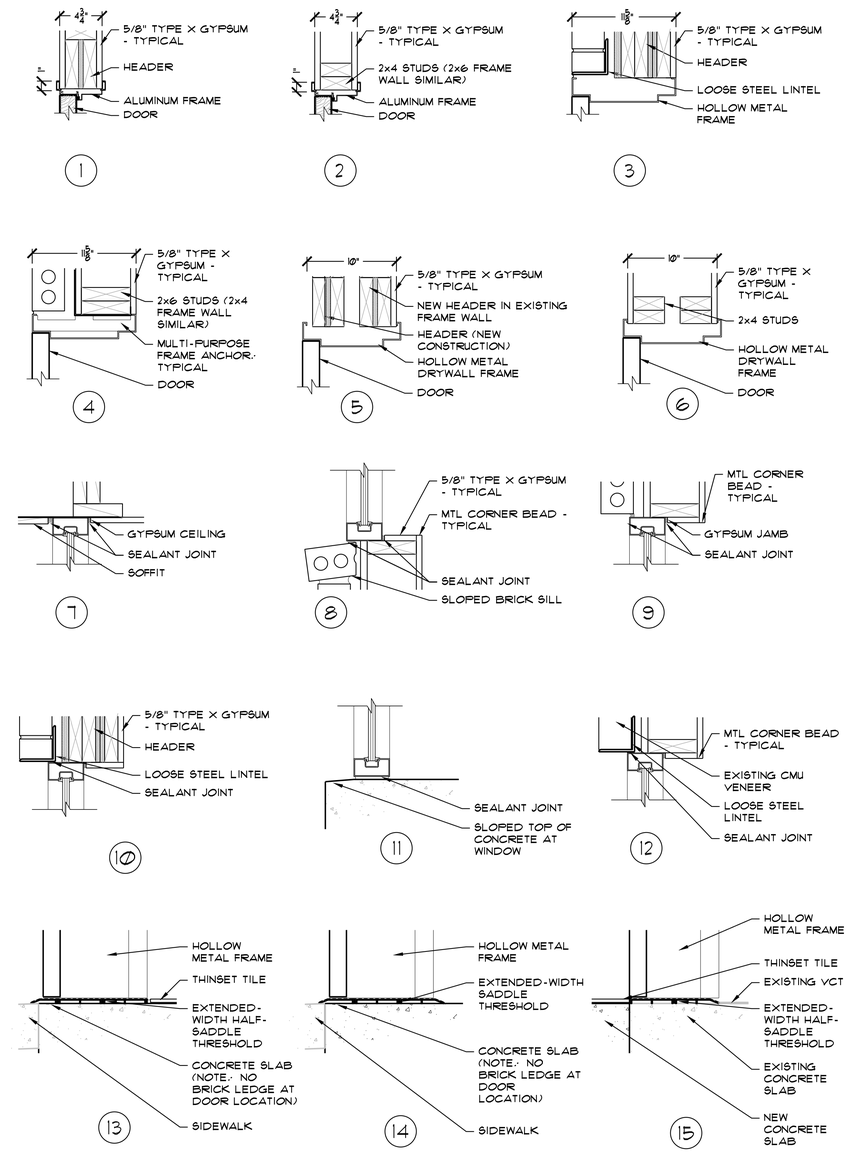

5 / A030 HEAD, JAMB AND SILL DETAILS

1-1/2" = 1'-0"

BID DOCUMENTS

REGISTERED ARCHITECT RICHARD OWEN HARRIS 18346 STATE OF TEXAS 30 Aug 2016

mwm Design Group
305 East Huntland Drive
Suite 200
Austin, Texas 78752
p: 512.453.0767
f: 512.453.1734

TBAE FIRM REGISTRATION NO.: 1452
TBPE FIRM REGISTRATION NO.: F-1416
TBPLS FIRM REGISTRATION NO.: 10065600

NO.	DATE	DESCRIPTION	BY

0 1"
The bar above measures one inch on the original drawing. Adjust scales accordingly.

DOOR, WINDOW TYPES & SCHEDULES, & DOOR DETAILS

CITY OF AUSTIN, AFD WOMEN'S LOCKER RM. ADDN., PHASE V AND EMS VEHICLE BAY EXPANSIONS & GEN. RENOVATIONS
AUSTIN, TEXAS

PLOTTED: 8/31/2016
JOB NO: 023-79D

FS/EMS0
A030

File: X:\023-79D_WomensLockerRooms\CAD\Fire & EMS Station 0\sheets\FS EMS0-A030 TYPES & SCHD.dwg 24x36

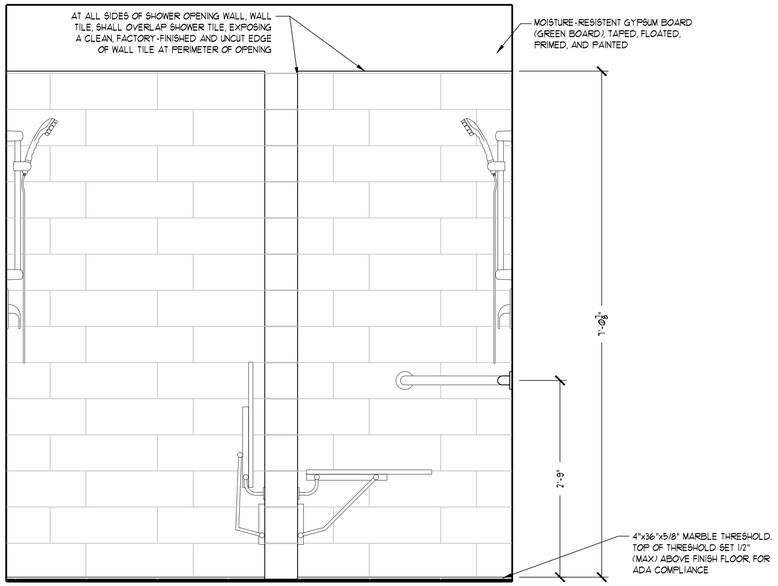

ELEVATION

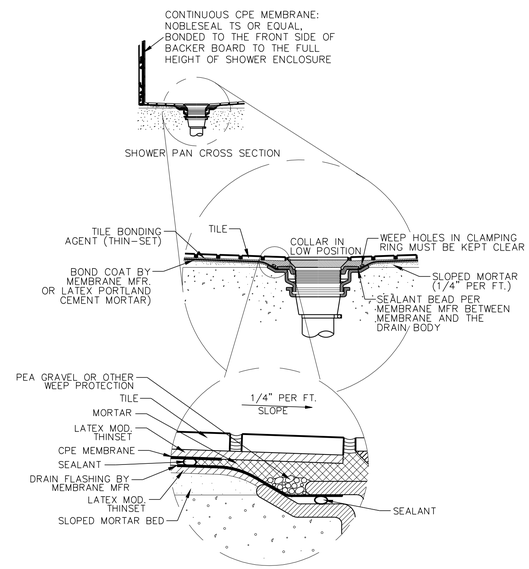

2 A040 SHOWER PAN AND DRAIN DETAIL

NTS

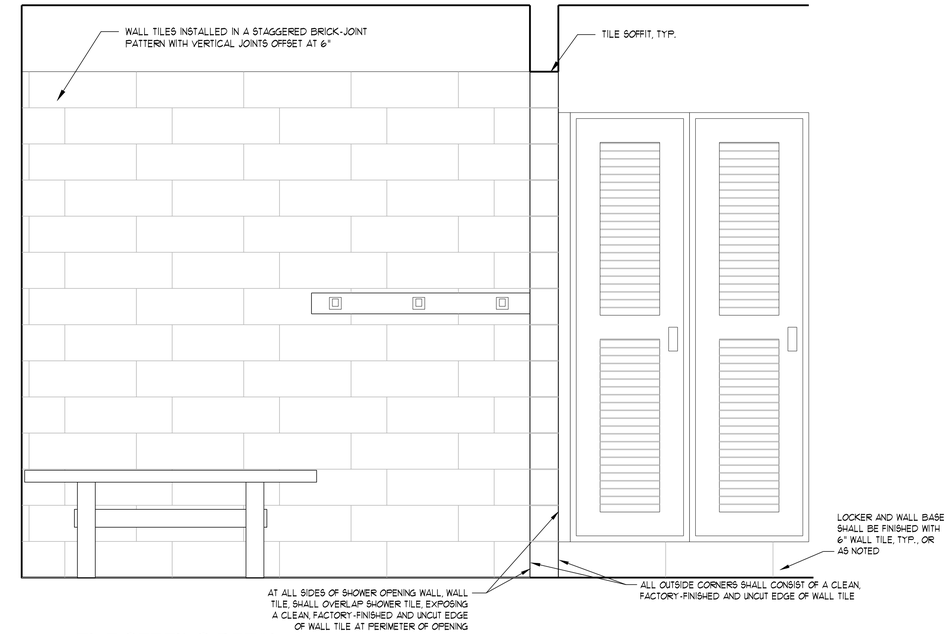

3 A040 TILE SETTING DETAIL

1"=1'-0"

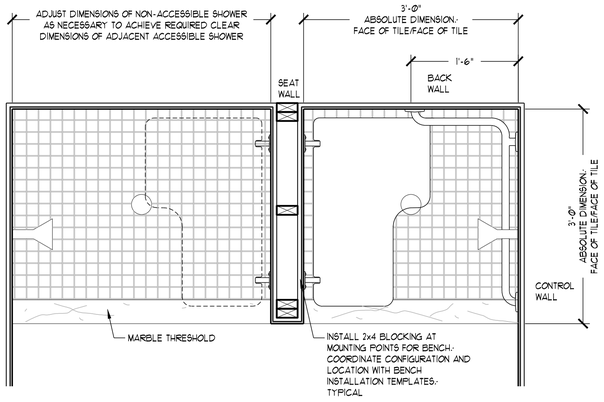

PLAN

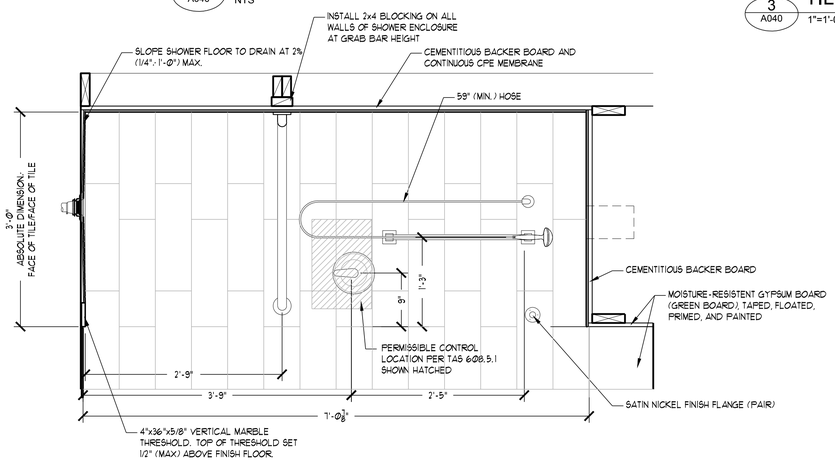

SECTION

NOTES.-

1. SCHEDULE PREINSTALLATION CONFERENCE PRIOR TO COMMENCING TILE SETTING.

2. EXTEND TILE WORK INTO RECESSES AND UNDER OR BEHIND EQUIPMENT AND FIXTURES TO FORM A COMPLETE COVERING WITHOUT INTERRUPTIONS, UNLESS OTHERWISE INDICATED.

3. TERMINATE WORK NEATLY AT OBSTRUCTIONS, EDGES, AND CORNERS WITHOUT DISRUPTING PATTERN OR JOINT ALIGNMENTS.

4. ACCURATELY FORM INTERSECTIONS AND RETURNS.

5. PERFORM CUTTING AND DRILLING OF TILE WITHOUT MARRING VISIBLE SURFACES. CAREFULLY GRIND CUT EDGES OF TILE ABUTTING TRIM, FINISH, OR BUILT-IN ITEMS FOR STRAIGHT ALIGNED JOINTS.

6. FIT TILE CLOSELY TO ELECTRICAL OUTLETS, PIPING, FIXTURES, AND OTHER PENETRATIONS SO PLATES, COLLARS, OR COVERS OVERLAP TILE.

1 A040 TYPICAL SHOWER DETAILS

1"=1'-0"

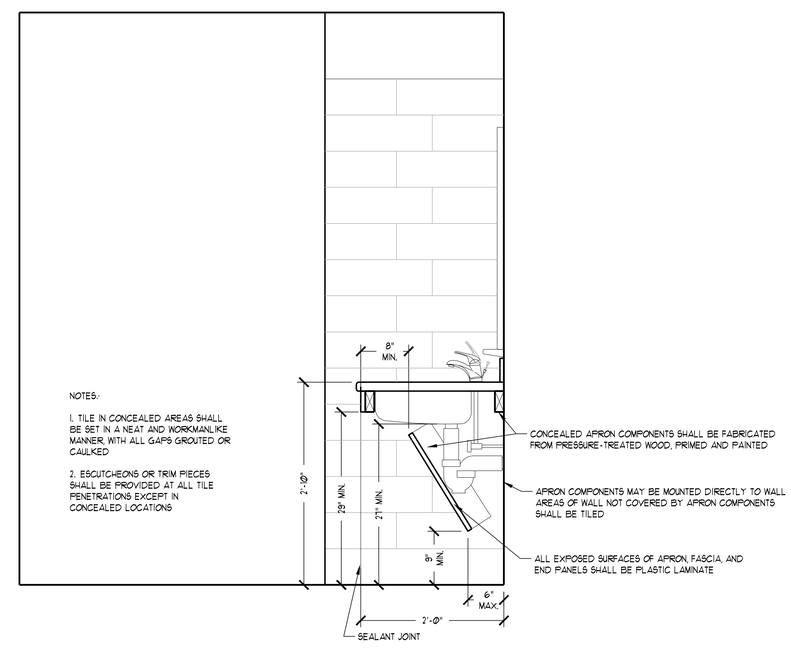

NOTES.-

1. TILE IN CONCEALED AREAS SHALL BE SET IN A NEAT AND WORKMANLIKE MANNER WITH ALL GAPS GROUTED OR CAULKED

2. ESCUTCHEONS OR TRIM PIECES SHALL BE PROVIDED AT ALL TILE PENETRATIONS EXCEPT IN CONCEALED LOCATIONS

4 A040 APRON AND TILE SETTING DETAIL

1"=1'-0"

BID DOCUMENTS

REGISTERED ARCHITECT JOWEN HARGROVE 78746 STATE OF TEXAS 31 AUG 2016

mwm Design Group
305 East Huntland Drive
Suite 200
Austin, Texas 78752
p: 512.453.0767
f: 512.453.1734
TBAE FIRM REGISTRATION NO.: 1452
TBPE FIRM REGISTRATION NO.: F-1416
TBPLS FIRM REGISTRATION NO.: 10065600

NO.	DATE	DESCRIPTION	BY

0 1"

The bar above measures one inch on the original drawing. Adjust scales accordingly.

STANDARD DETAILS

CITY OF AUSTIN, AFD WOMEN'S LOCKER RM. ADDN., PHASE V AND EMS VEHICLE BAY EXPANSIONS & GEN. RENOVATIONS
AUSTIN, TEXAS

PLOTTED: 8/31/2016
JOB NO: 023-79D

FS/EMS0
A040

File: Y:\023-790_Womens_Locker_Rooms\CAD\Fire & EMS Station 0\sheets\FS EMS0-A040 DETAILS.dwg 24x36

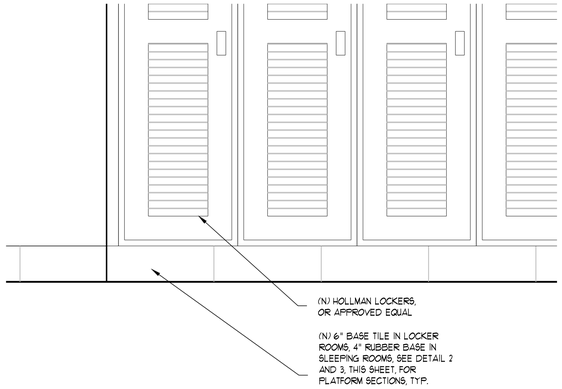

1 A050 LOCKER PLATFORM DETAIL ELEV.
1"=1'-0"

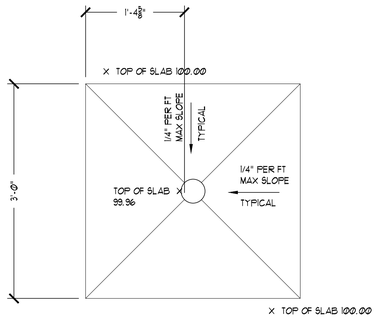

4 A050 TYPICAL SLAB RECESS AT SHOWER AND FLOORDRAIN
1"=1'-0"

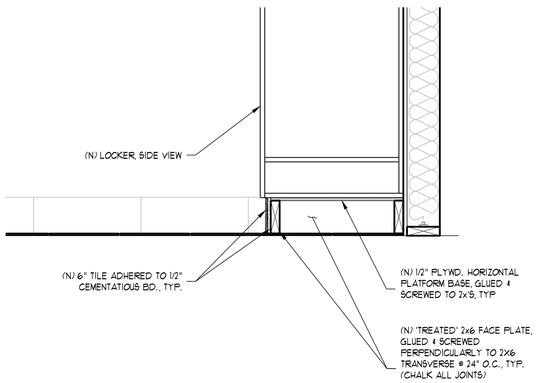

2 A050 6" LOCKER PLATFORM SECTION
1"=1'-0"

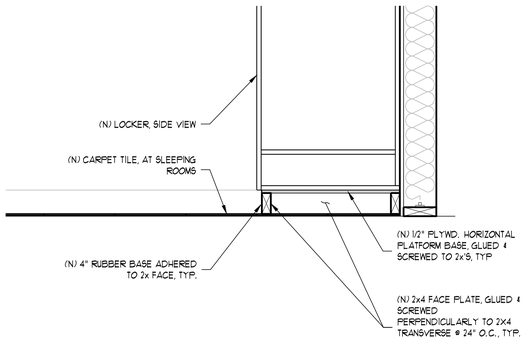

3 A050 4" LOCKER PLATFORM SECTION
1'= 1'-0"

BID DOCUMENTS

REGISTERED ARCHITECT JOWEN HARRIS 18346 STATE OF TEXAS 30 Aug 2016

mwm Design Group
305 East Huntland Drive
Suite 200
Austin, Texas 78752
p: 512.453.0767
f: 512.453.1734
TBAE FIRM REGISTRATION NO.: 1452
TBPE FIRM REGISTRATION NO.: F-1416
TBPLS FIRM REGISTRATION NO.: 10065600

NO.	DATE	DESCRIPTION	BY

0 1"
The bar above measures one inch on the original drawing. Adjust scales accordingly.

STANDARD DETAILS

CITY OF AUSTIN, AFD WOMEN'S LOCKER RM. ADDN., PHASE V AND EMS VEHICLE BAY EXPANSIONS & GEN. RENOVATIONS
AUSTIN, TEXAS

PLOTTED: 9/7/2016
JOB NO: 023-79D

FS/EMS0
A050

File: Y:\023-79D_WomensLockerRooms\CAD\Fire & EMS Station 0\sheets\FS EMS0-A050 DETAILS.dwg 24x36

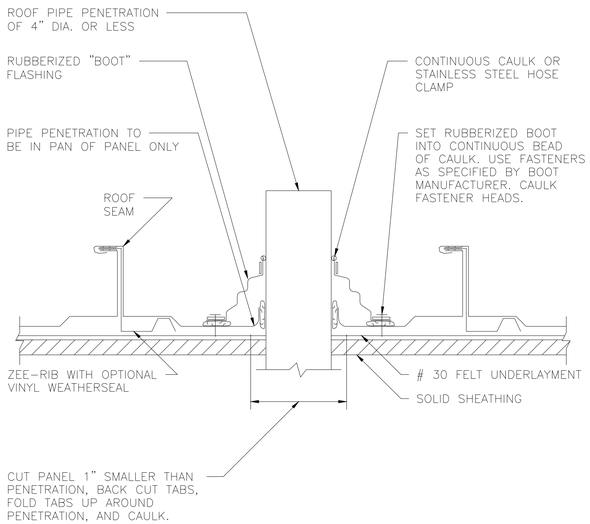

COORDINATE VENT INSTALLATIONS WITH LAYOUT OF ROOF PANELS. ALL VENT PENETRATIONS OF METAL ROOFING SHALL BE CENTERED BETWEEN SEAMS (AS SHOWN ABOVE).

1. CUT HOLE TO ALLOW FOR THERMAL MOVEMENT IF PANELS ARE 30'-0" OR LONGER.
2. IF PIPE IS MADE OF METAL, IT MUST BE PAINTED TO PREVENT RUST RUN-OFF FROM STAINING PANELS.
3. POSITION SQUARE BASED BOOTS IN A DIAMOND ORIENTATION WHERE POSSIBLE TO AID IN DIVERTING WATER.

1 A060 ROOF PENETRATION DETAIL
NTS

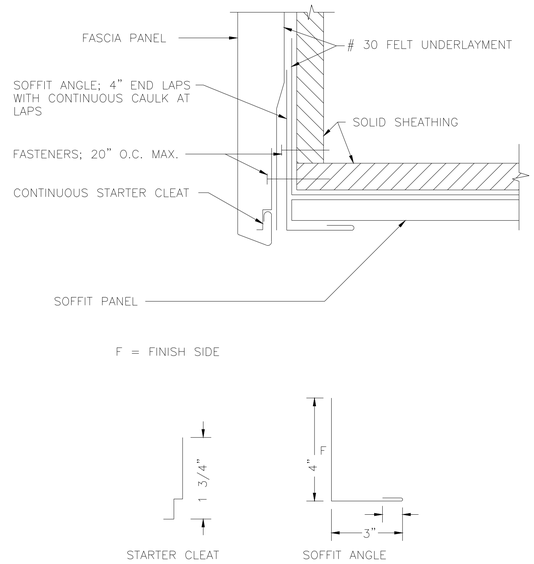

2 A060 FASCIA/SOFFIT DETAIL
NTS

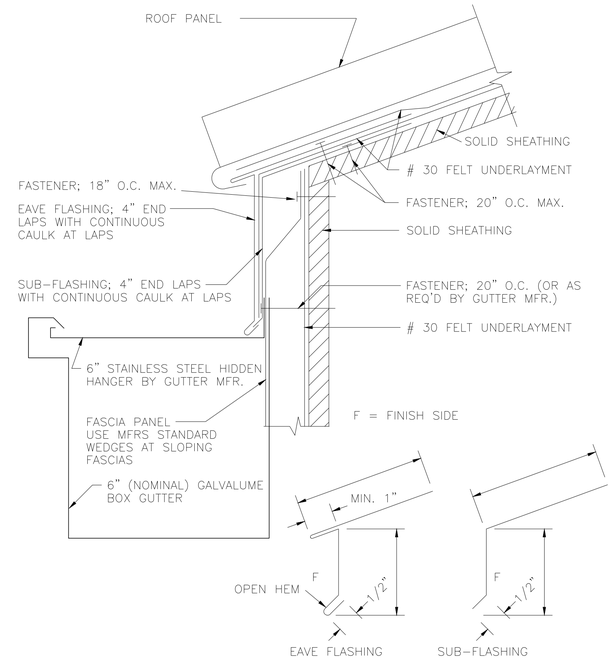

3 A060 FASCIA/ROOF/GUTTER DETAIL
NTS

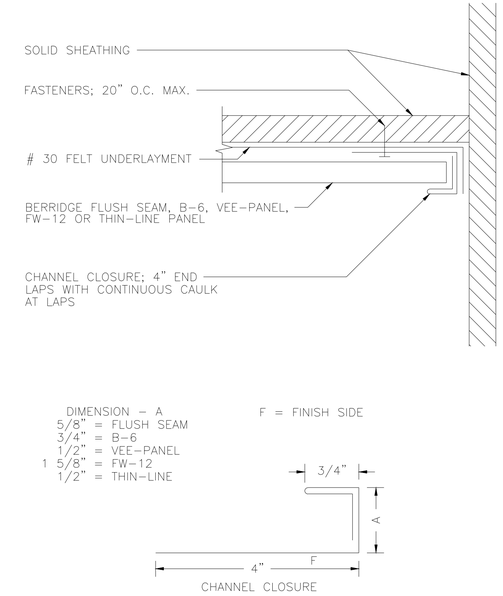

4 A060 SOFFIT DETAIL
NTS

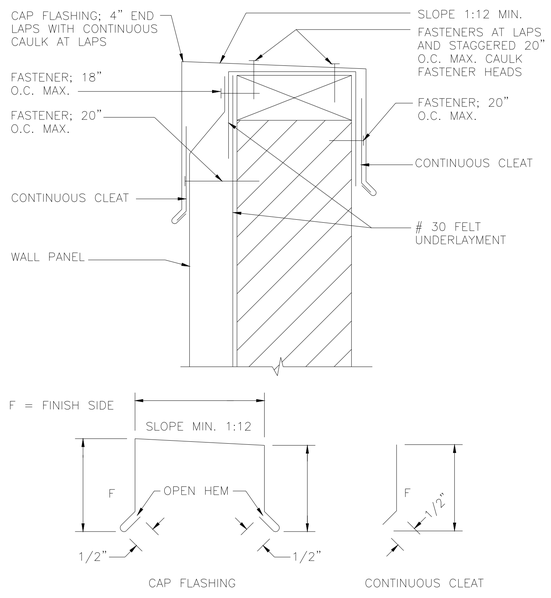

5 A060 WALL/PARAPET CAP DETAIL
NTS

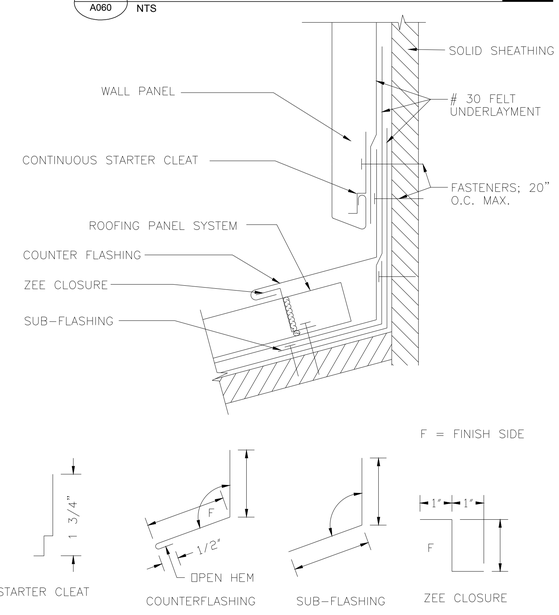

6 A060 WALL/ROOF HEAD DETAIL
NTS

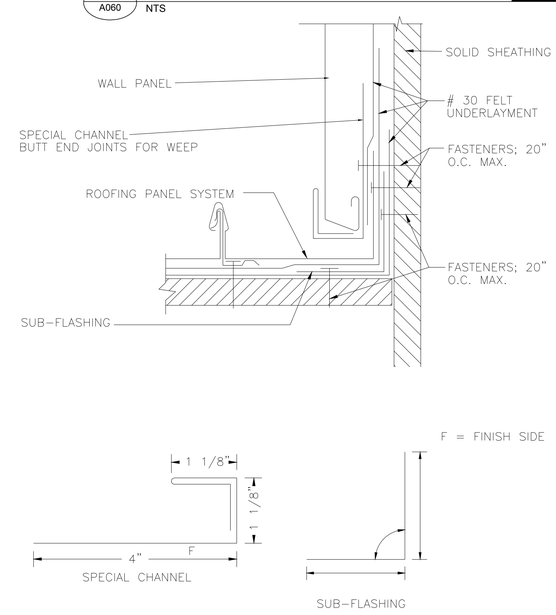

7 A060 WALL/ROOF RAKE DETAIL
NTS

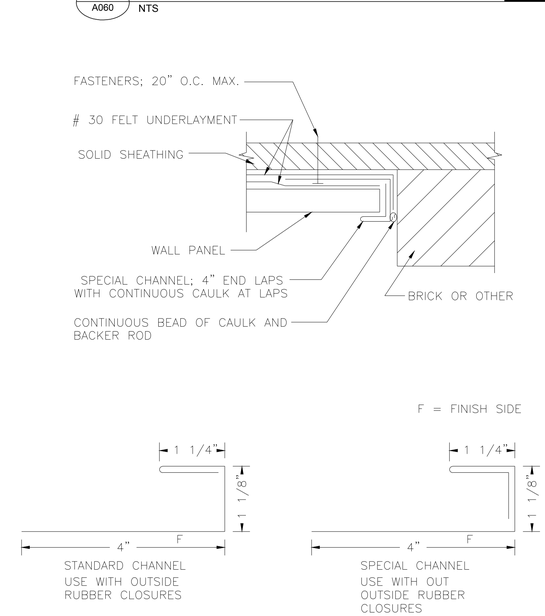

8 A060 WALL CORNER DETAIL
NTS

BID DOCUMENTS

REGISTERED ARCHITECT MWOWEN HARTSOE 78348 STATE OF TEXAS 31 AUG 2016

mwm Design Group
305 East Huntland Drive
Suite 200
Austin, Texas 78752
p: 512.453.0767
f: 512.453.1734
TBAE FIRM REGISTRATION NO.: 1452
TBPE FIRM REGISTRATION NO.: F-1416
TBPLS FIRM REGISTRATION NO.: 10065600

NO.	DATE	DESCRIPTION	BY

0 1"
The bar above measures one inch on the original drawing. Adjust scales accordingly.

ROOF DETAILS

CITY OF AUSTIN, AFD WOMEN'S LOCKER RM. ADDN., PHASE V AND EMS VEHICLE BAY EXPANSIONS & GEN. RENOVATIONS
AUSTIN, TEXAS

PLOTTED: 8/31/2016
JOB NO: 023-79D

FS/EMS0
A060

File: Y:\023-79D_WomensLockerRooms\CAD\Fire & EMS Station 0\sheets\FS EMS0-A060 DETAILS.dwg 24x36

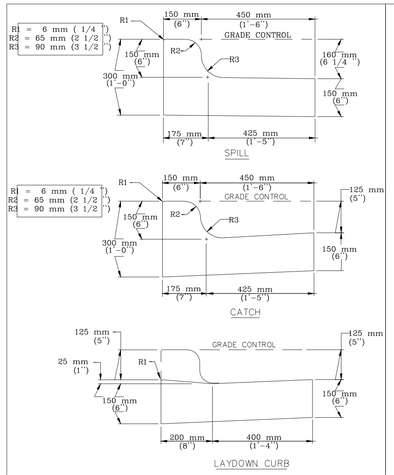

CITY OF AUSTIN DEPARTMENT OF PUBLIC WORKS AND TRANSPORTATION	CURB AND GUTTER SECTION		
RECORD COPY SIGNED BY LINO RIVERA 9/29/99 ADOPTED	THE ARCHITECT/ENGINEER ASSUMES RESPONSIBILITY FOR APPROPRIATE USE OF THIS STANDARD.	STANDARD NO.	430S-1

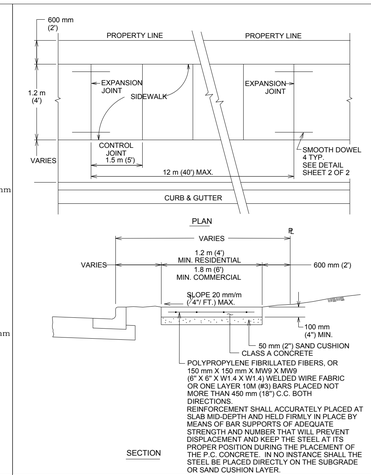

CITY OF AUSTIN DEPARTMENT OF PUBLIC WORKS	SIDEWALK		
RECORD COPY SIGNED BY BILL GARDNER 03/26/08 ADOPTED	THE ARCHITECT/ENGINEER ASSUMES RESPONSIBILITY FOR APPROPRIATE USE OF THIS STANDARD.	STANDARD NO.	432S-1 1 OF 3

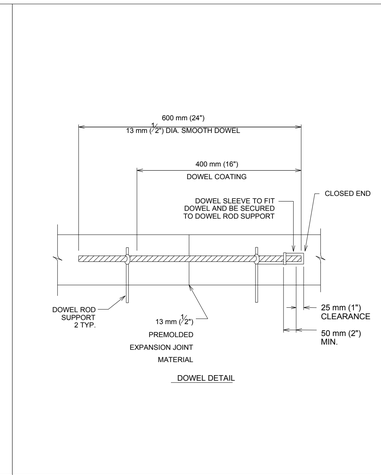

CITY OF AUSTIN DEPARTMENT OF PUBLIC WORKS	SIDEWALK		
RECORD COPY SIGNED BY BILL GARDNER 03/26/08 ADOPTED	THE ARCHITECT/ENGINEER ASSUMES RESPONSIBILITY FOR APPROPRIATE USE OF THIS STANDARD.	STANDARD NO.	432S-1 2 OF 3

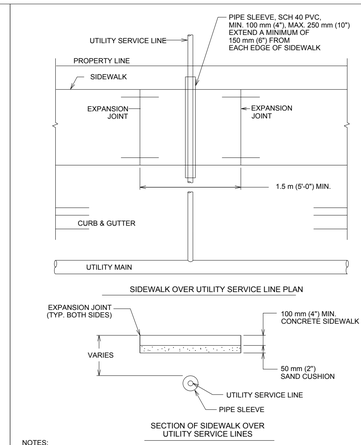

NOTES:
1. THIS STANDARD APPLIES TO THE INSTALLATION OF NEW UTILITIES OR UTILITIES BEING REPLACED BY A NEW LINE.
2. NO JOINTS IN UTILITY SERVICE PIPE TO BE LOCATED INSIDE PVC PIPE SLEEVE.

CITY OF AUSTIN DEPARTMENT OF PUBLIC WORKS	SIDEWALK		
RECORD COPY SIGNED BY BILL GARDNER 03/26/08 ADOPTED	THE ARCHITECT/ENGINEER ASSUMES RESPONSIBILITY FOR APPROPRIATE USE OF THIS STANDARD.	STANDARD NO.	432S-1 3 OF 3

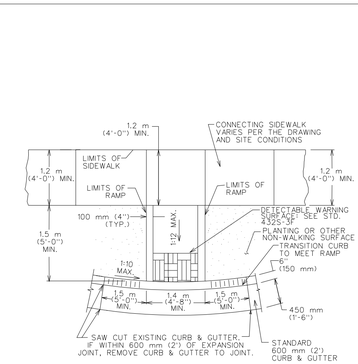

CITY OF AUSTIN DEPARTMENT OF PUBLIC WORKS	TYPE 1B SIDEWALK CURB RAMP		
RECORD COPY SIGNED BY BILL GARDNER 9/14/05 ADOPTED	THE ARCHITECT/ENGINEER ASSUMES RESPONSIBILITY FOR APPROPRIATE USE OF THIS STANDARD.	STANDARD NO.	432S-5B

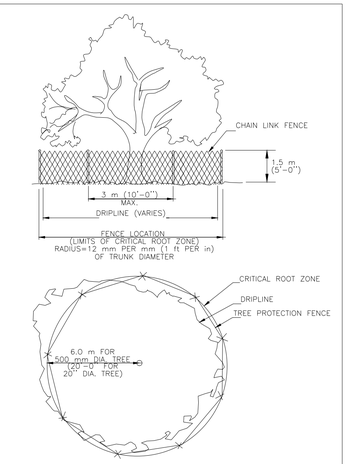

CITY OF AUSTIN WATERSHED PROTECTION DEPARTMENT	TREE PROPTECTION FENCE TYPE A - CHAIN LINK		
RECORD COPY SIGNED BY J. PATRICK MURPHY 11/15/99 ADOPTED	THE ARCHITECT/ENGINEER ASSUMES RESPONSIBILITY FOR APPROPRIATE USE OF THIS STANDARD.	STANDARD NO.	610S-2

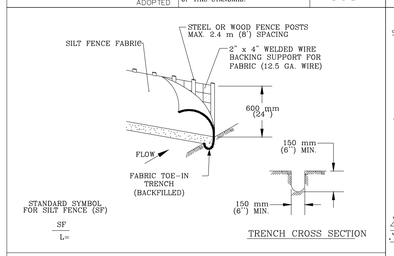

1. STEEL OR WOOD POSTS WHICH SUPPORT THE SILT FENCE SHALL BE INSTALLED ON A SLIGHT ANGLE TOWARD THE ANTICIPATED RUNOFF SOURCE. POST MUST BE EMBEDDED A MINIMUM OF 300 mm (12 INCHES). IF WOOD POSTS CANNOT ACHIEVE 300 mm (12 inches) DEPTH, USE STEEL POSTS.

2. THE TOE OF THE SILT FENCE SHALL BE TRENCHED IN WITH A SPADE OR MECHANICAL TRENCHER, SO THAT THE DOWNSLOPE FACE OF THE TRENCH IS FLAT AND PERPENDICULAR TO THE LINE OF FLOW.

3. THE TRENCH MUST BE A MINIMUM OF 150 mm (6 inches) DEEP AND 150 mm (6 inches) WIDE TO ALLOW FOR THE SILT FENCE FABRIC TO BE LAID IN THE GROUND AND BACKFILLED WITH COMPACTED MATERIAL.

4. SILT FENCE FABRIC SHOULD BE SECURELY FASTENED TO EACH STEEL OR WOOD SUPPORT POST OR TO WOVEN WIRE , WHICH IS IN TURN ATTACHED TO THE STEEL OR WOOD FENCE POST.

5. INSPECTION SHALL BE MADE WEEKLY OR AFTER EACH RAINFALL EVENT AND REPAIR OR REPLACEMENT SHALL BE MADE PROMPTY AS NEEDED.

6. SILT FENCE SHALL BE REMOVED WHEN THE SITE IS COMPLETELY STABILIZED SO AS NOT TO BLOCK OR IMPEDE STORM FLOW OR DRAINAGE.

7. ACCUMULATED SILT SHALL BE REMOVED WHEN IT REACHES A DEPTH OF 150 mm (6 inches). THE SILT SHALL BE DISPOSED OF ON AN APPROVED SITE AND IN SUCH A MANNER THAT WILL NOT CONTRIBUTE TO ADDITIONAL SILTATION.

CITY OF AUSTIN WATERSHED PROTECTION DEPARTMENT	SILT FENCE		
RECORD COPY SIGNED BY MORGAN BYARS 09/01/2011 ADOPTED	THE ARCHITECT/ENGINEER ASSUMES RESPONSIBILITY FOR APPROPRIATE USE OF THIS STANDARD.	STANDARD NO.	642S-1

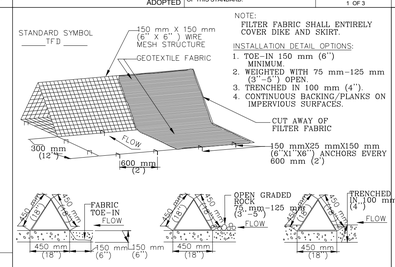

NOTE:
FILTER FABRIC SHALL ENTIRELY COVER DIKE AND SKIRT.

INSTALLATION DETAIL OPTIONS:
1. TOE-IN 150 mm (6") MINIMUM.
2. WEIGHTED WITH 75 mm-125 mm (3"-5") OPEN.
3. TRENCHED IN 100 mm (4").
4. CONTINUOUS BACKING/PLANKS ON IMPERVIOUS SURFACES.

GENERAL NOTES
1. DIKES SHALL BE PLACED IN A ROW WITH ENDS TIGHTLY ABUTTING THE ADJACENT DIKE.
2. THE FABRIC COVER AND SKIRT SHALL BE A CONTINUOUS WRAPPING OF GEOTEXTILE. THE SKIRT SHALL BE A CONTINUOUS EXTENSION OF THE FABRIC ON THE UPSTREAM FACE.
3. THE SKIRT SHALL BE WEIGHTED WITH A CONTINUOUS LAYER OF 75-125 mm (3-5") OPEN GRADED ROCK OR TOED-IN 150 mm (6") WITH MECHANICALLY COMPACTED MATERIAL. OTHERWISE, THE ENTIRE STRUCTURE SHALL BE TRENCHED IN 100 mm (4").
4. DIKES AND SKIRT SHALL BE SECURELY ANCHORED IN PLACE USING 150 mm (6") WIRE STAPLES ON 600 mm (2') CENTERS ON BOTH EDGES AND SKIRT, OR STAKE USING 10M (3/8 ") DIAMETER RE-BAR WITH TEE ENDS.
5. FILTER MATERIAL SHALL BE LAPPED OVER ENDS 150 mm (6") TO COVER DIKE TO DIKE JOINTS. JOINTS SHALL BE FASTENED WITH GALVANIZED SHOAT RINGS.
6. THE DIKE STRUCTURE SHALL BE MW40-150 mmX150 mm (6 GA. 6"X6") WIRE MESH, 450 mm (18") ON A SIDE.
7. INSPECTION SHALL BE MADE WEEKLY OR AFTER EACH RAINFALL EVENT AND REPAIR OR REPLACEMENT SHALL BE MADE PROMPTLY AS NEEDED BY THE CONTRACTOR.
8. ACCUMULATED SILT SHALL BE REMOVED WHEN IT REACHES A DEPTH OF 150 mm (6") AND DISPOSED OF IN A MANNER WHICH WILL NOT CAUSE ADDITIONAL SILTATION.
9. AFTER THE DEVELOPMENT SITE IS COMPLETLY STABILIZED. THE DIKES AND ANY REMAINING SILT SHALL BE REMOVED. SILT SHALL BE DISPOSED OF AS INDICATED IN GENERAL NOTE 8 ABOVE.

CITY OF AUSTIN WATERSHED PROTECTION DEPARTMENT	TRIANGULAR SEDIMENT FILTER DIKE		
RECORD COPY SIGNED BY J. PATRICK MURPHY 3/27/00 ADOPTED	THE ARCHITECT/ENGINEER ASSUMES RESPONSIBILITY FOR APPROPRIATE USE OF THIS STANDARD.	STANDARD NO.	628S

ENGINEERS NOTES:
MWM DETAIL
PERMEABLE PAVEMENT WITH PARTIAL EXFILTRATION TO SOIL SUBGRADE

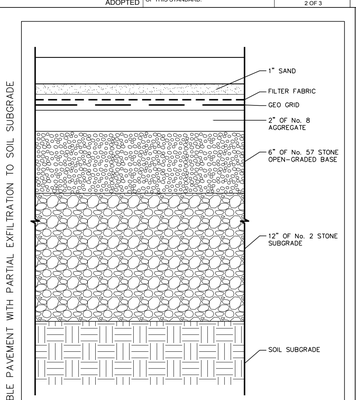

1	PERMEABLE PAVEMENT SIDEWALK	
C010	n.t.s.	1 OF 1

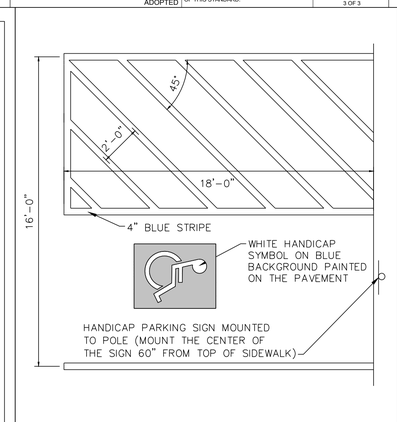

2	HANDICAP SPACE DETAIL	
C010	N.T.S.	

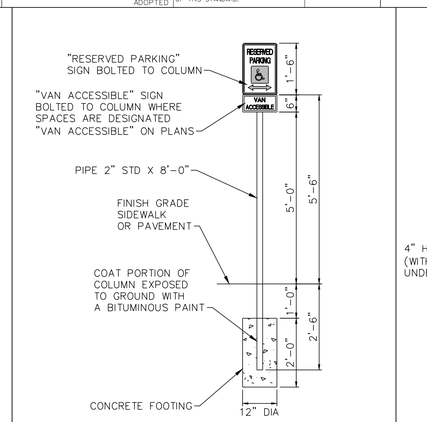

3	HANDICAP PARKING SIGN DETAIL	
C010	N.T.S.	

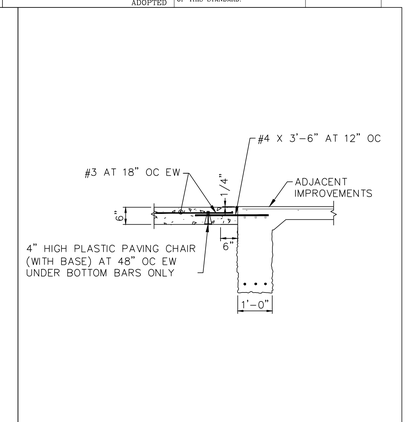

4	CONCRETE PAVEMENT SECTION/DOWEL	
C010	N.T.S.	

BID DOCUMENTS

STATE OF TEXAS
BRANDON EUGENE HAMMONS
87368
LICENSED PROFESSIONAL ENGINEER
MWM DesignGroup, Inc.
F-1416
8-30-16

mwm DesignGroup

305 East Huntland Drive
Suite 200
Austin, Texas 78752
p: 512.453.0767
f: 512.453.1734

TBAE FIRM REGISTRATION NO.: 1452
TBPE FIRM REGISTRATION NO.: F-1416
TBPLS FIRM REGISTRATION NO.: 10065600

NO.	DATE	DESCRIPTION	BY

0 1"
The bar above measures one inch on the original drawing. Adjust scales accordingly.

CIVIL DETAILS

CITY OF AUSTIN, AFD WOMEN'S LOCKER RM. ADDN., PHASE V
AND EMS VEHICLE BAY EXPANSIONS & GEN. RENOVATIONS
AUSTIN, TEXAS

PLOTTED: 9/7/2016
JOB NO: 023-79D

FS/EMS0
C010

File: Y:\023-79D_WomensLockerRooms\CAD\Fire & EMS Station D\sheets\FS EMS0-C010 DETAILS.dwg 24x36

ABBREVIATIONS

A, AMP	AMPERE
AFF	ABOVE FINISHED FLOOR
ADD	ADDENDUM
ADJ	ADJUSTABLE
A/C	AIR CONDITIONING
AH	AIR HANDLER UNIT
APPROX	APPROXIMATE
ARCH	ARCHITECT, ARCHITECTURAL
BLDG	BUILDING
BTU	BRITISH THERMAL UNIT
BS	BAR SINK
C	CONDUIT
CFH	CUBIC FOOT PER HOUR
CI	CAST IRON
CIR	CIRCLE
CMU	CONCRETE MASONRY UNIT
CO	CLEAN OUT
CO2	CARBON DIOXIDE
CONC	CONCRETE
COND	CONDENSATE DRAIN
CONST	CONSTRUCTION
CORR	CORRIDOR
CTR	CENTER
CU	CONDENSING UNIT
CW	COLD WATER
DB	DISHWASHER BOX
DEMO	DEMOLISH, DEMOLITION
DEPT	DEPARTMENT
DEL, DTL	DETAIL
DegF	DEGREE FAHRENHEIT
DIA	DIAMETER
DIM	DIMENSION
DISC	DISCONNECT
DIV	DIVISION
DN	DOWNSPOUT
DR	DOOR
DBL	DOUBLE
DW	DISHWASHER
DWG	DRAWING
EA	EACH
EF	EXHAUST FAN
EFF	EFFICIENCY
EER	ENERGY EFFICIENCY RATIO
ELEC	ELECTRIC, ELECTRICAL
EW	ELEVATOR SUMP PUMP WASTE
EWC	ELECTRIC WATER COOLER
EL	ELEVATION
ELEV	ELEVATOR
ENGR	ENGINEER
EQ	EQUAL
EQPT	EQUIPMENT
ETC	ETCETERA
ESP	EXTERNAL STATIC PRESSURE
EXIST	EXISTING
EXP	EXPOSED
EXT	EXTERIOR
EIFS	EXTERIOR INSULATION FINISH SYSTEM
FA	FIRE ALARM
FCO	FLOOR CLEAN OUT
FD	FLOOR DRAIN
FDC	FIRE DEPARTMENT CONNECTION
FE	FIRE EXTINGUISHER
FFL	FINISH FLOOR
FIN	FINISH(ED)
FIXT	FIXTURE
FLEX	FLEXIBLE
FL	FLOOR
FP	FIRE PROOF(ING)
FR	FIRE RATED
FT	FOOT, FEET
FU	FIXTURE UNIT
FV	FLUSH VALVE
G	GROUND
GA	GAUGE
GALV	GALVANIZED
GC	GENERAL CONTRACTOR
GH	GAS HEATER
GND	GROUND
GPM	GALLONS PER MINUTE
GPF	GALLONS PER FLUSH
GYP BD	GYPSUM BOARD
HTR	HEATER
HVAC	HEATING, VENTILATION & AIR CONDITIONING
HB	HOSE BIB
HP	HEAT PUMP UNIT, HORSEPOWER
HSPF	HEAT SEASONAL PERFORMANCE FACTOR
HW	HOT WATER
HWR	HOT WATER RETURN
HWRP	HOT WATER RE-CIRCULATION PUMP
IN	INLET
INFO	INFORMATION
INT	INTERIOR
INSUL	INSULATION
JAN	JANITOR
JB, J-BOX	JUNCTION BOX
K/O	KNOCK OUT
LAV	LAVATORY
L	LOUVER
LBS	POUND
LRE	LONG RADIUS ELBOW
MAX	MAXIMUM
MBH	THOUSAND BTU'S PER HOUR
MCA	MINIMUM CURRENT AMPACITY
MECH	MECHANICAL
MEZZ	MEZZANINE
MFR	MANUFACTURER
MH	MAN HOLE
MIN	MINIMUM
MISC	MISCELLANEOUS
MOCP	MAXIMUM OVERCURRENT PROTECTION
MS	MOP SINK
MTL	METAL
MULT	MULTIPLE
N/A, NA	NOT APPLICABLE
NAT	NATURAL
NOM	NOMINAL
N	NORTH
NIC	NOT IN CONTRACT
NTS	NOT TO SCALE
NO, #	NUMBER
OA, O/A	OUTSIDE AIR
OUT	OUTLET
PH, Ø	PHASE
PNL	PANEL
PSI	POUNDS PER SQUARE INCH
PVC	POLYVINYL CHLORIDE
QTY	QUANTITY
R, RAD	RADIUS
RA	RETURN AIR
RB	REFRIGERATOR BOX
RD	ROOF DRAIN
REBAR	REINFORCING BAR
REINF	REINFORCE, REINFORCING
REC	RECESSED
RECEP	RECEPTACLE
REQ(D)	REQUIRE(D)
RGS	RIGID GALVANIZED STEEL
RTU	ROOF TOP UNIT
RM	ROOM
S	SOUTH
SCH	SCHEDULE
SEER	SEASONAL ENERGY EFFICIENCY RATIO
SECT	SECTION
SF	SQUARE FEET
SPRINK	SPRINKLER
SHWR	SHOWER
SPEC	SPECIFICATION(S)
SQ	SQUARE
SS	SANITARY SEWER
SST	STAINLESS STEEL
STL	STEEL
SW	STORM WATER
TD	TROUGH DRAIN
TEL	TELEPHONE
TEMP	TEMPORARY
THRU	THROUGH
TOS	TOP OF STEEL
TX	TEXAS
TV	TELEVISION
TYP	TYPICAL
UG	UNDERGROUND
UL	UNDERWRITER LABORATORIES INC.
UH	UNIT HEATER
UR	URINAL
UTIL	UTILITY
V	VOLTAGE
VT	VENT
VOL	VOLUME
VTR	VENT THROUGH ROOF
WCV	WATER CLOSET
WCV-H	WATER CLOSET HANDICAPED
W/	WITH
WB	WET BULB
WH	WATER HEATER
WO, W/O	WITHOUT
WT	WEIGHT
WW	WASTE WATER

NOTE: NOT ALL SYMBOLS ON THIS LIST ARE APPLICABLE TO THIS PROJECT.

MECHANICAL SYMBOL LEGEND

- SUPPLY AIR GRILLE
- RETURN AIR GRILLE
- EXHAUST AIR GRILLE
- CO_2 — CARBON DIOXIDE SENSOR
- CO — CARBON MONOXIDE SENSOR
- T — TEMPERATURE SENSOR
- H — HUMIDITY SENSOR
- T — THERMOSTAT
- H — HUMIDISTAT
- SD — DUCT SMOKE DETECTOR
- F/SD — COMBINATION FIRE/SMOKE DAMPER
- FD — FIRE DAMPER
- FLEXIBLE DUCT WORK
- MANUAL DAMPER
- TAKEOFF WITH DAMPER
- TAKEOFF WITHOUT DAMPER
- SIDEWALL GRILLE, SUPPLY AIR
- SIDEWALL GRILLE, RETURN / EXHAUST AIR
- MECHANICAL EQUIPMENT, SEE SCHEDULES
- TRANSITION RECTANGULAR TO ROUND DUCT
- TURNINGVANE, 90 DEGREE ELBOW
- RADIUS ELBOW
- DOUBLE WALL SPIRAL DUCT
- CONNECT TO EXISTING
- XX/### — DIFFUSER TYPE / CFM
- ##/## — SIZE OF RECTANGULAR DUCT WHERE FIRST NUMBER INDICATES WIDTH AND SECOND NUMBER INDICATES VERTICAL DIMENSION
- ##Ø — DIAMETER OF ROUND DUCT

NOTE: NOT ALL SYMBOLS ON THIS LIST MAY BE APPLICABLE TO THIS PROJECT.

PIPING GENERAL NOTES

A. PROVIDE ALL MATERIALS AND EQUIPMENT AND PERFORM ALL LABOR REQUIRED TO INSTALL COMPLETE AND OPERABLE PIPING SYSTEMS AS INDICATED ON THE DRAWINGS, AND AS SPECIFIED AND REQUIRED BY CODE.

B. ELEVATIONS AS SHOWN ON THE DRAWINGS ARE TO THE BOTTOM OF ALL PRESSURE PIPING AND TO THE INVERT OF ALL GRAVITY PIPING UNLESS OTHERWISE NOTED.

C. MAINTAIN A MINIMUM OF 36" OF GROUND COVER OVER ALL UNDERGROUND HVAC PIPING (EDIT THE DEPTH OF THE GROUND COVER TO SUIT FROST LINE DEPTH AND PROJECT REQUIREMENTS).

D. UNLESS OTHERWISE NOTED, ALL CHILLED WATER AND HEATING WATER PIPING SHALL BE 3/4 IN. SIZE (EDIT SYSTEM TYPE OR PIPE SIZE TO SUIT PROJECT REQUIREMENTS).

E. PROVIDE AN AIR VENT AT THE HIGH POINT OF EACH DROP IN THE HEATING-WATER, CHILLED· WATER AND OTHER CLOSED-WATER PIPING SYSTEMS (EDIT SYSTEM TYPES TO SUIT THE PROJECT REQUIREMENTS). ALL PIPING SHALL GRADE TO LOW POINTS. PROVIDE HOSE END DRAIN VALVES AT THE BOTTOM OF ALL RISERS AND LOW POINTS.

F. UNLESS OTHERWISE NOTED, ALL PIPING IS OVERHEAD, TIGHT TO THE UNDERSIDE OF THE STRUCTURE OR SLAB, WITH SPACE FOR INSULATION IF REQUIRED.

G. INSTALL PIPING SO ALL VALVES, STRAINERS, UNIONS, TRAPS, FLANGES, AND OTHER APPURTENANCES REQUIRING ACCESS ARE ACCESSIBLE.

H. ALL VALVES SHALL BE INSTALLED SO THAT THE VALVE REMAINS IN SERVICE WHEN EQUIPMENT OR PIPING ON THE EQUIPMENT SIDE OF THE VALVE IS REMOVED.

I. ALL BALANCING VALVES AND BUTTERFLY VALVES SHALL BE PROVIDED WITH POSITION INDICATORS AND THE MAXIMUM ADJUSTABLE STOPS (MEMORY STOPS).

J. PROVIDE CHAINWHEEL OPERATORS FOR ALL VALVES IN EQUIPMENT ROOMS MOUNTED GREATER THAN 7'0" ABOVE FLOOR LEVEL; CHAIN SHALL EXTEND TO 7'0" ABOVE FLOOR LEVEL.

K. ALL VALVES (EXCEPT CONTROL VALVES) AND STRAINERS SHALL BE THE FULL SIZE OF THE PIPE BEFORE REDUCING IN SIZE TO MAKE CONNECTIONS TO EQUIPMENT AND CONTROLS.

L. INSTALL ALL PIPING WITHOUT FORCING OR SPRINGING.

M. ALL PIPING SHALL CLEAR DOORS AND WINDOWS.

N. ALL VALVES SHALL BE ADJUSTED FOR SMOOTH AND EASY OPERATION.

O. ALL PIPING WORK SHALL BE COORDINATED WITH ALL TRADES INVOLVED. OFFSETS IN PIPING AROUND OBSTRUCTIONS SHALL BE PROVIDED AT NO ADDITIONAL COST TO THE OWNER.

P. PROVIDE FLEXIBLE CONNECTIONS IN ALL PIPING SYSTEMS CONNECTED TO PUMPS, CHILLERS, COOLING TOWERS, AND OTHER EQUIPMENT WHICH REQUIRE VIBRATION ISOLATION EXCEPT WATER COILS. FLEXIBLE CONNECTIONS SHALL BE PROVIDED AS CLOSE TO THE EQUIPMENT AS POSSIBLE OR AS INDICATED ON THE DRAWINGS.

Q. SLOPE REFRIGERANT PIPING ONE PERCENT IN THE DIRECTION OF OIL RETURN. LIQUID LINES MAY BE INSTALLED LEVEL.

R. INSTALL HORIZONTAL REFRIGERANT HOT GAS DISCHARGE PIPING WITH 1/2" PER 1O FT. DOWNWARD SLOPE AWAY FROM THE COMPRESSOR.

S. INSTALL HORIZONTAL REFRIGERANT SUCTION LINES WITH 1 /2" PER 1O FT. DOWNWARD SLOPE TO THE COMPRESSOR, WITH NO LONG TRAPS OR DEAD ENDS THAT MAY CAUSE OIL TO SEPARATE FROM THE SUCTION GAS AND RETURN TO THE COMPRESSOR IN DAMAGING SLUGS.

T. PROVIDE LINE SIZE LIQUID INDICATORS IN THE MAIN LIQUID LINE LEAVING THE CONDENSER OR RECEIVER. INSTALL MOISTURE-LIQUID INDICATORS IN LIQUID LINES BETWEEN FILTER DRYERS AND THERMOSTATIC EXPANSION VALVES, AND IN LIQUID LINE TO RECEIVER.

U. PROVIDE A LINE SIZE STRAINER UPSTREAM OF EACH AUTOMATIC VALVE. PROVIDE A SHUTOFF VALVE ON EACH SIDE OF A STRAINER.

V. PROVIDE PERMANENT FILTER DRYERS IN LOW-TEMPERATURE SYSTEMS AND SYSTEMS USING HERMETIC COMPRESSORS.

W. PROVIDE REPLACEABLE CARTRIDGE FILTER DRYERS WITH A THREE-VALVE BYPASS ASSEMBLY FOR SOLENOID VALVES, ADJACENT TO RECEIVERS.

X. PROVIDE REFRIGERANT CHARGING VALVE CONNECTIONS IN THE LIQUID LINE BETWEEN THE RECEIVER SHUTOFF VALVE AND THE EXPANSION VALVE.

HVAC/ SHEET METAL GENERAL NOTES

A. PROVIDE ALL MATERIALS AND EQUIPMENT AND PERFORM ALL LABOR REQUIRED TO INSTALL COMPLETE AND OPERABLE HVAC SYSTEMS AS INDICATED ON THE DRAWINGS, AND AS SPECIFIED AND REQUIRED BY CODE.

B. CERTAIN ITEMS SUCH AS RISES AND DROPS IN DUCTWORK, ACCESS DOORS, VOLUME DAMPERS, ETC., ARE INDICATED ON THE CONTRACT DOCUMENT DRAWINGS FOR CLARITY FOR A SPECIFIC LOCATION REQUIREMENT AND SHALL NOT BE INTERPRETED AS THE EXTENT OF THE REQUIREMENTS FOR THESE ITEMS.

C. IN CORRIDORS WHERE CEILING SPEAKERS AND AIR DIFFUSERS ARE INDICATED BETWEEN THE SAME LIGHT FIXTURES, INSTALL BOTH DEVICES AT THE QUARTER POINTS BETWEEN THE SAME FIXTURE.

D. UNLESS OTHERWISE SHOWN, LOCATE ALL ROOM THERMOSTATS AND HUMIDISTATS 4'-0" (CENTERLINE) ABOVE THE FINISHED FLOOR AND NEXT TO THE LIGHT SWITCH WHERE APPLICABLE. NOTIFY THE ENGINEER OF ANY ROOMS WHERE THE PRECEDING LOCATION CANNOT BE MAINTAINED OR WHERE THERE IS A QUESTION ON LOCATION. CONFIRM EXACT LOCATION WITH OWNER BEFORE ROUGH-IN.

E. ALL DUCTWORK SHALL CLEAR DOORS AND WINDOWS.

F. ALL DUCTWORK DIMENSIONS, AS SHOWN ON THE DRAWINGS, ARE INTERNAL CLEAR DIMENSIONS AND DUCT SIZE SHALL BE INCREASED TO COMPENSATE FOR DUCT LINING THICKNESS.

G. UNLESS OTHERWISE NOTED OR SHOWN ON THE FLOOR PLAN, THE SUPPLY, EXHAUST, OUTSIDE AIR, AND RETURN AIR DUCTWORK SHALL BE RECTANGULAR GALVANIZED SHEET METAL DUCT.

H. PROVIDE ALL 90-DEGREE SQUARE ELBOWS WITH DOUBLE RADIUS TURNING VANES UNLESS OTHERWISE INDICATED. ELBOWS IN DISHWASHER, KITCHEN, AND LAUNDRY EXHAUSTS SHALL BE OF UNVANED SMOOTH RADIUS CONSTRUCTION WITH A RADIUS EQUAL TO 1-1/2 TIMES THE WIDTH OF THE DUCT. PROVIDE ACCESS DOORS UPSTREAM OF ALL ELBOWS WITH TURNING VANES.

I. COORDINATE DIFFUSER, REGISTER, AND GRILLE LOCATIONS WITH ARCHITECTURAL REFLECTED CEILING PLANS, LIGHTING, AND OTHER CEILING ITEMS AND MAKE MINOR DUCT MODIFICATIONS TO SUIT.

J. FIELD-ERECTED AND FACTORY-ASSEMBLED AIR HANDLING UNIT COILS SHALL BE ARRANGED FOR REMOVAL FROM THE UPSTREAM SIDE WITHOUT DISMANTLING SUPPORTS. PROVIDE GALVANIZED STRUCTURAL STEEL SUPPORTS FOR ALL COILS (EXCEPT THE LOWEST COIL) IN BANKS OVER TWO COILS HIGH TO PERMIT THE INDEPENDENT REMOVAL OF ANY COIL.

K. ALL AIR HANDLING UNITS SHALL OPERATE WITHOUT MOISTURE CARRYOVER.

L. LOCATE ALL MECHANICAL EQUIPMENT (SINGLE DUCT, DUAL DUCT, VARIABLE VOLUME, CONSTANT VOLUME AND FAN-POWERED BOXES, FAN COIL UNITS, CABINET HEATERS, UNIT HEATERS, UNIT VENTILATORS, COILS, STEAM HUMIDIFIERS, ETC.) FOR UNOBSTRUCTED ACCESS TO UNIT ACCESS PANELS, CONTROLS, AND VALVING.

M. FINNED TUBE RADIATION ENCLOSURES SHALL BE WALL-TO-WALL UNLESS OTHERWISE INDICATED.

N. PROVIDE FLEXIBLE CONNECTIONS IN ALL DUCTWORK SYSTEMS (SUPPLY, RETURN, AND EXHAUST) CONNECTED TO AIR HANDLING UNITS, FANS, AND OTHER EQUIPMENT THAT REQUIRE VIBRATION ISOLATION. FLEXIBLE CONNECTIONS SHALL BE PROVIDED AT THE POINT OF CONNECTION TO THE EQUIPMENT UNLESS OTHERWISE INDICATED.

O. UNLESS OTHERWISE NOTED, ALL DUCTWORK IS OVERHEAD, TIGHT TO THE UNDERSIDE OF THE STRUCTURE, WITH SPACE FOR INSULATION IF REQUIRED.

P. RUNS OF FLEXIBLE DUCT SHALL NOT EXCEED 5 FT. (EDIT THE MAXIMUM LENGTH OF THE FLEXIBLE DUCT TO SUIT THE PROJECT; 5 FT. MAXIMUM RECOMMENDED LENGTH, 8 FT. MAXIMUM LENGTH).

Q. ALL DUCTWORK SHALL BE COORDINATED WITH ALL TRADES INVOLVED. OFFSETS IN DUCTS, INCLUDING DIVIDED DUCTS AND TRANSITIONS AROUND OBSTRUCTIONS, SHALL BE PROVIDED AT NO ADDITIONAL COST TO THE OWNER.

R. PROVIDE ACCESS DOORS IN DUCTWORK TO PROVIDE ACCESS FOR ALL SMOKE DETECTORS, FIRE DAMPERS, SMOKE DAMPERS, VOLUME DAMPERS, HUMIDIFIERS, COILS, AND OTHER ITEMS LOCATED IN THE DUCTWORK THAT REQUIRE SERVICE AND/OR INSPECTION.

S. PROVIDE MANUAL BALANCING DAMPER IN EACH BRANCH DUCT TAKE-OFF. REFER TO THE BRANCH DUCT DETAILS ON THE DETAIL SHEET.

T. PROVIDE FIRE DAMPERS AT SUPPLY AIR AND RETURN AIR DUCT PENETRATIONS THRU RATED CEILING AND WALLS.

U. PROVIDE ACCESS DOORS IN DUCTWORK FOR THE OPERATION, ADJUSTMENT, AND MAINTENANCE OF ALL FANS, VALVES, AND MECHANICAL EQUIPMENT.

V. ALL DUCTS SHALL BE GROUNDED ACROSS FLEXIBLE CONNECTIONS WITH FLEXIBLE COPPER GROUNDING STRAPS. GROUNDING STRAPS SHALL BE BOLTED OR SOLDERED TO BOTH THE EQUIPMENT AND THE DUCT.

W. SMOKE DETECTORS SHALL BE FURNISHED AND WIRED BY THE ELECTRICAL CONTRACTOR. THE MECHANICAL CONTRACTOR SHALL BE RESPONSIBLE FOR MOUNTING THE SMOKE DETECTOR IN DUCTWORK AS SHOWN ON THE DRAWINGS AND IN ACCORDANCE WITH THE MANUFACTURER'S PRINTED INSTRUCTIONS.

X. TERMINATE GAS VENTS FOR UNIT HEATERS, WATER HEATERS, HIGH-PRESSURE PARTS WASHERS, HIGH-PRESSURE CLEANERS, AND OTHER GAS APPLIANCES A MINIMUM OF 30" ABOVE THE ROOF WITH RAIN CAP (EDIT ANY APPLIANCES AND THE HEIGHT ABOVE THE ROOF TO MEET THE CODE AND SUIT PROJECT REQUIREMENTS).

Y. SEE SPECIFICATIONS FOR DUCTWORK GAUGES, BRACING, HANGERS, AND OTHER REQUIREMENTS.

Z. LOCATION AND MOUNTING METHOD OF EXTERIOR LOUVERS ARE INDICATED FOR INFORMATION ONLY. COORDINATE WITH ARCHITECTURAL DRAWING FOR EXACT LOUVER LOCATIONS, MOUNTING, AND DETAILS.

ENCOTECH ENGINEERING CONSULTANTS
TBPE Firm 1141
8500 Bluffstone Cove, Suite B-103
Austin, Texas 78759 | 512.338.1101
Project No.: 14046.M.AUS

PROGRESS PRINT
RELEASED UNDER THE AUTHORITY OF: LYNN C. BROWN, P.E.
TEXAS REGISTRATION No: 55248
DATE: XX/XX/XXXX
(NOT INTENDED FOR BIDDING, PERMIT, OR CONSTRUCTION PURPOSES)

mwm Design Group
305 East Huntland Drive
Suite 200
Austin, Texas 78752
p: 512.453.0767
f: 512.453.1734
TBAE FIRM REGISTRATION NO.: 1452
TBPE FIRM REGISTRATION NO.: F-1416
TBPLS FIRM REGISTRATION NO.: 10065600

NO.	DATE	DESCRIPTION	BY
	09/25/2015	60%CD	
	03/04/2016	PROGRESS SET	
	08/05/2016	90%CD	

SCALE IS AS NOTED ON DRAWING

MECHANICAL ABBREVIATIONS, SYMBOLS, LEGEND, AND GENERAL NOTES

CITY OF AUSTIN, AFD WOMEN'S LOCKER RM. ADDN, PHASE V
AUSTIN/TRAVIS COUNTY EMS DEPARTMENT - VEHICLE BAY EXPANSION

PLOTTED: 8/30/2016
JOB NO: 023-79D

FS EMS
M000

File: J:\ACTIVE PROJECTS\MWM\15009.M.AUS — AFD WLR Ph 5\1- MEP\D-AutoCAD\FS-EMS\15009 FS-EMS-M000 Mech General Notes.dwg 24x36

ABBREVIATIONS

A, AMP	AMPERE
AFF	ABOVE FINISHED FLOOR
ADD	ADDENDUM
ADJ	ADJUSTABLE
A/C	AIR CONDITIONING
AH	AIR HANDLER UNIT
APPROX	APPROXIMATE
ARCH	ARCHITECT, ARCHITECTURAL
BLDG	BUILDING
BTU	BRITISH THERMAL UNIT
BS	BAR SINK
C	CONDUIT
CFH	CUBIC FOOT PER HOUR
CI	CAST IRON
CIR	CIRCLE
CMU	CONCRETE MASONRY UNIT
CO	CLEAN OUT
CO2	CARBON DIOXIDE
CONC	CONCRETE
COND	CONDENSATE DRAIN
CONST	CONSTRUCTION
CORR	CORRIDOR
CTR	CENTER
CU	CONDENSING UNIT
CW	COLD WATER
DB	DISHWASHER BOX
DEMO	DEMOUSH, DEMOLITION
DEPT	DEPARTMENT
DEL, DTL	DETAIL
DegF	DEGREE FAHRENHEIT
DIA	DIAMETER
DIM	DIMENSION
DISC	DISCONNECT
DIV	DIVISION
DN	DOWNSPOUT
DR	DOOR
DBL	DOUBLE
DW	DISHWASHER
DWG	DRAWING
EA	EACH
EF	EXHAUST FAN
EFF	EFFICIENCY
EER	ENERGY EFFICIENCY RATIO
ELEC	ELECTRIC, ELECTRICAL
EW	ELEVATOR SUMP PUMP WASTE
EWC	ELECTRIC WATER COOLER
EL	ELEVATION
ELEV	ELEVATOR
ENGR	ENGINEER
EQ	EQUAL
EQPT	EQUIPMENT
ETC	ETCETERA
ESP	EXTERNAL STATIC PRESSURE
EXIST	EXISTING
EXP	EXPOSED
EXT	EXTERIOR
EIFS	EXTERIOR INSULATION FINISH SYSTEM
FA	FIRE ALARM
FCO	FLOOR CLEAN OUT
FD	FLOOR DRAIN
FDC	FIRE DEPARTMENT CONNECTION
FE	FIRE EXTINGUISHER
FFL	FINISH FLOOR
FIN	FINISH(ED)
FIXT	FIXTURE
FLEX	FLEXIBLE
FL	FLOOR
FP	FIRE PROOF(ING)
FR	FIRE RATED
FT	FOOT, FEET
FU	FIXTURE UNIT
FV	FLUSH VALVE
G	GROUND
GA	GAUGE
GALV	GALVANIZED
GC	GENERAL CONTRACTOR
GH	GAS HEATER
GND	GROUND
GPM	GALLONS PER MINUTE
GPF	GALLONS PER FLUSH
GYP BD	GYPSUM BOARD
HTR	HEATER
HVAC	HEATING, VENTILATION & AIR CONDITIONING
HB	HOSE BIB
HP	HEAT PUMP UNIT, HORSEPOWER
HSPF	HEAT SEASONAL PERFORMANCE FACTOR
HW	HOT WATER
HWR	HOT WATER RETURN
HWRP	HOT WATER RE-CIRCULATION PUMP
IN	INLET
INFO	INFORMATION
INT	INTERIOR
INSUL	INSULATION
JAN	JANITOR
JB, J-BOX	JUNCTION BOX
K/O	KNOCK OUT
LAV	LAVATORY
L	LOUVER
LBS	POUND
LRE	LONG RADIUS ELBOW
MAX	MAXIMUM
MBH	THOUSAND BTU'S PER HOUR
MCA	MINIMUM CURRENT AMPACITY
MECH	MECHANICAL
MEZZ	MEZZANINE
MFR	MANUFACTURER
MH	MAN HOLE
MIN	MINIMUM
MISC	MISCELLANEOUS
MOCP	MAXIMUM OVERCURRENT PROTECTION
MS	MOP SINK
MTL	METAL
MULT	MULTIPLE
N/A, NA	NOT APPLICABLE
NAT	NATURAL
NOM	NOMINAL
N	NORTH
NIC	NOT IN CONTRACT
NTS	NOT TO SCALE
NO, #	NUMBER
OA, O/A	OUTSIDE AIR
OUT	OUTLET
PH, Ø	PHASE
PNL	PANEL
PSI	POUNDS PER SQUARE INCH
PVC	POLYVINYL CHLORIDE
QTY	QUANTITY
R, RAD	RADIUS
RA	RETURN AIR
RB	REFRIGERATOR BOX
RD	ROOF DRAIN
REBAR	REINFORCING BAR
REINF	REINFORCE, REINFORCING
REC	RECESSED
RECEP	RECEPTACLE
REQ(D)	REQUIRE(D)
RGS	RIGID GALVANIZED STEEL
RTU	ROOF TOP UNIT
RM	ROOM
S	SOUTH
SCH	SCHEDULE
SEER	SEASONAL ENERGY EFFICIENCY RATIO
SECT	SECTION
SF	SQUARE FEET
SPRINK	SPRINKLER
SHWR	SHOWER
SPEC	SPECIFICATION(S)
SQ	SQUARE
SS	SANITARY SEWER
SST	STAINLESS STEEL
STL	STEEL
SW	STORM WATER
TD	TROUGH DRAIN
TEL	TELEPHONE
TEMP	TEMPORARY
THRU	THROUGH
TOS	TOP OF STEEL
TX	TEXAS
TV	TELEVISION
TYP	TYPICAL
UG	UNDERGROUND
UL	UNDERWRITER LABORATORIES INC.
UH	UNIT HEATER
UR	URINAL
UTIL	UTILITY
V	VOLTAGE
VT	VENT
VOL	VOLUME
VTR	VENT THROUGH ROOF
WCV	WATER CLOSET
WCV-H	WATER CLOSET HANDICAPED
W/	WITH
WB	WET BULB
WH	WATER HEATER
WO, W/O	WITHOUT
WT	WEIGHT
WW	WASTE WATER

NOTE: NOT ALL SYMBOLS ON THIS LIST ARE APPLICABLE TO THIS PROJECT.

PLUMBING SYMBOLS LIST

- COLD WATER PIPING
- HOT WATER PIPING
- HOT WATER RETURN PIPING
- WASTE WATER PIPING
- VENT PIPING
- STORM DRAIN PIPING
- SHUT OFF VALVE
- ONE-WAY VALVE
- BALL VALVE
- FCO • FLOOR CLEAN OUT - SEE SCHEDULE
- EXT DBL CO • DOUBLE EXTERIOR CLEAN OUT
- CO • CLEAN OUT
- WCO • WALL CLEAN OUT
- FD • FLOOR DRAIN
- • AIR LOCK
- HB • HOSE BIBB
- FS • FLOOR SINK
- • SHUT OFF VALVE
- • VENT DRAIN TURN UP \ DOWN
- • THROUGH
- • SOLID
- • SHUT OFF VALVE
- • ONE WAY VALVE
- • INSPECTION PORTAL
- • RISER COLD WATER GENERAL
- • RISER COLD WATER LAVATORY
- • RISER COLD WATER HOSE BIB
- • RISER WASTE WATER GENERAL
- • RISER WASTE WATER LAVATORY
- • RISER WASTE WATER FLOOR DRAIN
- • RISER WASTE WATER FLOOR SINK
- • RISER WASTE WATER HIGH DENSITY
- • RISER WASTE WATER CLEAN OUT
- • RISER WASTE WATER DBL CLEAN OUT
- • RISER WASTE WATER VENT THROUGH ROOF
- • RISER WASTE WATER INSPECTION POINT

NOTE: NOT ALL SYMBOLS ON THIS LIST ARE APPLICABLE TO THIS PROJECT.

PLUMBING GENERAL NOTES

A. PROVIDE ALL MATERIALS AND EQUIPMENT AND PERFORM ALL LABOR REQUIRED TO INSTALL COMPLETE AND OPERABLE PLUMBING SYSTEMS AS INDICATED ON THE DRAWINGS, AND AS SPECIFIED AND REQUIRED BY CODE.

B. RUN ALL SOIL WASTE AND VENT PIPING WITH 2 PERCENT MINIMUM GRADE UNLESS OTHERWISE NOTED.

C. ELEVATIONS AS SHOWN ON THE DRAWINGS ARE TO THE BOTTOM OF ALL PRESSURE PIPING AND TO THE INVERT OF ALL GRAVITY PIPING.

D. ADJUST SEWER INVERTS TO KEEP THE TOPS OF PIPES IN LINE WHERE THE PIPE'S SIZE CHANGES.

E. PROVIDE SHUTOFF VALVES IN ALL DOMESTIC WATER PIPING SYSTEM BRANCHES.

F. UNLESS OTHERWISE NOTED, ALL PIPING IS OVERHEAD, TIGHT TO THE UNDERSIDE OF THE SLAB, WITH SPACE FOR INSULATION IF REQUIRED.

G. INSTALL PIPING SO ALL VALVES, STRAINERS, UNIONS, TRAPS, FLANGES, AND OTHER APPURTENANCES REQUIRING ACCESS ARE ACCESSIBLE.

H. WHERE DOMESTIC COLD WATER PIPING DROPS INTO A PIPE CHASE, THE SIZE SHOWN FOR THE PIPE DROPS SHALL BE USED TO THE LAST FIXTURE.

I. INSTALL ALL PIPING WITHOUT FORCING OR SPRINGING.

J. ALL PIPING SHALL CLEAR DOORS AND WINDOWS.

K. ALL PIPING SHALL GRADE TO LOW POINTS. PROVIDE HOSE END DRAIN VALVES AT THE BOTTOM OF ALL RISERS AND LOW POINTS.

L. UNIONS AND/OR FLANGES SHALL BE INSTALLED AT EACH PIECE OF EQUIPMENT, IN BYPASSES, AND IN LONG PIPING RUNS (100 FT. OR MORE) TO PERMIT DISASSEMBLY FOR ALTERATION AND REPAIRS.

M. ALL VALVES SHALL BE ADJUSTED FOR SMOOTH AND EASY OPERATION.

N. ALL VALVES AND STRAINERS SHALL BE THE FULL SIZE OF THE PIPE BEFORE REDUCING THE SIZE TO MAKE CONNECTIONS TO THE EQUIPMENT.

O. PROVIDE ALL PLUMBING FIXTURES AND EQUIPMENT WITH ACCESSIBLE STOPS.

P. UNLESS OTHERWISE NOTED, DRAINS SHALL BE INSTALLED AT THE LOW POINT OF FLOORS, ETC.

Q. PROVIDE CLEANOUTS IN SANITARY DRAINAGE SYSTEMS AT ENDS OF RUNS, AT CHANGES IN DIRECTION, NEAR THE BASE OF STACKS, EVERY 50 FT. IN HORIZONTAL RUNS AND ELSEWHERE AS INDICATED (EDIT HORIZONTAL CLEANOUT SPACING TO SUIT CODE AND PROJECT REQUIREMENTS).

R. ALL CLEANOUTS SHALL BE THE FULL SIZE OF THE PIPE FOR PIPE SIZES 6 IN. AND SMALLER, AND SHALL BE 6 IN. FOR PIPE SIZES LARGER THAN 6 IN.

S. ALL BALANCING VALVES AND BUTTERFLY VALVES SHALL BE PROVIDED WITH POSITION INDICATORS AND MAXIMUM ADJUSTABLE STOPS (MEMORY STOPS).

T. ALL VALVES SHALL BE INSTALLED SO THE VALVE REMAINS IN SERVICE WHEN THE EQUIPMENT OR PIPING ON THE EQUIPMENT SIDE OF THE VALVE IS REMOVED.

U. ALL PIPING WORK SHALL BE COORDINATED WITH ALL TRADES INVOLVED. OFFSETS IN PIPING AROUND OBSTRUCTIONS SHALL BE PROVIDED AT NO ADDITIONAL COST TO THE OWNER.

V. EXISTING STRUCTURE: CONTRACTOR SHALL DETERMINE IF EXISTING STRUCTURAL SYSTEM WILL BE AFFECTED BY NEW PLUMBING WORK PRIOR TO ANY CUTTING, DRILLING OR CORING. WHERE IT IS DEEMED NECESSARY FOR EXISTING SLAB OR BEAM TO BE DISTURBED FOR INSTALLATION OF NEW UNDERGROUND PIPING, COORDINATE WITH GENERAL CONTRACTOR FOR X-RAYING. AFTER X-RAYING IS COMPLETE, COORDINATE WITH ARCHITECT, COA PERSONNEL, AND STRUCTURAL ENGINEER FOR DIRECTION/APPROVAL. DO NOT CUT OR PENETRATE STRUCTURAL ELEMENTS WITHOUT PRIOR APPROVAL. LOCATION OF PIPING IS APPROXIMATE AND MAY BE ADJUSTED DUE TO EXISTING STRUCTURAL CONDITIONS.

W. EXISTING CONDITIONS: LOCATIONS OF EXISTING PLUMBING PIPING, EQUIPMENT, AND CONNECTION POINTS ARE APPROXIMATE AND ARE BASED ON SITE OBSERVATIONS AND EXISTING DRAWINGS. CONTRACTOR SHALL FIELD-VERIFY SIZE, LOCATION AND BURIAL DEPTH OF EXISTING PLUMBING PIPING PRIOR TO STARTING CONSTRUCTION.

X. CONSTRUCTION SCHEDULE: EXISTING FACILITY WILL BE OCCUPIED BY AFD/EMS STAFF AT ALL TIMES. CONTINUED ACCESS TO OPERATIONAL ELECTRICAL AND PLUMBING FACILITIES WILL BE REQUIRED. ALL OUTAGES REQUIRE PRIOR APPROVAL AND MUST BE SCHEDULED AT LEAST 7 DAYS BEFORE EXECUTION. CONTRACTOR SHALL PLAN EXECUTION OF WORK WITH MINIMUM DOWN-TIME TO AFD/EMS STAFF, AND PROVIDE DETAILED CONSTRUCTION SCHEDULE INDICATING ANY PROPOSED OUTAGES, TO COA PROJECT MANAGER FOR APPROVAL.

FIRE PROTECTION NOTES

A. PROVIDE ALL MATERIALS AND EQUIPMENT AND PERFORM ALL LABOR REQUIRED TO INSTALL COMPLETE AND OPERATE FIRE PROTECTION SYSTEMS, AS SPECIFIED, AND IN COMPLIANCE WITH THE STANDARDS OF THE NATIONAL FIRE PROTECTION ASSOCIATION, INDUSTRIAL RISK INSURERS, FACTORY MUTUAL, AND ALL STATE AND LOCAL REGULATIONS.

B. THE ENTIRE BUILDING SPRINKLER SYSTEM SHALL BE HYDRAULICALLY DESIGNED UNLESS OTHERWISE NOTED ON THE DRAWINGS. HEAD SPACING IN GENERAL AND WATER QUANTITY SHALL BE BASED ON NFPA 409 and NFPA 13.

C. THE ENTIRE BUILDING SPRINKLER SYSTEM SHALL BE PIPE SCHEDULE DESIGNED UNLESS OTHERWISE NOTED ON THE DRAWINGS. HEAD SPACING IN GENERAL AND WATER QUANTITY SHALL BE BASED ON NFPA 13

D. PROVIDE AN AUTOMATIC WET PIPE SPRINKLER SYSTEM THROUGHOUT THE ENTIRE BUILDING, COMPLETE IN ALL RESPECTS AND READY FOR OPERATION INCLUDING ALL TEST AND DRAIN LINES, PRESSURE GAUGES, HANGERS AND SUPPORTS, SIGNS, AND OTHER STANDARD APPURTENANCES. WIRING SHALL BE PROVIDED UNDER THE ELECTRICAL DIVISION.

E. ALL SHUTOFF VALVES IN THE SPRINKLER, STANDPIPE, AND COMBINED SYSTEMS SHALL BE APPROVED, INDICATING TYPE.

F. COORDINATE SPRINKLER HEAD LOCATIONS WITH THE ARCHITECTURAL CEILING PLANS, LIGHTING, BUILDING STRUCTURE AND OTHER CEILING ITEMS, AND MAKE MINOR MODIFICATIONS FOR SUITABILITY PURPOSES.

ENCOTECH ENGINEERING CONSULTANTS
TBPE Firm 1141 | 8500 Bluffstone Cove, Suite B-103 Austin, Texas 78759 | 512.338.1101
Project No.: 14046.M.AUS

STATE OF TEXAS
LYNN C. BROWN
55248
LICENSED PROFESSIONAL ENGINEER
09/09/2016

mwm Design Group
305 East Huntland Drive
Suite 200
Austin, Texas 78752
p: 512.453.0767
f: 512.453.1734
TBAE FIRM REGISTRATION NO.: 1452
TBPE FIRM REGISTRATION NO.: F-1416
TBPLS FIRM REGISTRATION NO.: 10065600

NO.	DATE	DESCRIPTION	BY

SCALE IS AS NOTED ON DRAWING

PLUMBING ABBREVIATIONS, SYMBOLS, LEGEND, AND GENERAL NOTES

CITY OF AUSTIN, AFD WOMEN'S LOCKER RM. ADDN, PHASE V
AUSTIN/TRAVIS COUNTY EMS DEPARTMENT - VEHICLE BAY EXPANSION

PLOTTED: 9/7/2016
JOB NO: 023-79D

FS EMS
P000

File: I:\ACTIVE PROJECTS\MWM\15009.M.AUS - AFD WLR Ph 5\1. MEP\D-AutoCAD\FS-EMS\15009 FS-EMS P000 Plumb General Notes.dwg 24x36

SP-xx-xxxxx

ABBREVIATIONS

A, AMP	AMPERE
AFF	ABOVE FINISHED FLOOR
ADD	ADDENDUM
ADJ	ADJUSTABLE
A/C	AIR CONDITIONING
AH	AIR HANDLER UNIT
APPROX	APPROXIMATE
ARCH	ARCHITECT, ARCHITECTURAL
BLDG	BUILDING
BTU	BRITISH THERMAL UNIT
BS	BAR SINK
C	CONDUIT
CFH	CUBIC FOOT PER HOUR
CI	CAST IRON
CIR	CIRCLE
CMU	CONCRETE MASONRY UNIT
CO	CLEAN OUT
CO2	CARBON DIOXIDE
CONC	CONCRETE
COND	CONDENSATE DRAIN
CONST	CONSTRUCTION
CORR	CORRIDOR
CTR	CENTER
CU	CONDENSING UNIT
CW	COLD WATER
DB	DISHWASHER BOX
DEMO	DEMOLISH, DEMOLITION
DEPT	DEPARTMENT
DEL, DTL	DETAIL
DegF	DEGREE FAHRENHEIT
DIA	DIAMETER
DIM	DIMENSION
DISC	DISCONNECT
DIV	DIVISION
DN	DOWNSPOUT
DR	DOOR
DBL	DOUBLE
DW	DISHWASHER
DWG	DRAWING
EA	EACH
EF	EXHAUST FAN
EFF	EFFICIENCY
EER	ENERGY EFFICIENCY RATIO
ELEC	ELECTRIC, ELECTRICAL
EW	ELEVATOR SUMP PUMP WASTE
EWC	ELECTRIC WATER COOLER
EL	ELEVATION
ELEV	ELEVATOR
ENGR	ENGINEER
EQ	EQUAL
EQPT	EQUIPMENT
ETC	ETCETERA
ESP	EXTERNAL STATIC PRESSURE
EXIST	EXISTING
EXP	EXPOSED
EXT	EXTERIOR
EIFS	EXTERIOR INSULATION FINISH SYSTEM
FA	FIRE ALARM
FCO	FLOOR CLEAN OUT
FD	FLOOR DRAIN
FDC	FIRE DEPARTMENT CONNECTION
FE	FIRE EXTINGUISHER
FFL	FINISH FLOOR
FIN	FINISH(ED)
FIXT	FIXTURE
FLEX	FLEXIBLE
FL	FLOOR
FP	FIRE PROOF(ING)
FR	FIRE RATED
FT	FOOT, FEET
FU	FIXTURE UNIT
FV	FLUSH VALVE
G	GROUND
GA	GAUGE
GALV	GALVANIZED
GC	GENERAL CONTRACTOR
GH	GAS HEATER
GND	GROUND
GPM	GALLONS PER MINUTE
GPF	GALLONS PER FLUSH
GYP BD	GYPSUM BOARD
HTR	HEATER
HVAC	HEATING, VENTILATION & AIR CONDITIONING
HB	HOSE BIB
HP	HEAT PUMP UNIT, HORSEPOWER
HSPF	HEAT SEASONAL PERFORMANCE FACTOR
HW	HOT WATER
HWR	HOT WATER RETURN
HWRP	HOT WATER RE-CIRCULATION PUMP
IN	INLET
INFO	INFORMATION
INT	INTERIOR
INSUL	INSULATION
JAN	JANITOR
JB, J-BOX	JUNCTION BOX
K/O	KNOCK OUT
LAV	LAVATORY
L	LOUVER
LBS	POUND
LRE	LONG RADIUS ELBOW
MAX	MAXIMUM
MBH	THOUSAND BTU'S PER HOUR
MCA	MINIMUM CURRENT AMPACITY
MECH	MECHANICAL
MEZZ	MEZZANINE
MFR	MANUFACTURER
MH	MAN HOLE
MIN	MINIMUM
MISC	MISCELLANEOUS
MOCP	MAXIMUM OVERCURRENT PROTECTION
MS	MOP SINK
MTL	METAL
MULT	MULTIPLE
N/A, NA	NOT APPLICABLE
NAT	NATURAL
NOM	NOMINAL
N	NORTH
NIC	NOT IN CONTRACT
NTS	NOT TO SCALE
NO, #	NUMBER
OA, O/A	OUTSIDE AIR
OUT	OUTLET
PH, Ø	PHASE
PNL	PANEL
PSI	POUNDS PER SQUARE INCH
PVC	POLYVINYL CHLORIDE
QTY	QUANTITY
R, RAD	RADIUS
RA	RETURN AIR
RB	REFRIGERATOR BOX
RD	ROOF DRAIN
REBAR	REINFORCING BAR
REINF	REINFORCE, REINFORCING
REC	RECESSED
RECEP	RECEPTACLE
REQ(D)	REQUIRE(D)
RGS	RIGID GALVANIZED STEEL
RTU	ROOF TOP UNIT
RM	ROOM
S	SOUTH
SCH	SCHEDULE
SEER	SEASONAL ENERGY EFFICIENCY RATIO
SECT	SECTION
SF	SQUARE FEET
SPRINK	SPRINKLER
SHWR	SHOWER
SPEC	SPECIFICATION(S)
SQ	SQUARE
SS	SANITARY SEWER
SST	STAINLESS STEEL
STL	STEEL
SW	STORM WATER
TD	TROUGH DRAIN
TEL	TELEPHONE
TEMP	TEMPORARY
THRU	THROUGH
TOS	TOP OF STEEL
TX	TEXAS
TV	TELEVISION
TYP	TYPICAL
UG	UNDERGROUND
UL	UNDERWRITER LABORATORIES INC.
UH	UNIT HEATER
UR	URINAL
UTIL	UTILITY
V	VOLTAGE
VT	VENT
VOL	VOLUME
VTR	VENT THROUGH ROOF
WCV	WATER CLOSET
WCV-H	WATER CLOSET HANDICAPED
W/	WITH
WB	WET BULB
WH	WATER HEATER
WO, W/O	WITHOUT
WT	WEIGHT
WW	WASTE WATER

NOTE: NOT ALL SYMBOLS ON THIS LIST ARE APPLICABLE TO THIS PROJECT.

ELECTRICAL SYMBOL LIST

- SIMPLEX CONVENIENCE OUTLET TO BE MOUNTED AT 15" A.F.F. TO CENTER OR AS NOTED
- DUPLEX RECEPTACLE TO BE MOUNTED AT 15" A.F.F. TO CENTER OR AS NOTED
- 208V RECEPTACLE TO BE MOUNTED AT 15" A.F.F. TO CENTER OR AS NOTED
- QUADPLEX RECEPTACLE TO BE MOUNTED AT 15" A.F.F. TO CENTER OR AS NOTED
- DUPLEX RECEPTACLE IN RECESSED FLOOR BOX MOUNTED FLUSH WITH FLOOR
- QUADPLEX RECEPTACLE IN RECESSED FLOOR BOX MOUNTED FLUSH WITH FLOOR
- TELEPHONE OUTLET AT 15" A.F.F. TO CENTER OR AS NOTED
  FURNISH 3/4" CONDUIT WITH 2 PULLSTRINGS TO ABOVE CEILING OR AS NOTED
- DATA OUTLET AT 15" A.F.F. TO CENTER OR AS NOTED
  FURNISH 3/4" CONDUIT WITH 2 PULLSTRINGS TO ABOVE CEILING OR AS NOTED
- COMBINATION TELEPHONE AND DATA OUTLET AT 15" A.F.F. TO CENTER OR AS NOTED
  FURNISH 3/4" CONDUIT WITH 2 PULLSTRINGS TO ABOVE CEILING OR AS NOTED
- COMBINATION TELEPHONE AND DATA OUTLET AT IN RECESSED FLOOR BOX MOUNTED FLUSH WITH FLOOR.
  FURNISH 3/4" CONDUIT WITH 2 PULLSTRINGS TO ABOVE CEILING OR AS NOTED
- $ SINGLE POLE LIGHT SWITCH TO BE MOUNTED AT 44" A.F.F. TO CENTER OR AS NOTED
- $3 THREE WAY LIGHT SWITCH TO BE MOUNTED AT 44" A.F.F. TO CENTER OR AS NOTED
- $D SINGLE POLE DIMMER SWITCH TO BE MOUNTED AT 44" A.F.F. TO CENTER OR AS NOTED
  COORDINATE SWITCH RATING WITH CONNECTED LIGHTING WATTAGE
- $M MOTION DETECTOR SWITCH TO BE MOUNTED AT 44" A.F.F. TO CENTER OR AS NOTED
- $3M THREE WAY MOTION DETECTOR SWITCH TO BE MOUNTED AT 44" A.F.F. TO CENTER OR AS NOTED
- $MR MOTOR-RATED SWITCH TO BE MOUNTED AT 44" A.F.F. TO CENTER OR AS NOTED
- POWER POLE, HUBBELL MODEL PPOA WITH DIVIDER, OR APPROVED EQUIVALENT
- GFCI GROUND FAULT CIRCUIT INTERRUPTER
- WP WEATHERPROOF ENCLOSURE, WEATHER-RESISTANT TYPE RECEPTACLE WITH GROUND FAULT CIRCUIT INTERRUPTER
- TMB NEW 3/4"x4'x8' PLYWOOD TELEPHONE MOUNTING BOARD WITH #6 (Cu) GROUND AND DEDICATED DUPLEX CONVININENCE OUTLETS AS SHOWN ON PLANS. FURNISH IN ACCORDANCE WITH TELEPHONE COMPANY REQUIREMENTS.
- ELECTRICAL PANELBOARD
- INDICATED CIRCUIT IN CONDUIT RUN IN FLOOR OR UNDERGROUND
- INDICATED CIRCUIT IN CONDUIT CONCEALED IN WALLS OR ABOVE CEILING.
- ROUND J-BOX
- SQUARE J-BOX
- MOTOR
- DISCONNECT
- FUSED DISCONNECT
- MOLDED CASE SWITCH

VOLTAGE DROP TABLE

	208V, 1Ø	120V, 1Ø
#12 AWG	0 - 90 FT	0 - 50 FT
#10 AWG	91 - 150 FT	51 - 90 FT
#8 AWG	151 - 250 FT	91 - 140 FT
#6 AWG	251 - 390 FT	141 - 225 FT
#4 AWG	391 - 630 FT	226 - 300 FT

(VERIFY MINIMUM VOLTAGE DROP AND CONDUIT SIZE, PER N.E.C.)

ELECTRICAL GENERAL NOTES

A. ELECTRICAL CONTRACTOR SHALL VISIT THE PREMISES AND BECOME THOROUGHLY FAMILIAR WITH ALL DETAILS OF THE WORK AND WORKING CONDITIONS, TO VERIFY ALL DIMENSIONS IN THE FIELD.

B. LOCATION OF DEVICES ON ELECTRICAL DRAWINGS IS DIAGRAMMATIC. SEE ARCHITECTURAL DRAWINGS FOR DIMENSIONS AND LOCATIONS OF DEVICES EXPOSED TO VIEW.

C. ELECTRICAL CONTRACTOR SHALL VISIT SITE AND SHALL BECOME FAMILIAR WITH SITE CONDITIONS AND VERIFY WORK TO BE INSTALLED PRIOR TO SUBMITTING A BID: BY SUBMITTING A BID, CONTRACTOR CERTIFIES FAMILIARITY WITH EXISTING JOBSITE CONDITIONS PRIOR TO COMMENCEMENT OF WORK; FAILURE TO DO SO WILL NOT BE CAUSE FOR EXTRA WORK COMPENSATION.

D. ALL WORK SHALL CONFORM TO THE NATIONAL ELECTRICAL CODE, INTERNATIONAL BUILDING CODE, LOCAL CODE AND ORDINANCES AS ADOPTED BY THE AUTHORITY HAVING JURISDICTION.

E. ALL MATERIAL SHALL BE NEW AND BEAR A U.L. LABEL.

F. ELECTRICAL CONTRACTOR SHALL COORDINATE WITH OTHER TRADES AND WITH UTILITY COMPANY FOR TIMELY INSTALLATION OF WORK WHILE SPACE IS ACCESSIBLE. CUTTING AND PATCHING CAUSED BY FAILURE TO COORDINATE WITH OTHER TRADES WILL BE PERFORMED AT NO EXTRA COST TO THE OWNER AND COORDINATED WITH THE OWNER.

G. FURNISH ALL MATERIAL, LABOR, EQUIPMENT AND PERMITS TO PROVIDE A COMPLETE ELECTRICAL SYSTEM CONSISTENT WITH THE INTENT OF THE DRAWINGS.

H. SUBMIT COMPLETE DESCRIPTIVE DATA OF EQUIPMENT AND DEVICES TO ARCHITECT & ENGINEER FOR APPROVAL PRIOR TO ORDERING EQUIPMENT. OBTAIN OWNERS' APPROVAL ON ALL EQUIPMENT, DEVICE, ETC. INDICATED OR NOT ON DRAWINGS. COORDINATE LOCATION AND INSTALLATION OF OWNER-FURNISHED ITEMS AFFECTING THIS TRADE.

I. NOTIFY ENGINEER OF ANY DISCOVERED OR DISCLOSED CONDITIONS THAT DIFFER FROM THE CONTRACT DOCUMENTS.

J. INSTALLATIONS FOUND NOT COMPLYING WITH SPECIFIED WORKMANSHIP PRACTICES SHALL BE REVISED TO COMPLY AT NO ADDITIONAL COST TO THE OWNER.

K. ELECTRICAL CONTRACTOR SHALL PERFORM WORK IN A SAFE MANNER AND MAINTAIN ADEQUATE PROTECTION OF WORK, THE OWNER'S PROPERTY AND ALL PERSONS ON SITE FROM INJURY, DAMAGE OR LOSS.

L. FIELD LOCATE STRUCTURAL MEMBERS TO COORDINATE LOCATION OF PANELS, CONDUITS AND DEVICES. CAREFULLY COORDINATE INSTALLATION SCHEDULES WITH OTHER TRADES AND GENERAL CONTRACTOR.

M. ENTIRE ELECTRICAL SYSTEM SHALL BE GROUNDED ACCORDING TO NATIONAL ELECTRICAL CODE REQUIREMENTS.

N. MINIMUM WIRE SIZE FOR LIGHTING AND BRANCH CIRCUITS SHALL BE #12 THHN/THWN COPPER.

O. FEEDER CONDUCTORS, BRANCH WIRING AND PANEL BUSS AND GROUND BUSS SHALL BE COPPER.

P. WIRING DEVICES THAT OCCUR TOGETHER SHALL BE GANGED UNDER A COMMON WALL PLATE, UNLESS NOTED OTHERWISE.

Q. PROVIDE COMPLETE AND TYPE-WRITTEN PANEL DIRECTORIES FOR ALL ELECTRICAL PANELS. MOUNT DIRECTORIES ON INSIDE FACE OF PANEL DOOR.

R. PANELBOARDS SHALL BE GENERAL ELECTRIC, SQUARE D, SIEMENS, OR OTHER APPROVED EQUAL.

S. LAMP MANUFACTURERS SHALL BE G.E., PHILLIPS, OSRAM-SYLVANIA, OR OTHER APPROVED EQUAL.

T. INCLUDE LABOR AND MATERIAL FOR COORDINATION AND ENERGIZING MECHANICAL AND PLUMBING EQUIPMENT.

U. ELECTRICAL CONTRACTOR SHALL ASSEMBLE AND PROVIDE TO THE OWNER AS PART OF CLOSE-OUT SUBMISSION REQUIREMENTS, ORGANIZED BINDER WITH TECHNICAL DATA, CUT SHEETS, MAINTENANCE REQUIREMENTS, ADJUSTMENT PROCEDURES, TEST REPORTS, APPROVALS, WARRANTIES, PHONE NUMBERS OF SERVICE PERSONNEL, SOURCES OF REPLACEMENT PARTS AND OTHER PERTINENT INFORMATION.

V. EXISTING STRUCTURE: CONTRACTOR SHALL DETERMINE IF EXISTING STRUCTURAL SYSTEM WILL BE AFFECTED BY NEW ELECTRICAL WORK PRIOR TO ANY CUTTING, DRILLING OR CORING. WHERE IT IS DEEMED NECESSARY FOR EXISTING SLAB OR BEAM TO BE DISTURBED FOR INSTALLATION OF NEW UNDERGROUND CONDUIT, COORDINATE WITH GENERAL CONTRACTOR FOR X-RAYING. AFTER X-RAYING IS COMPLETE, COORDINATE WITH ARCHITECT, COA PERSONNEL, AND STRUCTURAL ENGINEER FOR DIRECTION/APPROVAL. DO NOT CUT OR PENETRATE STRUCTURAL ELEMENTS WITHOUT PRIOR APPROVAL. LOCATION OF CONDUIT IS APPROXIMATE AND MAY BE ADJUSTED DUE TO EXISTING STRUCTURAL CONDITIONS.

W. EXISTING CONDITIONS: LOCATIONS OF EXISTING ELECTRICAL CONDUIT, EQUIPMENT, AND CONNECTION POINTS ARE APPROXIMATE AND ARE BASED ON SITE OBSERVATIONS AND EXISTING DRAWINGS. CONTRACTOR SHALL FIELD-VERIFY SIZE, LOCATION AND BURIAL DEPTH OF EXISTING CONDUIT PRIOR TO STARTING CONSTRUCTION.

X. CONSTRUCTION SCHEDULE: EXISTING FACILITY WILL BE OCCUPIED BY AFD/EMS STAFF AT ALL TIMES. CONTINUED ACCESS TO OPERATIONAL ELECTRICAL AND PLUMBING FACILITIES WILL BE REQUIRED. ALL OUTAGES REQUIRE PRIOR APPROVAL AND MUST BE SCHEDULED AT LEAST 7 DAYS BEFORE EXECUTION. CONTRACTOR SHALL PLAN EXECUTION OF WORK WITH MINIMUM DOWN-TIME TO AFD/EMS STAFF, AND PROVIDE DETAILED CONSTRUCTION SCHEDULE INDICATING ANY PROPOSED OUTAGES, TO COA PROJECT MANAGER FOR APPROVAL.

ENCOTECH ENGINEERING CONSULTANTS
TBPE Firm 1141 | 8500 Bluffstone Cove, Suite B-103 Austin, Texas 78759 | 512.338.1101
Project No.: 14046.M.AUS

STATE OF TEXAS SHARON S. BICKFORD 77390 LICENSED PROFESSIONAL ENGINEER
09/09/2016

mwm Design Group
305 East Huntland Drive
Suite 200
Austin, Texas 78752
p: 512.453.0767
f: 512.453.1734
TBAE FIRM REGISTRATION NO.: 1452
TBPE FIRM REGISTRATION NO.: F-1416
TBPLS FIRM REGISTRATION NO.: 10065600

NO.	DATE	DESCRIPTION	BY

SCALE IS AS NOTED ON DRAWING

ELECTRICAL ABBREVIATIONS, SYMBOLS, LEGEND, AND GENERAL NOTES

CITY OF AUSTIN, AFD WOMEN'S LOCKER RM. ADDN, PHASE V
AUSTIN/TRAVIS COUNTY EMS DEPARTMENT - VEHICLE BAY EXPANSION

PLOTTED: 9/7/2016
JOB NO: 023-79D

FS EMS
E000

File: J:\ACTIVE PROJECTS\MWM\15009.M.AUS — AFD WLR Ph 5\1. MEP\D-AutoCAD\FS-EMS\15009 FS-EMS-E000 Elec General Notes.dwg 24x36

GENERAL NOTES

THESE GENERAL NOTES SHALL APPLY UNLESS OTHERWISE SPECIFICALLY NOTED ON PLANS AND DETAILS. VERIFY ALL DIMENSIONS AND COORDINATE ALL STRUCTURAL PLANS AND DETAILS BEFORE STARTING WORK. THE ARCHITECT/ ENGINEER SHALL BE NOTIFIED OF ANY DISCREPANCIES PRIOR TO CONSTRUCTION. DESIGN, CONSTRUCTION, WORKMANSHIP AND MATERIALS SHALL COMPLY WITH THE 2012 EDITION OF THE INTERNATIONAL BUILDING CODE (IBC).

DESIGN CRITERIA

1. LIVE LOADS:

   ROOF .... 20 PSF
   OFFICE... 50 PSF
   CORRIDOR.. 100 PSF

1A. DEAD LOADS:

   a. HANGING CEILING AND MECHANICAL LOADS: FOR FLOORS, AN ALLOWANCE OF 15 PSF HAS BEEN MADE FOR HANGING CEILING AND MECHANICAL EQUIPMENT LOADS SUCH AS DUCT WORK AND SPRINKLER PIPES.

   b. HANGING CEILING AND MECHANICAL LOADS: FOR ROOFS, AN ALLOWANCE OF 10 PSF HAS BEEN MADE FOR HANGING CEILING AND MECHANICAL EQUIPMENT LOADS SUCH AS DUCT WORK AND SPRINKLER PIPES.

   c. ROOFING AND RIGID INSULATION LOADS: FOR ROOFS, AN ALLOWANCE OF 15 PSF

2. WIND LOAD: VARIES WITH HEIGHT PER IBC.
   120 MPH ULTIMATE WIND SPEED, EXPOSURE, RISK CATEGORY III

3. GROUND SNOW LOAD: 5 PSF (PER IBC).

4. FOUNDATION DESIGN IS BASED ON THE GEOTECHNICAL INVESTIGATION

   PREPARED BY: HVJ ASSOCIATES, INC
   PROJECT NUMBER: AG1215442
   DATED: JUNE 1, 2015

5. COMPLETE SHOP DRAWINGS FOR THE STRUCTURAL WORK SHALL BE SUBMITTED FOR REVIEW PRIOR TO COMMENCEMENT OF CONSTRUCTION, IN ACCORDANCE WITHTHE SPECIFICATIONS. REVIEW OF SHOP DRAWINGS BY THE ARCHITECT/ENGINEER DOES NOT RELIEVE THE CONTRACTOR OF FULL RESPONSIBILITY FOR CORRECT FABRICATION AND CONSTRUCTION OF THE WORK.

6. THE STRUCTURAL DRAWINGS SHALL NOT BE SCALED FOR DETERMINATION OF QUANTITIES, LENGTHS, OR FIT OF MATERIALS.

7. PRINCIPAL OPENINGS ARE SHOWN ON THE STRUCTURAL DRAWINGS. THE CONTRACTOR SHALL REFER TO ARCHITECTURAL, MECHANICAL, ELECTRICAL AND PLUMBING DRAWINGS, FOR SLEEVES, CURBS, INSERTS AND SIMILAR DETAILS NOT SHOWN. SIZE AND LOCATION OF ALL OPENINGS SHALL BE VERIFIED BY THE CONTRACTOR. ANY DEVIATION FROM OPENINGS SHOWN ON THE STRUCTURAL DRAWINGS SHALL BE BROUGHT TO THE ARCHITECT/ENGINEERS ATTENTION PRIOR TO CONSTRUCTION.

8. THE STRUCTURAL DRAWINGS AND SPECIFICATIONS REPRESENT THE FINISHED STRUCTURE. THEY DO NOT INDICATE THE METHODS OF CONSTRUCTION UNLESS SO STATED OR NOTED. THE CONTRACTOR SHALL PROVIDE ALL MEASURES NECESSARY TO PROTECT THE WORKERS AND ALL OTHER PERSONS DURING CONSTRUCTION.

9. THE CONTRACTOR SHALL PROVIDE TEMPORARY ERECTION BRACING AND SHORING OF ALL STRUCTURAL WORK AS REQUIRED FOR STABILITY OF THE STRUCTURE DURING ALL PHASES OF CONSTRUCTION. THE CONTRACTOR SHALL IMMEDIATELY NOTIFY THE OWNER'S REPRESENTATIVE OF ANY CONDITION WHICH, IN HIS OPINION, MIGHT ENDANGER THE STABILITY OF THE STRUCTURE OR CAUSE DISTRESS IN THE STRUCTURE.

10. CONSTRUCTION MATERIALS SHALL NOT BE STORED ON FLOORS OR ROOFS IN EXCESS OF THE DESIGN LIVE LOADS. IMPACT SHALL BE AVOIDED WHEN PLACING MATERIALS ON FLOOR OR ROOFS.

SEISMIC LOADS (PER 2012 IBC)

- SEISMIC USE GROUP: II
- MAPPED SPECTRAL ACCELERATIONS FOR SHORT PERIOD, $S_S = 0.095g$
- MAPPED SPECTRAL ACCELERATIONS FOR A 1-SECOND PERIOD, $S_1 = 0.04g$
- SITE CLASS: D
- DESIGN SPECTRAL RESPONSE ACCELERATIONS FOR SHORT PERIODS, $S_{DS} = 0.07$
- DESIGN SPECTRAL RESPONSE ACCELERATIONS FOR A 1-SECOND PERIOD, $S_1 = 0.064$
- SEISMIC DESIGN CATEGORY: A

FOUNDATION NOTES

1. FOR A MINIMUM DISTANCE 5'-0" OUTSIDE THE BUILDING LINE, REMOVE ALL VEGETATION, DEBRIS, AND 1'-0" TO 4'-0" MIN. OF STIFF TO VERY STIFF FAT CLAY. REFERENCE FOUNDATION PLAN FOR DEPTH OF FAT CLAY REMOVAL AT EACH PROJECT SITE. DISPOSE OF EXCAVATED MATERIAL OFF-SITE OR STOCKPILE FOR LANDSCAPING PURPOSES.

2. AFTER STRIPPING AND CUT GRADING HAS BEEN COMPLETED, THE UPPER 6" OF EXPOSED SUBGRADE SOILS IN BUILDING SLAB AREAS SHALL BE PROOF-ROLLED WITH A HEAVY (MIMIMUM 20 TON) RUBBER-TIRED VEHICLE SUCH AS A LOADED DUMP TRUCK OR WATER TRUCK TO PROVIDE A THOROUGH EVALUATION OF THE SUBGRADE STIFFNESS BEFORE PLACING THE FIRST LIFT OF FILL. SOILS THAT ARE OBSERVED TO RUT OR DEFLECT EXCESSIVELY UNDER THE MOVING LOAD SHALL BE UNDER-CUT AND REPLACED WITH COMPACTED SELECT FILL. ALL PROOF-ROLLING AND UNDER-CUTTING ACTIVITIES SHALL BE OBSERVED BY THE OWNER-APPROVED GEOTECHNICAL PERSONNEL AND SHOULD BE PERFORMED DURING PERIODS OF DRY WEATHER. SUBGRADE INSPECTIONS SHALL BE FOLLOWED IMMEDIATELY BY PLACEMENT OF SELECT FILL. IF RAINFALL EVENTS OCCUR BEFORE PLACING THE FIRST TWO LIFTS OF FILL, THE SUBGRADE INSPECTION RESULTS ARE NO LONGER VALID AND RE-TESTING AND POSSIBLE RE-WORKING AND RE-COMPACTION OF THE SUBGRADE SHALL BE REQUIRED.

3. EXCAVATION SHALL BE FILLED WITH SELECT FILL THAT IS IMPORTED TO THE SITE AND SHALL MEET THE THE FOLLOWING CRITERIA:
   IMPORTED SELECT FILL SHALL CONSIST OF CRUSHED LIMESTONE BASE MATERIAL MEETING THE REQUIREMENTS OF THE TEXAS DEPARTMENT OF TRANSPORTATION (TxDOT) 2004 STANDARD SPECIFICATIONS ITEM 247, TYPE A, GRADE 2 OR BETTER WITH A PLASTICITY INDEX BETWEEN 5 AND 20 PERCENT.
   IF ANY RUTS ARE CREATED IN THE FILL IMMEDIATELY UNDER THE FLOOR SLAB BY TRUCK LOADS THE BASE MATERIAL MUST BE RE-LEVELED & RE-COMPACTED.
   BEFORE THE PLACEMENT OF REINFORCING STEEL AND CONCRETE FOR THE FLOOR SLAB.

4. SELECT FILL SHALL BE PLACED IN HORIZONTAL LOOSE LIFTS OF NOT MORE THAN 8 INCHES IN THICKNESS, WITH COMPACTED THICKNESS NOT TO EXCEED 6", AND SHALL BE MOISTURE TREATED AND COMPACTED TO ACHIEVE A MINIMUM RELATIVE COMPACTION OF 95% BASED ON THE MAXIMUM DRY UNIT WEIGHT AS DETERMINED BY THE STANDARD PROCTOR METHOD (ASTM D 698). MOISTURE CONTENT OF SELECT FILL MATERIAL SHALL BE WITHIN THREE PERCENTAGE POINTS OF THE MOISTURE CONTENT AT THE TIME OF COMPACTION (-3% TO +3%).

5. APPROPRIATE LABORATORY TESTS SUCH AS PROCTOR MOISTURE-DENSITY TEST SHALL BE PERFORMED ON SAMPLES OF FILL MATERIAL. FIELD MOISTURE-DENSITY TEST AND VISUAL OBSERVATION OF LIFT THICKNESS AND MATERIAL TYPES SHALL BE PERFORMED DURING COMPACTION OPERATIONS TO VERIFY THAT THE CONSTRUCTION SATISFIES MATERIAL AND COMPACTION REQUIREMENTS. IN PLACE MOISTURE-DENSITY TEST AND LIFT THICKNESS CHECKS SHALL BE PERFORMED ON EVERY LIFT OF FILL.
   IF ANY PROBLEMS ARE ENCOUNTERED DURING THE EARTHWORK OPERATIONS, OR IF SITE CONDITIONS DEVIATE FROM THOSE ENCOUNTERED DURING OUR SUBSURFACE EXPLORATION, THE GEOTECHNICAL ENGINEER MUST BE NOTIFIED IMMEDIATELY TO DETERMINE THE EFFECT ON RECOMMENDATIONS EXPRESSED IN THIS REPORT. THE EXPOSED SUBGRADE AREAS SHALL BE SEALED AT THE END OF THE DAY WITH A SMOOTH DRUM ROLLER TO REDUCE THE POTENTIAL FOR INFILTRATION OF WATER INTO THE SUBGRADE.

6. SAMPLES OF PROPOSED SELECT FILL SHALL BE FURNISHED TO THE TESTING LABORATORY 7 (SEVEN) DAYS PRIOR TO INSTALLATION TO PERMIT TIME FOR SPECIFICATION COMPLIANCE INSPECTION AND APPROVAL.

VAPOR BARRIER NOTES

1. A VAPOR BARRIER SHALL BE PLACED UNDER THE ENTIRE CONCRETE SLAB-ON-GRADE. THE VAPOR BARRIER SHALL CONSIST OF A POLYETHENE OR POLYOLEFIN RESIN GEOMEMBRANE THAT MEET THE FOLLOWING REQUIREMENTS:

   a) MEET OR EXCEED THE CLASS A REQUIREMENTS OF ASTM E1745.
   b) WATER TRANSMISSION RATE (WVTR) OF 0.006 GRAINS (0.012 PERMS) OR LESS PER SQUARE FOOT IN ACCORDANCE WITH ASTM E96.
   c) MINIMUM PUNCTURE RESISTANCE OF 2445 GRAMS IN ACCORDANCE WITH ASTM 1709.
   d) MINIMUM TENSILE STRENGTH OF 76.6 PLF/INCH IN ACCORDANCE WITH ASTM D882.
   e) MINIMUM THICKNESS OF 15 MILS.

2. ACCEPTABLE PRODUCT IS STEGO WRAP CLASS A VAPOR BARRIER BY STEGO INDUSTRIES LLC, SAN JUAN CAPISTRANO, CALIFORNIA, OR APPROVED EQUAL.

3. VAPOR BARRIER SHALL BE INSTALLED IN STRICT ACCORDANCE WITH THE MANUFACTURER'S INSTRUCTIONS AND RECOMMENDATIONS. SPECIAL ATTENTION SHALL BE PAID TO THE VAPOR BARRIER INSTALLATION AT PIPE AND CONDUIT PENETRATIONS.

4. LAP JOINTS IN VAPOR BARRIER A MINIMUM OF 6 INCHES AND SEAL CONTINUOUSLY WITH A PRESSURE SENSITIVE, HIGH-DENSITY POLYETHELENE TAPE MANUFACTURED SPECIFICALLY FOR THE USE OF SEALING VAPOR BARRIER LAPS. THE TAPE SHALL MEET THE FOLLOWING REQUIREMENTS:

   a) WATER TRANSMISSION RATE (WVTR) OF 0.3 PERMS OR LESS PER SQUARE FOOT IN ACCORDANCE WITH ASTM E96.
   b) MINIMUM TAPE WIDTH OF 4 INCHES.

5. THE VAPOR BARRIER SHALL BE PLACED CONTINUOUS UNDER SLAB, DOWN THE SIDES AND ACROSS THE BOTTOM OF GRADE BEAMS. THE VAPOR BARRIER SHALL BE INSTALLED SMOOTH AND LEVEL. BUNCHING UNDER SLABS OR GRADE BEAMS WILL NOT BE PERMITTED AND SHALL BE CORRECTED PRIOR TO CONCRETE PLACEMENT.

6. VAPOR BARRIER SHALL BE INSPECTED FOR DAMAGES, TEARS OR PENETRATIONS PRIOR TO CONCRETE PLACEMENT. ALL DAMAGED AREAS SHALL BE REPAIRED BY CUTTING PATCHES OF VAPOR BARRIER, OVERLAPPING DAMAGED AREA 6 INCHES AND TAPED ALL EDGES.

CONCRETE

1. ALL CONCRETE WORK SHALL CONFORM TO THE AMERICAN CONCRETE INSTITUTE SPECIFICATION, A.C.I. #301 AND BUILDING CODE REQUIREMENTS, A.C.I. #318, LATEST EDITION.

2. ALL DETAILING, FABRICATION AND ERECTION OF REINFORCING BARS, UNLESS OTHERWISE NOTED, SHALL FOLLOW THE A.C.I. "MANUAL OF STANDARD PRACTICE FOR DETAILING REINFORCED CONCRETE", A.C.I. #315, LATEST EDITION.

3. CONCRETE SHALL HAVE A MINIMUM COMPRESSIVE STRENGTH AT 28 DAYS AS FOLLOWS:

   DRILLED PIERS .... COA CLASS "S" 4000 PSI (SEE NOTE 1.)
   STRUCTURAL CONCRETE .... COA CLASS "S" 4000 PSI
   SLAB-ON-GRADE, WALLS, OR FOOTINGS .... COA CLASS "S" 4000 PSI

   REFER TO SPECIFICATIONS FOR ADDITIONAL CONCRETE MIX DESIGN REQUIREMENTS.

   FURNISH MIX DESIGN FOR ALL CLASSES OF CONCRETE. OWNER SHALL RETAIN A QUALIFIED TESTING LABORATORY TO MAKE CONCRETE CYLINDERS AND PERFORM COMPRESSIVE TESTS. A MINIMUM OF THREE CYLINDERS SHALL BE TAKEN PER 50 CUBIC YARDS OF CONCRETE, WITH ONE TEST AT 7 DAYS AND TWO AT 28 DAYS. IF INITIAL TESTS FAIL, RESPONSIBLE PARTY SHALL PAY FOR ALL RESULTANT TESTING.

   NOTE 1. A HIGH-RANGE WATER REDUCING AD MIXTURE SHALL BE ADDED TO INCREASE THE SLUMP TO 6"-8"

4. REINFORCING BARS SHALL BE NEW BILLET STEEL CONFORMING TO ASTM A-615, GRADE 60.

5. STANDARD PROTECTIVE COVER OF REINFORCING BARS UNLESS OTHERWISE NOTED SHALL BE:

   WHERE CAST AGAINST EARTH OR FILL .... 3 IN.
   EXPOSED TO EARTH OR WEATHER .... 2 IN.
   SLABS AND WALLS .... 1 IN.
   OTHER .... 1 1/2 IN.

6. ALL ACCESSORIES SHALL BE IN ACCORDANCE WITH THE A.C.I. "MANUAL OF STANDARD PRACTICE FOR DETAILING REINFORCED CONCRETE", A.C.I. #315, LATEST EDITION. ACCESSORIES FOR EXPOSED CONCRETE SOFFITS SHALL HAVE PLASTIC COATED FEET. PROVIDE BOLSTERS AT SUSPENDED SLABS, WALLS AND WIDE BEAMS. PROVIDE CHAIRS AT JOISTS AND NARROW BEAMS.

7. VERTICAL CONSTRUCTION JOINTS IN FLOOR SLABS ARE TO BE AS SHOWN ON PLANS. NO HORIZONTAL JOINTS WILL BE PERMITTED IN SLABS OR BEAMS UNLESS OTHERWISE NOTED. MAXIMUM AREA FOR SINGLE SLAB POUR SHALL NOT EXCEED 10,000 S.F., U.N.O. CONTRACTOR MUST SUBMIT VARIANCE IN CONSTRUCTION JOINT LOCATION FOR REVIEW BY ENGINEER.

8. MAINTAIN A MINIMUM OF ONE BAR DIAMETER (BUT NOT LESS THAN 1") BETWEEN ALL REINFORCING BARS (INCLUDING LAPS) ON ALL SLABS. MAINTAIN A MINIMUM OF 1 1/2 " BETWEEN BARS IN COLUMNS, AND A MINIMUM OF 1 1/2 TIMES THE MAXIMUM COARSE AGGREGATE SIZE IN ALL CASES.

9. BARS SCHEDULED AND DETAILED 'CONT' SHALL BE LAPPED 30 BAR DIAMETERS UNLESS OTHERWISE NOTED ACCORDING TO BEAM SCHEDULE AND BAR PLACING DIAGRAM. THE SPLICES SHALL OCCUR AT MIDSPAN FOR TOP BARS AND OVER THE SUPPORTS FOR BOTTOM BARS.

10. CONCRETE PLACED BY PUMPING SHALL MEET THE FOLLOWING REQUIREMENTS:

    a) COARSE AGGREGATE SHALL BE GRADED FROM A MAXIMUM OF 3/4" DOWN.
    b) MAXIMUM ALLOWABLE INCREASE IN CEMENT FACTOR SHALL BE 1/2 SACK PER CUBIC YARD YARD NORMAL MIX DESIGN.
    c) MAXIMUM WATER CEMENT RATIO WILL CONFORM TO MIX DESIGN REQUIREMENTS. IF MORE WORKABILITY IS REQUIRED, ADMIXTURES MAY BE USED.
    d) MAXIMUM WEIGHT RATIO OF FINE AGGREGATES TO COARSE AGGREGATES SHALL NOT EXCEED 2/3.
    e) REFER TO A.C.I. #301, LATEST EDITION, SECTION 800, FOR OTHER PUMPING REQUIREMENTS.
    f) IN NO CASE SHALL CONCRETE BE PUMPED THROUGH AN ALUMINUM TUBE.

11. SHOP DRAWINGS SHALL BE PREPARED FOR ALL REINFORCING STEEL AND SUBMITTED TO ENGINEER/ARCHITECT. ENGINEER DRAWINGS SHALL NOT BE REPRODUCED AND USED AS SHOP DRAWINGS.

12. WELDING OF REINFORCING BARS SHALL NOT BE PERMITTED, UNLESS APPROVED BY ENGINEER.

13. DURING PLACEMENT OF CONCRETE, USE TREMIE OR OTHER MEANS TO LIMIT FREE-FALL OF CONCRETE TO 5'-0".

14. AT CORNER AND "T" INTERSECTIONS OF ALL BEAMS EXTEND FOUR CORNER BARS EQUAL TO THE SCHEDULED STEEL IN THE ADJACENT BEAMS 2'-0" EACH WAY, TWO BARS TOP AND TWO BARS BOTTOM.

15. PLUMBING OR ELECTRICAL LINES SHALL NOT BE RUN IN GRADE BEAM EXCAVATIONS.

16. INCLUDE AN ALLOWANCE FOR 2 TONS OF REINFORCING BARS (ANY SIZE) TO BE USED AS DIRECTED IN FIELD FOR SPECIAL CONDITIONS (LABOR FOR PLACING SAME TO BE INCLUDED). UPON COMPLETION OF PROJECT, REBATE TO OWNER ANY AMOUNT OF ALLOWANCE REMAINING AT $1,000 PER TON.

DRILLED PIER NOTES

1. REFERENCE GEOTECHNICAL REPORT FOR PIER DESIGN PARAMETERS.

2. EACH PIER SHAFT SHALL BE INSPECTED BY QUALIFIED GEOTECHNICAL PERSONNEL TO INSURE PROPER BEARING INTO THE AUSTIN GROUP LIMESTONE STRATUM AS DEFINED BY THE GEOTECHNICAL REPORT.

3. ALL PIERS SHALL BE CENTERED ON COLUMNS UNLESS OTHERWISE SHOWN.

4. DRILL PIERS TO THE EXACT SIZE SHOWN. SHAFTS SHALL BE BORED PLUMB WITH A TOLERANCE OF TWO INCHES. INSTALL OFFSET STAKES ON OPPOSITE SIDES OF THE PIER AND USE TO MAINTAIN THE PIER CENTERS AND TO CHECK THE PIER PLUMBNESS.

5. FOR ESTIMATING PURPOSES, EXCAVATE ALL PIERS TO THE DEPTHS INDICATED ON THE DRAWINGS. WHEN DIRECTED BY THE GEOTECHNICAL ENGINEER, CARRY SHAFT TO GREATER OR LESSER DEPTHS TO PROVIDE SUITABLE BEARING. ADJUSTMENTS WILL BE MADE IN THE CONTRACT PRICE FOR MORE OR LESS DEPTH IN ACCORD WITH THE UNIT PRICES QUOTED IN THE CONTRACTOR'S BID.

6. PIER BOTTOMS SHALL BE THOROUGHLY CLEAN AND FREE OF WATER WHEN CONCRETE IS PLACED. PROVIDE SUITABLE ACCESS AND LIGHTING FOR INSPECTION OF THE EXCAVATIONS FOR CLEANLINESS AND FOR CORRECTNESS OF DIMENSIONS AND ALIGNMENT.

7. PLACEMENT OF CONCRETE SHALL BE ACCOMPLISHED AS SOON AS POSSIBLE AFTER DRILLING AND INSPECTION. NO PIER EXCAVATION SHALL BE LEFT OPEN OVERNIGHT WITHOUT CONCRETING.

8. TEMPORARY STEEL CASINGS MAY BE REQUIRED ABOVE LIMESTONE STATUM TO PREVENT CAVING OF THE SOIL AND THE SEEPAGE OF WATER INTO THE DRILLED FOOTINGS. CASINGS SHALL BE METAL OF AMPLE STRENGTH TO WITHSTAND HANDLING STRESS, CONCRETE AND EARTH PRESSURES AND SHALL BE WATERTIGHT. CONTRACTORS SHALL FURNISH UNIT PRICES FOR CASING OF DIFFERENT SIZE PIER SHAFTS.

9. A TREMIE PIPE MAY BE USED TO PLACE CONCRETE TO PREVENT SEGREGATION OF CONCRETE INGREDIENTS AND TO PREVENT MOVING THE REINFORCING STEEL CAGE. AT THE START OF THE CONCRETE PLACEMENT OPERATION, THE BOTTOM OF THE TREMIE PIPE SHALL BE KEPT AS CLOSE TO THE BOTTOM AND CENTER OF THE SHAFT AS POSSIBLE. THE BOTTOM OF THE TREMIE PIPE SHOULD BE MAINTAINED AT LEAST 3 FEET BELOW TOP OF CONCRETE DURING PLACEMENT. A FREE - FALL METHOD OF PLACEMENT MAY BE USED IF THE CONCRETE IS DIRECTED THROUGH A HOPPER & FALLS DOWN THE CENTER OF THE SHAFT WITHOUT STRIKING THE REINFORCING CAGE.

POST-INSTALLED REBAR AND ANCHORS

THE BELOW PRODUCTS ARE THE DESIGN BASIS FOR THIS PROJECT. PRODUCT DIAMETER AND EMBEDMENT SHALL BE SHOWN IN THE DETAILS. INSTALL PRODUCTS IN ACCORDANCE WITH MANUFACTURER'S PRINTED INSTALLATION INSTRUCTIONS (MPII). CONTRACTOR SHALL CONTACT MANUFACTURER'S REPRESENTATIVE FOR PRODUCT INSTALLATION TRAINING AND SHALL SUBMIT LETTER TO THE ENGINEER-OF-RECORD (EOR) INDICATING TRAINING HAS TAKEN PLACE. REFER TO THE PROJECT BUILDING CODE AND/OR EVALUATION REPORT FOR SPECIAL INSTECTOINS AND PROOF LOAD REQUIREMENTS. SUBSTITUTION REQUESTS FOR PRODUCTS OTHER THAN THOSE LISTED BELOW MAY BE SUBMITTED BY THE CONTRACTOR TO THE EOR FOR REVIEW. SUBSTITUTIONS WILL ONLY BE CONSIDERED FOR PRODUCTS HAVING A RESEARCH REPORT RECOGNIZING THE PRODUCT FOR THE APPROPRIATE APPLICATION UNDER THE PROJECT BUILDING CODE. SUBSTITUTION REQUESTS SHALL INCLUDE CALCULATIONS THAT DEMONSTRATE THE SUBSTITUTED PRODUCT IS CAPABLE OF ACHIEVING THE EQUIVALENT PREFORMANCE VALUES OF THE DESIGN BASIS PRODUCT.

UNLESS OTHERWISE NOTED ON THE PLANS, ANCHORS SHALL BE:

1. FOR ANCHORING INTO CONCRETE:

   A. MECHANICAL ANCHORS SHALL HAVE BEEN TESTED IN ACCORDANCE WITH ACI 355.2 AND ICC-ES AC193 FOR CRACKED CONCRETE. PRE-APPROVED PRODUCTS INCLUDE:

      I. SIMPSON STRONG-TIE "STRONG-BOLT 2" (ICC-ES ESR-2713)
      II. SIMPSON STRONG-TIE "TITAN-HD" (ICC-ES ESR-3037)
      III. HILTI "KWIK BOLT TZ

   B. ADHESIVE FOR REBAR AND ANCHORS SHALL HAVE BEEN TESTED IN ACCORDANCE WITH ACI 355.4 AND ICC-ES AC308 FOR CRACKED CONCRETE APPLICATIONS. DESIGN ADHESIVE BOND STRENGTH HAS BEEN BASED ON ACI 355.4 TEMPERTURE CATEGORY B WITH INSTALLATIONS INTO DRY HOLES DRILLED USING CARBIDE DRILL BIT INTO CRACKED CONCRETE THAT HAS CURED FOR AT LEAST 21 DAYS. ADHESIVE ANCHORS REQUIRING CERTIFIED INSTALLATIONS SHALL BE INSTALLED BY A CERTIFIED ADHESIVE ANCHOR INSTALLER PER ACI 318-11 D.9.2.2. INSTALLIONS REQUIRING CERTIFIED STALLERS SHALL BE INSPECTED PER ACI 318-11 D.9.2.4. PRE-APPROVED PRODUCTS INCLUDE:

      I. SIMPSON STRONG-TIE "AT-XP" (IAPMO-UES ER-263)
      II. SIMPSON STRONG-TIE "SET-XP" (ICC-ES ESR-2508)
      III. HILTI "HIT-HY 200
      IV. HILTI "HIT-RE 500-SD" (ICC-ES ESR-2322)

2. FOR ANCHORING INTO MASONRY:

   A. SOLID-GROUTED CONCRETE MASONRY

      I. MECHANICAL ANCHORS SHALL HAVE BEEN TESTED IN ACCORDANCE WITH ICC-ES AC01 OR ICC-ES AC106. PRE-APPROVED PRODUCTS INCLUDE:

         (1) SIMPSON STRONG-TIE "TITAN-HD" (ICC-ES ESR-1056)
         (2) SIMPSON STRONG-TIE "STRONG-BOLT 2" (IAPMO-UES ER-240)
         (3) HILTI KWIK BOLT 3

      II. ADHESIVE FOR REBAR AND ANCHORS SHALL HAVE BEEN TESTED IN ACCORDANCE WITH ICC-ES AC58. PRE-APPROVED PRODUCTS INCLUDE:

         (1) SIMPSON STRONG-TIE "AT-XP" (IAPMO-UES ER-281)
         (2) SIMPSON STRONG-TIE "SET-XP" (IAPMO-UES ER-265)
         (3) HILTI "HIT-HY 70"

   B. HOLLOW CONCRETE MASONRY

      I. MECHANICAL ANCHORS SHALL HAVE BEEN TESTED IN ACCORDANCE WITH ICC-ES AC106. PRE-APPROVED PRODUCTS INCLUDE:

         (1) SIMPSON STRONG-TIE "TITAN-HD" (ICC-ES ESR-1056)

      II. ADHESIVE FOR REBAR AND ANCHORS SHALL HAVE BEEN TESTED IN ACCORDANCE WITH ICC-ES AC58. THE APPROPRIATE SCREEN TUBE SHALL BE USED AS RECOMMENDED BY THE ADHESIVE MANUFACTURER. PRE-APPROVED PRODUCTS INCLUDE:

         (1) SIMPSON STRONG-TIE "AT"
         (2) SIMPSON STRONG-TIE "SET"
         (3) HILTI "HIT-HY 70"

WOOD NOTES

A. SAWN FRAMING LUMBER SHALL COMPLY W/ THE LATEST EDITION OF THE GRADING RULES OF THE WESTERN WOOD PRODUCTS ASSOCIATION OR THE WEST COAST LUMBER INSPECTION BUREAU. ALL SAWN LUMBER SHALL BE STAMPED W/ THE GRADE MARK OF AN APPROVED LUMBER GRADING AGENCY. SAWN LUMBER SHALL HAVE THE FOLLOWING MIN GRADE (UNO). ALL SAWN LUMBER SHALL BE KILN-DRIED AND MOISTURE CONTENT SHALL NOT EXCEED 15%.

SIZE	SPECIES AND GRADE
2X4 STUDS, BLOCKING TOP PLATES	DOUGLAS FIR LARCH OR SYP, NO. 2
2X6 STUDS, BLOCKING, TOP PLATES	DOUGLAS FIR LARCH OR SYP, NO. 2
JOISTS AND ALL OTHER SAWN LUMBER	DOUGLAS FIR LARCH OR SYP, NO. 2
4X POSTS	DOUGLAS FIR LARCH OR SYP, NO. 2
6X POSTS & LARGER	DOUGLAS FIR LARCH OR SYP, NO. 1

B. GLUE-LAMINATED BEAMS (GLB) SHALL BE DOUGLAS FIR OR SOUTHERN YELLOW PINE COMBINATION 24F-V4 AT SIMPLE SPAN BEAMS AND 24F-V8 AT CANTILEVERED AND MULTI-SPAN BEAMS, UNO, AND SHALL HAVE THE FOLLOWING MIN PROPERTIES:

   FB = 2,400 psi FV = 240 psi fc (PERPENDICULAR) = 650 psi e =1,800,000 psi

   FABRICATION AND HANDLING SHALL CONFORM W/ THE LATEST AITC AND ASTM STANDARS. BEAMS SHALL BE MANUFACTURED W/ 2000' RADIUS MIN CAMBER UNLESS CAMBER IS SPECIFICALLY NOTED ON THE DRAWINGS. ALL LAMINATIONS SHALL BE 1 1/2" MIN THICK. MOISTURE CONTENT AT TIME OF GLUED LAMINATED TIMBER FABRICATION SHALL NOT EXCEED 16%

C. PARALLEL STRAND BEAMS (psi) SHALL BE DOUGLAS FIR OF SOUTHERN PINE OR YELLOW POPLAR, AND SHALL HAVE THE FOLLOWING MIN PROPERTIES:

   FB = 2,900 psi FV = 290 psi fc (PERPENDICULAR) = 750 psi e =2,000,000 psi

   FABRICATION SHALL COMFORM TO NER292. BEAMS SHALL BE MANUFACTURED WITHOUT CAMBER.

D. LAMINATED VENEER LUMBER (PSI) SHALL BE DOUGLAS FIR OR SOUTHERN PINE OR YELLOW POPLAR, AND SHALL HAVE THE FOLLOWING MIN PROPERTIES:

   FB = 2,600 psi FV = 285 psi fc (PERPENDICULAR) = 750 psi e =1,900,000 psi

   BEAMS SHALL BE MANUFACTURED WITHOUT CAMBER.

E. ALL ORIENTED STRAND BOARD (OSB) SHALL BE PERFORMANCE RATED BY THE AMERICAN PLYWOOD ASSOCIATION (APA). RATED SHEATHING SHALL COMPLY W/ I.C.C. REPORT NO. NER-108, EXPOSURE 1. INSTALL PER MANUFACTURE'S RECOMMENDATIONS. APA-RATED PLYWOOD AND OSB MAY BE USED INTERCHANGEABLY. PLYWOOD SHALL BE FIVE-PLY SHEATHING CONFORMING TO APA-THE ENGINEERED WOOD ASSOCIATION. GRAIN PERPENDICULAR TO SUPPORTS. PLYWOOD MAY BE ORIENTED PER SHEAR WALL SCHEDULE. PROVIDE BLOCKING AT PANEL EDGES WHERE INDICATED ON PLANS. ALL SHEATHING SHALL CONFORM TO THE FOLLOWING NOMINAL THICKNESS, SPAN RATING AND NAILING PATTERN U.N.O.

THICKNESS	GRADE/MATERIALS	USE	SPAN RATING	EDGE NAILING	FIELD NAILING
SEE SCHED	OSB	WALLS	-	SEE SHEAR WALL SCHEDULE	SEE SHEAR WALL SCHEDULE
5/8"	C-D PLYWOOD W/ EXT. GLUE	ROOF	48/24	SEE ROOF DIAPH. SCHED.	SEE ROOF DIAPH. SCHED.
3/4" T & G	STRUCTURAL (STURDI FLOOR)	FLOOR	48/24	SEE ROOF DIAPH. SCHED.	SEE ROOF DIAPH. SCHED.

F. SOLE PLATES RESTING ON CONCRETE OR MASONRY SHALL BE TREATED DOUGLAS FIR. ALL END CUTS MUST BE FIELD TREATED. SOLE PLATES SHALL BE ANCHORED TO THE FOUNDATION AS NOTED IN THE ANCHOR BOLT SECTION.

G. ALL NAILS, EXCEPT 16d, SHALL BE COMMON WIRE NAILS UNO. 16d NAILS MAY BE SINKERS OR BOX UNO ON PLANS OR SCHEDULES. NAILS SHALL BE DRIVEN SO THAT THE HEADS ARE FLUSH WITH WOOD SURFACE. OVER OR UNDER DRIVEN NAILS WILL NOT BE ACCEPTABLE. MISC NAILING SHALL BE PER IBC TABLE 2304.9.1 NAILING SCHEDULE.

NAIL SIZE	SHANK DIA	LENGTH
16d	0.135" MIN.	3-1/2"
10d	0.148"	3"
8d	0.131"	2-1/2"
10d PLYWOOD NAIL	0.148"	2-3/8"

H. DO NOT NOTCH OR DRILL JOISTS, BEAMS OR LOAD-BEARING STUDS W/OUT PRIOR APPROVAL OF THE STRUCTURAL ENGINEER THROUGH THE ARCHITECT. DOUBLE UP FLOOR JOISTS AND BLOCKING UNDER WALLS THAT RUN PARALLEL TO THE JOISTS. PROVIDE 2" (NOMINAL) SOLID BLOCKING BETWEEN JOIST AT SUPPORTS. JOIST HANGERS AND OTHER MISCELLANEOUS FRAMING ANCHORS SHALL BE AS MANUFACTURED BY SIMPSON COMPANY OR EQUIVALENT WITH CURRENT I.C.C. APPROVAL.

I. ALL BOLTS SHALL BE INSTALLED IN HOLES BORED W. A BIT 1/16 INCH LARGER THAN THE DIAMETER OF THE BOLT. BOLTS AND NUTS SEATING ON WOOD SHALL HAVE CUT STELL WASHERS UNDER HEADS AND NUTS. DING THREAD TO PREVENT LOOSENING. LAG BOLTS SHALL BE INSTALLED IN PRE-DRILLED HOLES BY TURNING WITH A WRENCH.

J. WHERE BRIDGING INTERFERES W/ MECH OR OTHER INSTALLATIONS, REMOVE BRIDGING AFTER DECK IS IN PLACE AND REPLACE W/ ADDITIONAL MFR SUPPLIED HORIZ. STRUT BRACING AT TOP AND BOTTOM CHORDS.

K. ALL PREFABRICATED GIRDER TRUSSES SHALL HAVE A MIN. OF (2) 2x6 BUILT-UP AT ALL BEARING POINTS, UNO ON THE DRAWINGS.

L. TO MINIMIZE DEFLECTION AT DIMENSIONAL LUMBER JOIST FRAMING, INSTALL ON ROW OF FLOOR BRIDGING AT CENTER SPAN WHEN SPANS ARE BETWEEN 10'-0" AND 15'-0", AND TWO ROWS AT THIRD POINTS FOR SPANS GREATER THAN 15'-0".

M. FRAMING ANCHORS, HANGERS AND OTHER MISC HARDWARE SPECIFIED ON PLANS SHALL BE AS MANUFACTURED BY SIMPSON STRONG-TIE CO., INC. OR EQUIVALENT W/ CURRENT I.C.C. APPROVAL.

N. WHERE METAL CONNECTORS, ANCHORS, FASTENERS, ETC. ARE INSTALLED IN OR EXPOSED TO POTENTIALLY CORROSIVE ENVIRONMENTS OR MATERIALS, (I.E. PRESSURE TREATED WOOD, FIRE RETARDANTS, DISSIMILAR METALS, ETC.), APPROPRIATE MEASURES SHALL BE TAKEN (I.E. USE OF CORROSIVE RESISTANT METAL, PROPER APPLICATION OF ADEQUATE PROTECTIVE COATING, ETC.) IN ORDER TO PROTECT THE HARDWARE AGAINST DAMAGE THAT MAY ADVERESLY AFFECT ITS LOAD CAPACITY. REFER TO MFR FOR SPECIFIC APPLICATION, LIMITATIONS, OR ADDITIONAL REQUIREMENTS. FASTENERS IN PRESERVATIVE-TREATED WOOD SHALL COMPLY WITH IBC 2304.9.5.

O. LUMBER SHALL BE IN DRY CONDITION AND THE MOISTURE CONTENT SHALL NOT EXCEED 15%.

P. ALL FRAMING MEMBERS FRAMING INTO THE SIDE OF A HEADER SHALL BE ATTACHED USING METAL JOIST HANGERS OF TYPE "LU" AS MANUFACTURED BY THE SIMPSON COMPANY OR EQUAL. THE HANGER SHALL BE SIZED AND INSTALLED IN ACCORDANCE WITH THE MANUFACTURERS RECOMMENDATIONS FOR THE SIZE OF JOIST SUPPORTED.

Q. ALL BOLTS AND LAG SCREWS SHALL HAVE STANDARD WASHERS.

R. REFER TO THE ARCHITECTURAL DRAWINGS FOR ADDITIONAL WOOD FRAMING MEMBERS. PROVIDE ADDITIONAL WOOD FRAMING MEMBERS SHOWN ON THE ARCHITECTURAL DRAWINGS EVEN THOUGH THEY MAY NOT BE SHOWN ON THE STRUCTURAL DRAWINGS.

S. CONNECT ROOF RAFTERS, PURLINS TO BEAM SUPPORT AT EACH END WITH A TYPE "H2.5" FRAMING ANCHOR MANUFACTURED BY THE SIMPSON COMPANY OR APPROVED EQUAL.

JOSE I. GUERRA, INC.
CONSULTING ENGINEERS
2401 S. IH35 SUITE 210
AUSTIN, TEXAS 78741
(512) 445-2090
TBPE FIRM F-3

STATE OF TEXAS
JOHN C. ROMS
85568
REGISTERED PROFESSIONAL ENGINEER
8-30-16

mwm DesignGroup
305 East Huntland Drive
Suite 200
Austin, Texas 78752
p: 512.453.0767
f: 512.453.1734
TBAE FIRM REGISTRATION NO.: 1452
TBPE FIRM REGISTRATION NO.: F-1416
TBPLS FIRM REGISTRATION NO.: 10065600

NO.	DATE	DESCRIPTION	BY

0 1"

The bar above measures one inch on the original drawing. Adjust scales accordingly.

STRUCTURAL GENERAL NOTES

PLOTTED: 8/30/2016
JOB NO: 023-79D

FS/EMS0
S1.0
___ OF ___

File: F:\15011_AFD Women's Locker Rm Improvements\DRAWINGS\CAD\15011_AFD_S1.0 STRUCTURAL GENERAL NOTES.dwg 24x36

GENERAL NOTES

CONCRETE MASONRY NOTES

1. ALL CONCRETE MASONRY SHALL BE IN ACCORDANCE WITH THE REQUIREMENTS OF THE LOCAL BUILDING CODES AND THE NATIONAL CONCRETE MASONRY ASSOCIATION.
2. HOLLOW CONCRETE MASONRY UNITS SHALL BE GRADE N UNITS, CONFORMING TO ASTM C90, LATEST EDITION.
3. MASONRY UNITS SHALL HAVE A MINIMUM AVERAGE NET AREA COMPRESSIVE STRENGTH OF 1900 PSI (f'm = 1500 PSI) WHEN TESTED IN ACCORDANCE WITH ASTM C140, "STANDARD TEST METHODS FOR SAMPLING AND TESTING CONCRETE MASONRY UNITS AND RELATED UNITS".
4. MORTAR FOR MASONRY SHALL BE IN ACCORDANCE WITH ASTM C270 TYPE "S", EXCEPT ALL MORTAR BELOW GRADE SHALL BE TYPE "M".
5. GROUT FOR HOLLOW MASONRY UNITS SHALL BE IN ACCORDANCE WITH ASTM C476, AND SHALL HAVE A MINIMUM COMPRESSIVE STRENGTH OF 3000 PSI AND SHALL BE NORMAL WEIGHT CONCRETE WITH PEA GRAVEL AGGREGATE.
6. REINFORCING SHALL BE NEW BILLET STEEL COMPLYING WITH ASTM A615, GRADE 60.
7. UNLESS OTHERWISE NOTED, ALL LOAD BEARING MASONRY WALLS AND EXTERIOR WALLS SHALL BE REINFORCED WITH 9 GA., MILL GALVANIZED, HORIZONTAL WIRE REINFORCEMENT (TRUSS TYPE) EMBEDDED IN MORTAR JOINTS AT 16" O.C.. WIRE REINFORCEMENT SHALL CONFORM TO ASTM DESIGNATION A82, AND SHALL BE LAPPED AT LEAST 6" WITH AT LEAST ONE CROSS WIRE WITHIN THE LAP.
8. CONCRETE MASONRY WALLS SHALL BE CONSTRUCTED USING THE LOW-LIFT METHOD, WITH A MAXIMUM GROUT POUR HEIGHT OF 5'-0".
9. REFER TO ARCHITECT'S DRAWINGS FOR THE EXTENT OF MASONRY WALLS. NON-LOADBEARING WALLS MAY NOT BE SHOWN ON THE STRUCTURAL DRAWINGS.
10. REINFORCED CONCRETE MASONRY SHALL BE USED AS INDICATED ON THE DRAWINGS. SEE ARCHITECTURAL WALL SECTIONS.
11. PROVIDE ONE-COURSE HORIZONTAL BOND BEAM REINFORCE WITH 2- #5 CONTINUOUS AT EVERY FLOOR LEVEL, ROOF LEVEL, AND PARAPET, MINIMUM, AND 32" O.C. BETWEEN FLOORS.
12. REINFORCING STEEL COVERAGE
    1. COVER TO REINFORCING STEEL WITHIN MASONRY ELEMENTS SHALL NOT BE LESS THAN THE FOLLOWING:
       a. EXPOSED TO EARTH OR WEATHER: 2" (#6 AND LARGER BARS), 1.5" (#5 AND SMALLER BARS.)
       b. NOT EXPOSED TO EARTH OR WEATHER: 1.5"
       c. LONGITUDINAL WIRES OF JOINT REINFORCEMENT SHALL BE FULLY EMBEDDED IN MORTAR OR GROUT WITH A MINIMUM COVER OF 5/8" WHEN EXPOSED TO EARTH AND WEATHER AND 1/2" WHEN NOT EXPOSED TO EARTH OR WEATHER.
13. CONTROL JOINTS
    1. CONTROL JOINTS SHALL BE PROVIDED IN ALL CONCRETE MASONRY CONSTRUCTION. REFER TO TYPICAL CONTROL JOINT DETAIL AND ARCHITECTURAL DRAWINGS FOR GUIDELINES AND SPACINGS.
14. STABILITY AND BRACING OF MASONRY WALLS DURING CONSTRUCTION
    1. ALL MASONRY WALLS SHOWN ON THE ARCHITECTURAL AND STRUCTURAL DRAWINGS HAVE BEEN DESIGNED TO RESIST THE REQUIRED CODE VERTICAL AND LATERAL FORCES APPLIED TO THEM IN THE FINAL CONSTRUCTED CONFIGURATION ONLY ASSUMING FULL BRACING TOP, BOTTOM, AND/OR SIDE OF WALL AS SHOWN. IT IS THE RESPONSIBILITY OF THE CONTRACTOR TO PROPERLY AND ADEQUATELY BRACE ALL MASONRY WALLS AT ALL STAGES DURING CONSTRUCTION TO RESIST ERECTION LOADS AND LATERAL LOADS THAT COULD POSSIBLY BE APPLIED PRIOR TO COMPLETION OF CONSTRUCTION.

STRUCTURAL STEEL

1. ALL HOT ROLLED STRUCTURAL STEEL W-SHAPES SHALL CONFORM TO ASTM SPECIFICATION A992, GRADE 50.
2. ALL STRUCTURAL STEEL M-SHAPES, S-SHAPES, CHANNELS, ANGLES, PLATES AND BARS SHALL CONFORM TO ASTM SPECIFICATION A36 UNLESS OTHERWISE SHOWN OR NOTED.
3. ALL ROUND, SQUARE AND RECTANGULAR HOLLOW STRUCTURAL SHAPES (HSS) SHALL CONFORM TO ASTM A500, GRADE B.
4. ALL STRUCTURAL STEEL SHALL BE DESIGNED, FABRICATED AND ERECTED IN ACCORDANCE WITH THE LATEST SPECIFICATIONS OF THE AMERICAN INSTITUTE OF STEEL CONSTRUCTION.
5. ALL STRUCTURAL BOLTS SHALL CONFORM TO ASTM A-325 UNLESS OTHERWISE SHOWN OR NOTED. FURNISH HARDENED WASHERS AT ALL BOLTED CONNECTIONS, INCLUDING ANCHOR BOLTS.
6. REFER TO ARCHITECTURAL AND MECHANICAL PLANS FOR VERIFICATION OF ALL BOLTS, BLOCKING ANCHORS, ETC., FOR THE ANCHORAGE OF THEIR RESPECTIVE ITEMS. COORDINATE WITH OTHER BID PACKAGES.
7. ALL BEAMS AND COLUMNS SHALL BE FULL LENGTH WITHOUT SPLICES UNLESS OTHERWISE INDICATED ON PLANS.
8. ALL SHOP AND FIELD WELDS SHALL BE MADE BY WELDERS WHO HAVE BEEN QUALIFIED AND CERTIFIED TO MAKE THE REQUIRED WELDS WITHIN THE PREVIOUS SIX MONTHS (FROM NOTICE TO PROCEED) IN ACCORDANCE WITH THE LATEST AMERICAN WELDING SOCIETY SPECIFICATIONS A.W.S. D1.1. STEEL JOISTS SHALL BE FABRICATED IN ACCORDANCE WITH THE REQUIREMENTS OF THE STEEL JOIST INSTITUTE & THE MANUFACTURER'S CERTIFIED WELDING & INSPECTION PROCEDURES.
9. ERECTION CONNECTORS SHALL BE PROVIDED IN ORDER TO PROPERLY ALIGN AND BE TRUE AND PLUMB WHEN WELDS ARE MADE.
10. SHOP DRAWINGS SHALL BE PREPARED FOR ALL STRUCTURAL STEEL AND SUBMITTED TO THE ARCHITECT/ENGINEER. ENGINEERING DRAWINGS SHALL NOT BE REPRODUCED AND USED AS SHOP DRAWINGS.
11. LOOSE STEEL LINTELS OVER OPENINGS IN EXTERIOR MASONRY WALLS SHALL BE AS FOLLOWS FOR EACH 4" WIDTH OF MASONRY. ALL STEEL LINTELS SHALL BE HOT DIP GALVANIZED. PROVIDE 8" MINIMUM BEARING AT EACH SIDE OF OPENING.

OPENING SIZE	LOOSE LINTEL SIZE
LESS THAN 4'-0"	L4x4x1/4
4'-0" TO LESS THAN 5'-0"	L4x4x1/4
5'-0" TO LESS THAN 6'-0"	L6"x4x5/16 (LLV)
6'-0" TO LESS THAN 7'-0"	L6x4x5/16(LLV)
7'-0" TO LESS THAN 10'-0"	L6x4x3/8 (LLV)

12. ALL COMPLETE PENETRATION WELDS, BOTH SHOP AND FIELD, SHALL BE MADE UNDER THE OBSERVATION OF A QUALIFIED TESTING LABORATORY INSPECTOR.
13. THE FABRICATOR SHALL SUPPLY BACK UP PLATES AND EXTENSION TABS FOR ALL COMPLETE PENETRATION WELDS.
14. ALL COMPLETE PENETRATION WELDS SHALL BE TESTED BY A QUALIFIED TESTING LABORATORY. ANY WELDS FOUND DEFECTIVE SHALL BE REMOVED AND REPLACED AT NO ADDITIONAL COST TO THE OWNER.
15. INCLUDE AN ALLOWANCE FOR 2 TONS OF STRUCTURAL STEEL (ANY SIZE) TO BE USED AS DIRECTED IN FIELD FOR SPECIAL CONDITIONS (LABOR FOR PLACING SAME TO BE INCLUDED). UPON COMPLETION OF PROJECT, REBATE TO OWNER ANY AMOUNT OF ALLOWANCE REMAINING AT $2,000 PER TON.

STRUCTURAL STEEL CONNECTIONS

1. WELDING SHALL CONFORM TO ANSI/AWS D1.1, LATEST EDITION. ALL SHOP AND FIELD WELDERS SHALL BE CERTIFIED ACCORDING TO AWS PROCEDURES FOR THE WELDING PROCESS AND WELDING POSITION USED. ELECTRODES FOR VARIOUS WELDING PROCESS SHALL BE AS SPECIFIED BELOW:

A. SMAW: E70XX LOW HYDROGEN
B. SAW: F7X-EXXX
C. GMAW: ER70S-X
D. FCAW: E7XT-X

2. BOLTS SHALL CONFORM TO ASTM A325 TYPE 1. BOLTS SHALL BE DESIGNED USING VALUES FOR BEARING TYPE BOLTS WITH THREAD ALLOWED IN THE SHEAR PLANE. MINIMUM BOLT DIAMETER SHALL BE 3/4 INCH.
3. STRUCTURAL STEEL CONNECTIONS ON THE DRAWINGS SHALL BE DESIGNED AND DETAILED BY THE CONTRACTOR UNDER THE DIRECT SUPERVISION OF A REGISTERED ENGINEER LICENSED IN THE STATE OF TEXAS. SEALED CALCULATIONS FOR ALL CONNECTIONS DESIGNED BY THE CONTRACTOR SHALL BE SUBMITTED FOR THE ARCHITECT'S FILES. SHOP DRAWINGS SUBMITTED WITHOUT COMPLETE DESIGN CALCULATIONS WILL NOT BE APPROVED.
4. BEAM CONNECTIONS SHALL BE DESIGNED AND DETAILED AS FOLLOWS, UNLESS NOTED OTHERWISE ON THE DRAWINGS:

A. CONNECTIONS SHALL BE AISC TYPE 2 SIMPLE FRAMING CONNECTIONS. SHEAR TAB CONNECTIONS SHALL NOT BE USED.
B. IN GENERAL, SHOP CONNECTIONS SHALL BE BOLTED OR WELDED AND FIELD CONNECTIONS SHALL BE AS NOTED ON DRAWINGS.
C. WHERE INDICATED, CONNECTIONS SHALL BE DESIGNED FOR THE SCHEDULED SHEAR FORCE, THE SHEAR FORCE INDICATED ON THE DRAWINGS AS "R= ", AND THE HORIZONTAL FORCE INDICATED AS "H=".
D. IF NOT INDICATED ON THE DRAWINGS, CONNECTIONS SHALL BE DESIGNED FOR 55 PERCENT OF THE TOTAL LOAD CAPACITY FOR THE BEAM SPAN SHOWN IN THE BEAM TABLES IN SECTION 3 OF THE AISC MANUAL, 14TH EDITION FOR NON-COMPOSITE CONSTRUCTION ONLY.
E. THE MINIMUM NUMBER OF ROWS OF BOLTS SHALL BE 1/6 OF THE BEAM DEPTH WITH ANY FRACTION BE ROUNDED TO THE NEXT HIGHER NUMBER.
F. BOLTS SHALL BE "SNUG TIGHT", U.N.O.. SNUG TIGHT CONDITION IS DEFINED AS THE TIGHTNESS ATTAINED BY A FEW IMPACTS ON AN IMPACT WRENCH OR THE FULL EFFORT OF A MAN USING AND ORDINARY SPUD WRENCH.
G. SHORT SLOTTED HOLES SHALL BE PERMITTED PROVIDED WASHERS ARE INSTALLED IN ACCORDANCE WITH AISC REQUIREMENTS. WASHERS SHALL BE HARDENED WHERE A325 BOLTS ARE UTILIZED.
H. ALL BOLTS SHALL BE WELL LUBRICATED AT TIME OF INSTALLATION. DRY, RUSTY BOLTS WILL NOT BE ALLOWED. ALL BOLTS SHALL BE NEW AND SHALL NOT BE REUSED.

5. WIND BRACE AND TRUSS CONNECTIONS SHALL BE DESIGNED AND DETAILED AS FOLLOWS, UNLESS NOTED OTHERWISE ON THE DRAWINGS:

A. CONNECTIONS SHALL BE WELDED.
B. CONNECTIONS SHALL BE DESIGNED AND DETAILED FOR THE FORCES SHOWN ON THE DRAWINGS.
C. IF FORCES ARE NOT INDICATED ON THE DRAWINGS, CONNECTIONS SHALL BE DESIGNED TO DEVELOP THE FULL TENSILE CAPACITY OF THE MEMBERS.

6. FOR CONNECTIONS NOT SPECIFICALLY ADDRESSED BY THESE NOTES OR THE DRAWINGS, PROVIDE FILLET WELDS AT ALL CONTACT SURFACES SUFFICIENT TO DEVELOP THE TENSILE STRENGTH OF THE SMALLER MEMBER AT THE JOINT.
7. UNLESS NOTED OTHERWISE ON THE DRAWINGS, ALL SHOP AND FIELD BOLTED CONNECTIONS SHALL DEVELOP AS APPLICABLE THE FULL TENSILE OR COMPRESSIVE STRENGTH OF THE MEMBER. ALL MEMBERS WITH BOLTED MOMENT CONNECTIONS, NOTED ON THE DRAWINGS WITH "MC", SHALL BE BOLTED TO DEVELOP THE FULL FLEXURAL CAPACITY OF THE MEMBER, UNLESS NOTED OTHERWISE ON THE DRAWINGS.
8. ROOF EDGE ANGLES SHALL BE CONTINUOUS AND SHALL BE SPLICED ONLY AT SUPPORTS. SPLICES SHALL BE BUTT WELDED TO DEVELOP FULL CAPACITY OF THE MEMBER..

DRAWING CONFLICTS

1. THE GENERAL CONTRACTOR SHALL COMPARE THE ARCHITECTURAL AND STRUCTURAL DRAWINGS AND REPORT ANY DISCREPANCY BETWEEN EACH SET OF DRAWINGS AND WITHIN EACH SET OF DRAWINGS TO THE ARCHITECT AND ENGINEER, PRIOR TO THE FABRICATION AND INSTALLATION OF ANY STRUCTURAL MEMBERS.

EXISTING CONDITIONS

1. THE GENERAL CONTRACTOR SHALL VERIFY ALL DIMENSIONS AND CONDITIONS OF THE EXISTING BUILDING AT THE JOB SITE AND REPORT ANY DISCREPANCIES FROM ASSUMED CONDITIONS SHOWN ON THE DRAWINGS TO THE ARCHITECT AND ENGINEER PRIOR TO THE FABRICATION AND ERECTION OF ANY MEMBERS.

SUBMITTALS

A. SUBMITTAL LIST AND SCHEDULE

THE GENERAL CONTRACTOR SHALL PREPARE A DETAILED LIST AND SCHEDULE OF ALL SUBMITTAL ITEMS TO BE SENT TO THE STRUCTURAL ENGINEER PRIOR TO THE START OF CONSTRUCTION. THIS LIST SHALL BE UPDATED AND REVISED AND KEPT CURRENT AS THE JOB PROGRESSES. THE SUBMITTAL LIST SHALL BE ORGANIZED AS SHOWN BELOW:
1. SHOP DRAWINGS
2. MANUFACTURERS LITERATURE FOR PRODUCTS, ASSEMBLIES, AND HARDWARE
3. PRODUCTS, ASSEMBLIES AND HARDWARE
4. PRODUCT CERTIFICATIONS, MILL CERTIFICATES, AND AFFIDAVITS
5. DESIGN CALCULATIONS

B. SHOP DRAWINGS

1. THE GENERAL CONTRACTOR SHALL SUBMIT FOR ENGINEER REVIEW SHOP DRAWINGS FOR THE FOLLOWING ITEMS:
   (1) BAR JOISTS AND JOIST GIRDERS (RE)
   (2) COMPOSITE BEAM SHEAR CONNECTOR LAYOUT
   (3) COMPOSITE METAL DECK
   (4) CONCRETE MIX DESIGNS (TA)
   (5) CONSTRUCTION JOINT LOCATIONS IN STRUCTURAL FLOORS, WALLS, AND SLABS ON GRADE
   (6) Elevators (OR)
   (7) EMBEDDED ITEMS (PLATES, ANGLES, BOLTS, ETC.) OR ITEMS ATTACHED TO THE STRUCTURAL FRAME FOR BUILDING CLADDING ATTACHMENT OR FOR ATTACHMENT OF OTHER ITEMS (OR)
   (8) EXTERIOR WINDOW WALL SYSTEM(OR)
   (9) FLOOR METAL FORM DECK
   (10) LIGHT GAUGE (COLD FORMED STEEL) METAL (RE) USED TO SUPPORT EXTERIOR CLADDING OR AS LOAD BEARING MEMBERS
   (11) MECHANICAL, ELECTRICAL, PLUMBING OPENINGS IN SLABS
   (12) METAL BUILDING (RE)
   (13) MISCELLANEOUS STEEL
   (14) REINFORCING STEEL
   (15) ROOF METAL DECK
   (16) STEEL STAIRS (RE)
   (17) STRUCTURAL STEEL, SHOP AND ERECTION DRAWINGS (RE)
   (18) STRUCTURAL STEEL BUILDING ERECTION-BRACING DRAWINGS AND ERECTION TOWER/SHORING DRAWINGS (RE,OR)
   (19) SURVEY OF STRUCTURAL STEEL ERECTION (RE)

Notes:
(RE) ITEMS MARKED THUS SHALL HAVE SHOP DRAWINGS SEALED BY A REGISTERED REGISTERED ENGINEER IN THE STATE WHERE THE PROJECT IS LOCATED PER THE PROJECT SPECIFICATIONS.
(OR) ITEMS MARKED THUS SHALL BE SUBMITTED TO ENGINEER FOR OWNER'S RECORD ONLY AND WILL NOT HAVE THE ENGINEER'S SHOP DRAWING STAMP STAMP AFFIXED.
(TA) ITEMS MARKED THUS SHALL BE SUBMITTED TO THE OWNER'S TESTING AGENCY FOR THEIR REVIEW.
(GE) ITEMS MARKED THUS SHALL BE SUBMITTED TO THE CONSTRUCTION GEO TECHNICAL ENGINEER FOR THEIR REVIEW.

2. ALL SHOP DRAWINGS MUST BE REVIEWED AND STAMPED BY THE GENERAL CONTRACTOR TO SUBMITTAL.
3. CONTRACTOR SHALL SUBMIT ONE SET OF REPRODUCIBLES AND TWO SETS OF PRINTS FOR ALL SHOP DRAWINGS SPECIFIED TO BE RETURNED BY THE ENGINEER.
4. THE OMISSION FROM THE SHOP DRAWINGS OF ANY MATERIALS REQUIRED BY THE CONTRACT DOCUMENTS TO BE FURNISHED SHALL NOT RELIEVE THE CONTRACTOR OF THE RESPONSIBILITY OF FURNISHING AND INSTALLING SUCH MATERIALS, REGARDLESS OF WHETHER THE SHOP DRAWINGS HAVE BEEN REVIEWED AND APPROVED.

C. MANUFACTURERS LITERATURE
SUBMIT TWO COPIES OF MANUFACTURERS LITERATURE FOR ALL MATERIALS AND PRODUCTS USED IN CONSTRUCTION ON THE PROJECT.

D. DESIGN CALCULATIONS
THE GENERAL CONTRACTOR SHALL SUBMIT FOR ENGINEER REVIEW TWO SETS OF DESIGN CALCULATIONS SEALED BY A REGISTERED ENGINEER IN THE STATE WHERE THE PROJECT IS LOCATED FOR THE FOLLOWING ITEMS:
1. STRUCTURAL STEEL CONNECTIONS
2. BAR JOISTS AND JOIST GIRDERS
3. STEEL STAIRS
4. METAL BUILDING
5. LIGHT GAUGE METAL (COLD FORMED STEEL) USED TO SUPPORT EXTERIOR CLADDING OR AS LOAD BEARING MEMBERS

ITEMS MARKED THUS (#) SHALL BE SUBMITTED FOR OWNER'S RECORD ONLY.

E. REPRODUCTION
THE USE OF ELECTRONIC FILES OR REPRODUCTIONS OF THESE CONTRACT DOCUMENTS BY ANY CONTRACTOR, SUBCONTRACTOR, ERECTOR, FABRICATOR, OR MATERIAL SUPPLIER IN LIEU OF PREPARATION OF SHOP DRAWINGS SIGNIFIES THEIR ACCEPTANCE OF ALL INFORMATION SHOWN HEREON AS CORRECT, AND OBLIGATES THEMSELVES TO ANY JOB EXPENSE, REAL OR IMPLIED, ARISING DUE TO ANY ERRORS THAT MAY OCCUR HEREON.

COORDINATION

1. IT IS THE RESPONSIBILITY OF THE GENERAL CONTRACTOR TO OBTAIN ALL CONTRACT DOCUMENTS AND LATEST ADDENDA AND TO SUBMIT SUCH DOCUMENTS TO ALL SUBCONTRACTORS AND MATERIAL SUPPLIERS PRIOR TO THE SUBMITTAL OF SHOP DRAWINGS, FABRICATION OF ANY STRUCTURAL MEMBERS, AND CONSTRUCTION.
2. THE GENERAL CONTRACTOR SHALL COMPARE THE ARCHITECTURAL, STRUCTURAL AND MECHANICAL DRAWINGS AND REPORT ANY DISCREPANCY BETWEEN EACH SET OF DRAWINGS AND WITHIN EACH SET OF DRAWINGS TO THE ARCHITECT AND ENGINEER PRIOR TO THE FABRICATION AND INSTALLATION OF ANY STRUCTURAL MEMBERS.
3. ONLY LARGER SLEEVE OPENINGS AND FRAMED OPENINGS IN STRUCTURAL FRAMING COMPONENT MEMBERS ARE INDICATED ON THE STRUCTURAL DRAWINGS. HOWEVER, ALL SLEEVES, INSERTS AND OPENINGS, INCLUDING FRAMES AND/OR SLEEVES SHALL BE PROVIDED FOR PASSAGE, PROVISION AND/OR INCORPORATION OF THE WORK OF THE CONTRACT, INCLUDING BUT NOT LIMITED TO MECHANICAL, ELECTRICAL AND PLUMBING WORK. THIS WORK SHALL INCLUDE THE COORDINATION OF SIZES, ALIGNMENT, DIMENSIONS, POSITION, LOCATIONS, ELEVATIONS AND GRADES AS REQUIRED TO SERVE THE INTENDED PURPOSE. OPENINGS NOT INDICATED ON THE STRUCTURAL DRAWINGS, BUT REQUIRED AS NOTED ABOVE, SHALL SUBMITTED TO THE ENGINEER FOR REVIEW.
4. REFER TO ARCHITECTURAL, MECHANICAL, ELECTRICAL AND PLUMBING DRAWINGS FOR FLOOR ELEVATIONS, SLOPES, DRAINS AND LOCATION OF DEPRESSED AND ELEVATED FLOOR AREAS.
5. COMPATIBILITY OF THE STRUCTURE AND PROVISIONS FOR BUILDING EQUIPMENT SUPPORTED ON OR FROM STRUCTURAL COMPONENTS SHALL BE VERIFIED AS TO SIZE, DIMENSIONS, CLEARANCES, ACCESSIBILITY, WEIGHTS AND REACTION WITH THE EQUIPMENT FOR WHICH THE STRUCTURE HAS BEEN DESIGNED PRIOR TO SUBMISSION OF SHOP DRAWINGS AND DATA FOR EACH PIECE OF EQUIPMENT AND FOR STRUCTURAL COMPONENTS. DIFFERENCES SHALL BE NOTED ON THE SUBMITTALS. SUCH DETAILS SHALL APPLY WHETHER OR NOT THEY ARE KEYED IN AT EACH LOCATION. QUESTIONS REGARDING APPLICABILITY OF TYPICAL DETAILS SHALL BE DETERMINED BY THE ENGINEER.
6. SHOP DRAWINGS SHALL BE PREPARED FOR ALL STRUCTURAL ITEMS AND SUBMITTED FOR REVIEW BY THE ENGINEER. CONTRACT DRAWINGS SHALL NOT BE REPRODUCED AND USED AS SHOP DRAWINGS. ALL ITEMS DEVIATING FROM THE CONTRACT DRAWINGS OR FROM PREVIOUSLY SUBMITTED SHOP DRAWINGS SHALL BE CLOUDED.
7. THE DETAILS DESIGNATED AS "TYPICAL DETAILS" APPLY GENERALLY TO THE DRAWINGS IN ALL AREAS WHERE CONDITIONS ARE SIMILAR TO THOSE DESCRIBED IN THE DETAILS.
8. ALL DIMENSIONS AND CONDITIONS OF EXISTING CONSTRUCTION SHALL BE VERIFIED BY THE CONTRACTOR AT THE JOB SITE. DIFFERENCES BETWEEN EXISTING CONSTRUCTION AND THE DRAWINGS SHALL BE REFERRED TO THE ARCHITECT. DIFFERENCES SHALL ALSO BE CLOUDED ON THE SHOP DRAWINGS.
9. THE DESIGN AND PROVISION OF ALL TEMPORARY SUPPORTS SUCH AS GUYS, BRACES, FALSEWORK, SUPPORTS AND ANCHORS FOR SAFETY LINES, CRIBBING OR ANY OTHER TEMPORARY ELEMENTS REQUIRED FOR THE EXECUTION OF THE CONTRACT ARE NOT INCLUDED IN THE DRAWINGS AND SHALL BE THE RESPONSIBILITY OF THE CONTRACTOR. TEMPORARY SUPPORTS SHALL NOT RESULT IN THE OVERSTRESS OR DAMAGE OF THE ELEMENTS TO BE BRACED NOR ANY ELEMENTS USED AS BRACE SUPPORTS.
10. THE CONTRACT STRUCTURAL DRAWINGS AND SPECIFICATIONS REPRESENT THE FINISHED STRUCTURE, AND, EXCEPT WHERE SPECIFICALLY SHOWN, DO NOT INDICATE THE METHOD OR MEANS OF CONSTRUCTION. THE CONTRACTOR SHALL SUPERVISE AND DIRECT THE WORK AND SHALL BE SOLELY RESPONSIBLE FOR ALL CONSTRUCTION MEANS, METHODS, PROCEDURES, TECHNIQUES, AND SEQUENCE.
11. THE ENGINEER SHALL NOT HAVE CONTROL OF, AND SHALL NOT BE RESPONSIBLE FOR, CONSTRUCTION MEANS, METHODS, TECHNIQUES, SEQUENCES, OR PROCEDURES, FOR SAFETY PRECAUTIONS AND PROGRAMS IN CONNECTION WITH THE WORK, FOR THE ACTS OR OMISSION OF THE CONTRACTOR, SUBCONTRACTOR, OR ANY OTHER PERSONS PERFORMING ANY OF THE WORK, OR FOR THE FAILURE OF ANY OF THEM TO CARRY OUT THE WORK IN ACCORDANCE WITH THE CONTRACT DOCUMENTS.
12. PERIODIC SITE OBSERVATION BY FIELD REPRESENTATIVES OF JOSE I. GUERRA, INC. IS SOLELY FOR THE PURPOSE OF DETERMINING IF THE WORK OF THE CONTRACTOR IS PROCEEDING IN ACCORDANCE WITH THE STRUCTURAL CONTRACT DOCUMENTS. THIS LIMITED SITE OBSERVATION IS INTENDED TO BE A CHECK OF THE QUALITY OR QUANTITY OF THE WORK, BUT RATHER PERIODIC IN AN EFFORT TO INFORM THE OWNER AGAINST DEFECTS AND DEFICIENCIES IN THE WORK OF THE CONTRACTOR.

JOSE I. GUERRA, INC.
CONSULTING ENGINEERS
2401 S. IH35 SUITE 210
AUSTIN, TEXAS 78741
(512) 445-2090
TBPE FIRM F-3

STATE OF TEXAS
JOHN C. ROWS
85568
REGISTERED PROFESSIONAL ENGINEER
8-30-16

mwm DesignGroup
305 East Huntland Drive
Suite 200
Austin, Texas 78752
p: 512.453.0767
f: 512.453.1734
TBAE FIRM REGISTRATION NO.: 1452
TBPE FIRM REGISTRATION NO.: F-1416
TBPLS FIRM REGISTRATION NO.: 10065600

NO.	DATE	DESCRIPTION	BY

0 1"
The bar above measures one inch on the original drawing. Adjust scales accordingly.

STRUCTURAL GENERAL NOTES

PLOTTED: 8/30/2016
JOB NO: 023-79D

FS/EMS0
S1.1
___ OF ___

File: F:\15011_AFD Women's Locker Rm Improvements\DRAWINGS\CAD\15011_AFD_S1.1 STRUCTURAL GENERAL NOTES.dwg 24x36

GENERAL NOTES

SPECIAL INSPECTIONS

THE OWNER'S TESTING LABORATORY SHALL PROVIDE SPECIAL INSPECTION SERVICES IN ACCORDANCE WITH THE INTERNATIONAL BUILDING CODE FOR THE FOLLOWING ITEMS:

1. STEEL CONSTRUCTION:
   - ALL FIELD WELDING
   - HIGH STRENGTH BOLTING
   - INSPECTION OF STRUCTURAL STEEL, BOLTING, WELDING MATERIAL
   - WELDING OF STRUCTURAL STEEL
2. CONCRETE CONSTRUCTION:
   - BOLTS INSTALLED IN CONCRETE
   - CONCRETE WORK
   - CONTINUOUS INSPECTION OF REINFORCING STEEL PLACING
   - EPOXY BOLTS
   - FORMWORK
   - REINFORCING STEEL PLACEMENT
   - WELDING OF REINFORCING STEEL
3. MASONRY CONSTRUCTION:
   - MASONRY WORK
4. SOILS:
   - SELECT FILL
5. DEEP FOUNDATIONS:
   - PIER FOUNDATIONS
6. SPRAYED FIRE-RESISTANT MATERIALS:
7. WIND REQUIREMENTS:
   - MAIN WINDFORCE-RESISTING SYSTEMS
   - ROOF CLADDING
   - WINDFORCE-RESISTING SYSTEM CONNECTION TO FOUNDATION
   - WIND-RESISTING COMPONENTS
8. STATEMENT OF SPECIAL INSPECTIONS:
9. SPECIAL INSPECTION IS REQUIRED FOR THE ITEMS LISTED ABOVE REFER TO SPECIFICATION SECTION014529 FOR TYPE AND EXTENT OF EACH SPECIAL INSPECTION AND EACH TEST. THE SPECIFICATION ALSO INDICATES WHETHER CONTINUOUS OR PERIODIC INSPECTION IS REQUIRED FOR THE ITEMS LISTED ABOVE ADDITIONAL INFORMATION.

STATEMENT OF SPECIAL INSPECTION PER IBC 2012, CHAPTER 17

PER SECTION 1705 OF THE 2012 INTERNATIONAL BUILDING CODE, THE FOLLOWING IS A LIST OF THE REQUIRED SPECIAL INSPECTIONS APPLICABLE FOR THIS PROJECT :

2012 IBC SECTION	INSPECTION / ASSURANCE	TYPE OF SPECIAL INSPECTIONS AND EXTENT	APPLICABLE	NON APPLICABLE	NON STRUCTURAL
1705.2	AISC 360	STEEL CONSTRUCTION	■	□	□
1705.2.2	IBC TABLE 1705.2.2	STEEL CONSTRUCTION OTHER THAN STRUCTURAL STEEL	■	□	□
1705.2.2.1.1	AWS D1.3	COLD-FORMED WELDING INSPECTION	□	■	□
1705.2.2.1.2	AWS D1.4 AND ACI 318	REINFORCING STEEL WELDING INSPECTION	■	□	□
1705.2.2.2	INDICATED IN SECTION	COLD-FORMED STEEL TRUSSES SPANNING 60 FEET OR GREATER	□	■	□
1705.3	IBC TABLE 1705.3	CONCRETE CONSTRUCTION	■	□	□
1705.4	INSPECTION: TMS 420/ACI 530/ASCE 5 ASSURANCE: TMS 620/ACI 530.1/ASCE 6	MASONRY CONSTRUCTION	■	□	□
1705.5	INDICATED IN SECTION	WOOD CONSTRUCTION	■	□	□
1705.6	INDICATED IN SECTION	SOILS	■	□	□
1705.7	INDICATED IN SECTION	DRIVEN DEEP FOUNDATIONS	□	■	□
1705.8	IBC TABLE 1705.8	CAST-IN-PLACE DEEP FOUNDATIONS (PIERS)	■	□	□
1705.9	INDICATED IN SECTION	HELICAL PILE FOUNDATIONS	□	■	□
1705.10	INDICATED IN SECTION	SPECIAL INSPECTION FOR WIND RESISTANCE	□	■	□
1705.11	INDICATED IN SECTION	SPECIAL INSPECTION FOR SEISMIC RESISTANCE	□	■	□
1705.12	INDICATED IN SECTION	TESTING AND QUALIFICATION FOR SEISMIC RESISTANCE	□	■	□
1705.13	INDICATED IN SECTION	SPRAYED FIRE-RESISTANCE MATERIALS	□	□	■
1705.14	AWCI 12-B	MASTIC AND INTUMESCENT FIRE-RESISTANT COATINGS	□	□	■
1705.15	INDICATED IN SECTION & ASTM E2570	EXTERIOR INSULATION AND FINISH SYSTEMS/ WATER-RESISTIVE BARRIER COATING	□	□	■
1705.16	INDICATED IN SECTION	FIRE-RESISTANCE PENETRATIONS AND JOINTS	□	□	■
1705.17	INDICATED IN SECTION	SPECIAL INSPECTION FOR SMOKE CONTROL	□	□	■

PER CHAPTER 17 OF THE 2012 INTERNATIONAL BUILDING CODE, THE FOLLOWING IS A LIST OF ADDITIONAL SPECIAL INSPECTIONS APPLICABLE TO THIS PROJECT * :

2012 IBC SECTION	TYPE OF SPECIAL INSPECTIONS AND EXTENT	APPLICABLE	NON APPLICABLE	DETAILS
1706	DESIGN STRENGTH OF MATERIALS	□	■	
1707	ALTERNATIVE TEST PROCEDURES	□	■	
1708	TEST SAFE LOAD	□	■	
1709	IN-SITU LOAD TESTS	□	■	
1710	PRECONSTRUCTION LOAD TESTS	□	■	
1711	MATERIAL AND TEST STANDARDS	□	■	

* ADDITIONAL SPECIAL INSPECTIONS PER 2012 IBC SHALL ALSO BE REQUIRED FOR PROPOSED WORK THAT IS, IN THE OPINION OF THE BUILDING OFFICIAL, UNUSUAL IN NATURE.

ABBREVIATIONS

AB	ANCHOR BOLT
ADDL	ADDITIONAL
AL	ALUMINUM
ALT	ALTERNATE
ANC	ANCHOR
APVD	APPROVED
ARCH	ARCHITECT, ARCHITECTURAL
BC	BOTTOM CHORD
BOC	BOTTOM OF CONCRETE
BOS	BOTTOM OF STEEL
BOT	BOTTOM, BOTTOM OF TRENCH
BM	BEAM
BP	BID PACKAGE
BRG	BEARING
BTWN	BETWEEN
CC	CENTER TO CENTER
CHKD	CHECKERED
CIP	CAST IN PLACE
CJ	CONSTRUCTION JOINT
CL, ℄	CENTERLINE
CLR	CLEARANCE
CMU	CONCRETE MASONRY UNIT
COL	COLUMN
CONC	CONCRETE
CONN	CONNECTION
CONT	CONTINUOUS
CTR	CENTER
CTRD	CENTERED
DBA	DEFORMED BAR ANCHOR
DIA.	DIAMETER
DP	DEEP
DWG	DRAWING
EA	EACH
ECS	EPOXY COATED STEEL
EE	EACH END
EF	EACH FACE
EL, ELEV	ELEVATION
EQ	EQUALLY SPACED
ES	EACH SIDE
EW	EACH WAY
EXP	EXPANSION
EXST	EXISTING
FD	FLOOR DRAIN
FDN	FOUNDATION
FIN	FINISH
FLG	FLANGE
FLR	FLOOR
FO	FACE OF
FRMG	FRAMING
FRP	FIBER REINFORCED PLASTIC
FS	FAR SIDE
FTG	FOOTING
GA	GAUGE, GAGE
GALV	GALVANIZED
GRD	GRADE
GRT	GROUT
GRTG	GRATING
H	HIGH
HCA	HEADED CONCRETE ANCHOR
HORIZ	HORIZONTAL
HSB	HIGH STRENGTH BOLT
IF	INSIDE FACE
IN	INCHES
JT	JOINT
L	LOW
LONG	LONGITUDINAL
LLH	LONG LEG HORIZONTAL
LLV	LONG LEG VERTICAL
LSH	LONG SLOTTED HOLE
MFR	MANUFACTURER
MAX	MAXIMUM
MB	MACHINE BOLT
MECH	MECHANICAL
MIN	MINIMUM
MTL	METAL
NDT	NON-DESTRUCTIVE TESTING
NIC	NOT IN CONTRACT
NS	NEAR SIDE
NTS	NOT TO SCALE
OC	ON CENTER
OD	OUTSIDE DIAMETER
OF	OUTSIDE FACE
O/O	OUT TO OUT
OPNG	OPENING
OPP	OPPOSITE
OSH	OVERSIZED HOLE
PC	PRECAST
PLCS	PLACES
PJF	PREMOLDED JOINT FILLER
PL, ℙ	PLATE
PROJ	PROJECTION
PVC	POLYVINYL CHLORIDE
RD	ROOF DRAIN
REINF	REINFORCE, REINFORCING
REQD	REQUIRED
RT	RADIOGRAPHIC TESTING
RTN	RETURN
SBD	SCHED. BEAM DEPTH
SJD	SCHED. JOIST DEPTH
SHT	SHEET
SIB	STRUCTURAL ISOLATION BREAK
SIM	SIMILAR
SLV	SHORT LEG VERTICAL
SPCG	SPACING
SPCS	SPACES
SPECS	SPECIFICATIONS
SQ	SQUARE
SS	STAINLESS STEEL
SSD	SCHEDULED SLAB DEPTH
SSH	SHORT SLOTTED HOLE
STD	STANDARD
STIFF	STIFFENER
STL	STEEL
SW	STUD WELD
SYM	SYMMETRICAL
T&B	TOP & BOTTOM
T/SL	TOP OF SLAB
TC	TOP CHORD
TD	TRUSS DIAGONAL
THK	THICK
TO.	TOP OF
TOC	TOP OF CONCRETE
TOF	TOP OF FOOTING
TOG	TOP OF GRATING
TOS	TOP OF STEEL
TOW	TOP OF WALL
TRANS	TRANSVERSE
TV	TRUSS VERTICAL
TYP	TYPICAL
UNO	UNLESS NOTED OTHERWISE
UT	ULTRASONIC TESTING
VERT	VERTICAL
W	WIDE
W/	WITH
WS	WATERSTOP
WWF	WELDED WIRE FABRIC

JOSE I. GUERRA, INC.
CONSULTING ENGINEERS
2401 S. IH35 SUITE 210
AUSTIN, TEXAS 78741
(512) 445-2090
TBPE FIRM F-3

STATE OF TEXAS
JOHN G. ACUFF
85562
REGISTERED PROFESSIONAL ENGINEER
8-30-16

mwm Design Group
305 East Huntland Drive
Suite 200
Austin, Texas 78752
p: 512.453.0767
f: 512.453.1734
TBAE FIRM REGISTRATION NO.: 1452
TBPE FIRM REGISTRATION NO.: F-1416
TBPLS FIRM REGISTRATION NO.: 10065600

NO.	DATE	DESCRIPTION	BY

0 1"
The bar above measures one inch on the original drawing. Adjust scales accordingly.

STRUCTURAL GENERAL NOTES

PLOTTED: 8/30/2016
JOB NO: 023-79D

FS/EMS0
S1.2

__ OF __

File: F:\15011_AFD Women's Locker Rm Improvements\DRAWINGS\CAD\15011_AFD_S1.2 STRUCTURAL GENERAL NOTES.dwg 24x36

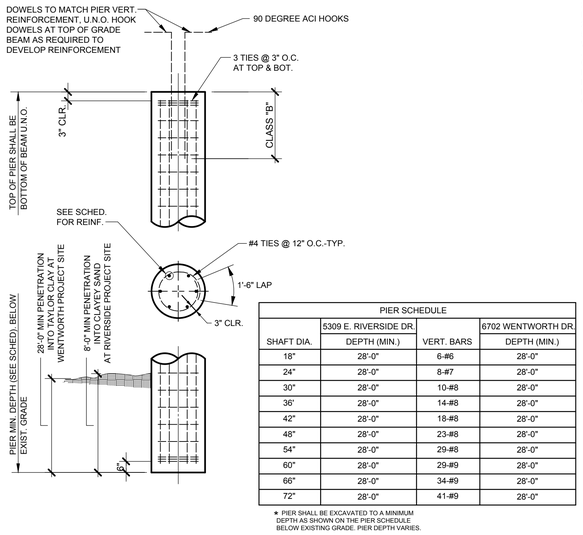

PIER SCHEDULE			
	5309 E. RIVERSIDE DR.		6702 WENTWORTH DR.
SHAFT DIA.	DEPTH (MIN.)	VERT. BARS	DEPTH (MIN.)
18"	28'-0"	6-#6	28'-0"
24"	28'-0"	8-#7	28'-0"
30"	28'-0"	10-#8	28'-0"
36'	28'-0"	14-#8	28'-0"
42"	28'-0"	18-#8	28'-0"
48"	28'-0"	23-#8	28'-0"
54"	28'-0"	29-#8	28'-0"
60"	28'-0"	29-#9	28'-0"
66"	28'-0"	34-#9	28'-0"
72"	28'-0"	41-#9	28'-0"

* PIER SHALL BE EXCAVATED TO A MINIMUM DEPTH AS SHOWN ON THE PIER SCHEDULE BELOW EXISTING GRADE. PIER DEPTH VARIES.

1 TYPICAL DRILLED PIER DETAIL
SCALE: NONE

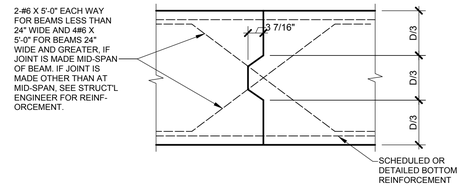

2 TYPICAL BEAM CONSTRUCTION JOINT ELEVATION OF SIDE OF BEAM
NO SCALE

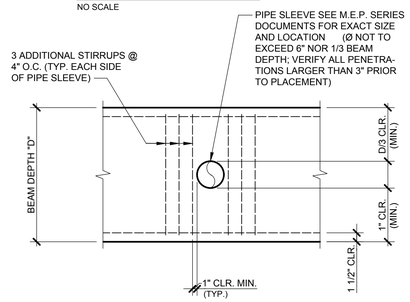

3 TYPICAL BEAM PENETRATION : ELEVATION (SIMILAR @ VERTICAL PENETRATIONS)
NO SCALE

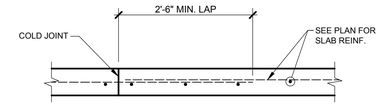

4 TYPICAL SLAB CONSTRUCTION JOINT DETAIL
NO SCALE

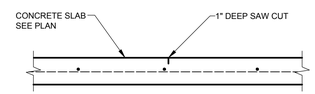

NOTE: SAW CUT SHALL BE MADE WITHIN 24 HOURS OF PLACEMENT OF CONCRETE

5 TYPICAL SAW CUT JOINT
NO SCALE

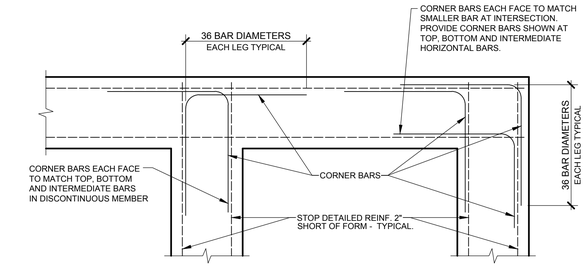

NOTES:

1. WHERE 90 DEGREE HOOKS ARE SCHEDULED OR DETAILED FOR TOP BARS, CORNER BARS MAY BE OMITTED.
2. MATCH SIZE, LOCATION AND NUMBER OF HORIZONTAL BEAM AND WALL BARS, EXCEPT THAT WHERE THERE ARE MORE THAN 2 TOP OR BOTTOM BARS, ONLY THE INSIDE AND OUTSIDE BARS MUST BE MATCHED.

PLAN

6 TYPICAL CORNER BARS AT WALL OR GRADE BEAM INTERSECTION DETAIL
NO SCALE

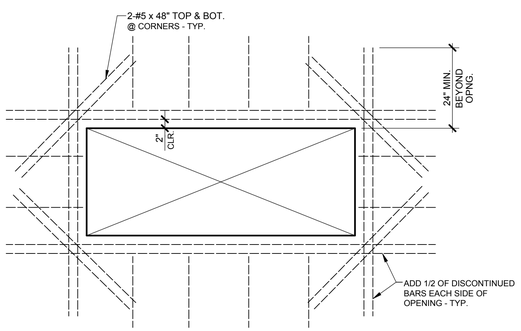

7 TYPICAL RECTANGULAR OPENING IN CONCRETE
NO SCALE

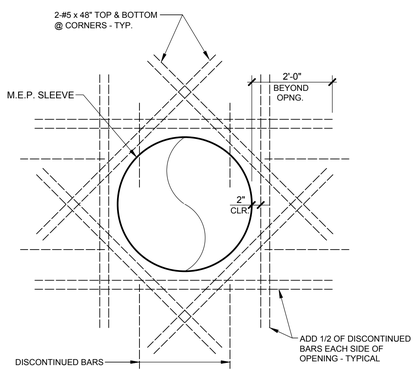

8 TYPICAL ROUND OPENING IN CONCRETE
NO SCALE

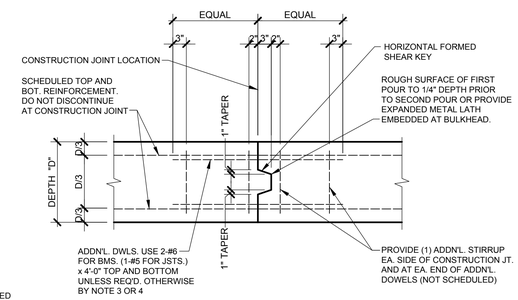

9 TYPICAL DETAIL AT CONSTRUCTION JOINT CONCRETE BEAM OR JOIST
NO SCALE

NOTE:

1. GENERAL CONTRACTOR SHALL SUBMIT DESIRED CONSTRUCTION JOINT LAYOUT AS A SHOP DRAWING FOR APPROVAL A MINIMUM OF TWO WEEKS PRIOR TO POUR.
2. CONSTRUCTION JOINT LOCATIONS SHALL BE COORDINATED WITH REINFORCING STEEL SUPPLIER AND ERECTOR PRIOR TO SUBMISSION OF SHOP DRAWINGS.
3. ACCEPTABLE JOINT LOCATIONS ARE AS FOLLOWS:
   A. FOR BEAMS NOT SUPPORTING INTERSECTING BEAMS: PLACE JOINT WITHIN TWO FEET EITHER SIDE OF BEAM MIDSPAN.
   B. FOR BEAMS SUPPORTING INTERSECTING BEAMS: CHECK WITH STRUCTURAL ENGINEER.
4. FOR JOINT LOCATIONS OTHER THAN WITHIN TWO FEET EITHER SIDE OF MID SPAN, CONTRACTOR SHALL COORDINATE REQUIRED ADDN'L. REINFORCEMENT WITH THE ENGINEER ON THE SHOP DRAWINGS.

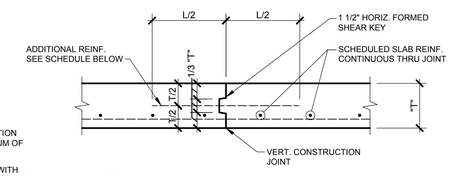

NOTES:

1. CONSTRUCTION JOINTS SHOULD BE LOCATED ON THE MIDDLE THIRD OF THE SLAB SPAN
2. CONCRETE SURFACE AT CONSTRUCTION JOINT SHALL BE CLEAN AND FREE OF LAITANCE.

ADD'N. REINFORCEMENT SCHED. Fy = 60 ksi	
SLAB THICKNESS	REINFORCEMENT
T < 4"	#4 @ 18 x 2'-6"
4" < T ≤ 6"	#4 @ 12 x 2'-6"
6" < T ≤ 8"	#5 @ 12 x 3'-0"
8" < T ≤ 12"	#6 @ 12 x 3'-8"

10 TYPICAL DETAIL AT CONSTRUCTION JOINT CONCRETE STRUCTURAL SLAB
NO SCALE

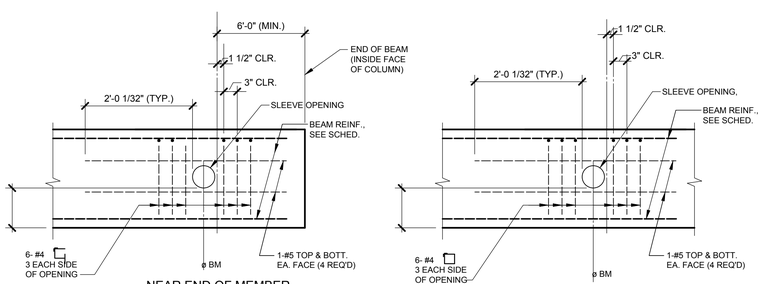

NEAR END OF MEMBER

AT BEAM SPAN ø

NOTE:
USE SCHEDULED 40 STEEL PIPE SLEEVES FOR ALL PENETRATIONS THRU CONC. BEAMS AND JOISTS.

11 TYP. ELEVATION OF SLEEVE DETAIL THRU CONCRETE BEAM
SCALE: NONE

JOSE I. GUERRA, INC.
CONSULTING ENGINEERS
2401 S. IH35 SUITE 210
AUSTIN, TEXAS 78741
(512) 445-2090
TBPE FIRM F-3

STATE OF TEXAS — JOSE I. GUERRA — 85548 — PROFESSIONAL ENGINEER — 8-30-16

mwm Design Group
305 East Huntland Drive
Suite 200
Austin, Texas 78752
p: 512.453.0767
f: 512.453.1734
TBAE FIRM REGISTRATION NO.: 1452
TBPE FIRM REGISTRATION NO.: F-1416
TBPLS FIRM REGISTRATION NO.: 10065600

NO.	DATE	DESCRIPTION	BY

0 1"
The bar above measures one inch on the original drawing. Adjust scales accordingly.

TYPICAL FOUNDATION DETAILS

PLOTTED: 8/30/2016
JOB NO: 023-79D

FS/EMS0
S3.0

__ OF __

File: F:\15011_AFD Women's Locker Rm Improvements\DRAWINGS\CAD\15011_S3.0_TYPICAL FOUNDATION DETAILS.dwg 24x36

BEAM AND GIRDER TENSION DEVELOPMENT AND LAP SPLICE LENGTHS

GRADE 60 REINFORCEMENT, NORMALWEIGHT CONCRETE

BAR SIZE	LAP CLASS	f'c = 3000 PSI		f'c = 4000 PSI		f'c = 5000 PSI		f'c = 6000 PSI		f'c = 7000 PSI		f'c = 8000 PSI	
		BOTTOM BARS	OTHER BARS	BOTTOM BARS	OTHER BARS	BOTTOM BARS	OTHER BARS	BOTTOM BARS	OTHER BARS	BOTTOM BARS	OTHER BARS	BOTTOM BARS	OTHER BARS
#3	A	12	13	12	12	12	12	12	12	12	12	12	12
	B	16	17	16	16	16	16	16	16	16	16	16	16
#4	A	16	20	14	18	12	16	12	15	12	14	12	13
	B	21	26	19	24	16	21	16	20	16	19	16	17
#5	A	23	29	20	25	18	23	16	21	15	19	14	18
	B	30	38	26	33	24	30	21	28	20	25	19	24
#6	A	31	40	27	35	24	31	22	28	20	26	19	25
	B	41	52	36	46	32	41	29	37	26	34	25	33
#7	A	46	60	40	52	36	46	33	42	30	39	28	37
	B	60	78	52	68	47	60	43	55	39	51	37	49
#8	A	60	78	52	67	46	60	42	55	39	51	37	48
	B	78	102	68	88	60	78	55	72	51	67	49	63
#9	A	64	84	56	72	50	65	46	59	42	55	40	51
	B	84	110	73	94	65	85	60	77	55	72	52	67
#10	A	72	93	62	81	56	72	51	66	47	61	44	57
	B	94	121	81	106	73	94	67	86	62	80	58	75
#11	A	85	110	74	96	66	86	60	78	56	72	52	68
	B	111	143	97	125	86	112	78	102	73	94	68	89

NOTES:
1. ALL SPLICE LENGTHS ARE IN INCHES.
2. THIS TABLE SHALL BE USED FOR BEAMS AND GIRDERS ONLY. REFER TO OTHER DEVELOPMENT LENGTH TABLES FOR OTHER MEMBERS.
3. THE TENSION DEVELOPMENT LENGTH (Ld) IS EQUAL TO THE SCHEDULED "CLASS A" LAP SPLICE LENGTH.
4. A BOTTOM BAR IS DEFINED AS ANY BAR THAT DOES NOT HAVE MORE THAN 12" OF FRESH CONCRETE BELOW THE BAR.
5. OTHER BARS INCLUDE TOP BARS, FACE BARS, AND ALL OTHER BARS THAT HAVE MORE THAN 12" OF FRESH CONCRETE BELOW THE BAR.
6. FOR EPOXY-COATED BARS, MULTIPLY THE TABULATED SPLICE LENGTHS OF BOTTOM BARS BY 1.5 AND THE TABULATED SPLICE LENGTHS OF OTHER BARS BY 1.3.
7. WHEN LAP SPLICING BARS OF DIFFERENT SIZES, THE LAP LENGTH IS DETERMINED BY THE SMALLER BAR BUT MAY NOT BE LESS THAN THE "CLASS A" SPLICE LENGTH OF THE LARGER BAR.

COLUMN AND PIER TENSION DEVELOPMENT AND LAP SPLICE LENGTHS

GRADE 60 REINFORCEMENT, NORMALWEIGHT CONCRETE

BAR SIZE	LAP CLASS	f'c = 3000 PSI		f'c = 4000 PSI		f'c = 5000 PSI		f'c = 6000 PSI		f'c = 7000 PSI		f'c = 8000 PSI	
		CATEGORY 1	CATEGORY 2	CATEGORY 1	CATEGORY 2	CATEGORY 1	CATEGORY 2	CATEGORY 1	CATEGORY 2	CATEGORY 1	CATEGORY 2	CATEGORY 1	CATEGORY 2
#5	A	19	21	19	19	19	19	19	19	19	19	19	19
	B	24	27	21	24	19	21	19	19	19	19	19	19
#6	A	23	30	23	26	23	23	23	23	23	23	23	23
	B	30	38	26	33	23	30	23	27	23	25	23	24
#7	A	33	44	29	38	27	34	27	31	27	29	27	27
	B	43	57	37	49	33	44	31	40	28	37	27	35
#8	A	39	52	34	45	30	40	30	37	30	34	30	32
	B	50	67	43	58	39	52	36	47	33	44	31	41
#9	A	44	59	38	51	34	46	34	42	34	39	34	36
	B	57	76	50	66	45	59	41	54	38	50	35	47
#10	A	51	66	44	57	39	51	39	47	39	43	39	40
	B	66	85	57	74	51	66	47	60	43	56	40	52
#11	A	57	71	49	62	44	55	43	51	43	47	43	44
	B	74	92	64	80	57	72	52	66	48	61	45	57

NOTES:
1. ALL SPLICE LENGTHS ARE IN INCHES.
2. THIS TABLE SHALL BE USED FOR COLUMNS ONLY. REFER TO OTHER DEVELOPMENT LENGTH TABLES FOR OTHER MEMBERS.
3. THE TENSION DEVELOPMENT LENGTH (Ld) IS EQUAL TO THE SCHEDULED "CLASS A" LAP SPLICE LENGTH.
4. FOR DETERMINING THE BAR CATEGORY, "db" IS DEFINED AS THE DIAMETER OF THE LARGER BAR BEING SPLICED.
5. THE "CATEGORY 1" LAP LENGTH SHALL BE USED WHEN THE CLEAR SPACING BETWEEN BARS AT THE SPLICE IS EQUAL TO OR GREATER THAN 3db.
6. THE "CATEGORY 2" LAP LENGTH SHALL BE USED WHEN THE CLEAR SPACING BETWEEN BARS AT THE SPLICE IS LESS THAN 3db AND GREATER THAN 2db.
7. WHEN THE CLEAR SPACING BETWEEN BARS AT THE SPLICE IS EQUAL TO OR LESS THAN 2db, SPLICES SHALL BE STAGGERED SO THAT NO MORE THAN 50% OF BARS ARE SPLICED AT ANY GIVEN LOCATION. REFER TO TYPICAL CLEAR SPACING CRITERIA OF LAP SPLICED BARS, STAGGERED SPLICES" FOR CRITERIA TO DETERMINE CLEAR SPACING "S" FOR BARS AT STAGGERED SPLICES.
8. IN CASES WHERE BAR SPACING IS NOT THE SAME AT DIFFERENT COLUMN FACES, THE SMALLER SPACING SHALL BE USED TO DETERMINE THE APPLICABLE SPLICE CATEGORY.
9. FOR EPOXY-COATED BARS, MULTIPLY THE TABULATED SPLICE LENGTHS BY 1.5.
10. WHEN LAP SPLICING BARS OF DIFFERENT SIZES, THE LAP LENGTH IS DETERMINED BY THE SMALLER BAR BUT MAY NOT BE LESS THAN THE "CLASS A" SPLICE LENGTH OF THE LARGER BAR.

1 BEAM AND GIRDER TENSION DEVELOPMENT AND LAP SPLICE LENGTHS

N.T.S.

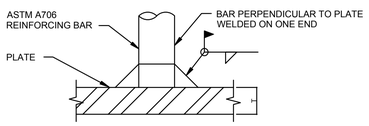

DEVELOPMENT OF WELDABLE REINFORCEMENT

GRADE 60 REINFORCEMENT, E70 ELECTRODE

BAR SIZE	NOMINAL WELD SIZE (INCHES)	MINIMUM PLATE THICKNESS, T (INCHES)
#3	1/4	1/4
#4	5/16	1/4
#5	3/8	1/4
#6	7/16	5/16
#7	1/2	3/8
#8	9/16	7/16
#9	5/8	1/2
#10	11/16	9/16
#11	3/4	5/8

3 DEVELOPMENT OF WELDABLE REINFORCEMENT

N.T.S.

DEVELOPMENT LENGTHS OF STANDARD HOOKS IN TENSION

GRADE 60 REINFORCEMENT, NORMALWEIGHT CONCRETE

BAR SIZE	f'c=3000 PSI		f'c=4000 PSI		f'c=5000 PSI		f'c=6000 PSI		f'c=7000 PSI		f'c=8000 PSI		BAR SIZE
	Lhb	0.7 Lhb	Lhb	0.7 Lhb	Lhb	0.7 Lhb	Lhb	0.7 Lhb	Lhb	0.7 Lhb	Lhb	0.7 Lhb	
#3	9	7	8	6	7	6	6	6	6	6	6	6	#3
#4	11	8	10	7	9	7	8	6	8	6	7	6	#4
#5	14	10	12	9	11	8	10	7	9	7	9	7	#5
#6	17	12	15	11	13	10	12	9	11	8	11	8	#6
#7	20	14	17	12	15	11	14	10	13	10	12	9	#7
#8	22	16	19	14	17	12	16	12	15	11	14	10	#8
#9	25	18	22	16	20	14	18	13	17	12	16	12	#9
#10	28	20	25	18	22	16	20	14	19	14	18	13	#10
#11	31	22	27	19	24	17	22	16	21	15	19	14	#11
#14	38	-	33	-	29	-	27	-	25	-	23	-	#14
#18	50	-	43	-	39	-	35	-	33	-	31	-	#18

NOTES:
1. Ldh = DEVELOPMENT LENGTH OF STANDARD HOOKS IN TENSION (INCHES).
2. Ldh = Lhb UNLESS CONDITIONS OF NOTE 3 ARE SATISFIED.
3. Ldh = 0.7Lhb FOR #11 BARS AND SMALLER WHEN SIDE COVER (NORMAL TO PLANE OF HOOK) IS NOT LESS THAN 2 1/2 INCHES AND FOR 90° HOOKS COVER ON BAR EXTENSION BEYOND HOOK IS NOT LESS THAN 2 INCHES.
4. HOOKS ARE NOT CONSIDERED EFFECTIVE FOR DEVELOPING BARS IN COMPRESSION.
5. Ldh SHALL BE MULTIPLIED BY 1.2 FOR EPOXY-COATED HOOKED REINFORCING BARS.

4 DEVELOPMENT LENGTHS OF STD HOOKS IN TENSION

N.T.S.

SLAB TENSION DEVELOPMENT AND LAP SPLICE LENGTHS

GRADE 60 REINFORCEMENT, NORMALWEIGHT CONCRETE

BAR SIZE	LAP CLASS	f'c = 3000 PSI		f'c = 4000 PSI		f'c = 5000 PSI	
		BOTTOM BARS	OTHER BARS	BOTTOM BARS	OTHER BARS	BOTTOM BARS	OTHER BARS
#3	A	12	13	12	12	12	12
	B	16	17	16	16	16	16
#4	A	17	22	15	19	13	17
	B	23	29	20	25	17	23
#5	A	25	32	21	28	19	25
	B	33	42	28	37	25	33
#6	A	33	43	29	37	26	34
	B	43	56	38	49	34	45
#7	A	53	69	46	60	42	54
	B	69	90	60	78	55	71
#8	A	66	86	57	74	51	67
	B	86	112	75	97	67	88
#9	A	80	104	69	90	62	81
	B	104	136	90	117	81	106

NOTES:
1. ALL SPLICE LENGTHS ARE IN INCHES.
2. THIS TABLE SHALL BE USED FOR SLABS ONLY. REFER TO OTHER DEVELOPMENT LENGTH TABLES FOR OTHER MEMBERS.
3. THE TENSION DEVELOPMENT LENGTH (Ld) IS EQUAL TO THE SCHEDULED "CLASS A" LAP SPLICE LENGTH.
4. A BOTTOM BAR IS DEFINED AS ANY BAR THAT DOES NOT HAVE MORE THAN 12" OF FRESH CONCRETE BELOW THE BAR.
5. OTHER BARS INCLUDE TOP BARS AND ALL OTHER BARS THAT HAVE MORE THAN 12" OF FRESH CONCRETE BELOW THE BAR. FOR TOP REINFORCEMENT IN SLABS THAT ARE 12" THICK OR LESS, TABULATED SPLICE LENGTHS FOR BOTTOM BARS SHALL BE USED.
6. FOR EPOXY-COATED BARS, MULTIPLY THE TABULATED SPLICE LENGTHS OF BOTTOM BARS BY 1.5 AND THE TABULATED SPLICE LENGTHS OF OTHER BARS BY 1.3.
7. WHEN LAP SPLICING BARS OF DIFFERENT SIZES, THE LAP LENGTH IS DETERMINED BY THE SMALLER BAR BUT MAY NOT BE LESS THAN THE "CLASS A" SPLICE LENGTH OF THE LARGER BAR.

5 SLAB TENSION DEVELOPMENT AND LAP SPLICE LENGTHS

N.T.S.

WALL HORIZONTAL BAR TENSION DEVELOPMENT AND LAP SPLICE LENGTHS

GRADE 60 REINFORCEMENT, NORMALWEIGHT CONCRETE

BAR SIZE	LAP CLASS	f'c = 3000 PSI	f'c = 4000 PSI	f'c = 5000 PSI
#3	A	13	12	12
	B	17	16	16
#4	A	22	19	17
	B	29	25	23
#5	A	32	28	25
	B	42	37	33
#6	A	43	37	34
	B	56	49	45
#7	A	69	60	54
	B	90	78	71
#8	A	86	74	67
	B	112	97	88
#9	A	104	90	81
	B	136	117	106

NOTES:
1. ALL SPLICE LENGTHS ARE IN INCHES.
2. THIS TABLE SHALL BE USED FOR WALL HORIZONTAL BARS ONLY. REFER TO OTHER DEVELOPMENT LENGTH TABLES FOR WALL VERTICAL BARS AND OTHER MEMBERS.
3. THE TENSION DEVELOPMENT LENGTH (Ld) IS EQUAL TO THE SCHEDULED "CLASS A" LAP SPLICE LENGTH.
4. FOR EPOXY-COATED BARS, MULTIPLY THE TABULATED SPLICE LENGTHS BY 1.3.
5. MAY NOT BE LESS THAN THE "CLASS A" SPLICE LENGTH OF THE LARGER BAR.

   WHEN LAP SPLICING BARS OF DIFFERENT SIZES, THE LAP LENGTH IS DETERMINED BY THE SMALLER BAR BUT

6 WALL HORIZONTAL BAR TENSION DEVELOPMENT AND LAP SPLICE LENGTHS

N.T.S.

WALL VERTICAL BAR TENSION DEVELOPMENT AND LAP SPLICE LENGTHS

GRADE 60 REINFORCEMENT, NORMALWEIGHT CONCRETE

BAR SIZE	LAP CLASS	f'c = 3000 PSI		f'c = 4000 PSI		f'c = 5000 PSI		f'c = 6000 PSI	
		CATEGORY 1	CATEGORY 2	CATEGORY 1	CATEGORY 2	CATEGORY 1	CATEGORY 2	CATEGORY 1	CATEGORY 2
#4	A	17	17	15	15	15	15	15	15
	B	22	22	19	19	17	17	16	16
#5	A	21	25	19	21	19	19	19	19
	B	27	32	24	28	21	25	19	23
#6	A	25	33	23	29	23	26	23	24
	B	33	43	28	37	25	34	23	31
#7	A	41	48	35	42	32	38	29	34
	B	53	63	46	54	41	49	38	45
#8	A	51	55	44	48	40	43	36	39
	B	66	72	57	62	51	56	47	51
#9	A	62	62	54	54	48	48	44	44
	B	81	81	70	70	63	63	57	57

NOTES:
1. ALL SPLICE LENGTHS ARE IN INCHES.
2. THIS TABLE SHALL BE USED FOR WALL VERTICAL BARS ONLY. REFER TO OTHER DEVELOPMENT LENGTH TABLES FOR WALL HORIZONTAL BARS AND OTHER MEMBERS.
3. THE TENSION DEVELOPMENT LENGTH (Ld) IS EQUAL TO THE SCHEDULED "CLASS A" LAP SPLICE LENGTH.
4. FOR DETERMINING THE BAR CATEGORY, "db" IS DEFINED AS THE DIAMETER OF THE LARGER BAR BEING SPLICED.
5. THE "CATEGORY 1" LAP LENGTH SHALL BE USED WHEN THE CLEAR SPACING BETWEEN BARS AT THE SPLICE IS EQUAL TO OR GREATER THAN 3db.
6. THE "CATEGORY 2" LAP LENGTH SHALL BE USED WHEN THE CLEAR SPACING BETWEEN BARS AT THE SPLICE IS LESS THAN 3db AND GREATER THAN 2db.
7. WHEN THE CLEAR SPACING BETWEEN BARS AT THE SPLICE IS EQUAL TO OR LESS THAN 2db, SPLICES SHALL BE STAGGERED SO THAT NO MORE THAN 50% OF BARS ARE SPLICED AT ANY GIVEN LOCATION. REFER TO ' TYPICAL CLEAR SPACING CRITERIA OF LAP SPLICED BARS, STAGGERED SPLICES CRITERIA TO DETERMINE CLEAR SPACING "S" FOR BARS AT STAGGERED SPLICES.
8. FOR EPOXY-COATED BARS, MULTIPLY THE TABULATED SPLICE LENGTHS BY 1.5.
9. WHEN LAP SPLICING BARS OF DIFFERENT SIZES, THE LAP LENGTH IS DETERMINED BY THE SMALLER BAR BUT MAY NOT BE LESS THAN THE "CLASS A" SPLICE LENGTH OF THE LARGER BAR.

7 WALL VERTICAL BAR TENSION DEVELOPMENT AND LAP SPLICE LENGTH

N.T.S.

JOSE I. GUERRA, INC.
CONSULTING ENGINEERS
2401 S. IH35 SUITE 210
AUSTIN, TEXAS 78741
(512) 445-2090
TBPE FIRM F-3

STATE OF TEXAS
JOSE I. GUERRA
85546
REGISTERED PROFESSIONAL ENGINEER
8-30-16

mwm Design Group
305 East Huntland Drive
Suite 200
Austin, Texas 78752
p: 512.453.0767
f: 512.453.1734
TBAE FIRM REGISTRATION NO.: 1452
TBPE FIRM REGISTRATION NO.: F-1416
TBPLS FIRM REGISTRATION NO.: 10065600

NO.	DATE	DESCRIPTION	BY

0 1"
The bar above measures one inch on the original drawing. Adjust scales accordingly.

TYPICAL DEVELOPMENT SPLICES

PLOTTED: 8/30/2016
JOB NO: 023-79D

FS/EMS0
S3.1

___ OF ___

File: F:\15011_AFD Women's Locker Rm Improvements\DRAWINGS\CAD\15011_S3.1_TYPICAL DEVELOPMENT SPLICE TABLES.dwg 24x36

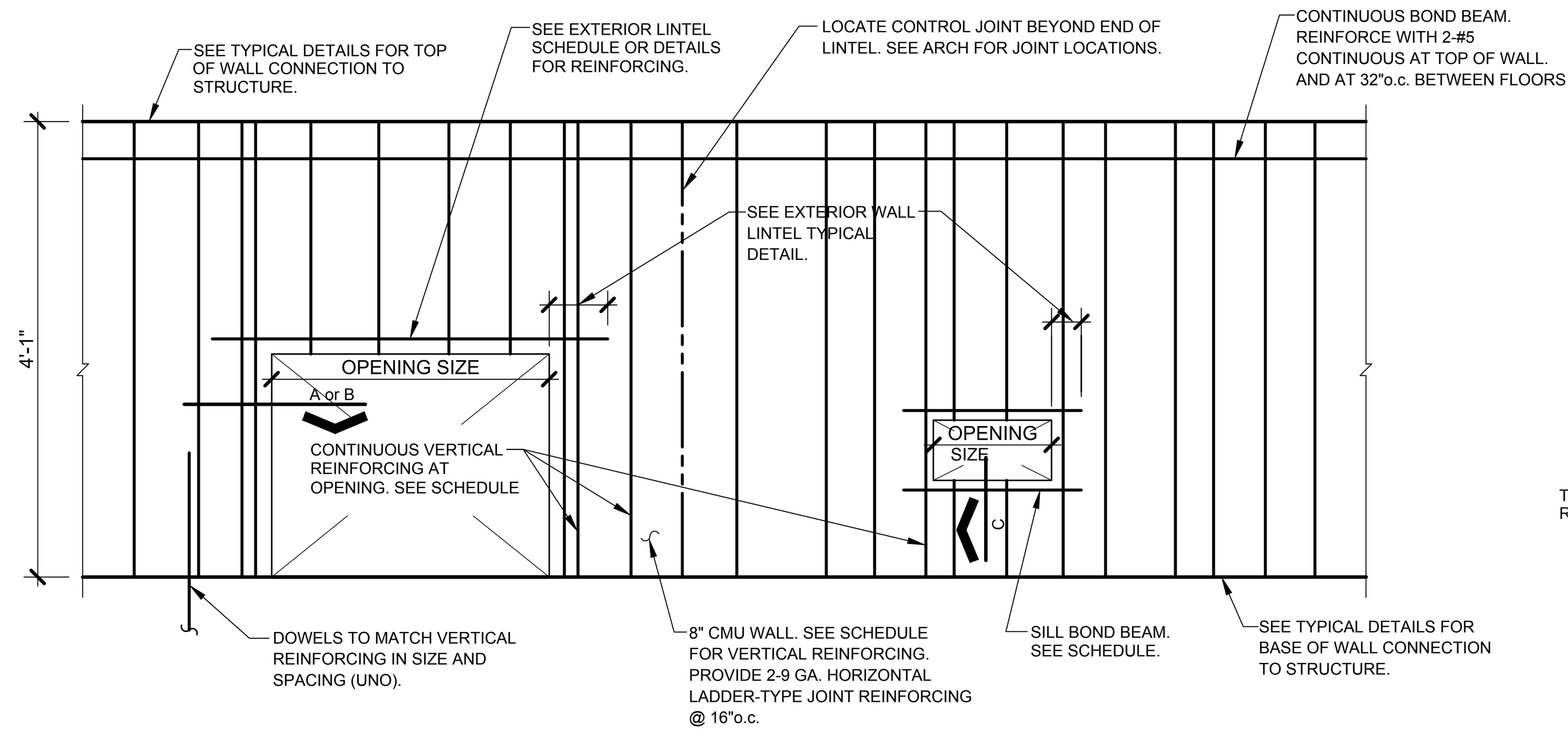

NOTES:
1. GROUT REINFORCED CELLS WITH 3000 PSI PEA GRAVEL CONCRETE.

1 TYPICAL DETAIL OPENINGS AT EXTERIOR MASONRY WALLS

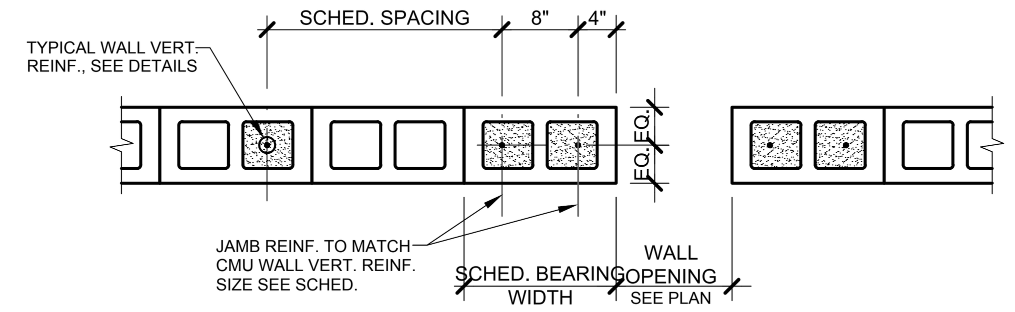

A CMU WALL-JAMB (SINGLE LAYERS) REINF. DETAIL
SCALE: 1" = 1'-0"

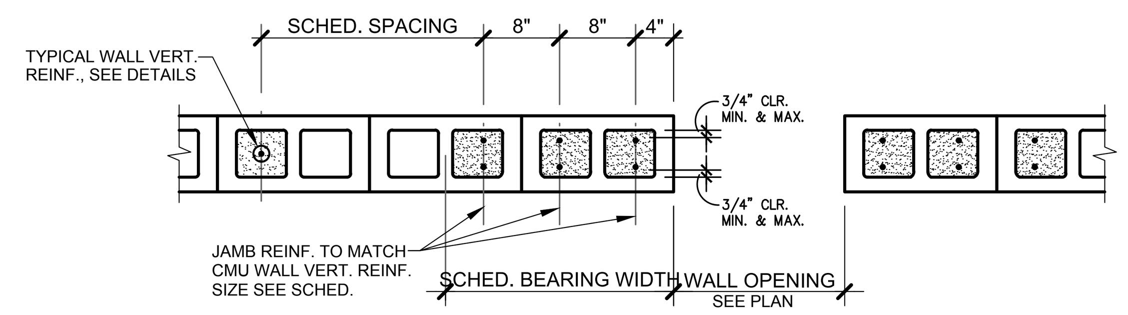

B CMU WALL - JAMB (2 LAYERS) REINF. DETAIL
SCALE: 1" = 1'-0"

SILL REINFORCING

OPENING SIZE	L 8'-0"	10'-0"	12'-0"	14'-0"
REINFORCING	2 - #4	2 - #5	2 - #5	4 - #5

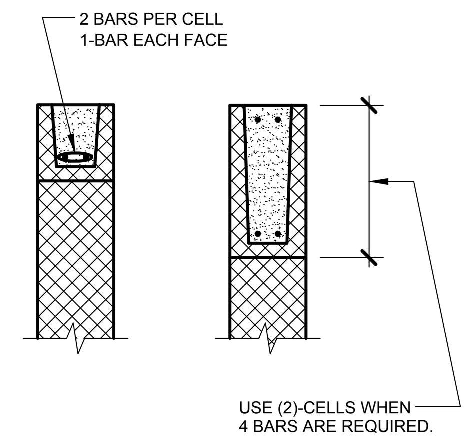

C SECTION
SCALE: 1" = 1'-0"

CMU LINTEL SCHEDULE

MASONRY OPENING	NOMINAL DEPTH	REINFORCING		NO. OF BARS EA. SIDE OF OPENING	BEARING WIDTH EA. END
		LONGITUDINAL	STIRRUPS		
LESS THAN 4'-0"	16"	2#4 BOT.	#3 @ 8"	2-#5	16"
4'-0" BUT LESS THAN 5'-0"	16"	2-#5 BOT.	#3 @ 8"	2-#5	16"
5'-0" BUT LESS THAN 6'-0"	16"	2-#5 TOP & BOT.	#3 @ 8"	2-#5	16"
6'-0" BUT LESS THAN 7'-0"	16"	2#5 TOP & BOT.	#3 @ 8"	3-#5	16"
7'-0" BUT LESS THAN 8'-0"	16"	2#5 TOP & BOT.	#3 @ 8"	3-#5	16"
8'-0" BUT LESS THAN 9'-0"	24"	2#5 TOP & BOT.	#3 @ 8"	6-#5 (2 LAYERS)	24"
9'-0" BUT LESS THAN 10'-6"	24"	2#5 TOP & BOT.	#3 @ 8"	6-#5 (2 LAYERS)	24"
10'-6" BUT LESS THAN 12'-6"	24"	2#5 TOP & BOT.	#3 @ 8"	6-#5 (2 LAYERS)	24"

NOTES:

1. PROVIDE CMU LINTELS FOR ALL OPENINGS IN INTERIOR AND EXTERIOR CMU PARTITIONS.
2. SEE ARCHITECTURAL DRAWINGS FOR SIZE AND LOCATION OF CMU WALL OPENINGS.
3. PROVIDE 16" MINIMUM BEARING AT EACH END OF LINTEL. EXTEND LINTEL REINF. 1'-2" SIDE OF OPENING U.N.O.
4. LINTELS SHALL REMAIN SHORED UNTIL MASONRY CONSTRUCTION ABOVE HAS CURED A MINIMUM OF 14 DAYS.
5. OPENINGS SHALL HAVE THE FIRST TWO VERTICAL CELLS ON EACH SIDE REINFORCED AND GROUTED UP TO THE TOP OF THE WALL, REF. LINTEL SCHED. U.N.O.
6. FILL LINTEL BLOCK AND BOND BEAMS W/ 3000 PSI N. WT. PEA GRAVEL CONCRETE.

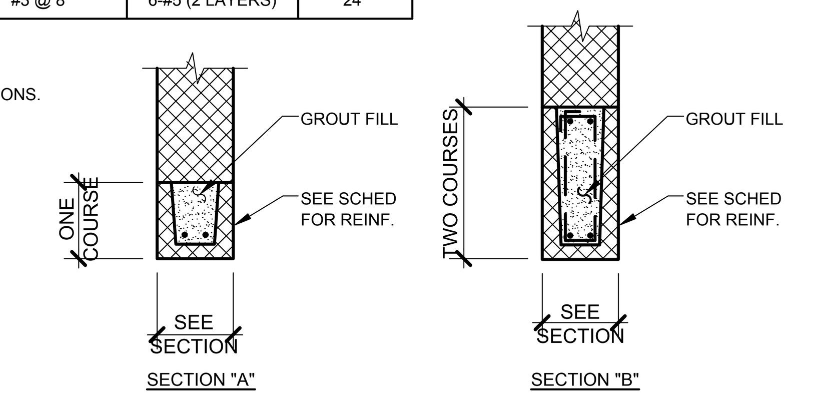

2 TYPICAL CMU LINTEL DETAIL

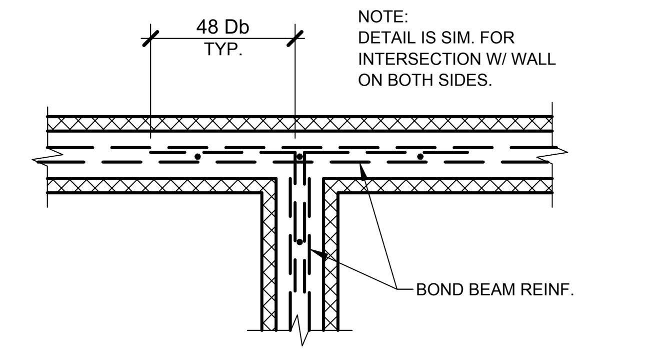

INTERSECTION DETAIL
NOTE: PROVIDE VERT. BAR IN ABUTTING CELLS.

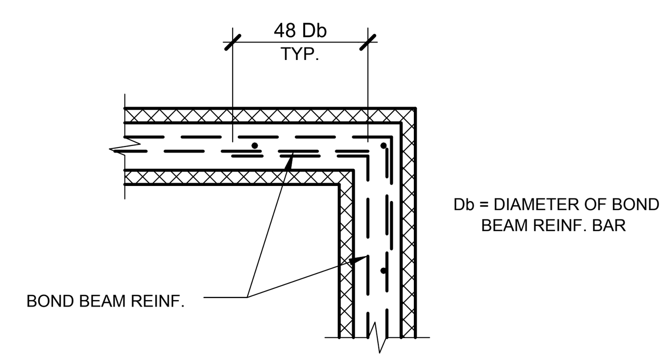

NOTE: PROVIDE VERT. BAR IN CORNER CELL AND EACH ADJACENT CELL.

3 CORNER DETAIL

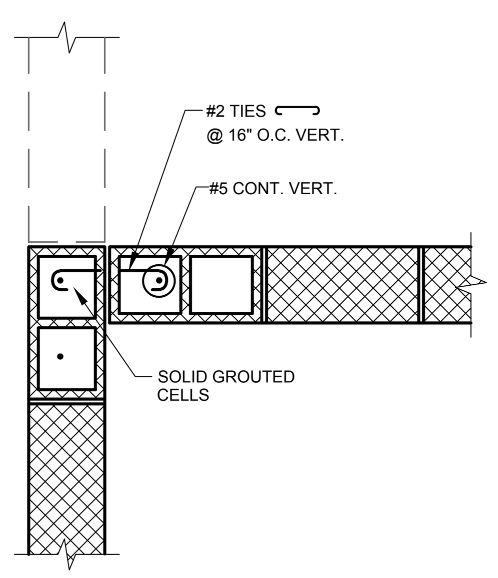

4 TYPICAL DETAIL ATNON-LOAD BEARING WALL INTERSECTION : PLAN

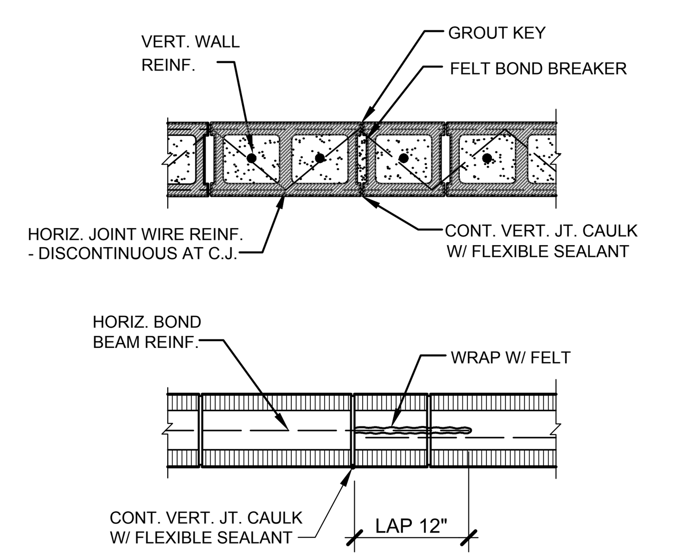

NOTE:
SPACING OF VERTICAL CONTROL JOINTS IN CMU WALLS SHALL NOT EXCEED 25'-0".

5 CMU WALL CONTROL JOINT DETAIL
NO SCALE

LOOSE LINTEL SCHEDULE

1. ONE ANGLE SHALL BE PROVIDED FOR EACH 4" WIDTH OF BRICK SEE ARCHITECTURAL DRAWINGS FOR LOCATION. STEEL LINTELS SHALL BE GALVANIZED EXCEPT AT THOSE LOCATIONS NOTED OTHERWISE.

2. REF. ARCH'L. DWGS. FOR OTHER STEEL LINTEL CONFIGURATIONS AT DOOR AND WINDOW OPENINGS NOT SHOWN ON STRUCTURAL DRAWINGS.

MASONRY OPENING	SIZE	BEARING EA. END
LESS THAN 4'-0"	ANGLE 3 1/2"x3 1/2"x1/4"	8" MIN.
4'-0" BUT LESS THAN 5'-0"	ANGLE 4"x3 1/2"x1/4"	8" MIN.
5'-0" BUT LESS THAN 6'-0"	ANGLE 5"x3 1/2"x1/4"	8" MIN.
6'-0" BUT LESS THAN 7'-0"	ANGLE 6"x3 1/2"x5/16"	12" MIN.
7'-0" BUT LESS THAN 9'-0"	ANGLE 7"x4"x3/8"	16" MIN.

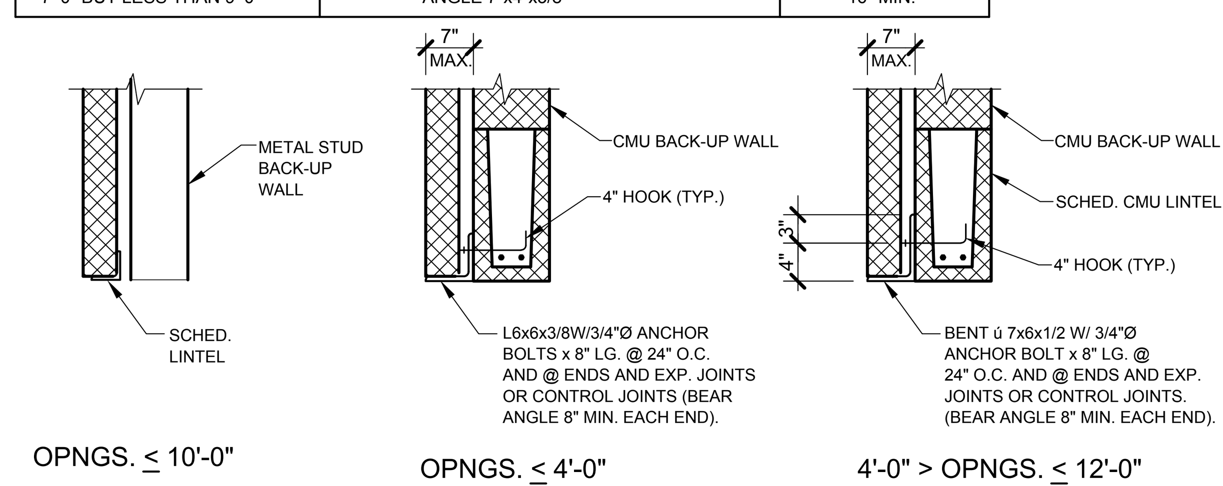

NOTE: PROVIDE LONGER HORIZ. ANGLE LEG AT MASONRY VENEER DIMENSION GREATER THAN 7". REF. ARCH'L. FOR LOCATIONS.

6 LOOSE LINTEL BEAM SCHEDULE

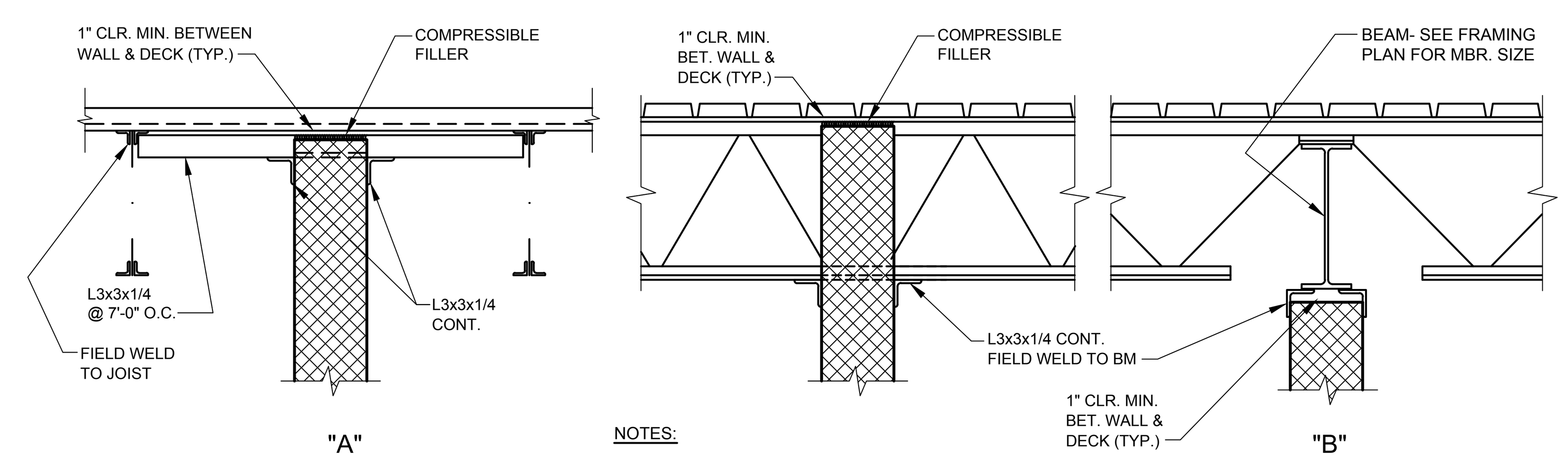

NOTES:

1. FIELD WELD CONNECTION.
2. PROVIDE LATERAL BRACING AS SHOWN FOR ALL INTERIOR CMU PARTITION WALLS EXTENDING TO ROOF OR FLOOR STRUCTURE ABOVE.
3. REINF. INTERIOR CMU PARTITIONS W/ #4 @ 48" O.C. GROUT CELLS W/ 3000 PSI PEA GRAVEL CONCRETE, U.N.O.

7 TYPICAL INTERIOR PARTITION BRACING DETAILS

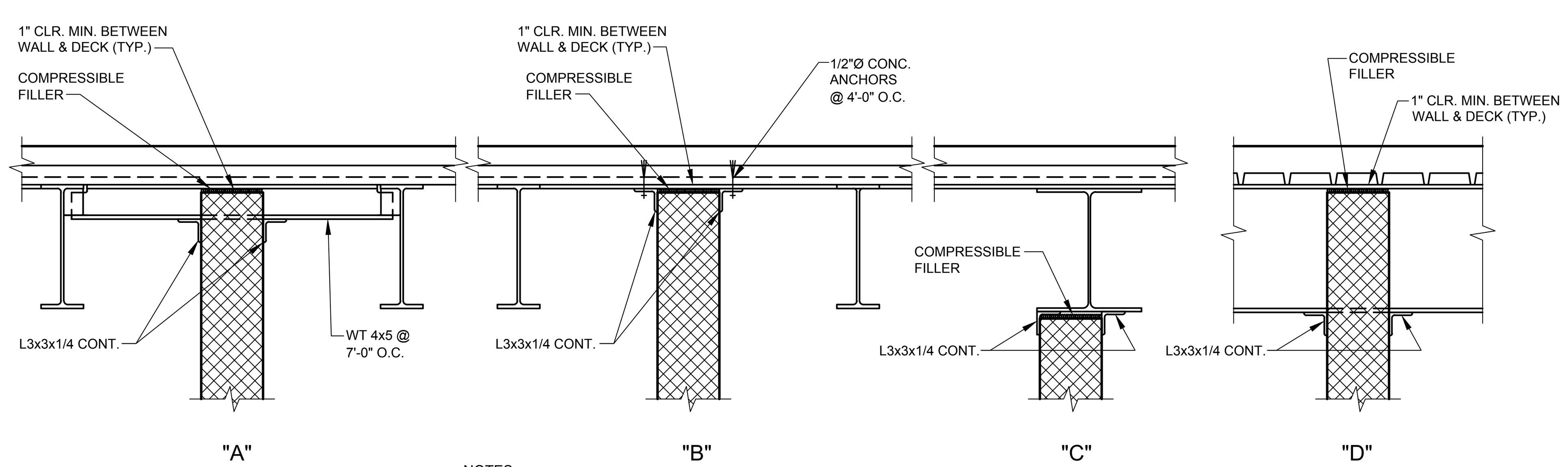

NOTES:

1. FIELD WELD CONNECTION.
2. PROVIDE LATERAL BRACING AS SHOWN FOR ALL INTERIOR CMU PARTITION WALLS EXTENDING TO ROOF OR FLOOR STRUCTURE ABOVE.
3. REINF. INTERIOR CMU PARTITIONS W/ #4 @ 48" O.C. GROUT CELLS W/ 3000 PSI PEA GRAVEL CONCRETE, U.N.O.

8 TYPICAL INTERIOR PARTITION BRACING DETAILS

CMU WALL, PILASTER AND COLUMN VERTICAL REINFORCEMENT DEVELOPMENT AND LAP SPLICE LENGTHS

BAR SIZE	4" CMU	6" CMU		8" AND 12" CMU	
	1 BAR/ CELL	1 BAR/ CELL	2 BARS/ CELL	1 BAR/ CELL	2 BARS/ CELL
#3	19	16	19	16	17
#4	34	25	34	21	29
#5	NP	40	45	27	45
#6	NP	NP	NP	51	54
#7	NP	NP	NP	63	63
#8	NP	NP	NP	72	NP

NP = NOT PERMITTED

NOTES:
1. ALL DEVELOPMENT AND LAP SPLICE LENGTHS ARE IN INCHES.
2. THE LAP SPLICE LENGTH TABLE SHALL BE USED FOR ALL REINFORCED CMU WALLS, PILASTERS AND COLUMNS UNLESS NOTED OTHERWISE IN DETAILS.
3. INCREASE TABULATED VALUES BY 50% FOR EPOXY COATED REINFORCEMENT.
4. THIS TABLE IS DEVELOPED WITH F'M=1500PSI. REFER TO GENERAL NOTES AND SPECIFICATIONS FOR CMU F'M.
5. WITH APPROVAL BY THE ENGINEER, WELDED SPLICES AND MECHANICAL SPLICES DEVELOPING AT LEAST 125% OF THE YIELD STRENGTH, FY, OF THE BAR MAY BE SUBSTITUTED IN SOME LOCATIONS.
6. WHEN LAP SPLICING BARS OF DIFFERENT SIZES, THE LAP LENGTH IS DETERMINED BY THE SMALLER BAR.
7. REFER TO THE TYPICAL DETAIL AND SPECIFICATIONS FOR CMU VERTICAL REINFORCEMENT PLACEMENT FOR BAR POSITIONING IN CELLS.

9 CMU WALL, AND COLUMN VERTICAL REINFORCEMENT DEVELOPMENT AND LAP SPLICE LENGHS
NO SCALE

JOSE I. GUERRA, INC.
CONSULTING ENGINEERS
2401 S. IH35 SUITE 210
AUSTIN, TEXAS 78741
(512) 445-2090
TBPE FIRM F-3

mwm Design Group
305 East Huntland Drive
Suite 200
Austin, Texas 78752
p: 512.453.0767
f: 512.453.1734
TBAE FIRM REGISTRATION NO.: 1452
TBPE FIRM REGISTRATION NO.: F-1416
TBPLS FIRM REGISTRATION NO.: 10065600

NO.	DATE	DESCRIPTION	BY

0 1"
The bar above measures one inch on the original drawing. Adjust scales accordingly.

TYPICAL FOUNDATIONS DETAILS

PLOTTED: 8/30/2016
JOB NO: 023-79D
FS/EMS0
S3.2
___ OF ___

File: F:\15011_AFD Women's Locker Rm Improvements\DRAWINGS\CAD\15011_S3.2_TYPICAL FOUNDATION DETAILS.dwg 24x36

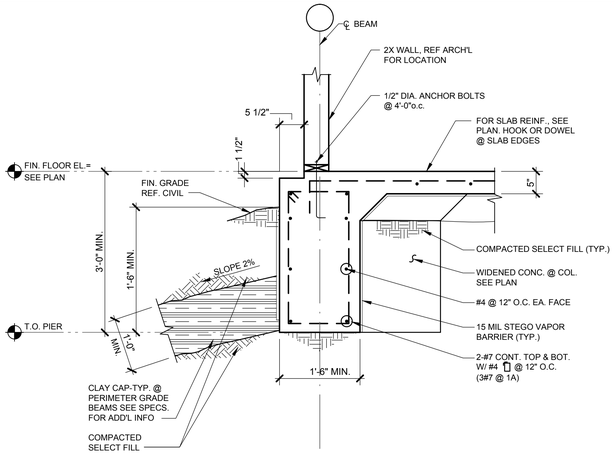

1 1A SECTION
3/4" = 1'-0"

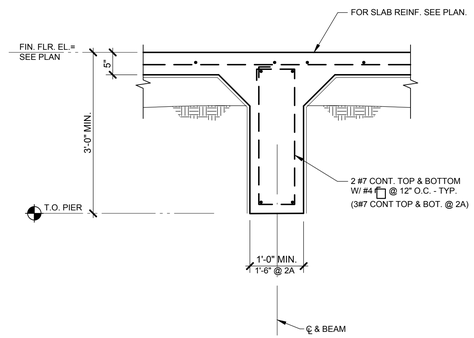

2 2A SECTION
3/4" = 1'-0"

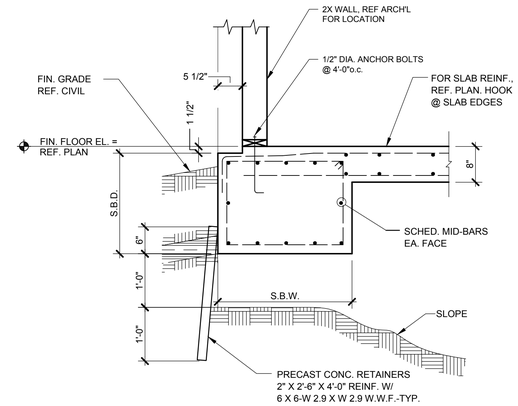

3 SECTION
3/4" = 1'-0"

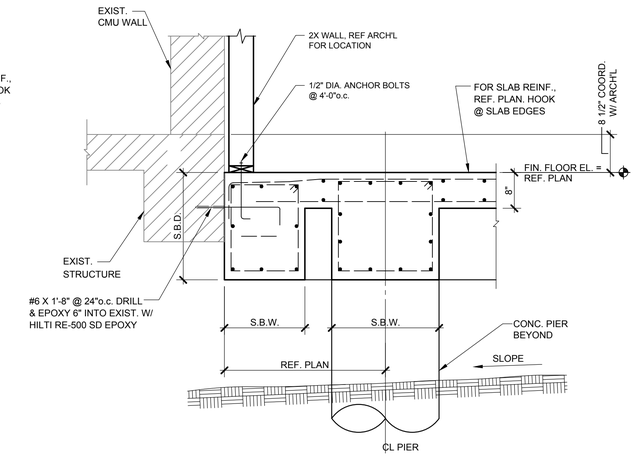

4 SECTION
3/4" = 1'-0"

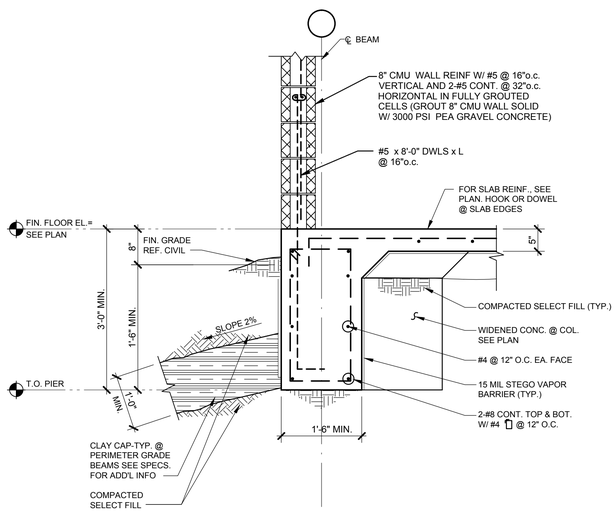

5 SECTION
3/4" = 1'-0"

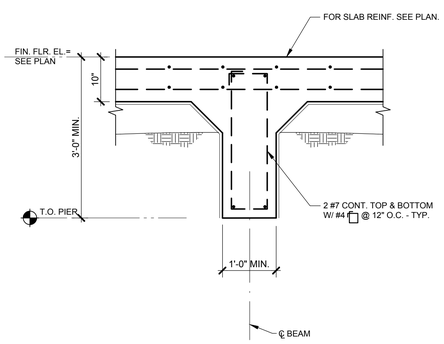

6 SECTION
3/4" = 1'-0"

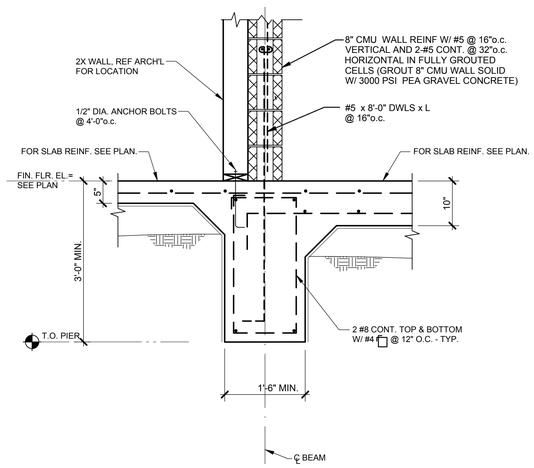

7 SECTION
3/4" = 1'-0"

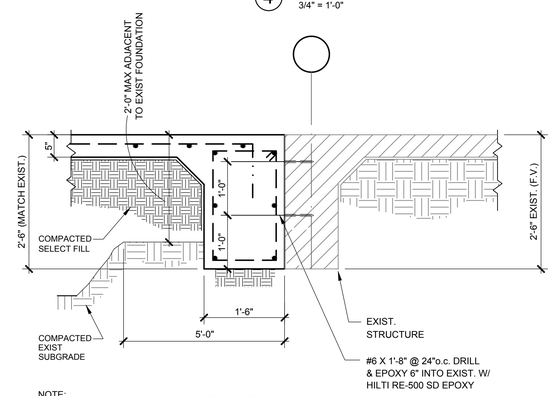

NOTE:
REF. 1/S3.3
FOR TYP INFO.

8 SECTION
3/4" = 1'-0"

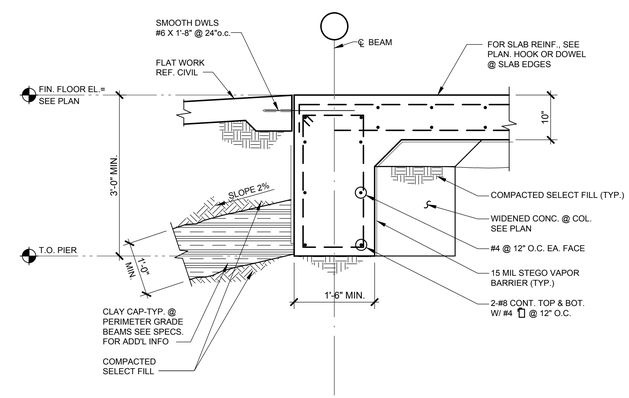

9 SECTION
3/4" = 1'-0"

JOSE I. GUERRA, INC.
CONSULTING ENGINEERS
2401 S. IH35 SUITE 210
AUSTIN, TEXAS 78741
(512) 445-2090
TBPE FIRM F-3

STATE OF TEXAS
JOHN C. MARS
LICENSE NO. 85565
PROFESSIONAL ENGINEER
8-30-16

mwm Design Group
305 East Huntland Drive
Suite 200
Austin, Texas 78752
p: 512.453.0767
f: 512.453.1734
TBAE FIRM REGISTRATION NO.: 1452
TBPE FIRM REGISTRATION NO.: F-1416
TBPLS FIRM REGISTRATION NO.: 10065600

NO.	DATE	DESCRIPTION	BY

0 1"
The bar above measures one inch on the original drawing. Adjust scales accordingly.

FOUNDATIONS DETAILS

PLOTTED: 8/30/2016
JOB NO: 023-79D

FS/EMS0
S3.3

__ OF __

File: F:\15011_AFD Women's Locker Rm Improvements\DRAWINGS\CAD\15011_S3.3_FOUNDATION DETAILS.dwg 24x36

CONNECTION	TYPE	NAILING
JOIST TO SILL OR GIRDER	TOENAIL	(3) - 8d
ROOF TRUSS TO PLATE	BY TRUSS MFR	BY TRUSS MFR
BRIDGING TO JOIST	TOENAIL EA END	(2) - 8d
SOLE PLATE TO JOIST OR BLKG.	FACE NAIL	16d @ 16"o.c.
TOP PLATE TO STUD	FACE NAIL	(2)-16d
STUD TO SOLE PLATE	TOENAIL OR END NAIL	(4)-8d OR (2)-16d
DOUBLE STUDS	FACE NAIL	10d @ 16"o.c.
DOUBLE TOP PLATE	FACE NAIL	16d @ 16"o.c.
TOP PLATES, LAPS, AND INTERSECTIONS	FACE NAIL	(2)-16d
CONTINUOUS HEADER, TWO PIECES	ALONG EA EDGE	16d @ 16"o.c.
CEILING JOIST TO PLATE	TOENAIL	(3)-8d
CONTINUOUS HEADER TO STUD	TOENAIL	(4)-16d
CEILING JOISTS, LAPS OVER PARTITIONS	FACENAIL	(3)-16d
FLOOR TRUSS TO PLATE	BY TRUSS MFR	BY TRUSS MFR
BUILT-UP CORNER STUDS	ALONG FACE	16d @ 24"o.c.
BUILT-UP GIRDER AND BEAMS	T & B STAGGER	16d @ 16"o.c.
	ENDS AND SPLICES	(4) - 16d

1 FRAMING NAILING SCHEDULE
NO SCALE

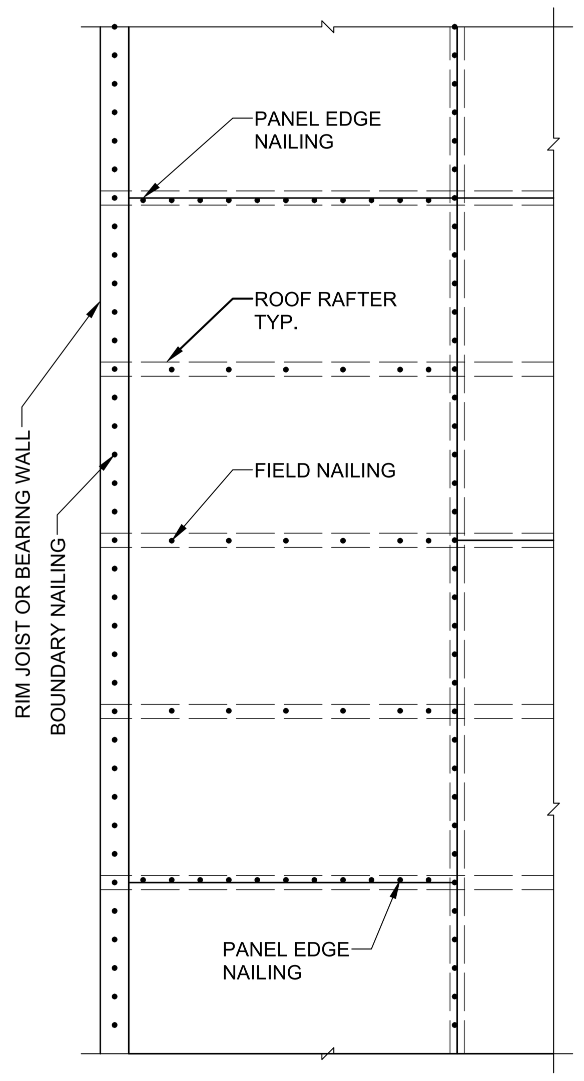

ROOF DIAPHRAGM NAILING SCHEDULE				
LOCATION	SIZE	SPACING		
		INT	PERIM	CORNER
BOUNDARY	10d	6"	6"	6"
PANEL EDGE	10d	6"	6"	6"
FIELD	10d	6"	6"	6"

NOTES:
1. MINIMUM PENETRATION IN FRAMING IS 1 1/2"
2.DIAPHRAGMS ARE BLOCKED.

2 ROOF DIAPHRAGM NAILING SCHEDULE
NO SCALE

BUILT-UP COLUMN SCHEDULE	
BEAM WIDTH	BUILT-UP STUD COLUMN (EA END)
GL 3 1/8 x ...... 3 1/2 LVL x.....	3- STUD COLUMN
GL 5 1/8 x ...... 5 1/4 LVL x.....	4- STUD COLUMN
GL 6 3/4 x ...... LVL 7 x.....	6- STUD COLUMN
2- 2 x	2- STUD COLUMN
2- 2 x 12	3- STUD COLUMN
3- 2 x	3- STUD COLUMN
4- 2 x	4- STUD COLUMN

BEAM HANGER SCHEDULE	
BEAM SIZE	SIMPSON HANGER
2- 2x12	HU212- 2
3- 2x12	HU612
GL 3 1/8 x 12	HHB3
GL 3 1/8 x 13 1/2	GB3
GL 5 1/8 x 12	GB5

NOTE:
1. "GL" DENOTES GLULAM BEAM.
2. "LVL" DENOTES MICROLLAM LVL BEAM.
3. TRUSS MANUFACTURER SHALL SPECIFY AND DESIGN JOIST HANGERS FOR CALCULATED LOADS.

3 BUILT UP-COL. & BEAM HANGER SCHEDULE
NO SCALE

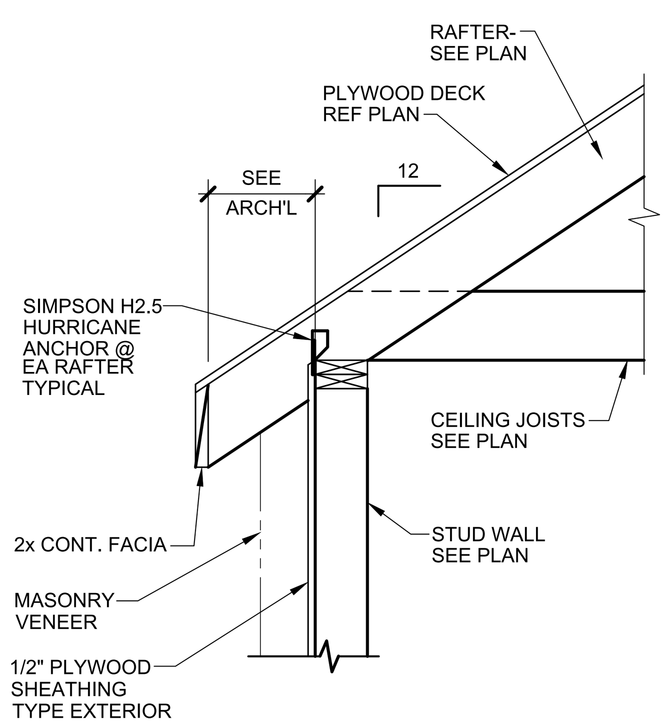

4 SECTION
NO SCALE

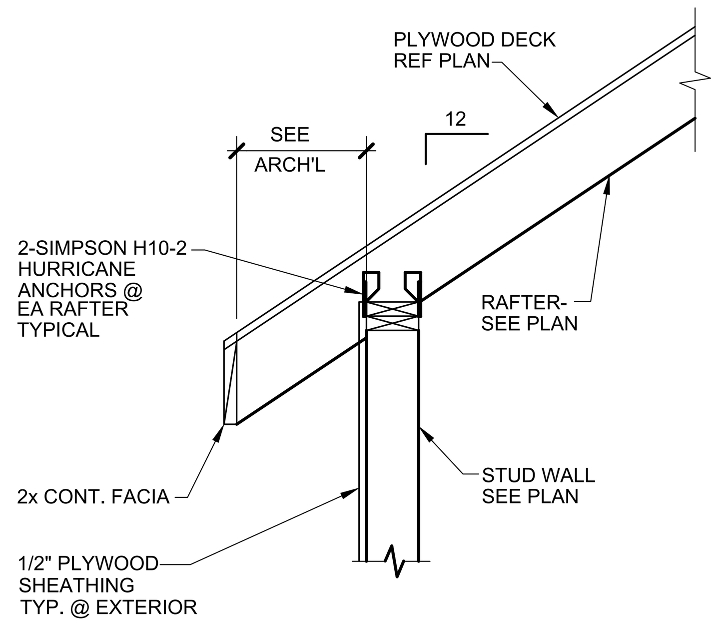

5 SECTION
NO SCALE

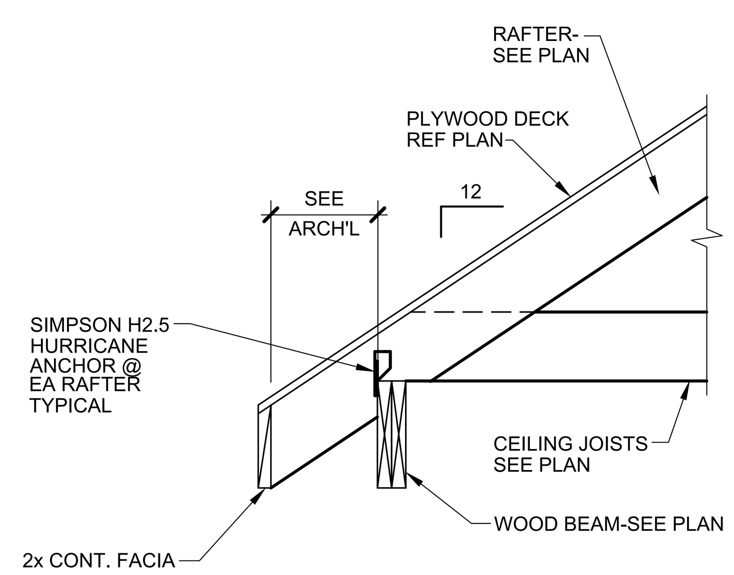

6 SECTION
NO SCALE

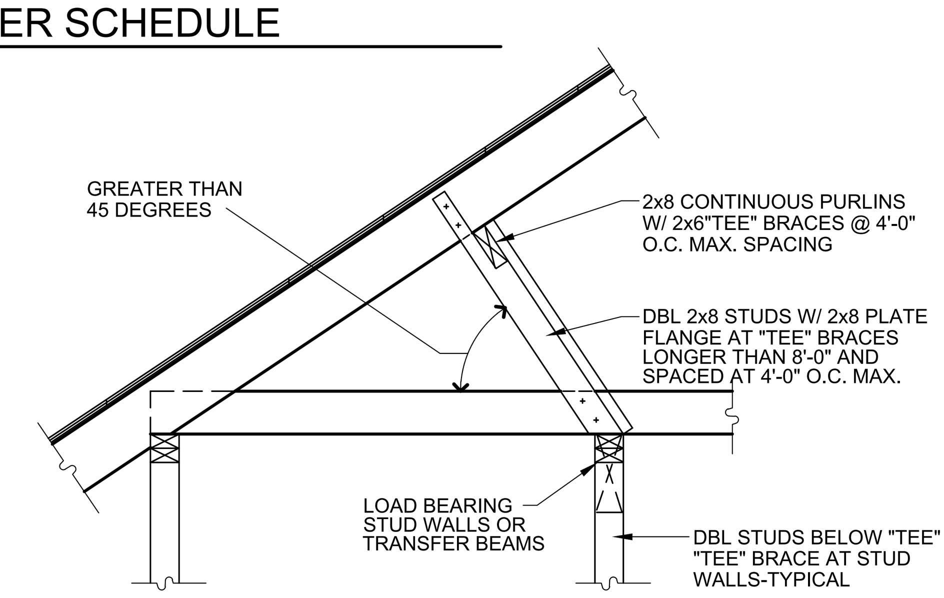

TYPICAL- PURLIN BRACING DETAIL
N.T.S.

NOTES: SIMILAR AT HIPS, VALLEYS, AND RIDGES

7 SECTION
NO SCALE

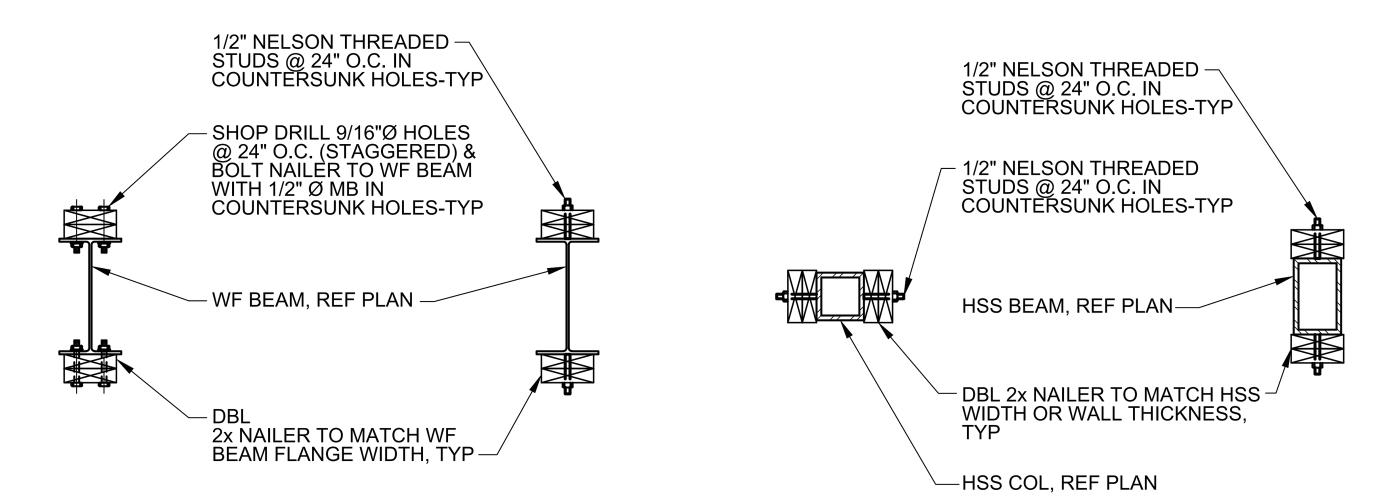

NAILER TO WF BEAM

NAILER TO HSS COLUMN

NAILER TO HSS BEAM

8 DETAIL
NO SCALE

DESIGN CRITERIA		
TRUSSES		FLOOR
UNIFORM LOADING IN PSF	TCLL	100
	TCDL	25
	BCLL	0
	BCDL	10
	TOTAL	140 PSF
UNIT STRESS INCREASE		0
SPACING		12"
DEPTH OR PITCH		16"

NOTES:
1. TC= TOP CHORD, BC =BOTTOM CHORD
2. LL = LIVE LOAD, DL DEAD LOAD
3. ROOF LIVE LOADS MAY REDUCED ACCORDING TO APPLICABLE CODE REQUIREMENTS FOR RISE AND TRIBUTARY CONSIDERATIONS.
3. DEAD LOADS INCLUDE SELF WEIGHT OF TRUSS (ESTIMATE 5 PSF).

SPECIAL LOADS	
DESCRIPTION	LOAD
WATER HEATERS	400 LBS
HVAC UNITS	200 LBS
INTERIOR WALLS	120 PLF

NOTES:
1. REFER TO PLANS FOR OTHER LOADS NOT SCHEDULED, SUCH AS REACTIONS FROM ROOFTOP EQUIPMENT.

9 TRUSS LOADING SCHEDULE
NO SCALE

CEILING JOIST NOTES:

1. G.C. SHALL VERIFY DIMENSIONS WITH ACHITECTURAL DRAWINGS AND SHALL NOTIFY ARCH/ ENGINEER OF DISCREPANCIES PRIOR TO CONSTRUCTIONS.
2. FOR INTERIOR AND EXTERIOR WALLS, PROVIDE (2) KING STUDS FOR OPENINGS UP TO 5 FEET IN LENGTH, OR (3) KING STUBS FOR OPENINGS UP TO 9 FEET LENGTH. KING STUD QUANTITY IS TO BE PROVIDED AT EACH SIDE OF OPENING.
3. PROVIDE (1) TRIMMER STUD FOR OPENINGS UP TO 5 FEET LENGTH, (2) TRIMMER STUDS FOR OPENINGS UP TO 10 FEET LENGTH, OR (3) TRIMMER STUDS FOR OPENINGS UP 16 FEET LENGTH. TRIMMER STUD QUANTITY IS TO BE PROVIDED AT EACH SIDE OF OPENING.
4. STUD PACKS SHALL INCLUDE KING AND TRIMMER STUDS AT OPENINGS.
5. TRIMMER AND KING STUD SIZE SHALL MATCH WALL FRAMING STUD SIZE.
6. VERTICAL NAILING BETWEEN TRIMMER STUDS AND BETWEEN KING STUDS SHALL BE 16d AT 16".
7. REFERENCE THIS SHEET FOR LOAD BEARING WALL STUD SIZE & SPACING.
8. REFERENCE SHEET S4.1 FOR SHEAR WALL SCHEDULE.
9. ALL LUMBER TO BE #2 S.Y.P.K.D.
10. ALL CEILING JOISTS TO BE 2x8 AL 16" O.C. UNLESS NOTED OTHERWISE (17'-0" MAX SPAN) REFERENCE IBC FOR OTHER SPANS
11. ALL HEADERS @ 2x4 WALLS TO BE 2-2X PER IBC CODE UNLESS NOTED OTHERWISE. @ 2x6 WALLS TO BE 3-2x PER IBC CODE UNLESS NOTED OTHERWISE.

HEADER SCHEDULE
3-2x8 0'-0" to 5'-0"
3-2x10 5'-1" to 6'-1"
3-2x12 6'-2" to 7'-1"

12. ALL BEAMS LARGER THAN 2-2x6 TO BE SUPPORTED BY BUILT-UP STUD COLUMNS AT 2x6 STUD WALLS AND 2x4 STUD WALLS AT EACH END UNLESS NOTED OTHERWISE AND BLOCKED SOLID TO FOUNDATION. SEE BUILT-UP COLUMN SCHEDULE SHEET S4.0 FOR NUMBER OF BUILT-UP STUD COLUMN; AT EACH END OF BEAMS.
13. DOUBLE 2x8 CEILING JOISTS AS REQUIRED. UNDER HVAC AND/OR WH UNITS LOCATED IN ATTIC. PROVIDE 3/4" PLYWOOD DECK PAD AND CATWALK AS REQUIRED.
14. ALL BEAMS JOB BUILT FROM 3 OR MORE MEMBERS NAILED WITH 10D NAILS @ 6" O.C. TOP AND BOTTOM.
15. ALL GLU-LAMS TO BE DESIGNED WITH STANDARD CAMBER OF R=2000 FT.
16. BRACE TOP FLANGE OF ALL GLULAM, MICROLLAM, OR 2xWOOD BEAMS @ 4'-0" EA SIDE OF CEILING JOISTS WITH 2x6 CONTINUOS STIFFBACK AND 2x4 BRACES
17. STUD WALLS SHALL BE 2x6 @ 16 " O.C., #2 S.Y.P.K.D. UNO. (MAX. HEIGHT 10'-0") STUD WALLS SHALL BE 2x8 @ 16" O.C. , # 2 S.Y.P.K.D. UNO. (HEIGHTS GREATER THAN 10-0" TO 14'-0" MAX.)
18. PROVIDE 2x BLOCKING AT 4'-0" O.C. VERTICALLY AT ALL STUD WALLS.
19. ALL FRAMING TO COMPLY WITH I.B.C. BUILDING CODES, CURRET EDITION.
20. VERIFY ANY CHANGES WITH ENGINEER PRIOR TO CONSTRUCTION.

ROOF FRAMING PLAN

S C A L E :

PLAN NOTES:

1. G.C. SHALL VERIFY DIMENSIONS WITH ACHITECTURAL DRAWINGS AND SHALL NOTIFY ARCH/ ENGINEER OF DISCREPANCIES PRIOR TO CONSTRUCTIONS.
2. ALL LUMBER TO BE #2 Y.P.K.D.
3. ALL RAFTERS TO BE 2x8 AT 16"O.C. WITH A MAXIMUM UNBRACED SPAN 18'-0" MEASURED ALONG THE SLOPE, UNLESS NOTED OTHERWISE.
4. ALL HIPS, RIDGES, VALLEYS TO BE 2x10 MAXIMUM. UNBRACED SPAN 8'-0" UNLESS NOTED OTHERWISE. PROVIDE "TEE" BRACES @ 6'-0" O.C. MAX SPACING AT RIDGES. PROVIDE "TEE" BRACES @ 8'-0" O.C. MAX SPACING AT HIPS AND VALLYS. PROVIDE DBL STUDS BELOW EACH "TEE" BRACE AT STUD WALLS
5. PROVIDE 2x8 CONTINUOUS PURLINS WITH 2x8 "TEE" BRACES @ 4'-0" O.C. MAX SPACING PROVIDE DBL STUDS BELOW EACH "TEE" BRACE AT STUD WALLS. NAIL "TEE" BRACE TOGETHER WITH 10D NAILS @ 6" O.C.- TYPICAL.
6. "TEE" BRACES LONGER THAN 8'-0" SHALL BE DBL 2x8 STUD WITH FLANGE PLATE "TEE" BRACE AND BRACED HORIZONTALLY @ 6'-0" O.C. IN TWO DIRECTIONS, NAIL "TEE" BRACE TOGETHER WITH 1O D NAILS @ 6" O.C. - TYPICAL
7. PROVIDE 2x6 MIN. COLLAR TIES AT 4'-0" O.C. AT ALL RIDGES.
8. ALL FRAMING TO COMPLY WITH I.B.C. BUILDING CODE CURRENT EDITION.
9. VERIFY AND CHANGES WITH ENGINEER PRIOR TO CONSTRUCTION.

JOSE I. GUERRA, INC.
CONSULTING ENGINEERS
2401 S. IH35 SUITE 210
AUSTIN, TEXAS 78741
(512) 445-2090
TBPE FIRM F-3

STATE OF TEXAS
JOHN C. ROMS
85568
REGISTERED PROFESSIONAL ENGINEER
8-30-16

mwm DesignGroup
305 East Huntland Drive
Suite 200
Austin, Texas 78752
p: 512.453.0767
f: 512.453.1734
TBAE FIRM REGISTRATION NO.: 1452
TBPE FIRM REGISTRATION NO.: F-1416
TBPLS FIRM REGISTRATION NO.: 10065600

NO.	DATE	DESCRIPTION	BY

0 1"
The bar above measures one inch on the original drawing. Adjust scales accordingly.

TYPICAL WOOD FRAMING DETAILS

PLOTTED: 8/30/2016
JOB NO: 023-79D

FS/EMS0
S4.0
___ OF ___

File: F:\15011_AFD Women's Locker Rm Improvements\DRAWINGS\CAD\15011_S4.0 TYPICAL WOOD FRAMING DETAILS.dwg 24x36

SHEAR WALL SCHEDULE

1. WALL STUDS/FRAMING MEMBERS SHALL BE SPACED @ 16" MAX, UNO.
2. WSP = WOOD STRUCTURAL PANEL, PLYWOOD OR ORIENTED STRAND BOARD, (OSB).
3. PROVIDE FULL HEIGHT DOUBLE STUDS AT ENDS OF SHEAR WALLS UNO ON PLANS OR DETAILS. HOLDOWNS AS SPECIFIED ON FOUNDATION PLAN SHALL BE ATTACHED TO DOUBLE STUDS OR POSTS PER MFR SPEC. STITCH NAIL END STUDS TOGETHER WITH 16d AT EDGE NAILING SPACING. STAGGER ROWS.
4. BLOCK ALL PANEL EDGES WITH MIN 2x BLOCKING, UNO AND EDGE NAIL SHEATHING AT BLOCKED EDGES. SEE TYPICAL SHEAR WALL CONSTRUCTION DETAIL.
5. WHERE INDICATED ON PLANS, SHEAR WALLS SHALL EXTEND BETWEEN OPENINGS OR ENDS OF WALL UNLESS LENGTH IS NOTED ON PLANS. WHERE SHEATHING IS INTERRUPTED BY INTERSECTING WALL, PROVIDE CHANNEL BLOCKING PER TYPICAL DETAIL.
6. FOR 5/8" TO 3/4" THICK FLOOR SHEATHING 3 1/4" (MIN) LONG NAILS SHALL BE USED. FOR 7/8" TO 1 1/8" THICK FLOOR SHEATHING, 3 1/2" (MIN) LONG NAILS SHALL BE USED.
7. ALL SHEATHING NAILS AT SHEAR WALLS SHALL BE COMMON NAILS. SUBSTITUTION OF ALTERNATE FASTENERS IS NOT PERMITTED WITHOUT PRIOR WRITTEN APPROVAL BY ENGINEER.
8. NUTS SHALL BE SECURELY FASTENED AGAINST, BUT NOT RECESSED INTO, BOTTOM PLATE.
9. ALL EXTERIOR SHEAR WALLS BE SHEATHED WITH 15/32" CDX PLYWOOD.
10. ANCHOR BOLTS SHALL BE CAST-IN-PLACE.

MARK	SHEATHING MATERIAL	EDGE NAILING	FIELD NAILING	BOTTOM PLATE ATTACHMENT (CONC)
A	15/32" WSP BLOCK, ONE SIDE OF WALL	8d @ 6"	8d @ 6"	1/2"Ø AHR BOLT @ 32"

1 SHEAR WALL SCHEDULE
NO SCALE

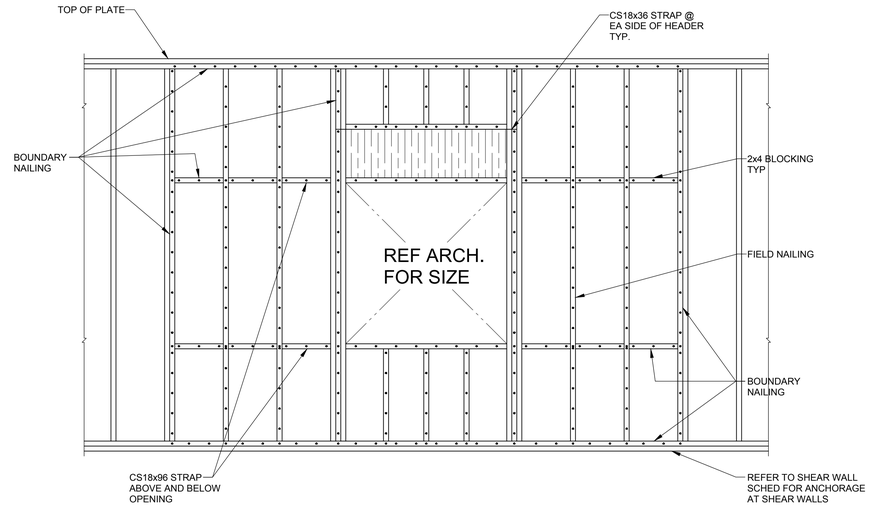

2 ELEVATION WITH WINDOW OPENING
NO SCALE

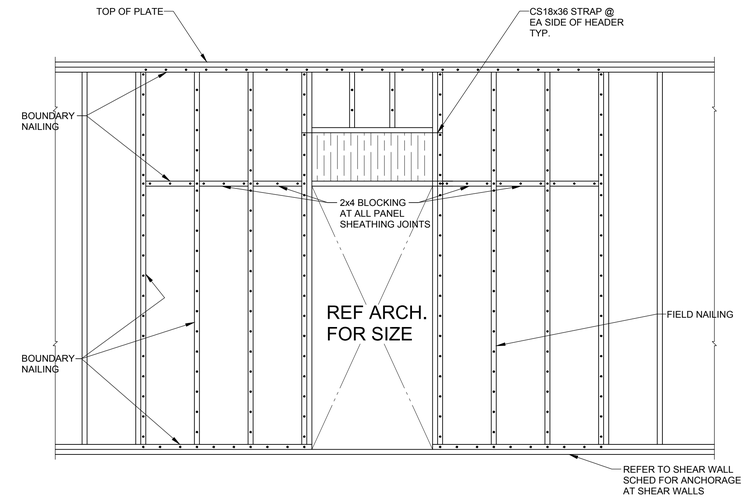

3 ELEVATION WITH DOOR OPENING
NO SCALE

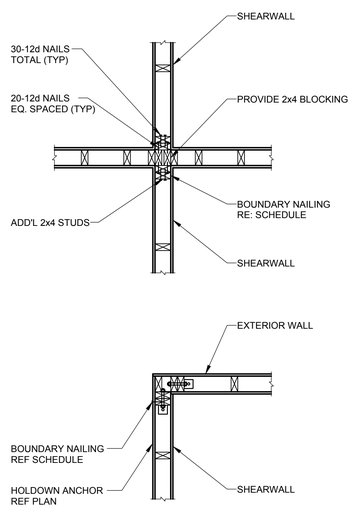

NOTE:
BLOCKING AND NAILING REQUIRED WHEN INTERSECTING WALL(S) INTERRUPTS SHEARWALL SHEATHING ALONG LENGTH

4 WALL FRAMING DETAIL
SCALE: 3/4" = 1'-0"

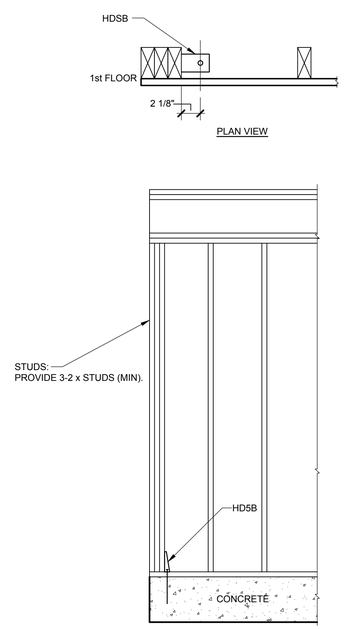

5 SHEARWALL HOLDOWNS AT EXTERIOR AND INTERIOR WALLS
NO SCALE

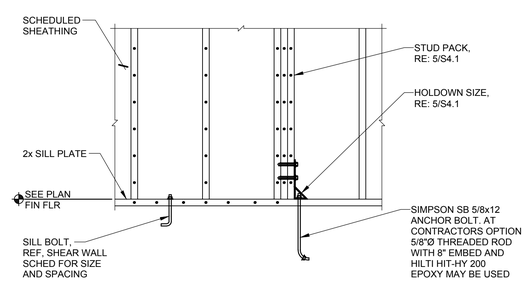

6 SHEARWALL ANCHORAGE AT FOUNDATION
SCALE: 3/4" = 1'-0"

JOSE I. GUERRA, INC.
CONSULTING ENGINEERS
2401 S. IH35 SUITE 210
AUSTIN, TEXAS 78741
(512) 445-2090
TBPE FIRM F-3

STATE OF TEXAS — JOSE I. GUERRA — 85546 — REGISTERED PROFESSIONAL ENGINEER — 8-30-16

mwm Design Group
305 East Huntland Drive
Suite 200
Austin, Texas 78752
p: 512.453.0767
f: 512.453.1734
TBAE FIRM REGISTRATION NO.: 1452
TBPE FIRM REGISTRATION NO.: F-1416
TBPLS FIRM REGISTRATION NO.: 10065600

NO.	DATE	DESCRIPTION	BY

0 — 1"
The bar above measures one inch on the original drawing. Adjust scales accordingly.

TYPICAL WOOD FRAMING DETAILS

PLOTTED: 8/30/2016
JOB NO: 023-79D

FS/EMS0
S4.1

__ OF __

File: F:\15011_AFD Women's Locker Rm Improvements\DRAWINGS\CAD\15011_S4.1 TYPICAL WOOD FRAMING DETAILS.dwg 24x36

BEAM SCHEDULE

MARK	BEAM WIDTH	BEAM DEPTH	REFER DETAIL	LONGITUDINAL REINFORCEMENT No.	SIZE	TYPE	REMARKS	No.	SIZE	
B1	24	24		4	8	Z	DON'T SPLICE	ALL	#4	8"o.c.
							CANT.	ALL	#4	4"o.c.
				4	8	X	3 - #5 E.F.			
B2	24	24		4	8	A		ALL	#4	8"o.c.
				4	8	M	3 - #5 E.F.			
B3	18	24		4	8	B		ALL	#4	8"o.c.
							CANT.	ALL	#4	4"o.c.
				4	8	M	3 - #5 E.F.			
B4	30	24		5	8	A	DON'T SPLICE	ALL	#4	8"o.c.
				5	8	M	3- #5 E.F.			
B5	30	24		5	8	J		ALL	#4	8"o.c.
				5	8	M	3- #5 E.F.			
B6	24	24		4	8	B		ALL	#4	8"o.c.
							CANT.	ALL	#4	4"o.c.
				4	8	M	3- #5 E.F.			
B7	24	24		4	8	A	DON'T SPLICE	ALL	#4	8"o.c.
				4	8	M	3- #5 E.F.			
B8	24	24		4	8	J		ALL	#4	8"o.c.
				4	8	M	3 - #5 E.F.			
B9	24	24		4	8	B		ALL	#4	8"o.c.
				4	8	M	3- #5 E.F.			
B10	18	24		3	7	AC	DON'T SPLICE	ALL	#4	8"o.c.
							CAN'T	ALL	#4	4"o.c.
				3	7	W	3 - #5 E.F.			
B11	18	24		3	7	J	DON'T SPLICE	ALL	#4	8"o.c.
				3	7	M	3 - #5 E.F.			
B12	18	24		3	7	B		ALL	#4	8"o.c.
				3	7	M	3 - #5 E.F.			
B13	24	24		4	7	A		ALL	#4	8"o.c.
				4	7	M	3 - #5 E.F.			
B14	24	24		4	7	J		ALL	#4	8"o.c.
				4	7	M	3 - #5 E.F.			
B15	24	24		4	7	B		ALL	#4	8"o.c.
				4	7	M	3 - #5 E.F.			
B16	18	24		3	7	A	DON'T SPLICE	ALL	#4	8"o.c.
				3	7	M	3 - #5 E.F.			
B17	18	24		3	7	B		ALL	#4	8"o.c.
				3	7	M	3 - #5 E.F.			
B18	18	24		3	7	A		ALL	#4	8"o.c.
							CANT.	ALL	#4	4"o.c.
				3	7	M	3 - #5 E.F.			
B19	18	24		3	7	B		ALL	#4	8"o.c.
				3	7	M	3 - #5 E.F.			
B20	18	24		3	7	L		ALL	#4	8"o.c.
				3	7	M	3 - #5 E.F.			
B21	18	24		3	7	A		ALL	#4	8"o.c.
				3	7	M	3 - #5 E.F.			
B22	18	24		3	7	B		ALL	#4	8"o.c.
				3	7	M	3 - #5 E.F.			
B23	18	24		3	7	L		ALL	#4	8"o.c.
				3	7	M	3 - #5 E.F.			

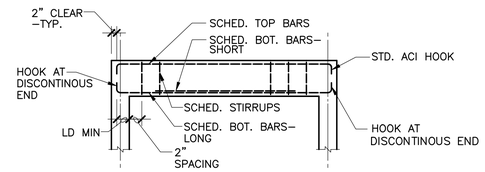

SINGLE SPAN

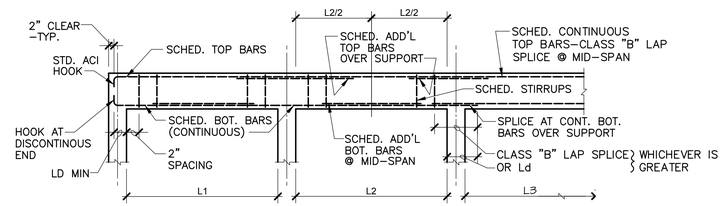

MULTIPLE SPANS

TYPICAL BEAM REINFORCING PLACEMENT DETAILS

NO SCALE

BAR PLACEMENT DIAGRAMS

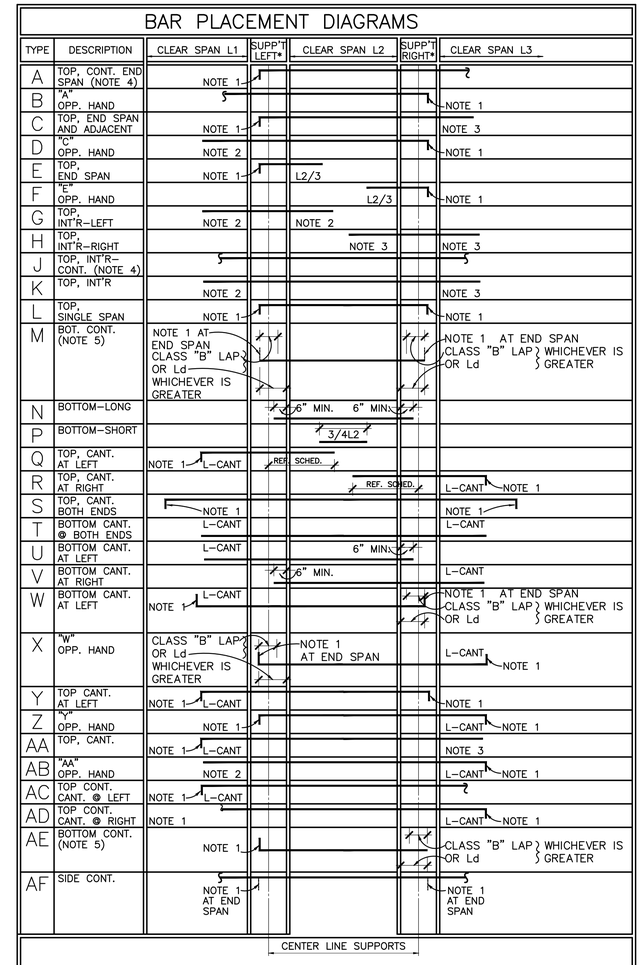

* BEAM ORIENTATION ON FRAMING PLAN RELATIVE TO PLACEMENT DIAGRAM IS DETERMINED BY READING BEAM MARK ON PLAN: LEFT-TO-RIGHT.

JOIST ORIENTATION IS DETERMINED PERPENDICULAR TO JOIST MARK ON FRAMING PLAN: LEFT-TO-RIGHT OR BOTTOM-TO-TOP.

NOTE 1: STANDARD ACI 90° HOOK.
NOTE 2: L1/3 OR L2/3, WHICHEVER IS GREATER.
NOTE 3: L2/3 OR L3/3, WHICHEVER IS GREATER.
NOTE 4: ALL CONT. TOP BARS SHALL BE LAPPED A MIN. OF CLASS "B" LAP SPLICE (EXCEPT PERIMETER BEAMS) AT THE MID SPAN WHERE SPLICE OCCURS AT PERIMETER BEAMS, PROVIDE CLASS "B" LAP SPLICE. SEE NOTE 6.
NOTE 5: SPLICES NOT REQUIRED AT EVERY SUPPORT. BARS MAY BE FURNISHED IN LONGEST PRACTICAL LENGTH, BUT CLASS "B" LAP SPLICE OR Ld WHICHEVER IS GREATER MUST OCCUR OVER SUPPORT.
NOTE 6: PERIMETER BEAM SPLICES SHALL CONFORM WITH SECTION 7.13 OF ACI 318 "REQUIREMENTS FOR STRUCTURAL INTEGRITY".

JOSE I. GUERRA, INC.
CONSULTING ENGINEERS
2401 S. IH35 SUITE 210
AUSTIN, TEXAS 78741
(512) 445-2090
TBPE FIRM F-3

STATE OF TEXAS
JOHN C. ROBB
NO. 85548
REGISTERED PROFESSIONAL ENGINEER
8-30-16

mwm Design Group
305 East Huntland Drive
Suite 200
Austin, Texas 78752
p: 512.453.0767
f: 512.453.1734
TBAE FIRM REGISTRATION NO.: 1452
TBPE FIRM REGISTRATION NO.: F-1416
TBPLS FIRM REGISTRATION NO.: 10065600

NO.	DATE	DESCRIPTION	BY

0 1"
The bar above measures one inch on the original drawing. Adjust scales accordingly.

SCHEDULES

PLOTTED: 8/30/2016
JOB NO: 023-79D

FS/EMS0
S5.0

___ OF ___

File: F:\15011_AFD Women's Locker Rm Improvements\DRAWINGS\CAD\15011_S5.0 SCHEDULES.dwg 24x36

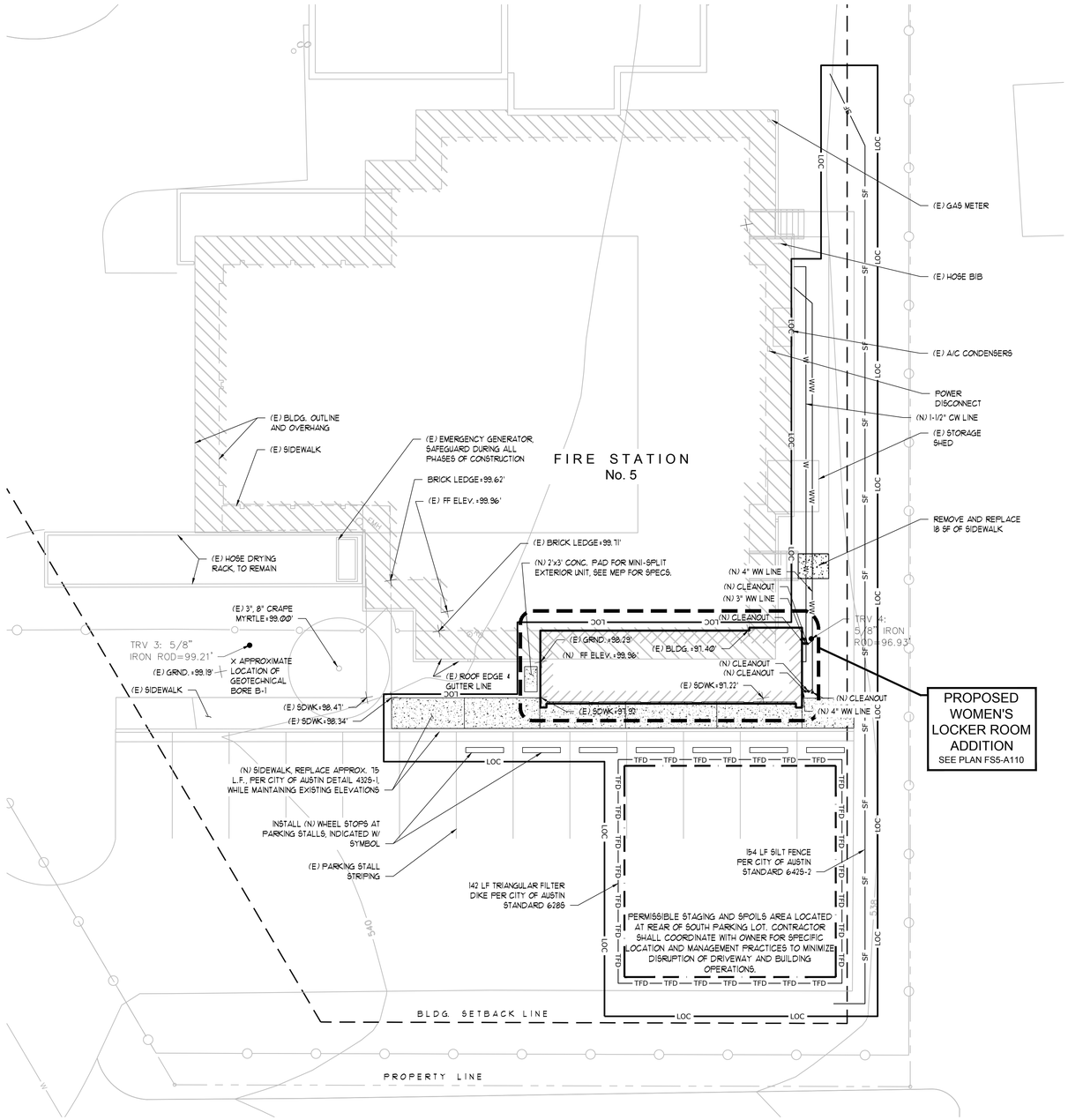

1 FS5-C050 ENLARGED SITE PLAN

SCALE: 1" = 10'

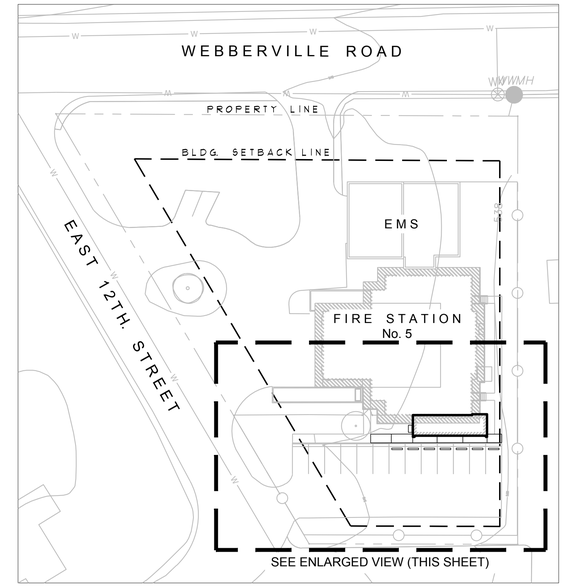

SITE PLAN (KEY MAP)

SITE PLAN LEGEND

- PROPERTY LINES
- BUILDING SETBACK LINES
- LOC — LIMITS OF CONSTRUCTION
- 528 — EXISTING TOPOGRAPHIC CONTOUR
- EXISTING TREE & TREE PROTECTION
- EXISTING CHAIN LINK FENCE
- PROPOSED OBJECT
- PROPOSED CURB & GUTTER
- PROPOSED ASHPHALT
- PROPOSED CONCRETE
- EXISTING PERVIOUS AREA
- PROPOSED PERVIOUS AREA
- EXISTING STRUCTURE
- PROPOSED STRUCTURE
- (E)XX.XX — EXISTING SPOT ELEVATION
- XX.XX — PROPOSED SPOT ELEVATION

	EXISTING	PROPOSED
SITE AREA, S.F.	40,958 SF	40,958 SF
IMPERVIOUS AREA, S.F. (%)	29,829 SF (72.8%)	+381 SF (73.8%)
NET CHANGE %		+1.0 %
GROSS FLOOR AREA OF PROPOSED ADDITION		485 SF

NOTE

THE LOCATIONS OF EXISTING IMPROVEMENTS SHOWN ON THIS PLAN WERE DERIVED IN PART FROM RECORD DOCUMENTS OF UNKNOWN ACCURACY. THE PRESENCE, LOCATION AND ELEVATION OF EXISTING UTILITIES IN THE FILED SHALL BE VERIFIED BY THE CONTRACTOR BEFORE COMMENCING WORK. IT SHALL BE THE RESPONSIBILITY OF THE CONTRACTOR TO VERIFY EXISTING CONDITIONS WITHIN THE LIMITS OF CONSTRUCTION. FAILURE OF AN EXISTING UTILITY TO APPEAR ON THIS PLAN SHALL NOT RELIEVE THE CONTRACTOR OF RESPONSIBILITY TO PROTECT AND REPAIR, IF DAMAGED, SUCH UTILITIES.

ALL NEW PEDESTRIAN PAVEMENT SHALL BE CONSTRUCTED IN ACCORDANCE WITH THE TEXAS ACCESSIBILITY STANDARDS, AND SHALL MATCH THE ELEVATIONS OF EXISTING IMPROVEMENTS AT POINTS OF INTERSECTION.

FINE GRADING SHALL BE COMPLETED TO DRAIN STORMWATER AWAY FROM BUILDING PERIMETERS, AND SPECIFICALLY AWAY FROM FROM BUILDING ENTRANCES AT THE MAXIMUM SLOPES POSSIBLE GIVEN EXISTING CONDITIONS ADJACENT.

BID DOCUMENTS

STATE OF TEXAS
BRANDON E. CLEMMER
No. 87368
LICENSED PROFESSIONAL ENGINEER
MWM DesignGroup, Inc.
F-1416
8-30-16

mwm DesignGroup
305 East Huntland Drive
Suite 200
Austin, Texas 78752
p: 512.453.0767
f: 512.453.1734

TBAE FIRM REGISTRATION NO.: 1452
TBPE FIRM REGISTRATION NO.: F-1416
TBPLS FIRM REGISTRATION NO.: 10065600

NO.	DATE	DESCRIPTION	BY

0 1"
The bar above measures one inch on the original drawing. Adjust scales accordingly.

SITE PLAN

CITY OF AUSTIN, AFD WOMEN'S LOCKER RM. ADDN, PHASE V
1201 WEBBERVILLE ROAD, AUSTIN, TEXAS 78721

PLOTTED: 9/7/2016
JOB NO: 023-79D

FS5-C050

File: Y:\023-79D_WomensLockerRooms\CAD\Fire Station 5\Sheets\FS5-A050 SITE PLAN.dwg 24x36

PROJECT DATA: FIRE STATION 5

GOVERNING CODES

2012 INTERNATIONAL ENERGY CONSERVATION CODE
2012 INTERNATIONAL BUILDING CODE
2012 INTERNATIONAL MECHANICAL CODE
2012 UNIFORM PLUMBING CODE (AS AMENDED BY COA)
2012 NATIONAL ELECTRIC CODE (AS AMENDED BY COA)
2010 ADA STANDARDS FOR ACCESSIBLE DESIGN
2012 TEXAS ACCESSIBILITY STANDARDS

BUILDING CODE DATA – IBC CHAPTER 3

OCCUPANCY GROUP

B THE USE OF A BUILDING OR STRUCTURE, OR A PORTION THEREOF, FOR OFFICE, PROFESSIONAL OR SERVICE–TYPE TRANSACTIONS, INCLUDING STORAGE OF RECORDS AND ACCOUNTS.

GENERAL BUILDING LIMITATIONS – IBC CHAPTER 5

ALLOWABLE HEIGHT AND BUILDING AREA (TABLE 503)

TYPE VB (B OCCUPANCY)
AREA (SF) 9,000
HEIGHT 2 STORY

FRONTAGE INCREASE (If) = [F/P–0.25]W/30 = 25
SPRINKLER INCREASE (Is) = 0

ALLOWABLE AREA (B) = At+(AtIf/100)+(AtIs/100) = 11,250

ACTUAL AREA B (SF) 5,904
ACTUAL AREA B 1 STORY

CONSTRUCTION TYPE – IBC CHAPTER 6

FIRE RESISTIVE REQUIREMENTS FOR BUILDING ELEMENTS (TYPE VB–TABLE 601)

BEARING WALLS	
INTERIOR	NO REQUIREMENTS
EXTERIOR	NO REQUIREMENTS
NONBEARING WALLS	
EXTERIOR	SEE BELOW
NONBEARING WALLS	
INTERIOR	NO REQUIREMENTS
FLOOR CONSTRUCTION	NO REQUIREMENTS
ROOF CONSTRUCTION	NO REQUIREMENTS

EXTERIOR WALL/OPENING PROTECTION (TABLE 602 AND 704.8)
EXTERIOR WALLS 1 LESS THAN 10 FEET
NO RATING 10 FEET OR GREATER

INTERIOR FINISHES – IBC CHAPTER 8

FLAME SPREAD RATINGS OF MATERIALS AND FINISHES (TABLE 803.4)

CLASS A: FLAME SPREAD 0–25, SMOKE DEVELOPED 0–450
CLASS B: FLAME SPREAD 26–75, SMOKE DEVELOPED 0–450
CLASS C: FLAME SPREAD 76–200, SMOKE DEVELOPED 0–450

VERTICAL EXITS AND PASSAGEWAYS	CLASS B
EXIT ACCESS CORRIDORS	CLASS B
ROOMS AND ENCLOSED SPACES	CLASS C

OCCUPANCY LOAD AND MEANS OF EGRESS –

	AREA (sqft.)	OCCUPANT LOAD FACTOR (sqft.)	OCCUPANTS	REQUIRED EGRESS WIDTH PER OCCUPANT	REQUIRED EGRESS WIDTH
LOCKER ROOM	464	–	–	–	–
TOTAL			–	–	–
EGRESS WIDTH PROVIDED (1 DOOR)					32

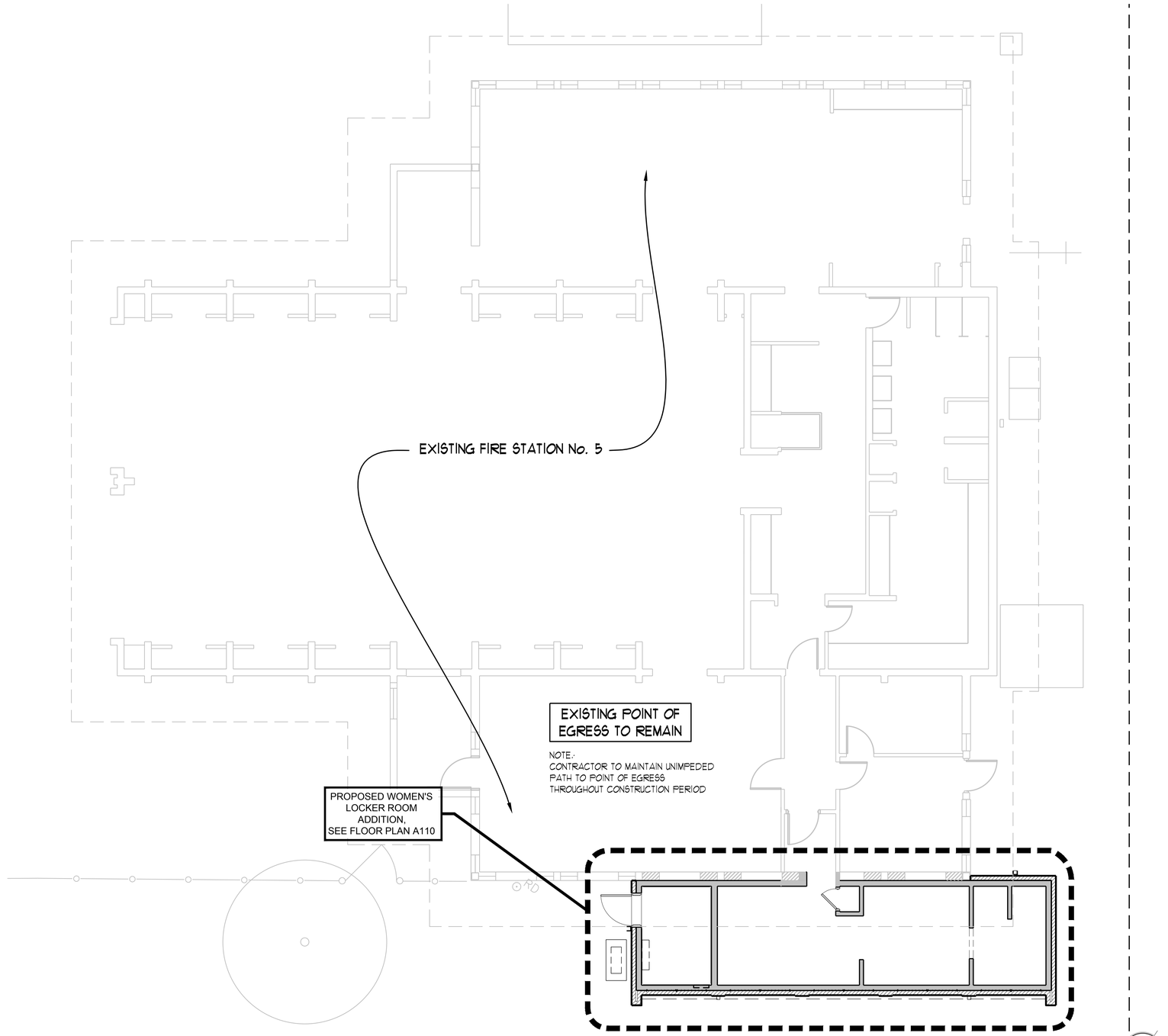

1 FS5-A010 KEY PLAN
SCALE: 3/16" = 1'-0"

BID DOCUMENTS

REGISTERED ARCHITECT JOHN OWEN HARRISON 18348 STATE OF TEXAS

mwm Design Group
305 East Huntland Drive
Suite 200
Austin, Texas 78752
p: 512.453.0767
f: 512.453.1734

TBAE FIRM REGISTRATION NO.: 1452
TBPE FIRM REGISTRATION NO.: F-1416
TBPLS FIRM REGISTRATION NO.: 10065600

NO.	DATE	DESCRIPTION	BY

0 1"
The bar above measures one inch on the original drawing. Adjust scales accordingly.

CODE SUMMARY & KEY PLAN

CITY OF AUSTIN, AFD WOMEN'S LOCKER RM. ADDN, PHASE V
1201 WEBBERVILLE ROAD, AUSTIN, TEXAS 78721

PLOTTED: 8/30/2016
JOB NO: 023-79D

FS5-A010

File: Y:\023-79D_WomensLockerRooms\CAD\Fire Station 5\Sheets\FS5-A010 CODE.dwg 24x36

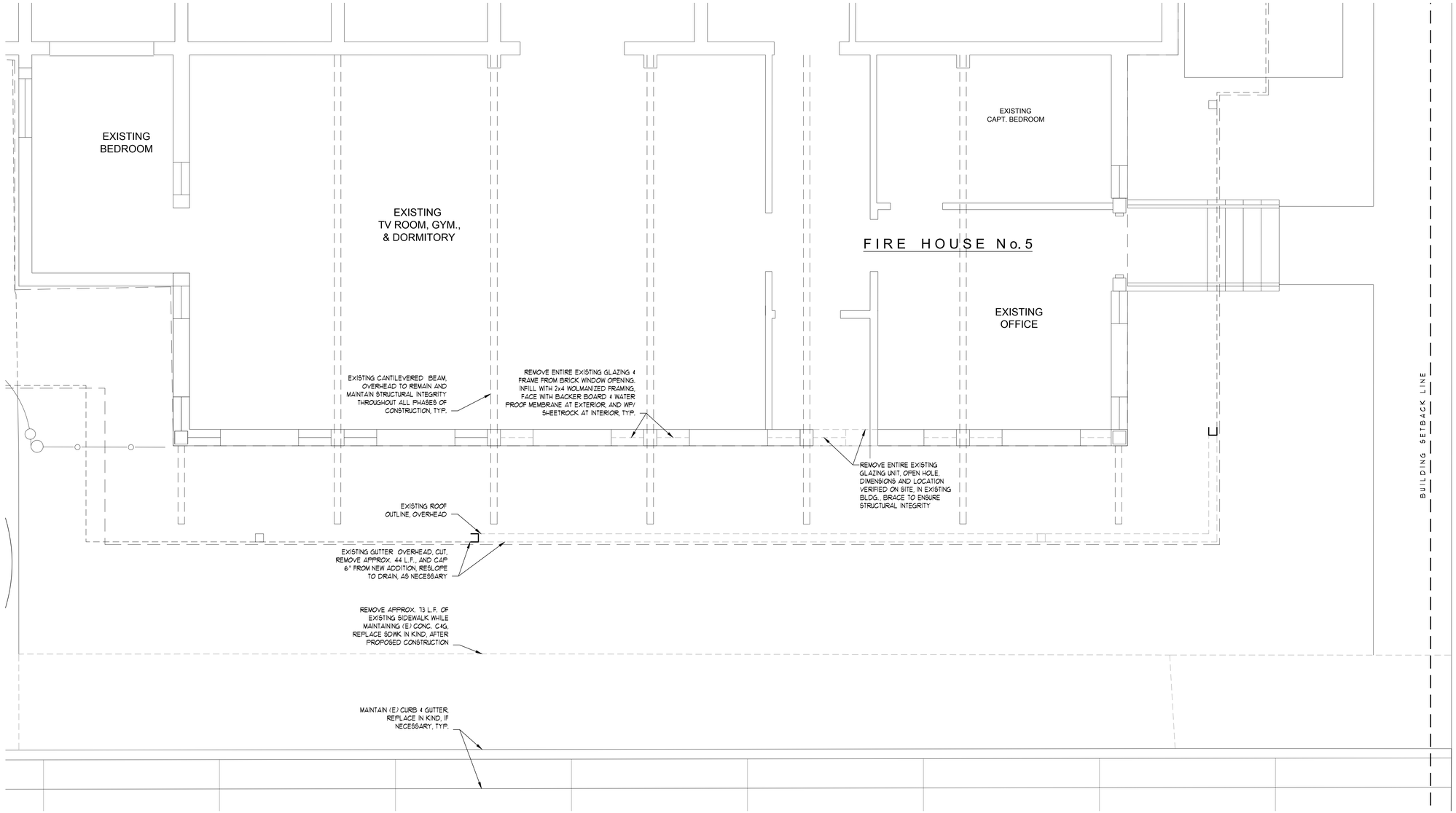

1 FS5-A100 DEMOLITION PLAN

SCALE: 3/8" = 1'-0'

DEMOLITION LEGEND

- PROPERTY LINES
- BUILDING SETBACK LINES
- EXISTING TO REMAIN
- EXISTING OVERHEAD OBJECT
- EXISTING STRUCTURE
- EXISTING TO REMOVE
- EXISTING TO REMOVE

BID DOCUMENTS

REGISTERED ARCHITECT MARK W. OWEN HARGROVE 16348 STATE OF TEXAS

mwm Design Group

305 East Huntland Drive
Suite 200
Austin, Texas 78752
p: 512.453.0767
f: 512.453.1734

TBAE FIRM REGISTRATION NO.: 1452
TBPE FIRM REGISTRATION NO.: F-1416
TBPLS FIRM REGISTRATION NO.: 10065600

NO.	DATE	DESCRIPTION	BY

0 1"

The bar above measures one inch on the original drawing. Adjust scales accordingly.

DEMOLITION PLAN

CITY OF AUSTIN, AFD WOMEN'S LOCKER RM. ADDN, PHASE V
1201 WEBBERVILLE ROAD, AUSTIN, TEXAS 78721

PLOTTED: 8/30/2016
JOB NO: 023-79D

FS5-A100

File: Y:\023-79D_WomensLockerRooms\CAD\Fire Station 5\Sheets\FS5-A100 DEMO PLAN.dwg 24x36

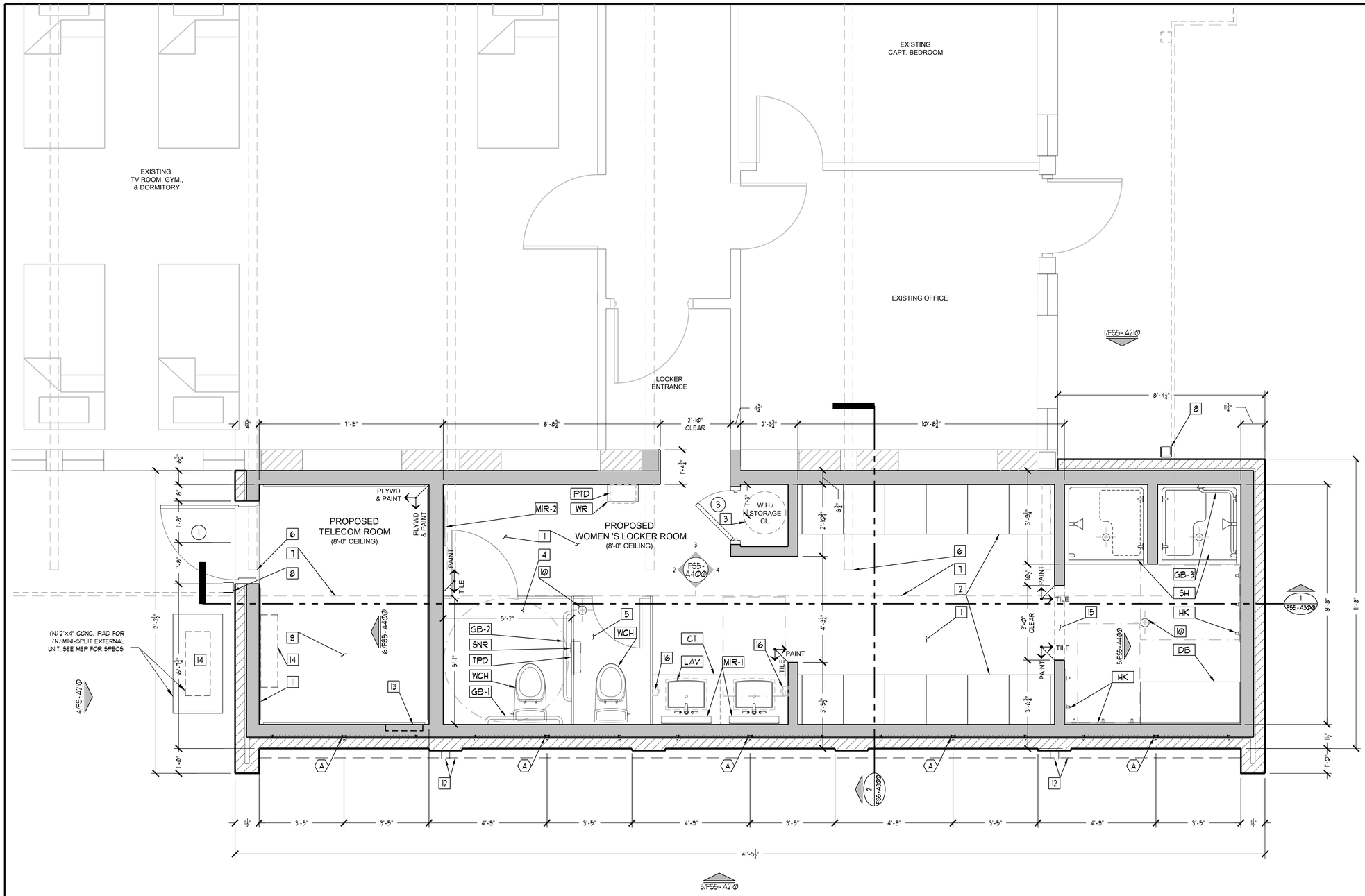

LEGEND

- PROPERTY LINES
- BUILDING SETBACK LINES
- EXISTING TO REMAIN
- EXISTING OVERHEAD OBJECT
- EXISTING TO REMOVE
- EXISTING STRUCTURE
- PROPOSED STRUCTURE
- PROPOSED OBJECT
- PROPOSED WALL FINISH TYPE (TILE / PAINT)
- PROPOSED FLOOR DRAIN
- A.D.A. CLEAR FLOOR AREA
- PROPOSED GLAZING AT CLERESTORY
- PROPOSED GLAZING
- PROPOSED BRICK VENEER WALL
- PROPOSED FRAME WALL
- PROPOSED WALL INFILL, AS NOTED
- PROPOSED CMU BLOCK WALL
- PROPOSED CONCRETE
- PROPOSED FLOOR TILE
- PROPOSED PLYWOOD

CALL-OUT KEY

1. (N) NON-SLIP TILE FLOORING
2. (N) 20"x24"x60" HOLMAN LOCKERS OR APPROVED EQUAL
3. (N) COMPACT WATER HEATER
4. (N) ACCESSIBLE TOILET STALL
5. (N) STANDARD TOILET STALL
6. (E) CANTILEVERED BEAMS, OVERHEAD, TO REMAIN ABOVE NEW CEILING
7. (E) ROOF OVERHANG, SHOWN FOR COORDINATION ONLY
8. (E) EDGE OF GUTTER, OVERHEAD, CUT AND CAP 6" FROM NEW ADDITION
9. TELECOM ROOM: BROOM FINISHED CONCRETE FLOOR
10. (N) FLOOR DRAIN, REFER TO STRUCTURAL AND M.E.P. FOR SPECS.
11. TELECOM ROOM: INSTALL 3/4" WOLMANIZED PLYWD, PRIME, PAINTED, LAG SCREWED AT 4 CORNERS, TO GYP. BD. WALL, SEE A400 FOR DETAILS
12. (N) ROOF OVERHANG WITH GUTTER AND DOWNSPOUTS
13. (N) PULL BOX FOR COMMUNICATION CABLING, SEE MEP FOR SPECS.
14. (N) MINI SPLIT AC WALL MOUNTED UNIT AND HEAT PUMP OUTDOOR UNIT (ON 2'x4' CONC. SLAB), SEE MEP SPECS
15. (N) TILE INSIDE 3'-0"x7'-0" OPENING
16. (N) SOAP DISPENSER PROVIDED BY OWNER

1 FS5-A110 FLOOR PLAN
SCALE: 1/2" = 1'-0'

BID DOCUMENTS

REGISTERED ARCHITECT W. OWEN HARRISON 18248 STATE OF TEXAS

mwm Design Group
305 East Huntland Drive
Suite 200
Austin, Texas 78752
p: 512.453.0767
f: 512.453.1734
TBAE FIRM REGISTRATION NO.: 1452
TBPE FIRM REGISTRATION NO.: F-1416
TBPLS FIRM REGISTRATION NO.: 10065600

NO.	DATE	DESCRIPTION	BY

0 1"
The bar above measures one inch on the original drawing. Adjust scales accordingly.

FLOOR PLAN

CITY OF AUSTIN, AFD WOMEN'S LOCKER RM. ADDN, PHASE V
1201 WEBBERVILLE ROAD, AUSTIN, TEXAS 78721

PLOTTED: 8/30/2016
JOB NO: 023-79D

FS5-A110

File: Y:\023-79D_WomensLockerRooms\CAD\Fire Station 5\Sheets\FS5-A110 FLOOR PLAN.dwg 24x36

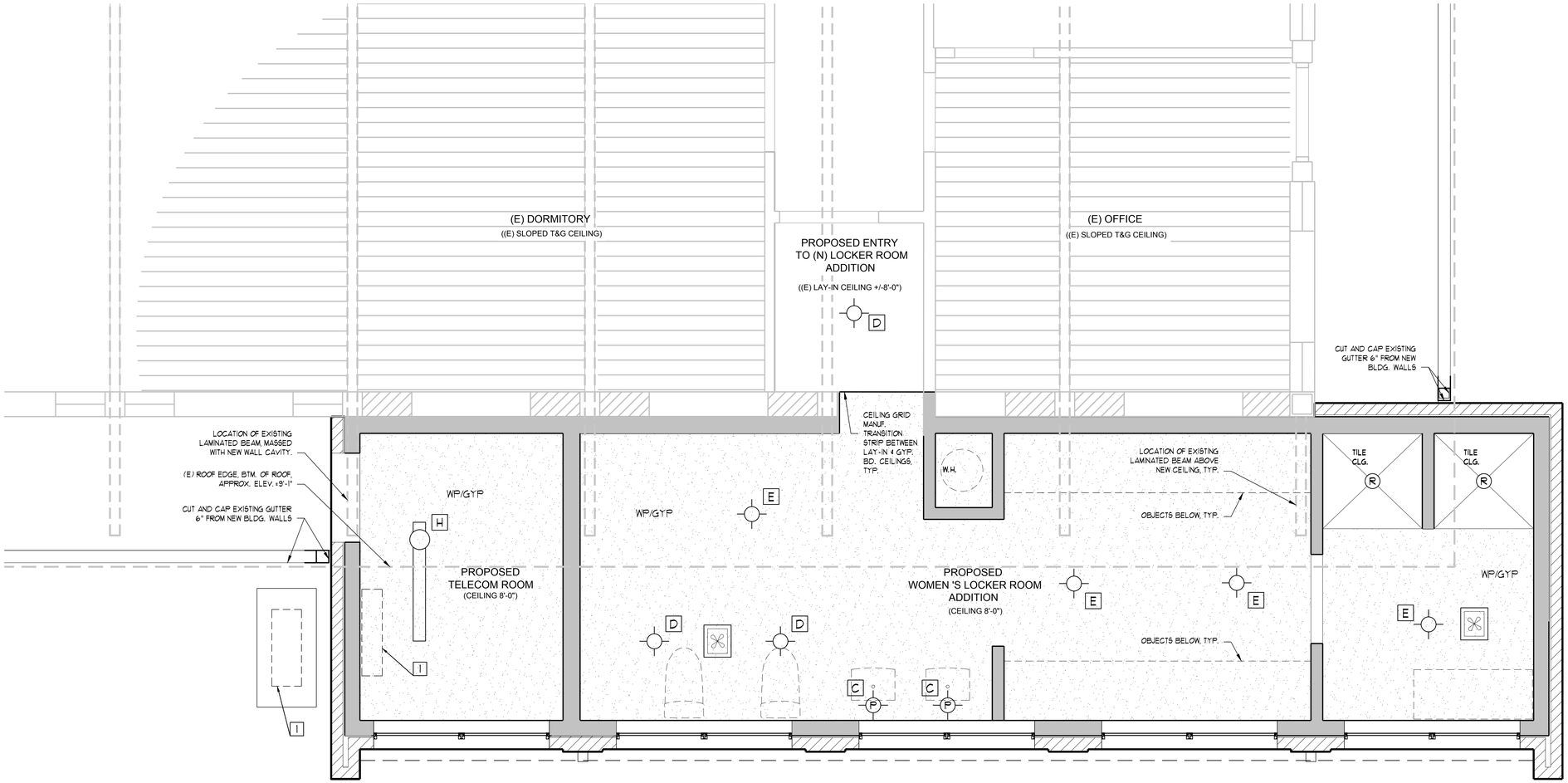

1 FS5-A120 REFLECTED CEILING PLAN

SCALE: 1/2" = 1'-0'

RCP LEGEND

- GYPSUM WALLBOARD
- 2'x2' LAY-IN ACOUSTICAL TILE CEILING GRID
- PLYWOOD SURFACE
- 1x WOOD PLANKS/T&G
- 2x WOOD FRAME INFILL, INCLUDES- INSULATION, GYP. BD., TAPE, FLOAT, CHAULK ALL JOINTS/GAPS & PAINT
- OPEN TO STRUCTURE ABOVE
- FLUSH MOUNT CEILING LIGHT
- PENDANT CEILING LIGHT
- RECESSED CEILING MOUNT LIGHT
- (2) 4 FT. NEON BALLAST FLUSH MOUNT WORK LIGHT, W/ MTL PROTECTIVE COVER
- RECESSED MOUNTED EXHAUST FAN
- CEILING FAN WITH LIGHT
- WALL SCONCE
- SURFACE MOUNT UNDER-CABINET LIGHT

CALL-OUT KEY

1. (N) MINI SPLIT AC WALL MOUNTED UNIT AND HEAT PUMP OUTDOOR UNIT (ON 2'x4' CONC. SLAB), SEE MEP SPECS
2. NO ATTIC ACCESS AT THIS LOCATION
3. LIGHTING FIXTURE SCHEDULE FS/EMS0-A020, DETAIL No.3

BID DOCUMENTS

REGISTERED ARCHITECT JOHN OWEN HARRISON 18348 STATE OF TEXAS

mwm Design Group
305 East Huntland Drive
Suite 200
Austin, Texas 78752
p: 512.453.0767
f: 512.453.1734

TBAE FIRM REGISTRATION NO.: 1452
TBPE FIRM REGISTRATION NO.: F-1416
TBPLS FIRM REGISTRATION NO.: 10065600

NO.	DATE	DESCRIPTION	BY

0 1"

The bar above measures one inch on the original drawing. Adjust scales accordingly.

REFLECTED CEILING PLAN

CITY OF AUSTIN, AFD WOMEN'S LOCKER RM. ADDN, PHASE V
1201 WEBBERVILLE ROAD, AUSTIN, TEXAS 78721

PLOTTED: 8/30/2016
JOB NO: 023-79D

FS5-A120

File: Y:\023-79D_WomensLockerRooms\CAD\Fire Station 5\Sheets\FS5-A120 RC PLAN.dwg 24x36

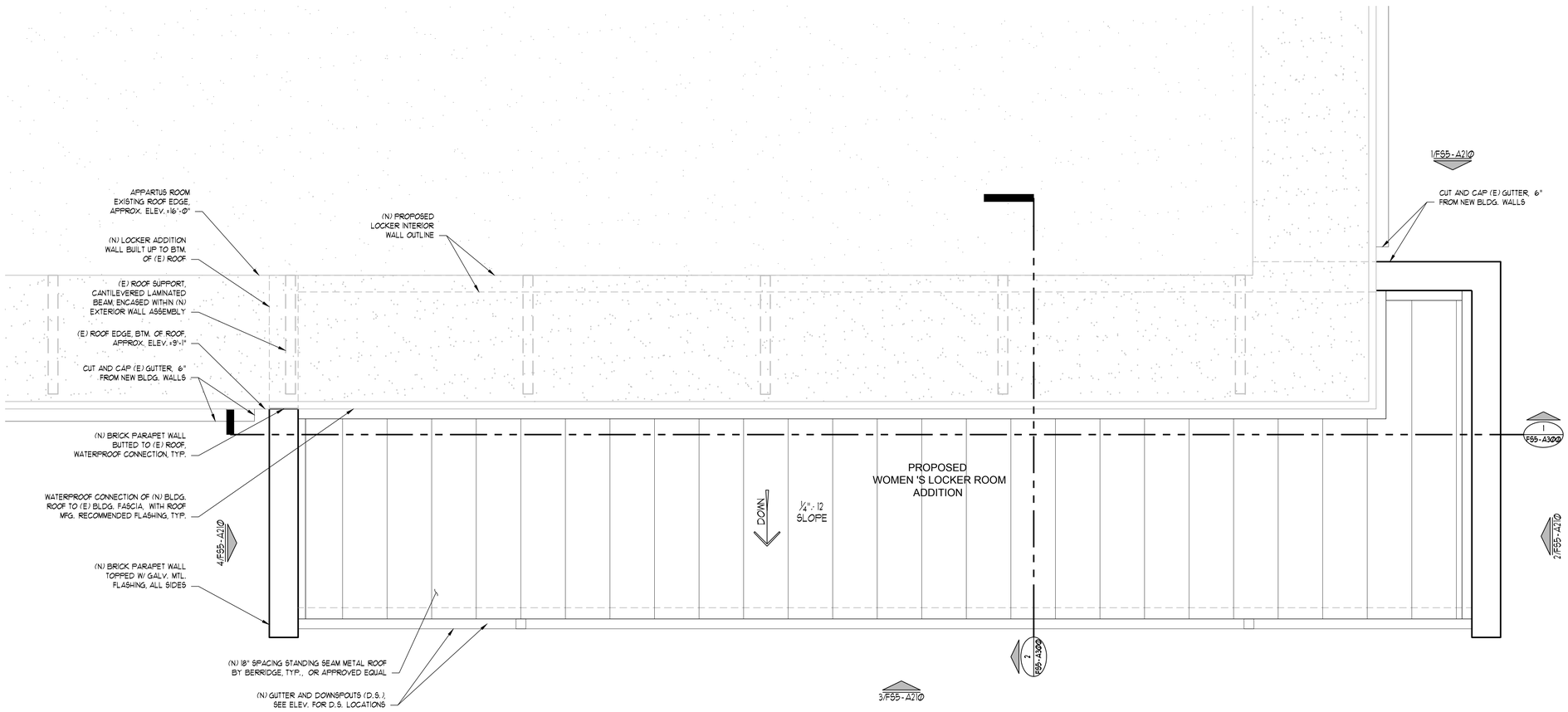

1 FS5-A130 ROOF PLAN
SCALE: 1/2" = 1'-0'

BID DOCUMENTS

REGISTERED ARCHITECT JOHN OWEN HARRISON 18348 STATE OF TEXAS

mwm Design Group

305 East Huntland Drive
Suite 200
Austin, Texas 78752
p: 512.453.0767
f: 512.453.1734

TBAE FIRM REGISTRATION NO.: 1452
TBPE FIRM REGISTRATION NO.: F-1416
TBPLS FIRM REGISTRATION NO.: 10065600

NO.	DATE	DESCRIPTION	BY

0 1"
The bar above measures one inch on the original drawing. Adjust scales accordingly.

ROOF PLAN

CITY OF AUSTIN, AFD WOMEN'S LOCKER RM. ADDN, PHASE V
1201 WEBBERVILLE ROAD, AUSTIN, TEXAS 78721

PLOTTED: 8/30/2016
JOB NO: 023-79D

FS5-A130

File: Y:\023-79D_WomensLockerRooms\CAD\Fire Station 5\Sheets\FS5-A130 ROOF PLAN.dwg 24x36

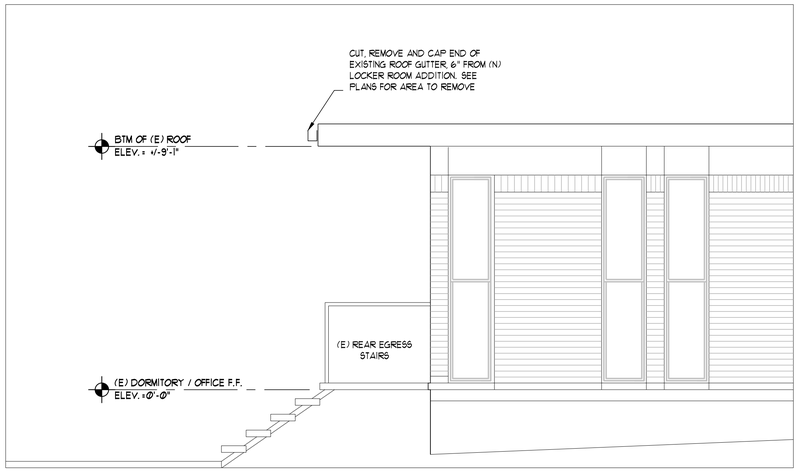

1 FS5-A200 NORTH ELEVATION
SCALE: 3/8" = 1'-0"

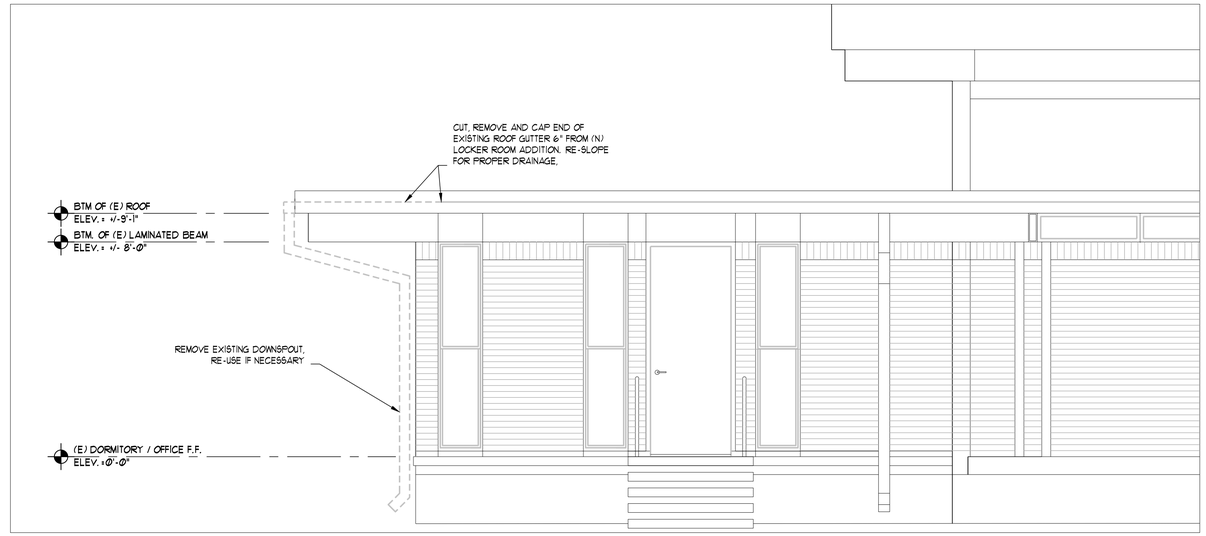

2 FS5-A200 EAST ELEVATION
SCALE: 3/8" = 1'-0"

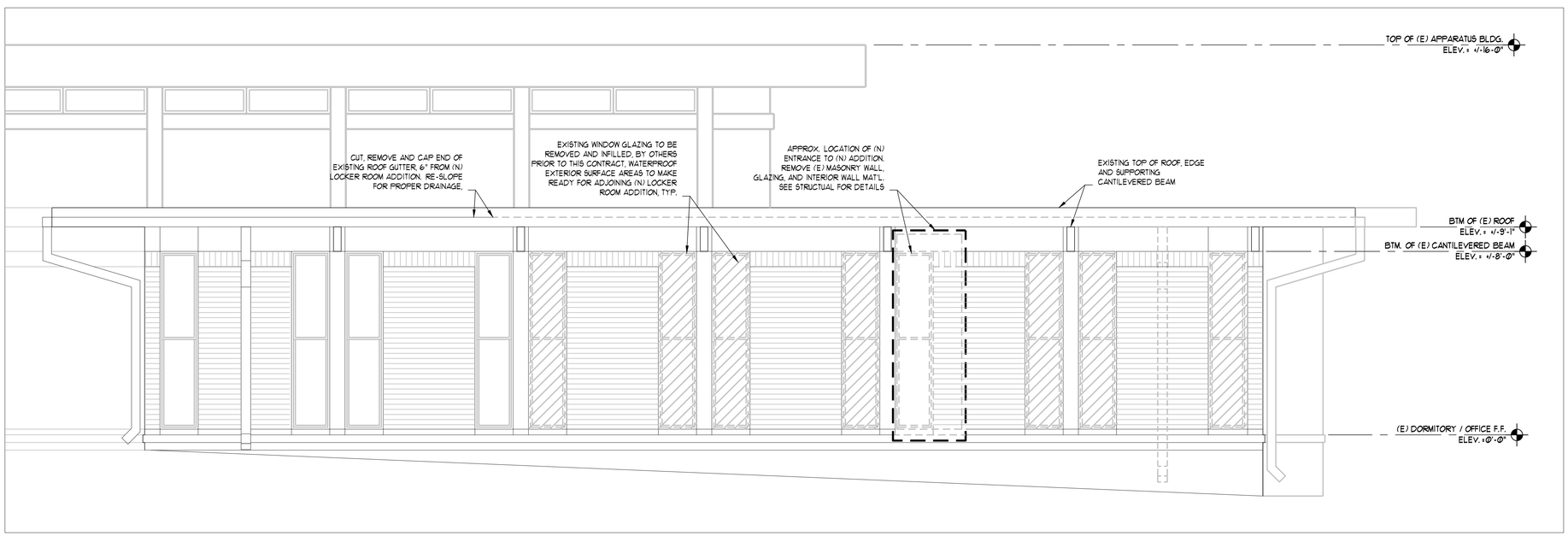

3 FS5-A200 SOUTH ELEVATION
SCALE: 3/8" = 1'-0"

BID DOCUMENTS

REGISTERED ARCHITECT JOHN OWEN HARRISON 18348 STATE OF TEXAS

mwm Design Group
305 East Huntland Drive
Suite 200
Austin, Texas 78752
p: 512.453.0767
f: 512.453.1734
TBAE FIRM REGISTRATION NO.: 1452
TBPE FIRM REGISTRATION NO.: F-1416
TBPLS FIRM REGISTRATION NO.: 10065600

NO.	DATE	DESCRIPTION	BY

0 1"
The bar above measures one inch on the original drawing. Adjust scales accordingly.

DEMOLITION ELEVATION

CITY OF AUSTIN, AFD WOMEN'S LOCKER RM. ADDN, PHASE V
1201 WEBBERVILLE ROAD, AUSTIN, TEXAS 78721

PLOTTED: 8/30/2016
JOB NO: 023-79D

FS5-A200

File: Y:\023-79D_WomensLockerRooms\CAD\Fire Station 5\Sheets\FS5-A200 DEMO ELEV.dwg 24x36

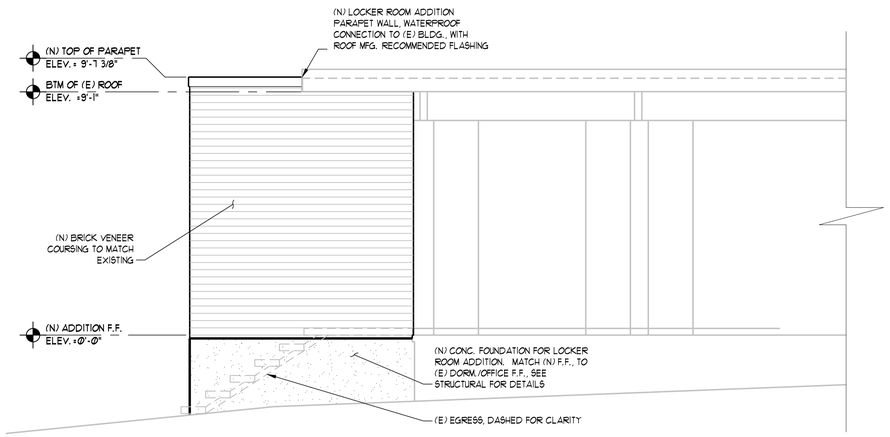

1 FS5-A210 NORTH ELEVATION / SECTION

SCALE: 3/8" = 1'-0"

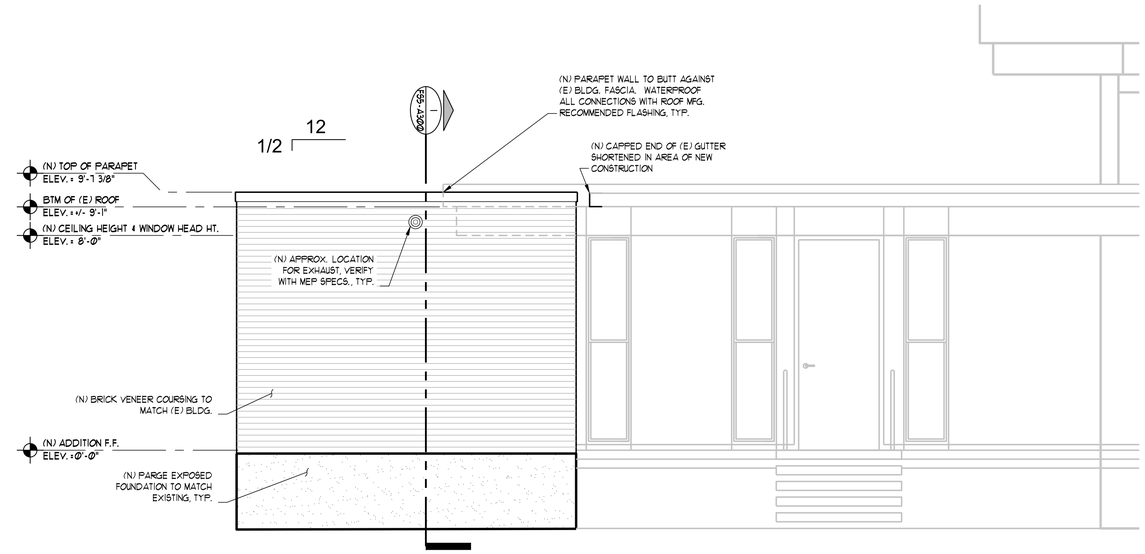

2 FS5-A210 EAST ELEVATION

SCALE: 3/8" = 1'-0"

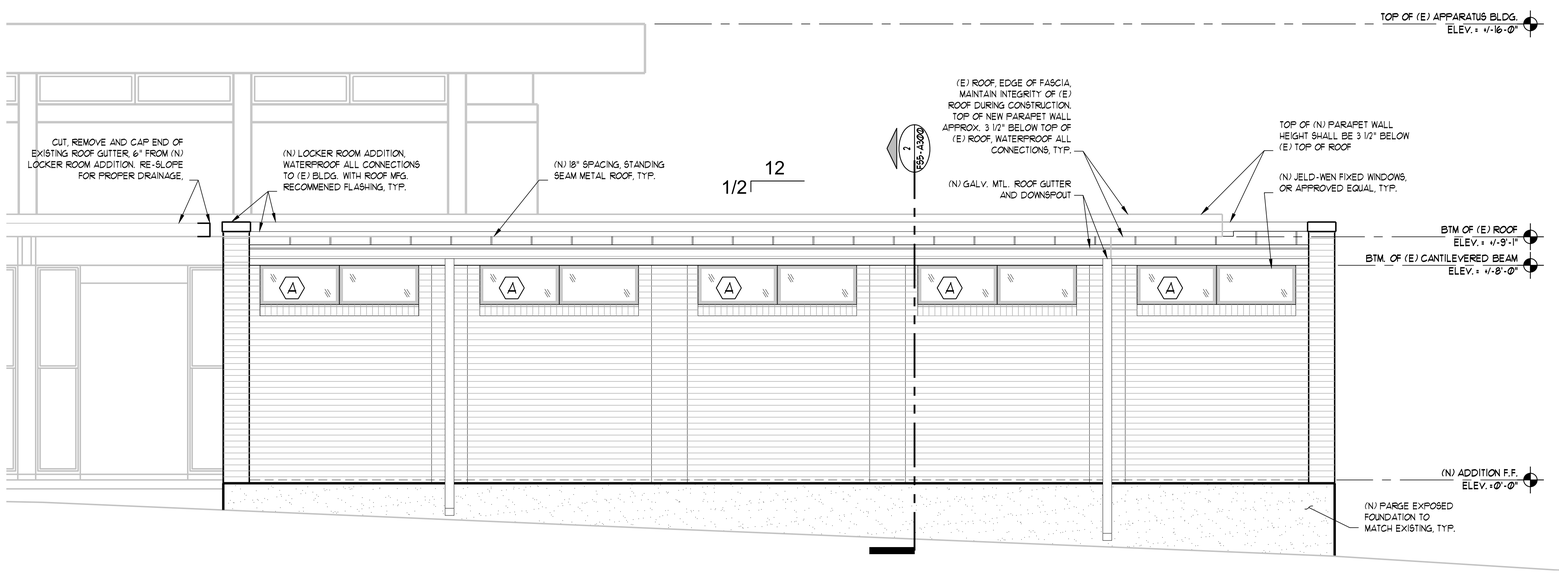

3 FS5-A210 SOUTH ELEVATION

SCALE: 3/8" = 1'-0"

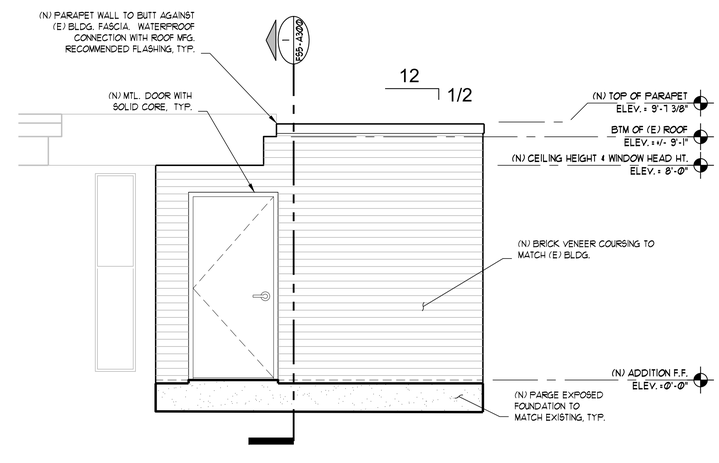

4 FS5-A210 WEST ELEVATION

SCALE: 3/8" = 1'-0"

BID DOCUMENTS

REGISTERED ARCHITECT STEWART OWEN HARTSON 18348 STATE OF TEXAS

mwm Design Group

305 East Huntland Drive
Suite 200
Austin, Texas 78752
p: 512.453.0767
f: 512.453.1734

TBAE FIRM REGISTRATION NO.: 1452
TBPE FIRM REGISTRATION NO.: F-1416
TBPLS FIRM REGISTRATION NO.: 10065600

NO.	DATE	DESCRIPTION	BY

0 1"

The bar above measures one inch on the original drawing. Adjust scales accordingly.

BUILDING ELEVATIONS

CITY OF AUSTIN, AFD WOMEN'S LOCKER RM. ADDN, PHASE V
1201 WEBBERVILLE ROAD, AUSTIN, TEXAS 78721

PLOTTED: 8/30/2016
JOB NO: 023-79D

FS5-A210

File: Y:\023-79D_WomensLockerRooms\CAD\Fire Station 5\Sheets\FS5-A210 BLDG ELEV.dwg 24x36

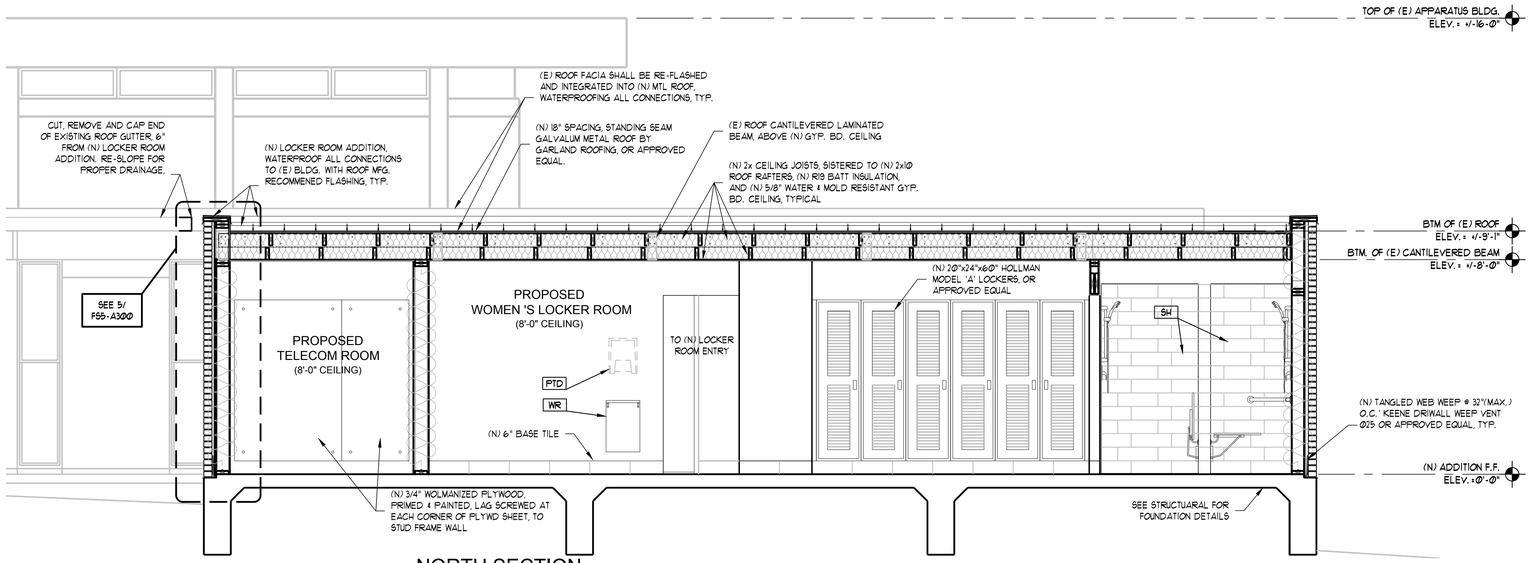

1 FS5-A300 NORTH SECTION
SCALE: 3/8" = 1'-0"

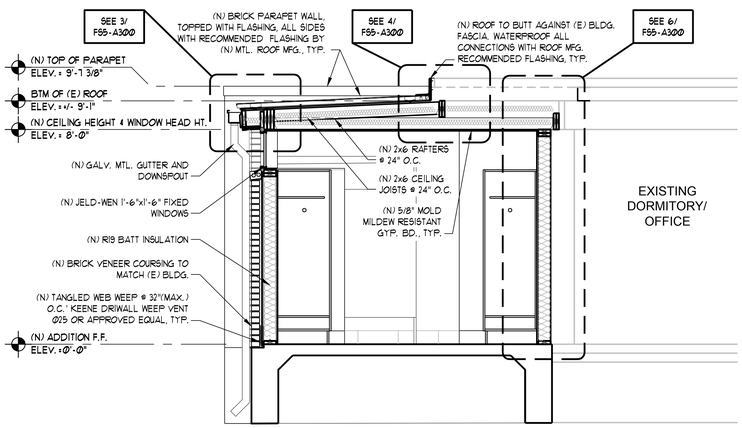

2 FS5-A300 EAST SECTION
SCALE: 3/8" = 1'-0"

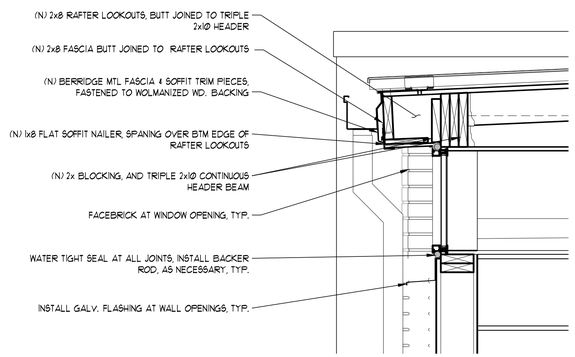

3 FS5-A300 WALL SECTION
SCALE: 1" = 1'-0"

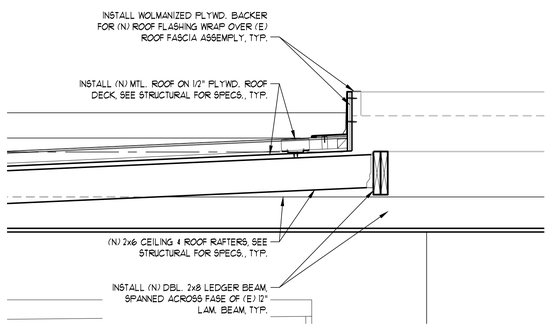

4 FS5-A300 WALL SECTION
SCALE: 1" = 1'-0"

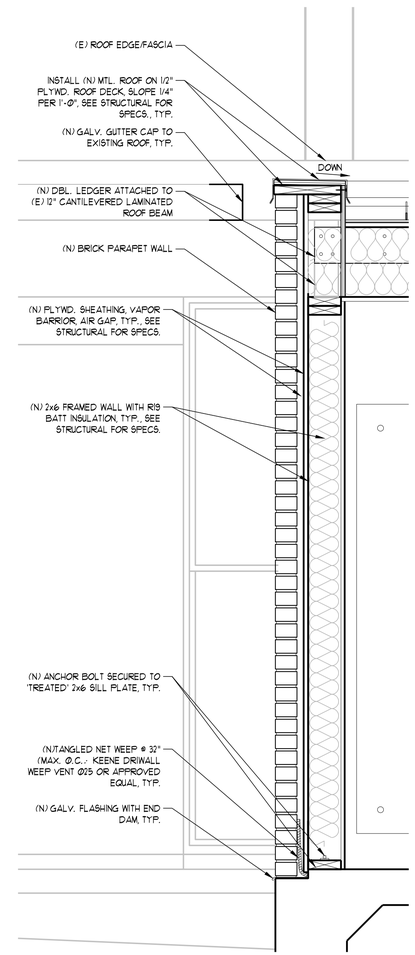

5 FS5-A300 WALL SECTION
SCALE: 1" = 1'-0"

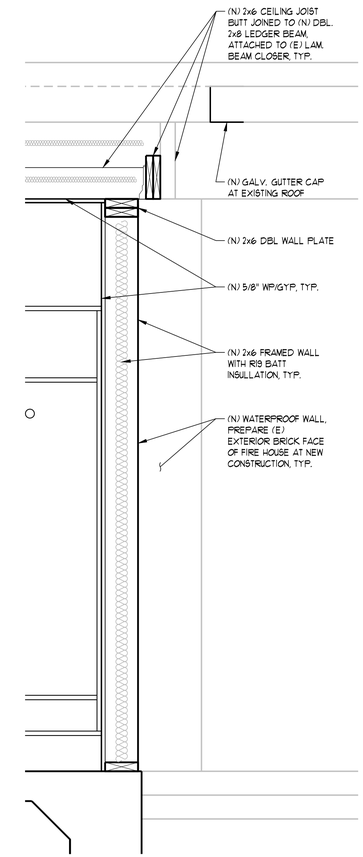

6 FS5-A300 WALL SECTION
SCALE: 1" = 1'-0"

BID DOCUMENTS

REGISTERED ARCHITECT JOHN OWEN HARRISON 18348 STATE OF TEXAS
Aug 30 2016

mwm Design Group
305 East Huntland Drive
Suite 200
Austin, Texas 78752
p: 512.453.0767
f: 512.453.1734
TBAE FIRM REGISTRATION NO.: 1452
TBPE FIRM REGISTRATION NO.: F-1416
TBPLS FIRM REGISTRATION NO.: 10065600

NO.	DATE	DESCRIPTION	BY

0 1"
The bar above measures one inch on the original drawing. Adjust scales accordingly.

BUILDING & WALL SECTIONS

CITY OF AUSTIN, AFD WOMEN'S LOCKER RM. ADDN, PHASE V
1201 WEBBERVILLE ROAD, AUSTIN, TEXAS 78721

PLOTTED: 8/30/2016
JOB NO: 023-79D

FS5-A300

File: X:\023-79D_WomensLockerRooms\CAD\Fire Station 5\Sheets\FS5-A300 BLDG SECT.dwg 24x36

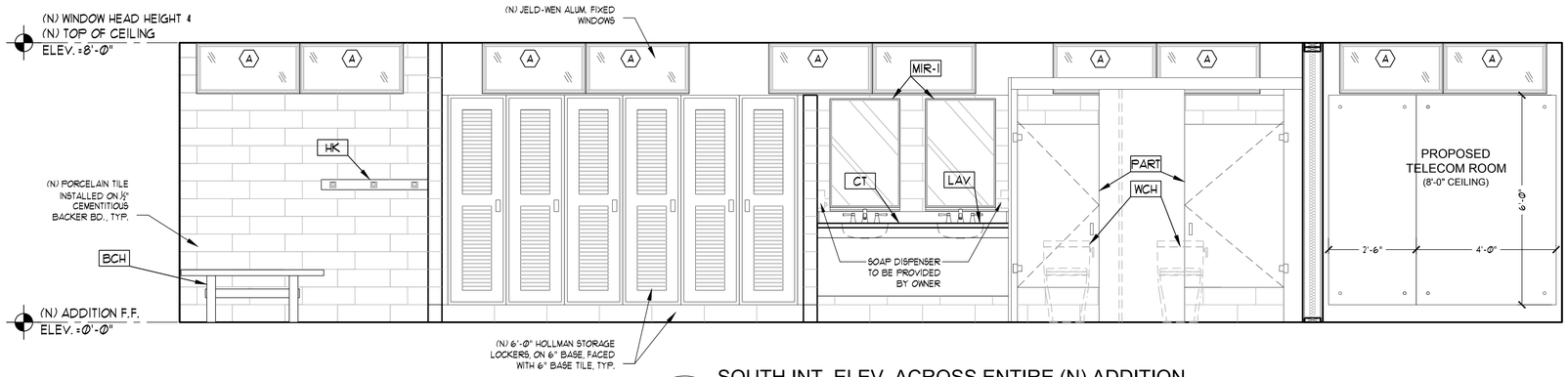

1 FS5-A400 SOUTH INT. ELEV. ACROSS ENTIRE (N) ADDITION

SCALE: 1/2" = 1'-0"

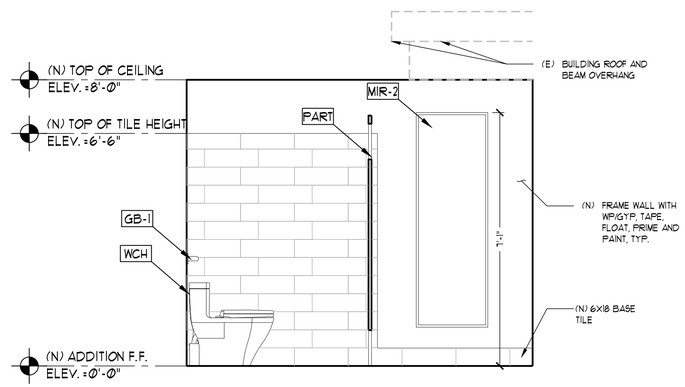

2 FS5-A400 WEST INT. ELEV. @ ACCESSIBLE STALL

SCALE: 1/2" = 1'-0"

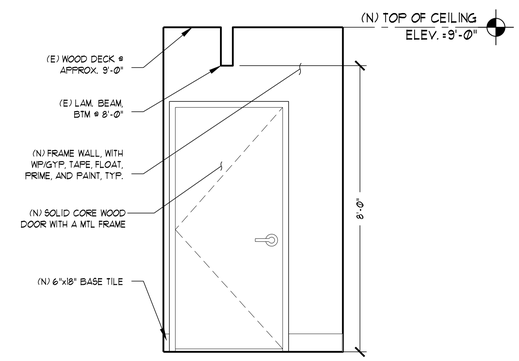

3 FS5-A400 NORTH INT. ELEV. @ LOCKER ENTRANCE

SCALE: 1/2" = 1'-0"

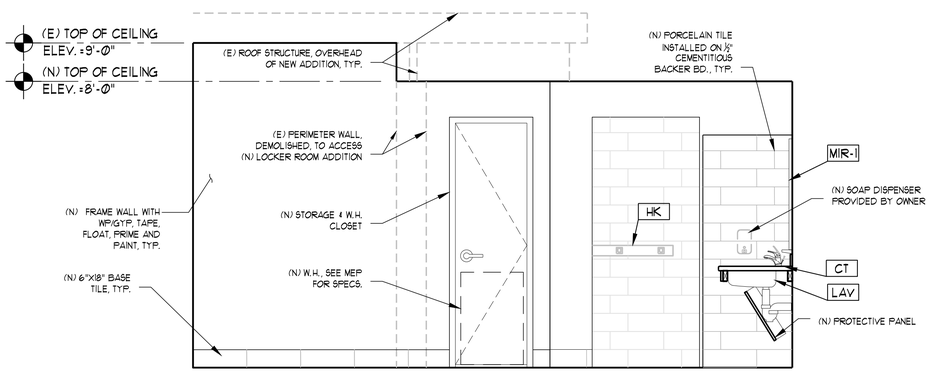

4 FS5-A400 EAST INT. ELEV. @ W.H./STORAGE CL. & ACC. SINK

SCALE: 1/2" = 1'-0"

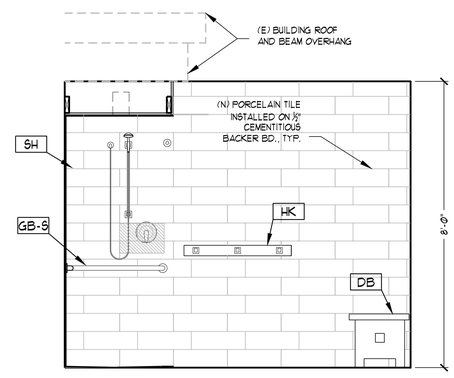

5 FS5-A400 EAST INT. ELEV. @ SHOWERS

SCALE: 1/2" = 1'-0"

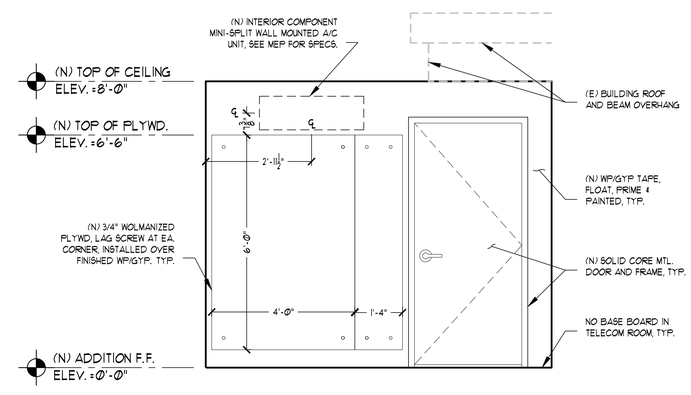

6 FS5-A400 WEST INT. ELEV. @ TELECOM ROOM

SCALE: 1/2" = 1'-0"

BID DOCUMENTS

REGISTERED ARCHITECT W. OWEN RAMSEY 18345 STATE OF TEXAS

mwm Design Group

305 East Huntland Drive
Suite 200
Austin, Texas 78752
p: 512.453.0767
f: 512.453.1734

TBAE FIRM REGISTRATION NO.: 1452
TBPE FIRM REGISTRATION NO.: F-1416
TBPLS FIRM REGISTRATION NO.: 10065600

NO.	DATE	DESCRIPTION	BY

0 1"

The bar above measures one inch on the original drawing. Adjust scales accordingly.

INTERIOR ELEVATIONS

CITY OF AUSTIN, AFD WOMEN'S LOCKER RM. ADDN, PHASE V
1201 WEBBERVILLE ROAD, AUSTIN, TEXAS 78721

PLOTTED: 8/30/2016
JOB NO: 023-79D

FS5-A400

File: Y:\023-79D_WomensLockerRooms\CAD\Fire Station 5\Sheets\FS5-A400 INT ELEV.dwg 24x36

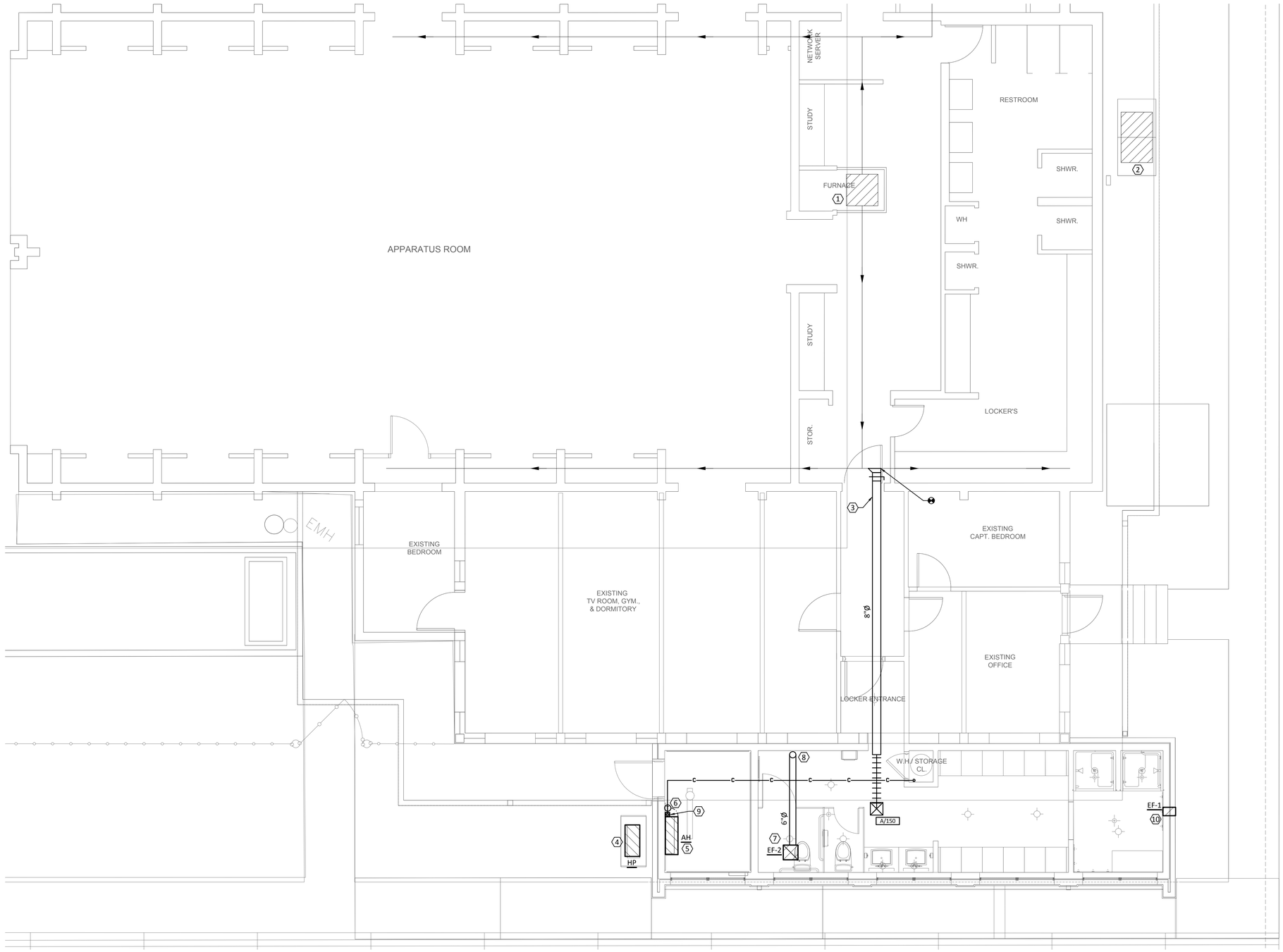

1 MECHANICAL PLAN

SCALE: 1/4" = 1'-0"

PLAN GENERAL NOTES

A. REFER TO M0.00 FOR GENERAL NOTES.
B. DO NOT ROUTE ANY DUCT & PIPING ABOVE ELECTRICAL PANELS.
C. PROVIDE AND INSTALL TRANSITION AS REQUIRED TO CONNECT SMALL DUCT TO LOUVER OR GRILLE.
D. COORDINATE WITH ARCHITECT AND STRUCTURAL ENGINEER FOR ALL WALL AND ROOF PENETRATION.
E. MAINTAIN 10' CLEARANCE FROM ANY EXHAUST AIR OUTLET OR FLUE TO ANY OUTSIDE AIR INTAKE OR OPENING TO BUILDING.
F. PROVIDE LOCKING ACCESS PORT CAPS ON ALL REFRIGERANT CIRCUIT SERVICE PORTS LOCATED ON THE EXTERIOR OF THE BUILDING.
G. ESTIMATED LOCATION OF ALL EXISTING MECHANICAL LAYOUT AND EQUIPMENT LOCATION IS BASED ON SITE OBSERVATION AND EXISTING DRAWINGS. CONTRACTOR SHALL VERIFY SIZE, LOCATION OF ALL EXISTING PLUMBING PIPING EQUIPMENT PRIOR TO BID AND CONSTRUCTION.

KEYED NOTES

1. EXISTING 7.5 TON DX COOLING / ELECTRIC HEAT AIR HANDLER (DATED 10/2014) SHALL REMAIN. EXISTING AIR HANDLER AND CONDENSING UNIT IS SUFFICIENT TO ADD SUPPLY AIR TO NEW LOCKER.
2. EXISTING 7.5 TON OUTDOOR CONDENSING UNIT SHALL REMAIN.
3. NEW 8" SUPPLY DUCT WORK WITH EXTERNAL WRAP INSULATION SHALL BE ROUTED ABOVE CEILING FROM NEW TAB ON EXISTING SUPPLY AIR DUCT TO CEILING SUPPLY AIR GRILLE IN NEW LOCKER ROOM.
   RE-BALANCE SUPPLY AIR GRILLES DOWN FOR ADDITIONAL 150CFM TO NEW LOCKER ROOM.
4. HEAT PUMP UNIT FOR DUCTLESS UNITS SHALL BE MOUNTED LEVEL ON CONCRETE PAD WITH NEOPRENE CORK PAD
5. DUCTLESS AIR HANDLER SHALL BE WALL MOUNTED ABOVE DOOR.
6. PROVIDE TEMPERATURE CONTROLLER ON WALL AT 48" A.F.F.
7. EXHAUST FAN SHALL BE SUSPENDED FROM CEILING WITH VIBRATION ISOLATORS.
8. ROUTE 6"Ø EXHAUST DUCT FROM EXHAUST FAN THROUGH ROOF TO LOW PROFILE ROOF CAP WITH INTEGRAL BIRDSCREEN AND FLASHING (GREENHECK RCC-7 OR APPROVED EQUIVALENT).
9. PROVIDE CONDENSATE DRAIN PUMP (WITH LINE SET KIT) FOR WALL MOUNTED DUCTLESS AIR HANDLER ON WALL (LITTLE GIANT MODEL EC-1K OR APPROVED EQUIVALENT).
   ROUTE 3/4" INSULATED CONDENSATE DRAIN PIPING FROM AIR HANDLER UNIT VIA CONDENSATE PUMP UP TO ABOVE CEILING THEN TO 1" ABOVE RIM OF HUB DRAIN INSIDE WATER HEATER CLOSET.
10. THROUGH WALL EXHAUST FAN WITH BUILD-IN GRILLE AND LOUVER.

SEQUENCE OF OPERATION NOTES

A. DUCTLESS SPLIT SYSTEM CONTROL
   a. SYSTEM - ON/OFF CONTROL:
      ON/OFF CONTROL FROM WALL MOUNTED THERMOSTAT.
   b. FAN – ON/OFF CONTROL:
      FAN WILL BE ACTIVATED UNDER THE FOLLOWING CONDITIONS:
      - IF THE THERMOSTAT IS SET IN THE "FAN" MODE
      - ACTIVATION OF THE COOLING OR HEATING MODE
   c. COOLING MODE:
      THERMOSTAT SETTING WILL EITHER BE IN "AUTO" OR "COOL"
      IF THE ROOM TEMPERATURE, AS MEASURED BY THE INDOOR UNIT MOUNTED ROOM TEMPERATURE SENSOR, RISES ABOVE THE THERMOSTATS SET POINT TEMPERATURE THE CONDENSING UNIT AND THE WALL MOUNTED FAN COIL UNIT WILL BE ACTIVATED.
   d. HEATING MODE:
      THERMOSTAT SETTING WILL EITHER BE IN "AUTO" OR "HEAT"
      IF THE ROOM TEMPERATURE, AS MEASURED BY THE INDOOR UNIT MOUNTED ROOM TEMPERATURE SENSOR, DOWN BELOW THE THERMOSTATS SET POINT TEMPERATURE THE CONDENSING UNIT AND THE WALL MOUNTED FAN COIL UNIT WILL BE ACTIVATED.
   e. CONDENSATE PUMP CONTROL:
      THE PRIMARY CONDENSATE FLOAT SWITCH WILL ACTIVATE AND DEACTIVATE THE CONDENSATE PUMP.
   f. SAFETY:
      A SECONDARY OVERFLOW CONDENSATE FLOAT SWITCH UPON ACTIVATION WILL CONTINUE TO RUN THE CONDENSATE PUMP, DEACTIVATE THE FAN, AND INITIATE A BLINKING LIGHT ON THE CONTROL DISPLAY TO INDICATE THE PROBLEM.
B. EXHAUST FANS (SEE ELECTRICAL PLAN FOR CONTROLLER)
   - EF-1 & EF-2 WILL BE INTERLOCKED WITH LIGHTING SWITCH WITH A TIME-DELAY-OFF RELAY SWITCH TO ALLOW FAN TO OPERATE UP TO 15 MINUTES AFTER LIGHTS ARE TURNED OFF

ENCOTECH ENGINEERING CONSULTANTS
TBPE Firm 1141
8500 Bluffstone Cove, Suite B-103
Austin, Texas 78759 | 512.338.1101
Project No.: 14046.M.AUS

STATE OF TEXAS
LYNN C. BROWN
55248
LICENSED PROFESSIONAL ENGINEER
08/30/2016

mwm Design Group
305 East Huntland Drive
Suite 200
Austin, Texas 78752
p: 512.453.0767
f: 512.453.1734
TBAE FIRM REGISTRATION NO.: 1452
TBPE FIRM REGISTRATION NO.: F-1416
TBPLS FIRM REGISTRATION NO.: 10065600

NO.	DATE	DESCRIPTION	BY

SCALE IS AS NOTED ON DRAWING

MECHANICAL PLAN

CITY OF AUSTIN, AFD WOMEN'S LOCKER RM. ADDN, PHASE V
1201 WEBBERVILLE ROAD, AUSTIN, TEXAS 78721

PLOTTED: 8/30/2016
JOB NO: 023-79D

FS5-M110

File: J:\ACTIVE PROJECTS\MWM\15009.M.AUS – AFD WLR Ph 5\1. MEP\D-AutoCAD\FS5\15009 FS05 M110 Mech Plan.dwg 24x36

DUCTLESS HEAT PUMP SCHEDULE

MARK	CLG. DATA		ELECTRICAL DATA			UNIT DATA				
	TONS	EER/ SEER	MCA	MOCP	VOLT/PH	MAKE	MODEL	LBS.	NOTES	CORRESPONDING AIR HANDLER
HP	1.5	13.3/ 21.5	10.0	15	208V/1PH	LG	LSU090HSV4	75		

NOTES:
1. PROVIDE DISCONNECT, TO BE FIELD MOUNTED BY ELECTRICAL CONTRACTOR.
2. COMPRESSOR SHALL BE PROVIDED WITH 10 YEARS WARRANTY.
3. UNIT TO BE PROVIDED LOW AMBIENT KIT FOR OPERATION DOWN TO 40°F.

DUCTLESS SPLIT UNIT SCHEDULE

MARK	AIR DATA					COOLING DATA												HEATING DATA					ELECTRICAL DATA			UNIT DATA			
	TOT. CFM	O/A CFM	E.S.P.	HP	CONFIGURATION	AMBIENT		ENTERING		LEAVING		DESIGN		SCHEDULE		STAGE	EER/ SEER	DES.	SCHEDULE		STAGE	HSPF	MCA	MOCP	VOLT/PH	MAKE	MODEL	LBS.	NOTES
						D.B.	W.B.	D.B.	W.B.	D.B.	W.B.	SENS.	TOT.	SENS.	TOT.			MBH	MBH	KW									
AH	272	N/A	N/A	-	WALL-MOUNTED	105	74	80	67	-	-			-	9.0	INV.	14.0/ 21.0	-	10.8	-	-	10.80				LG	LSN090HSV4	20	1, 2, 3

NOTES:
1. EACH UNIT TO BE MOUNTED USING VIBRATION ISOLATORS.
2. INDOOR UNIT TO INCLUDE MANUFACTURER THERMOSTAT.
3. CONDENSATE PUMP.

FAN SCHEDULE

MARK	AREA SERVED	LOCATION	INTERLOCK	AIR DATA				ELECTRICAL DATA			UNIT DATA					
				CFM	S.P.	HP	RPM	FLA	MOCP	VOLT/PH	MAKE	MODEL	TYPE	DRIVE	LBS.	NOTES
EF-1	SHOWER	WALL	LIGHT SWITCH	70	0.25	-	2600	0.7	15	115V/1PH	BROAN	512M	THRU-WALL VENTILATOR	DIRECT	-	DISC, SC, GC, VI
EF-2	RESTROOM	CEILING	LIGHT SWITCH	150	0.25	-	1400	0.6	15	115V/1PH	GREENHECK	CSP-A190	CENTRIFUGAL	DIRECT	17	DISC, SC, BDD, VI

NOTES:
1. FEATURE NOTES:
   - DISC = DISCONNECT SWITCH
   - TD = PROVIDE AND INSTALL A TIME-DELAY-OFF RELAY SWITCH TO ALLOW FAN TO OPERATE UP TO 15 MINUTES AFTER LIGHTS ARE TURNED OFF
   - SC = SPEED CONTROL (DIRECT DRIVE FANS ONLY)
   - BDD = BACKDRAFT DAMPER
   - GC= EXTERNAL WALL CAP (WITH BIRDSCREEN) AND INTERIOR GRILLE
   - VI = VIBRATION ISOLATORS

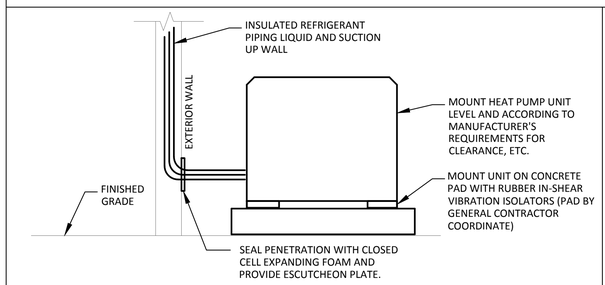

REFRIGERANT PIPING INSULATION NOTES
1. ALL CLOSED CELL POLYMER INSULATION SHALL HAVE GLUED JOINTS WITH COMPLETE COVERAGE OF ALL METAL SURFACES. ALL INSULATION EXPOSED TO EXTERIOR SHALL BE PAINTED WITH TWO COATS AS PER INSULATION MANUFACTURERS SPECIFICATIONS.
2. PROVIDE AND INSTALL LINE DRYER IN LIQUID FREON LINE
3. PROVIDE INSULATION SHIELD AT ALL SUPPORTS.

1 HEAT PUMP UNIT DETAIL
NOT TO SCALE

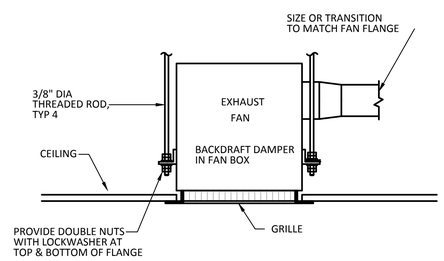

2 CEILING EXHAUST FAN DETAIL
NOT TO SCALE

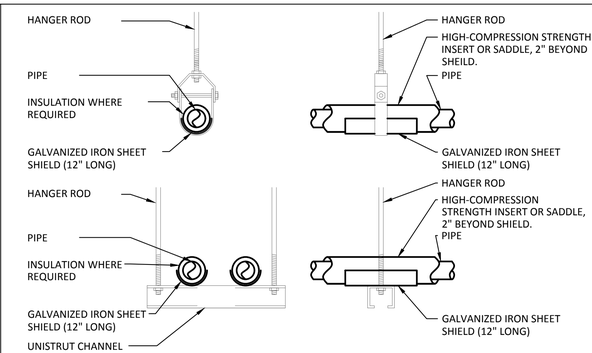

NOTE:
1. ATTACH SUPPORTS FOR ALL PIPING SUSPENDED FROM THE STEEL STRUCTURE TO THE TOP CORD OF JOISTS OR BEAM.
2. PROVIDE COPPER OR PLASTIC COATED HANGERS FOR NON-INSULATED COPPER PIPE

3 PIPE HANGER DETAIL
NOT TO SCALE

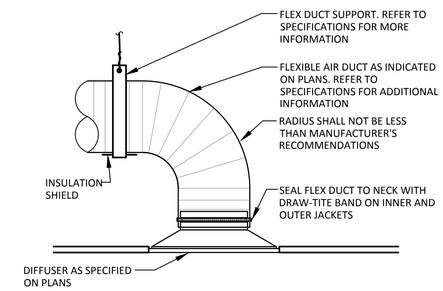

4 SUPPLY DIFFUSER
NOT TO SCALE

ENCOTECH ENGINEERING CONSULTANTS
TBPE Firm 1141 | 8500 Bluffstone Cove, Suite B-103 Austin, Texas 78759 | 512.338.1101
Project No.: 14046.M.AUS

STATE OF TEXAS — LYNN C. BROWN — 55248 — LICENSED PROFESSIONAL ENGINEER
08/30/2016

mwm Design Group
305 East Huntland Drive
Suite 200
Austin, Texas 78752
p: 512.453.0767
f: 512.453.1734
TBAE FIRM REGISTRATION NO.: 1452
TBPE FIRM REGISTRATION NO.: F-1416
TBPLS FIRM REGISTRATION NO.: 10065600

NO.	DATE	DESCRIPTION	BY

SCALE IS AS NOTED ON DRAWING

MECHANICAL SCHEDULES & DETAILS

CITY OF AUSTIN, AFD WOMEN'S LOCKER RM. ADDN, PHASE V
1201 WEBBERVILLE ROAD, AUSTIN, TEXAS 78721

PLOTTED: 8/30/2016
JOB NO: 023-79D

FS5-M210

File: L:\ACTIVE PROJECTS\MWM\15009.M.AUS – AFD WLR Ph 5\1. MEP\D-AutoCAD\FS5\15009 FS05 M210 Mech Schedule Details.dwg 24x36

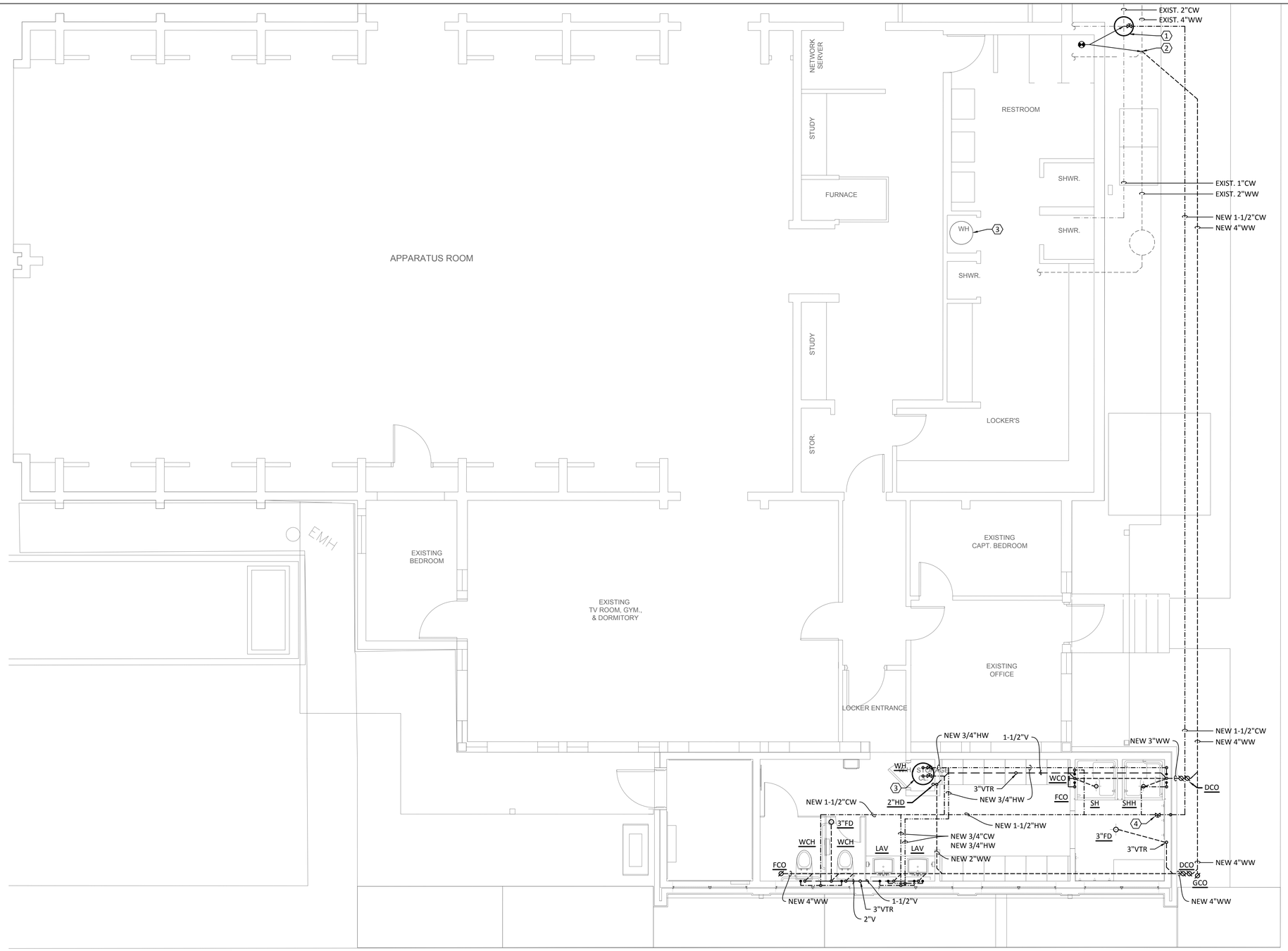

PLAN GENERAL NOTES

A. REFER TO P0.00 FOR GENERAL NOTES.

B. ESTIMATED LOCATION OF ALL EXISTING PLUMBING LAYOUT AND EQUIPMENT LOCATION IS BASED ON SITE OBSERVATION AND EXISTING DRAWINGS. CONTRACTOR SHALL VERIFY SIZE, LOCATION OF ALL EXISTING PLUMBING PIPING EQUIPMENT PRIOR TO BID AND CONSTRUCTION

C. DO NOT ROUTE ANY PLUMBING PIPING ABOVE ANY ELECTRICAL PANEL.

D. PROVIDE AND INSTALL WATER SAVER TRAP PRIMER FROM NEAREST LAVATORY OR TRAP PRIMER WITH ACCESSIBLE SHUT-OFF VALVE IN WALL TO ALL FLOOR DRAINS, HUB DRAINS AND FLOOR SINKS. SEE PLAN FOR LOCATION.

E. PROVIDE AND INSTALL ACCESS TO ALL SHUT-OFF VALVES.

F. INSULATE 100% OF ALL HOT WATER PIPING, HOT WATER RETURN PIPING & COLD WATER PIPING ACCORDING TO SPECIFICATIONS.

G. REFER TO PLUMBING RISER FOR ADDITIONAL SIZING INFORMATION.

KEYED NOTES

1. NEW 1-1/2" CW PIPING UNDERGROUND FROM NEW RESTROOM SHALL BE CONNECTED TO EXISTING MAIN 2" CW PIPING UNDERGOUND. PROVIDE AND INSTALL VALVE BOX AT CONNECTION POINT.
2. NEW 4" WW PIPING UNDERGROUND FROM NEW RESTROOM SHALL BE CONNECTED TO EXISTING MAIN 4" WW PIPING.
3. EXISTING WATER HEATER SHALL REMAIN AND HAS INSUFFICIENT CAPACITY TO ADD TWO NEW SHOWERS AND LAVATORIES. SEE KEY NOTE #5 FOR NEW WATER HEATER.
4. MAIN WATER SHUT-OFF VALVE FOR NEW LOCKER ROOM ABOVE CEILING. COORDINATE WITH GENERAL CONTRACTOR TO PROVIDE AND INSTALL ACCESS PANEL.
5. PROVIDE WATER HEATER ON 3" CONCRETE PAD WITH SECONDARY DRAIN PAN. ROUTE T&P AND SECONDARY DRAIN PAN DRAIN PIPING TO 1" ABOVE RIM OF HUB DRAIN. CONCRETE PAD IS BY GENERAL CONTRACTOR.

1 PLUMBING PLAN
SCALE: 1/4" = 1'-0"

ENCOTECH ENGINEERING CONSULTANTS
TBPE Firm 1141
8500 Bluffstone Cove, Suite B-103
Austin, Texas 78759 | 512.338.1101
Project No.: 14046.M.AUS

STATE OF TEXAS
LYNN C. BROWN
55248
LICENSED PROFESSIONAL ENGINEER
08/30/2016

mwm Design Group
305 East Huntland Drive
Suite 200
Austin, Texas 78752
p: 512.453.0767
f: 512.453.1734
TBAE FIRM REGISTRATION NO.: 1452
TBPE FIRM REGISTRATION NO.: F-1416
TBPLS FIRM REGISTRATION NO.: 10065600

NO.	DATE	DESCRIPTION	BY

SCALE IS AS NOTED ON DRAWING

PLUMBING PLAN

CITY OF AUSTIN, AFD WOMEN'S LOCKER RM. ADDN, PHASE V
1201 WEBBERVILLE ROAD, AUSTIN, TEXAS 78721

PLOTTED: 8/30/2016
JOB NO: 023-79D

FS5-P110

File: J:\ACTIVE PROJECTS\MWM\15009.M.AUS — AFD WLR Ph 5\1. MEP\D-AutoCAD\FS5\15009 FS05 P110 Plumb Plan.dwg 24x36

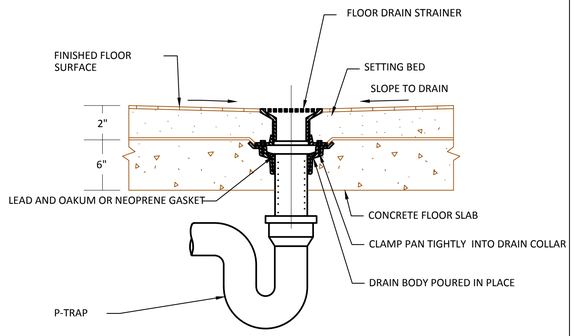

6 TYPICAL FLOOR DRAIN DETAIL
NOT TO SCALE

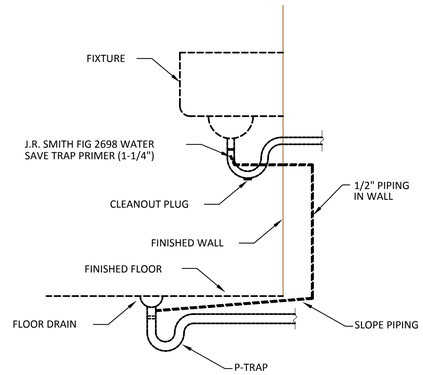

5 WATER SAVER TRAP PRIMER DETAIL
NOT TO SCALE

WATER CALCULATION

WATER CLOSET, FLUSH VALVE	4 x	5.0 F.U. =	20.0 F.U.
SHOWER	4 x	2.0 F.U. =	8.0 F.U.
LAVATORY	3 x	1.0 F.U. =	3.0 F.U.
KITCHEN SINK, COMMERCIAL	1 x	3.0 F.U. =	3.0 F.U.
SERVICE SINK (PUBLIC)	1 x	3.0 F.U. =	3.0 F.U.
DISHWASHER	1 x	1.5 F.U. =	1.5 F.U.
CLOTHES WASHER	1 x	4.0 F.U. =	4.0 F.U.
DRINKING FOUNTAIN	1 x	0.5 F.U. =	0.5 F.U.
FIRST HOSE BIBB	1 x	2.5 F.U. =	2.5 F.U.
ADDITIONAL HOSE BIBBS	2 x	1.0 F.U. =	2.0 F.U.
TOTAL FIXTURE UNITS		=	47.5 F.U.
47.5 FIXTURE UNITS		=	49.0 GPM

HIGHEST FIXTURE = 10 FEET
(10 FT.) x 0.43 = 4.3 PSI STATIC LOSS

HORIZONTAL PIPE LENGTH TAP TO METER	=	10 FEET
HORIZONTAL PIPE LENGTH METER TO BUILDING	=	100 FEET
HORIZONTAL PIPE LENGTH BUILDING TO LAST FIXTURE	=	100 FEET
VERTICAL PIPE LENGTH BUILDING RISE TO HIGHEST FIXTURE	=	10 FEET
TOTAL PIPE LENGTH	=	220 FEET

(220 FT.) x 1.25 (FITTING LOSS) = 275 FEET TOTAL DEVELOPED LENGTH

SIZE	DEVICE		PSI LOSS
1-1/2"	METER	=	5.4 PSI
	STATIC	=	4.3 PSI
	FIXTURE (FLUSH VALVE)	=	15.0 PSI
	TOTAL BUILDING LOSS	=	24.7 PSI

PRESSURE AT STREET	=	50.0 PSI
BUILDING LOSS	=	24.7 PSI
DIFFERENCE	=	25.3 PSI

(25.3 / 275) x 100 = 9.2 MAX PSI DROP ALLOWABLE PER 100 FT. PIPE LENGTH

EXISTING 1-1/2" METER AND 2" MAIN WATER LINE TO BUILDING IS SUFFICIENT

WATER CALCULATION NOTES

- THIS CALCULATION IS BASED ON UNIFORM PLUMBING CODE 2012, APPENDIX A.
* VERIFY PRESSURE AT TIME OF CONSTRUCTION. IF GREATER THAN 65 PSI PROVIDE AND INSTALL PRESSURE REDUCING VALVE TO REDUCE WATER PRESSURE TO 65 PSI MAXIMUM.

PLUMBING FIXTURE SCHEDULE

MARK	CW	HW	VENT	S&W	MODEL NUMBER	DESCRIPTION
WC	1"	-	2"	3"	WATER CLOSET: KOHLER MODEL: WELLWORTH K-4406 FLUSH VALVE: SLOAN MODEL: 111-1.28 SEAT: CHURCH 295SSC	FLUSH VALVE WATER CLOSET, FLOOR MOUNTED, ELONGATED BOWL, 1-1/2" TOP SPUD, FLOOR OUTLET EXPOSED WATER CLOSET FLUSHOMETER FOR FLOOR MOUNTED TOP SPUD BOWLS, 1.28 GPF. OPEN FRONT, ELONGATED SEAT WITH STAINLESS STEEL LOCKING HINGE
WCH	1"	-	2"	3"	WATER CLOSET: KOHLER MODEL: HIGHLINE K-4405 FLUSH VALVE: SLOAN MODEL: 8111-1.28 SEAT: CHURCH 295SSC	FLUSH VALVE WATER CLOSET, FLOOR MOUNTED, ELONGATED BOWL, 1-1/2" TOP SPUD, FLOOR OUTLET, ADA COMPLIANT EXPOSED WATER CLOSET FLUSHOMETER FOR FLOOR MOUNTED TOP SPUD BOWLS, 1.28 GPF. OPEN FRONT, ELONGATED SEAT WITH STAINLESS STEEL LOCKING HINGE
LAV	1/2"	1/2"	1-1/2"	2"	LAVATORY: KOHLER MODEL: K-1997-1-0 (HANDICAP USE) FAUCET: DELTA MODEL: 26C3942 MIXING VALVE: WATTS MODEL: L111	WALL HUNG, VITREOUS CHINA, 22"x19" BOWL, HANDICAP ACCESSIBLE. MANUAL GOOSENECK FAUCET, 0.5 GPM AERATOR, 8" CENTERS, LEVER HANDLES INDIVIDUAL FAUCET THERMOSTATIC MIXING VALVE. HOT WATER TEMPERATURE SHALL BE LIMITED TO 110 DEGREES FAHRENHEIT.
SH	1/2"	1/2"	1-1/2"	2"	SHOWER ENCLOSURE: AQUATIC MODEL: 1363BFS SHOWER FAUCET & HANDSET: T&S BRASS MODEL: B-3205 MIXING VALVE: LAWLER MODEL: SERIES 516 UNIT NUMBER: 86823	36"Wx36"D AQUATIC SHOWER UNIT WITH NO DAM. COMPLETE WITH L-SHAPED FOLD-UP SEAT, SLIDE BAR, VACUUM BREAKER AND HOSE, CURTAIN RODS (VERIFY DEPTH OF RECESS) PRESSURE BALANCE SHOWER VALVE, HANDHELD SPRAY ASSEMBLY, 2.0 GPM FLOW CONTROL DEVICE WITH THUMB VALVE TO SWITCH BETWEEN 0.5 GPM AND 2.0 GPM, GRAB BAR WITH BRACKET ASSEMBLY, ADA COMPLIANT ROUGH CHROME THERMOSTATIC MIXING VALVE, 0.5 MINIMUM FLOW RATE, OUTLET RANGE 95-115 DegF WITH A SPINDLE TO ADJUST OUTLET TEMPERATURE. SET OUTLET TEMPERATURE AT 110DegF.
SHH	1/2"	1/2"	1-1/2"	2"	SHOWER ENCLOSURE: AQUATIC MODEL: 1363BFS ADA COMPLIANCE SHOWER FAUCET & HANDSET: T&S BRASS MODEL: B-3205 MIXING VALVE: LAWLER MODEL: SERIES 516 UNIT NUMBER: 86823	36"Wx36"D AQUATIC SHOWER UNIT WITH NO DAM. COMPLETE WITH L-SHAPE FOLD-UP SEAT, GRAB BARS, SLIDE BAR, VACUUM BREAKER AND HOSE, CURTAIN RODS (VERIFY DEPTH OF RECESS) PRESSURE BALANCE SHOWER VALVE, HANDHELD SPRAY ASSEMBLY, 2.0 GPM FLOW CONTROL DEVICE WITH THUMB VALVE TO SWITCH BETWEEN 0.5 GPM AND 2.0 GPM, GRAB BAR WITH BRACKET ASSEMBLY, ADA COMPLIANT ROUGH CHROME THERMOSTATIC MIXING VALVE, 0.5 MINIMUM FLOW RATE, OUTLET RANGE 95-115 DegF WITH A SPINDLE TO ADJUST OUTLET TEMPERATURE. SET OUTLET TEMPERATURE AT 110DegF.
WH	3/4"	3/4"	-	-	WATER HEATER: A.O. SMITH MODEL: DEN-40 EXPANSION TANK: AMTROL ST-5	ELECTRIC WATER HEATER, 40 GALLON TANK, 4.5 KW HEATING ELEMENT, 140°F OUTPUT, 25 GPH RECOVERY AT 80°F TEMPERATURE RISE, 208V/1ϕ ELECTRIC POWER 5 GALLON INLINE EXPANSION TANK
FD	-	-	2"	*	SMITH 2005	FLOOR DRAIN. CAST IRON. ADJUSTABLE STRAINER HEAD.
FCO	-	-	-	*	SMITH 4020	FLOOR CLEANOUT. CAST IRON WITH NICKEL BRONZE ADUSTABLE TOP.
GCO	-	-	-	*	SMITH 4237	GROUND CLEANOUT. CAST IRON WITH CAST IRON NON-TILT ADJUSTABLE TOP.

NOTES:
* SEE PLAN FOR SIZING.
** PLUMBING FIXTURES, ACCESSORIES AND INSTALLATION SHALL MEET ALL FEDERAL, STATE, ADA AND LOCAL REQUIREMENTS.

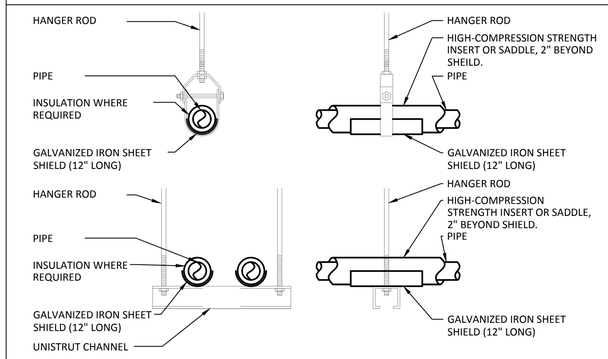

NOTE:
1. ATTACH SUPPORTS FOR ALL PIPING SUSPENDED FROM THE STEEL STRUCTURE TO THE TOP CORD OF JOISTS OR BEAM.
2. PROVIDE COPPER OR PLASTIC COATED HANGERS FOR NON-INSULATED COPPER PIPE

4 PIPE HANGER DETAIL
NOT TO SCALE

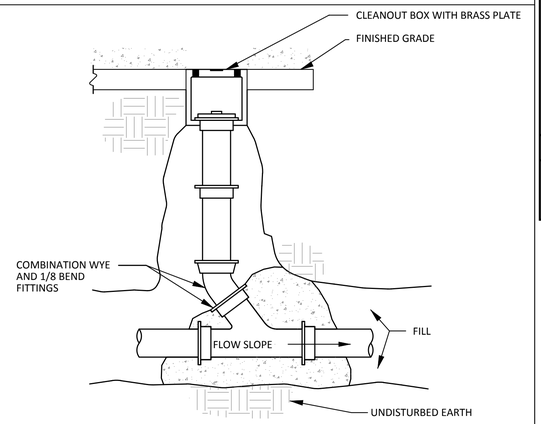

3 EXTERIOR CLEANOUT DETAIL
NOT TO SCALE

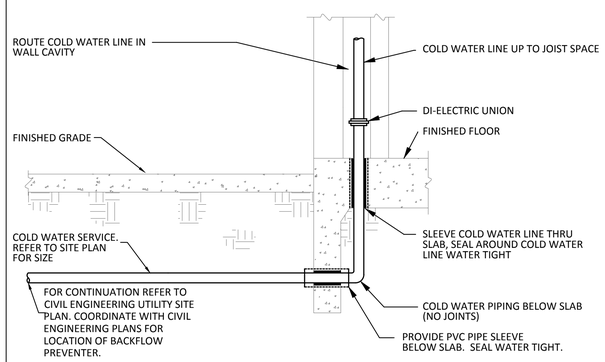

2 COLD WATER BUILDING ENTRY DETAIL
N.T.S.

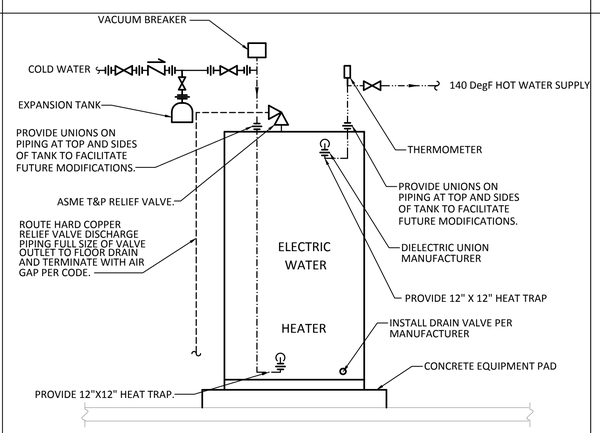

1 ELECTRICAL WATER HEATER DETAIL
N.T.S.

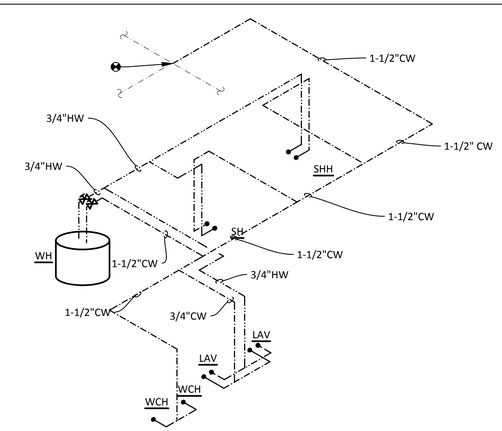

7 WATER RISER
N.T.S.

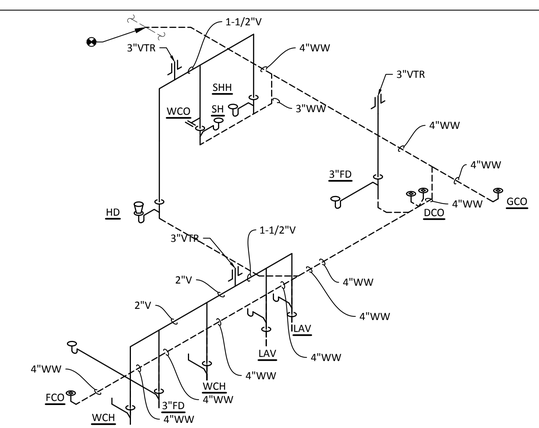

8 WASTE WATER AND VENT RISER
N.T.S.

ENCOTECH ENGINEERING CONSULTANTS
TBPE Firm 1141 | 8500 Bluffstone Cove, Suite B-103 Austin, Texas 78759 | 512.338.1101
Project No.: 14046.M.AUS

STATE OF TEXAS — LYNN C. BROWN — 55248 — LICENSED PROFESSIONAL ENGINEER
08/30/2016

mwm Design Group
305 East Huntland Drive
Suite 200
Austin, Texas 78752
p: 512.453.0767
f: 512.453.1734
TBAE FIRM REGISTRATION NO.: 1452
TBPE FIRM REGISTRATION NO.: F-1416
TBPLS FIRM REGISTRATION NO.: 10065600

NO.	DATE	DESCRIPTION	BY

SCALE IS AS NOTED ON DRAWING

PLUMBING SCHEDULES & DETAILS

CITY OF AUSTIN, AFD WOMEN'S LOCKER RM. ADDN, PHASE V
1201 WEBBERVILLE ROAD, AUSTIN, TEXAS 78721

PLOTTED: 8/30/2016
JOB NO: 023-79D

FS5-P210

File: L:\ACTIVE PROJECTS\MWM\15009.M.AUS – AFD WLR Ph 5\1. MEP\D-AutoCAD\FS5\15009 FS05 P210 Plumb Schedule Details.dwg 24x36

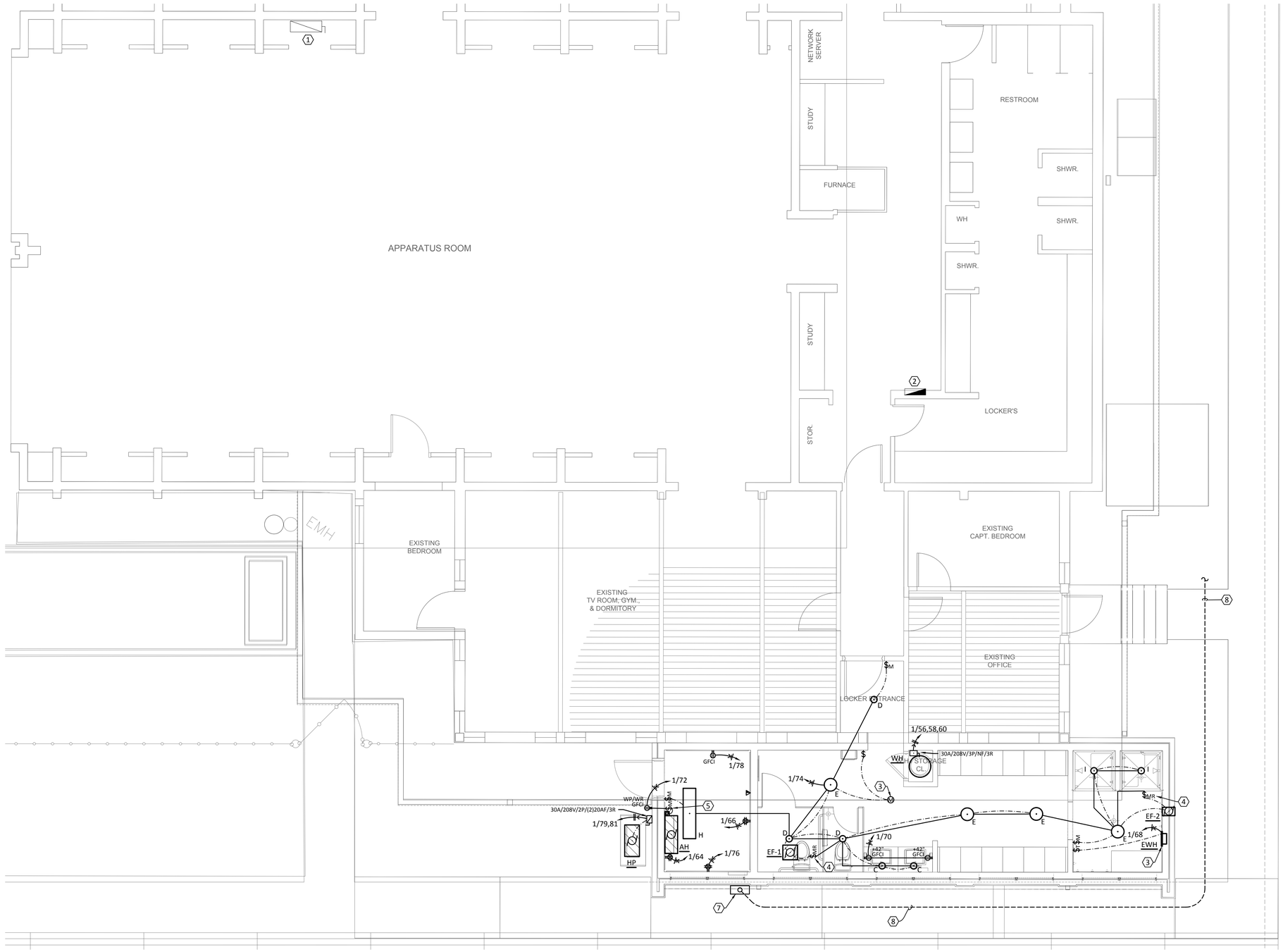

1 ELECTRICAL PLAN

SCALE: 1/4" = 1'-0"

PLAN GENERAL NOTES

A. REFER TO E0.00 FOR GENERAL NOTES.

B. DO NOT ROUTE ANY DUCT & PIPING ABOVE ELECTRICAL PANELS.

C. ESTIMATED LOCATION OF ALL EXISTING ELECTRICAL LAYOUT AND EQUIPMENT LOCATION IS BASED ON SITE OBSERVATION AND EXISTING DRAWINGS. CONTRACTOR SHALL VERIFY SIZE, LOCATION OF ALL EXISTING ELECTRICAL EQUIPMENT, DEVICES AND CONDUITS PRIOR TO BID AND CONSTRUCTION.

D. ALL EXTERIOR LIGHTING FIXTURE SHALL BE CONTROLLED BY PHOTOCELL AND TIMER.

E. FIRE ALARM NOTE: EXTEND EXISTING FIRE ALARM SYSTEM TO NEW ADDITIONAL LOCKER ROOM

KEYED NOTES

1. EXISTING 400A, 120/208V, 3Ø MAIN DISCONNECT ON WALL.
2. EXISTING PANEL '1', 400A, 120/208V, 3Ø, MLO 84-SPACE WITH:
   - 8 AVAILABLE SPACES.
   - 12 - 20A, 120V, 1Ø AND 5 - 30A, 120/208V, 3Ø CIRCUIT BREAKERS ARE IN 'OFF' POSITION
3. NEW ELECTRIC RECESSED WALL HEATER WITH TIMER SWITCH ON WALL. COORDINATE WITH ARCHITECT FOR EXACT LOCATION AND MOUNTING HEIGHT.
4. MOTOR RATED DISCONNECT SWITCH SHALL BE MOUNTED ON STRUCTURAL MEMBER ABOVE ACCESSIBLE CEILING.
5. MOTOR RATED DISCONNECT SWITCH SHALL BE MOUNTED ON WALL.
6. PROVIDE AND INSTALL COMBINATION INFRARED AND ULTRASONIC MOTION DETECTOR ON CEILING AS SHOWN ON PLANS (LEVITON MODEL OSC20-M0W OR APPROVED EQUIVALENT). WALL SWITCH AS SHOWN ON PLAN SHALL ENABLES MOTION DETECTOR OR SHUTS OFF LIGHTING.
7. 18x18x8 COMMUNICATION BOX ON WALL. ROUTE 2-4" CONDUIT FROM BOX THROUGH WALL TO SERVER ROOM.
8. ROUTE 2-4" UNDERGROUND CONDUIT FROM EXISTING COMMUNICATION MANHOLE.

ENCOTECH ENGINEERING CONSULTANTS
TBPE Firm 1141
8500 Bluffstone Cove, Suite B-103
Austin, Texas 78759 | 512.338.1101
Project No.: 14046.M.AUS

STATE OF TEXAS
SHARON S. BICKFORD
77390
LICENSED PROFESSIONAL ENGINEER
08/30/2016

mwm Design Group
305 East Huntland Drive
Suite 200
Austin, Texas 78752
p: 512.453.0767
f: 512.453.1734
TBAE FIRM REGISTRATION NO.: 1452
TBPE FIRM REGISTRATION NO.: F-1416
TBPLS FIRM REGISTRATION NO.: 10065600

NO.	DATE	DESCRIPTION	BY

SCALE IS AS NOTED ON DRAWING

ELECTRICAL PLAN

CITY OF AUSTIN, AFD WOMEN'S LOCKER RM. ADDN, PHASE V
1201 WEBBERVILLE ROAD, AUSTIN, TEXAS 78721

PLOTTED: 8/30/2016
JOB NO: 023-79D

FS5-E110

File: J:\ACTIVE PROJECTS\MWM\15009.M.AUS – AFD WLR Ph 5\1. MEP\D-AutoCAD\FS5\15009 FS05 E110 Elec Plan.dwg 24x36

LIGHTING FIXTURE SCHEDULE

MARK	MANUFACTURER	MODEL	VOLT	LAMPING QTY	LAMPING WATTAGE	LAMPING TYPE	LAMPING TEMP	DRIVER TYPE	PHYSICAL TYPE	PHYSICAL SIZE	DESCRIPTION
C	BRUCK	223-850-CH-MP -	120	1	8	LED	2800K	DIMMING DRIVER	PENDANT	12"H x 3.125"SQ	RECTLINEAR FROST GLASS SHADE, 6FT EXTENSION CABLE, CHROME FINISH
D	LITHONIA	FHHL-7-8-30-DNA -	120	1	9.3	LED	3000K	DIMMING DRIVER	CEILING	7"DIA x 1-/34"H	CEILING MOUNTED, GLASS SHADE WITH SMOOTH NARUAL ALEMINUM FINISH, WET LOCATION
E	LITHONIA	FHHL-13-8-30-DNA -	120	1	28	LED	3000K	DIMMING DRIVER	CEILING	7"DIA x 1-/34"H	CEILING MOUNTED, GLASS SHADE WITH SMOOTH NARUAL ALEMINUM FINISH, WET LOCATION
H	-	- -	120	-	-	-	-	-	-	-	STRIP ZEON LIGHT
I	GOTHAM	EVO-30-10-6-DFR-MVOLT-E21	MVOLT	1	10	LED	2700K	0-10V DIMMING DRIVER	CEILING	6-1/4"D x 7-5/8"H	NON-CONDUCTIVE SHOWER DOWNLIGHT
WL	LITHONIA	DSXW1-LED-10C-530-30K-T4M-MVOLT-ELCW-DDBXD -	MVOLT	1	20	LED	3000K	0-10V DIMMING DRIVER	WALL	13-3/4"W x 4"D	WALL MOUNTED TYPE IV MEDIUM DISTRIBUTION. LED. RATED FOR LOW TEMPERATURE. DARK BRONZE. BATTERY BACK-UP.

1. SEE ARCHITECTURAL REFLECTED CEILING PLAN FOR EXACT LOCATION OF ALL FIXTURES.
2. PROVIDE ENERGY SAVING BALLASTS FOR ALL FIXTURES WHEREVER AVAILABLE.

ELECTRIC HEATER SCHEDULE

UNIT	INPUT	ELEC AMPS	ELEC VOLT/PHASE	WEIGHT	UNIT MAKE	UNIT MODEL	UNIT TYPE
EWH	3413 BTUH 1000 W	8.3	120V/1Ø	7.6 LBS	BROAN	120	PROPELLER ELECTRIC HEATER

NOTES:
1. UNIT SHALL BE CONTROLLED WITH A WALL MOUNTED TIMER (BROAN MODEL 61V, 61W - 15 MINUTE TIMER).

EXISTING PANELBOARD SCHEDULE 1

LOCATION: SEE PLAN
C.B. RATING: EXISTING

NOTE	VOLTAGE	PHASE	WIRE	CIR	MOUNTING ØA	MOUNTING ØB	MOUNTING ØC	CIR	SIZE	LUG	TYPE	NOTE
	208Y/120V	3	4			FLUSH LOAD			400	MLO	-	
	USE and/or AREA SERVED		C/B POLE						C/B POLE	USE and/or AREA SERVED		
1	EXIST. SPARE		20/1	1	-			2	70/3	EXIST. PANEL 'E'		1
1	EXIST. SMOKE DETECTOR		20/1	3	6500			4				
1	EXIST. BATHROOM LT & RECEPT.		20/1	5		500		6				
1	EXIST. GARAGE LOCKER LIT.		20/1	7		6500		8				
1	EXIST. TIME CLOCK & EXTERIOR LT		20/1	9			1500	10	20/1	EXIST. GARAGE LOCKER LT		1
1	EXIST. GFCI		20/1	11			6500	12	20/1	EXIST. EXTERIOR LT		1
1	EXIST. RECEPTS		20/1	13	1500			14	20/1	EXIST. KITCHEN & EXT RECEPS		1
1	EXIST. CIRCUIT		20/1	15	1500			16	20/1	EXIST. REFRIGATOR		1
1	EXIST. RECEPTS.		20/1	17		1500		18	20/1	EXIST. CIRCUIT		1
1	EXIST. RECEPTS.		20/1	19		1500		20	20/1	EXIST. GARAGE & EXT RECEPS		1
1	EXIST. RECEPTS.		20/1	21			1500	22	20/1	XIST. VENT HOOD & MICROWAV		1
1	EXIST. RECEPTS.		20/1	23			1500	24	20/1	EXIST. ICE MAKER		1
1	SPARE		20/1	25	-			26	20/1	EXIST. WATER COOLER		1
1	EXIST. RECEPTS.		20/1	27		1500		28	20/1	SPARE		1
1	EXIST. CIRCUIT		20/1	29			1500	30	20/1	EXIST. GARAGE & EXT RECEPS		1
1	SPARE		20/1	31	-			32	20/1	EXIST. CIRCUIT		1
1	SPARE		20/1	33		-		34	20/1	EXIST. GENERATOR		1
1	SPARE		20/1	35			-	36	20/1	SPARE		1
1	EXIST. DORM LT & RECEPTS		20/1	37	1500			38	20/1	SPARE		1
1	EXIST. HALL LT & RECEPTS		20/1	39		1500		40	20/1	SPARE		1
1	EXIST. WATER HEATER GFCI		20/1	41			1500	42	20/1	SPARE		1

SEE SECTION 2 FOR LOAD ANALYSIS

EXISTING PANELBOARD SCHEDULE 1(2)

LOCATION: SEE PLAN
C.B. RATING: EXISTING

NOTE	VOLTAGE	PHASE	WIRE	CIR	MOUNTING ØA	MOUNTING ØB	MOUNTING ØC	CIR	SIZE	LUG	TYPE	NOTE
	208Y/120V	3	4			FLUSH LOAD			400	MLO	-	
	USE and/or AREA SERVED		C/B POLE						C/B POLE	USE and/or AREA SERVED		
1	EXIST. DEN/KITCHEN DUCT HEATE		50/3	43	4500			44	50/3	EXIST. CONDENSING UNIT		1
					4000							
				45		4500		46				
						4000						
				47			4500	48				
							4000					
1	EXIST. DORM DUCT HEATER		50/3	49	4500			50	30/3	SPARE		1
					-							
				51		4500		52				
						-						
				53			4500	54				
							-					
1	SPARE		30/3	55	-			56	30/3	NEW WATER HEATER		2
					1500							
				57		-		58				
						1500						
				59			-	60				
							1500					
1	EXIST. A/C FAN UNIT		20/3	61	500			62	20/1	EXIST. RECEPTS		1
					1500							
				63		500		64	20/1	NEW SERVER RECEPTACLES		2
						1500						
				65			500	66	20/1	NEW SERVER RECEPTACLES		2
							1500					
1	SPARE		30/3	67	-			68	20/1	NEW ELECTRICAL HEATER		2
					1000							
				69		-		70	20/1	NEW RESTROOM RECEPTACLES		2
						360						
				71			-	72	20/1	NEW RECEPTS		2
							360					
1	EXIST. EMS PANEL		100/3	73	9500			74	20/1	NEW LIGHTING		2
					300							
				75		9500		76	20/1	NEW SERVER RECEPTACLES		2
						1500						
				77			9500	78	20/1	NEW SERVER RECEPTACLES		2
							1500					
3	NEW HP & AH		15/2	79	1040			80	-	SPACE		
					-							
				81		1040		82	-	SPACE		
						-						
2	NEW HAND DRYER		20/1	83			1200	84	-	SPACE		
							-					
	TOTAL LOAD PER PHASE				46840	49400	50560		50560 VA / 120 V = 421 A			

FEEDER OCPD AND CONDUCTOR CALCULATION

LOAD DESCRIPTION (LOAD IN KVA)	CONNECTED LOAD	DEMAND FACTOR	DEMAND LOAD	AMPACITY FACTOR	FEEDER AMPACITY	NOTES
INTERIOR LIGHTING	10.80	1.00	10.80	1.25	13.50	
EXTERIOR LIGHTING	0.00	1.00	0.00	1.25	0.00	
RECEPTACLES	80.22	*	45.11	1.00	45.11	*FIRST 10 kVA AT 100%, REST AT 50%
HVAC	43.58	1.00	43.58	1.00	43.58	
EQUIPMENT	12.20	1.00	12.20	1.00	12.20	
KITCHEN EQUIPMENT	0.00	1.00	0.00	1.00	0.00	
LARGEST MOTOR NONE	-	-	-	0.25	0.00	
SPARE	0.00	1.00	0.00	1.00	0.00	
TOTAL KVA	**146.80**	**-**	**111.69**	**-**	**114.39**	
TOTAL AMPS	**407 A**	**-**	**310 A**	**-**	**318 A**	

EXISTING 400 AMPS, 208/120VAC, 3 PHASE ELECTRICAL SERVICE AND PANEL ARE SUFFICIENT FOR NEW ADDITIONAL LOAD

ELECTRICAL PANEL NOTES

1. EXISTING CIRCUIT BREAKER
2. NEW POWER CONNECTION TO EXISTING SPARE CIRCUIT BREAKER.
3. NEW CIRCUIT BREAKER

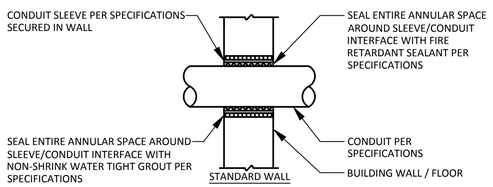

2 WALL PENETRATION DETAIL
NOT TO SCALE

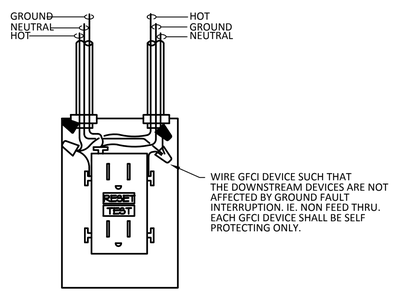

1 GFCI RECEPTACLE WIRING DIAGRAM
NOT TO SCALE

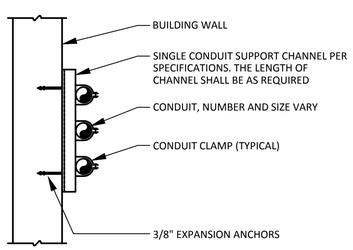

NOTE:
CONDUIT MAY RUN VERTICAL OR HORIZONTAL DEPENDING ON APPLICATION.

4 WALL / CEILING CONDUIT SUPPORT DETAIL
NOT TO SCALE

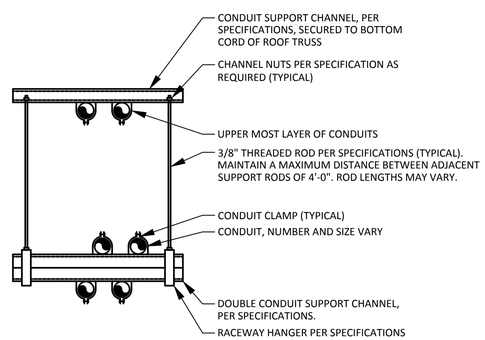

3 CONDUIT SUPPORT DETAIL
NOT TO SCALE

ENCOTECH ENGINEERING CONSULTANTS
TBPE Firm 1141
8500 Bluffstone Cove, Suite B-103
Austin, Texas 78759 | 512.338.1101
Project No.: 14046.M.AUS

STATE OF TEXAS
SHARON S. BICKFORD
77390
LICENSED PROFESSIONAL ENGINEER
08/30/2016

mwm Design Group
305 East Huntland Drive
Suite 200
Austin, Texas 78752
p: 512.453.0767
f: 512.453.1734
TBAE FIRM REGISTRATION NO.: 1452
TBPE FIRM REGISTRATION NO.: F-1416
TBPLS FIRM REGISTRATION NO.: 10065600

NO.	DATE	DESCRIPTION	BY

SCALE IS AS NOTED ON DRAWING

ELECTRICAL SCHEDULES & DETAILS

CITY OF AUSTIN, AFD WOMEN'S LOCKER RM. ADDN, PHASE V
1201 WEBBERVILLE ROAD, AUSTIN, TEXAS 78721

PLOTTED: 8/30/2016
JOB NO: 023-79D

FS5-E210

File: J:\ACTIVE PROJECTS\MWM\15009.M.AUS – AFD WLR Ph 5\1. MEP\D-AutoCAD\FS5\15009 FS05 E210 Elec Schedule Details.dwg 24x36

NOTES:

1. FIN. FLR. ELEV. MATCH EXISTING SLAB ELEVATION. T.O.C. REFERS TO TOP OF STRUCTURAL SLAB U.N.O.

2. - INDICATES SLAB DEPRESSIONS.
SEE STRUCTURAL PLANS & DETAILS FOR DEPTH OF SLAB DEPRESSIONS
SEE ARCHITECTURAL FOR EXACT LOCATIONS OF ALL SLAB DEPRESSIONS.
DROPS SHOWN ON PLAN ARE IN STRUCTURAL SLAB SEE ARCHITECTURAL FOR EXACT LOCATIONS OF ALL SLAB DEPRESSIONS.

3. SEE ARCHITECTURAL AND MECHANICAL - COORDINATE ALL FLOOR OPENINGS AND PENETRATIONS WITH TRADES INVOLVED FOR ACTUAL SIZES AND LOCATIONS.

4. REFER TO MECHANICAL, ELECTRICAL AND PLUMBING DRAWINGS FOR SLAB PENETRATIONS AND UNDERGROUND UTILITIES.

5. CONTRACTOR TO VERIFY ALL SLAB EDGE, STAIR AND ELEVATOR OPENING DIMENSIONS WITH ARCHITECTURAL DRAWINGS PRIOR TO CONSTRUCTION.

6. SEE GENERAL NOTES AND SPECIFICATION FOR ADDITIONAL INFORMATION.

7. CONTRACTOR TO VERIFY ALL DIMENSIONS AND EXISTING CONDITIONS AND AND REPORT ANY DISCREPANCY TO THE ARCHITECT AND THE ENGINEER.

8. REFER TO ARCHITECTURAL DRAWINGS FOR EXTENT AND DIMENSIONS OF RAISED OR DEPRESSED SLAB AREAS, SLOPES AND DRAINS.

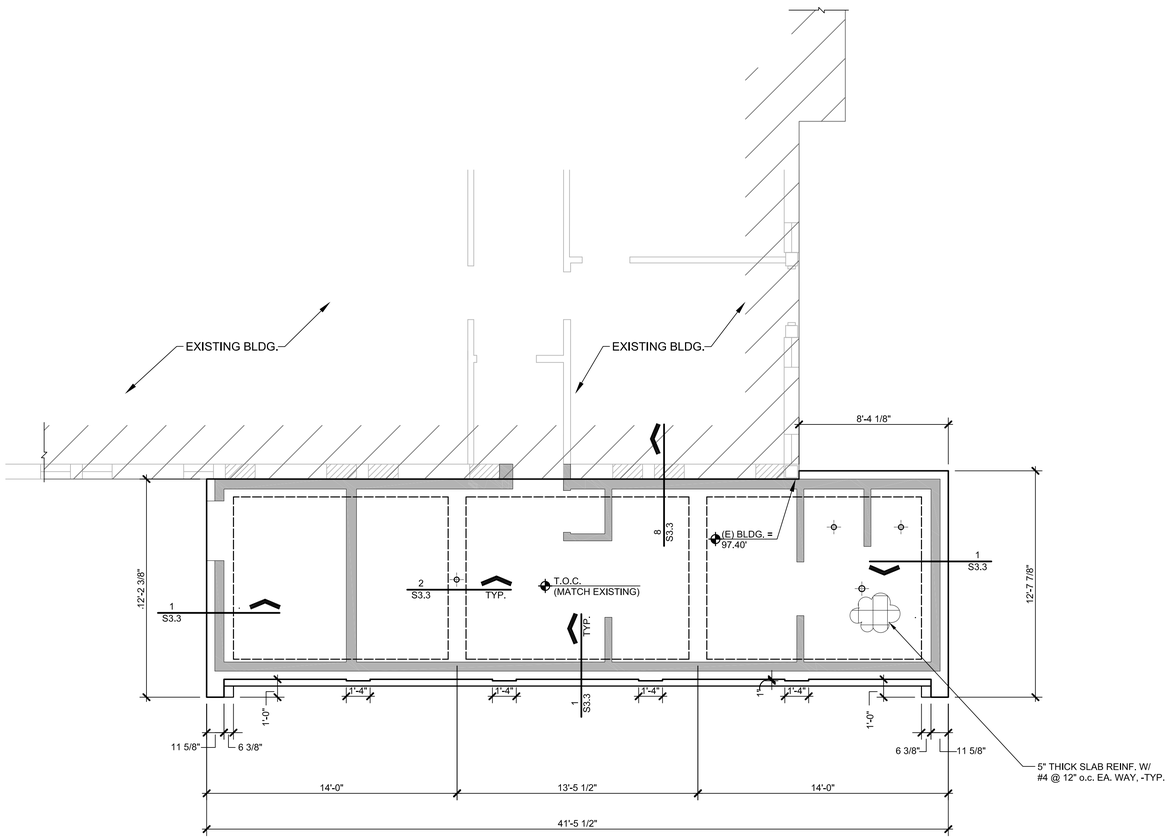

1'-0" MIN. REMOVAL OF EXISTING FAT CLAYS

1 FOUNDATION PLAN _FS5
SCALE: 1/4" = 1'-0"

JOSE I. GUERRA, INC.
CONSULTING ENGINEERS
2401 S. IH35 SUITE 210
AUSTIN, TEXAS 78741
(512) 445-2090
TBPE FIRM F-3

STATE OF TEXAS
JOHN C. GOBS
85568
REGISTERED
PROFESSIONAL ENGINEER
8-30-16

mwm Design Group
305 East Huntland Drive
Suite 200
Austin, Texas 78752
p: 512.453.0767
f: 512.453.1734
TBAE FIRM REGISTRATION NO.: 1452
TBPE FIRM REGISTRATION NO.: F-1416
TBPLS FIRM REGISTRATION NO.: 10065600

NO.	DATE	DESCRIPTION	BY

0 1"
The bar above measures one inch on the original drawing. Adjust scales accordingly.

FOUNDATION PLAN

WOMEN'S LOCKER ROOM PHASE V
1201 WEBBERVILLE ROAD, AUSTIN, TEXAS 78721

PLOTTED: 8/30/2016
JOB NO: 023-79D

FS5-S2.0

___ OF ___

File: F:\15011_AFD Women's Locker Rm Improvements\DRAWINGS\CAD\15011_FS5_S2.0 FOUNDATION PLAN.dwg 24x36

SHORING NOTES:

1. ALL NEW OPENINGS ARE TO BE FRAMED WITH NEW STEEL BEAMS OR GLULAM BEAMS TO SUPPORT THE ROOF AND CEILING LOADS CURRENTLY SUPPORTED BY EXISTING LOAD BEARING WALLS TO BE DEMOLISHED. REFERENCE ARCHITECTURAL DRAWINGS FOR DEMOLITION DRAWINGS.

2. THE STRUCTURAL DRAWINGS AND SPECIFICATIONS REPRESENT THE FINISHED STRUCTURE. THEY DO NOT INDICATE THE METHODS OF CONSTRUCTION UNLESS SO STATED OR NOTED. THE CONTRACTOR SHALL PROVIDE ALL MEASURES NECESSARY TO PROTECT THE WORKERS AND ALL OTHER PERSONS DURING CONSTRUCTION.

3. THE CONTRACTOR SHALL PROVIDE TEMPORARY ERECTION BRACING AND SHORING OF ALL STRUCTURAL WORK AS REQUIRED FOR STABILITY OF THE STRUCTURE DURING ALL PHASES OF CONSTRUCTION. THE CONTRACTOR SHALL IMMEDIATELY NOTIFY THE ENGINEER OF ANY CONDITION THAT MIGHT ENDANGER THE STABILITY OF THE STRUCTURE OR CAUSE DISTRESS IN THE STRUCTURE.

4. THE EXISTING LOAD BEARING WALLS TO BE DEMOLISHED ARE TO BE SHORED BY THE CONTRACTOR. THE CONTRACTOR'S TEMPORARY SHORING SYSTEM IS TO REMAIN IN PLACE UNTIL ALL NEW BEAMS HAVE BEEN ERECTED AND ATTACHED TO THE EXISTING LOAD BEARING WALLS/ROOF FRAMING PER STRUCTURAL DRAWINGS.

5. THE CONTRACTOR SHALL SUBMIT SHORING PLANS FOR REVIEW BY ARCHITECT/ ENGINEER THE SHORING PLAN SHALL BE DESIGNED AND SEALED BY AN ENGINEER REGISTERED IN THE STATE OF TEXAS.

6. THE SHORING SYSTEM SHOULD JACK THE EXISTING LOAD BEARING WALLS BETWEEN 1/16" AND 1/8" ABOVE THEIR FINAL ELEVATIONS IN ORDER TO INSURE THAT THE ROOF LOADS ARE TRANSFERRED TO THE NEW BEAMS WITHOUT DEFLECTION.

7. THE BUILDING MUST REMAIN OPEN AND OPERATING DURING CONSTRUCTION. ALL WORK MUST BE PERFORMED IN SUCH A MANNER AS TO CAUSE MINIMAL DISRUPTION TO THE NORMAL ACTIVITIES OF THE BUILDING.

SHEARWALL LEGEND

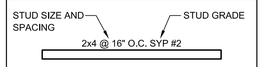

SHEARWALL LEGEND

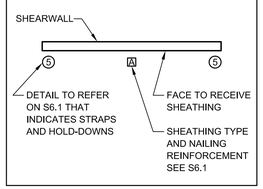

CEILING JOIST NOTES:

1. G.C. SHALL VERIFY DIMENSIONS WITH ACHITECTURAL DRAWINGS AND SHALL NOTIFY ARCH/ ENGINEER OF DISCREPANCIES PRIOR TO CONSTRUCTIONS.
2. FOR INTERIOR AND EXTERIOR WALLS, PROVIDE (2) KING STUDS FOR OPENINGS UP TO 5 FEET IN LENGTH, OR (3) KING STUBS FOR OPENINGS UP TO 9 FEET LENGTH. KING STUD QUANTITY IS TO BE PROVIDED AT EACH SIDE OF OPENING.
3. PROVIDE (1) TRIMMER STUD FOR OPENINGS UP TO 5 FEET LENGTH, (2) TRIMMER STUDS FOR OPENINGS UP TO 10 FEET LENGTH, OR (3) TRIMMER STUDS FOR OPENINGS UP 16 FEET LENGTH. TRIMMER STUD QUANTITY IS TO BE PROVIDED AT EACH SIDE OF OPENING.
4. STUD PACKS SHALL INCLUDE KING AND TRIMMER STUDS AT OPENINGS.
5. TRIMMER AND KING STUD SIZE SHALL MATCH WALL FRAMING STUD SIZE.
6. VERTICAL NAILING BETWEEN TRIMMER STUDS AND BETWEEN KING STUDS SHALL BE 16d AT 16".
7. REFERENCE THIS SHEET FOR LOAD BEARING WALL STUD SIZE & SPACING.
8. REFERENCE SHEET S4.1 FOR SHEAR WALL SCHEDULE.
9. ALL LUMBER TO BE #2 S.Y.P.K.D.
10. ALL CEILING JOISTS TO BE 2x8 AL 16" O.C. UNLESS NOTED OTHERWISE (17'-0" MAX SPAN) REFERENCE IBC FOR OTHER SPANS
11. ALL HEADERS @ 2x4 WALLS TO BE 2-2X PER IBC CODE UNLESS NOTED OTHERWISE. @ 2x6 WALLS TO BE 3-2x PER IBC CODE UNLESS NOTED OTHERWISE.

HEADER SCHEDULE

3-2x8 0'-0" to 5'-0"
3-2x10 5'-1" to 6'-1"
3-2x12 6'-2" to 7'-1"

12. ALL BEAMS LARGER THAN 2-2x6 TO BE SUPPORTED BY BUILT-UP STUD COLUMNS AT 2x6 STUD WALLS AND 2x4 STUD WALLS AT EACH END UNLESS NOTED OTHERWISE AND BLOCKED SOLID TO FOUNDATION. SEE BUILT-UP COLUMN SCHEDULE SHEET S4.0 FOR NUMBER OF BUILT-UP STUD COLUMN; AT EACH END OF BEAMS.
13. DOUBLE 2x8 CEILING JOISTS AS REQUIRED. UNDER HVAC AND/OR WH UNITS LOCATED IN ATTIC. PROVIDE 3/4" PLYWOOD DECK PAD AND CATWALK AS REQUIRED.
14. ALL BEAMS JOB BUILT FROM 3 OR MORE MEMBERS NAILED WITH 10D NAILS @ 6" O.C. TOP AND BOTTOM.
15. ALL GLU-LAMS TO BE DESIGNED WITH STANDARD CAMBER OF R=2000 FT.
16. BRACE TOP FLANGE OF ALL GLULAM, MICROLLAM, OR 2xWOOD BEAMS @ 4'-0" EA SIDE OF CEILING JOISTS WITH 2x6 CONTINUOS STIFFBACK AND 2x4 BRACES
17. STUD WALLS SHALL BE 2x6 @ 16 " O.C., #2 S.Y.P.K.D. UNO. (MAX. HEIGHT 10'-0") STUD WALLS SHALL BE 2x8 @ 16" O.C. , # 2 S.Y.P.K.D. UNO. (HEIGHTS GREATER THAN 10-0" TO 14'-0" MAX.)
18. PROVIDE 2x BLOCKING AT 4'-0" O.C. VERTICALLY AT ALL STUD WALLS.
19. ALL FRAMING TO COMPLY WITH I.B.C. BUILDING CODES, CURRET EDITION.
20. VERIFY ANY CHANGES WITH ENGINEER PRIOR TO CONSTRUCTION.

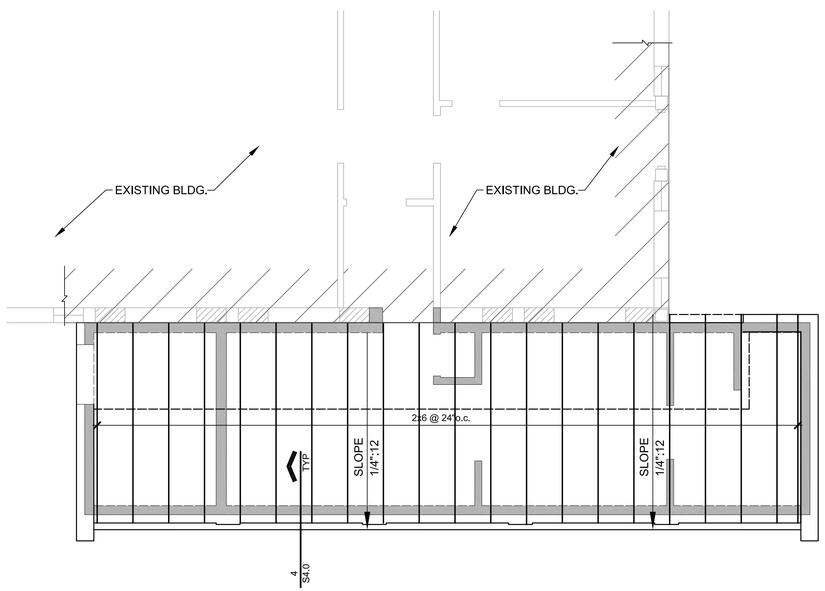

NOTE:
TOP OF STUD WALL ELEVATION REF. ARCH'L

2 ROOF FRAMING PLAN _FS5
SCALE: 1/4" = 1'-0"

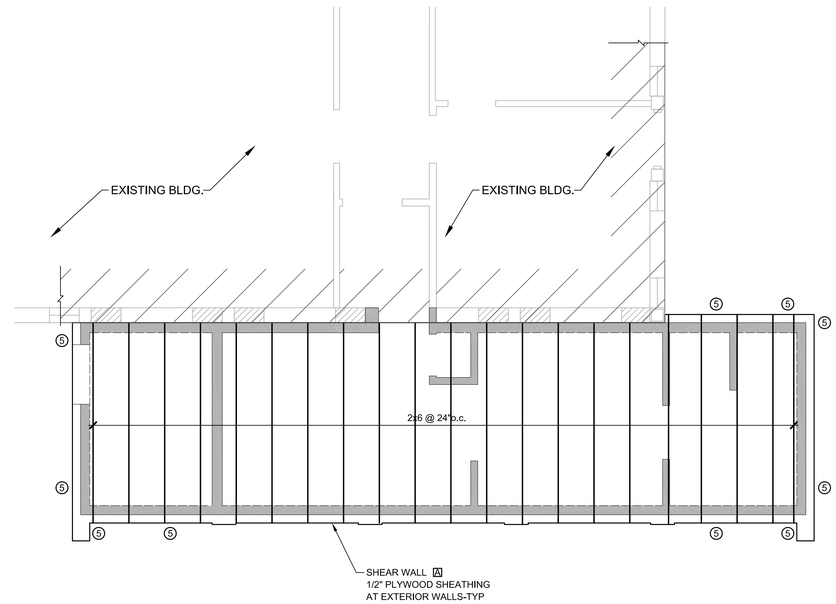

1 CEILING FRAMING PLAN _FS5
SCALE: 1/4" = 1'-0"

ROOF FRAMING PLAN

SCALE:

PLAN NOTES:

1. G.C. SHALL VERIFY DIMENSIONS WITH ACHITECTURAL DRAWINGS AND SHALL NOTIFY ARCH/ ENGINEER OF DISCREPANCIES PRIOR TO CONSTRUCTIONS.
2. ALL LUMBER TO BE #2 Y.P.K.D.
3. ALL RAFTERS TO BE 2x8 AT 16"O.C. WITH A MAXIMUM UNBRACED SPAN 18'-0" MEASURED ALONG THE SLOPE, UNLESS NOTED OTHERWISE.
4. ALL HIPS, RIDGES, VALLEYS TO BE 2x10 MAXIMUM. UNBRACED SPAN 8'-0" UNLESS NOTED OTHERWISE. PROVIDE "TEE" BRACES @ 6'-0" O.C. MAX SPACING AT RIDGES. PROVIDE "TEE" BRACES @ 8'-0" O.C. MAX SPACING AT HIPS AND VALLYS. PROVIDE DBL STUDS BELOW EACH "TEE" BRACE AT STUD WALLS
5. PROVIDE 2x8 CONTINUOUS PURLINS WITH 2x8 "TEE" BRACES @ 4'-0" O.C. MAX SPACING PROVIDE DBL STUDS BELOW EACH "TEE" BRACE AT STUD WALLS. NAIL "TEE" BRACE TOGETHER WITH 10D NAILS @ 6" O.C.- TYPICAL.
6. "TEE" BRACES LONGER THAN 8'-0" SHALL BE DBL 2x8 STUD WITH FLANGE PLATE "TEE" BRACE AND BRACED HORIZONTALLY @ 6'-0" O.C. IN TWO DIRECTIONS, NAIL "TEE" BRACE TOGETHER WITH 1O D NAILS @ 6" O.C. - TYPICAL
7. PROVIDE 2x6 MIN. COLLAR TIES AT 4'-0" O.C. AT ALL RIDGES.
8. ALL FRAMING TO COMPLY WITH I.B.C. BUILDING CODE CURRENT EDITION.
9. VERIFY AND CHANGES WITH ENGINEER PRIOR TO CONSTRUCTION.

JOSE I. GUERRA, INC.
CONSULTING ENGINEERS
2401 S. IH35 SUITE 210
AUSTIN, TEXAS 78741
(512) 445-2090
TBPE FIRM F-3

STATE OF TEXAS
JOHN C. GUERRA
85565
REGISTERED PROFESSIONAL ENGINEER
8-30-16

mwm Design Group
305 East Huntland Drive
Suite 200
Austin, Texas 78752
p: 512.453.0767
f: 512.453.1734
TBAE FIRM REGISTRATION NO.: 1452
TBPE FIRM REGISTRATION NO.: F-1416
TBPLS FIRM REGISTRATION NO.: 10065600

NO.	DATE	DESCRIPTION	BY

0 1"
The bar above measures one inch on the original drawing. Adjust scales accordingly.

ROOF & CEILING FRAMING PLAN

WOMEN'S LOCKER ROOM PHASE V
1201 WEBBERVILLE ROAD, AUSTIN, TEXAS 78721

PLOTTED: 8/30/2016
JOB NO: 023-79D

FS5-S2.1

___ OF ___

File: F:\15011_AFD Women's Locker Rm Improvements\DRAWINGS\CAD\15011_FS5_S2.1 ROOF FRAMING PLAN.dwg 24x36

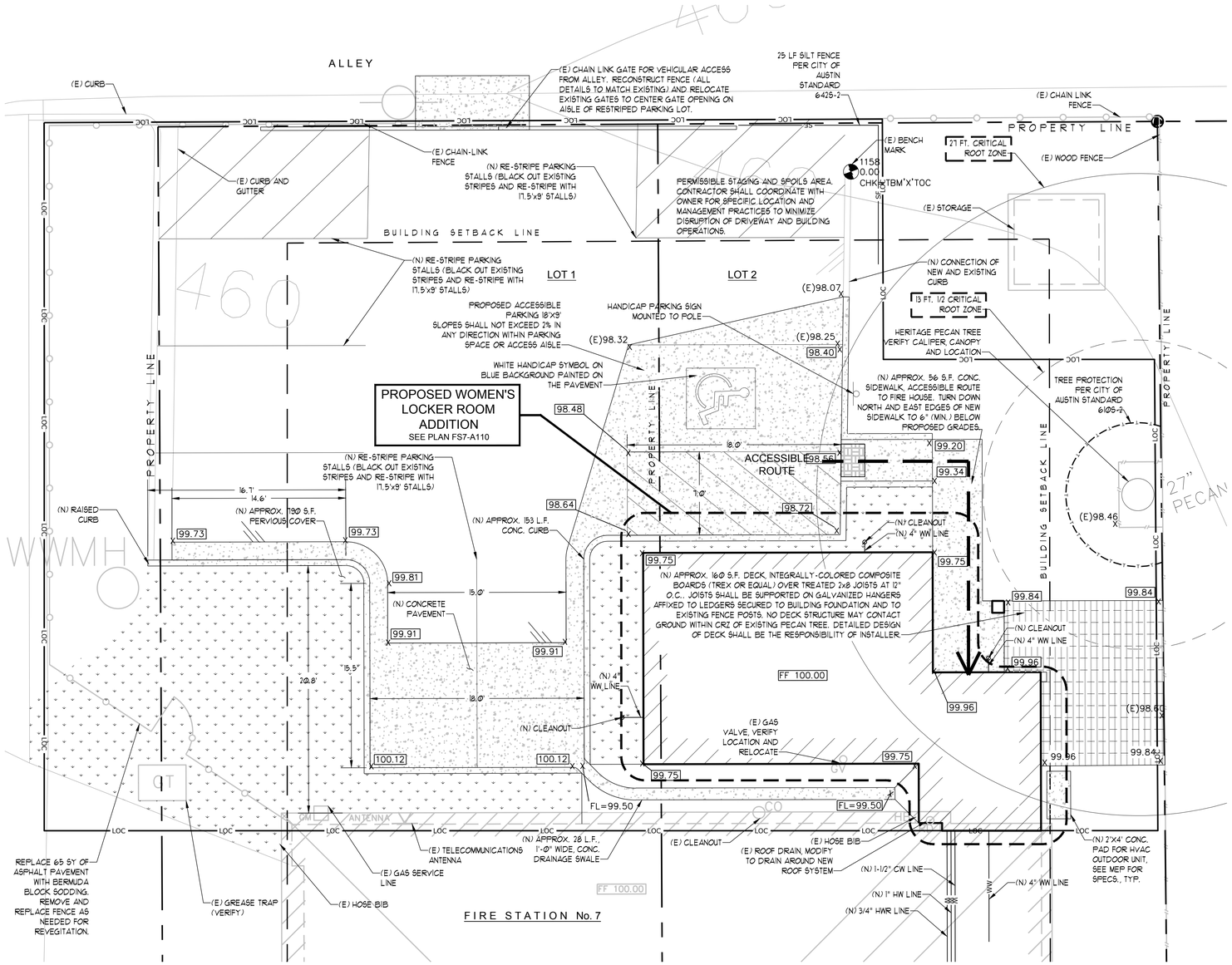

1 FS7-C050 ENLARGED SITE PLAN

SCALE: 1" = 5'

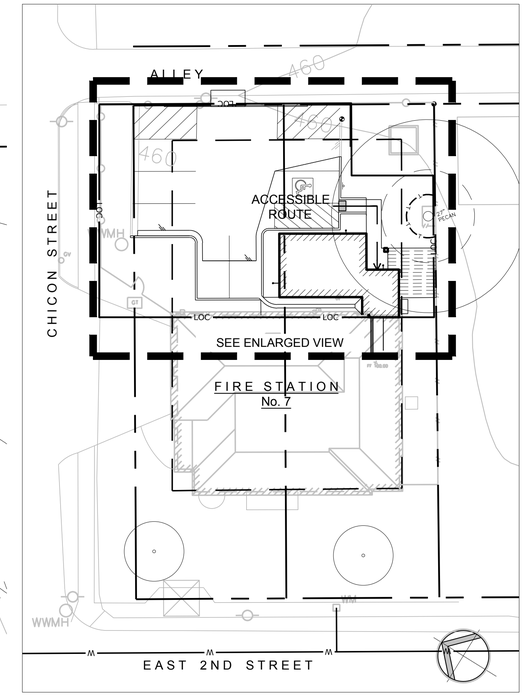

2 FS7-C050 SITE PLAN

SCALE: 1" = 20'

SITE PLAN LEGEND

- PROPERTY LINES
- BUILDING SETBACK LINES
- LOC — LIMITS OF CONSTRUCTION
- 528 — EXISTING TOPOGRAPHIC CONTOUR
- EXISTING TREE & TREE PROTECTION
- EXISTING CHAIN LINK FENCE
- PROPOSED OBJECT
- PROPOSED CURB & GUTTER
- PROPOSED ASHPHALT
- PROPOSED CONCRETE
- EXISTING PERVIOUS AREA
- PROPOSED PERVIOUS AREA
- EXISTING STRUCTURE
- PROPOSED STRUCTURE
- (E)XX.XX — EXISTING SPOT ELEVATION
- XX.XX — PROPOSED SPOT ELEVATION

NOTE

THE LOCATIONS OF EXISTING IMPROVEMENTS SHOWN ON THIS PLAN WERE DERIVED IN PART FROM RECORD DOCUMENTS OF UNKNOWN ACCURACY. THE PRESENCE, LOCATION AND ELEVATION OF EXISTING UTILITIES IN THE FILED SHALL BE VERIFIED BY THE CONTRACTOR BEFORE COMMENCING WORK. IT SHALL BE THE RESPONSIBILITY OF THE CONTRACTOR TO VERIFY EXISTING CONDITIONS WITHIN THE LIMITS OF CONSTRUCTION. FAILURE OF AN EXISTING UTILITY TO APPEAR ON THIS PLAN SHALL NOT RELIEVE THE CONTRACTOR OF RESPONSIBILITY TO PROTECT AND REPAIR, IF DAMAGED, SUCH UTILITIES.

ALL NEW PEDESTRIAN PAVEMENT SHALL BE CONSTRUCTED IN ACCORDANCE WITH THE TEXAS ACCESSIBILITY STANDARDS, AND SHALL MATCH THE ELEVATIONS OF EXISTING IMPROVEMENTS AT POINTS OF INTERSECTION.

FINE GRADING SHALL BE COMPLETED TO DRAIN STORMWATER AWAY FROM BUILDING PERIMETERS, AND SPECIFICALLY AWAY FROM FROM BUILDING ENTRANCES AT THE MAXIMUM SLOPES POSSIBLE GIVEN EXISTING CONDITIONS ADJACENT.

SUMMARY SEQUENCE OF CONSTRUCTION

1. INSTALL SEDIMENTATION AND EROSION CONTROLS AND TREE PROTECTION FENCING AND INITIATE TREE MITIGATION MEASURES (AS REQUIRED).
2. BEGIN SITE CLEARING/CONSTTRUCTION ACTIVITIES.
3. COMPLETE CONSTRUCTION AND BEGIN REVEGETATION OF SITE AND INSTALLATION OF LANDSCAPING.
4. FOLLOWING REVEGETATION, REMOVE THE TEMPORARY EROSION AND SEDIMENTATION CONTROLS AND COMPLETE ANY NECESSARY FINAL REVEGETATION RESULTING FROM REMOVAL OF THE CONTROLS.

	EXISTING	PROPOSED
SITE AREA, S.F.	11,554 SF	11,554 SF
IMPERVIOUS AREA, S.F. (%)	7,153.7 SF (62%)	-329.4 SF (59.1%)
NET CHANGE %		-2.9 %
GROSS FLOOR AREA OF PROPOSED ADDITION		560 SF

BID DOCUMENTS

STATE OF TEXAS BRANDON EUGENE HAMMAN 87368 LICENSED PROFESSIONAL ENGINEER
MWM DesignGroup, Inc. F-1416
8-30-16

mwm DesignGroup
305 East Huntland Drive
Suite 200
Austin, Texas 78752
p: 512.453.0767
f: 512.453.1734
TBAE FIRM REGISTRATION NO.: 1452
TBPE FIRM REGISTRATION NO.: F-1416
TBPLS FIRM REGISTRATION NO.: 10065600

NO.	DATE	DESCRIPTION	BY

0 1"
The bar above measures one inch on the original drawing. Adjust scales accordingly.

SITE PLAN

CITY OF AUSTIN, AFD WOMEN'S LOCKER RM. ADDN, PHASE V
201 CHICON STREET, AUSTIN, TEXAS, 78702

PLOTTED: 9/7/2016
JOB NO: 023-79D

FS7-C050

File: Y:\023-79D_WomensLockerRooms\CAD\Fire Station A\Sheets\FS7-A050 SITE PLAN.dwg 24x36

PROJECT DATA: FIRE STATION 7

GOVERNING CODES

2012 INTERNATIONAL ENERGY CONSERVATION CODE
2012 INTERNATIONAL BUILDING CODE
2012 INTERNATIONAL MECHANICAL CODE
2012 UNIFORM PLUMBING CODE (AS AMENDED BY COA)
2012 NATIONAL ELECTRIC CODE (AS AMENDED BY COA)
2010 ADA STANDARDS FOR ACCESSIBLE DESIGN
2012 TEXAS ACCESSIBILITY STANDARDS

BUILDING CODE DATA – IBC CHAPTER 3

OCCUPANCY GROUP

B THE USE OF A BUILDING OR STRUCTURE, OR A PORTION THEREOF, FOR OFFICE, PROFESSIONAL OR SERVICE–TYPE TRANSACTIONS, INCLUDING STORAGE OF RECORDS AND ACCOUNTS.

GENERAL BUILDING LIMITATIONS – IBC CHAPTER 5

ALLOWABLE HEIGHT AND BUILDING AREA (TABLE 503)

TYPE VB (B OCCUPANCY)
AREA (SF) 9,000
HEIGHT 2 STORY

FRONTAGE INCREASE (If) = [F/P–0.25]W/30 = 25
SPRINKLER INCREASE (Is) = 0

ALLOWABLE AREA (B) = At+(AtIf/100)+(AtIs/100) = 11,250

ACTUAL AREA B (SF) 3,561
ACTUAL AREA B 1 STORY

CONSTRUCTION TYPE – IBC CHAPTER 6

FIRE RESISTIVE REQUIREMENTS FOR BUILDING ELEMENTS (TYPE VB–TABLE 601)

BEARING WALLS	
INTERIOR	NO REQUIREMENTS
EXTERIOR	NO REQUIREMENTS
NONBEARING WALLS	
EXTERIOR	SEE BELOW
NONBEARING WALLS	
INTERIOR	NO REQUIREMENTS
FLOOR CONSTRUCTION	NO REQUIREMENTS
ROOF CONSTRUCTION	NO REQUIREMENTS

EXTERIOR WALL/OPENING PROTECTION (TABLE 602 AND 704.8)
EXTERIOR WALLS 1 LESS THAN 10 FEET
NO RATING 10 FEET OR GREATER

INTERIOR FINISHES – IBC CHAPTER 8

FLAME SPREAD RATINGS OF MATERIALS AND FINISHES (TABLE 803.4)

CLASS A: FLAME SPREAD 0–25, SMOKE DEVELOPED 0–450
CLASS B: FLAME SPREAD 26–75, SMOKE DEVELOPED 0–450
CLASS C: FLAME SPREAD 76–200, SMOKE DEVELOPED 0–450

VERTICAL EXITS AND PASSAGEWAYS	CLASS B
EXIT ACCESS CORRIDORS	CLASS B
ROOMS AND ENCLOSED SPACES	CLASS C

OCCUPANCY LOAD AND MEANS OF EGRESS –

	AREA (sqft.)	OCCUPANT LOAD FACTOR (sqft.)	OCCUPANTS	REQUIRED EGRESS WIDTH PER OCCUPANT	REQUIRED EGRESS WIDTH
LOCKER ROOM	560	–	–	–	–
TOTAL			–	–	–
EGRESS WIDTH PROVIDED (1 DOOR)					32

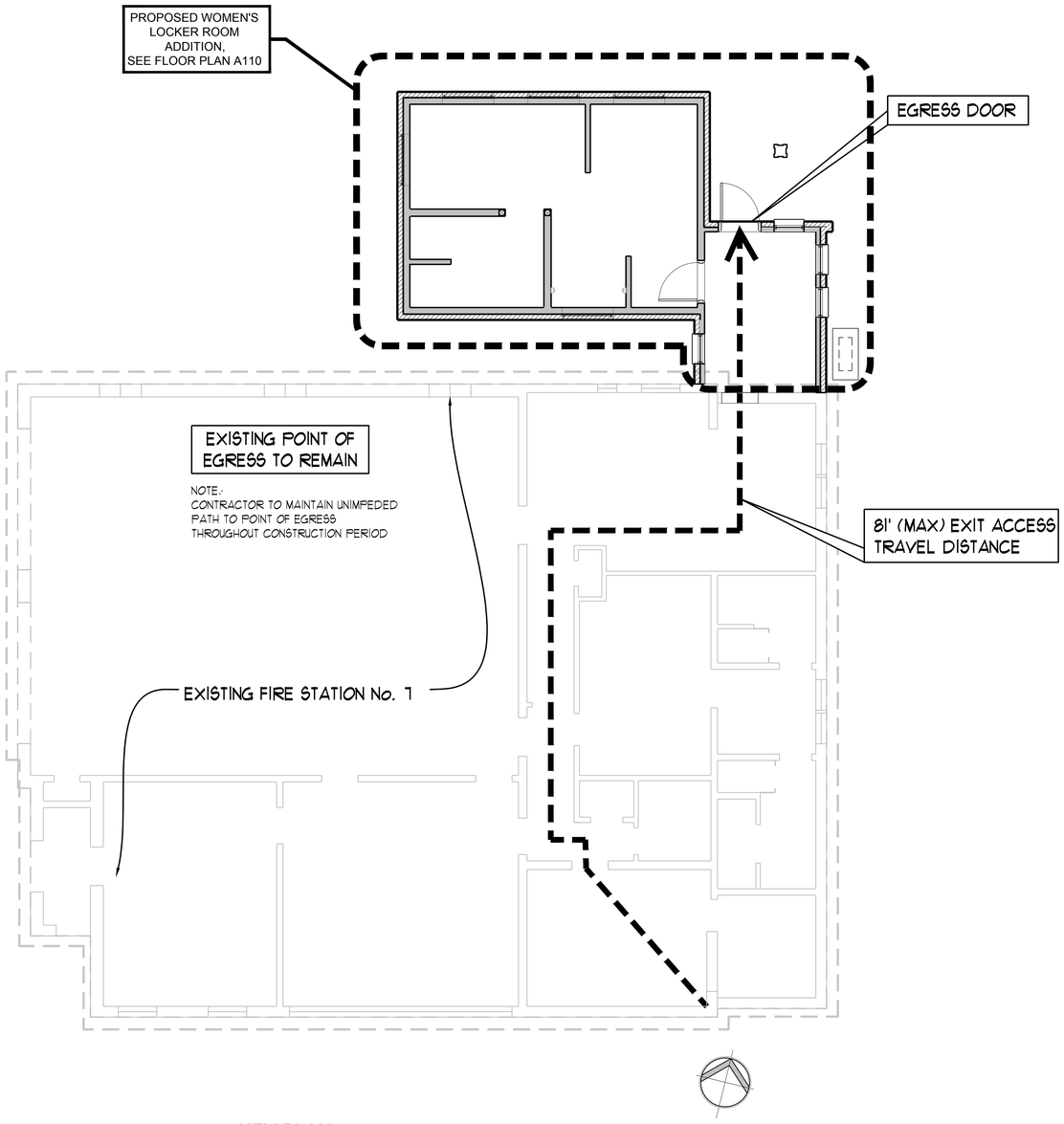

1 / FS7-A010 KEY PLAN
SCALE: 3/16" = 1'-0"

BID DOCUMENTS

REGISTERED ARCHITECT W. OWEN HARRIS 18348 STATE OF TEXAS

mwm Design Group
305 East Huntland Drive
Suite 200
Austin, Texas 78752
p: 512.453.0767
f: 512.453.1734
TBAE FIRM REGISTRATION NO.: 1452
TBPE FIRM REGISTRATION NO.: F-1416
TBPLS FIRM REGISTRATION NO.: 10065600

NO.	DATE	DESCRIPTION	BY

0 1"
The bar above measures one inch on the original drawing. Adjust scales accordingly.

CODE SUMMARY & KEY PLAN

CITY OF AUSTIN, AFD WOMEN'S LOCKER RM. ADDN, PHASE V
201 CHICON STREET, AUSTIN, TEXAS, 78702

PLOTTED: 8/30/2016
JOB NO: 023-79D

FS7-A010

File: Y:\023-79D_WomensLockerRooms\CAD\Fire Station 7\Sheets\FS7-A010 CODE.dwg 24x36

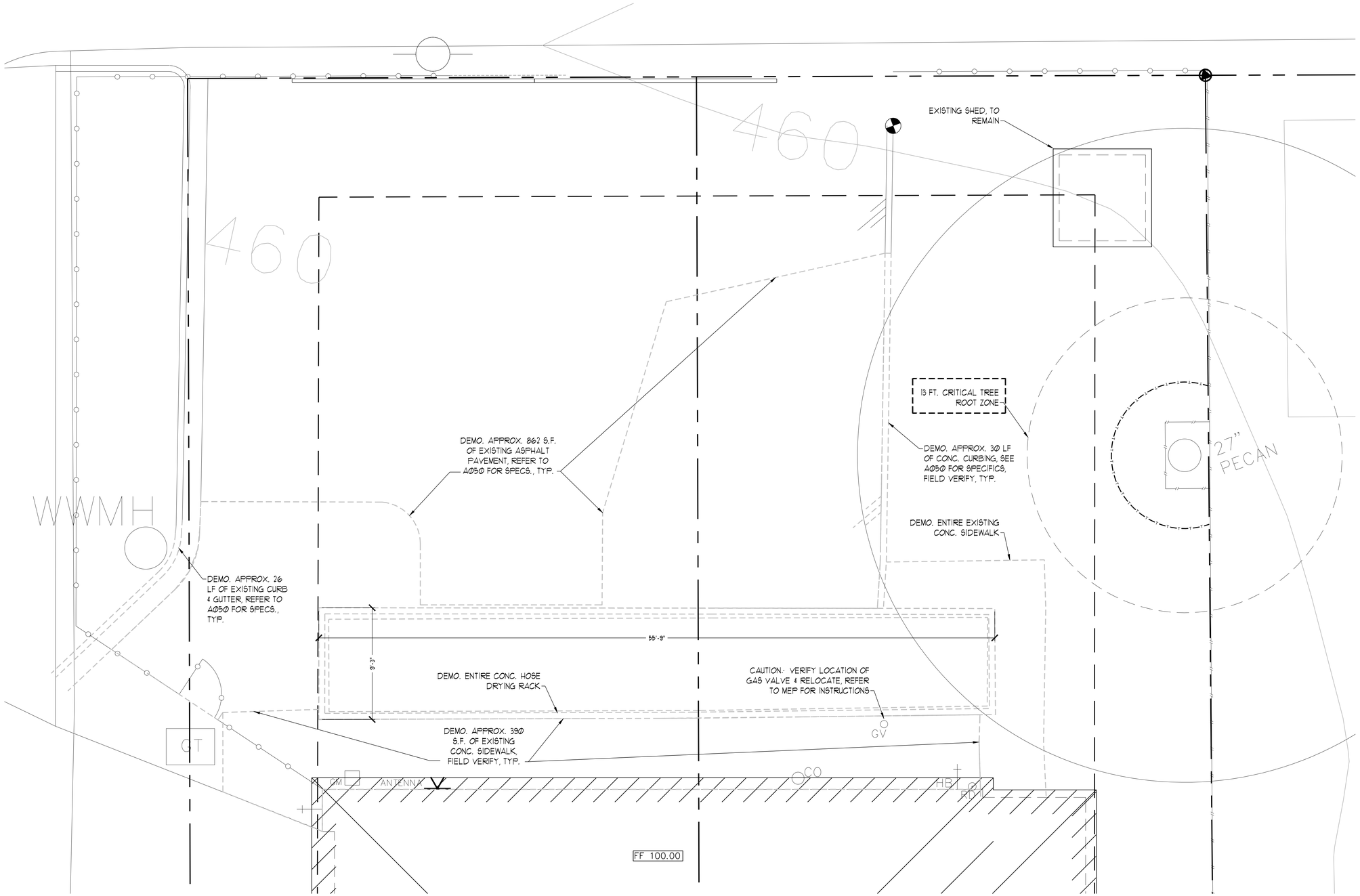

1 FS7-A100 DEMOLITION PLAN

SCALE: 1/4" = 1'-0"

DEMOLITION LEGEND

- PROPERTY LINES
- BUILDING SETBACK LINES
- EXISTING TO REMAIN
- EXISTING OVERHEAD OBJECT
- EXISTING STRUCTURE
- EXISTING TO REMOVE
- EXISTING TO REMOVE

BID DOCUMENTS

REGISTERED ARCHITECT W. OWEN HARRISON 18348 STATE OF TEXAS

mwm Design Group

305 East Huntland Drive
Suite 200
Austin, Texas 78752
p: 512.453.0767
f: 512.453.1734

TBAE FIRM REGISTRATION NO.: 1452
TBPE FIRM REGISTRATION NO.: F-1416
TBPLS FIRM REGISTRATION NO.: 10065600

NO.	DATE	DESCRIPTION	BY

0 1"

The bar above measures one inch on the original drawing. Adjust scales accordingly.

DEMOLITION PLAN

CITY OF AUSTIN, AFD WOMEN'S LOCKER RM. ADDN, PHASE V
201 CHICON STREET, AUSTIN, TEXAS, 78702

PLOTTED: 8/30/2016
JOB NO: 023-79D

FS7-A100

File: Y:\023-79D_WomensLockerRooms\CAD\Fire Station 7\Sheets\FS7-A100 DEMO PLAN.dwg 24x36

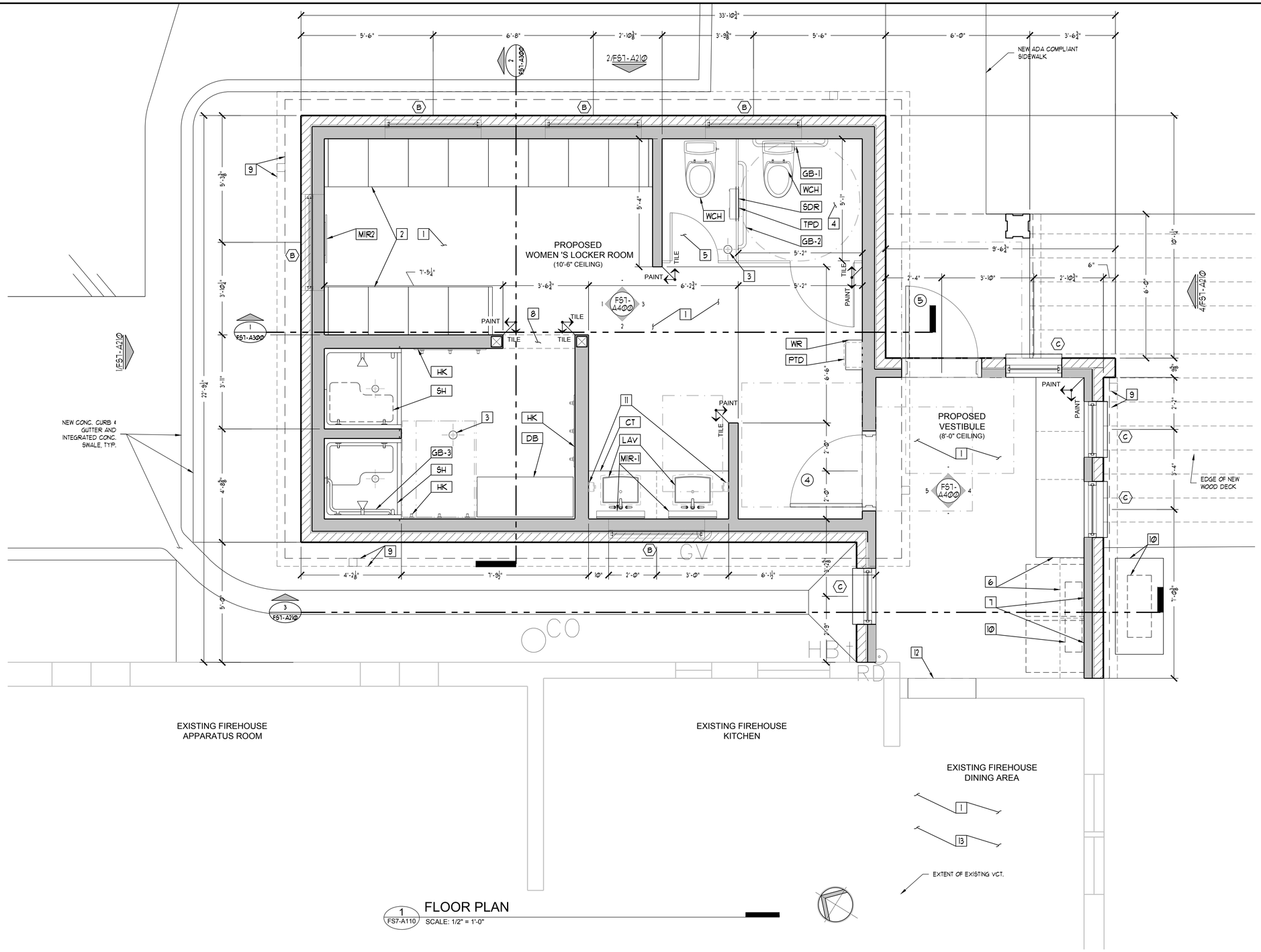

1 FS7-A110 FLOOR PLAN
SCALE: 1/2" = 1'-0"

LEGEND

- PROPERTY LINES
- BUILDING SETBACK LINES
- EXISTING TO REMAIN
- EXISTING OVERHEAD OBJECT
- EXISTING TO REMOVE
- EXISTING STRUCTURE
- PROPOSED STRUCTURE
- PROPOSED OBJECT
- TILE / PAINT — PROPOSED WALL FINISH TYPE
- PROPOSED FLOOR DRAIN
- A.D.A. CLEAR FLOOR AREA
- PROPOSED GLAZING AT CLERESTORY
- PROPOSED GLAZING
- PROPOSED BRICK VENEER WALL
- PROPOSED FRAME WALL
- PROPOSED WALL INFILL, AS NOTED
- PROPOSED CMU BLOCK WALL
- PROPOSED CONCRETE
- PROPOSED FLOOR TILE
- PROPOSED PLYWOOD

CALL-OUT INDEX

1. NON-SLIP TILE FLOORING
2. (N) 20"x24"x60" HOLMAN LOCKERS OR APPROVED EQUAL
3. (N) FLOOR DRAIN, REFER TO M.E.P. & STRUCTURAL
4. (N) ACCESSIBLE TOILET STALL
5. (N) STANDARD TOILET STALL
6. (N) 1'-6" L.F. BASE CABINET AND (N) 2'-6" L.F. WALL CABINET AND ONE 2'-6" CABINET W/OUT DOORS, OVER OWNER SUPPLIED CLOTHES WASHER AND DRYER. SEE A400 FOR ELEV'S.
7. (N) CLOTHES WASHER AND DRYER CONNECTIONS, REFER TO M.E.P. FOR SPECS.
8. (N) TILE INSIDE 30"x70" OPENING
9. (N) ROOF OVERHANG WITH GUTTER AND DOWNSPOUTS
10. (N) MINI SPLIT AC WALL MOUNTED UNIT AND HEAT PUMP OUTDOOR UNIT (ON 2'x4' CONC. SLAB), SEE MEP SPECS
11. SOAP DISPENSER SUPPLIED BY OWNER, TYP.
12. INSTALL NEW ADA COMPLIANT THRESHOLD AT EXISTING DOORWAY, TYP.
13. DINING AREA SLAB WILL BE CUT TO INSTALL NEW WASTEWATER CONNECTION. REMOVE EXISTING VCT FROM DINING AREA (100 SF) AND REPLACE WITH NEW CT TO MATCH ADJACENT VESTIBULE FOLLOWING WASTEWATER CONNECTION AND REPAIR OF SLAB. PROVIDE TAS-COMPLIANT TRANSITION STRIP (SCHLUTER OR APPROVED EQUAL) BETWEEN DINING AREA AND KITCHEN.

BID DOCUMENTS

REGISTERED ARCHITECT — MARK W. OWEN HARRISON — 18348 — STATE OF TEXAS

mwm Design Group
305 East Huntland Drive
Suite 200
Austin, Texas 78752
p: 512.453.0767
f: 512.453.1734

TBAE FIRM REGISTRATION NO.: 1452
TBPE FIRM REGISTRATION NO.: F-1416
TBPLS FIRM REGISTRATION NO.: 10065600

NO.	DATE	DESCRIPTION	BY

0 — 1"
The bar above measures one inch on the original drawing. Adjust scales accordingly.

FLOOR PLAN

CITY OF AUSTIN, AFD WOMEN'S LOCKER RM. ADDN, PHASE V
201 CHICON STREET, AUSTIN, TEXAS, 78702

PLOTTED: 8/30/2016
JOB NO: 023-79D

FS7-A110

File: Y:\023-79D_WomensLockerRooms\CAD\Fire Station 7\Sheets\FS7-A110 FLOOR PLAN.dwg 24x36

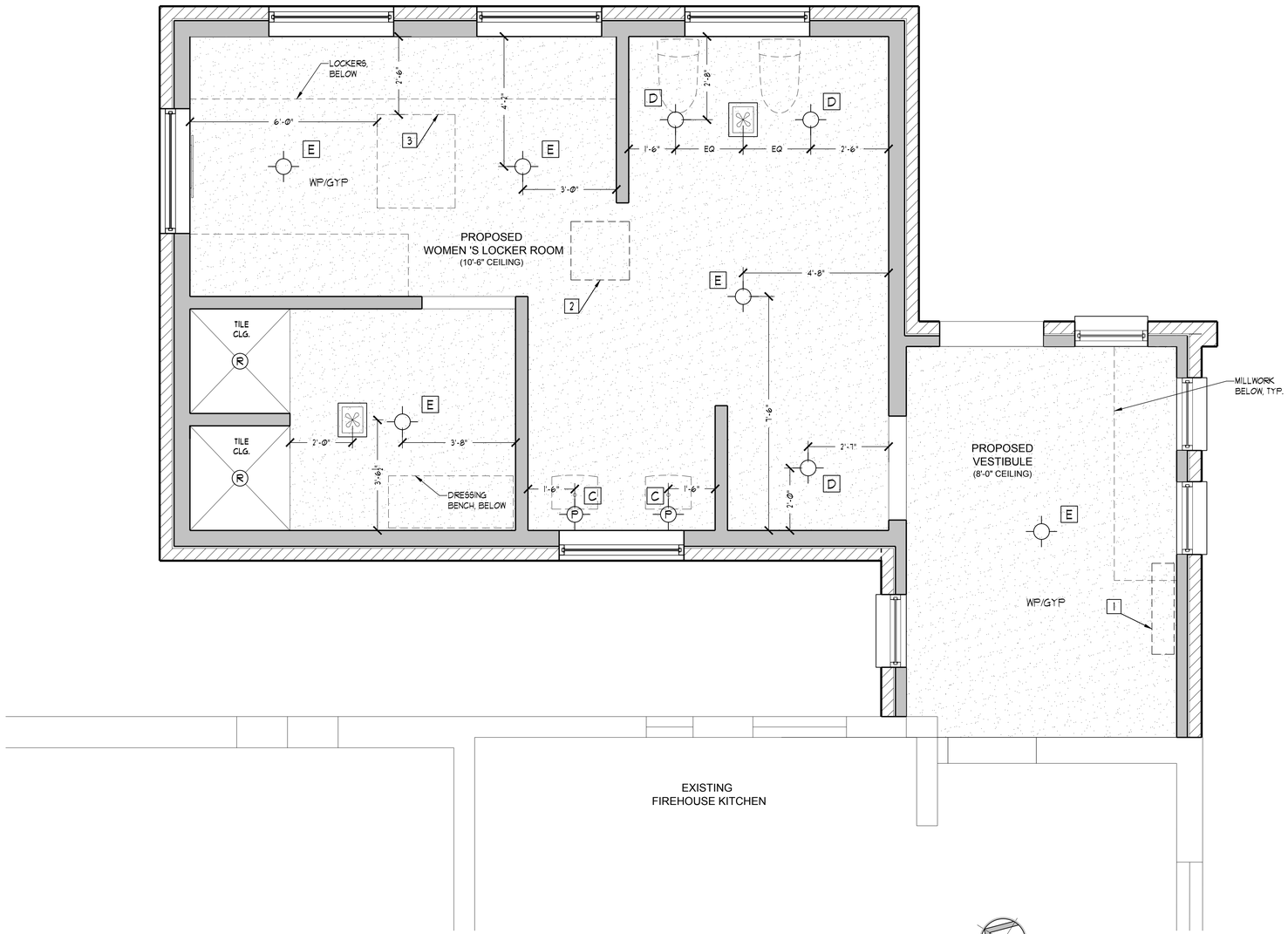

1 FS7-A120 REFLECTED CEILING PLAN

SCALE: 1/2" = 1'-0"

RCP LEGEND

- GYPSUM WALLBOARD
- 2'x2' LAY-IN ACOUSTICAL TILE CEILING GRID
- PLYWOOD SURFACE
- 1x WOOD PLANKS/TKG
- 2x WOOD FRAME INFILL, INCLUDES: INSULATION, GYP. BD. TAPE, FLOAT, CHAULK ALL JOINTS/GAPS & PAINT
- OPEN TO STRUCTURE ABOVE
- FLUSH MOUNT CEILING LIGHT
- P PENDANT CEILING LIGHT
- R RECESSED CEILING MOUNT LIGHT
- (2) 4 FT. NEON BALLAST FLUSH MOUNT WORK LIGHT, W/ MTL PROTECTIVE COVER
- RECESSED MOUNTED EXHAUST FAN
- CEILING FAN WITH LIGHT
- WALL SCONCE
- SURFACE MOUNT UNDER-CABINET LIGHT

CALL-OUT KEY

1. (N) MINI SPLIT AC WALL MOUNTED UNIT AND HEAT PUMP OUTDOOR UNIT (ON 2'x4' CONC. SLAB), SEE MEP SPECS
2. CEILING FLUSH MOUNT HVAC CASSETTE, 22 1/2"X 22 1/2", SEE MEP DRAWINGS FOR SPECS., TYP.
3. ATTIC ACCESS SCUTTLE 30"X 36" MIN., WITH INSULATED REMOVABLE HATCH COVER, TYP.
4. LIGHTING FIXTURE SCHEDULE F5/EM50-A020, DETAIL No.3

BID DOCUMENTS

REGISTERED ARCHITECT W. OWEN HARVARD 18348 STATE OF TEXAS

mwm Design Group
305 East Huntland Drive
Suite 200
Austin, Texas 78752
p: 512.453.0767
f: 512.453.1734
TBAE FIRM REGISTRATION NO.: 1452
TBPE FIRM REGISTRATION NO.: F-1416
TBPLS FIRM REGISTRATION NO.: 10065600

NO.	DATE	DESCRIPTION	BY

0 1"
The bar above measures one inch on the original drawing. Adjust scales accordingly.

REFLECTED CEILING PLAN

CITY OF AUSTIN, AFD WOMEN'S LOCKER RM. ADDN, PHASE V
201 CHICON STREET, AUSTIN, TEXAS, 78702

PLOTTED: 8/30/2016
JOB NO: 023-79D

FS7-A120

File: T:\023-79D_WomensLockerRooms\CAD\Fire Station 7\Sheets\FS7-A120 RCP PLAN.dwg 24x36

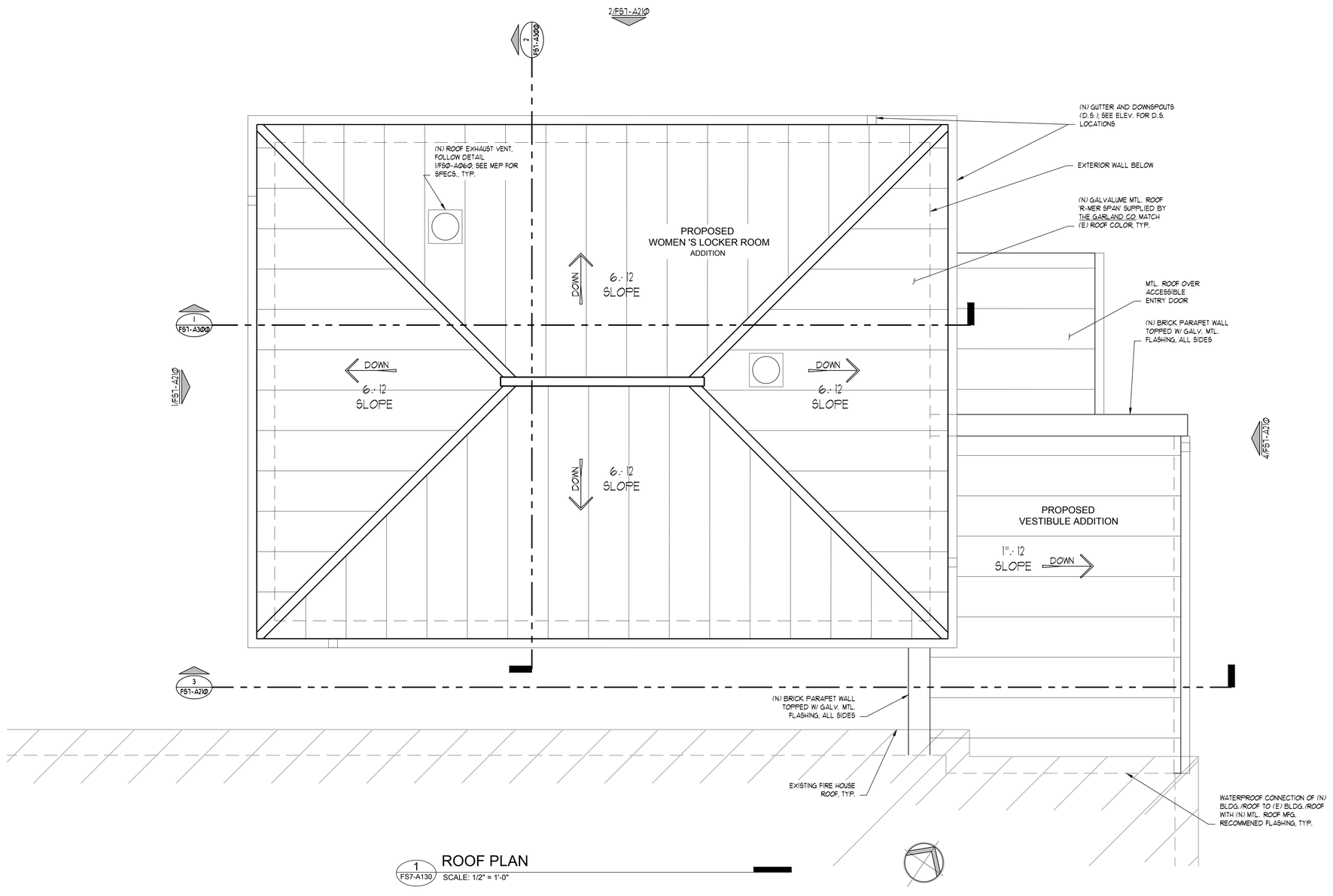

1 FS7-A130 ROOF PLAN
SCALE: 1/2" = 1'-0"

BID DOCUMENTS

REGISTERED ARCHITECT JOHN W. OWEN HARGROVE 16348 STATE OF TEXAS

mwm Design Group

305 East Huntland Drive
Suite 200
Austin, Texas 78752
p: 512.453.0767
f: 512.453.1734

TBAE FIRM REGISTRATION NO.: 1452
TBPE FIRM REGISTRATION NO.: F-1416
TBPLS FIRM REGISTRATION NO.: 10065600

NO.	DATE	DESCRIPTION	BY

0 1"
The bar above measures one inch on the original drawing. Adjust scales accordingly.

ROOF PLAN

CITY OF AUSTIN, AFD WOMEN'S LOCKER RM. ADDN, PHASE V
201 CHICON STREET, AUSTIN, TEXAS, 78702

PLOTTED: 8/30/2016
JOB NO: 023-79D

FS7-A130

File: Y:\023-79D_WomensLockerRooms\CAD\Fire Station 7\Sheets\FS7-A130 ROOF PLAN.dwg 24x36

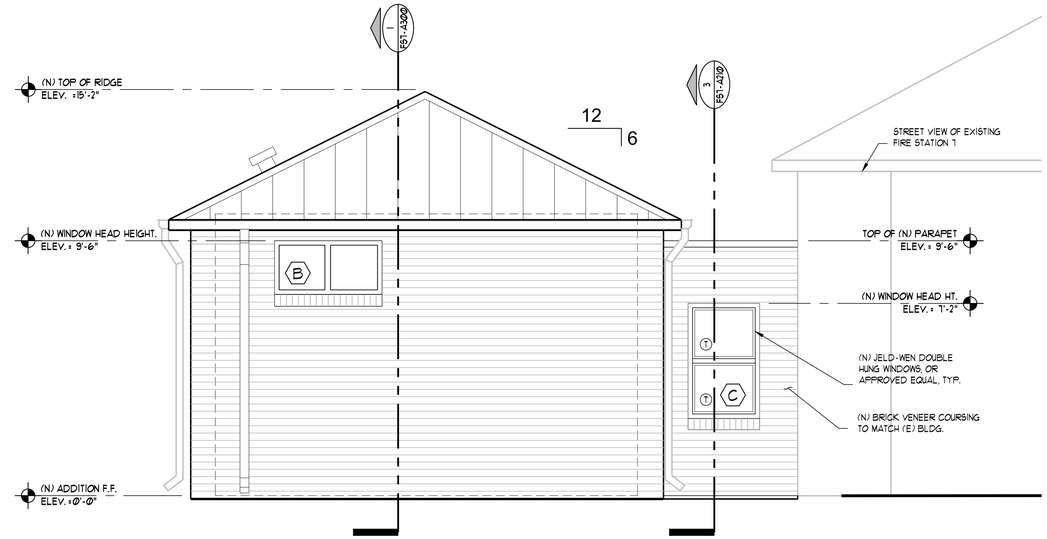

1 FS7-A210 NORTH ELEVATION
SCALE: 3/8" = 1'-0"

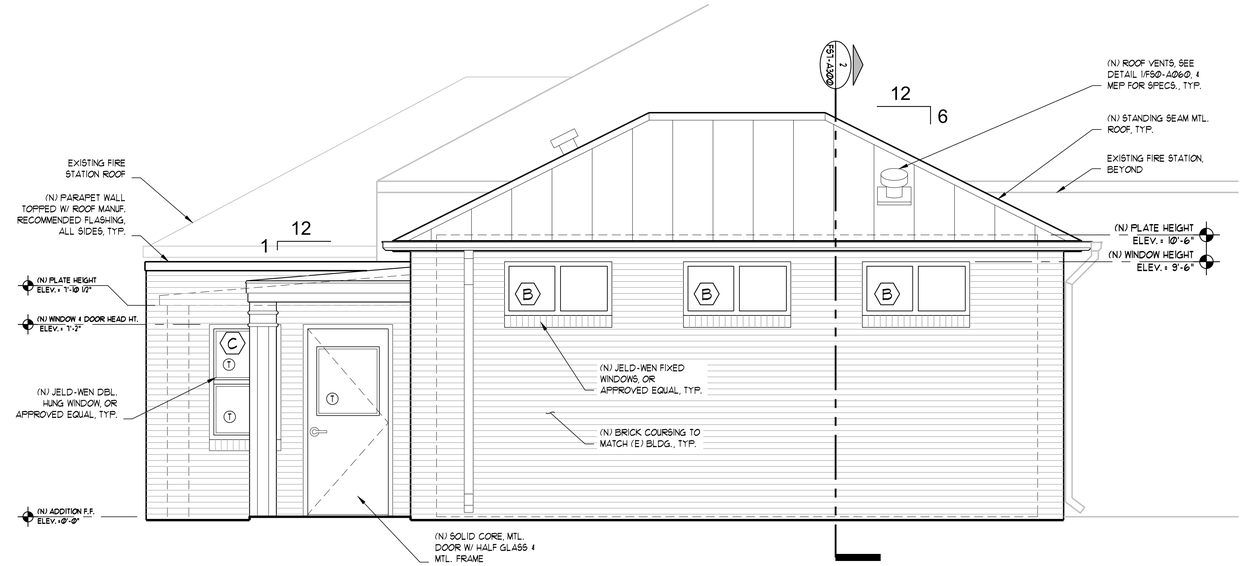

2 FS7-A210 EAST ELEVATION
SCALE: 3/8" = 1'-0"

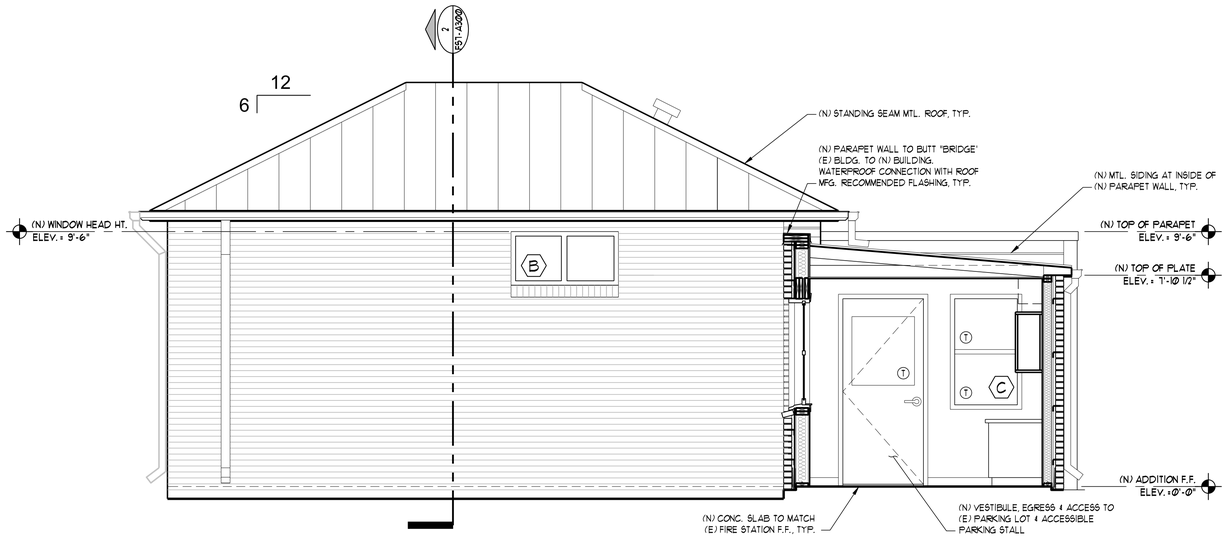

3 FS7-A210 WEST ELEVATION / SECTION
SCALE: 3/8" = 1'-0"

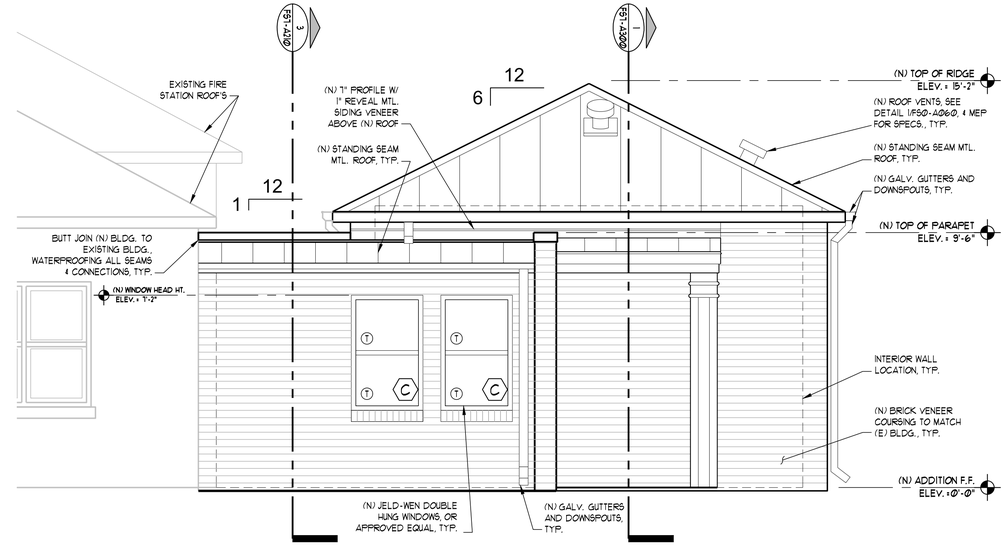

4 FS7-A210 SOUTH ELEVATION
SCALE: 3/8" = 1'-0"

BID DOCUMENTS

REGISTERED ARCHITECT JOHN OWEN HARRISON 18348 STATE OF TEXAS

mwm Design Group
305 East Huntland Drive
Suite 200
Austin, Texas 78752
p: 512.453.0767
f: 512.453.1734
TBAE FIRM REGISTRATION NO.: 1452
TBPE FIRM REGISTRATION NO.: F-1416
TBPLS FIRM REGISTRATION NO.: 10065600

NO.	DATE	DESCRIPTION	BY

0 — 1"
The bar above measures one inch on the original drawing. Adjust scales accordingly.

BUILDING ELEVATIONS

CITY OF AUSTIN, AFD WOMEN'S LOCKER RM. ADDN, PHASE V
201 CHICON STREET, AUSTIN, TEXAS, 78702

PLOTTED: 8/30/2016
JOB NO: 023-79D

FS7-A210

File: Y:\023-79D_WomensLockerRooms\CAD\Fire Station 7\Sheets\FS7-A210 BLDG ELEV.dwg 24x36

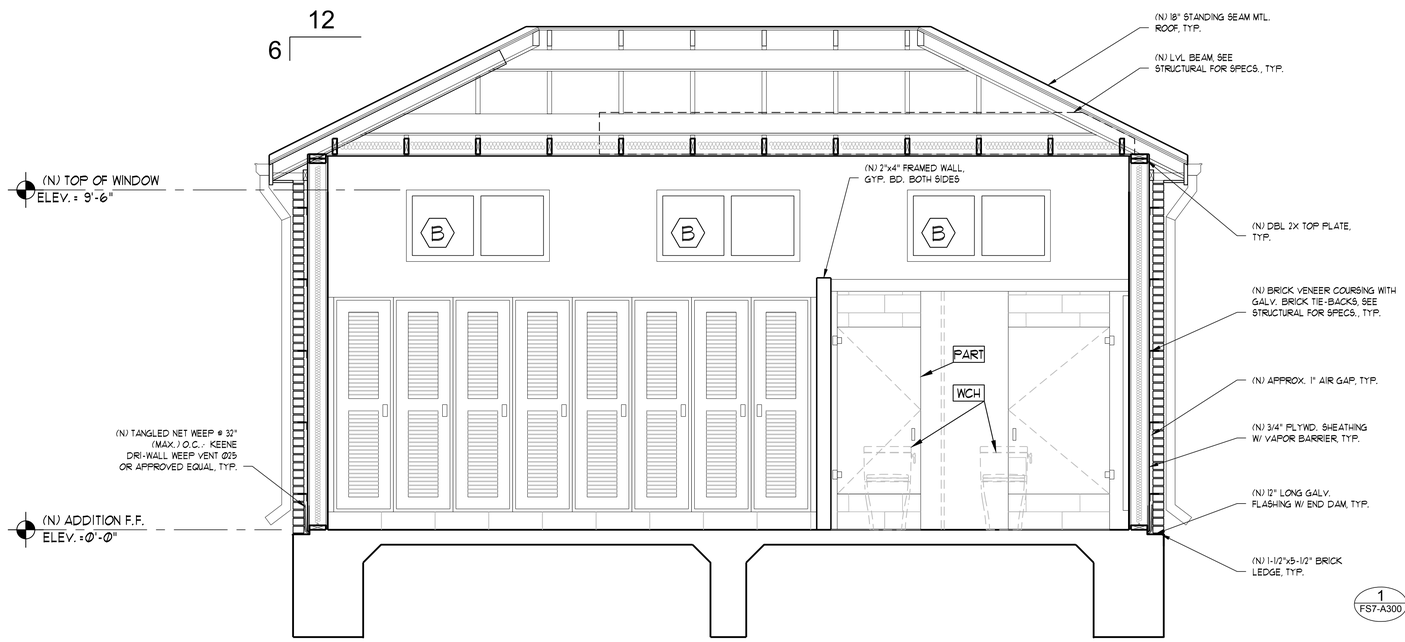

1 FS7-A300 EAST BLDG. SECTION/INT. ELEVATION

SCALE: 1/2" = 1'-0"

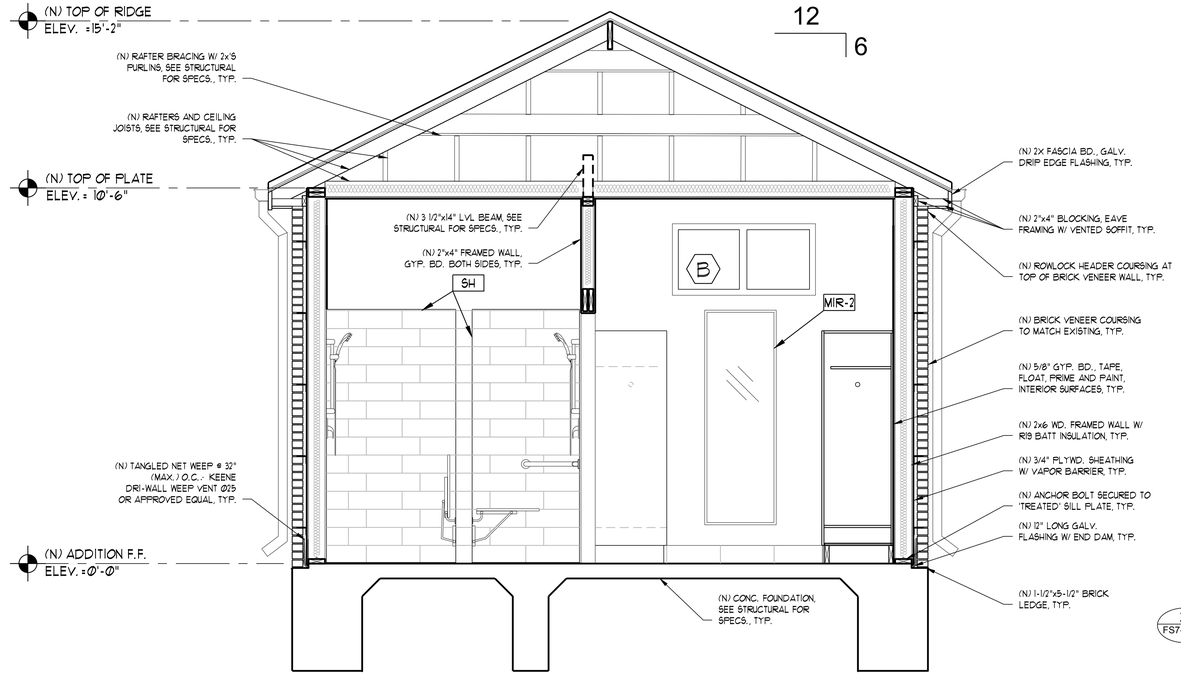

2 FS7-A300 NORTH BLDG. SECTION/INT. ELEVATION

SCALE: 1/2" = 1'-0"

BID DOCUMENTS

REGISTERED ARCHITECT JOWEN HARRIS 18348 STATE OF TEXAS

mwm Design Group
305 East Huntland Drive
Suite 200
Austin, Texas 78752
p: 512.453.0767
f: 512.453.1734

TBAE FIRM REGISTRATION NO.: 1452
TBPE FIRM REGISTRATION NO.: F-1416
TBPLS FIRM REGISTRATION NO.: 10065600

NO.	DATE	DESCRIPTION	BY

0 1"

The bar above measures one inch on the original drawing. Adjust scales accordingly.

BUILDING SECTIONS

CITY OF AUSTIN, AFD WOMEN'S LOCKER RM. ADDN, PHASE V
201 CHICON STREET, AUSTIN, TEXAS, 78702

PLOTTED: 8/30/2016
JOB NO: 023-79D

FS7-A300

File: Y:\023-79D_WomensLockerRooms\CAD\Fire Station 7\Sheets\FS7-A300 BLDG SECT.dwg 24x36

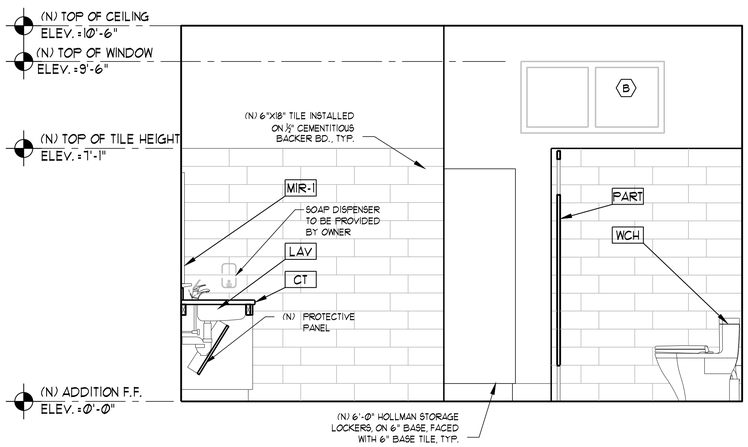

1 FS7-A400 NORTH INT. ELEV. @ SINK & STANDARD TOILET STALL
SCALE: 1/2" = 1'-0"

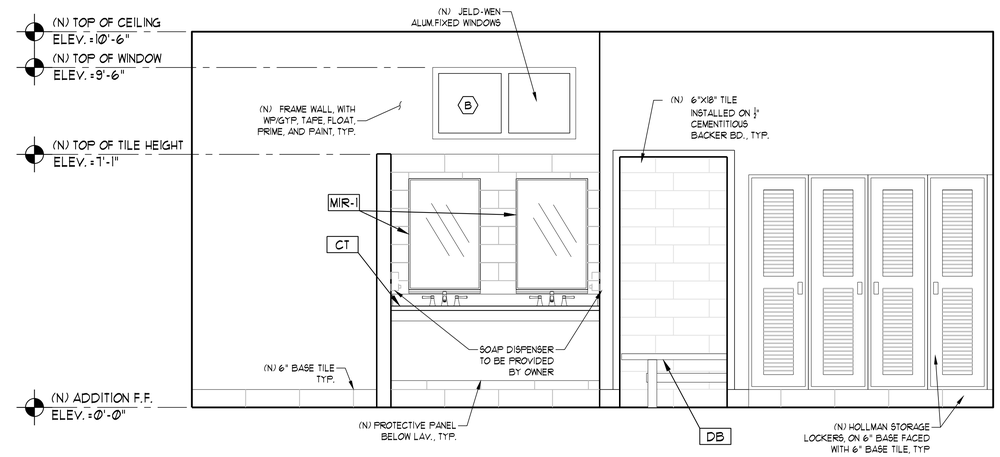

2 FS7-A400 WEST INTERIOR ELEVATION
SCALE: 1/2" = 1'-0"

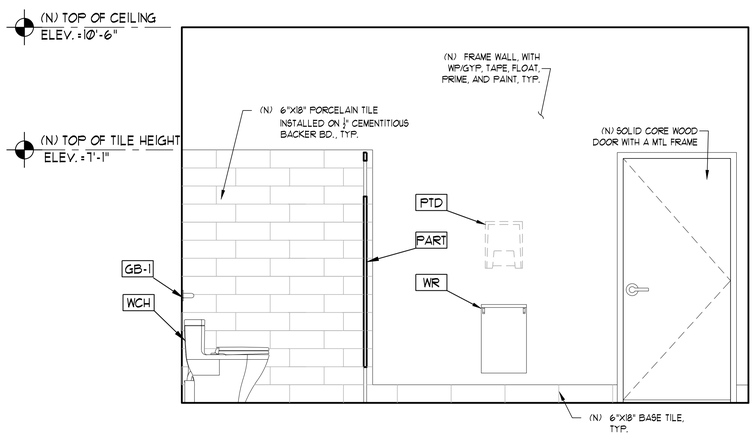

3 FS7-A400 SOUTH INTERIOR ELEV. @ ACC. STALL & ENTRANCE
SCALE: 1/2" = 1'-0"

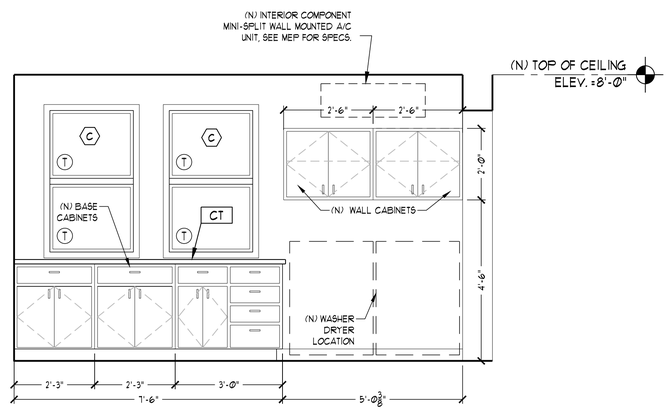

4 FS7-A400 SOUTH INTERIOR ELEV. @ VESTIBULE
SCALE: 1/2" = 1'-0"

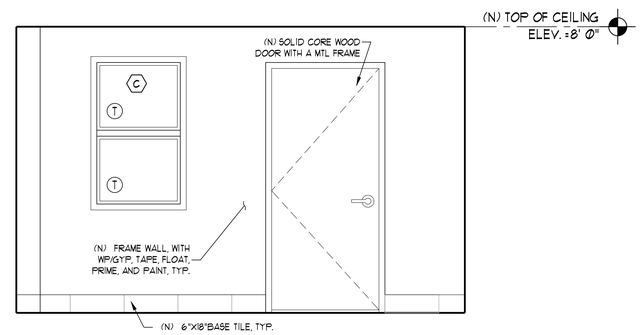

5 FS7-A400 NORTH INTERIOR ELEV. @ VESTIBULE
SCALE: 1/2" = 1'-0"

BID DOCUMENTS

REGISTERED ARCHITECT JOHN W. OWEN HARDY 18348 STATE OF TEXAS
Board Approved

mwm Design Group
305 East Huntland Drive
Suite 200
Austin, Texas 78752
p: 512.453.0767
f: 512.453.1734

TBAE FIRM REGISTRATION NO.: 1452
TBPE FIRM REGISTRATION NO.: F-1416
TBPLS FIRM REGISTRATION NO.: 10065600

NO.	DATE	DESCRIPTION	BY

0 1"
The bar above measures one inch on the original drawing. Adjust scales accordingly.

INTERIOR ELEVATIONS

CITY OF AUSTIN, AFD WOMEN'S LOCKER RM. ADDN, PHASE V
201 CHICON STREET, AUSTIN, TEXAS, 78702

PLOTTED: 8/30/2016
JOB NO: 023-79D

FS7-A400

File: Y:\023-79D_WomensLockerRooms\CAD\Fire Station 7\Sheets\FS7-A400 INT ELEV.dwg 24x36

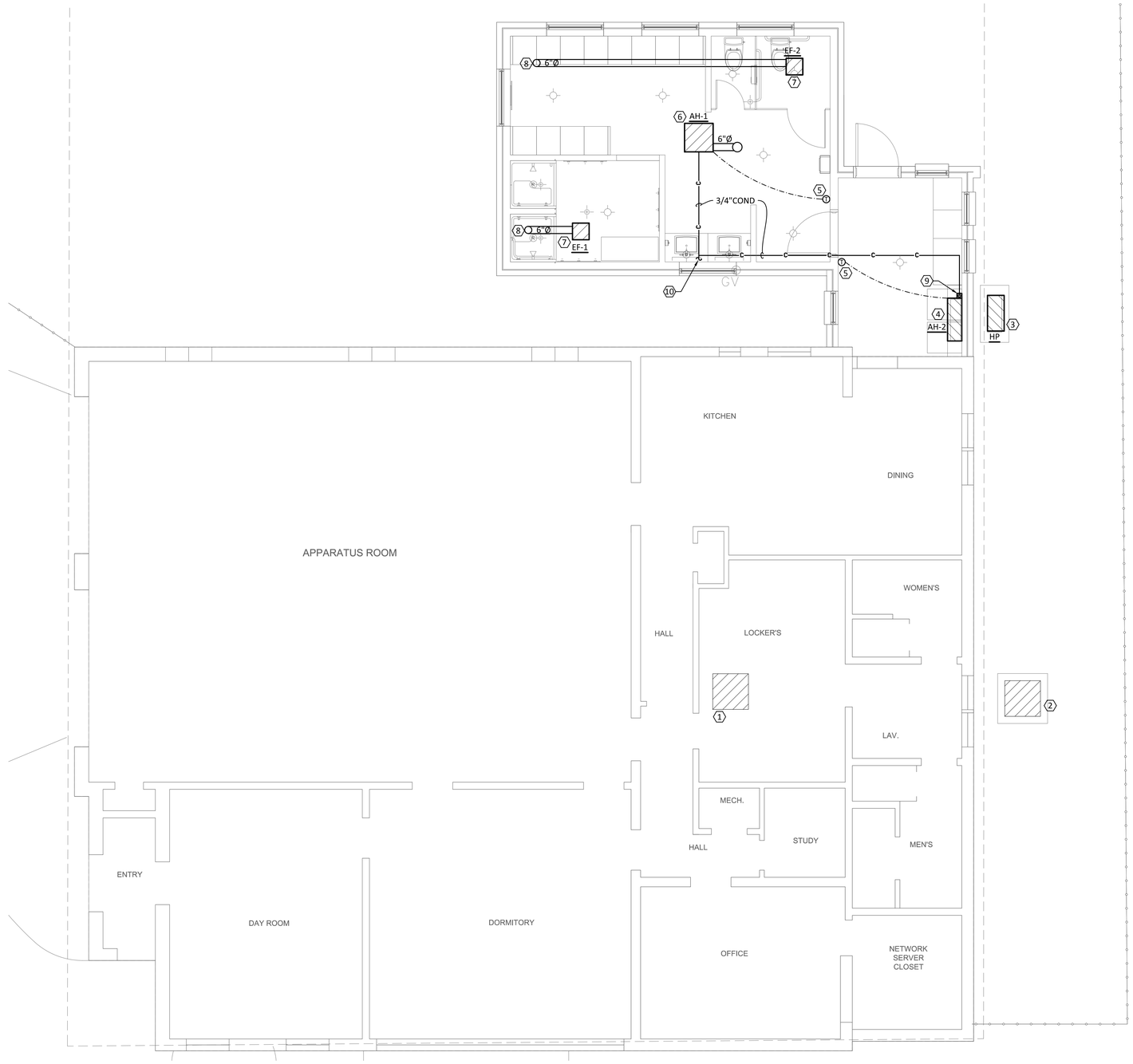

1 MECHANICAL PLAN

SCALE: 1/4" = 1'-0"

PLAN GENERAL NOTES

A. REFER TO M0.00 FOR GENERAL NOTES.
B. DO NOT ROUTE ANY DUCT & PIPING ABOVE ELECTRICAL PANELS.
C. PROVIDE AND INSTALL TRANSITION AS REQUIRED TO CONNECT SMALL DUCT TO LOUVER OR GRILLE.
D. COORDINATE WITH ARCHITECT AND STRUCTURAL ENGINEER FOR ALL WALL AND ROOF PENETRATION.
E. MAINTAIN 10' CLEARANCE FROM ANY EXHAUST AIR OUTLET OR FLUE TO ANY OUTSIDE AIR INTAKE OR OPENING TO BUILDING.
F. PROVIDE LOCKING ACCESS PORT CAPS ON ALL REFRIGERANT CIRCUIT SERVICE PORTS LOCATED ON THE EXTERIOR OF THE BUILDING.
G. ESTIMATED LOCATION OF ALL EXISTING MECHANICAL LAYOUT AND EQUIPMENT LOCATION IS BASED ON SITE OBSERVATION AND EXISTING DRAWINGS. CONTRACTOR SHALL VERIFY SIZE, LOCATION OF ALL EXISTING PLUMBING PIPING EQUIPMENT PRIOR TO BID AND CONSTRUCTION.

KEYED NOTES

1. EXISTING AIR HANDLER ABOVE CEILING SHALL REMAIN. EXISTING AIR HANDLER AND CONDENSING UNIT APPEARS TO BE INSUFFICIENT TO ADD SUPPLY AIR TO NEW LOCKER.
2. EXISTING OUTDOOR CONDENSING UNIT SHALL REMAIN.
3. HEAT PUMP UNIT FOR DUCTLESS UNITS SHALL BE MOUNTED LEVEL ON CONCRETE PAD WITH NEOPRENE CORK PAD
4. DUCTLESS AIR HANDLER SHALL BE WALL MOUNTED ABOVE DOOR.
5. PROVIDE TEMPERATURE CONTROLLER ON WALL AT 48" A.F.F.
6. CEILING CASSETTE AIR HANDLER SHALL BE SUSPENDED FROM STRUCTURAL MEMBER WITH VIBRATION ISOLATORS.
   ROUTE 6" OUTSIDE AIR DUCT TO UNIT FROM LOW PROFILE ROOF CAP (GREENHECK RCC-7 OR APPROVED EQUIVALENT).
7. EXHAUST FAN SHALL BE SUSPENDED FROM CEILING WITH VIBRATION ISOLATORS.
8. ROUTE 6"Ø EXHAUST DUCT FROM EXHAUST FANS THROUGH ROOF TO LOW PROFILE ROOF CAP WITH INTEGRAL BIRDSCREEN AND FLASHING (GREENHECK RCC-7 OR APPROVED EQUIVALENT)
9. PROVIDE CONDENSATE DRAIN PUMP (WITH LINE SET KIT) FOR WALL MOUNTED DUCTLESS AIR HANDLER ON WALL (LITTLE GIANT MODEL EC-1K OR APPROVED EQUIVALENT).
10. ROUTE 3/4" INSULATED CONDENSATE DRAIN PIPING TO TAILPIECE ABOVE CEILING. TAILPIECE PIPING FROM LAVATORY TO ABOVE CEILING IS BY PLUMBING CONTRACTOR.

SEQUENCE OF OPERATION NOTES

A. DUCTLESS SPLIT SYSTEM CONTROL
   a. SYSTEM - ON/OFF CONTROL:
      ON/OFF CONTROL FROM WALL MOUNTED THERMOSTAT.
   b. FAN – ON/OFF CONTROL:
      FAN WILL BE ACTIVATED UNDER THE FOLLOWING CONDITIONS:
      - IF THE THERMOSTAT IS SET IN THE "FAN" MODE
      - ACTIVATION OF THE COOLING OR HEATING MODE
   c. COOLING MODE:
      THERMOSTAT SETTING WILL EITHER BE IN "AUTO" OR "COOL"
      IF THE ROOM TEMPERATURE, AS MEASURED BY THE INDOOR UNIT MOUNTED ROOM TEMPERATURE SENSOR, RISES ABOVE THE THERMOSTATS SET POINT TEMPERATURE THE CONDENSING UNIT AND THE WALL MOUNTED FAN COIL UNIT WILL BE ACTIVATED.
   d. HEATING MODE:
      THERMOSTAT SETTING WILL EITHER BE IN "AUTO" OR "HEAT"
      IF THE ROOM TEMPERATURE, AS MEASURED BY THE INDOOR UNIT MOUNTED ROOM TEMPERATURE SENSOR, DOWN BELOW THE THERMOSTATS SET POINT TEMPERATURE THE CONDENSING UNIT AND THE WALL MOUNTED FAN COIL UNIT WILL BE ACTIVATED.
   e. CONDENSATE PUMP CONTROL:
      THE PRIMARY CONDENSATE FLOAT SWITCH WILL ACTIVATE AND DEACTIVATE THE CONDENSATE PUMP.
   f. SAFETY:
      A SECONDARY OVERFLOW CONDENSATE FLOAT SWITCH UPON ACTIVATION WILL CONTINUE TO RUN THE CONDENSATE PUMP, DEACTIVATE THE FAN, AND INITIATE A BLINKING LIGHT ON THE CONTROL DISPLAY TO INDICATE THE PROBLEM.
B. EXHAUST FANS (SEE ELECTRICAL PLAN FOR CONTROLLER)
   - EF-1 & EF-2 WILL BE INTERLOCKED WITH LIGHTING SWITCH WITH A TIME-DELAY-OFF RELAY SWITCH TO ALLOW FAN TO OPERATE UP TO 15 MINUTES AFTER LIGHTS ARE TURNED OFF

ENCOTECH ENGINEERING CONSULTANTS
TBPE Firm 1141 | 8500 Bluffstone Cove, Suite B-103 Austin, Texas 78759 | 512.338.1101
Project No.: 15009.M.AUS

STATE OF TEXAS
LYNN C. BROWN
55248
LICENSED PROFESSIONAL ENGINEER
08/30/2016

mwm Design Group
305 East Huntland Drive
Suite 200
Austin, Texas 78752
p: 512.453.0767
f: 512.453.1734
TBAE FIRM REGISTRATION NO.: 1452
TBPE FIRM REGISTRATION NO.: F-1416
TBPLS FIRM REGISTRATION NO.: 10065600

NO.	DATE	DESCRIPTION	BY

SCALE IS AS NOTED ON DRAWING

MECHANICAL PLAN

CITY OF AUSTIN, AFD WOMEN'S LOCKER RM. ADDN, PHASE V
201 CHICON STREET, AUSTIN, TEXAS, 78702

PLOTTED: 8/30/2016
JOB NO: 023-79D

FS7-M110

File: J:\ACTIVE PROJECTS\MWM\15009.M.AUS – AFD WLR Ph 5\1. MEP\D-AutoCAD\FS7\15009 FS07 M110 Mech Plan.dwg 24x36

CONDENSING UNIT SCHEDULE

MARK	CLG. DATA		ELECTRICAL DATA			UNIT DATA				
	TONS	EER/ SEER	MCA	MOCP	VOLT/PH	MAKE	MODEL	LBS.	NOTES	CORRESPONDING AIR HANDLER
HP	1.5	14.0/ 21.0	13.3	20	208V/1PH	LG	LMU18CHV	100		

NOTES:
1. PROVIDE DISCONNECT, TO BE FIELD MOUNTED BY ELECTRICAL CONTRACTOR.
2. COMPRESSOR SHALL BE PROVIDED WITH 10 YEARS WARRANTY.
3. UNIT TO BE PROVIDED LOW AMBIENT KIT FOR OPERATION DOWN TO 40°F.

DUCTLESS SPLIT UNIT SCHEDULE

MARK	AIR DATA					COOLING DATA												HEATING DATA					ELECTRICAL DATA			UNIT DATA			
	TOT. CFM	O/A CFM	E.S.P.	HP	CONFIGURATION	AMBIENT		ENTERING		LEAVING		DESIGN		SCHEDULE		STAGE	EER/ SEER	DES.	SCHEDULE		STAGE	HSPF	MCA	MOCP	VOLT/PH	MAKE	MODEL	LBS.	NOTES
						D.B.	W.B.	D.B.	W.B.	D.B.	W.B.	SENS.	TOT.	SENS.	TOT.			MBH	MBH	KW									
AH-1	265	N/A	N/A	-	CASSETE	105	74	80	67	-	-			-	9.0	INV.	14.0/ 21.0	-	8.5	-	-	9.20	0.2	15	208V/1PH	LG	LMCN097HV	31	1, 2
AH-2	177	N/A	N/A	-	WALL-MOUNTED	105	74	80	67	-	-			-	7.0	INV.	14.0/ 21.0	-	8.1	-	-	9.20	0.2	15	208V/1PH	LG	LMN078HVT	20	1, 2, 3

NOTES:
1. EACH UNIT TO BE MOUNTED USING VIBRATION ISOLATORS.
2. INDOOR UNIT TO INCLUDE MANUFACTURER THERMOSTAT.
3. CONDENSATE PUMP.

FAN SCHEDULE

MARK	AREA SERVED	LOCATION	INTERLOCK	AIR DATA				ELECTRICAL DATA			UNIT DATA					
				CFM	S.P.	HP	RPM	FLA	MOCP	VOLT/PH	MAKE	MODEL	TYPE	DRIVE	LBS.	NOTES
EF-1	SHOWER	CEILING	LIGHT SWITCH	75	0.25	-	900	0.6	15	115V/1PH	GREENHECK	SP-B90	CENTRIFUGAL	DIRECT	8	DISC, SC, BDD, CC, BS, VI
EF-2	RESTROOM	CEILING	LIGHT SWITCH	150	0.25	-	1400	0.6	15	115V/1PH	GREENHECK	CSP-A190	CENTRIFUGAL	DIRECT	17	DISC, SC, BDD, CC, BS, VI

NOTES:
1. FEATURE NOTES:
   - DISC = DISCONNECT SWITCH
   - TD = PROVIDE AND INSTALL A TIME-DELAY-OFF RELAY SWITCH TO ALLOW FAN TO OPERATE UP TO 15 MINUTES AFTER LIGHTS ARE TURNED OFF
   - SC = SPEED CONTROL (DIRECT DRIVE FANS ONLY)
   - BDD = BACKDRAFT DAMPER
   - BS = BIRD SCREEN
   - VI = VIBRATION ISOLATORS

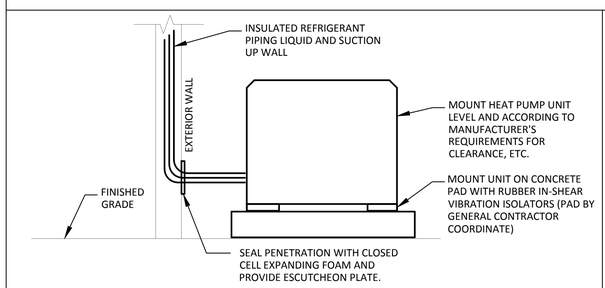

REFRIGERANT PIPING INSULATION NOTES

1. ALL CLOSED CELL POLYMER INSULATION SHALL HAVE GLUED JOINTS WITH COMPLETE COVERAGE OF ALL METAL SURFACES. ALL INSULATION EXPOSED TO EXTERIOR SHALL BE PAINTED WITH TWO COATS AS PER INSULATION MANUFACTURERS SPECIFICATIONS.
2. PROVIDE AND INSTALL LINE DRYER IN LIQUID FREON LINE
3. PROVIDE INSULATION SHIELD AT ALL SUPPORTS.

1 HEAT PUMP UNIT DETAIL
NOT TO SCALE

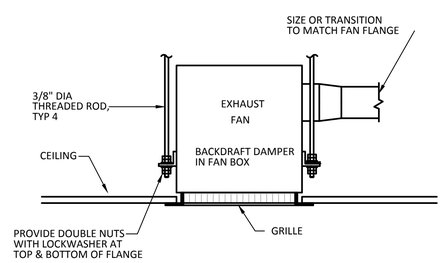

2 CEILING EXHAUST FAN DETAIL
NOT TO SCALE

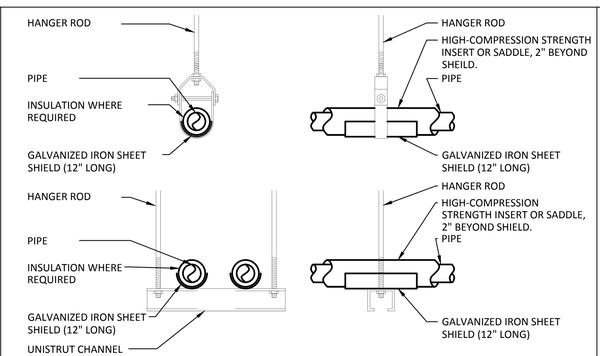

NOTE:
1. ATTACH SUPPORTS FOR ALL PIPING SUSPENDED FROM THE STEEL STRUCTURE TO THE TOP CORD OF JOISTS OR BEAM.
2. PROVIDE COPPER OR PLASTIC COATED HANGERS FOR NON-INSULATED COPPER PIPE

3 PIPE HANGER DETAIL
NOT TO SCALE

ENCOTECH ENGINEERING CONSULTANTS
TBPE Firm 1141 | 8500 Bluffstone Cove, Suite B-103 Austin, Texas 78759 | 512.338.1101
Project No.: 15009.M.AUS

STATE OF TEXAS
LYNN C. BROWN
55248
LICENSED PROFESSIONAL ENGINEER
08/30/2016

mwm Design Group
305 East Huntland Drive
Suite 200
Austin, Texas 78752
p: 512.453.0767
f: 512.453.1734
TBAE FIRM REGISTRATION NO.: 1452
TBPE FIRM REGISTRATION NO.: F-1416
TBPLS FIRM REGISTRATION NO.: 10065600

NO.	DATE	DESCRIPTION	BY

SCALE IS AS NOTED ON DRAWING

MECHANICAL SCHEDULES & DETAILS

CITY OF AUSTIN, AFD WOMEN'S LOCKER RM. ADDN, PHASE V
201 CHICON STREET, AUSTIN, TEXAS, 78702

PLOTTED: 8/30/2016
JOB NO: 023-79D

FS7-M210

File: L:\ACTIVE PROJECTS\MWM\15009.M.AUS – AFD WLR Ph 5\1. MEP\D-AutoCAD\FS7\15009 FS07 M210 Mech Schedule Details.dwg 24x36

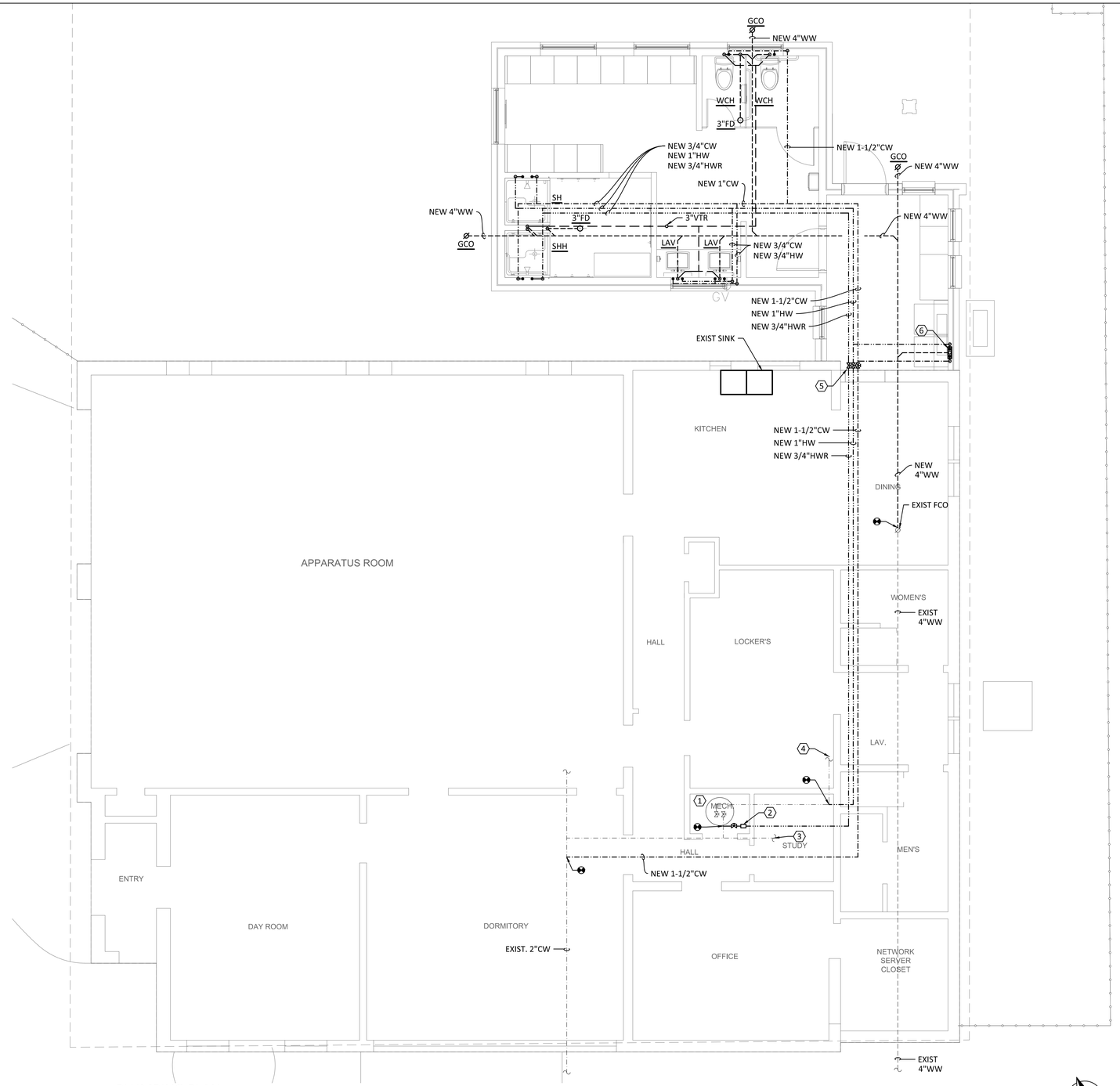

1 PLUMBING PLAN
SCALE: 1/4" = 1'-0"

PLAN GENERAL NOTES

A. REFER TO P0.00 FOR GENERAL NOTES.

B. ESTIMATED LOCATION OF ALL EXISTING PLUMBING LAYOUT AND EQUIPMENT LOCATION IS BASED ON SITE OBSERVATION AND EXISTING DRAWINGS. CONTRACTOR SHALL VERIFY SIZE, LOCATION OF ALL EXISTING PLUMBING PIPING EQUIPMENT PRIOR TO BID AND CONSTRUCTION

C. DO NOT ROUTE ANY PLUMBING PIPING ABOVE ANY ELECTRICAL PANEL.

D. PROVIDE AND INSTALL WATER SAVER TRAP PRIMER FROM NEAREST LAVATORY OR TRAP PRIMER WITH ACCESSIBLE SHUT-OFF VALVE IN WALL TO ALL FLOOR DRAINS, HUB DRAINS AND FLOOR SINKS. SEE PLAN FOR LOCATION.

E. PROVIDE AND INSTALL ACCESS TO ALL SHUT-OFF VALVES.

F. INSULATE 100% OF ALL HOT WATER PIPING, HOT WATER RETURN PIPING & COLD WATER PIPING ACCORDING TO SPECIFICATIONS.

G. REFER TO PLUMBING RISER FOR ADDITIONAL SIZING INFORMATION.

H. ALL NEW UNDERGROUND PIPING UNDER EXISTING SLAB SHALL BE REQUIRED TO CUT EXISTING SLAB OR/AND BEAM. COORDINATE WITH ARCHITECT, COA PERSONELS AND STRUCTURAL ENGINEER PRIOR TO CONSTRUCTION. THE CONTRACTOR SHALL DETERMINE THE EXISTING STRUCTURAL SYSTEM PRIOR TO CUTTING, DRILLING OR CORING. THE TESTING AGENCY SHALL X-RAY ALL PENETRATIONS PRIOR TO CUTTING FLOOR SLAB. DO NOT CUT OR PENETRATE STRUCTURAL ELEMENTS WITHOUT PRIOR APPROVAL OF THE TESTING AGENCY.

COA PROJECT MANAGER AND STRUCTURAL ENGINEER AND PLUMBING ENGINEER SHALL BE PRESENT DURING CUTING. LOCATION SHOWN ARE APPROXIMATE AND MAY BE SLIGHTLY RELOCATED DUE TO EXISTING STRUCTURAL CONDITION.

KEYED NOTES

1. EXISTING WATER HEATER SHALL REMAIN AND HAS SUFFICIENT CAPACITY TO ADD TWO NEW SHOWERS AND LAVATORIES (EXISTING WATER HEATER BY STATE INDUSTRIES, INC. MODEL GS6-50YBRS, 50 GALLON TANK, 40MBH INPUT, 41 GALLON RECOVERY AT 90°F RISE)
2. PROVIDE NEW HOT WATER RECIRCULATION PUMP (GRUNDFOS MODEL UP-26-96-BF, 1/12 HP, 120V, 1Ø 1.7 AMPS SECURELY SUSPEND FROM STRUCTURE W/ VIBRATION ISOLATORS)
3. EXISTING CW PIPING TO EXISTING PLUMBING FIXTURE
4. EXISTING HW PIPING TO EXISTING PLUMBING FIXTURE.
5. MAIN WATER SHUT-OFF VALVE FOR NEW LOCKER ROOM ABOVE CEILING. COORDINATE WITH GENERAL CONTRACTOR TO PROVIDE AND INSTALL ACCESS PANEL.
6. NEW CLOTHES WASHER CONNECTION (WATER-TITE MODEL W4700, CENTER DRAIN, QUARTER TURN VALVES)

ENCOTECH ENGINEERING CONSULTANTS
TBPE Firm 1141 | 8500 Bluffstone Cove, Suite B-103 Austin, Texas 78759 | 512.338.1101
Project No.: 15009.M.AUS

STATE OF TEXAS
LYNN C. BROWN
55248
LICENSED PROFESSIONAL ENGINEER
08/30/2016

mwm Design Group
305 East Huntland Drive
Suite 200
Austin, Texas 78752
p: 512.453.0767
f: 512.453.1734
TBAE FIRM REGISTRATION NO.: 1452
TBPE FIRM REGISTRATION NO.: F-1416
TBPLS FIRM REGISTRATION NO.: 10065600

NO.	DATE	DESCRIPTION	BY

SCALE IS AS NOTED ON DRAWING

PLUMBING PLAN

CITY OF AUSTIN, AFD WOMEN'S LOCKER RM. ADDN, PHASE V
201 CHICON STREET, AUSTIN, TEXAS, 78702

PLOTTED: 8/30/2016
JOB NO: 023-79D

FS7-P110

File: I:\ACTIVE PROJECTS\MWM\15009.M.AUS - AFD WLR Ph 5\1. MEP\D-AutoCAD\FS7\15009 FS07 P110 Plumb Plan.dwg 24x36

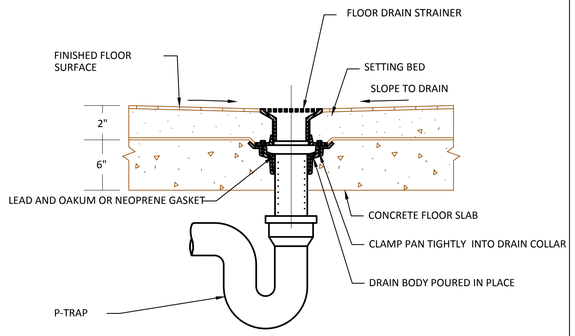

6 TYPICAL FLOOR DRAIN DETAIL
NOT TO SCALE

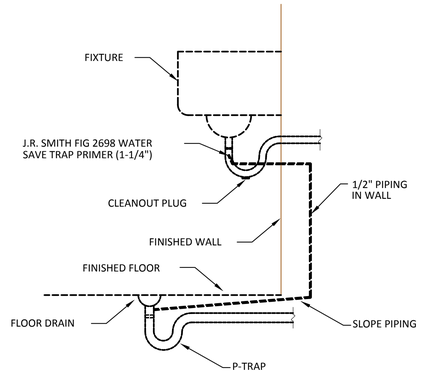

5 WATER SAVER TRAP PRIMER DETAIL
NOT TO SCALE

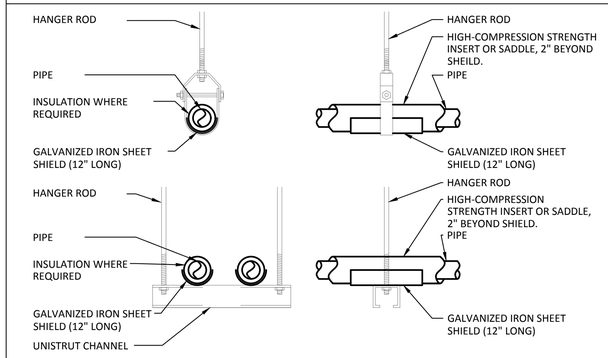

NOTE:
1. ATTACH SUPPORTS FOR ALL PIPING SUSPENDED FROM THE STEEL STRUCTURE TO THE TOP CORD OF JOISTS OR BEAM.
2. PROVIDE COPPER OR PLASTIC COATED HANGERS FOR NON-INSULATED COPPER PIPE

4 PIPE HANGER DETAIL
NOT TO SCALE

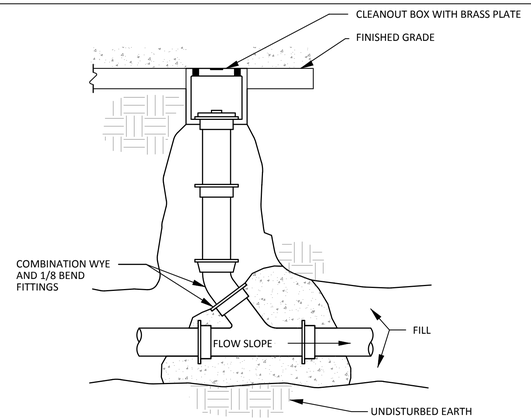

3 EXTERIOR CLEANOUT DETAIL
NOT TO SCALE

WATER CALCULATION

WATER CLOSET, FLUSH VALVE	4 x	5.0 F.U. =	20.0 F.U.
SHOWER	4 x	2.0 F.U. =	8.0 F.U.
LAVATORY	3 x	1.0 F.U. =	3.0 F.U.
KITCHEN SINK, COMMERCIAL	1 x	3.0 F.U. =	3.0 F.U.
SERVICE SINK (PUBLIC)	1 x	3.0 F.U. =	3.0 F.U.
DISHWASHER	1 x	1.5 F.U. =	1.5 F.U.
CLOTHES WASHER	1 x	4.0 F.U. =	4.0 F.U.
DRINKING FOUNTAIN	1 x	0.5 F.U. =	0.5 F.U.
FIRST HOSE BIBB	1 x	2.5 F.U. =	2.5 F.U.
ADDITIONAL HOSE BIBBS	2 x	1.0 F.U. =	2.0 F.U.
TOTAL FIXTURE UNITS		=	47.5 F.U.
47.5 FIXTURE UNITS		=	49.0 GPM

HIGHEST FIXTURE = 10 FEET
(10 FT.) x 0.43 = 4.3 PSI STATIC LOSS

HORIZONTAL PIPE LENGTH TAP TO METER	=	10 FEET
HORIZONTAL PIPE LENGTH METER TO BUILDING	=	100 FEET
HORIZONTAL PIPE LENGTH BUILDING TO LAST FIXTURE	=	100 FEET
VERTICAL PIPE LENGTH BUILDING RISE TO HIGHEST FIXTURE	=	10 FEET
TOTAL PIPE LENGTH	=	220 FEET

(220 FT.) x 1.25 (FITTING LOSS) = 275 FEET TOTAL DEVELOPED LENGTH

SIZE	DEVICE		PSI LOSS
1-1/2"	METER	=	5.4 PSI
	STATIC	=	4.3 PSI
	FIXTURE (FLUSH VALVE)	=	15.0 PSI
	TOTAL BUILDING LOSS	=	24.7 PSI

PRESSURE AT STREET	=	50.0 PSI
BUILDING LOSS	=	24.7 PSI
DIFFERENCE	=	25.3 PSI

(25.3 / 275) x 100 = 9.2 MAX PSI DROP ALLOWABLE PER 100 FT. PIPE LENGTH

EXISTING 1-1/2" METER AND 2" MAIN WATER LINE TO BUILDING IS SUFFICIENT

WATER CALCULATION NOTES

- THIS CALCULATION IS BASED ON UNIFORM PLUMBING CODE 2012, APPENDIX A.
* VERIFY PRESSURE AT TIME OF CONSTRUCTION. IF GREATER THAN 65 PSI PROVIDE AND INSTALL PRESSURE REDUCING VALVE TO REDUCE WATER PRESSURE TO 65 PSI MAXIMUM.

PLUMBING FIXTURE SCHEDULE

MARK	CW	HW	VENT	S&W	MODEL NUMBER	DESCRIPTION
WC	1"	-	2"	3"	WATER CLOSET: KOHLER MODEL: WELLWORTH K-4406 FLUSH VALVE: SLOAN MODEL: 111-1.28 SEAT: CHURCH 295SSC	FLUSH VALVE WATER CLOSET, FLOOR MOUNTED, ELONGATED BOWL, 1-1/2" TOP SPUD, FLOOR OUTLET EXPOSED WATER CLOSET FLUSHOMETER FOR FLOOR MOUNTED TOP SPUD BOWLS, 1.28 GPF. OPEN FRONT, ELONGATED SEAT WITH STAINLESS STEEL LOCKING HINGE
WCH	1"	-	2"	3"	WATER CLOSET: KOHLER MODEL: HIGHLINE K-4405 FLUSH VALVE: SLOAN MODEL: 8111-1.28 SEAT: CHURCH 295SSC	FLUSH VALVE WATER CLOSET, FLOOR MOUNTED, ELONGATED BOWL, 1-1/2" TOP SPUD, FLOOR OUTLET, ADA COMPLIANT EXPOSED WATER CLOSET FLUSHOMETER FOR FLOOR MOUNTED TOP SPUD BOWLS, 1.28 GPF. OPEN FRONT, ELONGATED SEAT WITH STAINLESS STEEL LOCKING HINGE
LAV	1/2"	1/2"	1-1/2"	2"	LAVATORY: KOHLER MODEL: K-1997-1-0 (HANDICAP USE) FAUCET: DELTA MODEL: 26C3942 MIXING VALVE: WATTS MODEL: L111	WALL HUNG, VITREOUS CHINA, 22"x19" BOWL, HANDICAP ACCESSIBLE. MANUAL GOOSENECK FAUCET, 0.5 GPM AERATOR, 8" CENTERS, LEVER HANDLES INDIVIDUAL FAUCET THERMOSTATIC MIXING VALVE. HOT WATER TEMPERATURE SHALL BE LIMITED TO 110 DEGREES FAHRENHEIT.
SH	1/2"	1/2"	1-1/2"	2"	SHOWER ENCLOSURE: AQUATIC MODEL: 1363BFS SHOWER FAUCET & HANDSET: T&S BRASS MODEL: B-3205 MIXING VALVE: LAWLER MODEL: SERIES 516 UNIT NUMBER: 86823	36"Wx36"D AQUATIC SHOWER UNIT WITH NO DAM. COMPLETE WITH L-SHAPED FOLD-UP SEAT, SLIDE BAR, VACUUM BREAKER AND HOSE, CURTAIN RODS (VERIFY DEPTH OF RECESS) PRESSURE BALANCE SHOWER VALVE, HANDHELD SPRAY ASSEMBLY, 2.0 GPM FLOW CONTROL DEVICE WITH THUMB VALVE TO SWITCH BETWEEN 0.5 GPM AND 2.0 GPM, GRAB BAR WITH BRACKET ASSEMBLY, ADA COMPLIANT ROUGH CHROME THERMOSTATIC MIXING VALVE, 0.5 MINIMUM FLOW RATE, OUTLET RANGE 95-115 DegF WITH A SPINDLE TO ADJUST OUTLET TEMPERATURE. SET OUTLET TEMPERATURE AT 110DegF.
SHH	1/2"	1/2"	1-1/2"	2"	SHOWER ENCLOSURE: AQUATIC MODEL: 1363BFS ADA COMPLIANCE SHOWER FAUCET & HANDSET: T&S BRASS MODEL: B-3205 MIXING VALVE: LAWLER MODEL: SERIES 516 UNIT NUMBER: 86823	36"Wx36"D AQUATIC SHOWER UNIT WITH NO DAM. COMPLETE WITH L-SHAPE FOLD-UP SEAT, GRAB BARS, SLIDE BAR, VACUUM BREAKER AND HOSE, CURTAIN RODS (VERIFY DEPTH OF RECESS) PRESSURE BALANCE SHOWER VALVE, HANDHELD SPRAY ASSEMBLY, 2.0 GPM FLOW CONTROL DEVICE WITH THUMB VALVE TO SWITCH BETWEEN 0.5 GPM AND 2.0 GPM, GRAB BAR WITH BRACKET ASSEMBLY, ADA COMPLIANT ROUGH CHROME THERMOSTATIC MIXING VALVE, 0.5 MINIMUM FLOW RATE, OUTLET RANGE 95-115 DegF WITH A SPINDLE TO ADJUST OUTLET TEMPERATURE. SET OUTLET TEMPERATURE AT 110DegF.
FD	-	-	2"	*	SMITH 2005	FLOOR DRAIN. CAST IRON. ADJUSTABLE STRAINER HEAD.
FCO	-	-	-	*	SMITH 4020	FLOOR CLEANOUT. CAST IRON WITH NICKEL BRONZE ADUSTABLE TOP.
GCO	-	-	-	*	SMITH 4237	GROUND CLEANOUT. CAST IRON WITH CAST IRON NON-TILT ADJUSTABLE TOP.

NOTES:
* SEE PLAN FOR SIZING.
** PLUMBING FIXTURES, ACCESSORIES AND INSTALLATION SHALL MEET ALL FEDERAL, STATE, ADA AND LOCAL REQUIREMENTS.

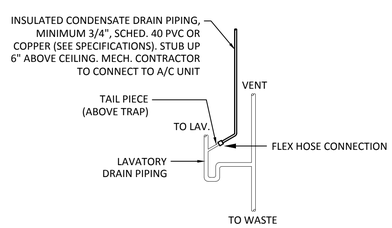

2 CONDENSATE DRAIN - LAVATORY TAILPIECE DETAIL
NOT TO SCALE

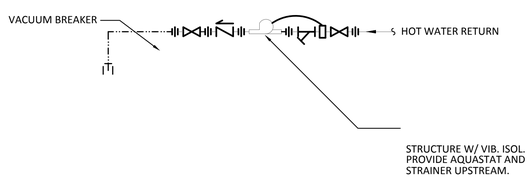

1 RECIRCULATION PUMP DETAIL
NOT TO SCALE

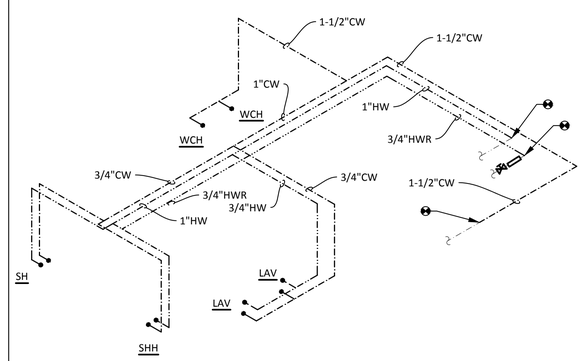

7 WATER RISER
NOT TO SCALE

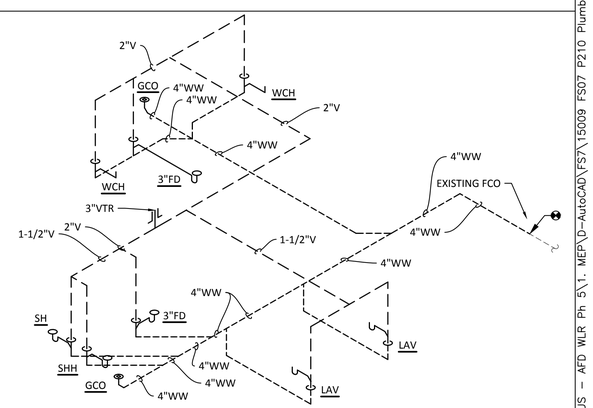

8 WASTE WATER AND VENT RISER
NOT TO SCALE

ENCOTECH ENGINEERING CONSULTANTS
TBPE Firm 1141 | 8500 Bluffstone Cove, Suite B-103 Austin, Texas 78759 | 512.338.1101
Project No.: 15009.M.AUS

STATE OF TEXAS — LYNN C. BROWN — 55248 — LICENSED PROFESSIONAL ENGINEER
08/30/2016

mwm Design Group
305 East Huntland Drive
Suite 200
Austin, Texas 78752
p: 512.453.0767
f: 512.453.1734
TBAE FIRM REGISTRATION NO.: 1452
TBPE FIRM REGISTRATION NO.: F-1416
TBPLS FIRM REGISTRATION NO.: 10065600

NO.	DATE	DESCRIPTION	BY

SCALE IS AS NOTED ON DRAWING

PLUMBING SCHEDULES & DETAILS

CITY OF AUSTIN, AFD WOMEN'S LOCKER RM. ADDN, PHASE V
201 CHICON STREET, AUSTIN, TEXAS, 78702

PLOTTED: 8/30/2016
JOB NO: 023-79D

FS7-P210

File: J:\ACTIVE PROJECTS\MWM\15009.M.AUS – AFD WLR Ph 5\1. MEP\D-AutoCAD\FS7\15009 FS07 P210 Plumb Schedule Details.dwg 24x36

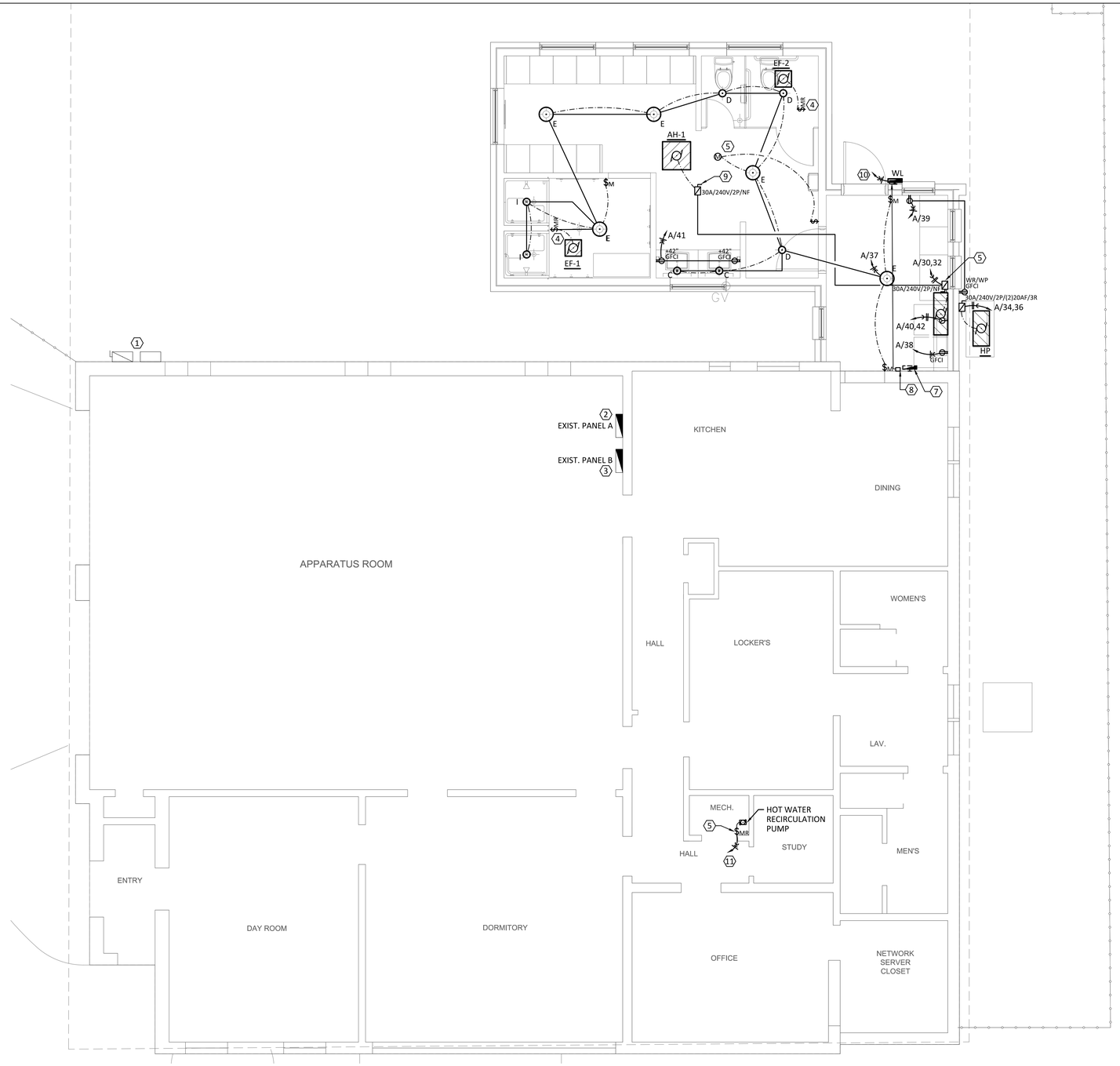

1 ELECTRICAL PLAN

SCALE: 1/4" = 1'-0"

PLAN GENERAL NOTES

A. REFER TO E0.00 FOR GENERAL NOTES.

B. DO NOT ROUTE ANY DUCT & PIPING ABOVE ELECTRICAL PANELS.

C. ESTIMATED LOCATION OF ALL EXISTING ELECTRICAL LAYOUT AND EQUIPMENT LOCATION IS BASED ON SITE OBSERVATION AND EXISTING DRAWINGS. CONTRACTOR SHALL VERIFY SIZE, LOCATION OF ALL EXISTING ELECTRICAL EQUIPMENT, DEVICES AND CONDUITS PRIOR TO BID AND CONSTRUCTION.

D. ALL EXTERIOR LIGHTING FIXTURE SHALL BE CONTROLLED BY PHOTOCELL AND TIMER.

E. FIRE ALARM NOTE: EXTEND EXISTING FIRE ALARM SYSTEM TO NEW ADDITIONAL LOCKER ROOM

KEYED NOTES

1. EXISTING 225A, 120/240V, 1Ø DISCONNECT AND METER ON WALL FROM OVERHEAD ELECTRICAL SERVICE.
2. EXISTING PANEL 'A', 255A, 120/240V, 1Ø, MCB 42-SPACE WITH 10 AVAILABLE SPACES.
3. EXISTING PANEL 'B', 255A, 120/240V, 1Ø, MLO 42-SPACE WITH 28 AVAILABLE SPACES.
4. MOTOR RATED DISCONNECT SWITCH SHALL BE MOUNTED ON STRUCTURAL MEMBER ABOVE ACCESSIBLE CEILING.
5. DISCONNECT SWITCH SHALL BE MOUNTED ON WALL.
6. PROVIDE AND INSTALL CEILING DUAL TECHNOLOGY MOTION DETECTOR WITH WALL MOUNTED OVERDRIVE SWITCH AT DOOR.
7. REMOVE EXISTING EXTERIOR WALL MOUNTED LIGHTING FIXTURE. REMOVE CONDUIT AND WIRING BACK TO NEAREST JUNCTION BOX ABOVE CEILING.
8. RELOCATE EXISTING SECURITY KEY PAD TO WALL ADJACENT TO DOOR AS SHOWN ON PLAN.
9. DISCONNECT SHALL BE MOUNTED ON STRUCTURAL MEMBER ABOVE ACCESSIBLE CEILING.
10. CONNECT TO EXITING EXTERIOR LIGHTING CIRCUIT ABOVE CEILING.
11. CONNECT TO NEAREST EXISTING RECEPTACLE CIRCUIT.

ENCOTECH ENGINEERING CONSULTANTS
TBPE Firm 1141 | 8500 Bluffstone Cove, Suite B-103 Austin, Texas 78759 | 512.338.1101
Project No.: 15009.M.AUS

STATE OF TEXAS SHARON S. BICKFORD 77390 LICENSED PROFESSIONAL ENGINEER
08/30/2016

mwm Design Group
305 East Huntland Drive
Suite 200
Austin, Texas 78752
p: 512.453.0767
f: 512.453.1734
TBAE FIRM REGISTRATION NO.: 1452
TBPE FIRM REGISTRATION NO.: F-1416
TBPLS FIRM REGISTRATION NO.: 10065600

NO.	DATE	DESCRIPTION	BY

SCALE IS AS NOTED ON DRAWING

ELECTRICAL PLAN

CITY OF AUSTIN, AFD WOMEN'S LOCKER RM. ADDN, PHASE V
201 CHICON STREET, AUSTIN, TEXAS, 78702

PLOTTED: 8/30/2016
JOB NO: 023-79D

FS7-E110

File: J:\ACTIVE PROJECTS\MWM\15009.M.AUS – AFD WLR Ph 5\1. MEP\D-AutoCAD\FS7\15009 FS07 E110 Elec Plan.dwg 24x36

LIGHTING FIXTURE SCHEDULE

MARK	MANUFACTURER	MODEL	VOLT	LAMPING QTY	LAMPING WATTAGE	LAMPING TYPE	LAMPING TEMP	DRIVER TYPE	PHYSICAL TYPE	PHYSICAL SIZE	DESCRIPTION
C	BRUCK	223-850-CH-MP / -	120	1	8	LED	2800K	DIMMING DRIVER	PENDANT	12"H x 3.125"SQ	RECTLINEAR FROST GLASS SHADE, 6FT EXTENSION CABLE, CHROME FINISH
D	LITHONIA	FHHL-7-8-30-DNA / -	120	1	9.3	LED	3000K	DIMMING DRIVER	CEILING	7"DIA x 1-/34"H	CEILING MOUNTED, GLASS SHADE WITH SMOOTH NARUAL ALEMINUM FINISH, WET LOCATION
E	LITHONIA	FHHL-13-8-30-DNA / -	120	1	28	LED	3000K	DIMMING DRIVER	CEILING	7"DIA x 1-/34"H	CEILING MOUNTED, GLASS SHADE WITH SMOOTH NARUAL ALEMINUM FINISH, WET LOCATION
H	-	- / -	120	-	-	-	-	-	-	-	STRIP ZEON LIGHT
I	GOTHAM	EVO-30-10-6-DFR-MVOLT-E21	MVOLT	1	10	LED	2700K	0-10V DIMMING DRIVER	CEILING	6-1/4"D x 7-5/8"H	NON-CONDUCTIVE SHOWER DOWNLIGHT
WL	LITHONIA	DSXW1-LED-10C-530-30K-T4M-MVOLT-ELCW-DDBXD / -	MVOLT	1	20	LED	3000K	0-10V DIMMING DRIVER	WALL	13-3/4"W x 4"D	WALL MOUNTED TYPE IV MEDIUM DISTRIBUTION. LED. RATED FOR LOW TEMPERATURE. DARK BRONZE. BATTERY BACK-UP.

1. SEE ARCHITECTURAL REFLECTED CEILING PLAN FOR EXACT LOCATION OF ALL FIXTURES.
2. PROVIDE ENERGY SAVING BALLASTS FOR ALL FIXTURES WHEREVER AVAILABLE.

TOTAL LOAD ANALYSIS

LOAD DESCRIPTION (LOAD IN KVA)	CONNECTED LOAD	DEMAND FACTOR	DEMAND LOAD	NOTES
INTERIOR LIGHTING	5.90	1.00	5.90	
EXTERIOR LIGHTING	1.00	1.00	1.00	
RECEPTACLES	26.47	*	18.24	*FIRST 10 kVA AT 100%, REST AT 50%
HVAC	15.24	1.00	15.24	
EQUIPMENT	12.70	1.00	12.70	
KITCHEN EQUIPMENT	0.00	1.00	0.00	
SPARE	0.00	1.00	0.00	
TOTAL KVA	**61.31**	-	**53.08**	**240/120V, 1 PHASE, 3 WIRE**
TOTAL AMPS	**255 A**	-	**221 A**	

EXISTING 225AMP ELECTRICAL SERVICE IS SUFFICIENT FOR ADDITIONAL NEW BATH ELECTRICAL LOAD

ELECTRICAL PANEL NOTES

1. EXISTING CIRCUIT BREAKER
2. NEW POWER CONNECTION TO EXISTING SPARE CIRCUIT BREAKER.
3. NEW CIRCUIT BREAKER

EXISTING PANELBOARD SCHEDULE A

LOCATION: SEE PLAN
C.B. RATING: EXISTING

NOTE	VOLTAGE	PHASE	WIRE	MOUNTING	SIZE	LUG	TYPE	NOTE
	240/120V	**1**	**3**	**SURFACE**	**225**	**MCB**	**-**	

NOTE	USE and/or AREA SERVED	C/B POLE	CIR	LOAD ØA	LOAD ØC	CIR	C/B POLE	USE and/or AREA SERVED	NOTE
1	EXIST. A/C	40/2	1	3300		2	20/1	-	1
			3	-	3300	4	20/1	EXIST. LIGHTING	1
1	EXIST. RECEPTS	20/1	5	750	1000	6	20/1	EXIST. LIGHTING	1
1	EXIST. LIGHTING	20/1	7	1000	1000	8	20/1	EXIST. GARAGE HEATER	1
1	EXIST. RECEPTS	20/1	9	750	750	10	20/1	EXIST. RECEPTS	1
1	EXIST. RECEPTS	20/1	11	750	500	12	20/1	EXIST. KITCHEN EXHAUST	1
1	EXIST. AIR HANDLER	20/1	13	500	750	14	20/1	EXIST. BATHROOM RECEPTS	1
1	EXIST. RECEPTS	20/1	15	750	750	16	20/1	EXIST. RECEPTS	1
1	EXIST. RECEPTS	20/1	17	750	750	18	20/1	EXIST. RECEPTS	1
1	EXIST. KITCHEN LT & FAN	20/1	19	1000	750	20	20/1	EXIST. RECEPTS	1
1	EXIST. REFRIGERATOR	20/1	21	1200	750	22	20/1	EXIST. RECEPTS	1
1	EXIST. EXTERIOR LIGHT	20/1	23	1000	750	24	20/1	EXIST. RECEPTS	1
1	EXIST. GARAGE LIGHT	20/1	25	1000	750	26	20/1	EXIST. RECEPTS	1
1	EXIST. RECEPTS	20/1	27		750	28	20/1	SPARE	1
1	EXIST. RECEPTS	20/1	29	750	200	30	20/2	NEW AIR HANDLER UNITS	3
1	EXIST. DISPOSAL	20/1	31		800	32			
1	EXIST. BUFFET	30/2	33	1500	200	34	20/2	NEW HEAT PUMP UNIT	3
			35	1620	1500	36			
3	NEW LIGHT	20/1	37	400	1620	38	20/1	NEW CLOTHES WASHER	3
3	NEW RECEPTS	20/1	39		360	40	30/2	NEW CLOTHES DRYER	3
3	NEW BATHROOM RECEPTS	20/1	41	360	2500	42			
	TOTAL LOAD PER PHASE			**21830**	**20280**			**21830 VA / 120 V = 182 A**	

FEEDER OCPD AND CONDUCTOR CALCULATION

LOAD DESCRIPTION (LOAD IN KVA)	CONNECTED LOAD	DEMAND FACTOR	DEMAND LOAD	AMPACITY FACTOR	FEEDER AMPACITY	NOTES
INTERIOR LIGHTING	5.40	1.00	5.40	1.25	6.75	
EXTERIOR LIGHTING	1.00	1.00	1.00	1.25	1.25	
RECEPTACLES	14.97	*	12.49	1.00	12.49	*FIRST 10 kVA AT 100%, REST AT 50%
HVAC	12.24	1.00	12.24	1.00	12.24	
EQUIPMENT	8.50	1.00	8.50	1.00	8.50	
KITCHEN EQUIPMENT	0.00	1.00	0.00	1.00	0.00	
LARGEST MOTOR NONE	-	-	-	0.25	0.00	
SPARE	0.00	1.00	0.00	1.00	0.00	
TOTAL KVA	**42.11**	-	**39.63**	-	**41.23**	
TOTAL AMPS	**175 A**	-	**165 A**	-	**172 A**	

EXISTING PANELBOARD SCHEDULE B

LOCATION: SEE PLAN
C.B. RATING: EXISTING

NOTE	VOLTAGE	PHASE	WIRE	MOUNTING	SIZE	LUG	TYPE	NOTE
	240/120V	**1**	**3**	**SURFACE**	**225**	**MLO**	**-**	

NOTE	USE and/or AREA SERVED	C/B POLE	CIR	LOAD ØA	LOAD ØC	CIR	C/B POLE	USE and/or AREA SERVED	NOTE
1	EXIST. PLYOVENT	30/2	1	2000		2	60/2	EXIST. CIRCUIT	1
			3	3500	2000	4			
1	EXIST. GARAGE RECEPTS	20/1	5	750	3500	6	20/1	EXIST. GARAGE RECEPTS	1
1	EXIST. RECEPTS	20/1	7	750	750	8	20/2	EXIST. MINI SPLIT A/C	1
1	EXIST. EXIT LIGHT	20/1	9	500	1500	10			
1	EXIST. SMOKE DETECTOR	20/1	11	1500	200	12	20/1	EXIST. CTM BLACK BOX	1
	SPACE	-	13		750	14	20/1	EXIST. CTM RECEPTS.	1
	SPACE	-	15		750	16	20/1	EXIST. GARAGE RECEPTS	1
	SPACE	-	17	-		18	-	SPACE	
	SPACE	-	19	-	-	20	-	SPACE	
	SPACE	-	21	-	-	22	-	SPACE	
	SPACE	-	23	-	-	24	-	SPACE	
	SPACE	-	25	-	-	26	-	SPACE	
	SPACE	-	27	-	-	28	-	SPACE	
	SPACE	-	29	-	-	30	-	SPACE	
	SPACE	-	31	-	-	32	-	SPACE	
	SPACE	-	33	-	-	34	-	SPACE	
	SPACE	-	35	-	-	36	-	SPACE	
	SPACE	-	37	-	-	38	-	SPACE	
	SPACE	-	39	-	-	40	-	SPACE	
	SPACE	-	41	-	-	42	-	SPACE	
	TOTAL LOAD PER PHASE			**9750**	**9450**			**9750 VA / 120 V = 81 A**	

FEEDER OCPD AND CONDUCTOR CALCULATION

LOAD DESCRIPTION (LOAD IN KVA)	CONNECTED LOAD	DEMAND FACTOR	DEMAND LOAD	AMPACITY FACTOR	FEEDER AMPACITY	NOTES
INTERIOR LIGHTING	0.50	1.00	0.50	1.25	0.63	
EXTERIOR LIGHTING	0.00	1.00	0.00	1.25	0.00	
RECEPTACLES	11.50	*	10.75	1.00	10.75	*FIRST 10 kVA AT 100%, REST AT 50%
HVAC	3.00	1.00	3.00	1.00	3.00	
EQUIPMENT	4.20	1.00	4.20	1.00	4.20	
KITCHEN EQUIPMENT	0.00	1.00	0.00	1.00	0.00	
LARGEST MOTOR NONE	-	-	-	0.25	0.00	
SPARE	0.00	1.00	0.00	1.00	0.00	
TOTAL KVA	**19.20**	-	**18.45**	-	**18.58**	
TOTAL AMPS	**80 A**	-	**77 A**	-	**77 A**	

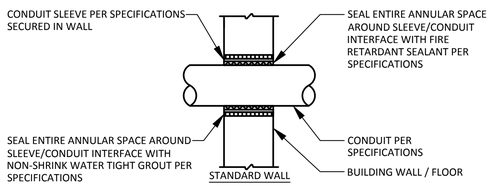

2 WALL PENETRATION DETAIL
NOT TO SCALE

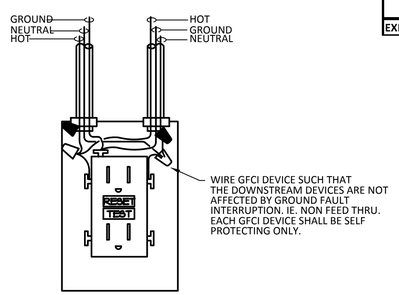

1 GFCI RECEPTACLE WIRING DIAGRAM
NOT TO SCALE

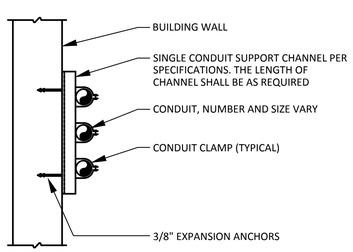

NOTE:
CONDUIT MAY RUN VERTICAL OR HORIZONTAL DEPENDING ON APPLICATION.

4 WALL / CEILING CONDUIT SUPPORT DETAIL
NOT TO SCALE

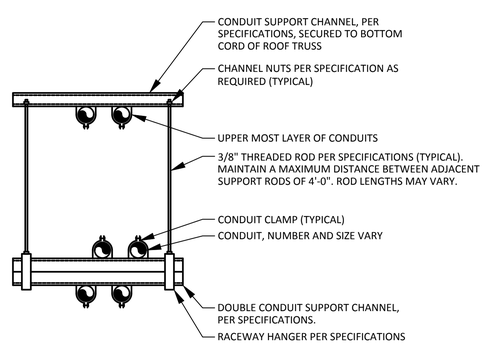

3 CONDUIT SUPPORT DETAIL
NOT TO SCALE

ENCOTECH ENGINEERING CONSULTANTS
TBPE Firm 1141 | 8500 Bluffstone Cove, Suite B-103 Austin, Texas 78759 | 512.338.1101
Project No.: 15009.M.AUS

STATE OF TEXAS SHARON S. BICKFORD 77390 LICENSED PROFESSIONAL ENGINEER
08/30/2016

mwm Design Group
305 East Huntland Drive
Suite 200
Austin, Texas 78752
p: 512.453.0767
f: 512.453.1734
TBAE FIRM REGISTRATION NO.: 1452
TBPE FIRM REGISTRATION NO.: F-1416
TBPLS FIRM REGISTRATION NO.: 10065600

NO.	DATE	DESCRIPTION	BY

SCALE IS AS NOTED ON DRAWING

ELECTRICAL SCHEDULES & DETAILS

CITY OF AUSTIN, AFD WOMEN'S LOCKER RM. ADDN, PHASE V
201 CHICON STREET, AUSTIN, TEXAS, 78702

PLOTTED: 8/30/2016
JOB NO: 023-79D

FS7-E210

File: J:\ACTIVE PROJECTS\MWM\15009.M.AUS – AFD WLR Ph 5\1. MEP\D-AutoCAD\FS7\15009 FS07 E210 Elec Schedule Details.dwg 24x36

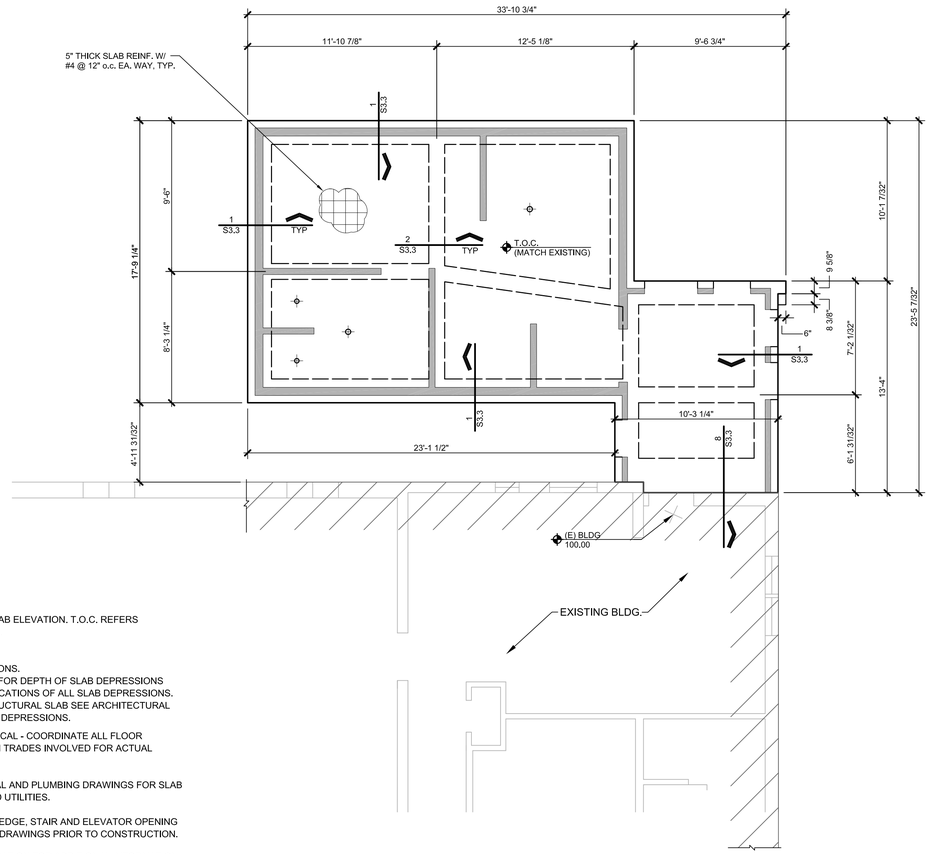

NOTES:

1. FIN. FLR. ELEV. MATCH EXISTING SLAB ELEVATION. T.O.C. REFERS TO TOP OF STRUCTURAL SLAB U.N.O.

2. - INDICATES SLAB DEPRESSIONS.
SEE STRUCTURAL PLANS & DETAILS FOR DEPTH OF SLAB DEPRESSIONS
SEE ARCHITECTURAL FOR EXACT LOCATIONS OF ALL SLAB DEPRESSIONS.
DROPS SHOWN ON PLAN ARE IN STRUCTURAL SLAB SEE ARCHITECTURAL FOR EXACT LOCATIONS OF ALL SLAB DEPRESSIONS.

3. SEE ARCHITECTURAL AND MECHANICAL - COORDINATE ALL FLOOR OPENINGS AND PENETRATIONS WITH TRADES INVOLVED FOR ACTUAL SIZES AND LOCATIONS.

4. REFER TO MECHANICAL, ELECTRICAL AND PLUMBING DRAWINGS FOR SLAB PENETRATIONS AND UNDERGROUND UTILITIES.

5. CONTRACTOR TO VERIFY ALL SLAB EDGE, STAIR AND ELEVATOR OPENING DIMENSIONS WITH ARCHITECTURAL DRAWINGS PRIOR TO CONSTRUCTION.

6. SEE GENERAL NOTES AND SPECIFICATION FOR ADDITIONAL INFORMATION.

7. CONTRACTOR TO VERIFY ALL DIMENSIONS AND EXISTING CONDITIONS AND AND REPORT ANY DISCREPANCY TO THE ARCHITECT AND THE ENGINEER.

8. REFER TO ARCHITECTURAL DRAWINGS FOR EXTENT AND DIMENSIONS OF RAISED OR DEPRESSED SLAB AREAS, SLOPES AND DRAINS.

1'-0" MIN. REMOVAL OF EXISTING FAT CLAYS

1 FOUNDATION PLAN _FS7

SCALE: 1/4" = 1'-0"

JOSE I. GUERRA, INC.
CONSULTING ENGINEERS
2401 S. IH35 SUITE 210
AUSTIN, TEXAS 78741
(512) 445-2090
TBPE FIRM F-3

STATE OF TEXAS
JOHN C. GUERRA
85565
REGISTERED
PROFESSIONAL ENGINEER
8-30-16

mwm Design Group
305 East Huntland Drive
Suite 200
Austin, Texas 78752
p: 512.453.0767
f: 512.453.1734
TBAE FIRM REGISTRATION NO.: 1452
TBPE FIRM REGISTRATION NO.: F-1416
TBPLS FIRM REGISTRATION NO.: 10065600

NO.	DATE	DESCRIPTION	BY

0 1"
The bar above measures one inch on the original drawing. Adjust scales accordingly.

FOUNDATION PLAN

WOMEN'S LOCKER ROOM PHASE V
201 CHICON STREET, AUSTIN, TEXAS 78702

PLOTTED: 8/30/2016
JOB NO: 023-79D

FS7-S2.0

___ OF ___

File: F:\15011_AFD Women's Locker Rm Improvements\DRAWINGS\CAD\15011_FS7_S2.0 FOUNDATION PLAN.dwg 24x36

SHORING NOTES:

1. ALL NEW OPENINGS ARE TO BE FRAMED WITH NEW STEEL BEAMS OR GLULAM BEAMS TO SUPPORT THE ROOF AND CEILING LOADS CURRENTLY SUPPORTED BY EXISTING LOAD BEARING WALLS TO BE DEMOLISHED. REFERENCE ARCHITECTURAL DRAWINGS FOR DEMOLITION DRAWINGS.

2. THE STRUCTURAL DRAWINGS AND SPECIFICATIONS REPRESENT THE FINISHED STRUCTURE. THEY DO NOT INDICATE THE METHODS OF CONSTRUCTION UNLESS SO STATED OR NOTED, THE CONTRACTOR SHALL PROVIDE ALL MEASURES NECESSARY TO PROTECT THE WORKERS AND ALL OTHER PERSONS DURING CONSTRUCTION.

3. THE CONTRACTOR SHALL PROVIDE TEMPORARY ERECTION BRACING AND SHORING OF ALL STRUCTURAL WORK AS REQUIRED FOR STABILITY OF THE STRUCTURE DURING ALL PHASES OF CONSTRUCTION. THE CONTRACTOR SHALL IMMEDIATELY NOTIFY THE ENGINEER OF ANY CONDITION THAT MIGHT ENDANGER THE STABILITY OF THE STRUCTURE OR CAUSE DISTRESS IN THE STRUCTURE.

4. THE EXISTING LOAD BEARING WALLS TO BE DEMOLISHED ARE TO BE SHORED BY THE CONTRACTOR. THE CONTRACTOR'S TEMPORARY SHORING SYSTEM IS TO REMAIN IN PLACE UNTIL ALL NEW BEAMS HAVE BEEN ERECTED AND ATTACHED TO THE EXISTING LOAD BEARING WALLS/ROOF FRAMING PER STRUCTURAL DRAWINGS.

5. THE CONTRACTOR SHALL SUBMIT SHORING PLANS FOR REVIEW BY ARCHITECT/ ENGINEER THE SHORING PLAN SHALL BE DESIGNED AND SEALED BY AN ENGINEER REGISTERED IN THE STATE OF TEXAS.

6. THE SHORING SYSTEM SHOULD JACK THE EXISTING LOAD BEARING WALLS BETWEEN 1/16" AND 1/8" ABOVE THEIR FINAL ELEVATIONS IN ORDER TO INSURE THAT THE ROOF LOADS ARE TRANSFERRED TO THE NEW BEAMS WITHOUT DEFLECTION.

7. THE BUILDING MUST REMAIN OPEN AND OPERATING DURING CONSTRUCTION. ALL WORK MUST BE PERFORMED IN SUCH A MANNER AS TO CAUSE MINIMAL DISRUPTION TO THE NORMAL ACTIVITIES OF THE BUILDING.

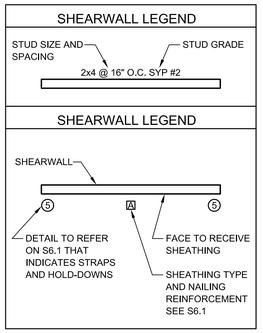

CEILING JOIST NOTES:

1. G.C. SHALL VERIFY DIMENSIONS WITH ACHITECTURAL DRAWINGS AND SHALL NOTIFY ARCH/ ENGINEER OF DISCREPANCIES PRIOR TO CONSTRUCTIONS.
2. FOR INTERIOR AND EXTERIOR WALLS, PROVIDE (2) KING STUDS FOR OPENINGS UP TO 5 FEET IN LENGTH, OR (3) KING STUBS FOR OPENINGS UP TO 9 FEET LENGTH. KING STUD QUANTITY IS TO BE PROVIDED AT EACH SIDE OF OPENING.
3. PROVIDE (1) TRIMMER STUD FOR OPENINGS UP TO 5 FEET LENGTH, (2) TRIMMER STUDS FOR OPENINGS UP TO 10 FEET LENGTH, OR (3) TRIMMER STUDS FOR OPENINGS UP 16 FEET LENGTH. TRIMMER STUD QUANTITY IS TO BE PROVIDED AT EACH SIDE OF OPENING.
4. STUD PACKS SHALL INCLUDE KING AND TRIMMER STUDS AT OPENINGS.
5. TRIMMER AND KING STUD SIZE SHALL MATCH WALL FRAMING STUD SIZE.
6. VERTICAL NAILING BETWEEN TRIMMER STUDS AND BETWEEN KING STUDS SHALL BE 16d AT 16".
7. REFERENCE THIS SHEET FOR LOAD BEARING WALL STUD SIZE & SPACING.
8. REFERENCE SHEET S4.1 FOR SHEAR WALL SCHEDULE.
9. ALL LUMBER TO BE #2 S.Y.P.K.D.
10. ALL CEILING JOISTS TO BE 2x8 AL 16" O.C. UNLESS NOTED OTHERWISE (17'-0" MAX SPAN) REFERENCE IBC FOR OTHER SPANS
11. ALL HEADERS @ 2x4 WALLS TO BE 2-2X PER IBC CODE UNLESS NOTED OTHERWISE. @ 2x6 WALLS TO BE 3-2x PER IBC CODE UNLESS NOTED OTHERWISE.

HEADER SCHEDULE

3-2x8 0'-0" to 5'-0"
3-2x10 5'-1" to 6'-1"
3-2x12 6'-2" to 7'-1"

12. ALL BEAMS LARGER THAN 2-2x6 TO BE SUPPORTED BY BUILT-UP STUD COLUMNS AT 2x6 STUD WALLS AND 2x4 STUD WALLS AT EACH END UNLESS NOTED OTHERWISE AND BLOCKED SOLID TO FOUNDATION. SEE BUILT-UP COLUMN SCHEDULE SHEET S4.0 FOR NUMBER OF BUILT-UP STUD COLUMN; AT EACH END OF BEAMS.
13. DOUBLE 2x8 CEILING JOISTS AS REQUIRED, UNDER HVAC AND/OR WH UNITS LOCATED IN ATTIC. PROVIDE 3/4" PLYWOOD DECK PAD AND CATWALK AS REQUIRED.
14. ALL BEAMS JOB BUILT FROM 3 OR MORE MEMBERS NAILED WITH 10D NAILS @ 6" O.C. TOP AND BOTTOM.
15. ALL GLU-LAMS TO BE DESIGNED WITH STANDARD CAMBER OF R=2000 FT.
16. BRACE TOP FLANGE OF ALL GLULAM, MICROLLAM, OR 2xWOOD BEAMS @ 4'-0" EA SIDE OF CEILING JOISTS WITH 2x6 CONTINUOS STIFFBACK AND 2x4 BRACES
17. STUD WALLS SHALL BE 2x6 @ 16 " O.C., #2 S.Y.P.K.D. UNO. (MAX. HEIGHT 10'-0") STUD WALLS SHALL BE 2x8 @ 16" O.C. , # 2 S.Y.P.K.D. UNO. (HEIGHTS GREATER THAN 10-0" TO 14'-0" MAX.)
18. PROVIDE 2x BLOCKING AT 4'-0" O.C. VERTICALLY AT ALL STUD WALLS.
19. ALL FRAMING TO COMPLY WITH I.B.C. BUILDING CODES, CURRET EDITION.
20. VERIFY ANY CHANGES WITH ENGINEER PRIOR TO CONSTRUCTION.

ROOF FRAMING PLAN

SCALE:

PLAN NOTES:

1. G.C. SHALL VERIFY DIMENSIONS WITH ACHITECTURAL DRAWINGS AND SHALL NOTIFY ARCH/ ENGINEER OF DISCREPANCIES PRIOR TO CONSTRUCTIONS.
2. ALL LUMBER TO BE #2 Y.P.K.D.
3. ALL RAFTERS TO BE 2x8 AT 16"O.C. WITH A MAXIMUM UNBRACED SPAN 18'-0" MEASURED ALONG THE SLOPE, UNLESS NOTED OTHERWISE.
4. ALL HIPS, RIDGES, VALLEYS TO BE 2x10 MAXIMUM. UNBRACED SPAN 8'-0" UNLESS NOTED OTHERWISE. PROVIDE "TEE" BRACES @ 6'-0" O.C. MAX SPACING AT RIDGES. PROVIDE "TEE" BRACES @ 8'-0" O.C. MAX SPACING AT HIPS AND VALLYS. PROVIDE DBL STUDS BELOW EACH "TEE" BRACE AT STUD WALLS
5. PROVIDE 2x8 CONTINUOUS PURLINS WITH 2x8 "TEE" BRACES @ 4'-0" O.C. MAX SPACING PROVIDE DBL STUDS BELOW EACH "TEE" BRACE AT STUD WALLS. NAIL "TEE" BRACE TOGETHER WITH 10D NAILS @ 6" O.C.- TYPICAL.
6. "TEE" BRACES LONGER THAN 8'-0" SHALL BE DBL 2x8 STUD WITH FLANGE PLATE "TEE" BRACE AND BRACED HORIZONTALLY @ 6'-0" O.C. IN TWO DIRECTIONS, NAIL "TEE" BRACE TOGETHER WITH 1O D NAILS @ 6" O.C. - TYPICAL
7. PROVIDE 2x6 MIN. COLLAR TIES AT 4'-0" O.C. AT ALL RIDGES.
8. ALL FRAMING TO COMPLY WITH I.B.C. BUILDING CODE CURRENT EDITION.
9. VERIFY AND CHANGES WITH ENGINEER PRIOR TO CONSTRUCTION.

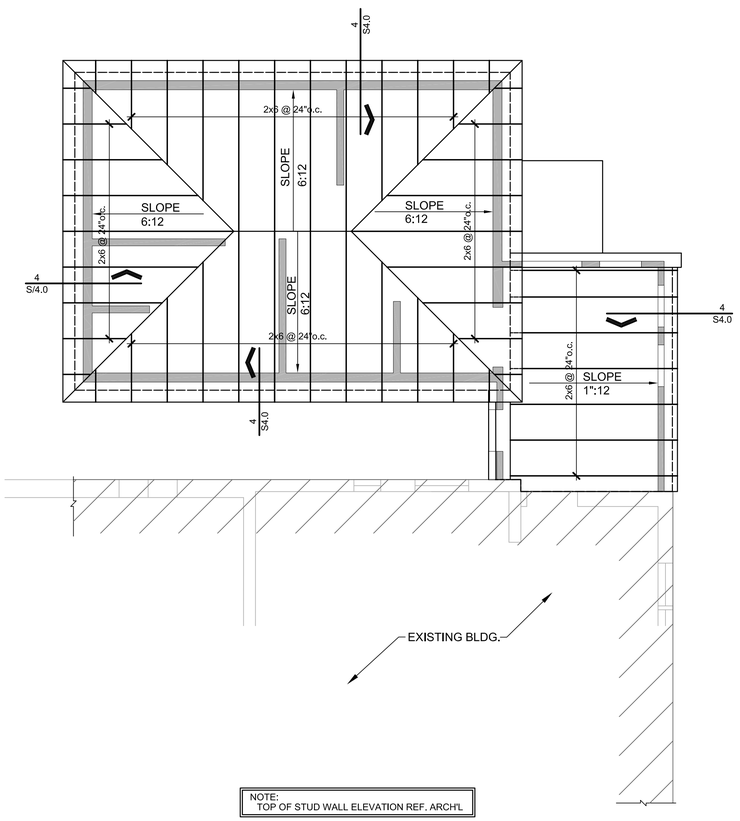

NOTE:
TOP OF STUD WALL ELEVATION REF. ARCH'L

NORTH

2 ROOF FRAMING PLAN _FS7

SCALE: 1/4" = 1'-0"

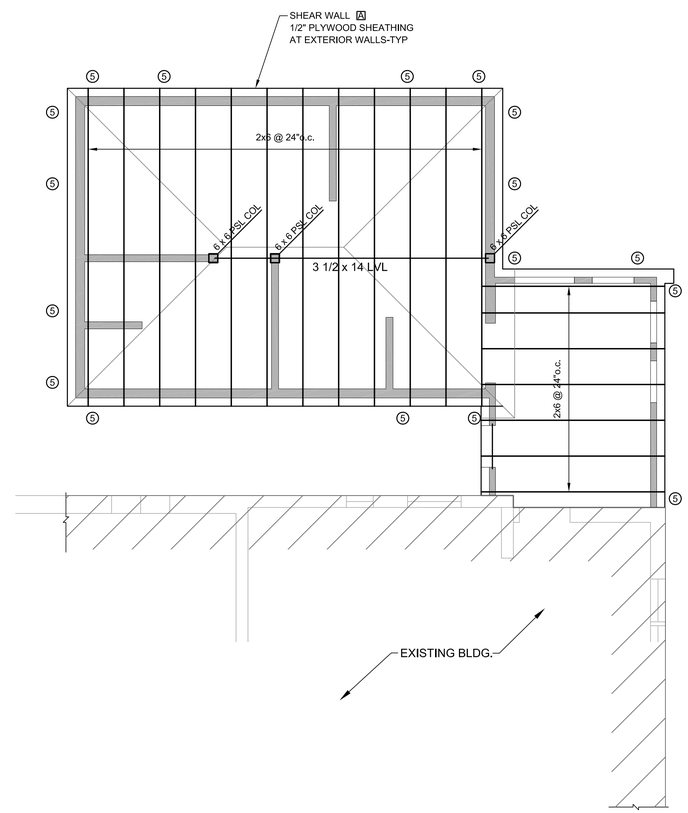

NORTH

1 CEILING FRAMING PLAN _FS7

SCALE: 1/4" = 1'-0"

JOSE I. GUERRA, INC.
CONSULTING ENGINEERS
2401 S. IH35 SUITE 210
AUSTIN, TEXAS 78741
(512) 445-2090
TBPE FIRM F-3

STATE OF TEXAS
JOSE I. GUERRA
No. 85568
LICENSED
PROFESSIONAL ENGINEER
8-30-16

mwm Design Group
305 East Huntland Drive
Suite 200
Austin, Texas 78752
p: 512.453.0767
f: 512.453.1734
TBAE FIRM REGISTRATION NO.: 1452
TBPE FIRM REGISTRATION NO.: F-1416
TBPLS FIRM REGISTRATION NO.: 10065600

NO.	DATE	DESCRIPTION	BY

0 1"
The bar above measures one inch on the original drawing. Adjust scales accordingly.

ROOF & CEILING FRAMING PLAN

WOMEN'S LOCKER ROOM PHASE V
201 CHICON STREET, AUSTIN, TEXAS 78702

PLOTTED: 8/30/2016
JOB NO: 023-79D

FS7-S2.1

___ OF ___

File: F:\15011_AFD Women's Locker Rm Improvements\DRAWINGS\CAD\15011_FS7_S2.1 ROOF FRAMING PLAN.dwg 24x36

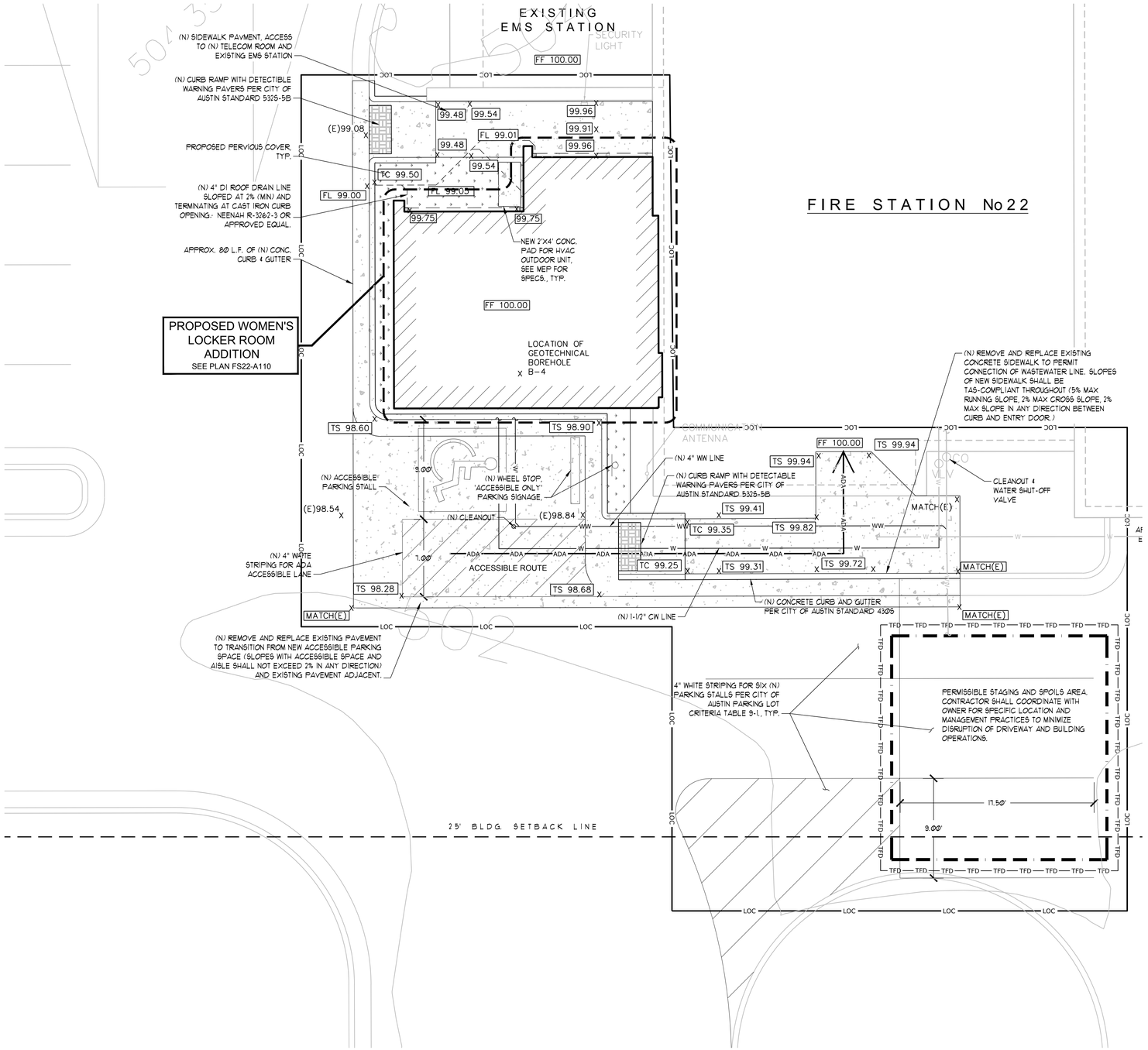

1 FS22-A050 ENLARGED SITE PLAN

SCALE: 1" = 5'

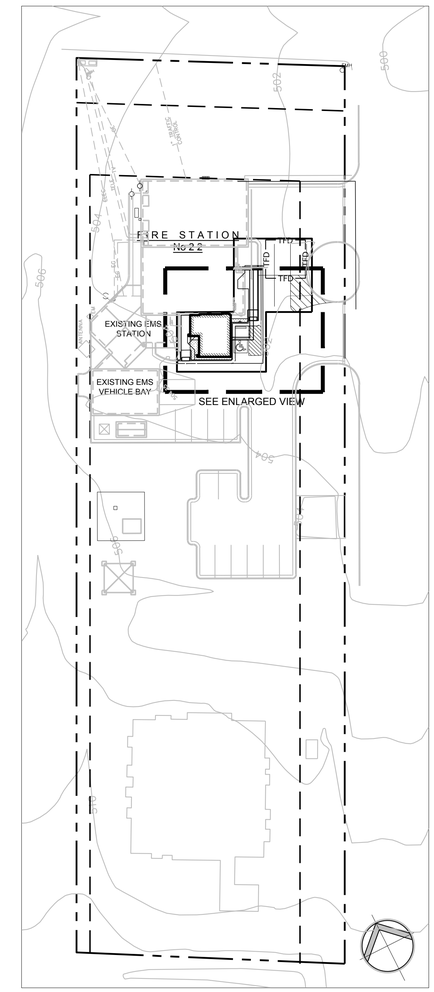

2 FS22-A050 SITE PLAN (KEY PLAN)

SCALE: 1" = 40'

SITE PLAN LEGEND

- PROPERTY LINES
- BUILDING SETBACK LINES
- LOC — LIMITS OF CONSTRUCTION
- 528 — EXISTING TOPOGRAPHIC CONTOUR
- EXISTING TREE & TREE PROTECTION
- EXISTING CHAIN LINK FENCE
- PROPOSED OBJECT
- PROPOSED CURB & GUTTER
- PROPOSED ASHPHALT
- PROPOSED CONCRETE
- EXISTING PERVIOUS AREA
- PROPOSED PERVIOUS AREA
- EXISTING STRUCTURE
- PROPOSED STRUCTURE
- (E)XX.XX — EXISTING SPOT ELEVATION
- XX.XX — PROPOSED SPOT ELEVATION

NOTE

THE LOCATIONS OF EXISTING IMPROVEMENTS SHOWN ON THIS PLAN WERE DERIVED IN PART FROM RECORD DOCUMENTS OF UNKNOWN ACCURACY. THE PRESENCE, LOCATION AND ELEVATION OF EXISTING UTILITIES IN THE FILED SHALL BE VERIFIED BY THE CONTRACTOR BEFORE COMMENCING WORK. IT SHALL BE THE RESPONSIBILITY OF THE CONTRACTOR TO VERIFY EXISTING CONDITIONS WITHIN THE LIMITS OF CONSTRUCTION. FAILURE OF AN EXISTING UTILITY TO APPEAR ON THIS PLAN SHALL NOT RELIEVE THE CONTRACTOR OF RESPONSIBILITY TO PROTECT AND REPAIR, IF DAMAGED, SUCH UTILITIES.

ALL NEW PEDESTRIAN PAVEMENT SHALL BE CONSTRUCTED IN ACCORDANCE WITH THE TEXAS ACCESSIBILITY STANDARDS, AND SHALL MATCH THE ELEVATIONS OF EXISTING IMPROVEMENTS AT POINTS OF INTERSECTION.

FINE GRADING SHALL BE COMPLETED TO DRAIN STORMWATER AWAY FROM BUILDING PERIMETERS, AND SPECIFICALLY AWAY FROM FROM BUILDING ENTRANCES AT THE MAXIMUM SLOPES POSSIBLE GIVEN EXISTING CONDITIONS ADJACENT.

SUMMARY SEQUENCE OF CONSTRUCTION

1. INSTALL SEDIMENTATION AND EROSION CONTROLS AND TREE PROTECTION FENCING AND INITIATE TREE MITIGATION MEASURES (AS REQUIRED).
2. BEGIN SITE CLEARING/CONSTTRUCTION ACTIVITIES.
3. COMPLETE CONSTRUCTION AND BEGIN REVEGETATION OF SITE AND INSTALLATION OF LANDSCAPING.
4. FOLLOWING REVEGETATION, REMOVE THE TEMPORARY EROSION AND SEDIMENTATION CONTROLS AND COMPLETE ANY NECESSARY FINAL REVEGETATION RESULTING FROM REMOVAL OF THE CONTROLS.

	EXISTING	PROPOSED
SITE AREA, S.F.	75,087 SF	75,087 SF
IMPERVIOUS AREA, S.F. (%)	31,799 SF (42.3%)	- 6 SF (42.3%)
NET CHANGE %		- 0.01 %
GROSS FLOOR AREA OF PROPOSED ADDITION		483 SF

BID DOCUMENTS

STATE OF TEXAS — BRANDON EGBERT HAMANN — 100107368 — LICENSED PROFESSIONAL ENGINEER — MWM DesignGroup, Inc. F-1416 — 8-30-16

mwm DesignGroup
305 East Huntland Drive
Suite 200
Austin, Texas 78752
p: 512.453.0767
f: 512.453.1734
TBAE FIRM REGISTRATION NO.: 1452
TBPE FIRM REGISTRATION NO.: F-1416
TBPLS FIRM REGISTRATION NO.: 10065600

NO.	DATE	DESCRIPTION	BY

0 — 1"
The bar above measures one inch on the original drawing. Adjust scales accordingly.

SITE PLAN

CITY OF AUSTIN, AFD WOMEN'S LOCKER RM. ADDN, PHASE V
5309 EAST RIVERSIDE DRIVE, AUSTIN, TEXAS 78741

PLOTTED: 9/7/2016
JOB NO: 023-79D

FS22
C050

File: Y:\023-79D_WomensLockerRooms\CAD\Fire Station 22\Sheets\FS22-A050 SITE PLAN.dwg 24x36

PROJECT DATA: FIRE STATION 22

GOVERNING CODES

2012 INTERNATIONAL ENERGY CONSERVATION CODE
2012 INTERNATIONAL BUILDING CODE
2012 INTERNATIONAL MECHANICAL CODE
2012 UNIFORM PLUMBING CODE (AS AMENDED BY COA)
2012 NATIONAL ELECTRIC CODE (AS AMENDED BY COA)
2010 ADA STANDARDS FOR ACCESSIBLE DESIGN
2012 TEXAS ACCESSIBILITY STANDARDS

BUILDING CODE DATA – IBC CHAPTER 3

OCCUPANCY GROUP

B THE USE OF A BUILDING OR STRUCTURE, OR A PORTION THEREOF, FOR OFFICE, PROFESSIONAL OR SERVICE–TYPE TRANSACTIONS, INCLUDING STORAGE OF RECORDS AND ACCOUNTS.

GENERAL BUILDING LIMITATIONS – IBC CHAPTER 5

ALLOWABLE HEIGHT AND BUILDING AREA (TABLE 503)

TYPE VB (B OCCUPANCY)
AREA (SF) 9,000
HEIGHT 2 STORY

FRONTAGE INCREASE (If) = [F/P–0.25]W/30 = 25
SPRINKLER INCREASE (Is) = 0

ALLOWABLE AREA (B) = At+(AtIf/100)+(AtIs/100) = 11,250

ACTUAL AREA B (SF) 4,747
ACTUAL AREA B 1 STORY

CONSTRUCTION TYPE – IBC CHAPTER 6

FIRE RESISTIVE REQUIREMENTS FOR BUILDING ELEMENTS (TYPE VB–TABLE 601)

BEARING WALLS	
INTERIOR	NO REQUIREMENTS
EXTERIOR	NO REQUIREMENTS
NONBEARING WALLS	
EXTERIOR	SEE BELOW
NONBEARING WALLS	
INTERIOR	NO REQUIREMENTS
FLOOR CONSTRUCTION	NO REQUIREMENTS
ROOF CONSTRUCTION	NO REQUIREMENTS

EXTERIOR WALL/OPENING PROTECTION (TABLE 602 AND 704.8)
EXTERIOR WALLS 1 LESS THAN 10 FEET
NO RATING 10 FEET OR GREATER

INTERIOR FINISHES – IBC CHAPTER 8

FLAME SPREAD RATINGS OF MATERIALS AND FINISHES (TABLE 803.4)

CLASS A: FLAME SPREAD 0–25, SMOKE DEVELOPED 0–450
CLASS B: FLAME SPREAD 26–75, SMOKE DEVELOPED 0–450
CLASS C: FLAME SPREAD 76–200, SMOKE DEVELOPED 0–450

VERTICAL EXITS AND PASSAGEWAYS	CLASS B
EXIT ACCESS CORRIDORS	CLASS B
ROOMS AND ENCLOSED SPACES	CLASS C

OCCUPANCY LOAD AND MEANS OF EGRESS –

	AREA (sqft.)	OCCUPANT LOAD FACTOR (sqft.)	OCCUPANTS	REQUIRED EGRESS WIDTH PER OCCUPANT	REQUIRED EGRESS WIDTH
LOCKER ROOM	472	–	–	–	–
TOTAL			–	–	–
EGRESS WIDTH PROVIDED (1 DOOR)					32

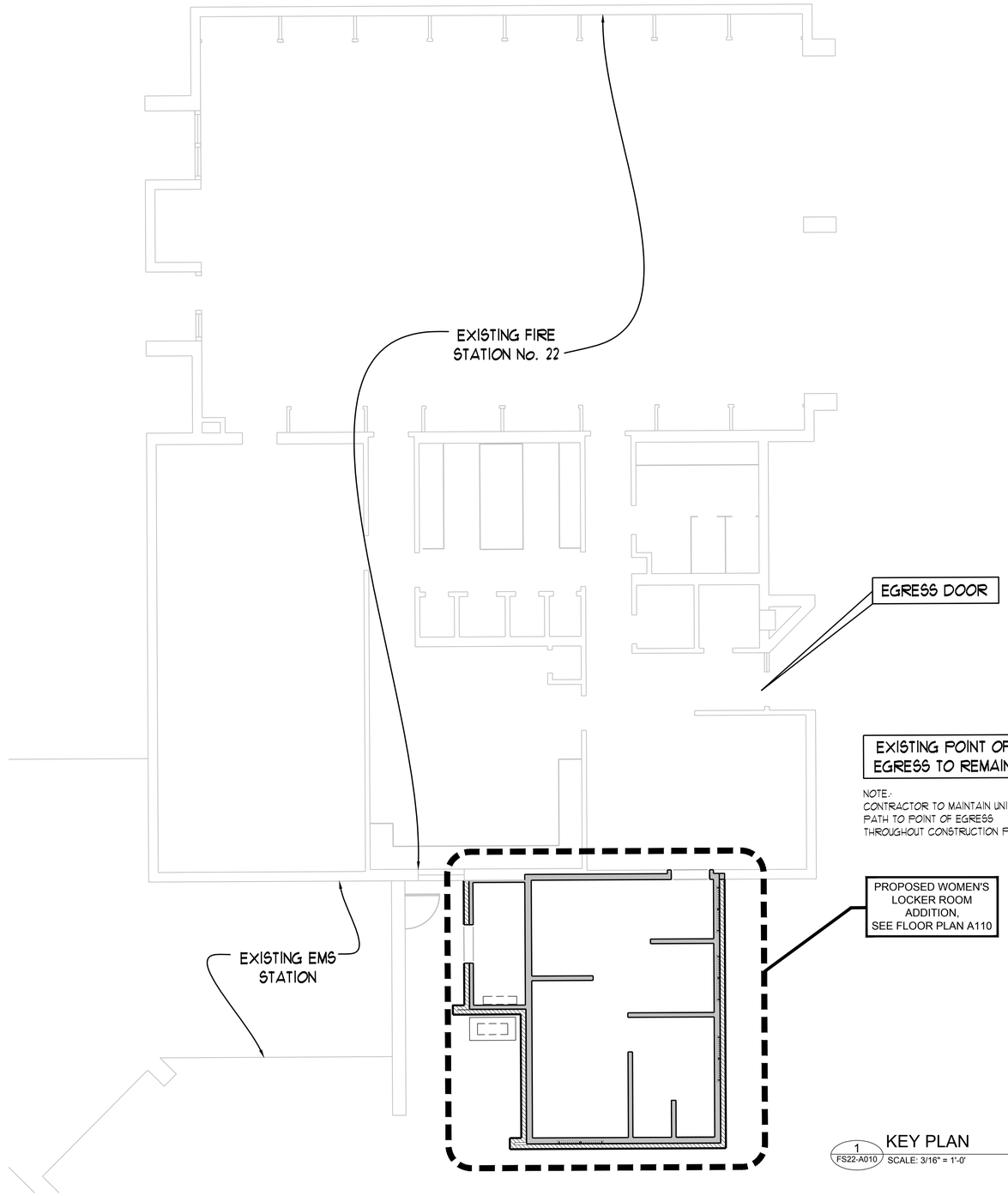

1 FS22-A010 KEY PLAN
SCALE: 3/16" = 1'-0'

BID DOCUMENTS

REGISTERED ARCHITECT MICHAEL OWEN HARRISON 18348 STATE OF TEXAS
8-30-2016

mwm Design Group
305 East Huntland Drive
Suite 200
Austin, Texas 78752
p: 512.453.0767
f: 512.453.1734

TBAE FIRM REGISTRATION NO.: 1452
TBPE FIRM REGISTRATION NO.: F-1416
TBPLS FIRM REGISTRATION NO.: 10065600

NO.	DATE	DESCRIPTION	BY

0 1"
The bar above measures one inch on the original drawing. Adjust scales accordingly.

CODE SUMMARY & KEY PLAN

CITY OF AUSTIN, AFD WOMEN'S LOCKER RM. ADDN, PHASE V
5309 EAST RIVERSIDE DRIVE, AUSTIN, TEXAS 78741

PLOTTED: 8/30/2016
JOB NO: 023-79D

FS22-A010

File: Y:\023-79D_Womens_LockerRooms\CAD\Fire Station 22\Sheets\FS22-A010 CODE.dwg 24x36

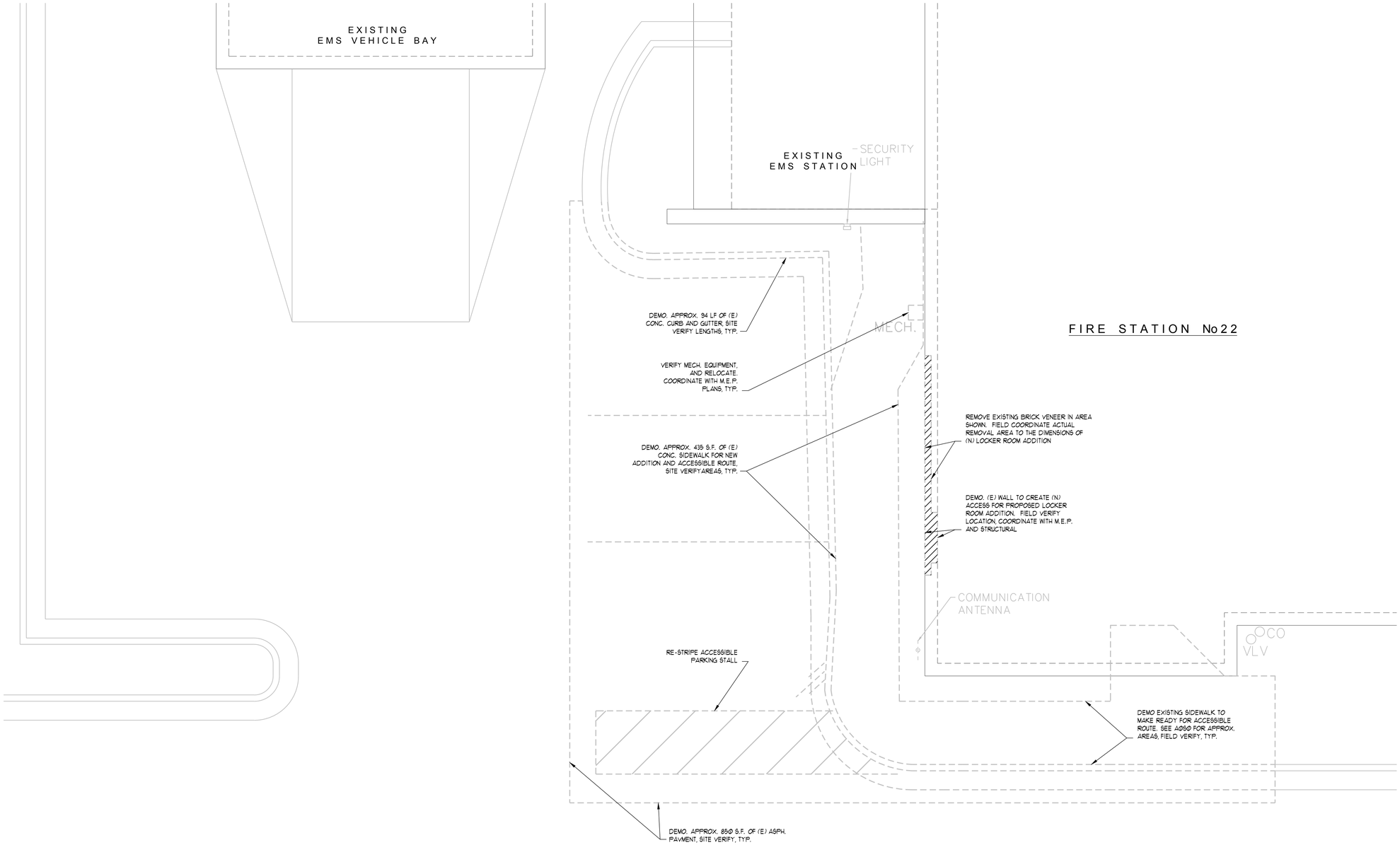

1
FS22-A100
DEMOLITION PLAN
SCALE: 1/4" = 1'-0"

DEMOLITION LEGEND

- PROPERTY LINES
- BUILDING SETBACK LINES
- EXISTING TO REMAIN
- EXISTING OVERHEAD OBJECT
- EXISTING STRUCTURE
- EXISTING TO REMOVE
- EXISTING TO REMOVE

BID DOCUMENTS

REGISTERED ARCHITECT W. OWEN HARTNETT 18348 STATE OF TEXAS

mwm Design Group

305 East Huntland Drive
Suite 200
Austin, Texas 78752
p: 512.453.0767
f: 512.453.1734

TBAE FIRM REGISTRATION NO.: 1452
TBPE FIRM REGISTRATION NO.: F-1416
TBPLS FIRM REGISTRATION NO.: 10065600

NO.	DATE	DESCRIPTION	BY

0 1"
The bar above measures one inch on the original drawing. Adjust scales accordingly.

DEMOLITION PLAN

CITY OF AUSTIN, AFD WOMEN'S LOCKER RM. ADDN, PHASE V
5309 EAST RIVERSIDE DRIVE, AUSTIN, TEXAS 78741

PLOTTED: 8/30/2016
JOB NO: 023-79D

FS22-A100

File: Y:\023-79D_WomensLockerRooms\CAD\Fire Station 22\Sheets\FS22-A100 DEMO PLAN.dwg 24x36

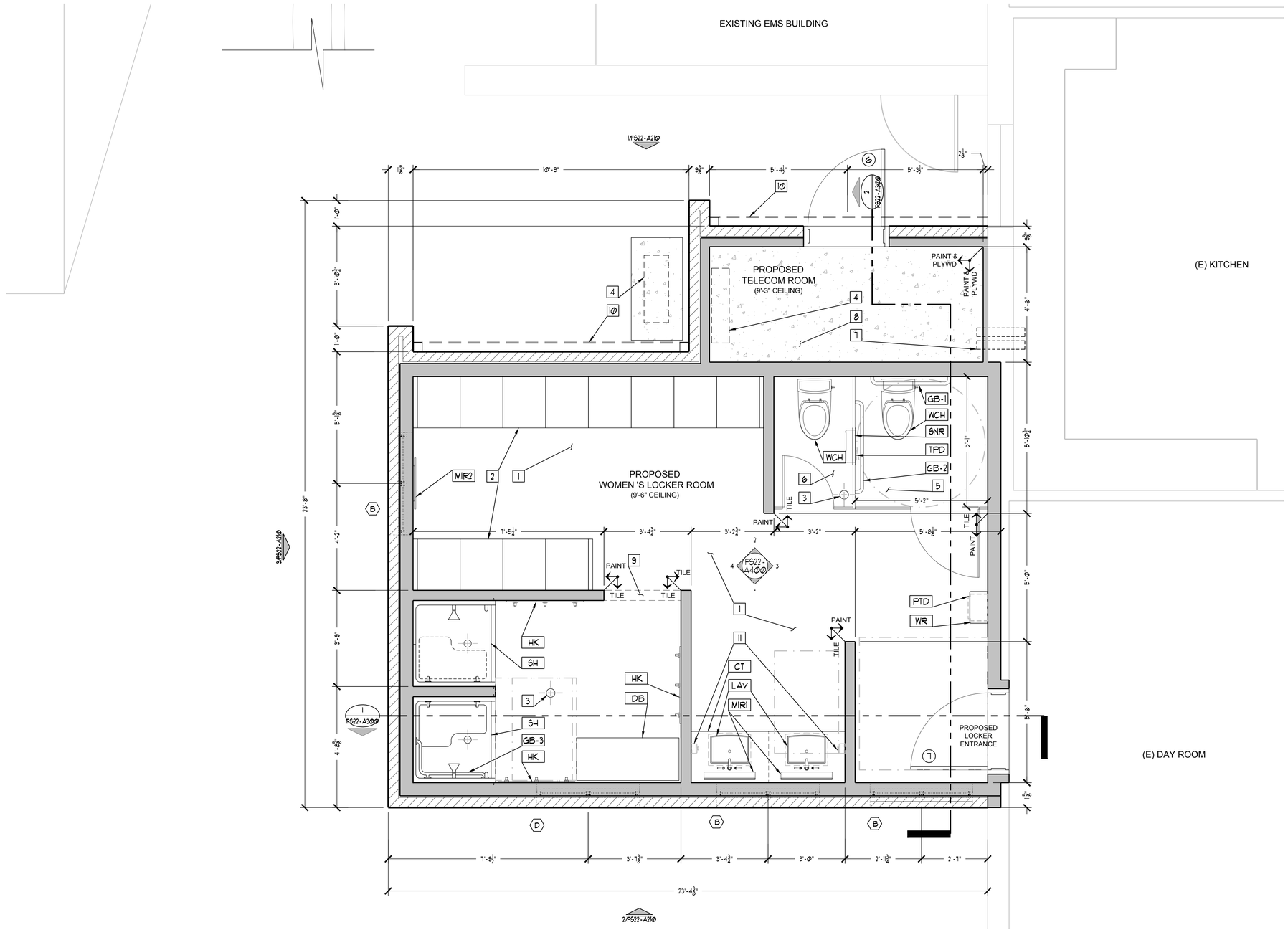

1 FS22-A110 FLOOR PLAN
SCALE: 1/2" = 1'-0'

LEGEND

- PROPERTY LINES
- BUILDING SETBACK LINES
- EXISTING TO REMAIN
- EXISTING OVERHEAD OBJECT
- EXISTING TO REMOVE
- EXISTING STRUCTURE
- PROPOSED STRUCTURE
- PROPOSED OBJECT
- TILE / PAINT — PROPOSED WALL FINISH TYPE
- PROPOSED FLOOR DRAIN
- A.D.A. CLEAR FLOOR AREA
- PROPOSED GLAZING AT CLERESTORY
- PROPOSED GLAZING
- PROPOSED BRICK VENEER WALL
- PROPOSED FRAME WALL
- PROPOSED WALL INFILL, AS NOTED
- PROPOSED CMU BLOCK WALL
- PROPOSED CONCRETE
- PROPOSED FLOOR TILE
- PROPOSED PLYWOOD

CALL-OUT KEY

1. (N) NON-SLIP CERAMIC TILE FLOORING
2. (N) 20"x24"x60" HOLMAN LOCKERS OR APPROVED EQUAL
3. (N) FLOOR DRAIN, SLOPE TO DRAIN, REFER TO M.E.P. & STRUCTURAL FOR SPECS.
4. (N) MINI SPLIT AC WALL MOUNTED UNIT AND HEAT PUMP OUTDOOR UNIT (ON 2'x4' CONC. SLAB). SEE MEP SPECS
5. (N) ACCESSIBLE TOILET STALL
6. (N) STANDARD TOILET STALL
7. INSTALL (2) 4" PVC CONDUITS FOR NETWORK CABLING
8. (N) BROOM FINISHED CONCRETE FLOOR
9. (N) TILE INSIDE 30"x10" OPENING
10. (N) ROOF OVERHANG WITH GUTTER AND DOWNSPOUTS
11. SOAP DISPENSER SUPPLIED BY OWNER, TYP.

BID DOCUMENTS

REGISTERED ARCHITECT — JOHN OWEN HARRISON — 18348 — STATE OF TEXAS

mwm Design Group
305 East Huntland Drive
Suite 200
Austin, Texas 78752
p: 512.453.0767
f: 512.453.1734
TBAE FIRM REGISTRATION NO.: 1452
TBPE FIRM REGISTRATION NO.: F-1416
TBPLS FIRM REGISTRATION NO.: 10065600

NO.	DATE	DESCRIPTION	BY

0 — 1"
The bar above measures one inch on the original drawing. Adjust scales accordingly.

FLOOR PLAN

CITY OF AUSTIN, AFD WOMEN'S LOCKER RM. ADDN, PHASE V
5309 EAST RIVERSIDE DRIVE, AUSTIN, TEXAS 78741

PLOTTED: 8/30/2016
JOB NO: 023-79D

FS22-A110

File: Y:\023-79D_WomensLockerRooms\CAD\Fire Station 22\Sheets\FS22-A110 FLOOR PLAN.dwg 24x36

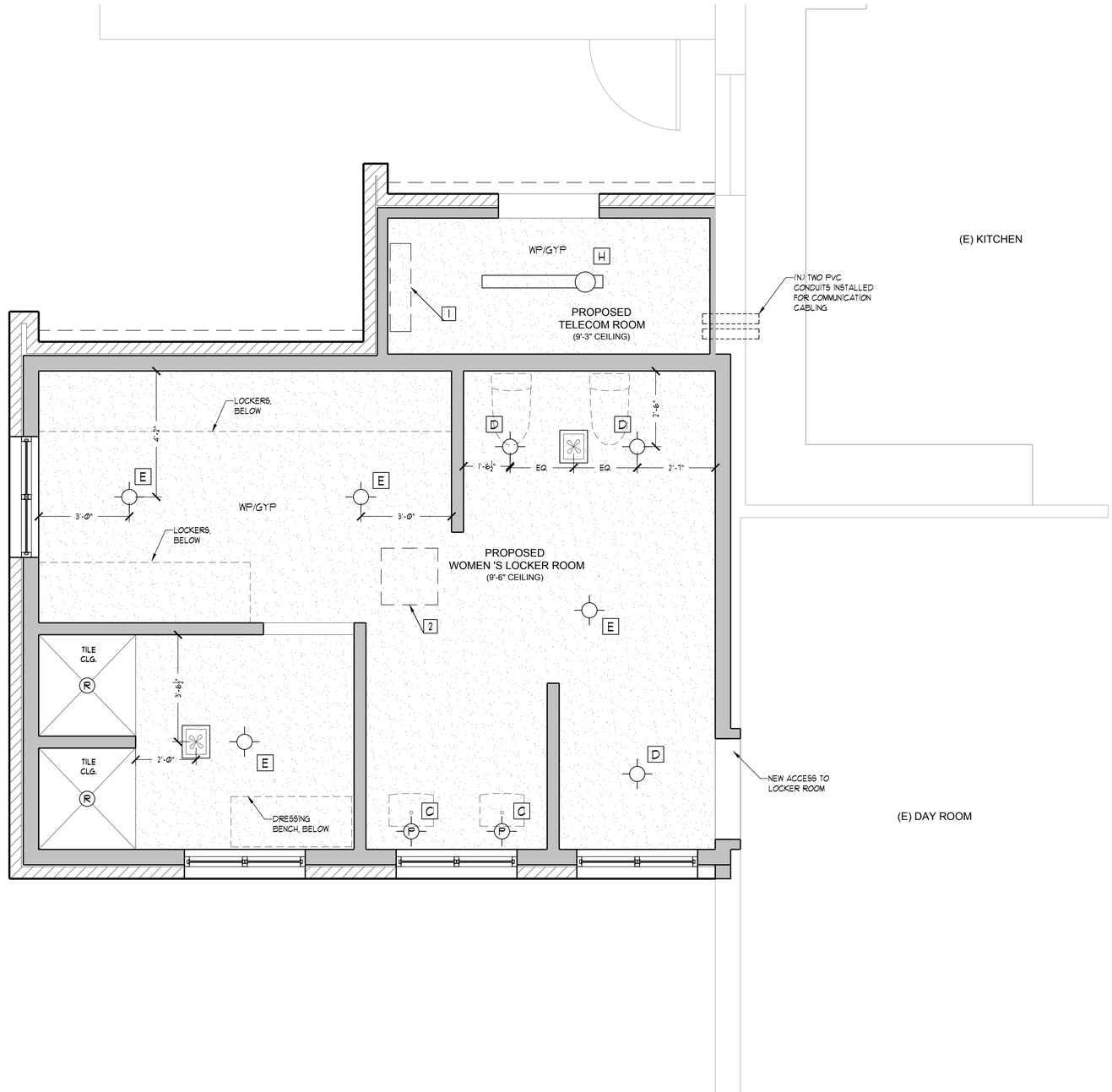

1 FS22-A120 REFLECTED CEILING PLAN

SCALE: 1/2" = 1'-0"

RCP LEGEND

- GYPSUM WALLBOARD
- 2'x2' LAY-IN ACOUSTICAL TILE CEILING GRID
- PLYWOOD SURFACE
- 1x WOOD PLANKS/TAG
- 2x WOOD FRAME INFILL, INCLUDES:- INSULATION, GYP. BD., TAPE, FLOAT, CHALK ALL JOINTS/GAPS & PAINT
- OPEN TO STRUCTURE ABOVE
- FLUSH MOUNT CEILING LIGHT
- PENDANT CEILING LIGHT
- RECESSED CEILING MOUNT LIGHT
- (2) 4 FT. NEON BALLAST FLUSH MOUNT WORK LIGHT, W/ MTL PROTECTIVE COVER
- RECESSED MOUNTED EXHAUST FAN
- CEILING FAN WITH LIGHT
- WALL SCONCE
- SURFACE MOUNT UNDER-CABINET LIGHT

CALL-OUT KEY

1. (N) MINI SPLIT AC WALL MOUNTED UNIT AND HEAT PUMP OUTDOOR UNIT (ON 2'x4' CONC. SLAB), SEE MEP SPECS
2. CEILING FLUSH MOUNT HVAC CASSETTE, 22 1/2"X 22 1/2", SEE MEP DRAWINGS FOR SPECS., TYP.
3. LIGHTING FIXTURE SCHEDULE FS/EMS0-A020, DETAIL No. 3

BID DOCUMENTS

REGISTERED ARCHITECT RICHARD W. OWEN HARTNETT 18348 STATE OF TEXAS

mwm Design Group
305 East Huntland Drive
Suite 200
Austin, Texas 78752
p: 512.453.0767
f: 512.453.1734
TBAE FIRM REGISTRATION NO.: 1452
TBPE FIRM REGISTRATION NO.: F-1416
TBPLS FIRM REGISTRATION NO.: 10065600

NO.	DATE	DESCRIPTION	BY

0 1"

The bar above measures one inch on the original drawing. Adjust scales accordingly.

REFLECTED CEILING PLAN

CITY OF AUSTIN, AFD WOMEN'S LOCKER RM. ADDN, PHASE V
5309 EAST RIVERSIDE DRIVE, AUSTIN, TEXAS 78741

PLOTTED: 8/30/2016
JOB NO: 023-79D

FS22-A120

File: Z:\023-79D_WomensLockerRooms\CAD\Fire Station 22\Sheets\FS22-A120 RCP PLAN.dwg 24x36

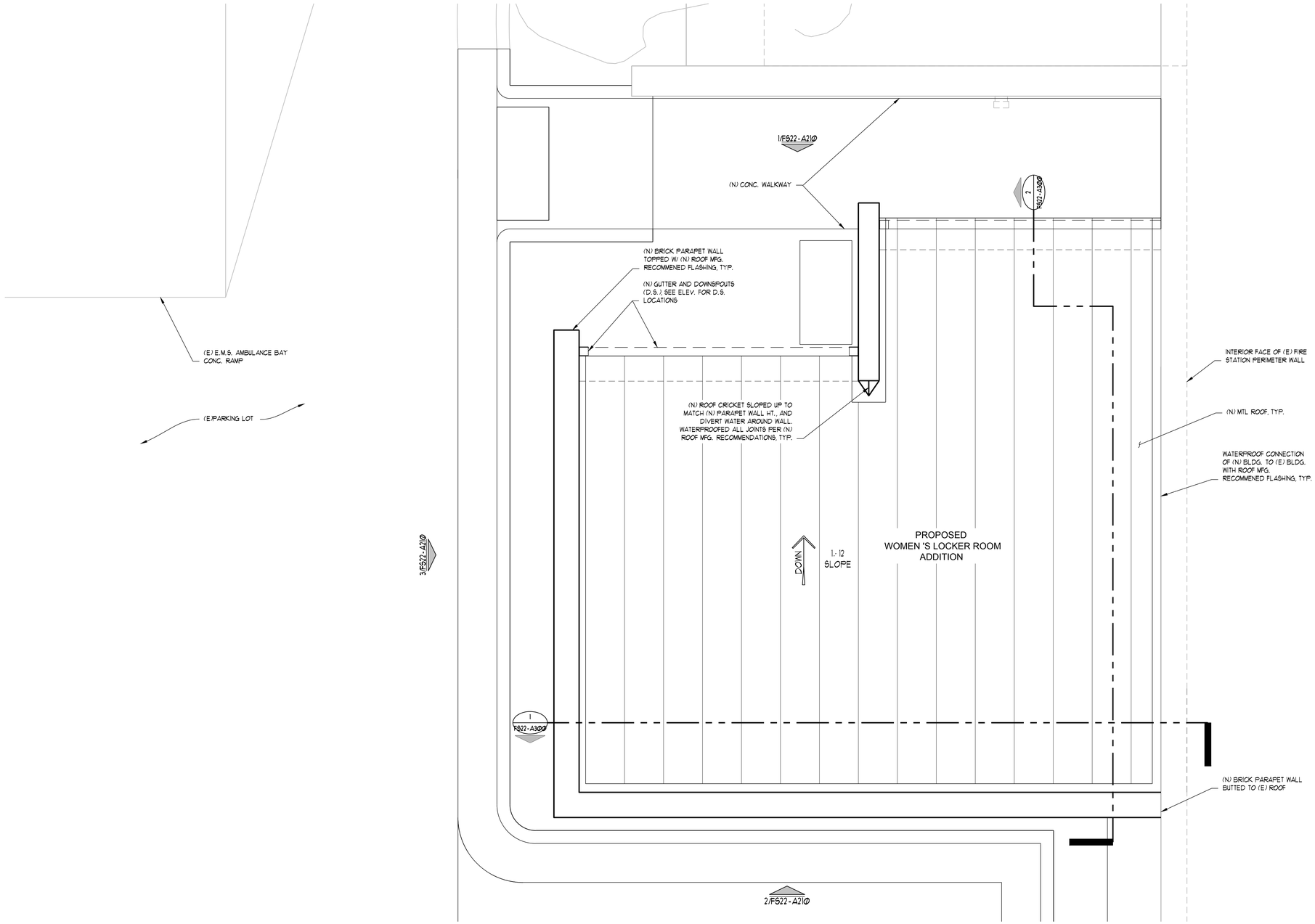

1 FS22-A130 ROOF PLAN
SCALE: 1/2" = 1'-0"

BID DOCUMENTS

REGISTERED ARCHITECT
W. OWEN HARRISON
18348
STATE OF TEXAS

mwm Design Group
305 East Huntland Drive
Suite 200
Austin, Texas 78752
p: 512.453.0767
f: 512.453.1734

TBAE FIRM REGISTRATION NO.: 1452
TBPE FIRM REGISTRATION NO.: F-1416
TBPLS FIRM REGISTRATION NO.: 10065600

NO.	DATE	DESCRIPTION	BY

0 1"
The bar above measures one inch on the original drawing. Adjust scales accordingly.

ROOF PLAN

CITY OF AUSTIN, AFD WOMEN'S LOCKER RM. ADDN, PHASE V
5309 EAST RIVERSIDE DRIVE, AUSTIN, TEXAS 78741

PLOTTED: 8/30/2016
JOB NO: 023-79D

FS22-A130

File: Y:\023-79D_WomensLockerRooms\CAD\Fire Station 22\Sheets\FS22-A130 ROOF PLAN.dwg 24x36

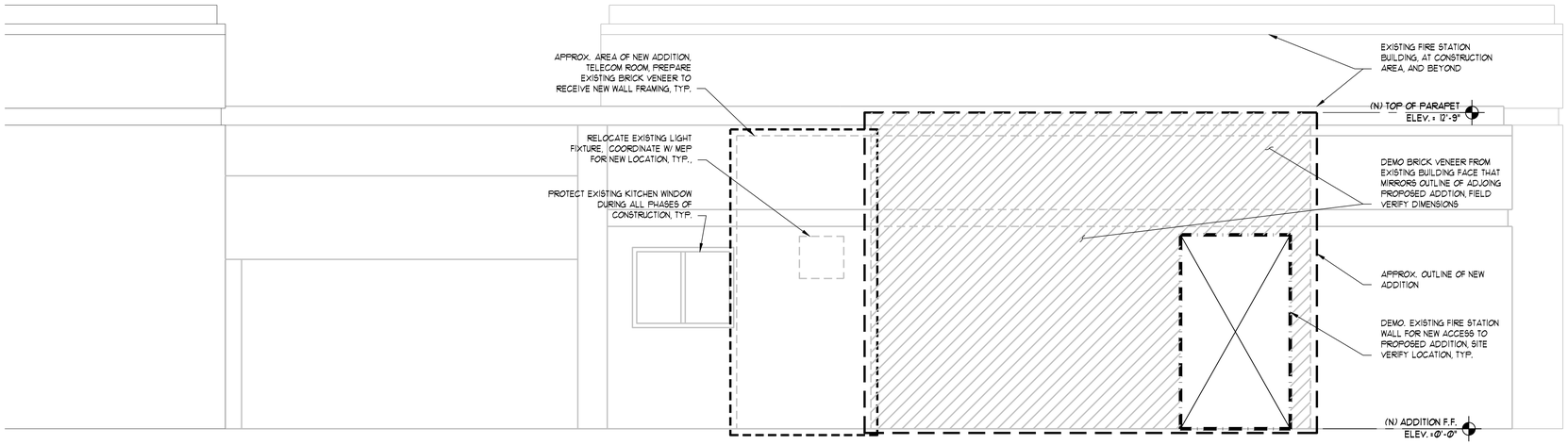

1 FS22-A200 WEST DEMO. ELEVATION

SCALE: 3/8" = 1'-0"

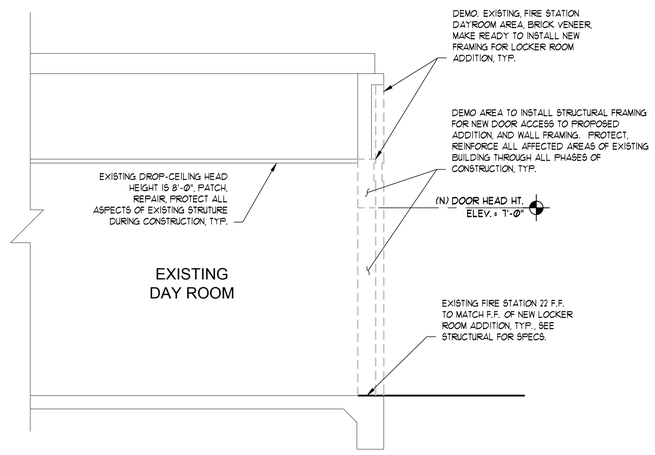

2 FS22-A200 NORTH DEMO. SECTION

SCALE: 3/8" = 1'-0"

BID DOCUMENTS

REGISTERED ARCHITECT JOHN W. OWEN HARGROVE 18348 STATE OF TEXAS

mwm Design Group

305 East Huntland Drive
Suite 200
Austin, Texas 78752
p: 512.453.0767
f: 512.453.1734

TBAE FIRM REGISTRATION NO.: 1452
TBPE FIRM REGISTRATION NO.: F-1416
TBPLS FIRM REGISTRATION NO.: 10065600

NO.	DATE	DESCRIPTION	BY

0 1"

The bar above measures one inch on the original drawing. Adjust scales accordingly.

DEMOLITION ELEVATIONS

CITY OF AUSTIN, AFD WOMEN'S LOCKER RM. ADDN, PHASE V
5309 EAST RIVERSIDE DRIVE, AUSTIN, TEXAS 78741

PLOTTED: 8/30/2016
JOB NO: 023-79D

FS22-A200

File: Y:\023-79D_WomensLockerRooms\CAD\Fire Station 22\Sheets\FS22-A200 DEMO ELEV.dwg 24x36

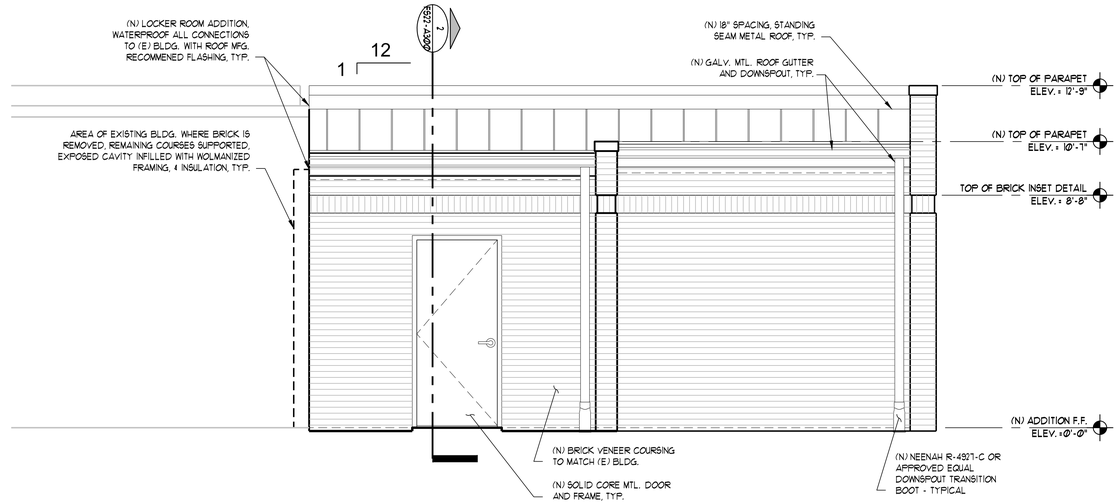

1 FS22-A210 WEST BUILDING ELEVATION

SCALE: 3/8" = 1'-0"

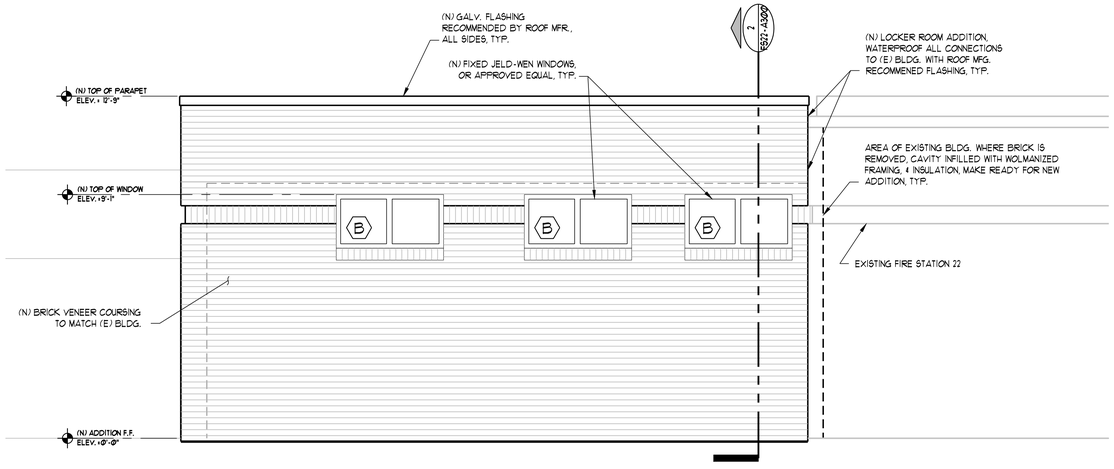

2 FS22-A210 EAST BUILDING ELEVATION

SCALE: 3/8" = 1'-0"

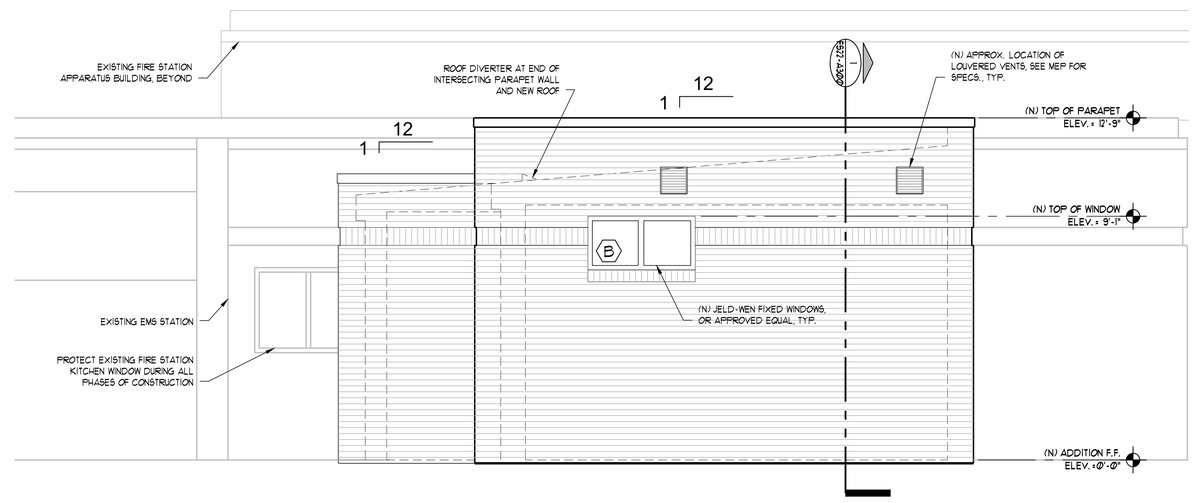

3 FS22-A210 SOUTH BUILDING ELEVATION

SCALE: 3/8" = 1'-0"

BID DOCUMENTS

REGISTERED ARCHITECT JOHN OWEN HARRISON 18348 STATE OF TEXAS

mwm Design Group
305 East Huntland Drive
Suite 200
Austin, Texas 78752
p: 512.453.0767
f: 512.453.1734

TBAE FIRM REGISTRATION NO.: 1452
TBPE FIRM REGISTRATION NO.: F-1416
TBPLS FIRM REGISTRATION NO.: 10065600

NO.	DATE	DESCRIPTION	BY

0 1"

The bar above measures one inch on the original drawing. Adjust scales accordingly.

BUILDING ELEVATIONS

CITY OF AUSTIN, AFD WOMEN'S LOCKER RM. ADDN, PHASE V
5309 EAST RIVERSIDE DRIVE, AUSTIN, TEXAS 78741

PLOTTED: 8/30/2016
JOB NO: 023-79D

FS22-A210

File: Y:\023-79D_WomensLockerRooms\CAD\Fire Station 22\Sheets\FS22-A210 BLDG ELEV.dwg 24x36

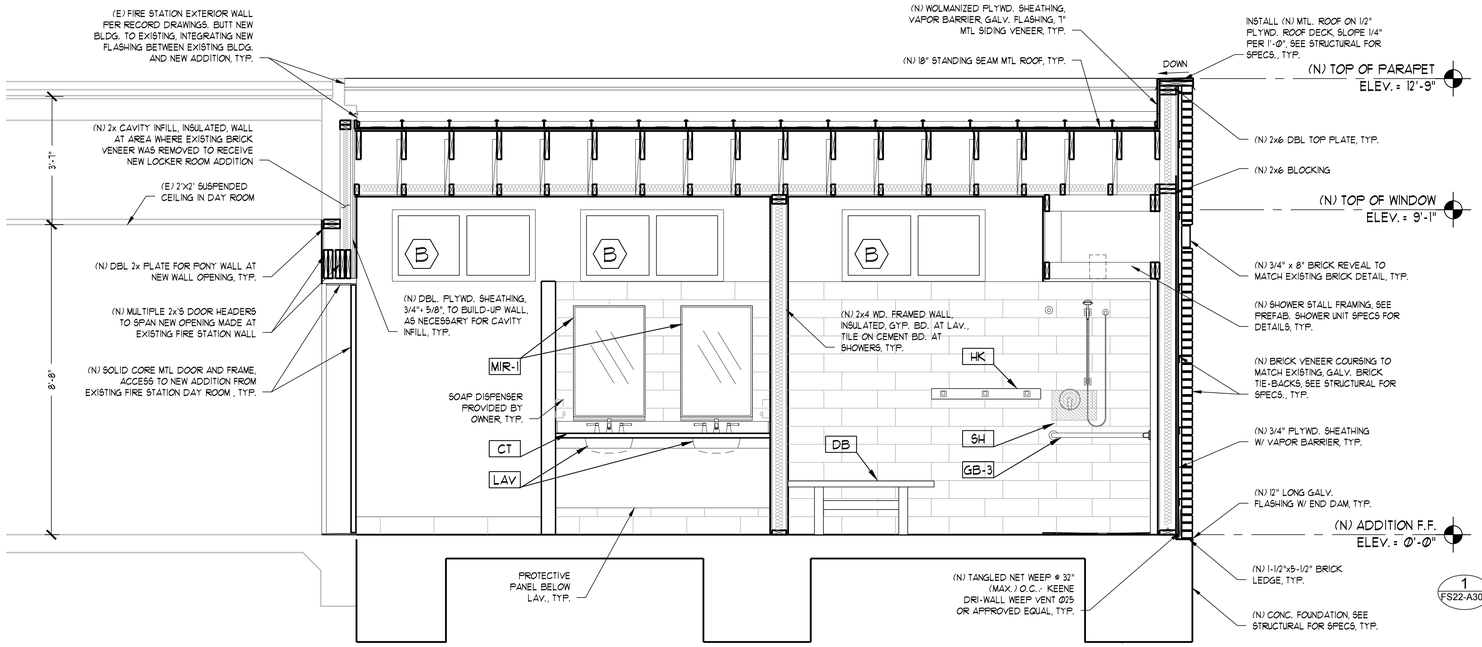

1 FS22-A300 EAST BUILDING SECTION / INT. ELEV.
SCALE: 1/2" = 1'-0"

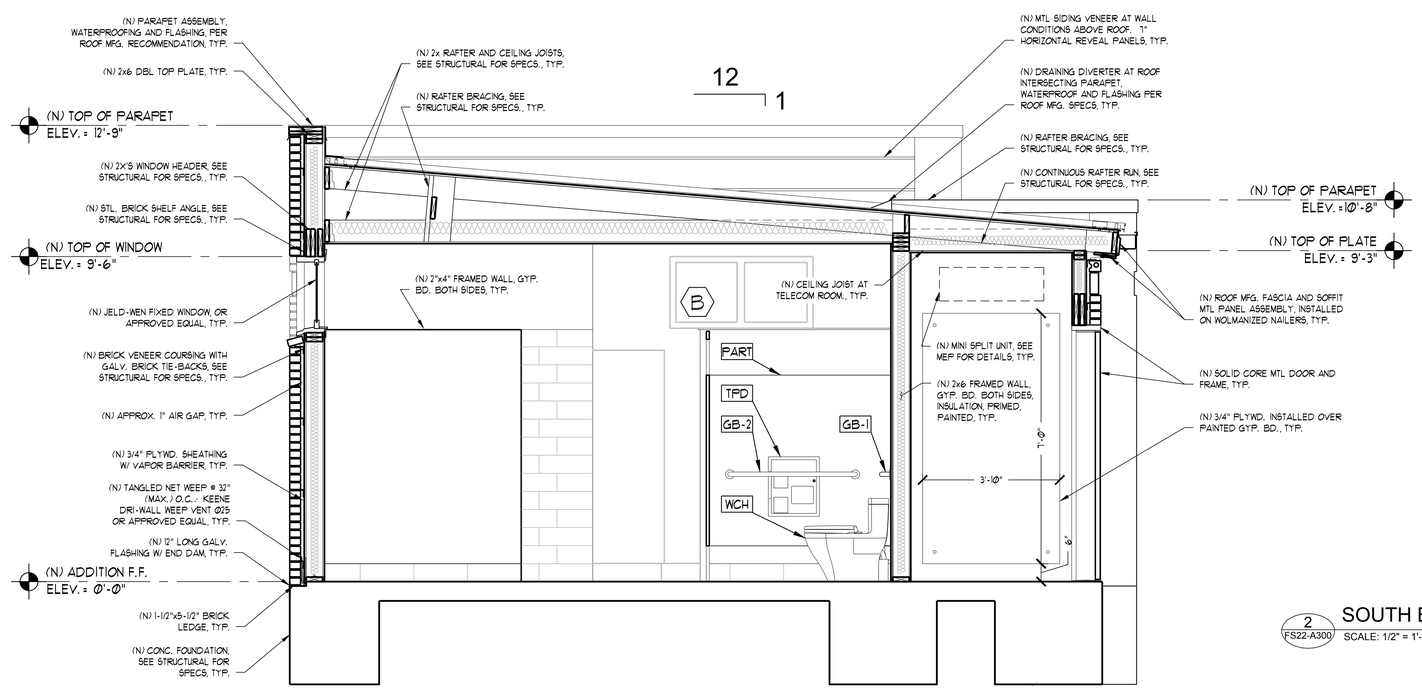

2 FS22-A300 SOUTH BUILDING SECTION / INT. ELEV.
SCALE: 1/2" = 1'-0"

BID DOCUMENTS

REGISTERED ARCHITECT W. OWEN HARDING 18348 STATE OF TEXAS

mwm Design Group
305 East Huntland Drive
Suite 200
Austin, Texas 78752
p: 512.453.0767
f: 512.453.1734

TBAE FIRM REGISTRATION NO.: 1452
TBPE FIRM REGISTRATION NO.: F-1416
TBPLS FIRM REGISTRATION NO.: 10065600

NO.	DATE	DESCRIPTION	BY

0 1"
The bar above measures one inch on the original drawing. Adjust scales accordingly.

BUILDING SECTIONS

CITY OF AUSTIN, AFD WOMEN'S LOCKER RM. ADDN, PHASE V
5309 EAST RIVERSIDE DRIVE, AUSTIN, TEXAS 78741

PLOTTED: 8/30/2016
JOB NO: 023-79D

FS22-A300

File: Y:\023-79D_WomensLockerRooms\CAD\Fire Station 22\Sheets\FS22-A300 BLDG SECT.dwg 24x36

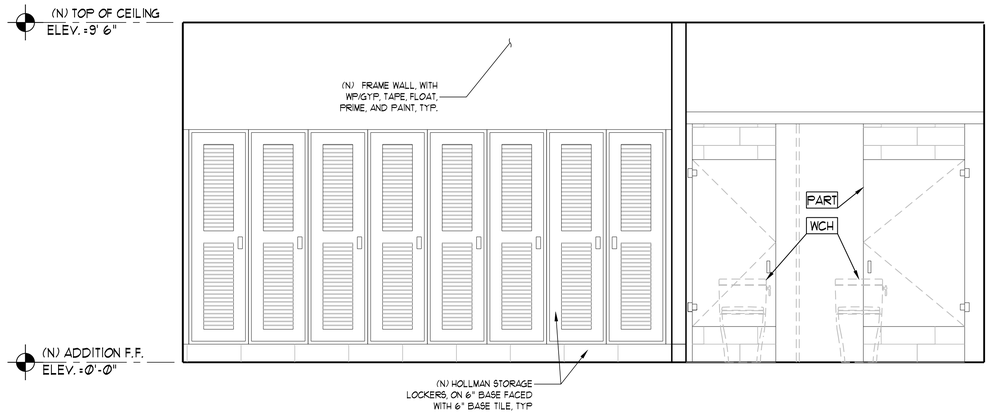

1 FS22-A400 WEST INTERIOR ELEVATION

SCALE: 3/8" = 1'-0"

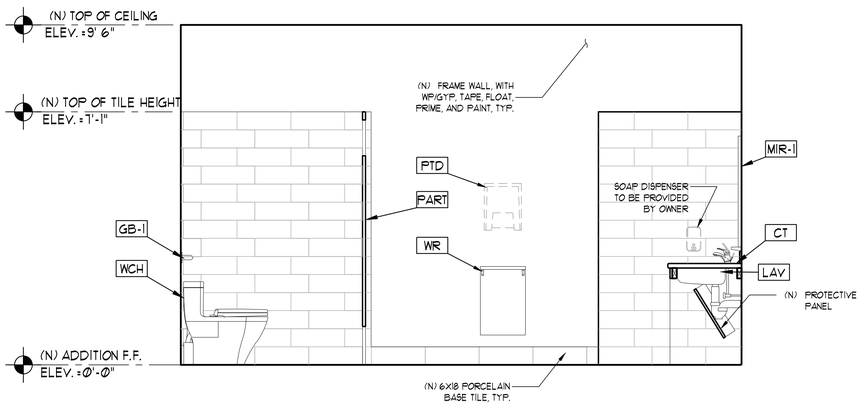

2 FS22-A400 NORTH INT. ELEV. @ LAV & STANDARD STALL

SCALE: 1/2" = 1'-0"

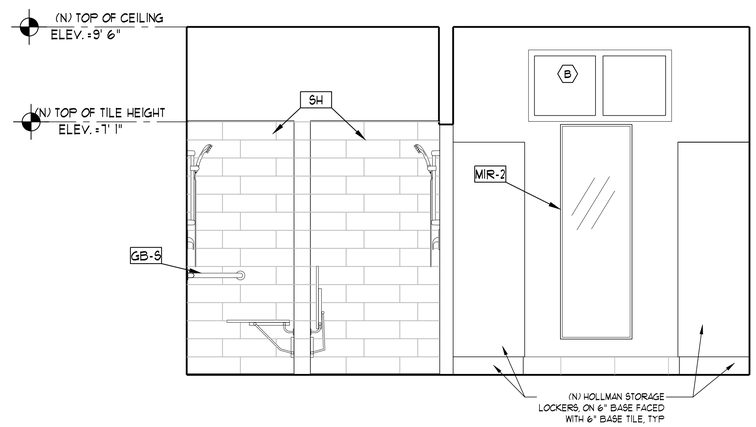

3 FS22-A400 SOUTH INT. ELEV. @ SHOWERS & LOCKERS

SCALE: 1/2" = 1'-0"

BID DOCUMENTS

REGISTERED ARCHITECT W. OWEN HARGROVE 18348 STATE OF TEXAS

mwm Design Group
305 East Huntland Drive
Suite 200
Austin, Texas 78752
p: 512.453.0767
f: 512.453.1734

TBAE FIRM REGISTRATION NO.: 1452
TBPE FIRM REGISTRATION NO.: F-1416
TBPLS FIRM REGISTRATION NO.: 10065600

NO.	DATE	DESCRIPTION	BY

0 1"

The bar above measures one inch on the original drawing. Adjust scales accordingly.

INTERIOR ELEVATIONS

CITY OF AUSTIN, AFD WOMEN'S LOCKER RM. ADDN, PHASE V
5309 EAST RIVERSIDE DRIVE, AUSTIN, TEXAS 78741

PLOTTED: 8/30/2016
JOB NO: 023-79D

FS22-A400

File: Y:\023-79D_WomensLockerRooms\CAD\Fire Station 22\Sheets\FS22-A400 INT ELEV.dwg 24x36

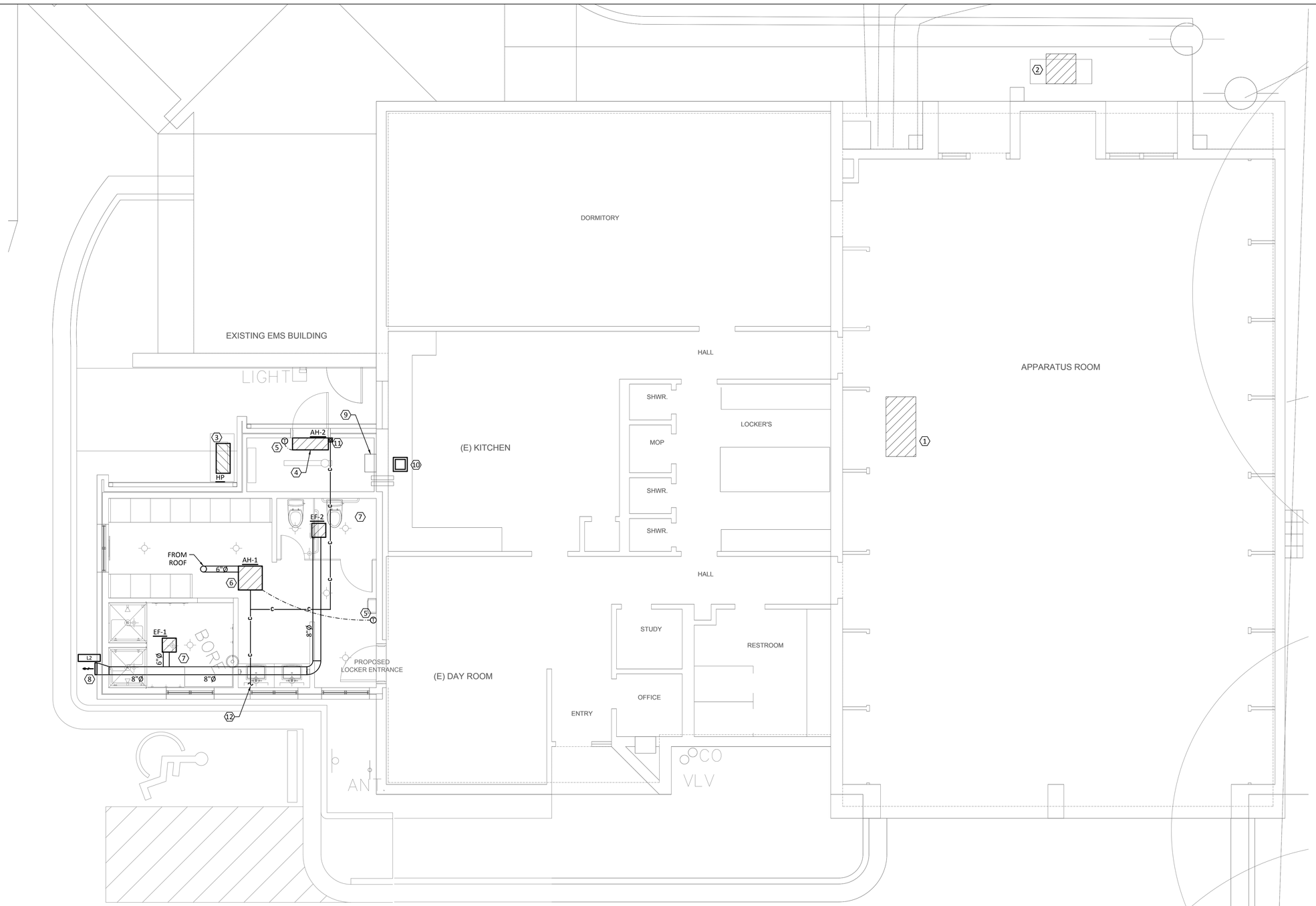

1 MECHANICAL PLAN

SCALE: 1/4" = 1'-0"

PLAN GENERAL NOTES

A. REFER TO M0.00 FOR GENERAL NOTES.
B. DO NOT ROUTE ANY DUCT & PIPING ABOVE ELECTRICAL PANELS.
C. PROVIDE AND INSTALL TRANSITION AS REQUIRED TO CONNECT SMALL DUCT TO LOUVER OR GRILLE.
D. COORDINATE WITH ARCHITECT AND STRUCTURAL ENGINEER FOR ALL WALL AND ROOF PENETRATION.
E. MAINTAIN 10' CLEARANCE FROM ANY EXHAUST AIR OUTLET OR FLUE TO ANY OUTSIDE AIR INTAKE OR OPENING TO BUILDING.
F. PROVIDE LOCKING ACCESS PORT CAPS ON ALL REFRIGERANT CIRCUIT SERVICE PORTS LOCATED ON THE EXTERIOR OF THE BUILDING.
G. ESTIMATED LOCATION OF ALL EXISTING MECHANICAL LAYOUT AND EQUIPMENT LOCATION IS BASED ON SITE OBSERVATION AND EXISTING DRAWINGS. CONTRACTOR SHALL VERIFY SIZE, LOCATION OF ALL EXISTING PLUMBING PIPING EQUIPMENT PRIOR TO BID AND CONSTRUCTION.

KEYED NOTES

1. EXISTING 5-TON HORIZONTAL AIR HANDLER (DATED 04/2009) SHALL REMAIN. EXISTING AIR HANDLER AND CONDENSING UNIT APPEARS TO BE INSUFFICIENT TO ADD SUPPLY AIR TO NEW LOCKER.
2. EXISTING 5-TON OUTDOOR CONDENSING UNIT (DATED 04/2009) SHALL REMAIN.
3. HEAT PUMP UNIT FOR DUCTLESS UNITS SHALL BE MOUNTED LEVEL ON CONCRETE PAD WITH NEOPRENE CORK PAD
4. DUCTLESS AIR HANDLER SHALL BE WALL MOUNTED ABOVE DOOR.
5. PROVIDE AND INSTALL TEMPERATURE CONTROLLER ON WALL AT 48" A.F.F.
6. CEILING CASSETTE AIR HANDLER SHALL BE SUSPENDED FROM STRUCTURAL MEMBER WITH VIBRATION ISOLATORS.
   ROUTE 6" OUTSIDE AIR DUCT TO UNIT FROM LOW PROFILE ROOF CAP (GREENHECK RCC-7 OR APPROVED EQUIVALENT).
7. EXHAUST FAN SHALL BE SUSPENDED FROM CEILING WITH VIBRATION ISOLATORS.
8. ROUTE COMBINED 8"Ø EXHAUST DUCT FROM EXHAUST FANS TO EXHAUST LOUVER WITH INTEGRAL BIRDSCREEN.
9. REMOVE EXISTING WALL OUTLET FOR KITCHEN HOOD. RE-ROUTE KITCHEN HOOD DUCT TO ROOF OUTLET (SEE KEY NOTE 10)
10. PROVIDE AND INSTALL LOW PROFILE ROOF CAP (BROAN MODEL 644) WITH BIRDSCREEN AND FLASHING ON EXISTING ROOF FOR EXISTING 8" KITCHEN HOOD.
11. PROVIDE AND INSTALL CONDENSATE DRAIN PUMP (WITH LINE SET KIT) FOR WALL MOUNTED DUCTLESS AIR HANDLER ON WALL (LITTLE GIANT MODEL EC-1K OR APPROVED EQUIVALENT).
12. ROUTE 3/4" INSULATED CONDENSATE DRAIN PIPING TO TAILPIECE ABOVE CEILING. TAILPIECE PIPING FROM LAVATORY TO ABOVE CEILING IS BY PLUMBING CONTRACTOR.

SEQUENCE OF OPERATION NOTES

A. DUCTLESS SPLIT SYSTEM CONTROL
   a. SYSTEM - ON/OFF CONTROL:
      ON/OFF CONTROL FROM WALL MOUNTED THERMOSTAT.
   b. FAN – ON/OFF CONTROL:
      FAN WILL BE ACTIVATED UNDER THE FOLLOWING CONDITIONS:
      - IF THE THERMOSTAT IS SET IN THE "FAN" MODE
      - ACTIVATION OF THE COOLING OR HEATING MODE
   c. COOLING MODE:
      THERMOSTAT SETTING WILL EITHER BE IN "AUTO" OR "COOL"
      IF THE ROOM TEMPERATURE, AS MEASURED BY THE INDOOR UNIT MOUNTED ROOM TEMPERATURE SENSOR, RISES ABOVE THE THERMOSTATS SET POINT TEMPERATURE THE CONDENSING UNIT AND THE WALL MOUNTED FAN COIL UNIT WILL BE ACTIVATED.
   d. HEATING MODE:
      THERMOSTAT SETTING WILL EITHER BE IN "AUTO" OR "HEAT"
      IF THE ROOM TEMPERATURE, AS MEASURED BY THE INDOOR UNIT MOUNTED ROOM TEMPERATURE SENSOR, DOWN BELOW THE THERMOSTATS SET POINT TEMPERATURE THE CONDENSING UNIT AND THE WALL MOUNTED FAN COIL UNIT WILL BE ACTIVATED.
   e. CONDENSATE PUMP CONTROL:
      THE PRIMARY CONDENSATE FLOAT SWITCH WILL ACTIVATE AND DEACTIVATE THE CONDENSATE PUMP.
   f. SAFETY:
      A SECONDARY OVERFLOW CONDENSATE FLOAT SWITCH UPON ACTIVATION WILL CONTINUE TO RUN THE CONDENSATE PUMP, DEACTIVATE THE FAN, AND INITIATE A BLINKING LIGHT ON THE CONTROL DISPLAY TO INDICATE THE PROBLEM.
B. EXHAUST FANS (SEE ELECTRICAL PLAN FOR CONTROLLER)
   - EF-1 & EF-2 WILL BE INTERLOCKED WITH LIGHTING SWITCH WITH A TIME-DELAY-OFF RELAY SWITCH TO ALLOW FAN TO OPERATE UP TO 15 MINUTES AFTER LIGHTS ARE TURNED OFF

ENCOTECH ENGINEERING CONSULTANTS
TBPE Firm 1141 | 8500 Bluffstone Cove, Suite B-103 Austin, Texas 78759 | 512.338.1101
Project No.: 15009.M.AUS

STATE OF TEXAS LYNN C. BROWN 55248 LICENSED PROFESSIONAL ENGINEER
08/30/2016

mwm Design Group
305 East Huntland Drive
Suite 200
Austin, Texas 78752
p: 512.453.0767
f: 512.453.1734
TBAE FIRM REGISTRATION NO.: 1452
TBPE FIRM REGISTRATION NO.: F-1416
TBPLS FIRM REGISTRATION NO.: 10065600

NO.	DATE	DESCRIPTION	BY

SCALE IS AS NOTED ON DRAWING

MECHANICAL PLAN

CITY OF AUSTIN, AFD WOMEN'S LOCKER RM. ADDN, PHASE V
5309 EAST RIVERSIDE DRIVE, AUSTIN, TEXAS 78741

PLOTTED: 8/30/2016
JOB NO: 023-79D

FS22-M110

File: J:\ACTIVE PROJECTS\MWM\15009.M.AUS – AFD WLR Ph 5\1. MEP\D-AutoCAD\FS22\15009 FS22 M110 Mech Plan.dwg 24x36

CONDENSING UNIT SCHEDULE

MARK	CLG. DATA		ELECTRICAL DATA			UNIT DATA				
	TONS	EER/ SEER	MCA	MOCP	VOLT/PH	MAKE	MODEL	LBS.	NOTES	CORRESPONDING AIR HANDLER
HP	1.5	14.0/ 21.0	13.3	20	208V/1PH	LG	LMU18CHV	100		

NOTES:
1. PROVIDE DISCONNECT, TO BE FIELD MOUNTED BY ELECTRICAL CONTRACTOR.
2. COMPRESSOR SHALL BE PROVIDED WITH 10 YEARS WARRANTY.
3. UNIT TO BE PROVIDED LOW AMBIENT KIT FOR OPERATION DOWN TO 40°F.

LOUVER SCHEDULE

MARK	NOMINAL SIZE	FREE AREA (FT2)	TYPE	MAKE	MODEL
L-2	12"x14"	0.34	EXTRUDED ALUMINUM, DRAINABLE BLADE	GREENHECK	ESD-401

NOTES:
1. COORDINATE EXACT LOCATION AND MOUNTING OF LOUVER WITH ARCHITECTURAL ELEVATION.
2. COORDINATE FINISH WITH ARCHITECT.

DUCTLESS SPLIT UNIT SCHEDULE

MARK	AIR DATA					COOLING DATA												HEATING DATA					ELECTRICAL DATA			UNIT DATA			
	TOT. CFM	O/A CFM	E.S.P.	HP	CONFIGURATION	AMBIENT		ENTERING		LEAVING		DESIGN		SCHEDULE		STAGE	EER/ SEER	DES.	SCHEDULE		STAGE	HSPF	MCA	MOCP	VOLT/PH	MAKE	MODEL	LBS.	NOTES
						D.B.	W.B.	D.B.	W.B.	D.B.	W.B.	SENS.	TOT.	SENS.	TOT.			MBH	MBH	KW									
AH-1	265	N/A	N/A	-	CASSETE	105	74	80	67	-	-			-	9.0	INV.	14.0/ 21.0	-	8.5	-	-	9.20	0.2	15	208V/1PH	LG	LMCN097HV	31	1, 2
AH-2	177	N/A	N/A	-	WALL-MOUNTED	105	74	80	67	-	-			-	7.0	INV.	14.0/ 21.0	-	8.1	-	-	9.20	0.2	15	208V/1PH	LG	LMN078HVT	20	1, 2, 3

NOTES:
1. EACH UNIT TO BE MOUNTED USING VIBRATION ISOLATORS.
2. INDOOR UNIT TO INCLUDE MANUFACTURER THERMOSTAT.
3. CONDENSATE PUMP.

FAN SCHEDULE

MARK	AREA SERVED	LOCATION	INTERLOCK	AIR DATA				ELECTRICAL DATA			UNIT DATA					
				CFM	S.P.	HP	RPM	FLA	MOCP	VOLT/PH	MAKE	MODEL	TYPE	DRIVE	LBS.	NOTES
EF-1	SHOWER	CEILING	LIGHT SWITCH	75	0.25	-	900	0.6	15	115V/1PH	GREENHECK	SP-B90	CENTRIFUGAL	DIRECT	8	DISC, SC, BDD, CC, BS, VI
EF-2	RESTROOM	CEILING	LIGHT SWITCH	150	0.25	-	1400	0.6	15	115V/1PH	GREENHECK	CSP-A190	CENTRIFUGAL	DIRECT	17	DISC, SC, BDD, CC, BS, VI

NOTES:
1. FEATURE NOTES:
   DISC = DISCONNECT SWITCH
   TD = PROVIDE AND INSTALL A TIME-DELAY-OFF RELAY SWITCH TO ALLOW FAN TO OPERATE UP TO 15 MINUTES AFTER LIGHTS ARE TURNED OFF
   SC = SPEED CONTROL (DIRECT DRIVE FANS ONLY)
   BDD = BACKDRAFT DAMPER
   BS = BIRD SCREEN
   VI = VIBRATION ISOLATORS

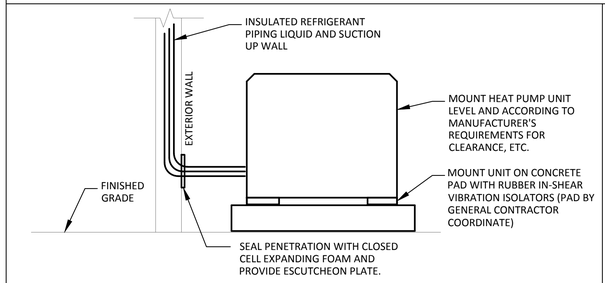

REFRIGERANT PIPING INSULATION NOTES
1. ALL CLOSED CELL POLYMER INSULATION SHALL HAVE GLUED JOINTS WITH COMPLETE COVERAGE OF ALL METAL SURFACES. ALL INSULATION EXPOSED TO EXTERIOR SHALL BE PAINTED WITH TWO COATS AS PER INSULATION MANUFACTURERS SPECIFICATIONS.
2. PROVIDE AND INSTALL LINE DRYER IN LIQUID FREON LINE
3. PROVIDE INSULATION SHIELD AT ALL SUPPORTS.

1 HEAT PUMP UNIT DETAIL
NOT TO SCALE

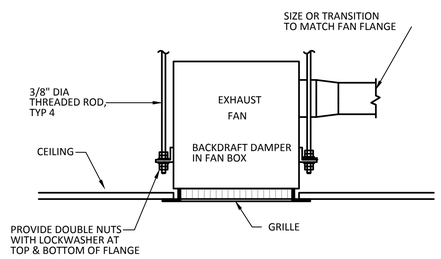

2 CEILING EXHAUST FAN DETAIL
NOT TO SCALE

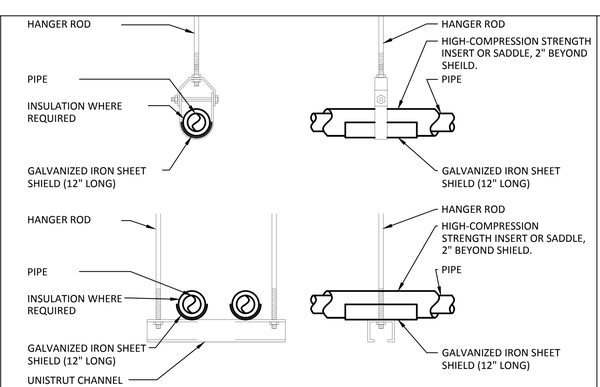

NOTE:
1. ATTACH SUPPORTS FOR ALL PIPING SUSPENDED FROM THE STEEL STRUCTURE TO THE TOP CORD OF JOISTS OR BEAM.
2. PROVIDE COPPER OR PLASTIC COATED HANGERS FOR NON-INSULATED COPPER PIPE

3 PIPE HANGER DETAIL
NOT TO SCALE

ENCOTECH ENGINEERING CONSULTANTS
TBPE Firm 1141 | 8500 Bluffstone Cove, Suite B-103 Austin, Texas 78759 | 512.338.1101
Project No.: 15009.M.AUS

STATE OF TEXAS
LYNN C. BROWN
55248
LICENSED PROFESSIONAL ENGINEER
08/30/2016

mwm Design Group
305 East Huntland Drive
Suite 200
Austin, Texas 78752
p: 512.453.0767
f: 512.453.1734
TBAE FIRM REGISTRATION NO.: 1452
TBPE FIRM REGISTRATION NO.: F-1416
TBPLS FIRM REGISTRATION NO.: 10065600

NO.	DATE	DESCRIPTION	BY

SCALE IS AS NOTED ON DRAWING

MECHANICAL SCHEDULES & DETAILS

CITY OF AUSTIN, AFD WOMEN'S LOCKER RM. ADDN, PHASE V
5309 EAST RIVERSIDE DRIVE, AUSTIN, TEXAS 78741

PLOTTED: 8/30/2016
JOB NO: 023-79D

FS22-M210

File: J:\ACTIVE PROJECTS\MWM\15009.M.AUS - AFD WLR Ph 5\1. MEP\D-AutoCAD\FS22\15009 FS22 M210 Mech Schedule Details.dwg 24x36

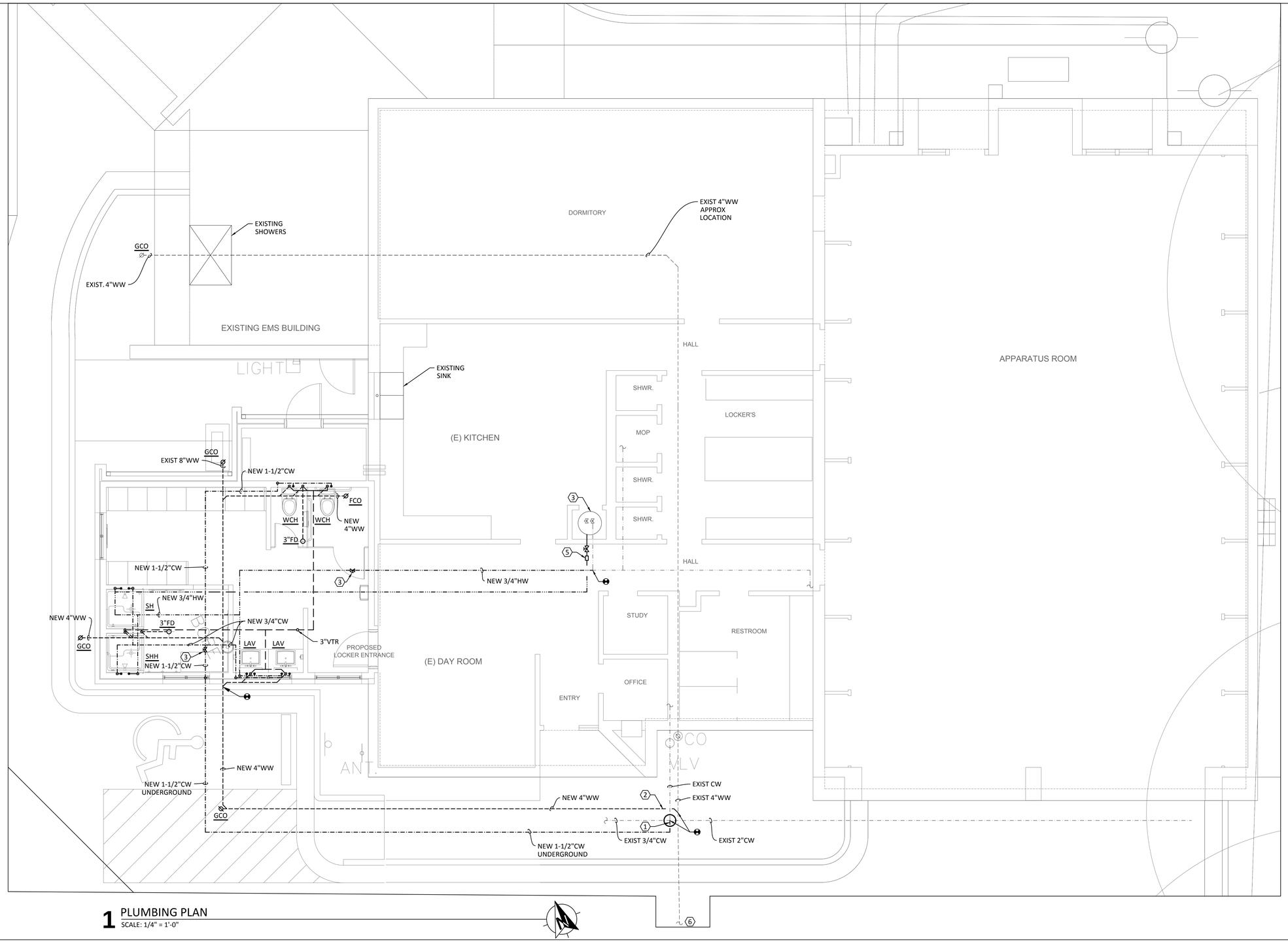

1 PLUMBING PLAN
SCALE: 1/4" = 1'-0"

PLAN GENERAL NOTES

A. REFER TO P0.00 FOR GENERAL NOTES.
B. ESTIMATED LOCATION OF ALL EXISTING PLUMBING LAYOUT AND EQUIPMENT LOCATION IS BASED ON SITE OBSERVATION AND EXISTING DRAWINGS. CONTRACTOR SHALL VERIFY SIZE, LOCATION OF ALL EXISTING PLUMBING PIPING EQUIPMENT PRIOR TO BID AND CONSTRUCTION
C. DO NOT ROUTE ANY PLUMBING PIPING ABOVE ANY ELECTRICAL PANEL.
D. PROVIDE AND INSTALL WATER SAVER TRAP PRIMER FROM NEAREST LAVATORY OR TRAP PRIMER WITH ACCESSIBLE SHUT-OFF VALVE IN WALL TO ALL FLOOR DRAINS, HUB DRAINS AND FLOOR SINKS. SEE PLAN FOR LOCATION.
E. PROVIDE AND INSTALL ACCESS TO ALL SHUT-OFF VALVES.
F. INSULATE 100% OF ALL HOT WATER PIPING, HOT WATER RETURN PIPING & COLD WATER PIPING ACCORDING TO SPECIFICATIONS.
G. REFER TO PLUMBING RISERS FOR ADDITIONAL SIZING INFORMATION.
H. ALL NEW UNDERGROUND PIPING UNDER EXISTING SLAB SHALL BE REQUIRED TO CUT EXISTING SLAB OR/AND BEAM. COORDINATE WITH ARCHITECT, COA PERSONELS AND STRUCTURAL ENGINEER PRIOR TO CONSTRUCTION. THE CONTRACTOR SHALL DETERMINE THE EXISTING STRUCTURAL SYSTEM PRIOR TO CUTTING, DRILLING OR CORING. THE TESTING AGENCY SHALL X-RAY ALL PENETRATIONS PRIOR TO CUTTING FLOOR SLAB. DO NOT CUT OR PENETRATE STRUCTURAL ELEMENTS WITHOUT PRIOR APPROVAL OF THE TESTING AGENCY.
COA PROJECT MANAGER AND STRUCTURAL ENGINEER AND PLUMBING ENGINEER SHALL BE PRESENT DURING CUTING. LOCATION SHOWN ARE APPROXIMATE AND MAY BE SLIGHTLY RELOCATED DUE TO EXISTING STRUCTURAL CONDITION.

KEYED NOTES

1. NEW 1-1/2" CW PIPING UNDERGROUND FROM NEW RESTROOM SHALL BE CONNECTED TO EXISTING MAIN 2" CW PIPING UNDERGOUND. PROVIDE AND INSTALL VALVE BOX AT CONNECTION POINT.
2. NEW 4" WW PIPING UNDERGROUND FROM NEW RESTROOM SHALL BE CONNECTED TO EXISTING MAIN 4" WW PIPING.
3. EXISTING WATER HEATER SHALL REMAIN AND APPEARS TO HAVE SUFFICIENT CAPACITY TO ADD TWO NEW SHOWERS AND LAVATORIES (EXISTING WATER HEATER BY RHEEM MODEL 81V-80D, 80 GALLON TANK, 4500W, 31 GALLON RECOVERY AT 60°F RISE)
4. MAIN WATER SHUT-OFF VALVE FOR NEW LOCKER ROOM ABOVE CEILING. COORDINATE WITH GENERAL CONTRACTOR TO PROVIDE AND INSTALL ACCESS PANEL.
5. PROVIDE AND INSTALL NEW HOT WATER RECIRCULATION PUMP (GRUNDFOS MODEL UP-26-96-BF, 1/12 HP, 120V, 1Ø 1.7 AMPS SECURELY SUSPEND FROM STRUCTURE W/ VIBRATION ISOLATORS).
6. CONTINUE TO SANITARY SEWER CONNECTION. INVERT DEPTH 3 FEET.

ENCOTECH ENGINEERING CONSULTANTS
TBPE Firm 1141 | 8500 Bluffstone Cove, Suite B-103 Austin, Texas 78759 | 512.338.1101
Project No.: 15009.M.AUS

STATE OF TEXAS
LYNN C. BROWN
55248
LICENSED PROFESSIONAL ENGINEER
08/30/2016

mwm Design Group
305 East Huntland Drive
Suite 200
Austin, Texas 78752
p: 512.453.0767
f: 512.453.1734
TBAE FIRM REGISTRATION NO.: 1452
TBPE FIRM REGISTRATION NO.: F-1416
TBPLS FIRM REGISTRATION NO.: 10065600

NO.	DATE	DESCRIPTION	BY

SCALE IS AS NOTED ON DRAWING

PLUMBING PLAN

CITY OF AUSTIN, AFD WOMEN'S LOCKER RM. ADDN, PHASE V
5309 EAST RIVERSIDE DRIVE, AUSTIN, TEXAS 78741

PLOTTED: 8/30/2016
JOB NO: 023-79D

FS22-P110

File: J:\-ACTIVE PROJECTS\MWM\15009.M.AUS — AFD WLR Ph 5\1. MEP\D-AutoCAD\FS22\15009 FS22 P110 Plumb Plan.dwg 24x36

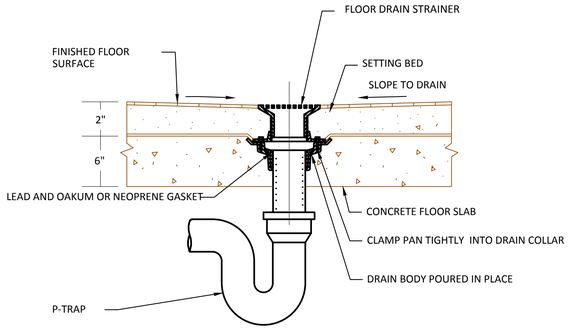

6 TYPICAL FLOOR DRAIN DETAIL
NOT TO SCALE

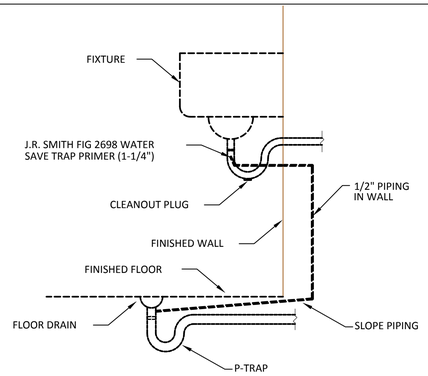

5 WATER SAVER TRAP PRIMER DETAIL
NOT TO SCALE

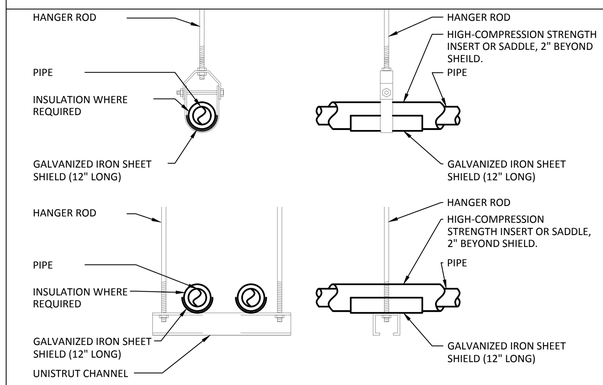

NOTE:
1. ATTACH SUPPORTS FOR ALL PIPING SUSPENDED FROM THE STEEL STRUCTURE TO THE TOP CORD OF JOISTS OR BEAM.
2. PROVIDE COPPER OR PLASTIC COATED HANGERS FOR NON-INSULATED COPPER PIPE

4 PIPE HANGER DETAIL
NOT TO SCALE

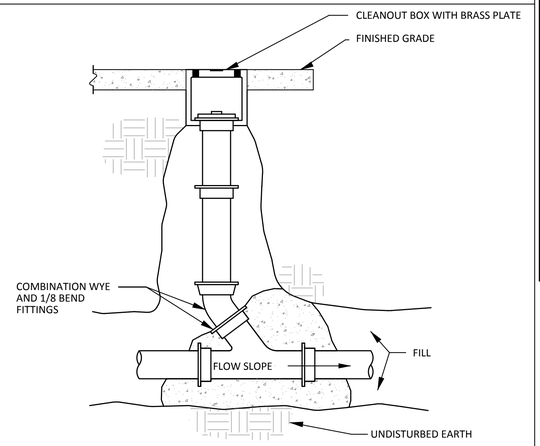

3 EXTERIOR CLEANOUT DETAIL
NOT TO SCALE

WATER CALCULATION

WATER CLOSET, FLUSH VALVE	6 x	5.0 F.U. =	30.0 F.U.
URINAL, FLUSH VALVE	1 x	4.0 F.U. =	4.0 F.U.
SHOWER	7 x	2.0 F.U. =	14.0 F.U.
LAVATORY	5 x	1.0 F.U. =	5.0 F.U.
KITCHEN SINK, COMMERCIAL	2 x	3.0 F.U. =	6.0 F.U.
SERVICE SINK (PUBLIC)	1 x	3.0 F.U. =	3.0 F.U.
DISHWASHER	1 x	1.5 F.U. =	1.5 F.U.
CLOTHES WASHER	1 x	4.0 F.U. =	4.0 F.U.
DRINKING FOUNTAIN	1 x	0.5 F.U. =	0.5 F.U.
FIRST HOSE BIBB	1 x	2.5 F.U. =	2.5 F.U.
ADDITIONAL HOSE BIBBS	2 x	1.0 F.U. =	2.0 F.U.
TOTAL FIXTURE UNITS		=	72.5 F.U.
72.5 FIXTURE UNITS		=	58.8 GPM

HIGHEST FIXTURE = 10 FEET
(10 FT.) x 0.43 = 4.3 PSI STATIC LOSS

HORIZONTAL PIPE LENGTH TAP TO METER	=	10 FEET
HORIZONTAL PIPE LENGTH METER TO BUILDING	=	100 FEET
HORIZONTAL PIPE LENGTH BUILDING TO LAST FIXTURE	=	100 FEET
VERTICAL PIPE LENGTH BUILDING RISE TO HIGHEST FIXTURE	=	10 FEET
TOTAL PIPE LENGTH	=	220 FEET

(220 FT.) x 1.25 (FITTING LOSS) = 275 FEET TOTAL DEVELOPED LENGTH

SIZE	DEVICE		PSI LOSS
1-1/2"	METER	=	7.8 PSI
	STATIC	=	4.3 PSI
	FIXTURE (FLUSH VALVE)	=	15.0 PSI
TOTAL BUILDING LOSS		=	27.1 PSI

PRESSURE AT STREET	=	50.0 PSI
BUILDING LOSS	=	27.1 PSI
DIFFERENCE	=	22.9 PSI

(22.9 / 275) x 100 = 8.3 MAX PSI DROP ALLOWABLE PER 100 FT. PIPE LENGTH

EXISTING 1-1/2" METER AND 2" MAIN WATER LINE TO BUILDING IS SUFFICIENT

WATER CALCULATION NOTES

- THIS CALCULATION IS BASED ON UNIFORM PLUMBING CODE 2012, APPENDIX A.
* VERIFY PRESSURE AT TIME OF CONSTRUCTION. IF GREATER THAN 65 PSI PROVIDE AND INSTALL PRESSURE REDUCING VALVE TO REDUCE WATER PRESSURE TO 65 PSI MAXIMUM.

PLUMBING FIXTURE SCHEDULE

MARK	CW	HW	VENT	S&W	MODEL NUMBER	DESCRIPTION
WCH	1"	-	2"	3"	WATER CLOSET: KOHLER MODEL: HIGHLINE K-4405 FLUSH VALVE: SLOAN MODEL: 8111-1.28 SEAT: CHURCH 295SSC	FLUSH VALVE WATER CLOSET, FLOOR MOUNTED, ELONGATED BOWL, 1-1/2" TOP SPUD, FLOOR OUTLET, ADA COMPLIANT EXPOSED WATER CLOSET FLUSHOMETER FOR FLOOR MOUNTED TOP SPUD BOWLS, 1.28 GPF. OPEN FRONT, ELONGATED SEAT WITH STAINLESS STEEL LOCKING HINGE
LAV	1/2"	1/2"	1-1/2"	2"	LAVATORY: KOHLER MODEL: K-1997-1-0 (HANDICAP USE) FAUCET: DELTA MODEL: 26C3942 MIXING VALVE: WATTS MODEL: L111	WALL HUNG, VITREOUS CHINA, 22"x19" BOWL, HANDICAP ACCESSIBLE. MANUAL GOOSENECK FAUCET, 0.5 GPM AERATOR, 8" CENTERS, LEVER HANDLES INDIVIDUAL FAUCET THERMOSTATIC MIXING VALVE. HOT WATER TEMPERATURE SHALL BE LIMITED TO 110 DEGREES FAHRENHEIT.
SH	1/2"	1/2"	1-1/2"	2"	SHOWER FAUCET & HANDSET: MOEN MODEL: 8346 MIXING VALVE: LAWLER MODEL: SERIES 516 UNIT NUMBER: 86823 FLOOR DRAIN: SMITH 2005	PRESSURE BALANCE SHOWER VALVE, HANDHELD SPRAY ASSEMBLY, 1.5 GPM, ADA COMPLIANT. ROUGH CHROME THERMOSTATIC MIXING VALVE, 0.5 MINIMUM FLOW RATE, OUTLET RANGE 95-115 DegF WITH A SPINDLE TO ADJUST OUTLET TEMPERATURE. SET OUTLET TEMPERATURE AT 110DegF. CAST IRON. ADJUSTABLE STRAINER HEAD.
SHH	1/2"	1/2"	1-1/2"	2"	SHOWER ENCLOSURE: AQUATIC ADA COMPLIANCE SHOWER FAUCET & HANDSET: MOEN MODEL: 8346 MIXING VALVE: LAWLER MODEL: SERIES 516 UNIT NUMBER: 86823 FLOOR DRAIN: SMITH 2005	TILED, COMPLETE WITH L-SHAPED FOLD-UP SEAT, GRAB BARS, SLIDE BAR, VACUUM BREAKER AND HOSE, CURTAIN RODS (VERIFY DEPTH OF RECESS). PRESSURE BALANCE SHOWER VALVE, HANDHELD SPRAY ASSEMBLY, 1.5 GPM, ADA COMPLIANT. ROUGH CHROME THERMOSTATIC MIXING VALVE, 0.5 MINIMUM FLOW RATE, OUTLET RANGE 95-115 DegF WITH A SPINDLE TO ADJUST OUTLET TEMPERATURE. SET OUTLET TEMPERATURE AT 110DegF. CAST IRON. ADJUSTABLE STRAINER HEAD.
FD	-	-	2"	*	SMITH 2005	FLOOR DRAIN. CAST IRON. ADJUSTABLE STRAINER HEAD.
FCO	-	-	-	*	SMITH 4020	FLOOR CLEANOUT. CAST IRON WITH NICKEL BRONZE ADJUSTABLE TOP.
GCO	-	-	-	*	SMITH 4237	GROUND CLEANOUT. CAST IRON WITH CAST IRON NON-TILT ADJUSTABLE TOP.

NOTES:
* SEE PLAN FOR SIZING.
** PLUMBING FIXTURES, ACCESSORIES AND INSTALLATION SHALL MEET ALL FEDERAL, STATE, ADA AND LOCAL REQUIREMENTS.

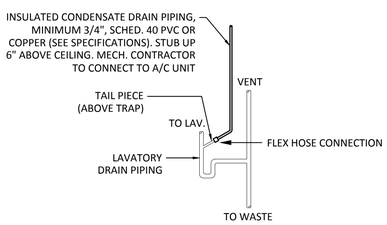

2 CONDENSATE DRAIN - LAVATORY TAILPIECE DETAIL
NOT TO SCALE

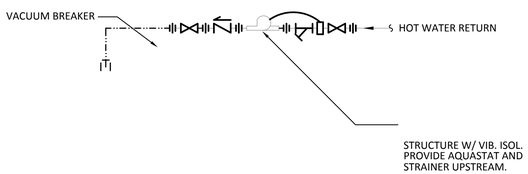

1 RECIRCULATION PUMP DETAIL
NOT TO SCALE

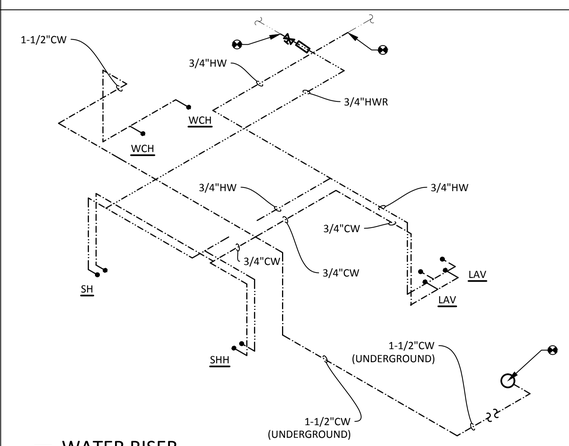

7 WATER RISER
NOT TO SCALE

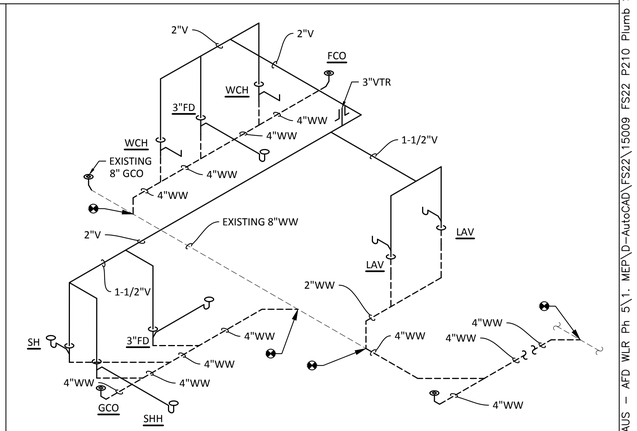

8 WASTE WATER AND VENT RISER
NOT TO SCALE

ENCOTECH ENGINEERING CONSULTANTS
TBPE Firm 1141 | 8500 Bluffstone Cove, Suite B-103 Austin, Texas 78759 | 512.338.1101
Project No.: 15009.M.AUS

STATE OF TEXAS — LYNN C. BROWN 55248 — LICENSED PROFESSIONAL ENGINEER
08/30/2016

mwm Design Group
305 East Huntland Drive
Suite 200
Austin, Texas 78752
p: 512.453.0767
f: 512.453.1734
TBAE FIRM REGISTRATION NO.: 1452
TBPE FIRM REGISTRATION NO.: F-1416
TBPLS FIRM REGISTRATION NO.: 10065600

NO.	DATE	DESCRIPTION	BY

SCALE IS AS NOTED ON DRAWING

PLUMBING SCHEDULES & DETAILS

CITY OF AUSTIN, AFD WOMEN'S LOCKER RM. ADDN, PHASE V
5309 EAST RIVERSIDE DRIVE, AUSTIN, TEXAS 78741

PLOTTED: 8/30/2016
JOB NO: 023-79D

FS22-P210

File: J:\ACTIVE PROJECTS\MWM\15009.M.AUS – AFD WLR Ph 5\1. MEP\D-AutoCAD\FS22\15009 FS22 P210 Plumb Schedule Details.dwg 24x36

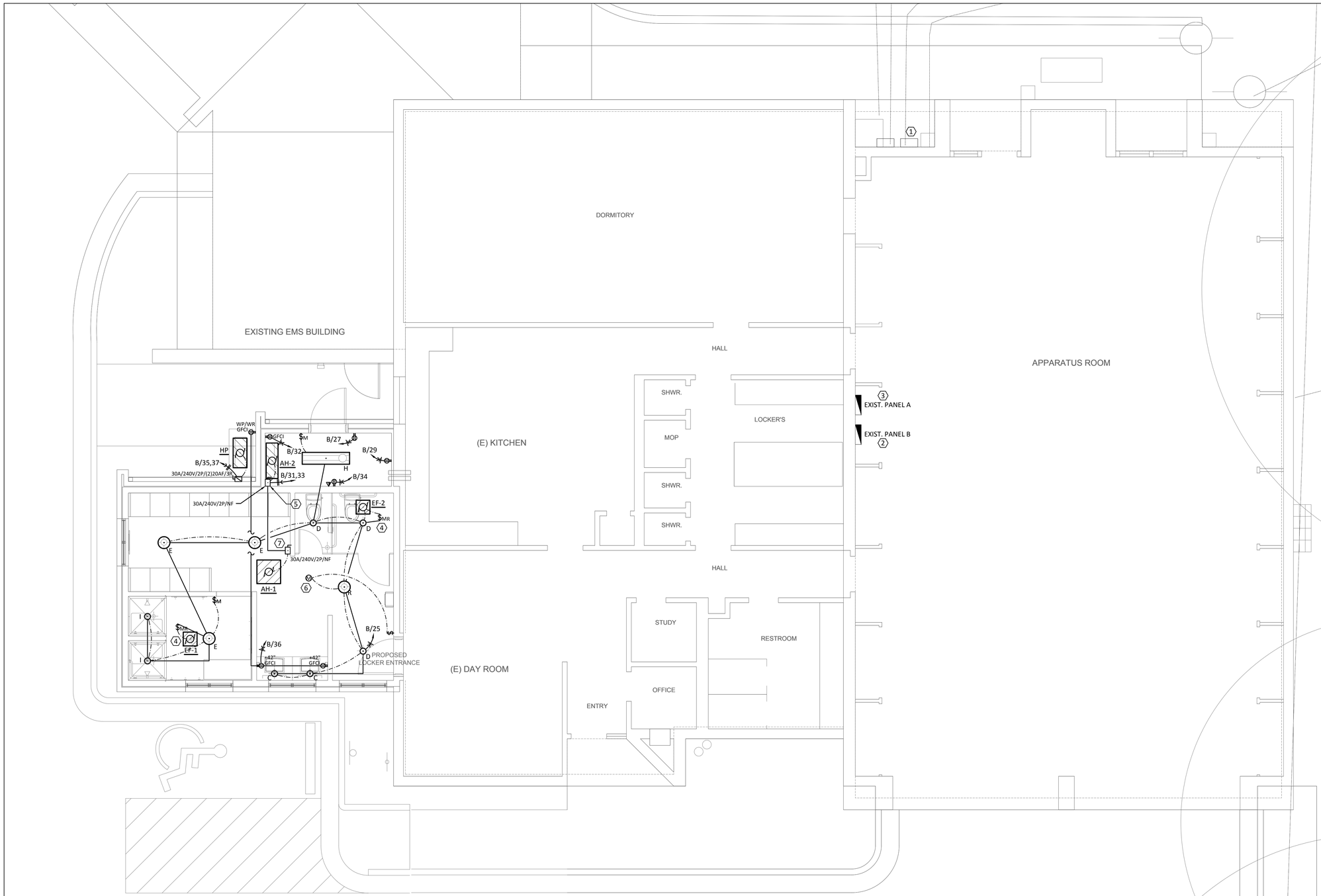

PLAN GENERAL NOTES

A. REFER TO E0.00 FOR GENERAL NOTES.
B. DO NOT ROUTE ANY DUCT & PIPING ABOVE ELECTRICAL PANELS.
C. ESTIMATED LOCATION OF ALL EXISTING ELECTRICAL LAYOUT AND EQUIPMENT LOCATION IS BASED ON SITE OBSERVATION AND EXISTING DRAWINGS. CONTRACTOR SHALL VERIFY SIZE, LOCATION OF ALL EXISTING ELECTRICAL EQUIPMENT, DEVICES AND CONDUITS PRIOR TO BID AND CONSTRUCTION.
D. ALL EXTERIOR LIGHTING FIXTURE SHALL BE CONTROLLED BY PHOTOCELL AND TIMER.
E. FIRE ALARM NOTE: EXTEND EXISTING FIRE ALARM SYSTEM TO NEW ADDITIONAL LOCKER ROOM.

KEYED NOTES

1. EXISTING 300A, 120/208V, 3Ø METER AND CT-CAN ON WALL.
2. EXISTING PANEL 'B', 300A, 120/208V, 3Ø, 300A MCB 42-SPACE WITH 10 AVAILABLE SPACES.
3. EXISTING PANEL 'A', 100A, 120/208V, 3Ø, MLO 30-SPACE WITHOUT AVAILABLE SPACE.
4. MOTOR RATED DISCONNECT SWITCH SHALL BE MOUNTED ON STRUCTURAL MEMBER ABOVE ACCESSIBLE CEILING.
5. DISCONNECT SHALL BE MOUNTED ON WALL.
6. PROVIDE AND INSTALL CEILING DUAL TECHNOLOGY MOTION DETECTOR WITH WALL MOUNTED OVERDRIVE SWITCH AT DOOR.
7. DISCONNECT SHALL BE MOUNTED ON STRUCTURAL MEMBER ABOVE ACCESSIBLE CEILING.
8. 2-4" PVC SLEEVE THROUGH WALL FOR DATA WIRING.

1 ELECTRICAL PLAN
SCALE: 1/4" = 1'-0"

ENCOTECH
ENGINEERING CONSULTANTS
TBPE Firm 1141 | 8500 Bluffstone Cove, Suite B-103
Austin, Texas 78759 | 512.338.1101
Project No.: 15009.M.AUS

STATE OF TEXAS
SHARON S. BICKFORD
77390
LICENSED
PROFESSIONAL ENGINEER
08/30/2016

mwm Design Group
305 East Huntland Drive
Suite 200
Austin, Texas 78752
p: 512.453.0767
f: 512.453.1734
TBAE FIRM REGISTRATION NO.: 1452
TBPE FIRM REGISTRATION NO.: F-1416
TBPLS FIRM REGISTRATION NO.: 10065600

NO.	DATE	DESCRIPTION	BY

SCALE IS AS NOTED ON DRAWING

ELECTRICAL PLAN

CITY OF AUSTIN, AFD WOMEN'S LOCKER RM. ADDN, PHASE V
5309 EAST RIVERSIDE DRIVE, AUSTIN, TEXAS 78741

PLOTTED: 8/30/2016
JOB NO: 023-79D

FS22-E110

File: J:\ACTIVE PROJECTS\MWM\15009.M.AUS - AFD WLR Ph 5\1. MEP\D-AutoCAD\FS22\15009 FS22 E110 Elec Plan.dwg 24x36

LIGHTING FIXTURE SCHEDULE

MARK	MANUFACTURER	MODEL	VOLT	LAMPING QTY	LAMPING WATTAGE	LAMPING TYPE	LAMPING TEMP	DRIVER TYPE	PHYSICAL TYPE	PHYSICAL SIZE	DESCRIPTION
C	BRUCK	223-850-CH-MP / -	120	1	8	LED	2800K	DIMMING DRIVER	PENDANT	12"H x 3.125"SQ	RECTLINEAR FROST GLASS SHADE, 6FT EXTENSION CABLE, CHROME FINISH
D	LITHONIA	FHHL-7-8-30-DNA / -	120	1	9.3	LED	3000K	DIMMING DRIVER	CEILING	7"DIA x 1-/34"H	CEILING MOUNTED, GLASS SHADE WITH SMOOTH NARUAL ALEMINUM FINISH, WET LOCATION
E	LITHONIA	FHHL-13-8-30-DNA / -	120	1	28	LED	3000K	DIMMING DRIVER	CEILING	7"DIA x 1-/34"H	CEILING MOUNTED, GLASS SHADE WITH SMOOTH NARUAL ALEMINUM FINISH, WET LOCATION
H	-	- / -	120	-	-	-	-	-	-	-	STRIP ZEON LIGHT
I	GOTHAM	EVO-30-10-6-DFR-MVOLT-E21	MVOLT	1	10	LED	2700K	0-10V DIMMING DRIVER	CEILING	6-1/4"D x 7-5/8"H	NON-CONDUCTIVE SHOWER DOWNLIGHT
WL	LITHONIA	DSXW1-LED-10C-530-30K-T4M-MVOLT-ELCW-DDBXD / -	MVOLT	1	20	LED	3000K	0-10V DIMMING DRIVER	WALL	13-3/4"W x 4"D	WALL MOUNTED TYPE IV MEDIUM DISTRIBUTION. LED. RATED FOR LOW TEMPERATURE. DARK BRONZE. BATTERY BACK-UP.

1. SEE ARCHITECTURAL REFLECTED CEILING PLAN FOR EXACT LOCATION OF ALL FIXTURES.
2. PROVIDE ENERGY SAVING BALLASTS FOR ALL FIXTURES WHEREVER AVAILABLE.

EXISTING PANELBOARD SCHEDULE — A

LOCATION: SEE PLAN
C.B. RATING: EXISTING

NOTE	VOLTAGE	PHASE	WIRE	MOUNTING	SIZE	LUG	TYPE	NOTE
	208Y/120V	3	4	SURFACE	100	MLO	-	

NOTE	USE and/or AREA SERVED	C/B POLE	CIR	LOAD ØA	LOAD ØB	LOAD ØC	CIR	C/B POLE	USE and/or AREA SERVED	NOTE
1	EXIST. DORM RECEPTS	20/1	1	1000			2	20/1	EXIST. ELEPHONE	1
				500						
1	EXIST. DORM RECEPTS	20/1	3		1000		4	20/1	EXIST. RECEPTS	1
					1000					
1	EXIST. DORM RECEPTS	20/1	5			1000	6	20/1	EXIST. KITCHEN LIGHTS	1
						1000				
1	EXIST DISPOSAL	20/1	7	1000			8	20/1	EXIST. KITCHEN LIGHTS	1
				1000						
1	EXIST. KITCHEN RECEPTS	20/1	9		1000		10	20/1	EXIST. KITCHEN RECEPTS	1
					1000					
1	EXIST. DORM RECEPTS & FAN	20/1	11			1000	12	20/1	EXIST. SHOWER LT, FAN, HEATER	1
						1000				
1	EXIST. EXTERIOR LIGHT	20/1	13	1000			14	20/1	EXIST. APPARATUS RM RECEPTS	1
				1000						
1	EXIST. ALARM LIGHT	20/1	15		1000		16	20/1	EXIST. APPARATUS RM LIGHT	1
					1000					
1	EXIST. DAYROOM RECEPTS.	20/1	17			1000	18	20/1	EXIST. APPARATUS RM LIGHT	1
						1000				
1	EXIST. OUTSIDE POLE LIGHT	20/1	19	1000			20	20/1	EXIST. REFRIGERATOR	1
				1000						
1	EXIST. EADIO & PA SYSTEM	20/1	21		500		22	20/1	EXIST. OVERHEAD DOOR	1
					1000					
1	EXIST. CIRCUIT	20/1	23			1000	24	20/1	EXIST. OVERHEAD DOOR	1
						1000				
1	EXIST. TOILET LIGHTS & FAN	20/1	25	1000			26	20/1	EXIST. CIRCUIT	1
				1000						
1	EXIST. DRYER	30/2	27		2000		28	20/1	EXIST. CIRCUIT	1
					1000					
			29			2000	30	20/1	EXIST. CIRCUIT	1
						1000				
	TOTAL LOAD PER PHASE			9500	10500	11000	11000 VA / 120 V = 92 A			

FEEDER OCPD AND CONDUCTOR CALCULATION

LOAD DESCRIPTION (LOAD IN KVA)	CONNECTED LOAD	DEMAND FACTOR	DEMAND LOAD	AMPACITY FACTOR	FEEDER AMPACITY	NOTES
INTERIOR LIGHTING	8.00	1.00	8.00	1.25	10.00	
EXTERIOR LIGHTING	2.00	1.00	2.00	1.25	2.50	
RECEPTACLES	12.00	*	11.00	1.00	11.00	*FIRST 10 kVA AT 100%, REST AT 50%
HVAC	0.00	1.00	0.00	1.00	0.00	
EQUIPMENT	9.00	1.00	9.00	1.00	9.00	
KITCHEN EQUIPMENT	0.00	1.00	0.00	1.00	0.00	
LARGEST MOTOR NONE	-	-	-	0.25	0.00	
SPARE	0.00	1.00	0.00	1.00	0.00	
TOTAL KVA	**31.00**	-	**30.00**	-	**32.50**	
TOTAL AMPS	**86 A**	-	**83 A**	-	**90 A**	

EXISTING PANELBOARD SCHEDULE — MAIN PANEL

LOCATION: SEE PLAN
C.B. RATING: EXISTING

NOTE	VOLTAGE	PHASE	WIRE	MOUNTING	SIZE	LUG	TYPE	NOTE
	208Y/120V	3	4	SURFACE	400	300A MCB	-	

NOTE	USE and/or AREA SERVED	C/B POLE	CIR	LOAD ØA	LOAD ØB	LOAD ØC	CIR	C/B POLE	USE and/or AREA SERVED	NOTE
1	EXIST. UNIT HEATER	30/3	1	2800			2	30/3	EXIST. UNIT HEATER	1
				2800						
			3		2800		4			
					2800					
			5			2800	6			
						2800				
1	EXIST. OUTSIDE LIGHTS	20/2	7	1500			8	40/2	EXIST. HOSE DRYER	1
				3300						
			9		1500		10			
					3300					
1	EXIST. PLYMOVENT	20/3	11			1500	12	20/2	EXIST. EXHAUST FAN	1
						1000				
			13	1500			14	20/1	HAND DRYER	3
				1200						
			15		1500		16	30/2	EXIST. WATER HEATER	1
					2250					
1	EXIST. CIRCUIT	30/1	17			2000	18			
						2250				
1	EXIST. CIRCUIT	30/1	19	2000			20	20/1	EXIST. EXHAUST FAN	1
				1000						
1	EXIST. ELECTRIC HEAT EM	60/2	21		5000		22	50/2	EXIST. ELECTRIC RANGE	1
					4000					
			23			5000	24			
						4000				
3	NEW LIGHT & EXHAUST FAN	20/1	25	600			26	40/3	EXIST A/C HEAT PUMP	1
				3800						
3	NEW SERVER RECEPTS	20/1	27		1500		28			
					3800					
3	NEW SERVER RECEPTS	20/1	29			1500	30			
						3800				
3	NEW AIR HANDLERS	20/2	31	200			32	20/1	NEW SERVER RECEPTS	3
				1500						
			33		200		34	20/1	NEW SERVER RECEPTS	3
					1500					
3	NEW HEAT PUMP	20/2	35			1620	36	20/1	NEW RECEPTS	3
						720				
			37	1620			38	100/3	EXIST. PANEL 'A'	1
				9500						
1	EXIST. ELECTRIC HEAT	60/2	39		5000		40			
					10500					
			41			5000	42			
						11000				
	TOTAL LOAD PER PHASE			33320	45650	44990	45650 VA / 120 V = 380 A			

LOAD ANALYSIS

LOAD DESCRIPTION (LOAD IN KVA)	CONNECTED LOAD	DEMAND FACTOR	DEMAND LOAD	NOTES
INTERIOR LIGHTING	8.60	1.00	8.60	
EXTERIOR LIGHTING	5.00	1.00	5.00	
RECEPTACLES	16.72	*	13.36	*FIRST 10 kVA AT 100%, REST AT 50%
HVAC	53.84	1.00	53.84	
EQUIPMENT	39.80	1.00	39.80	
KITCHEN EQUIPMENT	0.00	1.00	0.00	
SPARE	0.00	1.00	0.00	
TOTAL KVA	**123.96**	-	**120.60**	**208Y/120V, 3 PHASE, 4 WIRE**
TOTAL AMPS	**344 A**	-	**335 A**	

EXISTING PANELBOARD 'B' AND ELECTRICAL SERVICE ARE SUFFICIENT FOR ADDITIONAL NEW BATH ELECTRICAL LOAD

ELECTRICAL PANEL NOTES

1. EXISTING CIRCUIT BREAKER
2. NEW POWER CONNECTION TO EXISTING SPARE CIRCUIT BREAKER.
3. NEW CIRCUIT BREAKER

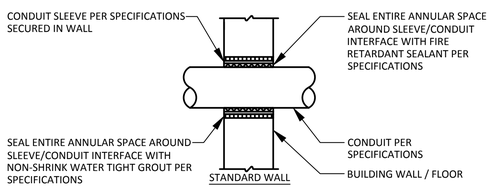

2 WALL PENETRATION DETAIL
NOT TO SCALE

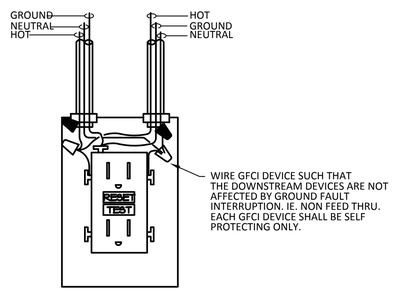

1 GFCI RECEPTACLE WIRING DIAGRAM
NOT TO SCALE

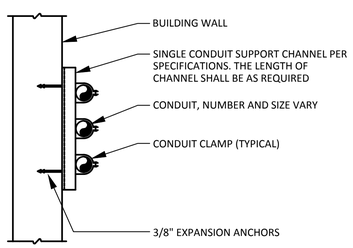

NOTE:
CONDUIT MAY RUN VERTICAL OR HORIZONTAL DEPENDING ON APPLICATION.

4 WALL / CEILING CONDUIT SUPPORT DETAIL
NOT TO SCALE

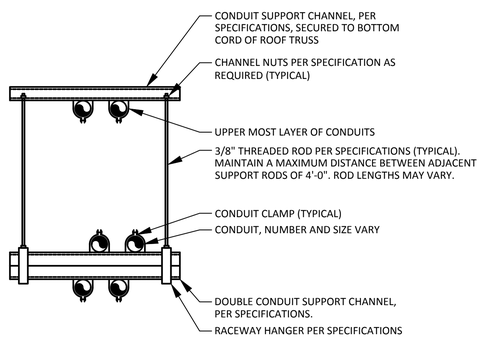

3 CONDUIT SUPPORT DETAIL
NOT TO SCALE

ENCOTECH ENGINEERING CONSULTANTS
TBPE Firm 1141
8500 Bluffstone Cove, Suite B-103
Austin, Texas 78759 | 512.338.1101
Project No.: 15009.M.AUS

STATE OF TEXAS — SHARON S. BICKFORD — 77390 — LICENSED PROFESSIONAL ENGINEER
08/30/2016

mwm Design Group
305 East Huntland Drive
Suite 200
Austin, Texas 78752
p: 512.453.0767
f: 512.453.1734
TBAE FIRM REGISTRATION NO.: 1452
TBPE FIRM REGISTRATION NO.: F-1416
TBPLS FIRM REGISTRATION NO.: 10065600

NO.	DATE	DESCRIPTION	BY

SCALE IS AS NOTED ON DRAWING

ELECTRICAL SCHEDULES & DETAILS

CITY OF AUSTIN, AFD WOMEN'S LOCKER RM. ADDN, PHASE V
5309 EAST RIVERSIDE DRIVE, AUSTIN, TEXAS 78741

PLOTTED: 8/30/2016
JOB NO: 023-79D

FS22-E210

File: J:\ACTIVE PROJECTS\MWM\15009.M.AUS – AFD WLR Ph 5\1. MEP\D-AutoCAD\FS22\15009 FS22 E210 Elec Schedule Details.dwg 24x36

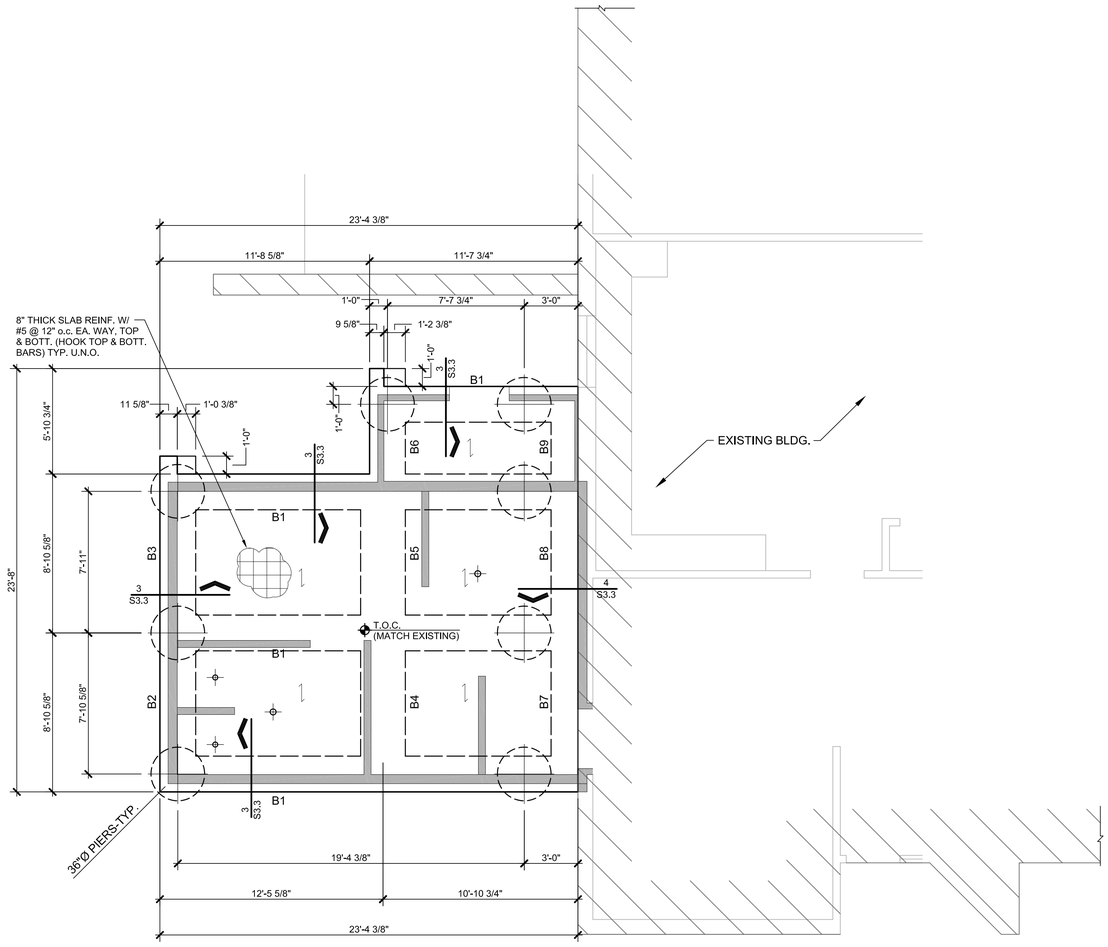

NOTES:

1. FIN. FLR. ELEV. MATCH EXISTING SLAB ELEVATION. T.O.C. REFERS TO TOP OF STRUCTURAL SLAB U.N.O.

2. ALL DRILLED PIERS TO BE STRAIGHT SHAFTS U.N.O. TOP OF PIER ELEVATION VARIES BELOW T.O.C. ELEV. U.N.O. ON PLAN OR DETAILS. PIER SIZES ARE NOTED THUS:

PIER DIA.
T.O.P.

3. SEE SHEET S3.0 FOR TYPICAL PIER DETAILS.

4. - INDICATES SLAB DEPRESSIONS. SEE STRUCTURAL PLANS & DETAILS FOR DEPTH OF SLAB DEPRESSIONS SEE ARCHITECTURAL FOR EXACT LOCATIONS OF ALL SLAB DEPRESSIONS. DROPS SHOWN ON PLAN ARE IN STRUCTURAL SLAB SEE ARCHITECTURAL FOR EXACT LOCATIONS OF ALL SLAB DEPRESSIONS.

5. SEE ARCHITECTURAL AND MECHANICAL - COORDINATE ALL FLOOR OPENINGS AND PENETRATIONS WITH TRADES INVOLVED FOR ACTUAL SIZES AND LOCATIONS.

6. REFER TO MECHANICAL, ELECTRICAL AND PLUMBING DRAWINGS FOR SLAB PENETRATIONS AND UNDERGROUND UTILITIES.

7. CONTRACTOR TO VERIFY ALL SLAB EDGE, STAIR AND ELEVATOR OPENING DIMENSIONS WITH ARCHITECTURAL DRAWINGS PRIOR TO CONSTRUCTION.

8. SEE GENERAL NOTES AND SPECIFICATION FOR ADDITIONAL INFORMATION.

9. CONTRACTOR TO VERIFY ALL DIMENSIONS AND EXISTING CONDITIONS AND AND REPORT ANY DISCREPANCY TO THE ARCHITECT AND THE ENGINEER.

10. REFER TO ARCHITECTURAL DRAWINGS FOR EXTENT AND DIMENSIONS OF RAISED OR DEPRESSED SLAB AREAS, SLOPES AND DRAINS.

NOTE

1 FOUNDATION PLAN _FS22
SCALE: 1/4" = 1'-0"

JOSE I. GUERRA, INC.
CONSULTING ENGINEERS
2401 S. IH35 SUITE 210
AUSTIN, TEXAS 78741
(512) 445-2090
TBPE FIRM F-3

STATE OF TEXAS
JOSE I. GUERRA
85548
REGISTERED PROFESSIONAL ENGINEER
8-30-16

mwm Design Group
305 East Huntland Drive
Suite 200
Austin, Texas 78752
p: 512.453.0767
f: 512.453.1734
TBAE FIRM REGISTRATION NO.: 1452
TBPE FIRM REGISTRATION NO.: F-1416
TBPLS FIRM REGISTRATION NO.: 10065600

NO.	DATE	DESCRIPTION	BY

0 1"
The bar above measures one inch on the original drawing. Adjust scales accordingly.

FOUNDATION PLAN

WOMEN'S LOCKER ROOM PHASE V
5309 EAST RIVERSIDE DRIVE, AUSTIN, TEXAS 78741

PLOTTED: 8/30/2016
JOB NO: 023-79D

FS22-S2.0

___ OF ___

File: F:\15011_AFD Women's Locker Rm Improvements\DRAWINGS\CAD\15011_FS22_S2.0 FOUNDATION PLAN.dwg 24x36

SHORING NOTES:

1. ALL NEW OPENINGS ARE TO BE FRAMED WITH NEW STEEL BEAMS OR GLULAM BEAMS TO SUPPORT THE ROOF AND CEILING LOADS CURRENTLY SUPPORTED BY EXISTING LOAD BEARING WALLS TO BE DEMOLISHED. REFERENCE ARCHITECTURAL DRAWINGS FOR DEMOLITION DRAWINGS.

2. THE STRUCTURAL DRAWINGS AND SPECIFICATIONS REPRESENT THE FINISHED STRUCTURE. THEY DO NOT INDICATE THE METHODS OF CONSTRUCTION UNLESS SO STATED OR NOTED. THE CONTRACTOR SHALL PROVIDE ALL MEASURES NECESSARY TO PROTECT THE WORKERS AND ALL OTHER PERSONS DURING CONSTRUCTION.

3. THE CONTRACTOR SHALL PROVIDE TEMPORARY ERECTION BRACING AND SHORING OF ALL STRUCTURAL WORK AS REQUIRED FOR STABILITY OF THE STRUCTURE DURING ALL PHASES OF CONSTRUCTION. THE CONTRACTOR SHALL IMMEDIATELY NOTIFY THE ENGINEER OF ANY CONDITION THAT MIGHT ENDANGER THE STABILITY OF THE STRUCTURE OR CAUSE DISTRESS IN THE STRUCTURE.

4. THE EXISTING LOAD BEARING WALLS TO BE DEMOLISHED ARE TO BE SHORED BY THE CONTRACTOR. THE CONTRACTOR'S TEMPORARY SHORING SYSTEM IS TO REMAIN IN PLACE UNTIL ALL NEW BEAMS HAVE BEEN ERECTED AND ATTACHED TO THE EXISTING LOAD BEARING WALLS/ROOF FRAMING PER STRUCTURAL DRAWINGS.

5. THE CONTRACTOR SHALL SUBMIT SHORING PLANS FOR REVIEW BY ARCHITECT/ ENGINEER THE SHORING PLAN SHALL BE DESIGNED AND SEALED BY AN ENGINEER REGISTERED IN THE STATE OF TEXAS.

6. THE SHORING SYSTEM SHOULD JACK THE EXISTING LOAD BEARING WALLS BETWEEN 1/16" AND 1/8" ABOVE THEIR FINAL ELEVATIONS IN ORDER TO INSURE THAT THE ROOF LOADS ARE TRANSFERRED TO THE NEW BEAMS WITHOUT DEFLECTION.

7. THE BUILDING MUST REMAIN OPEN AND OPERATING DURING CONSTRUCTION. ALL WORK MUST BE PERFORMED IN SUCH A MANNER AS TO CAUSE MINIMAL DISRUPTION TO THE NORMAL ACTIVITIES OF THE BUILDING.

SHEARWALL LEGEND

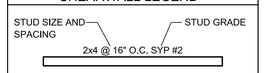

SHEARWALL LEGEND

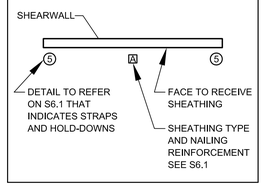

CEILING JOIST NOTES:

1. G.C. SHALL VERIFY DIMENSIONS WITH ACHITECTURAL DRAWINGS AND SHALL NOTIFY ARCH/ ENGINEER OF DISCREPANCIES PRIOR TO CONSTRUCTIONS.
2. FOR INTERIOR AND EXTERIOR WALLS, PROVIDE (2) KING STUDS FOR OPENINGS UP TO 5 FEET IN LENGTH, OR (3) KING STUBS FOR OPENINGS UP TO 9 FEET LENGTH. KING STUD QUANTITY IS TO BE PROVIDED AT EACH SIDE OF OPENING.
3. PROVIDE (1) TRIMMER STUD FOR OPENINGS UP TO 5 FEET LENGTH, (2) TRIMMER STUDS FOR OPENINGS UP TO 10 FEET LENGTH, OR (3) TRIMMER STUDS FOR OPENINGS UP 16 FEET LENGTH. TRIMMER STUD QUANTITY IS TO BE PROVIDED AT EACH SIDE OF OPENING.
4. STUD PACKS SHALL INCLUDE KING AND TRIMMER STUDS AT OPENINGS.
5. TRIMMER AND KING STUD SIZE SHALL MATCH WALL FRAMING STUD SIZE.
6. VERTICAL NAILING BETWEEN TRIMMER STUDS AND BETWEEN KING STUDS SHALL BE 16d AT 16".
7. REFERENCE THIS SHEET FOR LOAD BEARING WALL STUD SIZE & SPACING.
8. REFERENCE SHEET S4.1 FOR SHEAR WALL SCHEDULE.
9. ALL LUMBER TO BE #2 S.Y.P.K.D.
10. ALL CEILING JOISTS TO BE 2x8 AL 16" O.C. UNLESS NOTED OTHERWISE (17'-0" MAX SPAN) REFERENCE IBC FOR OTHER SPANS
11. ALL HEADERS @ 2x4 WALLS TO BE 2-2X PER IBC CODE UNLESS NOTED OTHERWISE. @ 2x6 WALLS TO BE 3-2x PER IBC CODE UNLESS NOTED OTHERWISE.

HEADER SCHEDULE

3-2x8 0'-0" to 5'-0"
3-2x10 5'-1" to 6'-1"
3-2x12 6'-2" to 7'-1"

12. ALL BEAMS LARGER THAN 2-2x6 TO BE SUPPORTED BY BUILT-UP STUD COLUMNS AT 2x6 STUD WALLS AND 2x4 STUD WALLS AT EACH END UNLESS NOTED OTHERWISE AND BLOCKED SOLID TO FOUNDATION. SEE BUILT-UP COLUMN SCHEDULE SHEET S4.0 FOR NUMBER OF BUILT-UP STUD COLUMN; AT EACH END OF BEAMS.
13. DOUBLE 2x8 CEILING JOISTS AS REQUIRED. UNDER HVAC AND/OR WH UNITS LOCATED IN ATTIC. PROVIDE 3/4" PLYWOOD DECK PAD AND CATWALK AS REQUIRED.
14. ALL BEAMS JOB BUILT FROM 3 OR MORE MEMBERS NAILED WITH 10D NAILS @ 6" O.C. TOP AND BOTTOM.
15. ALL GLU-LAMS TO BE DESIGNED WITH STANDARD CAMBER OF R=2000 FT.
16. BRACE TOP FLANGE OF ALL GLULAM, MICROLLAM, OR 2xWOOD BEAMS @ 4'-0" EA SIDE OF CEILING JOISTS WITH 2x6 CONTINUOS STIFFBACK AND 2x4 BRACES
17. STUD WALLS SHALL BE 2x6 @ 16 " O.C., #2 S.Y.P.K.D. UNO. (MAX. HEIGHT 10'-0") STUD WALLS SHALL BE 2x8 @ 16" O.C. , # 2 S.Y.P.K.D. UNO. (HEIGHTS GREATER THAN 10-0" TO 14'-0" MAX.)
18. PROVIDE 2x BLOCKING AT 4'-0" O.C. VERTICALLY AT ALL STUD WALLS.
19. ALL FRAMING TO COMPLY WITH I.B.C. BUILDING CODES, CURRET EDITION.
20. VERIFY ANY CHANGES WITH ENGINEER PRIOR TO CONSTRUCTION.

ROOF FRAMING PLAN

SCALE:

PLAN NOTES:

1. G.C. SHALL VERIFY DIMENSIONS WITH ACHITECTURAL DRAWINGS AND SHALL NOTIFY ARCH/ ENGINEER OF DISCREPANCIES PRIOR TO CONSTRUCTIONS.
2. ALL LUMBER TO BE #2 Y.P.K.D.
3. ALL RAFTERS TO BE 2x8 AT 16"O.C. WITH A MAXIMUM UNBRACED SPAN 18'-0" MEASURED ALONG THE SLOPE, UNLESS NOTED OTHERWISE.
4. ALL HIPS, RIDGES, VALLEYS TO BE 2x10 MAXIMUM. UNBRACED SPAN 8'-0" UNLESS NOTED OTHERWISE. PROVIDE "TEE" BRACES @ 6'-0" O.C. MAX SPACING AT RIDGES. PROVIDE "TEE" BRACES @ 8'-0" O.C. MAX SPACING AT HIPS AND VALLYS. PROVIDE DBL STUDS BELOW EACH "TEE" BRACE AT STUD WALLS
5. PROVIDE 2x8 CONTINUOUS PURLINS WITH 2x8 "TEE" BRACES @ 4'-0" O.C. MAX SPACING PROVIDE DBL STUDS BELOW EACH "TEE" BRACE AT STUD WALLS. NAIL "TEE" BRACE TOGETHER WITH 10D NAILS @ 6" O.C.- TYPICAL.
6. "TEE" BRACES LONGER THAN 8'-0" SHALL BE DBL 2x8 STUD WITH FLANGE PLATE "TEE" BRACE AND BRACED HORIZONTALLY @ 6'-0" O.C. IN TWO DIRECTIONS, NAIL "TEE" BRACE TOGETHER WITH 1O D NAILS @ 6" O.C. - TYPICAL
7. PROVIDE 2x6 MIN. COLLAR TIES AT 4'-0" O.C. AT ALL RIDGES.
8. ALL FRAMING TO COMPLY WITH I.B.C. BUILDING CODE CURRENT EDITION.
9. VERIFY AND CHANGES WITH ENGINEER PRIOR TO CONSTRUCTION.

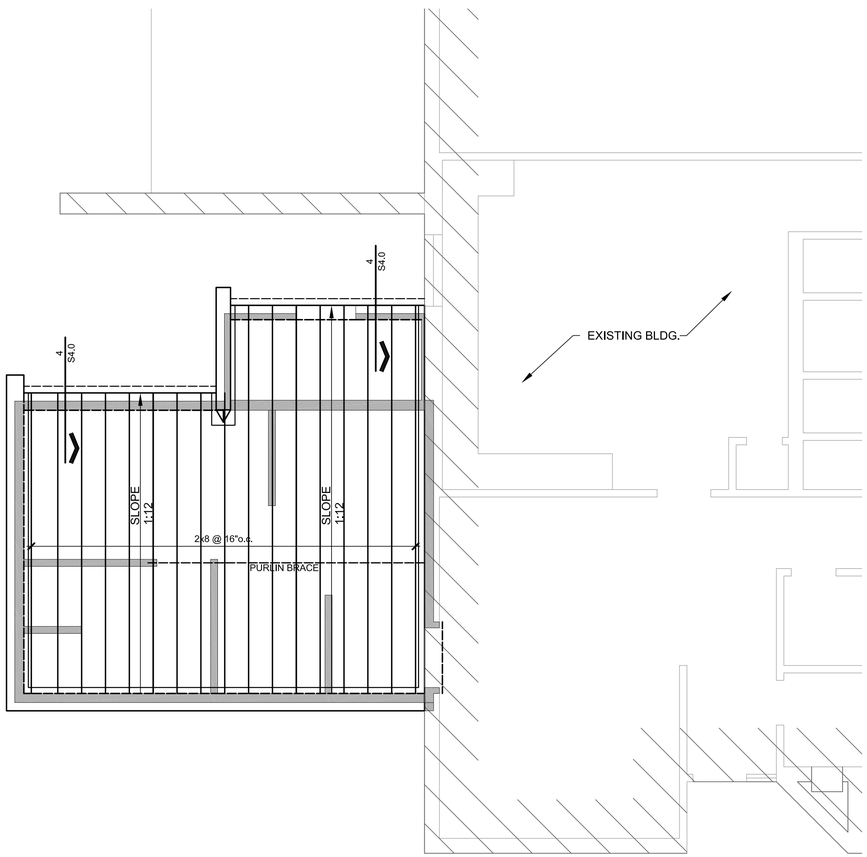

NOTE:
TOP OF STUD WALL ELEVATION REF. ARCH'L

NORTH

2 ROOF FRAMING PLAN _FS22
SCALE: 1/4" = 1'-0"

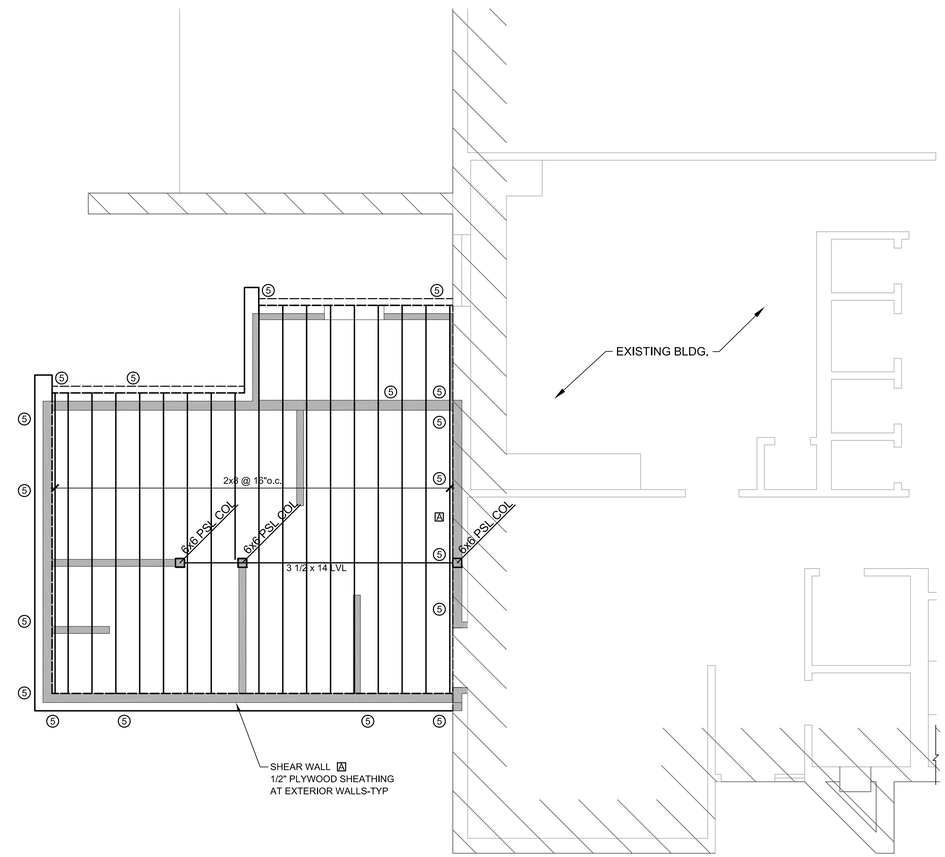

NORTH

1 CEILING FRAMING PLAN _FS22
SCALE: 1/4" = 1'-0"

JOSE I. GUERRA, INC.
CONSULTING ENGINEERS
2401 S. IH35 SUITE 210
AUSTIN, TEXAS 78741
(512) 445-2090
TBPE FIRM F-3

STATE OF TEXAS
JOSE I. GUERRA
No. 85568
REGISTERED PROFESSIONAL ENGINEER
8-30-16

mwm Design Group
305 East Hunland Drive
Suite 200
Austin, Texas 78752
p: 512.453.0767
f: 512.453.1734
TBAE FIRM REGISTRATION NO.: 1452
TBPE FIRM REGISTRATION NO.: F-1416
TBPLS FIRM REGISTRATION NO.: 10065600

NO.	DATE	DESCRIPTION	BY

0 1"
The bar above measures one inch on the original drawing. Adjust scales accordingly.

ROOF & CEILING FRAMING PLAN

WOMEN'S LOCKER ROOM PHASE V
5309 EAST RIVERSIDE DRIVE, AUSTIN, TEXAS 78741

PLOTTED: 8/30/2016
JOB NO: 023-79D

FS22-S2.1

___ OF ___

File: F:\15011_AFD Women's Locker Rm Improvements\DRAWINGS\CAD\15011_FS22_S2.1 ROOF FRAMING PLAN.dwg 24x36

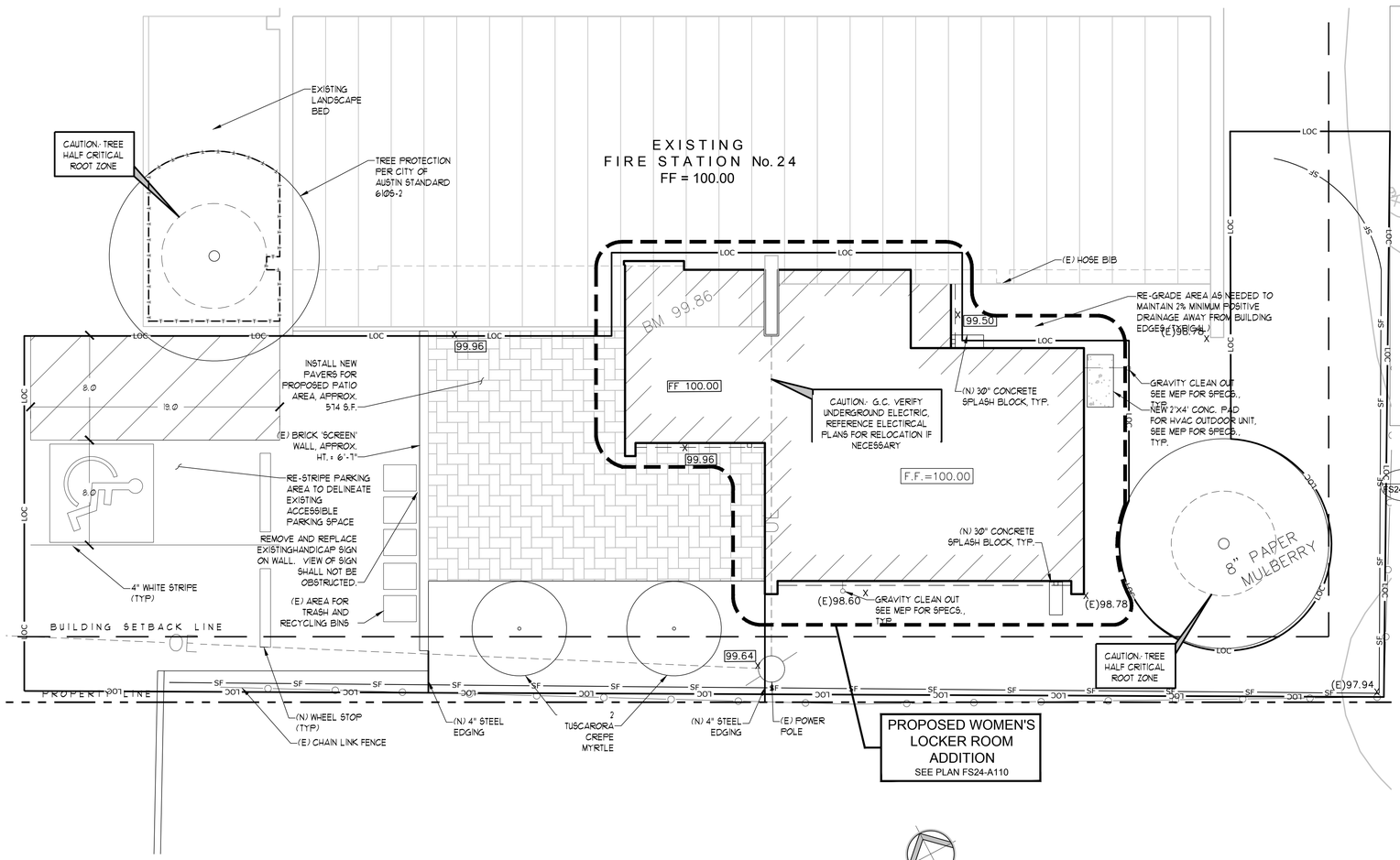

1 FS24-A050 ENLARGED SITE PLAN

SCALE: 1" = 5'

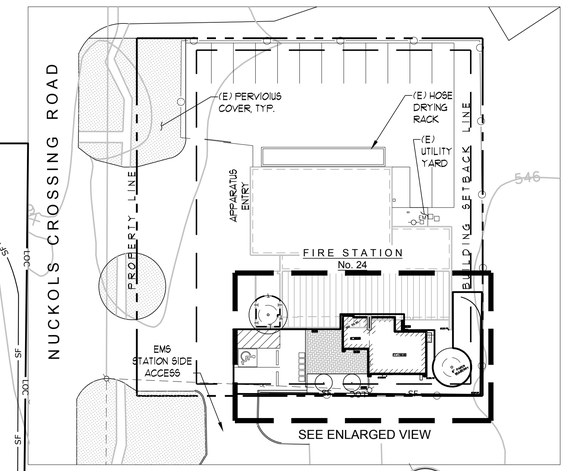

2 FS24-A050 SITE PLAN (KEY PLAN)

SCALE: 1" = 30'

SITE PLAN LEGEND

- PROPERTY LINES
- BUILDING SETBACK LINES
- LOC — LIMITS OF CONSTRUCTION
- 528 — EXISTING TOPOGRAPHIC CONTOUR
- EXISTING TREE & TREE PROTECTION
- EXISTING CHAIN LINK FENCE
- PROPOSED OBJECT
- PROPOSED CURB & GUTTER
- PROPOSED ASHPHALT
- PROPOSED CONCRETE
- EXISTING PERVIOUS AREA
- PROPOSED PERVIOUS AREA
- EXISTING STRUCTURE
- PROPOSED STRUCTURE
- (E)XX.XX — EXISTING SPOT ELEVATION
- XX.XX — PROPOSED SPOT ELEVATION

NOTE

THE LOCATIONS OF EXISTING IMPROVEMENTS SHOWN ON THIS PLAN WERE DERIVED IN PART FROM RECORD DOCUMENTS OF UNKNOWN ACCURACY. THE PRESENCE, LOCATION AND ELEVATION OF EXISTING UTILITIES IN THE FILED SHALL BE VERIFIED BY THE CONTRACTOR BEFORE COMMENCING WORK. IT SHALL BE THE RESPONSIBILITY OF THE CONTRACTOR TO VERIFY EXISTING CONDITIONS WITHIN THE LIMITS OF CONSTRUCTION. FAILURE OF AN EXISTING UTILITY TO APPEAR ON THIS PLAN SHALL NOT RELIEVE THE CONTRACTOR OF RESPONSIBILITY TO PROTECT AND REPAIR, IF DAMAGED, SUCH UTILITIES.

ALL NEW PEDESTRIAN PAVEMENT SHALL BE CONSTRUCTED IN ACCORDANCE WITH THE TEXAS ACCESSIBILITY STANDARDS, AND SHALL MATCH THE ELEVATIONS OF EXISTING IMPROVEMENTS AT POINTS OF INTERSECTION.

FINE GRADING SHALL BE COMPLETED TO DRAIN STORMWATER AWAY FROM BUILDING PERIMETERS, AND SPECIFICALLY AWAY FROM FROM BUILDING ENTRANCES AT THE MAXIMUM SLOPES POSSIBLE GIVEN EXISTING CONDITIONS ADJACENT.

SUMMARY SEQUENCE OF CONSTRUCTION

1. INSTALL SEDIMENTATION AND EROSION CONTROLS AND TREE PROTECTION FENCING AND INITIATE TREE MITIGATION MEASURES (AS REQUIRED).
2. BEGIN SITE CLEARING/CONSTTRUCTION ACTIVITIES.
3. COMPLETE CONSTRUCTION AND BEGIN REVEGETATION OF SITE AND INSTALLATION OF LANDSCAPING.
4. FOLLOWING REVEGETATION, REMOVE THE TEMPORARY EROSION AND SEDIMENTATION CONTROLS AND COMPLETE ANY NECESSARY FINAL REVEGETATION RESULTING FROM REMOVAL OF THE CONTROLS.

PLANT LIST

COMMON NAME	BOTANICAL NAME	SIZE	COMMENT
CREPE MYRTLE	TUSCARORA CREPE MYRTLE LAGERSTOEMIA x "TUSCARORA"	5"	MULTI TRUNK MATCHED

	EXISTING	PROPOSED
SITE AREA, S.F.	21,780 SF	21,780 SF
IMPERVIOUS AREA, S.F. (%)	15,927.2 SF (73%)	+1,179 SF (78.5%)
NET CHANGE %		+5.5 %
GROSS FLOOR AREA OF PROPOSED ADDITION		640 SF

THIS SITE IS COMPRISED OF TWO PROPERTIES, CITY OF AUSTIN; VOL. 2472, PG. 285 AND VOL. 2476, PG., 498 D.R.T.C. (40 AC.)

BID DOCUMENTS

STATE OF TEXAS BRANDON EDWARD HAMILTON 87368 LICENSED PROFESSIONAL ENGINEER
MWM DesignGroup, Inc. F-1416
8-30-16

mwm DesignGroup
305 East Huntland Drive
Suite 200
Austin, Texas 78752
p: 512.453.0767
f: 512.453.1734
TBAE FIRM REGISTRATION NO.: 1452
TBPE FIRM REGISTRATION NO.: F-1416
TBPLS FIRM REGISTRATION NO.: 10065600

NO.	DATE	DESCRIPTION	BY

0 1"
The bar above measures one inch on the original drawing. Adjust scales accordingly.

SITE PLAN

CITY OF AUSTIN, AFD WOMEN'S LOCKER RM. ADDN, PHASE V
5810 NUCKOLS CROSSING ROAD, AUSTIN, TEXAS 78744

PLOTTED: 9/7/2016
JOB NO: 023-79D

FS24-C050

File: T:\023-79D_WomensLockerRooms\CAD\Fire Station 24\Sheets\FS24-A050 SITE PLAN.dwg 24x36

PROJECT DATA: FIRE STATION 5

GOVERNING CODES

2012 INTERNATIONAL ENERGY CONSERVATION CODE
2012 INTERNATIONAL BUILDING CODE
2012 INTERNATIONAL MECHANICAL CODE
2012 UNIFORM PLUMBING CODE (AS AMENDED BY COA)
2012 NATIONAL ELECTRIC CODE (AS AMENDED BY COA)
2010 ADA STANDARDS FOR ACCESSIBLE DESIGN
2012 TEXAS ACCESSIBILITY STANDARDS

BUILDING CODE DATA – IBC CHAPTER 3

OCCUPANCY GROUP

B THE USE OF A BUILDING OR STRUCTURE, OR A PORTION THEREOF, FOR OFFICE, PROFESSIONAL OR SERVICE–TYPE TRANSACTIONS, INCLUDING STORAGE OF RECORDS AND ACCOUNTS.

GENERAL BUILDING LIMITATIONS – IBC CHAPTER 5

ALLOWABLE HEIGHT AND BUILDING AREA (TABLE 503)

TYPE VB (B OCCUPANCY)
AREA (SF) 9,000
HEIGHT 2 STORY

FRONTAGE INCREASE (If) = [F/P–0.25]W/30 = 25
SPRINKLER INCREASE (Is) = 0

ALLOWABLE AREA (B) = At+(AtIf/100)+(AtIs/100) = 11,250

ACTUAL AREA B (SF) 4,922
ACTUAL AREA B 1 STORY

CONSTRUCTION TYPE – IBC CHAPTER 6

FIRE RESISTIVE REQUIREMENTS FOR BUILDING ELEMENTS (TYPE VB–TABLE 601)

BEARING WALLS	
INTERIOR	NO REQUIREMENTS
EXTERIOR	NO REQUIREMENTS
NONBEARING WALLS	
EXTERIOR	SEE BELOW
NONBEARING WALLS	
INTERIOR	NO REQUIREMENTS
FLOOR CONSTRUCTION	NO REQUIREMENTS
ROOF CONSTRUCTION	NO REQUIREMENTS

EXTERIOR WALL/OPENING PROTECTION (TABLE 602 AND 704.8)

EXTERIOR WALLS	1 LESS THAN 10 FEET
	NO RATING 10 FEET OR GREATER

INTERIOR FINISHES – IBC CHAPTER 8

FLAME SPREAD RATINGS OF MATERIALS AND FINISHES (TABLE 803.4)

CLASS A: FLAME SPREAD 0–25, SMOKE DEVELOPED 0–450
CLASS B: FLAME SPREAD 26–75, SMOKE DEVELOPED 0–450
CLASS C: FLAME SPREAD 76–200, SMOKE DEVELOPED 0–450

VERTICAL EXITS AND PASSAGEWAYS	CLASS B
EXIT ACCESS CORRIDORS	CLASS B
ROOMS AND ENCLOSED SPACES	CLASS C

OCCUPANCY LOAD AND MEANS OF EGRESS –

	AREA (sqft.)	OCCUPANT LOAD FACTOR (sqft.)	OCCUPANTS	REQUIRED EGRESS WIDTH PER OCCUPANT	REQUIRED EGRESS WIDTH
LOCKER ROOM	633	–	–	–	–
TOTAL			–	–	–
EGRESS WIDTH PROVIDED (1 DOOR)					32

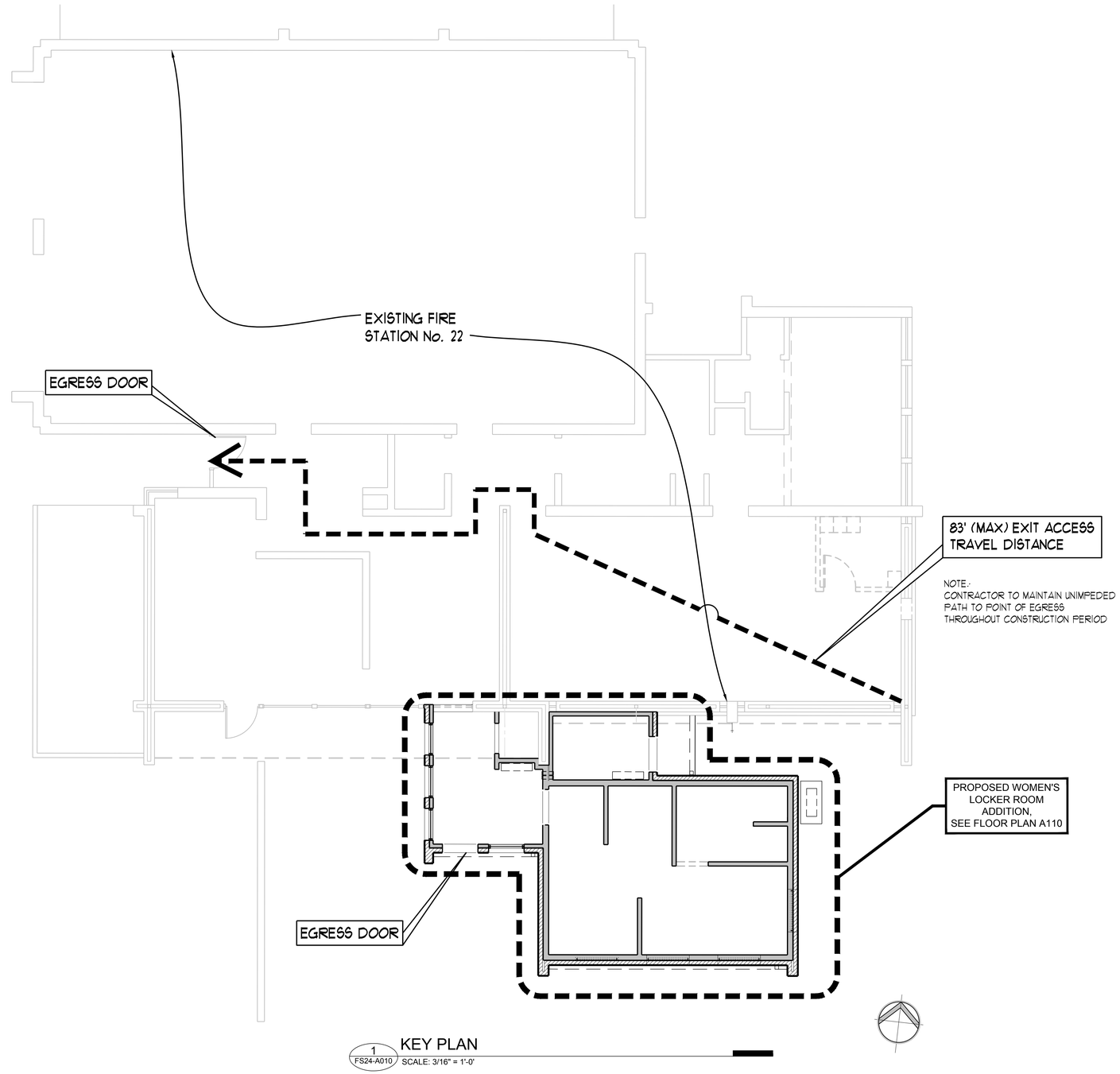

1 FS24-A010 KEY PLAN
SCALE: 3/16" = 1'-0'

BID DOCUMENTS

REGISTERED ARCHITECT W. OWEN RAMSEY 18345 STATE OF TEXAS

mwm Design Group
305 East Huntland Drive
Suite 200
Austin, Texas 78752
p: 512.453.0767
f: 512.453.1734
TBAE FIRM REGISTRATION NO.: 1452
TBPE FIRM REGISTRATION NO.: F-1416
TBPLS FIRM REGISTRATION NO.: 10065600

NO.	DATE	DESCRIPTION	BY

0 1"
The bar above measures one inch on the original drawing. Adjust scales accordingly.

CODE SUMMARY & KEY PLAN

CITY OF AUSTIN, AFD WOMEN'S LOCKER RM. ADDN, PHASE V
5810 NUCKOLS CROSSING ROAD, AUSTIN, TEXAS 78744

PLOTTED: 8/30/2016
JOB NO: 023-79D

FS24-A010

File: Y:\023-79D_WomensLockerRooms\CAD\Fire Station 24\Sheets\FS24-A010 CODE.dwg 24x36

DEMOLITION LEGEND

- PROPERTY LINES
- BUILDING SETBACK LINES
- EXISTING TO REMAIN
- EXISTING OVERHEAD OBJECT
- EXISTING STRUCTURE
- EXISTING TO REMOVE
- EXISTING TO REMOVE

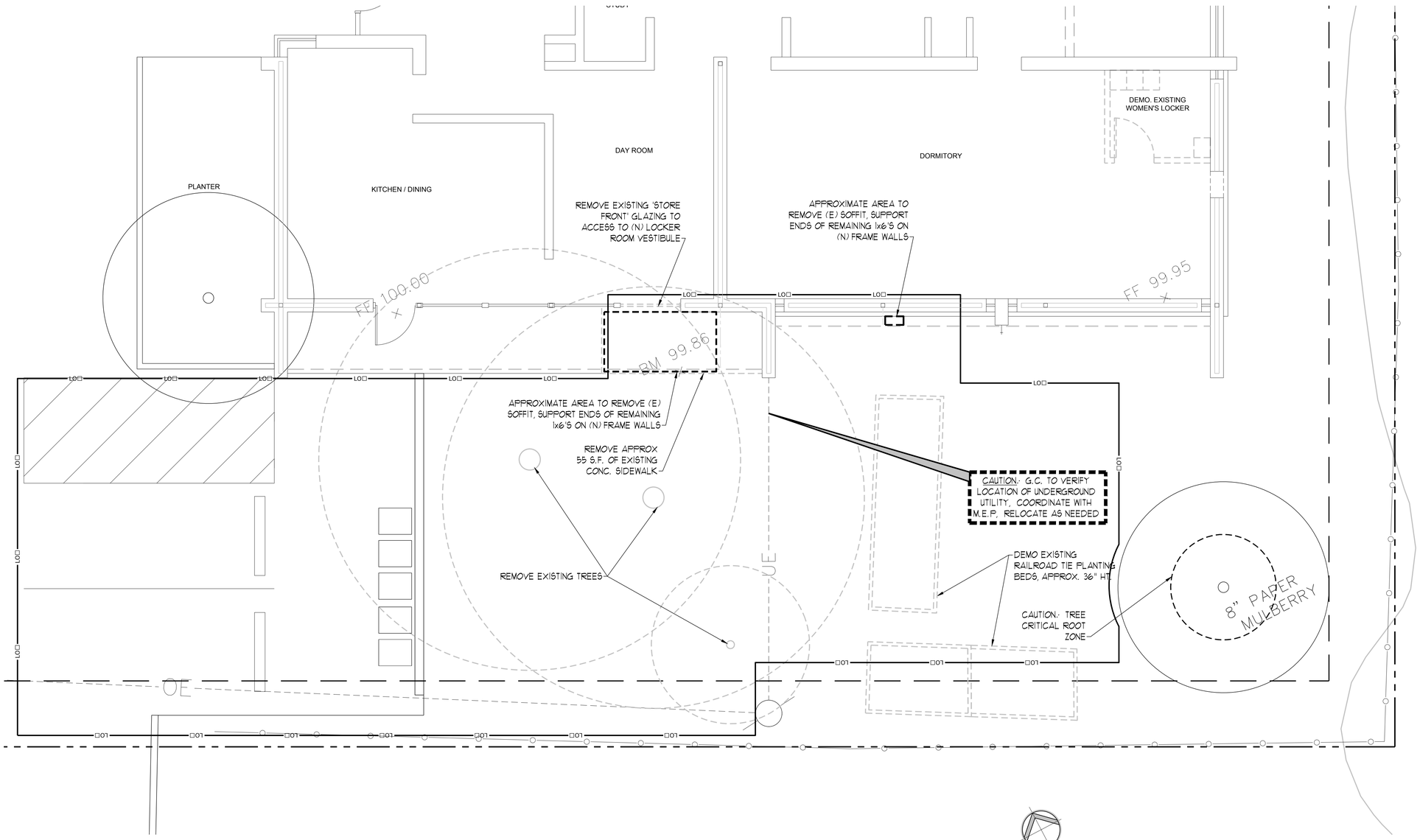

1 FS24-A100 DEMOLITION PLAN

SCALE: 1/4" = 1'-0"

BID DOCUMENTS

REGISTERED ARCHITECT JOHN OWEN HARRISON 18348 STATE OF TEXAS

mwm Design Group

305 East Huntland Drive
Suite 200
Austin, Texas 78752
p: 512.453.0767
f: 512.453.1734

TBAE FIRM REGISTRATION NO.: 1452
TBPE FIRM REGISTRATION NO.: F-1416
TBPLS FIRM REGISTRATION NO.: 10065600

NO.	DATE	DESCRIPTION	BY

0 1"

The bar above measures one inch on the original drawing. Adjust scales accordingly.

DEMOLITION PLAN

CITY OF AUSTIN, AFD WOMEN'S LOCKER RM. ADDN, PHASE V
5810 NUCKOLS CROSSING ROAD, AUSTIN, TEXAS 78744

PLOTTED: 8/30/2016
JOB NO: 023-79D

FS24-A100

File: "A:\023-79D_WomensLockerRooms\CAD\Fire Station 24\Sheets\FS24-A100 DEMO PLAN.dwg 24x36

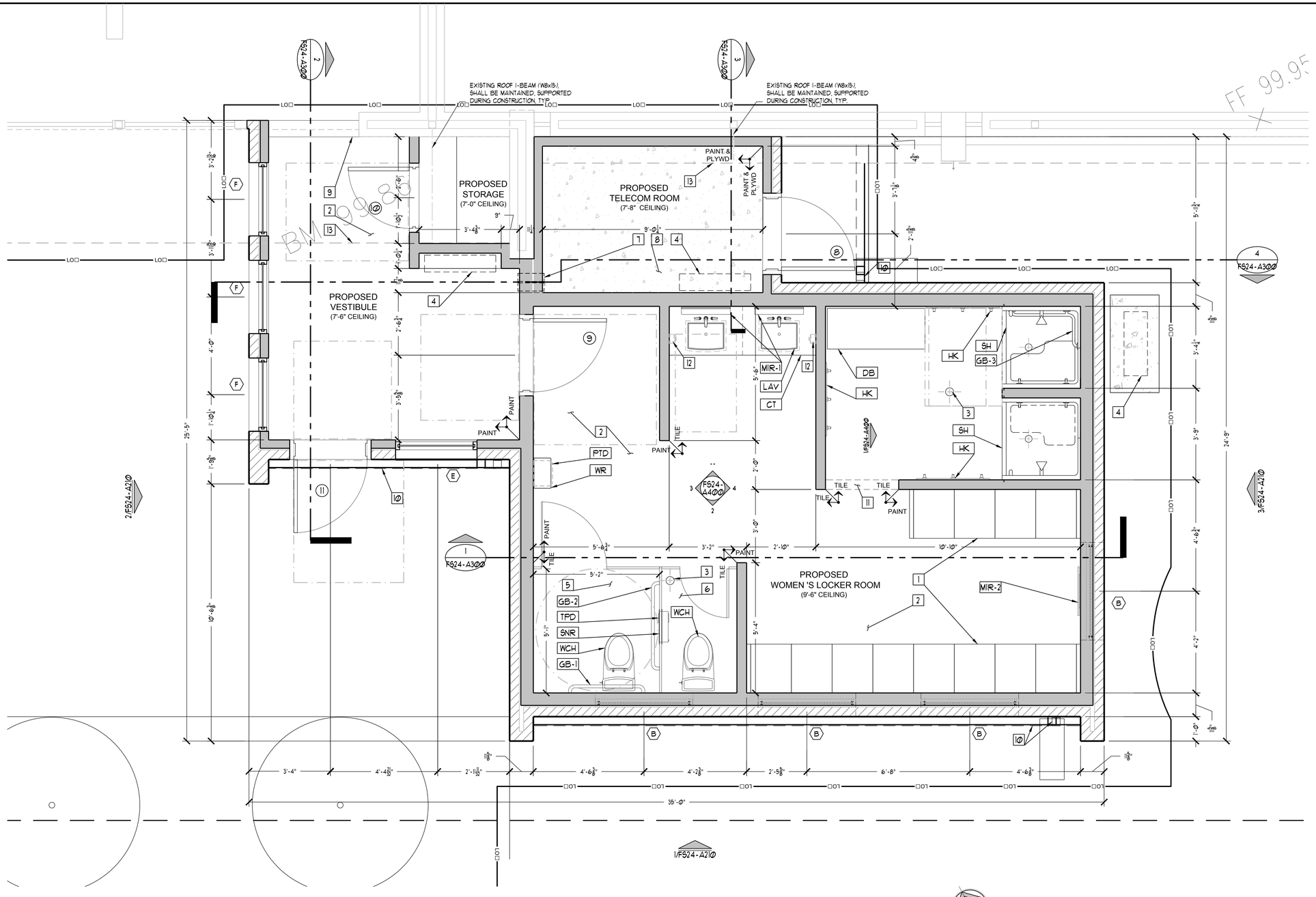

1 FS24-A110 FLOOR PLAN
SCALE: 1/2" = 1'-0"

LEGEND

- PROPERTY LINES
- BUILDING SETBACK LINES
- EXISTING TO REMAIN
- EXISTING OVERHEAD OBJECT
- EXISTING TO REMOVE
- EXISTING STRUCTURE
- PROPOSED STRUCTURE
- PROPOSED OBJECT
- TILE / PAINT — PROPOSED WALL FINISH TYPE
- PROPOSED FLOOR DRAIN
- A.D.A. CLEAR FLOOR AREA
- PROPOSED GLAZING AT CLERESTORY
- PROPOSED GLAZING
- PROPOSED BRICK VENEER WALL
- PROPOSED FRAME WALL
- PROPOSED WALL INFILL, AS NOTED
- PROPOSED CMU BLOCK WALL
- PROPOSED CONCRETE
- PROPOSED FLOOR TILE
- PROPOSED PLYWOOD

CALL-OUT KEY

1. (N) NON-SLIP TILE FLOORING
2. (N) 20"x24"x60" HOLMAN LOCKERS OR APPROVED EQUAL
3. (N) FLOOR DRAIN, REFER TO M.E.P.
4. (N) MINI SPLIT AC WALL MOUNTED UNIT AND HEAT PUMP OUTDOOR UNIT (ON 2'x4' CONC. SLAB), SEE MEP SPECS
5. (N) ACCESSIBLE TOILET STALL
6. (N) STANDARD TOILET STALL
7. INSTALL (2) 4" PVC CONDUITS FOR NETWORK CABLING
8. (N) BROOM FINISHED CONCRETE FLOOR, SEE STRUCTURAL
9. (N) THRESHOLD, REFER TO PAGE FS0-A0300, DETAIL 5, SUB DETAIL 13 FOR SPECS.
10. (N) ROOF OVERHANG WITH GUTTER AND DOWNSPOUTS
11. (N) TILE INSIDE 3'0"X1'0" OPENING
12. (N) SOAP DISPENSER SUPPLIED BY OWNER, TYP.
13. (E) BUILDING OVERHANG

BID DOCUMENTS

REGISTERED ARCHITECT W. OWEN HARRISON 18348 STATE OF TEXAS

mwm Design Group
305 East Huntland Drive
Suite 200
Austin, Texas 78752
p: 512.453.0767
f: 512.453.1734
TBAE FIRM REGISTRATION NO.: 1452
TBPE FIRM REGISTRATION NO.: F-1416
TBPLS FIRM REGISTRATION NO.: 10065600

FLOOR PLAN

NO.	DATE	DESCRIPTION	BY

0 — 1"
The bar above measures one inch on the original drawing. Adjust scales accordingly.

FLOOR PLAN

CITY OF AUSTIN, AFD WOMEN'S LOCKER RM. ADDN, PHASE V
5810 NUCKOLS CROSSING ROAD, AUSTIN, TEXAS 78744

PLOTTED: 8/30/2016
JOB NO: 023-79D

FS24-A110

File: Y:\023-79D_WomensLockerRooms\CAD\Fire Station 24\Sheets\FS24-A110 FLOOR PLAN.dwg 24x36

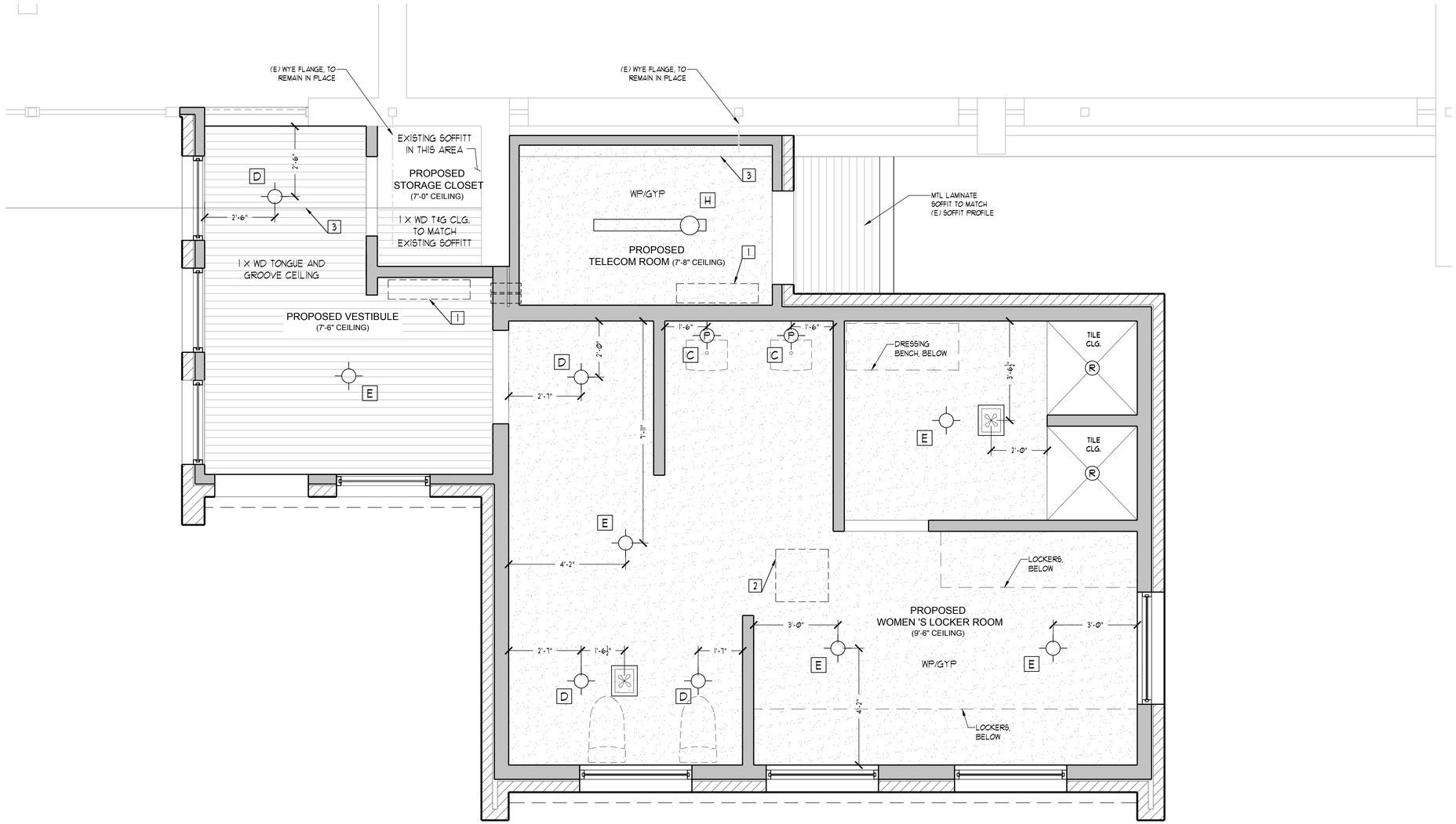

RCP LEGEND

- GYPSUM WALLBOARD
- 2'x2' LAY-IN ACOUSTICAL TILE CEILING GRID
- PLYWOOD SURFACE
- 1x WOOD PLANKS/T&G
- 2x WOOD FRAME INFILL, INCLUDES:- INSULATION, GYP. BD., TAPE, FLOAT, CHAULK ALL JOINTS/GAPS & PAINT
- OPEN TO STRUCTURE ABOVE
- FLUSH MOUNT CEILING LIGHT
- PENDANT CEILING LIGHT
- RECESSED CEILING MOUNT LIGHT
- (2) 4 FT. NEON BALLAST FLUSH MOUNT WORK LIGHT, W/ MTL PROTECTIVE COVER
- RECESSED MOUNTED EXHAUST FAN
- CEILING FAN WITH LIGHT
- WALL SCONCE
- SURFACE MOUNT UNDER-CABINET LIGHT

CALL-OUT KEY

1. (N) MINI SPLIT AC WALL MOUNTED UNIT AND HEAT PUMP OUTDOOR UNIT (ON 2'x4' CONC. SLAB), SEE MEP SPECS
2. CEILING FLUSH MOUNT HVAC CASSETTE, 22 1/2"X 22 1/2", SEE MEP DRAWINGS FOR SPECS., TYP.
3. (E) BUILDING OVERHANG
4. LIGHTING FIXTURE SCHEDULE F5/EM50-A010, DETAIL No. 3

1 FS24-A120 REFLECTED CEILING PLAN

SCALE: 1/2" = 1'-0"

BID DOCUMENTS

REGISTERED ARCHITECT JOW OWEN HARTNETT 78348 STATE OF TEXAS

mwm Design Group
305 East Huntland Drive
Suite 200
Austin, Texas 78752
p: 512.453.0767
f: 512.453.1734
TBAE FIRM REGISTRATION NO.: 1452
TBPE FIRM REGISTRATION NO.: F-1416
TBPLS FIRM REGISTRATION NO.: 10065600

NO.	DATE	DESCRIPTION	BY

0 1"

The bar above measures one inch on the original drawing. Adjust scales accordingly.

REFLECTED CEILING PLAN

CITY OF AUSTIN, AFD WOMEN'S LOCKER RM. ADDN, PHASE V
5810 NUCKOLS CROSSING ROAD, AUSTIN, TEXAS 78744

PLOTTED: 8/30/2016
JOB NO: 023-79D

FS24-A120

File: Y:\023-79D_WomensLockerRooms\CAD\Fire Station 24\Sheets\FS24-A120 RC PLAN.dwg 24x36

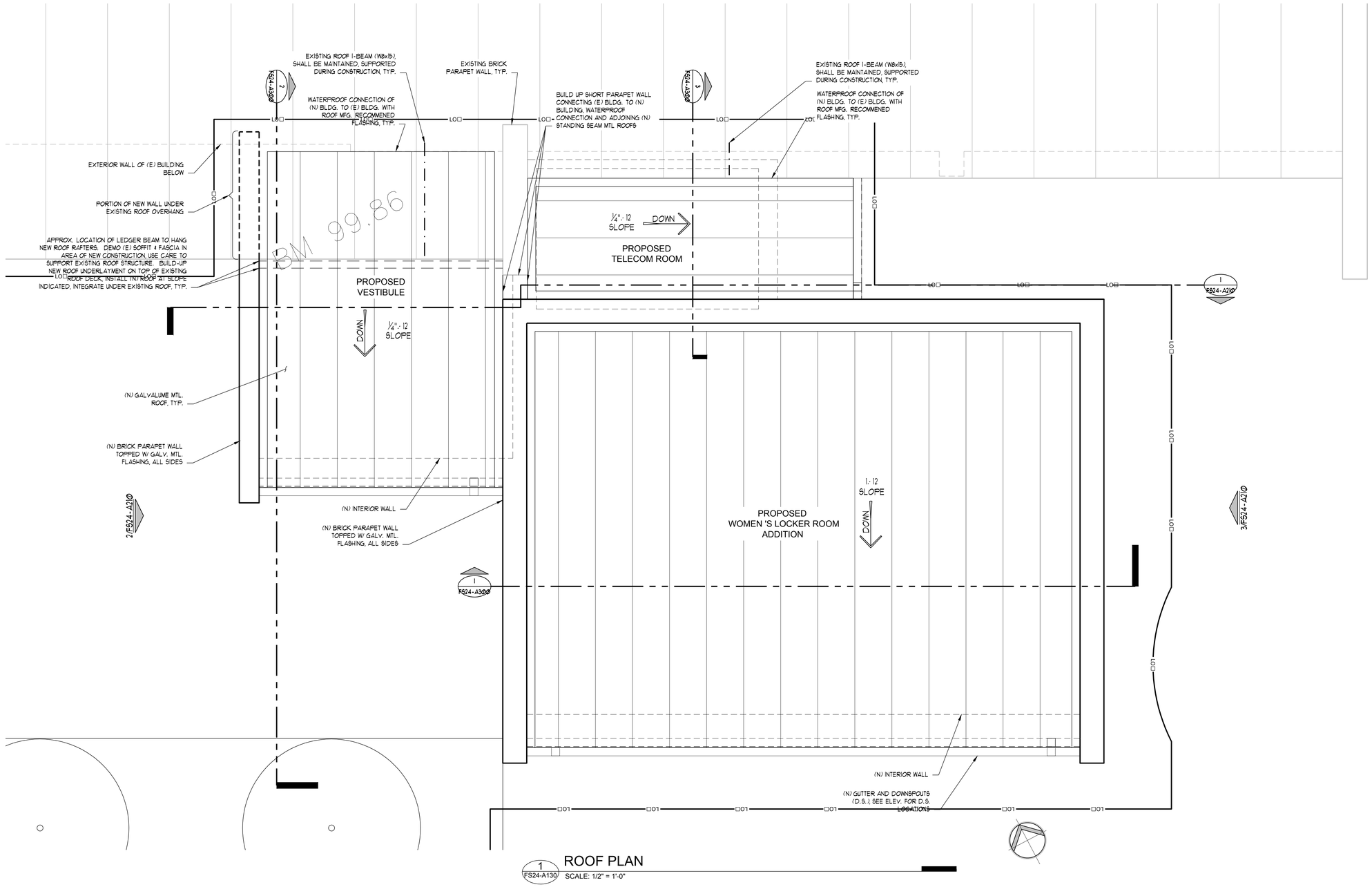

1 FS24-A130 ROOF PLAN
SCALE: 1/2" = 1'-0"

BID DOCUMENTS

REGISTERED ARCHITECT W. OWEN HARRIS 18348 STATE OF TEXAS

mwm Design Group

305 East Huntland Drive
Suite 200
Austin, Texas 78752
p: 512.453.0767
f: 512.453.1734

TBAE FIRM REGISTRATION NO.: 1452
TBPE FIRM REGISTRATION NO.: F-1416
TBPLS FIRM REGISTRATION NO.: 10065600

NO.	DATE	DESCRIPTION	BY

0 1"
The bar above measures one inch on the original drawing. Adjust scales accordingly.

ROOF PLAN

CITY OF AUSTIN, AFD WOMEN'S LOCKER RM. ADDN, PHASE V
5810 NUCKOLS CROSSING ROAD, AUSTIN, TEXAS 78744

PLOTTED: 8/30/2016
JOB NO: 023-79D

FS24-A130

File: T:\023-79D_WomensLockerRooms\CAD\Fire Station 24\Sheets\FS24-A130 ROOF PLAN.dwg 24x36

FLOOR PLAN

FS24-A100

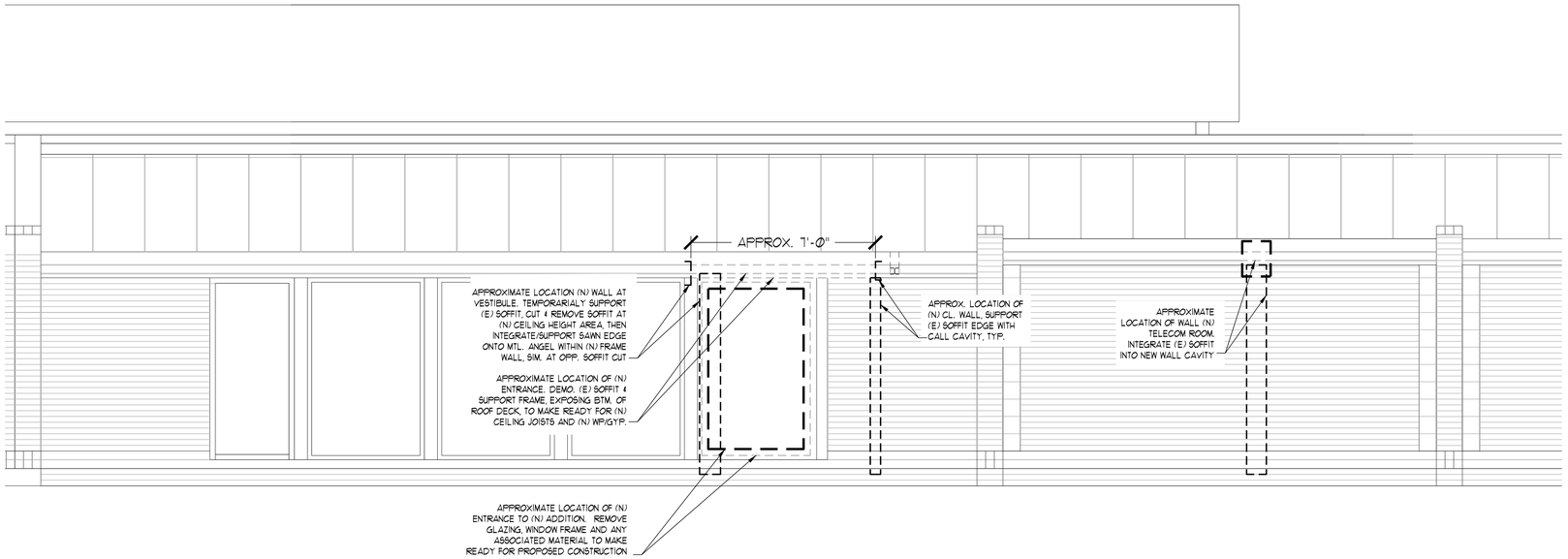

1 FS24-A200 SOUTH DEMOLITION ELEVATION
SCALE: 3/8" = 1'-0"

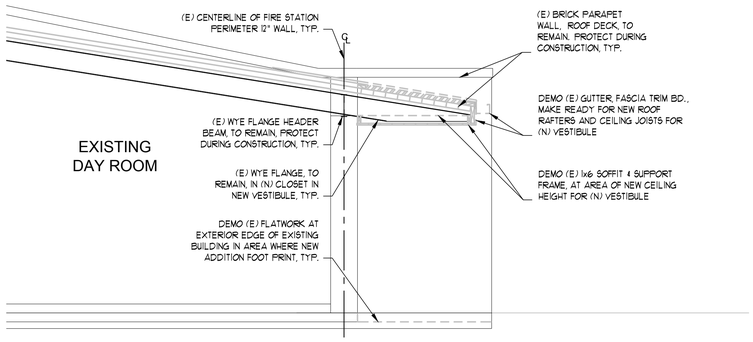

2 FS24-A200 WEST DEMOLITION SECTION/ELEVATION
SCALE: 3/8" = 1'-0"

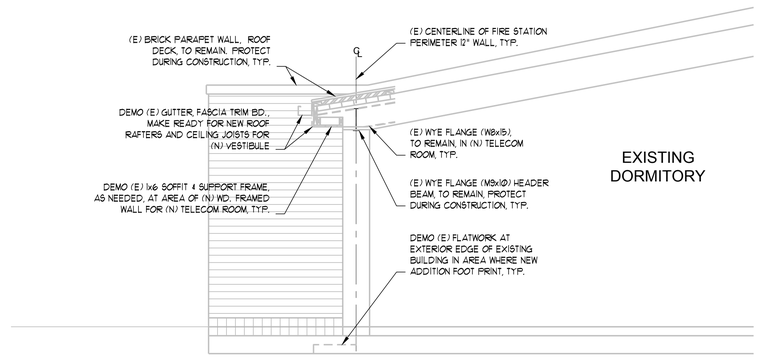

3 FS24-A200 EAST DEMOLITION SECTION/ELEVATION
SCALE: 3/8" = 1'-0"

BID DOCUMENTS

REGISTERED ARCHITECT JOHN W. OWEN HARGROVE 18348 STATE OF TEXAS

mwm Design Group
305 East Huntland Drive
Suite 200
Austin, Texas 78752
p: 512.453.0767
f: 512.453.1734

TBAE FIRM REGISTRATION NO.: 1452
TBPE FIRM REGISTRATION NO.: F-1416
TBPLS FIRM REGISTRATION NO.: 10065600

NO.	DATE	DESCRIPTION	BY

0 1"
The bar above measures one inch on the original drawing. Adjust scales accordingly.

DEMOLITION ELEVATIONS

CITY OF AUSTIN, AFD WOMEN'S LOCKER RM. ADDN, PHASE V
5810 NUCKOLS CROSSING ROAD, AUSTIN, TEXAS 78744

PLOTTED: 8/30/2016
JOB NO: 023-79D

FS24-A200

File: Y:\023-79D_WomensLockerRooms\CAD\Fire Station 24\Sheets\FS24-A200 DEMO ELEV.dwg 24x36

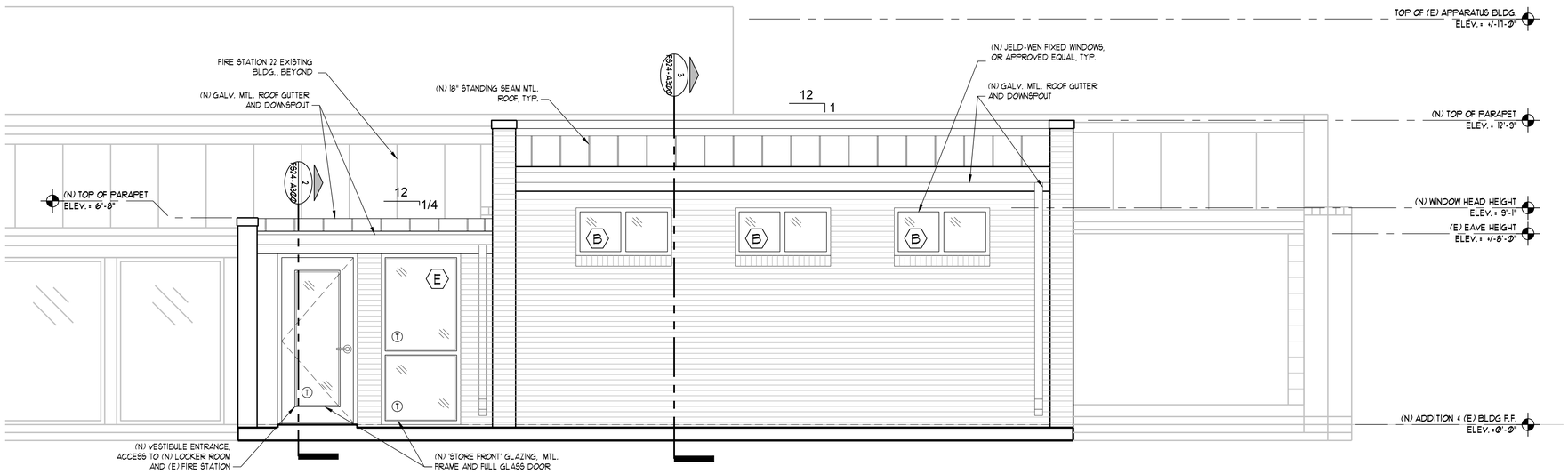

1 FS24-A210 SOUTH ELEVATION
SCALE: 3/8" = 1'-0"

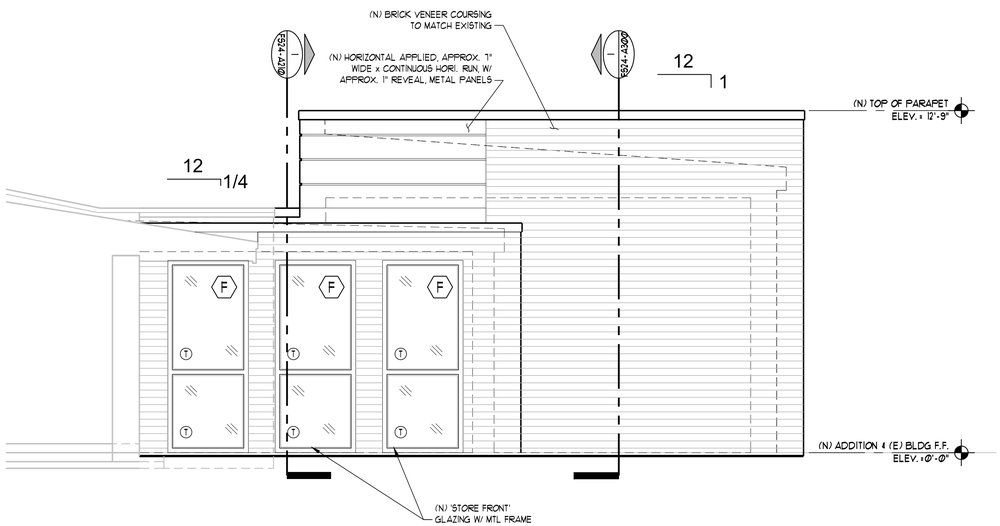

2 FS24-A210 WEST ELEVATION
SCALE: 3/8" = 1'-0"

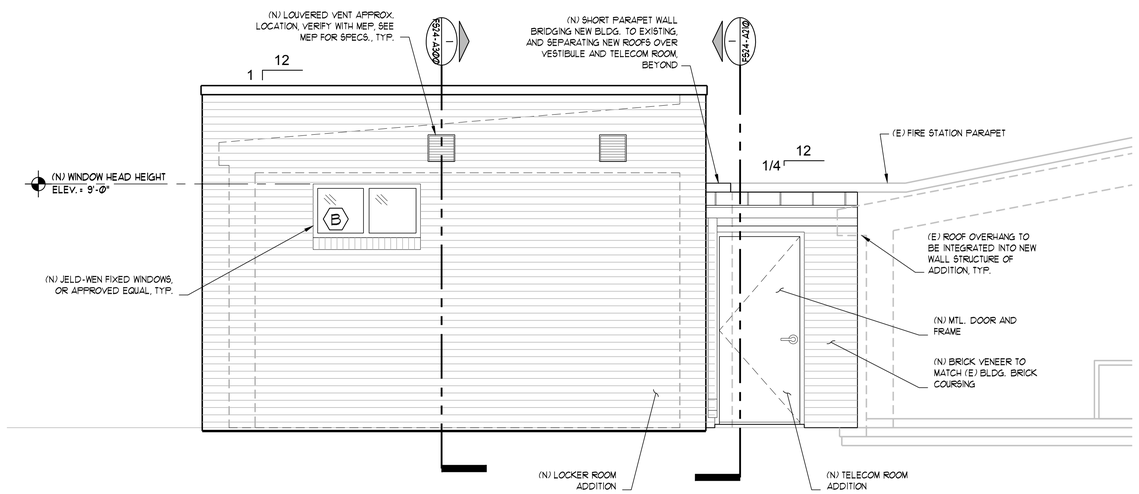

3 FS24-A210 EAST ELEVATION
SCALE: 3/8" = 1'-0"

BID DOCUMENTS

REGISTERED ARCHITECT W. OWEN HARTNETT 18348 STATE OF TEXAS

mwm Design Group

305 East Huntland Drive
Suite 200
Austin, Texas 78752
p: 512.453.0767
f: 512.453.1734

TBAE FIRM REGISTRATION NO.: 1452
TBPE FIRM REGISTRATION NO.: F-1416
TBPLS FIRM REGISTRATION NO.: 10065600

NO.	DATE	DESCRIPTION	BY

0 1"
The bar above measures one inch on the original drawing. Adjust scales accordingly.

BUILDING ELEVATIONS

CITY OF AUSTIN, AFD WOMEN'S LOCKER RM. ADDN, PHASE V
5810 NUCKOLS CROSSING ROAD, AUSTIN, TEXAS 78744

PLOTTED: 8/30/2016
JOB NO: 023-79D

FS24-A210

File: "A:\023-79D_WomensLockerRooms\CAD\Fire Station 24\Sheets\FS24-A210 BLDG ELEV.dwg 24x36

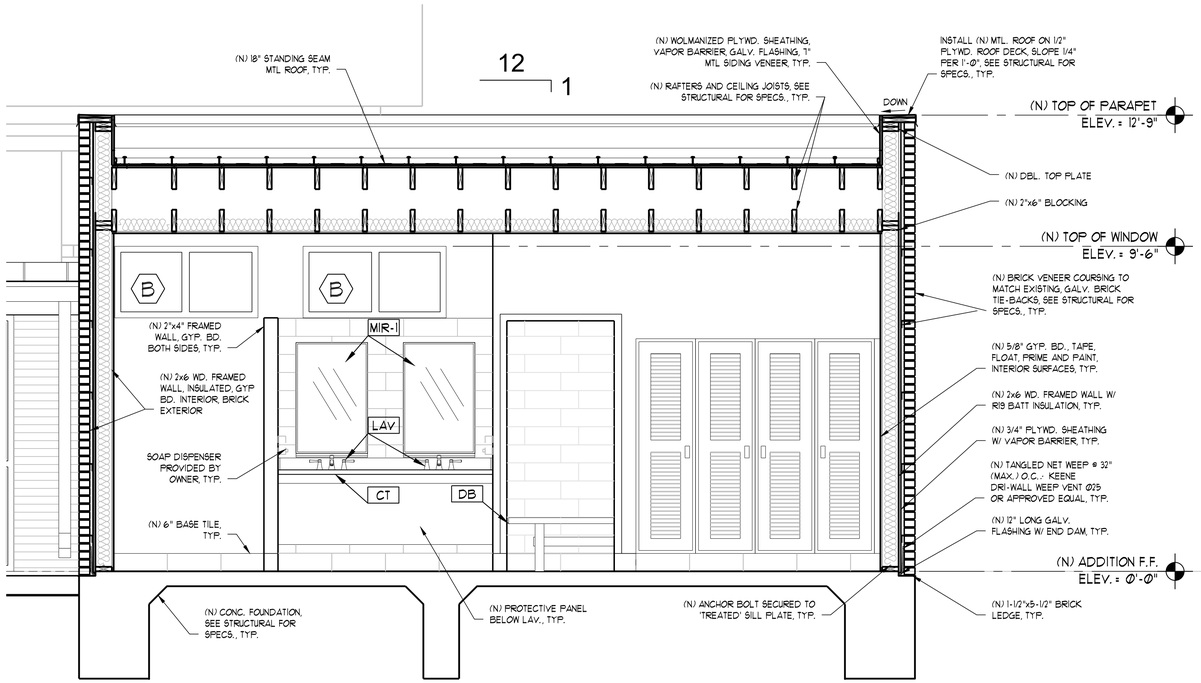

1 FS24-A300 NORTH SECTION
SCALE: 1/2" = 1'-0"

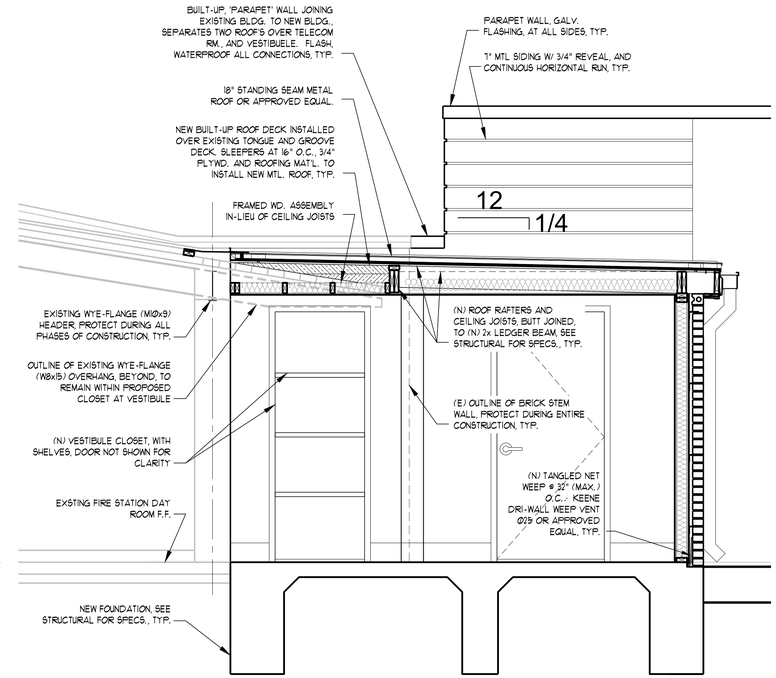

2 FS24-A300 EAST SECTION @ VESTIBULE
SCALE: 1/2" = 1'-0"

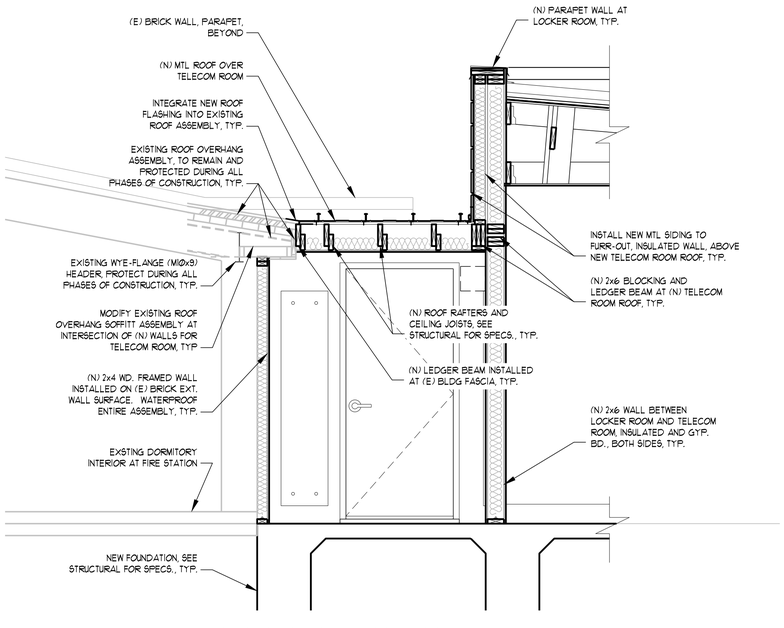

3 FS24-A300 EAST SECTION @ TELECOM ROOM
SCALE: 1/2" = 1'-0"

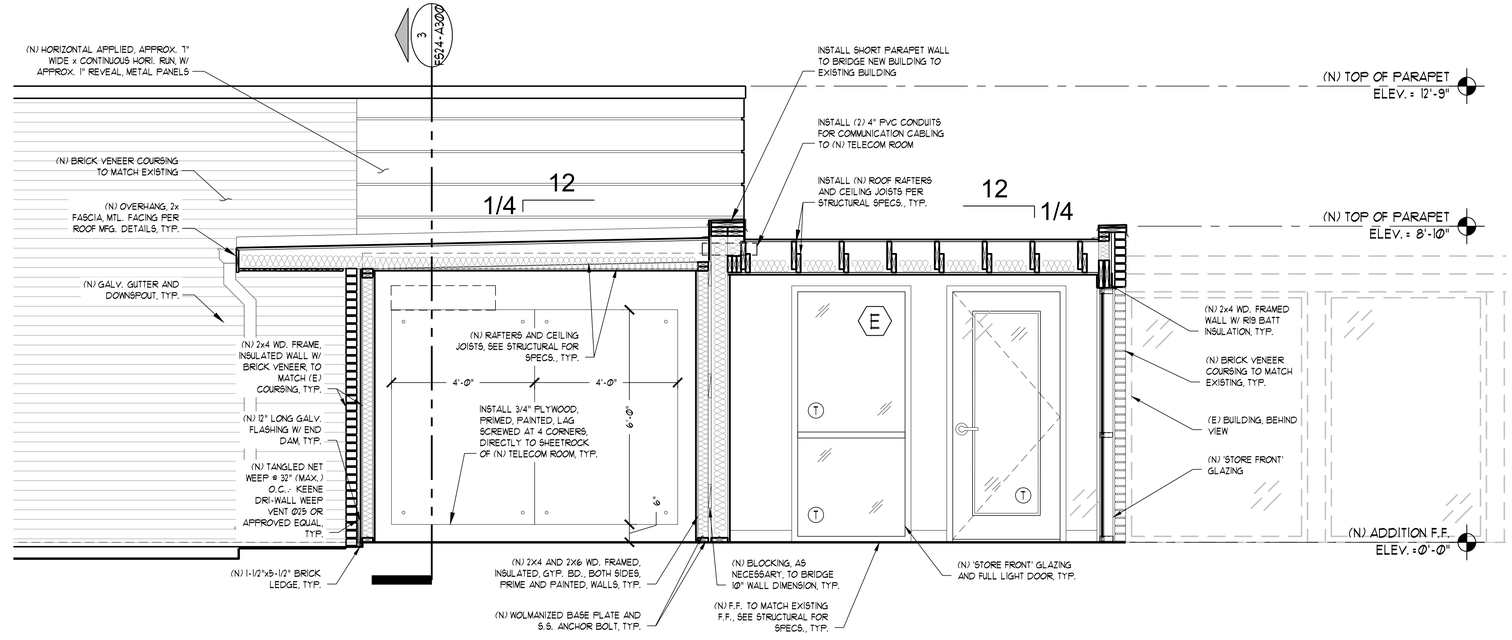

4 FS24-A300 SOUTH SECTION @ TELECOM RM. & VESTIBULE
SCALE: 1/2" = 1'-0"

BID DOCUMENTS

REGISTERED ARCHITECT JOHN W. OWEN HARDEE 16348 STATE OF TEXAS
8-30-16

mwm Design Group
305 East Huntland Drive
Suite 200
Austin, Texas 78752
p: 512.453.0767
f: 512.453.1734

TBAE FIRM REGISTRATION NO.: 1452
TBPE FIRM REGISTRATION NO.: F-1416
TBPLS FIRM REGISTRATION NO.: 10065600

NO.	DATE	DESCRIPTION	BY

0 1"
The bar above measures one inch on the original drawing. Adjust scales accordingly.

BUILDING SECTIONS

CITY OF AUSTIN, AFD WOMEN'S LOCKER RM. ADDN, PHASE V
5810 NUCKOLS CROSSING ROAD, AUSTIN, TEXAS 78744

PLOTTED: 8/30/2016
JOB NO: 023-79D

FS24-A300

File: Y:\023-79D_WomensLockerRooms\CAD\Fire Station 24\Sheets\FS24-A300 BLDG SECT.dwg 24x36

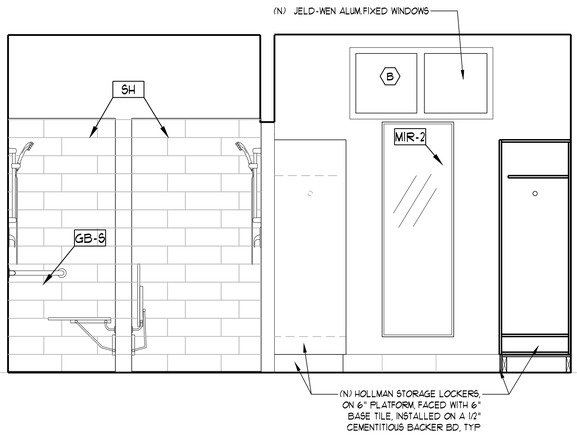

1 FS24-A400 EAST INTERIOR ELEV. @ SHOWERS & LOCKERS
SCALE: 1/2" = 1'-0"

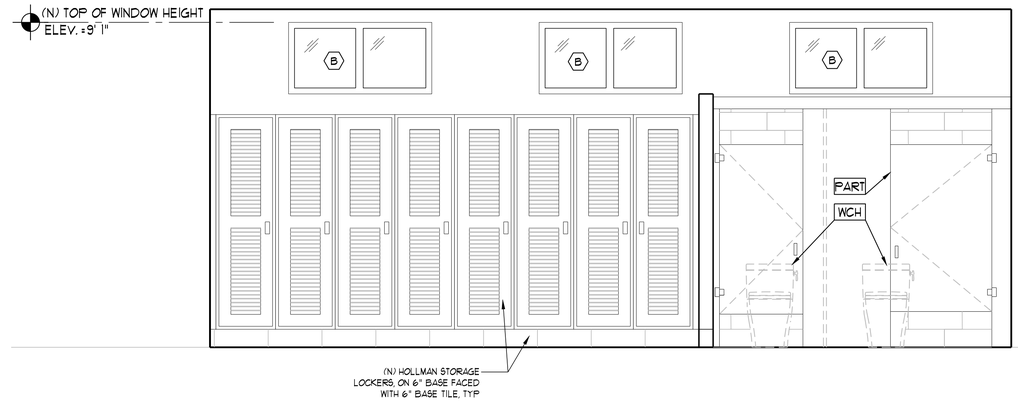

2 FS24-A400 SOUTH INTERIOR ELEVATION
SCALE: 1/2" = 1'-0"

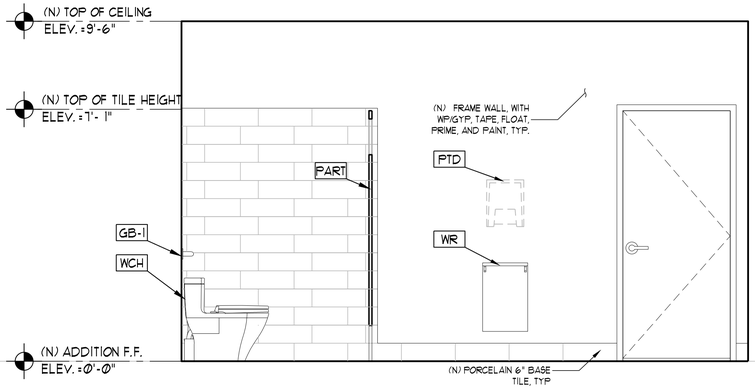

3 FS24-A400 WEST INT. ELEV. @ ACCESSIBLE STALL & ENTRANCE
SCALE: 1/2" = 1'-0"

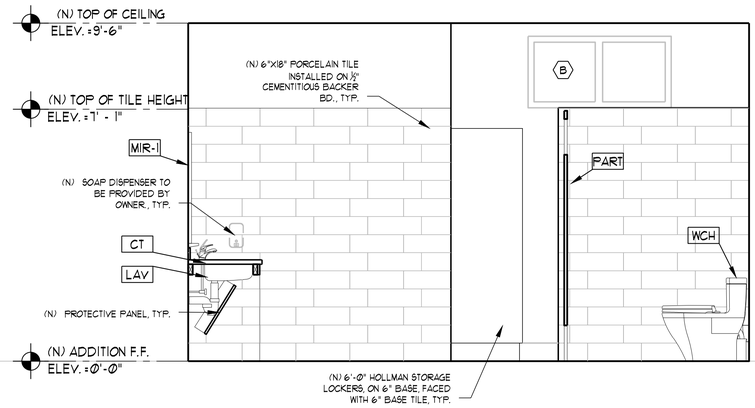

4 FS24-A400 EAST INT. ELEV. @ SINK & STANDARD STALL
SCALE: 1/2" = 1'-0"

BID DOCUMENTS

REGISTERED ARCHITECT
JAMES W. OWEN HARRISON
TBAE FIRM REGISTRATION NO. 1452
STATE OF TEXAS

mwm Design Group
305 East Huntland Drive
Suite 200
Austin, Texas 78752
p: 512.453.0767
f: 512.453.1734
TBAE FIRM REGISTRATION NO.: 1452
TBPE FIRM REGISTRATION NO.: F-1416
TBPLS FIRM REGISTRATION NO.: 10065600

NO.	DATE	DESCRIPTION	BY

0 1"
The bar above measures one inch on the original drawing. Adjust scales accordingly.

INTERIOR ELEVATIONS

CITY OF AUSTIN, AFD WOMEN'S LOCKER RM. ADDN, PHASE V
5810 NUCKOLS CROSSING ROAD, AUSTIN, TEXAS 78744

PLOTTED: 8/30/2016
JOB NO: 023-79D

FS24-A400

File: Y:\023-79D_WomensLockerRooms\CAD\Fire Station 24\Sheets\FS24-A400 INT ELEV.dwg 24x36

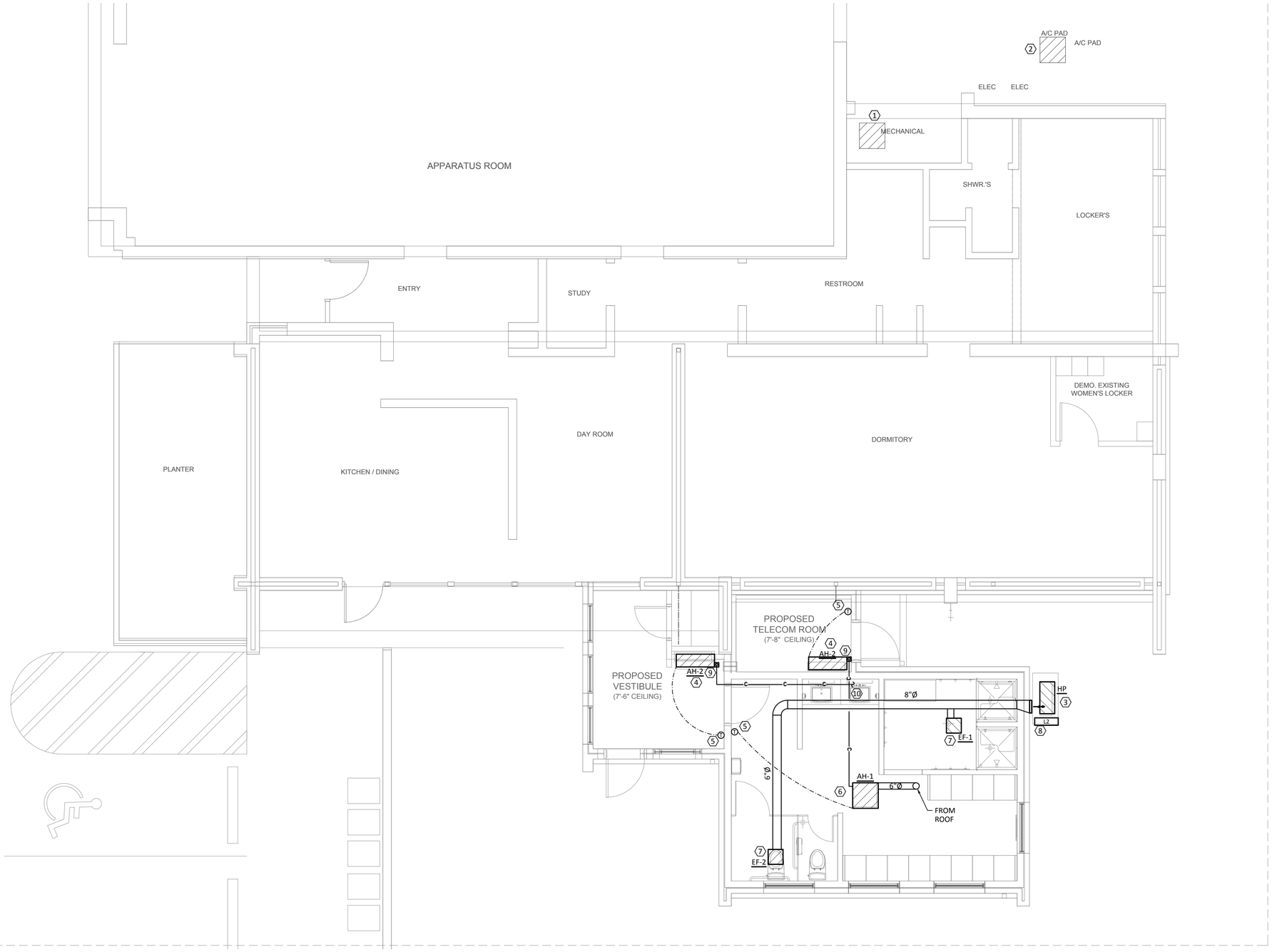

1 MECHANICAL PLAN

SCALE: 1/4" = 1'-0"

PLAN GENERAL NOTES

A. REFER TO M0.00 FOR GENERAL NOTES.
B. DO NOT ROUTE ANY DUCT & PIPING ABOVE ELECTRICAL PANELS.
C. PROVIDE AND INSTALL TRANSITION AS REQUIRED TO CONNECT SMALL DUCT TO LOUVER OR GRILLE.
D. COORDINATE WITH ARCHITECT AND STRUCTURAL ENGINEER FOR ALL WALL AND ROOF PENETRATION.
E. MAINTAIN 10' CLEARANCE FROM ANY EXHAUST AIR OUTLET OR FLUE TO ANY OUTSIDE AIR INTAKE OR OPENING TO BUILDING.
F. PROVIDE LOCKING ACCESS PORT CAPS ON ALL REFRIGERANT CIRCUIT SERVICE PORTS LOCATED ON THE EXTERIOR OF THE BUILDING.
G. ESTIMATED LOCATION OF ALL EXISTING MECHANICAL LAYOUT AND EQUIPMENT LOCATION IS BASED ON SITE OBSERVATION AND EXISTING DRAWINGS. CONTRACTOR SHALL VERIFY SIZE, LOCATION OF ALL EXISTING PLUMBING PIPING EQUIPMENT PRIOR TO BID AND CONSTRUCTION.

KEYED NOTES

1. EXISTING EXISTING AIR HANDLE SHALL REMAIN. EXISTING AIR HANDLER AND CONDENSING UNIT APPEARS TO BE INSUFFICIENT TO ADD SUPPLY AIR TO NEW LOCKER.
2. EXISTING OUTDOOR CONDENSING UNIT SHALL REMAIN.
3. HEAT PUMP UNIT FOR DUCTLESS UNITS SHALL BE MOUNTED LEVEL ON CONCRETE PAD WITH NEOPRENE CORK PAD
4. DUCTLESS AIR HANDLER SHALL BE WALL MOUNTED ABOVE DOOR.
5. PROVIDE AND INSTALL TEMPERATURE CONTROLLER ON WALL AT 48" A.F.F.
6. CEILING CASSETTE AIR HANDLER SHALL BE SUSPENDED FROM STRUCTURAL MEMBER WITH VIBRATION ISOLATORS.
   ROUTE 6" OUTSIDE AIR DUCT TO UNIT FROM LOW PROFILE ROOF CAP (GREENHECK RCC-7 OR APPROVED EQUIVALENT).
7. EXHAUST FAN SHALL BE SUSPENDED FROM CEILING WITH VIBRATION ISOLATORS.
8. ROUTE COMBINED 8"Ø EXHAUST DUCT FROM EXHAUST FANS TO EXHAUST LOUVER WITH INTEGRAL BIRDSCREEN.
9. PROVIDE AND INSTALL CONDENSATE DRAIN PUMP (WITH LINE SET KIT) FOR WALL MOUNTED DUCTLESS AIR HANDLER ON WALL (LITTLE GIANT MODEL EC-1K OR APPROVED EQUIVALENT).
10. ROUTE 3/4" INSULATED CONDENSATE DRAIN PIPING TO TAILPIECE ABOVE CEILING. TAILPIECE PIPING FROM LAVATORY TO ABOVE CEILING IS BY PLUMBING CONTRACTOR.

SEQUENCE OF OPERATION NOTES

A. DUCTLESS SPLIT SYSTEM CONTROL
   a. SYSTEM - ON/OFF CONTROL:
      ON/OFF CONTROL FROM WALL MOUNTED THERMOSTAT.
   b. FAN – ON/OFF CONTROL:
      FAN WILL BE ACTIVATED UNDER THE FOLLOWING CONDITIONS:
      - IF THE THERMOSTAT IS SET IN THE "FAN" MODE
      - ACTIVATION OF THE COOLING OR HEATING MODE
   c. COOLING MODE:
      THERMOSTAT SETTING WILL EITHER BE IN "AUTO" OR "COOL"
      IF THE ROOM TEMPERATURE, AS MEASURED BY THE INDOOR UNIT MOUNTED ROOM TEMPERATURE SENSOR, RISES ABOVE THE THERMOSTATS SET POINT TEMPERATURE THE CONDENSING UNIT AND THE WALL MOUNTED FAN COIL UNIT WILL BE ACTIVATED.
   d. HEATING MODE:
      THERMOSTAT SETTING WILL EITHER BE IN "AUTO" OR "HEAT"
      IF THE ROOM TEMPERATURE, AS MEASURED BY THE INDOOR UNIT MOUNTED ROOM TEMPERATURE SENSOR, DOWN BELOW THE THERMOSTATS SET POINT TEMPERATURE THE CONDENSING UNIT AND THE WALL MOUNTED FAN COIL UNIT WILL BE ACTIVATED.
   e. CONDENSATE PUMP CONTROL:
      THE PRIMARY CONDENSATE FLOAT SWITCH WILL ACTIVATE AND DEACTIVATE THE CONDENSATE PUMP.
   f. SAFETY:
      A SECONDARY OVERFLOW CONDENSATE FLOAT SWITCH UPON ACTIVATION WILL CONTINUE TO RUN THE CONDENSATE PUMP, DEACTIVATE THE FAN, AND INITIATE A BLINKING LIGHT ON THE CONTROL DISPLAY TO INDICATE THE PROBLEM.
B. EXHAUST FANS (SEE ELECTRICAL PLAN FOR CONTROLLER)
   - EF-1 & EF-2 WILL BE INTERLOCKED WITH LIGHTING SWITCH WITH A TIME-DELAY-OFF RELAY SWITCH TO ALLOW FAN TO OPERATE UP TO 15 MINUTES AFTER LIGHTS ARE TURNED OFF

ENCOTECH ENGINEERING CONSULTANTS
TBPE Firm 1141 | 8500 Bluffstone Cove, Suite B-103 Austin, Texas 78759 | 512.338.1101
Project No.: 15009.M.AUS

STATE OF TEXAS
LYNN C. BROWN
55248
LICENSED PROFESSIONAL ENGINEER
08/30/2016

mwm Design Group
305 East Huntland Drive
Suite 200
Austin, Texas 78752
p: 512.453.0767
f: 512.453.1734
TBAE FIRM REGISTRATION NO.: 1452
TBPE FIRM REGISTRATION NO.: F-1416
TBPLS FIRM REGISTRATION NO.: 10065600

NO.	DATE	DESCRIPTION	BY

SCALE IS AS NOTED ON DRAWING

MECHANICAL PLAN

WOMEN'S LOCKER ROOM PHASE V
5810 NUCKOLS CROSSING ROAD, AUSTIN, TEXAS 78744

PLOTTED: 8/30/2016
JOB NO: 023-79D

FS24-M110

File: L:\ACTIVE PROJECTS\MWM\15009.M.AUS – AFD WLR Ph 5\1. MEP\D-AutoCAD\FS24\15009 FS24 M110 Mech Plan.dwg 24x36

CONDENSING UNIT SCHEDULE

MARK	CLG. DATA		ELECTRICAL DATA			UNIT DATA				
	TONS	EER/ SEER	MCA	MOCP	VOLT/PH	MAKE	MODEL	LBS.	NOTES	CORRESPONDING AIR HANDLER
HP	1.5	14.0/ 21.0	26.0	30	208V/1PH	LG	LMU30CHV	100		

NOTES:
1. PROVIDE DISCONNECT, TO BE FIELD MOUNTED BY ELECTRICAL CONTRACTOR.
2. COMPRESSOR SHALL BE PROVIDED WITH 10 YEARS WARRANTY.
3. UNIT TO BE PROVIDED LOW AMBIENT KIT FOR OPERATION DOWN TO 40°F.

LOUVER SCHEDULE

MARK	NOMINAL SIZE	FREE AREA (FT2)	TYPE	MAKE	MODEL
L-2	12"x14"	0.34	EXTRUDED ALUMINUM, DRAINABLE BLADE	GREENHECK	ESD-401

NOTES:
1. COORDINATE EXACT LOCATION AND MOUNTING OF LOUVER WITH ARCHITECTURAL ELEVATION.
2. COORDINATE FINISH WITH ARCHITECT.

DUCTLESS SPLIT UNIT SCHEDULE

MARK	AIR DATA					COOLING DATA												HEATING DATA					ELECTRICAL DATA			UNIT DATA			
	TOT. CFM	O/A CFM	E.S.P.	HP	CONFIGURATION	AMBIENT		ENTERING		LEAVING		DESIGN		SCHEDULE		STAGE	EER/ SEER	DES.	SCHEDULE		STAGE	HSPF	MCA	MOCP	VOLT/PH	MAKE	MODEL	LBS.	NOTES
						D.B.	W.B.	D.B.	W.B.	D.B.	W.B.	SENS.	TOT.	SENS.	TOT.			MBH	MBH	KW									
AH-1	265	N/A	N/A	-	CASSETE	105	74	80	67	-	-			-	9.0	INV.	14.0/ 21.0	-	8.5	-	-	9.20	0.2	15	208V/1PH	LG	LMCN097HV	31	1, 2
AH-2	177	N/A	N/A	-	WALL-MOUNTED	105	74	80	67	-	-			-	7.0	INV.	14.0/ 21.0	-	8.1	-	-	9.20	0.2	15	208V/1PH	LG	LMN078HVT	20	1, 2, 3
AH-3	265	N/A	N/A	-	WALL-MOUNTED	105	74	80	67	-	-			-	9.0	INV.	14.0/ 21.0	-	8.5	-	-	9.20	0.2	15	208V/1PH	LG	LMCN097HV	31	1, 2, 3

NOTES:
1. EACH UNIT TO BE MOUNTED USING VIBRATION ISOLATORS.
2. INDOOR UNIT TO INCLUDE MANUFACTURER THERMOSTAT.
3. CONDENSATE PUMP.

FAN SCHEDULE

MARK	AREA SERVED	LOCATION	INTERLOCK	AIR DATA				ELECTRICAL DATA			UNIT DATA					
				CFM	S.P.	HP	RPM	FLA	MOCP	VOLT/PH	MAKE	MODEL	TYPE	DRIVE	LBS.	NOTES
EF-1	SHOWER	CEILING	LIGHT SWITCH	75	0.25	-	900	0.6	15	115V/1PH	GREENHECK	SP-B90	CENTRIFUGAL	DIRECT	8	DISC, SC, BDD, CC, BS, VI
EF-2	RESTROOM	CEILING	LIGHT SWITCH	150	0.25	-	1400	0.6	15	115V/1PH	GREENHECK	CSP-A190	CENTRIFUGAL	DIRECT	17	DISC, SC, BDD, CC, BS, VI

NOTES:
1. FEATURE NOTES:
   DISC = DISCONNECT SWITCH
   TD = PROVIDE AND INSTALL A TIME-DELAY-OFF RELAY SWITCH TO ALLOW FAN TO OPERATE UP TO 15 MINUTES AFTER LIGHTS ARE TURNED OFF
   SC = SPEED CONTROL (DIRECT DRIVE FANS ONLY)
   BDD = BACKDRAFT DAMPER
   BS = BIRD SCREEN
   VI = VIBRATION ISOLATORS

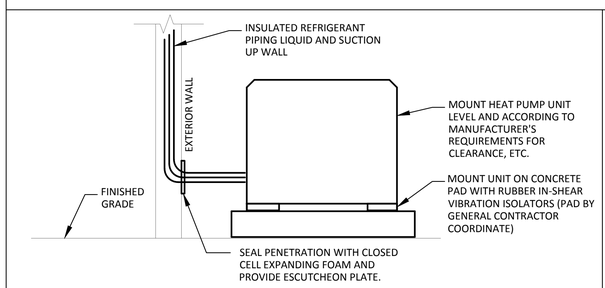

REFRIGERANT PIPING INSULATION NOTES
1. ALL CLOSED CELL POLYMER INSULATION SHALL HAVE GLUED JOINTS WITH COMPLETE COVERAGE OF ALL METAL SURFACES. ALL INSULATION EXPOSED TO EXTERIOR SHALL BE PAINTED WITH TWO COATS AS PER INSULATION MANUFACTURERS SPECIFICATIONS.
2. PROVIDE AND INSTALL LINE DRYER IN LIQUID FREON LINE
3. PROVIDE INSULATION SHIELD AT ALL SUPPORTS.

1 HEAT PUMP UNIT DETAIL
NOT TO SCALE

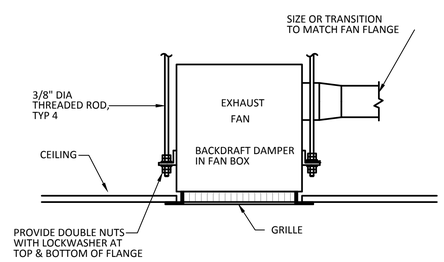

2 CEILING EXHAUST FAN DETAIL
NOT TO SCALE

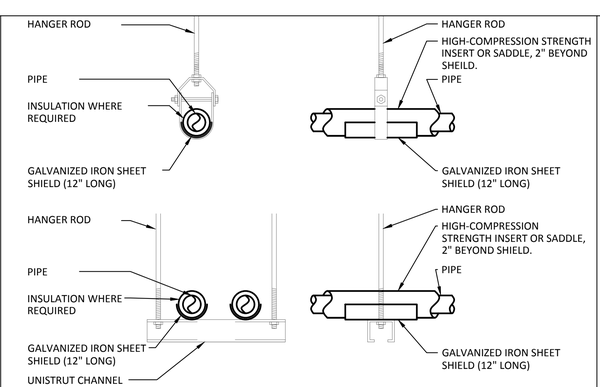

NOTE:
1. ATTACH SUPPORTS FOR ALL PIPING SUSPENDED FROM THE STEEL STRUCTURE TO THE TOP CORD OF JOISTS OR BEAM.
2. PROVIDE COPPER OR PLASTIC COATED HANGERS FOR NON-INSULATED COPPER PIPE

3 PIPE HANGER DETAIL
NOT TO SCALE

ENCOTECH ENGINEERING CONSULTANTS
TBPE Firm 1141 | 8500 Bluffstone Cove, Suite B-103 Austin, Texas 78759 | 512.338.1101
Project No.: 15009.M.AUS

STATE OF TEXAS
LYNN C. BROWN
55248
LICENSED PROFESSIONAL ENGINEER
08/30/2016

mwm Design Group
305 East Huntland Drive
Suite 200
Austin, Texas 78752
p: 512.453.0767
f: 512.453.1734
TBAE FIRM REGISTRATION NO.: 1452
TBPE FIRM REGISTRATION NO.: F-1416
TBPLS FIRM REGISTRATION NO.: 10065600

NO.	DATE	DESCRIPTION	BY

SCALE IS AS NOTED ON DRAWING

MECHANICAL SCHEDULES & DETAILS

WOMEN'S LOCKER ROOM PHASE V
5810 NUCKOLS CROSSING ROAD, AUSTIN, TEXAS 78744

PLOTTED: 8/30/2016
JOB NO: 023-79D

FS24-M210

File: L:\ACTIVE PROJECTS\MWM\15009.M.AUS - AFD WLR Ph 5\1. MEP\D-AutoCAD\FS24\15009 FS24 M210 Mech Schedule Details.dwg 24x36

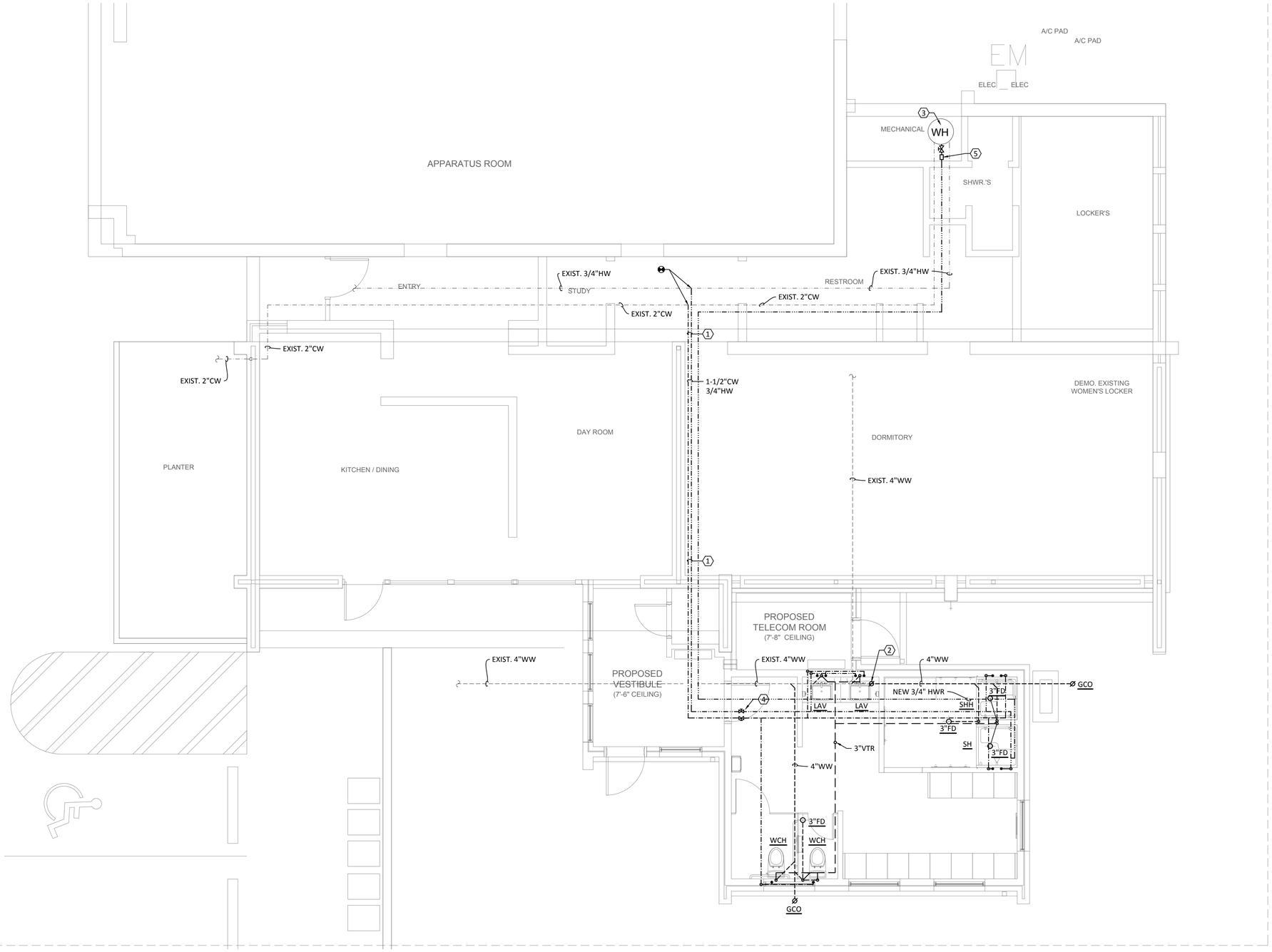

1 PLUMBING PLAN

SCALE: 1/4" = 1'-0"

PLAN GENERAL NOTES

A. REFER TO P0.00 FOR GENERAL NOTES.

B. ESTIMATED LOCATION OF ALL EXISTING PLUMBING LAYOUT AND EQUIPMENT LOCATION IS BASED ON SITE OBSERVATION AND EXISTING DRAWINGS. CONTRACTOR SHALL VERIFY SIZE, LOCATION OF ALL EXISTING PLUMBING PIPING EQUIPMENT PRIOR TO BID AND CONSTRUCTION

C. DO NOT ROUTE ANY PLUMBING PIPING ABOVE ANY ELECTRICAL PANEL.

D. PROVIDE AND INSTALL WATER SAVER TRAP PRIMER FROM NEAREST LAVATORY OR TRAP PRIMER WITH ACCESSIBLE SHUT-OFF VALVE IN WALL TO ALL FLOOR DRAINS, HUB DRAINS AND FLOOR SINKS. SEE PLAN FOR LOCATION.

E. PROVIDE AND INSTALL ACCESS TO ALL SHUT-OFF VALVES.

F. INSULATE 100% OF ALL HOT WATER PIPING, HOT WATER RETURN PIPING & COLD WATER PIPING ACCORDING TO SPECIFICATIONS.

G. REFER TO PLUMBING RISERS FOR ADDITIONAL SIZING INFORMATION.

H. ALL NEW UNDERGROUND PIPING UNDER EXISTING SLAB SHALL BE REQUIRED TO CUT EXISTING SLAB OR/AND BEAM. COORDINATE WITH ARCHITECT, COA PERSONELS AND STRUCTURAL ENGINEER PRIOR TO CONSTRUCTION. THE CONTRACTOR SHALL DETERMINE THE EXISTING STRUCTURAL SYSTEM PRIOR TO CUTTING, DRILLING OR CORING. THE TESTING AGENCY SHALL X-RAY ALL PENETRATIONS PRIOR TO CUTTING FLOOR SLAB. DO NOT CUT OR PENETRATE STRUCTURAL ELEMENTS WITHOUT PRIOR APPROVAL OF THE TESTING AGENCY.

COA PROJECT MANAGER AND STRUCTURAL ENGINEER AND PLUMBING ENGINEER SHALL BE PRESENT DURING CUTING. LOCATION SHOWN ARE APPROXIMATE AND MAY BE SLIGHTLY RELOCATED DUE TO EXISTING STRUCTURAL CONDITION.

KEYED NOTES

1. NEW 1-1/2" CW PIPING AND 3/4" HW PIPING SHALL BE CONNECTED TO EXISTING PIPING ABOVE CEILING AND ROUTE ABOVE WALL BETWEEN DORMITORY AND DAYROOM TO NEW LOCKER ROOM.
2. REMOVE EXISTING GCO AND EXTEND 4" WW PIPING TO NEW GCO AS SHOWN ON PLAN.
3. EXISTING WATER HEATER SHALL REMAIN AND APPEARS TO HAVE SUFFICIENT CAPACITY TO ADD TWO NEW SHOWERS AND LAVATORIES (EXISTING WATER HEATER BY BRADFORD MODEL MI5036FBN, 50 GALLON TANK, 50MBH NATURAL GAS INPUT, 42 GALLON RECOVERY AT 90°F RISE)
4. MAIN WATER SHUT-OFF VALVE FOR NEW LOCKER ROOM ABOVE CEILING. COORDINATE WITH GENERAL CONTRACTOR TO PROVIDE AND INSTALL ACCESS PANEL.
5. PROVIDE AND INSTALL NEW HOT WATER RECIRCULATION PUMP (GRUNDFOS MODEL UP-26-96-BF, 1/12 HP, 120V, 1Ø 1.7 AMPS SECURELY SUSPEND FROM STRUCTURE W/ VIBRATION ISOLATORS).

ENCOTECH
ENGINEERING CONSULTANTS
TBPE Firm 1141
8500 Bluffstone Cove, Suite B-103
Austin, Texas 78759 | 512.338.1101
Project No.: 15009.M.AUS

STATE OF TEXAS
LYNN C. BROWN
55248
LICENSED PROFESSIONAL ENGINEER
08/30/2016

mwm Design Group
305 East Huntland Drive
Suite 200
Austin, Texas 78752
p: 512.453.0767
f: 512.453.1734
TBAE FIRM REGISTRATION NO.: 1452
TBPE FIRM REGISTRATION NO.: F-1416
TBPLS FIRM REGISTRATION NO.: 10065600

NO.	DATE	DESCRIPTION	BY

SCALE IS AS NOTED ON DRAWING

PLUMBING PLAN

WOMEN'S LOCKER ROOM PHASE V
5810 NUCKOLS CROSSING ROAD, AUSTIN, TEXAS 78744

PLOTTED: 8/30/2016
JOB NO: 023-79D

FS24-P110

File: J:\ACTIVE PROJECTS\MWM\15009.M.AUS - AFD WLR Ph 5\1. MEP\D-AutoCAD\FS24\15009 FS24 P110 Plumb Plan.dwg 24x36

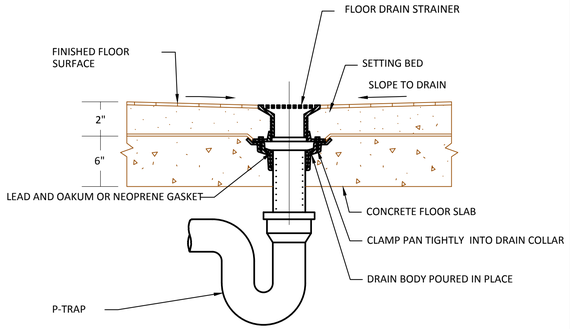

6 TYPICAL FLOOR DRAIN DETAIL
NOT TO SCALE

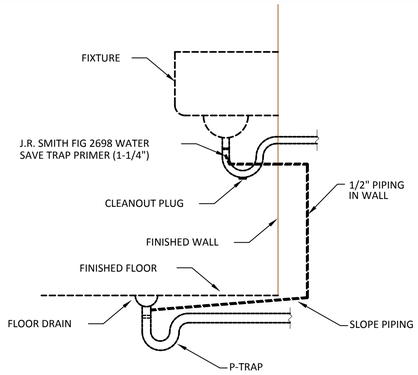

5 WATER SAVER TRAP PRIMER DETAIL
NOT TO SCALE

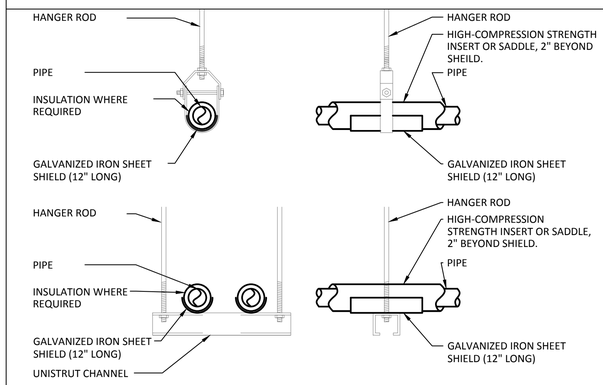

NOTE:
1. ATTACH SUPPORTS FOR ALL PIPING SUSPENDED FROM THE STEEL STRUCTURE TO THE TOP CORD OF JOISTS OR BEAM.
2. PROVIDE COPPER OR PLASTIC COATED HANGERS FOR NON-INSULATED COPPER PIPE

4 PIPE HANGER DETAIL
NOT TO SCALE

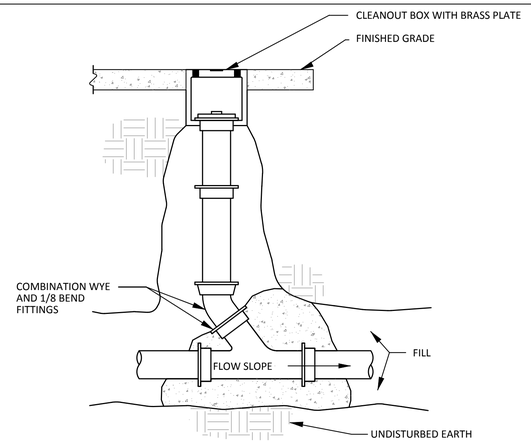

3 EXTERIOR CLEANOUT DETAIL
NOT TO SCALE

WATER CALCULATION

WATER CLOSET, FLUSH VALVE	4 x	5.0 F.U. =	20.0 F.U.
URINAL, FLUSH VALVE	1 x	4.0 F.U. =	4.0 F.U.
SHOWER	4 x	2.0 F.U. =	8.0 F.U.
LAVATORY	6 x	1.0 F.U. =	6.0 F.U.
KITCHEN SINK, COMMERCIAL	1 x	3.0 F.U. =	3.0 F.U.
SERVICE SINK (PUBLIC)	1 x	3.0 F.U. =	3.0 F.U.
DISHWASHER	1 x	1.5 F.U. =	1.5 F.U.
CLOTHES WASHER	1 x	4.0 F.U. =	4.0 F.U.
DRINKING FOUNTAIN	1 x	0.5 F.U. =	0.5 F.U.
FIRST HOSE BIBB	1 x	2.5 F.U. =	2.5 F.U.
ADDITIONAL HOSE BIBBS	2 x	1.0 F.U. =	2.0 F.U.
TOTAL FIXTURE UNITS		=	54.5 F.U.
54.5 FIXTURE UNITS		=	51.8 GPM

HIGHEST FIXTURE = 10 FEET
(10 FT.) x 0.43 = 4.3 PSI STATIC LOSS

HORIZONTAL PIPE LENGTH TAP TO METER	=	50 FEET
HORIZONTAL PIPE LENGTH METER TO BUILDING	=	100 FEET
HORIZONTAL PIPE LENGTH BUILDING TO LAST FIXTURE	=	100 FEET
VERTICAL PIPE LENGTH BUILDING RISE TO HIGHEST FIXTURE	=	10 FEET
TOTAL PIPE LENGTH	=	260 FEET

(260 FT.) x 1.25 (FITTING LOSS) = 325 FEET TOTAL DEVELOPED LENGTH

SIZE	DEVICE		PSI LOSS
1-1/2"	METER	=	6.0 PSI
	STATIC	=	4.3 PSI
	FIXTURE (FLUSH VALVE)	=	15.0 PSI
	TOTAL BUILDING LOSS	=	25.3 PSI

PRESSURE AT STREET	=	50.0 PSI
BUILDING LOSS	=	25.3 PSI
DIFFERENCE	=	24.7 PSI

(24.7 / 325) x 100 = 7.6 MAX PSI DROP ALLOWABLE PER 100 FT. PIPE LENGTH

EXISTING 1-1/2" METER AND 2" MAIN WATER LINE TO BUILDING IS SUFFICIENT

WATER CALCULATION NOTES

- THIS CALCULATION IS BASED ON UNIFORM PLUMBING CODE 2012, APPENDIX A.
* VERIFY PRESSURE AT TIME OF CONSTRUCTION. IF GREATER THAN 65 PSI PROVIDE AND INSTALL PRESSURE REDUCING VALVE TO REDUCE WATER PRESSURE TO 65 PSI MAXIMUM.

PLUMBING FIXTURE SCHEDULE

MARK	CW	HW	VENT	S&W	MODEL NUMBER	DESCRIPTION
WC	1"	-	2"	3"	WATER CLOSET: KOHLER MODEL: WELLWORTH K-4406 FLUSH VALVE: SLOAN MODEL: 111-1.28 SEAT: CHURCH 295SSC	FLUSH VALVE WATER CLOSET, FLOOR MOUNTED, ELONGATED BOWL, 1-1/2" TOP SPUD, FLOOR OUTLET EXPOSED WATER CLOSET FLUSHOMETER FOR FLOOR MOUNTED TOP SPUD BOWLS, 1.28 GPF. OPEN FRONT, ELONGATED SEAT WITH STAINLESS STEEL LOCKING HINGE
WCH	1"	-	2"	3"	WATER CLOSET: KOHLER MODEL: HIGHLINE K-4405 FLUSH VALVE: SLOAN MODEL: 8111-1.28 SEAT: CHURCH 295SSC	FLUSH VALVE WATER CLOSET, FLOOR MOUNTED, ELONGATED BOWL, 1-1/2" TOP SPUD, FLOOR OUTLET, ADA COMPLIANT EXPOSED WATER CLOSET FLUSHOMETER FOR FLOOR MOUNTED TOP SPUD BOWLS, 1.28 GPF. OPEN FRONT, ELONGATED SEAT WITH STAINLESS STEEL LOCKING HINGE
LAV	1/2"	1/2"	1-1/2"	2"	LAVATORY: KOHLER MODEL: K-1997-1-0 (HANDICAP USE) FAUCET: DELTA MODEL: 26C3942 MIXING VALVE: WATTS MODEL: L111	WALL HUNG, VITREOUS CHINA, 22"x19" BOWL, HANDICAP ACCESSIBLE. MANUAL GOOSENECK FAUCET, 0.5 GPM AERATOR, 8" CENTERS, LEVER HANDLES INDIVIDUAL FAUCET THERMOSTATIC MIXING VALVE. HOT WATER TEMPERATURE SHALL BE LIMITED TO 110 DEGREES FAHRENHEIT.
SH	1/2"	1/2"	1-1/2"	2"	SHOWER ENCLOSURE: AQUATIC MODEL: 1363BFS SHOWER FAUCET & HANDSET: T&S BRASS MODEL: B-3205 MIXING VALVE: LAWLER MODEL: SERIES 516 UNIT NUMBER: 86823	36"Wx36"D AQUATIC SHOWER UNIT WITH NO DAM. COMPLETE WITH L-SHAPED FOLD-UP SEAT, SLIDE BAR, VACUUM BREAKER AND HOSE, CURTAIN RODS (VERIFY DEPTH OF RECESS) PRESSURE BALANCE SHOWER VALVE, HANDHELD SPRAY ASSEMBLY, 2.0 GPM FLOW CONTROL DEVICE WITH THUMB VALVE TO SWITCH BETWEEN 0.5 GPM AND 2.0 GPM, GRAB BAR WITH BRACKET ASSEMBLY, ADA COMPLIANT ROUGH CHROME THERMOSTATIC MIXING VALVE, 0.5 MINIMUM FLOW RATE, OUTLET RANGE 95-115 DegF WITH A SPINDLE TO ADJUST OUTLET TEMPERATURE. SET OUTLET TEMPERATURE AT 110DegF.
SHH	1/2"	1/2"	1-1/2"	2"	SHOWER ENCLOSURE: AQUATIC MODEL: 1363BFS ADA COMPLIANCE SHOWER FAUCET & HANDSET: T&S BRASS MODEL: B-3205 MIXING VALVE: LAWLER MODEL: SERIES 516 UNIT NUMBER: 86823	36"Wx36"D AQUATIC SHOWER UNIT WITH NO DAM. COMPLETE WITH L-SHAPE FOLD-UP SEAT, GRAB BARS, SLIDE BAR, VACUUM BREAKER AND HOSE, CURTAIN RODS (VERIFY DEPTH OF RECESS) PRESSURE BALANCE SHOWER VALVE, HANDHELD SPRAY ASSEMBLY, 2.0 GPM FLOW CONTROL DEVICE WITH THUMB VALVE TO SWITCH BETWEEN 0.5 GPM AND 2.0 GPM, GRAB BAR WITH BRACKET ASSEMBLY, ADA COMPLIANT ROUGH CHROME THERMOSTATIC MIXING VALVE, 0.5 MINIMUM FLOW RATE, OUTLET RANGE 95-115 DegF WITH A SPINDLE TO ADJUST OUTLET TEMPERATURE. SET OUTLET TEMPERATURE AT 110DegF.
FD	-	-	2"	*	SMITH 2005	FLOOR DRAIN. CAST IRON. ADJUSTABLE STRAINER HEAD.
FCO	-	-	-	*	SMITH 4020	FLOOR CLEANOUT. CAST IRON WITH NICKEL BRONZE ADUSTABLE TOP.
GCO	-	-	-	*	SMITH 4237	GROUND CLEANOUT. CAST IRON WITH CAST IRON NON-TILT ADJUSTABLE TOP.

NOTES:
* SEE PLAN FOR SIZING.
** PLUMBING FIXTURES, ACCESSORIES AND INSTALLATION SHALL MEET ALL FEDERAL, STATE, ADA AND LOCAL REQUIREMENTS.

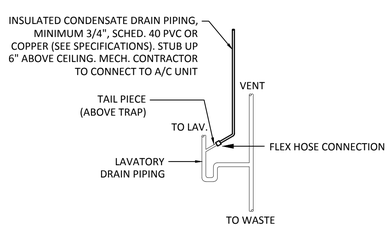

2 CONDENSATE DRAIN - LAVATORY TAILPIECE DETAIL
NOT TO SCALE

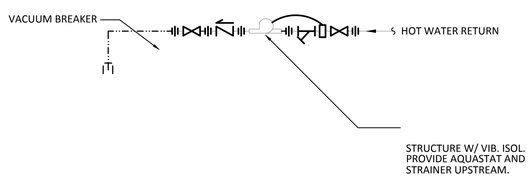

1 RECIRCULATION PUMP DETAIL
NOT TO SCALE

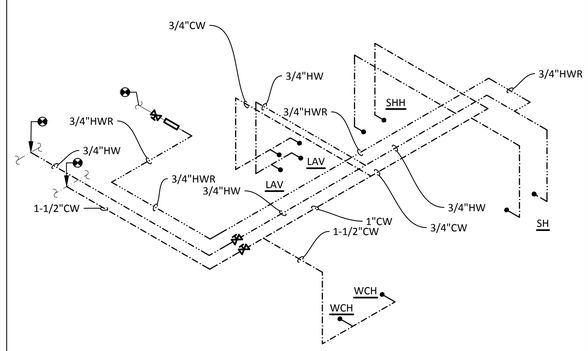

7 WATER RISER
NOT TO SCALE

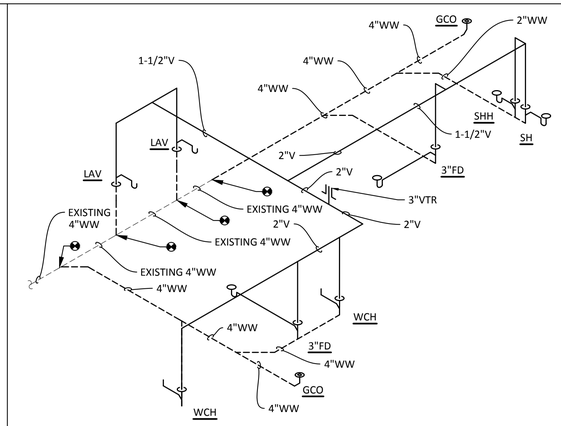

8 WASTE WATER AND VENT RISER
NOT TO SCALE

ENCOTECH ENGINEERING CONSULTANTS
TBPE Firm 1141 | 8500 Bluffstone Cove, Suite B-103 Austin, Texas 78759 | 512.338.1101
Project No.: 15009.M.AUS

STATE OF TEXAS — LYNN C. BROWN 55248 — LICENSED PROFESSIONAL ENGINEER
08/30/2016

mwm Design Group
305 East Huntland Drive
Suite 200
Austin, Texas 78752
p: 512.453.0767
f: 512.453.1734
TBAE FIRM REGISTRATION NO.: 1452
TBPE FIRM REGISTRATION NO.: F-1416
TBPLS FIRM REGISTRATION NO.: 10065600

NO.	DATE	DESCRIPTION	BY

SCALE IS AS NOTED ON DRAWING

PLUMBING SCHEDULES & DETAILS

WOMEN'S LOCKER ROOM PHASE V
5810 NUCKOLS CROSSING ROAD, AUSTIN, TEXAS 78744

PLOTTED: 8/30/2016
JOB NO: 023-79D

FS24-P210

File: J:\ACTIVE PROJECTS\MWM\15009.M.AUS – AFD WLR Ph 5\1. MEP\D-AutoCAD\FS24\15009 FS24 P210 Plumb Schedule Details.dwg 24x36

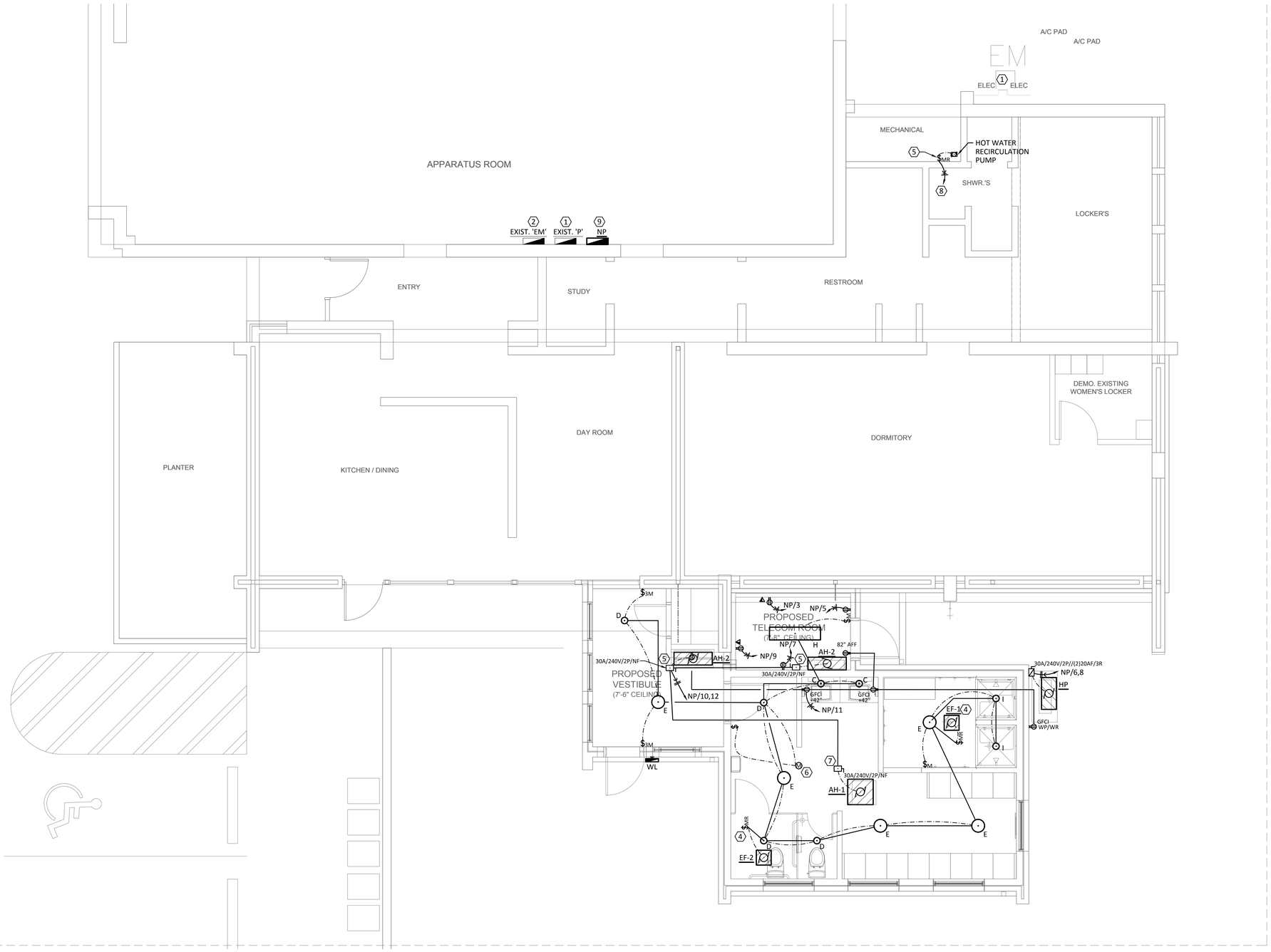

1 ELECTRICAL PLAN

SCALE: 1/4" = 1'-0"

PLAN GENERAL NOTES

A. REFER TO E0.00 FOR GENERAL NOTES.

B. DO NOT ROUTE ANY DUCT & PIPING ABOVE ELECTRICAL PANELS.

C. ESTIMATED LOCATION OF ALL EXISTING ELECTRICAL LAYOUT AND EQUIPMENT LOCATION IS BASED ON SITE OBSERVATION AND EXISTING DRAWINGS. CONTRACTOR SHALL VERIFY SIZE, LOCATION OF ALL EXISTING ELECTRICAL EQUIPMENT, DEVICES AND CONDUITS PRIOR TO BID AND CONSTRUCTION.

D. ALL EXTERIOR LIGHTING FIXTURE SHALL BE CONTROLLED BY PHOTOCELL AND TIMER.

KEYED NOTES

1. EXISTING 200A, 120/240V, 1Ø METER AND MAIN DISCONNECT ON WALL SHALL REMAIN.
2. EXISTING PANEL 'P', 200A, 120/240V, 1Ø, MCB 42-SPACE WITHOUT AVAILABLE SPACE.
3. EXISTING PANEL 'EM', 125A, 120/240V, 1Ø, MLO 16-SPACE WITH 8 AVAILABLE SPACES.
4. MOTOR RATED DISCONNECT SWITCH SHALL BE MOUNTED ON STRUCTURAL MEMBER ABOVE ACCESSIBLE CEILING.
5. MOTOR RATED DISCONNECT SWITCH SHALL BE MOUNTED ON WALL.
6. PROVIDE AND INSTALL CEILING DUAL TECHNOLOGY MOTION DETECTOR WITH WALL MOUNTED OVERDRIVE SWITCH AT DOOR.
7. DISCONNECT SHALL BE MOUNTED ON STRUCTURAL MEMBER ABOVE ACCESSIBLE CEILING.
8. CONNECT TO NEAREST EXISTING RECEPTACLE CIRCUIT.
9. NEW ELECTRICAL LOAD CENTER 'NP', 100A, 120/240V, 1Ø, MLO 18-SPACE.

ENCOTECH
ENGINEERING CONSULTANTS
TBPE Firm 1141
8500 Bluffstone Cove, Suite B-103
Austin, Texas 78759 | 512.338.1101
Project No.: 15009.M.AUS

STATE OF TEXAS
SHARON S. BICKFORD
77390
LICENSED
PROFESSIONAL ENGINEER
08/30/2016

mwm Design Group
305 East Huntland Drive
Suite 200
Austin, Texas 78752
p: 512.453.0767
f: 512.453.1734
TBAE FIRM REGISTRATION NO.: 1452
TBPE FIRM REGISTRATION NO.: F-1416
TBPLS FIRM REGISTRATION NO.: 10065600

NO.	DATE	DESCRIPTION	BY

SCALE IS AS NOTED ON DRAWING

ELECTRICAL PLAN

WOMEN'S LOCKER ROOM PHASE V
5810 NUCKOLS CROSSING ROAD, AUSTIN, TEXAS 78744

PLOTTED: 8/30/2016
JOB NO: 023-79D

FS24-E110

File: J:\ACTIVE PROJECTS\MWM\15009.M.AUS - AFD WLR Ph 5\1. MEP\D-AutoCAD\FS24\15009 FS24 E110 Elec Plan.dwg 24x36

LIGHTING FIXTURE SCHEDULE

MARK	MANUFACTURER	MODEL	VOLT	LAMPING QTY	LAMPING WATTAGE	LAMPING TYPE	LAMPING TEMP	DRIVER TYPE	PHYSICAL TYPE	PHYSICAL SIZE	DESCRIPTION
C	BRUCK	223-850-CH-MP / -	120	1	8	LED	2800K	DIMMING DRIVER	PENDANT	12"H x 3.125"SQ	RECTLINEAR FROST GLASS SHADE, 6FT EXTENSION CABLE, CHROME FINISH
D	LITHONIA	FHHL-7-8-30-DNA / -	120	1	9.3	LED	3000K	DIMMING DRIVER	CEILING	7"DIA x 1-/34"H	CEILING MOUNTED, GLASS SHADE WITH SMOOTH NARUAL ALEMINUM FINISH, WET LOCATION
E	LITHONIA	FHHL-13-8-30-DNA / -	120	1	28	LED	3000K	DIMMING DRIVER	CEILING	7"DIA x 1-/34"H	CEILING MOUNTED, GLASS SHADE WITH SMOOTH NARUAL ALEMINUM FINISH, WET LOCATION
H	-	- / -	120	-	-	-	-	-	-	-	STRIP ZEON LIGHT
I	GOTHAM	EVO-30-10-6-DFR-MVOLT-E21	MVOLT	1	10	LED	2700K	0-10V DIMMING DRIVER	CEILING	6-1/4"D x 7-5/8"H	NON-CONDUCTIVE SHOWER DOWNLIGHT
WL	LITHONIA	DSXW1-LED-10C-530-30K-T4M-MVOLT-ELCW-DDBXD / -	MVOLT	1	20	LED	3000K	0-10V DIMMING DRIVER	WALL	13-3/4"W x 4"D	WALL MOUNTED TYPE IV MEDIUM DISTRIBUTION. LED. RATED FOR LOW TEMPERATURE. DARK BRONZE. BATTERY BACK-UP.

1. SEE ARCHITECTURAL REFLECTED CEILING PLAN FOR EXACT LOCATION OF ALL FIXTURES.
2. PROVIDE ENERGY SAVING BALLASTS FOR ALL FIXTURES WHEREVER AVAILABLE.

NEW PANELBOARD SCHEDULE — NP

LOCATION: SEE PLAN
C.B. RATING: 10,000 A.I.C.

NOTE	VOLTAGE	PHASE	WIRE	MOUNTING	SIZE	LUG	TYPE	NOTE
	240/120V	1	3	SURFACE	100	MLO	-	

USE and/or AREA SERVED	C/B POLE	CIR	LOAD ØA	LOAD ØC	CIR	C/B POLE	USE and/or AREA SERVED	
NEW LIGHTING	20/1	1	600		2	30/2	DRYER	3
			2000					
NEW SERVER RECEPTS	20/1	3		1000	4			
				2000				
NEW SERVER RECEPTS	20/1	5	1000		6	30/2	HP	3
			3120					
NEW SERVER RECEPTS	20/1	7		1000	8			
				3120				
NEW SERVER RECEPTS	20/1	9	1000		10	20/2	AIR HANDLER UNITS	3
			300					
NEW RECEPTS	20/1	11		540	12			
				300				
SPARE	20/1	13	-		14	-	SPACE	
			-					
SPARE	20/1	15		-	16	-	SPACE	
				-				
SPARE	20/1	17	-		18	-	SPACE	
			-					
TOTAL LOAD PER PHASE			8020	7960	8020 VA / 120 V = 67 A			

EXISTING PANELBOARD SCHEDULE — P

LOCATION: SEE PLAN
C.B. RATING: - A.I.C.

NOTE	VOLTAGE	PHASE	WIRE	MOUNTING	SIZE	LUG	TYPE	NOTE
	240/120V	1	3	SURFACE	225	MLO	-	

USE and/or AREA SERVED	C/B POLE	CIR	LOAD ØA	LOAD ØC	CIR	C/B POLE	USE and/or AREA SERVED	
EXIST. TRUCK LIGHT	20/1	1	800		2	20/1	EXIST. CIRCUIT	1
			750					
EXIST. TRUCKROOM RECEPTS.	20/1	3		750	4	20/1	EXIST. CIRCUIT	1
				750				
EXIST. KITCHEN LT	20/1	5	800		6	20/1	EXIST. OUTSIDE LT	1
			800					
EXIST. DORMROOM RECEPTS.	20/1	7		750	8	20/1	EXIST. TELECOM	1
				500				
EXIST. CIRCUIT	20/1	9	750		10	20/1	EXIST. CIRCUIT	1
			750					
EXIST. RECEPTS.	20/1	11		750	12	20/1	EXIST. RESTROOM OUTLET	1
				750				
EXIST. CIRCUIT	20/1	13	750		14	20/1	EXIST. REFRIGERATOR	1
			1200					
EXIST. COFFEE MAKER	20/1	15		1200	16	20/1	EXIST. CIRCUIT	1
				750				
EXIST. KITCHEN SINK	20/1	17	750		18	20/1	EXIST. EXTERIOR RECEPTS.	1
			750					
EXIST. GARAGE DOOR	50/2	19		4000	20	20/1	EXIST. CIRCUIT	1
				750				
		21	4000		22	40/2	EXIST. CON DENSING UNIT	1
			3000					
EXIST. CIRCUIT	20/1	23		750	24			
				3000				
EXIST. CIRCUIT	20/1	25	750		26	20/1	EXIST. FURNACE	1
			750					
EXIST. CIRCUIT	20/1	27		750	28	20/1	EXIST. UNIT HEATER	1
				1000				
EXIST. EM LOADCENTER	40/2	29	3000		30	20/2	EXIST. AC UNIT	1
			1200					
		31		3000	32			
				1200				
EXIST. CIRCUIT	20/1	33	750		34	20/1	EXIST. CIRCUIT	1
			750					
EXIST. CIRCUIT	20/1	35		750	36	40/2	EXIST. UNIT HEATER	1
				2000				
EXIST. CIRCUIT	20/1	37	750		38		DORMROOM	
			2000					
EXIST. CIRCUIT	50/2	39		3000	40	100/2	NEW PANEL 'NP'	2
				2000				
		41	3000		42			
			2000					
TOTAL LOAD PER PHASE			25050	28400	SEE CALCULATION NOT BELOW			

ELECTRICAL PANEL NOTES

1. EXISTING CIRCUIT BREAKER
2. REPLACE EXISTING 30A, 2-POLE CIRCUIT BREAKER WITH 100A, 2-POLE FOR NEW SUB-PANEL. RE-ROUTE DRYER CONNECTION TO NEW PANEL 'NP'
3. NEW CIRCUIT BREAKER

ELECTRICAL LOAD ANALYSIS NOTES

LOAD ANALYSIS - PER 2014 N.E.C., SECTION 220.87

1.	EXISTING KVA MAXIMUM (PER AUSTIN ENERGY TIME OF USE BILL HISTORY REPORT)	=	23.03	KVA
2.	EXISTING MAXIMUM DEMAIN = 23.03 KVA x 125% =	=	28.79	KVA
3.	NEW ELECTRICAL LOAD	=	11.98	KVA
4.	TOTAL LOAD	=	40.77	KVA
	120/240V, 1 PHASE	=	170	AMPS

EXISTING 225 AMPS ELECTRICAL MAIN PANEL P AND SERVICE ARE SUFFICIENT FOR NEW ELECTRICAL LOAD.

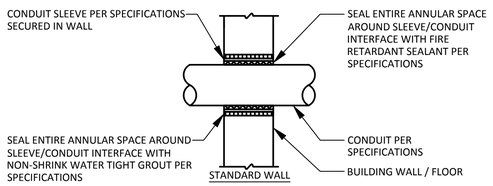

2 WALL PENETRATION DETAIL
NOT TO SCALE

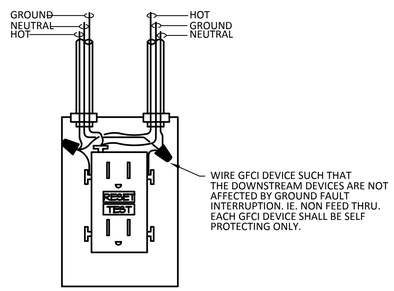

1 GFCI RECEPTACLE WIRING DIAGRAM
NOT TO SCALE

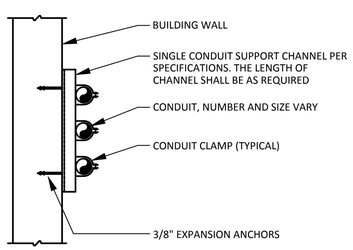

NOTE:
CONDUIT MAY RUN VERTICAL OR HORIZONTAL DEPENDING ON APPLICATION.

4 WALL / CEILING CONDUIT SUPPORT DETAIL
NOT TO SCALE

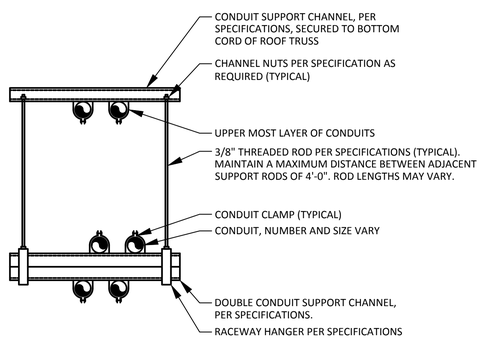

3 CONDUIT SUPPORT DETAIL
NOT TO SCALE

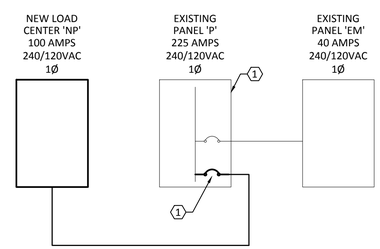

ONE LINE NOTES

1. EXISTING PANEL 'P'
2. REPLACE EXISTING 30A, 2-POLE CIRCUIT BREAKER (SPACE 40 & 42) WITH 100A, 2-POLE FOR NEW SUB-PANEL.
3. 3 - #3 AWG / #8(G) / 2" CONDUIT
4. NEW ELECTRICAL LOAD CENTER 'NP'

5 ELECTRICAL ONE LINE DIAGRAM
NOT TO SCALE

ENCOTECH ENGINEERING CONSULTANTS
TBPE Firm 1141
8500 Bluffstone Cove, Suite B-103
Austin, Texas 78759 | 512.338.1101
Project No.: 15009.M.AUS

STATE OF TEXAS — SHARON S. BICKFORD — 77390 — LICENSED PROFESSIONAL ENGINEER
08/30/2016

mwm Design Group
305 East Huntland Drive
Suite 200
Austin, Texas 78752
p: 512.453.0767
f: 512.453.1734
TBAE FIRM REGISTRATION NO.: 1452
TBPE FIRM REGISTRATION NO.: F-1416
TBPLS FIRM REGISTRATION NO.: 10065600

NO.	DATE	DESCRIPTION	BY

SCALE IS AS NOTED ON DRAWING

ELECTRICAL SCHEDULES & DETAILS

WOMEN'S LOCKER ROOM PHASE V
5810 NUCKOLS CROSSING ROAD, AUSTIN, TEXAS 78744

PLOTTED: 8/30/2016
JOB NO: 023-79D

FS24-E210

File: J:\ACTIVE PROJECTS\MWM\15009.M.AUS – AFD WLR Ph 5\1. MEP\D-AutoCAD\FS24\15009 FS24 E210 Elec Schedule Details.dwg 24x36

NOTES:

1. FIN. FLR. ELEV. MATCH EXISTING SLAB ELEVATION. T.O.C. REFERS TO TOP OF STRUCTURAL SLAB U.N.O.

2. - INDICATES SLAB DEPRESSIONS. SEE STRUCTURAL PLANS & DETAILS FOR DEPTH OF SLAB DEPRESSIONS SEE ARCHITECTURAL FOR EXACT LOCATIONS OF ALL SLAB DEPRESSIONS. DROPS SHOWN ON PLAN ARE IN STRUCTURAL SLAB SEE ARCHITECTURAL FOR EXACT LOCATIONS OF ALL SLAB DEPRESSIONS.

3. SEE ARCHITECTURAL AND MECHANICAL - COORDINATE ALL FLOOR OPENINGS AND PENETRATIONS WITH TRADES INVOLVED FOR ACTUAL SIZES AND LOCATIONS.

4. REFER TO MECHANICAL, ELECTRICAL AND PLUMBING DRAWINGS FOR SLAB PENETRATIONS AND UNDERGROUND UTILITIES.

5. CONTRACTOR TO VERIFY ALL SLAB EDGE, STAIR AND ELEVATOR OPENING DIMENSIONS WITH ARCHITECTURAL DRAWINGS PRIOR TO CONSTRUCTION.

6. SEE GENERAL NOTES AND SPECIFICATION FOR ADDITIONAL INFORMATION.

7. CONTRACTOR TO VERIFY ALL DIMENSIONS AND EXISTING CONDITIONS AND AND REPORT ANY DISCREPANCY TO THE ARCHITECT AND THE ENGINEER.

8. REFER TO ARCHITECTURAL DRAWINGS FOR EXTENT AND DIMENSIONS OF RAISED OR DEPRESSED SLAB AREAS, SLOPES AND DRAINS.

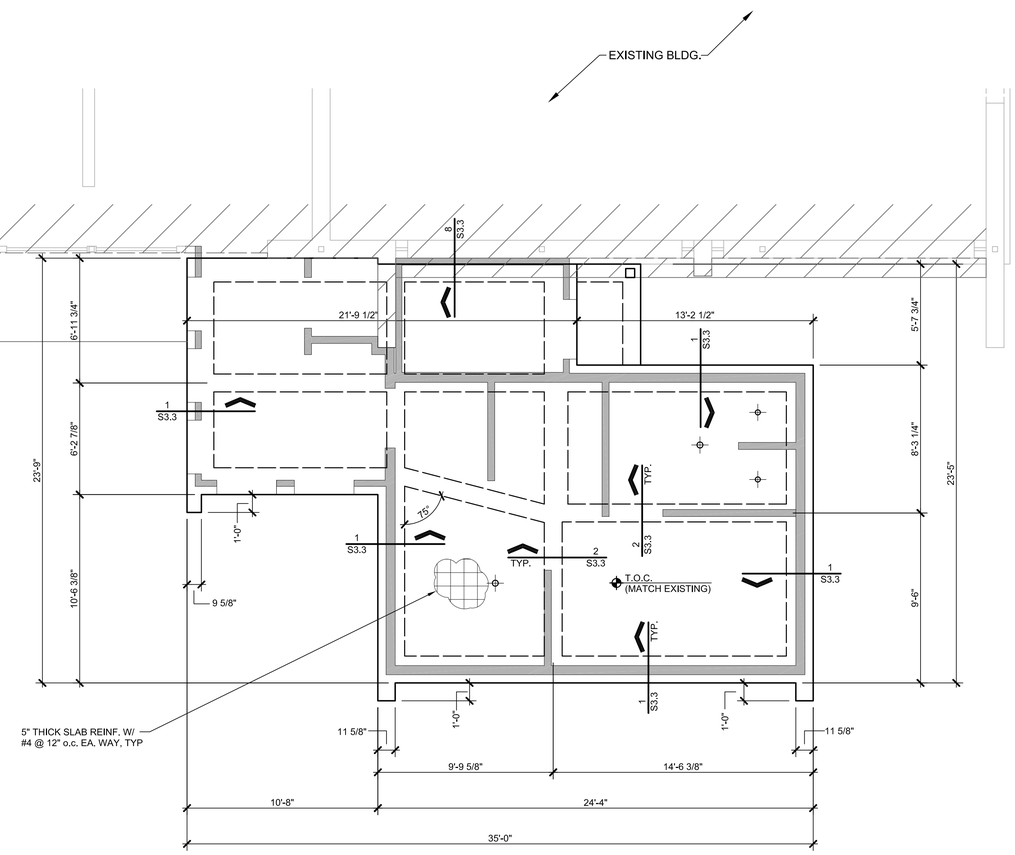

4'-0" MIN. REMOVAL OF EXISTING FAT CLAYS

NORTH

2 FOUNDATION PLAN _FS24

SCALE: 1/4" = 1'-0"

JOSE I. GUERRA, INC.
CONSULTING ENGINEERS
2401 S. IH35 SUITE 210
AUSTIN, TEXAS 78741
(512) 445-2090
TBPE FIRM F-3

STATE OF TEXAS
JOSE I. GUERRA
REGISTERED
PROFESSIONAL ENGINEER
8-30-16

mwm Design Group
305 East Huntland Drive
Suite 200
Austin, Texas 78752
p: 512.453.0767
f: 512.453.1734
TBAE FIRM REGISTRATION NO.: 1452
TBPE FIRM REGISTRATION NO.: F-1416
TBPLS FIRM REGISTRATION NO.: 10065600

NO.	DATE	DESCRIPTION	BY

0 1"
The bar above measures one inch on the original drawing. Adjust scales accordingly.

FOUNDATION PLAN

WOMEN'S LOCKER ROOM PHASE V
5810 NUCKOLS CROSSING, AUSTIN, TEXAS 78744

PLOTTED: 8/30/2016
JOB NO: 023-79D

FS24-S2.0

___ OF ___

File: F:\15011_AFD Women's Locker Rm Improvements\DRAWINGS\CAD\15011_FS24_S2.0 FOUNDATION PLAN.dwg 24x36

SHORING NOTES:

1. ALL NEW OPENINGS ARE TO BE FRAMED WITH NEW STEEL BEAMS OR GLULAM BEAMS TO SUPPORT THE ROOF AND CEILING LOADS CURRENTLY SUPPORTED BY EXISTING LOAD BEARING WALLS TO BE DEMOLISHED. REFERENCE ARCHITECTURAL DRAWINGS FOR DEMOLITION DRAWINGS.

2. THE STRUCTURAL DRAWINGS AND SPECIFICATIONS REPRESENT THE FINISHED STRUCTURE. THEY DO NOT INDICATE THE METHODS OF CONSTRUCTION UNLESS SO STATED OR NOTED. THE CONTRACTOR SHALL PROVIDE ALL MEASURES NECESSARY TO PROTECT THE WORKERS AND ALL OTHER PERSONS DURING CONSTRUCTION.

3. THE CONTRACTOR SHALL PROVIDE TEMPORARY ERECTION BRACING AND SHORING OF ALL STRUCTURAL WORK AS REQUIRED FOR STABILITY OF THE STRUCTURE DURING ALL PHASES OF CONSTRUCTION. THE CONTRACTOR SHALL IMMEDIATELY NOTIFY THE ENGINEER OF ANY CONDITION THAT MIGHT ENDANGER THE STABILITY OF THE STRUCTURE OR CAUSE DISTRESS IN THE STRUCTURE.

4. THE EXISTING LOAD BEARING WALLS TO BE DEMOLISHED ARE TO BE SHORED BY THE CONTRACTOR. THE CONTRACTOR'S TEMPORARY SHORING SYSTEM IS TO REMAIN IN PLACE UNTIL ALL NEW BEAMS HAVE BEEN ERECTED AND ATTACHED TO THE EXISTING LOAD BEARING WALLS/ROOF FRAMING PER STRUCTURAL DRAWINGS.

5. THE CONTRACTOR SHALL SUBMIT SHORING PLANS FOR REVIEW BY ARCHITECT/ ENGINEER THE SHORING PLAN SHALL BE DESIGNED AND SEALED BY AN ENGINEER REGISTERED IN THE STATE OF TEXAS.

6. THE SHORING SYSTEM SHOULD JACK THE EXISTING LOAD BEARING WALLS BETWEEN 1/16" AND 1/8" ABOVE THEIR FINAL ELEVATIONS IN ORDER TO INSURE THAT THE ROOF LOADS ARE TRANSFERRED TO THE NEW BEAMS WITHOUT DEFLECTION.

7. THE BUILDING MUST REMAIN OPEN AND OPERATING DURING CONSTRUCTION. ALL WORK MUST BE PERFORMED IN SUCH A MANNER AS TO CAUSE MINIMAL DISRUPTION TO THE NORMAL ACTIVITIES OF THE BUILDING.

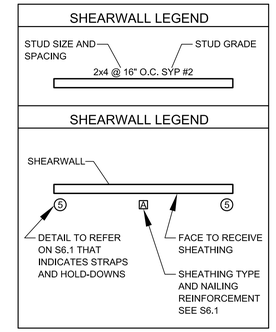

CEILING JOIST NOTES:

1. G.C. SHALL VERIFY DIMENSIONS WITH ACHITECTURAL DRAWINGS AND SHALL NOTIFY ARCH/ ENGINEER OF DISCREPANCIES PRIOR TO CONSTRUCTIONS.
2. FOR INTERIOR AND EXTERIOR WALLS, PROVIDE (2) KING STUDS FOR OPENINGS UP TO 5 FEET IN LENGTH, OR (3) KING STUBS FOR OPENINGS UP TO 9 FEET LENGTH. KING STUD QUANTITY IS TO BE PROVIDED AT EACH SIDE OF OPENING.
3. PROVIDE (1) TRIMMER STUD FOR OPENINGS UP TO 5 FEET LENGTH, (2) TRIMMER STUDS FOR OPENINGS UP TO 10 FEET LENGTH, OR (3) TRIMMER STUDS FOR OPENINGS UP 16 FEET LENGTH. TRIMMER STUD QUANTITY IS TO BE PROVIDED AT EACH SIDE OF OPENING.
4. STUD PACKS SHALL INCLUDE KING AND TRIMMER STUDS AT OPENINGS.
5. TRIMMER AND KING STUD SIZE SHALL MATCH WALL FRAMING STUD SIZE.
6. VERTICAL NAILING BETWEEN TRIMMER STUDS AND BETWEEN KING STUDS SHALL BE 16d AT 16".
7. REFERENCE THIS SHEET FOR LOAD BEARING WALL STUD SIZE & SPACING.
8. REFERENCE SHEET S4.1 FOR SHEAR WALL SCHEDULE.
9. ALL LUMBER TO BE #2 S.Y.P.K.D.
10. ALL CEILING JOISTS TO BE 2x8 AL 16" O.C. UNLESS NOTED OTHERWISE (17'-0" MAX SPAN) REFERENCE IBC FOR OTHER SPANS
11. ALL HEADERS @ 2x4 WALLS TO BE 2-2X PER IBC CODE UNLESS NOTED OTHERWISE. @ 2x6 WALLS TO BE 3-2x PER IBC CODE UNLESS NOTED OTHERWISE.

HEADER SCHEDULE

3-2x8 0'-0" to 5'-0"
3-2x10 5'-1" to 6'-1"
3-2x12 6'-2" to 7'-1"

12. ALL BEAMS LARGER THAN 2-2x6 TO BE SUPPORTED BY BUILT-UP STUD COLUMNS AT 2x6 STUD WALLS AND 2x4 STUD WALLS AT EACH END UNLESS NOTED OTHERWISE AND BLOCKED SOLID TO FOUNDATION. SEE BUILT-UP COLUMN SCHEDULE SHEET S4.0 FOR NUMBER OF BUILT-UP STUD COLUMN; AT EACH END OF BEAMS.
13. DOUBLE 2x8 CEILING JOISTS AS REQUIRED. UNDER HVAC AND/OR WH UNITS LOCATED IN ATTIC. PROVIDE 3/4" PLYWOOD DECK PAD AND CATWALK AS REQUIRED.
14. ALL BEAMS JOB BUILT FROM 3 OR MORE MEMBERS NAILED WITH 10D NAILS @ 6" O.C. TOP AND BOTTOM.
15. ALL GLU-LAMS TO BE DESIGNED WITH STANDARD CAMBER OF R=2000 FT.
16. BRACE TOP FLANGE OF ALL GLULAM, MICROLLAM, OR 2xWOOD BEAMS @ 4'-0" EA SIDE OF CEILING JOISTS WITH 2x6 CONTINUOS STIFFBACK AND 2x4 BRACES
17. STUD WALLS SHALL BE 2x6 @ 16 " O.C., #2 S.Y.P.K.D. UNO. (MAX. HEIGHT 10'-0") STUD WALLS SHALL BE 2x8 @ 16" O.C. , # 2 S.Y.P.K.D. UNO. (HEIGHTS GREATER THAN 10-0" TO 14'-0" MAX.)
18. PROVIDE 2x BLOCKING AT 4'-0" O.C. VERTICALLY AT ALL STUD WALLS.
19. ALL FRAMING TO COMPLY WITH I.B.C. BUILDING CODES, CURRET EDITION.
20. VERIFY ANY CHANGES WITH ENGINEER PRIOR TO CONSTRUCTION.

ROOF FRAMING PLAN

SCALE:

PLAN NOTES:

1. G.C. SHALL VERIFY DIMENSIONS WITH ACHITECTURAL DRAWINGS AND SHALL NOTIFY ARCH/ ENGINEER OF DISCREPANCIES PRIOR TO CONSTRUCTIONS.
2. ALL LUMBER TO BE #2 Y.P.K.D.
3. ALL RAFTERS TO BE 2x8 AT 16"O.C. WITH A MAXIMUM UNBRACED SPAN 18'-0" MEASURED ALONG THE SLOPE, UNLESS NOTED OTHERWISE.
4. ALL HIPS, RIDGES, VALLEYS TO BE 2x10 MAXIMUM. UNBRACED SPAN 8'-0" UNLESS NOTED OTHERWISE. PROVIDE "TEE" BRACES @ 6'-0" O.C. MAX SPACING AT RIDGES. PROVIDE "TEE" BRACES @ 8'-0" O.C. MAX SPACING AT HIPS AND VALLYS. PROVIDE DBL STUDS BELOW EACH "TEE" BRACE AT STUD WALLS
5. PROVIDE 2x8 CONTINUOUS PURLINS WITH 2x8 "TEE" BRACES @ 4'-0" O.C. MAX SPACING PROVIDE DBL STUDS BELOW EACH "TEE" BRACE AT STUD WALLS. NAIL "TEE" BRACE TOGETHER WITH 10D NAILS @ 6" O.C.- TYPICAL.
6. "TEE" BRACES LONGER THAN 8'-0" SHALL BE DBL 2x8 STUD WITH FLANGE PLATE "TEE" BRACE AND BRACED HORIZONTALLY @ 6'-0" O.C. IN TWO DIRECTIONS, NAIL "TEE" BRACE TOGETHER WITH 1O D NAILS @ 6" O.C. - TYPICAL
7. PROVIDE 2x6 MIN. COLLAR TIES AT 4'-0" O.C. AT ALL RIDGES.
8. ALL FRAMING TO COMPLY WITH I.B.C. BUILDING CODE CURRENT EDITION.
9. VERIFY AND CHANGES WITH ENGINEER PRIOR TO CONSTRUCTION.

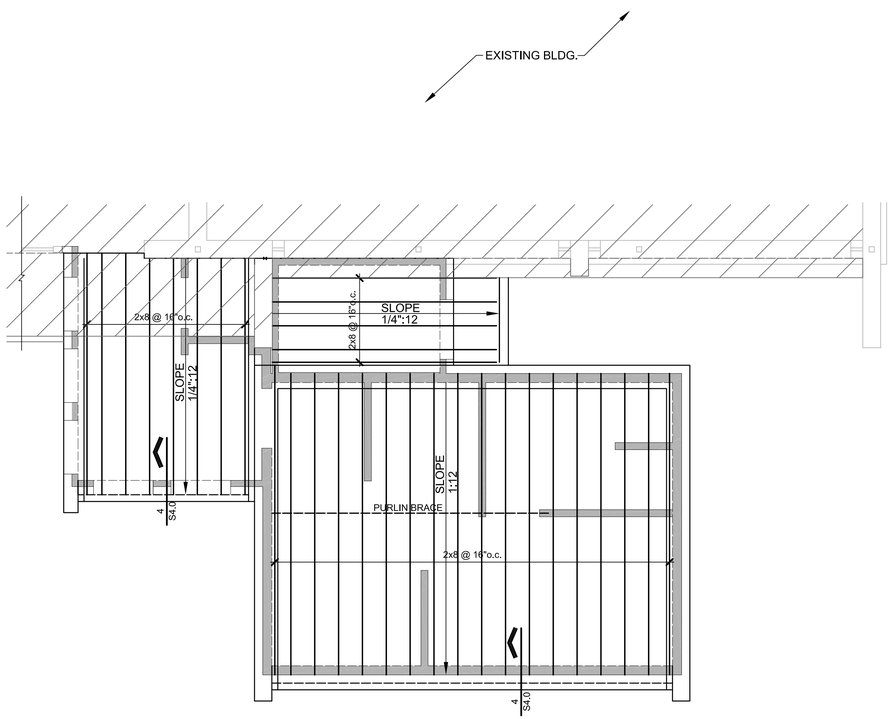

NOTE:
TOP OF STUD WALL ELEVATION REF. ARCH'L

NORTH

2 ROOF FRAMING PLAN _FS24
SCALE: 1/4" = 1'-0"

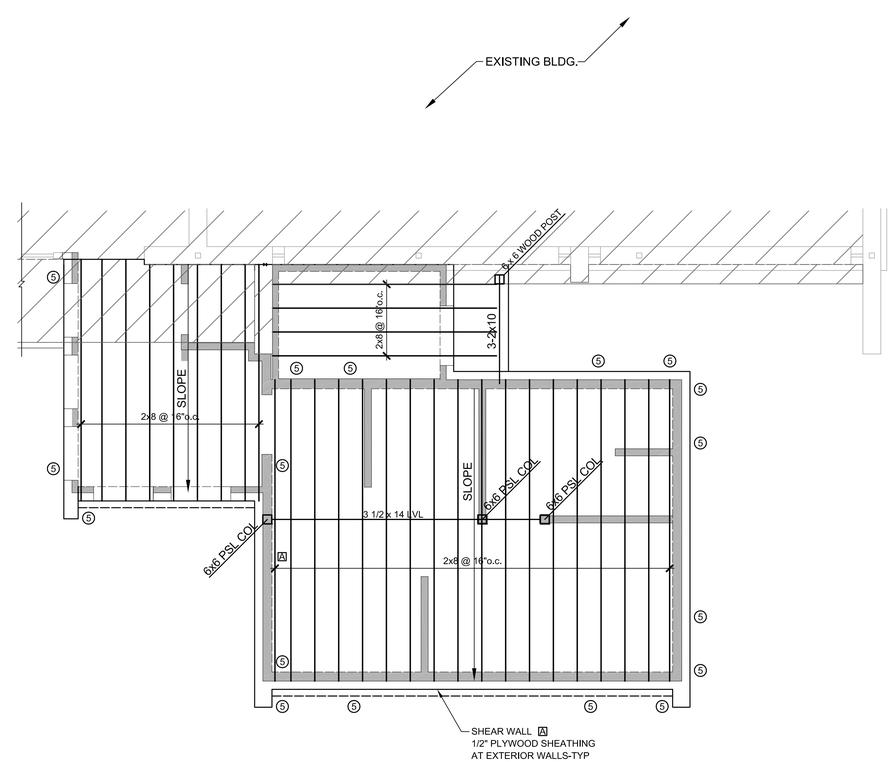

NORTH

1 CEILING FRAMING PLAN _FS24
SCALE: 1/4" = 1'-0"

JOSE I. GUERRA, INC.
CONSULTING ENGINEERS
2401 S. IH35 SUITE 210
AUSTIN, TEXAS 78741
(512) 445-2090
TBPE FIRM F-3

STATE OF TEXAS
JOSE I. GUERRA
86546
REGISTERED PROFESSIONAL ENGINEER
8-30-16

mwm Design Group
305 East Huntland Drive
Suite 200
Austin, Texas 78752
p: 512.453.0767
f: 512.453.1734
TBAE FIRM REGISTRATION NO.: 1452
TBPE FIRM REGISTRATION NO.: F-1416
TBPLS FIRM REGISTRATION NO.: 10065600

NO.	DATE	DESCRIPTION	BY

0 1"
The bar above measures one inch on the original drawing. Adjust scales accordingly.

ROOF & CEILING FRAMING PLAN

WOMEN'S LOCKER ROOM PHASE V
5810 NUCKOLS CROSSING, AUSTIN, TEXAS 78744

PLOTTED: 8/30/2016
JOB NO: 023-79D

FS24-S2.1

___ OF ___

File: F:\15011_AFD Women's Locker Rm Improvements\DRAWINGS\CAD\15011_FS24_S2.1 ROOF FRAMING PLAN.dwg 2:4x36

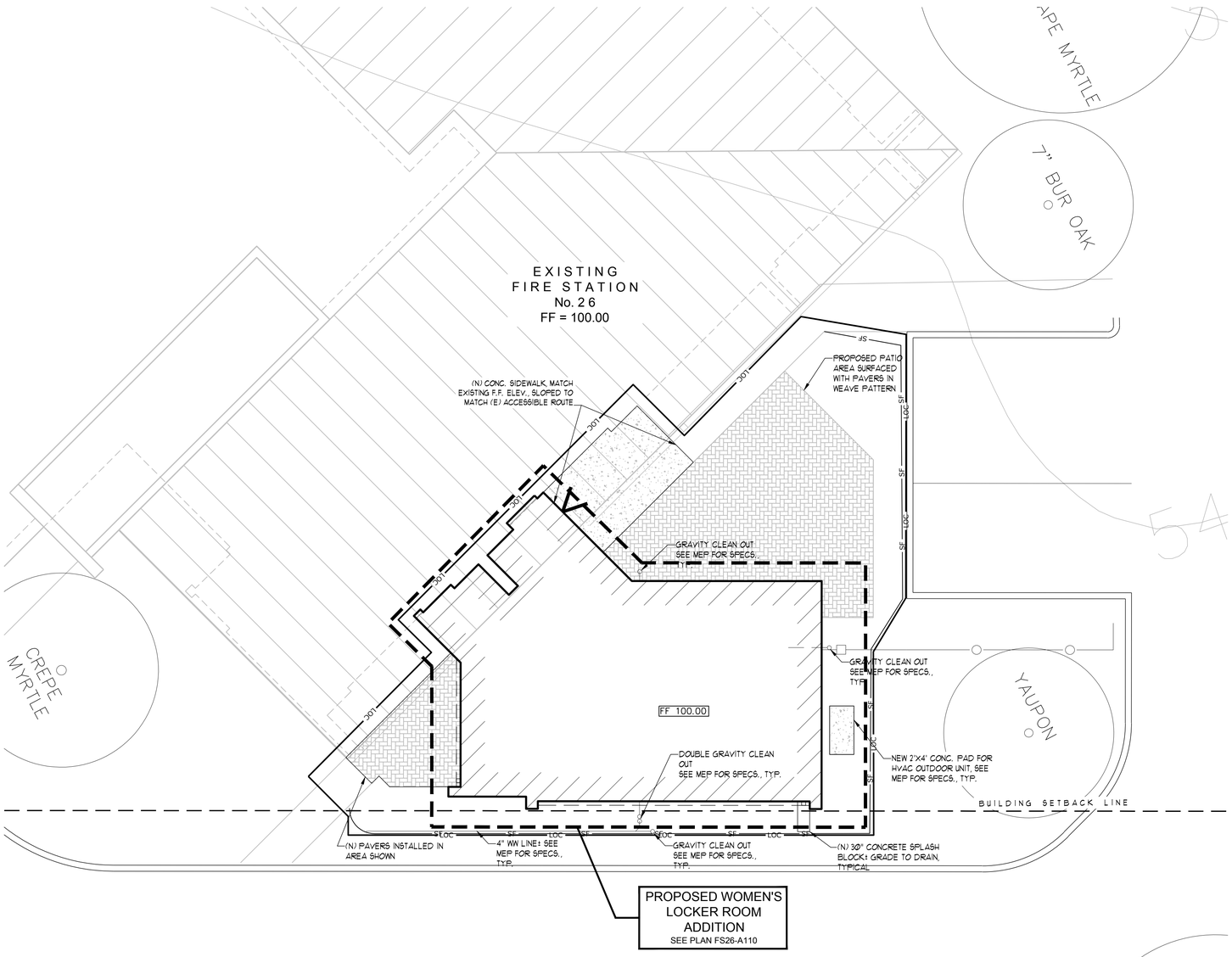

1 FS26-A050 ENLARGED SITE PLAN

SCALE: 1" = 5'-0"

NOTE

THE LOCATIONS OF EXISTING IMPROVEMENTS SHOWN ON THIS PLAN WERE DERIVED IN PART FROM RECORD DOCUMENTS OF UNKNOWN ACCURACY. THE PRESENCE, LOCATION AND ELEVATION OF EXISTING UTILITIES IN THE FILED SHALL BE VERIFIED BY THE CONTRACTOR BEFORE COMMENCING WORK. IT SHALL BE THE RESPONSIBILITY OF THE CONTRACTOR TO VERIFY EXISTING CONDITIONS WITHIN THE LIMITS OF CONSTRUCTION. FAILURE OF AN EXISTING UTILITY TO APPEAR ON THIS PLAN SHALL NOT RELIEVE THE CONTRACTOR OF RESPONSIBILITY TO PROTECT AND REPAIR, IF DAMAGED, SUCH UTILITIES.

ALL NEW PEDESTRIAN PAVEMENT SHALL BE CONSTRUCTED IN ACCORDANCE WITH THE TEXAS ACCESSIBILITY STANDARDS, AND SHALL MATCH THE ELEVATIONS OF EXISTING IMPROVEMENTS AT POINTS OF INTERSECTION.

FINE GRADING SHALL BE COMPLETED TO DRAIN STORMWATER AWAY FROM BUILDING PERIMETERS, AND SPECIFICALLY AWAY FROM FROM BUILDING ENTRANCES AT THE MAXIMUM SLOPES POSSIBLE GIVEN EXISTING CONDITIONS ADJACENT.

SUMMARY SEQUENCE OF CONSTRUCTION

1. INSTALL SEDIMENTATION AND EROSION CONTROLS AND TREE PROTECTION FENCING AND INITIATE TREE MITIGATION MEASURES (AS REQUIRED).
2. BEGIN SITE CLEARING/CONSTTRUCTION ACTIVITIES.
3. COMPLETE CONSTRUCTION AND BEGIN REVEGETATION OF SITE AND INSTALLATION OF LANDSCAPING.
4. FOLLOWING REVEGETATION, REMOVE THE TEMPORARY EROSION AND SEDIMENTATION CONTROLS AND COMPLETE ANY NECESSARY FINAL REVEGETATION RESULTING FROM REMOVAL OF THE CONTROLS.

SITE PLAN LEGEND

- PROPERTY LINES
- BUILDING SETBACK LINES
- LOC — LIMITS OF CONSTRUCTION
- 528 — EXISTING TOPOGRAPHIC CONTOUR
- EXISTING TREE & TREE PROTECTION
- EXISTING CHAIN LINK FENCE
- PROPOSED OBJECT
- PROPOSED CURB & GUTTER
- PROPOSED ASHPHALT
- PROPOSED CONCRETE
- EXISTING PERVIOUS AREA
- PROPOSED PERVIOUS AREA
- EXISTING STRUCTURE
- PROPOSED STRUCTURE
- (E)XX.XX — EXISTING SPOT ELEVATION
- XX.XX — PROPOSED SPOT ELEVATION

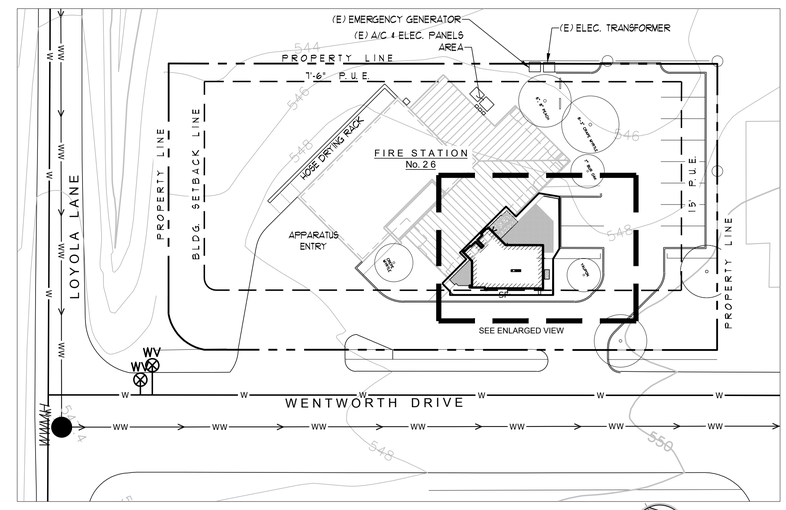

2 FS26-A050 SITE PLAN (KEY PLAN)

SCALE: 1" = 30'

	EXISTING	PROPOSED
SITE AREA, S.F.	27,547 SF	27,547 SF
IMPERVIOUS AREA, S.F. (%)	14,620 (53.1%)	+474 SF (54.8%)
NET CHANGE %		+1.7 %
GROSS FLOOR AREA OF PROPOSED ADDITION		620 SF

BID DOCUMENTS

BRANDON EDWARD LAMBERT 087368 LICENSED PROFESSIONAL ENGINEER
MWM DesignGroup, Inc. F-1416
8-30-16

mwm DesignGroup
305 East Huntland Drive
Suite 200
Austin, Texas 78752
p: 512.453.0767
f: 512.453.1734
TBAE FIRM REGISTRATION NO.: 1452
TBPE FIRM REGISTRATION NO.: F-1416
TBPLS FIRM REGISTRATION NO.: 10065600

NO.	DATE	DESCRIPTION	BY

0 — 1"
The bar above measures one inch on the original drawing. Adjust scales accordingly.

SITE PLAN

CITY OF AUSTIN, AFD WOMEN'S LOCKER RM. ADDN., PHASE V
6702 WENTWORTH DRIVE, AUSTIN, TEXAS 78724

PLOTTED: 9/7/2016
JOB NO: 023-79D

FS26-C050

File: Y:\023-79D_WomensLockerRooms\CAD\Fire Station 26\Sheets\FS26-A050 SITE PLAN.dwg 24x36

PROJECT DATA: FIRE STATION 26

GOVERNING CODES

2012 INTERNATIONAL ENERGY CONSERVATION CODE
2012 INTERNATIONAL BUILDING CODE
2012 INTERNATIONAL MECHANICAL CODE
2012 UNIFORM PLUMBING CODE (AS AMENDED BY COA)
2012 NATIONAL ELECTRIC CODE (AS AMENDED BY COA)
2010 ADA STANDARDS FOR ACCESSIBLE DESIGN
2012 TEXAS ACCESSIBILITY STANDARDS

BUILDING CODE DATA – IBC CHAPTER 3

OCCUPANCY GROUP

B THE USE OF A BUILDING OR STRUCTURE, OR A PORTION THEREOF, FOR OFFICE, PROFESSIONAL OR SERVICE-TYPE TRANSACTIONS, INCLUDING STORAGE OF RECORDS AND ACCOUNTS.

GENERAL BUILDING LIMITATIONS – IBC CHAPTER 5

ALLOWABLE HEIGHT AND BUILDING AREA (TABLE 503)

TYPE VB (B OCCUPANCY)
AREA (SF) 9,000
HEIGHT 2 STORY

FRONTAGE INCREASE (If) = [F/P–0.25]W/30 = 25
SPRINKLER INCREASE (Is) = 0

ALLOWABLE AREA (B) = At+(AtIf/100)+(AtIs/100) = 11,250

ACTUAL AREA B (SF) 5,227
ACTUAL AREA B 1 STORY

CONSTRUCTION TYPE – IBC CHAPTER 6

FIRE RESISTIVE REQUIREMENTS FOR BUILDING ELEMENTS (TYPE VB–TABLE 601)

BEARING WALLS	
INTERIOR	NO REQUIREMENTS
EXTERIOR	NO REQUIREMENTS
NONBEARING WALLS	
EXTERIOR	SEE BELOW
NONBEARING WALLS	
INTERIOR	NO REQUIREMENTS
FLOOR CONSTRUCTION	NO REQUIREMENTS
ROOF CONSTRUCTION	NO REQUIREMENTS

EXTERIOR WALL/OPENING PROTECTION (TABLE 602 AND 704.8)
EXTERIOR WALLS 1 LESS THAN 10 FEET
NO RATING 10 FEET OR GREATER

INTERIOR FINISHES – IBC CHAPTER 8

FLAME SPREAD RATINGS OF MATERIALS AND FINISHES (TABLE 803.4)

CLASS A: FLAME SPREAD 0–25, SMOKE DEVELOPED 0–450
CLASS B: FLAME SPREAD 26–75, SMOKE DEVELOPED 0–450
CLASS C: FLAME SPREAD 76–200, SMOKE DEVELOPED 0–450

VERTICAL EXITS AND PASSAGEWAYS	CLASS B
EXIT ACCESS CORRIDORS	CLASS B
ROOMS AND ENCLOSED SPACES	CLASS C

OCCUPANCY LOAD AND MEANS OF EGRESS –

	AREA (sqft.)	OCCUPANT LOAD FACTOR (sqft.)	OCCUPANTS	REQUIRED EGRESS WIDTH PER OCCUPANT	REQUIRED EGRESS WIDTH
LOCKER ROOM	588	–	–	–	–
TOTAL			–	–	–
EGRESS WIDTH PROVIDED (1 DOOR)					32

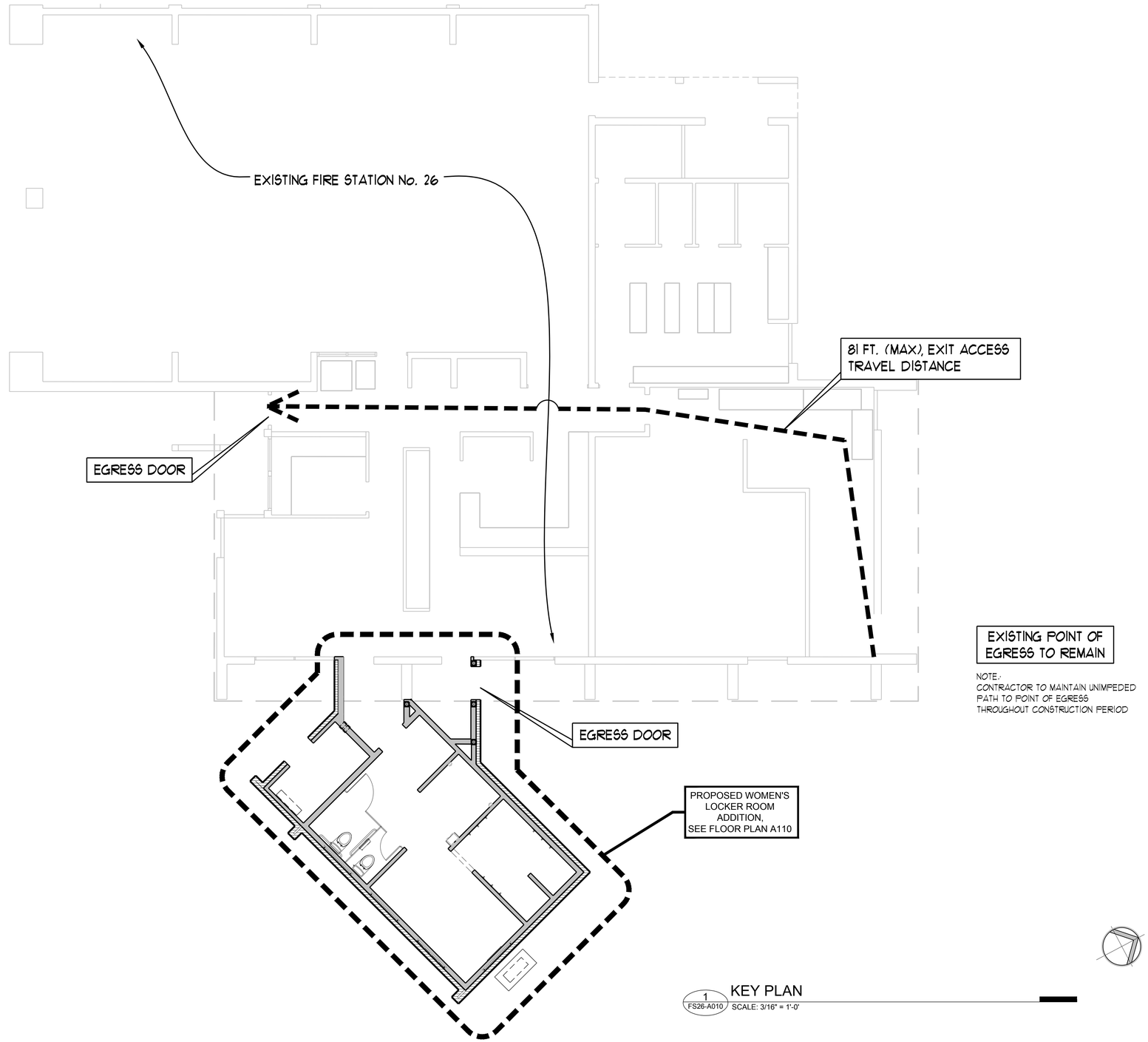

1 FS26-A010 KEY PLAN
SCALE: 3/16" = 1'-0'

BID DOCUMENTS

REGISTERED ARCHITECT JOHN W. OWEN HARRISON 18348 STATE OF TEXAS

mwm Design Group
305 East Huntland Drive
Suite 200
Austin, Texas 78752
p: 512.453.0767
f: 512.453.1734
TBAE FIRM REGISTRATION NO.: 1452
TBPE FIRM REGISTRATION NO.: F-1416
TBPLS FIRM REGISTRATION NO.: 10065600

NO.	DATE	DESCRIPTION	BY

0 1"
The bar above measures one inch on the original drawing. Adjust scales accordingly.

CODE SUMMARY & KEY PLAN

CITY OF AUSTIN, AFD WOMEN'S LOCKER RM. ADDN., PHASE V
6702 WENTWORTH DRIVE, AUSTIN, TEXAS 78724

PLOTTED: 8/30/2016
JOB NO: 023-79D

FS26-A010

File: X:\023-79D_WomensLockerRooms\CAD\Fire Station 26\Sheets\FS26-A010 CODE.dwg 24x36

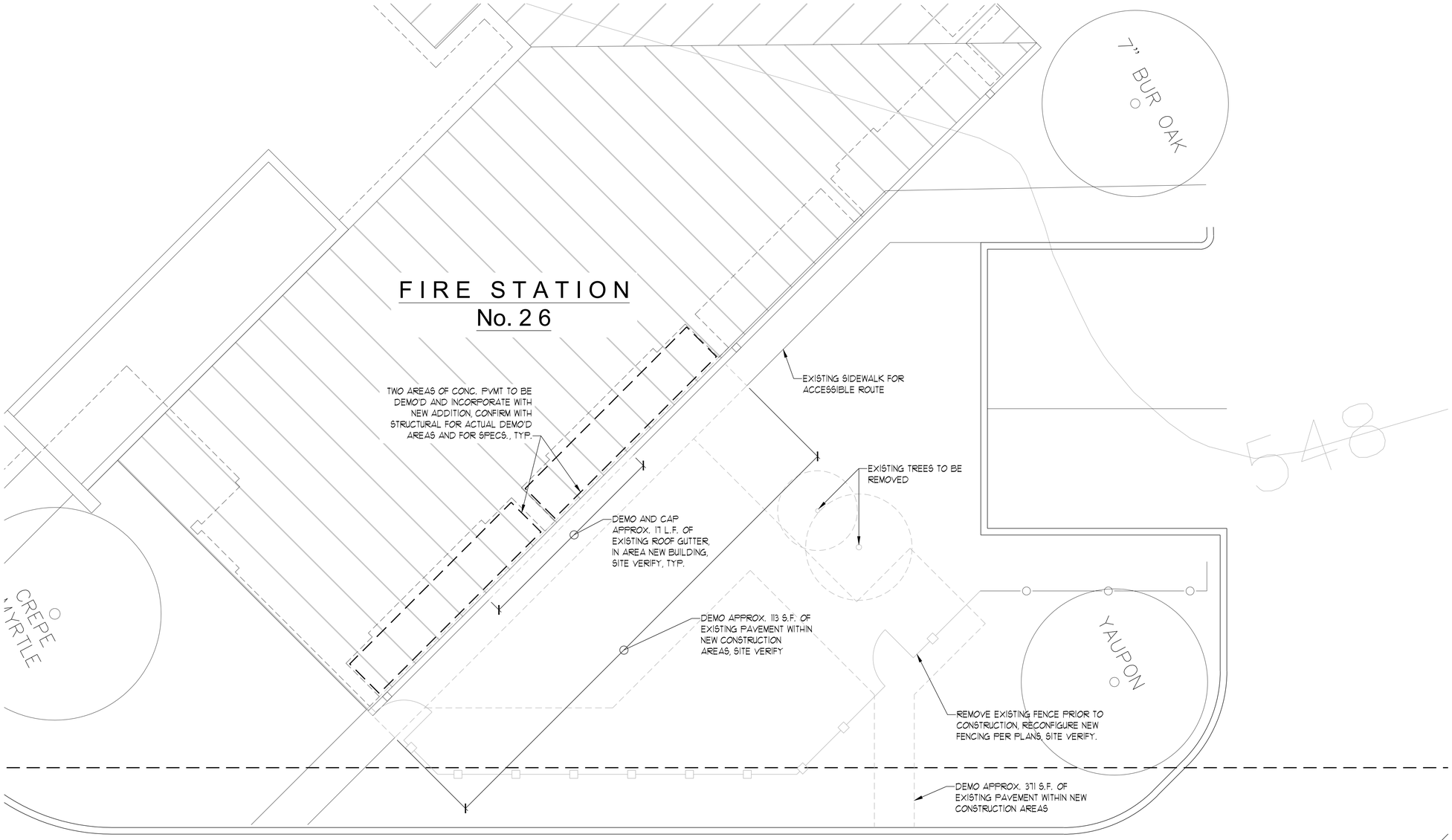

DEMOLITION LEGEND

- PROPERTY LINES
- BUILDING SETBACK LINES
- EXISTING TO REMAIN
- EXISTING OVERHEAD OBJECT
- EXISTING STRUCTURE
- EXISTING TO REMOVE
- EXISTING TO REMOVE

1 / FS26-A100 DEMOLITION PLAN

SCALE: 1/4" = 1'-0"

BID DOCUMENTS

REGISTERED ARCHITECT W. OWEN HARGROVE 16348 STATE OF TEXAS

mwm Design Group
305 East Huntland Drive
Suite 200
Austin, Texas 78752
p: 512.453.0767
f: 512.453.1734

TBAE FIRM REGISTRATION NO.: 1452
TBPE FIRM REGISTRATION NO.: F-1416
TBPLS FIRM REGISTRATION NO.: 10065600

NO.	DATE	DESCRIPTION	BY

0 1"

The bar above measures one inch on the original drawing. Adjust scales accordingly.

DEMOLITION PLAN

CITY OF AUSTIN, AFD WOMEN'S LOCKER RM. ADDN., PHASE V
6702 WENTWORTH DRIVE, AUSTIN, TEXAS 78724

PLOTTED: 8/30/2016
JOB NO: 023-79D

FS26-A100

File: Y:\023-79D_WomensLockerRooms\CAD\Fire Station 26\Sheets\FS26-A100 DEMO PLAN.dwg 24x36

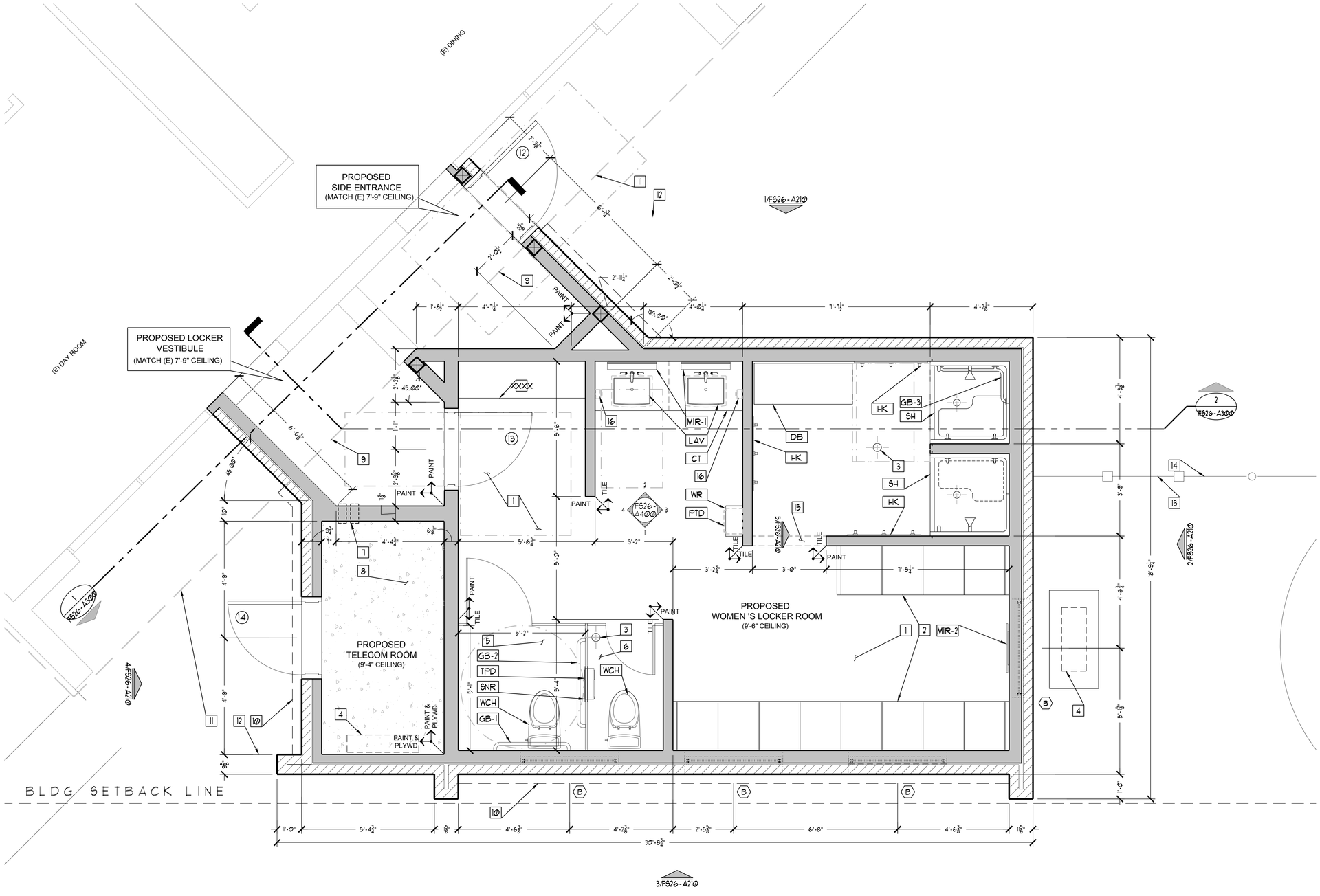

1 FS26-A110 FLOOR PLAN
SCALE: 1/2" = 1'-0"

LEGEND

- PROPERTY LINES
- BUILDING SETBACK LINES
- EXISTING TO REMAIN
- EXISTING OVERHEAD OBJECT
- EXISTING TO REMOVE
- EXISTING STRUCTURE
- PROPOSED STRUCTURE
- PROPOSED OBJECT
- TILE / PAINT — PROPOSED WALL FINISH TYPE
- PROPOSED FLOOR DRAIN
- A.D.A. CLEAR FLOOR AREA
- PROPOSED GLAZING AT CLERESTORY
- PROPOSED GLAZING
- PROPOSED BRICK VENEER WALL
- PROPOSED FRAME WALL
- PROPOSED WALL INFILL, AS NOTED
- PROPOSED CMU BLOCK WALL
- PROPOSED CONCRETE
- PROPOSED FLOOR TILE
- PROPOSED PLYWOOD

CALL-OUT KEY

1. (N) NON-SLIP TILE FLOORING
2. (N) 20"x24"x60" HOLMAN LOCKERS OR APPROVED EQUAL
3. (N) FLOOR DRAIN, REFER TO M.E.P.
4. (N) MINI SPLIT AC WALL MOUNTED UNIT AND HEAT PUMP OUTDOOR UNIT (ON 2'x4' CONC. SLAB), SEE MEP SPECS
5. (N) ACCESSIBLE TOILET STALL
6. (N) STANDARD TOILET STALL
7. INSTALL (2) 4" PVC CONDUITS FOR NETWORK CABLING
8. (N) BROOM FINISHED CONCRETE FLOOR, SEE STRUCTURAL
9. (E) ROOF FASCIA OUTLINE, CONSTRUCT (N) ROOF PERPENDICULAR TO (E) ROOF, WATERPROOF CONNECTION WITH (N) ROOF MFG. APPROVED FLASHING, MATCH (N) CEILING HEIGHT TO (E) EAVE HEIGHT
10. (N) ROOF OVERHANG WITH GALV. GUTTER AND DOWNSPOUTS
11. (E) ROOF EAVE
12. (N) CONC. SIDEWALK OR (N) PAVER EDGE, SEE SITE PLAN FOR SPECS.
13. PROPOSED LOCATION OF (N) WOOD FENCE
14. END OF (E) CHAIN-LINK FENCE, CONNECT TO (N) WOOD FENCE
15. (N) TILE INSIDE 3'0"x7'0" OPENING
16. (N) SOAP DISPENSER PROVIDED BY OWNER

BID DOCUMENTS

REGISTERED ARCHITECT W. OWEN HARTNETT 18348 STATE OF TEXAS

mwm Design Group
305 East Huntland Drive
Suite 200
Austin, Texas 78752
p: 512.453.0767
f: 512.453.1734
TBAE FIRM REGISTRATION NO.: 1452
TBPE FIRM REGISTRATION NO.: F-1416
TBPLS FIRM REGISTRATION NO.: 10065600

NO.	DATE	DESCRIPTION	BY

0 — 1"
The bar above measures one inch on the original drawing. Adjust scales accordingly.

FLOOR PLAN

CITY OF AUSTIN, AFD WOMEN'S LOCKER RM. ADDN., PHASE V
6702 WENTWORTH DRIVE, AUSTIN, TEXAS 78724

PLOTTED: 8/30/2016
JOB NO: 023-79D

FS26-A110

File: X:\023-79D_WomensLockerRooms\CAD\Fire Station 26\Sheets\FS26-A110 FLOOR PLAN.dwg 24x36

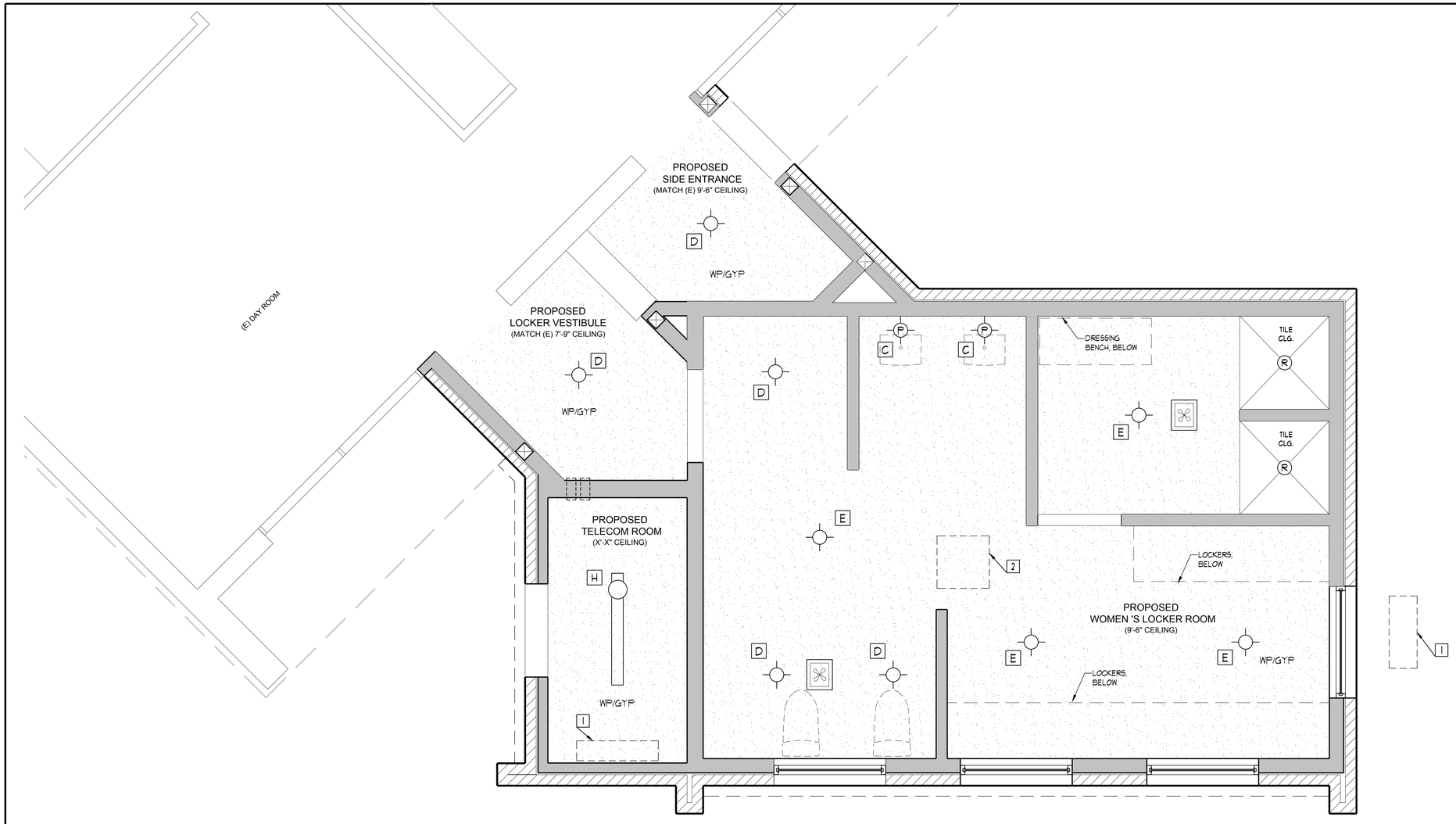

1
FS26-A120
REFLECTED CEILING PLAN
SCALE: 1/2" = 1'-0"

RCP LEGEND

- GYPSUM WALLBOARD
- 2'x2' LAY-IN ACOUSTICAL TILE CEILING GRID
- PLYWOOD SURFACE
- 1x WOOD PLANKS/TKG
- 2x WOOD FRAME INFILL, INCLUDES- INSULATION, GYP. BD., TAPE, FLOAT, CHAULK ALL JOINTS/GAPS & PAINT
- OPEN TO STRUCTURE ABOVE
- FLUSH MOUNT CEILING LIGHT
- PENDANT CEILING LIGHT
- RECESSED CEILING MOUNT LIGHT
- (2) 4 FT. NEON BALLAST FLUSH MOUNT WORK LIGHT, W/ MTL PROTECTIVE COVER
- RECESSED MOUNTED EXHAUST FAN
- CEILING FAN WITH LIGHT
- WALL SCONCE
- SURFACE MOUNT UNDER-CABINET LIGHT

CALL-OUT KEY

1. (N) MINI SPLIT AC WALL MOUNTED UNIT AND HEAT PUMP OUTDOOR UNIT (ON 2'x4' CONC. SLAB), SEE MEP SPECS
2. CEILING FLUSH MOUNT HVAC CASSETTE, 22 1/2"X 22 1/2", SEE MEP DRAWINGS FOR SPECS., TYP.
3. LIGHTING FIXTURE SCHEDULE FS/EMS0-A010, DETAIL No. 3

BID DOCUMENTS

REGISTERED ARCHITECT W. OWEN HARDING 18348 STATE OF TEXAS

mwm Design Group
305 East Huntland Drive
Suite 200
Austin, Texas 78752
p: 512.453.0767
f: 512.453.1734
TBAE FIRM REGISTRATION NO.: 1452
TBPE FIRM REGISTRATION NO.: F-1416
TBPLS FIRM REGISTRATION NO.: 10065600

NO.	DATE	DESCRIPTION	BY

0 1"
The bar above measures one inch on the original drawing. Adjust scales accordingly.

RELFECTED CEILING PLAN

CITY OF AUSTIN, AFD WOMEN'S LOCKER RM. ADDN., PHASE V
6702 WENTWORTH DRIVE, AUSTIN, TEXAS 78724

PLOTTED: 8/30/2016
JOB NO: 023-79D

FS26-A120

File: "A:\023-79D_WomensLockerRooms\CAD\Fire Station 26\Sheets\FS26-A120 RCP PLAN.dwg 24x36

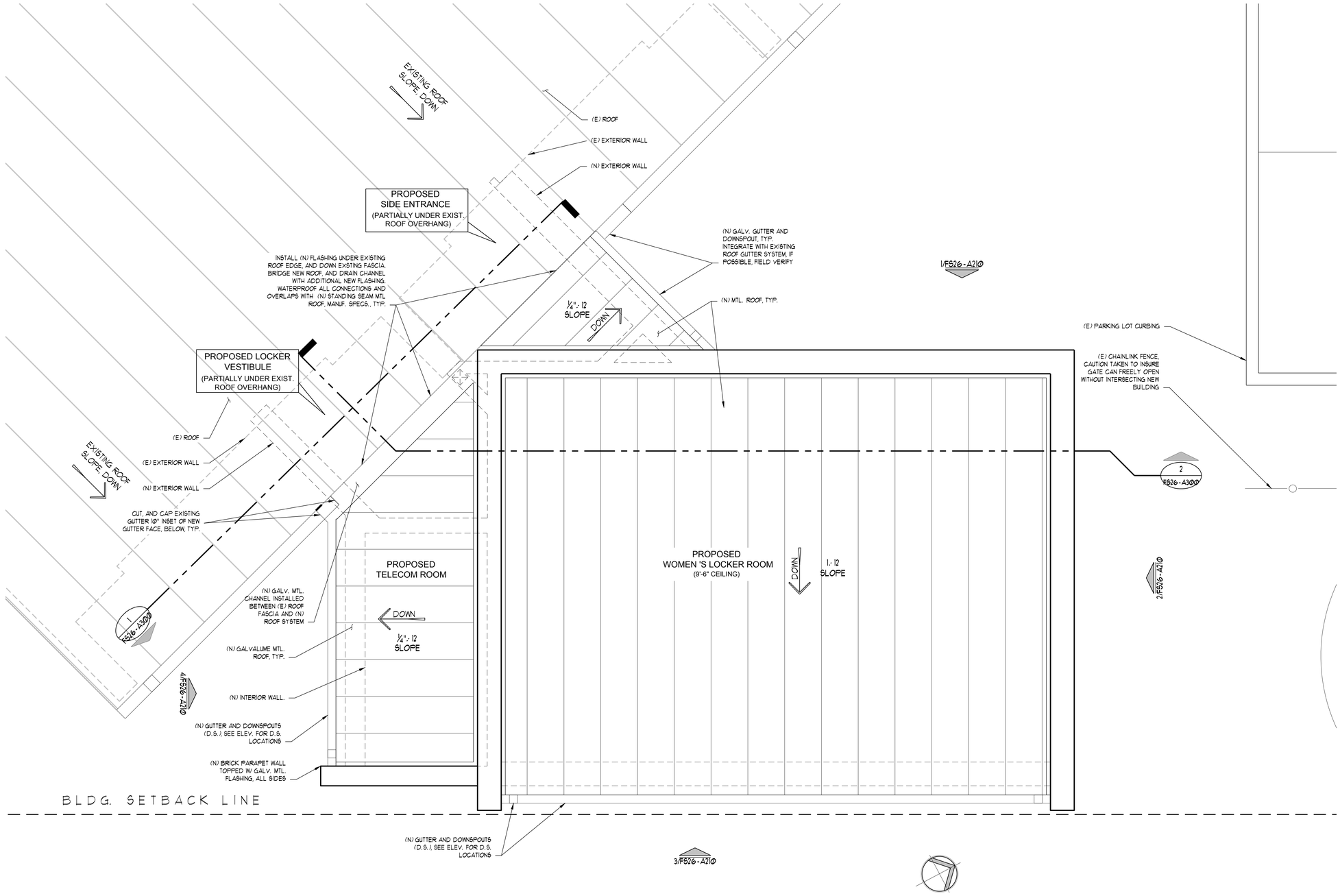

1 FS26-A120 ROOF PLAN
SCALE: 1/2" = 1'-0"

BID DOCUMENTS

REGISTERED ARCHITECT JOHN OWEN HARRISON 18348 STATE OF TEXAS
10 Aug 2016

mwm Design Group

305 East Huntland Drive
Suite 200
Austin, Texas 78752
p: 512.453.0767
f: 512.453.1734

TBAE FIRM REGISTRATION NO.: 1452
TBPE FIRM REGISTRATION NO.: F-1416
TBPLS FIRM REGISTRATION NO.: 10065600

NO.	DATE	DESCRIPTION	BY

0 1"
The bar above measures one inch on the original drawing. Adjust scales accordingly.

ROOF PLAN

CITY OF AUSTIN, AFD WOMEN'S LOCKER RM. ADDN., PHASE V
6702 WENTWORTH DRIVE, AUSTIN, TEXAS 78724

PLOTTED: 8/30/2016
JOB NO: 023-79D

FS26-A130

File: Y:\023-79D_WomensLockerRooms\CAD\Fire Station 26\Sheets\FS26-A130 ROOF PLAN.dwg 24x36

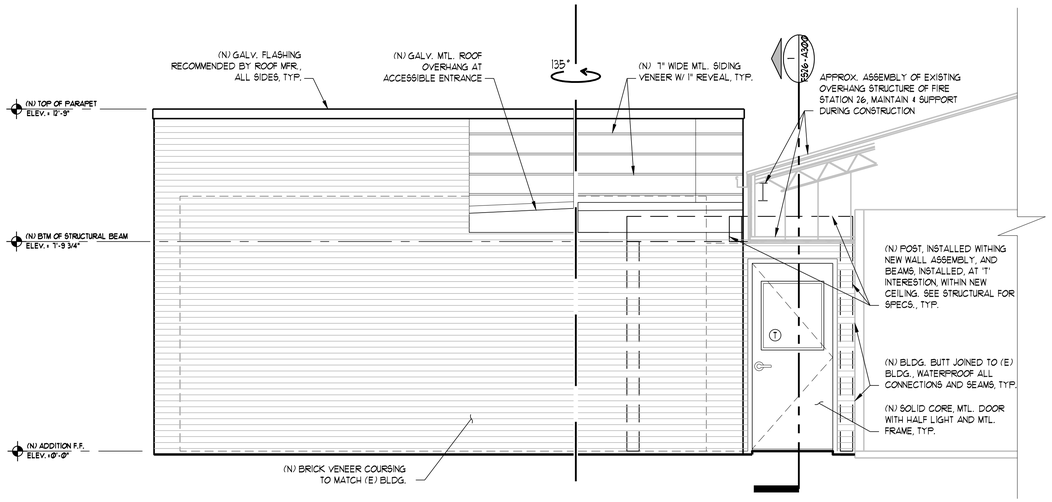

1 FS26-A210 NORTH ELEVATION
SCALE: 3/8" = 1'-0"

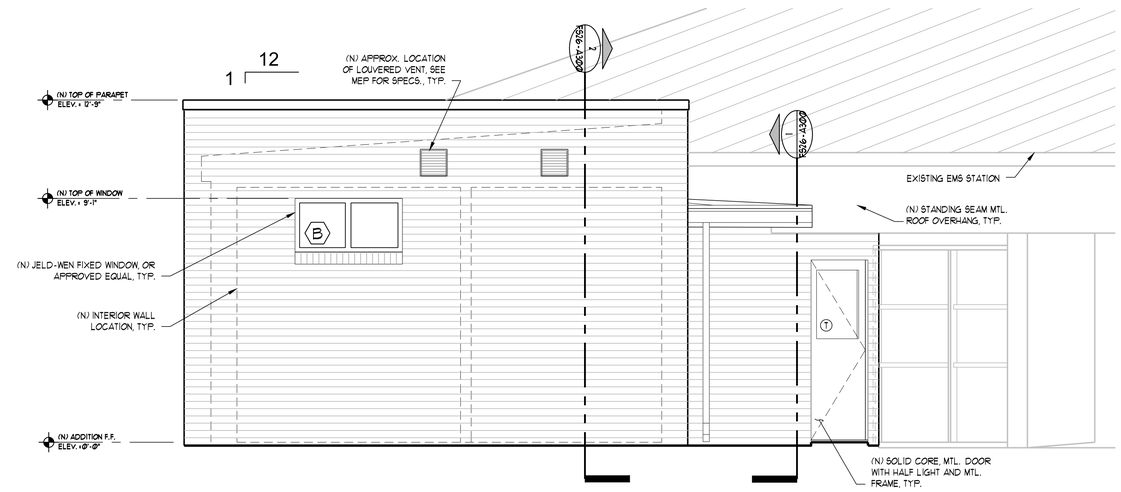

2 FS26-A210 EAST ELEVATION
SCALE: 3/8" = 1'-0"

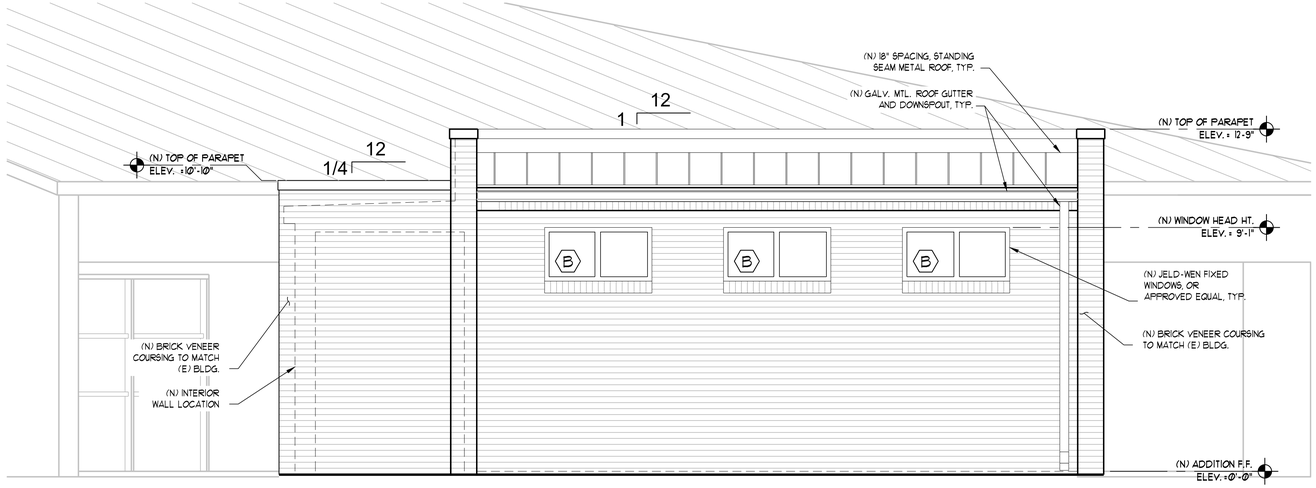

3 FS26-A210 SOUTH ELEVATION
SCALE: 3/8" = 1'-0"

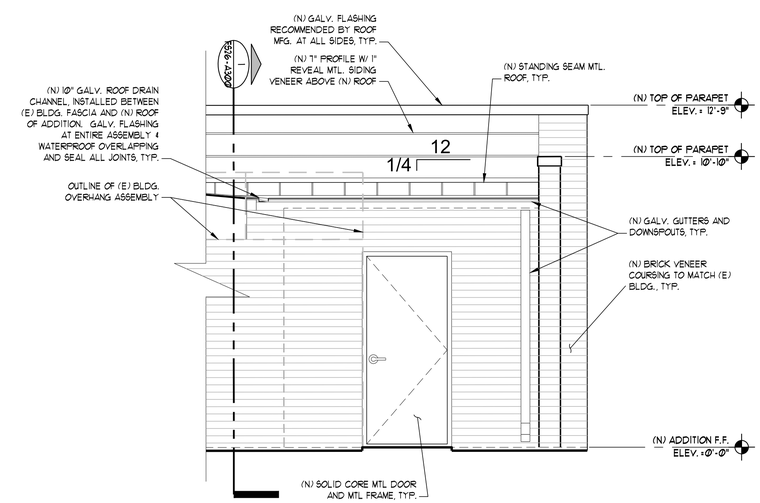

4 FS26-A210 WEST ELEVATION
SCALE: 3/8" = 1'-0"

BID DOCUMENTS

REGISTERED ARCHITECT JOHN OWEN HARRISON 78348 STATE OF TEXAS

mwm Design Group

305 East Huntland Drive
Suite 200
Austin, Texas 78752
p: 512.453.0767
f: 512.453.1734

TBAE FIRM REGISTRATION NO.: 1452
TBPE FIRM REGISTRATION NO.: F-1416
TBPLS FIRM REGISTRATION NO.: 10065600

NO.	DATE	DESCRIPTION	BY

0 1"
The bar above measures one inch on the original drawing. Adjust scales accordingly.

BUILDING ELEVATIONS

CITY OF AUSTIN, AFD WOMEN'S LOCKER RM. ADDN., PHASE V
6702 WENTWORTH DRIVE, AUSTIN, TEXAS 78724

PLOTTED: 8/30/2016
JOB NO: 023-79D

FS26-A210

File: Y:\023-79D_WomensLockerRooms\CAD\Fire Station 26\Sheets\FS26-A210 BLDG ELEV.dwg 24x36

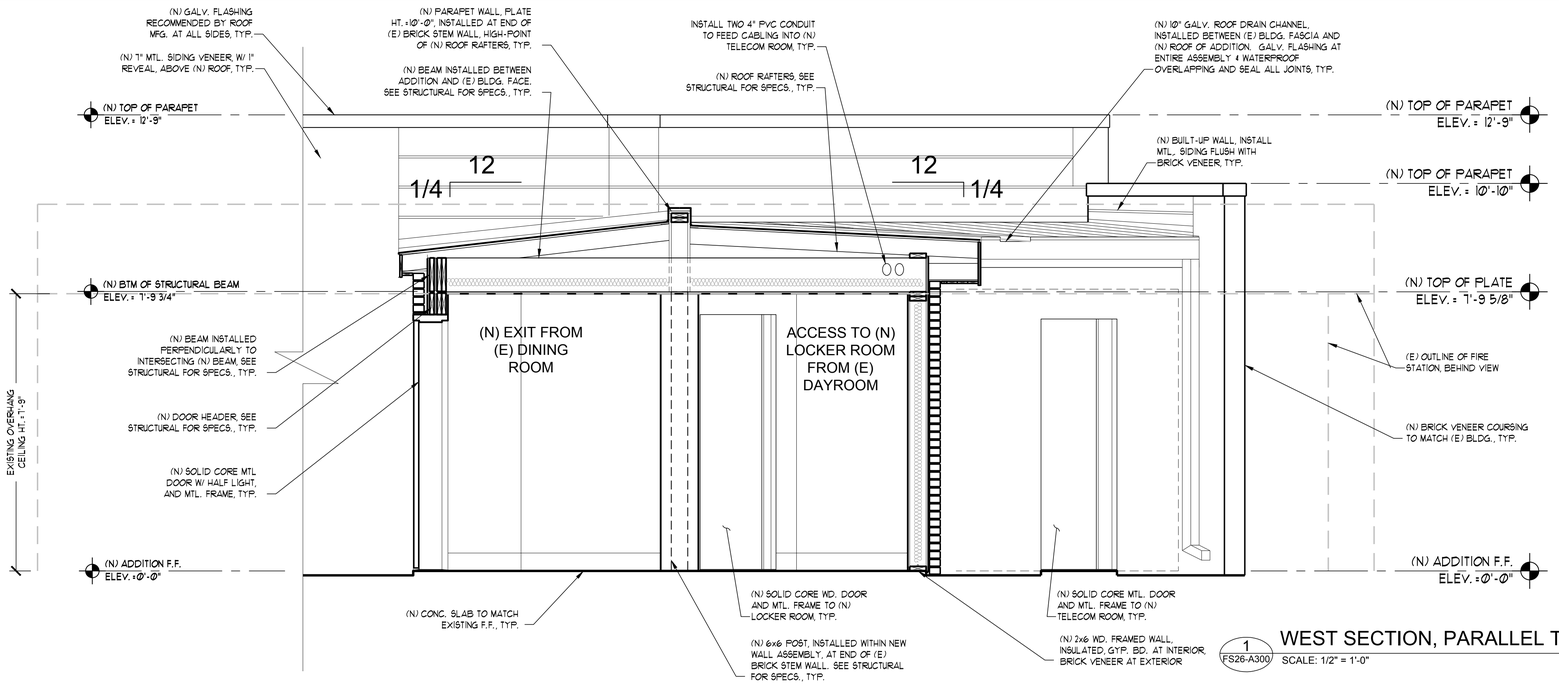

1 FS26-A300 WEST SECTION, PARALLEL TO (E) BLDG.
SCALE: 1/2" = 1'-0"

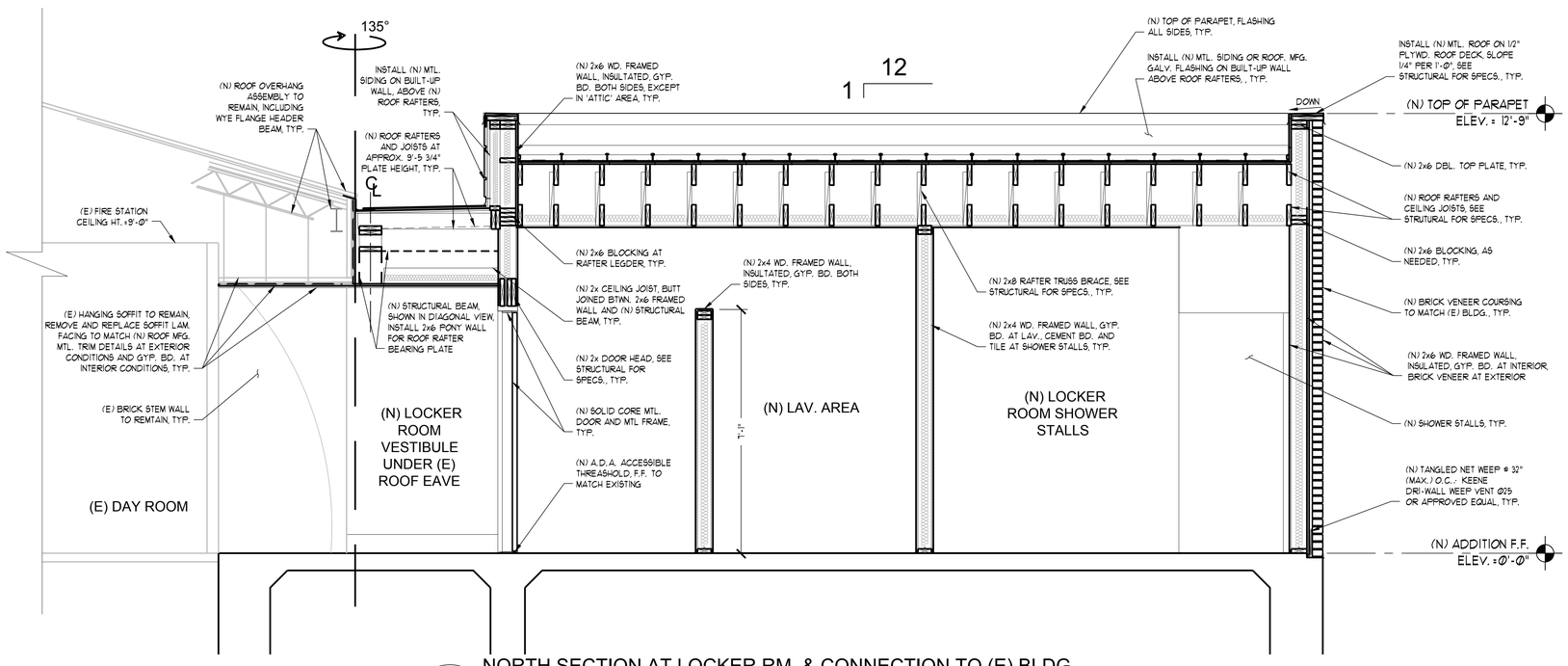

2 FS26-A300 NORTH SECTION AT LOCKER RM. & CONNECTION TO (E) BLDG.
SCALE: 1/2" = 1'-0"

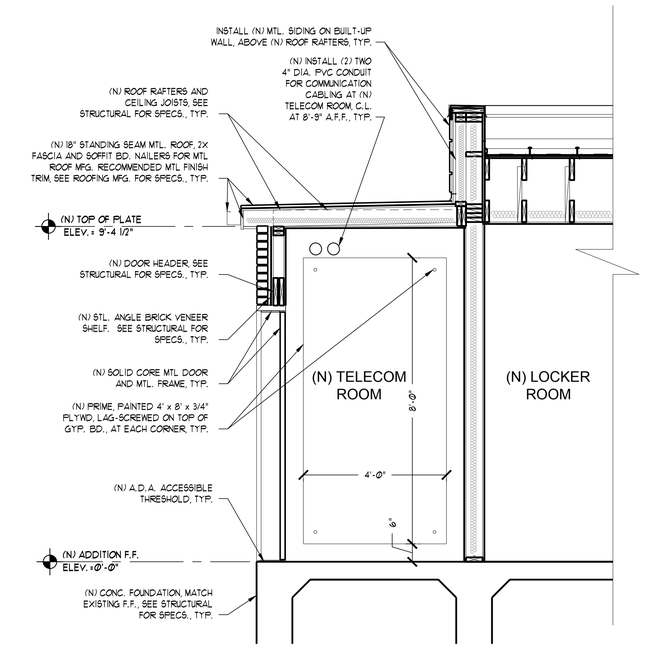

3 FS26-A300 NORTH SECTION AT TELECOM RM.
SCALE: 1/2" = 1'-0"

BID DOCUMENTS

REGISTERED ARCHITECT W. OWEN HARGRO 16348 STATE OF TEXAS
Aug 30, 2016

mwm Design Group
305 East Huntland Drive
Suite 200
Austin, Texas 78752
p: 512.453.0767
f: 512.453.1734
TBAE FIRM REGISTRATION NO.: 1452
TBPE FIRM REGISTRATION NO.: F-1416
TBPLS FIRM REGISTRATION NO.: 10065600

NO.	DATE	DESCRIPTION	BY

0 1"
The bar above measures one inch on the original drawing. Adjust scales accordingly.

BUILDING SECTIONS

CITY OF AUSTIN, AFD WOMEN'S LOCKER RM. ADDN., PHASE V
6702 WENTWORTH DRIVE, AUSTIN, TEXAS 78724

PLOTTED: 8/30/2016
JOB NO: 023-79D

FS26-A300

File: Y:\023-79D_WomensLockerRooms\CAD\Fire Station 26\Sheets\FS26-A300 BLDG SECT.dwg 24x36

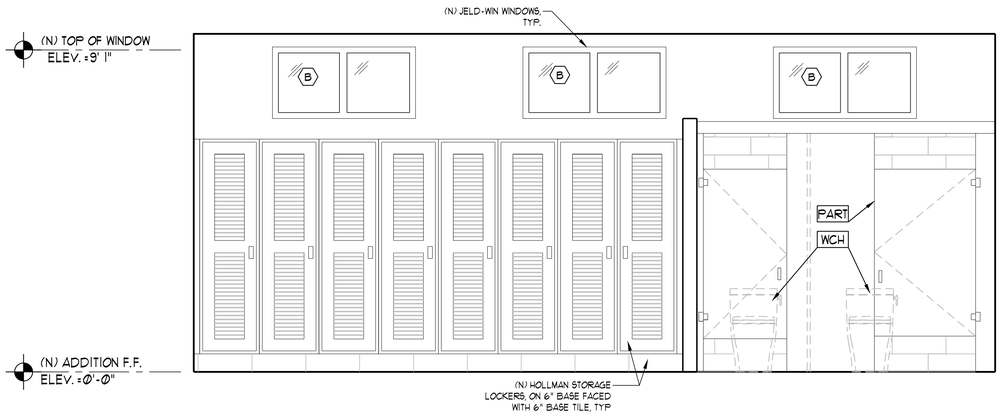

1 FS26-A400 NORTH INTERIOR ELEVATION
SCALE: 1/2" = 1'-0"

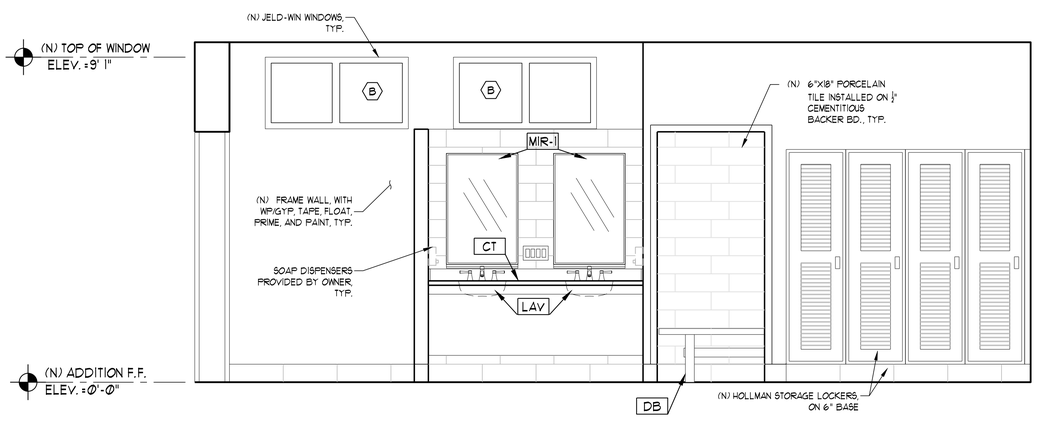

2 FS26-A400 SOUTH INTERIOR ELEVATION
SCALE: 1/2" = 1'-0"

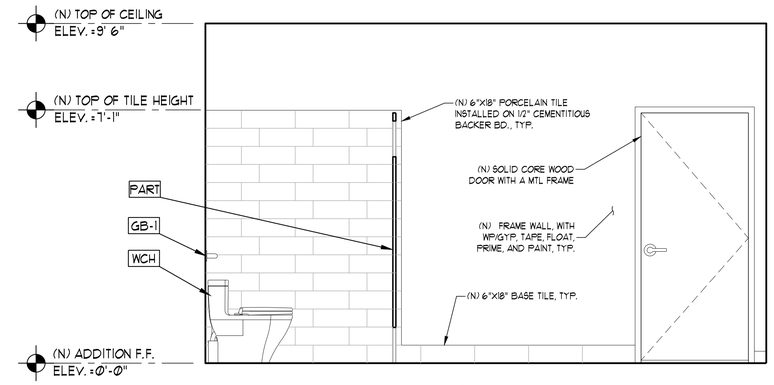

3 FS26-A400 EAST INTERIOR ELEVATION
SCALE: 1/2" = 1'-0"

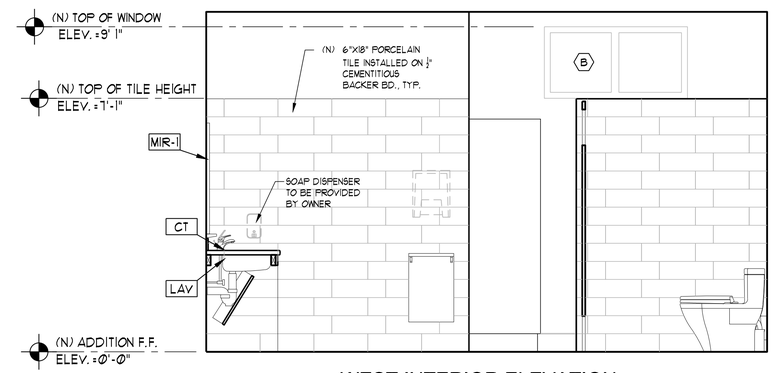

4 FS26-A400 WEST INTERIOR ELEVATION @ SINK & TOILETS
SCALE: 1/2" = 1'-0"

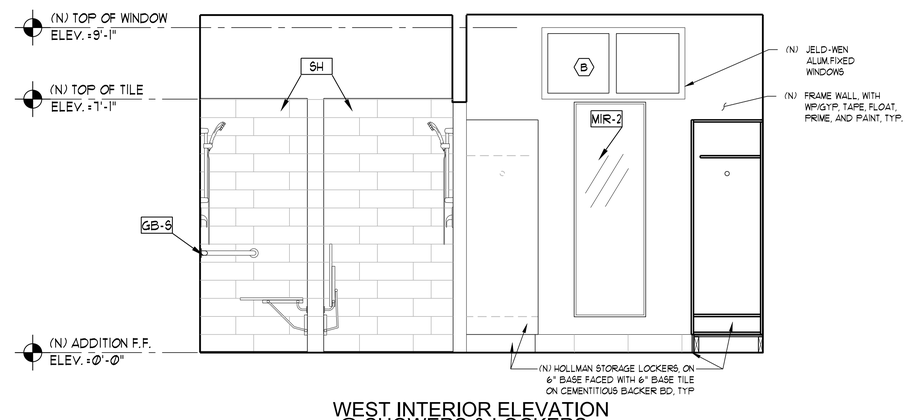

5 FS26-A400 WEST INTERIOR ELEVATION @ SHOWERS & LOCKERS
SCALE: 1/2" = 1'-0"

BID DOCUMENTS

REGISTERED ARCHITECT JOHN OWEN HARRISON 18348 STATE OF TEXAS

mwm Design Group
305 East Huntland Drive
Suite 200
Austin, Texas 78752
p: 512.453.0767
f: 512.453.1734
TBAE FIRM REGISTRATION NO.: 1452
TBPE FIRM REGISTRATION NO.: F-1416
TBPLS FIRM REGISTRATION NO.: 10065600

NO.	DATE	DESCRIPTION	BY

0 1"
The bar above measures one inch on the original drawing. Adjust scales accordingly.

INTERIOR ELEVATIONS

CITY OF AUSTIN, AFD WOMEN'S LOCKER RM. ADDN., PHASE V
6702 WENTWORTH DRIVE, AUSTIN, TEXAS 78724

PLOTTED: 8/30/2016
JOB NO: 023-79D

FS26-A400

File: X:\023-79D_WomensLockerRooms\CAD\Fire Station 26\Sheets\FS26-A400 INT ELEV.dwg 24x36

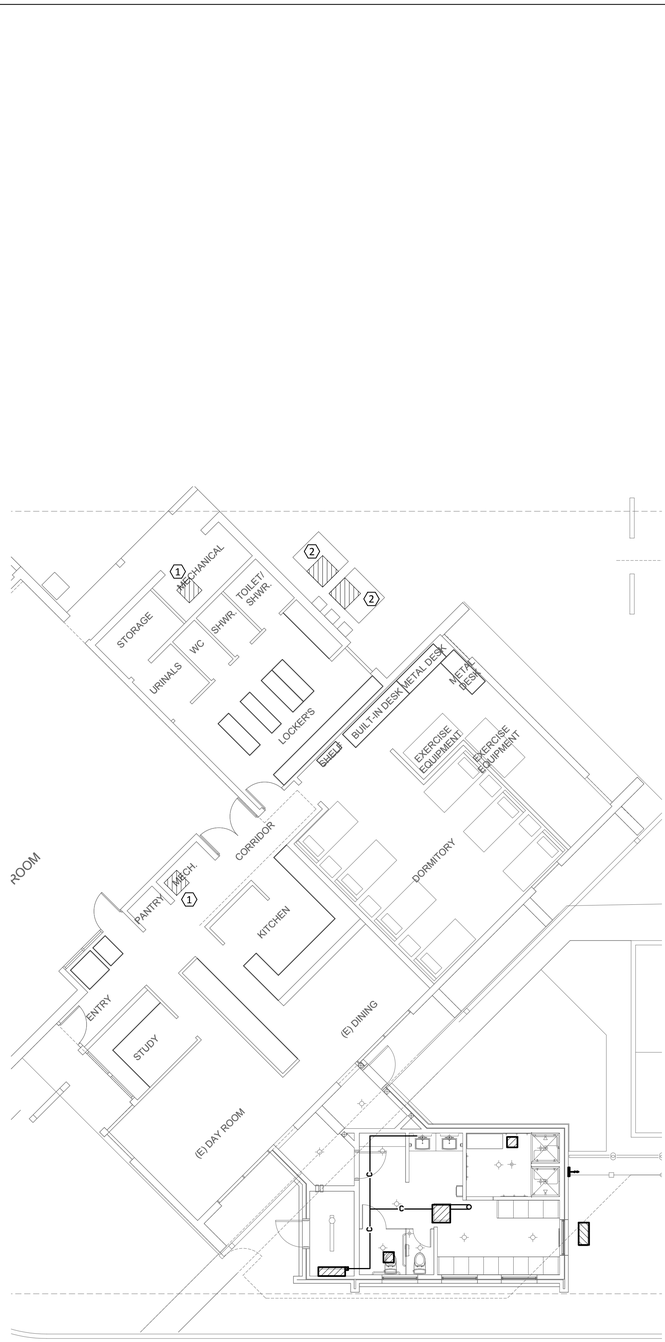

1 OVERALL MECHANICAL PLAN
SCALE: 1/4" = 1'-0"

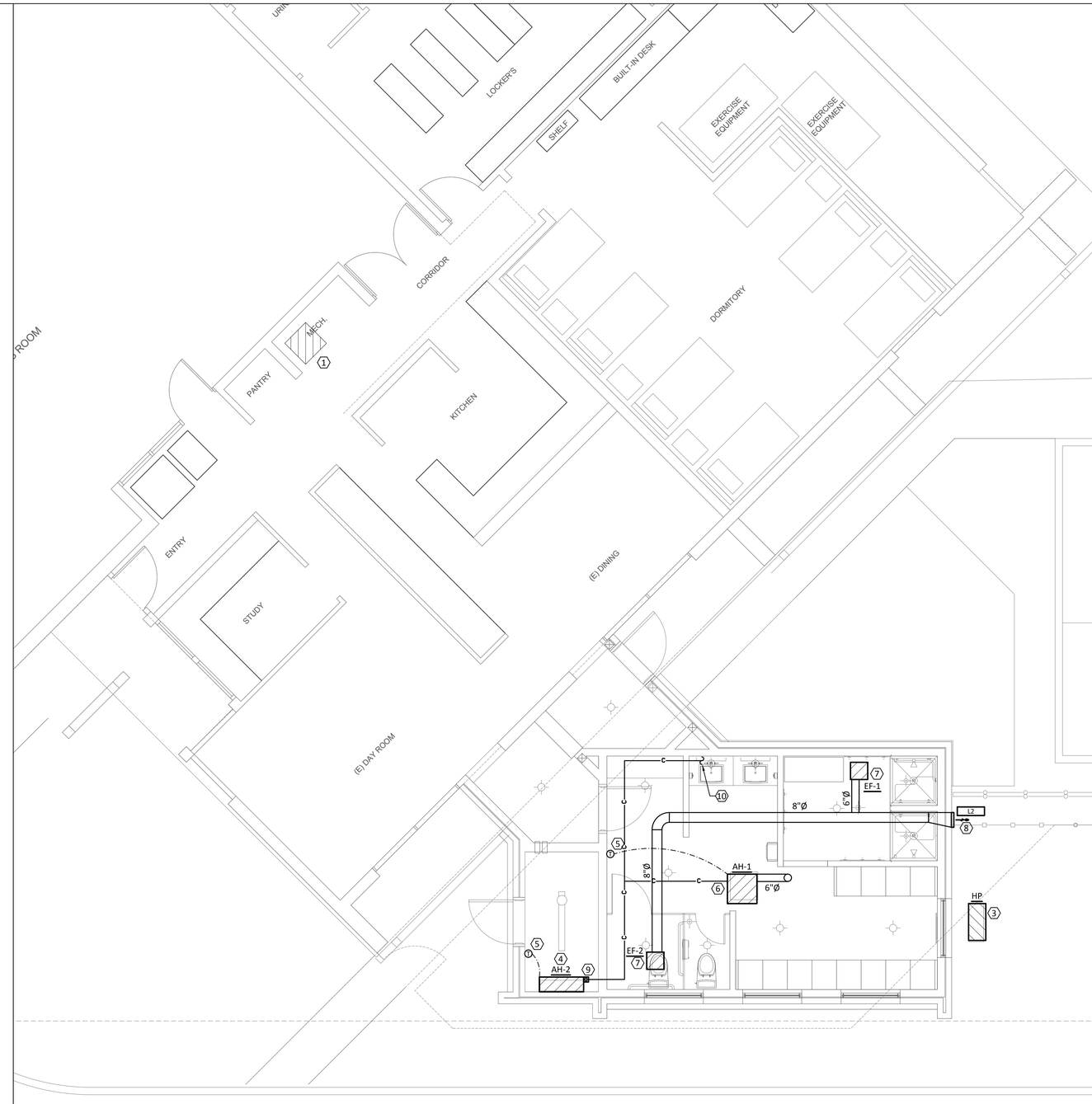

1 MECHANICAL PLAN
SCALE: 1/4" = 1'-0"

PLAN GENERAL NOTES

A. REFER TO M0.00 FOR GENERAL NOTES.
B. DO NOT ROUTE ANY DUCT & PIPING ABOVE ELECTRICAL PANELS.
C. PROVIDE AND INSTALL TRANSITION AS REQUIRED TO CONNECT SMALL DUCT TO LOUVER OR GRILLE.
D. COORDINATE WITH ARCHITECT AND STRUCTURAL ENGINEER FOR ALL WALL AND ROOF PENETRATION.
E. MAINTAIN 10' CLEARANCE FROM ANY EXHAUST AIR OUTLET OR FLUE TO ANY OUTSIDE AIR INTAKE OR OPENING TO BUILDING.
F. PROVIDE LOCKING ACCESS PORT CAPS ON ALL REFRIGERANT CIRCUIT SERVICE PORTS LOCATED ON THE EXTERIOR OF THE BUILDING.
G. ESTIMATED LOCATION OF ALL EXISTING MECHANICAL LAYOUT AND EQUIPMENT LOCATION IS BASED ON SITE OBSERVATION AND EXISTING DRAWINGS. CONTRACTOR SHALL VERIFY SIZE, LOCATION OF ALL EXISTING PLUMBING PIPING EQUIPMENT PRIOR TO BID AND CONSTRUCTION.

KEYED NOTES

1. EXISTING EXISTING AIR HANDLE SHALL REMAIN. EXISTING AIR HANDLER AND CONDENSING UNIT APPEARS TO BE INSUFFICIENT TO ADD SUPPLY AIR TO NEW LOCKER.
2. EXISTING OUTDOOR CONDENSING UNIT SHALL REMAIN.
3. HEAT PUMP UNIT FOR DUCTLESS UNITS SHALL BE MOUNTED LEVEL ON CONCRETE PAD WITH NEOPRENE CORK PAD
4. DUCTLESS AIR HANDLER SHALL BE WALL MOUNTED ABOVE DOOR.
5. PROVIDE AND INSTALL TEMPERATURE CONTROLLER ON WALL AT 48" A.F.F.
6. CEILING CASSETTE AIR HANDLER SHALL BE SUSPENDED FROM STRUCTURAL MEMBER WITH VIBRATION ISOLATORS.
   ROUTE 6" OUTSIDE AIR DUCT TO UNIT FROM LOW PROFILE ROOF CAP (GREENHECK RCC-7 OR APPROVED EQUIVALENT).
7. EXHAUST FAN SHALL BE SUSPENDED FROM CEILING WITH VIBRATION ISOLATORS.
8. ROUTE COMBINED EXHAUST DUCT FROM EXHAUST FANS THROUGH WALL TO LOUVER.
9. PROVIDE AND INSTALL CONDENSATE DRAIN PUMP (WITH LINE SET KIT) FOR WALL MOUNTED DUCTLESS AIR HANDLER ON WALL (LITTLE GIANT MODEL EC-1K OR APPROVED EQUIVALENT).
10. ROUTE 3/4" INSULATED CONDENSATE DRAIN PIPING TO TAILPIECE ABOVE CEILING. TAILPIECE PIPING FROM LAVATORY TO ABOVE CEILING IS BY PLUMBING CONTRACTOR

SEQUENCE OF OPERATION NOTES

A. DUCTLESS SPLIT SYSTEM CONTROL
   a. SYSTEM - ON/OFF CONTROL:
      ON/OFF CONTROL FROM WALL MOUNTED THERMOSTAT.
   b. FAN – ON/OFF CONTROL:
      FAN WILL BE ACTIVATED UNDER THE FOLLOWING CONDITIONS:
      - IF THE THERMOSTAT IS SET IN THE "FAN" MODE
      - ACTIVATION OF THE COOLING OR HEATING MODE
   c. COOLING MODE:
      THERMOSTAT SETTING WILL EITHER BE IN "AUTO" OR "COOL"
      IF THE ROOM TEMPERATURE, AS MEASURED BY THE INDOOR UNIT MOUNTED ROOM TEMPERATURE SENSOR, RISES ABOVE THE THERMOSTATS SET POINT TEMPERATURE THE CONDENSING UNIT AND THE WALL MOUNTED FAN COIL UNIT WILL BE ACTIVATED.
   d. HEATING MODE:
      THERMOSTAT SETTING WILL EITHER BE IN "AUTO" OR "HEAT"
      IF THE ROOM TEMPERATURE, AS MEASURED BY THE INDOOR UNIT MOUNTED ROOM TEMPERATURE SENSOR, DOWN BELOW THE THERMOSTATS SET POINT TEMPERATURE THE CONDENSING UNIT AND THE WALL MOUNTED FAN COIL UNIT WILL BE ACTIVATED.
   e. CONDENSATE PUMP CONTROL:
      THE PRIMARY CONDENSATE FLOAT SWITCH WILL ACTIVATE AND DEACTIVATE THE CONDENSATE PUMP.
   f. SAFETY:
      A SECONDARY OVERFLOW CONDENSATE FLOAT SWITCH UPON ACTIVATION WILL CONTINUE TO RUN THE CONDENSATE PUMP, DEACTIVATE THE FAN, AND INITIATE A BLINKING LIGHT ON THE CONTROL DISPLAY TO INDICATE THE PROBLEM.
B. EXHAUST FANS (SEE ELECTRICAL PLAN FOR CONTROLLER)
   - EF-1 & EF-2 WILL BE INTERLOCKED WITH LIGHTING SWITCH WITH A TIME-DELAY-OFF RELAY SWITCH TO ALLOW FAN TO OPERATE UP TO 15 MINUTES AFTER LIGHTS ARE TURNED OFF

ENCOTECH ENGINEERING CONSULTANTS
TBPE Firm 1141
8500 Bluffstone Cove, Suite B-103
Austin, Texas 78759 | 512.338.1101
Project No.: 15009.M.AUS

STATE OF TEXAS
LYNN C. BROWN
55248
LICENSED PROFESSIONAL ENGINEER
08/30/2016

mwm Design Group
305 East Huntland Drive
Suite 200
Austin, Texas 78752
p: 512.453.0767
f: 512.453.1734
TBAE FIRM REGISTRATION NO.: 1452
TBPE FIRM REGISTRATION NO.: F-1416
TBPLS FIRM REGISTRATION NO.: 10065600

NO.	DATE	DESCRIPTION	BY

SCALE IS AS NOTED ON DRAWING

MECHANICAL PLANS

CITY OF AUSTIN, AFD WOMEN'S LOCKER RM. ADDN., PHASE V
6702 WENTWORTH DRIVE, AUSTIN, TEXAS 78724

PLOTTED: 8/30/2016
JOB NO: 023-79D

FS26-M110

File: J:\ACTIVE PROJECTS\MWM\15009.M.AUS – AFD WLR Ph 5\1. MEP\D-AutoCAD\FS26\15009 FS26 M110 Mech Plan.dwg 24x36

SP-xx-xxxxx

CONDENSING UNIT SCHEDULE

MARK	CLG. DATA		ELECTRICAL DATA			UNIT DATA				
	TONS	EER/ SEER	MCA	MOCP	VOLT/PH	MAKE	MODEL	LBS.	NOTES	CORRESPONDING AIR HANDLER
HP	1.5	14.0/ 21.0	13.3	20	208V/1PH	LG	LMU18CHV	100		

NOTES:
1. PROVIDE DISCONNECT, TO BE FIELD MOUNTED BY ELECTRICAL CONTRACTOR.
2. COMPRESSOR SHALL BE PROVIDED WITH 10 YEARS WARRANTY.
3. UNIT TO BE PROVIDED LOW AMBIENT KIT FOR OPERATION DOWN TO 40°F.

DUCTLESS SPLIT UNIT SCHEDULE

MARK	AIR DATA					COOLING DATA												HEATING DATA					ELECTRICAL DATA			UNIT DATA			
	TOT. CFM	O/A CFM	E.S.P.	HP	CONFIGURATION	AMBIENT D.B.	AMBIENT W.B.	ENTERING D.B.	ENTERING W.B.	LEAVING D.B.	LEAVING W.B.	DESIGN SENS.	DESIGN TOT.	SCHEDULE SENS.	SCHEDULE TOT.	STAGE	EER/ SEER	DES. MBH	SCHEDULE MBH	SCHEDULE KW	STAGE	HSPF	MCA	MOCP	VOLT/PH	MAKE	MODEL	LBS.	NOTES
AH-1	265	N/A	N/A	-	CASSETE	105	74	80	67	-	-			-	9.0	INV.	14.0/ 21.0	-	8.5	-	-	9.20	0.2	15	208V/1PH	LG	LMCN097HV	31	1, 2
AH-2	177	N/A	N/A	-	WALL-MOUNTED	105	74	80	67	-	-			-	7.0	INV.	14.0/ 21.0	-	8.1	-	-	9.20	0.2	15	208V/1PH	LG	LMN078HVT	20	1, 2, 3

NOTES:
1. EACH UNIT TO BE MOUNTED USING VIBRATION ISOLATORS.
2. INDOOR UNIT TO INCLUDE MANUFACTURER THERMOSTAT.
3. CONDENSATE PUMP.

FAN SCHEDULE

MARK	AREA SERVED	LOCATION	INTERLOCK	AIR DATA				ELECTRICAL DATA			UNIT DATA					
				CFM	S.P.	HP	RPM	FLA	MOCP	VOLT/PH	MAKE	MODEL	TYPE	DRIVE	LBS.	NOTES
EF-1	SHOWER	CEILING	LIGHT SWITCH	75	0.25	-	900	0.6	15	115V/1PH	GREENHECK	SP-B90	CENTRIFUGAL	DIRECT	8	DISC, SC, BDD, CC, BS, VI
EF-2	RESTROOM	CEILING	LIGHT SWITCH	150	0.25	-	1400	0.6	15	115V/1PH	GREENHECK	CSP-A190	CENTRIFUGAL	DIRECT	17	DISC, SC, BDD, CC, BS, VI

NOTES:
1. FEATURE NOTES:
   - DISC = DISCONNECT SWITCH
   - TD = PROVIDE AND INSTALL A TIME-DELAY-OFF RELAY SWITCH TO ALLOW FAN TO OPERATE UP TO 15 MINUTES AFTER LIGHTS ARE TURNED OFF
   - SC = SPEED CONTROL (DIRECT DRIVE FANS ONLY)
   - BDD = BACKDRAFT DAMPER
   - RC = ROOF CURB
   - CC = CURB CAP
   - BS = BIRD SCREEN
   - VI = VIBRATION ISOLATORS

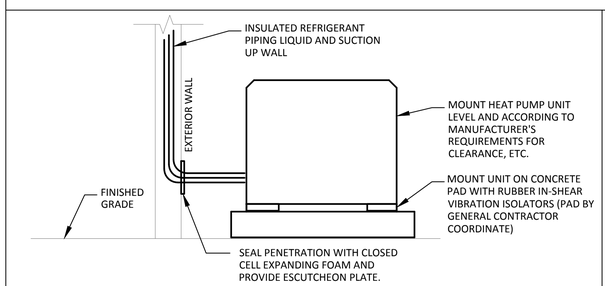

REFRIGERANT PIPING INSULATION NOTES

1. ALL CLOSED CELL POLYMER INSULATION SHALL HAVE GLUED JOINTS WITH COMPLETE COVERAGE OF ALL METAL SURFACES. ALL INSULATION EXPOSED TO EXTERIOR SHALL BE PAINTED WITH TWO COATS AS PER INSULATION MANUFACTURERS SPECIFICATIONS.
2. PROVIDE AND INSTALL LINE DRYER IN LIQUID FREON LINE
3. PROVIDE INSULATION SHIELD AT ALL SUPPORTS.

1 HEAT PUMP UNIT DETAIL
NOT TO SCALE

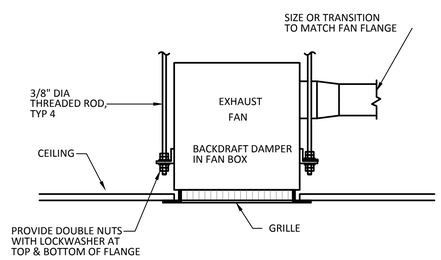

2 CEILING EXHAUST FAN DETAIL
NOT TO SCALE

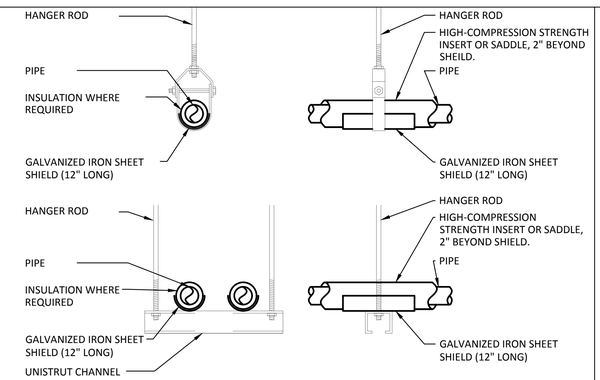

NOTE:
1. ATTACH SUPPORTS FOR ALL PIPING SUSPENDED FROM THE STEEL STRUCTURE TO THE TOP CORD OF JOISTS OR BEAM.
2. PROVIDE COPPER OR PLASTIC COATED HANGERS FOR NON-INSULATED COPPER PIPE

3 PIPE HANGER DETAIL
NOT TO SCALE

ENCOTECH ENGINEERING CONSULTANTS
TBPE Firm 1141 | 8500 Bluffstone Cove, Suite B-103 Austin, Texas 78759 | 512.338.1101
Project No.: 15009.M.AUS

STATE OF TEXAS
LYNN C. BROWN
55248
LICENSED PROFESSIONAL ENGINEER
08/30/2016

mwm Design Group
305 East Huntland Drive
Suite 200
Austin, Texas 78752
p: 512.453.0767
f: 512.453.1734
TBAE FIRM REGISTRATION NO.: 1452
TBPE FIRM REGISTRATION NO.: F-1416
TBPLS FIRM REGISTRATION NO.: 10065600

NO.	DATE	DESCRIPTION	BY

SCALE IS AS NOTED ON DRAWING

MECHANICAL SCHEDULES & DETAILS

CITY OF AUSTIN, AFD WOMEN'S LOCKER RM. ADDN., PHASE V
6702 WENTWORTH DRIVE, AUSTIN, TEXAS 78724

PLOTTED: 8/30/2016
JOB NO: 023-79D

FS26-M210

File: J:\ACTIVE PROJECTS\MWM\15009.M.AUS - AFD WLR Ph 5\T. MEP\D-AutoCAD\FS26\15009 FS26 M210 Mech Schedule Details.dwg 24x36

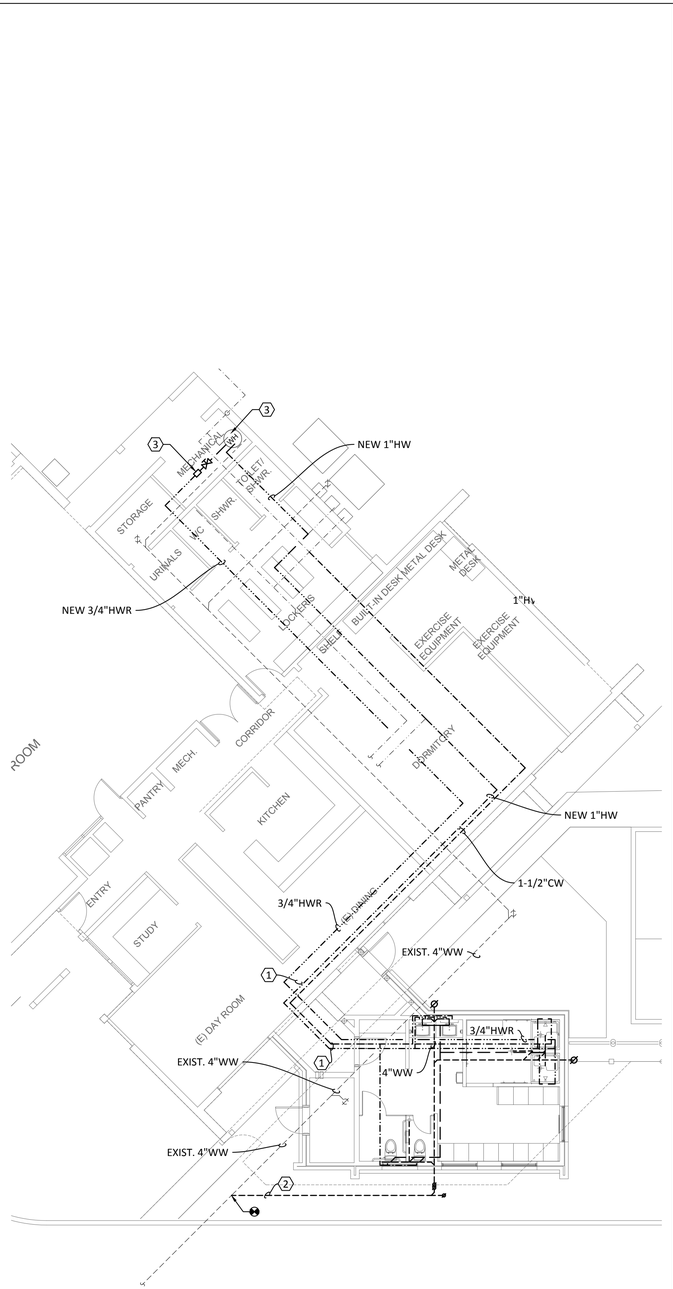

2 OVERALL PLUMBING PLAN

SCALE: 1/8" = 1'-0"

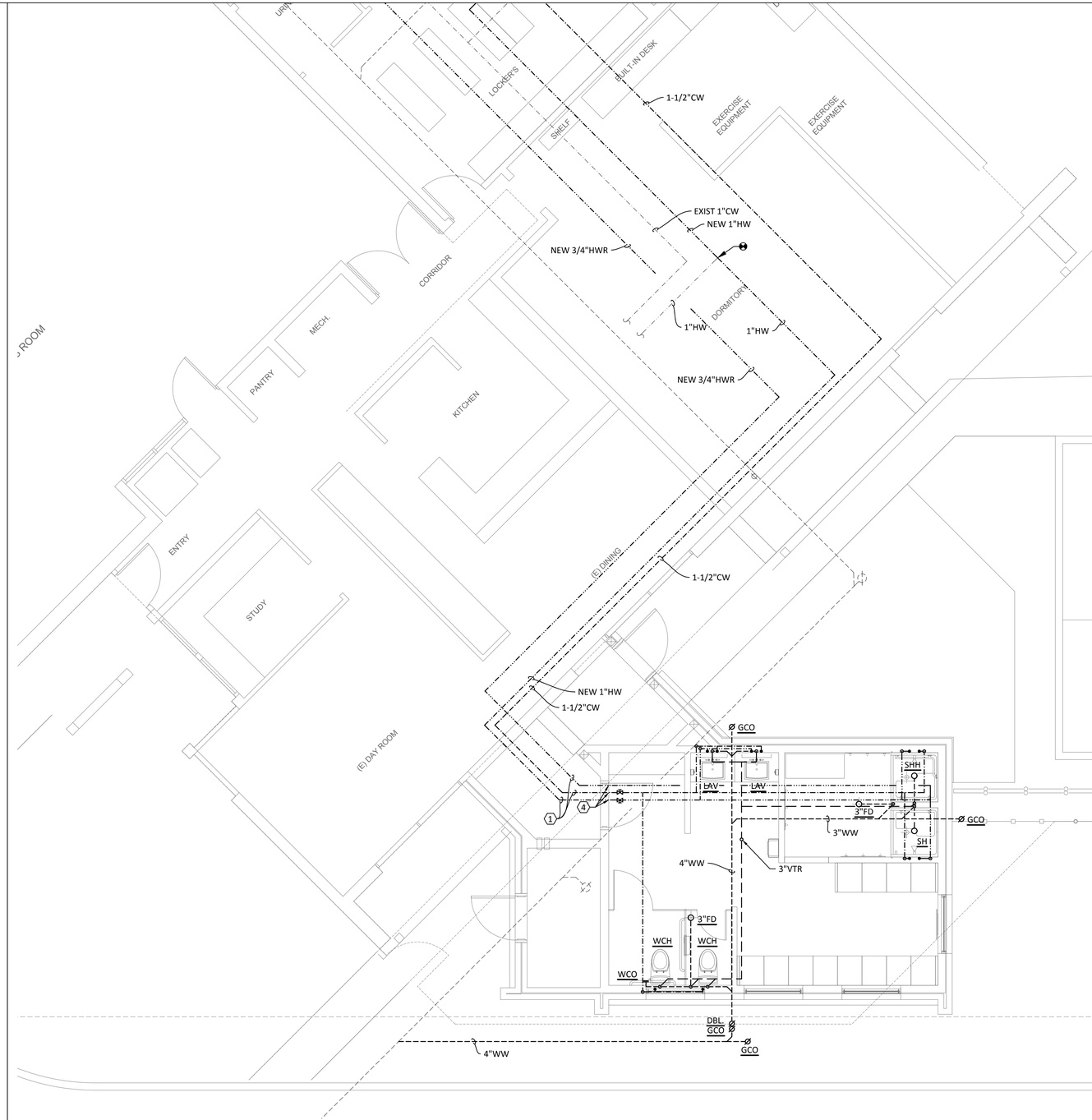

1 PLUMBING PLAN

SCALE: 1/4" = 1'-0"

PLAN GENERAL NOTES

A. REFER TO P0.00 FOR GENERAL NOTES.

B. ESTIMATED LOCATION OF ALL EXISTING PLUMBING LAYOUT AND EQUIPMENT LOCATION IS BASED ON SITE OBSERVATION AND EXISTING DRAWINGS. CONTRACTOR SHALL VERIFY SIZE, LOCATION OF ALL EXISTING PLUMBING PIPING EQUIPMENT PRIOR TO BID AND CONSTRUCTION

C. DO NOT ROUTE ANY PLUMBING PIPING ABOVE ANY ELECTRICAL PANEL.

D. PROVIDE AND INSTALL WATER SAVER TRAP PRIMER FROM NEAREST LAVATORY OR TRAP PRIMER WITH ACCESSIBLE SHUT-OFF VALVE IN WALL TO ALL FLOOR DRAINS, HUB DRAINS AND FLOOR SINKS. SEE PLAN FOR LOCATION.

E. PROVIDE AND INSTALL ACCESS TO ALL SHUT-OFF VALVES.

F. INSULATE 100% OF ALL HOT WATER PIPING, HOT WATER RETURN PIPING & COLD WATER PIPING ACCORDING TO SPECIFICATIONS.

KEYED NOTES

1. NEW 1-1/2" CW PIPING, 1" HW PIPING AND 3/4" HWR PIPING SHALL BE CONNECTED TO EXISTING PIPING ABOVE CEILING AND ROUTE ABOVE WALL BETWEEN DORMITORY AND DAYROOM TO NEW LOCKER ROOM.
2. CONNECT NEW 4" WW PIPING TO EXISTING 4"WW.
3. EXISTING WATER HEATER SHALL REMAIN AND APPEARS TO HAVE SUFFICIENT CAPACITY TO ADD TWO NEW SHOWERS AND LAVATORIES (EXISTING WATER HEATER BY STATE INDUSTRIES MODEL SRX-100-NRT3, 100 GALLON TANK, 75.1MBH NATURAL GAS INPUT, 63.1 GALLON RECOVERY AT 90°F RISE)
4. MAIN WATER SHUT-OFF VALVE FOR NEW LOCKER ROOM ABOVE CEILING. COORDINATE WITH GENERAL CONTRACTOR TO PROVIDE AND INSTALL ACCESS PANEL.
5. PROVIDE AND INSTALL NEW HOT WATER RECIRCULATION PUMP (GRUNDFOS MODEL UP-26-96-BF, 1/12 HP, 120V, 1Ø 1.7 AMPS SECURELY SUSPEND FROM STRUCTURE W/ VIBRATION ISOLATORS).

ENCOTECH ENGINEERING CONSULTANTS
TBPE Firm 1141
8500 Bluffstone Cove, Suite B-103
Austin, Texas 78759 | 512.338.1101
Project No.: 15009.M.AUS

STATE OF TEXAS
LYNN C. BROWN
55248
LICENSED PROFESSIONAL ENGINEER
08/30/2016

mwm Design Group
305 East Huntland Drive
Suite 200
Austin, Texas 78752
p: 512.453.0767
f: 512.453.1734
TBAE FIRM REGISTRATION NO.: 1452
TBPE FIRM REGISTRATION NO.: F-1416
TBPLS FIRM REGISTRATION NO.: 10065600

NO.	DATE	DESCRIPTION	BY

SCALE IS AS NOTED ON DRAWING

PLUMBING PLANS

CITY OF AUSTIN, AFD WOMEN'S LOCKER RM. ADDN., PHASE V
6702 WENTWORTH DRIVE, AUSTIN, TEXAS 78724

PLOTTED: 8/30/2016
JOB NO: 023-79D

FS26-P110

File: J:\ACTIVE PROJECTS\MWM\15009.M.AUS - AFD WLR Ph 5\1. MEP\D-AutoCAD\FS26\15009 FS26 P110 Plumb Plan.dwg 24x36

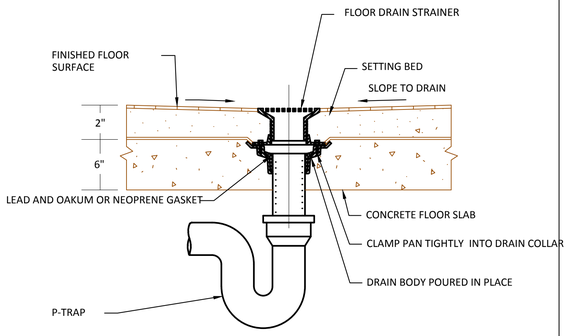

7 TYPICAL FLOOR DRAIN DETAIL
NOT TO SCALE

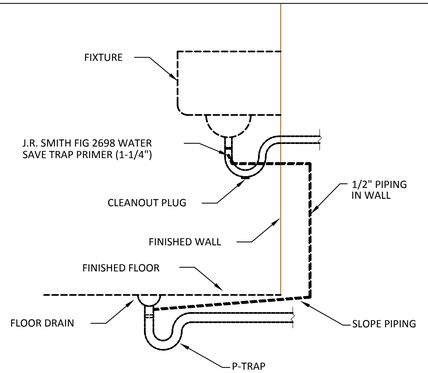

6 WATER SAVER TRAP PRIMER DETAIL
NOT TO SCALE

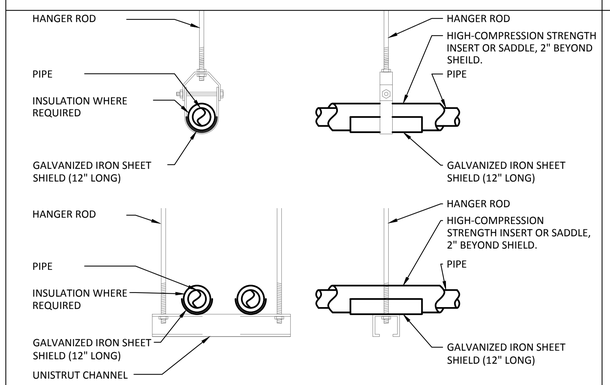

NOTE:
1. ATTACH SUPPORTS FOR ALL PIPING SUSPENDED FROM THE STEEL STRUCTURE TO THE TOP CORD OF JOISTS OR BEAM.
2. PROVIDE COPPER OR PLASTIC COATED HANGERS FOR NON-INSULATED COPPER PIPE

5 PIPE HANGER DETAIL
NOT TO SCALE

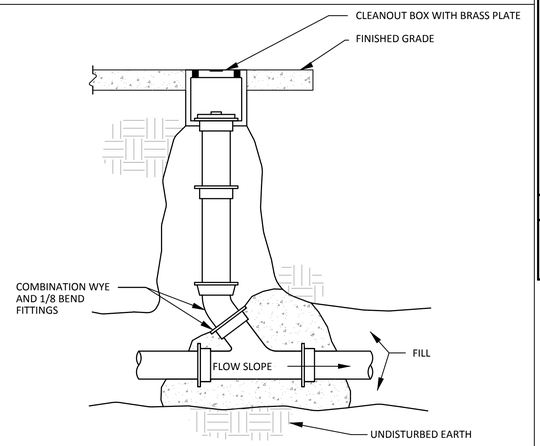

4 EXTERIOR CLEANOUT DETAIL
NOT TO SCALE

WATER CALCULATION

WATER CLOSET, FLUSH VALVE	4 x	5.0 F.U. =	20.0 F.U.
URINAL, FLUSH VALVE	2 x	4.0 F.U. =	8.0 F.U.
SHOWER	4 x	2.0 F.U. =	8.0 F.U.
LAVATORY	5 x	1.0 F.U. =	5.0 F.U.
KITCHEN SINK, COMMERCIAL	1 x	3.0 F.U. =	3.0 F.U.
SERVICE SINK (PUBLIC)	1 x	3.0 F.U. =	3.0 F.U.
DISHWASHER	1 x	1.5 F.U. =	1.5 F.U.
CLOTHES WASHER	1 x	4.0 F.U. =	4.0 F.U.
DRINKING FOUNTAIN	1 x	0.5 F.U. =	0.5 F.U.
FIRST HOSE BIBB	1 x	2.5 F.U. =	2.5 F.U.
ADDITIONAL HOSE BIBBS	2 x	1.0 F.U. =	2.0 F.U.
TOTAL FIXTURE UNITS		=	57.5 F.U.
57.5 FIXTURE UNITS		=	53.0 GPM

HIGHEST FIXTURE = 10 FEET
(10 FT.) x 0.43 = 4.3 PSI STATIC LOSS

HORIZONTAL PIPE LENGTH TAP TO METER	=	10 FEET
HORIZONTAL PIPE LENGTH METER TO BUILDING	=	100 FEET
HORIZONTAL PIPE LENGTH BUILDING TO LAST FIXTURE	=	100 FEET
VERTICAL PIPE LENGTH BUILDING RISE TO HIGHEST FIXTURE	=	10 FEET
TOTAL PIPE LENGTH	=	220 FEET

(220 FT.) x 1.25 (FITTING LOSS) = 275 FEET TOTAL DEVELOPED LENGTH

SIZE	DEVICE		PSI LOSS
1-1/2"	METER	=	6.3 PSI
	STATIC	=	4.3 PSI
	FIXTURE (FLUSH VALVE)	=	15.0 PSI
	TOTAL BUILDING LOSS	=	25.6 PSI

PRESSURE AT STREET	=	50.0 PSI
BUILDING LOSS	=	25.6 PSI
DIFFERENCE	=	24.4 PSI

(24.4 / 275) x 100 = 8.9 MAX PSI DROP ALLOWABLE PER 100 FT. PIPE LENGTH

EXISTING 1-1/2" METER AND 2" MAIN WATER LINE TO BUILDING IS SUFFICIENT

WATER CALCULATION NOTES

- THIS CALCULATION IS BASED ON UNIFORM PLUMBING CODE 2012, APPENDIX A.
* VERIFY PRESSURE AT TIME OF CONSTRUCTION. IF GREATER THAN 65 PSI PROVIDE AND INSTALL PRESSURE REDUCING VALVE TO REDUCE WATER PRESSURE TO 65 PSI MAXIMUM.

PLUMBING FIXTURE SCHEDULE

MARK	CW	HW	VENT	S&W	MODEL NUMBER	DESCRIPTION
WCH	1"	-	2"	3"	WATER CLOSET: KOHLER MODEL: HIGHLINE K-4405 FLUSH VALVE: SLOAN MODEL: 8111-1.28 SEAT: CHURCH 295SSC	FLUSH VALVE WATER CLOSET, FLOOR MOUNTED, ELONGATED BOWL, 1-1/2" TOP SPUD, FLOOR OUTLET, ADA COMPLIANT EXPOSED WATER CLOSET FLUSHOMETER FOR FLOOR MOUNTED TOP SPUD BOWLS, 1.28 GPF. OPEN FRONT, ELONGATED SEAT WITH STAINLESS STEEL LOCKING HINGE
LAV	1/2"	1/2"	1-1/2"	2"	LAVATORY: KOHLER MODEL: K-1997-1-0 (HANDICAP USE) FAUCET: DELTA MODEL: 26C3942 MIXING VALVE: WATTS MODEL: L111	WALL HUNG, VITREOUS CHINA, 22"x19" BOWL, HANDICAP ACCESSIBLE. MANUAL GOOSENECK FAUCET, 0.5 GPM AERATOR, 8" CENTERS, LEVER HANDLES INDIVIDUAL FAUCET THERMOSTATIC MIXING VALVE. HOT WATER TEMPERATURE SHALL BE LIMITED TO 110 DEGREES FAHRENHEIT.
SH	1/2"	1/2"	1-1/2"	2"	SHOWER FAUCET & HANDSET: MOEN MODEL: 8346 MIXING VALVE: LAWLER MODEL: SERIES 516 UNIT NUMBER: 86823 FLOOR DRAIN: SMITH 2005	PRESSURE BALANCE SHOWER VALVE, HANDHELD SPRAY ASSEMBLY, 1.5 GPM, ADA COMPLIANT. ROUGH CHROME THERMOSTATIC MIXING VALVE, 0.5 MINIMUM FLOW RATE, OUTLET RANGE 95-115 DegF WITH A SPINDLE TO ADJUST OUTLET TEMPERATURE. SET OUTLET TEMPERATURE AT 110DegF. CAST IRON. ADJUSTABLE STRAINER HEAD.
SHH	1/2"	1/2"	1-1/2"	2"	SHOWER FAUCET & HANDSET: MOEN MODEL: 8346 MIXING VALVE: LAWLER MODEL: SERIES 516 UNIT NUMBER: 86823 FLOOR DRAIN: SMITH 2005	PRESSURE BALANCE SHOWER VALVE, HANDHELD SPRAY ASSEMBLY, 1.5 GPM, ADA COMPLIANT. ROUGH CHROME THERMOSTATIC MIXING VALVE, 0.5 MINIMUM FLOW RATE, OUTLET RANGE 95-115 DegF WITH A SPINDLE TO ADJUST OUTLET TEMPERATURE. SET OUTLET TEMPERATURE AT 110DegF. CAST IRON. ADJUSTABLE STRAINER HEAD.
FD	-	-	2"	*	SMITH 2005	FLOOR DRAIN. CAST IRON. ADJUSTABLE STRAINER HEAD.
FCO	-	-	-	*	SMITH 4020	FLOOR CLEANOUT. CAST IRON WITH NICKEL BRONZE ADUSTABLE TOP.
GCO	-	-	-	*	SMITH 4237	GROUND CLEANOUT. CAST IRON WITH CAST IRON NON-TILT ADJUSTABLE TOP.
WCO	-	-	-	*	SMITH 9776	WALL CLEANOUT WITH THREADED PLUG AND COVER. HEAVY DUTY. POLISHED STAINLESS STEEL COVER PLATE. ROUGH FINISH STAINLESS STEEL PLUG.

NOTES:
* SEE PLAN FOR SIZING.
** PLUMBING FIXTURES, ACCESSORIES AND INSTALLATION SHALL MEET ALL FEDERAL, STATE, ADA AND LOCAL REQUIREMENTS.

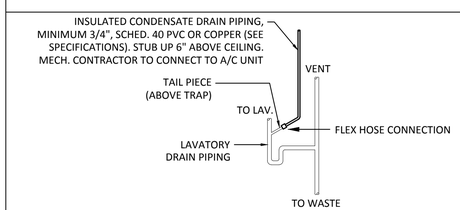

3 CONDENSATE DRAIN - LAVATORY TAILPIECE DETAIL
NOT TO SCALE

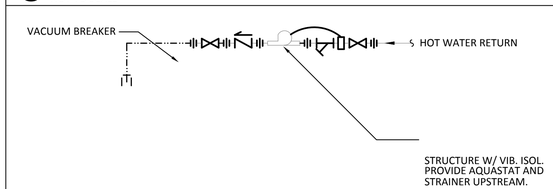

2 RECIRCULATION PUMP DETAIL
NOT TO SCALE

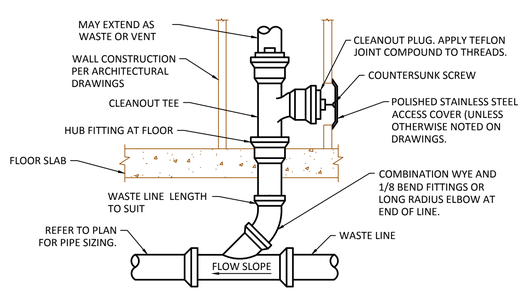

1 WALL CLEAN OUT DETAIL
N.T.S.

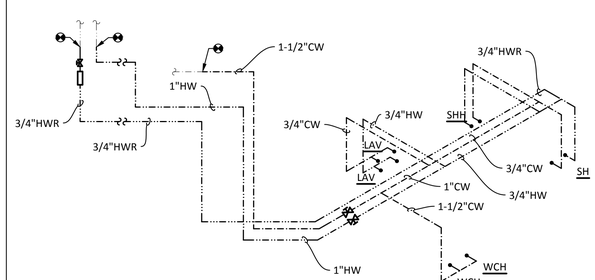

8 WATER RISER
N.T.S.

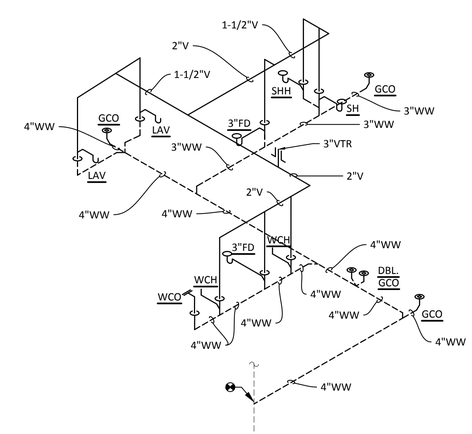

9 WASTE WATER AND VENT RISER
N.T.S.

ENCOTECH ENGINEERING CONSULTANTS
TBPE Firm 1141 | 8500 Bluffstone Cove, Suite B-103 Austin, Texas 78759 | 512.338.1101
Project No.: 15009.M.AUS

STATE OF TEXAS — LYNN C. BROWN 55248 — LICENSED PROFESSIONAL ENGINEER
08/30/2016

mwm Design Group
305 East Huntland Drive
Suite 200
Austin, Texas 78752
p: 512.453.0767
f: 512.453.1734
TBAE FIRM REGISTRATION NO.: 1452
TBPE FIRM REGISTRATION NO.: F-1416
TBPLS FIRM REGISTRATION NO.: 10065600

NO.	DATE	DESCRIPTION	BY

SCALE IS AS NOTED ON DRAWING

PLUMBING SCHEDULES & DETAILS

CITY OF AUSTIN, AFD WOMEN'S LOCKER RM. ADDN., PHASE V
6702 WENTWORTH DRIVE, AUSTIN, TEXAS 78724

PLOTTED: 8/30/2016
JOB NO: 023-79D

FS26-P210

File: J:\ACTIVE PROJECTS\MWM\15009.M.AUS — AFD WLR Ph 5\1. MEP\D-AutoCAD\FS26\15009 FS26 P210 Plumb Schedule Details.dwg 24x36

SP-xx-xxxxx

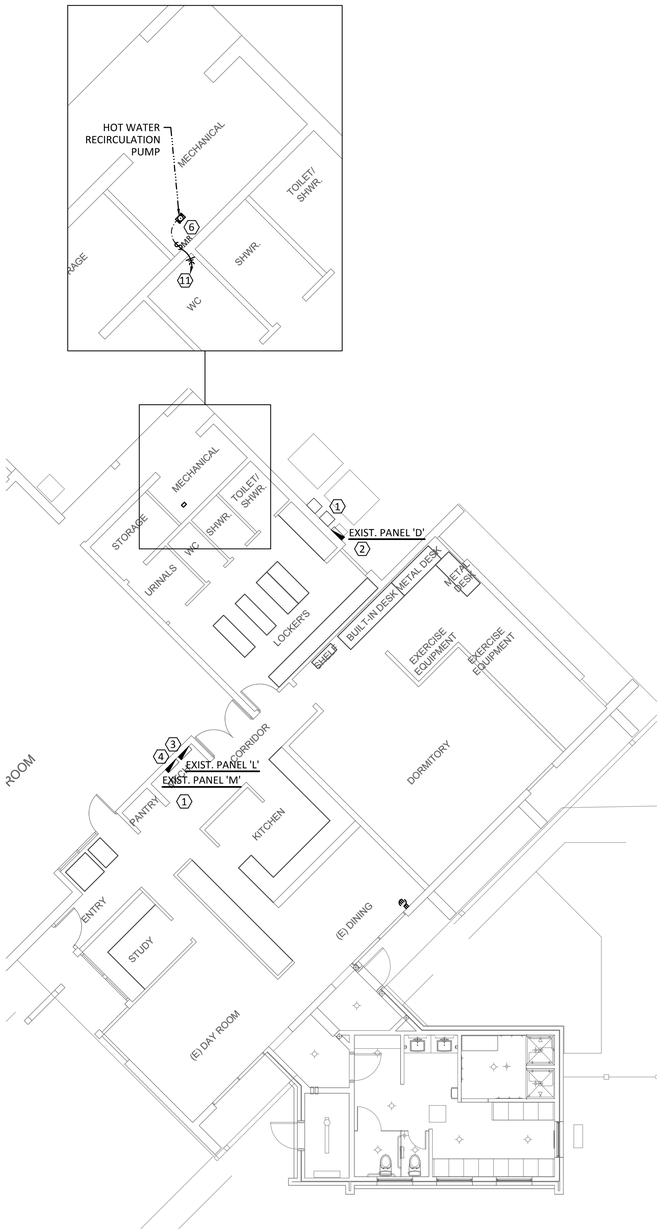

1 OVERALL ELECTRICAL PLAN

SCALE: 1/8" = 1'-0"

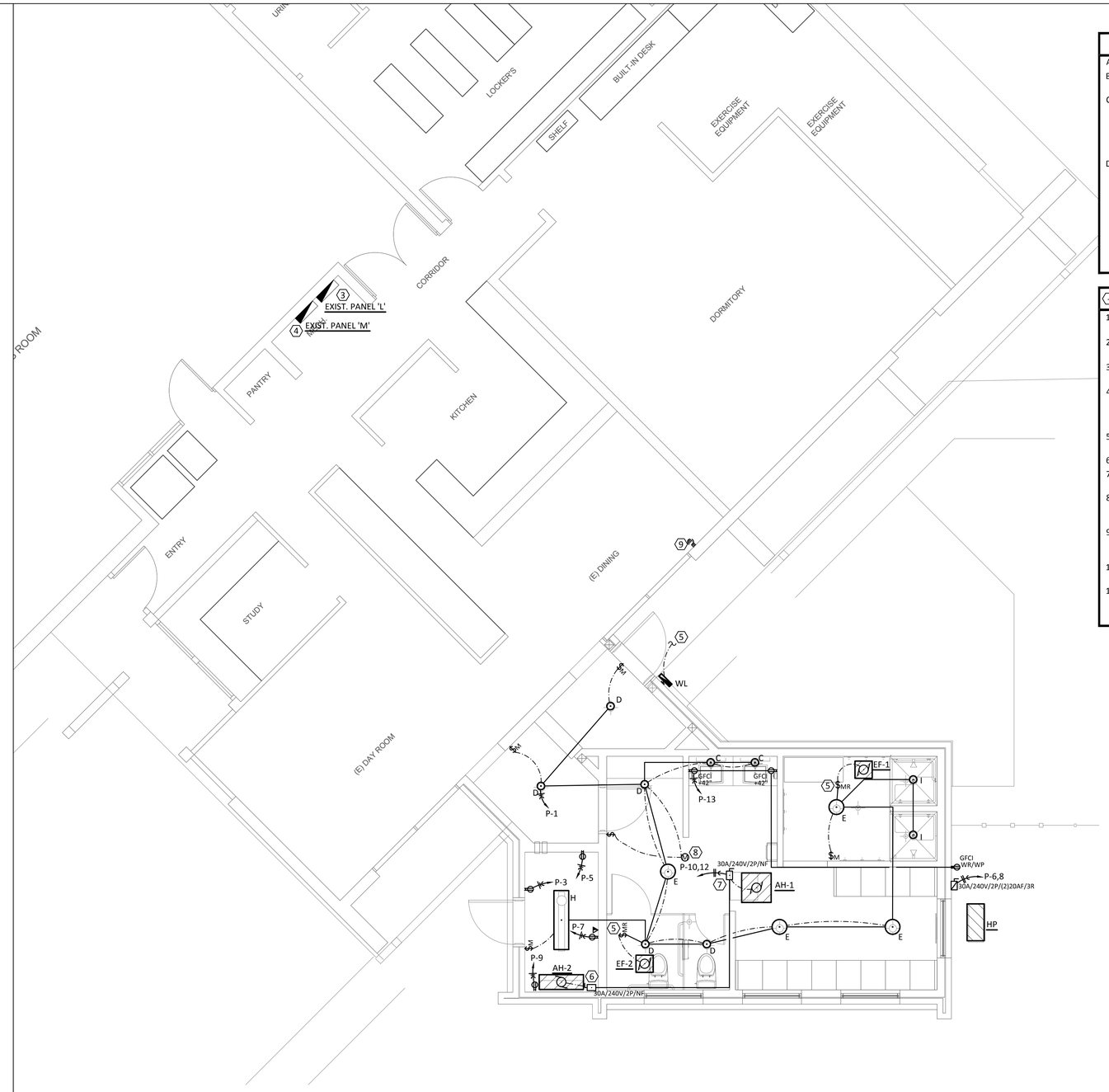

1 ELECTRICAL PLAN

SCALE: 1/4" = 1'-0"

PLAN GENERAL NOTES

A. REFER TO E0.00 FOR GENERAL NOTES.
B. DO NOT ROUTE ANY DUCT & PIPING ABOVE ELECTRICAL PANELS.
C. ESTIMATED LOCATION OF ALL EXISTING ELECTRICAL LAYOUT AND EQUIPMENT LOCATION IS BASED ON SITE OBSERVATION AND EXISTING DRAWINGS. CONTRACTOR SHALL VERIFY SIZE, LOCATION OF ALL EXISTING ELECTRICAL EQUIPMENT, DEVICES AND CONDUITS PRIOR TO BID AND CONSTRUCTION.
D. ALL EXTERIOR LIGHTING FIXTURE SHALL BE CONTROLLED BY PHOTOCELL AND TIMER.

KEYED NOTES

1. EXISTING 200A, 120/240V, 1Ø METER AND MAIN DISCONNECT ON WALL SHALL REMAIN.
2. EXISTING PANEL 'D', 200A, 120/240V, 3Ø, MLO WITH 12 AVAILABLE SPACES.
3. EXISTING PANEL 'L', 200A, 120/240V, 1Ø, MCB 36-SPACE WITHOUT AVAILABLE SPACE.
4. EXISTING PANEL 'M', 60A, 120/240V, 3Ø, MLO 14-SPACE WITH 10 AVAILABLE SPACES AND ONE 30A/240V/1Ø CIRCUIT BREAKER FOR DEMOLISHED WINDOWS AC UNIT IS OFF. REFER SHEET E210 FOR NEW SCHEDULE.
5. MOTOR RATED DISCONNECT SWITCH SHALL BE MOUNTED ON STRUCTURAL MEMBER ABOVE ACCESSIBLE CEILING.
6. DISCONNECT SHALL BE MOUNTED ON WALL.
7. DISCONNECT SHALL BE MOUNTED ON STRUCTURAL MEMBER ABOVE ACCESSIBLE CEILING.
8. PROVIDE AND INSTALL CEILING DUAL TECHNOLOGY MOTION DETECTOR WITH WALL MOUNTED OVERDRIVE SWITCH AT DOOR.
9. ABANDON EXISTING 30A/240V/1Ø RECEPTACLE FOR DEMOLISHED WINDOW AC UNIT AND USE CIRCUIT BREAKER M/2,4 FOR NEW HP UNIT.
10. CONNECT TO EXISTING EXTERIOR LIGHTING CIRCUIT AND CONTROL.
11. CONNECT TO NEAREST EXISTING RECEPTACLE CIRCUIT.

ENCOTECH ENGINEERING CONSULTANTS
TBPE Firm 1141
8500 Bluffstone Cove, Suite B-103
Austin, Texas 78759 | 512.338.1101
Project No.: 15009.M.AUS

STATE OF TEXAS
SHARON S. BICKFORD
77390
LICENSED PROFESSIONAL ENGINEER
08/30/2016

mwm Design Group
305 East Huntland Drive
Suite 200
Austin, Texas 78752
p: 512.453.0767
f: 512.453.1734
TBAE FIRM REGISTRATION NO.: 1452
TBPE FIRM REGISTRATION NO.: F-1416
TBPLS FIRM REGISTRATION NO.: 10065600

NO.	DATE	DESCRIPTION	BY

SCALE IS AS NOTED ON DRAWING

ELECTRICAL PLANS

CITY OF AUSTIN, AFD WOMEN'S LOCKER RM. ADDN., PHASE V
6702 WENTWORTH DRIVE, AUSTIN, TEXAS 78724

PLOTTED: 8/30/2016
JOB NO: 023-79D

FS26-E110

File: J:\ACTIVE PROJECTS\MWM\15009.M.AUS – AFD WLR Ph 5\1- MEP\D-AutoCAD\FS26\15009 FS26 E110 Elec Plan.dwg 24x36

SP-xx-xxxxx

EXISTING PANELBOARD SCHEDULE — M

LOCATION: SEE PLAN
C.B. RATING: - A.I.C.

NOTE	VOLTAGE	PHASE	WIRE	MOUNTING	SIZE	LUG	TYPE	NOTE
	240/120V	1	3	-	60	60	-	

	USE and/or AREA SERVED	C/B POLE	CIR	LOAD ØA	CIR	LOAD ØC	CIR	C/B POLE	USE and/or AREA SERVED	
3	NEW LIGHTING	20/1	1	600	2		30/2	EXISTING PLYMOVENT	1
				1500						
3	SERVER RECEPTACLES	20/1	3		4	1000				
						1500				
3	SERVER RECEPTACLES	20/1	5	1000	6		20/2	NEW HP	2
				1620						
3	SERVER RECEPTACLES	20/1	7		8	1000				
						1620				
3	SERVER RECEPTACLES	20/1	9	1000	10		20/2	NEW AH	3
				300						
3	HAND DRYER	20/1	11		12	1200				
						300				
3	RECEPTACLE	20/1	13	540	14		-	SPACE	
				-						
	TOTAL LOAD PER PHASE			6560		6620		6620 VA / 120 V = 55 A		

FEEDER OCPD AND CONDUCTOR CALCULATION

LOAD DESCRIPTION (LOAD IN KVA)	CONNECTED LOAD	DEMAND FACTOR	DEMAND LOAD	AMPACITY FACTOR	FEEDER AMPACITY	NOTES
INTERIOR LIGHTING	0.60	1.00	0.60	1.25	0.75	
EXTERIOR LIGHTING	0.00	1.00	0.00	1.25	0.00	
RECEPTACLES	4.54	*	4.54	1.00	4.54	*FIRST 10 kVA AT 100%, REST AT 50%
HVAC	3.84	1.00	3.84	1.00	3.84	
EQUIPMENT	4.20	1.00	4.20	1.00	4.20	
KITCHEN EQUIPMENT	0.00	1.00	0.00	1.00	0.00	
LARGEST MOTOR NONE	-	-	-	0.25	0.00	
SPARE	0.00	1.00	0.00	1.00	0.00	
TOTAL KVA	**13.18**	-	**13.18**	-	**13.33**	
TOTAL AMPS	**55 A**	-	**55 A**	-	**56 A**	

EXISTING 60 AMPS, 240/120VAC, 1 PHASE PANEL IS SUFFICIENT FOR NEW LOAD

ELECTRICAL PANEL NOTES

1. EXISTING CIRCUIT BREAKER
2. REMOVE EXISTING BREAKER AND REPLACE WITH NEW BREAKER AS SHWON
3. NEW CIRCUIT BREAKER

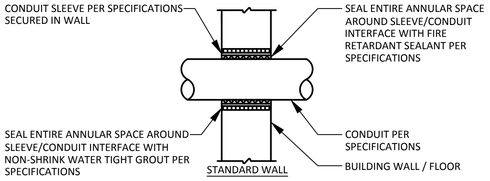

2 WALL PENETRATION DETAIL
NOT TO SCALE

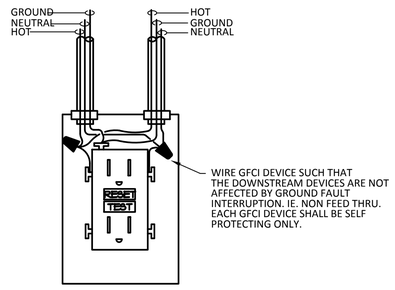

1 GFCI RECEPTACLE WIRING DIAGRAM
NOT TO SCALE

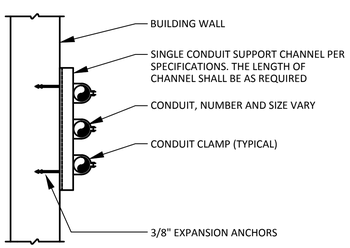

NOTE:
CONDUIT MAY RUN VERTICAL OR HORIZONTAL DEPENDING ON APPLICATION.

4 WALL / CEILING CONDUIT SUPPORT DETAIL
NOT TO SCALE

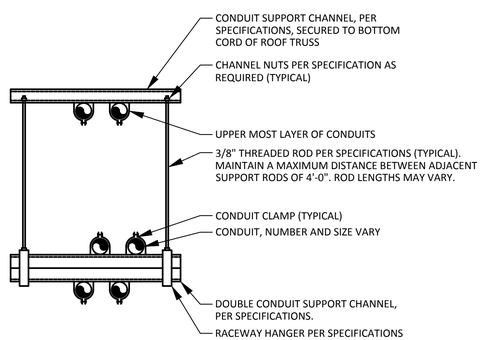

3 CONDUIT SUPPORT DETAIL
NOT TO SCALE

ENCOTECH ENGINEERING CONSULTANTS
TBPE Firm 1141
8500 Bluffstone Cove, Suite B-103
Austin, Texas 78759 | 512.338.1101
Project No.: 15009.M.AUS

STATE OF TEXAS — SHARON S. BICKFORD — 77390 — LICENSED PROFESSIONAL ENGINEER
08/30/2016

mwm Design Group
305 East Huntland Drive
Suite 200
Austin, Texas 78752
p: 512.453.0767
f: 512.453.1734
TBAE FIRM REGISTRATION NO.: 1452
TBPE FIRM REGISTRATION NO.: F-1416
TBPLS FIRM REGISTRATION NO.: 10065600

NO.	DATE	DESCRIPTION	BY

SCALE IS AS NOTED ON DRAWING

ELECTRICAL SCHEDULES & DETAILS

CITY OF AUSTIN, AFD WOMEN'S LOCKER RM. ADDN., PHASE V
6702 WENTWORTH DRIVE, AUSTIN, TEXAS 78724

PLOTTED: 8/30/2016
JOB NO: 023-79D

FS26-E210

File: J:\ACTIVE PROJECTS\MWM\15009.M.AUS – AFD WLR Ph 5\1. MEP\D-AutoCAD\FS26\15009 FS26 E210 Elec Schedule Details.dwg 24x36

SP-xx-xxxxx

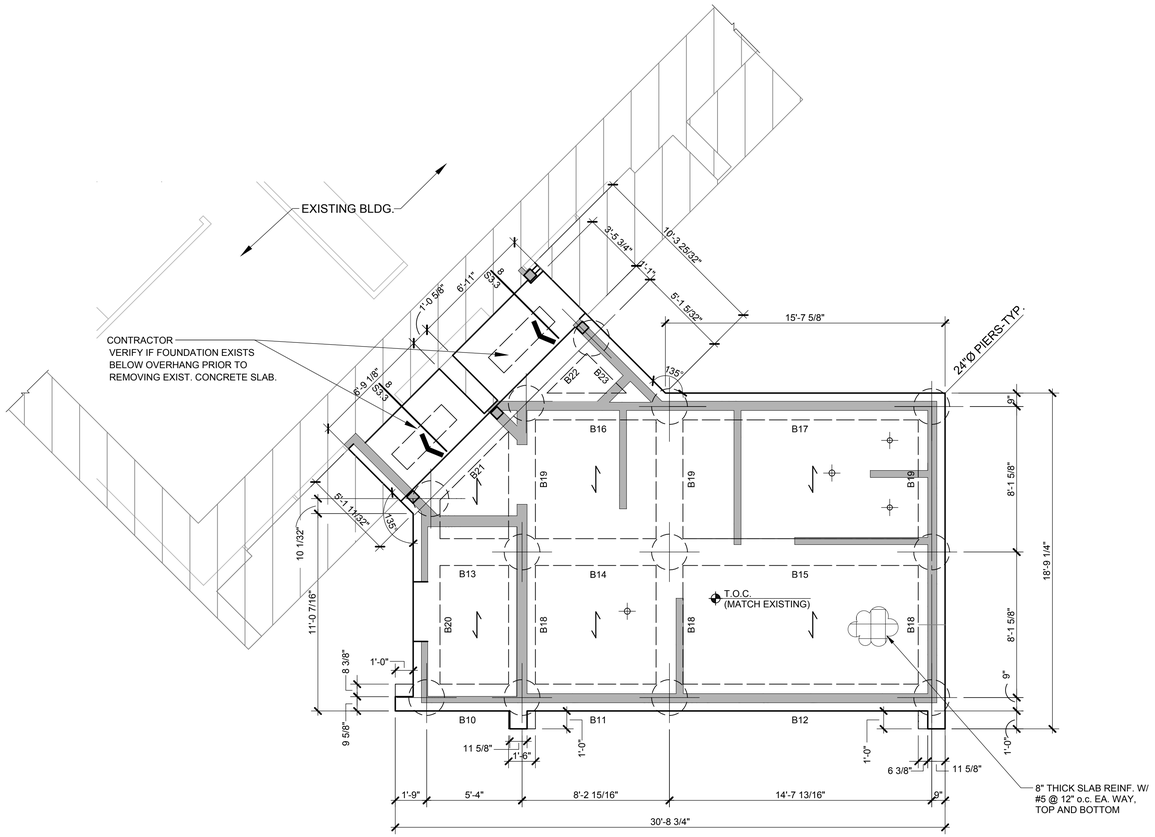

NOTES:

1. FIN. FLR. ELEV. VARIES SEE ARCH'L. T.O.C. REFERS TO TOP OF STRUCTURAL SLAB U.N.O.

2. ALL DRILLED PIERS TO BE STRAIGHT SHAFTS U.N.O. TOP OF PIER ELEVATION VARIES BELOW T.O.C. ELEV. U.N.O. ON PLAN OR DETAILS. PIER SIZES ARE NOTED THUS:

3. SEE SHEET S3.0 FOR TYPICAL PIER DETAILS.

4. - INDICATES SLAB DEPRESSIONS.
SEE STRUCTURAL PLANS & DETAILS FOR DEPTH OF SLAB DEPRESSIONS
SEE ARCHITECTURAL FOR EXACT LOCATIONS OF ALL SLAB DEPRESSIONS.
DROPS SHOWN ON PLAN ARE IN STRUCTURAL SLAB SEE ARCHITECTURAL FOR EXACT LOCATIONS OF ALL SLAB DEPRESSIONS.

5. SEE ARCHITECTURAL AND MECHANICAL - COORDINATE ALL FLOOR OPENINGS AND PENETRATIONS WITH TRADES INVOLVED FOR ACTUAL SIZES AND LOCATIONS.

6. REFER TO MECHANICAL, ELECTRICAL AND PLUMBING DRAWINGS FOR SLAB PENETRATIONS AND UNDERGROUND UTILITIES.

7. CONTRACTOR TO VERIFY ALL SLAB EDGE, STAIR AND ELEVATOR OPENING DIMENSIONS WITH ARCHITECTURAL DRAWINGS PRIOR TO CONSTRUCTION.

8. SEE GENERAL NOTES AND SPECIFICATION FOR ADDITIONAL INFORMATION.

9. CONTRACTOR TO VERIFY ALL DIMENSIONS AND EXISTING CONDITIONS AND AND REPORT ANY DISCREPANCY TO THE ARCHITECT AND THE ENGINEER.

10. REFER TO ARCHITECTURAL DRAWINGS FOR EXTENT AND DIMENSIONS OF RAISED OR DEPRESSED SLAB AREAS, SLOPES AND DRAINS.

NORTH

1 FOUNDATION PLAN _FS26
SCALE: 1/4" = 1'-0"

JOSE I. GUERRA, INC.
CONSULTING ENGINEERS
2401 S. IH35 SUITE 210
AUSTIN, TEXAS 78741
(512) 445-2090
TBPE FIRM F-3

STATE OF TEXAS
JOHN C. ROBB
85568
REGISTERED PROFESSIONAL ENGINEER
8-30-16

mwm Design Group
305 East Huntland Drive
Suite 200
Austin, Texas 78752
p: 512.453.0767
f: 512.453.1734
TBAE FIRM REGISTRATION NO.: 1452
TBPE FIRM REGISTRATION NO.: F-1416
TBPLS FIRM REGISTRATION NO.: 10065600

NO.	DATE	DESCRIPTION	BY

0 1"
The bar above measures one inch on the original drawing. Adjust scales accordingly.

FOUNDATION PLAN

WOMEN'S LOCKER ROOM PHASE V
6702 WENTWORTH DRIVE, AUSTIN, TEXAS 78724

PLOTTED: 8/30/2016
JOB NO: 023-79D

FS26-S2.0

___ OF ___

File: F:\15011_AFD Women's Locker Rm Improvements\DRAWINGS\CAD\15011_FS26_S2.0 FOUNDATION PLAN.dwg 24x36

SHORING NOTES:

1. ALL NEW OPENINGS ARE TO BE FRAMED WITH NEW STEEL BEAMS OR GLULAM BEAMS TO SUPPORT THE ROOF AND CEILING LOADS CURRENTLY SUPPORTED BY EXISTING LOAD BEARING WALLS TO BE DEMOLISHED. REFERENCE ARCHITECTURAL DRAWINGS FOR DEMOLITION DRAWINGS.

2. THE STRUCTURAL DRAWINGS AND SPECIFICATIONS REPRESENT THE FINISHED STRUCTURE. THEY DO NOT INDICATE THE METHODS OF CONSTRUCTION UNLESS SO STATED OR NOTED. THE CONTRACTOR SHALL PROVIDE ALL MEASURES NECESSARY TO PROTECT THE WORKERS AND ALL OTHER PERSONS DURING CONSTRUCTION.

3. THE CONTRACTOR SHALL PROVIDE TEMPORARY ERECTION BRACING AND SHORING OF ALL STRUCTURAL WORK AS REQUIRED FOR STABILITY OF THE STRUCTURE DURING ALL PHASES OF CONSTRUCTION. THE CONTRACTOR SHALL IMMEDIATELY NOTIFY THE ENGINEER OF ANY CONDITION THAT MIGHT ENDANGER THE STABILITY OF THE STRUCTURE OR CAUSE DISTRESS IN THE STRUCTURE.

4. THE EXISTING LOAD BEARING WALLS TO BE DEMOLISHED ARE TO BE SHORED BY THE CONTRACTOR. THE CONTRACTOR'S TEMPORARY SHORING SYSTEM IS TO REMAIN IN PLACE UNTIL ALL NEW BEAMS HAVE BEEN ERECTED AND ATTACHED TO THE EXISTING LOAD BEARING WALLS/ROOF FRAMING PER STRUCTURAL DRAWINGS.

5. THE CONTRACTOR SHALL SUBMIT SHORING PLANS FOR REVIEW BY ARCHITECT/ ENGINEER THE SHORING PLAN SHALL BE DESIGNED AND SEALED BY AN ENGINEER REGISTERED IN THE STATE OF TEXAS.

6. THE SHORING SYSTEM SHOULD JACK THE EXISTING LOAD BEARING WALLS BETWEEN 1/16" AND 1/8" ABOVE THEIR FINAL ELEVATIONS IN ORDER TO INSURE THAT THE ROOF LOADS ARE TRANSFERRED TO THE NEW BEAMS WITHOUT DEFLECTION.

7. THE BUILDING MUST REMAIN OPEN AND OPERATING DURING CONSTRUCTION. ALL WORK MUST BE PERFORMED IN SUCH A MANNER AS TO CAUSE MINIMAL DISRUPTION TO THE NORMAL ACTIVITIES OF THE BUILDING.

SHEARWALL LEGEND

SHEARWALL LEGEND

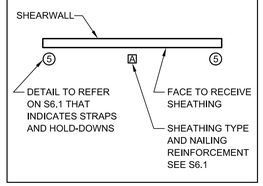

CEILING JOIST NOTES:

1. G.C. SHALL VERIFY DIMENSIONS WITH ACHITECTURAL DRAWINGS AND SHALL NOTIFY ARCH/ ENGINEER OF DISCREPANCIES PRIOR TO CONSTRUCTIONS.
2. FOR INTERIOR AND EXTERIOR WALLS, PROVIDE (2) KING STUDS FOR OPENINGS UP TO 5 FEET IN LENGTH, OR (3) KING STUBS FOR OPENINGS UP TO 9 FEET LENGTH. KING STUD QUANTITY IS TO BE PROVIDED AT EACH SIDE OF OPENING.
3. PROVIDE (1) TRIMMER STUD FOR OPENINGS UP TO 5 FEET LENGTH, (2) TRIMMER STUDS FOR OPENINGS UP TO 10 FEET LENGTH, OR (3) TRIMMER STUDS FOR OPENINGS UP 16 FEET LENGTH. TRIMMER STUD QUANTITY IS TO BE PROVIDED AT EACH SIDE OF OPENING.
4. STUD PACKS SHALL INCLUDE KING AND TRIMMER STUDS AT OPENINGS.
5. TRIMMER AND KING STUD SIZE SHALL MATCH WALL FRAMING STUD SIZE.
6. VERTICAL NAILING BETWEEN TRIMMER STUDS AND BETWEEN KING STUDS SHALL BE 16d AT 16".
7. REFERENCE THIS SHEET FOR LOAD BEARING WALL STUD SIZE & SPACING.
8. REFERENCE SHEET S4.1 FOR SHEAR WALL SCHEDULE.
9. ALL LUMBER TO BE #2 S.Y.P.K.D.
10. ALL CEILING JOISTS TO BE 2x8 AL 16" O.C. UNLESS NOTED OTHERWISE (17'-0" MAX SPAN) REFERENCE IBC FOR OTHER SPANS
11. ALL HEADERS @ 2x4 WALLS TO BE 2-2X PER IBC CODE UNLESS NOTED OTHERWISE. @ 2x6 WALLS TO BE 3-2x PER IBC CODE UNLESS NOTED OTHERWISE.

HEADER SCHEDULE

3-2x8 0'-0" to 5'-0"
3-2x10 5'-1" to 6'-1"
3-2x12 6'-2" to 7'-1"

12. ALL BEAMS LARGER THAN 2-2x6 TO BE SUPPORTED BY BUILT-UP STUD COLUMNS AT 2x6 STUD WALLS AND 2x4 STUD WALLS AT EACH END UNLESS NOTED OTHERWISE AND BLOCKED SOLID TO FOUNDATION. SEE BUILT-UP COLUMN SCHEDULE SHEET S4.0 FOR NUMBER OF BUILT-UP STUD COLUMN; AT EACH END OF BEAMS.
13. DOUBLE 2x8 CEILING JOISTS AS REQUIRED. UNDER HVAC AND/OR WH UNITS LOCATED IN ATTIC. PROVIDE 3/4" PLYWOOD DECK PAD AND CATWALK AS REQUIRED.
14. ALL BEAMS JOB BUILT FROM 3 OR MORE MEMBERS NAILED WITH 10D NAILS @ 6" O.C. TOP AND BOTTOM.
15. ALL GLU-LAMS TO BE DESIGNED WITH STANDARD CAMBER OF R=2000 FT.
16. BRACE TOP FLANGE OF ALL GLULAM, MICROLLAM, OR 2xWOOD BEAMS @ 4'-0" EA SIDE OF CEILING JOISTS WITH 2x6 CONTINUOS STIFFBACK AND 2x4 BRACES
17. STUD WALLS SHALL BE 2x6 @ 16 " O.C., #2 S.Y.P.K.D. UNO. (MAX. HEIGHT 10'-0") STUD WALLS SHALL BE 2x8 @ 16" O.C. , # 2 S.Y.P.K.D. UNO. (HEIGHTS GREATER THAN 10-0" TO 14'-0" MAX.)
18. PROVIDE 2x BLOCKING AT 4'-0" O.C. VERTICALLY AT ALL STUD WALLS.
19. ALL FRAMING TO COMPLY WITH I.B.C. BUILDING CODES, CURRET EDITION.
20. VERIFY ANY CHANGES WITH ENGINEER PRIOR TO CONSTRUCTION.

ROOF FRAMING PLAN

SCALE:

PLAN NOTES:

1. G.C. SHALL VERIFY DIMENSIONS WITH ACHITECTURAL DRAWINGS AND SHALL NOTIFY ARCH/ ENGINEER OF DISCREPANCIES PRIOR TO CONSTRUCTIONS.
2. ALL LUMBER TO BE #2 Y.P.K.D.
3. ALL RAFTERS TO BE 2x8 AT 16"O.C. WITH A MAXIMUM UNBRACED SPAN 18'-0" MEASURED ALONG THE SLOPE, UNLESS NOTED OTHERWISE.
4. ALL HIPS, RIDGES, VALLEYS TO BE 2x10 MAXIMUM. UNBRACED SPAN 8'-0" UNLESS NOTED OTHERWISE. PROVIDE "TEE" BRACES @ 6'-0" O.C. MAX SPACING AT RIDGES. PROVIDE "TEE" BRACES @ 8'-0" O.C. MAX SPACING AT HIPS AND VALLYS. PROVIDE DBL STUDS BELOW EACH "TEE" BRACE AT STUD WALLS
5. PROVIDE 2x8 CONTINUOUS PURLINS WITH 2x8 "TEE" BRACES @ 4'-0" O.C. MAX SPACING PROVIDE DBL STUDS BELOW EACH "TEE" BRACE AT STUD WALLS. NAIL "TEE" BRACE TOGETHER WITH 10D NAILS @ 6" O.C.- TYPICAL.
6. "TEE" BRACES LONGER THAN 8'-0" SHALL BE DBL 2x8 STUD WITH FLANGE PLATE "TEE" BRACE AND BRACED HORIZONTALLY @ 6'-0" O.C. IN TWO DIRECTIONS, NAIL "TEE" BRACE TOGETHER WITH 1O D NAILS @ 6" O.C. - TYPICAL
7. PROVIDE 2x6 MIN. COLLAR TIES AT 4'-0" O.C. AT ALL RIDGES.
8. ALL FRAMING TO COMPLY WITH I.B.C. BUILDING CODE CURRENT EDITION.
9. VERIFY AND CHANGES WITH ENGINEER PRIOR TO CONSTRUCTION.

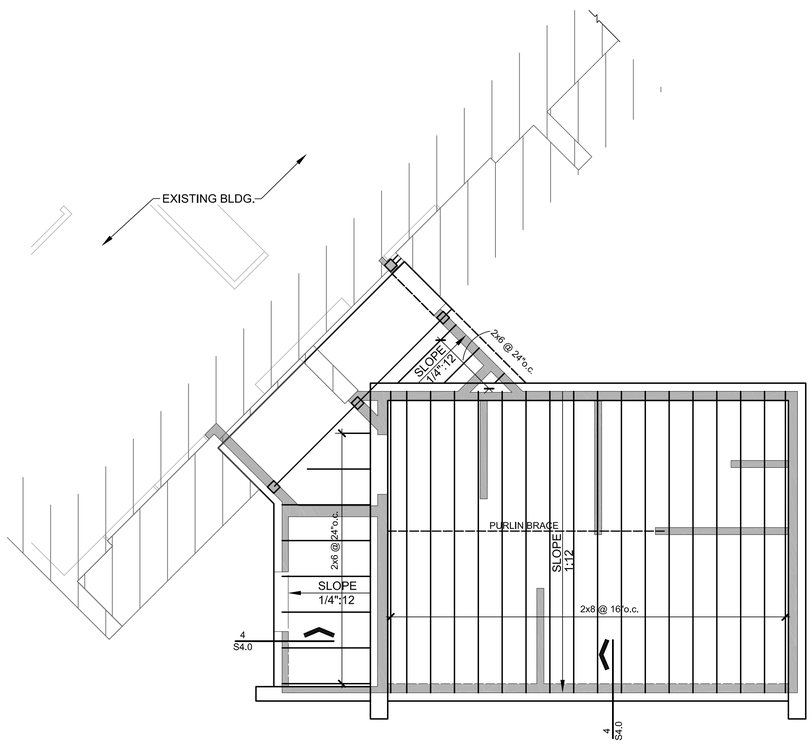

NOTE:
TOP OF STUD WALL ELEVATION REF. ARCH'L

NORTH

2 ROOF FRAMING PLAN _FS26
SCALE: 1/4" = 1'-0"

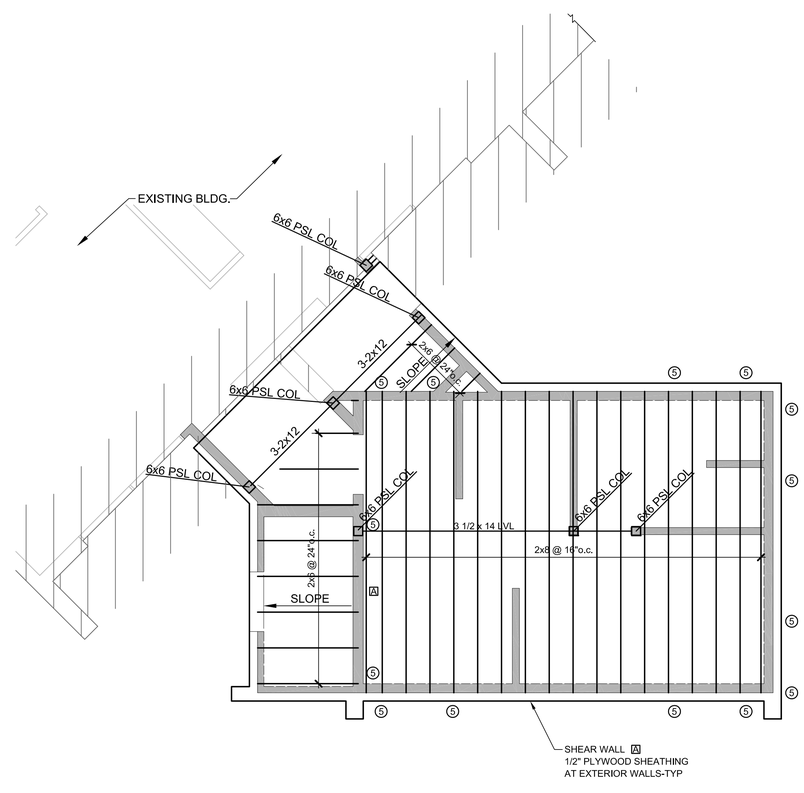

NORTH

1 CEILING FRAMING PLAN _FS26
SCALE: 1/4" = 1'-0"

JOSE I. GUERRA, INC.
CONSULTING ENGINEERS
2401 S. IH35 SUITE 210
AUSTIN, TEXAS 78741
(512) 445-2090
TBPE FIRM F-3

STATE OF TEXAS
JOHN C. GUERRA
85565
REGISTERED PROFESSIONAL ENGINEER
8-30-16

mwm Design Group
305 East Huntland Drive
Suite 200
Austin, Texas 78752
p: 512.453.0767
f: 512.453.1734
TBAE FIRM REGISTRATION NO.: 1452
TBPE FIRM REGISTRATION NO.: F-1416
TBPLS FIRM REGISTRATION NO.: 10065600

NO.	DATE	DESCRIPTION	BY

0 1"
The bar above measures one inch on the original drawing. Adjust scales accordingly.

ROOF & CEILING FRAMING PLAN

WOMEN'S LOCKER ROOM PHASE V
6702 WENTWORTH DRIVE, AUSTIN, TEXAS 78724

PLOTTED: 8/30/2016
JOB NO: 023-79D

FS26-S2.1

___ OF ___

File: F:\15011_AFD Women's Locker Rm Improvements\DRAWINGS\CAD\15011_FS26_S2.1 ROOF FRAMING PLAN.dwg 24x36

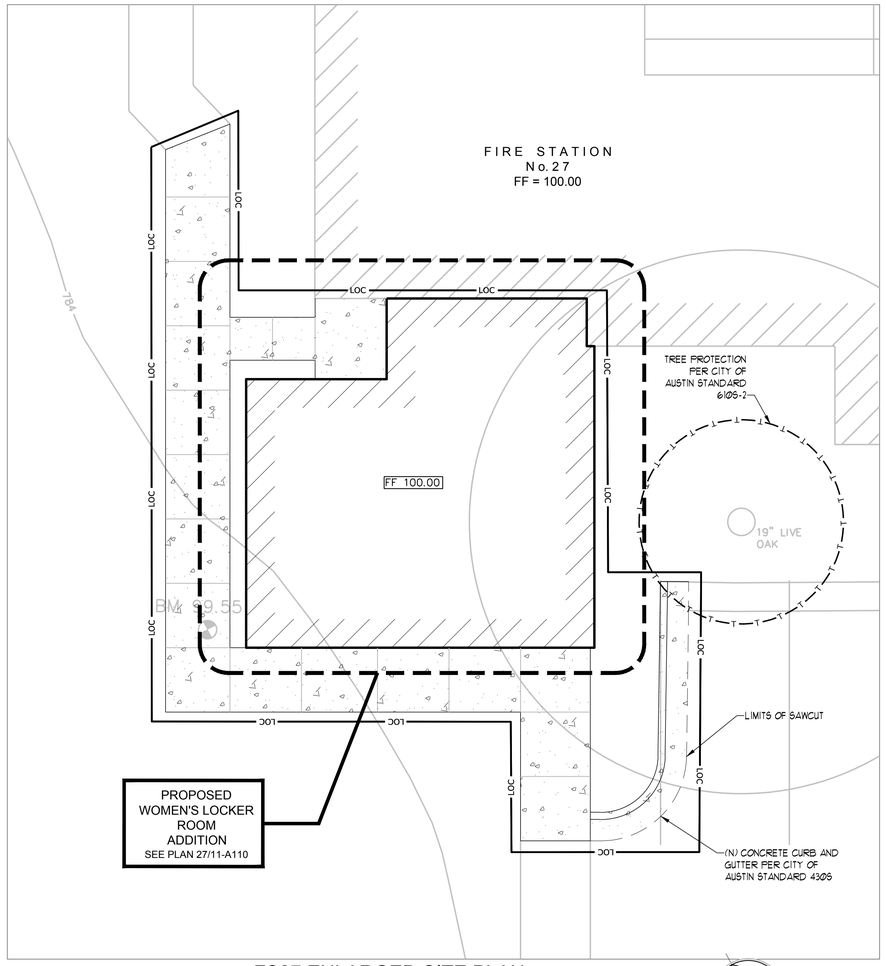

1 27/11-A050 FS27 ENLARGED SITE PLAN
SCALE: 1'=5'

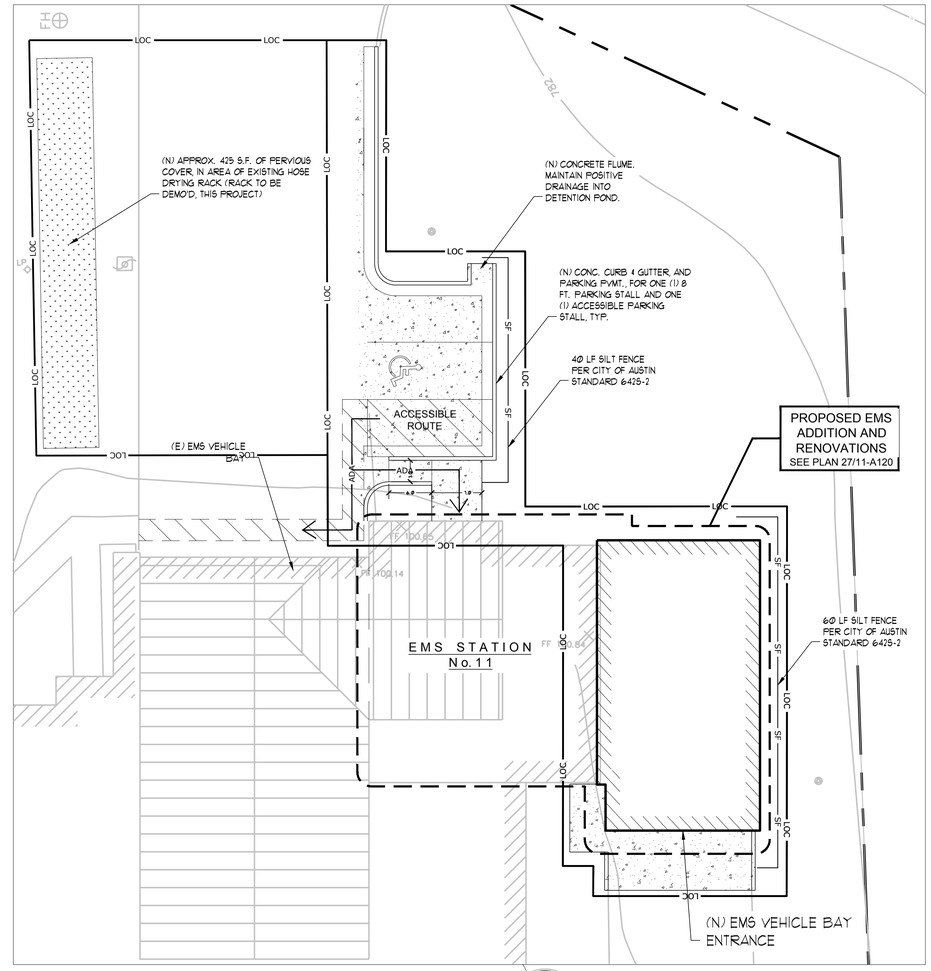

1 27/11-A050 EMS11 ENLARGED SITE PLAN
SCALE: 1'=10'

SITE PLAN LEGEND

- PROPERTY LINES
- BUILDING SETBACK LINES
- LOC — LIMITS OF CONSTRUCTION
- 528 — EXISTING TOPOGRAPHIC CONTOUR
- EXISTING TREE & TREE PROTECTION
- EXISTING CHAIN LINK FENCE
- PROPOSED OBJECT
- PROPOSED CURB & GUTTER
- PROPOSED ASHPHALT
- PROPOSED CONCRETE
- EXISTING PERVIOUS AREA
- PROPOSED PERVIOUS AREA
- EXISTING STRUCTURE
- PROPOSED STRUCTURE
- (E)XX.XX — EXISTING SPOT ELEVATION
- XX.XX — PROPOSED SPOT ELEVATION

NOTE

THE LOCATIONS OF EXISTING IMPROVEMENTS SHOWN ON THIS PLAN WERE DERIVED IN PART FROM RECORD DOCUMENTS OF UNKNOWN ACCURACY. THE PRESENCE, LOCATION AND ELEVATION OF EXISTING UTILITIES IN THE FILED SHALL BE VERIFIED BY THE CONTRACTOR BEFORE COMMENCING WORK. IT SHALL BE THE RESPONSIBILITY OF THE CONTRACTOR TO VERIFY EXISTING CONDITIONS WITHIN THE LIMITS OF CONSTRUCTION. FAILURE OF AN EXISTING UTILITY TO APPEAR ON THIS PLAN SHALL NOT RELIEVE THE CONTRACTOR OF RESPONSIBILITY TO PROTECT AND REPAIR, IF DAMAGED, SUCH UTILITIES.

ALL NEW PEDESTRIAN PAVEMENT SHALL BE CONSTRUCTED IN ACCORDANCE WITH THE TEXAS ACCESSIBILITY STANDARDS, AND SHALL MATCH THE ELEVATIONS OF EXISTING IMPROVEMENTS AT POINTS OF INTERSECTION.

FINE GRADING SHALL BE COMPLETED TO DRAIN STORMWATER AWAY FROM BUILDING PERIMETERS, AND SPECIFICALLY AWAY FROM FROM BUILDING ENTRANCES AT THE MAXIMUM SLOPES POSSIBLE GIVEN EXISTING CONDITIONS ADJACENT.

SUMMARY SEQUENCE OF CONSTRUCTION

1. INSTALL SEDIMENTATION AND EROSION CONTROLS AND TREE PROTECTION FENCING AND INITIATE TREE MITIGATION MEASURES (AS REQUIRED).
2. BEGIN SITE CLEARING/CONSTTRUCTION ACTIVITIES.
3. COMPLETE CONSTRUCTION AND BEGIN REVEGETATION OF SITE AND INSTALLATION OF LANDSCAPING.
4. FOLLOWING REVEGETATION, REMOVE THE TEMPORARY EROSION AND SEDIMENTATION CONTROLS AND COMPLETE ANY NECESSARY FINAL REVEGETATION RESULTING FROM REMOVAL OF THE CONTROLS.

	EXISTING	PROPOSED
SITE AREA, S.F.	143,748 SF	143,748 SF
IMPERVIOUS AREA, S.F. (%)	17,400 SF (12.7%)	
IMIPERVIOUS AREA OF 1994 ADDITION, S.F.	1,101 SF	
TOTAL IMP. AREA, S.F.(%)	18,501 SF (12.8%)	+274 SF (13.1%)
NET CHANGE %		+0.3%
GROSS FLOOR AREA OF PROPOSED ADDITION		1,460 SF

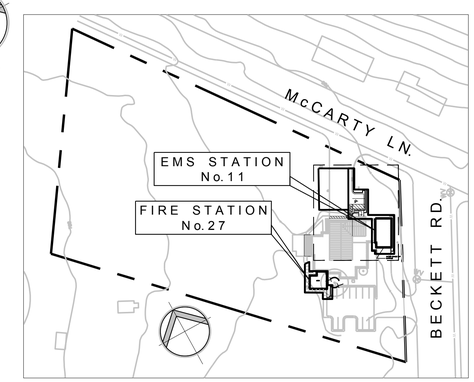

2 27/11-A050 SITE PLAN (KEY PLAN)
SCALE: 1"=100'

BID DOCUMENTS

STATE OF TEXAS — BRANDON EVERETT HUMANN — 106187368 — LICENSED PROFESSIONAL ENGINEER — MWM DesignGroup, Inc. F-1416 — 8-30-16

mwm DesignGroup
305 East Huntland Drive
Suite 200
Austin, Texas 78752
p: 512.453.0767
f: 512.453.1734
TBAE FIRM REGISTRATION NO.: 1452
TBPE FIRM REGISTRATION NO.: F-1416
TBPLS FIRM REGISTRATION NO.: 10065600

NO.	DATE	DESCRIPTION	BY

0 — 1"
The bar above measures one inch on the original drawing. Adjust scales accordingly.

SITE PLAN

AFD WOMEN'S LOCKER RM. ADDN, PHASE V AND
EMS VEHICLE BAY EXPANSIONS & GEN. RENOVATIONS
5401 McCARTY LANE, AUSTIN, TEXAS 78749

PLOTTED: 9/7/2016
JOB NO: 023-79D

FS27 EMS11
C050

File: Y:\023-79D_WomensLockerRooms\CAD\Fire Station 27 - EMS 11\Sheets\FS27 EMS11-A050 SITE PLAN.dwg 24x36

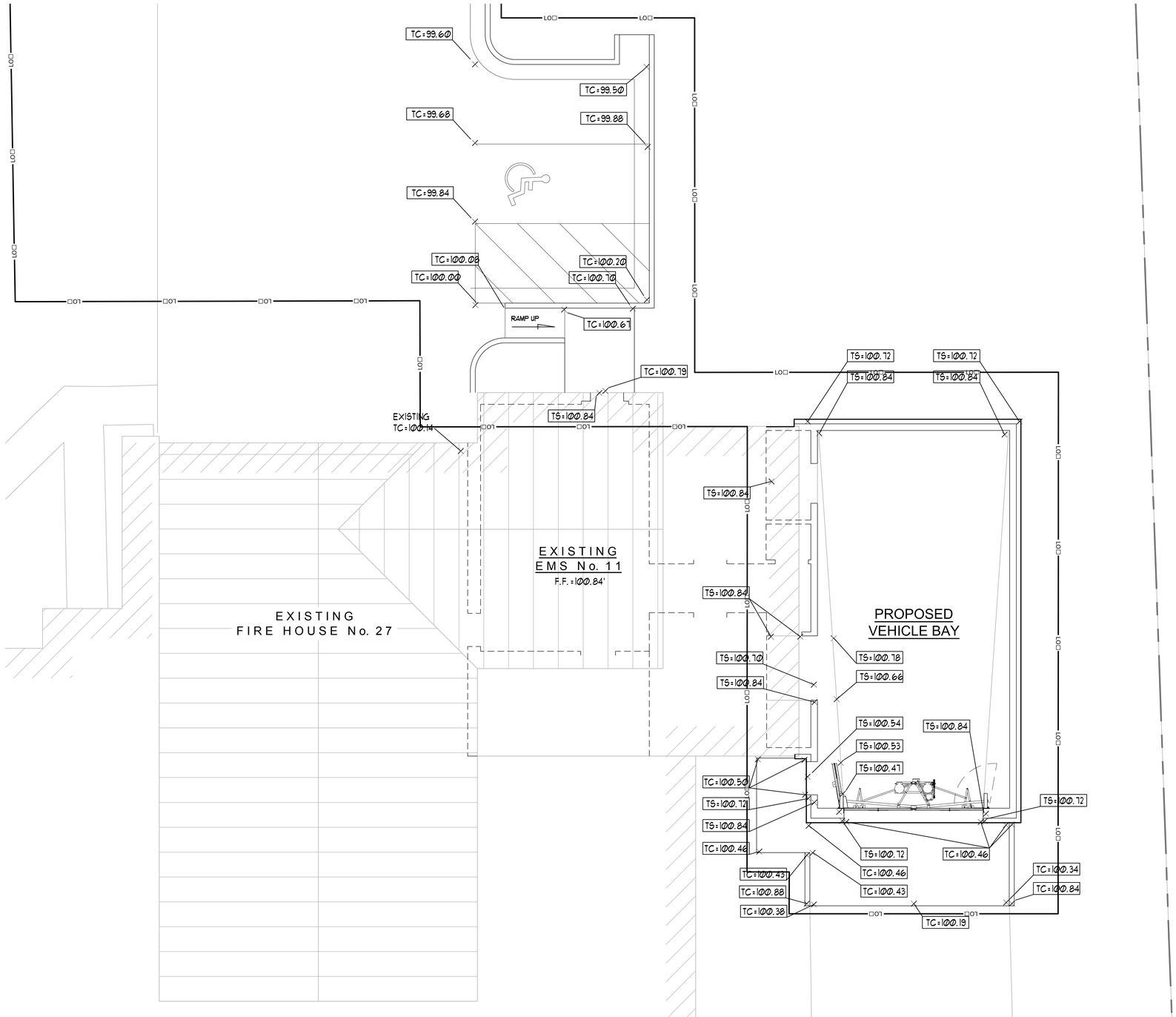

1 27/11-AC125 SPOT ELEVATIONS PLAN
SCALE: 3/16" = 1'-0'

BID DOCUMENTS

REGISTERED ARCHITECT W. POWER HARROD III 18345 STATE OF TEXAS

mwm Design Group
305 East Huntland Drive
Suite 200
Austin, Texas 78752
p: 512.453.0767
f: 512.453.1734
TBAE FIRM REGISTRATION NO.: 1452
TBPE FIRM REGISTRATION NO.: F-1416
TBPLS FIRM REGISTRATION NO.: 10065600

NO.	DATE	DESCRIPTION	BY

0 — 1"
The bar above measures one inch on the original drawing. Adjust scales accordingly.

SPOT ELEVATION SLAB PLAN

AFD WOMEN'S LOCKER RM. ADDN, PHASE V AND
EMS VEHICLE BAY EXPANSIONS & GEN. RENOVATIONS
5401 McCARTY LANE, AUSTIN, TEXAS 78749

PLOTTED: 8/30/2016
JOB NO: 023-79D

FS27 EMS11
AC125

File: X:\023-79D_WomensLockerRooms\CAD\Fire Station 27 - EMS 11\Sheets\FS27 EMS11-AC125 SLAB PLAN.dwg 24x36

PROJECT DATA: EMS STATION 11/FIRE STATION 27

GOVERNING CODES

2012 INTERNATIONAL ENERGY CONSERVATION CODE
2012 INTERNATIONAL BUILDING CODE
2012 INTERNATIONAL MECHANICAL CODE
2012 UNIFORM PLUMBING CODE (AS AMENDED BY COA)
2012 NATIONAL ELECTRIC CODE (AS AMENDED BY COA)
2010 ADA STANDARDS FOR ACCESSIBLE DESIGN
2012 TEXAS ACCESSIBILITY STANDARDS

BUILDING CODE DATA – IBC CHAPTER 3

OCCUPANCY GROUP

B THE USE OF A BUILDING OR STRUCTURE, OR A PORTION THEREOF, FOR OFFICE, PROFESSIONAL OR SERVICE–TYPE TRANSACTIONS, INCLUDING STORAGE OF RECORDS AND ACCOUNTS.

VEHICLE BAY SHALL BE CONSIDERED A NON–SEPARATED OCCUPANCY PER IBC 508.3.

GENERAL BUILDING LIMITATIONS – IBC CHAPTER 5

ALLOWABLE HEIGHT AND BUILDING AREA (TABLE 503)

TYPE VB (B OCCUPANCY)
AREA (SF) 9,000
HEIGHT 2 STORY

FRONTAGE INCREASE (If) = [F/P–0.25]W/30 = 25
SPRINKLER INCREASE (Is) = 0

ALLOWABLE AREA (B) = At+(Atif/100)+(Atis/100) = 11,250

ACTUAL AREA B (SF) 7,602
ACTUAL AREA B 1 STORY (PLUS MEZZANINE)

CONSTRUCTION TYPE – IBC CHAPTER 6

FIRE RESISTIVE REQUIREMENTS FOR BUILDING ELEMENTS (TYPE VB–TABLE 601)

BEARING WALLS	
INTERIOR	NO REQUIREMENTS
EXTERIOR	NO REQUIREMENTS
NONBEARING WALLS	
EXTERIOR	SEE BELOW
NONBEARING WALLS	
INTERIOR	NO REQUIREMENTS
FLOOR CONSTRUCTION	NO REQUIREMENTS
ROOF CONSTRUCTION	NO REQUIREMENTS

EXTERIOR WALL/OPENING PROTECTION (TABLE 602 AND 704.8)
EXTERIOR WALLS 1 LESS THAN 10 FEET
NO RATING 10 FEET OR GREATER

INTERIOR FINISHES – IBC CHAPTER 8

FLAME SPREAD RATINGS OF MATERIALS AND FINISHES (TABLE 803.4)

CLASS A: FLAME SPREAD 0–25, SMOKE DEVELOPED 0–450
CLASS B: FLAME SPREAD 26–75, SMOKE DEVELOPED 0–450
CLASS C: FLAME SPREAD 76–200, SMOKE DEVELOPED 0–450

VERTICAL EXITS AND PASSAGEWAYS	CLASS B
EXIT ACCESS CORRIDORS	CLASS B
ROOMS AND ENCLOSED SPACES	CLASS C

OCCUPANCY LOAD AND MEANS OF EGRESS –

	AREA (sqft.)	OCCUPANT LOAD FACTOR (sqft.)	OCCUPANTS	REQUIRED EGRESS WIDTH PER OCCUPANT (GENERAL /STAIR)	REQUIRED EGRESS WIDTH (GENERAL /STAIR)
LOCKER ROOM	514	–	–	–	–
TOTAL			–	–	–
EGRESS WIDTH PROVIDED (1 DOOR)					32
EMS STATION	1,456	200	8	0.2/0.3	1.6/2.4
VEHICLE BAY	1,014	200	6	0.2	1.2
TOTAL			14	–	3.6
EGRESS WIDTH PROVIDED (2 DOORS)					64

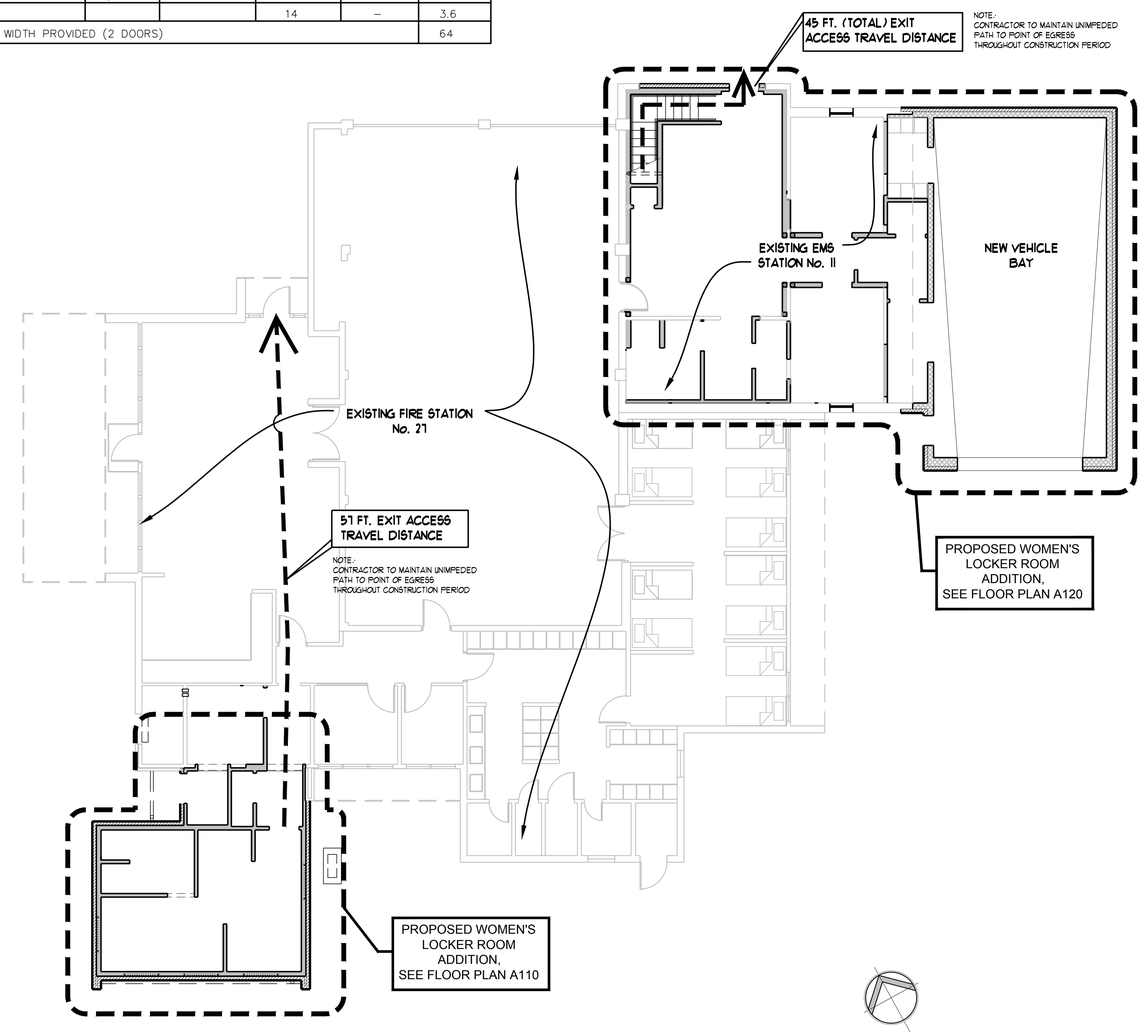

1 / 27/11-A010 KEY PLAN
SCALE: 1/8" = 1'-0'

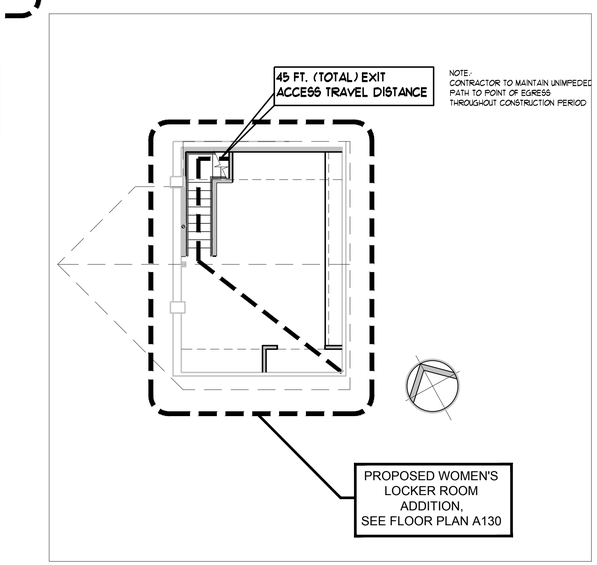

2 / 27/11-A010 EMS11 MEZZANINE KEY PLAN
SCALE: 1/8" = 1'-0'

BID DOCUMENTS

REGISTERED ARCHITECT JOHN OWEN HARRISON 16346 STATE OF TEXAS

mwm Design Group
305 East Huntland Drive
Suite 200
Austin, Texas 78752
p: 512.453.0767
f: 512.453.1734
TBAE FIRM REGISTRATION NO.: 1452
TBPE FIRM REGISTRATION NO.: F-1416
TBPLS FIRM REGISTRATION NO.: 10065600

NO.	DATE	DESCRIPTION	BY

0 1"
The bar above measures one inch on the original drawing. Adjust scales accordingly.

FS27 & EMS11 CODE SUMMARY & KEY PLAN

AFD WOMEN'S LOCKER RM. ADDN, PHASE V AND
EMS VEHICLE BAY EXPANSIONS & GEN. RENOVATIONS
5401 McCARTY LANE, AUSTIN, TEXAS 78749

PLOTTED: 8/30/2016
JOB NO: 023-79D

FS27/EMS11
A010

File: T:\023-79D_WomensLockerRooms\CAD\Fire Station 27 – EMS 11\Sheets\FS27_EMS11–A010 CODE.dwg 24x36

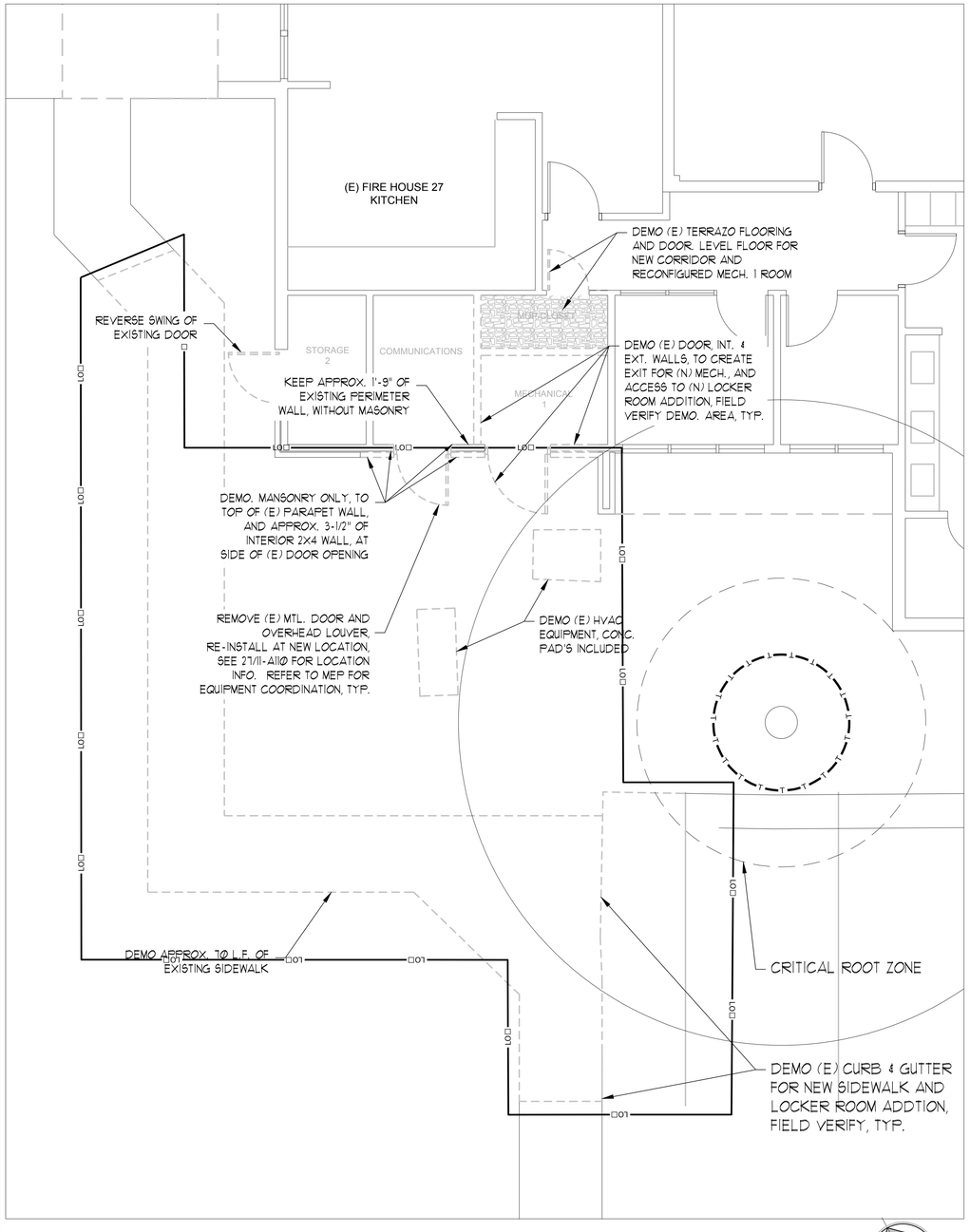

1 27/11-A100 FS27 DEMOLITION PLAN

SCALE: 1/4" = 1'-0'

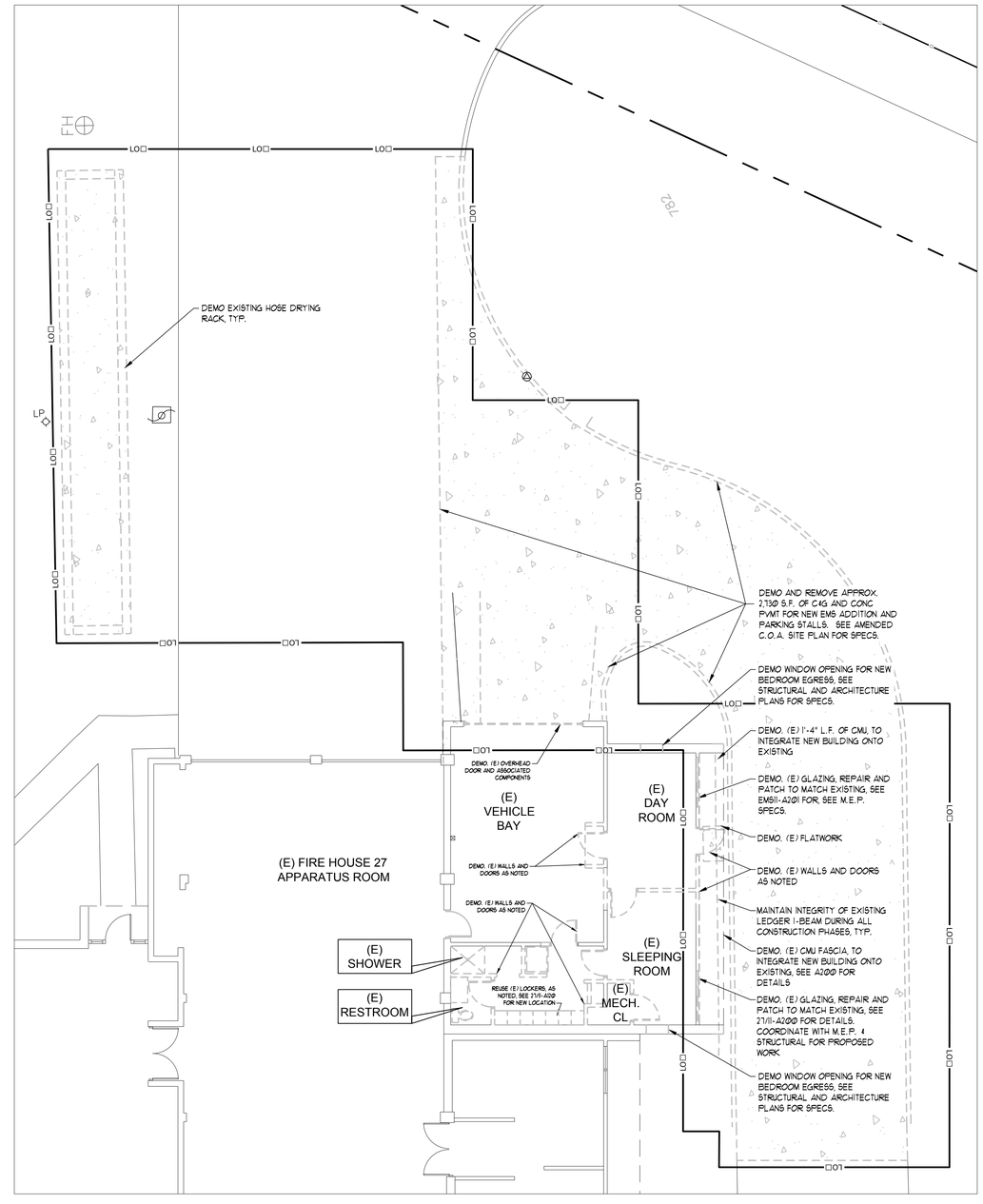

2 27/11-A100 EMS11 DEMOLITION PLAN

SCALE: 1/8" = 1'-0'

DEMOLITION LEGEND

- PROPERTY LINES
- BUILDING SETBACK LINES
- EXISTING TO REMAIN
- EXISTING OVERHEAD OBJECT
- EXISTING STRUCTURE
- EXISTING TO REMOVE
- EXISTING TO REMOVE

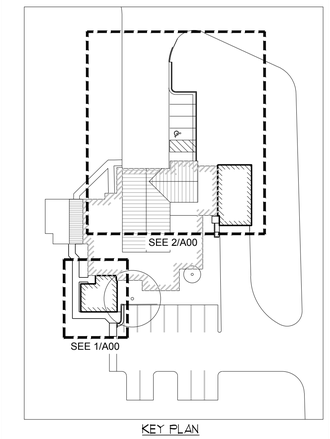

KEY PLAN

BID DOCUMENTS

REGISTERED ARCHITECT W. OWEN HARROD 18846 STATE OF TEXAS

mwm Design Group
305 East Huntland Drive
Suite 200
Austin, Texas 78752
p: 512.453.0767
f: 512.453.1734
TBAE FIRM REGISTRATION NO.: 1452
TBPE FIRM REGISTRATION NO.: F-1416
TBPLS FIRM REGISTRATION NO.: 10065600

NO.	DATE	DESCRIPTION	BY

0 1"

The bar above measures one inch on the original drawing. Adjust scales accordingly.

FS27 & EMS11 DEMOLITION PLANS

AFD WOMEN'S LOCKER RM. ADDN, PHASE V AND
EMS VEHICLE BAY EXPANSIONS & GEN. RENOVATIONS
5401 McCARTY LANE, AUSTIN, TEXAS 78749

PLOTTED: 8/30/2016
JOB NO: 023-79D

FS27/EMS11
A100

File: X:\023-79D_WomensLockerRooms\CAD\Fire Station 27 - EMS 11\Sheets\FS27 EMS11-A100 DEMO PLAN.dwg 24x36

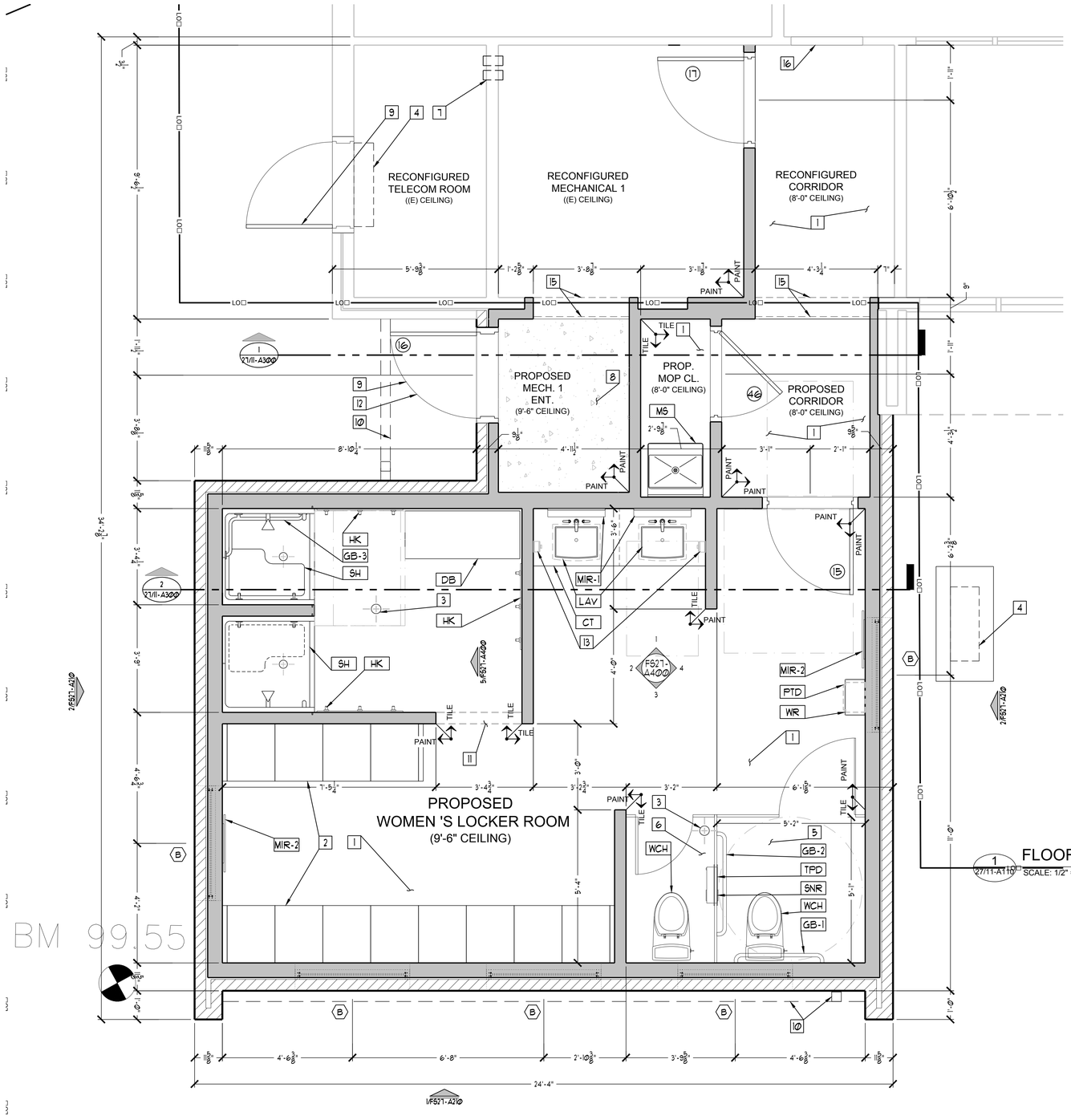

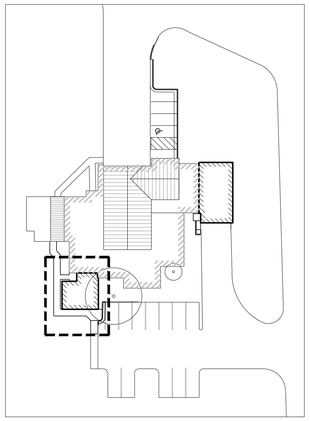

KEY PLAN

LEGEND

- PROPERTY LINES
- BUILDING SETBACK LINES
- EXISTING TO REMAIN
- EXISTING OVERHEAD OBJECT
- EXISTING TO REMOVE
- EXISTING STRUCTURE
- PROPOSED STRUCTURE
- PROPOSED OBJECT
- TILE / PAINT — PROPOSED WALL FINISH TYPE
- PROPOSED FLOOR DRAIN
- A.D.A. CLEAR FLOOR AREA
- PROPOSED GLAZING AT CLERESTORY
- PROPOSED GLAZING
- PROPOSED BRICK VENEER WALL
- PROPOSED FRAME WALL
- PROPOSED WALL INFILL, AS NOTED
- PROPOSED CMU BLOCK WALL
- PROPOSED CONCRETE
- PROPOSED FLOOR TILE
- PROPOSED PLYWOOD

1 / 27/11-A110 FLOOR PLAN
SCALE: 1/2" = 1'-0"

CALL-OUT KEY

1. (N) TILE FLOORING
2. (N) 20"x24"x60" HOLMAN LOCKERS OR APPROVED EQUAL
3. (N) FLOOR DRAIN, REFER TO M.E.P.
4. (N) MINI SPLIT AC WALL MOUNTED UNIT AND HEAT PUMP OUTDOOR UNIT (ON 2'x4' CONC. SLAB), SEE MEP SPECS
5. (N) ACCESSIBLE TOILET STALL
6. (N) STANDARD TOILET STALL
7. INSTALL (2) 4" PVC CONDUITS FOR NETWORK CABLING
8. (N) BROOM FINISHED CONCRETE FLOOR, SEE STRUCTURAL
9. REVERSE SWING OF EXISTING DOOR
10. (N) ROOF OVERHANG WITH GUTTER AND DOWNSPOUTS
11. (N) TILE INSIDE 3'0"x1'0" OPENING
12. INSTALL EXISTING DOOR W/ OVERHEAD VENT AT THIS NEW MECHANICAL EXIT. COORDINATE WITH MEP TO RECONNECT AIR INTAKE AT LOUVERED VENT, TYP.
13. SOAP DISPENSER SUPPLIED BY OWNER, TYP.
15. GYPSUM CASED OPENING (8'-0" A.F.F.) SEE STRUCTURAL DETAILS FOR NEW DBL. WALL HEADER SPECS., TYP.
16. INSTALL NEW ADA COMPLIANT THRESHOLD AT EXISTING DOORWAY, TYP.

BID DOCUMENTS

REGISTERED ARCHITECT — OWEN HARTSOE — 16346 — STATE OF TEXAS

mwm Design Group
305 East Huntland Drive
Suite 200
Austin, Texas 78752
p: 512.453.0767
f: 512.453.1734
TBAE FIRM REGISTRATION NO.: 1452
TBPE FIRM REGISTRATION NO.: F-1416
TBPLS FIRM REGISTRATION NO.: 10065600

NO.	DATE	DESCRIPTION	BY

0 — 1"
The bar above measures one inch on the original drawing. Adjust scales accordingly.

FS27 FLOOR PLAN

AFD WOMEN'S LOCKER RM. ADDN, PHASE V AND
EMS VEHICLE BAY EXPANSIONS & GEN. RENOVATIONS
5401 McCARTY LANE, AUSTIN, TEXAS 78749

PLOTTED: 8/30/2016
JOB NO: 023-79D

FS27/EMS11
A110

File: Y:\023-79D_WomensLockerRooms\CAD\Fire Station 27 – EMS 11\Sheets\FS27 EMS11-A110 FLOOR PLAN.dwg 24x36

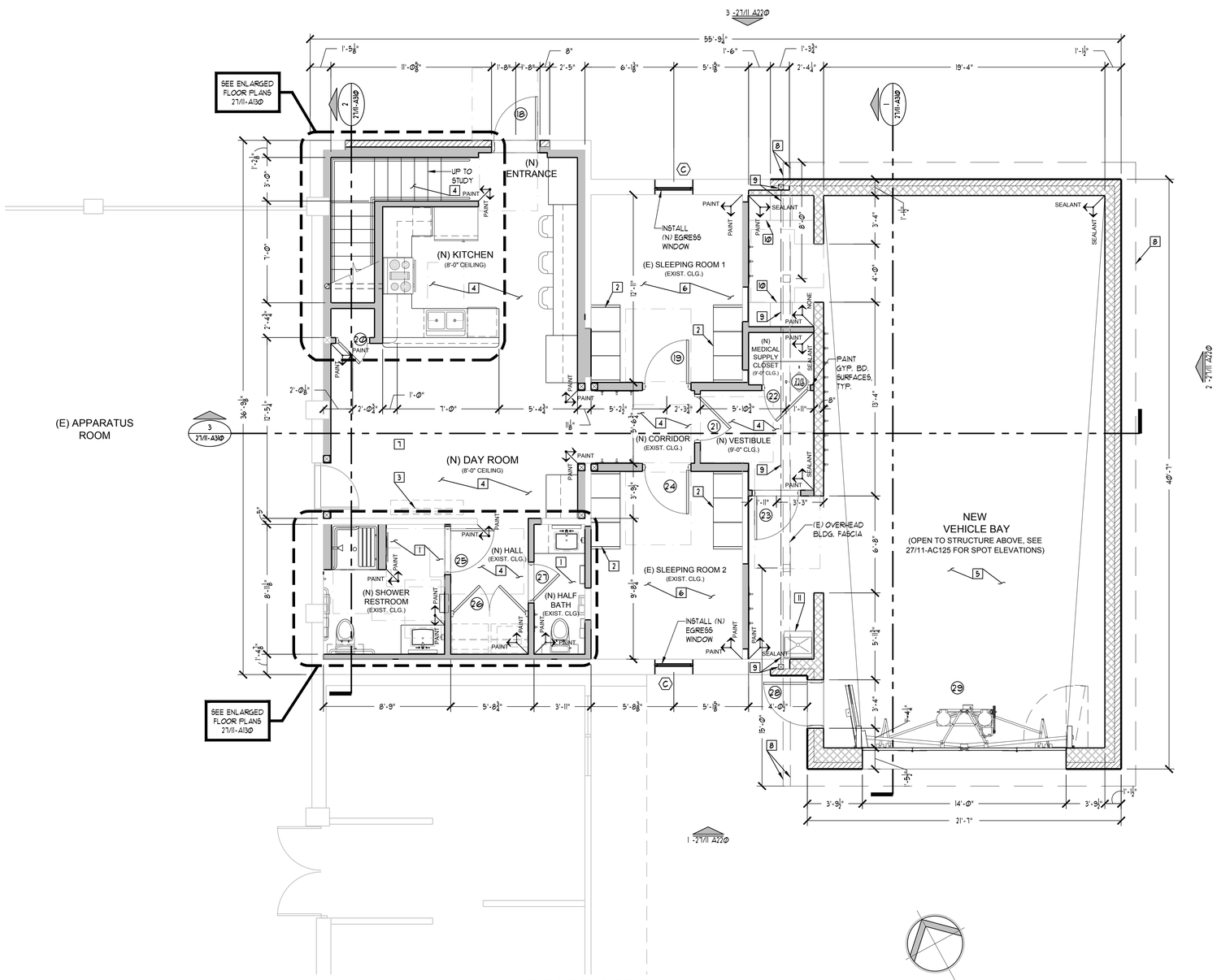

1 27/11-A120 FIRST FLOOR PLAN
SCALE: 1/4" = 1'-0"

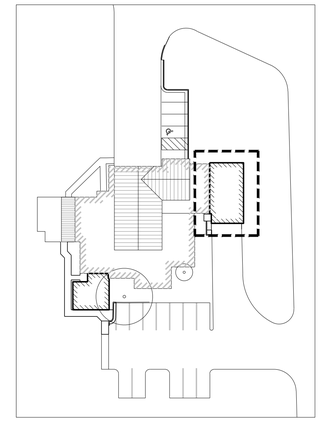

KEY PLAN

LEGEND

- PROPERTY LINES
- BUILDING SETBACK LINES
- EXISTING TO REMAIN
- EXISTING OVERHEAD OBJECT
- EXISTING TO REMOVE
- EXISTING STRUCTURE
- PROPOSED STRUCTURE
- PROPOSED OBJECT
- TILE / PAINT — PROPOSED WALL FINISH TYPE
- PROPOSED FLOOR DRAIN
- A.D.A. CLEAR FLOOR AREA
- PROPOSED GLAZING AT CLERESTORY
- PROPOSED GLAZING
- PROPOSED BRICK VENEER WALL
- PROPOSED FRAME WALL
- PROPOSED WALL INFILL, AS NOTED
- PROPOSED CMU BLOCK WALL
- PROPOSED CONCRETE
- PROPOSED FLOOR TILE
- PROPOSED PLYWOOD

CALL-OUT INDEX

1. TILE FLOORING
2. 20"x24"x80" HOLMAN LOCKERS OR APPROVED EQUAL
3. FLAT SCREEN T.V. LOCATION, PROVIDED BY OWNER
4. RUBBER TILE FLOORING OR APPROVED EQUAL
5. FINISHED CONCRETE FLOOR WITH INTEGRATED SLOPED VEHICLE PARKING AREA
6. CARPET TILE FLOORING BY KINETEX OR APPROVED EQUAL
7. REFER TO PLUMBING PLANS FOR AREAS OF EXISTING SLAB TO BE CUT AND REPAIRED FOR INSTALLATION OF NEW WASTEWATER LINES.
8. ROOF OVERHANG AND GALV. GUTTER WITH DOWNSPOUTS AT 8'-0" AND 15'-0" FROM FACE OF NEW VEHICLE BAY
9. EXISTING STRUCTURAL BEAM AND COLMS., MAINTAIN AND SECURE THROUGHOUT ALL PHASES OF CONSTRUCTION, TYP.
10. RE-INSTALL EXISTING STORAGE CABINETS AT LOCATION IDENTIFIED IN FLOOR PLAN, THIS SHEET
11. INSTALL (N) FLOOR LEVEL MOP SINK, COORDINATE WITH MEP FOR LOCATION, TYP.

BID DOCUMENTS

REGISTERED ARCHITECT — R. OWEN HARNOD — 16346 — STATE OF TEXAS

mwm Design Group
305 East Huntland Drive
Suite 200
Austin, Texas 78752
p: 512.453.0767
f: 512.453.1734
TBAE FIRM REGISTRATION NO.: 1452
TBPE FIRM REGISTRATION NO.: F-1416
TBPLS FIRM REGISTRATION NO.: 10065600

NO.	DATE	DESCRIPTION	BY

0 — 1"
The bar above measures one inch on the original drawing. Adjust scales accordingly.

EMS11 FLOOR PLAN

AFD WOMEN'S LOCKER RM. ADDN, PHASE V AND
EMS VEHICLE BAY EXPANSIONS & GEN. RENOVATIONS
5401 McCARTY LANE, AUSTIN, TEXAS 78749

PLOTTED: 8/30/2016
JOB NO: 023-79D

FS27/EMS11
A120

File: Y:\023-79D_WomensLockerRooms\CAD\Fire Station 27 – EMS 11\Sheets\FS27 EMS11-A120 FLOOR PLAN.dwg 24x36

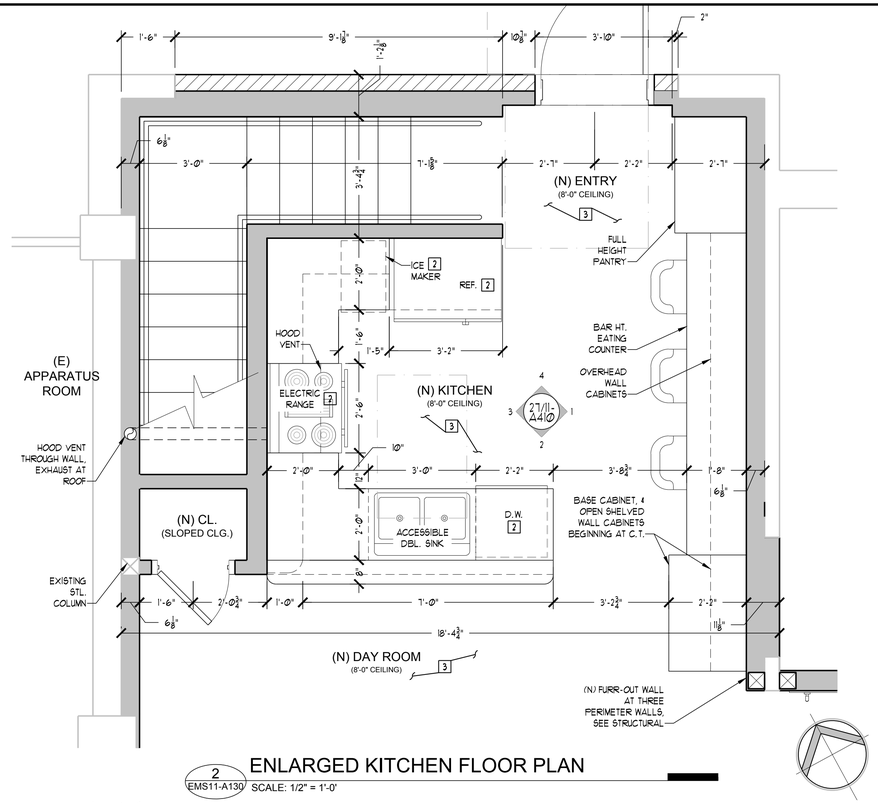

2 EMS11-A130 ENLARGED KITCHEN FLOOR PLAN
SCALE: 1/2" = 1'-0"

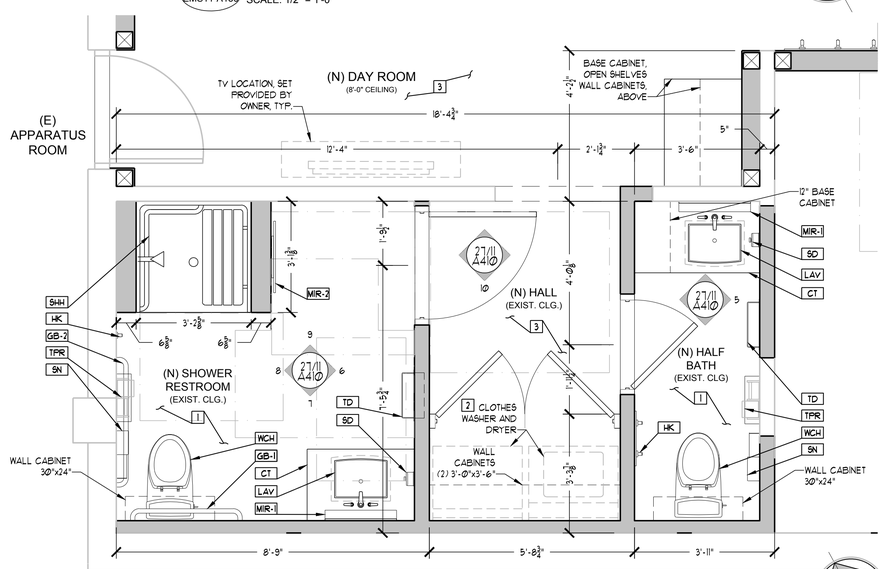

3 EMS11-A130 ENLARGED SHOWER/RR, UTILITY, & 1/2 BATH FLOOR PLAN
SCALE: 1/2" = 1'-0"

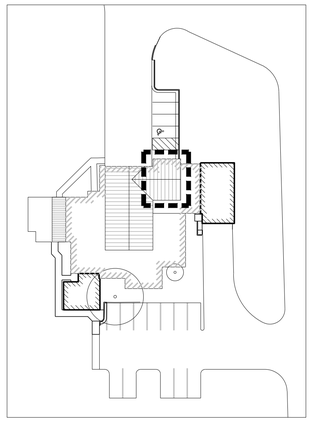

KEY PLAN

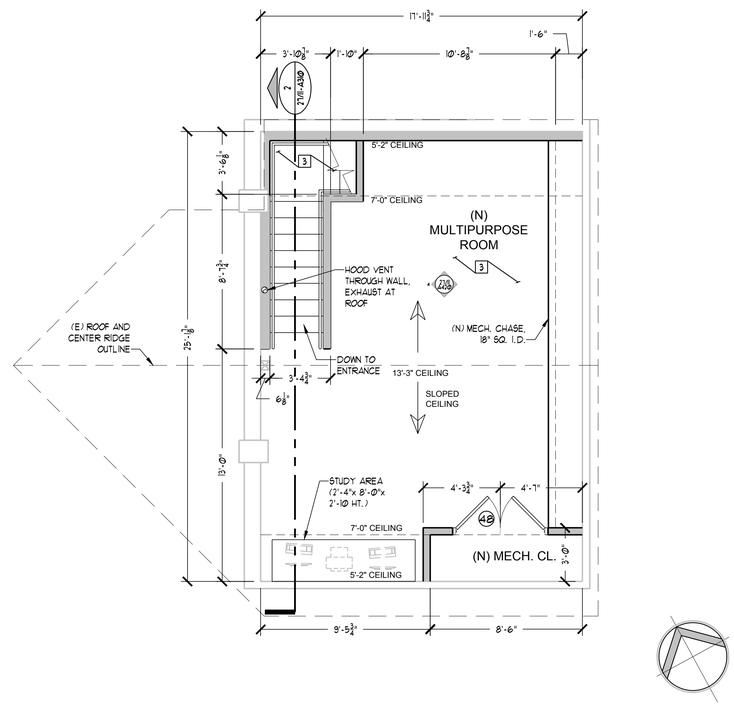

1 EMS11-A130 SECOND FLOOR PLAN
SCALE: 1/4" = 1'-0"

LEGEND

- PROPERTY LINES
- BUILDING SETBACK LINES
- EXISTING TO REMAIN
- EXISTING OVERHEAD OBJECT
- EXISTING TO REMOVE
- EXISTING STRUCTURE
- PROPOSED STRUCTURE
- PROPOSED OBJECT
- PROPOSED WALL FINISH TYPE (TILE / PAINT)
- PROPOSED FLOOR DRAIN
- A.D.A. CLEAR FLOOR AREA
- PROPOSED GLAZING AT CLERESTORY
- PROPOSED GLAZING
- PROPOSED BRICK VENEER WALL
- PROPOSED FRAME WALL
- PROPOSED WALL INFILL, AS NOTED
- PROPOSED CMU BLOCK WALL
- PROPOSED CONCRETE
- PROPOSED FLOOR TILE
- PROPOSED PLYWOOD

CALL-OUT INDEX

1. TILE FLOORING
2. APPLIANCES TO BE PROVIDED BY OWNER
3. RUBBER TILE FLOORING OR APPROVED EQUAL

BID DOCUMENTS

REGISTERED ARCHITECT OWEN HARTSOE 16346 STATE OF TEXAS

mwm Design Group
305 East Huntland Drive
Suite 200
Austin, Texas 78752
p: 512.453.0767
f: 512.453.1734
TBAE FIRM REGISTRATION NO.: 1452
TBPE FIRM REGISTRATION NO.: F-1416
TBPLS FIRM REGISTRATION NO.: 10065600

NO.	DATE	DESCRIPTION	BY

0 — 1"
The bar above measures one inch on the original drawing. Adjust scales accordingly.

EMS11 SECOND & ENLARGED FLOOR PLANS

AFD WOMEN'S LOCKER RM. ADDN, PHASE V AND
EMS VEHICLE BAY EXPANSIONS & GEN. RENOVATIONS
5401 McCARTY LANE, AUSTIN, TEXAS 78749

PLOTTED: 8/30/2016
JOB NO: 023-79D

FS27/EMS11
A130

File: Y:\023-79D_WomensLockerRooms\CAD\Fire Station 27 - EMS 11\Sheets\FS27 EMS11-A130 2ND FL & LG PLANS.dwg 24x36

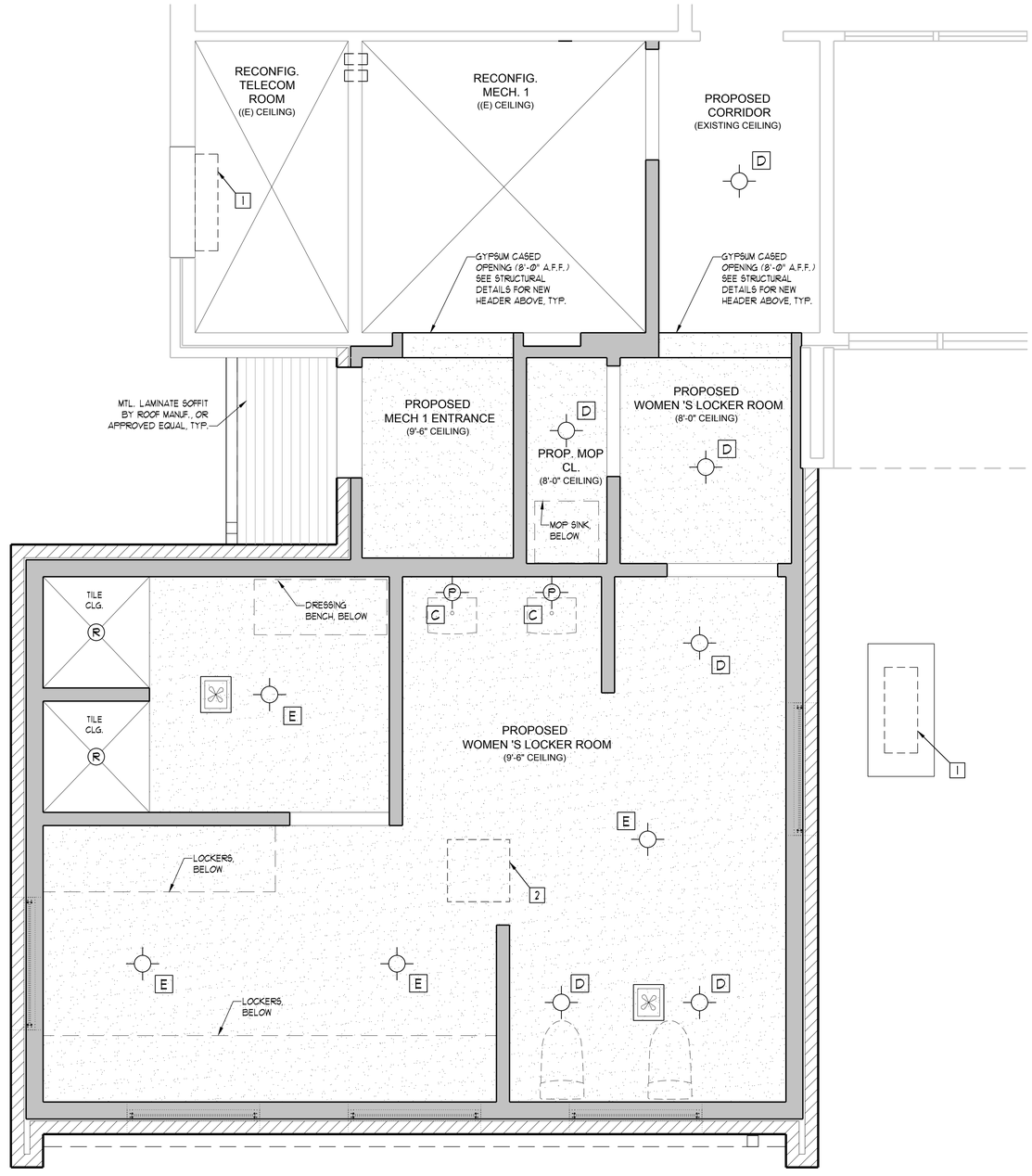

1 27/11-A140 REFLECTED CEILING PLAN
SCALE: 1/2" = 1'-0"

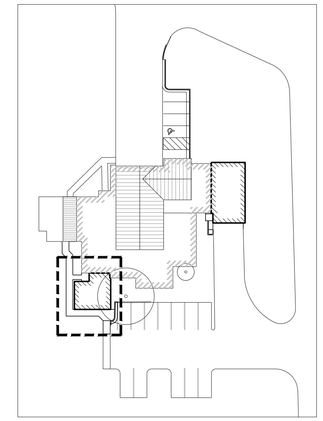

KEY PLAN

RCP LEGEND

- GYPSUM WALLBOARD
- 2'x2' LAY-IN ACOUSTICAL TILE CEILING GRID
- PLYWOOD SURFACE
- 1x WOOD PLANKS/T&G
- 2x WOOD FRAME INFILL, INCLUDES: INSULATION, GYP. BD., TAPE, FLOAT, CHAULK ALL JOINTS/GAPS & PAINT
- OPEN TO STRUCTURE ABOVE
- FLUSH MOUNT CEILING LIGHT
- PENDANT CEILING LIGHT
- RECESSED CEILING MOUNT LIGHT
- (2) 4 FT. NEON BALLAST FLUSH MOUNT WORK LIGHT, W/ MTL PROTECTIVE COVER
- RECESSED MOUNTED EXHAUST FAN
- CEILING FAN WITH LIGHT
- WALL SCONCE
- SURFACE MOUNT UNDER-CABINET LIGHT

CALL-OUT KEY

1. (N) MINI SPLIT AC WALL MOUNTED UNIT AND HEAT PUMP OUTDOOR UNIT (ON 2'x4' CONC. SLAB), SEE MEP SPECS
2. CEILING FLUSH MOUNT HVAC CASSETTE, 22 1/2"X 22 1/2", SEE MEP DRAWINGS FOR SPECS., TYP.
3. LIGHTING FIXTURE SCHEDULE F5/EMSG0-A0.10, DETAIL No. 3

BID DOCUMENTS

REGISTERED ARCHITECT WOWEN HARGROVE 18345 STATE OF TEXAS

mwm Design Group
305 East Huntland Drive
Suite 200
Austin, Texas 78752
p: 512.453.0767
f: 512.453.1734
TBAE FIRM REGISTRATION NO.: 1452
TBPE FIRM REGISTRATION NO.: F-1416
TBPLS FIRM REGISTRATION NO.: 10065600

NO.	DATE	DESCRIPTION	BY

0 1"
The bar above measures one inch on the original drawing. Adjust scales accordingly.

FS27 REFLECTED CEILING PLAN

AFD WOMEN'S LOCKER RM. ADDN, PHASE V AND
EMS VEHICLE BAY EXPANSIONS & GEN. RENOVATIONS
5401 McCARTY LANE, AUSTIN, TEXAS 78749

PLOTTED: 8/30/2016
JOB NO: 023-79D

FS27/EMS11
A140

File: X:\023-79D_WomensLockerRooms\CAD\Fire Station 27 - EMS 11\Sheets\FS27 EMS11-A140 RC PLAN.dwg 24x36

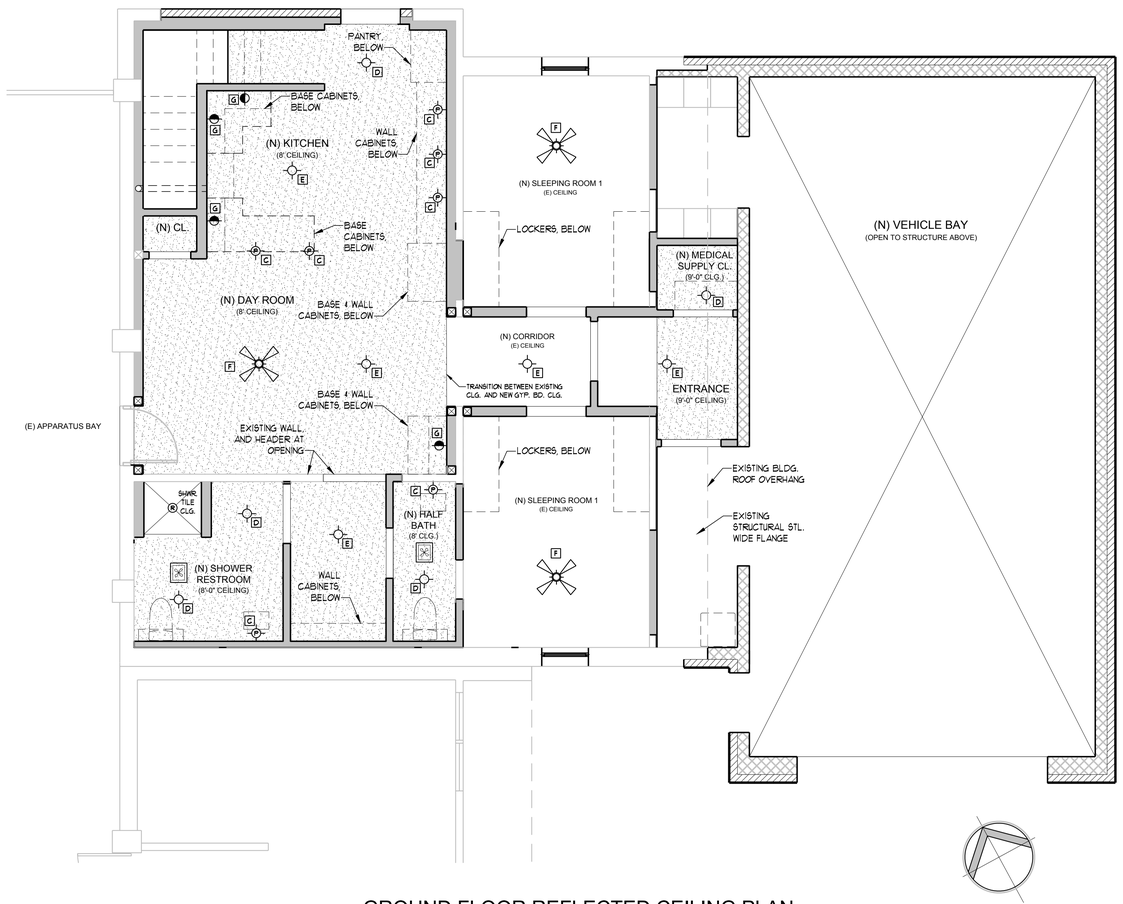

1 27/11-A150 GROUND FLOOR REFLECTED CEILING PLAN

SCALE: 1/4" = 1'-0'

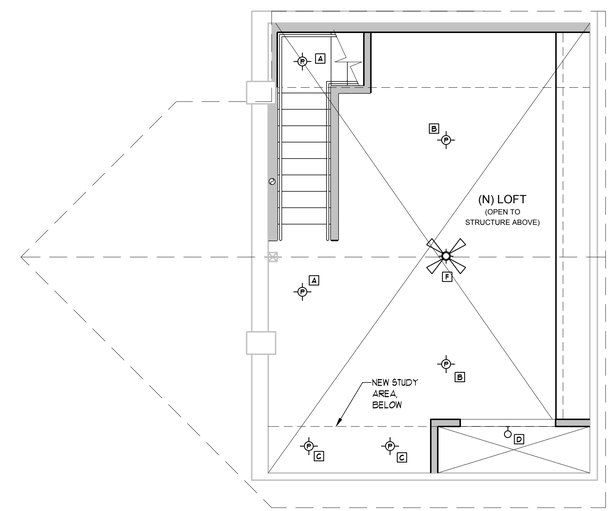

2 27/11-A150 2ND. FLOOR REFLECTED CEILING PLAN

SCALE: 1/4" = 1'-0'

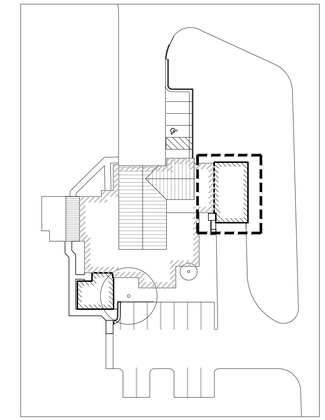

KEY PLAN

RCP LEGEND

- GYPSUM WALLBOARD
- 2'x2' LAY-IN ACOUSTICAL TILE CEILING GRID
- PLYWOOD SURFACE
- 1x WOOD PLANKS/T&G
- 2x WOOD FRAME INFILL, INCLUDES:- INSULATION, GYP. BD., TAPE, FLOAT, CHALK ALL JOINTS/GAPS & PAINT
- OPEN TO STRUCTURE ABOVE
- FLUSH MOUNT CEILING LIGHT
- PENDANT CEILING LIGHT
- RECESSED CEILING MOUNT LIGHT
- (2) 4 FT. NEON BALLAST FLUSH MOUNT WORK LIGHT, W/ MTL PROTECTIVE COVER
- RECESSED MOUNTED EXHAUST FAN
- CEILING FAN WITH LIGHT
- WALL SCONCE
- SURFACE MOUNT UNDER-CABINET LIGHT

CALL-OUT KEY

1 LIGHTING FIXTURE SCHEDULE F5/EM50-A020, DETAIL No. 3

BID DOCUMENTS

REGISTERED ARCHITECT OWEN HARNOS 16348 STATE OF TEXAS

mwm Design Group
305 East Huntland Drive
Suite 200
Austin, Texas 78752
p: 512.453.0767
f: 512.453.1734
TBAE FIRM REGISTRATION NO.: 1452
TBPE FIRM REGISTRATION NO.: F-1416
TBPLS FIRM REGISTRATION NO.: 10065600

NO.	DATE	DESCRIPTION	BY

0 1"

The bar above measures one inch on the original drawing. Adjust scales accordingly.

EMS11 REFLECTED CEILING PLANS

AFD WOMEN'S LOCKER RM. ADDN, PHASE V AND
EMS VEHICLE BAY EXPANSIONS & GEN. RENOVATIONS
5401 McCARTY LANE, AUSTIN, TEXAS 78749

PLOTTED: 8/30/2016
JOB NO: 023-79D

FS27/EMS11
A150

File: Y:\023-79D_WomensLockerRooms\CAD\Fire Station 27 - EMS 11\Sheets\FS27 EMS11-A150 RC PLAN.dwg 24x36

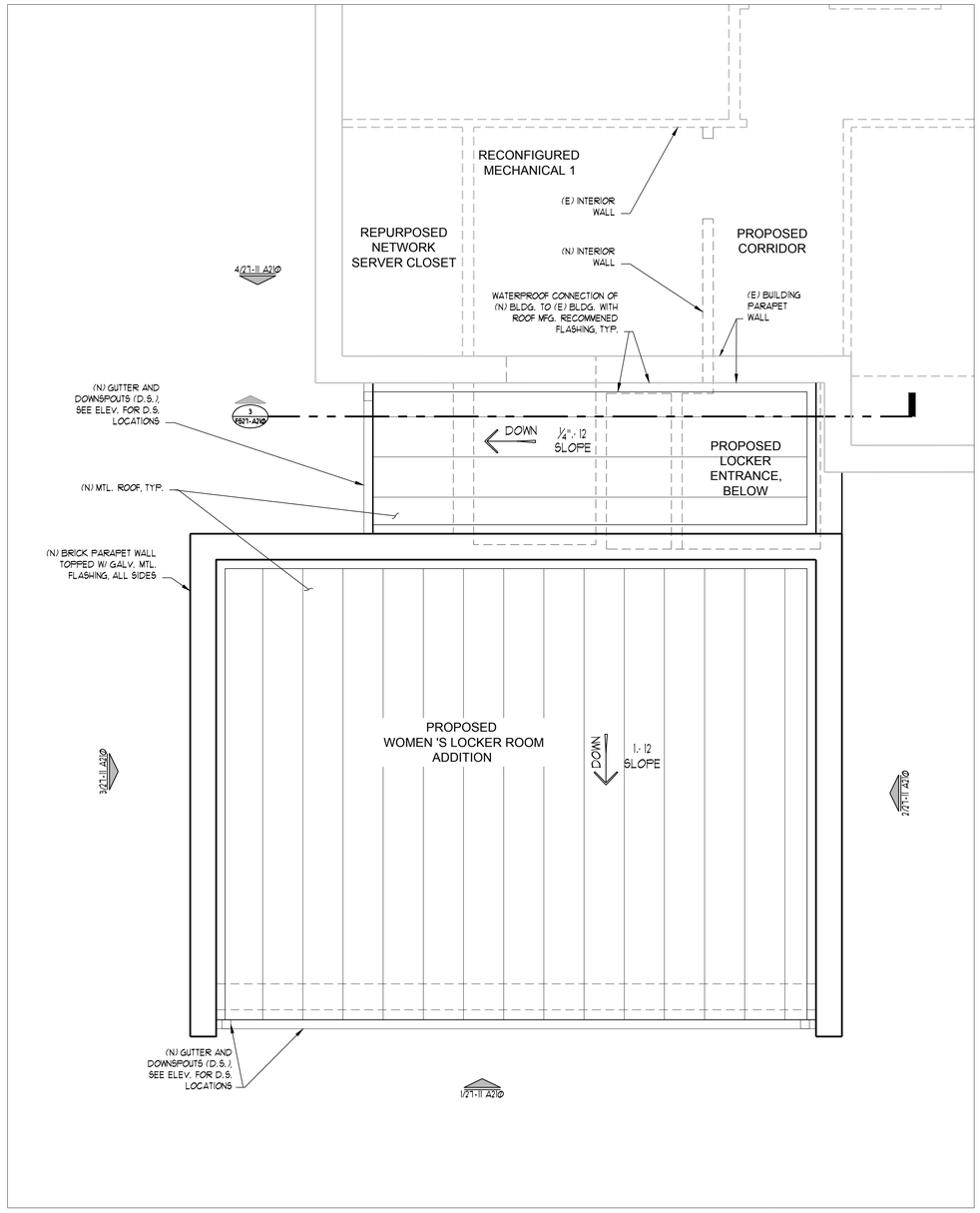

1 27/11-A160 FS27 ROOF PLAN
SCALE: 3/8" = 1'-0"

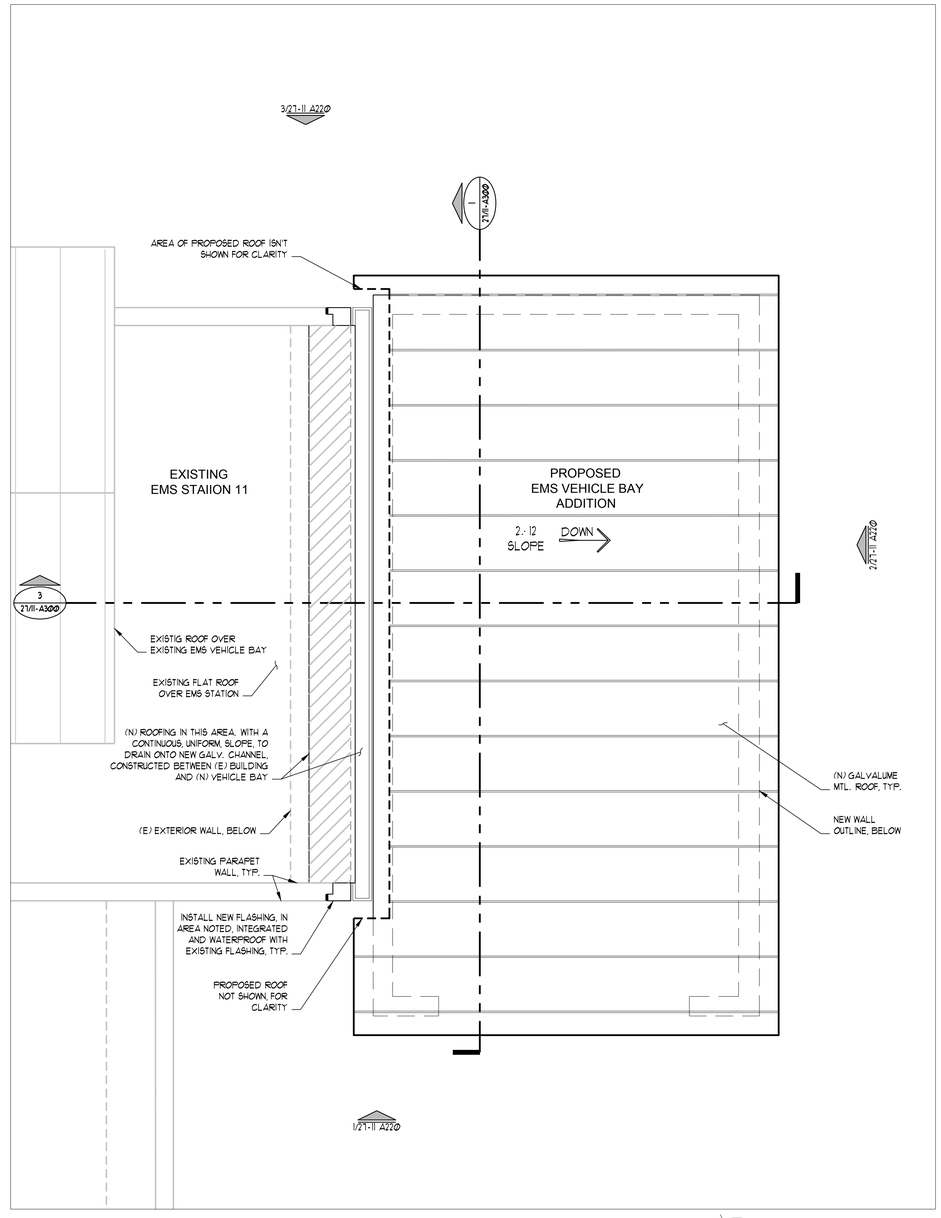

2 27/11-A160 EMS11 ROOF PLAN
SCALE: 1/4" = 1'-0"

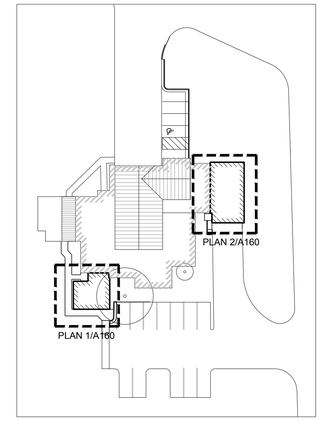

KEY PLAN

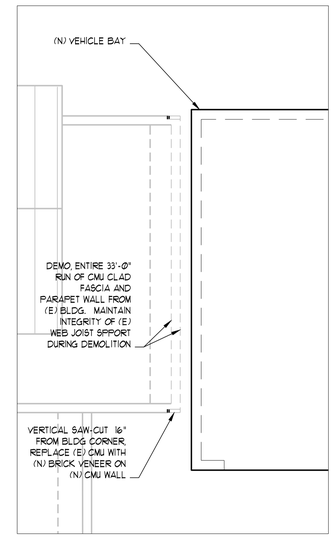

3 27/11-A160 EMS 11 DEMO ROOF PLAN
SCALE: 1/8" = 1'-0"

BID DOCUMENTS

REGISTERED ARCHITECT W. OWEN WARRODD 18345 STATE OF TEXAS

mwm Design Group
305 East Huntland Drive
Suite 200
Austin, Texas 78752
p: 512.453.0767
f: 512.453.1734

TBAE FIRM REGISTRATION NO.: 1452
TBPE FIRM REGISTRATION NO.: F-1416
TBPLS FIRM REGISTRATION NO.: 10065600

NO.	DATE	DESCRIPTION	BY

0 1"
The bar above measures one inch on the original drawing. Adjust scales accordingly.

FS27 & EMS11 ROOF PLANS & EMS 11 DEMO ROOF PLAN

AFD WOMEN'S LOCKER RM. ADDN, PHASE V AND
EMS VEHICLE BAY EXPANSIONS & GEN. RENOVATIONS
5401 McCARTY LANE, AUSTIN, TEXAS 78749

PLOTTED: 8/30/2016
JOB NO: 023-79D

FS27/EMS11
A160

File: Y:\023-79D_WomensLockerRooms\CAD\Fire Station 27 - EMS 11\Sheets\FS27 EMS11-A160 ROOF PLAN.dwg 2:4x35

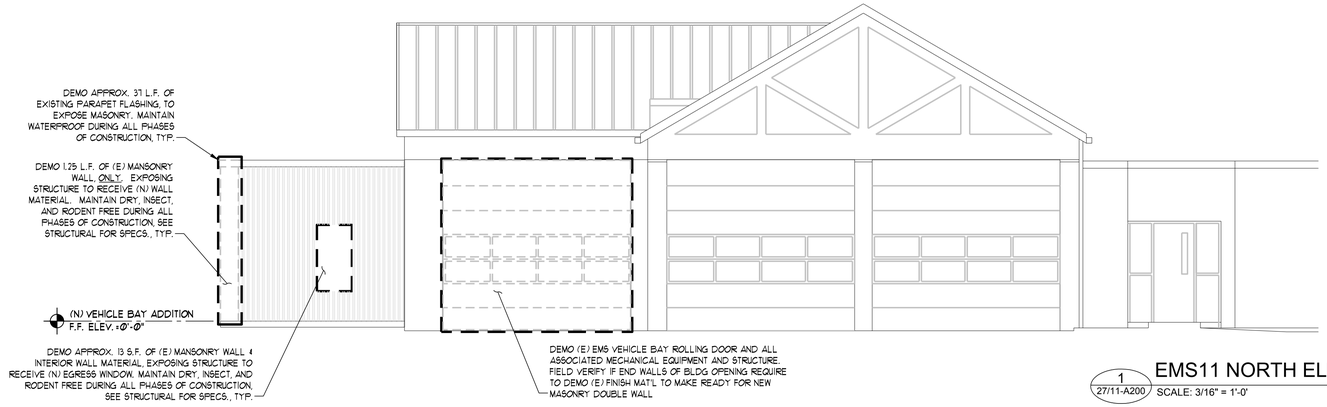

1 / 27/11-A200 EMS11 NORTH ELEVATION

SCALE: 3/16" = 1'-0'

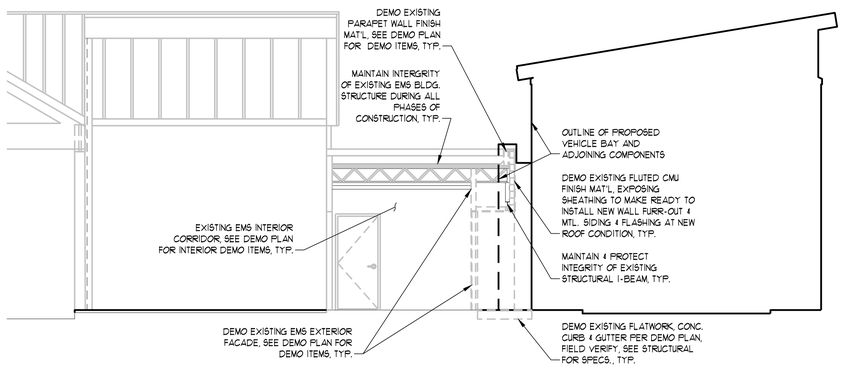

2 / 27/11-A200 EMS11 SOUTH SECTION

SCALE: 3/16" = 1'-0'

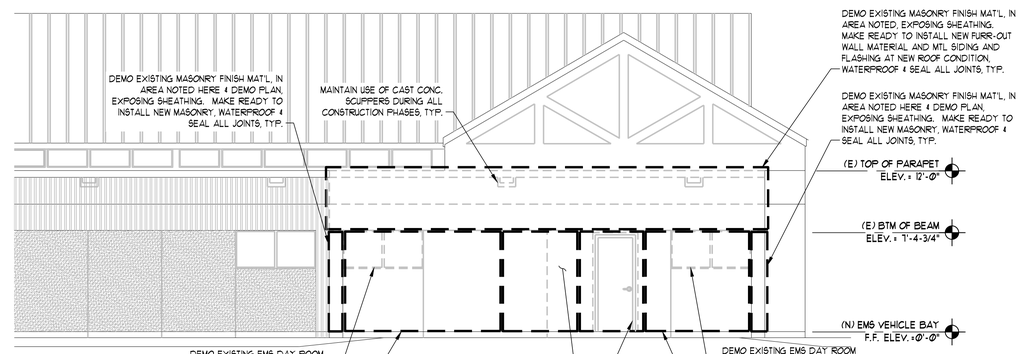

3 / 27/11-A200 EMS11 EAST ELEVATION

SCALE: 3/16" = 1'-0'

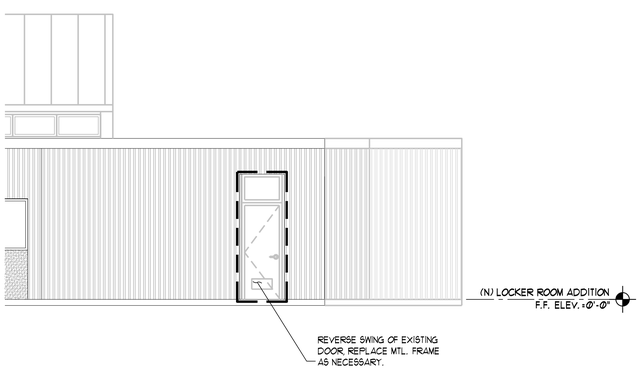

4 / 27/11-A200 FS27 WEST ELEVATION

SCALE: 3/16" = 1'-0'

5 / 27/11-A200 FS27 & EMS11 SOUTH ELEVATION

SCALE: 3/16" = 1'-0'

BID DOCUMENTS

REGISTERED ARCHITECT W. OWEN HARRISON 18346 STATE OF TEXAS

mwm Design Group

305 East Huntland Drive
Suite 200
Austin, Texas 78752
p: 512.453.0767
f: 512.453.1734

TBAE FIRM REGISTRATION NO.: 1452
TBPE FIRM REGISTRATION NO.: F-1416
TBPLS FIRM REGISTRATION NO.: 10065600

NO.	DATE	DESCRIPTION	BY

0 — 1"

The bar above measures one inch on the original drawing. Adjust scales accordingly.

FS27 & EMS11 DEMOLITION ELEVATIONS

AFD WOMEN'S LOCKER RM. ADDN, PHASE V AND
EMS VEHICLE BAY EXPANSIONS & GEN. RENOVATIONS
5401 McCARTY LANE, AUSTIN, TEXAS 78749

PLOTTED: 8/30/2016
JOB NO: 023-79D

FS27/EMS11
A200

File: Y:\023-79D_WomensLockerRooms\CAD\Fire Station 27 — EMS 11\Sheets\FS27 EMS11-A200 DEMO ELEV.dwg 24x36

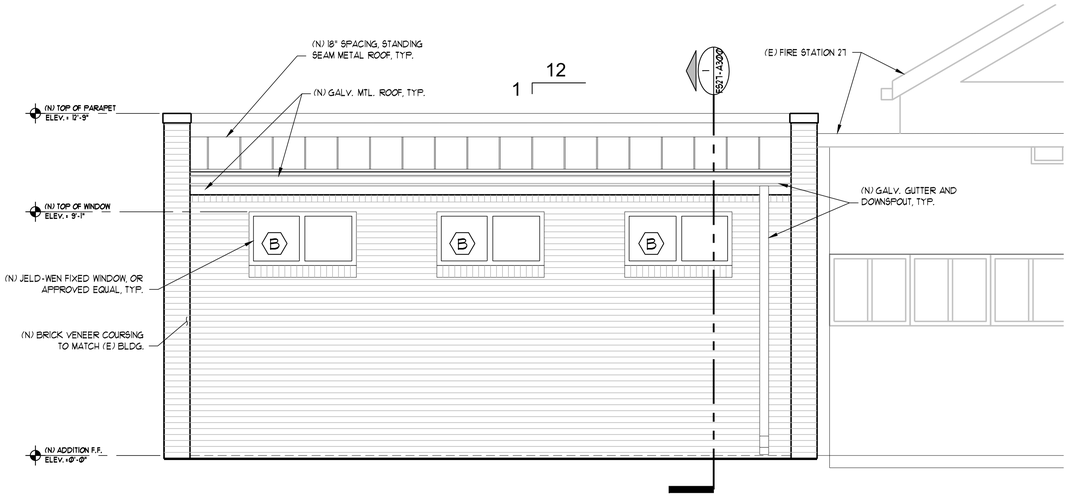

1 27/11-A210 SOUTH SECTION
SCALE: 3/8" = 1'-0"

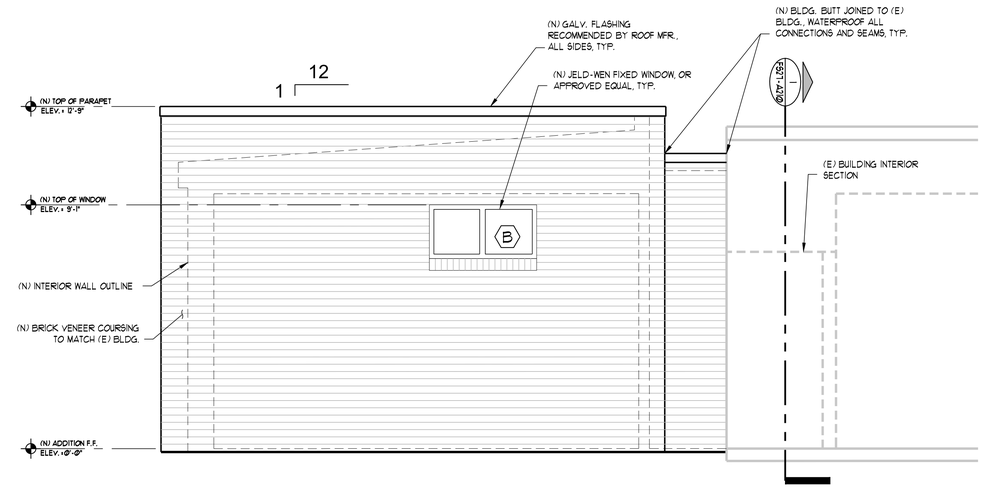

2 27/11-A210 EAST ELEVATION
SCALE: 3/8" = 1'-0"

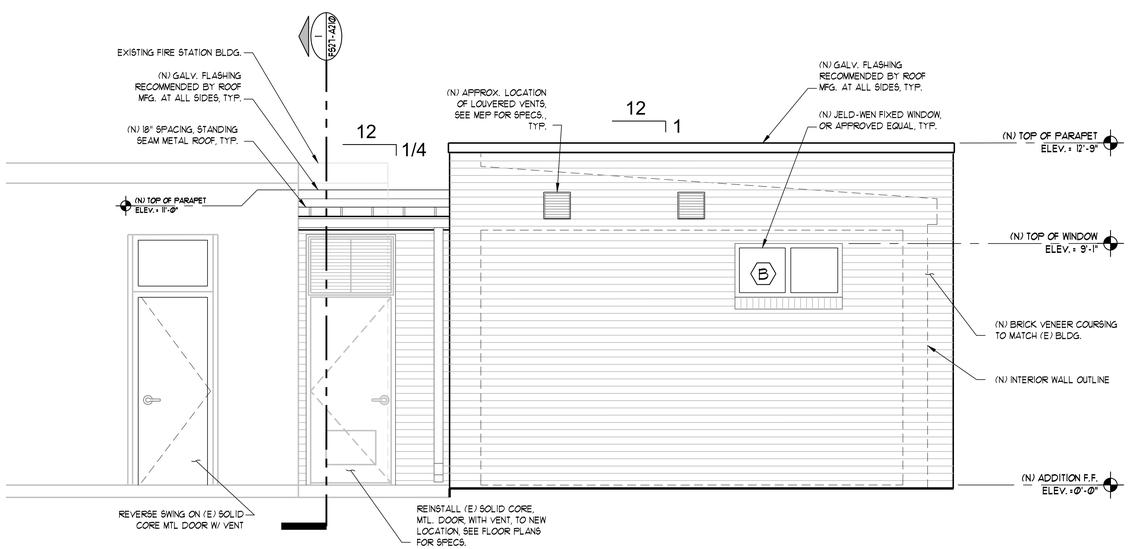

3 27/11-A210 WEST ELEVATION
SCALE: 3/8" = 1'-0"

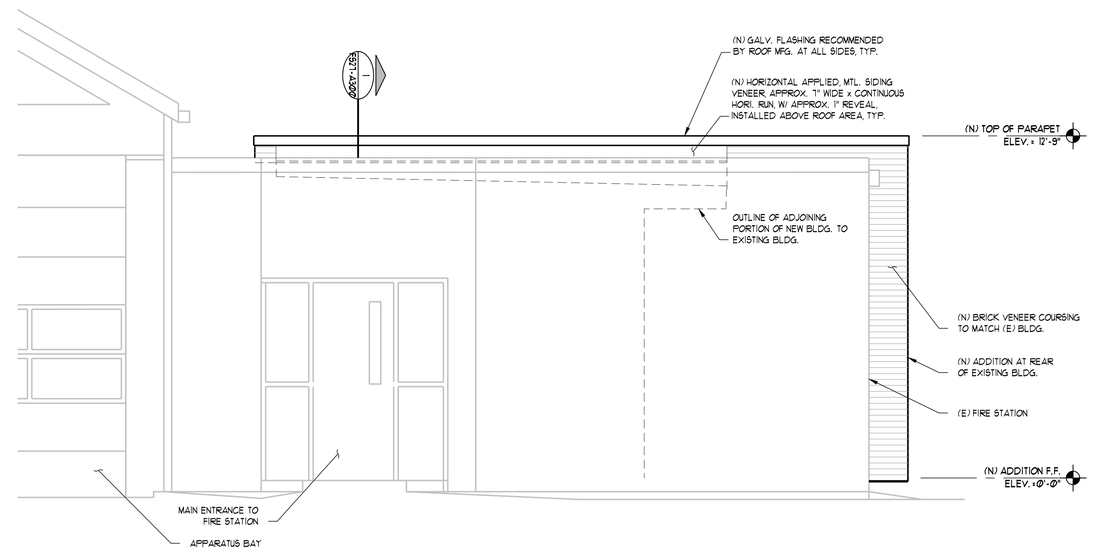

4 27/11-A210 NORTH ELEVATION
SCALE: 3/8" = 1'-0"

BID DOCUMENTS

REGISTERED ARCHITECT W. OWEN MARROD 18345 STATE OF TEXAS

mwm Design Group
305 East Huntland Drive
Suite 200
Austin, Texas 78752
p: 512.453.0767
f: 512.453.1734
TBAE FIRM REGISTRATION NO.: 1452
TBPE FIRM REGISTRATION NO.: F-1416
TBPLS FIRM REGISTRATION NO.: 10065600

NO.	DATE	DESCRIPTION	BY

0 1"
The bar above measures one inch on the original drawing. Adjust scales accordingly.

FS27 BUILDING ELEVATIONS

AFD WOMEN'S LOCKER RM. ADDN, PHASE V AND
EMS VEHICLE BAY EXPANSIONS & GEN. RENOVATIONS
5401 McCARTY LANE, AUSTIN, TEXAS 78749

PLOTTED: 8/30/2016
JOB NO: 023-79D

FS27/EMS11
A210

File: X:\023-79D_WomensLockerRooms\CAD\Fire Station 27 - EMS 11\Sheets\FS27 EMS11-A210 BLDG ELEV.dwg 24x36

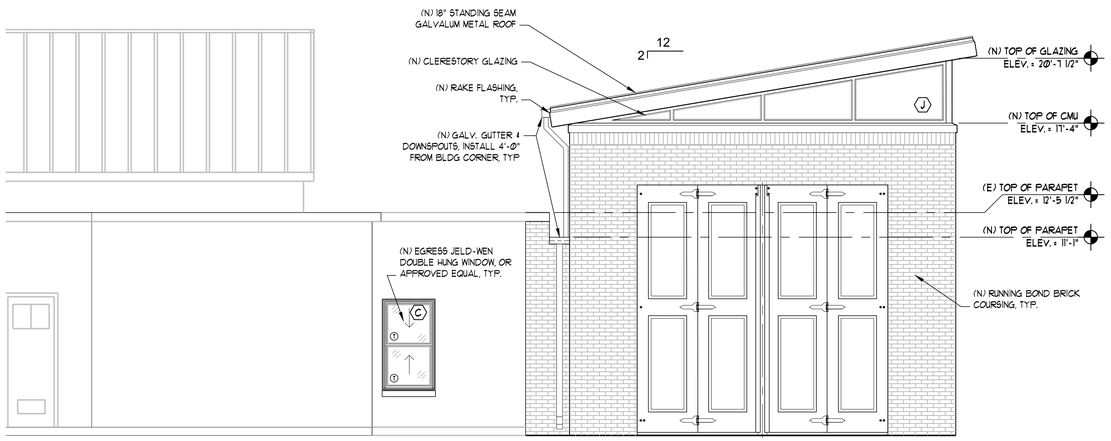

1 27/11-A220 SOUTH ELEVATION

SCALE: 1/4" = 1'-0"

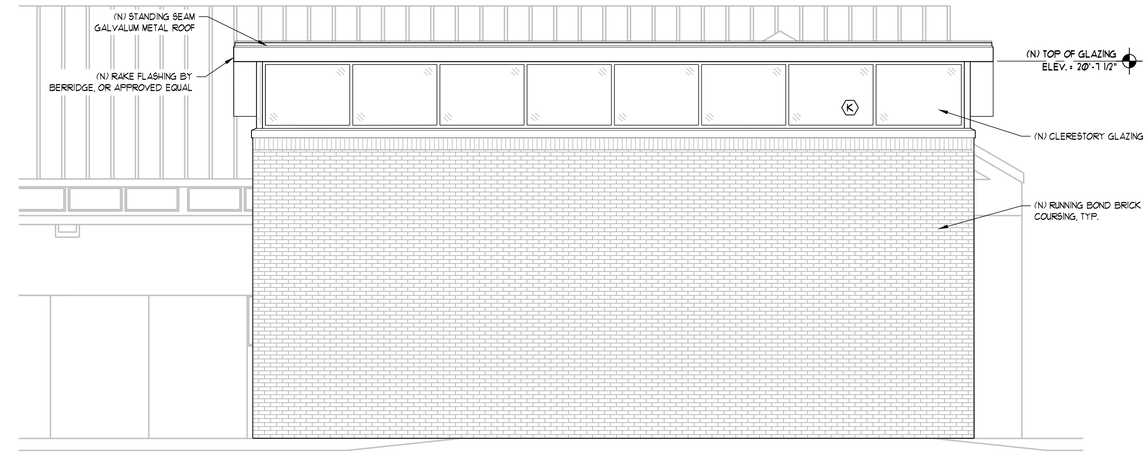

2 27/11-A220 EAST ELEVATION

SCALE: 1/4" = 1'-0"

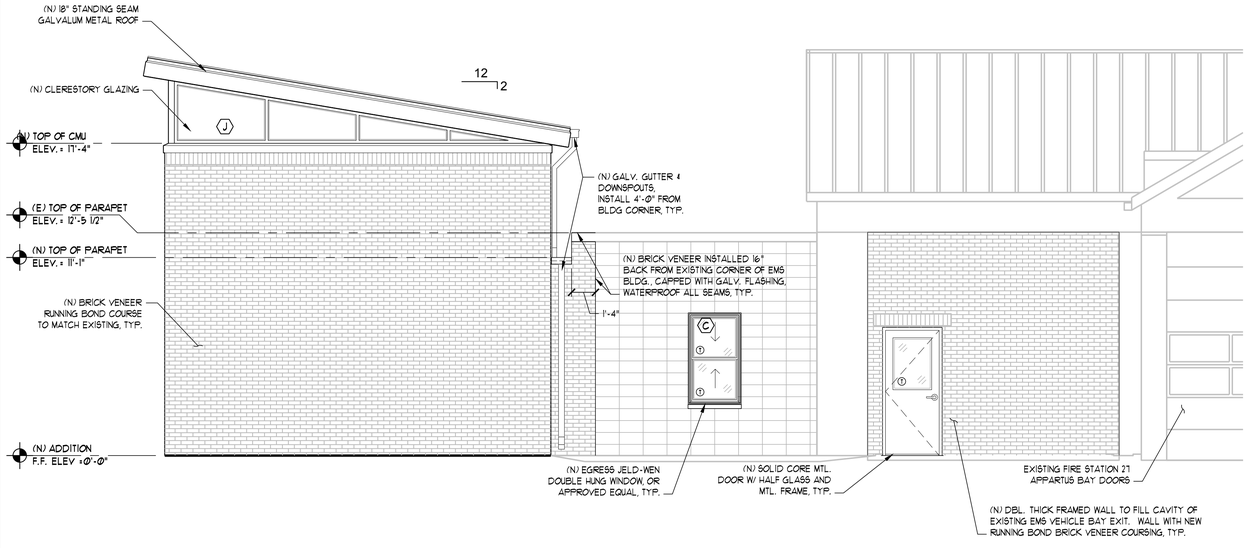

3 27/11-A220 NORTH ELEVATION

SCALE: 1/4" = 1'-0"

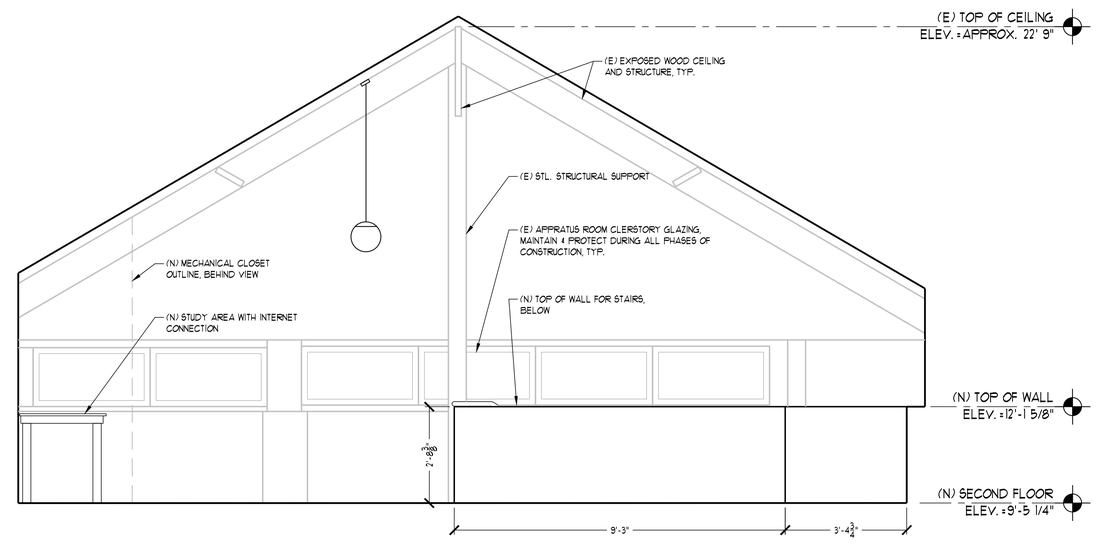

4 27/11-A220 MULTI-PURPOSE ROOM INT. ELEV.

SCALE: 1/2" = 1'-0"

BID DOCUMENTS

REGISTERED ARCHITECT WOMEN HARRISON 18345 STATE OF TEXAS

mwm Design Group
305 East Huntland Drive
Suite 200
Austin, Texas 78752
p: 512.453.0767
f: 512.453.1734

TBAE FIRM REGISTRATION NO.: 1452
TBPE FIRM REGISTRATION NO.: F-1416
TBPLS FIRM REGISTRATION NO.: 10065600

NO.	DATE	DESCRIPTION	BY

0 1"

The bar above measures one inch on the original drawing. Adjust scales accordingly.

EMS11 BUILDING ELEVATIONS

AFD WOMEN'S LOCKER RM. ADDN, PHASE V AND
EMS VEHICLE BAY EXPANSIONS & GEN. RENOVATIONS
5401 McCARTY LANE, AUSTIN, TEXAS 78749

PLOTTED: 8/30/2016
JOB NO: 023-79D

FS27/EMS11
A220

File: Y:\023-79D_WomensLockerRooms\CAD\Fire Station 27 - EMS 11\Sheets\FS27 EMS11-A220 BLDG ELEV.dwg 24x36

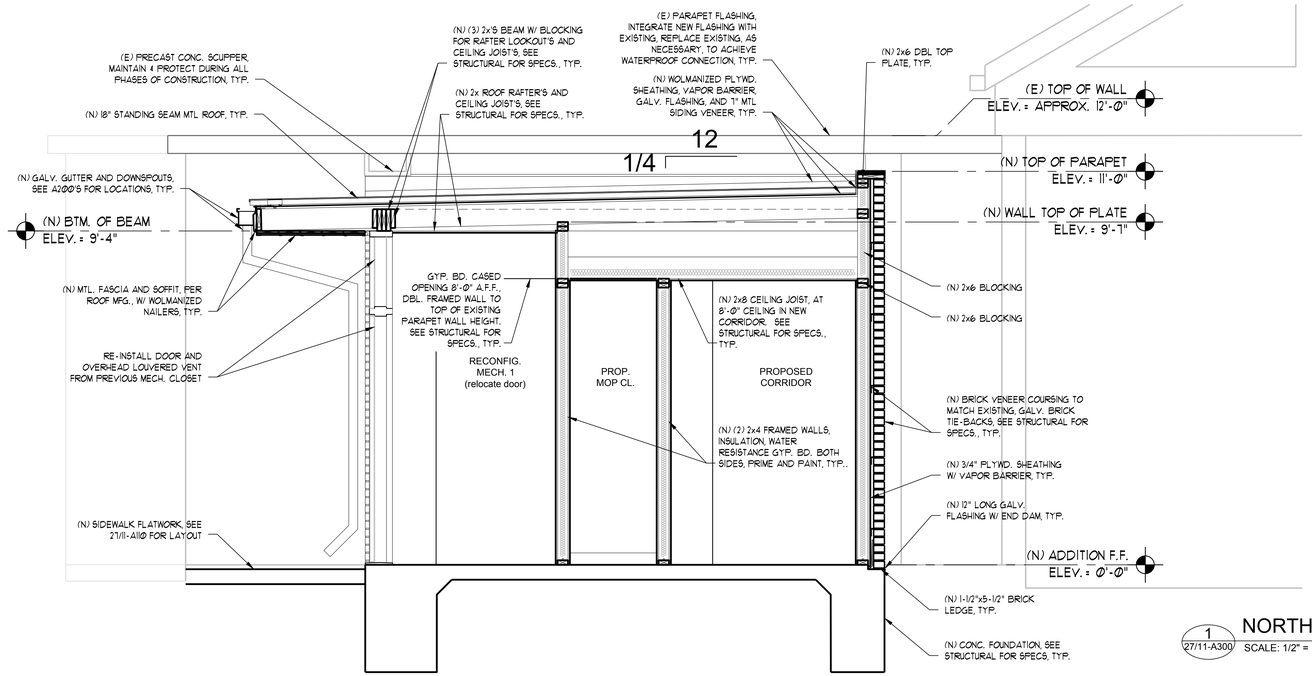

1 / 27/11-A300 NORTH SECTION AT (N) MECH. EXIT & (N) CORRIDOR

SCALE: 1/2" = 1'-0"

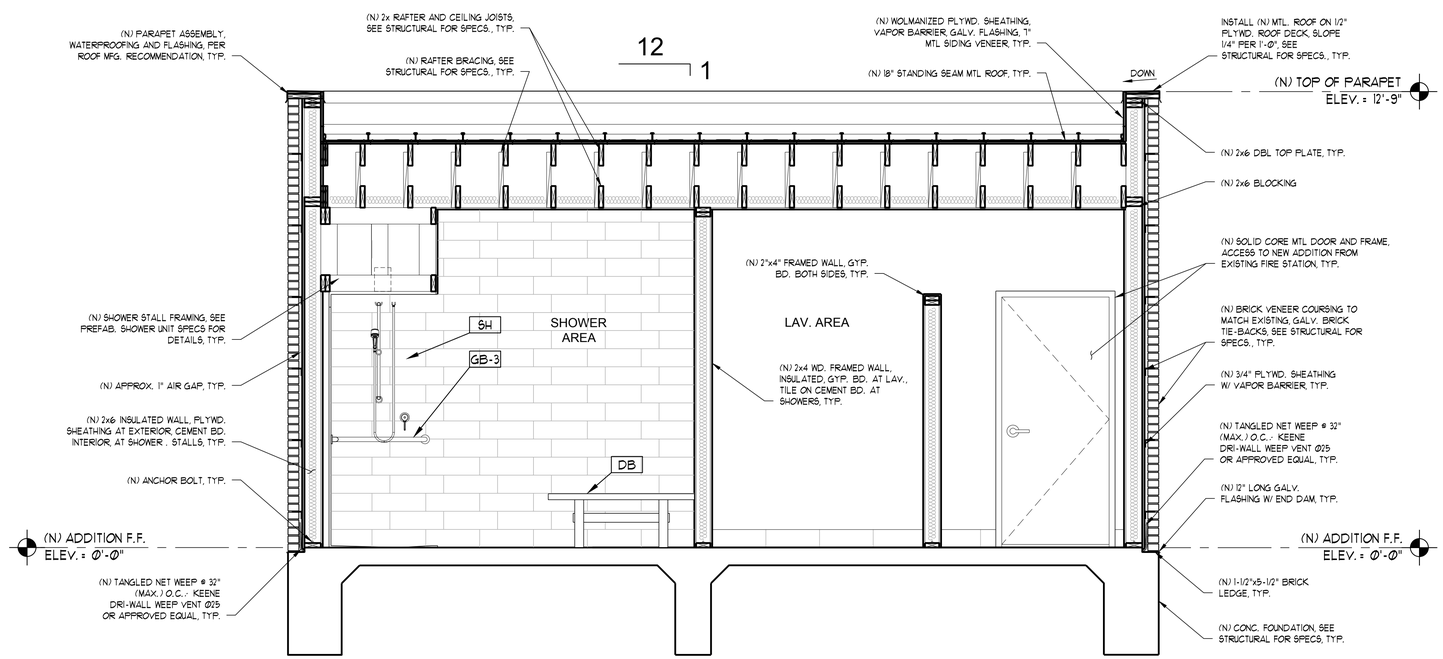

2 / 27/11-A300 NORTH SECTION

SCALE: 3/8" = 1'-0"

BID DOCUMENTS

REGISTERED ARCHITECT — OWEN HARNOD — 16348 — STATE OF TEXAS

mwm Design Group

305 East Huntland Drive
Suite 200
Austin, Texas 78752
p: 512.453.0767
f: 512.453.1734

TBAE FIRM REGISTRATION NO.: 1452
TBPE FIRM REGISTRATION NO.: F-1416
TBPLS FIRM REGISTRATION NO.: 10065600

NO.	DATE	DESCRIPTION	BY

0 — 1"

The bar above measures one inch on the original drawing. Adjust scales accordingly.

FS27 BUILDING SECTIONS

AFD WOMEN'S LOCKER RM. ADDN, PHASE V AND
EMS VEHICLE BAY EXPANSIONS & GEN. RENOVATIONS
5401 McCARTY LANE, AUSTIN, TEXAS 78749

PLOTTED: 8/30/2016

JOB NO: 023-79D

FS27/EMS11
A300

File: Y:\023-79D_WomensLockerRooms\CAD\Fire Station 27 - EMS 11\Sheets\FS27 EMS11-A300 BLDG SECT.dwg 24x36

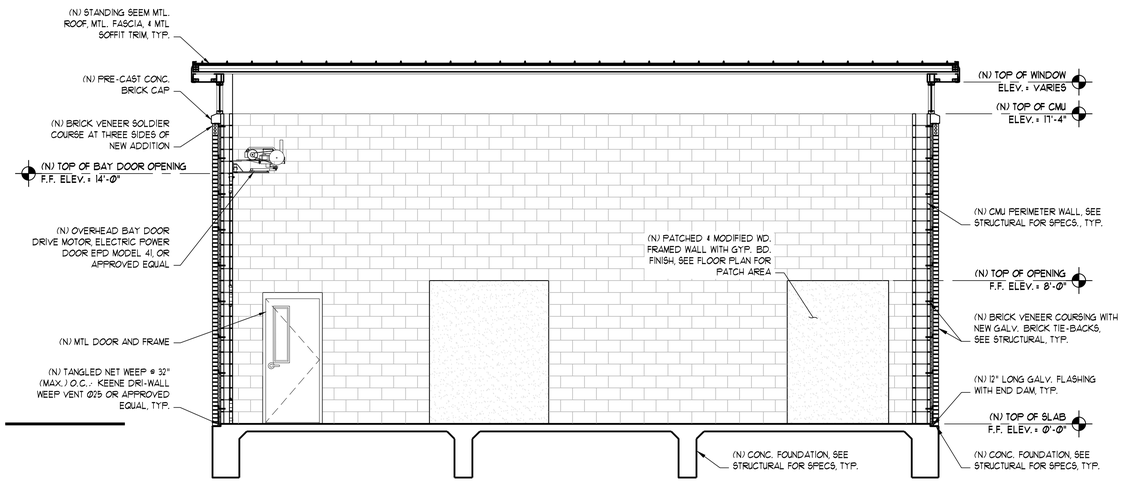

1 27/11-A310 WEST SECTION @ VEHICLE BAY
SCALE: 1/4" = 1'-0"

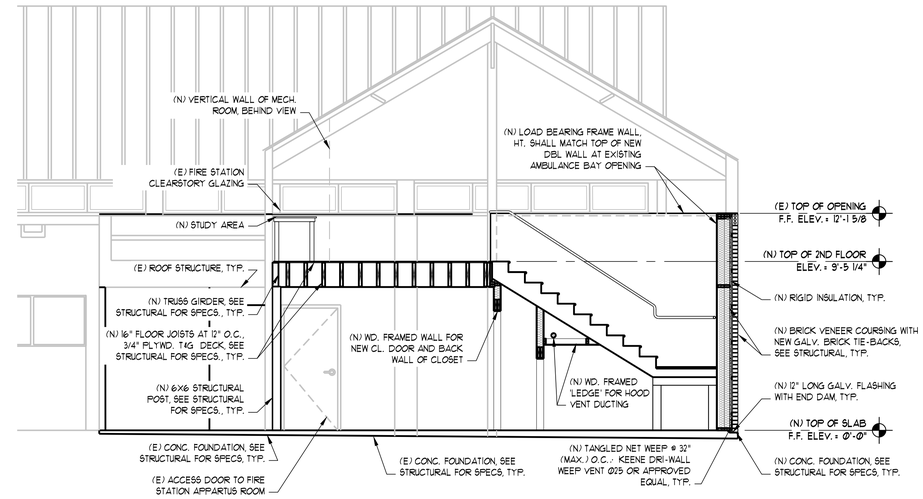

2 27/11-A310 WEST SECTION @ NEW DAY ROOM & 2nd FLOOR
SCALE: 1/4" = 1'-0"

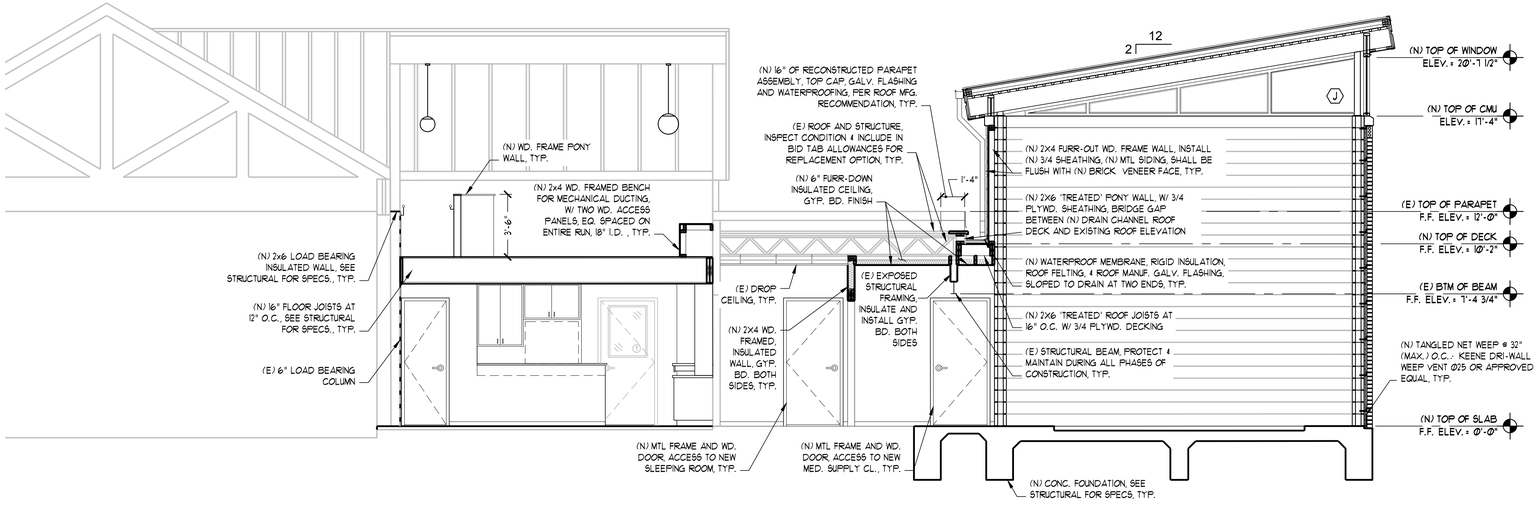

3 27/11-A310 NORTH SECTION
SCALE: 1/4" = 1'-0"

BID DOCUMENTS

REGISTERED ARCHITECT JOWEN HARRISON 18346 STATE OF TEXAS

mwm Design Group

305 East Huntland Drive
Suite 200
Austin, Texas 78752
p: 512.453.0767
f: 512.453.1734

TBAE FIRM REGISTRATION NO.: 1452
TBPE FIRM REGISTRATION NO.: F-1416
TBPLS FIRM REGISTRATION NO.: 10065600

NO.	DATE	DESCRIPTION	BY

0 1"
The bar above measures one inch on the original drawing. Adjust scales accordingly.

EMS11 BUILDING SECTIONS

AFD WOMEN'S LOCKER RM. ADDN, PHASE V AND
EMS VEHICLE BAY EXPANSIONS & GEN. RENOVATIONS
5401 McCARTY LANE, AUSTIN, TEXAS 78749

PLOTTED: 8/30/2016
JOB NO: 023-79D
FS27/EMS11
A310

File: Y:\023-79D_WomensLockerRooms\CAD\Fire Station 27 - EMS 11\Sheets\FS27 EMS11-A310 BLDG SECT.dwg 24x36

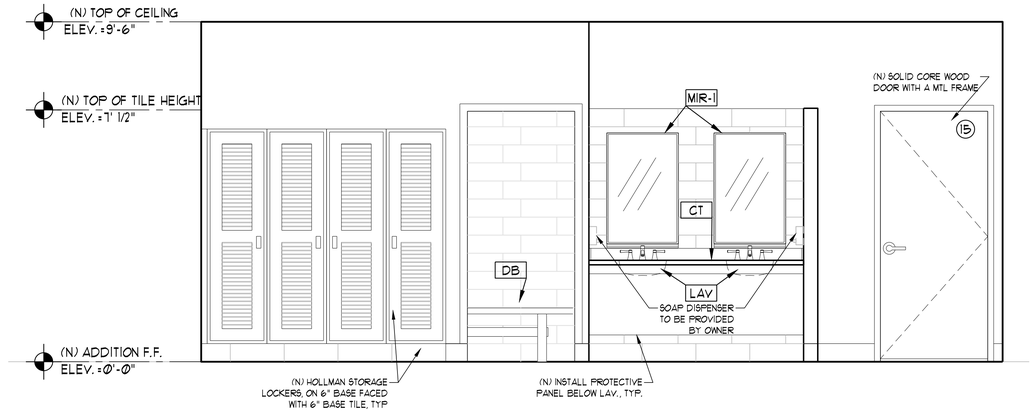

1 FS27-A400 NORTH INTERIOR ELEVATION
SCALE: 1/2" = 1'-0"

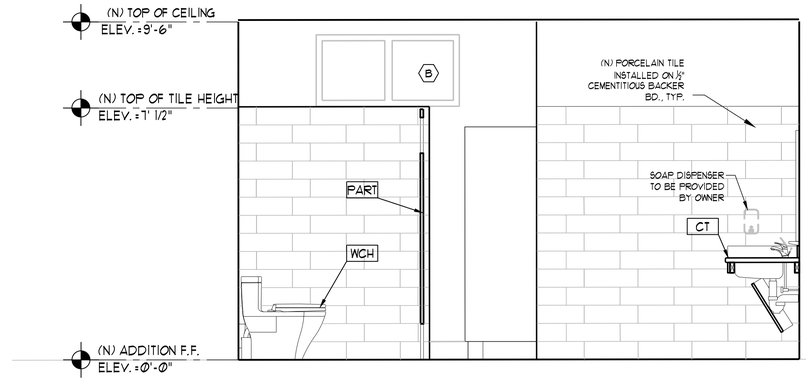

2 FS27-A400 EAST INTERIOR ELEV. @ SHOWERS & LOCKERS
SCALE: 1/2" = 1'-0"

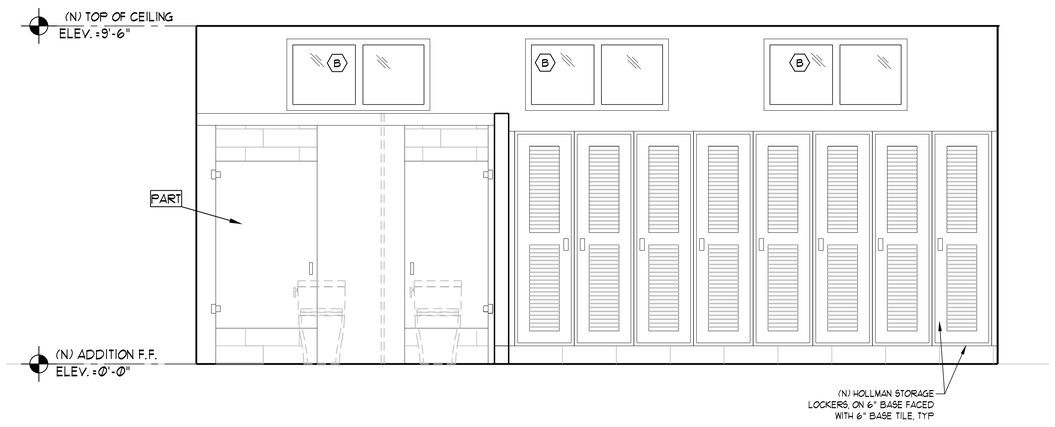

3 FS27-A400 SOUTH INTERIOR ELEVATION
SCALE: 1/2" = 1'-0"

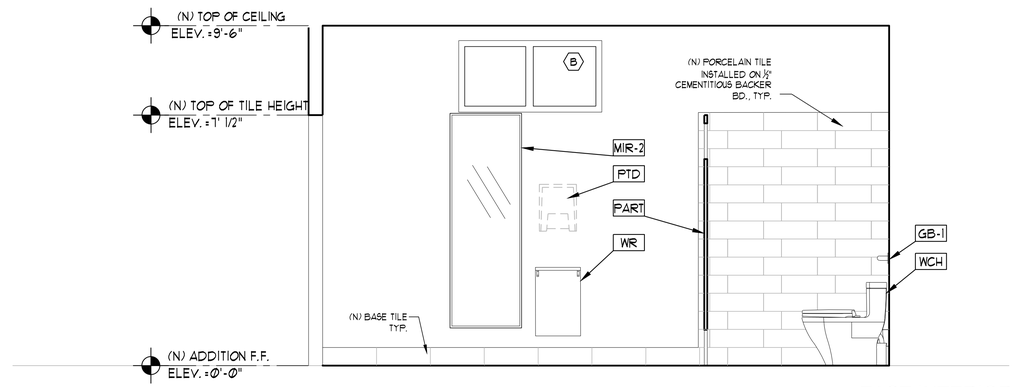

4 FS27-A210 EAST INTERIOR ELEV. @ SINK & TOILETS
SCALE: 3/8" = 1'-0"

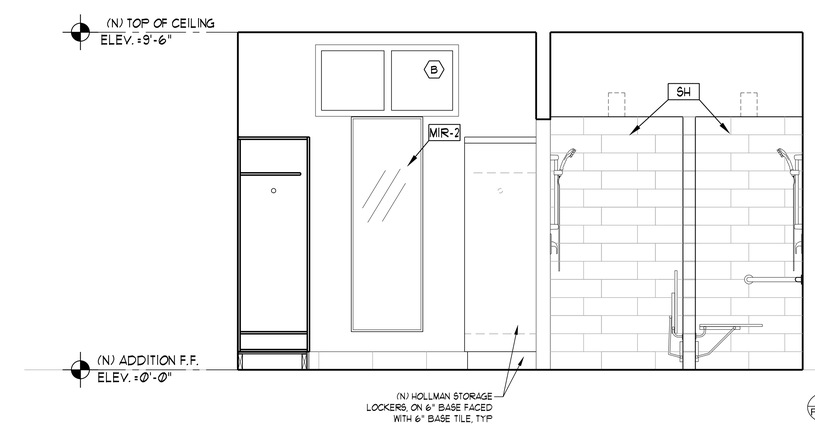

5 FS27-A400 WEST INTERIOR ELEV.
SCALE: 1/2" = 1'-0"

BID DOCUMENTS

REGISTERED ARCHITECT W. OWEN HARTNETT 18346 STATE OF TEXAS

mwm Design Group
305 East Huntland Drive
Suite 200
Austin, Texas 78752
p: 512.453.0767
f: 512.453.1734
TBAE FIRM REGISTRATION NO.: 1452
TBPE FIRM REGISTRATION NO.: F-1416
TBPLS FIRM REGISTRATION NO.: 10065600

NO.	DATE	DESCRIPTION	BY

0 1"
The bar above measures one inch on the original drawing. Adjust scales accordingly.

FS27 INTERIOR ELEVATIONS

AFD WOMEN'S LOCKER RM. ADDN, PHASE V AND
EMS VEHICLE BAY EXPANSIONS & GEN. RENOVATIONS
5401 McCARTY LANE, AUSTIN, TEXAS 78749

PLOTTED: 8/30/2016
JOB NO: 023-79D

FS27/EMS11
A400

File: Y:\023-79D_WomensLockerRooms\CAD\Fire Station 27 - EMS 11\Sheets\FS27 EMS11-A400 INT ELEV.dwg 24x36

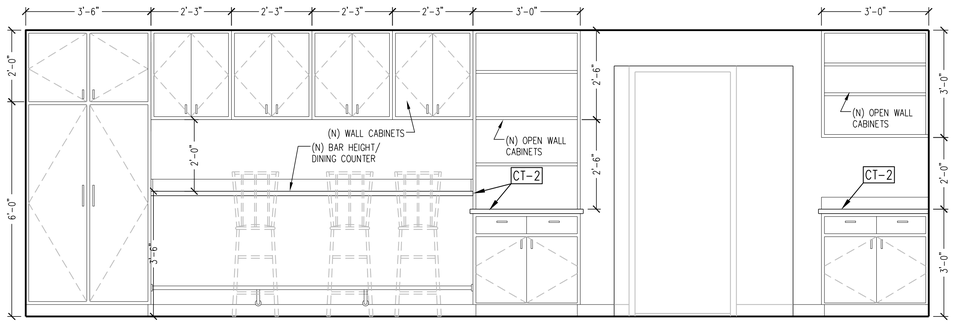

1 27/11-A410 DINING COUNTER
SCALE: 1/2" = 1'-0'

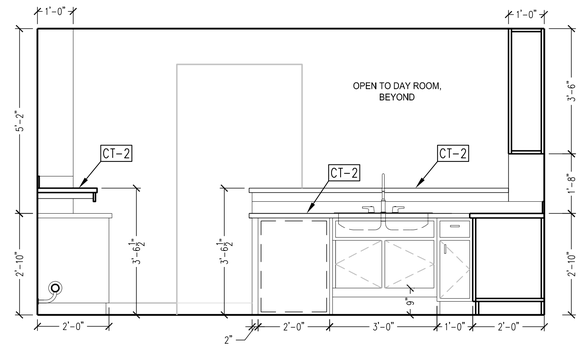

2 27/11-A410 KITCHEN COUNTER
SCALE: 1/2" = 1'-0'

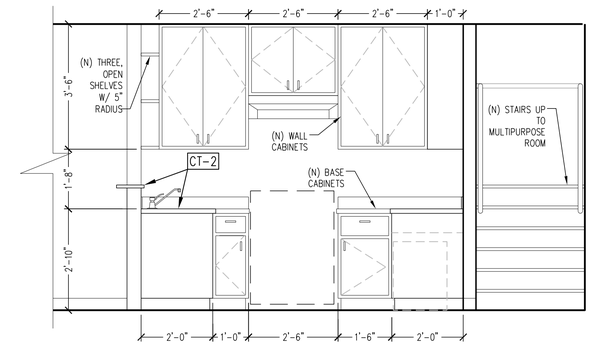

3 2711-A410 KITCHEN & STAIR
SCALE: 1/2" = 1'-0'

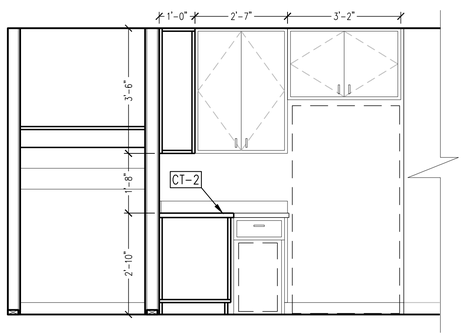

4 27/11-A410 KITCHEN & STAIR
SCALE: 1/2" = 1'-0'

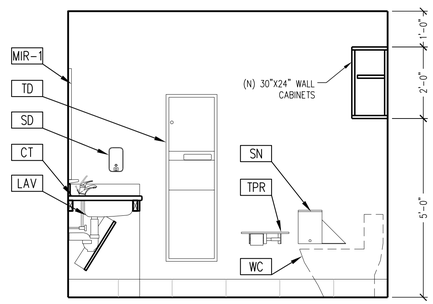

5 27/11-A410 HALF BATH
SCALE: 1/2" = 1'-0'

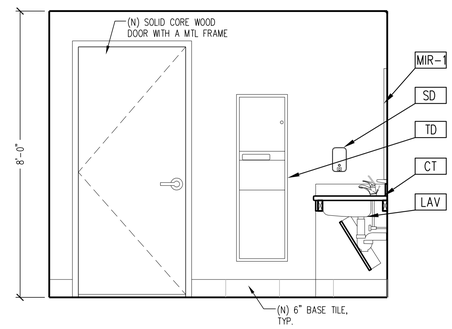

6 27/11-A410 SHOWER/RESTROOM
SCALE: 1/2" = 1'-0'

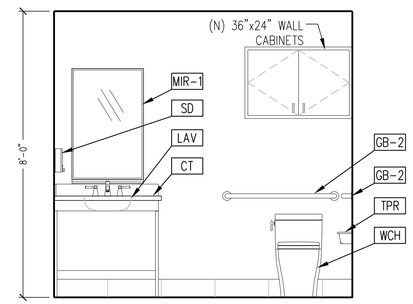

7 27/11-A410 SHOWER/RESTROOM
SCALE: 1/2" = 1'-0'

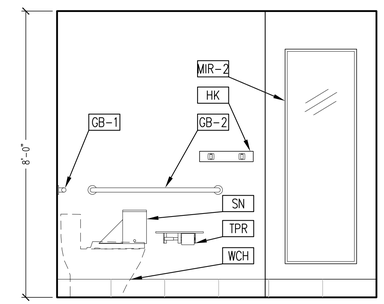

8 27/11-A410 SHOWER/RESTROOM
SCALE: 1/2" = 1'-0'

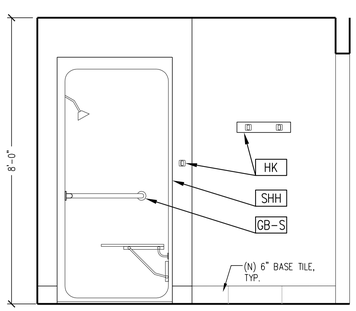

9 27/11-A410 SHOWER/RESTROOM
SCALE: 1/2" = 1'-0'

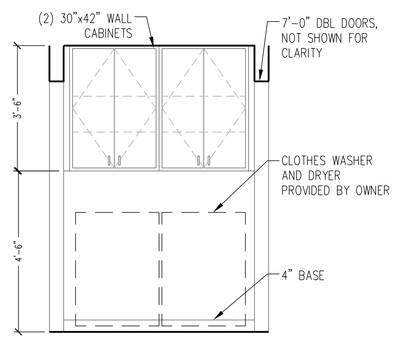

10 27/11-A410 UTILITY CLOSET
SCALE: 1/2" = 1'-0'

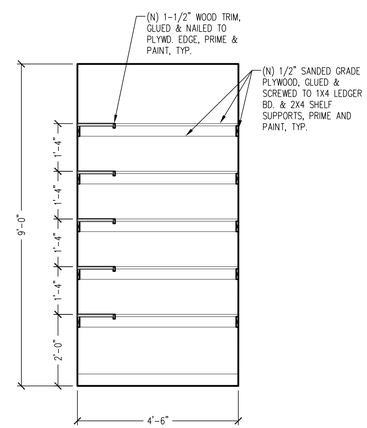

11 27/11-A410 MEDICAL CLOSET
SCALE: 1/2" = 1'-0'

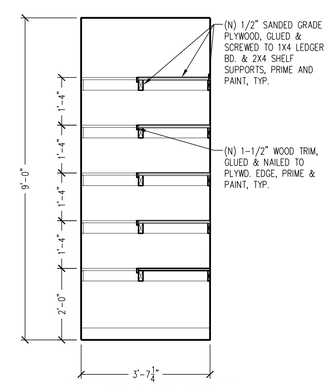

12 27/11-A410 MEDICAL CLOSET
SCALE: 1/2" = 1'-0'

BID DOCUMENTS

mwm Design Group
305 East Huntland Drive
Suite 200
Austin, Texas 78752
p: 512.453.0767
f: 512.453.1734
TBAE FIRM REGISTRATION NO.: 1452
TBPE FIRM REGISTRATION NO.: F-1416
TBPLS FIRM REGISTRATION NO.: 10065600

NO.	DATE	DESCRIPTION	BY

0 1"
The bar above measures one inch on the original drawing. Adjust scales accordingly.

EMS11 INTERIOR ELEVATIONS

AFD WOMEN'S LOCKER RM. ADDN, PHASE V AND
EMS VEHICLE BAY EXPANSIONS & GEN. RENOVATIONS
5401 McCARTY LANE, AUSTIN, TEXAS 78749

PLOTTED: 8/30/2016
JOB NO: 023-79D

FS27/EMS11
A410

File: Y:\023-79D_WomensLockerRooms\CAD\Fire Station 27 - EMS 11\Sheets\FS27 EMS11-A410 INT ELEV.dwg 24x36

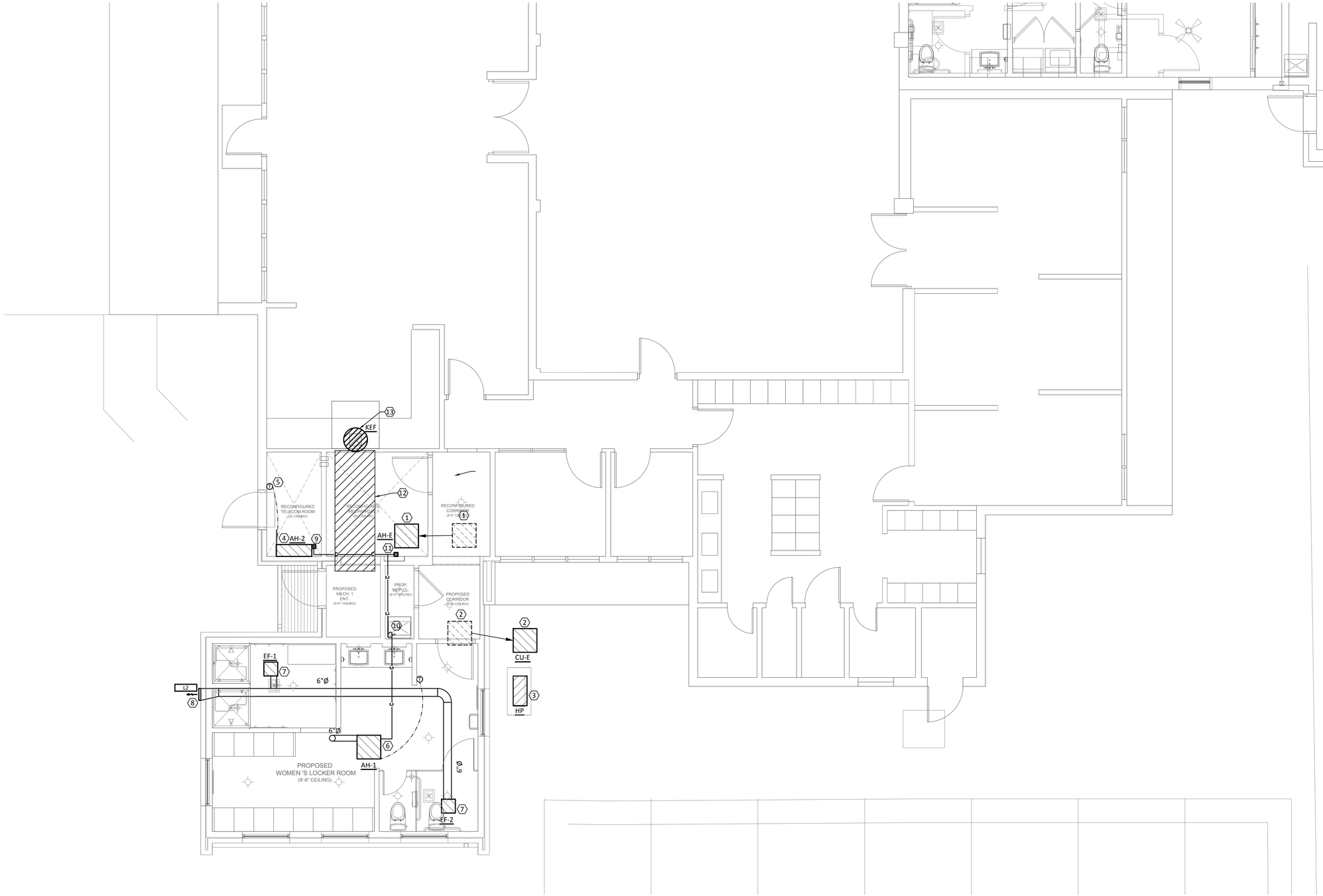

1 MECHANICAL PLAN

SCALE: 1/4" = 1'-0"

PLAN GENERAL NOTES

A. REFER TO M0.00 FOR GENERAL NOTES.
B. DO NOT ROUTE ANY DUCT & PIPING ABOVE ELECTRICAL PANELS.
C. PROVIDE AND INSTALL TRANSITION AS REQUIRED TO CONNECT SMALL DUCT TO LOUVER OR GRILLE.
D. COORDINATE WITH ARCHITECT AND STRUCTURAL ENGINEER FOR ALL WALL AND ROOF PENETRATION.
E. MAINTAIN 10' CLEARANCE FROM ANY EXHAUST AIR OUTLET OR FLUE TO ANY OUTSIDE AIR INTAKE OR OPENING TO BUILDING.
F. PROVIDE LOCKING ACCESS PORT CAPS ON ALL REFRIGERANT CIRCUIT SERVICE PORTS LOCATED ON THE EXTERIOR OF THE BUILDING.
G. ESTIMATED LOCATION OF ALL EXISTING MECHANICAL LAYOUT AND EQUIPMENT LOCATION IS BASED ON SITE OBSERVATION AND EXISTING DRAWINGS. CONTRACTOR SHALL VERIFY SIZE, LOCATION OF ALL EXISTING PLUMBING PIPING EQUIPMENT PRIOR TO BID AND CONSTRUCTION.

KEYED NOTES

1. REMOVE EXISTING 5-TON AIR HANDLER UNIT AND REPLACE MATCHING 5-TON AIR HANDLER AT NEW LOCATION.
   RECONNECT DUCT WORK FROM NEW LOCATION OF AIR HANDLER TO EXISTING DUCTWORK .
2. REMOVE EXISTING 5-TON OUTDOOR CONDENSING UNIT AND REPLACE MATCH 5-TON CONDENSING UNIT AT NEW LOCATION AT SHOWN ON PLAN.
3. HEAT PUMP UNIT FOR DUCTLESS UNITS SHALL BE MOUNTED LEVEL ON CONCRETE PAD WITH NEOPRENE CORK PAD
4. DUCTLESS AIR HANDLER SHALL BE WALL MOUNTED ABOVE DOOR.
5. PROVIDE AND INSTALL TEMPERATURE CONTROLLER ON WALL AT 48" A.F.F.
6. CEILING CASSETTE AIR HANDLER SHALL BE SUSPENDED FROM STRUCTURAL MEMBER WITH VIBRATION ISOLATORS.
   ROUTE 6" OUTSIDE AIR DUCT TO UNIT FROM LOW PROFILE ROOF CAP (GREENHECK RCC-7 OR APPROVED EQUIVALENT).
7. EXHAUST FAN SHALL BE SUSPENDED FROM CEILING WITH VIBRATION ISOLATORS.
8. ROUTE COMBINED EXHAUST DUCT FROM EXHAUST FANS THROUGH WALL TO LOUVER.
9. PROVIDE AND INSTALL CONDENSATE DRAIN PUMP (WITH LINE SET KIT) FOR WALL MOUNTED DUCTLESS AIR HANDLER ON WALL (LITTLE GIANT MODEL EC-1K OR APPROVED EQUIVALENT).
10. ROUTE 3/4" INSULATED CONDENSATE DRAIN PIPING TO 6" ABOVE RIM OF MOP SINK.
11. PROVIDE AND INSTALL CONDENSATE DRAIN PUMP FOR AIR HANDLER ON FLOOR (LITTLE GIANT OR APPROVED EQUIVALENT).
12. REMOVE EXISTING EXHAUST FAN, DUCT WORK AND LOUVER ON WALL FOR KITCHEN HOOD.
13. RE-ROUTE 12" INSULATED EXHAUST DUCT (WITH FIREMASTER FAST WRAP XL 3" THICK FOIL ENCAPSULATED BLANKET TYPE DUCT WRAP AS MANUFACTURED BY "THERMAL CERAMIC" DALLAS, 2 HOUR RATING) FROM EXISTING KITCHEN HOOD TO ROOF MOUNTED EXHAUST FAN. PROVIDE TRANSITION AS REQUIRED TO CONNECT TO ROOF MOUNTED AND KITCHEN HOOD.

SEQUENCE OF OPERATION NOTES

A. DUCTLESS SPLIT SYSTEM CONTROL
   a. SYSTEM - ON/OFF CONTROL:
      ON/OFF CONTROL FROM WALL MOUNTED THERMOSTAT.
   b. FAN – ON/OFF CONTROL:
      FAN WILL BE ACTIVATED UNDER THE FOLLOWING CONDITIONS:
      - IF THE THERMOSTAT IS SET IN THE "FAN" MODE
      - ACTIVATION OF THE COOLING OR HEATING MODE
   c. COOLING MODE:
      THERMOSTAT SETTING WILL EITHER BE IN "AUTO" OR "COOL"
      IF THE ROOM TEMPERATURE, AS MEASURED BY THE INDOOR UNIT MOUNTED ROOM TEMPERATURE SENSOR, RISES ABOVE THE THERMOSTATS SET POINT TEMPERATURE THE CONDENSING UNIT AND THE WALL MOUNTED FAN COIL UNIT WILL BE ACTIVATED.
   d. HEATING MODE:
      THERMOSTAT SETTING WILL EITHER BE IN "AUTO" OR "HEAT"
      IF THE ROOM TEMPERATURE, AS MEASURED BY THE INDOOR UNIT MOUNTED ROOM TEMPERATURE SENSOR, DOWN BELOW THE THERMOSTATS SET POINT TEMPERATURE THE CONDENSING UNIT AND THE WALL MOUNTED FAN COIL UNIT WILL BE ACTIVATED.
   e. CONDENSATE PUMP CONTROL:
      THE PRIMARY CONDENSATE FLOAT SWITCH WILL ACTIVATE AND DEACTIVATE THE CONDENSATE PUMP.
   f. SAFETY:
      A SECONDARY OVERFLOW CONDENSATE FLOAT SWITCH UPON ACTIVATION WILL CONTINUE TO RUN THE CONDENSATE PUMP, DEACTIVATE THE FAN, AND INITIATE A BLINKING LIGHT ON THE CONTROL DISPLAY TO INDICATE THE PROBLEM.
B. EXHAUST FANS (SEE ELECTRICAL PLAN FOR CONTROLLER)
   - EF-1 & EF-2 WILL BE INTERLOCKED WITH LIGHTING SWITCH WITH A TIME-DELAY-OFF RELAY SWITCH TO ALLOW FAN TO OPERATE UP TO 15 MINUTES AFTER LIGHTS ARE TURNED OFF

ENCOTECH ENGINEERING CONSULTANTS
TBPE Firm 1141 | 8500 Bluffstone Cove, Suite B-103 Austin, Texas 78759 | 512.338.1101
Project No.: 15009.M.AUS

STATE OF TEXAS
LYNN C. BROWN
55248
LICENSED PROFESSIONAL ENGINEER
08/30/2016

mwm Design Group
305 East Huntland Drive
Suite 200
Austin, Texas 78752
p: 512.453.0767
f: 512.453.1734
TBAE FIRM REGISTRATION NO.: 1452
TBPE FIRM REGISTRATION NO.: F-1416
TBPLS FIRM REGISTRATION NO.: 10065600

NO.	DATE	DESCRIPTION	BY

SCALE IS AS NOTED ON DRAWING

MECHANICAL PLANS

AFD WOMEN'S LOCKER RM. ADDN, PHASE V & EMS VEHICLE BAY EXPANSIONS & GEN. RENOVATIONS
5401 McCARTY LANE, AUSTIN, TEXAS 78749

PLOTTED: 8/30/2016
JOB NO: 023-79D

FS27-M110

File: J:\ACTIVE PROJECTS\MWM\15009.M.AUS – AFD WLR Ph 5\1. MEP\D-AutoCAD\FS27\15009 FS27 M110 Mech Plan.dwg 24x36

DUCTLESS HEATPUMP SCHEDULE

MARK	CLG. DATA		ELECTRICAL DATA			UNIT DATA				
	TONS	EER/ SEER	MCA	MOCP	VOLT/PH	MAKE	MODEL	LBS.	NOTES	CORRESPONDING AIR HANDLER
HP	1.5	14.0/ 21.0	13.3	20	208V/1PH	LG	LMU18CHV	100		

NOTES:
1. PROVIDE DISCONNECT, TO BE FIELD MOUNTED BY ELECTRICAL CONTRACTOR.
2. COMPRESSOR SHALL BE PROVIDED WITH 10 YEARS WARRANTY.
3. UNIT TO BE PROVIDED LOW AMBIENT KIT FOR OPERATION DOWN TO 40°F.

DUCTLESS SPLIT UNIT SCHEDULE

MARK	AIR DATA					COOLING DATA												HEATING DATA					ELECTRICAL DATA			UNIT DATA			
	TOT. CFM	O/A CFM	E.S.P.	HP	CONFIGURATION	AMBIENT D.B.	AMBIENT W.B.	ENTERING D.B.	ENTERING W.B.	LEAVING D.B.	LEAVING W.B.	DESIGN SENS.	DESIGN TOT.	SCHEDULE SENS.	SCHEDULE TOT.	STAGE	EER/ SEER	DES. MBH	SCHEDULE MBH	SCHEDULE KW	STAGE	HSPF	MCA	MOCP	VOLT/PH	MAKE	MODEL	LBS.	NOTES
AH-1	265	N/A	N/A	-	CASSETE	105	74	80	67	-	-			-	9.0	INV.	14.0/ 21.0	-	8.5	-	-	9.20	0.2	15	208V/1PH	LG	LMCN097HV	31	1, 2
AH-2	177	N/A	N/A	-	WALL-MOUNTED	105	74	80	67	-	-			-	7.0	INV.	14.0/ 21.0	-	8.1	-	-	9.20	0.2	15	208V/1PH	LG	LMN078HVT	20	1, 2, 3

NOTES:
1. EACH UNIT TO BE MOUNTED USING VIBRATION ISOLATORS.
2. INDOOR UNIT TO INCLUDE MANUFACTURER THERMOSTAT.
3. CONDENSATE PUMP.

CONDENSING UNIT SCHEDULE

MARK	CLG. DATA		ELECTRICAL DATA			UNIT DATA				
	TONS	EER/ SEER	MCA	MOCP	VOLT/PH	MAKE	MODEL	LBS.	NOTES	CORRESPONDING AIR HANDLER
CU 5T - TRANE	5	-/ 16.0	45.0	60	208V/1PH	TRANE	4TTB4061	275		

NOTES:
1. PROVIDE DISCONNECT, TO BE FIELD MOUNTED BY ELECTRICAL CONTRACTOR.
2. COMPRESSOR SHALL BE PROVIDED WITH 10 YEARS WARRANTY.
3. UNIT TO BE PROVIDED LOW AMBIENT KIT FOR OPERATION DOWN TO 40°F.

AIR HANDLER UNIT SCHEDULE

MARK	AIR DATA					COOLING DATA												HEATING DATA					ELECTRICAL DATA			UNIT DATA			
	TOT. CFM	O/A CFM	E.S.P.	HP	CONFIGURATION	AMBIENT D.B.	AMBIENT W.B.	ENTERING D.B.	ENTERING W.B.	LEAVING D.B.	LEAVING W.B.	DESIGN SENS.	DESIGN TOT.	SCHEDULE SENS.	SCHEDULE TOT.	STAGE	EER/ SEER	DES. MBH	SCHEDULE MBH	SCHEDULE KW	STAGE	EFF.	MCA	MOCP	VOLT/PH	MAKE	MODEL	LBS.	NOTES
AH-E	2000		0.5	1	CONVERTIBLE	105	74	80	67	-	-			44.2	58.4	1	-/ 13.0		36.9	10.8	1	N/A	41.0	45	208V/3PH	TRANE	GAM2A0C60	159	

NOTES:
1. PROVIDED STANDARD THERMOSTAT, SINGLE STAGE COOLING AND HEATING, BY HONEYWELL, OR APPROVED EQUIVALENT.
2. PROVIDE DISCONNECT, TO BE FIELD MOUNTED BY ELECTRICAL CONTRACTOR.
3. UNIT TO BE MOUNTED USING VIBRATION ISOLATORS.
4. UNIT TO INCLUDE STANDARD DISPOSABLE 1" FILTER.

FAN SCHEDULE

MARK	AREA SERVED	LOCATION	INTERLOCK	AIR DATA				ELECTRICAL DATA			UNIT DATA					
				CFM	S.P.	HP	RPM	FLA	MOCP	VOLT/PH	MAKE	MODEL	TYPE	DRIVE	LBS.	NOTES
EF-1	SHOWER	CEILING	LIGHT SWITCH	75	0.25	-	900	0.6	15	115V/1PH	GREENHECK	SP-B90	CENTRIFUGAL	DIRECT	8	DISC, SC, BDD, CC, BS, VI
EF-2	RESTROOM	CEILING	LIGHT SWITCH	150	0.25	-	1400	0.6	15	115V/1PH	GREENHECK	CSP-A190	CENTRIFUGAL	DIRECT	17	DISC, SC, BDD, CC, BS, VI
K-EF	EXISTING KITCHEN HOOD	ROOF	EXISTING HOOD SWITCH	1000	1	1/3	1400	3.6	20	230V/1PH	GREENHECK	CUBE-101-3	CENTRIFUGAL	BELT	88	DISC, BDD, CC, BS, VI, CURB

NOTES:
1. FEATURE NOTES:
DISC = DISCONNECT SWITCH
TD = PROVIDE AND INSTALL A TIME-DELAY-OFF RELAY SWITCH TO ALLOW FAN TO OPERATE UP TO 15 MINUTES AFTER LIGHTS ARE TURNED OFF
SC = SPEED CONTROL (DIRECT DRIVE FANS ONLY)
BDD = BACKDRAFT DAMPER
BS = BIRD SCREEN
VI = VIBRATION ISOLATORS
CURB = MANUFACTURER CURB

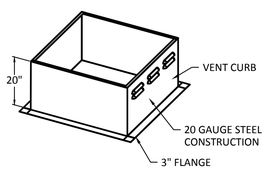

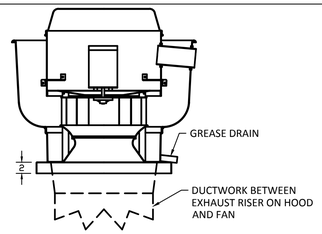

FEATURES:
- ROOF MOUNTED FANS
- RESTAURANT MODEL
- UL705 AND UL762
- VARIABLE SPEED CONTROL
- INTERNAL WIRING
- WEATHERPROOF DISCONNECT
- THERMAL OVERLOAD PROTECTION (SINGLE PHASE)
- HIGH HEAT OPERATION 300°F (149°C)
- GREASE CLASSIFICATION TESTING
- GREASE BOX

NORMAL TEMPERATURE TEST:
EXHAUST FAN MUST OPERATE CONTINUOUSLY WHILE EXHAUSTING AIR AT 300°F (149°C) UNTIL ALL FAN PARTS HAVE REACHED THERMAL EQUILIBRIUM, AND WITHOUT ANY DETERIORATING EFFECTS TO THE FAN WHICH WOULD CAUSE UNSAFE OPERATION.

ABNORMAL FLARE-UP TEST:
EXHAUST FAN MUST OPERATE CONTINUOUSLY WHILE EXHAUSTING BURNING GREASE VAPORS AT 600°F (316°C) FOR A PERIOD OF 15 MINUTES WITHOUT THE FAN BECOMING DAMAGED TO ANY EXTENT THAT COULD CAUSE AN UNSAFE CONDITION.

5 KITCHEN EXHAUST FAN DETAIL
NOT TO SCALE

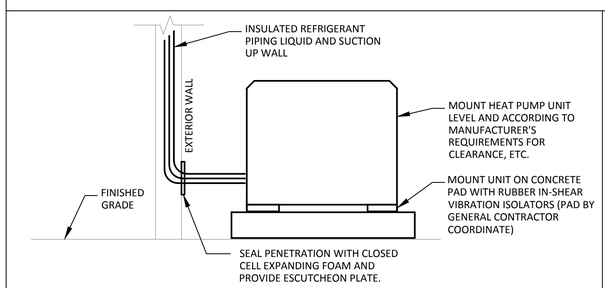

REFRIGERANT PIPING INSULATION NOTES
1. ALL CLOSED CELL POLYMER INSULATION SHALL HAVE GLUED JOINTS WITH COMPLETE COVERAGE OF ALL METAL SURFACES. ALL INSULATION EXPOSED TO EXTERIOR SHALL BE PAINTED WITH TWO COATS AS PER INSULATION MANUFACTURERS SPECIFICATIONS.
2. PROVIDE AND INSTALL LINE DRYER IN LIQUID FREON LINE
3. PROVIDE INSULATION SHIELD AT ALL SUPPORTS.

1 HEAT PUMP UNIT DETAIL
NOT TO SCALE

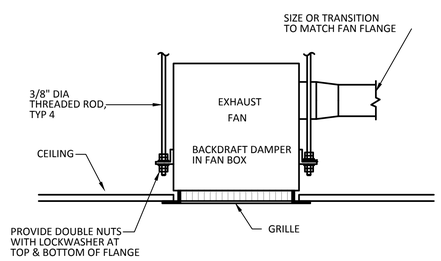

2 CEILING EXHAUST FAN DETAIL
NOT TO SCALE

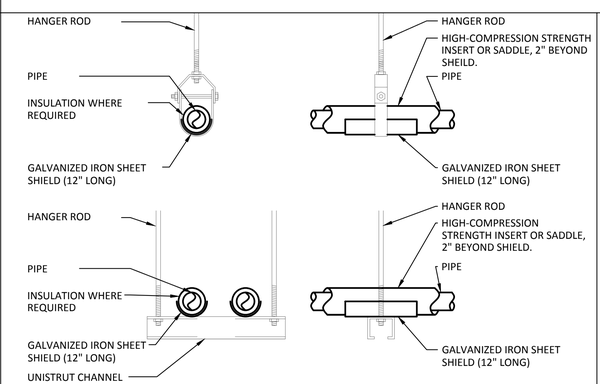

NOTE:
1. ATTACH SUPPORTS FOR ALL PIPING SUSPENDED FROM THE STEEL STRUCTURE TO THE TOP CORD OF JOISTS OR BEAM.
2. PROVIDE COPPER OR PLASTIC COATED HANGERS FOR NON-INSULATED COPPER PIPE

3 PIPE HANGER DETAIL
NOT TO SCALE

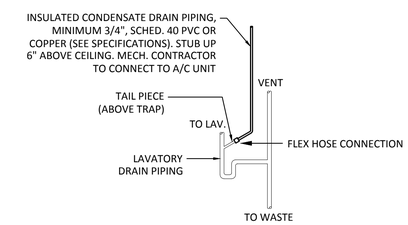

4 CONDENSATE DRAIN - LAVATORY TAILPIECE DETAIL
NOT TO SCALE

ENCOTECH ENGINEERING CONSULTANTS
TBPE Firm 1141 | 8500 Bluffstone Cove, Suite B-103 Austin, Texas 78759 | 512.338.1101
Project No.: 15009.M.AUS

STATE OF TEXAS — LYNN C. BROWN — 55248 — LICENSED PROFESSIONAL ENGINEER
08/30/2016

mwm Design Group
305 East Huntland Drive
Suite 200
Austin, Texas 78752
p: 512.453.0767
f: 512.453.1734
TBAE FIRM REGISTRATION NO.: 1452
TBPE FIRM REGISTRATION NO.: F-1416
TBPLS FIRM REGISTRATION NO.: 10065600

NO.	DATE	DESCRIPTION	BY

SCALE IS AS NOTED ON DRAWING

MECHANICAL SCHEDULES & DETAILS

AFD WOMEN'S LOCKER RM. ADDN, PHASE V & EMS VEHICLE BAY EXPANSIONS & GEN. RENOVATIONS
5401 McCARTY LANE, AUSTIN, TEXAS 78749

PLOTTED: 8/30/2016
JOB NO: 023-79D
FS27-M210

File: J:\ACTIVE PROJECTS\MWM\15009.M.AUS – AFD WLR Ph 5\1. MEP\D-AutoCAD\FS27\15009 FS27 M210 Mech Schedule Details.dwg 24x36

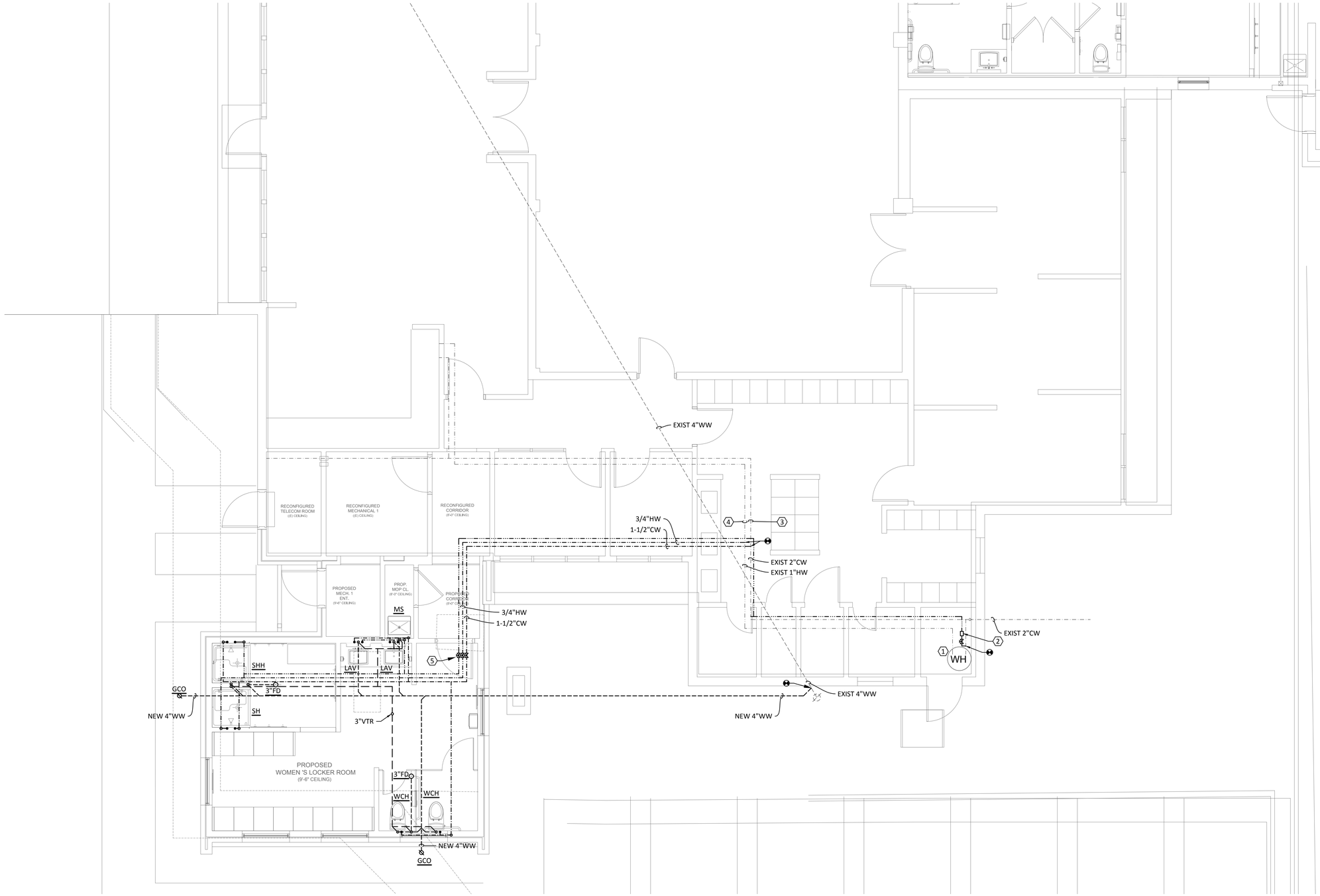

PLAN GENERAL NOTES

A. REFER TO P0.00 FOR GENERAL NOTES.

B. ESTIMATED LOCATION OF ALL EXISTING PLUMBING LAYOUT AND EQUIPMENT LOCATION IS BASED ON SITE OBSERVATION AND EXISTING DRAWINGS. CONTRACTOR SHALL VERIFY SIZE, LOCATION OF ALL EXISTING PLUMBING PIPING EQUIPMENT PRIOR TO BID AND CONSTRUCTION

C. DO NOT ROUTE ANY PLUMBING PIPING ABOVE ANY ELECTRICAL PANEL.

D. PROVIDE AND INSTALL WATER SAVER TRAP PRIMER FROM NEAREST LAVATORY OR TRAP PRIMER WITH ACCESSIBLE SHUT-OFF VALVE IN WALL TO ALL FLOOR DRAINS, HUB DRAINS AND FLOOR SINKS. SEE PLAN FOR LOCATION.

E. PROVIDE AND INSTALL ACCESS TO ALL SHUT-OFF VALVES.

F. INSULATE 100% OF ALL HOT WATER PIPING, HOT WATER RETURN PIPING & COLD WATER PIPING ACCORDING TO SPECIFICATIONS.

KEYED NOTES

1. EXISTING WATER HEATER SHALL REMAIN AND APPEARS TO HAVE SUFFICIENT CAPACITY TO ADD TWO NEW SHOWERS AND LAVATORIES (EXISTING WATER HEATER BY A.O. SMITH MODEL ECT-80-210, 80 GALLON TANK, 4500W, 61 GALLON RECOVERY AT 80°F RISE)
2. PROVIDE AND INSTALL NEW HOT WATER RECIRCULATION PUMP (GRUNDFOS MODEL UP-26-96-BF, 1/12 HP, 120V, 1Ø 1.7 AMPS SECURELY SUSPEND FROM STRUCTURE W/ VIBRATION ISOLATORS)
3. EXISTING CW PIPING TO EXISTING PLUMBING FIXTURE
4. EXISTING HW PIPING TO EXISTING PLUMBING FIXTURE.
5. MAIN WATER SHUT-OFF VALVE FOR NEW LOCKER ROOM ABOVE CEILING. COORDINATE WITH GENERAL CONTRACTOR TO PROVIDE AND INSTALL ACCESS PANEL.

1 PLUMBING PLAN
SCALE: 1/4" = 1'-0"

ENCOTECH ENGINEERING CONSULTANTS
TBPE Firm 1141 | 8500 Bluffstone Cove, Suite B-103 Austin, Texas 78759 | 512.338.1101
Project No.: 15009.M.AUS

STATE OF TEXAS
LYNN C. BROWN
55248
LICENSED PROFESSIONAL ENGINEER
08/30/2016

mwm Design Group
305 East Huntland Drive
Suite 200
Austin, Texas 78752
p: 512.453.0767
f: 512.453.1734
TBAE FIRM REGISTRATION NO.: 1452
TBPE FIRM REGISTRATION NO.: F-1416
TBPLS FIRM REGISTRATION NO.: 10065600

NO.	DATE	DESCRIPTION	BY

SCALE IS AS NOTED ON DRAWING

PLUMBING PLANS

AFD WOMEN'S LOCKER RM. ADDN, PHASE V & EMS VEHICLE BAY EXPANSIONS & GEN. RENOVATIONS
5401 McCARTY LANE, AUSTIN, TEXAS 78749

PLOTTED: 8/30/2016
JOB NO: 023-79D

FS27-P110

File: J:\ACTIVE PROJECTS\MWM\15009.M.AUS – AFD WLR Ph 5\1. MEP\D-AutoCAD\FS27\15009 FS27 P110 Plumb Plan.dwg 24x36

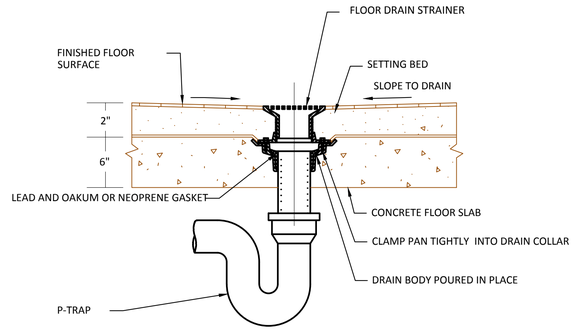

6 TYPICAL FLOOR DRAIN DETAIL
NOT TO SCALE

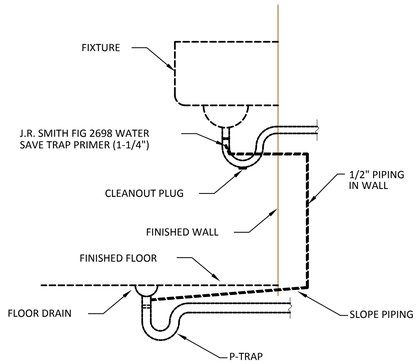

5 WATER SAVER TRAP PRIMER DETAIL
NOT TO SCALE

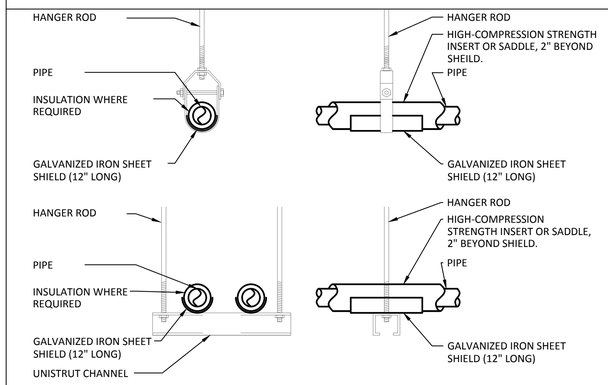

NOTE:
1. ATTACH SUPPORTS FOR ALL PIPING SUSPENDED FROM THE STEEL STRUCTURE TO THE TOP CORD OF JOISTS OR BEAM.
2. PROVIDE COPPER OR PLASTIC COATED HANGERS FOR NON-INSULATED COPPER PIPE

4 PIPE HANGER DETAIL
NOT TO SCALE

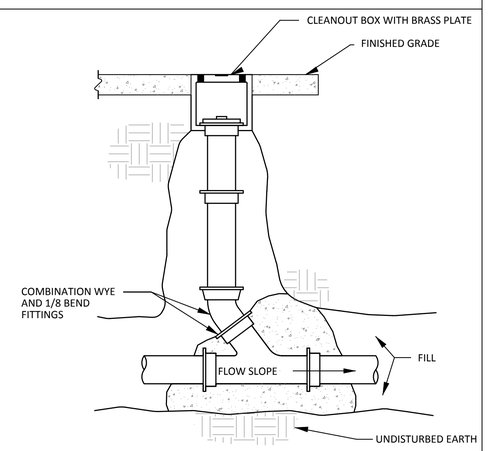

3 EXTERIOR CLEANOUT DETAIL
NOT TO SCALE

WATER CALCULATION

WATER CLOSET, FLUSH TANK	2 x	2.5 F.U. =	5.0 F.U.
WATER CLOSET, FLUSH VALVE	4 x	5.0 F.U. =	20.0 F.U.
URINAL, FLUSH TANK	0 x	2.0 F.U. =	0.0 F.U.
URINAL, FLUSH VALVE	2 x	4.0 F.U. =	8.0 F.U.
SHOWER	5 x	2.0 F.U. =	10.0 F.U.
BATHTUB	0 x	4.0 F.U. =	0.0 F.U.
LAVATORY	5 x	1.0 F.U. =	5.0 F.U.
KITCHEN SINK, COMMERCIAL	2 x	3.0 F.U. =	6.0 F.U.
SERVICE SINK (PUBLIC)	2 x	3.0 F.U. =	6.0 F.U.
DISHWASHER	1 x	1.5 F.U. =	1.5 F.U.
CLOTHES WASHER	1 x	4.0 F.U. =	4.0 F.U.
DRINKING FOUNTAIN	0 x	0.5 F.U. =	0.0 F.U.
FIRST HOSE BIBB	1 x	2.5 F.U. =	2.5 F.U.
ADDITIONAL HOSE BIBBS	2 x	1.0 F.U. =	2.0 F.U.
	0 x	0.0 F.U. =	0.0 F.U.
	0 x	0.0 F.U. =	0.0 F.U.
	0 x	0.0 F.U. =	0.0 F.U.
	0 x	0.0 F.U. =	0.0 F.U.
TOTAL FIXTURE UNITS		=	70.0 F.U.
70.0 FIXTURE UNITS		=	58.0 GPM

HIGHEST FIXTURE = 10 FEET
(10 FT.) x 0.43 = 4.3 PSI STATIC LOSS

HORIZONTAL PIPE LENGTH TAP TO METER	=	50 FEET
HORIZONTAL PIPE LENGTH METER TO BUILDING	=	100 FEET
HORIZONTAL PIPE LENGTH BUILDING TO LAST FIXTURE	=	100 FEET
VERTICAL PIPE LENGTH BUILDING RISE TO HIGHEST FIXTURE	=	10 FEET
TOTAL PIPE LENGTH	=	260 FEET

(260 FT.) x 1.25 (FITTING LOSS) = 325 FEET TOTAL DEVELOPED LENGTH

SIZE	DEVICE		PSI LOSS
1-1/2"	METER	=	7.6 PSI
	STATIC	=	4.3 PSI
	FIXTURE (FLUSH VALVE)	=	15.0 PSI
	TOTAL BUILDING LOSS	=	26.9 PSI

PRESSURE AT STREET	=	50.0 PSI
BUILDING LOSS	=	26.9 PSI
DIFFERENCE	=	23.1 PSI

(23.1 / 325) x 100 = 7.1 MAX PSI DROP ALLOWABLE PER 100 FT. PIPE LENGTH

EXISTING 1-1/2" METER AND 2" MAIN WATER LINE TO BUILDING IS SUFFICIENT

WATER CALCULATION NOTES

- THIS CALCULATION IS BASED ON UNIFORM PLUMBING CODE 2012, APPENDIX A.
* VERIFY PRESSURE AT TIME OF CONSTRUCTION. IF GREATER THAN 65 PSI PROVIDE AND INSTALL PRESSURE REDUCING VALVE TO REDUCE WATER PRESSURE TO 65 PSI MAXIMUM.

PLUMBING FIXTURE SCHEDULE

MARK	CW	HW	VENT	S&W	MODEL NUMBER	DESCRIPTION
WCH	1"	-	2"	3"	WATER CLOSET: KOHLER MODEL: HIGHLINE K-4405	FLUSH VALVE WATER CLOSET, FLOOR MOUNTED, ELONGATED BOWL, 1-1/2" TOP SPUD, FLOOR OUTLET, ADA COMPLIANT
					FLUSH VALVE: SLOAN MODEL: 8111-1.28	EXPOSED WATER CLOSET FLUSHOMETER FOR FLOOR MOUNTED TOP SPUD BOWLS, 1.28 GPF.
					SEAT: CHURCH 295SSC	OPEN FRONT, ELONGATED SEAT WITH STAINLESS STEEL LOCKING HINGE
LAV	1/2"	1/2"	1-1/2"	2"	LAVATORY: KOHLER MODEL: K-1997-1-0 (HANDICAP USE)	WALL HUNG, VITREOUS CHINA, 22"x19" BOWL, HANDICAP ACCESSIBLE.
					FAUCET: DELTA MODEL: 26C3942	MANUAL GOOSENECK FAUCET, 0.5 GPM AERATOR, 8" CENTERS, LEVER HANDLES
					MIXING VALVE: WATTS MODEL: L111	INDIVIDUAL FAUCET THERMOSTATIC MIXING VALVE. HOT WATER TEMPERATURE SHALL BE LIMITED TO 110 DEGREES FAHRENHEIT.
SH	1/2"	1/2"	1-1/2"	2"	SHOWER FAUCET & HANDSET: MOEN MODEL: 8346	PRESSURE BALANCE SHOWER VALVE, HANDHELD SPRAY ASSEMBLY, 1.5 GPM, ADA COMPLIANT.
					MIXING VALVE: LAWLER MODEL: SERIES 516 UNIT NUMBER: 86823	ROUGH CHROME THERMOSTATIC MIXING VALVE, 0.5 MINIMUM FLOW RATE, OUTLET RANGE 95-115 DegF WITH A SPINDLE TO ADJUST OUTLET TEMPERATURE. SET OUTLET TEMPERATURE AT 110DegF.
					FLOOR DRAIN: SMITH 2005	CAST IRON. ADJUSTABLE STRAINER HEAD.
SHH	1/2"	1/2"	1-1/2"	2"	SHOWER ENCLOSURE: AQUATIC ADA COMPLIANCE	TILED, COMPLETE WITH L-SHAPED FOLD-UP SEAT, GRAB BARS, SLIDE BAR, VACUUM BREAKER AND HOSE, CURTAIN RODS (VERIFY DEPTH OF RECESS).
					SHOWER FAUCET & HANDSET: MOEN MODEL: 8346	PRESSURE BALANCE SHOWER VALVE, HANDHELD SPRAY ASSEMBLY, 1.5 GPM, ADA COMPLIANT.
					MIXING VALVE: LAWLER MODEL: SERIES 516 UNIT NUMBER: 86823	ROUGH CHROME THERMOSTATIC MIXING VALVE, 0.5 MINIMUM FLOW RATE, OUTLET RANGE 95-115 DegF WITH A SPINDLE TO ADJUST OUTLET TEMPERATURE. SET OUTLET TEMPERATURE AT 110DegF.
					FLOOR DRAIN: SMITH 2005	CAST IRON. ADJUSTABLE STRAINER HEAD.
FD	-	-	2"	*	SMITH 2005	FLOOR DRAIN. CAST IRON. ADJUSTABLE STRAINER HEAD.
FCO	-	-	-	*	SMITH 4020	FLOOR CLEANOUT. CAST IRON WITH NICKEL BRONZE ADUSTABLE TOP.
GCO	-	-	-	*	SMITH 4237	GROUND CLEANOUT. CAST IRON WITH CAST IRON NON-TILT ADJUSTABLE TOP.

NOTES:
* SEE PLAN FOR SIZING.
** PLUMBING FIXTURES, ACCESSORIES AND INSTALLATION SHALL MEET ALL FEDERAL, STATE, ADA AND LOCAL REQUIREMENTS.

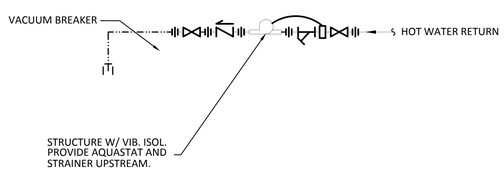

1 RECIRCULATION PUMP DETAIL
NOT TO SCALE

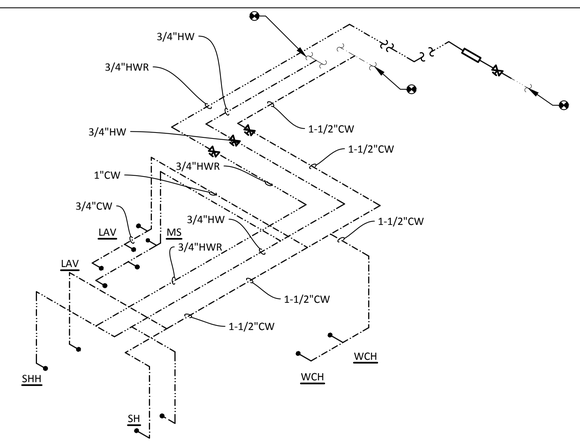

1 WATER RISER
NOT TO SCALE

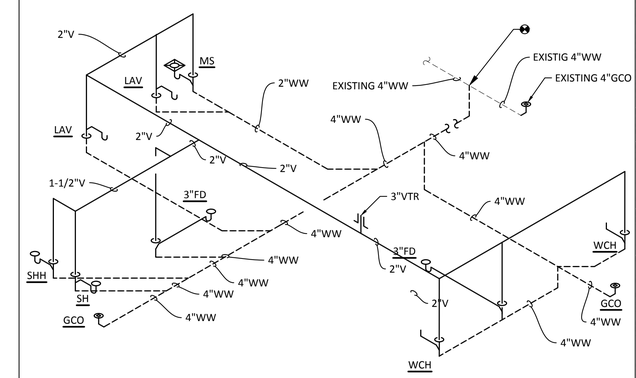

1 WASTE WATER AND VENT RISER
NOT TO SCALE

ENCOTECH ENGINEERING CONSULTANTS
TBPE Firm 1141
8500 Bluffstone Cove, Suite B-103
Austin, Texas 78759 | 512.338.1101
Project No.: 15009.M.AUS

STATE OF TEXAS
LYNN C. BROWN
55248
LICENSED PROFESSIONAL ENGINEER
08/30/2016

mwm Design Group
305 East Huntland Drive
Suite 200
Austin, Texas 78752
p: 512.453.0767
f: 512.453.1734
TBAE FIRM REGISTRATION NO.: 1452
TBPE FIRM REGISTRATION NO.: F-1416
TBPLS FIRM REGISTRATION NO.: 10065600

NO.	DATE	DESCRIPTION	BY

SCALE IS AS NOTED ON DRAWING

PLUMBING SCHEDULES & DETAILS

AFD WOMEN'S LOCKER RM. ADDN, PHASE V & EMS VEHICLE BAY EXPANSIONS & GEN. RENOVATIONS
5401 McCARTY LANE, AUSTIN, TEXAS 78749

PLOTTED: 8/30/2016
JOB NO: 023-79D

FS27-P210

File: J:\ACTIVE PROJECTS\MWM\15009.M.AUS — AFD WLR Ph 5\1. MEP\D-AutoCAD\FS27\15009 FS27 P210 Plumb Schedule Details.dwg 24x36

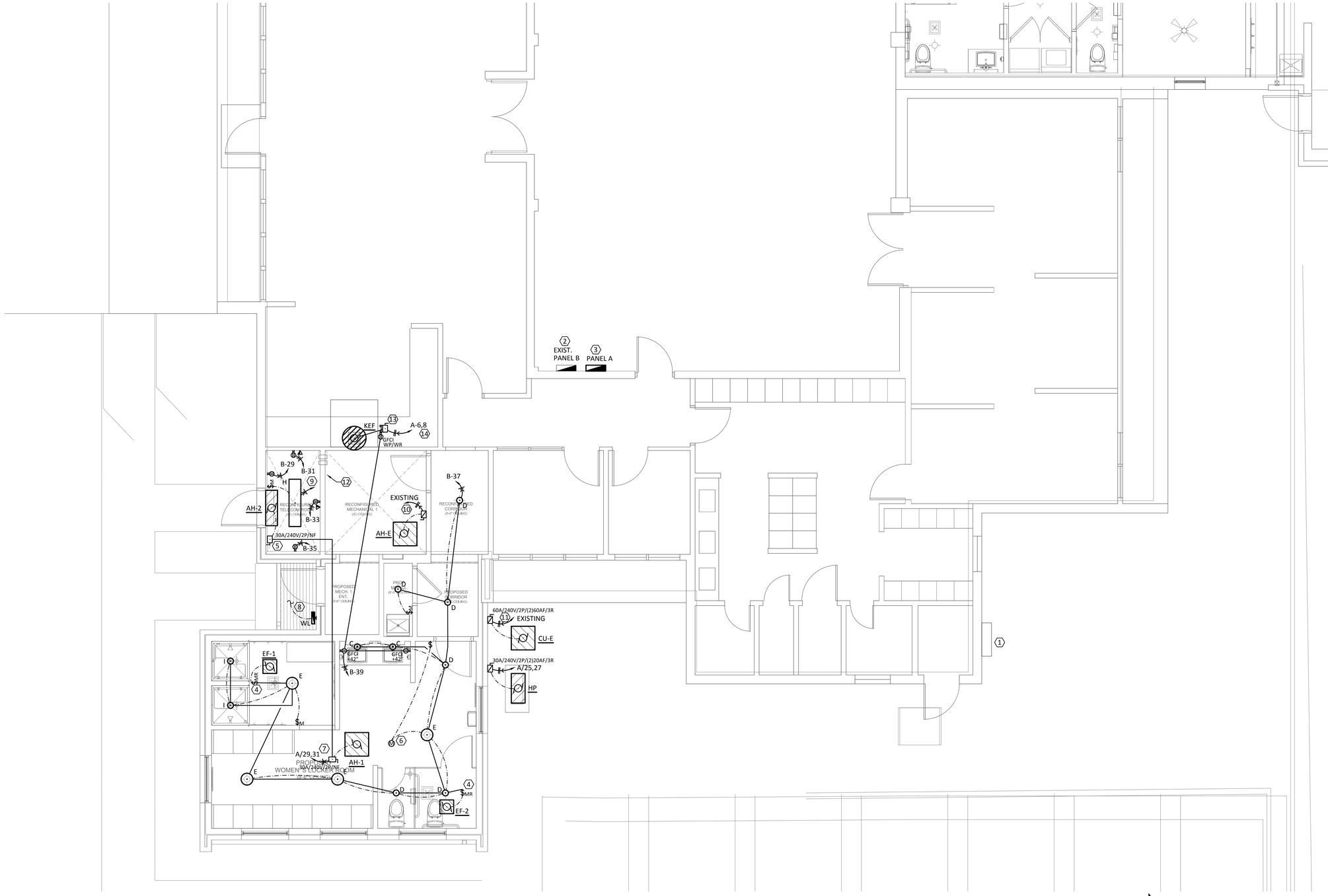

1 ELECTRICAL PLAN

SCALE: 1/4" = 1'-0"

PLAN GENERAL NOTES

A. REFER TO E0.00 FOR GENERAL NOTES.

B. DO NOT ROUTE ANY DUCT & PIPING ABOVE ELECTRICAL PANELS.

C. ESTIMATED LOCATION OF ALL EXISTING ELECTRICAL LAYOUT AND EQUIPMENT LOCATION IS BASED ON SITE OBSERVATION AND EXISTING DRAWINGS. CONTRACTOR SHALL VERIFY SIZE, LOCATION OF ALL EXISTING ELECTRICAL EQUIPMENT, DEVICES AND CONDUITS PRIOR TO BID AND CONSTRUCTION.

D. ALL EXTERIOR LIGHTING FIXTURE SHALL BE CONTROLLED BY PHOTOCELL AND TIMER.

KEYED NOTES

1. EXISTING 600A, 120/240V, 1Ø METER AND MAIN DISCONNECT ON WALL SHALL REMAIN.
2. EXISTING PANEL 'A', 600A, 120/240V, 3Ø, MLO WITH 16 AVAILABLE SPACES.
3. REPLACE EXISTING PANEL 'B', 200A, 120/240V, 1Ø, MCB 30-SPACE WITH NEW PANEL 'B', 200A, 120/240V, 1Ø, MCB 40-SPACE. RECONNECT EXISTING CIRCUIT FROM DEMOLISHED PANEL TO NEW PANEL.
4. MOTOR RATED DISCONNECT SWITCH SHALL BE MOUNTED ON STRUCTURAL MEMBER ABOVE ACCESSIBLE CEILING.
5. DISCONNECT SHALL BE MOUNTED ON WALL.
6. PROVIDE AND INSTALL CEILING DUAL TECHNOLOGY MOTION DETECTOR WITH WALL MOUNTED OVERDRIVE SWITCH AT DOOR.
7. DISCONNECT SHALL BE MOUNTED ON STRUCTURAL MEMBER ABOVE ACCESSIBLE CEILING.
8. CONNECT TO EXISTING EXTERIOR LIGHT CIRCUIT AND CONTROL.
9. CONNECT TO EXISTING STORAGE LIGHT CIRCUIT.
10. RECONNECT TO EXISTING AIR HANDLER UNIT CIRCUIT.
11. RECONNECT TO EXISTING CONDENSING UNIT CIRCUIT.
12. REMOVE ELECTRICAL DISCONNECT FOR DEMOLISHED KITCHEN EXHAUST FAN. REMOVE WIRING AND CONCUIT BACK TO NEAREST JUNCTION BOX FOR RE-CONNECT TO ROOF EXHAUST FAN.
13. PROVIDE AND INSTALL 30A/3P/NF/NEMA 3R DISCONNECT SWITCH NEAR UNIT ON P1000 UNISTRUT RACK SECURED TO ROOF. BOTTOM OF DISCONNECT AT 36" AFF.

    PROVIDE WP/WR/GFCI RECEPTACLE ON UNITRUT RACK AT 12" A.F.F.
14. RE-CONNECT POWER FROM EXISTING CIRCUIT FOR DEMOLISHED FAN TO NEW DISCONNECT FOR ROOF MOUNTED KITCHEN HOOD EXHAUST FAN.

ENCOTECH ENGINEERING CONSULTANTS
TBPE Firm 1141
8500 Bluffstone Cove, Suite B-103
Austin, Texas 78759 | 512.338.1101
Project No.: 15009.M.AUS

STATE OF TEXAS
SHARON S. BICKFORD
77390
LICENSED PROFESSIONAL ENGINEER
08/30/2016

mwm Design Group
305 East Huntland Drive
Suite 200
Austin, Texas 78752
p: 512.453.0767
f: 512.453.1734
TBAE FIRM REGISTRATION NO.: 1452
TBPE FIRM REGISTRATION NO.: F-1416
TBPLS FIRM REGISTRATION NO.: 10065600

NO.	DATE	DESCRIPTION	BY

SCALE IS AS NOTED ON DRAWING

ELECTRICAL PLANS

AFD WOMEN'S LOCKER RM. ADDN, PHASE V & EMS VEHICLE BAY EXPANSIONS & GEN. RENOVATIONS
5401 McCARTY LANE, AUSTIN, TEXAS 78749

PLOTTED: 8/30/2016
JOB NO: 023-79D

FS27-E110

File: J:\ACTIVE PROJECTS\MWM\15009.M.AUS – AFD WLR Ph 5\1. MEP\D-AutoCAD\FS27\15009 FS27 E110 Elec Plan.dwg 24x36

PANELBOARD SCHEDULE — B

LOCATION: UNKNOWN
C.B. RATING: - A.I.C.

NOTE	VOLTAGE	PHASE	WIRE	MOUNTING	SIZE	LUG	TYPE	NOTE
	240/120V	1	3	SURFACE	200	200	TYPE 1	

USE and/or AREA SERVED	C/B POLE	CIR	LOAD ØA	LOAD ØC	CIR	C/B POLE	USE and/or AREA SERVED
EXISTING LIGHT DORM	20/1	1	1000		2	20/1	EXISTING CEILING FAN
			500				
LOCKER ROOM LIGHT	20/1	3		600	4	20/1	EXISTING GARAGE RECEPTS.
				750			
EXIST PRINTER	20/1	5	1000		6	20/1	STING LOCKER & STUDY RM RECE
			750				
EXISTING DAY RM LIGHTS	20/1	7		600	8	20/1	SPARE
				-			
EXISTING GARAGE LIGHT	20/1	9	1000		10	20/1	EXISTING OFFICE RECEPTS.
			750				
EXISTING DORM RECEPTS	20/1	11		800	12	20/1	EXISTING KITCHEN RECEPTS.
				750			
EXISTING KITCHEN CEILING FAN	20/1	13	500		14	20/1	EXISTING KITCHEN RECEPTS.
			750				
SPARE	20/1	15		-	16	20/1	EXISTING GARAGE RECEPTS.
				750			
SPARE	20/1	17	-		18	20/1	EXISTING CLOCK RECEPTS
			1200				
EXISITNG EF-2	20/1	19		100	20	20/1	EXISTING DISPOSAL
				1000			
EXISTING DOOR BELL	20/1	21	100		22	20/1	EXISTING DAY RM RECEPTS
			750				
EXISTING EXTERIOR LT	20/1	23		1000	24	20/1	EXISTING STORAGE RM LIGHTS
				600			
EXISTING EWC	20/1	25	600		26	20/1	EXISTING EF-3
			300				
EXISTING CIRCUIT	20/1	27		750	28	20/1	SPARE
				-			
NEW SERVER RECEPTS	20/1	29	1000		30	-	-
			-				
NEW SERVER RECEPTS	20/1	31		1000	32	-	-
				-			
NEW SERVER RECEPTS	20/1	33	1000		34	-	-
			-				
NEW SERVER RECEPTS	20/1	35		1000	36	-	-
				-			
NEW LOCKER LIGHTS	20/1	37	600		38	-	-
			-				
NEW LOCKER RECEPTS	20/1	39		540	40	-	-
				-			
TOTAL LOAD PER PHASE			**11800**	**10240**	**11800 VA / 120 V = 98 A**		

FEEDER OCPD AND CONDUCTOR CALCULATION

LOAD DESCRIPTION (LOAD IN KVA)	CONNECTED LOAD	DEMAND FACTOR	DEMAND LOAD	AMPACITY FACTOR	FEEDER AMPACITY	NOTES
INTERIOR LIGHTING	6.40	1.00	6.40	1.25	8.00	
EXTERIOR LIGHTING	0.00	1.00	0.00	1.25	0.00	
RECEPTACLES	12.54	*	11.27	1.00	11.27	*FIRST 10 kVA AT 100%, REST AT 50%
HVAC	0.40	1.00	0.40	1.00	0.40	
EQUIPMENT	2.70	1.00	2.70	1.00	2.70	
KITCHEN EQUIPMENT	0.00	1.00	0.00	1.00	0.00	
LARGEST MOTOR NONE	-	-	-	0.25	0.00	
SPARE	0.00	1.00	0.00	1.00	0.00	
TOTAL KVA	**22.04**	**-**	**20.77**	**-**	**22.37**	
TOTAL AMPS	**92 A**	**-**	**87 A**	**-**	**93 A**	

ELECTRICAL PANEL NOTES

1. EXISTING CIRCUIT BREAKER
2. REMOVE EXISTING BREAKER AND REPLACE WITH NEW BREAKER AS SHWON
3. NEW CIRCUIT BREAKER

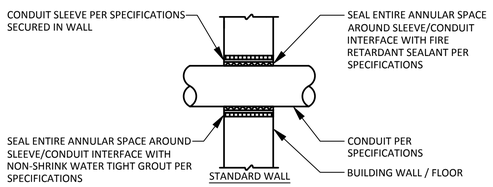

2 WALL PENETRATION DETAIL
NOT TO SCALE

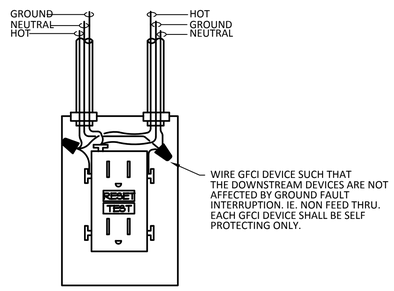

1 GFCI RECEPTACLE WIRING DIAGRAM
NOT TO SCALE

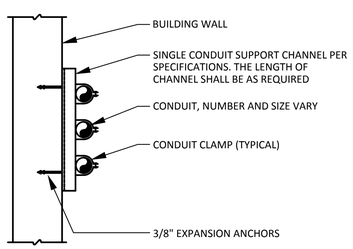

NOTE:
CONDUIT MAY RUN VERTICAL OR HORIZONTAL DEPENDING ON APPLICATION.

4 WALL / CEILING CONDUIT SUPPORT DETAIL
NOT TO SCALE

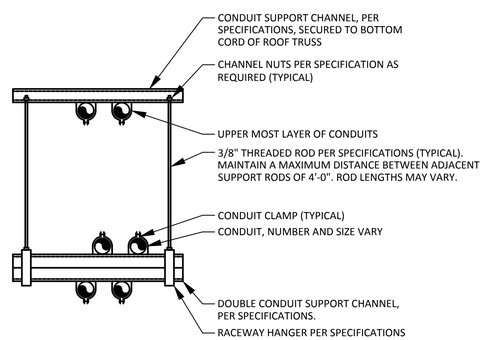

3 CONDUIT SUPPORT DETAIL
NOT TO SCALE

ENCOTECH ENGINEERING CONSULTANTS
TBPE Firm 1141 | 8500 Bluffstone Cove, Suite B-103 Austin, Texas 78759 | 512.338.1101
Project No.: 15009.M.AUS

STATE OF TEXAS — SHARON S. BICKFORD — 77390 — LICENSED PROFESSIONAL ENGINEER
08/30/2016

mwm Design Group
305 East Huntland Drive
Suite 200
Austin, Texas 78752
p: 512.453.0767
f: 512.453.1734
TBAE FIRM REGISTRATION NO.: 1452
TBPE FIRM REGISTRATION NO.: F-1416
TBPLS FIRM REGISTRATION NO.: 10065600

NO.	DATE	DESCRIPTION	BY

SCALE IS AS NOTED ON DRAWING

ELECTRICAL SCHEDULES & DETAILS

AFD WOMEN'S LOCKER RM. ADDN, PHASE V & EMS VEHICLE BAY EXPANSIONS & GEN. RENOVATIONS
5401 McCARTY LANE, AUSTIN, TEXAS 78749

PLOTTED: 8/30/2016
JOB NO: 023-79D

FS27-E210

File: J:\ACTIVE PROJECTS\WMM\15009.M.AUS — AFD WLR Ph 5\1. MEP\D-AutoCAD\FS27\15009 FS27 E210 Elec Schedule Details.dwg 24x36

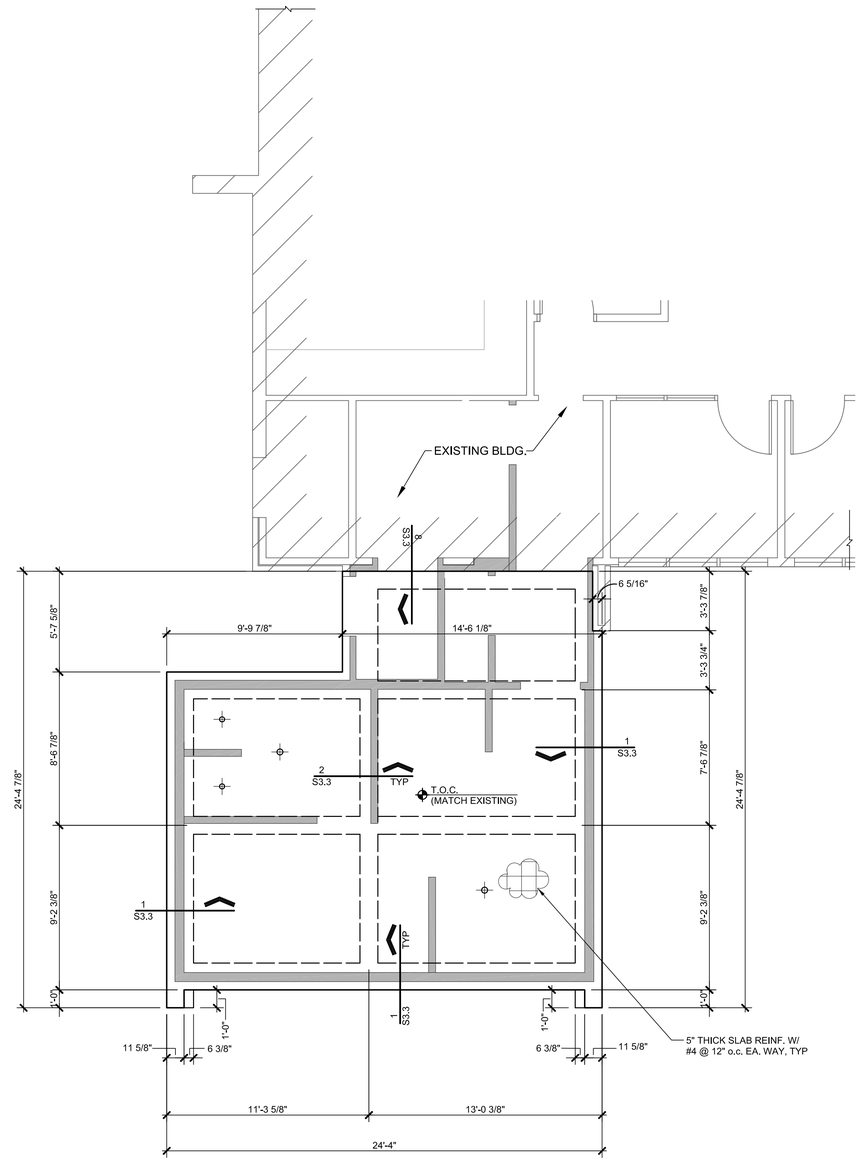

NOTES:

1. FIN. FLR. ELEV. MATCH EXISTING SLAB ELEVATION. T.O.C. REFERS TO TOP OF STRUCTURAL SLAB U.N.O.

2. - INDICATES SLAB DEPRESSIONS. SEE STRUCTURAL PLANS & DETAILS FOR DEPTH OF SLAB DEPRESSIONS SEE ARCHITECTURAL FOR EXACT LOCATIONS OF ALL SLAB DEPRESSIONS. DROPS SHOWN ON PLAN ARE IN STRUCTURAL SLAB SEE ARCHITECTURAL FOR EXACT LOCATIONS OF ALL SLAB DEPRESSIONS.

3. SEE ARCHITECTURAL AND MECHANICAL - COORDINATE ALL FLOOR OPENINGS AND PENETRATIONS WITH TRADES INVOLVED FOR ACTUAL SIZES AND LOCATIONS.

4. REFER TO MECHANICAL, ELECTRICAL AND PLUMBING DRAWINGS FOR SLAB PENETRATIONS AND UNDERGROUND UTILITIES.

5. CONTRACTOR TO VERIFY ALL SLAB EDGE, STAIR AND ELEVATOR OPENING DIMENSIONS WITH ARCHITECTURAL DRAWINGS PRIOR TO CONSTRUCTION.

6. SEE GENERAL NOTES AND SPECIFICATION FOR ADDITIONAL INFORMATION.

7. CONTRACTOR TO VERIFY ALL DIMENSIONS AND EXISTING CONDITIONS AND AND REPORT ANY DISCREPANCY TO THE ARCHITECT AND THE ENGINEER.

8. REFER TO ARCHITECTURAL DRAWINGS FOR EXTENT AND DIMENSIONS OF RAISED OR DEPRESSED SLAB AREAS, SLOPES AND DRAINS.

1'-0" MIN. REMOVAL OF EXISTING FAT CLAYS

1 FOUNDATION PLAN _FS27

SCALE: 1/4" = 1'-0"

JOSE I. GUERRA, INC.
CONSULTING ENGINEERS
2401 S. IH35 SUITE 210
AUSTIN, TEXAS 78741
(512) 445-2090
TBPE FIRM F-3

STATE OF TEXAS
JOSE I. GUERRA
NUMBER 85588
REGISTERED PROFESSIONAL ENGINEER
8-30-16

mwm Design Group
305 East Huntland Drive
Suite 200
Austin, Texas 78752
p: 512.453.0767
f: 512.453.1734
TBAE FIRM REGISTRATION NO.: 1452
TBPE FIRM REGISTRATION NO.: F-1416
TBPLS FIRM REGISTRATION NO.: 10065600

NO.	DATE	DESCRIPTION	BY

0 1"
The bar above measures one inch on the original drawing. Adjust scales accordingly.

FOUNDATION PLAN

WOMEN'S LOCKER ROOM PHASE V
5401 McCARTY LANE, AUSTIN, TEXAS 78749

PLOTTED: 8/30/2016
JOB NO: 023-79D

FS27-S2.0

___ OF ___

File: F:\15011_AFD Women's Locker Rm Improvements\DRAWINGS\CAD\15011_FS27_S2.0 FOUNDATION PLAN.dwg 24x36

SHORING NOTES:

1. ALL NEW OPENINGS ARE TO BE FRAMED WITH NEW STEEL BEAMS OR GLULAM BEAMS TO SUPPORT THE ROOF AND CEILING LOADS CURRENTLY SUPPORTED BY EXISTING LOAD BEARING WALLS TO BE DEMOLISHED. REFERENCE ARCHITECTURAL DRAWINGS FOR DEMOLITION DRAWINGS.

2. THE STRUCTURAL DRAWINGS AND SPECIFICATIONS REPRESENT THE FINISHED STRUCTURE. THEY DO NOT INDICATE THE METHODS OF CONSTRUCTION UNLESS SO STATED OR NOTED. THE CONTRACTOR SHALL PROVIDE ALL MEASURES NECESSARY TO PROTECT THE WORKERS AND ALL OTHER PERSONS DURING CONSTRUCTION.

3. THE CONTRACTOR SHALL PROVIDE TEMPORARY ERECTION BRACING AND SHORING OF ALL STRUCTURAL WORK AS REQUIRED FOR STABILITY OF THE STRUCTURE DURING ALL PHASES OF CONSTRUCTION. THE CONTRACTOR SHALL IMMEDIATELY NOTIFY THE ENGINEER OF ANY CONDITION THAT MIGHT ENDANGER THE STABILITY OF THE STRUCTURE OR CAUSE DISTRESS IN THE STRUCTURE.

4. THE EXISTING LOAD BEARING WALLS TO BE DEMOLISHED ARE TO BE SHORED BY THE CONTRACTOR. THE CONTRACTOR'S TEMPORARY SHORING SYSTEM IS TO REMAIN IN PLACE UNTIL ALL NEW BEAMS HAVE BEEN ERECTED AND ATTACHED TO THE EXISTING LOAD BEARING WALLS/ROOF FRAMING PER STRUCTURAL DRAWINGS.

5. THE CONTRACTOR SHALL SUBMIT SHORING PLANS FOR REVIEW BY ARCHITECT/ ENGINEER THE SHORING PLAN SHALL BE DESIGNED AND SEALED BY AN ENGINEER REGISTERED IN THE STATE OF TEXAS.

6. THE SHORING SYSTEM SHOULD JACK THE EXISTING LOAD BEARING WALLS BETWEEN 1/16" AND 1/8" ABOVE THEIR FINAL ELEVATIONS IN ORDER TO INSURE THAT THE ROOF LOADS ARE TRANSFERRED TO THE NEW BEAMS WITHOUT DEFLECTION.

7. THE BUILDING MUST REMAIN OPEN AND OPERATING DURING CONSTRUCTION. ALL WORK MUST BE PERFORMED IN SUCH A MANNER AS TO CAUSE MINIMAL DISRUPTION TO THE NORMAL ACTIVITIES OF THE BUILDING.

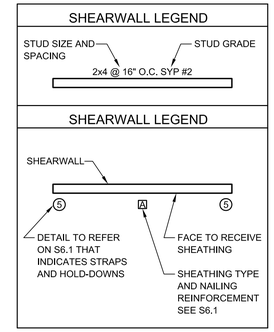

CEILING JOIST NOTES:

1. G.C. SHALL VERIFY DIMENSIONS WITH ACHITECTURAL DRAWINGS AND SHALL NOTIFY ARCH/ ENGINEER OF DISCREPANCIES PRIOR TO CONSTRUCTIONS.
2. FOR INTERIOR AND EXTERIOR WALLS, PROVIDE (2) KING STUDS FOR OPENINGS UP TO 5 FEET IN LENGTH, OR (3) KING STUBS FOR OPENINGS UP TO 9 FEET LENGTH. KING STUD QUANTITY IS TO BE PROVIDED AT EACH SIDE OF OPENING.
3. PROVIDE (1) TRIMMER STUD FOR OPENINGS UP TO 5 FEET LENGTH, (2) TRIMMER STUDS FOR OPENINGS UP TO 10 FEET LENGTH, OR (3) TRIMMER STUDS FOR OPENINGS UP 16 FEET LENGTH. TRIMMER STUD QUANTITY IS TO BE PROVIDED AT EACH SIDE OF OPENING.
4. STUD PACKS SHALL INCLUDE KING AND TRIMMER STUDS AT OPENINGS.
5. TRIMMER AND KING STUD SIZE SHALL MATCH WALL FRAMING STUD SIZE.
6. VERTICAL NAILING BETWEEN TRIMMER STUDS AND BETWEEN KING STUDS SHALL BE 16d AT 16".
7. REFERENCE THIS SHEET FOR LOAD BEARING WALL STUD SIZE & SPACING.
8. REFERENCE SHEET S4.1 FOR SHEAR WALL SCHEDULE.
9. ALL LUMBER TO BE #2 S.Y.P.K.D.
10. ALL CEILING JOISTS TO BE 2x8 AL 16" O.C. UNLESS NOTED OTHERWISE (17'-0" MAX SPAN) REFERENCE IBC FOR OTHER SPANS
11. ALL HEADERS @ 2x4 WALLS TO BE 2-2X PER IBC CODE UNLESS NOTED OTHERWISE. @ 2x6 WALLS TO BE 3-2x PER IBC CODE UNLESS NOTED OTHERWISE.

HEADER SCHEDULE

3-2x8 0'-0" to 5'-0"
3-2x10 5'-1" to 6'-1"
3-2x12 6'-2" to 7'-1"

12. ALL BEAMS LARGER THAN 2-2x6 TO BE SUPPORTED BY BUILT-UP STUD COLUMNS AT 2x6 STUD WALLS AND 2x4 STUD WALLS AT EACH END UNLESS NOTED OTHERWISE AND BLOCKED SOLID TO FOUNDATION. SEE BUILT-UP COLUMN SCHEDULE SHEET S4.0 FOR NUMBER OF BUILT-UP STUD COLUMN; AT EACH END OF BEAMS.
13. DOUBLE 2x8 CEILING JOISTS AS REQUIRED. UNDER HVAC AND/OR WH UNITS LOCATED IN ATTIC. PROVIDE 3/4" PLYWOOD DECK PAD AND CATWALK AS REQUIRED.
14. ALL BEAMS JOB BUILT FROM 3 OR MORE MEMBERS NAILED WITH 10D NAILS @ 6" O.C. TOP AND BOTTOM.
15. ALL GLU-LAMS TO BE DESIGNED WITH STANDARD CAMBER OF R=2000 FT.
16. BRACE TOP FLANGE OF ALL GLULAM, MICROLLAM, OR 2xWOOD BEAMS @ 4'-0" EA SIDE OF CEILING JOISTS WITH 2x6 CONTINUOS STIFFBACK AND 2x4 BRACES
17. STUD WALLS SHALL BE 2x6 @ 16 " O.C., #2 S.Y.P.K.D. UNO. (MAX. HEIGHT 10'-0") STUD WALLS SHALL BE 2x8 @ 16" O.C. , # 2 S.Y.P.K.D. UNO. (HEIGHTS GREATER THAN 10-0" TO 14'-0" MAX.)
18. PROVIDE 2x BLOCKING AT 4'-0" O.C. VERTICALLY AT ALL STUD WALLS.
19. ALL FRAMING TO COMPLY WITH I.B.C. BUILDING CODES, CURRET EDITION.
20. VERIFY ANY CHANGES WITH ENGINEER PRIOR TO CONSTRUCTION.

ROOF FRAMING PLAN

SCALE:

PLAN NOTES:

1. G.C. SHALL VERIFY DIMENSIONS WITH ACHITECTURAL DRAWINGS AND SHALL NOTIFY ARCH/ ENGINEER OF DISCREPANCIES PRIOR TO CONSTRUCTIONS.
2. ALL LUMBER TO BE #2 Y.P.K.D.
3. ALL RAFTERS TO BE 2x8 AT 16"O.C. WITH A MAXIMUM UNBRACED SPAN 18'-0" MEASURED ALONG THE SLOPE, UNLESS NOTED OTHERWISE.
4. ALL HIPS, RIDGES, VALLEYS TO BE 2x10 MAXIMUM. UNBRACED SPAN 8'-0" UNLESS NOTED OTHERWISE. PROVIDE "TEE" BRACES @ 6'-0" O.C. MAX SPACING AT RIDGES. PROVIDE "TEE" BRACES @ 8'-0" O.C. MAX SPACING AT HIPS AND VALLYS. PROVIDE DBL STUDS BELOW EACH "TEE" BRACE AT STUD WALLS
5. PROVIDE 2x8 CONTINUOUS PURLINS WITH 2x8 "TEE" BRACES @ 4'-0" O.C. MAX SPACING PROVIDE DBL STUDS BELOW EACH "TEE" BRACE AT STUD WALLS. NAIL "TEE" BRACE TOGETHER WITH 10D NAILS @ 6" O.C.- TYPICAL.
6. "TEE" BRACES LONGER THAN 8'-0" SHALL BE DBL 2x8 STUD WITH FLANGE PLATE "TEE" BRACE AND BRACED HORIZONTALLY @ 6'-0" O.C. IN TWO DIRECTIONS, NAIL "TEE" BRACE TOGETHER WITH 1O D NAILS @ 6" O.C. - TYPICAL
7. PROVIDE 2x6 MIN. COLLAR TIES AT 4'-0" O.C. AT ALL RIDGES.
8. ALL FRAMING TO COMPLY WITH I.B.C. BUILDING CODE CURRENT EDITION.
9. VERIFY AND CHANGES WITH ENGINEER PRIOR TO CONSTRUCTION.

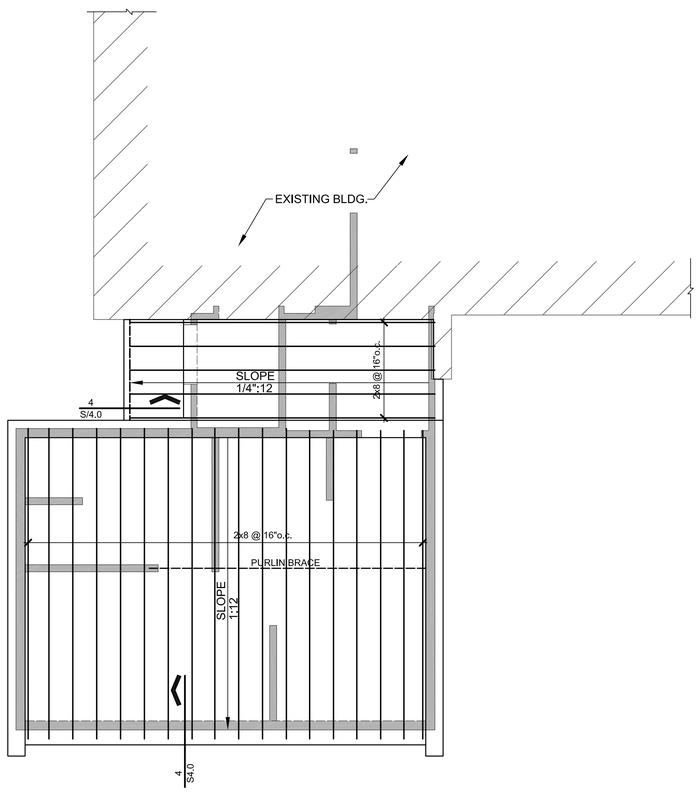

NOTE:
TOP OF STUD WALL ELEVATION REF. ARCH'L

NORTH

2 ROOF FRAMING PLAN _FS27

SCALE: 1/4" = 1'-0"

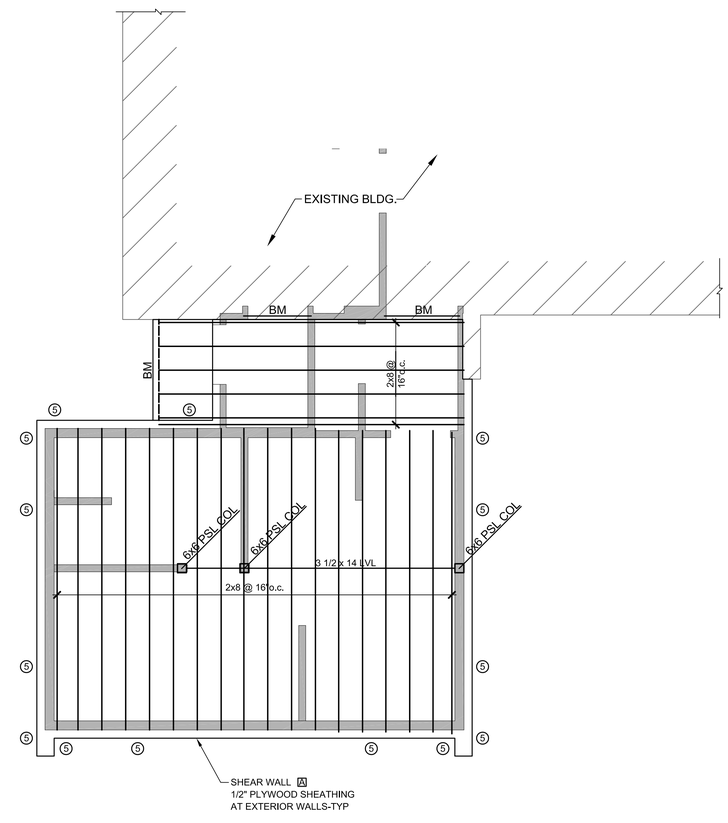

NORTH

1 CEILING FRAMING PLAN _FS27

SCALE: 1/4" = 1'-0"

JOSE I. GUERRA, INC.
CONSULTING ENGINEERS
2401 S. IH35 SUITE 210
AUSTIN, TEXAS 78741
(512) 445-2090
TBPE FIRM F-3

STATE OF TEXAS — JOHN C. HAYS — 85586 — PROFESSIONAL ENGINEER
8-30-16

mwm Design Group
305 East Huntland Drive
Suite 200
Austin, Texas 78752
p: 512.453.0767
f: 512.453.1734
TBAE FIRM REGISTRATION NO.: 1452
TBPE FIRM REGISTRATION NO.: F-1416
TBPLS FIRM REGISTRATION NO.: 10065600

NO.	DATE	DESCRIPTION	BY

0 1"
The bar above measures one inch on the original drawing. Adjust scales accordingly.

ROOF & CEILING FRAMING PLAN

WOMEN'S LOCKER ROOM PHASE V
5401 McCARTY LANE, AUSTIN, TEXAS 78749

PLOTTED: 8/30/2016
JOB NO: 023-79D

FS27-S2.1

___ OF ___

File: F:\15011_AFD Women's Locker Rm Improvements\DRAWINGS\CAD\15011_FS27_S2.1 ROOF FRAMING PLAN.dwg 24x36

PLAN GENERAL NOTES

A. REFER TO M0.00 FOR GENERAL NOTES.

B. DO NOT ROUTE ANY DUCT & PIPING ABOVE ELECTRICAL PANELS.

C. PROVIDE AND INSTALL TRANSITION AS REQUIRED TO CONNECT SMALL DUCT TO LOUVER OR GRILLE.

D. COORDINATE WITH ARCHITECT AND STRUCTURAL ENGINEER FOR ALL WALL AND ROOF PENETRATION.

E. MAINTAIN 10' CLEARANCE FROM ANY EXHAUST AIR OUTLET OR FLUE TO ANY OUTSIDE AIR INTAKE OR OPENING TO BUILDING.

F. PROVIDE LOCKING ACCESS PORT CAPS ON ALL REFRIGERANT CIRCUIT SERVICE PORTS LOCATED ON THE EXTERIOR OF THE BUILDING.

G. ESTIMATED LOCATION OF ALL EXISTING MECHANICAL LAYOUT AND EQUIPMENT LOCATION IS BASED ON SITE OBSERVATION AND EXISTING DRAWINGS. CONTRACTOR SHALL VERIFY SIZE, LOCATION OF ALL EXISTING PLUMBING PIPING EQUIPMENT PRIOR TO BID AND CONSTRUCTION.

KEYED NOTES

1. PROVIDE AND INSTALL CONDENSING UNITS ON CONCRETE PAD. COORDINATE WITH GENERAL CONTRACTOR TO PROVIDE AND INSTALL CONCRETE PADS.
2. SUSPEND HORIZONTAL AIR HANDLER UNIT ABOVE CEILING WITH NEOPRENE CORK VIBRATION ISOLATORS AND SECONDARY DRAIN PAN (OVERFLOW SWITCH MOUNTED TO PAN WITH STEEL SCREW TO SHUT OFF UNIT WHEN PAN OVERFLOWS).

   ROUTE 3/4" INSULATED CONDENSATE DRAIN DOWN TO TAILPIECE ABOVE LAVATORY.
3. PROVIDE PROGRAMMABLE THERMOSTAT MOUNTED AT 48" A.F.F.
4. EXHAUST FAN SHALL BE SUSPENDED FROM CEILING WITH VIBRATION ISOLATORS.
5. ROUTE COMBINED 10"Ø EXHAUST DUCT FROM EXHAUST FANS THROUGH ROOF TO LOW PROFILE ROOF CAP WITH INTEGRAL BIRDSCREEN AND FLASHING.
6. 14/12 SUPPLY DUCTWORK UP FROM LEVEL 1 TO LEVEL 2 INSIDE CLOSET.
7. GAS UNIT HEATER SHALL BE SUSPENDED FROM STRUCTURAL MEMBER WITH VIBRATION ISOLATORS AT 13'-0" A.F.F. TO BOTTOM OF UNIT HEATER. ROUTE COMBINED DRAIN FROM BOTH UNIT HEATERS SECONDARY HEAT EXCHANGER CONDENSATE 3/4" DRAIN FROM HEATER TO 1" ABOVE RIM OF LS INK.

   ROUTE 4" COMBUSTION AIR PIPING AND 4" VENT AIR PIPING UP THROUGH ROOF VIA MANUFACTURER'S CONCENTRIC VENT KIT. ROUTE COMBINED 3/4" DRAIN FROM UNIT HEATER VEND PIPING TO 1" ABOVE RIM OF LS SINK.
8. PROVIDE AND INSTALL EXHAUST FAN WITH CURB ON ROOF. ROUTE 12x12 DUCT FROM EXHAUST DUCT TO EXHAUST GRILLE 'EX' ON CEILING
9. ROUTE 4" EXHAUST DUCT FROM KITCHEN HOOD ABOVE CEILING TO WALL THEN UP INSIDE WALL THROUGH ROOF TO LOW PROFILE ROOF CAP. MAINTAIN 10 ' CLEARANCE FROM WALL CAP TO OPENING TO BUILDING.
10. CEILING CASSETTE AIR HANDLER SHALL BE SUSPENDED FROM STRUCTURAL MEMBER WITH VIBRATION ISOLATORS.

    ROUTE 6" OUTSIDE AIR DUCT TO UNIT FROM LOW PROFILE ROOF CAP (GREENHECK RCC-7 OR APPROVED EQUIVALENT).
11. ROUTE COMBINED 3/4" INSULATED CONDENSATE DRAIN TO TO 6" ABOVE RIM OF MOP SINK.
12. SUPPLY AIR DUCT INSIDE FRAMED BENCH .
13. PROVIDE SUPPLY AIR TAP UNDER DUCT INSIDE FRAMED BENCH AT LEVEL 2. SEE 2/EMS11-.110 FOR CONTINUATION.
14. ROUTE FLEXIBLE SUPPLY AIR DUCT BETWEEN FLOOR JOIST.
15. SUPPLY AIR DUCT SHALL BE MOUNTED ON WALL OF FRAMED BENCH TO PROVIDE AIR TO LEVEL 2 MULTIPURPOSE ROOM.
16. 8"Ø LOW PROFILE TYPE OUTSIDE AIR INTAKE WITH ACCESSIBLE MANUAL VOLUME DAMPER, BIRDSCREEN AND FLASHING. INTAKE SHALL BE PAINTED TO MATCH ROOF COLOR. COORDINATE ROOF PENETRATION AND COLOR WITH ROOFING CONTRACTOR.

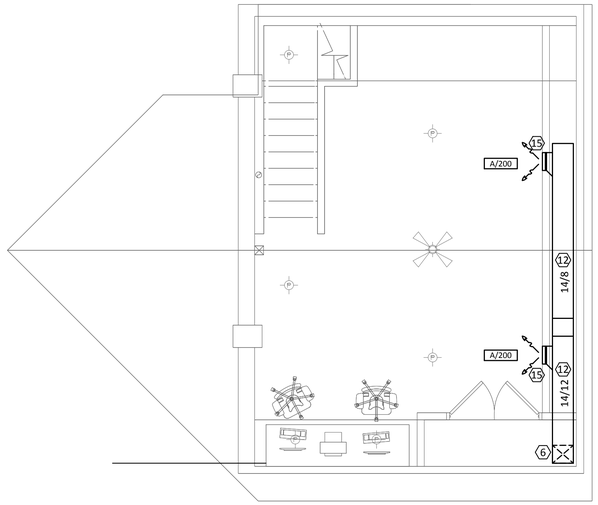

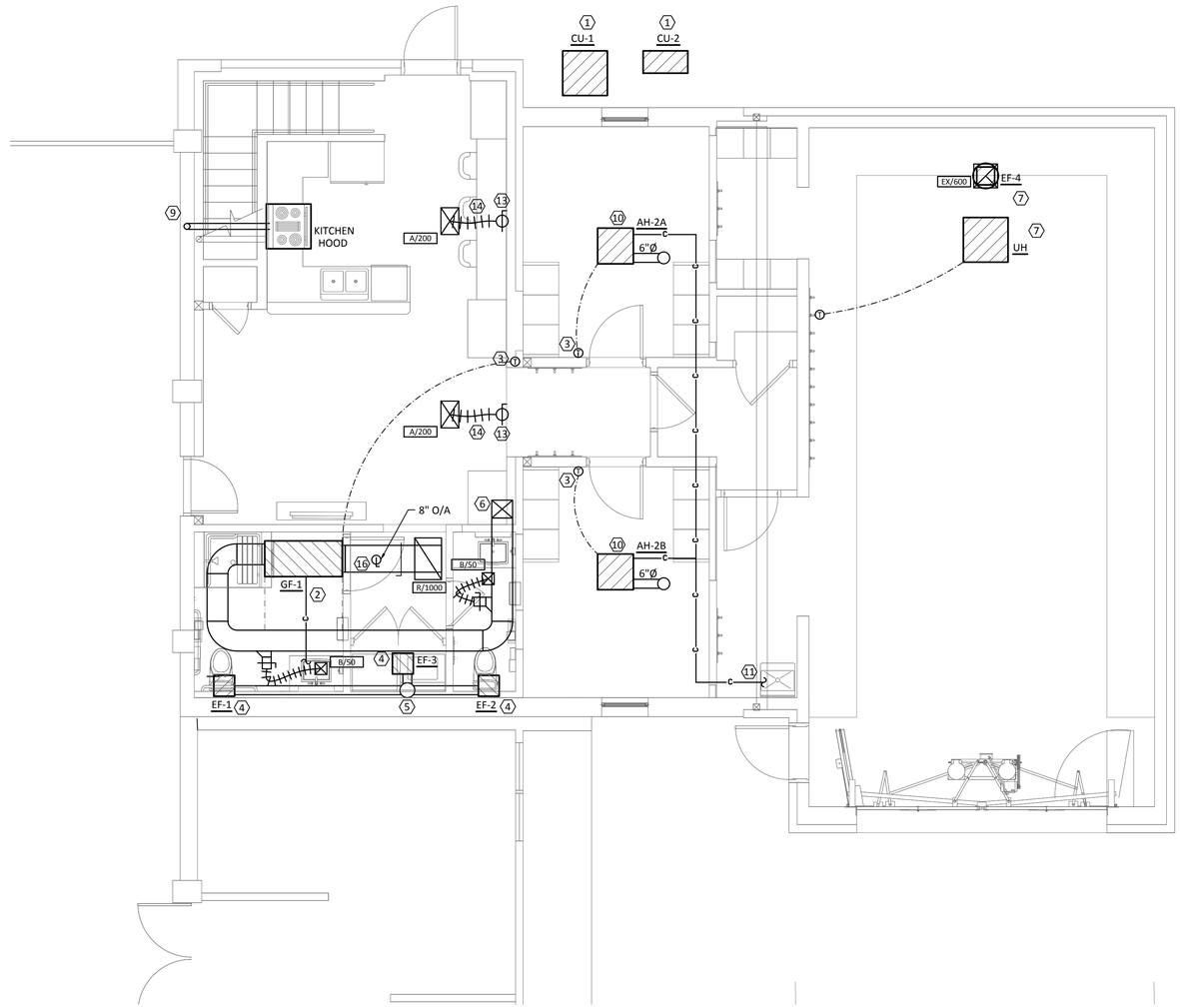

2 LEVEL 2 - MECHANICAL PLAN
SCALE: 1/4" = 1'-0"

1 LEVEL 1 - MECHANICAL PLAN
SCALE: 1/4" = 1'-0"

ENCOTECH ENGINEERING CONSULTANTS
TBPE Firm 1141 | 8500 Bluffstone Cove, Suite B-103 Austin, Texas 78759 | 512.338.1101
Project No.: 14046.M.AUS

STATE OF TEXAS LYNN C. BROWN 55248 LICENSED PROFESSIONAL ENGINEER
08/30/2016

mwm Design Group
305 East Huntland Drive
Suite 200
Austin, Texas 78752
p: 512.453.0767
f: 512.453.1734
TBAE FIRM REGISTRATION NO.: 1452
TBPE FIRM REGISTRATION NO.: F-1416
TBPLS FIRM REGISTRATION NO.: 10065600

NO.	DATE	DESCRIPTION	BY

SCALE IS AS NOTED ON DRAWING

MECHANICAL PLANS

AFD WOMEN'S LOCKER RM. ADDN, PHASE V & EMS VEHICLE BAY EXPANSIONS & GEN. RENOVATIONS
5401 McCARTY LANE, AUSTIN, TEXAS 78749

PLOTTED: 8/30/2016
JOB NO: 023-81

EMS11-M110

File: J:\ACTIVE PROJECTS\MWM\14095.M.AUS – EMS\1. MEP\D-AutoCAD\EMS Station 11\14095-EMS11 M100 Mech Plan.dwg 24x36

CONDENSING UNIT SCHEDULE

MARK	CLG. DATA		ELECTRICAL DATA			UNIT DATA				
	TONS	EER/ SEER	MCA	MOCP	VOLT/PH	MAKE	MODEL	LBS.	NOTES	CORRESPONDING AIR HANDLER
CU-2	1.5	14.0/ 21.0	13.3	20	208V/1PH	LG	LMU18CHV	100		AH-2A & 2B
CU-1	2.5	-/ 13.0	15.0	25	208V/1PH	TRANE	4TTB3030	195		GF-1

NOTES:
1. PROVIDE DISCONNECT, TO BE FIELD MOUNTED BY ELECTRICAL CONTRACTOR.
2. COMPRESSOR SHALL BE PROVIDED WITH 10 YEARS WARRANTY.
3. UNIT TO BE PROVIDED LOW AMBIENT KIT FOR OPERATION DOWN TO 40°F.

GAS FURNACE UNIT SCHEDULE

MARK	AIR DATA					COOLING DATA												HEATING DATA					ELECTRICAL DATA			UNIT DATA			
	TOT. CFM	O/A CFM	E.S.P.	HP	CONFIGURATION	AMBIENT D.B.	AMBIENT W.B.	ENTERING D.B.	ENTERING W.B.	LEAVING D.B.	LEAVING W.B.	DESIGN SENS.	DESIGN TOT.	SCHEDULE SENS.	SCHEDULE TOT.	STAGE	EER/ SEER	DES. MBH	SCHEDULE IN	SCHEDULE OUT	STAGE	AFUE	MCA	MOCP	VOLT/PH	MAKE	MODEL	LBS.	NOTES
GF-1	1000		0.5	0.5	CONVERTIBLE	105	74	80	67	-	-			21.2	28.1	1	-/ 13.0		60.0	57.0	1	0.95	9.2	15	115/1PH	TRANE	TUH1B060 4TXCB031	140	

NOTES:
1. PROVIDED STANDARD THERMOSTAT, SINGLE STAGE COOLING AND HEATING, BY HONEYWELL, OR APPROVED EQUIVALENT.
2. UNIT TO BE MOUNTED USING VIBRATION ISOLATORS.
3. UNIT TO INCLUDE STANDARD DISPOSABLE 1" FILTER.

DUCTLESS SPLIT UNIT SCHEDULE

MARK	AIR DATA					COOLING DATA												HEATING DATA					ELECTRICAL DATA			UNIT DATA			
	TOT. CFM	O/A CFM	E.S.P.	HP	CONFIGURATION	AMBIENT D.B.	AMBIENT W.B.	ENTERING D.B.	ENTERING W.B.	LEAVING D.B.	LEAVING W.B.	DESIGN SENS.	DESIGN TOT.	SCHEDULE SENS.	SCHEDULE TOT.	STAGE	EER/ SEER	DES. MBH	SCHEDULE MBH	SCHEDULE KW	STAGE	HSPF	MCA	MOCP	VOLT/PH	MAKE	MODEL	LBS.	NOTES
AH-2A	265	30	N/A	-	CASSETE	105	74	80	67	-	-			-	9.0	INV.	14.0/ 21.0	-	8.5	-	-	9.20	0.2	15	208V/1PH	LG	LMCN097HV	31	
AH-2B	265	30	N/A	-	CASSETE	105	74	80	67	-	-			-	9.0	INV.	14.0/ 21.0	-	8.5	-	-	9.20	0.2	15	208V/1PH	LG	LMCN097HV	31	

NOTES:
1. EACH UNIT TO BE MOUNTED USING VIBRATION ISOLATORS.
2. INDOOR UNIT TO INCLUDE MANUFACTURER THERMOSTAT.

AIR DEVICE SCHEDULE

MARK	SIZE	MOUNTING	INLET	CFM	MAX NC	DESCRIPTION	MAKE	MODEL
A	14" x 6"	GYP CEILING	-	200-300	-	LOUVER FACE, DOUBLE DEFLECTION SUPPLY AIR GRILL	PRICE	14x6/620-F-L-A-B12
B	8" x 6"	GYP CEILING	-	50-100	-	LOUVER FACE, DOUBLE DEFLECTION SUPPLY AIR GRILL	PRICE	8x6-620-F-L-A-B12
S	14" x 6"	WALL	-	200-300	-	LOUVER FACE, DOUBLE DEFLECTION SUPPLY AIR GRILL	PRICE	14x6-620-F-L-A-B12
R	24" x 20"	GYP CEILING	-	500-1000	-	LOUVER FACE RETURN AIR GRILL	PRICE	24x20-630-F-L-A-B12
EX	18" x 18"	GYP CEILING	-	600	-	LOUVER FACE EXHAUST AIR GRILL	PRICE	18x18-630-F-L-A-B12

NOTES:
1. COORDINATE EXACT LOCATION OF DIFFUSERS WITH ARCHITECTURAL REFLECTED CEILING PLAN.
2. NECK SIZES SHALL BE SIZED AS PER FLEX DUCT SCHEDULE, EXCEPT RETURN GRILLES, WHICH HAVE NOMINAL SIZE NECK.
3. AIRFLOW QUANTITIES AS NOTED ON MECHANICAL DRAWINGS.

FAN SCHEDULE

MARK	AREA SERVED	LOCATION	INTERLOCK	AIR DATA				ELECTRICAL DATA			UNIT DATA					
				CFM	S.P.	HP	RPM	FLA	MOCP	VOLT/PH	MAKE	MODEL	TYPE	DRIVE	LBS.	NOTES
EF-1	BATHROOM	CEILING	LIGHT SWITCH	75	0.25	-	900	0.6	15	115V/1PH	GREENHECK	SP-B90	CENTRIFUGAL	DIRECT	8	DISC, SC, BDD, CC, BS, VI
EF-2	BATHROOM	CEILING	LIGHT SWITCH	75	0.25	-	900	0.6	15	115V/1PH	GREENHECK	SP-B90	CENTRIFUGAL	DIRECT	8	DISC, SC, BDD, CC, BS, VI
EF-3	VEHICLE BAY	ROOF	CONTINUOUS	544	0.25	1/4	VAR	5.8	15	115V/1PH	GREENHECK	G-085-VG	CENTRIFUGAL	DIRECT VARIABLE	19	DISC, SC, BDD, RC, BS, VI

NOTES:
1. FEATURE NOTES:
   DISC = DISCONNECT SWITCH
   TD = PROVIDE AND INSTALL A TIME-DELAY-OFF RELAY SWITCH TO ALLOW FAN TO OPERATE UP TO 15 MINUTES AFTER LIGHTS ARE TURNED OFF
   SC = SPEED CONTROL (DIRECT DRIVE FANS ONLY)
   BDD = BACKDRAFT DAMPER
   RC = ROOF CURB
   CC = CURB CAP
   BS = BIRD SCREEN
   VI = VIBRATION ISOLATORS

UNIT HEATER SCHEDULE

TAG	GAS HEAT						MAKE	MODEL	NOTES
	MBH		ELECTRICAL		CFM	LBS			
	INPUT	OUTPUT	V / Ph	A					
UH	60	49.8	120/1	3.8	750	68	REZNOR	UDAS-60	1,2

NOTES:
1. PROVIDE UNIT WITH DISCONNECT SWITCH, HEAT PURGE SWITCH, AND CEILING BRACKET.
2. UNITS TO BE CONTROLLED BY THERMOSTAT SET TO 40°

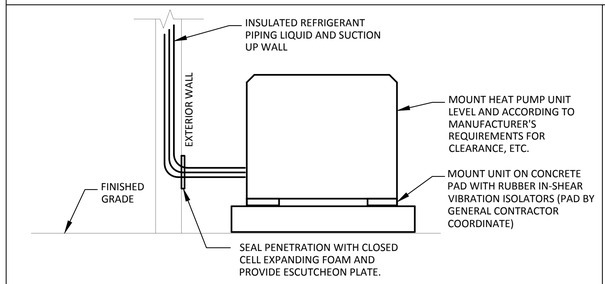

REFRIGERANT PIPING INSULATION NOTES

1. ALL CLOSED CELL POLYMER INSULATION SHALL HAVE GLUED JOINTS WITH COMPLETE COVERAGE OF ALL METAL SURFACES. ALL INSULATION EXPOSED TO EXTERIOR SHALL BE PAINTED WITH TWO COATS AS PER INSULATION MANUFACTURERS SPECIFICATIONS.
2. PROVIDE AND INSTALL LINE DRYER IN LIQUID FREON LINE
3. PROVIDE INSULATION SHIELD AT ALL SUPPORTS.

1 HEAT PUMP UNIT DETAIL
NOT TO SCALE

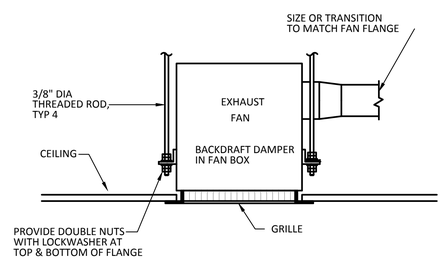

2 CEILING EXHAUST FAN DETAIL
NOT TO SCALE

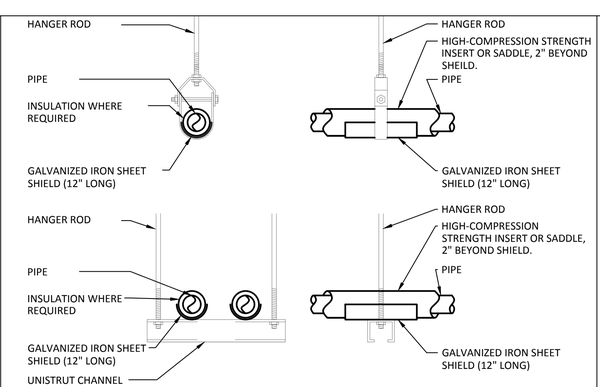

NOTE:
1. ATTACH SUPPORTS FOR ALL PIPING SUSPENDED FROM THE STEEL STRUCTURE TO THE TOP CORD OF JOISTS OR BEAM.
2. PROVIDE COPPER OR PLASTIC COATED HANGERS FOR NON-INSULATED COPPER PIPE

3 PIPE HANGER DETAIL
NOT TO SCALE

ENCOTECH ENGINEERING CONSULTANTS
TBPE Firm 1141
8500 Bluffstone Cove, Suite B-103
Austin, Texas 78759 | 512.338.1101
Project No.: 14046.M.AUS

STATE OF TEXAS
LYNN C. BROWN
55248
LICENSED PROFESSIONAL ENGINEER
08/30/2016

mwm Design Group
305 East Huntland Drive
Suite 200
Austin, Texas 78752
p: 512.453.0767
f: 512.453.1734
TBAE FIRM REGISTRATION NO.: 1452
TBPE FIRM REGISTRATION NO.: F-1416
TBPLS FIRM REGISTRATION NO.: 10065600

NO.	DATE	DESCRIPTION	BY

SCALE IS AS NOTED ON DRAWING

MECHANICAL SCHEDULES & DETAILS

AFD WOMEN'S LOCKER RM. ADDN, PHASE V & EMS VEHICLE BAY EXPANSIONS & GEN. RENOVATIONS
5401 McCARTY LANE, AUSTIN, TEXAS 78749

PLOTTED: 8/30/2016
JOB NO: 023-81

EMS11-M210

File: J:\ACTIVE PROJECTS\MWM\14095.M.AUS – EMS\1. MEP\D-AutoCAD\EMS Station 11\14095-EMS11 M210 Mech Schedule Details.dwg 24x36

PLAN GENERAL NOTES

A. REFER TO P0.00 FOR GENERAL NOTES.

B. ESTIMATED LOCATION OF ALL EXISTING PLUMBING LAYOUT AND EQUIPMENT LOCATION IS BASED ON SITE OBSERVATION AND EXISTING DRAWINGS. CONTRACTOR SHALL VERIFY SIZE, LOCATION OF ALL EXISTING PLUMBING PIPING EQUIPMENT PRIOR TO BID AND CONSTRUCTION

C. DO NOT ROUTE ANY PLUMBING PIPING ABOVE ANY ELECTRICAL PANEL.

D. PROVIDE AND INSTALL WATER SAVER TRAP PRIMER FROM NEAREST LAVATORY OR TRAP PRIMER WITH ACCESSIBLE SHUT-OFF VALVE IN WALL TO ALL FLOOR DRAINS, HUB DRAINS AND FLOOR SINKS. SEE PLAN FOR LOCATION.

E. PROVIDE AND INSTALL ACCESS TO ALL SHUT-OFF VALVES.

F. INSULATE 100% OF ALL HOT WATER PIPING, HOT WATER RETURN PIPING & COLD WATER PIPING ACCORDING TO SPECIFICATIONS.

KEYED NOTES

1. CONNECT NEW 1" CW PIPING TO EXISTING 2"CW PIPING AT MECHANICAL ROOM.
2. MOUNT WATER HEATER ON CONCRETE PAD.
3. PROVIDE AND INSTALL INSTALL ICE MAKER VALVE BOX ON WALL FOR REFRIGERATOR.
4. PROVIDE AND INSTALL HW & CW & DRAIN WASHER BOX ON WALL FOR CLOTHES WASHER.
5. PROVIDE AND INSTALL NEW HOT WATER RECIRCULATION PUMP (GRUNDFOS MODEL UP-26-96-BF, 1/12 HP, 120V, 1Ø 1.7 AMPS SECURELY SUSPEND FROM STRUCTURE W/ VIBRATION ISOLATORS).

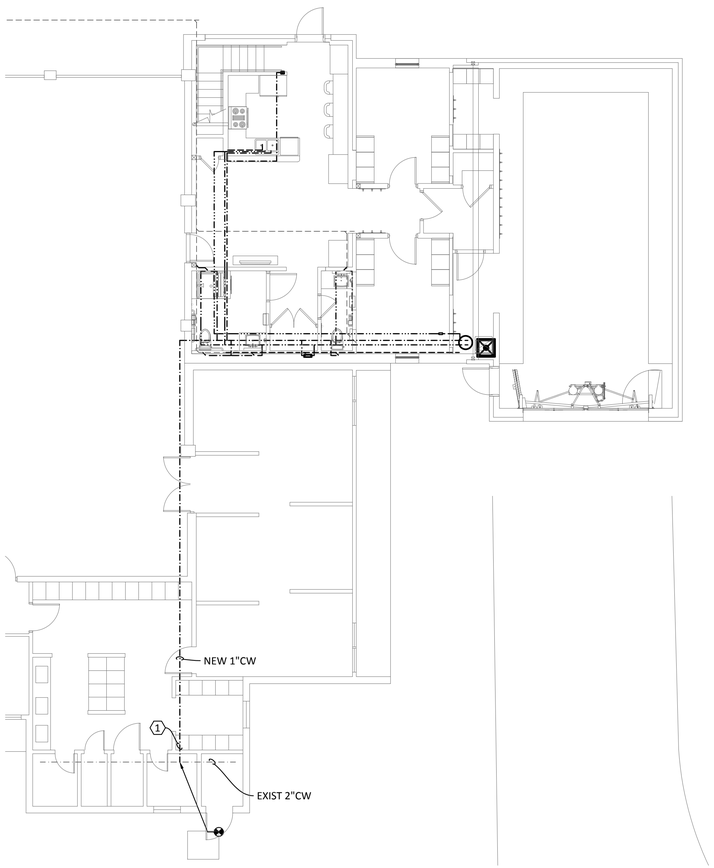

2 OVERALL PLUMBING PLAN
SCALE: 1/8" = 1'-0"

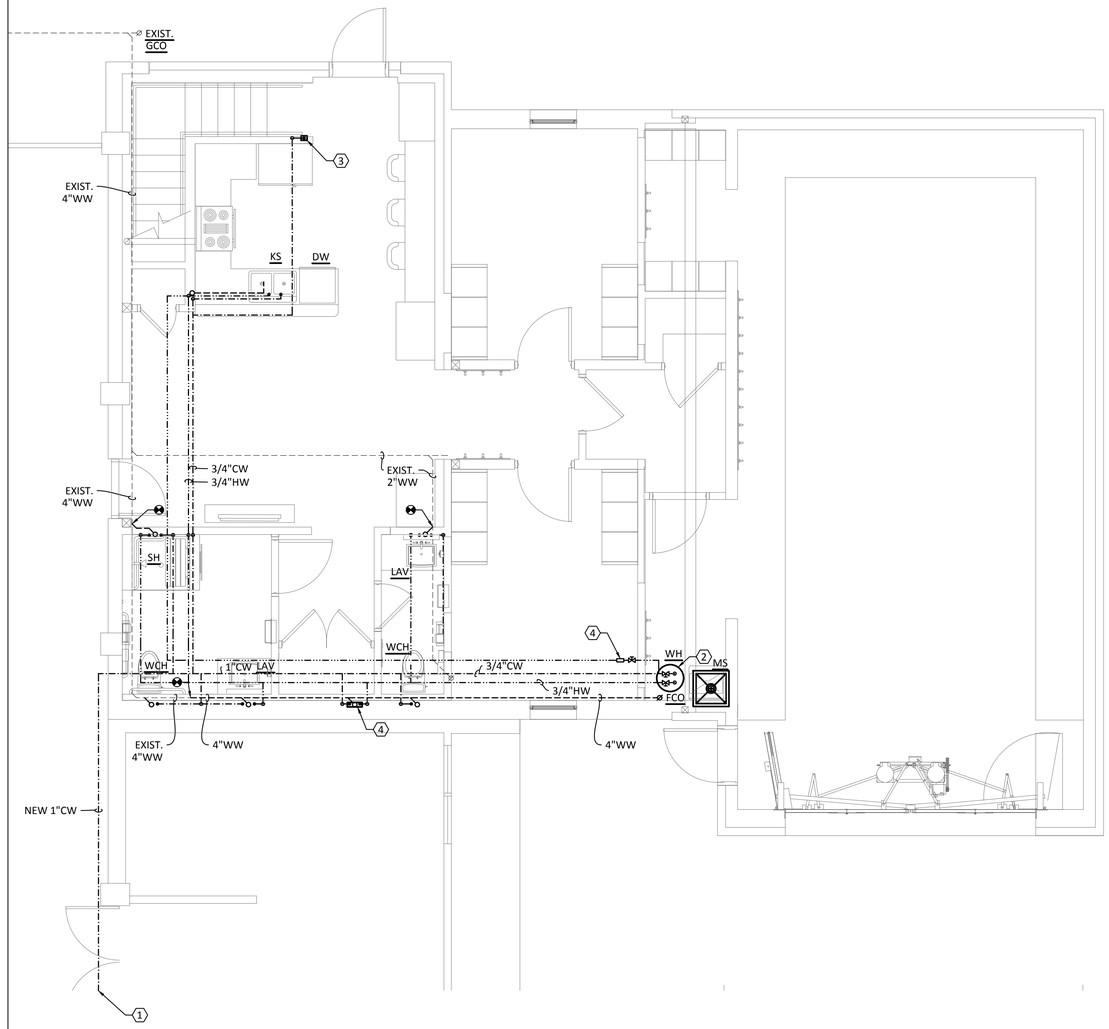

1 LEVEL 1 - PLUMBING PLAN
SCALE: 1/4" = 1'-0"

ENCOTECH ENGINEERING CONSULTANTS
TBPE Firm 1141
8500 Bluffstone Cove, Suite B-103
Austin, Texas 78759 | 512.338.1101
Project No.: 14046.M.AUS

STATE OF TEXAS
LYNN C. BROWN
55248
LICENSED PROFESSIONAL ENGINEER
08/30/2016

mwm Design Group
305 East Huntland Drive
Suite 200
Austin, Texas 78752
p: 512.453.0767
f: 512.453.1734
TBAE FIRM REGISTRATION NO.: 1452
TBPE FIRM REGISTRATION NO.: F-1416
TBPLS FIRM REGISTRATION NO.: 10065600

NO.	DATE	DESCRIPTION	BY

SCALE IS AS NOTED ON DRAWING

PLUMBING PLAN

AFD WOMEN'S LOCKER RM. ADDN, PHASE V & EMS VEHICLE BAY EXPANSIONS & GEN. RENOVATIONS
5401 McCARTY LANE, AUSTIN, TEXAS 78749

PLOTTED: 8/30/2016
JOB NO: 023-81

EMS11-P110

File: J:\ACTIVE PROJECTS\MWM\14095.M.AUS – EMS\1. MEP\D-AutoCAD\EMS Station 11\14095-EMS11 P100 Plumb Plan.dwg 24x36

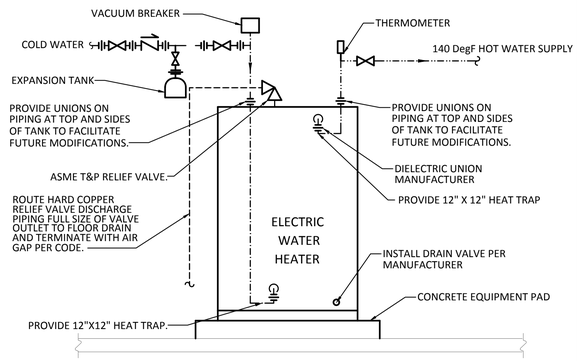

6 ELECTRICAL WATER HEATER WITH RECIRCULATION PUMP
NOT TO SCALE

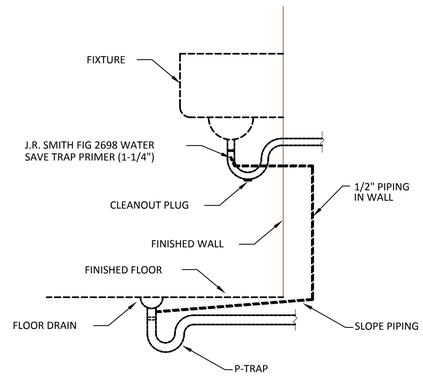

5 WATER SAVER TRAP PRIMER DETAIL
NOT TO SCALE

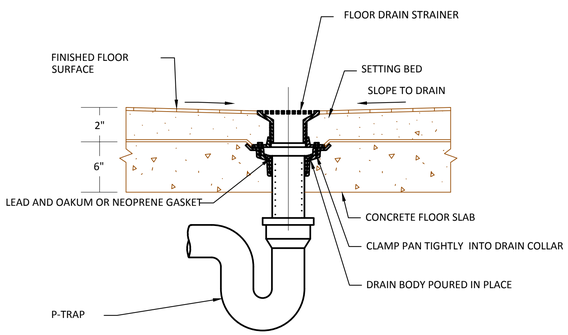

4 TYPICAL FLOOR DRAIN DETAIL
NOT TO SCALE

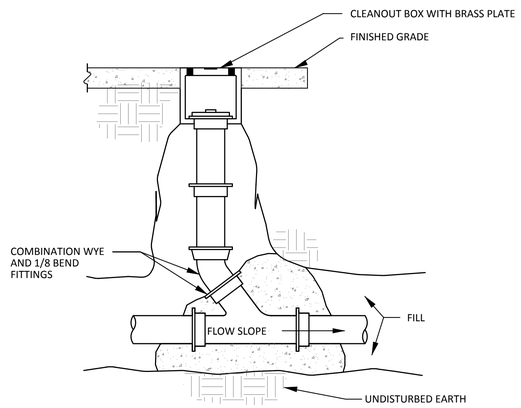

3 EXTERIOR CLEANOUT DETAIL
NOT TO SCALE

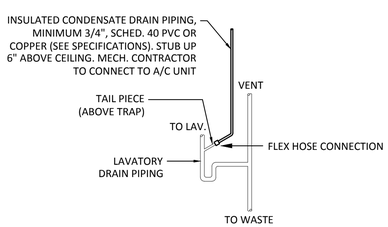

2 CONDENSATE DRAIN - LAVATORY TAILPIECE DETAIL
NOT TO SCALE

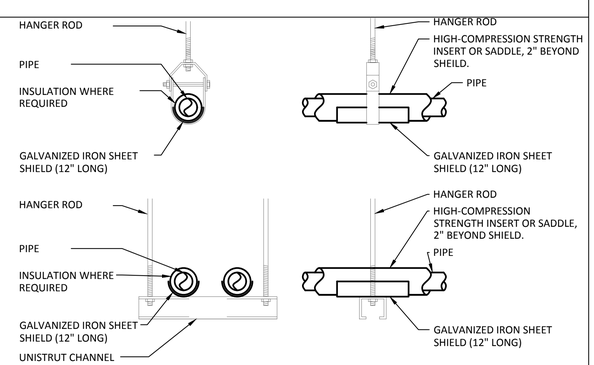

NOTE:
1. ATTACH SUPPORTS FOR ALL PIPING SUSPENDED FROM THE STEEL STRUCTURE TO THE TOP CORD OF JOISTS OR BEAM.
2. PROVIDE COPPER OR PLASTIC COATED HANGERS FOR NON-INSULATED COPPER PIPE

1 PIPE HANGER DETAIL
NOT TO SCALE

PLUMBING FIXTURE SCHEDULE

MARK	CW	HW	VENT	S&W	MODEL NUMBER	DESCRIPTION
WCH	1/2"	-	2"	3"	WATER CLOSET: KOHLER MODEL: HIGHLINE K-3519 SEAT: CHURCH 295SSC	FLUSH TANK WATER CLOSET, FLOOR MOUNTED, 1.0 GPF PRESSURE ASSIST FLUSHING SYSTEM, FLOOR OUTLET, ELONGATED BOWL, TRIP LEVER ON OPPOSITE SIDE FROM ADJACENT WALL, ADA COMPLIANT OPEN FRONT, ELONGATED SEAT WITH STAINLESS STEEL LOCKING HINGE
LAV	1/2"	1/2"	1-1/2"	2"	LAVATORY: KOHLER MODEL: K-1997-1-0 (HANDICAP USE) FAUCET: DELTA MODEL: 26C3942 MIXING VALVE: WATTS MODEL: L111	WALL HUNG, VITREOUS CHINA, 22"x19" BOWL, HANDICAP ACCESSIBLE. INSULATE ALL EXPOSED DRAIN AND WATER PIPING UNDER LAVATORY PER ADA REQUIREMENTS, WITH TRUEBRO MODEL #102W, OR EQUIVALENT MANUAL GOOSENECK FAUCET, 0.5 GPM AERATOR, 8" CENTERS, LEVER HANDLES INDIVIDUAL FAUCET THERMOSTATIC MIXING VALVE. HOT WATER TEMPERATURE SHALL BE LIMITED TO 110 DEGREES FAHRENHEIT.
SH	1/2"	1/2"	1-1/2"	2"	SHOWER FAUCET & HANDSET: MOEN MODEL: 8346 MIXING VALVE: LAWLER MODEL: SERIES 516 UNIT NUMBER: 86823 FLOOR DRAIN: SMITH 2005	PRESSURE BALANCE SHOWER VALVE, HANDHELD SPRAY ASSEMBLY, 1.5 GPM, ADA COMPLIANT. ROUGH CHROME THERMOSTATIC MIXING VALVE, 0.5 MINIMUM FLOW RATE, OUTLET RANGE 95-115 DegF WITH A SPINDLE TO ADJUST OUTLET TEMPERATURE. SET OUTLET TEMPERATURE AT 110DegF. CAST IRON. ADJUSTABLE STRAINER HEAD.
KS	1/2"	1/2"	1-1/2"	2"	KITCHEN SINK: ELKAY MODEL: ELUHAD211555PD FAUCET: AMERICAN STD MODEL: 4175.300.F15 TRUEBRO 102	SINGLE BOWL SINK. STAINLESS STEEL, 18 GA. UNDERMOUNT. 21"W x 16"L x 5.5"D BOWL. ADA COMPLIANT. SINK FAUCET. METAL BODY, CERAMIC CARTRIDGE. 1 HOLE. SWIVEL GOOSENECK SPOUT, 14-1/2" HIGH. PULL-DOWN SPRAY HEAD WITH INTEGRAL CHECK VALVE. SINGLE LEVER HANDLE. 1.5 GPM. CHROME FINISH. ADA COMPLIANT. WASTE AND SUPPLY PIPING COVERS. INSULATE ALL EXPOSED DRAIN AND WATER PIPING UNDER LAVATORY PER ADA REQUIREMENTS.
WH	3/4"	3/4"	-	-	WATER HEATER: A.O. SMITH MODEL: DEL-40 EXPANSION TANK: AMTROL ST-5	LOWBOY ELECTRIC WATER HEATER, 40 GALLON TANK, 4.5 KW HEATING ELEMENT, 140°F OUTPUT, 25 GPH RECOVERY AT 80°F TEMPERATURE RISE, 208V/1ϕ ELECTRIC POWER 5 GALLON INLINE EXPANSION TANK
FD	-	-	2"	*	SMITH 2005	FLOOR DRAIN. CAST IRON. ADJUSTABLE STRAINER HEAD.
FCO	-	-	-	*	SMITH 4020	FLOOR CLEANOUT. CAST IRON WITH NICKEL BRONZE ADUSTABLE TOP.
GCO	-	-	-	*	SMITH 4237	GROUND CLEANOUT. CAST IRON WITH CAST IRON NON-TILT ADJUSTABLE TOP.

NOTES:
* SEE PLAN FOR SIZING.
** PLUMBING FIXTURES, ACCESSORIES AND INSTALLATION SHALL MEET ALL FEDERAL, STATE, ADA AND LOCAL REQUIREMENTS.

ENCOTECH ENGINEERING CONSULTANTS
TBPE Firm 1141
8500 Bluffstone Cove, Suite B-103
Austin, Texas 78759 | 512.338.1101
Project No.: 14046.M.AUS

STATE OF TEXAS
LYNN C. BROWN
55248
LICENSED PROFESSIONAL ENGINEER
08/30/2016

mwm Design Group
305 East Huntland Drive
Suite 200
Austin, Texas 78752
p: 512.453.0767
f: 512.453.1734
TBAE FIRM REGISTRATION NO.: 1452
TBPE FIRM REGISTRATION NO.: F-1416
TBPLS FIRM REGISTRATION NO.: 10065600

NO.	DATE	DESCRIPTION	BY

SCALE IS AS NOTED ON DRAWING

PLUMBING SCHEDULES & DETAILS

AFD WOMEN'S LOCKER RM. ADDN, PHASE V & EMS VEHICLE BAY EXPANSIONS & GEN. RENOVATIONS
5401 McCARTY LANE, AUSTIN, TEXAS 78749

PLOTTED: 8/30/2016
JOB NO: 023-81

EMS11-P210

File: J:\ACTIVE PROJECTS\MWM\14095.M.AUS - EMS\1. MEP\D-AutoCAD\EMS Station 11\14095-EMS11 P210 Plumb Schedule Details.dwg 24x36

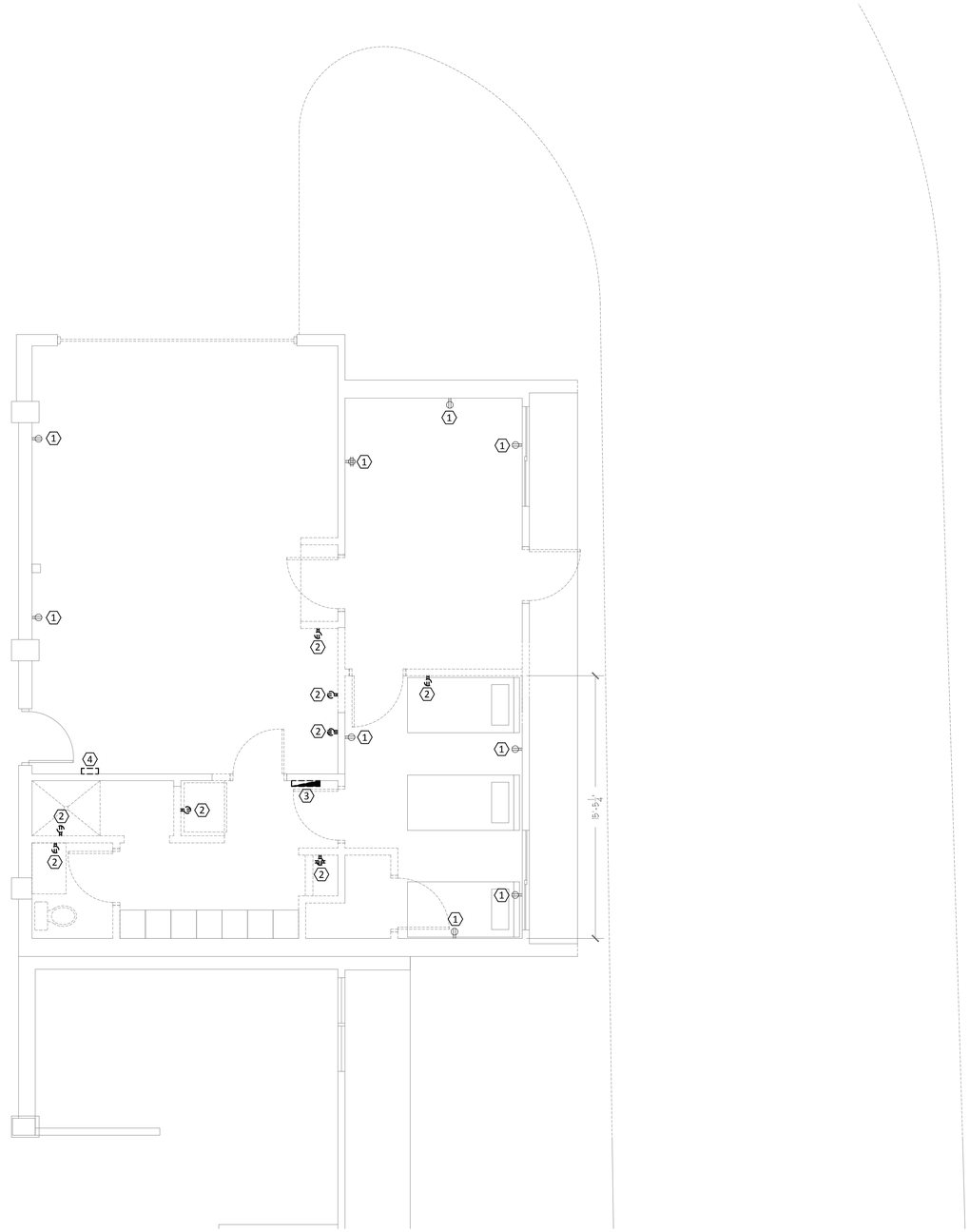

PLAN GENERAL NOTES

A. REFER TO E0.00 FOR GENERAL NOTES.

B. DO NOT ROUTE ANY DUCT & PIPING ABOVE ELECTRICAL PANELS.

C. ESTIMATED LOCATION OF ALL EXISTING ELECTRICAL LAYOUT AND EQUIPMENT LOCATION IS BASED ON SITE OBSERVATION AND EXISTING DRAWINGS. CONTRACTOR SHALL VERIFY SIZE, LOCATION OF ALL EXISTING ELECTRICAL EQUIPMENT, DEVICES AND CONDUITS PRIOR TO BID AND CONSTRUCTION.

D. ALL EXTERIOR LIGHTING FIXTURE SHALL BE CONTROLLED BY PHOTOCELL AND TIMER.

KEYED NOTES

1. EXISTING RECEPTACLE OUTLET TO REMAIN
2. REMOVE EXISTING RECEPTACLE OUTLET
3. REMOVE EXISTING FLUSH MOUNTED 200A, 120/208V, 3Ø ELECTRICAL PANEL. EXTEND CONDUIT AND CONDUCTOR FROM THIS PANEL TO NEW ELECTRICAL PANEL. REFER SHEET E-110 FOR NEW PANEL LOCATION.
4. REMOVE EXISTING CIRCUIT BREAKER BOX WITH RECEPTACLES

1 LEVEL 1 - ELECTRICAL DEMOLITION PLAN
SCALE: 1/4" = 1'-0"

ENCOTECH ENGINEERING CONSULTANTS
TBPE Firm 1141 | 8500 Bluffstone Cove, Suite B-103
Austin, Texas 78759 | 512.338.1101
Project No.: 14046.M.AUS

STATE OF TEXAS
SHARON S. BICKFORD
77390
LICENSED PROFESSIONAL ENGINEER
08/30/2016

mwm Design Group
305 East Huntland Drive
Suite 200
Austin, Texas 78752
p: 512.453.0767
f: 512.453.1734
TBAE FIRM REGISTRATION NO.: 1452
TBPE FIRM REGISTRATION NO.: F-1416
TBPLS FIRM REGISTRATION NO.: 10065600

NO.	DATE	DESCRIPTION	BY

SCALE IS AS NOTED ON DRAWING

ELECTRICAL DEMOLITION PLAN

AFD WOMEN'S LOCKER RM. ADDN, PHASE V & EMS VEHICLE BAY EXPANSIONS & GEN. RENOVATIONS
5401 McCARTY LANE, AUSTIN, TEXAS 78749

PLOTTED: 8/30/2016
JOB NO: 023-81

EMS11-E010

File: J:\ACTIVE PROJECTS\MWM\14095.M.AUS - EMS\1. MEP\D-AutoCAD\EMS Station 11\14095-EMS11 E100 Elec Plan.dwg 24x36

PLAN GENERAL NOTES

A. REFER TO E0.00 FOR GENERAL NOTES.

B. DO NOT ROUTE ANY DUCT & PIPING ABOVE ELECTRICAL PANELS.

C. ESTIMATED LOCATION OF ALL EXISTING ELECTRICAL LAYOUT AND EQUIPMENT LOCATION IS BASED ON SITE OBSERVATION AND EXISTING DRAWINGS. CONTRACTOR SHALL VERIFY SIZE, LOCATION OF ALL EXISTING ELECTRICAL EQUIPMENT, DEVICES AND CONDUITS PRIOR TO BID AND CONSTRUCTION.

D. ALL EXTERIOR LIGHTING FIXTURE SHALL BE CONTROLLED BY PHOTOCELL AND TIMER.

KEYED NOTES

1. PROVIDE AND INSTALL NEW SURFACE MOUNTED ELECTRICAL 200A, 120/208, 3Ø ELECTRICAL PANEL.
2. MOTOR RATED DISCONNECT SWITCH SHALL BE MOUNTED ON STRUCTURAL MEMBER.
3. DISCONNECT ON WALL FOR OVERHEAD DOOR OPENER. COORDINATE WITH OWNER AND MANUFACTURER FOR LOCATION AND REQUIREMENT.

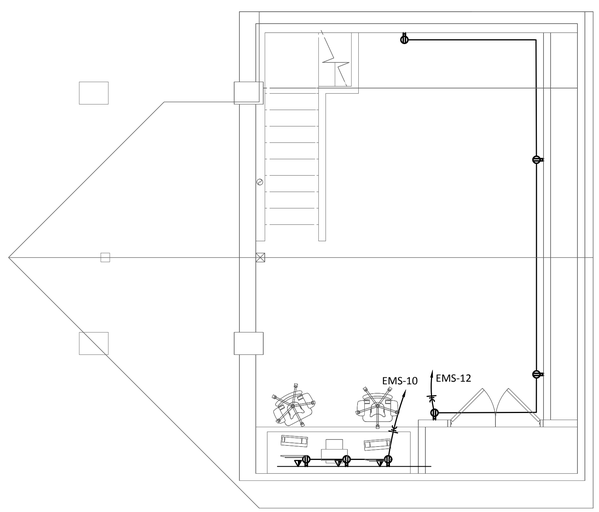

2 LEVEL 2 - ELECTRICAL PLAN
SCALE: 1/4" = 1'-0"

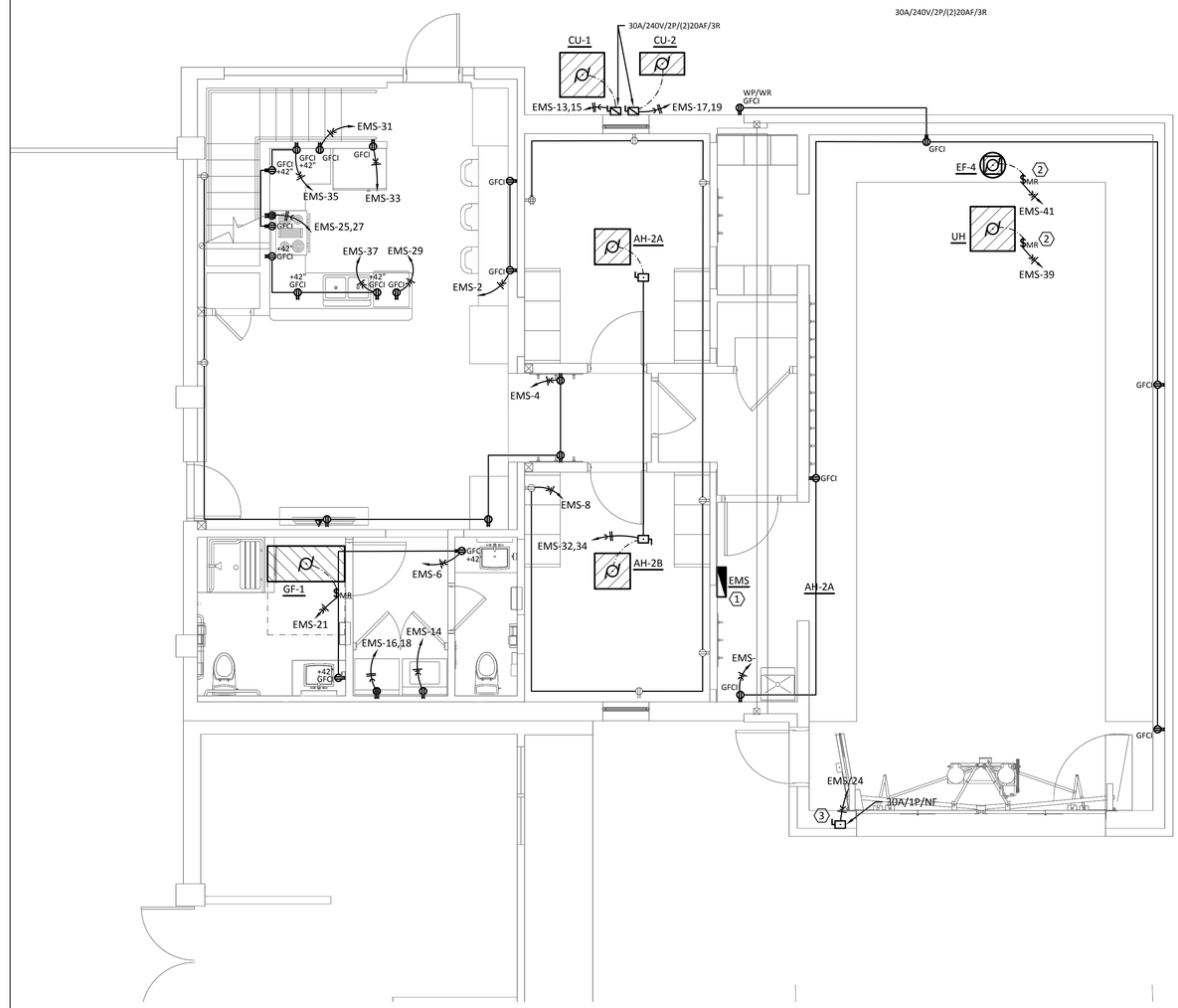

1 LEVEL 1 - ELECTRICAL PLAN
SCALE: 1/4" = 1'-0"

ENCOTECH ENGINEERING CONSULTANTS
TBPE Firm 1141
8500 Bluffstone Cove, Suite B-103
Austin, Texas 78759 | 512.338.1101
Project No.: 14046.M.AUS

STATE OF TEXAS
SHARON S. BICKFORD
77390
LICENSED PROFESSIONAL ENGINEER
08/30/2016

mwm Design Group
305 East Huntland Drive
Suite 200
Austin, Texas 78752
p: 512.453.0767
f: 512.453.1734
TBAE FIRM REGISTRATION NO.: 1452
TBPE FIRM REGISTRATION NO.: F-1416
TBPLS FIRM REGISTRATION NO.: 10065600

NO.	DATE	DESCRIPTION	BY

SCALE IS AS NOTED ON DRAWING

ELECTRICAL PLAN

AFD WOMEN'S LOCKER RM. ADDN, PHASE V & EMS VEHICLE BAY EXPANSIONS & GEN. RENOVATIONS
5401 McCARTY LANE, AUSTIN, TEXAS 78749

PLOTTED: 8/30/2016
JOB NO: 023-81

EMS11-E110

File: J:\ACTIVE PROJECTS\MWM\14095.M.AUS - EMS\1. MEP\D-AutoCAD\EMS Station 11\14095-EMS11 E100 Elec Plan.dwg 24x36

PLAN GENERAL NOTES

A. REFER TO E0.00 FOR GENERAL NOTES.

B. DO NOT ROUTE ANY DUCT & PIPING ABOVE ELECTRICAL PANELS.

C. ESTIMATED LOCATION OF ALL EXISTING ELECTRICAL LAYOUT AND EQUIPMENT LOCATION IS BASED ON SITE OBSERVATION AND EXISTING DRAWINGS. CONTRACTOR SHALL VERIFY SIZE, LOCATION OF ALL EXISTING ELECTRICAL EQUIPMENT, DEVICES AND CONDUITS PRIOR TO BID AND CONSTRUCTION.

D. ALL EXTERIOR LIGHTING FIXTURE SHALL BE CONTROLLED BY PHOTOCELL AND TIMER.

LIGHTING CONTROL NOTE

A. WHOLE EMS FACILITY LIGHTING SHALL BE CONTROLLED BY N-LIGHT NETWORK CONTROL SYSTEM.

B. NLIGHT SYSTEM WILL INCLUDE DIMMER, OCCUPANCY SENSOR, POWER PACK, BRIDGE AND GATEWAY.

C. LIGHTING WILL BE CONTROLLED LOCALLY OR BY MASTER SWITCH.

D. GATEWAY HAVE CONNECTION TO EMS SYSTEM (TOBE DETERMINED). IF EMS SYSTEM IN ACTIVE MODE, ALL INTERIOR LIGHTS IN EMS STATION WILL BE LIGHTED ON.

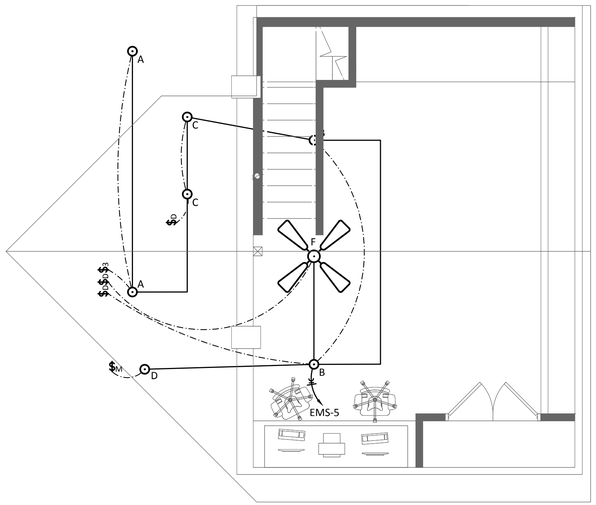

2 LEVEL 2 - ELECTRICAL PLAN
SCALE: 1/4" = 1'-0"

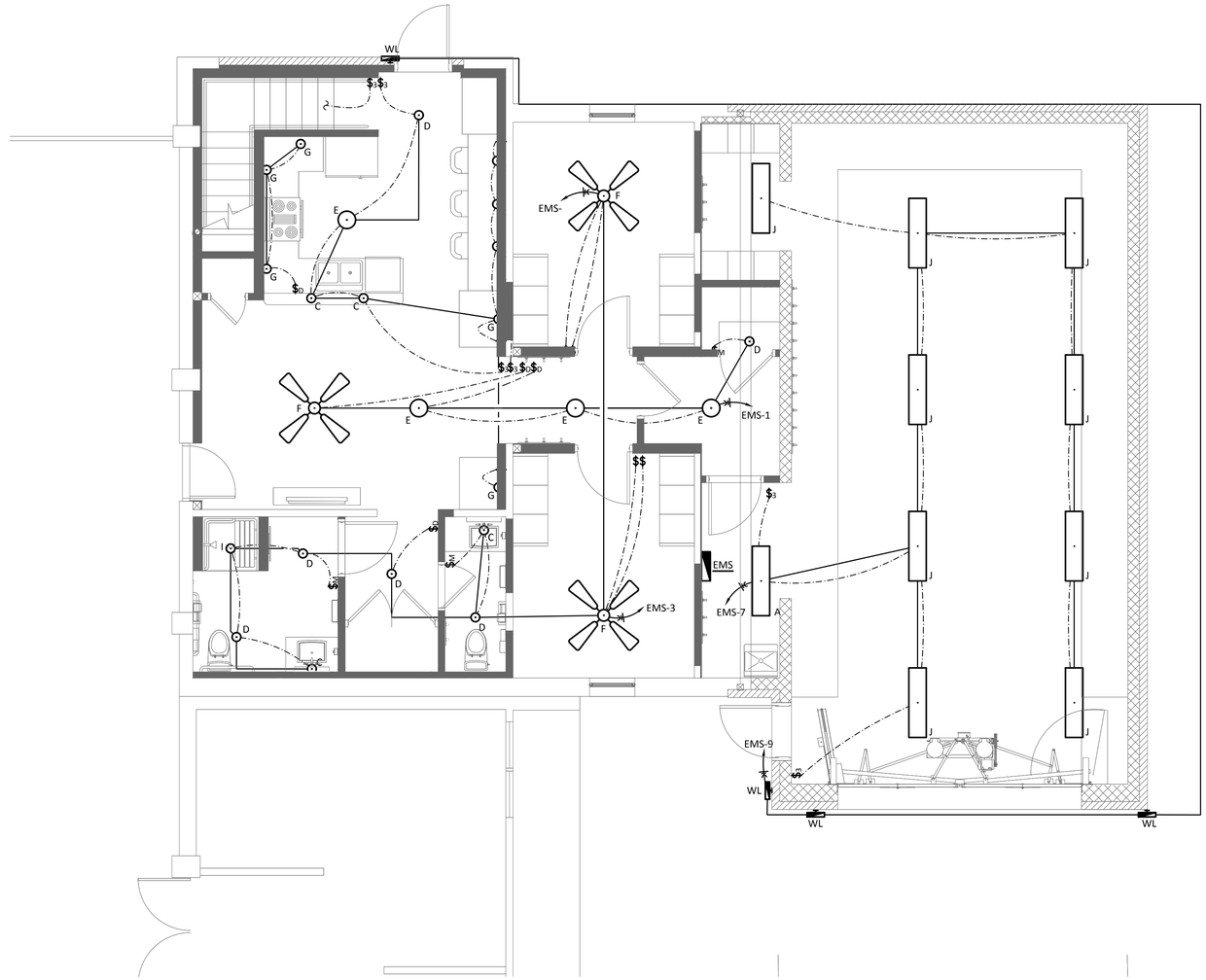

1 LEVEL 1 - ELECTRICAL PLAN
SCALE: 1/4" = 1'-0"

ENCOTECH
ENGINEERING CONSULTANTS
TBPE Firm 1141
8500 Bluffstone Cove, Suite B-103
Austin, Texas 78759 | 512.338.1101
Project No.: 14046.M.AUS

STATE OF TEXAS
SHARON S. BICKFORD
77390
LICENSED PROFESSIONAL ENGINEER
08/30/2016

mwm Design Group
305 East Huntland Drive
Suite 200
Austin, Texas 78752
p: 512.453.0767
f: 512.453.1734
TBAE FIRM REGISTRATION NO.: 1452
TBPE FIRM REGISTRATION NO.: F-1416
TBPLS FIRM REGISTRATION NO.: 10065600

NO.	DATE	DESCRIPTION	BY

SCALE IS AS NOTED ON DRAWING

LIGHTING PLAN

AFD WOMEN'S LOCKER RM. ADDN, PHASE V & EMS VEHICLE BAY EXPANSIONS & GEN. RENOVATIONS
5401 McCARTY LANE, AUSTIN, TEXAS 78749

PLOTTED: 8/30/2016
JOB NO: 023-81

EMS11-E120

File: J:\ACTIVE PROJECTS\MWM\14095.M.AUS – EMS\1. MEP\D-AutoCAD\EMS Station 11\14095-EMS11 E120 Lighting Plan.dwg 24x36

LIGHTING FIXTURE SCHEDULE

MARK	MANUFACTURER	MODEL	VOLT	LAMPING QTY	LAMPING WATTAGE	LAMPING TYPE	LAMPING TEMP	DRIVER TYPE	PHYSICAL TYPE	PHYSICAL SIZE	DESCRIPTION
A	LURALINE	710 STEMX-WACS-L9LMH-9W/30K -	120	1	9	850 LUMEN LED	3000K	DIMMING DRIVER	GLOBE	10" DIAMETER	GLOBE PENDANT WITH 54" MAX EXTENSION RODS.
B	LURALINE	714 STEMX-WACS-L9LMH-13W/GU -	120	1	13	910 LUMEN LED	3000K	DIMMING DRIVER	GLOBE	14" DIAMETER	GLOBE PENDANT WITH 54" MAX EXTENSION RODS.
C	BRUCK	223-850-CH-MP -	120	1	8	LED	2800K	DIMMING DRIVER	PENDANT	12"H x 3.125"SQ.	RECTLINEAR FROST GLASS SHADE, 6FT EXTENSION CABLE, CHROME FINISH
D	LITHONIA	FHHL-7-8-30-DNA -	120	1	9.3	LED	3000K	DIMMING DRIVER	CEILING	7"DIA x 1-/34"H	CEILING MOUNTED, GLASS SHADE WITH SMOOTH NARUAL ALEMINUM FINISH, WET LOCATION
E	LITHONIA	FHHL-13-8-30-DNA -	120	1	28	LED	3000K	DIMMING DRIVER	CEILING	7"DIA x 1-/34"H	CEILING MOUNTED, GLASS SHADE WITH SMOOTH NARUAL ALEMINUM FINISH, WET LOCATION
F	MINKA AIRE	LIGHT WAVE-F844-WH -	120	1	10W (LT) 66.4W (FAN)	LED	2700K	-	CEILING FAN WITH LIGHT	52" DIAMTER	CEILING FAN WITH LED LIGHT
G	ARAMCOST LIGHTING	RF3528060-12WWD -	120	1	75W	LED	3000K	DIMMING DRIVER	DIMMING	12'	18 LED PER FOOT, DC POWER SUPPLY DEPARATE, LINKABLE, TWO SIDE TPE LIGHT
J	LITHONIA	TL4-20L-FW-A12-EZ1-LP830 -	MVOLT	1	21	LED	3000K	0-10V DIMMING DRIVER	RECESSED TROUGHER	12"W x 48"L	LED. ACRYLIC LENS. WHITE FINISH.
WL	LITHONIA	DSXW1-LED-10C-530-30K-T4M-MVOLT-ELCW-DDBXD -	MVOLT	1	20	LED	3000K	0-10V DIMMING DRIVER	WALL	13-3/4"W x 4"D	WALL MOUNTED TYPE IV MEDIUM DISTRIBUTION. LED. RATED FOR LOW TEMPERATURE. DARK BRONZE. BATTERY BACK-UP.

1. SEE ARCHITECTURAL REFLECTED CEILING PLAN FOR EXACT LOCATION OF ALL FIXTURES.
2. PROVIDE ENERGY SAVING BALLASTS FOR ALL FIXTURES WHEREVER AVAILABLE.

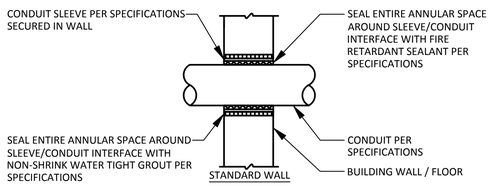

2 WALL PENETRATION DETAIL
NOT TO SCALE

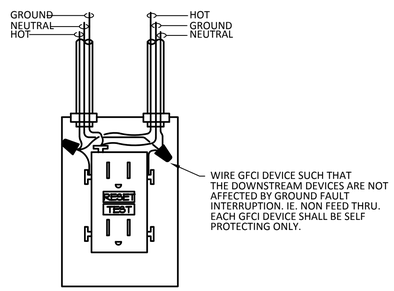

1 GFCI RECEPTACLE WIRING DIAGRAM
NOT TO SCALE

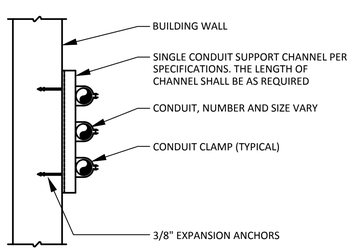

NOTE:
CONDUIT MAY RUN VERTICAL OR HORIZONTAL DEPENDING ON APPLICATION.

4 WALL / CEILING CONDUIT SUPPORT DETAIL
NOT TO SCALE

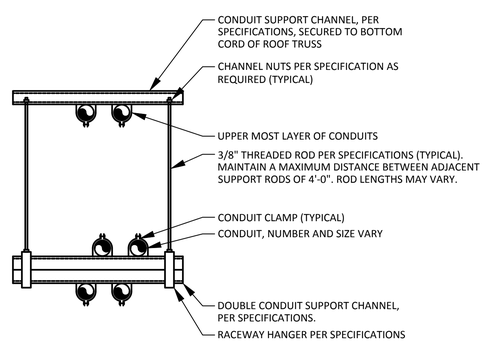

3 CONDUIT SUPPORT DETAIL
NOT TO SCALE

PANELBOARD SCHEDULE — EMS

LOCATION: SEE PLAN
C.B. RATING: - A.I.C.

NOTE	VOLTAGE	PHASE	WIRE	MOUNTING	SIZE	LUG	TYPE	NOTE
	208Y/120V	3	4	SURFACE	200	200A MCB	TYPE 1	

CIR	C/B POLE	USE and/or AREA SERVED	LOAD ØA	LOAD ØB	LOAD ØC	CIR	C/B POLE	USE and/or AREA SERVED
1	20/1	LIGHTING	1000	360		2	20/1	RECEPTACLES
3	20/1	LIGHTING		1000	720	4	20/1	RECEPTACLES
5	20/1	LIGHTING			1000	6	20/1	RECEPTACLES
7	20/1	VEHICLE BAY LIGHTING	600	360	540	8	20/1	RECEPTACLES
9	20/1	EXTERIOR LIGHTING		300	1800	10	20/1	RECEPTACLES
11	20/1	SPARE			-	12	20/1	RECEPTACLES
13	20/2	CU-1	950	1500	900	14	20/1	CLOTHES WASHER
15				950	2500	16	30/2	CLOTHES DRYER
17	20/2	CU-2			1250	18		
19			1250		2500	20	20/1	SPARE
21	20/1	GF-1		300		22	20/1	SPARE
23	20/1	GF-2			300	24	30/1	GARAGE OPENNER
25	40/2	RANGE	4000	1260	2500	26	20/1	VEHICLE BAY RECEPTS
27				4000		28	20/1	SPARE
29	20/1	DISHWASHER			1500	30	20/1	SPARE
31	20/1	ICE MAKER	1200	-		32		
33	20/1	REFRIGERATOR		1200	-	34		
35	20/1	KITCHEN RECEPTACLES			1800	36		
37	20/1	KITCHEN RECEPTACLES	1800			38		
39	20/1	VEHICLE BAY HEATER		500		40		
41	20/1	VEHICLE BAY EXHAUST FAN			700	42		
		TOTAL LOAD PER PHASE	14280	13270	12990			14280 VA / 120 V = 119 A

FEEDER OCPD AND CONDUCTOR CALCULATION

LOAD DESCRIPTION (LOAD IN KVA)	CONNECTED LOAD	DEMAND FACTOR	DEMAND LOAD	AMPACITY FACTOR	FEEDER AMPACITY	NOTES
INTERIOR LIGHTING	3.60	1.00	3.60	1.25	4.50	
EXTERIOR LIGHTING	0.30	1.00	0.30	1.25	0.38	
RECEPTACLES	5.94	*	5.94	1.00	5.94	*FIRST 10 kVA AT 100%, REST AT 50%
HVAC	6.20	1.00	6.20	1.00	6.20	
EQUIPMENT	24.50	1.00	24.50	1.00	24.50	
KITCHEN EQUIPMENT	0.00	1.00	0.00	1.00	0.00	
LARGEST MOTOR NONE	-	-	-	0.25	0.00	
SPARE	0.00	1.00	0.00	1.00	0.00	
TOTAL KVA	**40.54**	**-**	**40.54**	**-**	**41.52**	
TOTAL AMPS	**113 A**	**-**	**113 A**	**-**	**115 A**	

ENCOTECH ENGINEERING CONSULTANTS
TBPE Firm 1141
8500 Bluffstone Cove, Suite B-103
Austin, Texas 78759 | 512.338.1101
Project No.: 14046.M.AUS

STATE OF TEXAS — SHARON S. BICKFORD — 77390 — LICENSED PROFESSIONAL ENGINEER
08/30/2016

mwm Design Group
305 East Huntland Drive
Suite 200
Austin, Texas 78752
p: 512.453.0767
f: 512.453.1734
TBAE FIRM REGISTRATION NO.: 1452
TBPE FIRM REGISTRATION NO.: F-1416
TBPLS FIRM REGISTRATION NO.: 10065600

NO.	DATE	DESCRIPTION	BY

SCALE IS AS NOTED ON DRAWING

ELECTRICAL SCHEDULES & DETAILS

AFD WOMEN'S LOCKER RM. ADDN, PHASE V & EMS VEHICLE BAY EXPANSIONS & GEN. RENOVATIONS
5401 McCARTY LANE, AUSTIN, TEXAS 78749

PLOTTED: 8/30/2016
JOB NO: 023-81

EMS11-E210

File: J:\ACTIVE PROJECTS\WMM\14095.M.AUS — EMS\1. MEP\D-AutoCAD\EMS Station 11\14095-EMS11 E210 Elec Schedule Details.dwg 24x36

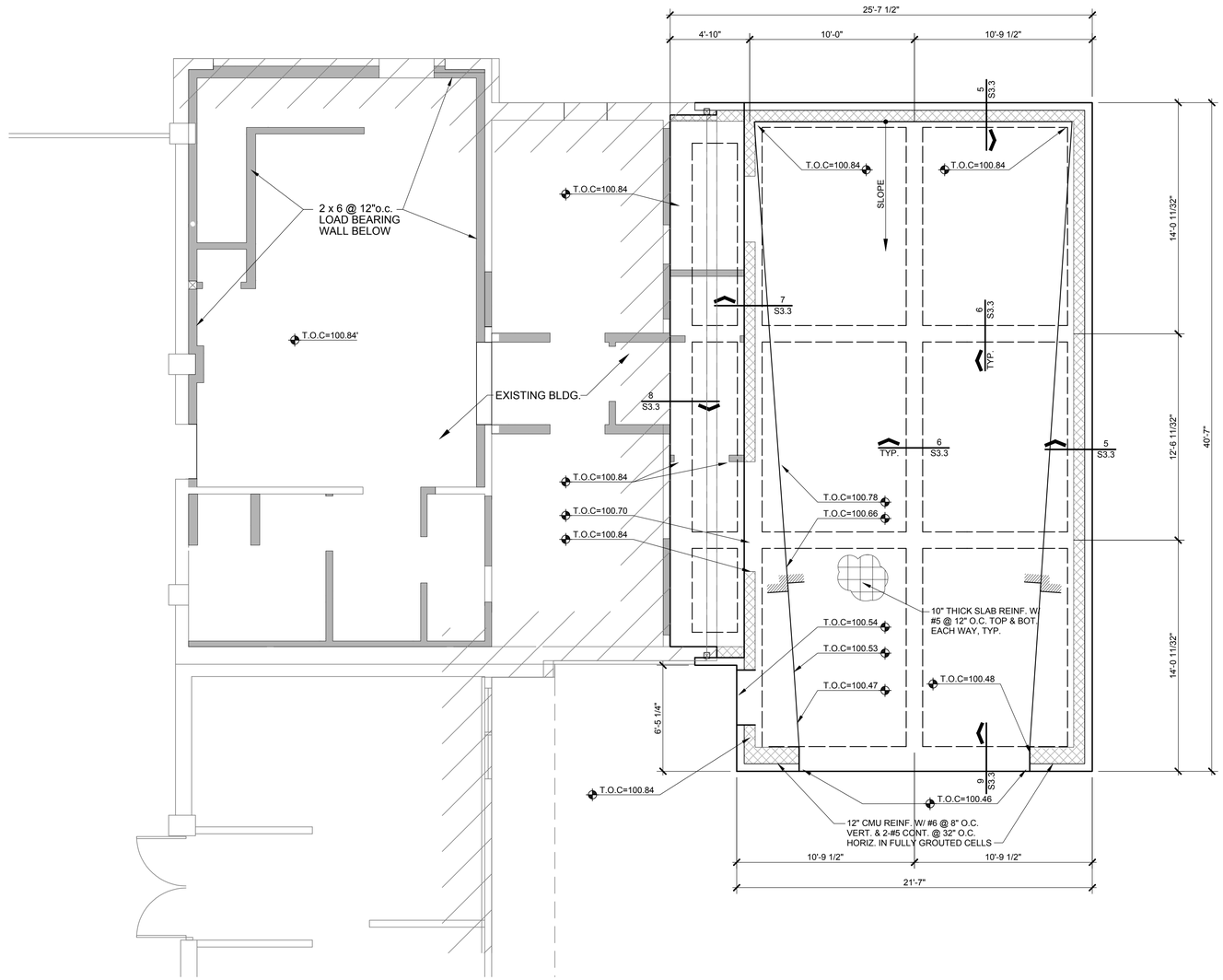

NOTES:

1. FIN. FLR. ELEV. VARIES SEE ARCH'L. T.O.C. REFERS TO TOP OF STRUCTURAL SLAB U.N.O.
2. - INDICATES SLAB DEPRESSIONS.
   SEE STRUCTURAL PLANS & DETAILS FOR DEPTH OF SLAB DEPRESSIONS
   SEE ARCHITECTURAL FOR EXACT LOCATIONS OF ALL SLAB DEPRESSIONS.
   DROPS SHOWN ON PLAN ARE IN STRUCTURAL SLAB SEE ARCHITECTURAL FOR EXACT LOCATIONS OF ALL SLAB DEPRESSIONS.
3. SEE ARCHITECTURAL AND MECHANICAL - COORDINATE ALL FLOOR OPENINGS AND PENETRATIONS WITH TRADES INVOLVED FOR ACTUAL SIZES AND LOCATIONS.
4. REFER TO MECHANICAL, ELECTRICAL AND PLUMBING DRAWINGS FOR SLAB PENETRATIONS AND UNDERGROUND UTILITIES.
5. CONTRACTOR TO VERIFY ALL SLAB EDGE, STAIR AND ELEVATOR OPENING DIMENSIONS WITH ARCHITECTURAL DRAWINGS PRIOR TO CONSTRUCTION.
6. SEE GENERAL NOTES AND SPECIFICATION FOR ADDITIONAL INFORMATION.
7. CONTRACTOR TO VERIFY ALL DIMENSIONS AND EXISTING CONDITIONS AND AND REPORT ANY DISCREPANCY TO THE ARCHITECT AND THE ENGINEER.
8. REFER TO ARCHITECTURAL DRAWINGS FOR EXTENT AND DIMENSIONS OF RAISED OR DEPRESSED SLAB AREAS, SLOPES AND DRAINS.

1'-0" MIN. REMOVAL OF EXISTING FAT CLAYS

1 FOUNDATION PLAN _EMS-11
SCALE: 1/4" = 1'-0"

JOSE I. GUERRA, INC.
CONSULTING ENGINEERS
2401 S. IH35 SUITE 210
AUSTIN, TEXAS 78741
(512) 445-2090
TBPE FIRM F-3

STATE OF TEXAS
JOHN C. MOBS
8556
REGISTERED
PROFESSIONAL ENGINEER
8-30-16

mwm Design Group
305 East Huntland Drive
Suite 200
Austin, Texas 78752
p: 512.453.0767
f: 512.453.1734
TBAE FIRM REGISTRATION NO.: 1452
TBPE FIRM REGISTRATION NO.: F-1416
TBPLS FIRM REGISTRATION NO.: 10065600

NO.	DATE	DESCRIPTION	BY

0 1"
The bar above measures one inch on the original drawing. Adjust scales accordingly.

FOUNDATION PLAN

CITY OF AUSTIN E.M.S. EXPANSIONS
5401 McCARTY LANE., AUSTIN, TX., 78749

PLOTTED: 8/30/2016
JOB NO: 023-79D

EMS11-S2.0

___ OF ___

File: F:\15012_EMS Vehicle Bay Expansions\DRAWINGS\CAD\15012_EMS-11_S2.0 FOUNDATION PLAN.dwg 24x36

SHORING NOTES:

1. ALL NEW OPENINGS ARE TO BE FRAMED WITH NEW STEEL BEAMS OR GLULAM BEAMS TO SUPPORT THE ROOF AND CEILING LOADS CURRENTLY SUPPORTED BY EXISTING LOAD BEARING WALLS TO BE DEMOLISHED. REFERENCE ARCHITECTURAL DRAWINGS FOR DEMOLITION DRAWINGS.

2. THE STRUCTURAL DRAWINGS AND SPECIFICATIONS REPRESENT THE FINISHED STRUCTURE. THEY DO NOT INDICATE THE METHODS OF CONSTRUCTION UNLESS SO STATED OR NOTED. THE CONTRACTOR SHALL PROVIDE ALL MEASURES NECESSARY TO PROTECT THE WORKERS AND ALL OTHER PERSONS DURING CONSTRUCTION.

3. THE CONTRACTOR SHALL PROVIDE TEMPORARY ERECTION BRACING AND SHORING OF ALL STRUCTURAL WORK AS REQUIRED FOR STABILITY OF THE STRUCTURE DURING ALL PHASES OF CONSTRUCTION. THE CONTRACTOR SHALL IMMEDIATELY NOTIFY THE ENGINEER OF ANY CONDITION THAT MIGHT ENDANGER THE STABILITY OF THE STRUCTURE OR CAUSE DISTRESS IN THE STRUCTURE.

4. THE EXISTING LOAD BEARING WALLS TO BE DEMOLISHED ARE TO BE SHORED BY THE CONTRACTOR. THE CONTRACTOR'S TEMPORARY SHORING SYSTEM IS TO REMAIN IN PLACE UNTIL ALL NEW BEAMS HAVE BEEN ERECTED AND ATTACHED TO THE EXISTING LOAD BEARING WALLS/ROOF FRAMING PER STRUCTURAL DRAWINGS.

5. THE CONTRACTOR SHALL SUBMIT SHORING PLANS FOR REVIEW BY ARCHITECT/ ENGINEER THE SHORING PLAN SHALL BE DESIGNED AND SEALED BY AN ENGINEER REGISTERED IN THE STATE OF TEXAS.

6. THE SHORING SYSTEM SHOULD JACK THE EXISTING LOAD BEARING WALLS BETWEEN 1/16" AND 1/8" ABOVE THEIR FINAL ELEVATIONS IN ORDER TO INSURE THAT THE ROOF LOADS ARE TRANSFERRED TO THE NEW BEAMS WITHOUT DEFLECTION.

7. THE BUILDING MUST REMAIN OPEN AND OPERATING DURING CONSTRUCTION. ALL WORK MUST BE PERFORMED IN SUCH A MANNER AS TO CAUSE MINIMAL DISRUPTION TO THE NORMAL ACTIVITIES OF THE BUILDING.

SHEARWALL LEGEND

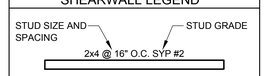

SHEARWALL LEGEND

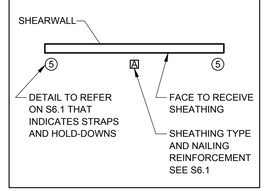

CEILING JOIST NOTES:

1. G.C. SHALL VERIFY DIMENSIONS WITH ACHITECTURAL DRAWINGS AND SHALL NOTIFY ARCH/ ENGINEER OF DISCREPANCIES PRIOR TO CONSTRUCTIONS.
2. FOR INTERIOR AND EXTERIOR WALLS, PROVIDE (2) KING STUDS FOR OPENINGS UP TO 5 FEET IN LENGTH, OR (3) KING STUBS FOR OPENINGS UP TO 9 FEET LENGTH. KING STUD QUANTITY IS TO BE PROVIDED AT EACH SIDE OF OPENING.
3. PROVIDE (1) TRIMMER STUD FOR OPENINGS UP TO 5 FEET LENGTH, (2) TRIMMER STUDS FOR OPENINGS UP TO 10 FEET LENGTH, OR (3) TRIMMER STUDS FOR OPENINGS UP 16 FEET LENGTH. TRIMMER STUD QUANTITY IS TO BE PROVIDED AT EACH SIDE OF OPENING.
4. STUD PACKS SHALL INCLUDE KING AND TRIMMER STUDS AT OPENINGS.
5. TRIMMER AND KING STUD SIZE SHALL MATCH WALL FRAMING STUD SIZE.
6. VERTICAL NAILING BETWEEN TRIMMER STUDS AND BETWEEN KING STUDS SHALL BE 16d AT 16".
7. REFERENCE THIS SHEET FOR LOAD BEARING WALL STUD SIZE & SPACING.
8. REFERENCE SHEET S4.1 FOR SHEAR WALL SCHEDULE.
9. ALL LUMBER TO BE #2 S.Y.P.K.D.
10. ALL CEILING JOISTS TO BE 2x8 AL 16" O.C. UNLESS NOTED OTHERWISE (17'-0" MAX SPAN) REFERENCE IBC FOR OTHER SPANS
11. ALL HEADERS @ 2x4 WALLS TO BE 2-2X PER IBC CODE UNLESS NOTED OTHERWISE. @ 2x6 WALLS TO BE 3-2x PER IBC CODE UNLESS NOTED OTHERWISE.

HEADER SCHEDULE

3-2x8 0'-0" to 5'-0"
3-2x10 5'-1" to 6'-1"
3-2x12 6'-2" to 7'-1"

12. ALL BEAMS LARGER THAN 2-2x6 TO BE SUPPORTED BY BUILT-UP STUD COLUMNS AT 2x6 STUD WALLS AND 2x4 STUD WALLS AT EACH END UNLESS NOTED OTHERWISE AND BLOCKED SOLID TO FOUNDATION. SEE BUILT-UP COLUMN SCHEDULE SHEET S4.0 FOR NUMBER OF BUILT-UP STUD COLUMN; AT EACH END OF BEAMS.
13. DOUBLE 2x8 CEILING JOISTS AS REQUIRED. UNDER HVAC AND/OR WH UNITS LOCATED IN ATTIC. PROVIDE 3/4" PLYWOOD DECK PAD AND CATWALK AS REQUIRED.
14. ALL BEAMS JOB BUILT FROM 3 OR MORE MEMBERS NAILED WITH 10D NAILS @ 6" O.C. TOP AND BOTTOM.
15. ALL GLU-LAMS TO BE DESIGNED WITH STANDARD CAMBER OF R=2000 FT.
16. BRACE TOP FLANGE OF ALL GLULAM, MICROLLAM, OR 2xWOOD BEAMS @ 4'-0" EA SIDE OF CEILING JOISTS WITH 2x6 CONTINUOS STIFFBACK AND 2x4 BRACES
17. STUD WALLS SHALL BE 2x6 @ 16 " O.C., #2 S.Y.P.K.D. UNO. (MAX. HEIGHT 10'-0") STUD WALLS SHALL BE 2x8 @ 16" O.C. , # 2 S.Y.P.K.D. UNO. (HEIGHTS GREATER THAN 10-0" TO 14'-0" MAX.)
18. PROVIDE 2x BLOCKING AT 4'-0" O.C. VERTICALLY AT ALL STUD WALLS.
19. ALL FRAMING TO COMPLY WITH I.B.C. BUILDING CODES, CURRET EDITION.
20. VERIFY ANY CHANGES WITH ENGINEER PRIOR TO CONSTRUCTION.

ROOF FRAMING PLAN

SCALE:

PLAN NOTES:

1. G.C. SHALL VERIFY DIMENSIONS WITH ACHITECTURAL DRAWINGS AND SHALL NOTIFY ARCH/ ENGINEER OF DISCREPANCIES PRIOR TO CONSTRUCTIONS.
2. ALL LUMBER TO BE #2 Y.P.K.D.
3. ALL RAFTERS TO BE 2x8 AT 16"O.C. WITH A MAXIMUM UNBRACED SPAN 18'-0" MEASURED ALONG THE SLOPE, UNLESS NOTED OTHERWISE.
4. ALL HIPS, RIDGES, VALLEYS TO BE 2x10 MAXIMUM. UNBRACED SPAN 8'-0" UNLESS NOTED OTHERWISE. PROVIDE "TEE" BRACES @ 6'-0" O.C. MAX SPACING AT RIDGES. PROVIDE "TEE" BRACES @ 8'-0" O.C. MAX SPACING AT HIPS AND VALLYS. PROVIDE DBL STUDS BELOW EACH "TEE" BRACE AT STUD WALLS
5. PROVIDE 2x8 CONTINUOUS PURLINS WITH 2x8 "TEE" BRACES @ 4'-0" O.C. MAX SPACING PROVIDE DBL STUDS BELOW EACH "TEE" BRACE AT STUD WALLS. NAIL "TEE" BRACE TOGETHER WITH 10D NAILS @ 6" O.C.- TYPICAL.
6. "TEE" BRACES LONGER THAN 8'-0" SHALL BE DBL 2x8 STUD WITH FLANGE PLATE "TEE" BRACE AND BRACED HORIZONTALLY @ 6'-0" O.C. IN TWO DIRECTIONS, NAIL "TEE" BRACE TOGETHER WITH 1O D NAILS @ 6" O.C. - TYPICAL
7. PROVIDE 2x6 MIN. COLLAR TIES AT 4'-0" O.C. AT ALL RIDGES.
8. ALL FRAMING TO COMPLY WITH I.B.C. BUILDING CODE CURRENT EDITION.
9. VERIFY AND CHANGES WITH ENGINEER PRIOR TO CONSTRUCTION.

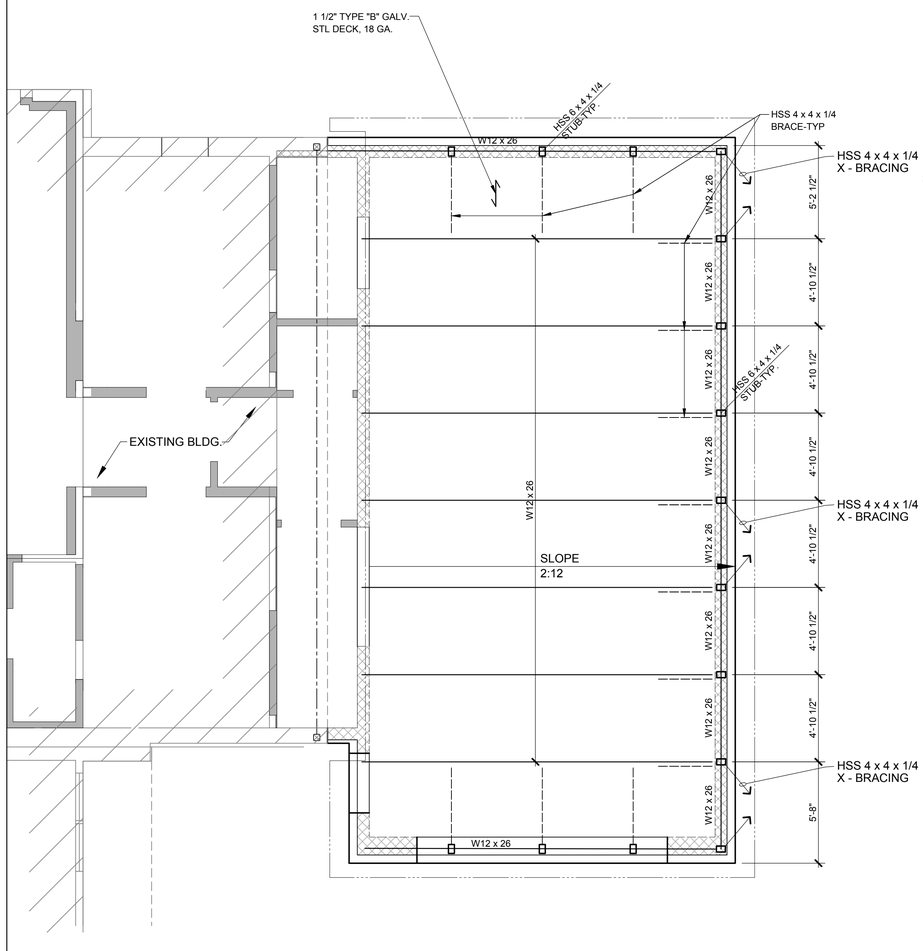

NOTE:
TOP OF STUD AND CMU WALL ELEVATION REF. ARCH'L

1 ROOF FRAMING PLAN _EMS-11
SCALE: 1/4" = 1'-0"

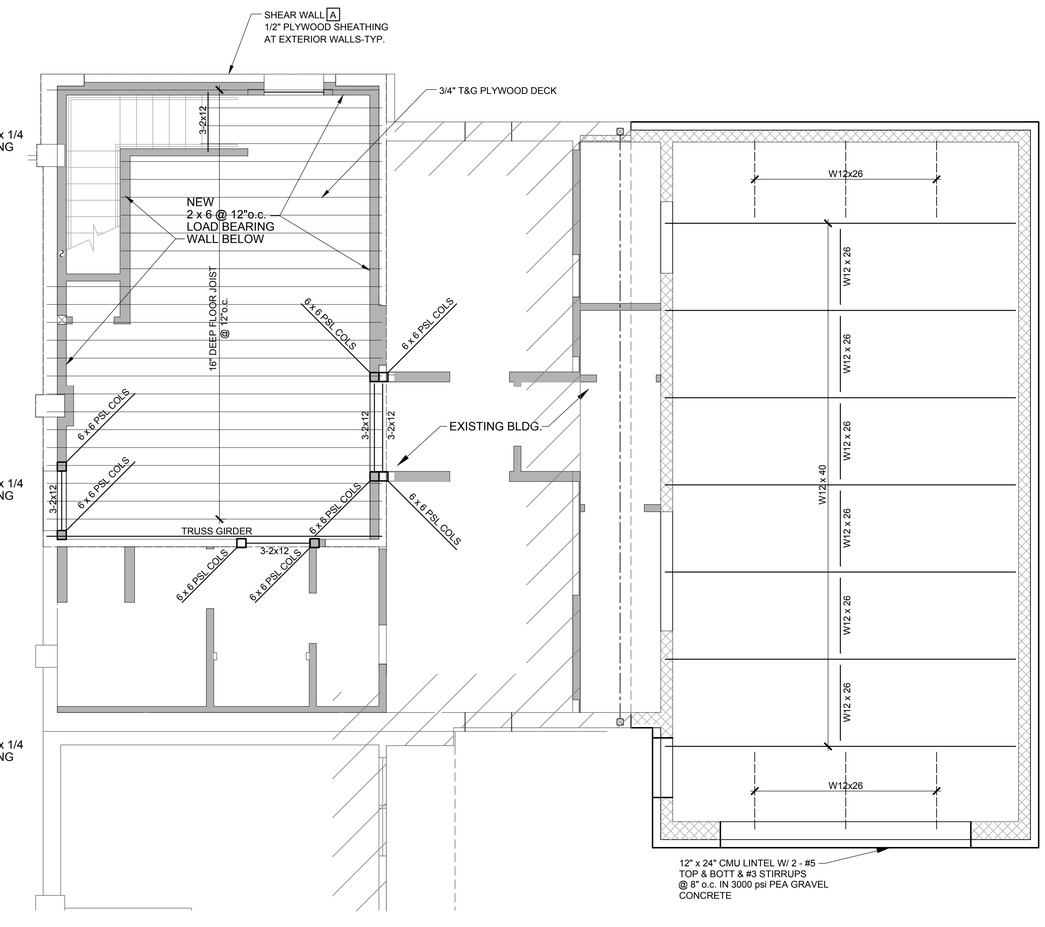

2 CEILING FRAMING PLAN _EMS-11
SCALE: 1/4" = 1'-0"

JOSE I. GUERRA, INC.
CONSULTING ENGINEERS
2401 S. IH35 SUITE 210
AUSTIN, TEXAS 78741
(512) 445-2090
TBPE FIRM F-3

STATE OF TEXAS — JOHN C. MOORE — 85568 — REGISTERED PROFESSIONAL ENGINEER — 8-30-16

mwm Design Group
305 East Huntland Drive
Suite 200
Austin, Texas 78752
p: 512.453.0767
f: 512.453.1734
TBAE FIRM REGISTRATION NO.: 1452
TBPE FIRM REGISTRATION NO.: F-1416
TBPLS FIRM REGISTRATION NO.: 10065600

NO.	DATE	DESCRIPTION	BY

0 1"
The bar above measures one inch on the original drawing. Adjust scales accordingly.

ROOF & CEILING FRAMING PLAN

CITY OF AUSTIN E.M.S. EXPANSIONS
5401 McCARTY LANE., AUSTIN, TX., 78749

PLOTTED: 8/30/2016
JOB NO: 023-79D

EMS11-S2.1

___ OF ___

File: F:\15012_EMS Vehicle Bay Expansions\DRAWINGS\CAD\15012_EMS-11_S2.1 ROOF FRAMING PLAN.dwg 24x36

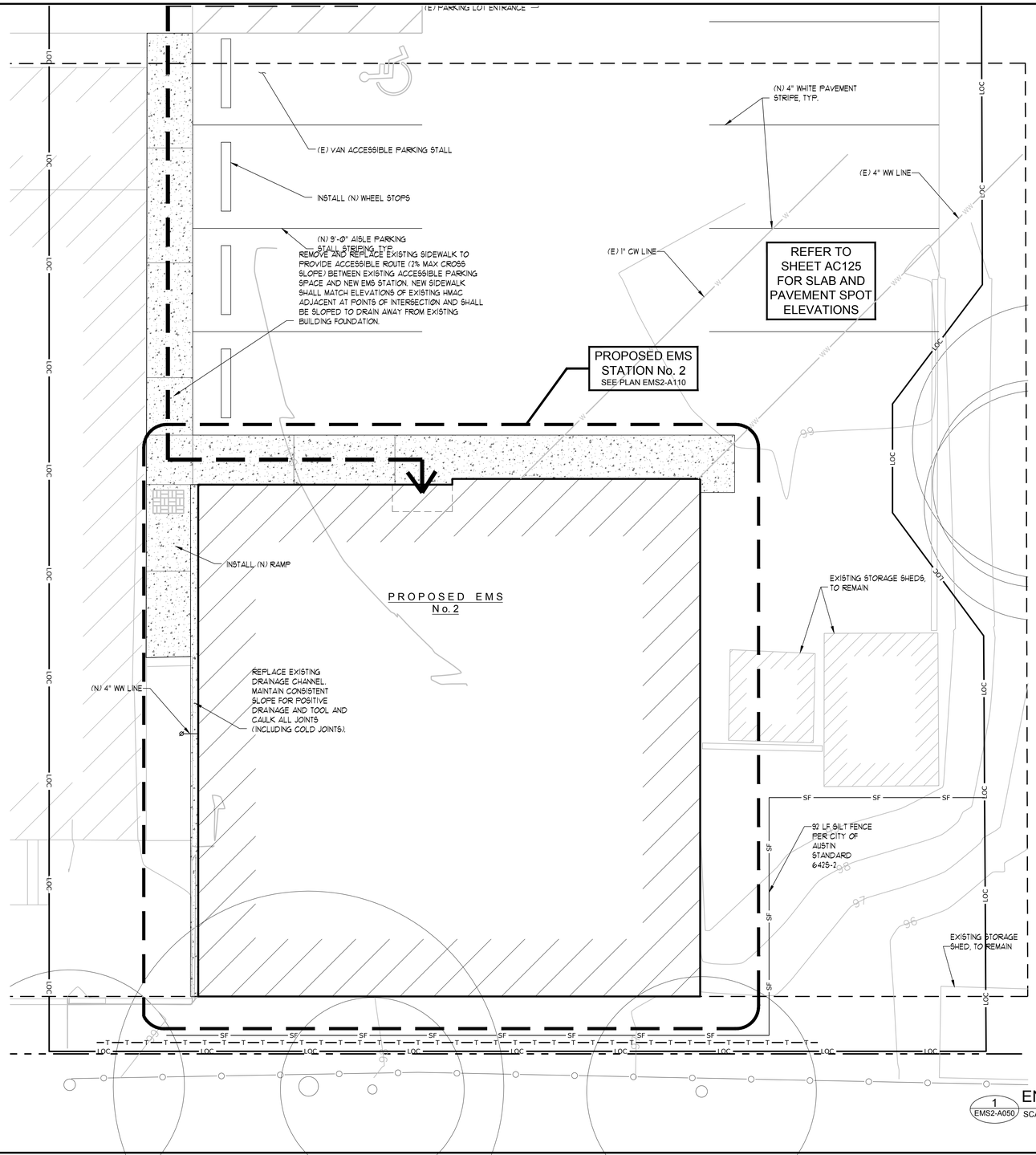

1 EMS2-A050 ENLARGED SITE PLAN
SCALE: 1" = 5'

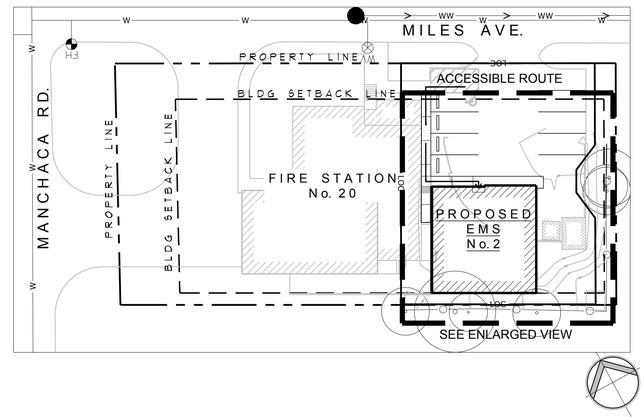

2 EMS2-A050 SITE PLAN (KEY PLAN)
SCALE: 1" = 30'

SITE PLAN LEGEND

- PROPERTY LINES
- BUILDING SETBACK LINES
- LOC — LIMITS OF CONSTRUCTION
- 528 — EXISTING TOPOGRAPHIC CONTOUR
- EXISTING TREE & TREE PROTECTION
- EXISTING CHAIN LINK FENCE
- PROPOSED OBJECT
- PROPOSED CURB & GUTTER
- PROPOSED ASHPHALT
- PROPOSED CONCRETE
- EXISTING PERVIOUS AREA
- PROPOSED PERVIOUS AREA
- EXISTING STRUCTURE
- PROPOSED STRUCTURE
- (E)XX.XX — EXISTING SPOT ELEVATION
- XX.XX — PROPOSED SPOT ELEVATION

	EXISTING	PROPOSED
SITE AREA, S.F.	20,700 SF	20,700 SF
IMPERVIOUS AREA, S.F. (%)	8,905 SF (43%)	1,959 SF
NET CHANGE %		0 %
GROSS FLOOR AREA OF PROPOSED ADDITION		1,958 SF

NOTE

THE LOCATIONS OF EXISTING IMPROVEMENTS SHOWN ON THIS PLAN WERE DERIVED IN PART FROM RECORD DOCUMENTS OF UNKNOWN ACCURACY. THE PRESENCE, LOCATION AND ELEVATION OF EXISTING UTILITIES IN THE FILED SHALL BE VERIFIED BY THE CONTRACTOR BEFORE COMMENCING WORK. IT SHALL BE THE RESPONSIBILITY OF THE CONTRACTOR TO VERIFY EXISTING CONDITIONS WITHIN THE LIMITS OF CONSTRUCTION. FAILURE OF AN EXISTING UTILITY TO APPEAR ON THIS PLAN SHALL NOT RELIEVE THE CONTRACTOR OF RESPONSIBILITY TO PROTECT AND REPAIR, IF DAMAGED, SUCH UTILITIES.

ALL NEW PEDESTRIAN PAVEMENT SHALL BE CONSTRUCTED IN ACCORDANCE WITH THE TEXAS ACCESSIBILITY STANDARDS, AND SHALL MATCH THE ELEVATIONS OF EXISTING IMPROVEMENTS AT POINTS OF INTERSECTION.

FINE GRADING SHALL BE COMPLETED TO DRAIN STORMWATER AWAY FROM BUILDING PERIMETERS, AND SPECIFICALLY AWAY FROM FROM BUILDING ENTRANCES AT THE MAXIMUM SLOPES POSSIBLE GIVEN EXISTING CONDITIONS ADJACENT.

SUMMARY SEQUENCE OF CONSTRUCTION

1. INSTALL SEDIMENTATION AND EROSION CONTROLS AND TREE PROTECTION FENCING AND INITIATE TREE MITIGATION MEASURES (AS REQUIRED).
2. BEGIN SITE CLEARING/CONSTTRUCTION ACTIVITIES.
3. COMPLETE CONSTRUCTION AND BEGIN REVEGETATION OF SITE AND INSTALLATION OF LANDSCAPING.
4. FOLLOWING REVEGETATION, REMOVE THE TEMPORARY EROSION AND SEDIMENTATION CONTROLS AND COMPLETE ANY NECESSARY FINAL REVEGETATION RESULTING FROM REMOVAL OF THE CONTROLS.

BID DOCUMENTS

STATE OF TEXAS — BRANDON EDWARD LAMMERT — 100187368 — LICENSED PROFESSIONAL ENGINEER
MWM DesignGroup, Inc. F-1416
8-30-16

mwm DesignGroup
305 East Huntland Drive
Suite 200
Austin, Texas 78752
p: 512.453.0767
f: 512.453.1734
TBAE FIRM REGISTRATION NO.: 1452
TBPE FIRM REGISTRATION NO.: F-1416
TBPLS FIRM REGISTRATION NO.: 10065600

NO.	DATE	DESCRIPTION	BY

0 — 1"
The bar above measures one inch on the original drawing. Adjust scales accordingly.

SITE PLAN

CITY OF AUSTIN, EMS EXPANSIONS
6601 MANCHACA ROAD, AUSTIN, TEXAS, 78745

PLOTTED: 9/7/2016
JOB NO: 023-81

EMS2
C050

File: Y:\023-790_WomensLockerRooms\CAD\EMS Station 2\Sheets\EMS2-A050 SITE PLAN.dwg 24x36

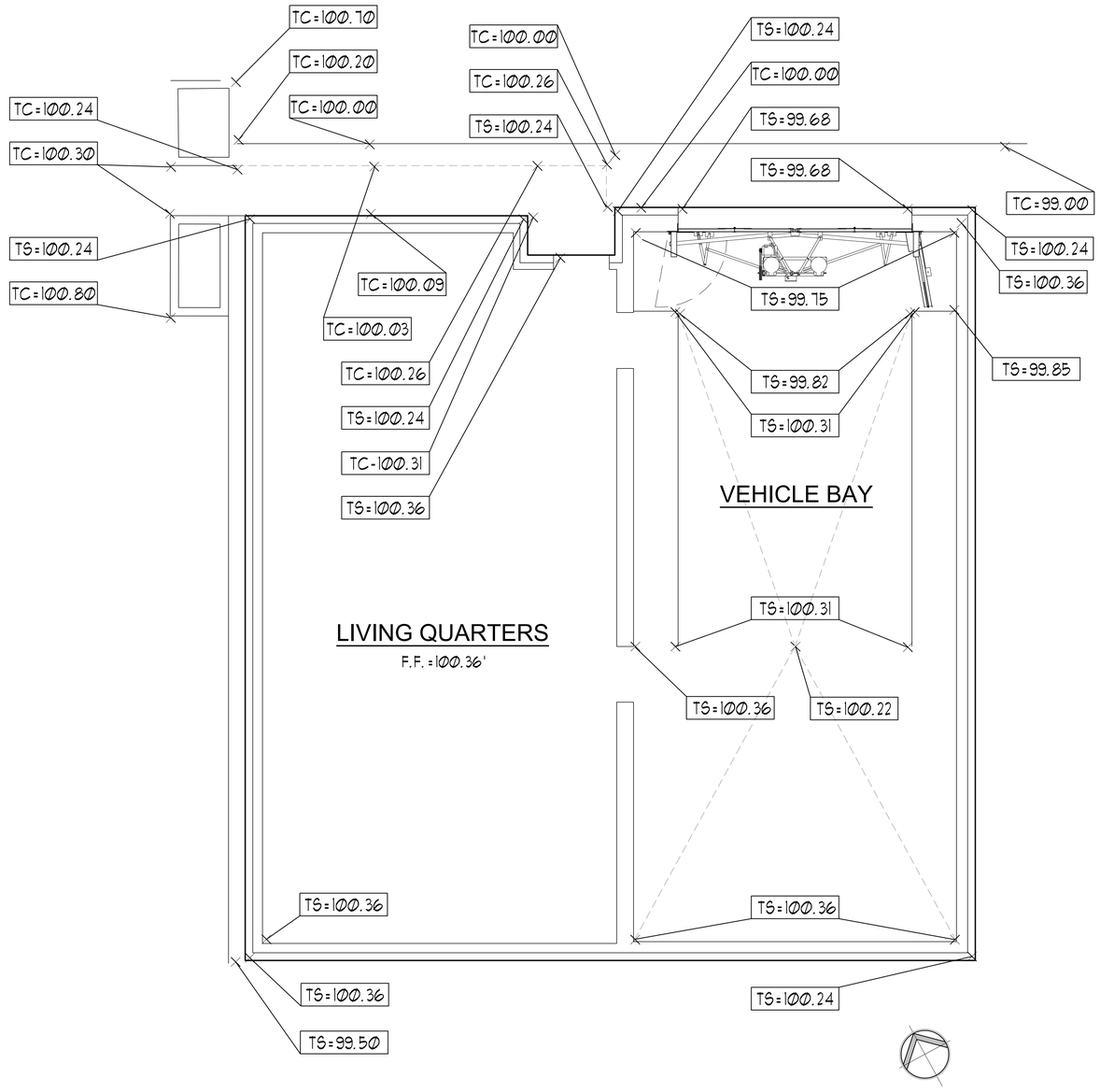

1 EMS2-AC125 SPOT ELEVATION SLAB PLAN
SCALE: 1/4" = 1'-0'

BID DOCUMENTS

REGISTERED ARCHITECT RICHARD W. OWEN HARRISON 18348 STATE OF TEXAS

mwm Design Group
305 East Huntland Drive
Suite 200
Austin, Texas 78752
p: 512.453.0767
f: 512.453.1734

TBAE FIRM REGISTRATION NO.: 1452
TBPE FIRM REGISTRATION NO.: F-1416
TBPLS FIRM REGISTRATION NO.: 10065600

NO.	DATE	DESCRIPTION	BY

0 1"
The bar above measures one inch on the original drawing. Adjust scales accordingly.

SPOT ELEVATION SLAB PLAN

CITY OF AUSTIN, EMS EXPANSIONS
6601 MANCHACA ROAD, AUSTIN, TEXAS, 78745

PLOTTED: 8/30/2016
JOB NO: 023-81

EMS2
AC125

File: Y:\023-791_WomensLockerRooms\CAD\EMS Station 2\Sheets\EMS2-AC125 SPOT PLAN.dwg 24x36

PROJECT DATA: EMS STATION 11/FIRE STATION 27

GOVERNING CODES

2012 INTERNATIONAL ENERGY CONSERVATION CODE
2012 INTERNATIONAL BUILDING CODE
2012 INTERNATIONAL MECHANICAL CODE
2012 UNIFORM PLUMBING CODE (AS AMENDED BY COA)
2012 NATIONAL ELECTRIC CODE (AS AMENDED BY COA)
2010 ADA STANDARDS FOR ACCESSIBLE DESIGN
2012 TEXAS ACCESSIBILITY STANDARDS

BUILDING CODE DATA – IBC CHAPTER 3

OCCUPANCY GROUP

B THE USE OF A BUILDING OR STRUCTURE, OR A PORTION THEREOF, FOR OFFICE, PROFESSIONAL OR SERVICE–TYPE TRANSACTIONS, INCLUDING STORAGE OF RECORDS AND ACCOUNTS.

VEHICLE BAY SHALL BE CONSIDERED A NON–SEPARATED OCCUPANCY PER IBC 508.3.

GENERAL BUILDING LIMITATIONS – IBC CHAPTER 5

ALLOWABLE HEIGHT AND BUILDING AREA (TABLE 503)

TYPE VB (B OCCUPANCY)
AREA (SF) 9,000
HEIGHT 2 STORY

FRONTAGE INCREASE (If) = [F/P–0.25]W/30 = 25
SPRINKLER INCREASE (Is) = 0

ALLOWABLE AREA (R–2) = At+(Atif/100)+(Atis/100) = 11,250

ACTUAL AREA B (SF) 1,946
ACTUAL AREA B 1 STORY

CONSTRUCTION TYPE – IBC CHAPTER 6

FIRE RESISTIVE REQUIREMENTS FOR BUILDING ELEMENTS (TYPE VB–TABLE 601)

BEARING WALLS	
INTERIOR	NO REQUIREMENTS
EXTERIOR	NO REQUIREMENTS
NONBEARING WALLS	
EXTERIOR	SEE BELOW
NONBEARING WALLS	
INTERIOR	NO REQUIREMENTS
FLOOR CONSTRUCTION	NO REQUIREMENTS
ROOF CONSTRUCTION	NO REQUIREMENTS

EXTERIOR WALL/OPENING PROTECTION (TABLE 602 AND 704.8)
EXTERIOR WALLS 1 LESS THAN 10 FEET
NO RATING 10 FEET OR GREATER

INTERIOR FINISHES – IBC CHAPTER 8

FLAME SPREAD RATINGS OF MATERIALS AND FINISHES (TABLE 803.4)

CLASS A: FLAME SPREAD 0–25, SMOKE DEVELOPED 0–450
CLASS B: FLAME SPREAD 26–75, SMOKE DEVELOPED 0–450
CLASS C: FLAME SPREAD 76–200, SMOKE DEVELOPED 0–450

VERTICAL EXITS AND PASSAGEWAYS	CLASS B
EXIT ACCESS CORRIDORS	CLASS B
ROOMS AND ENCLOSED SPACES	CLASS C

OCCUPANCY LOAD AND MEANS OF EGRESS –

	AREA (sqft.)	OCCUPANT LOAD FACTOR (sqft.)	OCCUPANTS	REQUIRED EGRESS WIDTH PER OCCUPANT (GENERAL /STAIR)	REQUIRED EGRESS WIDTH (GENERAL /STAIR)
EMS STATION	976	200	5	0.2	1.0
VEHICLE BAY	970	200	5	0.2	1.0
TOTAL			14	–	2.0
EGRESS WIDTH PROVIDED (1 DOOR)					32

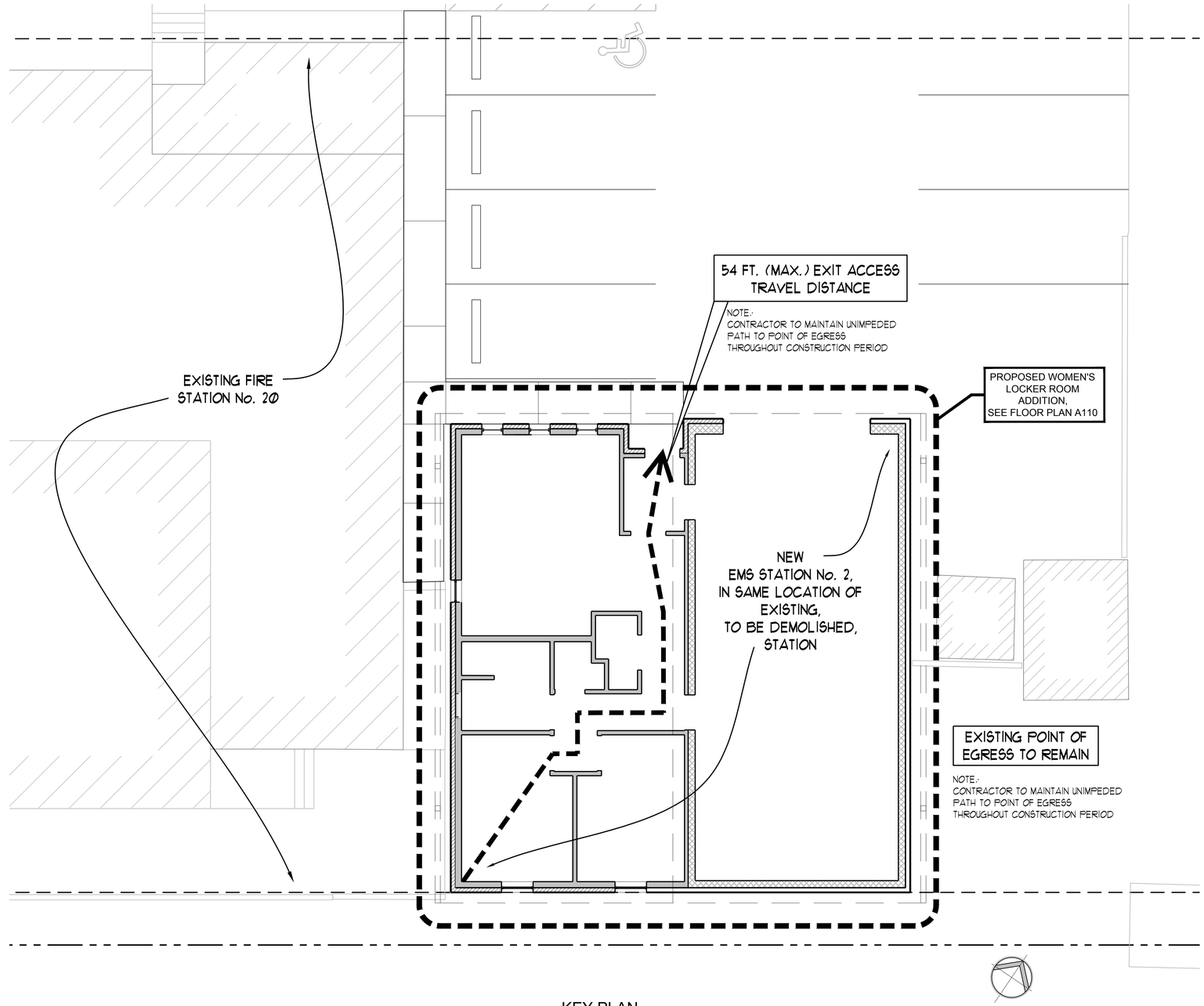

1 EMS2-A010 KEY PLAN
SCALE: 3/16" = 1'-0"

BID DOCUMENTS

REGISTERED ARCHITECT JOHN OWEN HARRIS 7838 STATE OF TEXAS

mwm Design Group
305 East Huntland Drive
Suite 200
Austin, Texas 78752
p: 512.453.0767
f: 512.453.1734
TBAE FIRM REGISTRATION NO.: 1452
TBPE FIRM REGISTRATION NO.: F-1416
TBPLS FIRM REGISTRATION NO.: 10065600

NO.	DATE	DESCRIPTION	BY

0 1"
The bar above measures one inch on the original drawing. Adjust scales accordingly.

CODE SUMMARY & KEY PLAN

CITY OF AUSTIN, EMS EXPANSIONS
6601 MANCHACA ROAD, AUSTIN, TEXAS, 78745

PLOTTED: 8/30/2016
JOB NO: 023-81

EMS2-A010

File: Y:\023-79D_WomensLockerRooms\CAD\EMS Station 2\Sheets\EMS2-A010 CODE.dwg 2:4:36

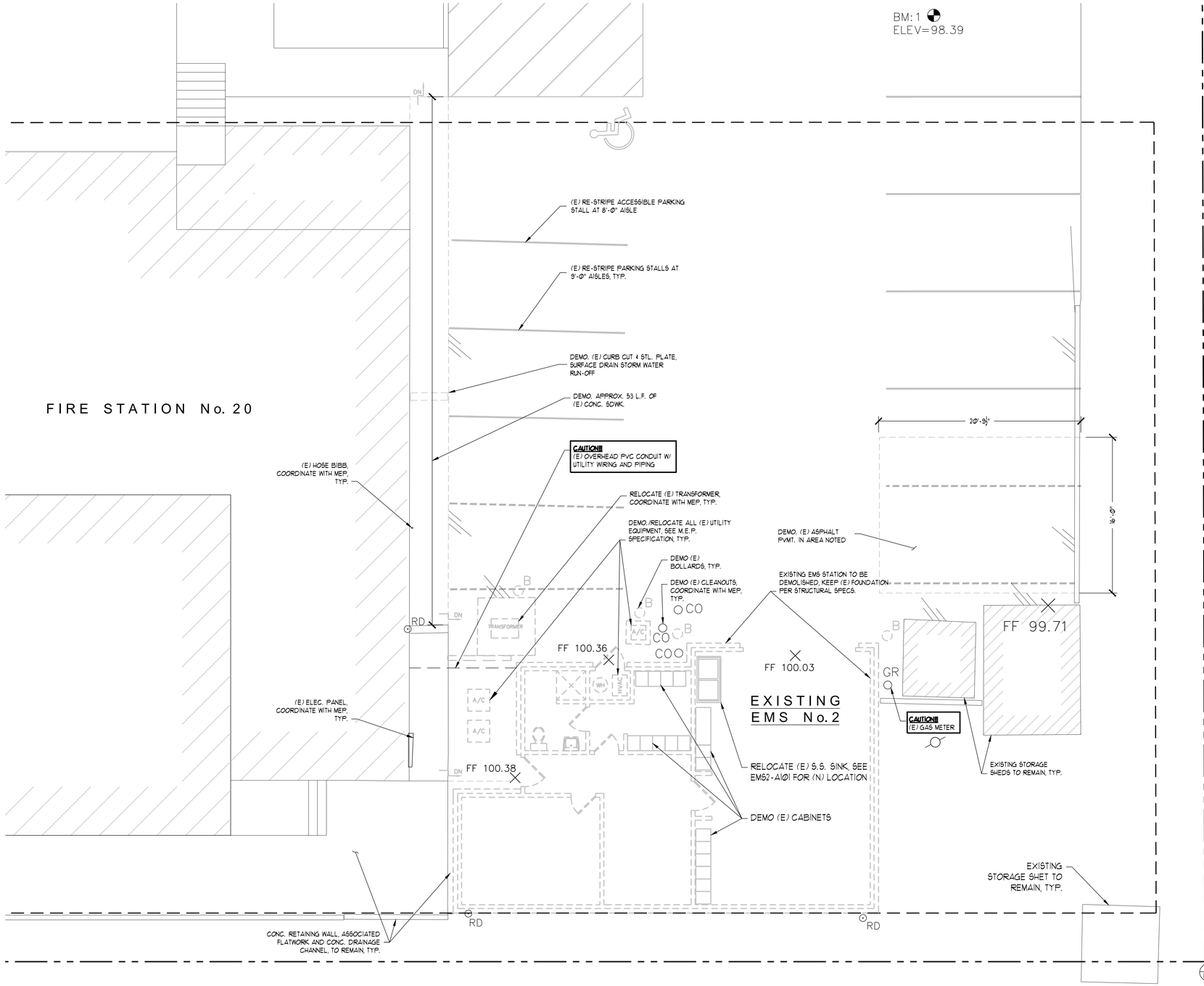

DEMOLITION LEGEND

- PROPERTY LINES
- BUILDING SETBACK LINES
- EXISTING TO REMAIN
- EXISTING OVERHEAD OBJECT
- EXISTING STRUCTURE
- EXISTING TO REMOVE
- EXISTING TO REMOVE

1 / EMS2-A100 DEMOLITION PLAN
SCALE: 3/16" = 1'-0"

BID DOCUMENTS

REGISTERED ARCHITECT JOHN OWEN HARTMAN 78348 STATE OF TEXAS

mwm Design Group
305 East Huntland Drive
Suite 200
Austin, Texas 78752
p: 512.453.0767
f: 512.453.1734
TBAE FIRM REGISTRATION NO.: 1452
TBPE FIRM REGISTRATION NO.: F-1416
TBPLS FIRM REGISTRATION NO.: 10065600

NO.	DATE	DESCRIPTION	BY

0 1"
The bar above measures one inch on the original drawing. Adjust scales accordingly.

DEMOLITION PLAN

CITY OF AUSTIN, EMS EXPANSIONS
6601 MANCHACA ROAD, AUSTIN, TEXAS, 78745

PLOTTED: 8/30/2016
JOB NO: 023-81

EMS2-A100

File: Y:\023-790_WomensLockerRooms\CAD\EMS Station 2\Sheets\EMS2-A100 DEMO PLAN.dwg 24x36

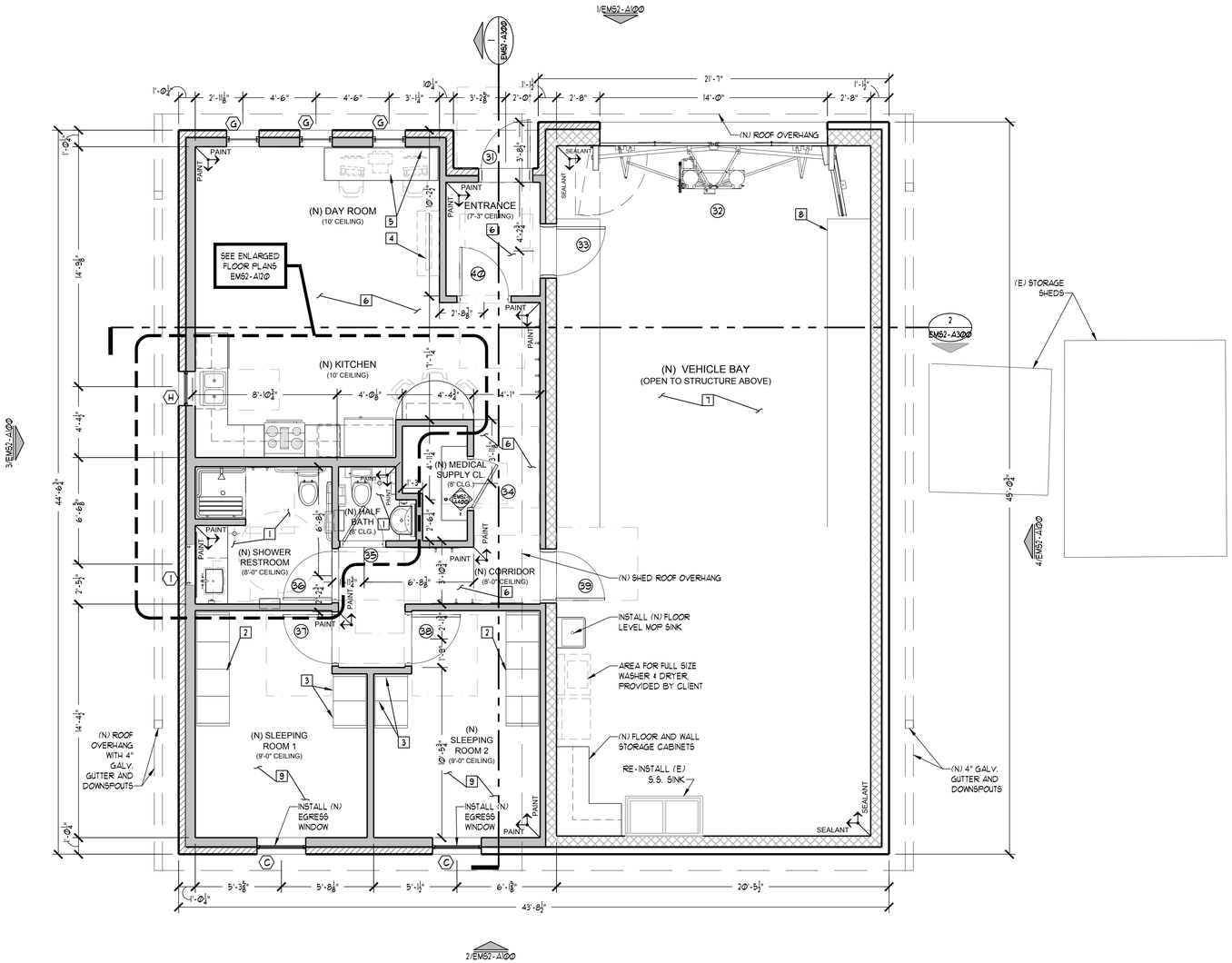

1 EMS2-A110 FLOOR PLAN
SCALE: 1/4" = 1'-0'

LEGEND

- PROPERTY LINES
- BUILDING SETBACK LINES
- EXISTING TO REMAIN
- EXISTING OVERHEAD OBJECT
- EXISTING TO REMOVE
- EXISTING STRUCTURE
- PROPOSED STRUCTURE
- PROPOSED OBJECT
- TILE / PAINT — PROPOSED WALL FINISH TYPE
- PROPOSED FLOOR DRAIN
- A.D.A. CLEAR FLOOR AREA
- PROPOSED GLAZING AT CLERESTORY
- PROPOSED GLAZING
- PROPOSED BRICK VENEER WALL
- PROPOSED FRAME WALL
- PROPOSED WALL INFILL, AS NOTED
- PROPOSED CMU BLOCK WALL
- PROPOSED CONCRETE
- PROPOSED FLOOR TILE
- PROPOSED PLYWOOD

CALL-OUT INDEX

1. CERAMIC TILE FLOORING
2. 20"x24"x80" HOLMAN LOCKERS OR APPROVED EQUAL
3. 18"x24"x80" HOLMAN LOCKERS OR APPROVED EQUAL
4. LOCATION OF 42" FLAT SCREEN T.V. (PROVIDED BY OWNER)
5. STUDY AREA WITH (2) P.C.'S AND (1) PRINTER, PROVIDED BY OWNER
6. RUBBER TILE FLOORING OR APPROVED EQUAL
7. FINISHED CONCRETE FLOOR WITH INTEGRATED SLOPED VEHICLE PARKING AREA
8. SLAB DROP, REFER TO 2/A110 FOR SPOT ELEVATIONS
9. CARPET TILE FLOORING OR APPROVED EQUAL

BID DOCUMENTS

REGISTERED ARCHITECT JOHN OWEN HARRISON 18248 STATE OF TEXAS

mwm Design Group
305 East Huntland Drive
Suite 200
Austin, Texas 78752
p: 512.453.0767
f: 512.453.1734
TBAE FIRM REGISTRATION NO.: 1452
TBPE FIRM REGISTRATION NO.: F-1416
TBPLS FIRM REGISTRATION NO.: 10065600

NO.	DATE	DESCRIPTION	BY

0 — 1"
The bar above measures one inch on the original drawing. Adjust scales accordingly.

FLOOR PLAN

CITY OF AUSTIN, EMS EXPANSIONS
6601 MANCHACA ROAD, AUSTIN, TEXAS, 78745

PLOTTED: 8/30/2016
JOB NO: 023-81

EMS2-A110

File: Y:\023-79D_WomensLockerRooms\CAD\EMS Station 2\Sheets\EMS2-A110 FLOOR PLAN.dwg 24x36

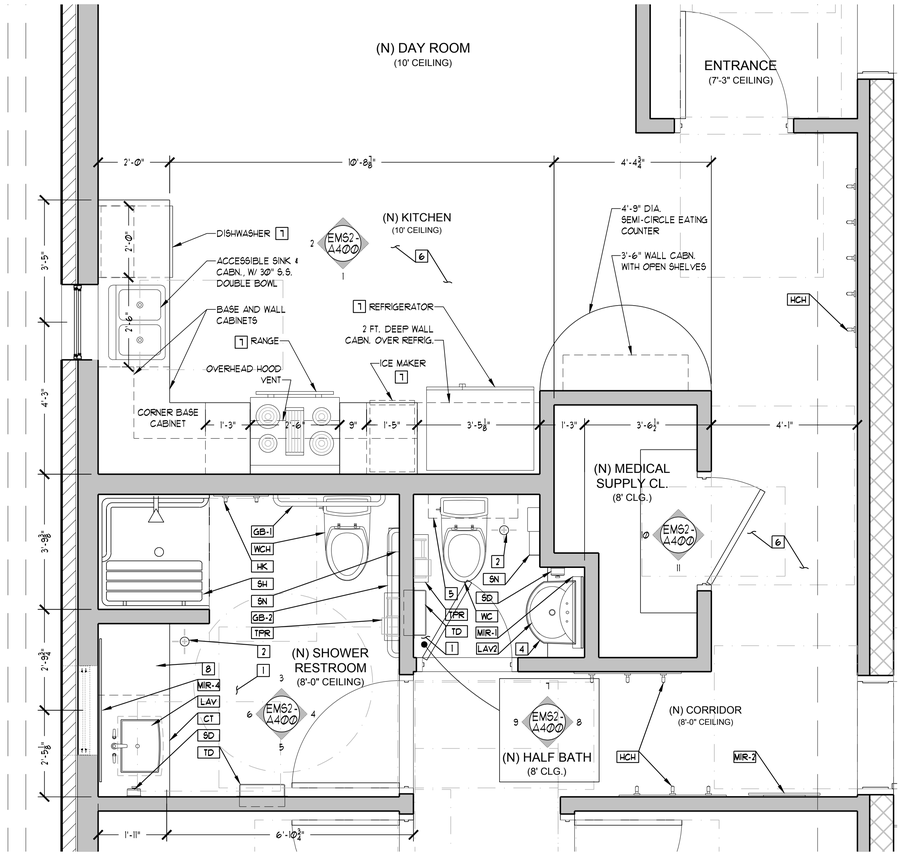

1 EMS2-A120 ENLARGED FLOOR PLAN
SCALE: 1/2" = 1'-0'

LEGEND

- PROPERTY LINES
- BUILDING SETBACK LINES
- EXISTING TO REMAIN
- EXISTING OVERHEAD OBJECT
- EXISTING TO REMOVE
- EXISTING STRUCTURE
- PROPOSED STRUCTURE
- PROPOSED OBJECT
- TILE / PAINT — PROPOSED WALL FINISH TYPE
- PROPOSED FLOOR DRAIN
- A.D.A. CLEAR FLOOR AREA
- PROPOSED GLAZING AT CLERESTORY
- PROPOSED GLAZING
- PROPOSED BRICK VENEER WALL
- PROPOSED FRAME WALL
- PROPOSED WALL INFILL, AS NOTED
- PROPOSED CMU BLOCK WALL
- PROPOSED CONCRETE
- PROPOSED FLOOR TILE
- PROPOSED PLYWOOD

CALL-OUT INDEX

1. CERAMIC TILE FLOORING
2. FLOOR DRAIN, SEE M.E.P. & STRUCTUAL FOR SPECS.
3. TOILET PER COA PRODUCT SPECS., SEE M.E.P. FOR INSTALLATION SPECS.
4. SHORTENED COUNTERTOP WITH APRON FRONT SINK
5. WALL CABINET FOR STORAGE (2'-6" X 2'-0")
6. RUBBER TILE FLOORING OR APPROVED EQUAL
7. APPLIANCE PROVIDED BY OWNER, TYP.
8. 24" BASE CABINET

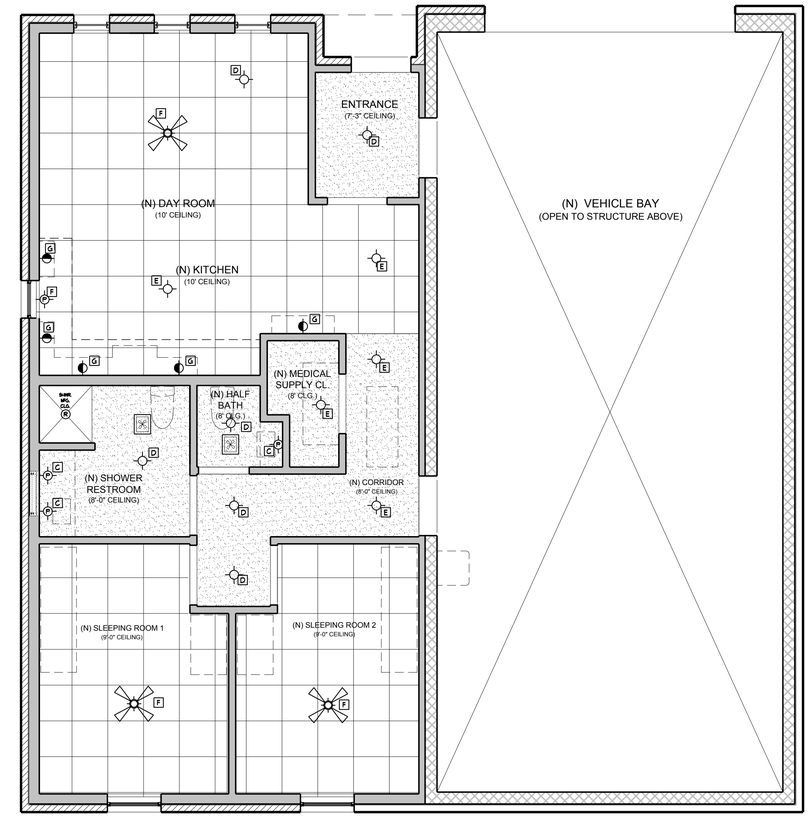

2 EMS2-A120 REFLECTED CEILING PLAN
SCALE: 1/4" = 1'-0'

RCP LEGEND

- GYPSUM WALLBOARD
- 2'x2' LAY-IN ACOUSTICAL TILE CEILING GRID
- PLYWOOD SURFACE
- 1x WOOD PLANKS/T&G
- 2x WOOD FRAME INFILL INCLUDES: INSULATION, GYP. BD., TAPE, FLOAT, CHAULK ALL JOINTS/GAPS & PAINT
- OPEN TO STRUCTURE ABOVE
- FLUSH MOUNT CEILING LIGHT
- PENDANT CEILING LIGHT
- RECESSED CEILING MOUNT LIGHT
- (2) 4 FT. NEON BALLAST FLUSH MOUNT WORK LIGHT, W/ MTL PROTECTIVE COVER
- RECESSED MOUNTED EXHAUST FAN
- CEILING FAN WITH LIGHT
- WALL SCONCE
- SURFACE MOUNT UNDER-CABINET LIGHT

CALL-OUT INDEX

1. LIGHTING FIXTURE SCHEDULE F5/EMS0-A010, DETAIL No. 3

BID DOCUMENTS

REGISTERED ARCHITECT W. OWEN HARRISON 18345 STATE OF TEXAS

mwm Design Group
305 East Huntland Drive
Suite 200
Austin, Texas 78752
p: 512.453.0767
f: 512.453.1734
TBAE FIRM REGISTRATION NO.: 1452
TBPE FIRM REGISTRATION NO.: F-1416
TBPLS FIRM REGISTRATION NO.: 10065600

NO.	DATE	DESCRIPTION	BY

0 1"
The bar above measures one inch on the original drawing. Adjust scales accordingly.

ENLARGED FLOOR AND REFLECTED CEILING PLAN

CITY OF AUSTIN, EMS EXPANSIONS
6601 MANCHACA ROAD, AUSTIN, TEXAS, 78745

PLOTTED: 8/30/2016
JOB NO: 023-81

EMS2-A120

File: Y:\023-790_Womens&LockerRooms\CAD\EMS Station 2\Sheets\EMS2-A120 LG RCP PLANS.dwg 24x36

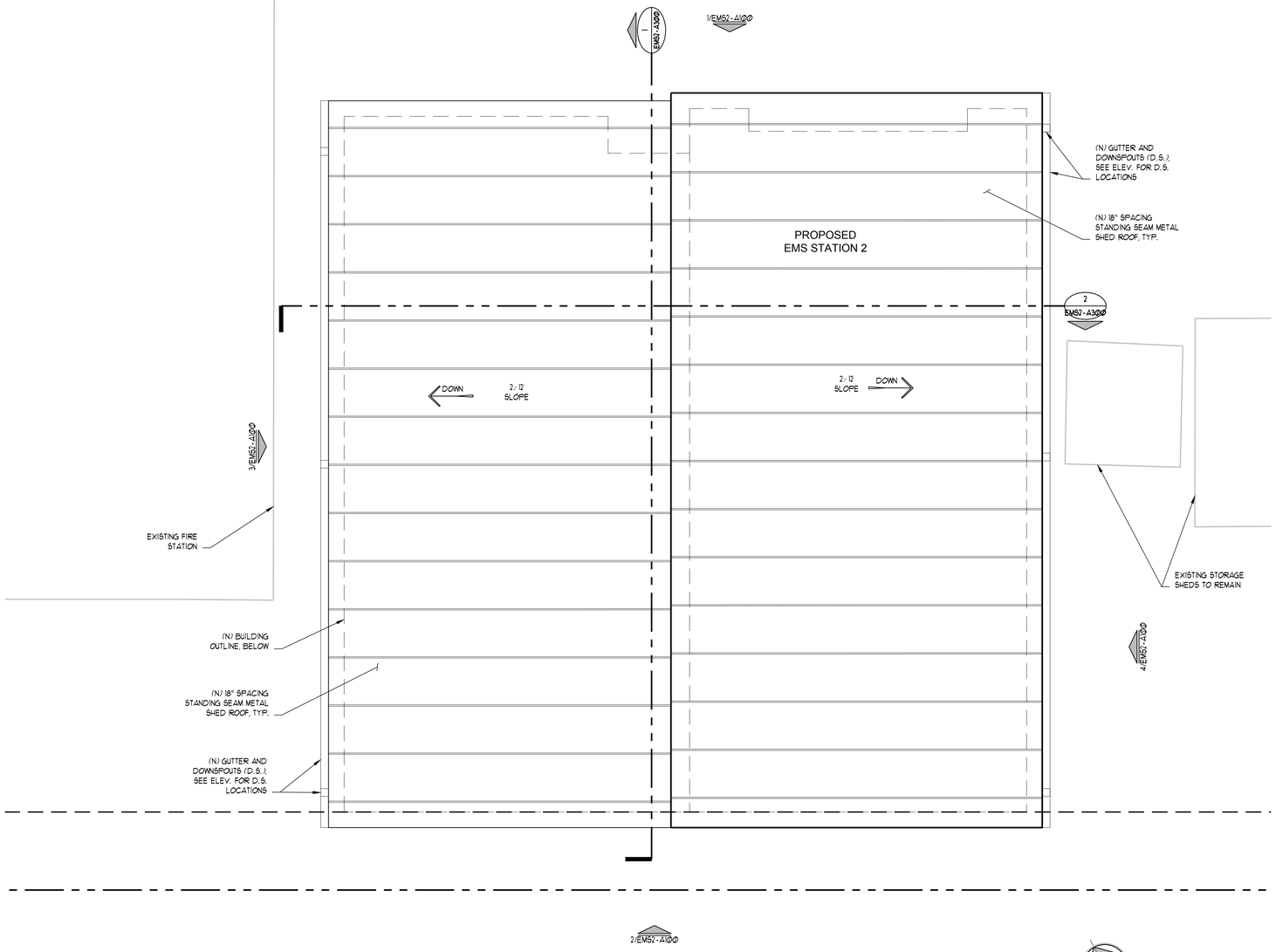

1
EMS2-A130
ROOF PLAN
SCALE: 1/4" = 1'-0"

BID DOCUMENTS

REGISTERED ARCHITECT
RICHARD OWEN HARRISON
18348
STATE OF TEXAS

mwm Design Group

305 East Huntland Drive
Suite 200
Austin, Texas 78752
p: 512.453.0767
f: 512.453.1734

TBAE FIRM REGISTRATION NO.: 1452
TBPE FIRM REGISTRATION NO.: F-1416
TBPLS FIRM REGISTRATION NO.: 10065600

NO.	DATE	DESCRIPTION	BY

0 1"
The bar above measures one inch on the original drawing. Adjust scales accordingly.

ROOF PLAN

CITY OF AUSTIN, EMS EXPANSIONS
6601 MANCHACA ROAD, AUSTIN, TEXAS, 78745

PLOTTED: 8/30/2016
JOB NO: 023-81

EMS2-A130

File: Y:\023-791_WomensLockerRooms\CAD\EMS Station 2\Sheets\EMS2-A130 ROOF PLAN.dwg 24x36

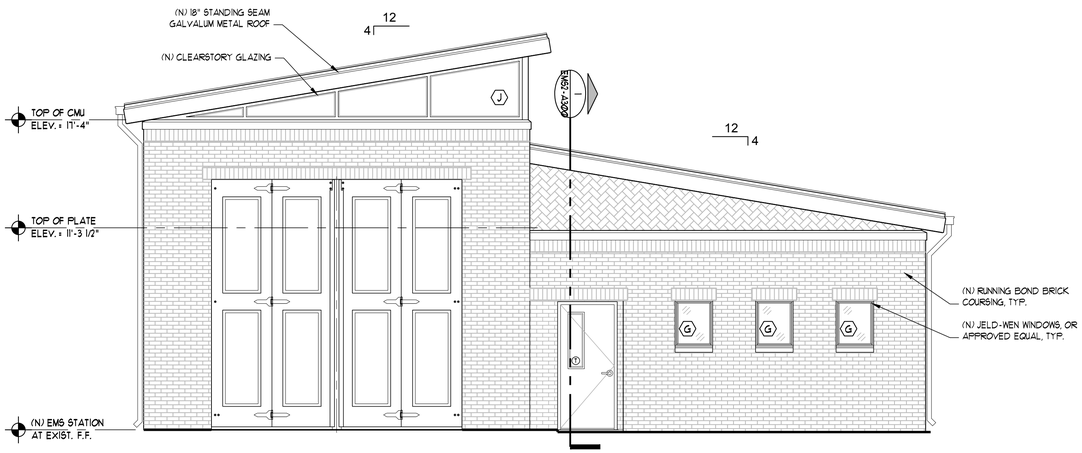

1 EMS2-A200 NORTH ELEVATION
SCALE: 1/4" = 1'-0'

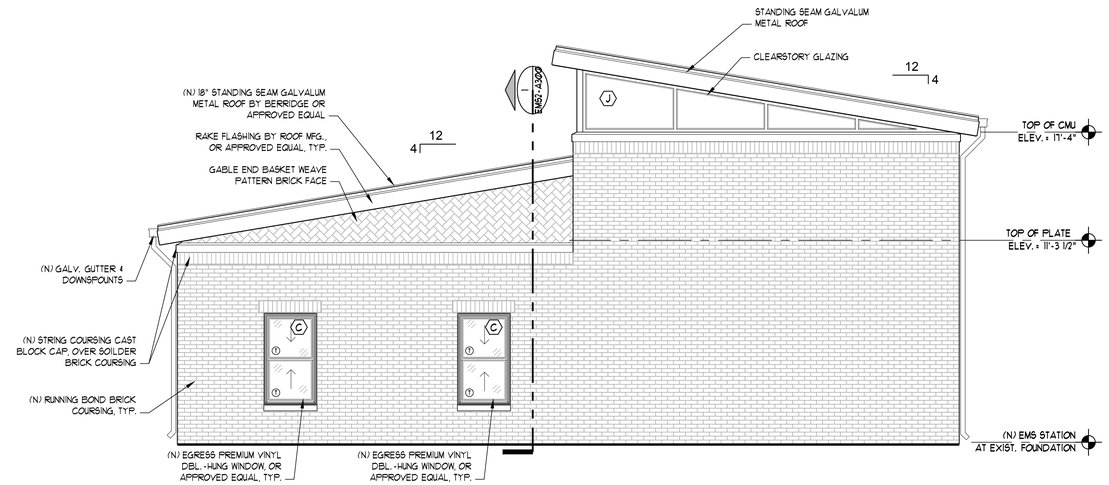

2 EMS2-A200 SOUTH ELEVATION
SCALE: 1/4" = 1'-0'

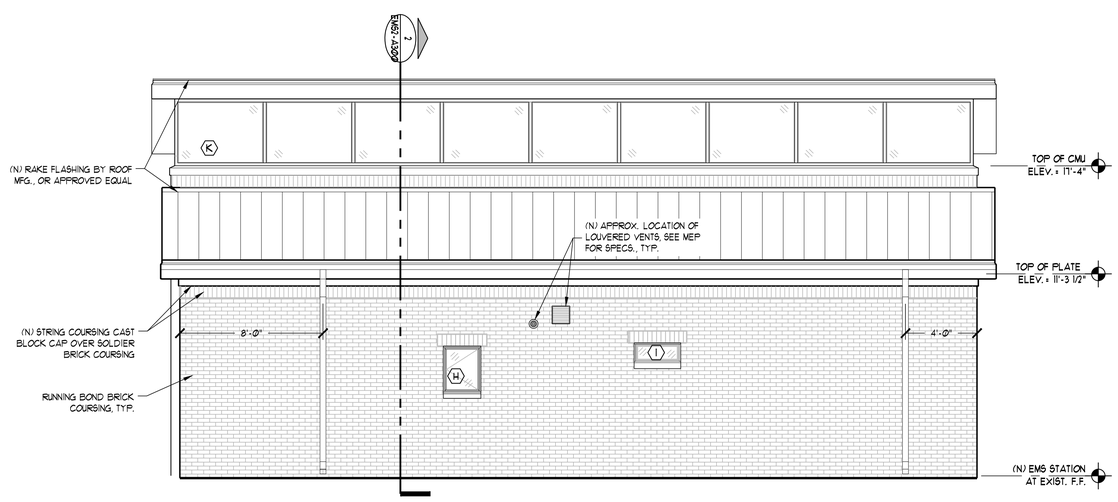

3 EMS2-A200 WEST ELEVATION
SCALE: 1/4" = 1'-0'

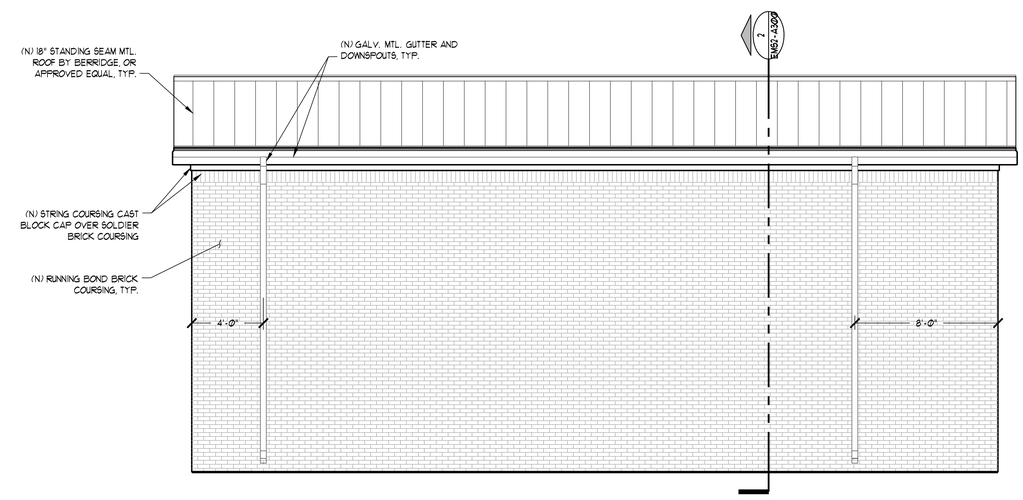

4 EMS2-A200 EAST ELEVATION
SCALE: 1/4" = 1'-0'

BID DOCUMENTS

REGISTERED ARCHITECT W. OWEN HARRISON 18348 STATE OF TEXAS

mwm Design Group
305 East Huntland Drive
Suite 200
Austin, Texas 78752
p: 512.453.0767
f: 512.453.1734

TBAE FIRM REGISTRATION NO.: 1452
TBPE FIRM REGISTRATION NO.: F-1416
TBPLS FIRM REGISTRATION NO.: 10065600

NO.	DATE	DESCRIPTION	BY

0 1"
The bar above measures one inch on the original drawing. Adjust scales accordingly.

BUILDING ELEVATIONS

CITY OF AUSTIN, EMS EXPANSIONS
6601 MANCHACA ROAD, AUSTIN, TEXAS, 78745

PLOTTED: 8/30/2016
JOB NO: 023-81

EMS2-A210

File: Y:\023-790_WomensLockerRooms\CAD\EMS Station 2\Sheets\EMS2-A210 BLDG ELEV.dwg 24x36

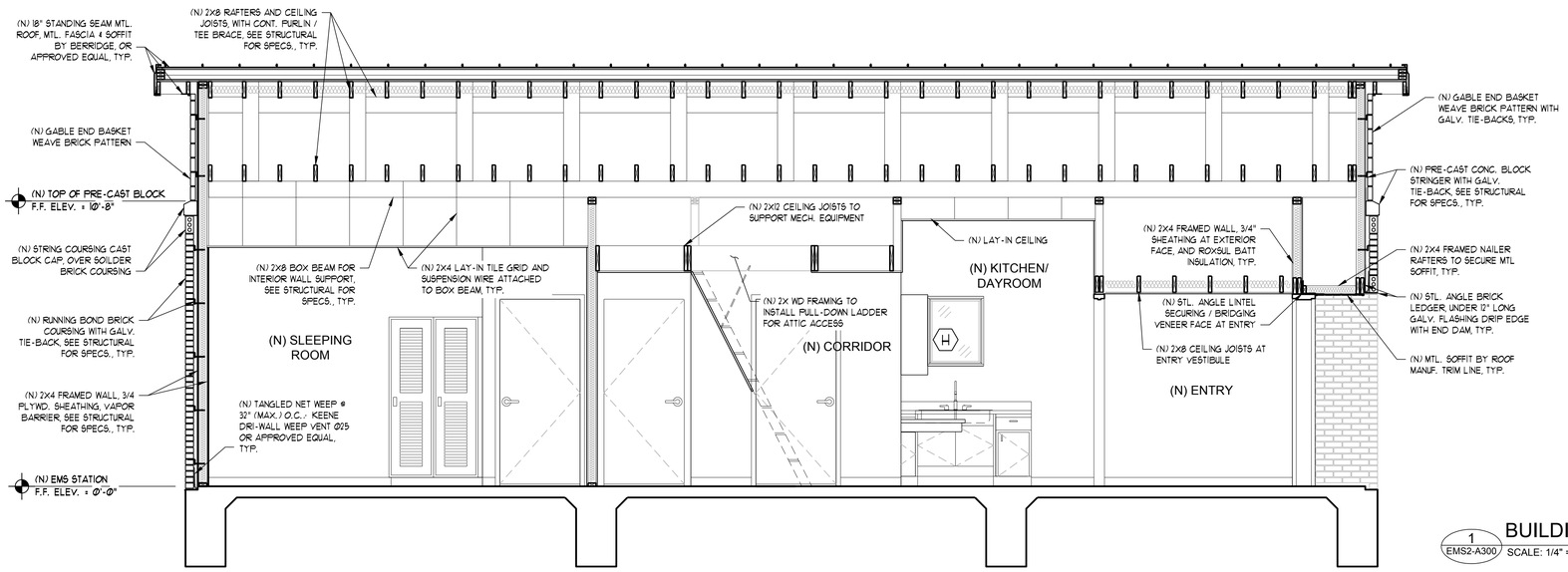

1 EMS2-A300 BUILDING SECTION
SCALE: 1/4" = 1'-0'

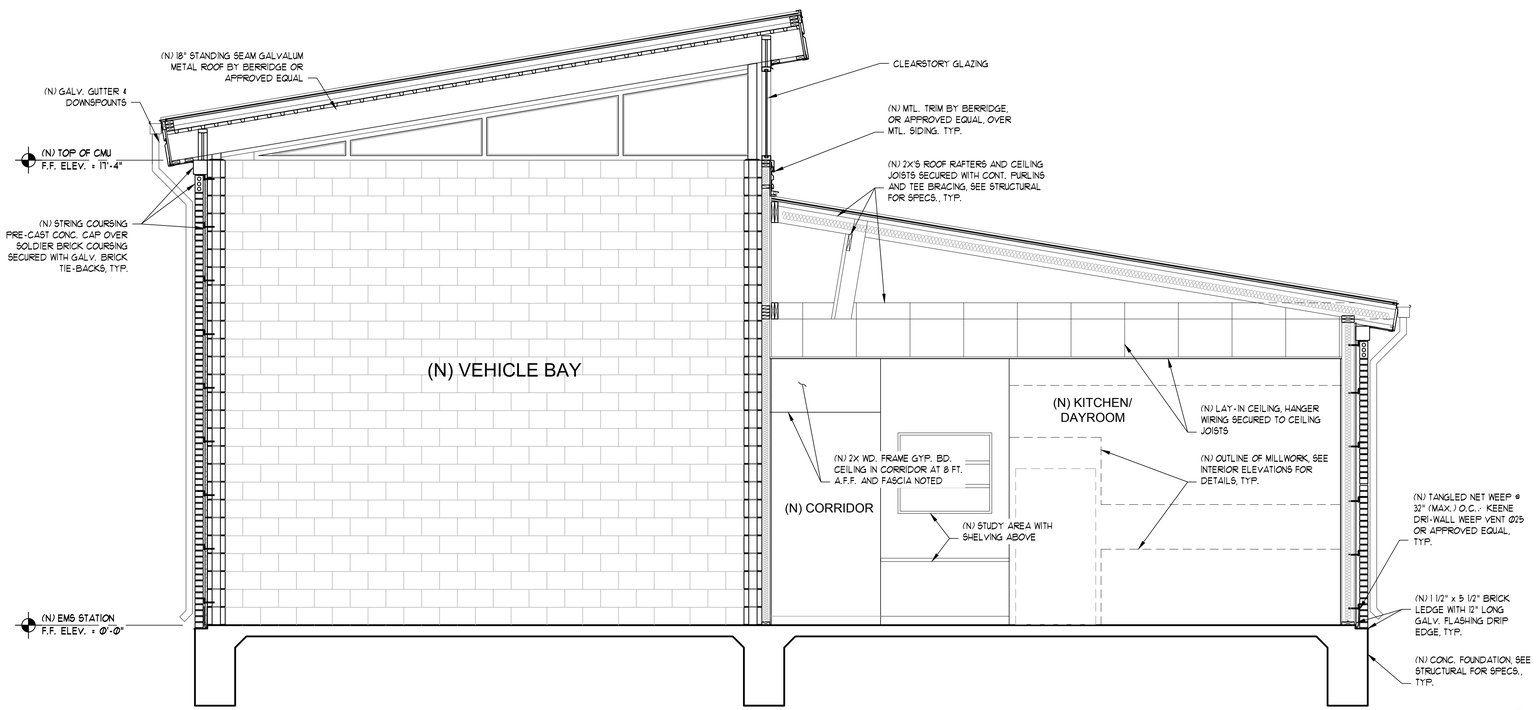

2 EMS2-A300 BUILDING SECTION
SCALE: 1/4" = 1'-0'

BID DOCUMENTS

REGISTERED ARCHITECT W. OWEN HARWOOD TEXAS STATE OF TEXAS
30 Aug 2016

mwm Design Group
305 East Huntland Drive
Suite 200
Austin, Texas 78752
p: 512.453.0767
f: 512.453.1734

TBAE FIRM REGISTRATION NO.: 1452
TBPE FIRM REGISTRATION NO.: F-1416
TBPLS FIRM REGISTRATION NO.: 10065600

NO.	DATE	DESCRIPTION	BY

0 1"
The bar above measures one inch on the original drawing. Adjust scales accordingly.

BUILDING SECTIONS

CITY OF AUSTIN, EMS EXPANSIONS
6601 MANCHACA ROAD, AUSTIN, TEXAS, 78745

PLOTTED: 8/30/2016
JOB NO: 023-81

EMS2-A300

File: Y:\023-79D_WomensLockerRooms\CAD\EMS Station 2\Sheets\EMS2-A300 BLDG SECT.dwg 24x36

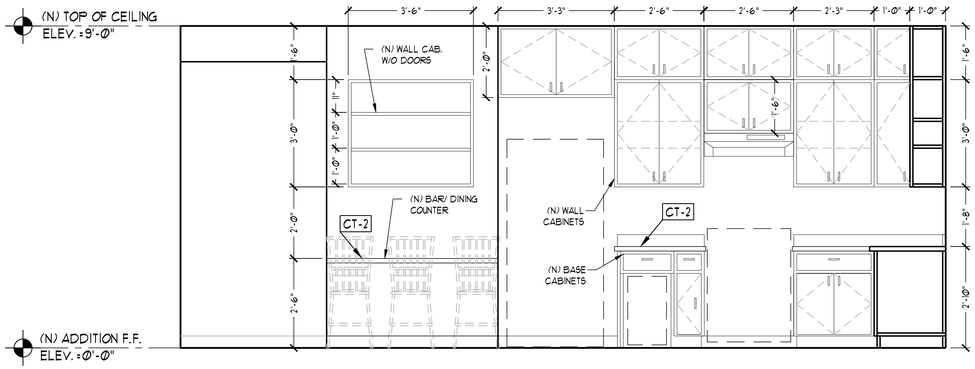

1 EMS2-A400 KITCHEN INTERIOR ELEVATION
SCALE: 1/2" = 1'-0'

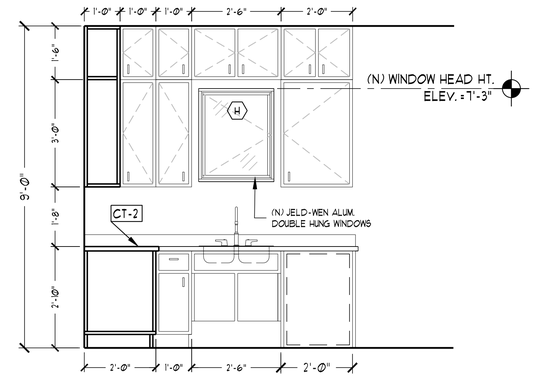

2 EMS2-A400 KITCHEN INTERIOR ELEVATION
SCALE: 1/2" = 1'-0'

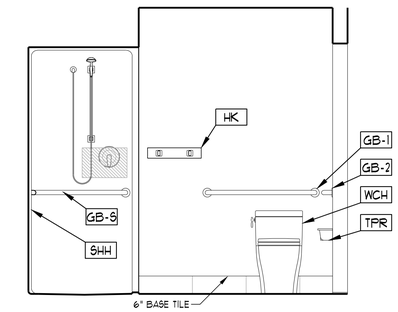

3 EMS2-A400 SHOWER/RESTROOM INT. ELEV.
SCALE: 1/2" = 1'-0'

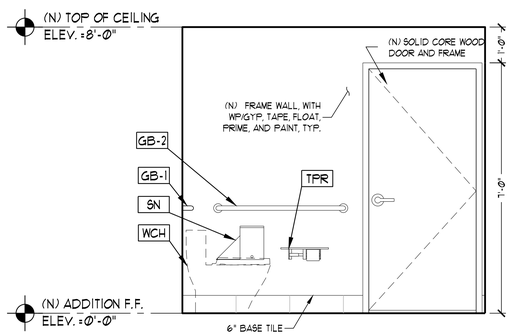

4 EMS2-A400 SHOWER/RESTROOM INT. ELEV.
SCALE: 1/2" = 1'-0'

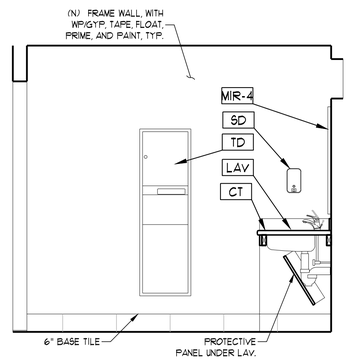

5 EMS2-A400 SHOWER/RESTROOM INT. ELEV.
SCALE: 1/2" = 1'-0'

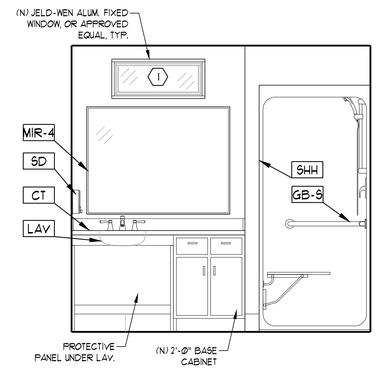

6 EMS2-A400 SHOWER/RESTROOM INT. ELEV.
SCALE: 1/2" = 1'-0'

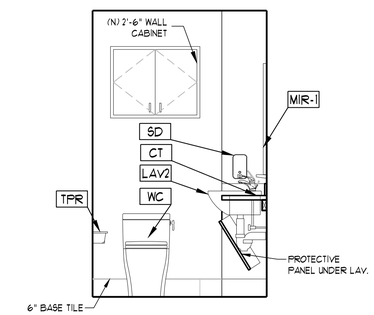

7 EMS2-A400 HALF BATH INTERIOR ELEV.
SCALE: 1/2" = 1'-0'

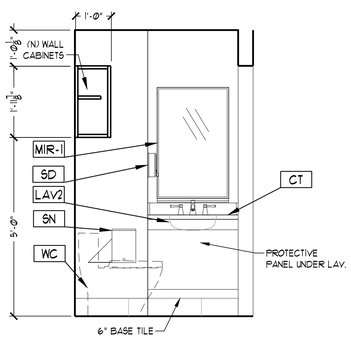

8 EMS2-A400 HALF BATH INTERIOR ELEV.
SCALE: 1/2" = 1'-0'

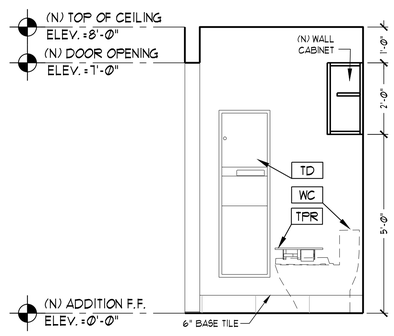

9 EMS2-A400 HALF BATH INTERIOR ELEV.
SCALE: 1/2" = 1'-0'

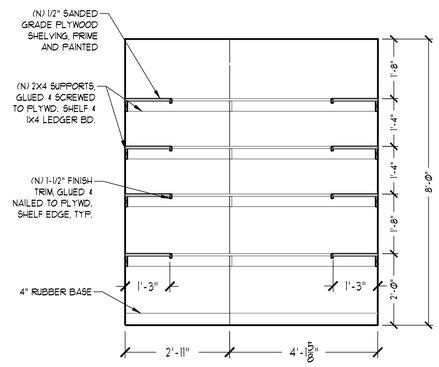

10 EMS2-A400 MEDICAL SUPPLY CLOSET INT. ELEV.
SCALE: 1/2" = 1'-0'

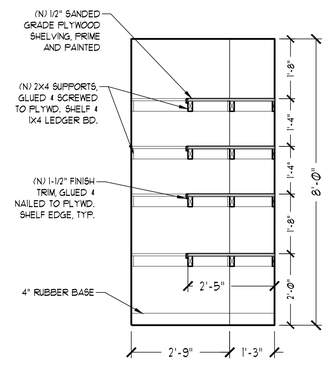

11 EMS2-A400 MEDICAL SUPPLY CLOSET INT. ELEV.
SCALE: 1/2" = 1'-0'

BID DOCUMENTS

REGISTERED ARCHITECT JOHN OWEN HARRISON 18348 STATE OF TEXAS

mwm Design Group
305 East Huntland Drive
Suite 200
Austin, Texas 78752
p: 512.453.0767
f: 512.453.1734

TBAE FIRM REGISTRATION NO.: 1452
TBPE FIRM REGISTRATION NO.: F-1416
TBPLS FIRM REGISTRATION NO.: 10065600

NO.	DATE	DESCRIPTION	BY

0 1"
The bar above measures one inch on the original drawing. Adjust scales accordingly.

INTERIOR ELEVATIONS

CITY OF AUSTIN, EMS EXPANSIONS
6601 MANCHACA ROAD, AUSTIN, TEXAS, 78745

PLOTTED: 8/30/2016
JOB NO: 023-81

EMS2-A400

File: Y:\023-79D_WomensLockerRooms\CAD\EMS Station 2\Sheets\EMS2-A400 INT ELEV.dwg 24x36

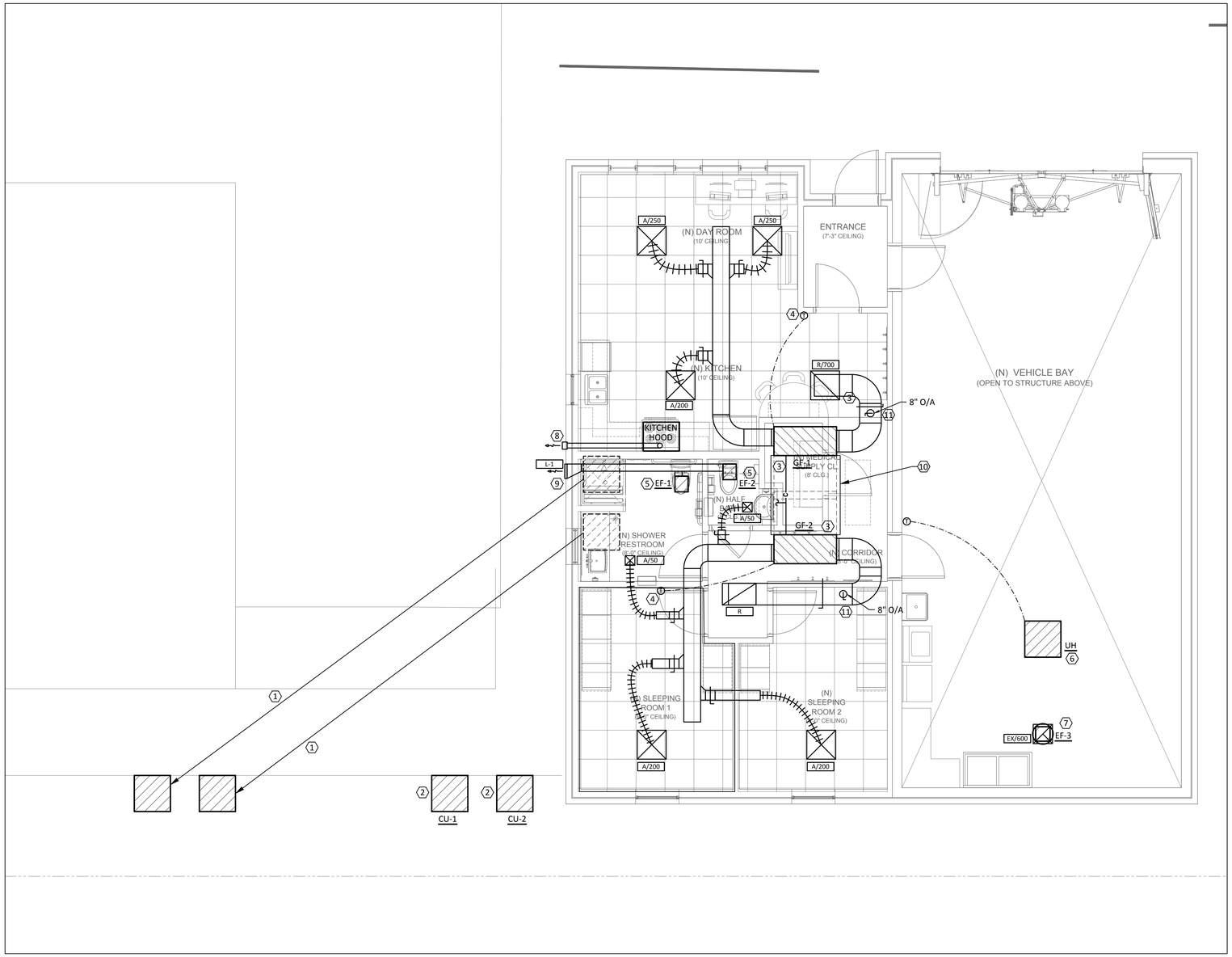

1 MECHANICAL PLAN

SCALE: 1/4" = 1'-0"

PLAN GENERAL NOTES

A. REFER TO M0.00 FOR GENERAL NOTES.

B. DO NOT ROUTE ANY DUCT & PIPING ABOVE ELECTRICAL PANELS.

C. PROVIDE AND INSTALL TRANSITION AS REQUIRED TO CONNECT SMALL DUCT TO LOUVER OR GRILLE.

D. COORDINATE WITH ARCHITECT AND STRUCTURAL ENGINEER FOR ALL WALL AND ROOF PENETRATION.

E. MAINTAIN 10' CLEARANCE FROM ANY EXHAUST AIR OUTLET OR FLUE TO ANY OUTSIDE AIR INTAKE OR OPENING TO BUILDING.

F. PROVIDE LOCKING ACCESS PORT CAPS ON ALL REFRIGERANT CIRCUIT SERVICE PORTS LOCATED ON THE EXTERIOR OF THE BUILDING.

G. ESTIMATED LOCATION OF ALL EXISTING MECHANICAL LAYOUT AND EQUIPMENT LOCATION IS BASED ON SITE OBSERVATION AND EXISTING DRAWINGS. CONTRACTOR SHALL VERIFY SIZE, LOCATION OF ALL EXISTING PLUMBING PIPING EQUIPMENT PRIOR TO BID AND CONSTRUCTION.

KEYED NOTES

1. RELOCATE EXISTING CONDENSING UNITS FOR FIRE STATION TO NEW LOCATION AS SHOWN ON PLAN. COORDINATE WITH GENERAL CONTRACTOR TO PROVIDE AND INSTALL CONCRETE PADS FOR CONDENSING UNIT TO MATCH ELEVATION OF EXISTING SIDEWALK.
2. PROVIDE AND INSTALL HEAT PUMP UNITS ON CONCRETE PAD. COORDINATE WITH GENERAL CONTRACTOR TO PROVIDE AND INSTALL CONCRETE PADS FOR HEAT PUMP UNITS TO MATCH ELEVATION OF EXISTING SIDEWALK.
3. SUSPEND HORIZONTAL AIR HANDLER UNIT ABOVE CEILING WITH NEOPRENE CORK VIBRATION ISOLATORS AND SECONDARY DRAIN PAN (OVERFLOW SWITCH MOUNTED TO PAN WITH STEEL SCREW TO SHUT OFF UNIT WHEN PAN OVERFLOWS).

   ROUTE 3/4" INSULATED CONDENSATE DRAIN DOWN TO TAILPIECE ABOVE LAVATORY OF HALF BATHROOM
4. PROVIDE PROGRAMMABLE THERMOSTAT MOUNTED AT 48" A.F.F.
5. EXHAUST FAN SHALL BE SUSPENDED FROM CEILING WITH VIBRATION ISOLATORS.
6. GAS UNIT HEATER SHALL BE SUSPENDED FROM STRUCTURAL MEMBER WITH VIBRATION ISOLATORS AT 13'-0" A.F.F. TO BOTTOM OF UNIT HEATER. ROUTE COMBINED DRAIN FROM BOTH UNIT HEATERS SECONDARY HEAT EXCHANGER CONDENSATE 3/4" DRAIN FROM HEATER TO 1" ABOVE RIM OF LS INK.

   ROUTE 4" COMBUSTION AIR PIPING AND 4" VENT AIR PIPING UP THROUGH ROOF VIA MANUFACTURER'S CONCENTRIC VENT KIT. ROUTE COMBINED 3/4" DRAIN FROM UNIT HEATER VEND PIPING TO 1" ABOVE RIM OF LS SINK.

   PROVIDE AND INSTALL THERMOSTAT FOR HEATER ON WALL AT 48" A.F.F. AS SHOWN ON PLAN
7. PROVIDE AND INSTALL EXHAUST FAN WITH CURB ON ROOF. ROUTE 12x12 DUCT FROM EXHAUST DUCT TO EXHAUST GRILLE 'EX' ON CEILING.
8. ROUTE 4" EXHAUST DUCT FROM KITCHEN HOOD ABOVE CEILING TO WALL CAP. MAINTAIN 10 ' CLEARANCE FROM WALL CAP TO OPENING TO BUILDING.
9. ROUTE COMBINED EXHAUST DUCT FROM EXHAUST FANS TO EXHAUST WALL LOUVER.
10. COORDINATE WITH GENERAL CONTRACTOR TO PROVIDE SERVICE PLATFORM FOR TWO AIR HANDLERS.
11. 8"Ø LOW PROFILE TYPE OUTSIDE AIR INTAKE WITH ACCESSIBLE MANUAL VOLUME DAMPER, BIRDSCREEN AND FLASHING. INTAKE SHALL BE PAINTED TO MATCH ROOF COLOR. COORDINATE ROOF PENETRATION AND COLOR WITH ROOFING CONTRACTOR.

ENCOTECH
ENGINEERING CONSULTANTS
TBPE Firm 1141 | 8500 Bluffstone Cove, Suite B-103
Austin, Texas 78759 | 512.338.1101
Project No.: 14046.M.AUS

STATE OF TEXAS
LYNN C. BROWN
55248
LICENSED PROFESSIONAL ENGINEER
08/30/2016

mwm Design Group
305 East Huntland Drive
Suite 200
Austin, Texas 78752
p: 512.453.0767
f: 512.453.1734
TBAE FIRM REGISTRATION NO.: 1452
TBPE FIRM REGISTRATION NO.: F-1416
TBPLS FIRM REGISTRATION NO.: 10065600

NO.	DATE	DESCRIPTION	BY

SCALE IS AS NOTED ON DRAWING

MECHANICAL PLAN

CITY OF AUSTIN, EMS EXPANSIONS
6601 MANCHACA ROAD, AUSTIN, TEXAS, 78745

PLOTTED: 8/30/2016
JOB NO: 023-81

EMS2-M110

File: J:\ACTIVE PROJECTS\MWM\14095.M.AUS - EMS\1. MEP\D-AutoCAD\EMS Station 2\14095-EMS2 M100 Mech Plan.dwg 24x36

CONDENSING UNIT SCHEDULE

MARK	CLG. DATA		ELECTRICAL DATA			UNIT DATA				
	TONS	EER/ SEER	MCA	MOCP	VOLT/PH	MAKE	MODEL	LBS.	NOTES	CORRESPONDING AIR HANDLER
CU-2	1.5	-/ 13.0	9.0	15	208V/1PH	TRANE	4TTB3018	192		
CU-1	2	-/ 13.0	12.0	20	208V/1PH	TRANE	4TTB3024	195		

NOTES:
1. PROVIDE DISCONNECT, TO BE FIELD MOUNTED BY ELECTRICAL CONTRACTOR.
2. COMPRESSOR SHALL BE PROVIDED WITH 10 YEARS WARRANTY.
3. UNIT TO BE PROVIDED LOW AMBIENT KIT FOR OPERATION DOWN TO 40°F.

GAS FURNACE UNIT SCHEDULE

MARK	AIR DATA					COOLING DATA											HEATING DATA					ELECTRICAL DATA			UNIT DATA			
	TOT. CFM	O/A CFM	E.S.P.	HP	CONFIGURATION	AMBIENT		ENTERING		LEAVING		DESIGN		SCHEDULE		STAGE	EER/ SEER	DES.	SCHEDULE		STAGE	AFUE	MCA	MOCP	VOLT/PH	MAKE	MODEL	LBS.	NOTES
						D.B.	W.B.	D.B.	W.B.	D.B.	W.B.	SENS.	TOT.	SENS.	TOT.			MBH	IN	OUT									
GF-2	500		0.5	1	CONVERTIBLE	105	74	80	67	-	-			10.3	18.0	1	-/ 13.0		120.0	114.0	1	0.95	12.9	20	115/1PH	TRANE	TUH1B040 4TXCD018	193	
GF-1	700		0.5	0.5	CONVERTIBLE	105	74	80	67	-	-			16.8	23.0	1	-/ 13.0		60.0	57.0	1	0.95	9.2	15	115/1PH	TRANE	TUH1B040 4TXCB024	140	

NOTES:
1. PROVIDED STANDARD THERMOSTAT, SINGLE STAGE COOLING AND HEATING, BY HONEYWELL, OR APPROVED EQUIVALENT.
2. UNIT TO BE MOUNTED USING VIBRATION ISOLATORS.
3. UNIT TO INCLUDE STANDARD MERV-8 DISPOSABLE 1" FILTER.

AIR DEVICE SCHEDULE

MARK	SIZE	MOUNTING	INLET	CFM	MAX NC	DESCRIPTION	MAKE	MODEL
A	14" x 6"	GYP CEILING	-	200-300	-	LOUVER FACE, DOUBLE DEFLECTION SUPPLY AIR GRILL	PRICE	14x6/620-F-L-A-B12
B	8" x 6"	GYP CEILING	-	50-100	-	LOUVER FACE, DOUBLE DEFLECTION SUPPLY AIR GRILL	PRICE	8x6-620-F-L-A-B12
S	14" x 6"	WALL	-	200-300	-	LOUVER FACE, DOUBLE DEFLECTION SUPPLY AIR GRILL	PRICE	14x6-620-F-L-A-B12
R	24" x 20"	GYP CEILING	-	500-1000	-	LOUVER FACE RETURN AIR GRILL	PRICE	24x20-630-F-L-A-B12
EX	18" x 18"	GYP CEILING	-	600	-	LOUVER FACE EXHAUST AIR GRILL	PRICE	18x18-630-F-L-A-B12

NOTES:
1. COORDINATE EXACT LOCATION OF DIFFUSERS WITH ARCHITECTURAL REFLECTED CEILING PLAN.
2. NECK SIZES SHALL BE SIZED AS PER FLEX DUCT SCHEDULE, EXCEPT RETURN GRILLES, WHICH HAVE NOMINAL SIZE NECK.
3. AIRFLOW QUANTITIES AS NOTED ON MECHANICAL DRAWINGS.

FAN SCHEDULE

MARK	AREA SERVED	LOCATION	INTERLOCK	AIR DATA				ELECTRICAL DATA			UNIT DATA					
				CFM	S.P.	HP	RPM	FLA	MOCP	VOLT/PH	MAKE	MODEL	TYPE	DRIVE	LBS.	NOTES
EF-1	BATHROOM	CEILING	LIGHT SWITCH	75	0.25	-	900	0.6	15	115V/1PH	GREENHECK	SP-B90	CENTRIFUGAL	DIRECT	8	DISC, SC, BDD, CC, BS, VI
EF-2	BATHROOM	CEILING	LIGHT SWITCH	75	0.25	-	900	0.6	15	115V/1PH	GREENHECK	SP-B90	CENTRIFUGAL	DIRECT	8	DISC, SC, BDD, CC, BS, VI
EF-3	VEHICLE BAY	ROOF	CONTINUOUS	544	0.25	1/4	VAR	5.8	15	115V/1PH	GREENHECK	G-085-VG	CENTRIFUGAL	DIRECT VARIABLE	19	DISC, SC, BDD, RC, BS, VI

NOTES:
1. FEATURE NOTES:
DISC = DISCONNECT SWITCH
TD = PROVIDE AND INSTALL A TIME-DELAY-OFF RELAY SWITCH TO ALLOW FAN TO OPERATE UP TO 15 MINUTES AFTER LIGHTS ARE TURNED OFF
SC = SPEED CONTROL (DIRECT DRIVE FANS ONLY)
BDD = BACKDRAFT DAMPER
RC = ROOF CURB
CC = CURB CAP
BS = BIRD SCREEN
VI = VIBRATION ISOLATORS

UNIT HEATER SCHEDULE

TAG	GAS HEAT						MAKE	MODEL	NOTES
	MBH		ELECTRICAL		CFM	LBS			
	INPUT	OUTPUT	V / Ph	A					
UH	60	49.8	120/1	3.8	750	68	REZNOR	UDAS-60	1,2

NOTES:
1. PROVIDE UNIT WITH DISCONNECT SWITCH, HEAT PURGE SWITCH, AND CEILING BRACKET.
2. UNITS TO BE CONTROLLED BY THERMOSTAT SET TO 40°

OUTSIDE AIR VENTILATION CALCULATION

MARK	SPACE	TOTAL NO. OF PEOPLE	O/A REQUIRED (CFM/PERSON)	SQUARE FOOTAGE (S.F.)	O/A REQUIRED (CFM/S.F.)	REQUIRED O/A SUB-TOTAL (CFM)	SUB-TOTAL O/A SCHEDULED (CFM)
GF-2	SLEEPING ROOM 1	3	5	145	0.06	24	
	SLEEPING ROOM 2	3	5	145	0.06	24	
GF-2 SUB TOTAL						48	60
GF-1	DAYROOM	6	5	150	0.06	39	
GF-1 SUB TOTAL						39	40

NOTES:
* OUTSIDE AIR CALCULATIONS BASED ON NUMBER OF PEOPLE SUBMITTED BY OWNER
** THE OUTSIDE AIR QUANTITIES LISTED IN THIS TABLE HAVE BEEN CALCULATED ACCORDING TO THE VENTILATION RATES PROVIDED IN ASHRAE 62.1.

LOUVER SCHEDULE

MARK	NOMINAL SIZE	FREE AREA (FT2)	TYPE	MAKE	MODEL
L-1	12"x14"	0.34	EXTRUDED ALUMINUM, DRAINABLE BLADE	GREENHECK	ESD-401

NOTES:
1. COORDINATE EXACT LOCATION AND MOUNTING OF LOUVER WITH ARCHITECTURAL ELEVATION.
2. COORDINATE FINISH WITH ARCHITECT.

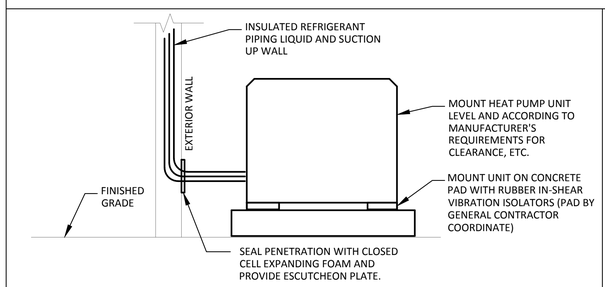

REFRIGERANT PIPING INSULATION NOTES

1. ALL CLOSED CELL POLYMER INSULATION SHALL HAVE GLUED JOINTS WITH COMPLETE COVERAGE OF ALL METAL SURFACES. ALL INSULATION EXPOSED TO EXTERIOR SHALL BE PAINTED WITH TWO COATS AS PER INSULATION MANUFACTURERS SPECIFICATIONS.
2. PROVIDE AND INSTALL LINE DRYER IN LIQUID FREON LINE
3. PROVIDE INSULATION SHIELD AT ALL SUPPORTS.

1 HEAT PUMP UNIT DETAIL
NOT TO SCALE

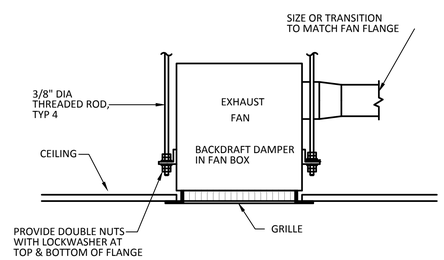

2 CEILING EXHAUST FAN DETAIL
NOT TO SCALE

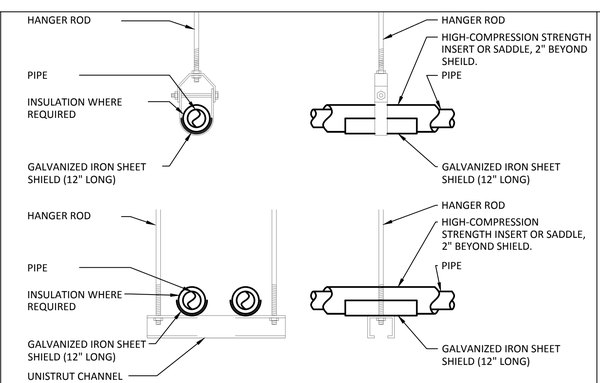

NOTE:
1. ATTACH SUPPORTS FOR ALL PIPING SUSPENDED FROM THE STEEL STRUCTURE TO THE TOP CORD OF JOISTS OR BEAM.
2. PROVIDE COPPER OR PLASTIC COATED HANGERS FOR NON-INSULATED COPPER PIPE

3 PIPE HANGER DETAIL
NOT TO SCALE

ENCOTECH ENGINEERING CONSULTANTS
TBPE Firm 1141 | 8500 Bluffstone Cove, Suite B-103 Austin, Texas 78759 | 512.338.1101
Project No.: 14046.M.AUS

STATE OF TEXAS
LYNN C. BROWN
55248
LICENSED PROFESSIONAL ENGINEER
08/30/2016

mwm Design Group
305 East Huntland Drive
Suite 200
Austin, Texas 78752
p: 512.453.0767
f: 512.453.1734
TBAE FIRM REGISTRATION NO.: 1452
TBPE FIRM REGISTRATION NO.: F-1416
TBPLS FIRM REGISTRATION NO.: 10065600

NO.	DATE	DESCRIPTION	BY

SCALE IS AS NOTED ON DRAWING

MECHANICAL SCHEDULES & DETAILS

CITY OF AUSTIN, EMS EXPANSIONS
6601 MANCHACA ROAD, AUSTIN, TEXAS, 78745

PLOTTED: 8/30/2016
JOB NO: 023-81

EMS2-M210

File: J:\ACTIVE PROJECTS\MWM\14095.M.AUS - EMS\1. MEP\D-AutoCAD\EMS Station 2\14095-EMS2 M210 Mech Schedule Details.dwg 24x36

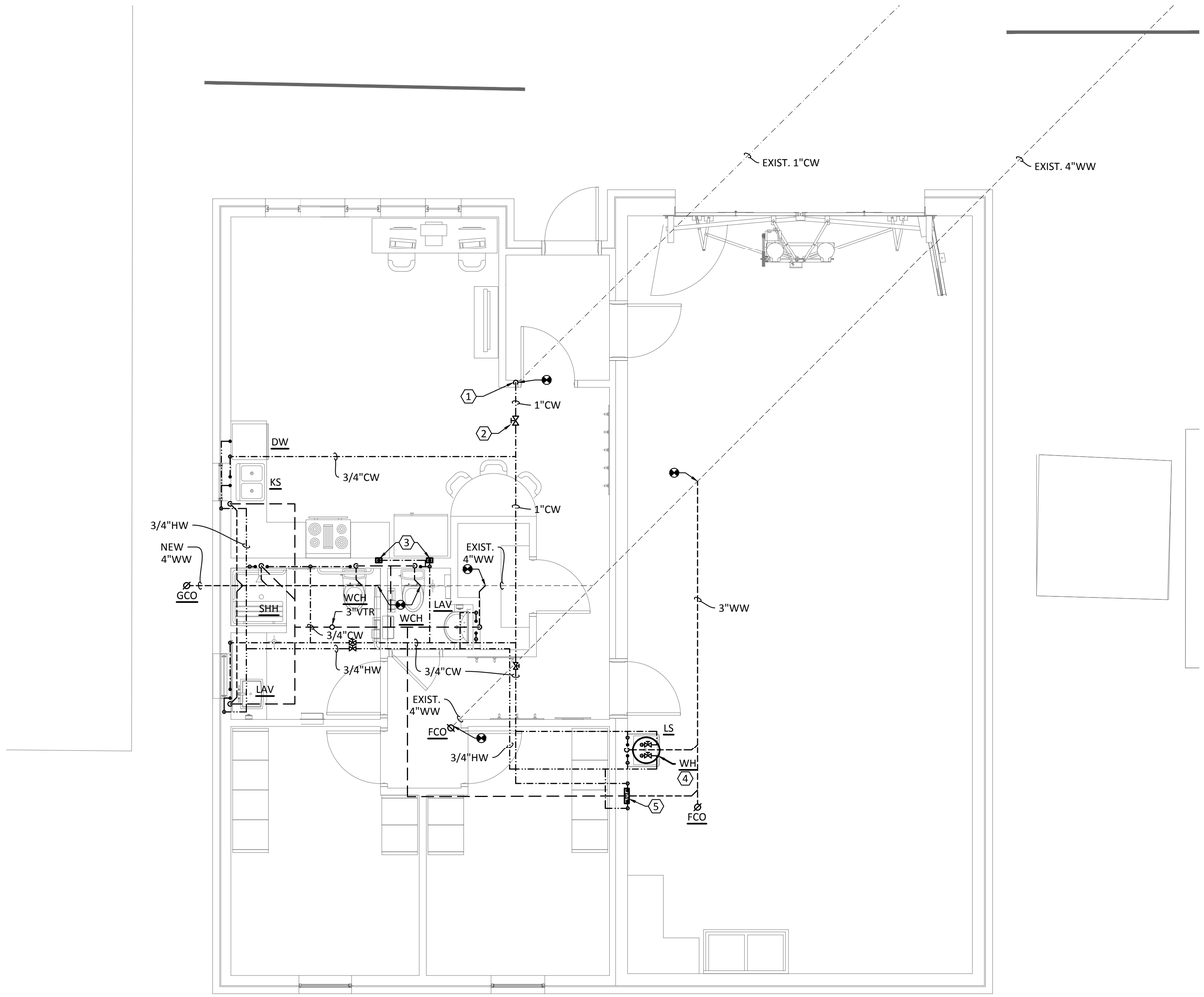

PLAN GENERAL NOTES

A. REFER TO P0.00 FOR GENERAL NOTES.

B. ESTIMATED LOCATION OF ALL EXISTING PLUMBING LAYOUT AND EQUIPMENT LOCATION IS BASED ON SITE OBSERVATION AND EXISTING DRAWINGS. CONTRACTOR SHALL VERIFY SIZE, LOCATION OF ALL EXISTING PLUMBING PIPING EQUIPMENT PRIOR TO BID AND CONSTRUCTION

C. DO NOT ROUTE ANY PLUMBING PIPING ABOVE ANY ELECTRICAL PANEL.

D. PROVIDE AND INSTALL WATER SAVER TRAP PRIMER FROM NEAREST LAVATORY OR TRAP PRIMER WITH ACCESSIBLE SHUT-OFF VALVE IN WALL TO ALL FLOOR DRAINS, HUB DRAINS AND FLOOR SINKS. SEE PLAN FOR LOCATION.

E. PROVIDE AND INSTALL ACCESS TO ALL SHUT-OFF VALVES.

F. INSULATE 100% OF ALL HOT WATER PIPING, HOT WATER RETURN PIPING & COLD WATER PIPING ACCORDING TO SPECIFICATIONS.

G. REFER TO PLUMBING RISERS FOR ADDITIONAL SIZING INFORMATION.

KEYED NOTES

1. CONNECT NEW 1" CW PIPING TO EXISTING MAIN 1" CW UNDERGROUND PIPING. ROUTE PIPING INSIDE WALL UP TO ABOVE CEILING.
2. PROVIDE AND INSTALL MAIN SHUT-OFF VALVE ABOVE ACCESSIBLE CEILING.
3. PROVIDE AND INSTALL INSTALL ICE MAKER VALVE BOX ON WALL FOR REFRIGERATOR.
4. PROVIDE AND INSTALL WATER HEATER ON WALL BRACKET ABOVE MOP SINK.
5. PROVIDE AND INSTALL HW & CW & DRAIN WASHER BOX ON WALL FOR CLOTHES WASHER.

1 PLUMBING PLAN
SCALE: 1/4" = 1'-0"

ENCOTECH ENGINEERING CONSULTANTS
TBPE Firm 1141 | 8500 Bluffstone Cove, Suite B-103 Austin, Texas 78759 | 512.338.1101
Project No.: 14046.M.AUS

STATE OF TEXAS
LYNN C. BROWN
55248
LICENSED PROFESSIONAL ENGINEER
08/30/2016

mwm Design Group
305 East Huntland Drive
Suite 200
Austin, Texas 78752
p: 512.453.0767
f: 512.453.1734
TBAE FIRM REGISTRATION NO.: 1452
TBPE FIRM REGISTRATION NO.: F-1416
TBPLS FIRM REGISTRATION NO.: 10065600

NO.	DATE	DESCRIPTION	BY

SCALE IS AS NOTED ON DRAWING

PLUMBING PLAN

CITY OF AUSTIN, EMS EXPANSIONS
6601 MANCHACA ROAD, AUSTIN, TEXAS, 78745

PLOTTED: 8/30/2016
JOB NO: 023-81

EMS2-P110

File: J:\ACTIVE PROJECTS\MWM\14095.M.AUS - EMS\1. MEP\D-AutoCAD\EMS Station 2\14095-EMS2 P100 Plumb Plan.dwg 24x36

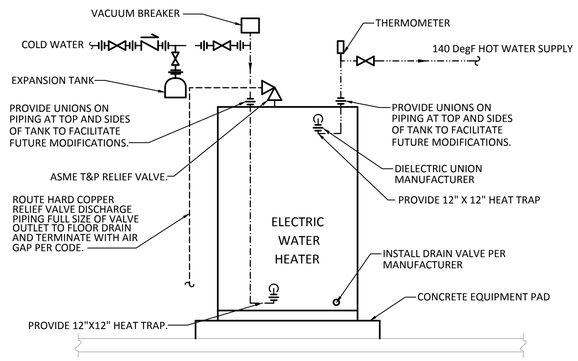

6 ELECTRICAL WATER HEATER WITH RECIRCULATION PUMP
NOT TO SCALE

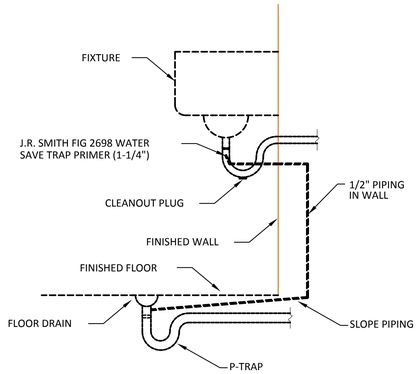

5 WATER SAVER TRAP PRIMER DETAIL
NOT TO SCALE

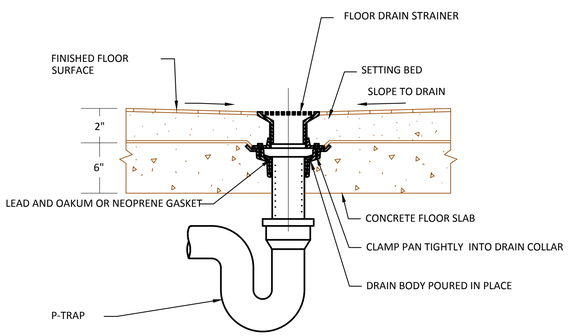

4 TYPICAL FLOOR DRAIN DETAIL
NOT TO SCALE

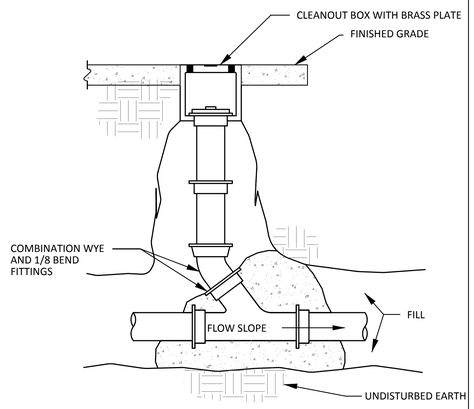

3 EXTERIOR CLEANOUT DETAIL
NOT TO SCALE

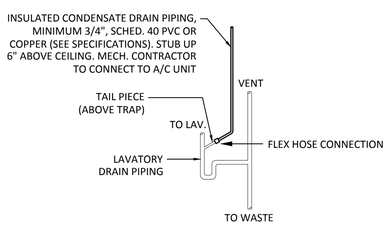

2 CONDENSATE DRAIN - LAVATORY TAILPIECE DETAIL
NOT TO SCALE

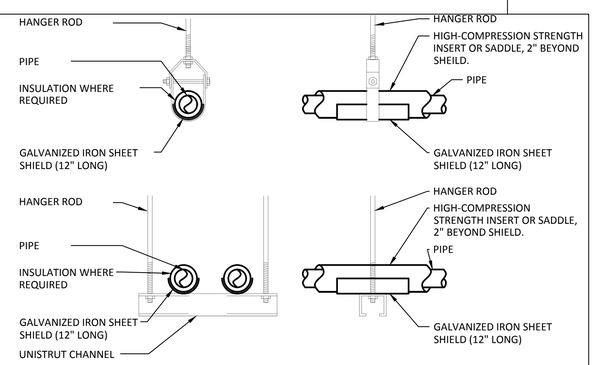

NOTE:
1. ATTACH SUPPORTS FOR ALL PIPING SUSPENDED FROM THE STEEL STRUCTURE TO THE TOP CORD OF JOISTS OR BEAM.
2. PROVIDE COPPER OR PLASTIC COATED HANGERS FOR NON-INSULATED COPPER PIPE

1 PIPE HANGER DETAIL
NOT TO SCALE

WATER CALCULATION

WATER CLOSET, FLUSH TANK	2 x	2.5 F.U. =	5.0 F.U.
WATER CLOSET, FLUSH VALVE	0 x	5.0 F.U. =	0.0 F.U.
URINAL, FLUSH TANK	0 x	2.0 F.U. =	0.0 F.U.
URINAL, FLUSH VALVE	0 x	4.0 F.U. =	0.0 F.U.
SHOWER	1 x	2.0 F.U. =	2.0 F.U.
BATHTUB	0 x	4.0 F.U. =	0.0 F.U.
LAVATORY	2 x	1.0 F.U. =	2.0 F.U.
KITCHEN SINK, COMMERCIAL	1 x	3.0 F.U. =	3.0 F.U.
SERVICE SINK (PUBLIC)	1 x	3.0 F.U. =	3.0 F.U.
DISHWASHER	1 x	1.5 F.U. =	1.5 F.U.
CLOTHES WASHER	1 x	4.0 F.U. =	4.0 F.U.
DRINKING FOUNTAIN	0 x	0.5 F.U. =	0.0 F.U.
FIRST HOSE BIBB	1 x	2.5 F.U. =	2.5 F.U.
ADDITIONAL HOSE BIBBS	2 x	1.0 F.U. =	2.0 F.U.
	0 x	0.0 F.U. =	0.0 F.U.
	0 x	0.0 F.U. =	0.0 F.U.
	0 x	0.0 F.U. =	0.0 F.U.
	0 x	0.0 F.U. =	0.0 F.U.
TOTAL FIXTURE UNITS		=	25.0 F.U.
25.0 FIXTURE UNITS		=	21.5 GPM

HIGHEST FIXTURE = 10 FEET
(10 FT.) x 0.43 = 4.3 PSI STATIC LOSS

HORIZONTAL PIPE LENGTH TAP TO METER	=	50 FEET
HORIZONTAL PIPE LENGTH METER TO BUILDING	=	100 FEET
HORIZONTAL PIPE LENGTH BUILDING TO LAST FIXTURE	=	100 FEET
VERTICAL PIPE LENGTH BUILDING RISE TO HIGHEST FIXTURE	=	10 FEET
TOTAL PIPE LENGTH	=	260 FEET

(260 FT.) x 1.25 (FITTING LOSS) = 325 FEET TOTAL DEVELOPED LENGTH

SIZE	DEVICE		PSI LOSS
1"	METER	=	3.2 PSI
	STATIC	=	4.3 PSI
	FIXTURE (FLUSH TANK)	=	8.0 PSI
TOTAL BUILDING LOSS		=	15.5 PSI

PRESSURE AT STREET	=	60.0 PSI
BUILDING LOSS	=	15.5 PSI
DIFFERENCE	=	44.5 PSI

(44.5 / 325) x 100 = 13.7 MAX PSI DROP ALLOWABLE PER 100 FT. PIPE LENGTH

EXISTING 1" METER AND 1" MAIN WATER LINE TO BUILDING IS SUFFICIENT

WATER CALCULATION NOTES

- THIS CALCULATION IS BASED ON UNIFORM PLUMBING CODE 2012, APPENDIX A.
* VERIFY PRESSURE AT TIME OF CONSTRUCTION. IF GREATER THAN 65 PSI PROVIDE AND INSTALL PRESSURE REDUCING VALVE TO REDUCE WATER PRESSURE TO 65 PSI MAXIMUM.

PLUMBING FIXTURE SCHEDULE

MARK	CW	HW	VENT	S&W	MODEL NUMBER	DESCRIPTION
WCH	1/2"	-	2"	3"	WATER CLOSET: KOHLER MODEL: HIGHLINE K-3519 SEAT: CHURCH 295SSC	FLUSH TANK WATER CLOSET, FLOOR MOUNTED, 1.0 GPF PRESSURE ASSIST FLUSHING SYSTEM, FLOOR OUTLET, ELONGATED BOWL, TRIP LEVER ON OPPOSITE SIDE FROM ADJACENT WALL, ADA COMPLIANT OPEN FRONT, ELONGATED SEAT WITH STAINLESS STEEL LOCKING HINGE
LAV	1/2"	1/2"	1-1/2"	2"	LAVATORY: KOHLER MODEL: K-1997-1-0 (HANDICAP USE) FAUCET: DELTA MODEL: 26C3942 MIXING VALVE: WATTS MODEL: L111	WALL HUNG, VITREOUS CHINA, 22"x19" BOWL, HANDICAP ACCESSIBLE. INSULATE ALL EXPOSED DRAIN AND WATER PIPING UNDER LAVATORY PER ADA REQUIREMENTS, WITH TRUEBRO MODEL #102W, OR EQUIVALENT MANUAL GOOSENECK FAUCET, 0.5 GPM AERATOR, 8" CENTERS, LEVER HANDLES INDIVIDUAL FAUCET THERMOSTATIC MIXING VALVE. HOT WATER TEMPERATURE SHALL BE LIMITED TO 110 DEGREES FAHRENHEIT.
SHH	1/2"	1/2"	1-1/2"	2"	SHOWER ENCLOSURE: AQUATIC ADA COMPLIANCE SHOWER FAUCET & HANDSET: MOEN MODEL: 8346 MIXING VALVE: LAWLER MODEL: SERIES 516 UNIT NUMBER: 86823 FLOOR DRAIN: SMITH 2005	TILED, COMPLETE WITH L-SHAPED FOLD-UP SEAT, GRAB BARS, SLIDE BAR, VACUUM BREAKER AND HOSE, CURTAIN RODS (VERIFY DEPTH OF RECESS). PRESSURE BALANCE SHOWER VALVE, HANDHELD SPRAY ASSEMBLY, 1.5 GPM, ADA COMPLIANT. ROUGH CHROME THERMOSTATIC MIXING VALVE, 0.5 MINIMUM FLOW RATE, OUTLET RANGE 95-115 DegF WITH A SPINDLE TO ADJUST OUTLET TEMPERATURE. SET OUTLET TEMPERATURE AT 110DegF. CAST IRON. ADJUSTABLE STRAINER HEAD.
KS	1/2"	1/2"	1-1/2"	2"	KITCHEN SINK: ELKAY MODEL: ELUHAD211555PD FAUCET: AMERICAN STD MODEL: 4175.300.F15 TRUEBRO 102	SINGLE BOWL SINK. STAINLESS STEEL, 18 GA. UNDERMOUNT. 21"W x 16"L x 5.5"D BOWL. ADA COMPLIANT. SINK FAUCET. METAL BODY, CERAMIC CARTRIDGE. 1 HOLE. SWIVEL GOOSENECK SPOUT, 14-1/2" HIGH. PULL-DOWN SPRAY HEAD WITH INTEGRAL CHECK VALVE. SINGLE LEVER HANDLE. 1.5 GPM. CHROME FINISH. ADA COMPLIANT. WASTE AND SUPPLY PIPING COVERS. INSULATE ALL EXPOSED DRAIN AND WATER PIPING UNDER LAVATORY PER ADA REQUIREMENTS.
WH	3/4"	3/4"	-	-	WATER HEATER: A.O. SMITH MODEL: DEL-40 EXPANSION TANK: AMTROL ST-5	LOWBOY ELECTRIC WATER HEATER, 40 GALLON TANK, 4.5 KW HEATING ELEMENT, 140°F OUTPUT, 25 GPH RECOVERY AT 80°F TEMPERATURE RISE, 208V/1ϕ ELECTRIC POWER 5 GALLON INLINE EXPANSION TANK
FD	-	-	2"	*	SMITH 2005	FLOOR DRAIN. CAST IRON. ADJUSTABLE STRAINER HEAD.
FCO	-	-	-	*	SMITH 4020	FLOOR CLEANOUT. CAST IRON WITH NICKEL BRONZE ADUSTABLE TOP.
GCO	-	-	-	*	SMITH 4237	GROUND CLEANOUT. CAST IRON WITH CAST IRON NON-TILT ADJUSTABLE TOP.

NOTES:
* SEE PLAN FOR SIZING.
** PLUMBING FIXTURES, ACCESSORIES AND INSTALLATION SHALL MEET ALL FEDERAL, STATE, ADA AND LOCAL REQUIREMENTS.

ENCOTECH ENGINEERING CONSULTANTS
TBPE Firm 1141
8500 Bluffstone Cove, Suite B-103
Austin, Texas 78759 | 512.338.1101
Project No.: 14046.M.AUS

STATE OF TEXAS
LYNN C. BROWN
55248
LICENSED PROFESSIONAL ENGINEER
08/30/2016

mwm Design Group
305 East Huntland Drive
Suite 200
Austin, Texas 78752
p: 512.453.0767
f: 512.453.1734
TBAE FIRM REGISTRATION NO.: 1452
TBPE FIRM REGISTRATION NO.: F-1416
TBPLS FIRM REGISTRATION NO.: 10065600

NO.	DATE	DESCRIPTION	BY

SCALE IS AS NOTED ON DRAWING

PLUMBING SCHEDULES & DETAILS

CITY OF AUSTIN, EMS EXPANSIONS
6601 MANCHACA ROAD, AUSTIN, TEXAS, 78745

PLOTTED: 8/30/2016
JOB NO: 023-81

EMS2-P210

File: J:\ACTIVE PROJECTS\MWM\14095.M.AUS — EMS\1. MEP\D-AutoCAD\EMS Station 2\14095-EMS2 P210 Plumb Schedule Details.dwg 24x36

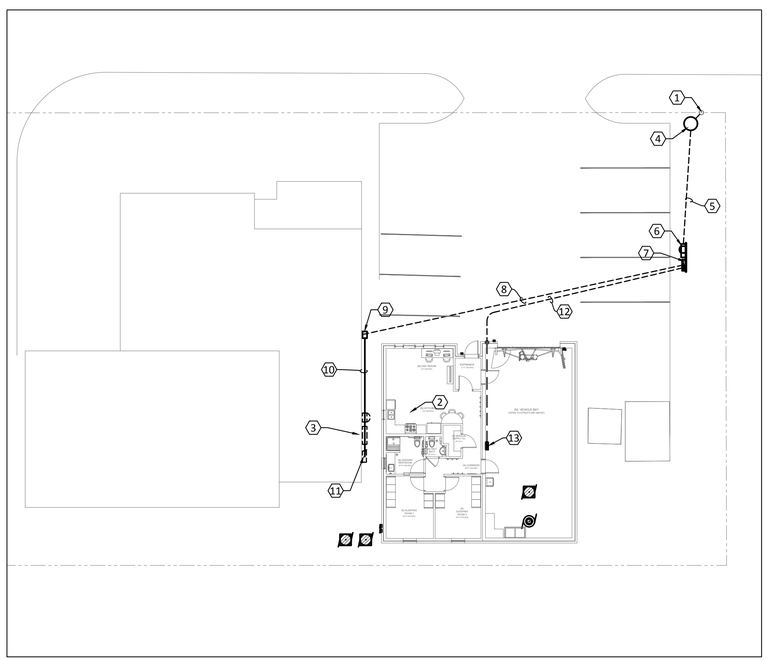

2 ELECTRICAL SITE PLAN
SCALE: 1/16" = 1'-0"

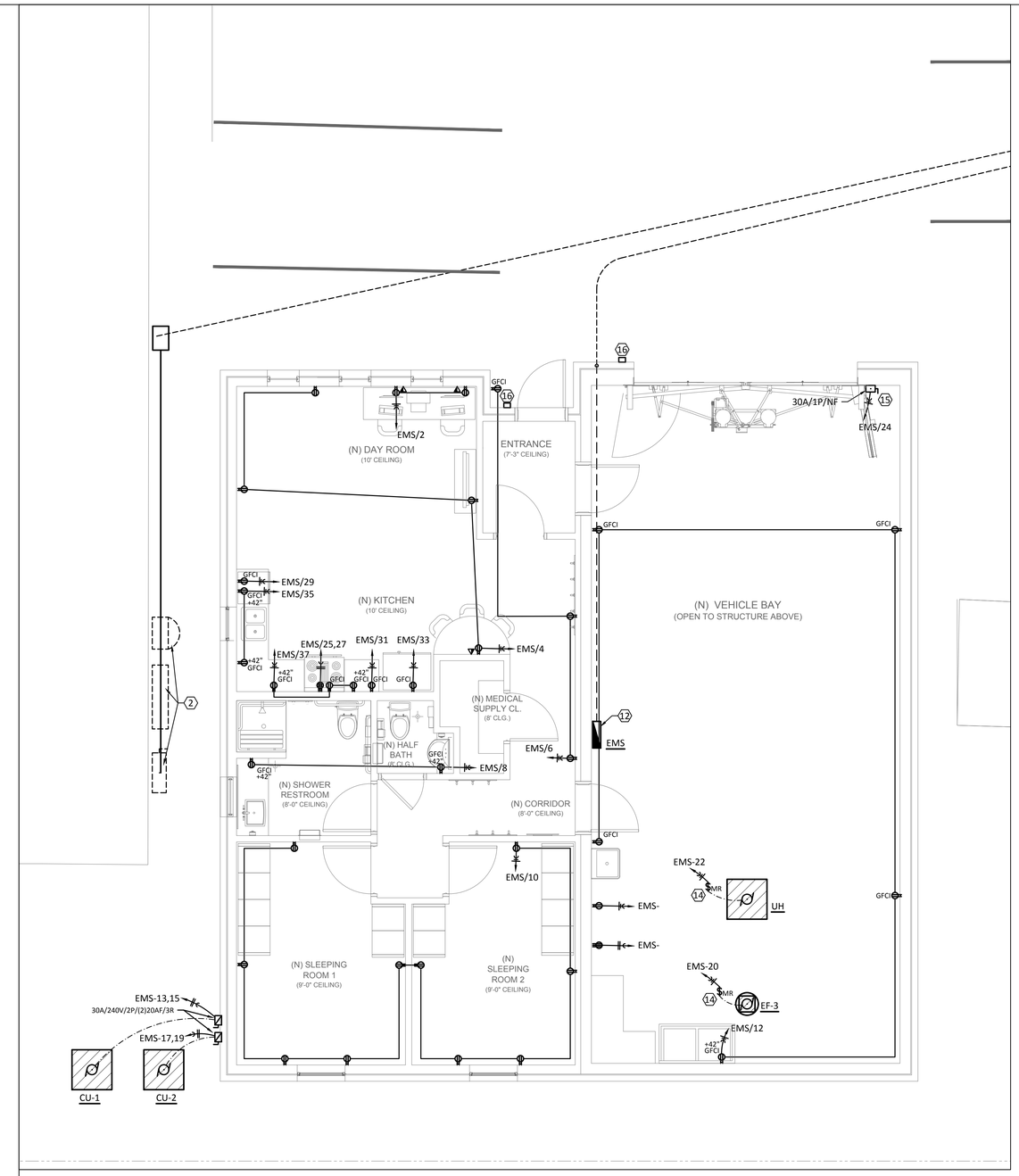

1 ELECTRICAL PLAN
SCALE: 1/4" = 1'-0"

PLAN GENERAL NOTES

A. REFER TO E0.00 FOR GENERAL NOTES.
B. DO NOT ROUTE ANY DUCT & PIPING ABOVE ELECTRICAL PANELS.
C. ESTIMATED LOCATION OF ALL EXISTING ELECTRICAL LAYOUT AND EQUIPMENT LOCATION IS BASED ON SITE OBSERVATION AND EXISTING DRAWINGS. CONTRACTOR SHALL VERIFY SIZE, LOCATION OF ALL EXISTING ELECTRICAL EQUIPMENT, DEVICES AND CONDUITS PRIOR TO BID AND CONSTRUCTION.
D. ALL EXTERIOR LIGHTING FIXTURE SHALL BE CONTROLLED BY PHOTOCELL AND TIMER.

KEYED NOTES

1. EXISTING POWER POLE. COORDINATE WITH AUSTIN ENERGY TO PROVIDE NEW POLE MOUNTED TRANSFORMER FOR NEW ELECTRICAL SERVICE.
2. COORDINATE WITH AUSTIN ENERGY TO REMOVE EXISTING UTILITY TRANSFORMER. UNDERGROUND PRIMARY CONDUIT AND WIRE FROM POWER TO DEMOLISHED TRANSFORMER SHALL BE ABANDONED IN PLACE.
3. REMOVE EXISTING CT-CAN, METER AND MAIN DISCONNECT (300A, 120/240V, 1Ø SERVICE). UNDERGROUND CONDUIT WITH CONDUCTOR TO EXISTING PANEL INSIDE BUILDING SHALL REMAIN.
4. NEW 36" UTILITY MANHOLE FOR SECONDARY ELECTRICAL SERVICE
5. NEW UNDERGROUND FROM MANHOLE TO ELECTRICAL SERVICE LOCATION.
6. PROVIDE AND INSTALL NEW METER AND CT-CAN ON UNI-STRUT RACK. UNI-STRUT RACK SHALL BE PROVIDED AND INSTALLED BY GENERAL CONTRACTOR.
7. PROVIDE AND INSTALL NEW BREAKER CIRCUIT BOX (ON UNI-STRUT RACK) WITH 2 CIRCUIT BREAKERS:
   - 300A, 120/240V, 1Ø FOR EXISTING MAIN FIRE STATION PANEL.
   - 200A, 120/240V, 1Ø FOR NEW 'EMS' PANEL
8. 4" UNDERGROUND CONDUIT WITH WIRE FROM CIRCUIT BREAKER BOX TO WALL MOUNTED PULL BOX EXITING BUILDING WALL.
9. 18x18 PULL BOX ON WALL
10. 4" CONDUIT WITH SHALL BE SECURITY MOUNTED TO WALL.
11. CONNECT NEW CONDUIT TO PULL BOX AND CONNECT WIRING TO EXISTING WIRE TO EXISTING PANEL.
12. 2" UNDERGROUND CONDUIT FROM BREAKER BOX TO NEW BUILDING THEN ROUTE AS HIGH AS POSSIBLE TO NEW ELECTRICAL PANEL FOR EMS STATION.
13. PROVIDE AND INSTALL NEW SURFACE MOUNTED 200A, 120/240V, 1Ø ELECTRICAL PANEL 'EMS'
14. MOTOR RATED DISCONNECT SWITCH SHALL BE MOUNTED ON STRUCTURAL MEMBER.
15. DISCONNECT ON WALL FOR OVERHEAD DOOR OPENER. COORDINATE WITH OWNER AND MANUFACTURER FOR LOCATION AND REQUIREMENT.
16. PROVIDE AND INSTALL JUNCTION BOX WITH 3/4" CONDUIT AND PULL STRING UP TO ABOVE CEILING FOR KEYPAD. KEY PAD WILL BE BY SECURITY CONTRACTOR.

ENCOTECH ENGINEERING CONSULTANTS
TBPE Firm 1141
8500 Bluffstone Cove, Suite B-103
Austin, Texas 78759 | 512.338.1101
Project No.: 14046.M.AUS

STATE OF TEXAS
SHARON S. BICKFORD
77390
LICENSED PROFESSIONAL ENGINEER
08/30/2016

mwm Design Group
305 East Huntland Drive
Suite 200
Austin, Texas 78752
p: 512.453.0767
f: 512.453.1734
TBAE FIRM REGISTRATION NO.: 1452
TBPE FIRM REGISTRATION NO.: F-1416
TBPLS FIRM REGISTRATION NO.: 10065600

NO.	DATE	DESCRIPTION	BY

SCALE IS AS NOTED ON DRAWING

ELECTRICAL PLAN (1 OF 2)

CITY OF AUSTIN, EMS EXPANSIONS
6601 MANCHACA ROAD, AUSTIN, TEXAS, 78745

PLOTTED: 8/30/2016
JOB NO: 023-81

EMS2-E110

File: J:\ACTIVE PROJECTS\MWM\14095.M.AUS – EMS\1. MEP\D-AutoCAD\EMS Station 2\14095-EMS2 E100 Elec Plan.dwg 24x36

PLAN GENERAL NOTES

A. REFER TO E0.00 FOR GENERAL NOTES.

B. DO NOT ROUTE ANY DUCT & PIPING ABOVE ELECTRICAL PANELS.

C. ESTIMATED LOCATION OF ALL EXISTING ELECTRICAL LAYOUT AND EQUIPMENT LOCATION IS BASED ON SITE OBSERVATION AND EXISTING DRAWINGS. CONTRACTOR SHALL VERIFY SIZE, LOCATION OF ALL EXISTING ELECTRICAL EQUIPMENT, DEVICES AND CONDUITS PRIOR TO BID AND CONSTRUCTION.

D. ALL EXTERIOR LIGHTING FIXTURE SHALL BE CONTROLLED BY PHOTOCELL AND TIMER.

E. CEILING FAN SHALL BE MOUNTED TO STRUCTURAL MEMBER.

LIGHTING CONTROL NOTE

A. WHOLE EMS FACILITY LIGHTING SHALL BE CONTROLLED BY N-LIGHT NETWORK CONTROL SYSTEM.

B. NLIGHT SYSTEM WILL INCLUDE DIMMER, OCCUPANCY SENSOR, POWER PACK, BRIDGE AND GATEWAY.

C. LIGHTING WILL BE CONTROLLED LOCALLY OR BY MASTER SWITCH.

D. GATEWAY HAVE CONNECTION TO EMS SYSTEM (TOBE DETERMINED). IF EMS SYSTEM IN ACTIVE MODE, ALL INTERIOR LIGHTS IN EMS STATION WILL BE LIGHTED ON.

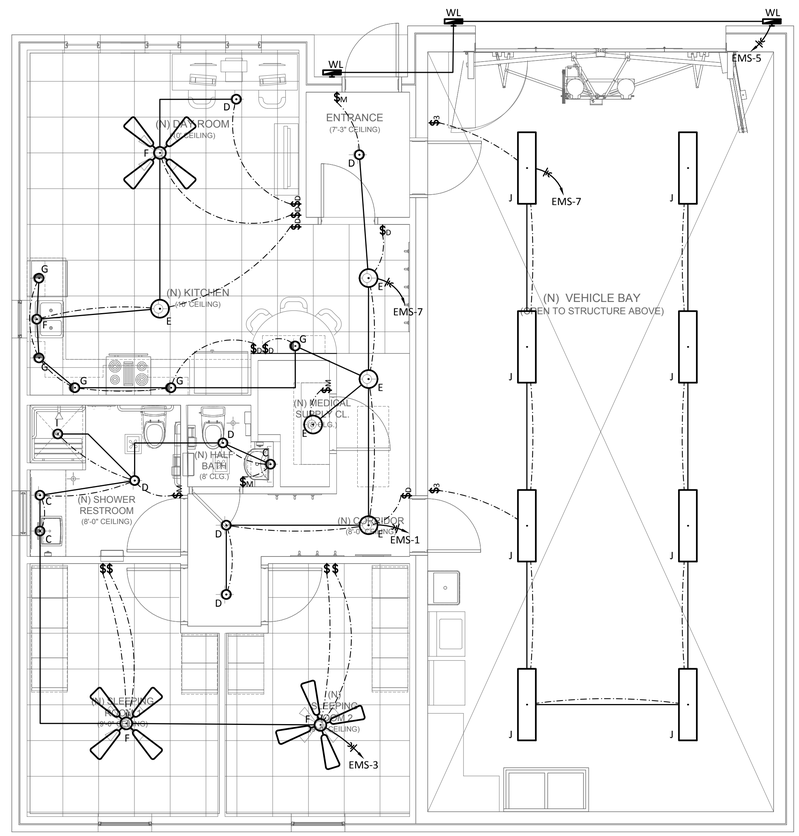

1 ELECTRICAL LIGHTING PLAN
SCALE: 1/4" = 1'-0"

ENCOTECH ENGINEERING CONSULTANTS
TBPE Firm 1141 | 8500 Bluffstone Cove, Suite B-103 Austin, Texas 78759 | 512.338.1101
Project No.: 14046.M.AUS

STATE OF TEXAS
SHARON S. BICKFORD
77390
LICENSED PROFESSIONAL ENGINEER
08/30/2016

mwm Design Group
305 East Huntland Drive
Suite 200
Austin, Texas 78752
p: 512.453.0767
f: 512.453.1734
TBAE FIRM REGISTRATION NO.: 1452
TBPE FIRM REGISTRATION NO.: F-1416
TBPLS FIRM REGISTRATION NO.: 10065600

NO.	DATE	DESCRIPTION	BY

SCALE IS AS NOTED ON DRAWING

ELECTRICAL PLAN

CITY OF AUSTIN, EMS EXPANSIONS
6601 MANCHACA ROAD, AUSTIN, TEXAS, 78745

PLOTTED: 8/30/2016
JOB NO: 023-81

EMS2-E120

File: J:\ACTIVE PROJECTS\MWM\14095.M.AUS — EMS\1. MEP\D-AutoCAD\EMS Station 2\14095-EMS2 E120 Lighting Plan.dwg 24x36

LIGHTING FIXTURE SCHEDULE

MARK	MANUFACTURER	MODEL	VOLT	LAMPING QTY	LAMPING WATTAGE	LAMPING TYPE	LAMPING TEMP	DRIVER TYPE	PHYSICAL TYPE	PHYSICAL SIZE	DESCRIPTION
C	BRUCK	223-850-CH-MP / -	120	1	8	LED	2800K	DIMMING DRIVER	PENDANT	12"H x 3.125"SQ	RECTLINEAR FROST GLASS SHADE, 6FT EXTENSION CABLE, CHROME FINISH
D	LITHONIA	FHHL-7-8-30-DNA / -	120	1	9.3	LED	3000K	DIMMING DRIVER	CEILING	7"DIA x 1-/34"H	CEILING MOUNTED, GLASS SHADE WITH SMOOTH NARUAL ALEMINUM FINISH, WET LOCATION
E	LITHONIA	FHHL-13-8-30-DNA / -	120	1	28	LED	3000K	DIMMING DRIVER	CEILING	7"DIA x 1-/34"H	CEILING MOUNTED, GLASS SHADE WITH SMOOTH NARUAL ALEMINUM FINISH, WET LOCATION
F	MINKA AIRE	LIGHT WAVE-F844-WH / -	120	1	10W (LT) 66.4W (FAN)	LED	2700K	-	CEILING FAN WITH LIGHT	52" DIAMTER	CEILING FAN WITH LED LIGHT
G	ARAMCOST LIGHTING	RF3528060-12WWD / -	120	1	75W	LED	3000K	DIMMING DRIVER	DIMMING	12'	18 LED PER FOOT, DC POWER SUPPLY DEPARATE, LINKABLE, TWO SIDE TPE LIGHT
I	GOTHAM	EVO-30-10-6-DFR-MVOLT-E21	MVOLT	1	10	LED	2700K	0-10V DIMMING DRIVER	CEILING	6-1/4"D x 7-5/8"H	NON-CONDUCTIVE SHOWER DOWNLIGHT
J	LITHONIA	TL4-20L-FW-A12-EZ1-LP830 / -	MVOLT	1	21	LED	3000K	0-10V DIMMING DRIVER	RECESSED TROUGHER	12"W x 48"L	LED. ACRYLIC LENS. WHITE FINISH.
WL	LITHONIA	DSXW1-LED-10C-530-30K-T4M-MVOLT-ELCW-DDBXD / -	MVOLT	1	20	LED	3000K	0-10V DIMMING DRIVER	WALL	13-3/4"W x 4"D	WALL MOUNTED TYPE IV MEDIUM DISTRIBUTION. LED. RATED FOR LOW TEMPERATURE. DARK BRONZE. BATTERY BACK-UP.

1. SEE ARCHITECTURAL REFLECTED CEILING PLAN FOR EXACT LOCATION OF ALL FIXTURES.
2. PROVIDE ENERGY SAVING BALLASTS FOR ALL FIXTURES WHEREVER AVAILABLE.

PANELBOARD SCHEDULE — EMS

LOCATION: SEE PLAN
C.B. RATING: - A.I.C.

NOTE	VOLTAGE	PHASE	WIRE	MOUNTING	SIZE	LUG	TYPE	NOTE
	240/120V	1	3	SURFACE	200	200A MCB	TYPE 1	

USE and/or AREA SERVED	C/B POLE	CIR	LOAD ØA	LOAD ØC	CIR	C/B POLE	USE and/or AREA SERVED
LIGHTING	20/1	1	1000		2	20/1	RECEPTACLES
			360				
LIGHTING	20/1	3		1000	4	20/1	RECEPTACLES
				720			
EXTERIOR LIGHTING	20/1	5	300		6	20/1	RECEPTACLES
			540				
VEHICLE BAY LIGHTING	20/1	7		600	8	20/1	RECEPTACLES
				360			
SPARE	20/1	9	-		10	20/1	RECEPTACLES
			1800				
SPARE	20/1	11			12	20/1	RECEPTACLES
				900			
CU-1	20/2	13	950		14	20/1	CLOTHES WASHER
			1500				
		15		950	16	30/2	CLOTHES DRYER
				2500			
CU-2	20/2	17	1250		18		
			2500				
		19		1250	20	20/1	VEHICLE BAY EXHAUST FAN
				700			
GF-1	20/1	21	300		22	20/1	VEHICLE BAY HEATER
			500				
GF-2	20/1	23		300	24	30/1	GARAGE OPENNER
				2500			
RANGE	40/2	25	4000		26		
			-				
		27		4000	28		
				-			
DISHWASHER	20/1	29	1500		30		
			-				
ICE MAKER	20/1	31		1200	32		
				-			
REFRIGERATOR	20/1	33	1200		34		
			-				
KITCHEN RECEPTACLES	20/1	35		1800	36		
				-			
KITCHEN RECEPTACLES	20/1	37	1800		38		
			-				
SPARE	20/1	39		-	40		
				-			
TOTAL LOAD PER PHASE			**19500**	**18780**	**19500 VA / 120 V = 163 A**		

ZA

FEEDER OCPD AND CONDUCTOR CALCULATION

LOAD DESCRIPTION (LOAD IN KVA)	CONNECTED LOAD	DEMAND FACTOR	DEMAND LOAD	AMPACITY FACTOR	FEEDER AMPACITY	NOTES
INTERIOR LIGHTING	2.90	1.00	2.90	1.25	3.63	
EXTERIOR LIGHTING	0.00	1.00	0.00	1.25	0.00	
RECEPTACLES	8.28	*	8.28	1.00	8.28	*FIRST 10 kVA AT 100%, REST AT 50%
HVAC	5.00	1.00	5.00	1.00	5.00	
EQUIPMENT	20.90	1.00	20.90	1.00	20.90	
KITCHEN EQUIPMENT	0.00	1.00	0.00	1.00	0.00	
LARGEST MOTOR NONE	-	-	-	0.25	0.00	
SPARE	1.20	1.00	1.20	1.00	1.20	
TOTAL KVA	**38.28**	**-**	**38.28**	**-**	**39.01**	
TOTAL AMPS	**160 A**	**-**	**160 A**	**-**	**163 A**	

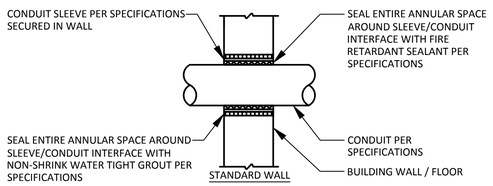

2 WALL PENETRATION DETAIL
NOT TO SCALE

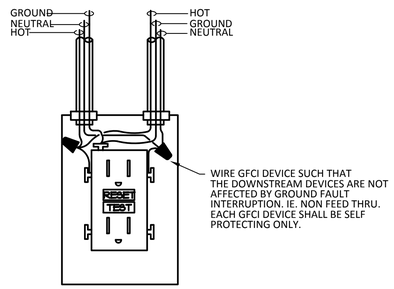

1 GFCI RECEPTACLE WIRING DIAGRAM
NOT TO SCALE

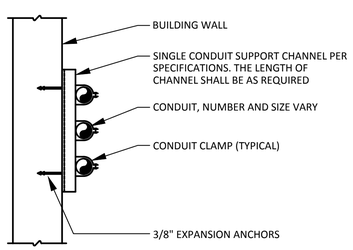

NOTE:
CONDUIT MAY RUN VERTICAL OR HORIZONTAL DEPENDING ON APPLICATION.

4 WALL / CEILING CONDUIT SUPPORT DETAIL
NOT TO SCALE

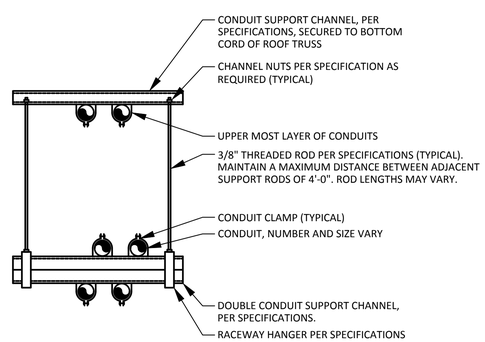

3 CONDUIT SUPPORT DETAIL
NOT TO SCALE

ENCOTECH ENGINEERING CONSULTANTS
TBPE Firm 1141
8500 Bluffstone Cove, Suite B-103
Austin, Texas 78759 | 512.338.1101
Project No.: 14046.M.AUS

STATE OF TEXAS — SHARON S. BIBKORD — 53338 — LICENSED — PROFESSIONAL ENGINEER
08/30/2016

mwm Design Group
305 East Huntland Drive
Suite 200
Austin, Texas 78752
p: 512.453.0767
f: 512.453.1734
TBAE FIRM REGISTRATION NO.: 1452
TBPE FIRM REGISTRATION NO.: F-1416
TBPLS FIRM REGISTRATION NO.: 10065600

NO.	DATE	DESCRIPTION	BY

SCALE IS AS NOTED ON DRAWING

ELECTRICAL SCHEDULES & DETAILS

CITY OF AUSTIN, EMS EXPANSIONS
6601 MANCHACA ROAD, AUSTIN, TEXAS, 78745

PLOTTED: 8/30/2016
JOB NO: 023-81

EMS2-E210

File: J:\ACTIVE PROJECTS\MWM\14095.M.AUS - EMS\1. MEP\D-AutoCAD\EMS Station 2\14095-EMS2 E210 Elec Schedule Details.dwg 24x36

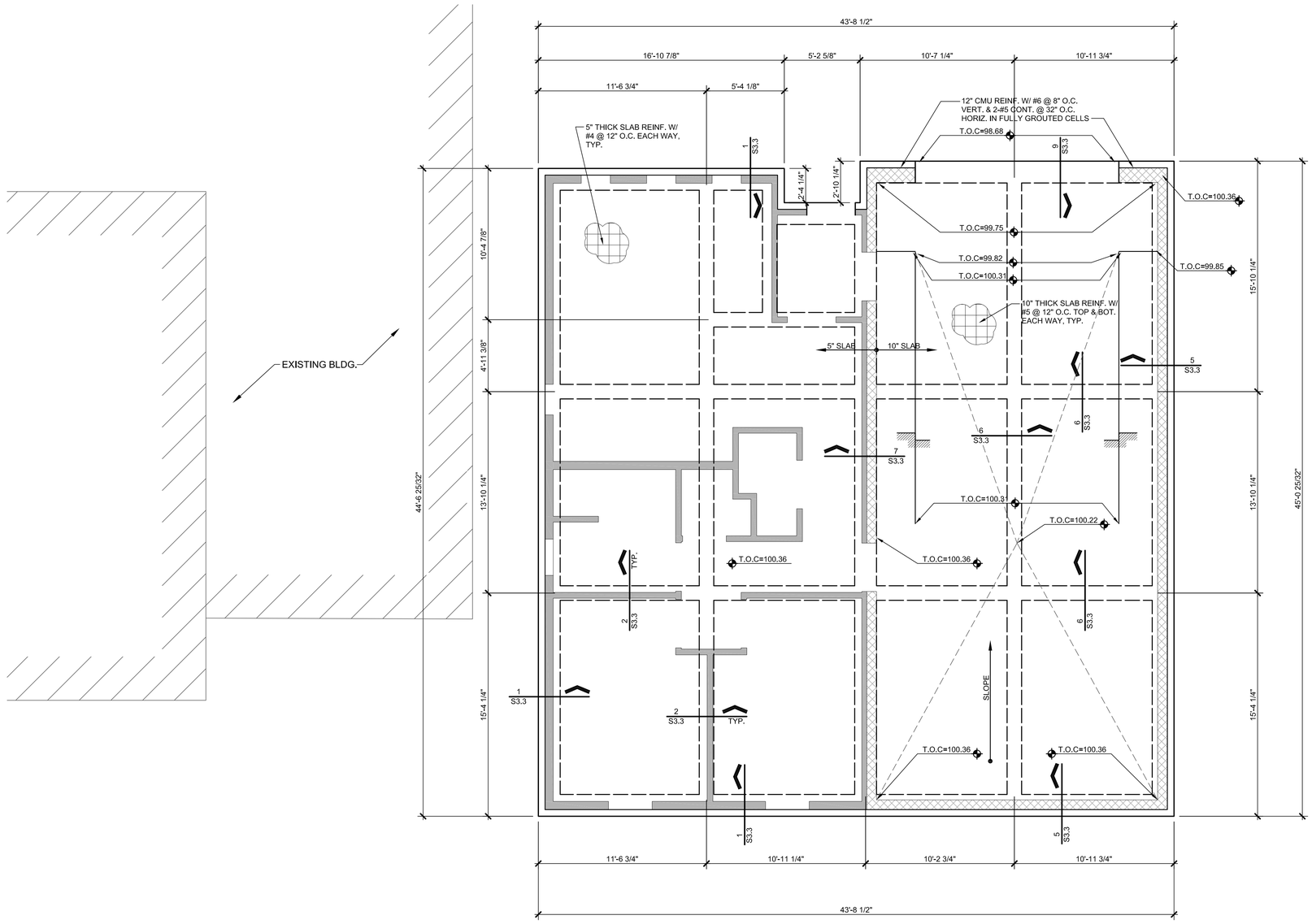

1'-0" MIN. REMOVAL OF EXISTING FAT CLAYS

1 FOUNDATION PLAN _EMS-2

SCALE: 1/4" = 1'-0"

NOTES:

1. FIN. FLR. ELEV. VARIES SEE ARCH'L. T.O.C. REFERS TO TOP OF STRUCTURAL SLAB U.N.O.
2. - INDICATES SLAB DEPRESSIONS. SEE STRUCTURAL PLANS & DETAILS FOR DEPTH OF SLAB DEPRESSIONS SEE ARCHITECTURAL FOR EXACT LOCATIONS OF ALL SLAB DEPRESSIONS. DROPS SHOWN ON PLAN ARE IN STRUCTURAL SLAB SEE ARCHITECTURAL FOR EXACT LOCATIONS OF ALL SLAB DEPRESSIONS.
3. SEE ARCHITECTURAL AND MECHANICAL - COORDINATE ALL FLOOR OPENINGS AND PENETRATIONS WITH TRADES INVOLVED FOR ACTUAL SIZES AND LOCATIONS.
4. REFER TO MECHANICAL, ELECTRICAL AND PLUMBING DRAWINGS FOR SLAB PENETRATIONS AND UNDERGROUND UTILITIES.
5. CONTRACTOR TO VERIFY ALL SLAB EDGE, STAIR AND ELEVATOR OPENING DIMENSIONS WITH ARCHITECTURAL DRAWINGS PRIOR TO CONSTRUCTION.
6. SEE GENERAL NOTES AND SPECIFICATION FOR ADDITIONAL INFORMATION.
7. CONTRACTOR TO VERIFY ALL DIMENSIONS AND EXISTING CONDITIONS AND AND REPORT ANY DISCREPANCY TO THE ARCHITECT AND THE ENGINEER.
8. REFER TO ARCHITECTURAL DRAWINGS FOR EXTENT AND DIMENSIONS OF RAISED OR DEPRESSED SLAB AREAS, SLOPES AND DRAINS.

JOSE I. GUERRA, INC.
CONSULTING ENGINEERS
2401 S. IH35 SUITE 210
AUSTIN, TEXAS 78741
(512) 445-2090
TBPE FIRM F-3

STATE OF TEXAS
JOHN C. ADAMS
85585
REGISTERED PROFESSIONAL ENGINEER
8-30-16

mwm Design Group
305 East Huntland Drive
Suite 200
Austin, Texas 78752
p: 512.453.0767
f: 512.453.1734
TBAE FIRM REGISTRATION NO.: 1452
TBPE FIRM REGISTRATION NO.: F-1416
TBPLS FIRM REGISTRATION NO.: 10065600

NO.	DATE	DESCRIPTION	BY

0 1"
The bar above measures one inch on the original drawing. Adjust scales accordingly.

FOUNDATION PLAN

CITY OF AUSTIN E.M.S. EXPANSIONS
6601 MANCHACA RD., AUSTIN, TX., 78745

PLOTTED: 8/30/2016
JOB NO: 023-79D

EMS2-S2.0

___ OF ___

File: F:\15012_EMS Vehicle Bay Expansions\DRAWINGS\CAD\15012_EMS-2_S2.0 FOUNDATION PLAN.dwg 24x36

SHORING NOTES:

1. ALL NEW OPENINGS ARE TO BE FRAMED WITH NEW STEEL BEAMS OR GLULAM BEAMS TO SUPPORT THE ROOF AND CEILING LOADS CURRENTLY SUPPORTED BY EXISTING LOAD BEARING WALLS TO BE DEMOLISHED. REFERENCE ARCHITECTURAL DRAWINGS FOR DEMOLITION DRAWINGS.

2. THE STRUCTURAL DRAWINGS AND SPECIFICATIONS REPRESENT THE FINISHED STRUCTURE. THEY DO NOT INDICATE THE METHODS OF CONSTRUCTION UNLESS SO STATED OR NOTED. THE CONTRACTOR SHALL PROVIDE ALL MEASURES NECESSARY TO PROTECT THE WORKERS AND ALL OTHER PERSONS DURING CONSTRUCTION.

3. THE CONTRACTOR SHALL PROVIDE TEMPORARY ERECTION BRACING AND SHORING OF ALL STRUCTURAL WORK AS REQUIRED FOR STABILITY OF THE STRUCTURE DURING ALL PHASES OF CONSTRUCTION. THE CONTRACTOR SHALL IMMEDIATELY NOTIFY THE ENGINEER OF ANY CONDITION THAT MIGHT ENDANGER THE STABILITY OF THE STRUCTURE OR CAUSE DISTRESS IN THE STRUCTURE.

4. THE EXISTING LOAD BEARING WALLS TO BE DEMOLISHED ARE TO BE SHORED BY THE CONTRACTOR. THE CONTRACTOR'S TEMPORARY SHORING SYSTEM IS TO REMAIN IN PLACE UNTIL ALL NEW BEAMS HAVE BEEN ERECTED AND ATTACHED TO THE EXISTING LOAD BEARING WALLS/ROOF FRAMING PER STRUCTURAL DRAWINGS.

5. THE CONTRACTOR SHALL SUBMIT SHORING PLANS FOR REVIEW BY ARCHITECT/ ENGINEER THE SHORING PLAN SHALL BE DESIGNED AND SEALED BY AN ENGINEER REGISTERED IN THE STATE OF TEXAS.

6. THE SHORING SYSTEM SHOULD JACK THE EXISTING LOAD BEARING WALLS BETWEEN 1/16" AND 1/8" ABOVE THEIR FINAL ELEVATIONS IN ORDER TO INSURE THAT THE ROOF LOADS ARE TRANSFERRED TO THE NEW BEAMS WITHOUT DEFLECTION.

7. THE BUILDING MUST REMAIN OPEN AND OPERATING DURING CONSTRUCTION. ALL WORK MUST BE PERFORMED IN SUCH A MANNER AS TO CAUSE MINIMAL DISRUPTION TO THE NORMAL ACTIVITIES OF THE BUILDING.

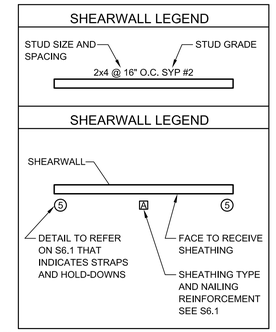

CEILING JOIST NOTES:

1. G.C. SHALL VERIFY DIMENSIONS WITH ACHITECTURAL DRAWINGS AND SHALL NOTIFY ARCH/ ENGINEER OF DISCREPANCIES PRIOR TO CONSTRUCTIONS.
2. FOR INTERIOR AND EXTERIOR WALLS, PROVIDE (2) KING STUDS FOR OPENINGS UP TO 5 FEET IN LENGTH, OR (3) KING STUBS FOR OPENINGS UP TO 9 FEET LENGTH. KING STUD QUANTITY IS TO BE PROVIDED AT EACH SIDE OF OPENING.
3. PROVIDE (1) TRIMMER STUD FOR OPENINGS UP TO 5 FEET LENGTH, (2) TRIMMER STUDS FOR OPENINGS UP TO 10 FEET LENGTH, OR (3) TRIMMER STUDS FOR OPENINGS UP 16 FEET LENGTH. TRIMMER STUD QUANTITY IS TO BE PROVIDED AT EACH SIDE OF OPENING.
4. STUD PACKS SHALL INCLUDE KING AND TRIMMER STUDS AT OPENINGS.
5. TRIMMER AND KING STUD SIZE SHALL MATCH WALL FRAMING STUD SIZE.
6. VERTICAL NAILING BETWEEN TRIMMER STUDS AND BETWEEN KING STUDS SHALL BE 16d AT 16".
7. REFERENCE THIS SHEET FOR LOAD BEARING WALL STUD SIZE & SPACING.
8. REFERENCE SHEET S4.1 FOR SHEAR WALL SCHEDULE.
9. ALL LUMBER TO BE #2 S.Y.P.K.D.
10. ALL CEILING JOISTS TO BE 2x8 AL 16" O.C. UNLESS NOTED OTHERWISE (17'-0" MAX SPAN) REFERENCE IBC FOR OTHER SPANS
11. ALL HEADERS @ 2x4 WALLS TO BE 2-2X PER IBC CODE UNLESS NOTED OTHERWISE. @ 2x6 WALLS TO BE 3-2x PER IBC CODE UNLESS NOTED OTHERWISE.

HEADER SCHEDULE

3-2x8 0'-0" to 5'-0"
3-2x10 5'-1" to 6'-1"
3-2x12 6'-2" to 7'-1"

12. ALL BEAMS LARGER THAN 2-2x6 TO BE SUPPORTED BY BUILT-UP STUD COLUMNS AT 2x6 STUD WALLS AND 2x4 STUD WALLS AT EACH END UNLESS NOTED OTHERWISE AND BLOCKED SOLID TO FOUNDATION. SEE BUILT-UP COLUMN SCHEDULE SHEET S4.0 FOR NUMBER OF BUILT-UP STUD COLUMN; AT EACH END OF BEAMS.
13. DOUBLE 2x8 CEILING JOISTS AS REQUIRED. UNDER HVAC AND/OR WH UNITS LOCATED IN ATTIC. PROVIDE 3/4" PLYWOOD DECK PAD AND CATWALK AS REQUIRED.
14. ALL BEAMS JOB BUILT FROM 3 OR MORE MEMBERS NAILED WITH 10D NAILS @ 6" O.C. TOP AND BOTTOM.
15. ALL GLU-LAMS TO BE DESIGNED WITH STANDARD CAMBER OF R=2000 FT.
16. BRACE TOP FLANGE OF ALL GLULAM, MICROLLAM, OR 2xWOOD BEAMS @ 4'-0" EA SIDE OF CEILING JOISTS WITH 2x6 CONTINUOS STIFFBACK AND 2x4 BRACES
17. STUD WALLS SHALL BE 2x6 @ 16 " O.C., #2 S.Y.P.K.D. UNO. (MAX. HEIGHT 10'-0") STUD WALLS SHALL BE 2x8 @ 16" O.C. , # 2 S.Y.P.K.D. UNO. (HEIGHTS GREATER THAN 10-0" TO 14'-0" MAX.)
18. PROVIDE 2x BLOCKING AT 4'-0" O.C. VERTICALLY AT ALL STUD WALLS.
19. ALL FRAMING TO COMPLY WITH I.B.C. BUILDING CODES, CURRET EDITION.
20. VERIFY ANY CHANGES WITH ENGINEER PRIOR TO CONSTRUCTION.

ROOF FRAMING PLAN

SCALE:

PLAN NOTES:

1. G.C. SHALL VERIFY DIMENSIONS WITH ACHITECTURAL DRAWINGS AND SHALL NOTIFY ARCH/ ENGINEER OF DISCREPANCIES PRIOR TO CONSTRUCTIONS.
2. ALL LUMBER TO BE #2 Y.P.K.D.
3. ALL RAFTERS TO BE 2x8 AT 16"O.C. WITH A MAXIMUM UNBRACED SPAN 18'-0" MEASURED ALONG THE SLOPE, UNLESS NOTED OTHERWISE.
4. ALL HIPS, RIDGES, VALLEYS TO BE 2x10 MAXIMUM. UNBRACED SPAN 8'-0" UNLESS NOTED OTHERWISE. PROVIDE "TEE" BRACES @ 6'-0" O.C. MAX SPACING AT RIDGES. PROVIDE "TEE" BRACES @ 8'-0" O.C. MAX SPACING AT HIPS AND VALLYS. PROVIDE DBL STUDS BELOW EACH "TEE" BRACE AT STUD WALLS
5. PROVIDE 2x8 CONTINUOUS PURLINS WITH 2x8 "TEE" BRACES @ 4'-0" O.C. MAX SPACING PROVIDE DBL STUDS BELOW EACH "TEE" BRACE AT STUD WALLS. NAIL "TEE" BRACE TOGETHER WITH 10D NAILS @ 6" O.C.- TYPICAL.
6. "TEE" BRACES LONGER THAN 8'-0" SHALL BE DBL 2x8 STUD WITH FLANGE PLATE "TEE" BRACE AND BRACED HORIZONTALLY @ 6'-0" O.C. IN TWO DIRECTIONS, NAIL "TEE" BRACE TOGETHER WITH 1O D NAILS @ 6" O.C. - TYPICAL
7. PROVIDE 2x6 MIN. COLLAR TIES AT 4'-0" O.C. AT ALL RIDGES.
8. ALL FRAMING TO COMPLY WITH I.B.C. BUILDING CODE CURRENT EDITION.
9. VERIFY AND CHANGES WITH ENGINEER PRIOR TO CONSTRUCTION.

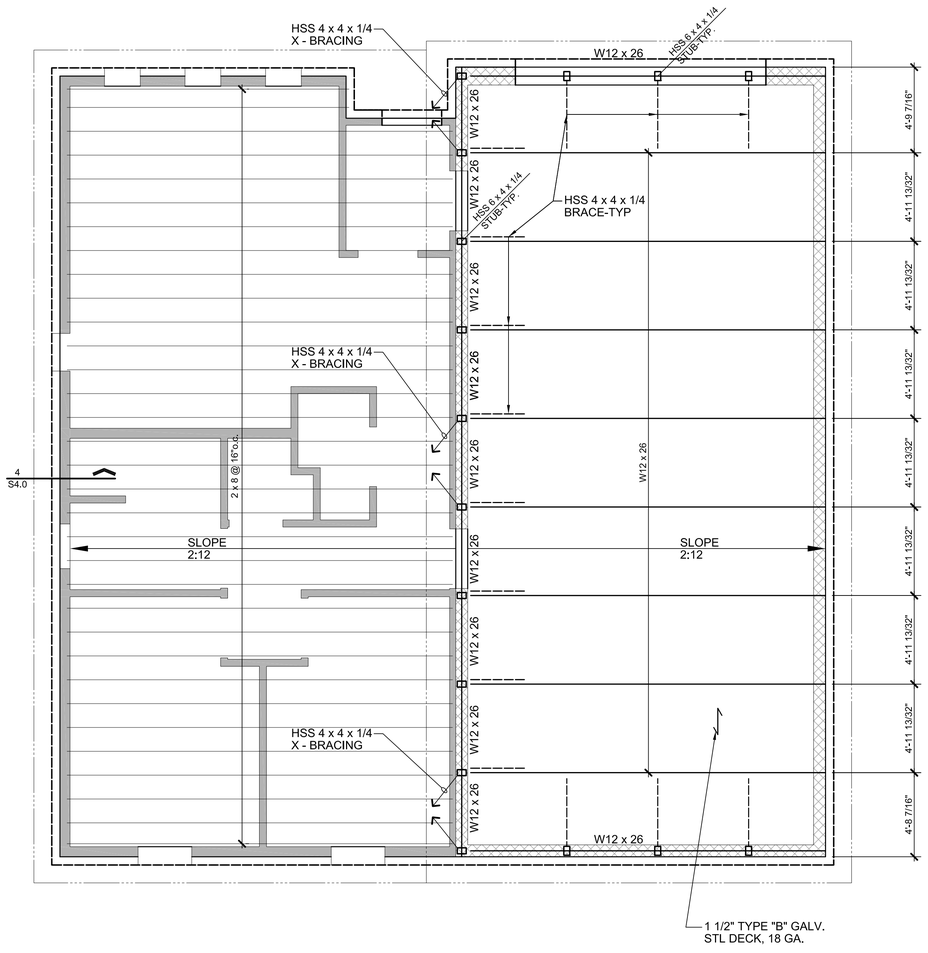

NOTE:
TOP OF STUD AND CMU WALL ELEVATION REF. ARCH'L

1 ROOF FRAMING PLAN_EMS-2
SCALE: 1/4" = 1'-0"

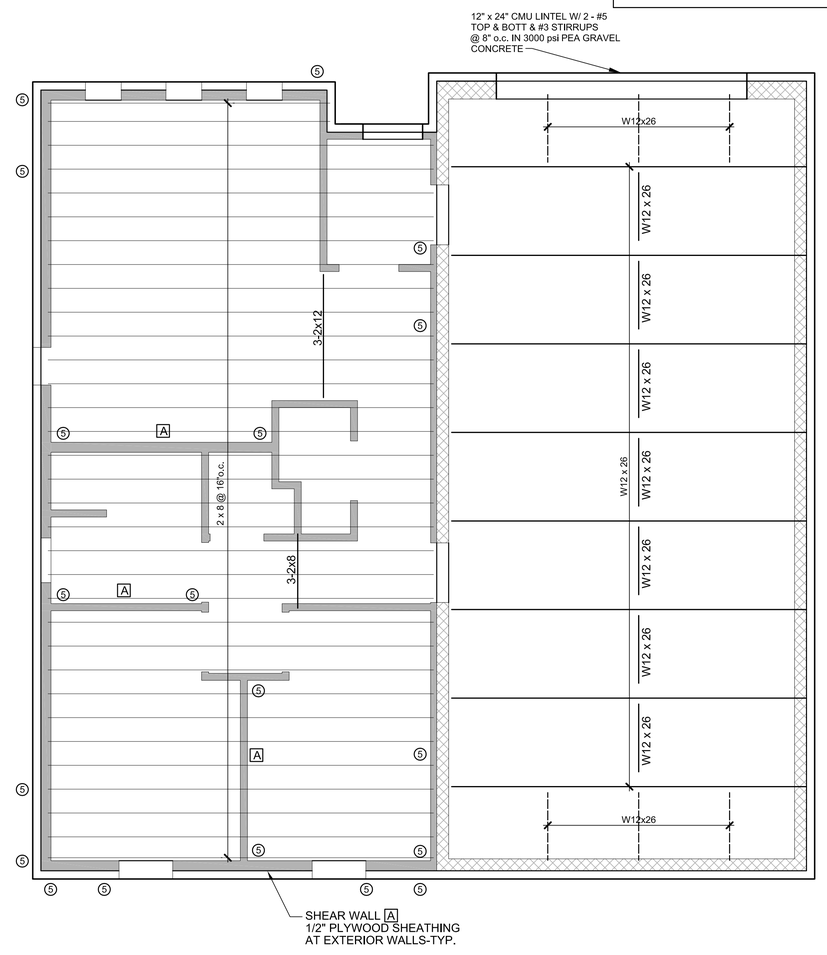

2 CEILING FRAMING PLAN_EMS-2
SCALE: 1/4" = 1'-0"

JOSE I. GUERRA, INC.
CONSULTING ENGINEERS
2401 S. IH35 SUITE 210
AUSTIN, TEXAS 78741
(512) 445-2090
TBPE FIRM F-3

STATE OF TEXAS
JOHN C. CHAPA
85568
REGISTERED PROFESSIONAL ENGINEER
8-30-16

mwm Design Group
305 East Huntland Drive
Suite 200
Austin, Texas 78752
p: 512.453.0767
f: 512.453.1734
TBAE FIRM REGISTRATION NO.: 1452
TBPE FIRM REGISTRATION NO.: F-1416
TBPLS FIRM REGISTRATION NO.: 10065600

NO.	DATE	DESCRIPTION	BY

0 1"
The bar above measures one inch on the original drawing. Adjust scales accordingly.

ROOF & CEILING FRAMING PLAN

CITY OF AUSTIN E.M.S. EXPANSIONS
6601 MANCHACA RD., AUSTIN, TX., 78745

PLOTTED: 8/30/2016
JOB NO: 023-79D

EMS2-S2.1

___ OF ___

File: F:\15012_EMS Vehicle Bay Expansions\DRAWINGS\CAD\15012_EMS-2_S2.1 ROOF FRAMING PLAN.dwg 2:4:36

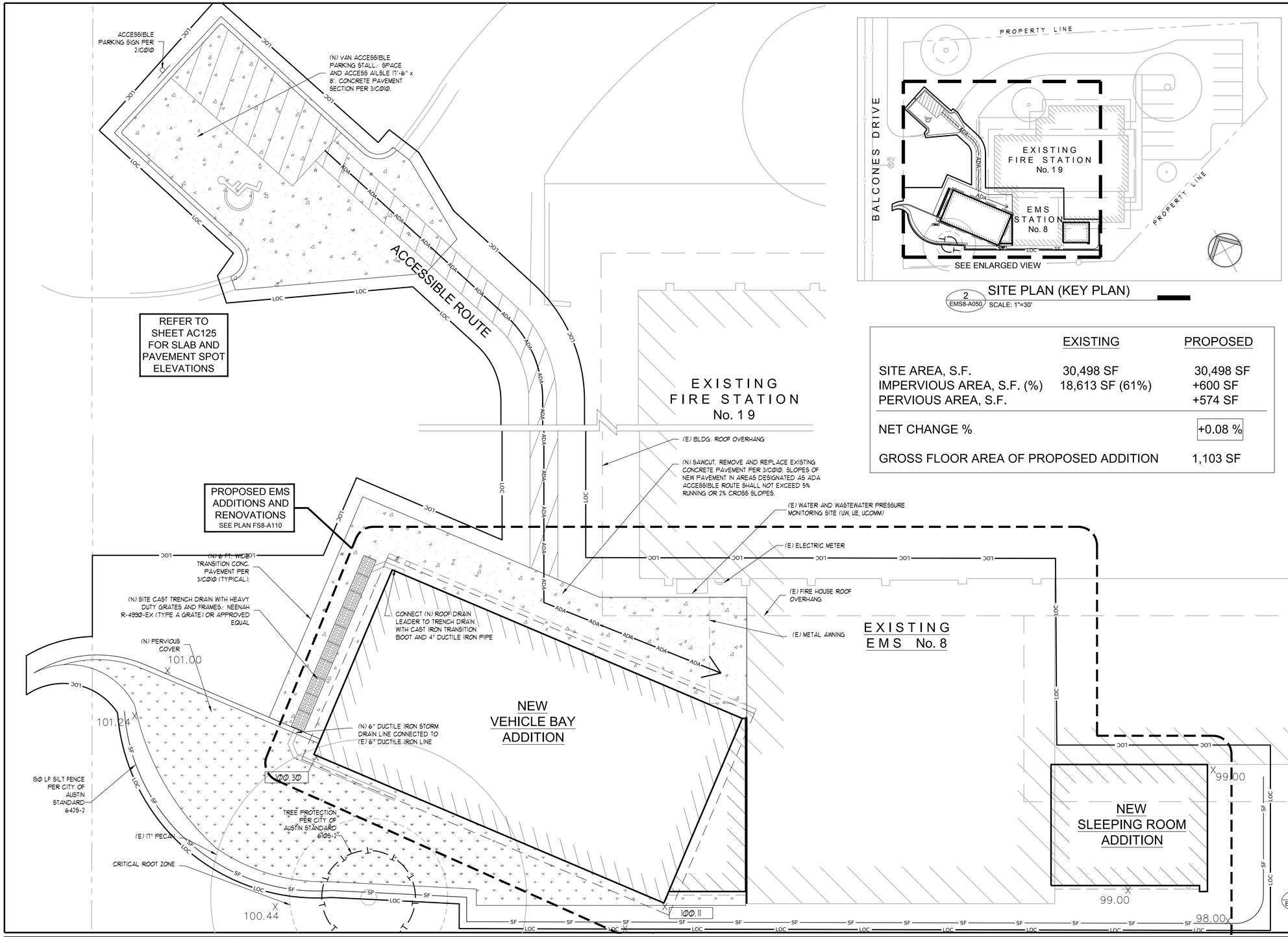

2 EMS8-A050 SITE PLAN (KEY PLAN)
SCALE: 1"=30'

	EXISTING	PROPOSED
SITE AREA, S.F.	30,498 SF	30,498 SF
IMPERVIOUS AREA, S.F. (%)	18,613 SF (61%)	+600 SF
PERVIOUS AREA, S.F.		+574 SF
NET CHANGE %		+0.08 %
GROSS FLOOR AREA OF PROPOSED ADDITION		1,103 SF

SITE PLAN LEGEND

- PROPERTY LINES
- BUILDING SETBACK LINES
- LOC — LIMITS OF CONSTRUCTION
- 528 — EXISTING TOPOGRAPHIC CONTOUR
- EXISTING TREE & TREE PROTECTION
- EXISTING CHAIN LINK FENCE
- PROPOSED OBJECT
- PROPOSED CURB & GUTTER
- PROPOSED ASHPHALT
- PROPOSED CONCRETE
- EXISTING PERVIOUS AREA
- PROPOSED PERVIOUS AREA
- EXISTING STRUCTURE
- PROPOSED STRUCTURE
- (E)XX.XX — EXISTING SPOT ELEVATION
- XX.XX — PROPOSED SPOT ELEVATION

NOTE

THE LOCATIONS OF EXISTING IMPROVEMENTS SHOWN ON THIS PLAN WERE DERIVED IN PART FROM RECORD DOCUMENTS OF UNKNOWN ACCURACY. THE PRESENCE, LOCATION AND ELEVATION OF EXISTING UTILITIES IN THE FILED SHALL BE VERIFIED BY THE CONTRACTOR BEFORE COMMENCING WORK. IT SHALL BE THE RESPONSIBILITY OF THE CONTRACTOR TO VERIFY EXISTING CONDITIONS WITHIN THE LIMITS OF CONSTRUCTION. FAILURE OF AN EXISTING UTILITY TO APPEAR ON THIS PLAN SHALL NOT RELIEVE THE CONTRACTOR OF RESPONSIBILITY TO PROTECT AND REPAIR, IF DAMAGED, SUCH UTILITIES.

ALL NEW PEDESTRIAN PAVEMENT SHALL BE CONSTRUCTED IN ACCORDANCE WITH THE TEXAS ACCESSIBILITY STANDARDS, AND SHALL MATCH THE ELEVATIONS OF EXISTING IMPROVEMENTS AT POINTS OF INTERSECTION.

FINE GRADING SHALL BE COMPLETED TO DRAIN STORMWATER AWAY FROM BUILDING PERIMETERS, AND SPECIFICALLY AWAY FROM FROM BUILDING ENTRANCES AT THE MAXIMUM SLOPES POSSIBLE GIVEN EXISTING CONDITIONS ADJACENT.

SUMMARY SEQUENCE OF CONSTRUCTION

1. INSTALL SEDIMENTATION AND EROSION CONTROLS AND TREE PROTECTION FENCING AND INITIATE TREE MITIGATION MEASURES (AS REQUIRED).
2. BEGIN SITE CLEARING/CONSTTRUCTION ACTIVITIES.
3. COMPLETE CONSTRUCTION AND BEGIN REVEGETATION OF SITE AND INSTALLATION OF LANDSCAPING.
4. FOLLOWING REVEGETATION, REMOVE THE TEMPORARY EROSION AND SEDIMENTATION CONTROLS AND COMPLETE ANY NECESSARY FINAL REVEGETATION RESULTING FROM REMOVAL OF THE CONTROLS.

1 EMS8-A050 ENLARGED SITE PLAN
SCALE: 1" = 5'

BID DOCUMENTS

STATE OF TEXAS — BRANDON EDWARD HAMMAN — 108867368 — LICENSED PROFESSIONAL ENGINEER
MWM DesignGroup, Inc. F-1416
8-30-16

mwm DesignGroup
305 East Huntland Drive
Suite 200
Austin, Texas 78752
p: 512.453.0767
f: 512.453.1734
TBAE FIRM REGISTRATION NO.: 1452
TBPE FIRM REGISTRATION NO.: F-1416
TBPLS FIRM REGISTRATION NO.: 10065600

NO.	DATE	DESCRIPTION	BY

0 — 1"
The bar above measures one inch on the original drawing. Adjust scales accordingly.

SITE PLAN

CITY OF AUSTIN, EMS EXPANSIONS
5211 BALCONES DRIVE, AUSTIN, TEXAS, 78731

PLOTTED: 9/7/2016
JOB NO: 023-81

EMS8
C050

File: "A:\023-79D_WomensLockerRooms\CAD\EMS Station 8\Sheets\EMS8-A050 SITE PLAN.dwg 24x36

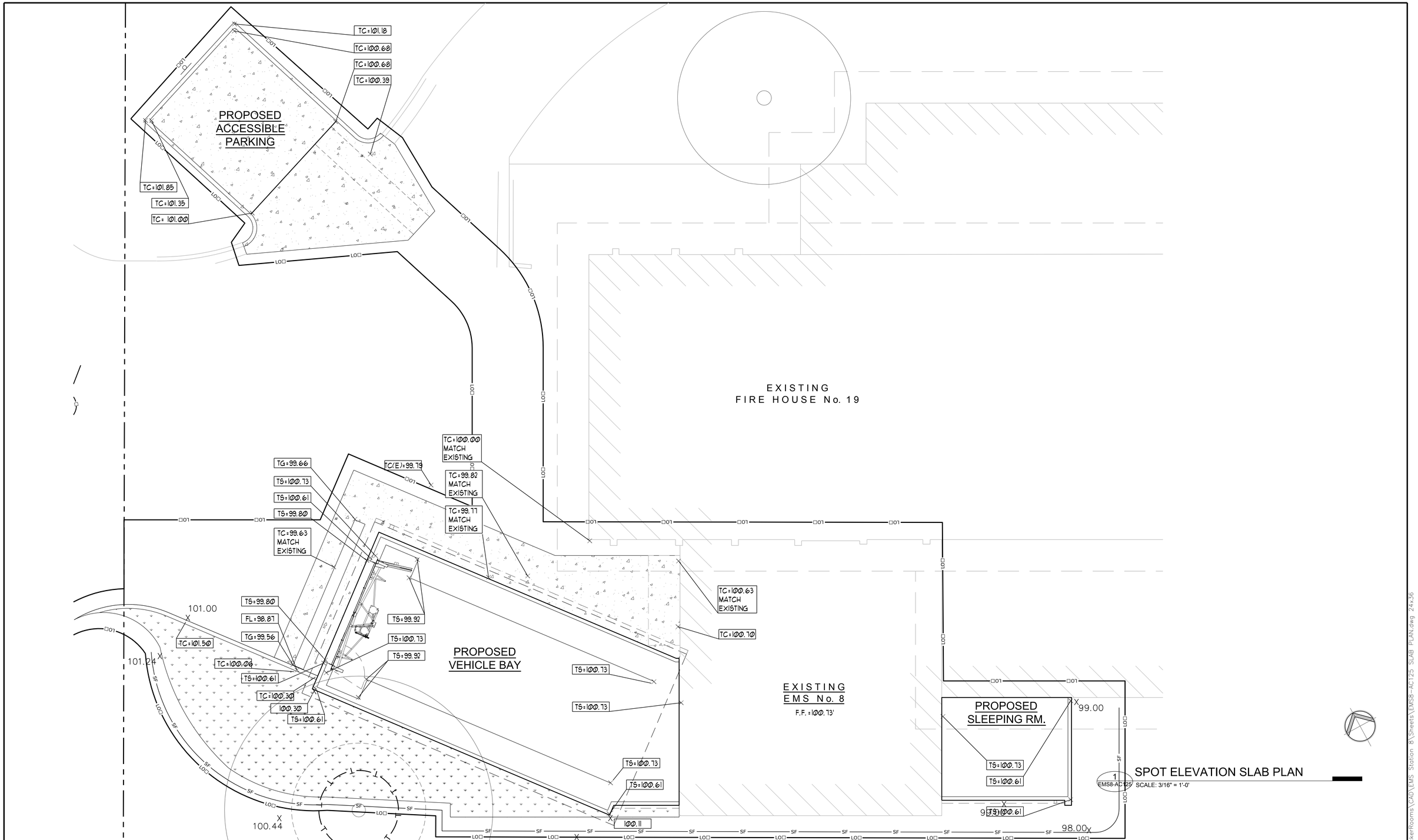

BID DOCUMENTS

REGISTERED ARCHITECT W. OREN HARRISON 18345 STATE OF TEXAS

mwm Design Group

305 East Huntland Drive
Suite 200
Austin, Texas 78752
p: 512.453.0767
f: 512.453.1734

TBAE FIRM REGISTRATION NO.: 1452
TBPE FIRM REGISTRATION NO.: F-1416
TBPLS FIRM REGISTRATION NO.: 10065600

NO.	DATE	DESCRIPTION	BY

0 1"

The bar above measures one inch on the original drawing. Adjust scales accordingly.

SPOT ELEVATION SLAB PLAN

CITY OF AUSTIN, EMS EXPANSIONS
5211 BALCONES DRIVE, AUSTIN, TEXAS, 78731

PLOTTED: 8/30/2016
JOB NO: 023-81

EMS8
AC125

File: X:\023-79D_WomensLockerRooms\CAD\EMS Station 8\Sheets\EMS8-AC125 SLAB PLAN.dwg 24x36

PROJECT DATA: EMS STATION 11/FIRE STATION 27

GOVERNING CODES

2012 INTERNATIONAL ENERGY CONSERVATION CODE
2012 INTERNATIONAL BUILDING CODE
2012 INTERNATIONAL MECHANICAL CODE
2012 UNIFORM PLUMBING CODE (AS AMENDED BY COA)
2012 NATIONAL ELECTRIC CODE (AS AMENDED BY COA)
2010 ADA STANDARDS FOR ACCESSIBLE DESIGN
2012 TEXAS ACCESSIBILITY STANDARDS

BUILDING CODE DATA – IBC CHAPTER 3

OCCUPANCY GROUP

B THE USE OF A BUILDING OR STRUCTURE, OR A PORTION THEREOF, FOR OFFICE, PROFESSIONAL OR SERVICE–TYPE TRANSACTIONS, INCLUDING STORAGE OF RECORDS AND ACCOUNTS.

VEHICLE BAY SHALL BE CONSIDERED A NON–SEPARATED OCCUPANCY PER IBC 508.3.

GENERAL BUILDING LIMITATIONS – IBC CHAPTER 5

ALLOWABLE HEIGHT AND BUILDING AREA (TABLE 503)

TYPE VB (B OCCUPANCY)
AREA (SF) 9,000
HEIGHT 2 STORY

FRONTAGE INCREASE (If) = [F/P–0.25]W/30 = 25
SPRINKLER INCREASE (Is) = 0

ALLOWABLE AREA (B) = At+(AtIf/100)+(AtIs/100) = 11,250

ACTUAL AREA B (SF) 7,272
ACTUAL AREA B 1 STORY

CONSTRUCTION TYPE – IBC CHAPTER 6

FIRE RESISTIVE REQUIREMENTS FOR BUILDING ELEMENTS (TYPE VB–TABLE 601)

BEARING WALLS	
INTERIOR	NO REQUIREMENTS
EXTERIOR	NO REQUIREMENTS
NONBEARING WALLS	
EXTERIOR	SEE BELOW
NONBEARING WALLS	
INTERIOR	NO REQUIREMENTS
FLOOR CONSTRUCTION	NO REQUIREMENTS
ROOF CONSTRUCTION	NO REQUIREMENTS

EXTERIOR WALL/OPENING PROTECTION (TABLE 602 AND 704.8)
EXTERIOR WALLS 1 LESS THAN 10 FEET
NO RATING 10 FEET OR GREATER

INTERIOR FINISHES – IBC CHAPTER 8

FLAME SPREAD RATINGS OF MATERIALS AND FINISHES (TABLE 803.4)

CLASS A: FLAME SPREAD 0–25, SMOKE DEVELOPED 0–450
CLASS B: FLAME SPREAD 26–75, SMOKE DEVELOPED 0–450
CLASS C: FLAME SPREAD 76–200, SMOKE DEVELOPED 0–450

VERTICAL EXITS AND PASSAGEWAYS	CLASS B
EXIT ACCESS CORRIDORS	CLASS B
ROOMS AND ENCLOSED SPACES	CLASS C

OCCUPANCY LOAD AND MEANS OF EGRESS –

	AREA (sqft.)	OCCUPANT LOAD FACTOR (sqft.)	OCCUPANTS	REQUIRED EGRESS WIDTH PER OCCUPANT	REQUIRED EGRESS WIDTH
EMS STATION	1,378	200	7	0.2	1.4
VEHICLE BAY	964	200	5	0.2	1.0
TOTAL			14	–	2.4
EGRESS WIDTH PROVIDED (1 DOOR)					32

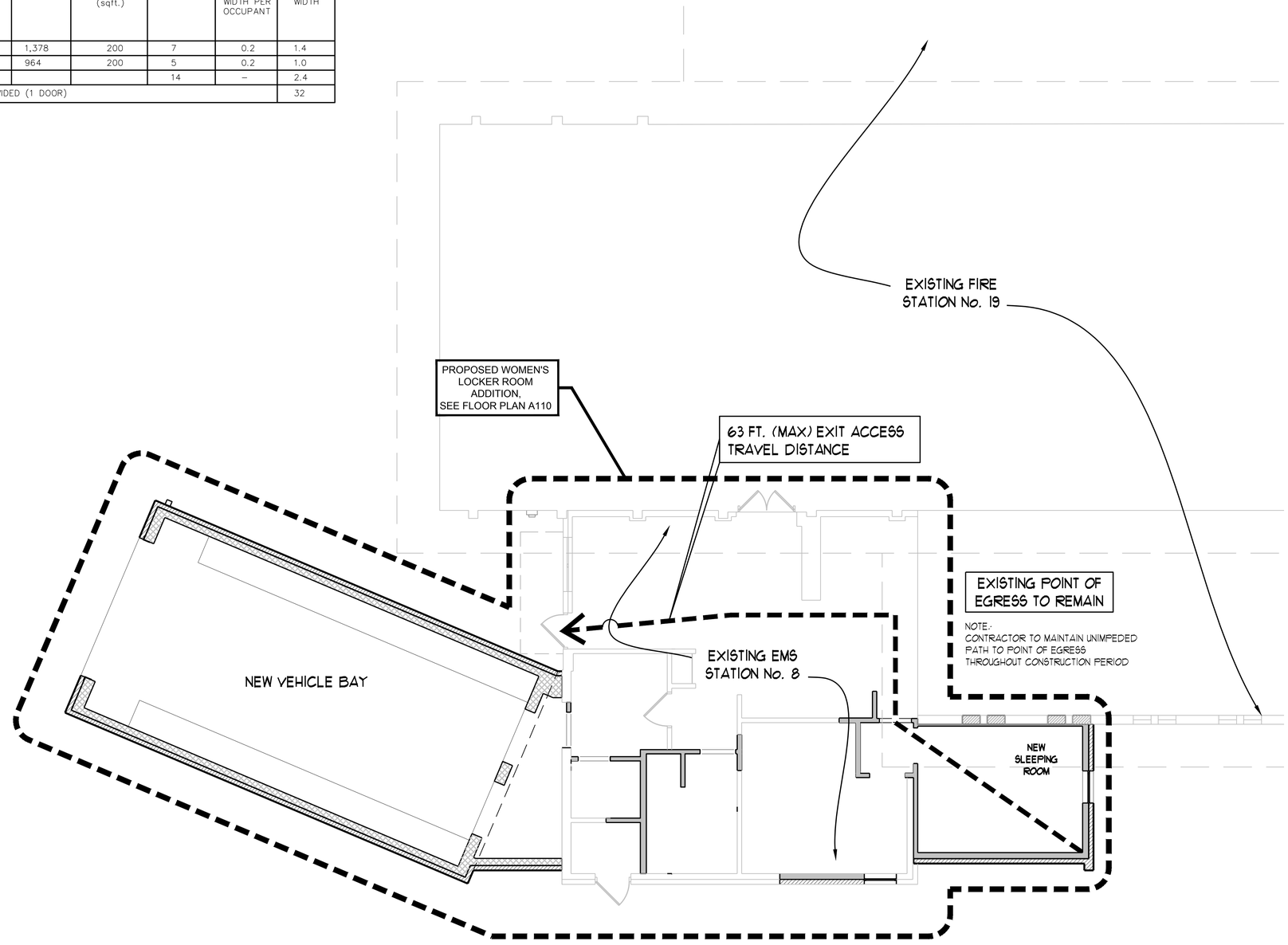

1 EMS8-A010 KEY PLAN
SCALE: 3/16" = 1'-0'

BID DOCUMENTS

REGISTERED ARCHITECT W. OWEN HARRISON 18348 STATE OF TEXAS

mwm Design Group
305 East Huntland Drive
Suite 200
Austin, Texas 78752
p: 512.453.0767
f: 512.453.1734

TBAE FIRM REGISTRATION NO.: 1452
TBPE FIRM REGISTRATION NO.: F-1416
TBPLS FIRM REGISTRATION NO.: 10065600

NO.	DATE	DESCRIPTION	BY

0 1"
The bar above measures one inch on the original drawing. Adjust scales accordingly.

CODE SUMMARY & KEY PLAN

CITY OF AUSTIN, EMS EXPANSIONS
5211 BALCONES DRIVE, AUSTIN, TEXAS, 78731

PLOTTED: 9/7/2016
JOB NO: 023-81

EMS8-A010

File: Y:\023-79D_WomensLockerRooms\CAD\EMS Station 8\Sheets\EMS8-A010 CODE.dwg 24x36

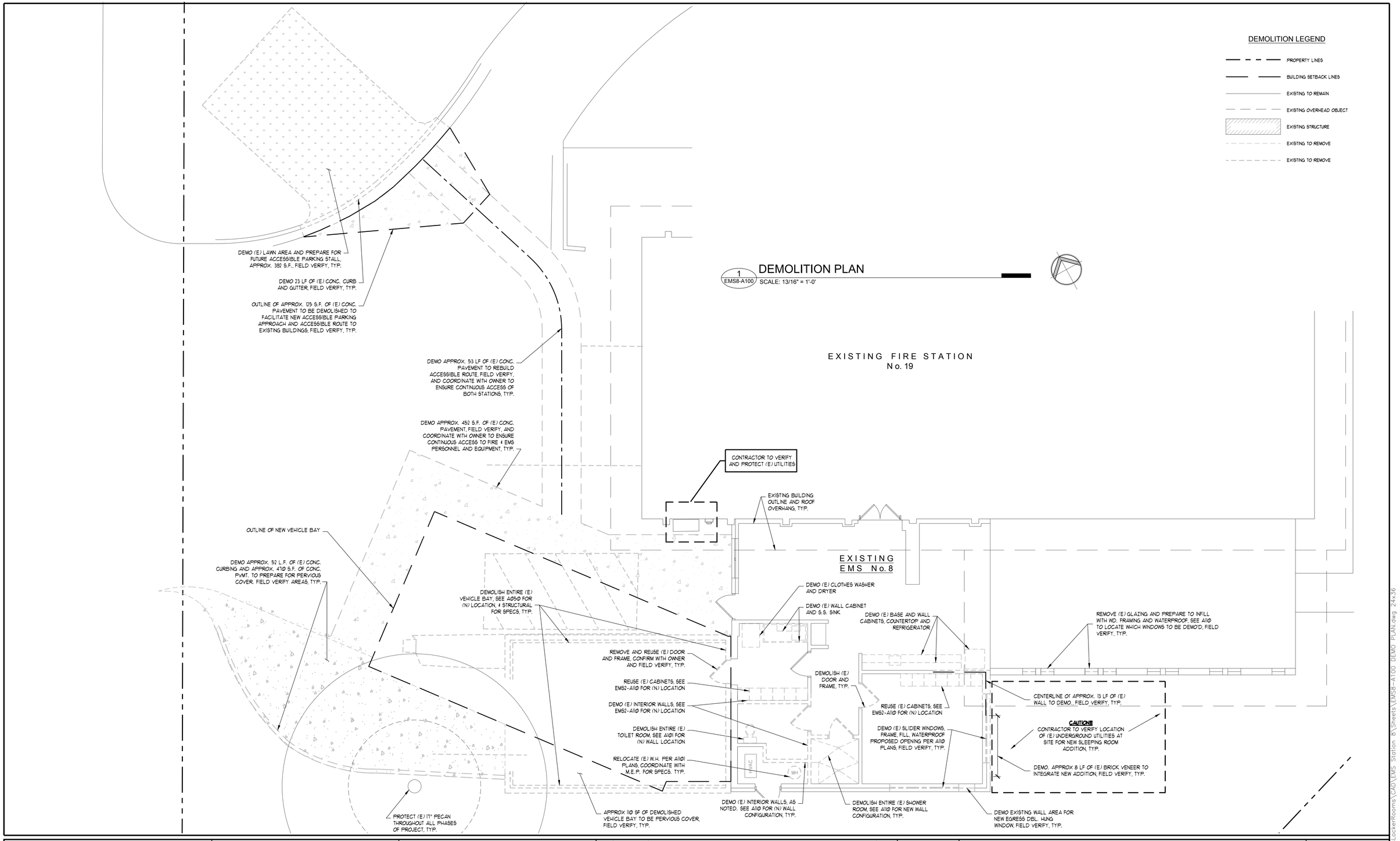

BID DOCUMENTS

REGISTERED ARCHITECT
W. OWEN HARGROVE
16348
STATE OF TEXAS
8/30/2016

mwm Design Group

305 East Huntland Drive
Suite 200
Austin, Texas 78752
p: 512.453.0767
f: 512.453.1734

TBAE FIRM REGISTRATION NO.: 1452
TBPE FIRM REGISTRATION NO.: F-1416
TBPLS FIRM REGISTRATION NO.: 10065600

NO.	DATE	DESCRIPTION	BY

0 1"

The bar above measures one inch on the original drawing. Adjust scales accordingly.

DEMOLITION PLAN

CITY OF AUSTIN, EMS EXPANSIONS
5211 BALCONES DRIVE, AUSTIN, TEXAS, 78731

PLOTTED: 8/30/2016
JOB NO: 023-81

EMS8-A100

File: Y:\023-790_WomensLockerRooms\CAD\EMS Station 8\Sheets\EMS8-A100 DEMO PLAN.dwg 24x36

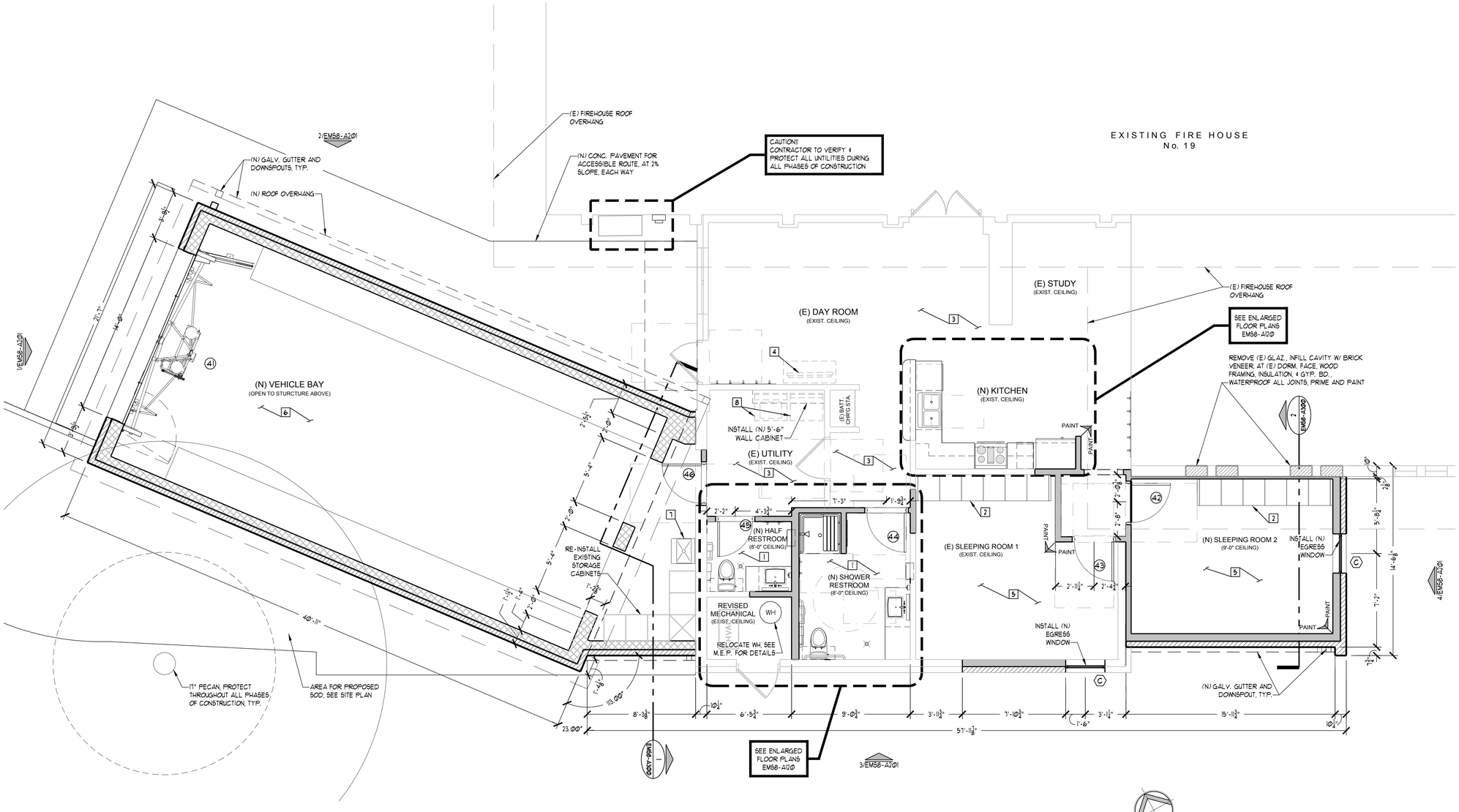

1 EMS8-A110 FLOOR PLAN
SCALE: 1/4" = 1'-0'

LEGEND

- PROPERTY LINES
- BUILDING SETBACK LINES
- EXISTING TO REMAIN
- EXISTING OVERHEAD OBJECT
- EXISTING TO REMOVE
- EXISTING STRUCTURE
- PROPOSED STRUCTURE
- PROPOSED OBJECT
- TILE / PAINT — PROPOSED WALL FINISH TYPE
- PROPOSED FLOOR DRAIN
- A.D.A. CLEAR FLOOR AREA
- PROPOSED GLAZING AT CLERESTORY
- PROPOSED GLAZING
- PROPOSED BRICK VENEER WALL
- PROPOSED FRAME WALL
- PROPOSED WALL INFILL, AS NOTED
- PROPOSED CMU BLOCK WALL
- PROPOSED CONCRETE
- PROPOSED FLOOR TILE
- PROPOSED PLYWOOD

CALL-OUT INDEX

1. CERAMIC TILE FLOORING
2. 20"x24"x80" HOLMAN LOCKERS OR APPROVED EQUAL
3. EXISTING FLOORING, REPLACE IN KIND IF DAMAGED DURING CONSTRUCTIONM, TYP.
4. LOCATION OF NEW 42" FLAT SCREEN T.V. (PROVIDED BY OWNER)
5. CARPET FLOORING OR APPROVED EQUAL
6. FINISHED CONCRETE FLOOR WITH INTEGRATED SLOPED VEHICLE PARKING AREA
7. INSTALL NEW FLOOR LEVEL MOP SINK
8. WASHER AND DRYER LOCATION, APPLIANCES PROVIDED BY OWNER

BID DOCUMENTS

REGISTERED ARCHITECT — JOHN W. OWEN HARRISON — 18348 — STATE OF TEXAS

mwm Design Group
305 East Huntland Drive
Suite 200
Austin, Texas 78752
p: 512.453.0767
f: 512.453.1734
TBAE FIRM REGISTRATION NO.: 1452
TBPE FIRM REGISTRATION NO.: F-1416
TBPLS FIRM REGISTRATION NO.: 10065600

NO.	DATE	DESCRIPTION	BY

0 — 1"
The bar above measures one inch on the original drawing. Adjust scales accordingly.

FLOOR PLAN

CITY OF AUSTIN, EMS EXPANSIONS
5211 BALCONES DRIVE, AUSTIN, TEXAS, 78731

PLOTTED: 8/30/2016
JOB NO: 023-81

EMS8-A110

File: Y:\023-791_WomensLockerRooms\CAD\EMS Station 8\Sheets\EMS8-A110 FLOOR PLAN.dwg 24x36

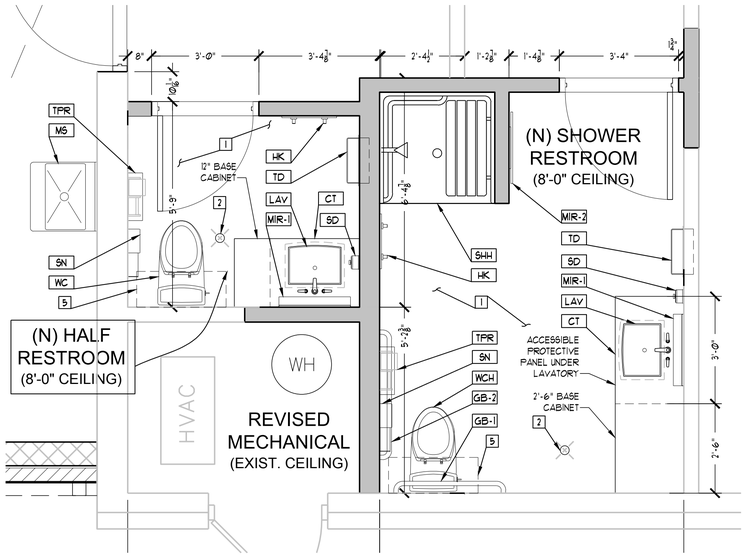

1 EMS8-A120 ENLARGED RESTROOMS FLOOR PLAN
SCALE: 1/2" = 1'-0"

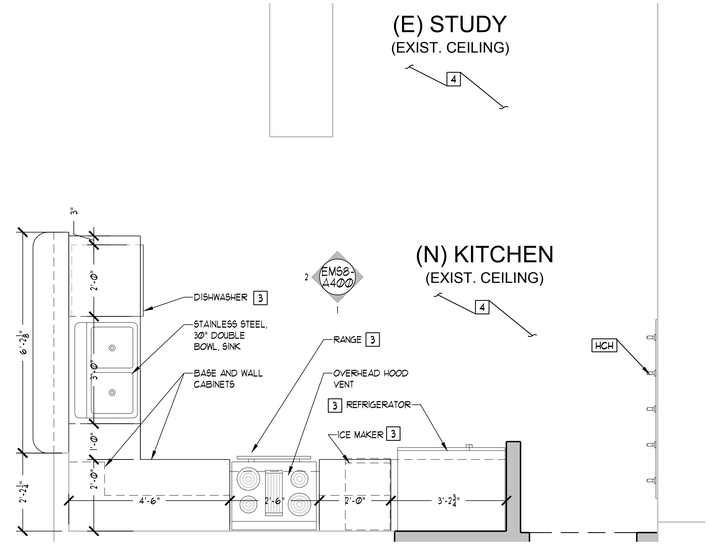

2 EMS8-A120 ENLARGED KITCHEN FLOOR PLAN
SCALE: 1/2" = 1'-0"

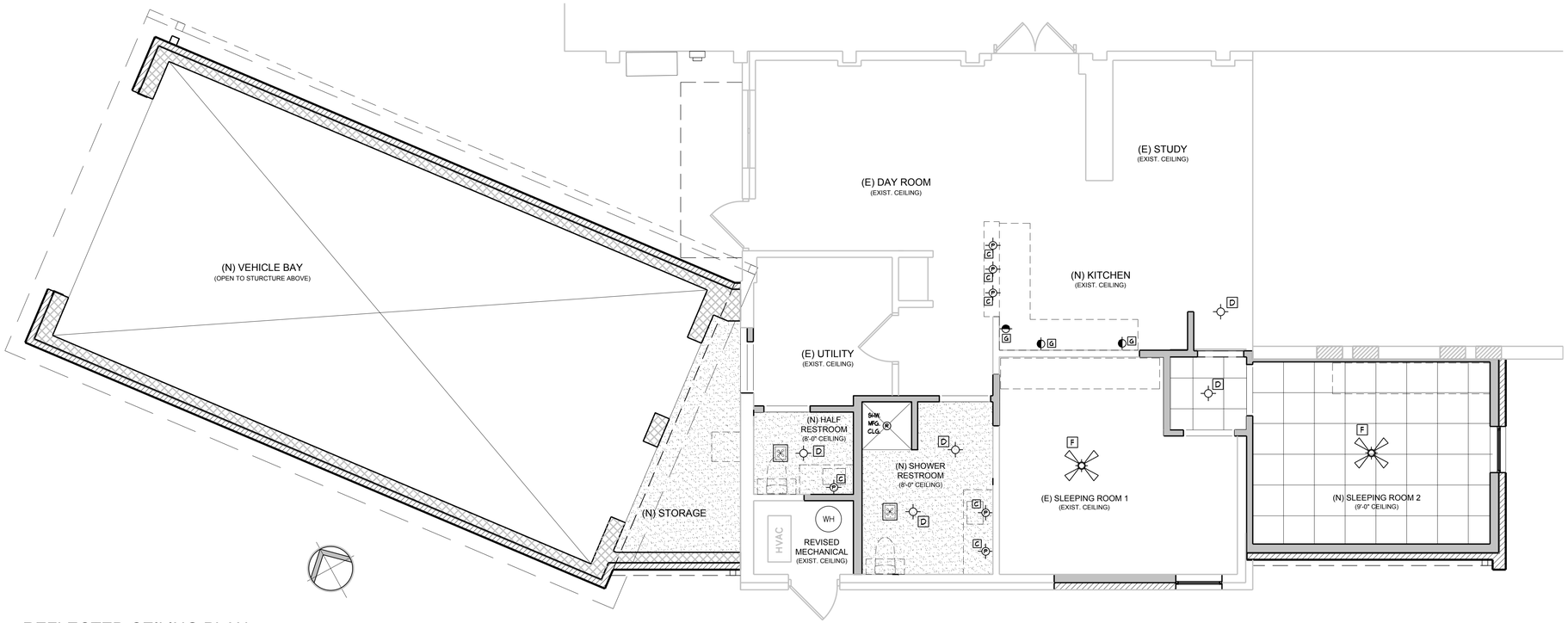

3 EMS8-A120 REFLECTED CEILING PLAN
SCALE: 1/4" = 1'-0"

RCP LEGEND

- GYPSUM WALLBOARD
- 2'x2' LAY-IN ACOUSTICAL TILE CEILING GRID
- PLYWOOD SURFACE
- 1x WOOD PLANKS/T&G
- 2x WOOD FRAME INFILL, INCLUDES: INSULATION, GYP. BD., TAPE, FLOAT, CHALK ALL JOINTS/GAPS & PAINT
- OPEN TO STRUCTURE ABOVE
- FLUSH MOUNT CEILING LIGHT
- PENDANT CEILING LIGHT
- RECESSED CEILING MOUNT LIGHT
- (2) 4 FT. NEON BALLAST FLUSH MOUNT WORK LIGHT, W/ MTL PROTECTIVE COVER
- RECESSED MOUNTED EXHAUST FAN
- CEILING FAN WITH LIGHT
- WALL SCONCE
- SURFACE MOUNT UNDER-CABINET LIGHT

CALL-OUT INDEX

1. CERAMIC TILE FLOORING
2. FLOOR DRAIN, SEE M.E.P. & STRUCTUAL FOR SPECS.
3. APPLIANCE PROVIDED BY OWNER, TYP.
4. EXISTING FLOORING TO REMAIN, PATCH AND REPAIR IN KIND IF DAMAGED DURING CONSTRUCTION, TYP.
5. (N) 2'-6" WALL CABINET
6. LIGHTING FIXTURE SCHEDULE FS/EMS8-A070, DETAIL No. 3

BID DOCUMENTS

REGISTERED ARCHITECT JOHN W. OWEN HARGROVE 16348 STATE OF TEXAS

mwm Design Group
305 East Huntland Drive
Suite 200
Austin, Texas 78752
p: 512.453.0767
f: 512.453.1734
TBAE FIRM REGISTRATION NO.: 1452
TBPE FIRM REGISTRATION NO.: F-1416
TBPLS FIRM REGISTRATION NO.: 10065600

NO.	DATE	DESCRIPTION	BY

0 1"
The bar above measures one inch on the original drawing. Adjust scales accordingly.

ENLARGED FLOOR & REFLECTIVE CELING PLANS

CITY OF AUSTIN, EMS EXPANSIONS
5211 BALCONES DRIVE, AUSTIN, TEXAS, 78731

PLOTTED: 8/30/2016
JOB NO: 023-81

EMS8-A120

File: Y:\023-790_WomensLockerRooms\CAD\EMS Station 8\Sheets\EMS8-A120 LG RCP PLANS.dwg 24x36

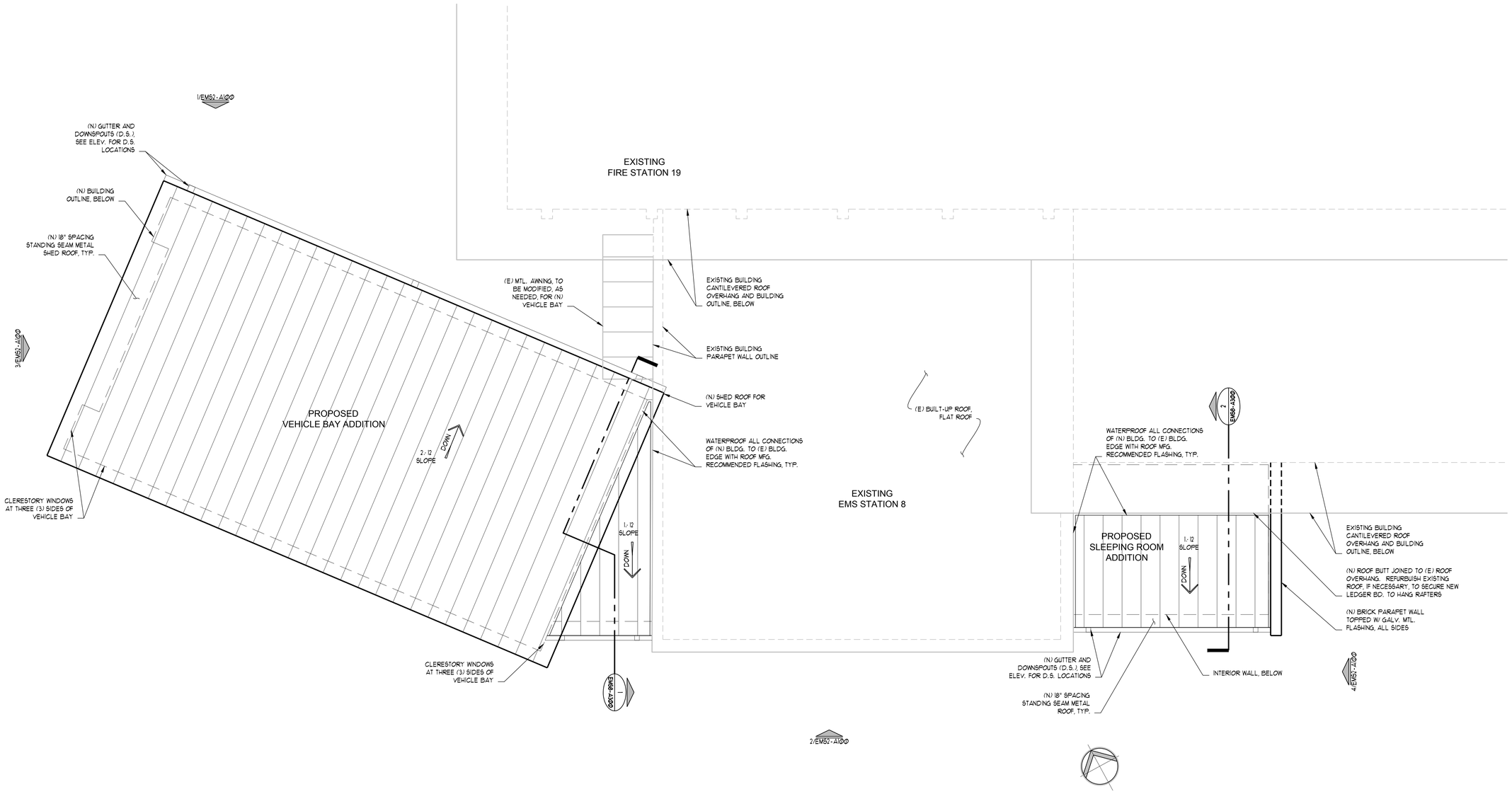

1 EMS8-A130 ROOF PLAN
SCALE: 1/4" = 1'-0"

BID DOCUMENTS

REGISTERED ARCHITECT W. OWEN HARTNETT 18348 STATE OF TEXAS

mwm Design Group

305 East Huntland Drive
Suite 200
Austin, Texas 78752
p: 512.453.0767
f: 512.453.1734

TBAE FIRM REGISTRATION NO.: 1452
TBPE FIRM REGISTRATION NO.: F-1416
TBPLS FIRM REGISTRATION NO.: 10065600

NO.	DATE	DESCRIPTION	BY

0 1"
The bar above measures one inch on the original drawing. Adjust scales accordingly.

ROOF PLAN

CITY OF AUSTIN, EMS EXPANSIONS
5211 BALCONES DRIVE, AUSTIN, TEXAS, 78731

PLOTTED: 8/30/2016
JOB NO: 023-81

EMS8-A130

File: "A:\023-79D_WomensLockerRooms\CAD\EMS Station 8\Sheets\EMS8-A130 ROOF PLAN.dwg 24x36

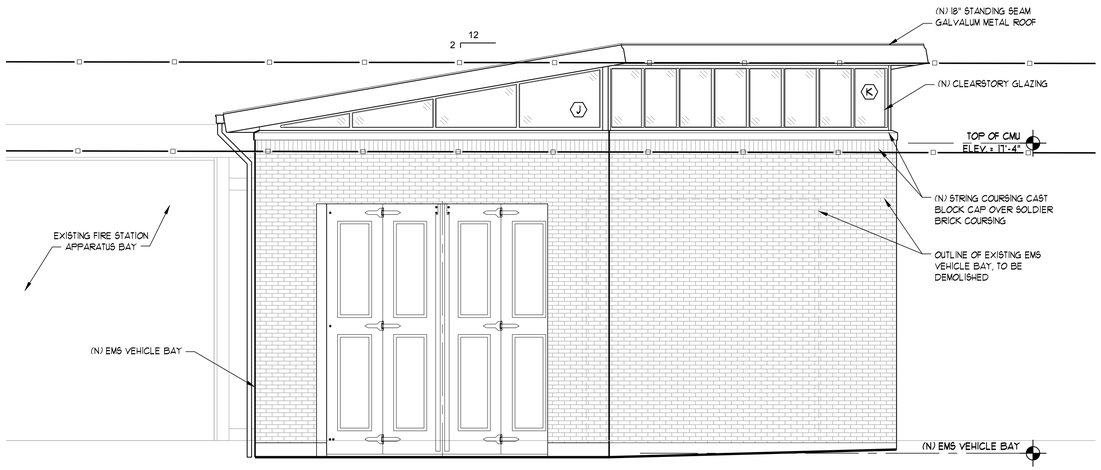

1 EMS8-A210 EAST ELEVATION
SCALE: 1/4" = 1'-0'

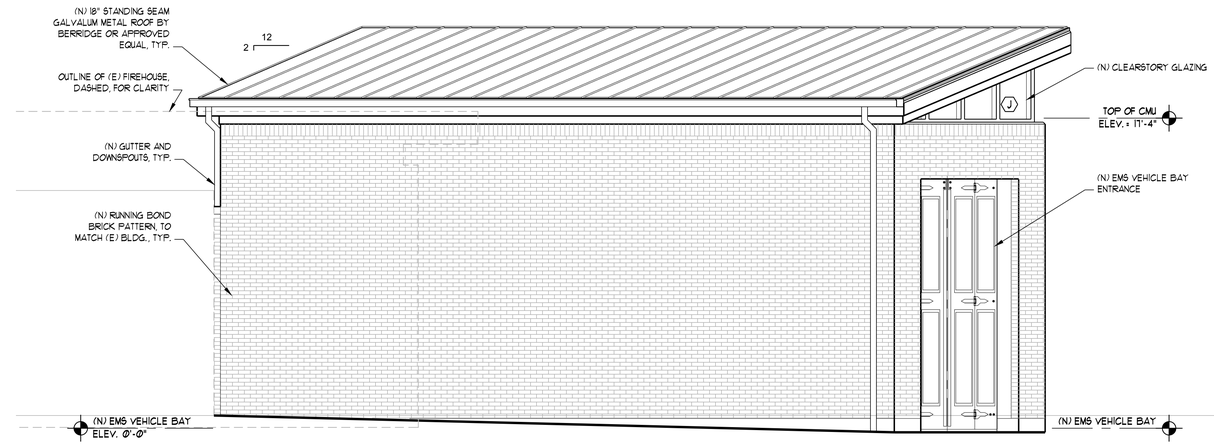

2 EMS8-A210 NORTH ELEVATION
SCALE: 1/4" = 1'-0'

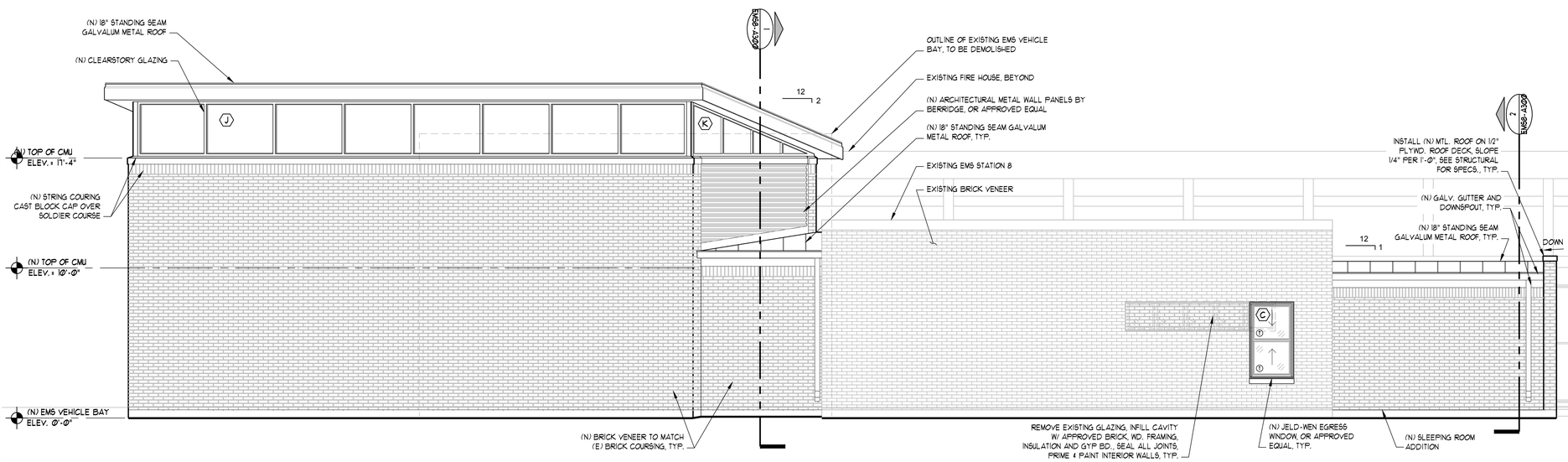

3 EMS8-A210 SOUTH ELEVATION
SCALE: 1/4" = 1'-0'

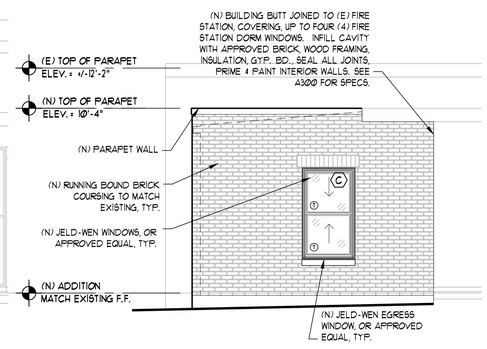

4 EMS8-A210 WEST ELEVATION
SCALE: 1/4" = 1'-0'

BID DOCUMENTS

REGISTERED ARCHITECT W. OWEN HARRISON 18348 STATE OF TEXAS

mwm Design Group

305 East Huntland Drive
Suite 200
Austin, Texas 78752
p: 512.453.0767
f: 512.453.1734

TBAE FIRM REGISTRATION NO.: 1452
TBPE FIRM REGISTRATION NO.: F-1416
TBPLS FIRM REGISTRATION NO.: 10065600

NO.	DATE	DESCRIPTION	BY

0 1"
The bar above measures one inch on the original drawing. Adjust scales accordingly.

BUILDING ELEVATIONS

CITY OF AUSTIN, EMS EXPANSIONS
5211 BALCONES DRIVE, AUSTIN, TEXAS, 78731

PLOTTED: 8/30/2016
JOB NO: 023-81

EMS8-A210

File: Y:\023-790_WomensLockerRooms\CAD\EMS Station 8\Sheets\EMS8-A210 BLDG ELEV.dwg 24x36

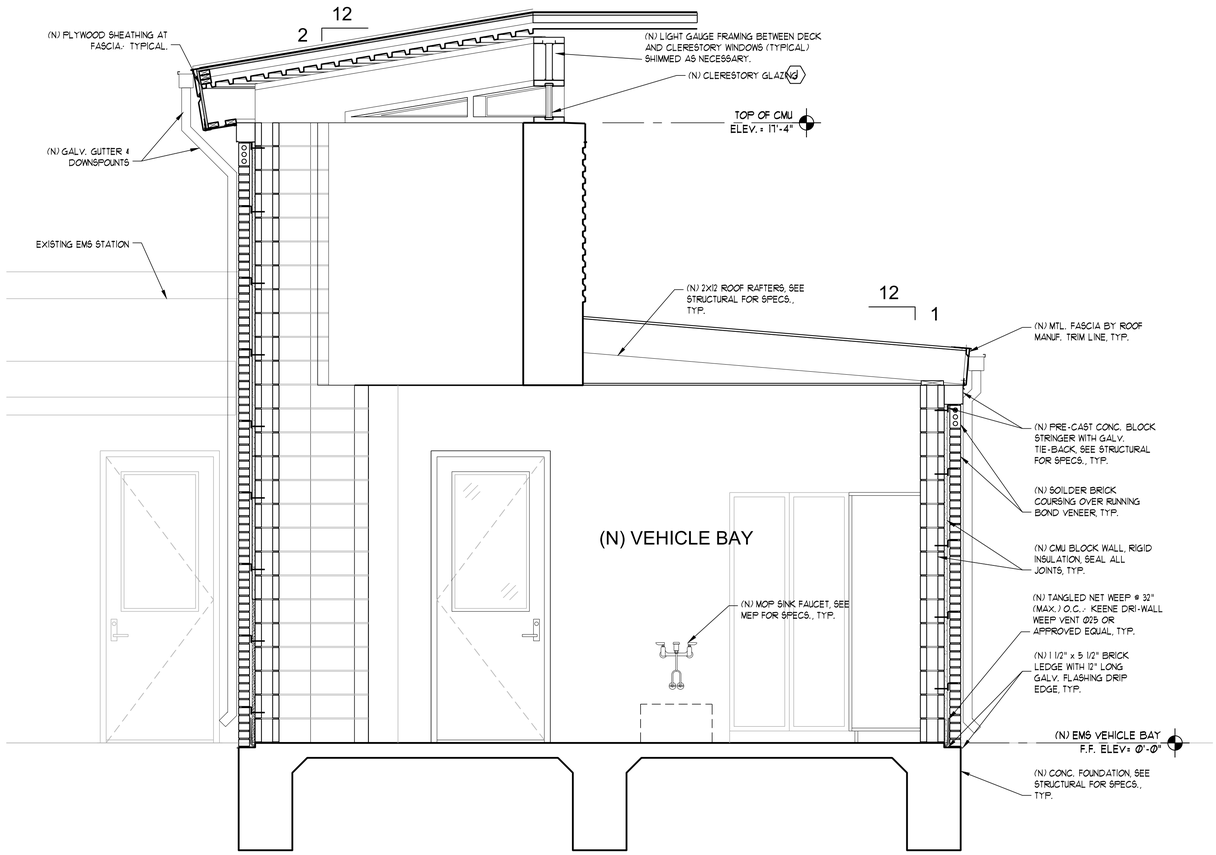

1 EMS8-A300 BUILDING SECTION
SCALE: 1/2" = 1'-0'

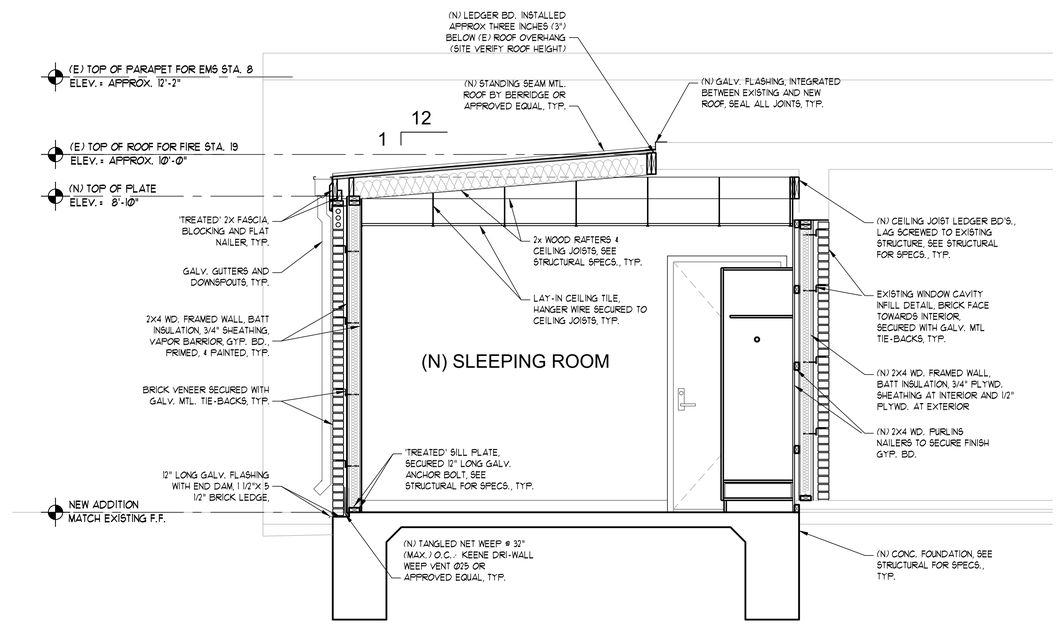

2 EMS8-A300 BUILDING SECTION
SCALE: 1/2" = 1'-0'

BID DOCUMENTS

REGISTERED ARCHITECT
W. OWEN HARTNETT
8/30/2016
18348
STATE OF TEXAS

mwm Design Group
305 East Huntland Drive
Suite 200
Austin, Texas 78752
p: 512.453.0767
f: 512.453.1734
TBAE FIRM REGISTRATION NO.: 1452
TBPE FIRM REGISTRATION NO.: F-1416
TBPLS FIRM REGISTRATION NO.: 10065600

NO.	DATE	DESCRIPTION	BY

0 1"
The bar above measures one inch on the original drawing. Adjust scales accordingly.

BUILDING SECTIONS

CITY OF AUSTIN, EMS EXPANSIONS
5211 BALCONES DRIVE, AUSTIN, TEXAS, 78731

PLOTTED: 8/30/2016
JOB NO: 023-81

EMS8-A300

File: Y:\023-79D_WomensLockerRooms\CAD\EMS Station 8\Sheets\EMS8-A300 BLDG SECT.dwg 24x36

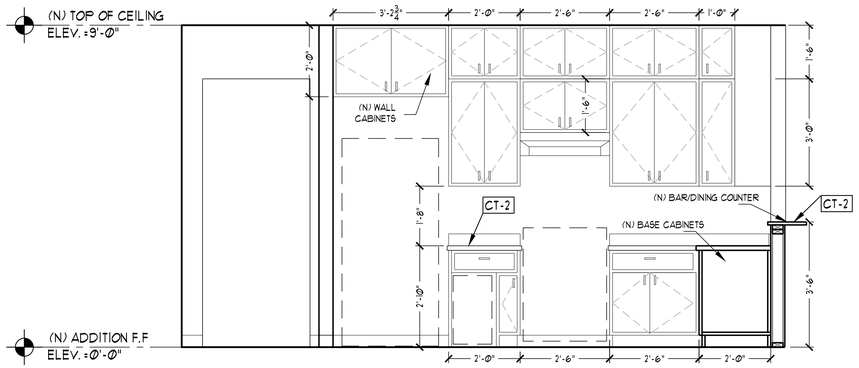

1 EMS8-A400 KITCHEN INTERIOR ELEVATION
SCALE: 1/2" = 1'-0'

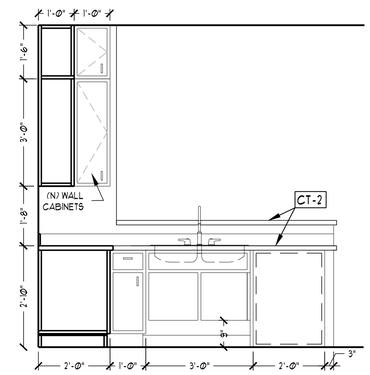

2 EMS8-A400 KITCHEN INTERIOR ELEVATION
SCALE: 1/2" = 1'-0'

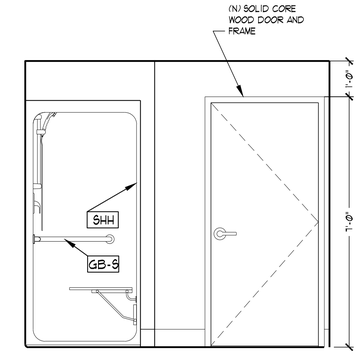

3 EMS8-A400 SHOWER/RESTROOM INTERIOR ELEV.
SCALE: 1/2" = 1'-0'

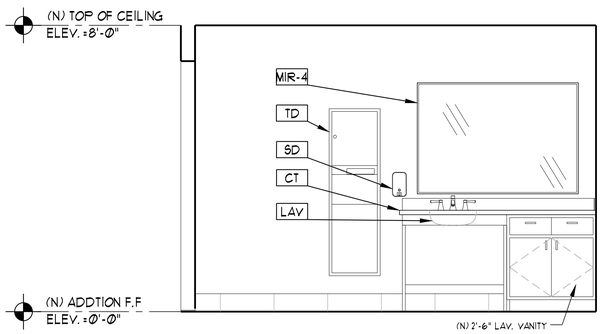

4 EMS8-A400 SHOWER/RESTROOM INTERIOR ELEV.
SCALE: 1/2" = 1'-0'

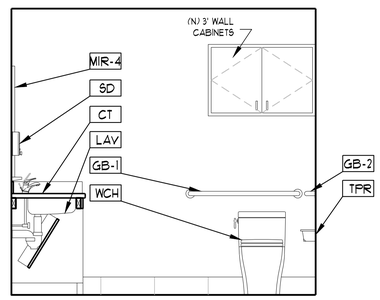

5 EMS8-A400 SHOWER/RESTROOM INTERIOR ELEV.
SCALE: 1/2" = 1'-0'

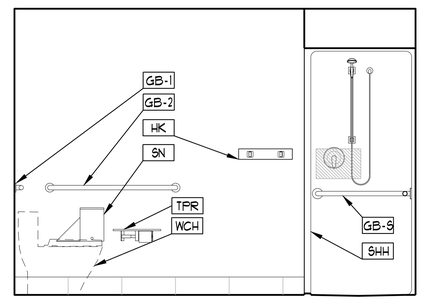

6 EMS8-A400 SHOWER/RESTROOM INTERIOR ELEV.
SCALE: 1/2" = 1'-0'

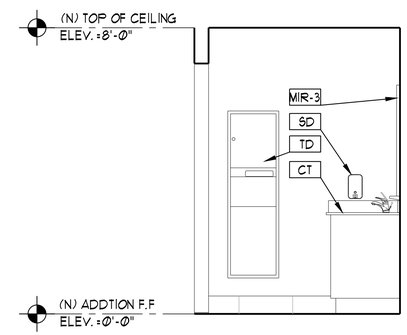

7 EMS8-A400 HALF BATH INTERIOR ELEV.
SCALE: 1/2" = 1'-0'

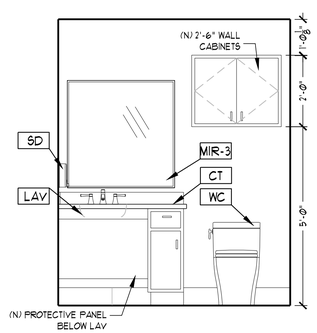

8 EMS8-A400 HALF BATH INTERIOR ELEV.
SCALE: 1/2" = 1'-0'

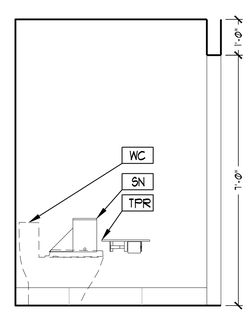

9 EMS8-A400 HALF BATH INTERIOR ELEV.
SCALE: 1/2" = 1'-0'

BID DOCUMENTS

REGISTERED ARCHITECT
ALLEN W. OWEN HARGROVE
16348
STATE OF TEXAS

mwm Design Group
305 East Huntland Drive
Suite 200
Austin, Texas 78752
p: 512.453.0767
f: 512.453.1734
TBAE FIRM REGISTRATION NO.: 1452
TBPE FIRM REGISTRATION NO.: F-1416
TBPLS FIRM REGISTRATION NO.: 10065600

NO.	DATE	DESCRIPTION	BY

0 1"
The bar above measures one inch on the original drawing. Adjust scales accordingly.

INTERIOR ELEVATIONS

CITY OF AUSTIN, EMS EXPANSIONS
5211 BALCONES DRIVE, AUSTIN, TEXAS, 78731

PLOTTED: 8/30/2016
JOB NO: 023-81

EMS8-A400

File: Y:\023-790_WomensLockerRooms\CAD\EMS Station 8\Sheets\EMS8-A400 INT ELEV.dwg 24x36

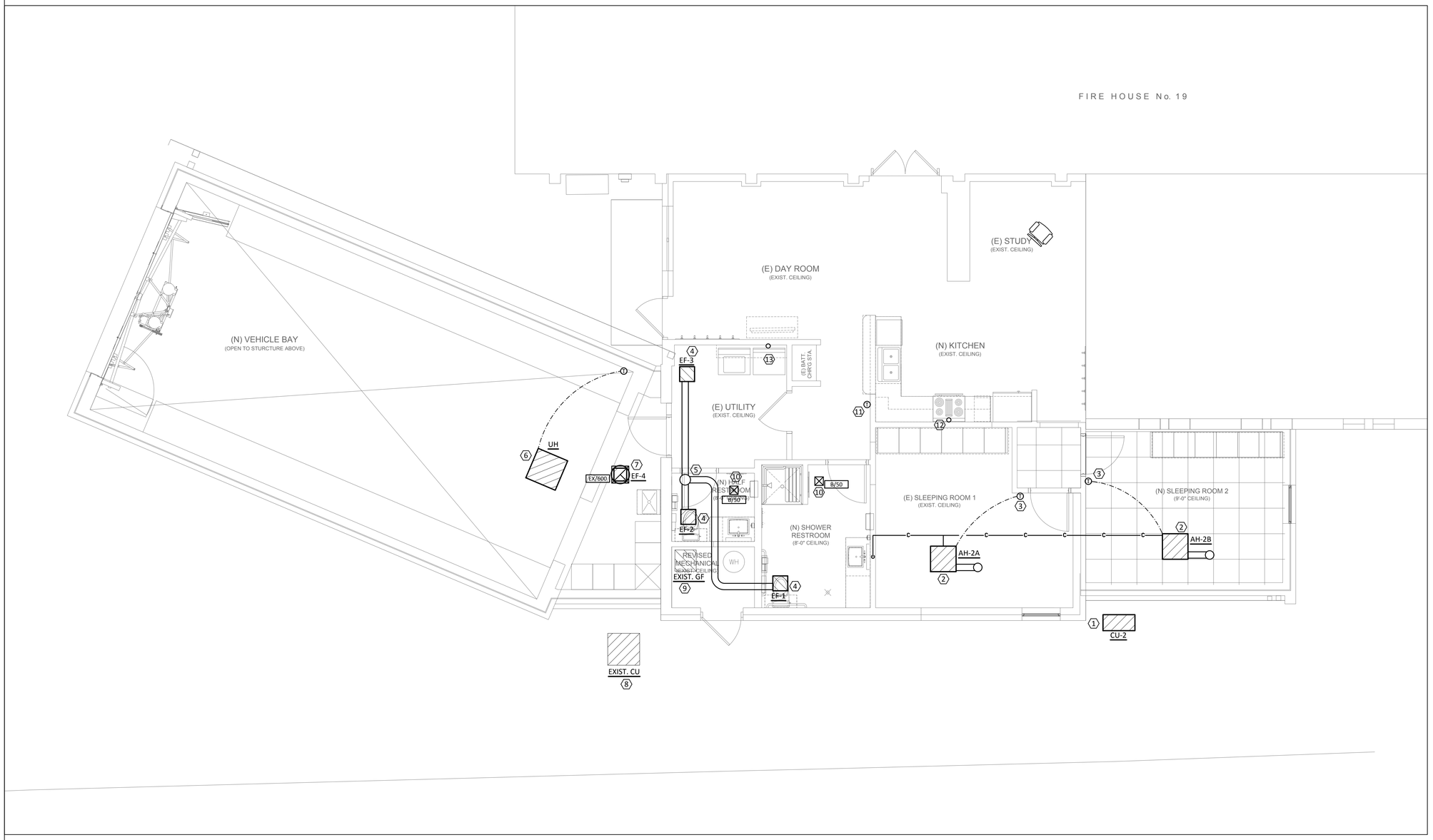

1 MECHANICAL PLAN

SCALE: 1/4" = 1'-0"

PLAN GENERAL NOTES

A. REFER TO M0.00 FOR GENERAL NOTES.

B. DO NOT ROUTE ANY DUCT & PIPING ABOVE ELECTRICAL PANELS.

C. PROVIDE AND INSTALL TRANSITION AS REQUIRED TO CONNECT SMALL DUCT TO LOUVER OR GRILLE.

D. COORDINATE WITH ARCHITECT AND STRUCTURAL ENGINEER FOR ALL WALL AND ROOF PENETRATION.

E. MAINTAIN 10' CLEARANCE FROM ANY EXHAUST AIR OUTLET OR FLUE TO ANY OUTSIDE AIR INTAKE OR OPENING TO BUILDING.

F. PROVIDE LOCKING ACCESS PORT CAPS ON ALL REFRIGERANT CIRCUIT SERVICE PORTS LOCATED ON THE EXTERIOR OF THE BUILDING.

G. ESTIMATED LOCATION OF ALL EXISTING MECHANICAL LAYOUT AND EQUIPMENT LOCATION IS BASED ON SITE OBSERVATION AND EXISTING DRAWINGS. CONTRACTOR SHALL VERIFY SIZE, LOCATION OF ALL EXISTING PLUMBING PIPING EQUIPMENT PRIOR TO BID AND CONSTRUCTION.

KEYED NOTES

1. HEAT PUMP UNIT FOR DUCTLESS UNITS SHALL BE MOUNTED LEVEL ON CONCRETE PAD WITH NEOPRENE CORK PAD
2. CEILING CASSETTE AIR HANDLER SHALL BE SUSPENDED FROM STRUCTURAL MEMBER WITH VIBRATION ISOLATORS.

   ROUTE 3/4" INSULATED CONDENSATE DRAIN TO TO TAIL PIECE AT LAVATORY.

   ROUTE 6" OUTSIDE AIR DUCT TO UNIT FROM LOW PROFILE ROOF CAP (GREENHECK RCC-7 OR APPROVED EQUIVALENT).
3. PROVIDE AND INSTALL TEMPERATURE CONTROLLER ON WALL AT 48" A.F.F.
4. EXHAUST FAN SHALL BE SUSPENDED FROM CEILING WITH VIBRATION ISOLATORS.
5. ROUTE COMBINED 10"Ø EXHAUST DUCT FROM EXHAUST FANS THROUGH ROOF TO LOW PROFILE ROOF CAP WITH INTEGRAL BIRDSCREEN AND FLASHING.
6. GAS UNIT HEATER SHALL BE SUSPENDED FROM STRUCTURAL MEMBER WITH VIBRATION ISOLATORS AT 13'-0" A.F.F. TO BOTTOM OF UNIT HEATER. ROUTE COMBINED DRAIN FROM BOTH UNIT HEATERS SECONDARY HEAT EXCHANGER CONDENSATE 3/4" DRAIN FROM HEATER TO 1" ABOVE RIM OF LS INK.

   ROUTE 4" COMBUSTION AIR PIPING AND 4" VENT AIR PIPING UP THROUGH ROOF VIA MANUFACTURER'S CONCENTRIC VENT KIT. ROUTE COMBINED 3/4" DRAIN FROM UNIT HEATER VEND PIPING TO 1" ABOVE RIM OF LS SINK.

   PROVIDE AND INSTALL THERMOSTAT FOR HEATER ON WALL AT 48" A.F.F. AS SHOWN ON PLAN
7. PROVIDE AND INSTALL EXHAUST FAN WITH CURB ON ROOF. ROUTE 12x12 DUCT FROM EXHAUST DUCT TO EXHAUST GRILLE 'EX' ON CEILING
8. EXISTING 3.5 TON CONDENSING UNIT (MANUFACTURER DATED 09/2012) IS APPEARED IN GOOD WORKING CONDITION. CONDENSING UNIT SHALL BE REMAIN.
9. EXISTING GAS FURNACE (AHU#2) IS APPEARED IN GOOD WORKING CONDITION. EXISTING GAS FURNACE, DUCT WORK AND DISTRIBUTION AIR GRILLES SHALL REMAIN (EXCEPT AS NOTE #10 BELOW)
10. NEW SUPPLY AIR GRILLES SHALL BE CONNECTED TO EXISTING HVAC SYSTEM
11. EXISTING THERMOSTAT ON WALL FOR EXISTING HVAC SYSTEM SHALL REMAIN.
12. ROUTE 4" EXHAUST DUCT FROM KITCHEN HOOD THROUGH ROOF TO LOW PROFILE ROOF CAP.
13. ROUTE 4" EXHAUST DUCT FROM DRYER THROUGH ROOF TO LOW PROFILE ROOF CAP.

ENCOTECH ENGINEERING CONSULTANTS
TBPE Firm 1141 | 8500 Bluffstone Cove, Suite B-103 Austin, Texas 78759 | 512.338.1101
Project No.: 14046.M.AUS

STATE OF TEXAS — LYNN C. BROWN — 55248 — LICENSED PROFESSIONAL ENGINEER
08/30/2016

mwm Design Group
305 East Huntland Drive
Suite 200
Austin, Texas 78752
p: 512.453.0767
f: 512.453.1734
TBAE FIRM REGISTRATION NO.: 1452
TBPE FIRM REGISTRATION NO.: F-1416
TBPLS FIRM REGISTRATION NO.: 10065600

NO.	DATE	DESCRIPTION	BY

SCALE IS AS NOTED ON DRAWING

MECHANICAL PLAN

CITY OF AUSTIN, EMS EXPANSIONS
5211 BALCONES DRIVE, AUSTIN, TEXAS, 78731

PLOTTED: 8/30/2016
JOB NO: 023-81

EMS8-M110

File: J:\ACTIVE PROJECTS\MWM\14095.M.AUS – EMS\1. MEP\D-AutoCAD\EMS Station 8\14095-EMS8 M100 Mech Plan.dwg 24x36

CONDENSING UNIT SCHEDULE

MARK	CLG. DATA		ELECTRICAL DATA			UNIT DATA				
	TONS	EER/ SEER	MCA	MOCP	VOLT/PH	MAKE	MODEL	LBS.	NOTES	CORRESPONDING AIR HANDLER
HP	1.5	14.0/ 21.0	13.3	20	208V/1PH	LG	LMU18CHV	100		

NOTES:
1. PROVIDE DISCONNECT, TO BE FIELD MOUNTED BY ELECTRICAL CONTRACTOR.
2. COMPRESSOR SHALL BE PROVIDED WITH 10 YEARS WARRANTY.
3. UNIT TO BE PROVIDED LOW AMBIENT KIT FOR OPERATION DOWN TO 40°F.

DUCTLESS SPLIT UNIT SCHEDULE

MARK	AIR DATA					COOLING DATA												HEATING DATA					ELECTRICAL DATA			UNIT DATA			
	TOT. CFM	O/A CFM	E.S.P.	HP	CONFIGURATION	AMBIENT D.B.	AMBIENT W.B.	ENTERING D.B.	ENTERING W.B.	LEAVING D.B.	LEAVING W.B.	DESIGN SENS.	DESIGN TOT.	SCHEDULE SENS.	SCHEDULE TOT.	STAGE	EER/ SEER	DES. MBH	SCHEDULE MBH	SCHEDULE KW	STAGE	HSPF	MCA	MOCP	VOLT/PH	MAKE	MODEL	LBS.	NOTES
AH-2A	265	30	N/A	-	CASSETE	105	74	80	67	-	-			-	9.0	INV.	14.0/ 21.0	-	8.5	-	-	9.20	0.2	15	208V/1PH	LG	LMCN097HV	31	
AH-2B	265	30	N/A	-	CASSETE	105	74	80	67	-	-			-	9.0	INV.	14.0/ 21.0	-	8.5	-	-	9.20	0.2	15	208V/1PH	LG	LMCN097HV	31	

NOTES:
1. EACH UNIT TO BE MOUNTED USING VIBRATION ISOLATORS.
2. INDOOR UNIT TO INCLUDE MANUFACTURER THERMOSTAT.

AIR DEVICE SCHEDULE

MARK	SIZE	MOUNTING	INLET	CFM	MAX NC	DESCRIPTION	MAKE	MODEL
B	8" x 6"	GYP CEILING	-	50-100	-	LOUVER FACE, DOUBLE DEFLECTION SUPPLY AIR GRILL	PRICE	8x6-620-F-L-A-B12

NOTES:
1. COORDINATE EXACT LOCATION OF DIFFUSERS WITH ARCHITECTURAL REFLECTED CEILING PLAN.
2. NECK SIZES SHALL BE SIZED AS PER FLEX DUCT SCHEDULE, EXCEPT RETURN GRILLES, WHICH HAVE NOMINAL SIZE NECK.
3. AIRFLOW QUANTITIES AS NOTED ON MECHANICAL DRAWINGS.

UNIT HEATER SCHEDULE

TAG	GAS HEAT						MAKE	MODEL	NOTES
	MBH		ELECTRICAL		CFM	LBS			
	INPUT	OUTPUT	V / Ph	A					
UH	60	49.8	120/1	3.8	750	68	REZNOR	UDAS-60	1,2

NOTES:
1. PROVIDE UNIT WITH DISCONNECT SWITCH, HEAT PURGE SWITCH, AND CEILING BRACKET.
2. UNITS TO BE CONTROLLED BY THERMOSTAT SET TO 40°

FAN SCHEDULE

MARK	AREA SERVED	LOCATION	INTERLOCK	AIR DATA				ELECTRICAL DATA			UNIT DATA					
				CFM	S.P.	HP	RPM	FLA	MOCP	VOLT/PH	MAKE	MODEL	TYPE	DRIVE	LBS.	NOTES
EF-1	BATHROOM	CEILING	LIGHT SWITCH	75	0.25	-	900	0.6	15	115V/1PH	GREENHECK	SP-B90	CENTRIFUGAL	DIRECT	8	DISC, SC, BDD, CC, BS, VI
EF-2	BATHROOM	CEILING	LIGHT SWITCH	75	0.25	-	900	0.6	15	115V/1PH	GREENHECK	SP-B90	CENTRIFUGAL	DIRECT	8	DISC, SC, BDD, CC, BS, VI
EF-3	BATHROOM	CEILING	LIGHT SWITCH	75	0.25	-	900	0.6	15	115V/1PH	GREENHECK	SP-B90	CENTRIFUGAL	DIRECT	8	DISC, SC, BDD, CC, BS, VI
EF-4	VEHICLE BAY	ROOF	CONTINUOUS	544	0.25	1/4	VAR	5.8	15	115V/1PH	GREENHECK	G-085-VG	CENTRIFUGAL	DIRECT VARIABLE	19	DISC, SC, BDD, RC, BS, VI

NOTES:
1. FEATURE NOTES:
   - DISC = DISCONNECT SWITCH
   - TD = PROVIDE AND INSTALL A TIME-DELAY-OFF RELAY SWITCH TO ALLOW FAN TO OPERATE UP TO 15 MINUTES AFTER LIGHTS ARE TURNED OFF
   - SC = SPEED CONTROL (DIRECT DRIVE FANS ONLY)
   - BDD = BACKDRAFT DAMPER
   - RC = ROOF CURB
   - CC = CURB CAP
   - BS = BIRD SCREEN
   - VI = VIBRATION ISOLATORS

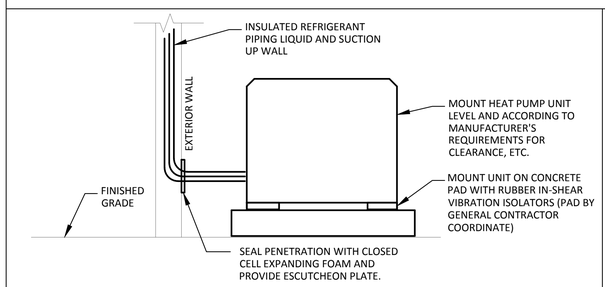

REFRIGERANT PIPING INSULATION NOTES

1. ALL CLOSED CELL POLYMER INSULATION SHALL HAVE GLUED JOINTS WITH COMPLETE COVERAGE OF ALL METAL SURFACES. ALL INSULATION EXPOSED TO EXTERIOR SHALL BE PAINTED WITH TWO COATS AS PER INSULATION MANUFACTURERS SPECIFICATIONS.
2. PROVIDE AND INSTALL LINE DRYER IN LIQUID FREON LINE
3. PROVIDE INSULATION SHIELD AT ALL SUPPORTS.

1 HEAT PUMP UNIT DETAIL
NOT TO SCALE

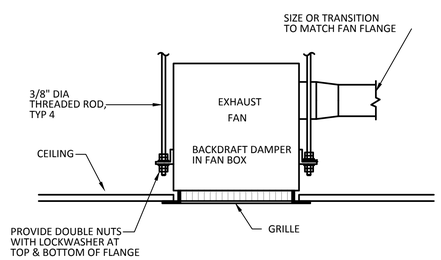

2 CEILING EXHAUST FAN DETAIL
NOT TO SCALE

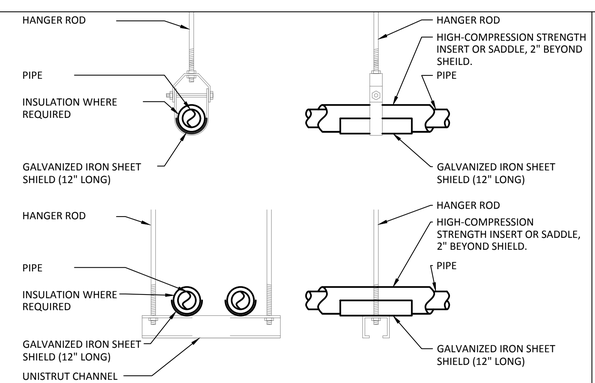

NOTE:
1. ATTACH SUPPORTS FOR ALL PIPING SUSPENDED FROM THE STEEL STRUCTURE TO THE TOP CORD OF JOISTS OR BEAM.
2. PROVIDE COPPER OR PLASTIC COATED HANGERS FOR NON-INSULATED COPPER PIPE

3 PIPE HANGER DETAIL
NOT TO SCALE

ENCOTECH ENGINEERING CONSULTANTS
TBPE Firm 1141 | 8500 Bluffstone Cove, Suite B-103 Austin, Texas 78759 | 512.338.1101
Project No.: 14046.M.AUS

STATE OF TEXAS — LYNN C. BROWN 55248 — LICENSED PROFESSIONAL ENGINEER
08/30/2016

mwm Design Group
305 East Huntland Drive
Suite 200
Austin, Texas 78752
p: 512.453.0767
f: 512.453.1734
TBAE FIRM REGISTRATION NO.: 1452
TBPE FIRM REGISTRATION NO.: F-1416
TBPLS FIRM REGISTRATION NO.: 10065600

NO.	DATE	DESCRIPTION	BY

SCALE IS AS NOTED ON DRAWING

MECHANICAL SCHEDULES & DETAILS

CITY OF AUSTIN, EMS EXPANSIONS
5211 BALCONES DRIVE, AUSTIN, TEXAS, 78731

PLOTTED: 8/30/2016
JOB NO: 023-81

EMS8-M210

File: J:\ACTIVE PROJECTS\MWM\14095.M.AUS - EMS\1. MEP\D-AutoCAD\EMS Station 8\14095-EMS8 M210 Mech Schedule Details.dwg 24x36

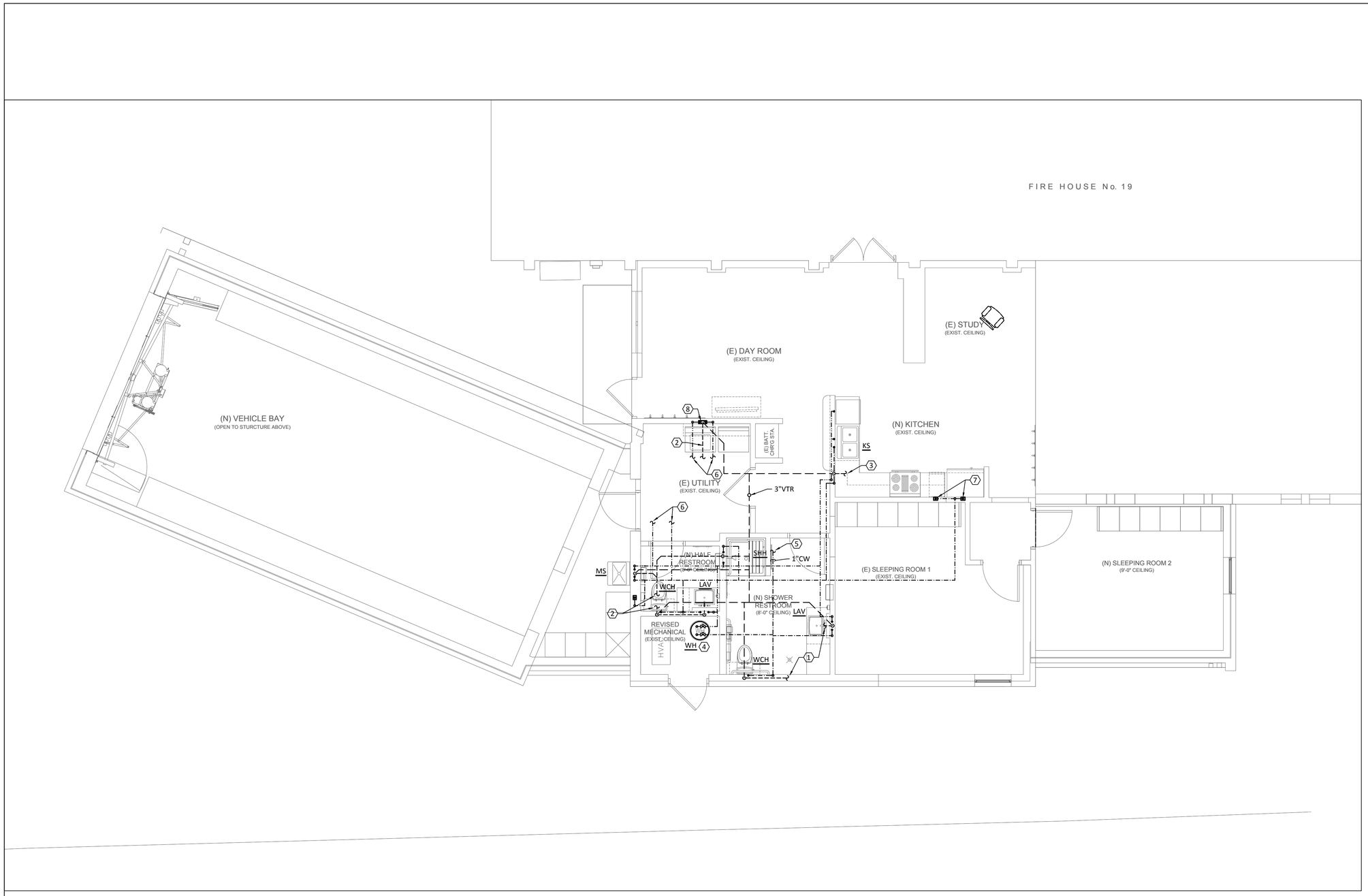

PLAN GENERAL NOTES

A. REFER TO P0.00 FOR GENERAL NOTES.

B. ESTIMATED LOCATION OF ALL EXISTING PLUMBING LAYOUT AND EQUIPMENT LOCATION IS BASED ON SITE OBSERVATION AND EXISTING DRAWINGS. CONTRACTOR SHALL VERIFY SIZE, LOCATION OF ALL EXISTING PLUMBING PIPING EQUIPMENT PRIOR TO BID AND CONSTRUCTION

C. DO NOT ROUTE ANY PLUMBING PIPING ABOVE ANY ELECTRICAL PANEL.

D. PROVIDE AND INSTALL WATER SAVER TRAP PRIMER FROM NEAREST LAVATORY OR TRAP PRIMER WITH ACCESSIBLE SHUT-OFF VALVE IN WALL TO ALL FLOOR DRAINS, HUB DRAINS AND FLOOR SINKS. SEE PLAN FOR LOCATION.

E. PROVIDE AND INSTALL ACCESS TO ALL SHUT-OFF VALVES.

F. INSULATE 100% OF ALL HOT WATER PIPING, HOT WATER RETURN PIPING & COLD WATER PIPING ACCORDING TO SPECIFICATIONS.

KEYED NOTES

1. CONNECT TO EXISTING WASTE WATER PIPING AT DEMOLISH SHOWER.
2. CONNECT TO EXISTING WASTE WATER PIPING AT DEMOLISHED WATER CLOSET.
3. CONNECT TO EXISTING WASTE WATER PIPING AT DEMOLISHED KITCHEN SINK.
4. RELOCATE EXISTING WATER HEATER ON NEW CONCRETE PAD.
5. CONNECT NEW 1" CW PIPING TO EXISTING CW PIPING ABOVE CEILING.
6. 3/4"CW AND 3/4"HW PIPING TO EXISTING PIPING ABOVE CEILING TO LAUNDRY SINK AND CLOTHES WASHER.
7. PROVIDE AND INSTALL INSTALL ICE MAKER VALVE BOX ON WALL FOR REFRIGERATOR.
8. PROVIDE WASHER BOX FOR NEW LOCATION OF WASHER.

1 PLUMBING PLAN
SCALE: 1/4" = 1'-0"

ENCOTECH
ENGINEERING CONSULTANTS
TBPE Firm 1141 | 8500 Bluffstone Cove, Suite B-103
Austin, Texas 78759 | 512.338.1101
Project No.: 14046.M.AUS

STATE OF TEXAS
LYNN C. BROWN
55248
LICENSED PROFESSIONAL ENGINEER
08/30/2016

mwm Design Group
305 East Huntland Drive
Suite 200
Austin, Texas 78752
p: 512.453.0767
f: 512.453.1734
TBAE FIRM REGISTRATION NO.: 1452
TBPE FIRM REGISTRATION NO.: F-1416
TBPLS FIRM REGISTRATION NO.: 10065600

NO.	DATE	DESCRIPTION	BY

SCALE IS AS NOTED ON DRAWING

PLUMBING PLAN

CITY OF AUSTIN, EMS EXPANSIONS
5211 BALCONES DRIVE, AUSTIN, TEXAS, 78731

PLOTTED: 8/30/2016
JOB NO: 023-81

EMS8-P110

File: J:\ACTIVE PROJECTS\MWM\14095.M.AUS - EMS\1. MEP\D-AutoCAD\EMS Station 8\14095-EMS8 P100 Plumb Plan.dwg 24x36

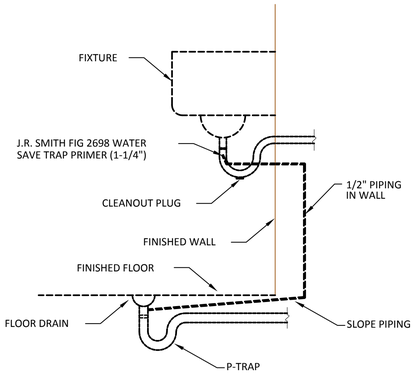

5 WATER SAVER TRAP PRIMER DETAIL
NOT TO SCALE

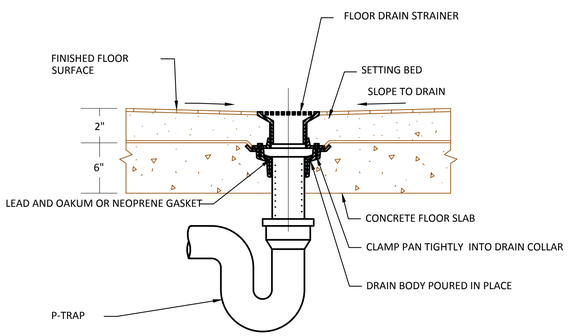

4 TYPICAL FLOOR DRAIN DETAIL
NOT TO SCALE

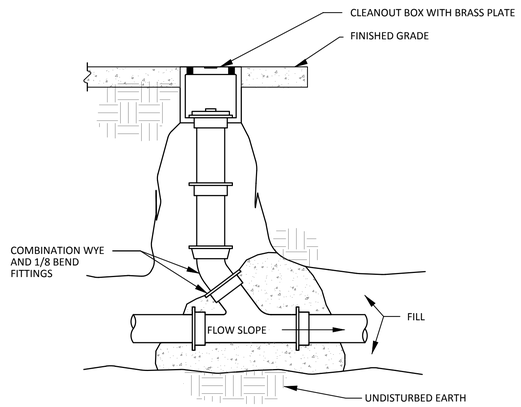

3 EXTERIOR CLEANOUT DETAIL
NOT TO SCALE

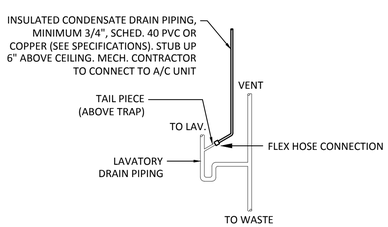

2 CONDENSATE DRAIN - LAVATORY TAILPIECE DETAIL
NOT TO SCALE

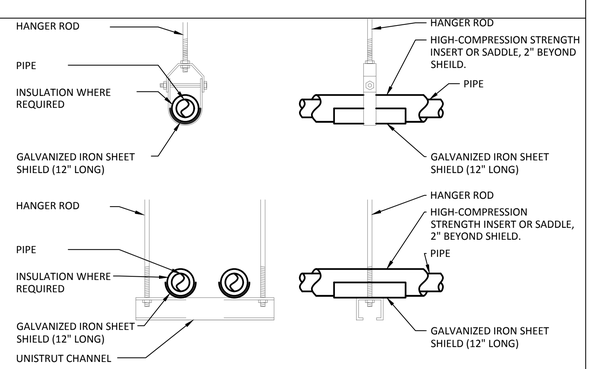

NOTE:
1. ATTACH SUPPORTS FOR ALL PIPING SUSPENDED FROM THE STEEL STRUCTURE TO THE TOP CORD OF JOISTS OR BEAM.
2. PROVIDE COPPER OR PLASTIC COATED HANGERS FOR NON-INSULATED COPPER PIPE

1 PIPE HANGER DETAIL
NOT TO SCALE

PLUMBING FIXTURE SCHEDULE

MARK	CW	HW	VENT	S&W	MODEL NUMBER	DESCRIPTION
WCH	1/2"	-	2"	3"	WATER CLOSET: KOHLER MODEL: HIGHLINE K-3519 SEAT: CHURCH 295SSC	FLUSH TANK WATER CLOSET, FLOOR MOUNTED, 1.0 GPF PRESSURE ASSIST FLUSHING SYSTEM, FLOOR OUTLET, ELONGATED BOWL, TRIP LEVER ON OPPOSITE SIDE FROM ADJACENT WALL, ADA COMPLIANT OPEN FRONT, ELONGATED SEAT WITH STAINLESS STEEL LOCKING HINGE
LAV	1/2"	1/2"	1-1/2"	2"	LAVATORY: KOHLER MODEL: K-1997-1-0 (HANDICAP USE) FAUCET: DELTA MODEL: 26C3942 MIXING VALVE: WATTS MODEL: L111	WALL HUNG, VITREOUS CHINA, 22"x19" BOWL, HANDICAP ACCESSIBLE. INSULATE ALL EXPOSED DRAIN AND WATER PIPING UNDER LAVATORY PER ADA REQUIREMENTS, WITH TRUEBRO MODEL #102W, OR EQUIVALENT MANUAL GOOSENECK FAUCET, 0.5 GPM AERATOR, 8" CENTERS, LEVER HANDLES INDIVIDUAL FAUCET THERMOSTATIC MIXING VALVE. HOT WATER TEMPERATURE SHALL BE LIMITED TO 110 DEGREES FAHRENHEIT.
SHH	1/2"	1/2"	1-1/2"	2"	SHOWER ENCLOSURE: AQUATIC ADA COMPLIANCE SHOWER FAUCET & HANDSET: MOEN MODEL: 8346 MIXING VALVE: LAWLER MODEL: SERIES 516 UNIT NUMBER: 86823 FLOOR DRAIN: SMITH 2005	TILED, COMPLETE WITH L-SHAPED FOLD-UP SEAT, GRAB BARS, SLIDE BAR, VACUUM BREAKER AND HOSE, CURTAIN RODS (VERIFY DEPTH OF RECESS). PRESSURE BALANCE SHOWER VALVE, HANDHELD SPRAY ASSEMBLY, 1.5 GPM, ADA COMPLIANT. ROUGH CHROME THERMOSTATIC MIXING VALVE, 0.5 MINIMUM FLOW RATE, OUTLET RANGE 95-115 DegF WITH A SPINDLE TO ADJUST OUTLET TEMPERATURE. SET OUTLET TEMPERATURE AT 110DegF. CAST IRON. ADJUSTABLE STRAINER HEAD.
KS	1/2"	1/2"	1-1/2"	2"	KITCHEN SINK: ELKAY MODEL: ELUHAD211555PD FAUCET: AMERICAN STD MODEL: 4175.300.F15 TRUEBRO 102	SINGLE BOWL SINK. STAINLESS STEEL, 18 GA. UNDERMOUNT. 21"W x 16"L x 5.5"D BOWL. ADA COMPLIANT. SINK FAUCET. METAL BODY, CERAMIC CARTRIDGE. 1 HOLE. SWIVEL GOOSENECK SPOUT, 14-1/2" HIGH. PULL-DOWN SPRAY HEAD WITH INTEGRAL CHECK VALVE. SINGLE LEVER HANDLE. 1.5 GPM. CHROME FINISH. ADA COMPLIANT. WASTE AND SUPPLY PIPING COVERS. INSULATE ALL EXPOSED DRAIN AND WATER PIPING UNDER LAVATORY PER ADA REQUIREMENTS.
WH	3/4"	3/4"	-	-	EXISTING WATER HEATER	EXISTING GAS WATER HEATER, 50 GALLON TANK, 60 MBH HEATING ELEMENT
FD	-	-	2"	*	SMITH 2005	FLOOR DRAIN. CAST IRON. ADJUSTABLE STRAINER HEAD.
FCO	-	-	-	*	SMITH 4020	FLOOR CLEANOUT. CAST IRON WITH NICKEL BRONZE ADUSTABLE TOP.
GCO	-	-	-	*	SMITH 4237	GROUND CLEANOUT. CAST IRON WITH CAST IRON NON-TILT ADJUSTABLE TOP.

NOTES:
* SEE PLAN FOR SIZING.
** PLUMBING FIXTURES, ACCESSORIES AND INSTALLATION SHALL MEET ALL FEDERAL, STATE, ADA AND LOCAL REQUIREMENTS.

ENCOTECH ENGINEERING CONSULTANTS
TBPE Firm 1141
8500 Bluffstone Cove, Suite B-103
Austin, Texas 78759 | 512.338.1101
Project No.: 14046.M.AUS

STATE OF TEXAS
LYNN C. BROWN
55248
LICENSED PROFESSIONAL ENGINEER
08/30/2016

mwm Design Group
305 East Huntland Drive
Suite 200
Austin, Texas 78752
p: 512.453.0767
f: 512.453.1734
TBAE FIRM REGISTRATION NO.: 1452
TBPE FIRM REGISTRATION NO.: F-1416
TBPLS FIRM REGISTRATION NO.: 10065600

NO.	DATE	DESCRIPTION	BY

SCALE IS AS NOTED ON DRAWING

PLUMBING SCHEDULES & DETAILS

CITY OF AUSTIN, EMS EXPANSIONS
5211 BALCONES DRIVE, AUSTIN, TEXAS, 78731

PLOTTED: 8/30/2016
JOB NO: 023-81

EMS8-P210

File: J:\ACTIVE PROJECTS\MWM\14095.M.AUS — EMS\1. MEP\D-AutoCAD\EMS Station 8\14095-EMS8 P210 Plumb Schedule Details.dwg 24x36

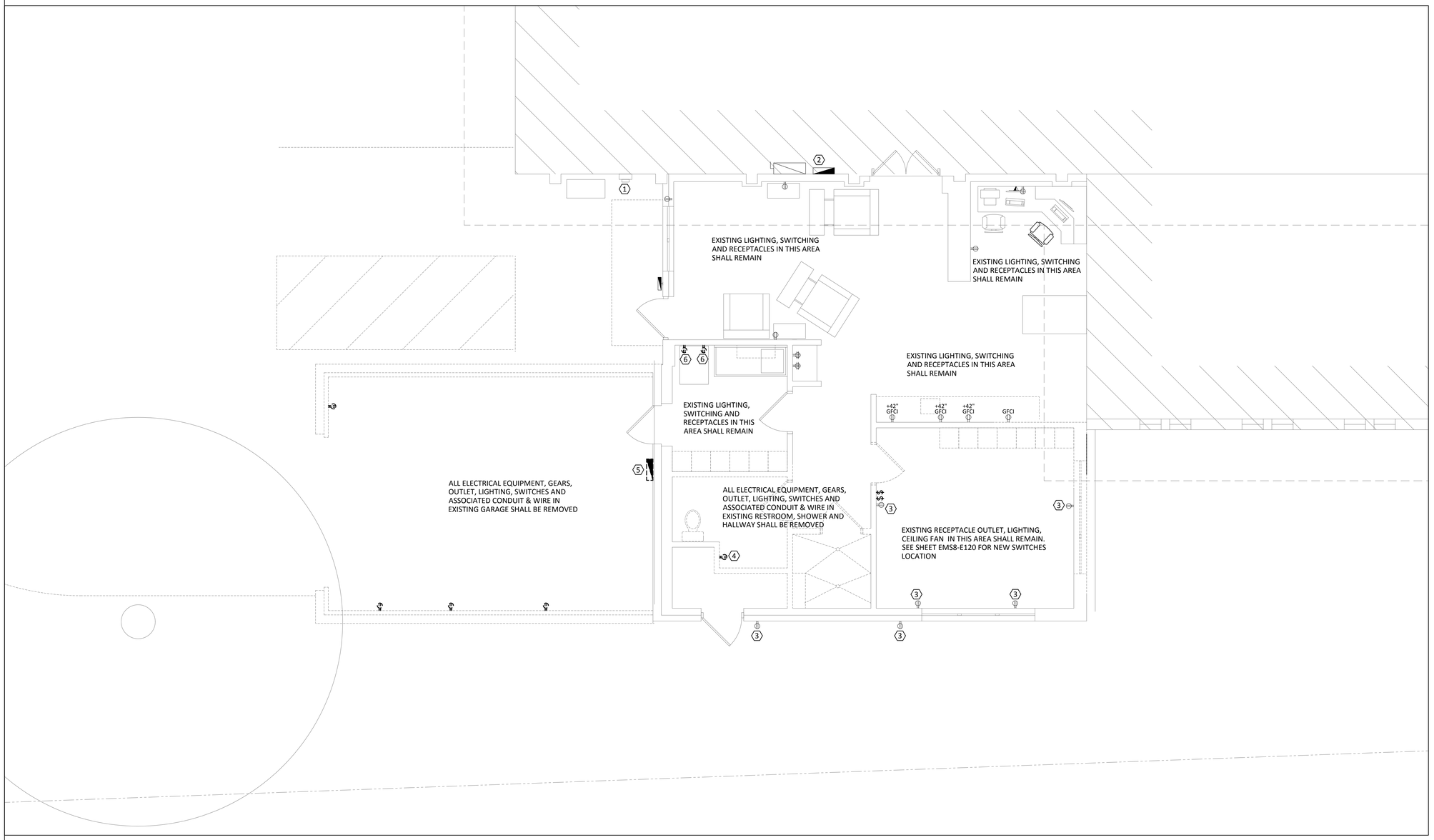

PLAN GENERAL NOTES

A. REFER TO E0.00 FOR GENERAL NOTES.

B. DO NOT ROUTE ANY DUCT & PIPING ABOVE ELECTRICAL PANELS.

C. ESTIMATED LOCATION OF ALL EXISTING ELECTRICAL LAYOUT AND EQUIPMENT LOCATION IS BASED ON SITE OBSERVATION AND EXISTING DRAWINGS. CONTRACTOR SHALL VERIFY SIZE, LOCATION OF ALL EXISTING ELECTRICAL EQUIPMENT, DEVICES AND CONDUITS PRIOR TO BID AND CONSTRUCTION.

D. ALL EXTERIOR LIGHTING FIXTURE SHALL BE CONTROLLED BY PHOTOCELL AND TIMER.

KEYED NOTES

1. EXISTING ELECTRICAL METER SHALL REMAIN.
2. EXISTING 400A, 120/208V, 3Ø MAIN DISCONNECT AND ELECTRICAL PANEL SHALL REMAIN.

   PROVIDE AND INSTALL 200A, 120/208V, 3Ø CIRCUIT BREAKER (FOR NEW ELECTRICAL PANEL 'EMS') ON AVAILABLE SPACE.
3. EXISTING RECEPTACLE TO REMAIN
4. DEMOLISH RECEPTACLE OUTLET.
5. REPLACE EXISTING ELECTRICAL PANEL (MLO, 125 AMPS, 120/208VAC, 30 SPACES) WITH NEW ELECTRICAL PANEL (MCB, 125 AMPS, 120/208VAC, 42 SPACES) RECONNECT EXISTING CIRCUIT FROM EXISTING PANEL TO NEW PANEL AS SHOWN IN ELECTRICAL PANEL SCHEDULE.
6. RELOCATE RECEPTACLE OUTLET FOR WASHER AND DRYER TO NEW LOCATION AS SHOWN IN 1/EMS8-E110

1 ELECTRICAL DEMOLITION PLAN
SCALE: 1/4" = 1'-0"

ENCOTECH ENGINEERING CONSULTANTS
TBPE Firm 1141 | 8500 Bluffstone Cove, Suite B-103 Austin, Texas 78759 | 512.338.1101
Project No.: 14046.M.AUS

STATE OF TEXAS
SHARON S. BICKFORD
77390
LICENSED PROFESSIONAL ENGINEER
08/30/2016

mwm Design Group
305 East Huntland Drive
Suite 200
Austin, Texas 78752
p: 512.453.0767
f: 512.453.1734
TBAE FIRM REGISTRATION NO.: 1452
TBPE FIRM REGISTRATION NO.: F-1416
TBPLS FIRM REGISTRATION NO.: 10065600

NO.	DATE	DESCRIPTION	BY

SCALE IS AS NOTED ON DRAWING

ELECTRICAL DEMOLITION PLAN

CITY OF AUSTIN, EMS EXPANSIONS
5211 BALCONES DRIVE, AUSTIN, TEXAS, 78731

PLOTTED: 8/30/2016
JOB NO: 023-81

EMS8-E100

File: J:\ACTIVE PROJECTS\MWM\14095.M.AUS - EMS\1. MEP\D-AutoCAD\EMS Station 8\14095-EMS8 E100 Elec Plan.dwg 24x36

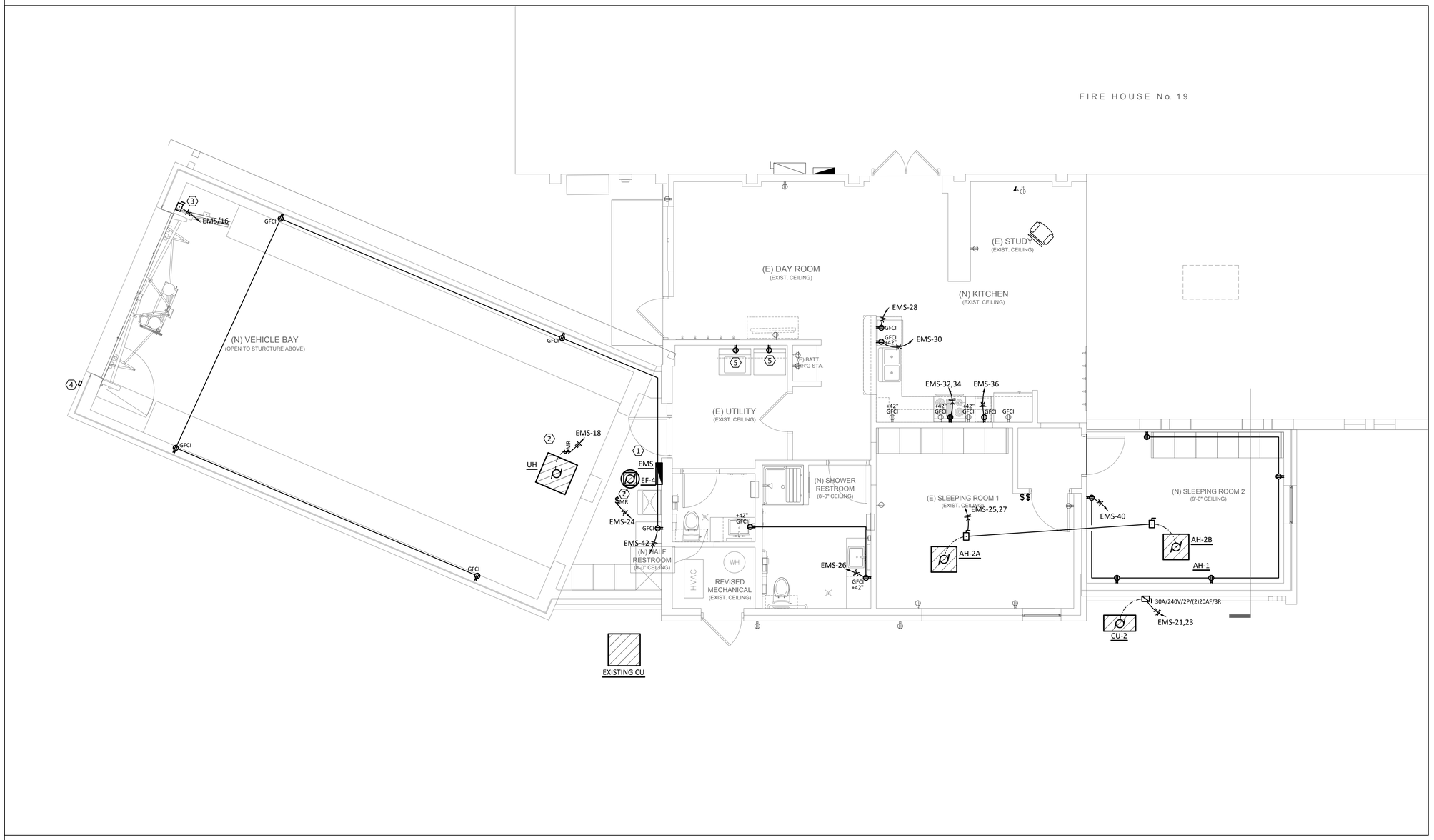

PLAN GENERAL NOTES

A. REFER TO E0.00 FOR GENERAL NOTES.

B. DO NOT ROUTE ANY DUCT & PIPING ABOVE ELECTRICAL PANELS.

C. ESTIMATED LOCATION OF ALL EXISTING ELECTRICAL LAYOUT AND EQUIPMENT LOCATION IS BASED ON SITE OBSERVATION AND EXISTING DRAWINGS. CONTRACTOR SHALL VERIFY SIZE, LOCATION OF ALL EXISTING ELECTRICAL EQUIPMENT, DEVICES AND CONDUITS PRIOR TO BID AND CONSTRUCTION.

D. ALL EXTERIOR LIGHTING FIXTURE SHALL BE CONTROLLED BY PHOTOCELL AND TIMER.

KEYED NOTES

1. PROVIDE AND INSTALL PANEL 'EMS', 125A, 120/208V, 3Ø, MCB 42-SPACE ON WALL.

   RECONNECT ALL EXISTING CIRCUIT FROM DEMOLISHED PANEL TO THIS PANEL.
2. MOTOR RATED DISCONNECT SWITCH SHALL BE MOUNTED ON STRUCTURAL MEMBER.
3. DISCONNECT ON WALL FOR OVERHEAD DOOR OPENER. COORDINATE WITH OWNER AND MANUFACTURER FOR LOCATION AND REQUIREMENT.
4. PROVIDE AND INSTALL JUNCTION BOX WITH 3/4" CONDUIT AND PULL STRING UP TO ABOVE CEILING FOR KEYPAD. KEY PAD WILL BE BY SECURITY CONTRACTOR.
5. NEW LOCATION OF RECEPTACLE OUTLETS FOR WASHER AND DRYER. REFER EMS8-E100 FOR EXISTING LOCATION.

1 ELECTRICAL PLAN
SCALE: 1/4" = 1'-0"

ENCOTECH ENGINEERING CONSULTANTS
TBPE Firm 1141
8500 Bluffstone Cove, Suite B-103
Austin, Texas 78759 | 512.338.1101
Project No.: 14046.M.AUS

STATE OF TEXAS
SHARON S. BICKFORD
77390
LICENSED PROFESSIONAL ENGINEER
08/30/2016

mwm Design Group
305 East Huntland Drive
Suite 200
Austin, Texas 78752
p: 512.453.0767
f: 512.453.1734
TBAE FIRM REGISTRATION NO.: 1452
TBPE FIRM REGISTRATION NO.: F-1416
TBPLS FIRM REGISTRATION NO.: 10065600

NO.	DATE	DESCRIPTION	BY

SCALE IS AS NOTED ON DRAWING

ELECTRICAL PLAN

CITY OF AUSTIN, EMS EXPANSIONS
5211 BALCONES DRIVE, AUSTIN, TEXAS, 78731

PLOTTED: 8/30/2016
JOB NO: 023-81

EMS8-E110

File: J:\ACTIVE PROJECTS\MWM\14095.M.AUS – EMS\1. MEP\D-AutoCAD\EMS Station 8\14095-EMS8 E100 Elec Plan.dwg 24x36

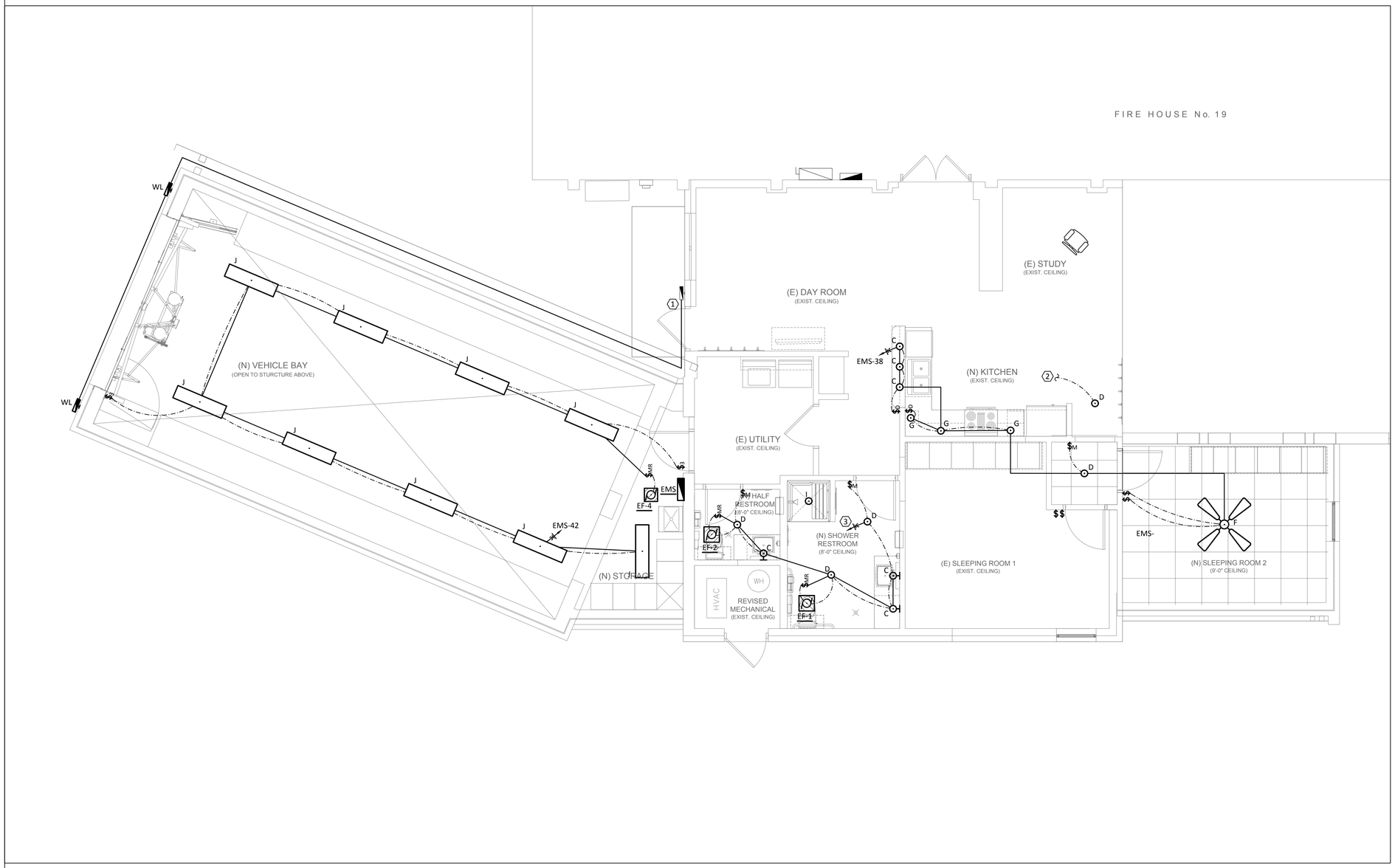

1 LIGHTING PLAN

SCALE: 1/4" = 1'-0"

PLAN GENERAL NOTES

A. REFER TO E0.00 FOR GENERAL NOTES.

B. DO NOT ROUTE ANY DUCT & PIPING ABOVE ELECTRICAL PANELS.

C. ESTIMATED LOCATION OF ALL EXISTING ELECTRICAL LAYOUT AND EQUIPMENT LOCATION IS BASED ON SITE OBSERVATION AND EXISTING DRAWINGS. CONTRACTOR SHALL VERIFY SIZE, LOCATION OF ALL EXISTING ELECTRICAL EQUIPMENT, DEVICES AND CONDUITS PRIOR TO BID AND CONSTRUCTION.

D. ALL EXTERIOR LIGHTING FIXTURE SHALL BE CONTROLLED BY PHOTOCELL AND TIMER.

KEYED NOTES

1. CONNECT NEW EXTERIOR LIGHTS TO EXISTING EXTERIOR LIGHT CIRCUIT AND CONTROL.
2. CONNECT NEW LIGHT TO EXISTING KITCHEN LIGHT CIRCUIT AND LIGHT SWITCH.
3. CONNECT TO EXISTING LIGHTING CIRCUIT ABOVE CEILING OF EXISTING RESTROOM AND HALLWAY.
4. NEW LOCATION OF SLEEPING ROOM 1 LIGHTING.

LIGHTING CONTROL NOTE

A. WHOLE EMS FACILITY LIGHTING SHALL BE CONTROLLED BY N-LIGHT NETWORK CONTROL SYSTEM.

B. NLIGHT SYSTEM WILL INCLUDE DIMMER, OCCUPANCY SENSOR, POWER PACK, BRIDGE AND GATEWAY.

C. LIGHTING WILL BE CONTROLLED LOCALLY OR BY MASTER SWITCH.

D. GATEWAY HAVE CONNECTION TO EMS SYSTEM (TOBE DETERMINED). IF EMS SYSTEM IN ACTIVE MODE, ALL INTERIOR LIGHTS IN EMS STATION WILL BE LIGHTED ON.

ENCOTECH
ENGINEERING CONSULTANTS
TBPE Firm 1141
8500 Bluffstone Cove, Suite B-103
Austin, Texas 78759 | 512.338.1101
Project No.: 14046.M.AUS

STATE OF TEXAS
SHARON S. BICKFORD
77390
LICENSED PROFESSIONAL ENGINEER
08/30/2016

mwm Design Group
305 East Huntland Drive
Suite 200
Austin, Texas 78752
p: 512.453.0767
f: 512.453.1734
TBAE FIRM REGISTRATION NO.: 1452
TBPE FIRM REGISTRATION NO.: F-1416
TBPLS FIRM REGISTRATION NO.: 10065600

NO.	DATE	DESCRIPTION	BY

SCALE IS AS NOTED ON DRAWING

LIGHTING PLAN

CITY OF AUSTIN, EMS EXPANSIONS
5211 BALCONES DRIVE, AUSTIN, TEXAS, 78731

PLOTTED: 8/30/2016
JOB NO: 023-81

EMS8-E120

File: J:\ACTIVE PROJECTS\MWM\14095.M.AUS - EMS\1. MEP\D-AutoCAD\EMS Station 8\14095-EMS8 E120 Lighting Plan.dwg 24x36

LIGHTING FIXTURE SCHEDULE

MARK	MANUFACTURER	MODEL	VOLT	LAMPING QTY	LAMPING WATTAGE	LAMPING TYPE	LAMPING TEMP	DRIVER TYPE	PHYSICAL TYPE	PHYSICAL SIZE	DESCRIPTION
C	BRUCK	223-850-CH-MP / -	120	1	8	LED	2800K	DIMMING DRIVER	PENDANT	12"H x 3.125"SQ	RECTLINEAR FROST GLASS SHADE, 6FT EXTENSION CABLE, CHROME FINISH
D	LITHONIA	FHHL-7-8-30-DNA / -	120	1	9.3	LED	3000K	DIMMING DRIVER	CEILING	7"DIA x 1-/34"H	CEILING MOUNTED, GLASS SHADE WITH SMOOTH NARUAL ALEMINUM FINISH, WET LOCATION
E	LITHONIA	FHHL-13-8-30-DNA / -	120	1	28	LED	3000K	DIMMING DRIVER	CEILING	7"DIA x 1-/34"H	CEILING MOUNTED, GLASS SHADE WITH SMOOTH NARUAL ALEMINUM FINISH, WET LOCATION
F	MINKA AIRE	LIGHT WAVE-F844-WH / -	120	1	10W (LT) 66.4W (FAN)	LED	2700K	-	CEILING FAN WITH LIGHT	52" DIAMTER	CEILING FAN WITH LED LIGHT
G	ARAMCOST LIGHTING	RF3528060-12WWD / -	120	1	75W	LED	3000K	DIMMING DRIVER	DIMMING	12'	18 LED PER FOOT, DC POWER SUPPLY DEPARATE, LINKABLE, TWO SIDE TPE LIGHT
J	LITHONIA	TL4-20L-FW-A12-EZ1-LP830 / -	MVOLT	1	21	LED	3000K	0-10V DIMMING DRIVER	RECESSED TROUGHER	12"W x 48"L	LED. ACRYLIC LENS. WHITE FINISH.
I	GOTHAM	EVO-30-10-6-DFR-MVOLT-E21	MVOLT	1	10	LED	2700K	0-10V DIMMING DRIVER	CEILING	6-1/4"D x 7-5/8"H	NON-CONDUCTIVE SHOWER DOWNLIGHT
WL	LITHONIA	DSXW1-LED-10C-530-30K-T4M-MVOLT-ELCW-DDBXD / -	MVOLT	1	20	LED	3000K	0-10V DIMMING DRIVER	WALL	13-3/4"W x 4"D	WALL MOUNTED TYPE IV MEDIUM DISTRIBUTION. LED. RATED FOR LOW TEMPERATURE. DARK BRONZE. BATTERY BACK-UP.

1. SEE ARCHITECTURAL REFLECTED CEILING PLAN FOR EXACT LOCATION OF ALL FIXTURES.
2. PROVIDE ENERGY SAVING BALLASTS FOR ALL FIXTURES WHEREVER AVAILABLE.

PANELBOARD SCHEDULE — EMS

LOCATION: UNKNOWN
C.B. RATING: - A.I.C.

NOTE	VOLTAGE	PHASE	WIRE	MOUNTING			SIZE	LUG	TYPE	NOTE
	208Y/120V	3	4	SURFACE			200	125A MCB	TYPE 1	
	USE and/or AREA SERVED		C/B POLE	CIR	LOAD ØA	LOAD ØB	LOAD ØC	CIR	C/B POLE	USE and/or AREA SERVED
	EXISITNG CIRCUIT		20/1	1	1000			2	20/1	EXISTING CIRCUIT
	EXISITNG CIRCUIT		20/1	3	1000			4	20/1	EXISTING CIRCUIT
	EXISTING EXTERIOR LIGHT		20/1	5		1000		6	20/1	EXISTING RECEPTACLES
	EXISTING LIGHT		20/1	7	1000		1000	8	20/1	EXISTING RECEPTACLES
	EXISITNG LIGHT		20/1	9	1000			10	20/1	EXISTING RECEPTACLES
	EXISTING WASHER		20/1	11		1000	1500	12	20/1	EXISTING BREAKROOM RECEPTS
	EXISITNG DRYER		20/1	13	600			14	20/1	EXISTING REFRIGERATOR
	EXISTING RECEPTACLE		20/1	15	1200			16	30/1	GARAGE OPENER
	EXISTING CU		40/2	17		1200	2500	18	20/1	VEHICLE BAY HEATER
				19	2500			20	20/1	EXISTING SUMP PUMP
	CU-2		20/2	21	600			22	20/1	EXISTING GAS FURNACE
				23		1250	1250	24	20/1	VEHICLE BAY EXHAUST FAN
	NEW AIR HANDLER UNITS		20/2	25	300		300	26	20/1	RESTROOM RECEPTACLES
				27	360			28	20/1	KITCHEN RECEPTACLES
	-		-	29		300		30	20/1	DISHWASHER
	-		-	31	-	180	-	32	40/2	RANGE
	-		-	33	-		1200	34		
	-		-	35		-		36	20/1	ICE MAKER
	-		-	37	-			38	20/1	NEW LIGHTING
	-		-	39	400	-		40	20/1	SLEEPING ROOM 2 RECEPTS
	-		-	41		900		42	20/1	VEHICLE BAY RECEPTS
	TOTAL LOAD PER PHASE				9960	10630	12150		12150 VA / 120 V = 101 A	

FEEDER OCPD AND CONDUCTOR CALCULATION

LOAD DESCRIPTION (LOAD IN KVA)	CONNECTED LOAD	DEMAND FACTOR	DEMAND LOAD	AMPACITY FACTOR	FEEDER AMPACITY	NOTES
INTERIOR LIGHTING	3.40	1.00	3.40	1.25	4.25	
EXTERIOR LIGHTING	0.00	1.00	0.00	1.25	0.00	
RECEPTACLES	11.54	*	10.77	1.00	10.77	*FIRST 10 kVA AT 100%, REST AT 50%
HVAC	11.50	1.00	11.50	1.00	11.50	
EQUIPMENT	6.30	1.00	6.30	1.00	6.30	
KITCHEN EQUIPMENT	0.00	1.00	0.00	1.00	0.00	
LARGEST MOTOR NONE	-	-	-	0.25	0.00	
SPARE	0.00	1.00	0.00	1.00	0.00	
TOTAL KVA	**32.74**	**-**	**31.97**	**-**	**32.82**	
TOTAL AMPS	**91 A**	**-**	**89 A**	**-**	**91 A**	

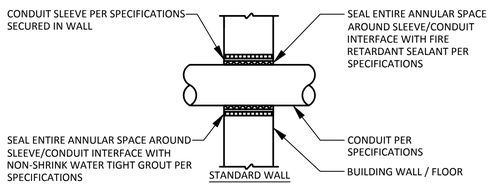

2 WALL PENETRATION DETAIL
NOT TO SCALE

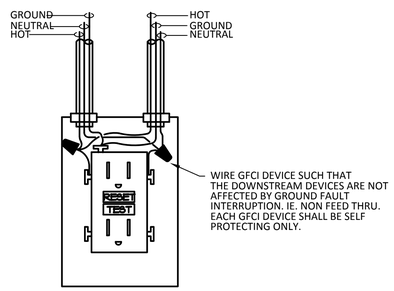

1 GFCI RECEPTACLE WIRING DIAGRAM
NOT TO SCALE

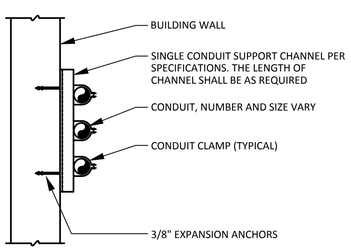

NOTE:
CONDUIT MAY RUN VERTICAL OR HORIZONTAL DEPENDING ON APPLICATION.

4 WALL / CEILING CONDUIT SUPPORT DETAIL
NOT TO SCALE

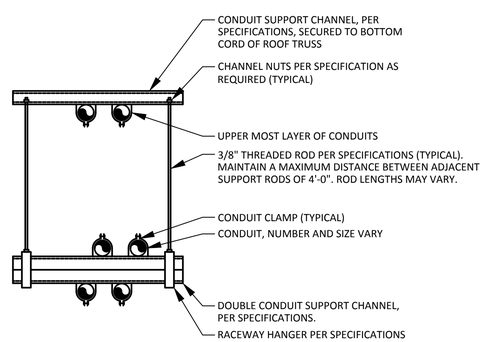

3 CONDUIT SUPPORT DETAIL
NOT TO SCALE

ENCOTECH ENGINEERING CONSULTANTS
TBPE Firm 1141
8500 Bluffstone Cove, Suite B-103
Austin, Texas 78759 | 512.338.1101
Project No.: 14046.M.AUS

STATE OF TEXAS — SHARON S. BICKFORD — 77390 — LICENSED PROFESSIONAL ENGINEER
08/30/2016

mwm Design Group
305 East Huntland Drive
Suite 200
Austin, Texas 78752
p: 512.453.0767
f: 512.453.1734
TBAE FIRM REGISTRATION NO.: 1452
TBPE FIRM REGISTRATION NO.: F-1416
TBPLS FIRM REGISTRATION NO.: 10065600

NO.	DATE	DESCRIPTION	BY

SCALE IS AS NOTED ON DRAWING

ELECTRICAL SCHEDULES & DETAILS

CITY OF AUSTIN, EMS EXPANSIONS
5211 BALCONES DRIVE, AUSTIN, TEXAS, 78731

PLOTTED: 8/30/2016
JOB NO: 023-81

EMS8-E210

File: J:\ACTIVE PROJECTS\MWM\14095.M.AUS - EMS\1. MEP\D-AutoCAD\EMS Station 8\14095-EMS8 E210 Elec Schedule Details.dwg 24x36

NOTES:

1. FIN. FLR. ELEV. VARIES SEE ARCH'L. T.O.C. REFERS TO TOP OF STRUCTURAL SLAB U.N.O.
2. - INDICATES SLAB DEPRESSIONS.
   SEE STRUCTURAL PLANS & DETAILS FOR DEPTH OF SLAB DEPRESSIONS
   SEE ARCHITECTURAL FOR EXACT LOCATIONS OF ALL SLAB DEPRESSIONS.
   DROPS SHOWN ON PLAN ARE IN STRUCTURAL SLAB SEE ARCHITECTURAL FOR EXACT LOCATIONS OF ALL SLAB DEPRESSIONS.
3. SEE ARCHITECTURAL AND MECHANICAL - COORDINATE ALL FLOOR OPENINGS AND PENETRATIONS WITH TRADES INVOLVED FOR ACTUAL SIZES AND LOCATIONS.
4. REFER TO MECHANICAL, ELECTRICAL AND PLUMBING DRAWINGS FOR SLAB PENETRATIONS AND UNDERGROUND UTILITIES.
5. CONTRACTOR TO VERIFY ALL SLAB EDGE, STAIR AND ELEVATOR OPENING DIMENSIONS WITH ARCHITECTURAL DRAWINGS PRIOR TO CONSTRUCTION.
6. SEE GENERAL NOTES AND SPECIFICATION FOR ADDITIONAL INFORMATION.
7. CONTRACTOR TO VERIFY ALL DIMENSIONS AND EXISTING CONDITIONS AND AND REPORT ANY DISCREPANCY TO THE ARCHITECT AND THE ENGINEER.
8. REFER TO ARCHITECTURAL DRAWINGS FOR EXTENT AND DIMENSIONS OF RAISED OR DEPRESSED SLAB AREAS, SLOPES AND DRAINS.

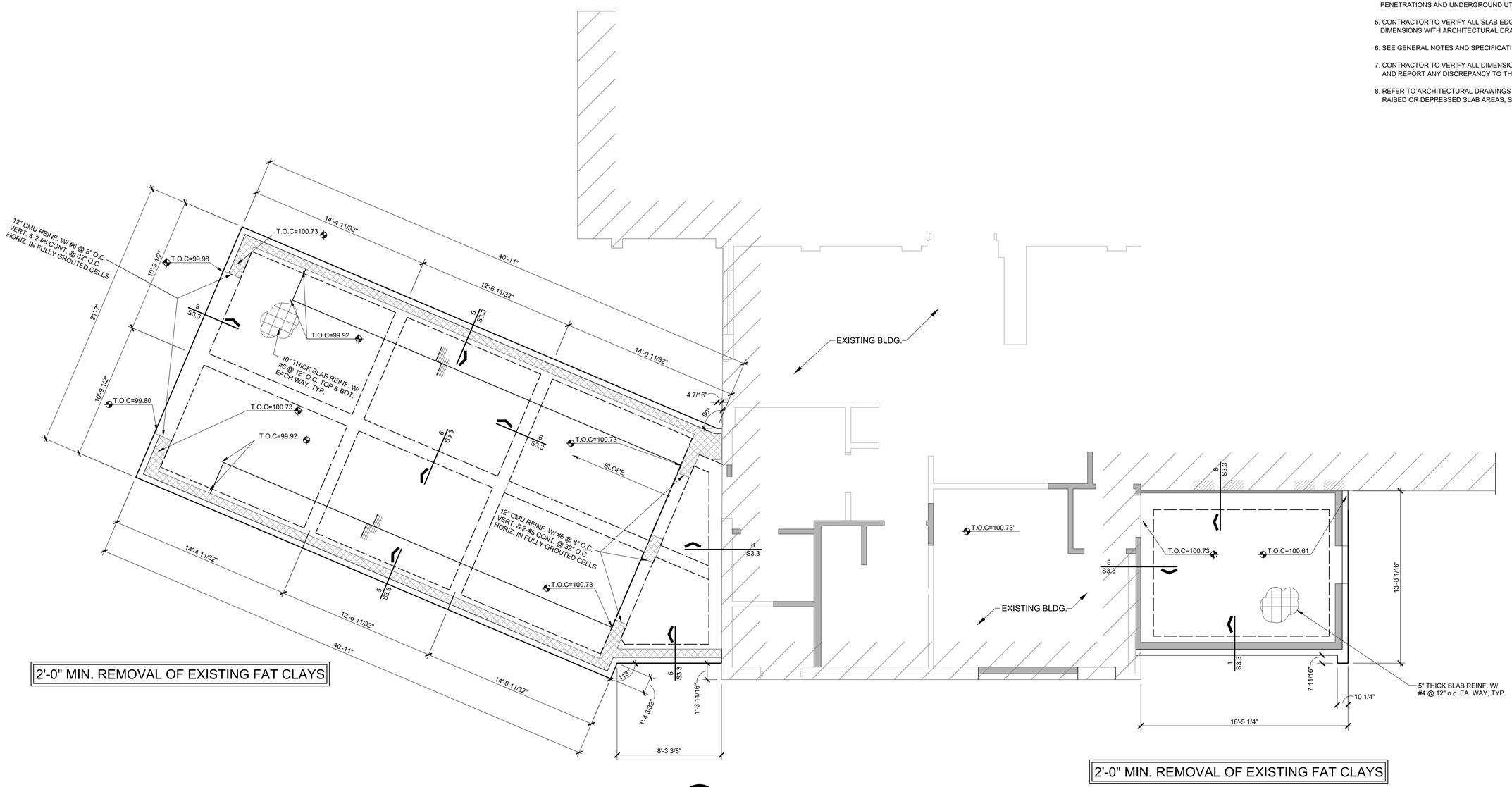

1 FOUNDATION PLAN _EMS-8
SCALE: 1/4" = 1'-0"

JOSE I. GUERRA, INC.
CONSULTING ENGINEERS
2401 S. IH35 SUITE 210
AUSTIN, TEXAS 78741
(512) 445-2090
TBPE FIRM F-3

STATE OF TEXAS
JOSE I. GUERRA
85546
REGISTERED PROFESSIONAL ENGINEER
8-30-16

mwm Design Group
305 East Huntland Drive
Suite 200
Austin, Texas 78752
p: 512.453.0767
f: 512.453.1734
TBAE FIRM REGISTRATION NO.: 1452
TBPE FIRM REGISTRATION NO.: F-1416
TBPLS FIRM REGISTRATION NO.: 10065600

NO.	DATE	DESCRIPTION	BY

0 1"
The bar above measures one inch on the original drawing. Adjust scales accordingly.

FOUNDATION PLAN

CITY OF AUSTIN E.M.S. EXPANSIONS
5211 BALCONES DR., AUSTIN, TX., 78731

PLOTTED: 8/30/2016
JOB NO: 023-79D

EMS8-S2.0

__ OF __

File: F:\15012_EMS Vehicle Bay Expansions\DRAWINGS\CAD\15012_EMS-8_S2.0 FOUNDATION PLAN.dwg 24x36

SHORING NOTES:

1. ALL NEW OPENINGS ARE TO BE FRAMED WITH NEW STEEL BEAMS OR GLULAM BEAMS TO SUPPORT THE ROOF AND CEILING LOADS CURRENTLY SUPPORTED BY EXISTING LOAD BEARING WALLS TO BE DEMOLISHED. REFERENCE ARCHITECTURAL DRAWINGS FOR DEMOLITION DRAWINGS.
2. THE STRUCTURAL DRAWINGS AND SPECIFICATIONS REPRESENT THE FINISHED STRUCTURE. THEY DO NOT INDICATE THE METHODS OF CONSTRUCTION UNLESS SO STATED OR NOTED. THE CONTRACTOR SHALL PROVIDE ALL MEASURES NECESSARY TO PROTECT THE WORKERS AND ALL OTHER PERSONS DURING CONSTRUCTION.
3. THE CONTRACTOR SHALL PROVIDE TEMPORARY ERECTION BRACING AND SHORING OF ALL STRUCTURAL WORK AS REQUIRED FOR STABILITY OF THE STRUCTURE DURING ALL PHASES OF CONSTRUCTION. THE CONTRACTOR SHALL IMMEDIATELY NOTIFY THE ENGINEER OF ANY CONDITION THAT MIGHT ENDANGER THE STABILITY OF THE STRUCTURE OR CAUSE DISTRESS IN THE STRUCTURE.
4. THE EXISTING LOAD BEARING WALLS TO BE DEMOLISHED ARE TO BE SHORED BY THE CONTRACTOR. THE CONTRACTOR'S TEMPORARY SHORING SYSTEM IS TO REMAIN IN PLACE UNTIL ALL NEW BEAMS HAVE BEEN ERECTED AND ATTACHED TO THE EXISTING LOAD BEARING WALLS/ROOF FRAMING PER STRUCTURAL DRAWINGS.
5. THE CONTRACTOR SHALL SUBMIT SHORING PLANS FOR REVIEW BY ARCHITECT/ ENGINEER THE SHORING PLAN SHALL BE DESIGNED AND SEALED BY AN ENGINEER REGISTERED IN THE STATE OF TEXAS.
6. THE SHORING SYSTEM SHOULD JACK THE EXISTING LOAD BEARING WALLS BETWEEN 1/16" AND 1/8" ABOVE THEIR FINAL ELEVATIONS IN ORDER TO INSURE THAT THE ROOF LOADS ARE TRANSFERRED TO THE NEW BEAMS WITHOUT DEFLECTION.
7. THE BUILDING MUST REMAIN OPEN AND OPERATING DURING CONSTRUCTION. ALL WORK MUST BE PERFORMED IN SUCH A MANNER AS TO CAUSE MINIMAL DISRUPTION TO THE NORMAL ACTIVITIES OF THE BUILDING.

SHEARWALL LEGEND

STUD SIZE AND SPACING — STUD GRADE

2x4 @ 16" O.C. SYP #2

SHEARWALL LEGEND

SHEARWALL

⑤ — A — ⑤

DETAIL TO REFER ON S6.1 THAT INDICATES STRAPS AND HOLD-DOWNS

FACE TO RECEIVE SHEATHING

SHEATHING TYPE AND NAILING REINFORCEMENT SEE S6.1

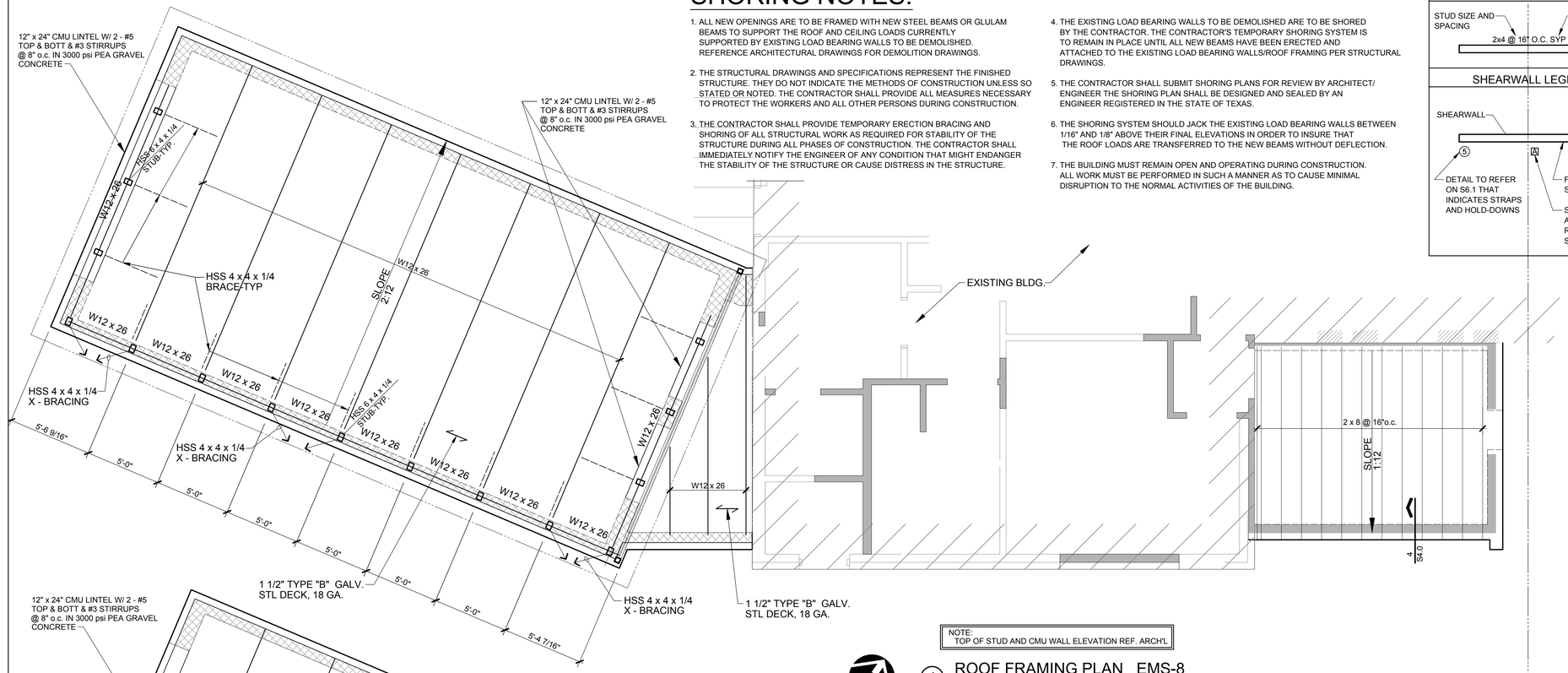

NOTE:
TOP OF STUD AND CMU WALL ELEVATION REF. ARCH'L

1 ROOF FRAMING PLAN _EMS-8

SCALE: 1/4" = 1'-0"

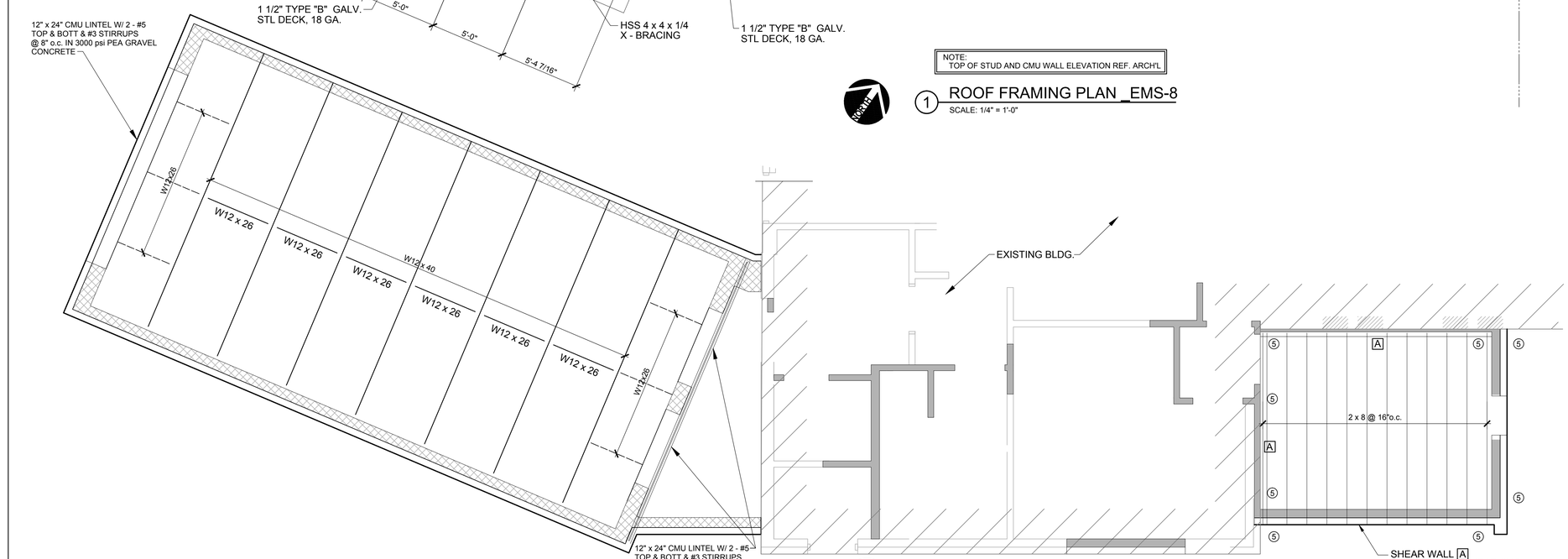

2 CEILING FRAMING PLAN _EMS-8

SCALE: 1/4" = 1'-0"

CEILING JOIST NOTES:

1. G.C. SHALL VERIFY DIMENSIONS WITH ACHITECTURAL DRAWINGS AND SHALL NOTIFY ARCH/ ENGINEER OF DISCREPANCIES PRIOR TO CONSTRUCTIONS.
2. FOR INTERIOR AND EXTERIOR WALLS, PROVIDE (2) KING STUDS FOR OPENINGS UP TO 5 FEET IN LENGTH, OR (3) KING STUBS FOR OPENINGS UP TO 9 FEET LENGTH. KING STUD QUANTITY IS TO BE PROVIDED AT EACH SIDE OF OPENING.
3. PROVIDE (1) TRIMMER STUD FOR OPENINGS UP TO 5 FEET LENGTH, (2) TRIMMER STUDS FOR OPENINGS UP TO 10 FEET LENGTH, OR (3) TRIMMER STUDS FOR OPENINGS UP 16 FEET LENGTH. TRIMMER STUD QUANTITY IS TO BE PROVIDED AT EACH SIDE OF OPENING.
4. STUD PACKS SHALL INCLUDE KING AND TRIMMER STUDS AT OPENINGS.
5. TRIMMER AND KING STUD SIZE SHALL MATCH WALL FRAMING STUD SIZE.
6. VERTICAL NAILING BETWEEN TRIMMER STUDS AND BETWEEN KING STUDS SHALL BE 16d AT 16".
7. REFERENCE THIS SHEET FOR LOAD BEARING WALL STUD SIZE & SPACING.
8. REFERENCE SHEET S4.1 FOR SHEAR WALL SCHEDULE.
9. ALL LUMBER TO BE #2 S.Y.P.K.D.
10. ALL CEILING JOISTS TO BE 2x8 AL 16" O.C. UNLESS NOTED OTHERWISE (17'-0" MA REFERENCE IBC FOR OTHER SPANS
11. ALL HEADERS @ 2x4 WALLS TO BE 2-2X PER IBC CODE UNLESS NOTED OTHERW @ 2x6 WALLS TO BE 3-2x PER IBC CODE UNLESS NOTED OTHERWISE.

HEADER SCHEDULE

3-2x8 0'-0" to 5'-0"
3-2x10 5'-1" to 6'-1"
3-2x12 6'-2" to 7'-1"

12. ALL BEAMS LARGER THAN 2-2x6 TO BE SUPPORTED BY BUILT-UP STUD COLUMNS 2x6 STUD WALLS AND 2x4 STUD WALLS AT EACH END UNLESS NOTED OTHERWISE AND BLOCKED SOLID TO FOUNDATION. SEE BUILT-UP COLUMN SCHEDULE SHEET S4.0 FOR NUMBER OF BUILT-UP STUD COLUMN; AT EACH END OF BEAMS.
13. DOUBLE 2x8 CEILING JOISTS AS REQUIRED. UNDER HVAC AND/OR WH UNITS LOCATED IN ATTIC. PROVIDE 3/4" PLYWOOD DECK PAD AND CATWALK AS REQUI
14. ALL BEAMS JOB BUILT FROM 3 OR MORE MEMBERS NAILED WITH 10D NAILS @ 6" O.C. TOP AND BOTTOM.
15. ALL GLU-LAMS TO BE DESIGNED WITH STANDARD CAMBER OF R=2000 FT.
16. BRACE TOP FLANGE OF ALL GLULAM, MICROLLAM, OR 2xWOOD BEAMS @ 4'-0" E/ CEILING JOISTS WITH 2x6 CONTINUOS STIFFBACK AND 2x4 BRACES
17. STUD WALLS SHALL BE 2x6 @ 16 " O.C., #2 S.Y.P.K.D. UNO. (MAX. HEIGHT 10'-0") STUD WALLS SHALL BE 2x8 @ 16" O.C. , # 2 S.Y.P.K.D. UNO. (HEIGHTS GREATER 10-0" TO 14'-0" MAX.)
18. PROVIDE 2x BLOCKING AT 4'-0" O.C. VERTICALLY AT ALL STUD WALLS.
19. ALL FRAMING TO COMPLY WITH I.B.C. BUILDING CODES, CURRET EDITION.
20. VERIFY ANY CHANGES WITH ENGINEER PRIOR TO CONSTRUCTION.

ROOF FRAMING PLAN

SCALE:

PLAN NOTES:

1. G.C. SHALL VERIFY DIMENSIONS WITH ACHITECTURAL DRAWINGS AND SHALL N ARCH/ ENGINEER OF DISCREPANCIES PRIOR TO CONSTRUCTIONS.
2. ALL LUMBER TO BE #2 Y.P.K.D.
3. ALL RAFTERS TO BE 2x8 AT 16"O.C. WITH A MAXIMUM UNBRACED SPAN 18'-0" MEASURED ALONG THE SLOPE, UNLESS NOTED OTHERWISE.
4. ALL HIPS, RIDGES, VALLEYS TO BE 2x10 MAXIMUM. UNBRACED SPAN 8'-0" UNLESS NOTED OTHERWISE. PROVIDE "TEE" BRACES @ 6'-0" O.C. MAX SPACING AT RIDGES. PROVIDE "TEE" BRACES @ 8'-0" O.C. MAX SPACING AT HIPS AND VALLYS. PROVIDE DBL STUDS BELOW EACH "TEE" BRACE AT STUD WALLS
5. PROVIDE 2x8 CONTINUOUS PURLINS WITH 2x8 "TEE" BRACES @ 4'-0" O.C. MAX S: PROVIDE DBL STUDS BELOW EACH "TEE" BRACE AT STUD WALLS. NAIL "TEE" BI TOGETHER WITH 10D NAILS @ 6" O.C.- TYPICAL.
6. "TEE" BRACES LONGER THAN 8'-0" SHALL BE DBL 2x8 STUD WITH FLANGE PLATE AND BRACED HORIZONTALLY @ 6'-0" O.C. IN TWO DIRECTIONS, NAIL "TEE" BRA TOGETHER WITH 10 D NAILS @ 6" O.C. - TYPICAL
7. PROVIDE 2x6 MIN. COLLAR TIES AT 4'-0" O.C. AT ALL RIDGES.
8. ALL FRAMING TO COMPLY WITH I.B.C. BUILDING CODE CURRENT EDITION.
9. VERIFY AND CHANGES WITH ENGINEER PRIOR TO CONSTRUCTION.

NOTE:
TOP OF STUD AND CMU WALL ELEVATION REF. ARCH'L

JOSE I. GUERRA, INC.
CONSULTING ENGINEERS
2401 S. IH35 SUITE 210
AUSTIN, TEXAS 78741
(512) 445-2090
TBPE FIRM F-3

STATE OF TEXAS — JOHN C. HAYES — 85566 — PROFESSIONAL ENGINEER — 8-30-16

mwm Design Group
305 East Huntland Drive
Suite 200
Austin, Texas 78752
p: 512.453.0767
f: 512.453.1734
TBAE FIRM REGISTRATION NO.: 1452
TBPE FIRM REGISTRATION NO.: F-1416
TBPLS FIRM REGISTRATION NO.: 10065600

NO.	DATE	DESCRIPTION	BY

0 — 1"
The bar above measures one inch on the original drawing. Adjust scales accordingly.

ROOF & CEILING FRAMING PLAN

CITY OF AUSTIN E.M.S. EXPANSIONS
5211 BALCONES DR., AUSTIN, TX., 78731

PLOTTED: 8/30/2016
JOB NO: 023-79D

EMS8-S2.1

___ OF ___

File: F:\15012_EMS Vehicle Bay Expansions\DRAWINGS\CAD\15012_EMS-8_S2.1 ROOF PLAN.dwg 2:43:36