AUSTIN ONION CREEK

FIRE & EMS STATION

THIS IS A LEED PROJECT

11112 OLD SAN ANTONIO ROAD
AUSTIN, TEXAS 78748

BRW PROJECT No.: 214106.00
CITY OF AUSTIN PROJECT No.: 6025.001
SEPTEMBER 23, 2016

OWNER — CITY OF AUSTIN
P.O. BOX 1088
AUSTIN, TEXAS 78767
(512) 974-7157

ARCHITECT — BROWN REYNOLDS WATFORD ARCHITECTS, INC.
2700 EARL RUDDER FREEWAY SOUTH, SUITE 4000
COLLEGE STATION, TEXAS 77845
(979) 694-1791 FAX: (979) 694-8293

LANDSCAPE ARCHITECT — COLEMAN & ASSOCIATES
9890 SILVER MOUNTAIN DRIVE
AUSTIN, TX 78737

CIVIL ENGINEER — CHAN & PARTNERS ENGINEERING, LLC.
TEXAS REGISTRATION No. F-13013
4319 JAMES CASEY STREET, SUITE 300
AUSTIN, TX 78745

STRUCTURAL ENGINEER — JQ+TSEN, LLC.
TBPE FIRM F-12778
1608 WEST 6TH STREET
AUSTIN, TX 78703

MECHANICAL / ELECTRICAL / PLUMBING ENGINEER — JOSE I. GUERRA, INC.
TBPE FIRM F-3
2401 SOUTH IH-35, SUITE 210
AUSTIN, TX 78767

REGISTERED ARCHITECT MARK E. WATFORD 9241 STATE OF TEXAS 09/23/16

REGISTERED LANDSCAPE ARCHITECT MICHAEL R. FISHBACK 2459 STATE OF TEXAS 9/23/16

STATE OF TEXAS JOHN R. KING 58429 LICENSED PROFESSIONAL ENGINEER 9/22/2016

STATE OF TEXAS STEPHANIE RAE TSEN 97275 LICENSED PROFESSIONAL ENGINEER 9.23.16

9-23-2016 STATE OF TEXAS ROBERTO DE LA CRUZ 85431 LICENSED PROFESSIONAL ENGINEER

STATE OF TEXAS JORGE A. OLIVARES 95828 LICENSED PROFESSIONAL ENGINEER 9-23-2016

STATE OF TEXAS BRANDON N. REYES 106528 LICENSED PROFESSIONAL ENGINEER 09-23-2016

LEED STATUS

THIS IS A LEED PROJECT AND WILL BE SUBMITTING FOR SILVER CERTIFICATION.

VICINITY MAP

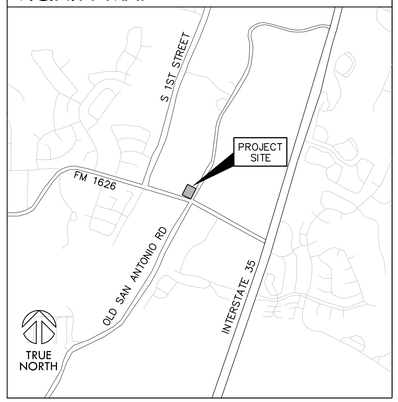

SYMBOL LEGEND

- NORTH ARROWS (PLAN, TRUE)
- PROPERTY LINE
- SETBACK LINE
- BUILDING SETBACK LINE/EASEMENT
- WORKING POINT, CONTROL OR DATUM POINT
- COLUMN DESIGNATION
- EXTERIOR ELEVATION
- INTERIOR ELEVATION
- KEYNOTE
- ITEM NOT IN CONTRACT
- ITEM TO BE OWNER FURNISHED/CONTRACTOR INSTALLED
- PARTITION TYPE
- DOOR NUMBER
- WINDOW TYPE
- REVISIONS
- FINISH SYMBOL
- ROOM DESIGNATION & NUMBER
- PLAN DETAIL
- BUILDING SECTION
- WALL SECTION
- TITLE / SCALE
- ALIGN
- TEMPERED GLASS

INDEX OF DRAWINGS

G1.1 TITLE SHEET AND DRAWING INDEX

AS1.1 SITE PLAN
AS1.2 SITE DETAILS
AS1.3 SITE DETAILS

C1.0 COVER SHEET
C1.1 GENERAL NOTES
C1.2 SUBDIVISION PLAT
C1.3 EXISTING CONDITIONS & DEMOLITION PLAN
C2.0 SITE PLAN
C2.1 ES & TREE PROTECTION PLAN
C2.2 ES DETAILS
C2.3 ES DETAILS 2
C3.0 DRAINAGE PLAN
C4.0 GRADING AND STORM DRAIN PLAN
C4.1 STORM DRAIN PROFILE SHEET 1 OF 2
C4.2 STORM DRAIN PROFILE SHEET 2 OF 2
C4.3 EXCAVATION AND BACKFILL PLAN
C5.0 PAVEMENT PLAN
C5.1 PAVEMENT DETAIL SHEET
C6.0 WATER & WASTEWATER PLAN
C6.1 WATER & WASTEWATER PROFILES
C6.2 WATER & WASTEWATER DETAILS SHEET 1 OF 2
C6.3 WATER & WASTEWATER DETAILS SHEET 2 OF 2
C7.0 STANDARD DETAIL SHEET 1 OF 5
C7.1 STANDARD DETAIL SHEET 2 OF 5
C7.2 STANDARD DETAIL SHEET 3 OF 5
C7.3 STANDARD DETAIL SHEET 4 OF 5
C7.4 STANDARD DETAIL SHEET 5 OF 5
C8.1 TRAFFIC CONTROL SEGMENT 2
C8.2 TRAFFIC CONTROL DETAILS SHEET 1
C8.3 TRAFFIC CONTROL DETAILS SHEET 2
C8.4 TRAFFIC CONTROL DETAILS SHEET 3
C8.5 TRAFFIC CONTROL DETAILS SHEET 4

L100 LANDSCAPE PLAN
L101 LANDSCAPE DETAILS & NOTES
L102 PLANTING SCHEDULE & NOTES
IR200 IRRIGATION PLAN & DETAILS
IR201 IRRIGATION DETAILS

S1.1 STRUCTURAL NOTES
S1.2 STRUCTURAL NOTES
S1.3 SPECIAL INSPECTIONS
S1.4 SPECIAL INSPECTIONS
S2.1 FOUNDATION PLAN
S2.2 MEZZANINE & LOW ROOF FRAMING PLAN
S2.3 ROOF PLAN
S2.4 LOAD BEARING WALL PLAN
S2.5 SHEAR WALL PLAN & SCHEDULE
S3.1 TYPICAL CONCRETE DETAILS
S3.2 TYPICAL CONCRETE DETAILS
S3.3 TYPICAL STEEL DETAILS
S4.1 FOUNDATION DETAILS
S5.1 FRAMING DETAILS
S5.2 CMU DETAILS
S5.3 FRAMING DETAILS
S5.4 FRAMING DETAILS
S6.1 STEEL DETAILS
S6.2 TRUSS DETAILS
S6.4 DETAILS

LS1.1 LIFE SAFETY PLAN
A1.1 FLOOR PLAN
A1.2 ENLARGE PLANS & DETAILS
A1.3 ENLARGE PLANS & DETAILS
A1.4 ROOF PLAN
A2.1 EXTERIOR ELEVATIONS
A2.2 EXTERIOR ELEVATIONS
A2.3 BUILDING SECTIONS
A2.4 BUILDING SECTIONS
A2.5 WALL SECTIONS
A2.6 WALL SECTIONS
A2.7 WALL SECTIONS
A2.8 WALL SECTIONS
A3.1 DOOR SCHEDULE & DETAILS
A3.2 WINDOW SCHEDULE
A3.3 WINDOW DETAILS
A3.4 INTERIOR ELEVATIONS
A3.5 MILLWORK DETAILS
A4.1 REFLECTED CEILING PLAN
A4.2 FINISH PLAN
A4.3 FURNITURE PLAN

MEP0 M.E.P. SITE PLAN
MP1.0 MECH., PLUMB., LEGENDS, ABR., & GENERAL NOTES
M1.1 MECHANICAL FLOOR PLANS
M1.2 MECHANICAL PIPING PLANS
M1.3 MECHANICAL ROOF PLAN
M3.1 MECHANICAL DETAILS
M4.1 MECHANICAL DIAGRAMS
M4.2 MECHANICAL SCHEDULES
M4.3 MECHANICAL SCHEDULES

P1.1 PLUMBING UNDERFLOOR PLAN
P1.2 PLUMBING FLOOR PLANS
P2.1 PLUMBING RISER DIAGRAM
P2.2 PLUMBING RISER DIAGRAM
P3.1 PLUMBING DETAILS
P4.1 PLUMBING SCHEDULES

E1.0 ELECTRICAL LEGENDS, ABR., & GENERAL NOTES
E1.2 ELECTRICAL LIGHTING FLOOR PLANS
E2.1 ELECTRICAL POWER FLOOR PLANS
E2.2 ELECTRICAL ABOVE CEILING PLANS
E3.1 SPECIAL SYSTEMS PLANS
E4.1 ELECTRICAL DETAILS
E5.1 ELECTRICAL SCHEDULES
E5.2 ELECTRICAL SCHEDULES
E6.1 ELECTRICAL DETAILS
E6.2 ELECTRICAL DETAILS

FA1.0 FIRE ALARM SCHEDULES & NOTES
FA1.1 FIRE ALARM FLOOR PLANS
FS1.0 FIRE SUPPRESSION DETAILS & NOTES
FS1.1 FIRE SUPPRESSION FLOOR PLANS

ARCHITECTURAL ABBREVIATIONS

A.F.F.	ABOVE FINISH FLOOR	MNTD.	MOUNTED
B.O.	BOTTOM OF	NOM.	NOMINAL
C.J.	CONTROL JOINT	N.I.C.	NOT IN CONTRACT
CLR	CLEAR	O.C.(E.W.)	ON CENTER (EACH WAY)
DIA.	DIAMETER	O.F./C.I.	OWNER FURNISHED/ CONTRACTOR INSTALLED
DN	DOWN	O.H.	OPPOSITE HAND
E.J.	EXPANSION JOINT	RE:	REFERENCE
EQ.	EQUAL	REQ./REQD	REQUIRED
FD	FLOOR DRAIN	R.O.	ROUGH OPENING
F.F.	FINISH FLOOR	SIM.	SIMILAR
F.V.	FIELD VERIFY	T.O.	TOP OF
GA.	GAUGE	TYP.	TYPICAL
J-BOX	JUNCTION BOX	W/	WITH
M.O.	MASONRY OPENING	W.B.	WIND BRACE
MAX.	MAXIMUM	W.P.	WORKING POINT
MIN.	MINIMUM		

DOOR CLEARANCE

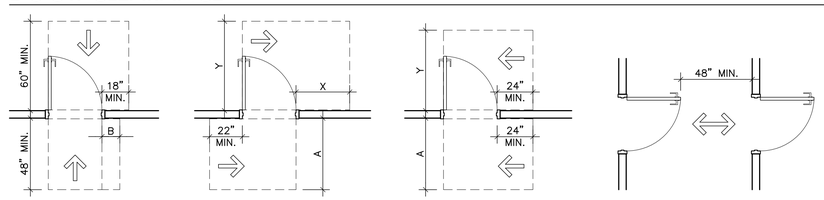

FRONT APPROACH
B = 12" MIN. IF DOOR HAS BOTH CLOSER & LATCH
B = 0" OTHERWISE

HINGE APPROACH
X = 36" MIN. IF Y = 60"
X = 42" MIN. IF Y = 54"
A = 48" MIN. IF DOOR HAS BOTH CLOSER & LATCH
A = 42" MIN. OTHERWISE

LATCH APPROACH
Y = 54" MIN. IF DOOR HAS CLOSER
Y = 48" MIN. OTHERWISE
A = 48" MIN. IF DOOR HAS CLOSER
A = 42" MIN. OTHERWISE

DOORS IN SERIES

NOTE:
ARROW INDICATES DIRECTION OF PRIMARY APPROACH. ALL DOORS SHALL COMPLY WITH MINIMUM DIMENSION REQUIREMENTS INDICATED ABOVE. RE: TEXAS ACCESSIBILITY STANDARDS, 2012 VERSION.

MASTER FORMAT KEYNOTE LEGEND

0000.XX

- KEYNOTE NUMBER
- SPECIFICATIONS MASTER FORMAT 2004 LEVEL 2 SUBDIVISION
- SPECIFICATIONS MASTER FORMAT 2004 DIVISION NUMBER

NOTE:

WHERE KEYNOTES REFERENCE OTHER ENGINEERING DISCIPLINES, SUCH AS:

(RE: STRUCTURAL), (RE: CIVIL), (RE: MEP), REFER TO ENGINEER'S DRAWINGS AND/OR SPECIFICATIONS FOR ADDITIONAL DETAILS AND INFORMATION. ITEMS SO NOTED ARE TO BE INCLUDED IN THE CONTRACT WHETHER OR NOT ENGINEER'S DRAWINGS AND SPECIFICATIONS CONTAIN ADDITIONAL INFORMATION OR REQUIREMENTS FOR EACH SPECIFIC ITEM KEYNOTED. UPON FINDING A DISCREPANCY OR APPARENT LACK OF COORDINATING INFORMATION IN ENGINEER'S DRAWINGS OR SPECIFICATIONS, CONTRACTOR SHALL REQUEST ADDITIONAL INFORMATION FROM ARCHITECT, IN ADVANCE TO AVOID COST OR TIME IMPACT.

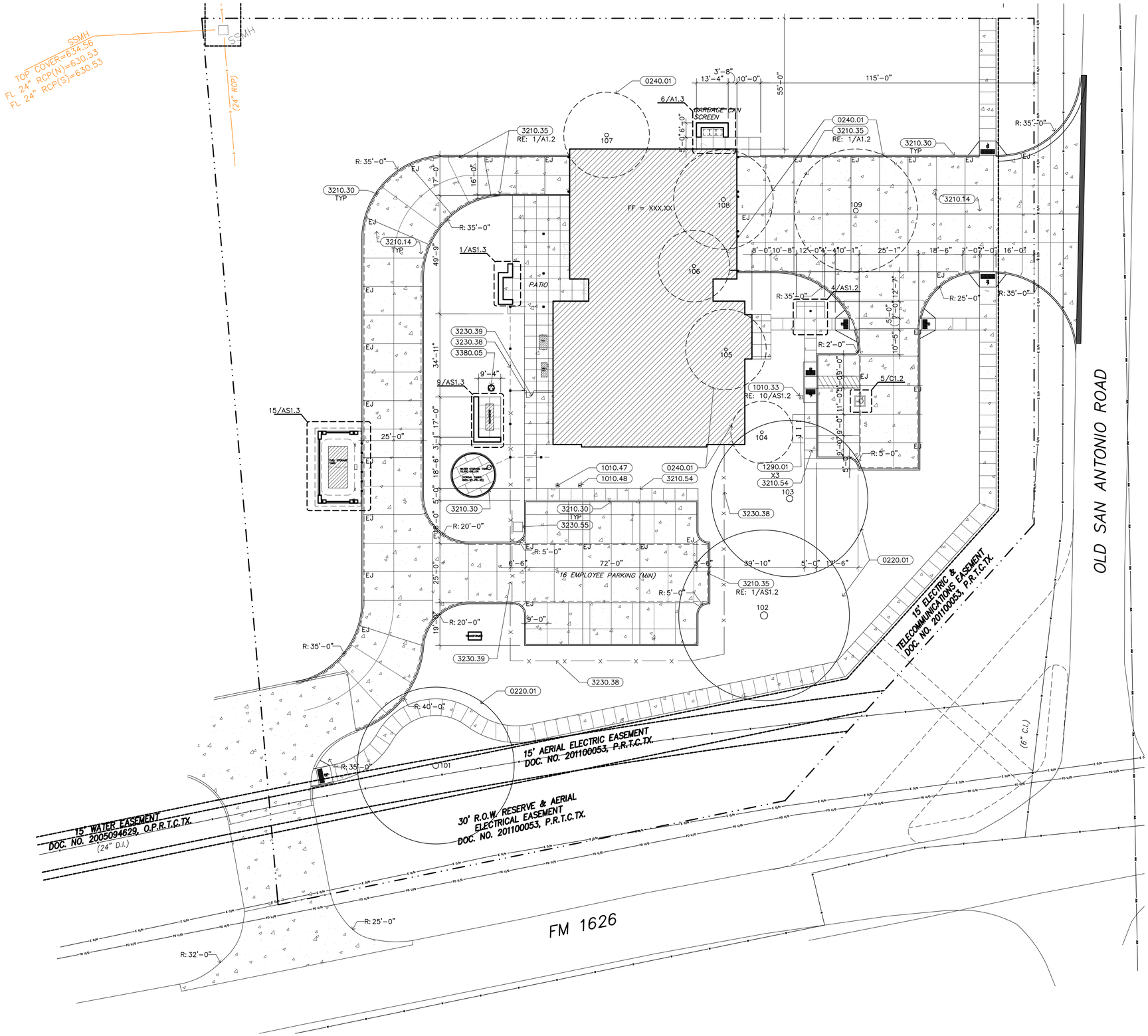

1 SITE PLAN
1" = 20-0"

SP001

KEYNOTES

DIVISION 02 – EXISTING CONDITIONS (TO REMAIN, U.N.O.) & DEMOLITION

0220.01 EXISTING TREE
0240.01 REMOVE EXISTING TREE

DIVISION 10 – SPECIALTIES

1010.33 POLE MOUNTED SIGNAGE – "H.C. PARKING ONLY"
1010.47 POLE MOUNTED SIGNAGE – "FUEL EFFICIENT VEHICLE PARKING"
1010.48 POLE MOUNTED SIGNAGE – "CARPOOL PARKING"

DIVISION 12 – FURNISHINGS

1290.01 PRE-MANUFACTURED METAL BICYCLE RACK

DIVISION 32 – EXTERIOR IMPROVEMENTS

3210.14 CONCRETE PAVING (RE: CIVIL)
3210.30 6" CONCRETE CURB (RE: CIVIL)
3210.35 FIRE LANE STRIPING PER CITY REQUIREMENTS
3210.54 CONCRETE SIDEWALK
3230.38 DECORATIVE METAL FENCE
3230.39 DECORATIVE METAL GATE
3230.55 MOTORIZED GATE OPERATOR

DIVISION 33 – UTILITIES (RE: CIVIL & MEP)

3380.05 RADIO COMMUNICATIONS ANTENNA

REGISTERED ARCHITECT MARK E. WATFORD 9241 STATE OF TEXAS
09/23/16

BROWN REYNOLDS WATFORD ARCHITECTS
2700 EARL RUDDER FRWY SOUTH
SUITE 4000
COLLEGE STATION, TEXAS 77845
979.694.1791
WWW.BRWARCH.COM

AUSTIN ONION CREEK FIRE & EMS STATION
11112 OLD SAN ANTONIO ROAD
AUSTIN, TEXAS 78748

REVISIONS

DATE	9/23/2016
DRAWN BY	LA, MW
CHECKED BY	RH
PROJECT NO.	214106.00

AS1.1

SITE PLAN

NOTE: SYMBOL TO BE CENTERED ON WIDTH OF PARKING SPACE AND @ DRIVE EDGE OF SPACE. SYMBOLS ARE REQUIRED TO CONTRAST WITH THE BACKGROUND WHITE ON BLUE (COLOR No. 105090 IN FEDERAL STD. 5952) DOUBLE COAT (TYP.)

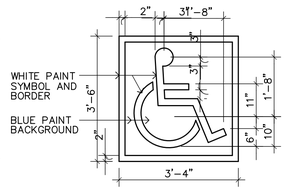

5 DETAIL SD001
1/2" = 1'-0"

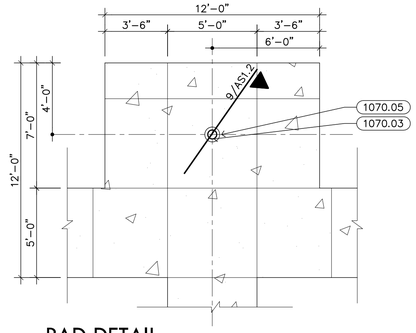

4 PAD DETAIL SD001
1/4" = 1'-0"

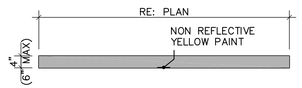

3 PAVEMENT MARKING SD001
1/2" = 1'-0"

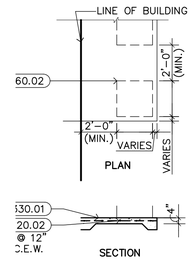

2 PAD DETAIL SD001
1/4" = 1'-0"

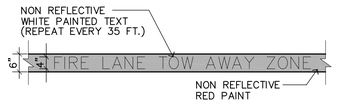

1 FIRE LANE DETAIL SD001
1/2" = 1'-0"

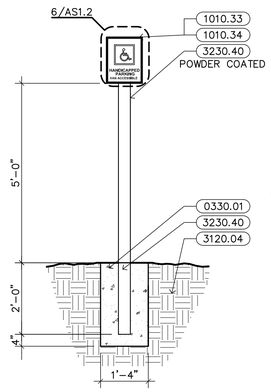

11 NOT USED SD001
1/2" = 1'-0"

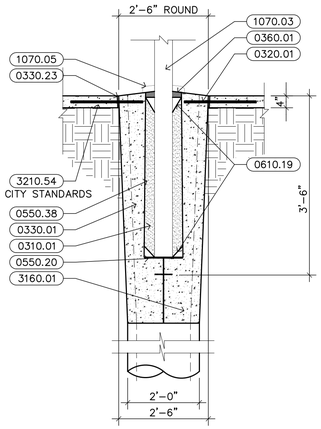

10 H.C. SIGN DETAIL SD001
1/2" = 1'-0"

9 FLAGPOLE DETAIL SD001
1/2" = 1'-0"

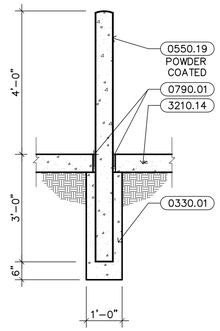

8 BOLLARD DETAIL SD001
1/2" = 1'-0"

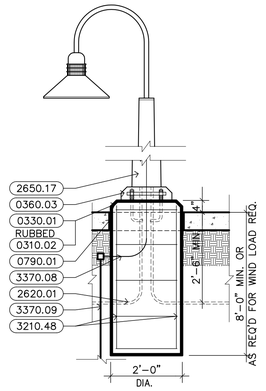

7 LIGHT POLE DETAIL SD001
1/2" = 1'-0"

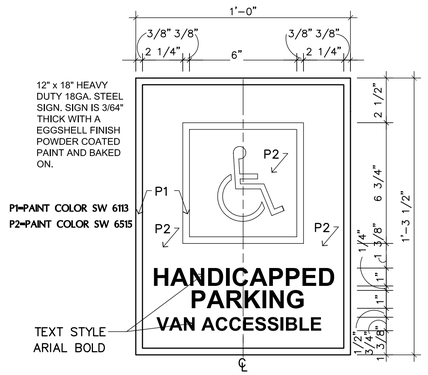

6 H.C. SIGN DETAIL SD001
3" = 1'-0"

KEYNOTES

DIVISION 03 – CONCRETE

0310.01 TAMPED, SCREEDED DRY SAND
0310.02 3/4" CHAMFER
0320.01 DOWEL INTO CONCRETE SLAB
0320.02 STEEL REINFORCING (RE: STRUCTURAL)
0330.01 CONCRETE (RE: STRUCTURAL)
0330.23 CONCRETE EXPANSION JOINT – FILL WITH JOINT SEALER 1/4" BELOW SURFACE
0360.01 LEAD CAULKING OVER WATERPROOF CEMENT GROUT
0360.03 FILL WITH GROUT

DIVISION 05 – METALS

0550.19 6" PIPE BOLLARD. FILL WITH CONCRETE AND PAINT SAFETY YELLOW
0550.20 1/2" STEEL PLATE WITH 3/4" DIAMETER LIGHTNING ARRESTOR SPIKE. EXTEND 2'-0" BELOW CONCRETE
0550.38 PIPE SLEEVE

DIVISION 06 – WOOD, PLASTICS, & COMPOSITES

0610.19 WOOD WEDGE

DIVISION 07 – THERMAL & MOISTURE PROTECTION

0790.01 SEALANT WITH BACKER ROD AS REQUIRED

DIVISION 10 – SPECIALTIES

1010.33 POLE MOUNTED SIGNAGE – "H.C. PARKING ONLY"
1010.34 POLE MOUNTED SIGNAGE – "VAN-ACCESSIBLE"
1070.03 GROUND-SET FLAGPOLE
1070.05 FLAGPOLE COLLAR

DIVISION 23 – HEATING, VENTILATING, & AIR-CONDITIONING (HVAC) (RE: MECHANICAL)

2360.02 HVAC CONDENSING UNIT

DIVISION 26 – ELECTRICAL (RE: ELECTRICAL)

2620.01 CONDUIT
2650.17 LIGHT POLE / FIXTURE ON CONCRETE BASE

DIVISION 31 – EARTHWORK

3120.04 EARTH
3160.01 CONCRETE PIER (RE: STRUCTURAL)

DIVISION 32 – EXTERIOR IMPROVEMENTS

3210.14 CONCRETE PAVING (RE: CIVIL)
3210.48 CAST-IN-PLACE CONCRETE WITH SIX #5 VERTICALS WITH #3 SPIRAL TIES @ 16" O.C.
3210.54 CONCRETE SIDEWALK
3230.40 4" X 4" STEEL TUBE POST WITH CAP PLATE

DIVISION 33 – UTILITIES (RE: CIVIL & MEP)

3370.08 BARE COPPER GROUND
3370.09 COPPER GROUND ROD (8'-0" LONG)

NOTES

1) FIRST FLUSH DIVERTER USING POST/WALL DIVERTER KIT MANUFACTURED BY RAINWATER HARVESTING PTY LTD (WWW.RAINWATERHARVESTING.COM), OR APPROVED EQUAL, AND 12" SDR35 PVC PIPE; COAT W/ BLACK PRIMER & THEN GALVANIZED PAINT TO PROECT PVC FROM SUNLIGHT. SEE SPECS.
2) 8" SDR35 PVC PIPE MAIN HARVEST LINE; COAT W/ BLACK PRIMER & THEN GALVANIZED PAINT TO PROTECT PVC FROM SUNLIGHT. SEE SPECS.
3) 4-STATION CONTROLLER FOR ACTUATED BALL VALVE; CONTROLLER SHALL BE IN WEATHERPROOF PEDESTAL.
4) SOLENOID VALVE ON WATER LINE FROM TANK TO PUMP CONTROLLED BY FLOAT SWITCH. LINE FROM TANK TO PUMP TO BE OPEN WHEN CISTERN CONTAINS RAINWATER. WHEN WATER LEVEL DROPS BELOW MINIMUM OF 1000 GALLONS, SOLENOID VALVE CLOSES AND IRRIGATION WILL AUTOMATICALLY SWITCH TO CITY SUPPLIED WATER FROM 1-1/2" IRRIGATION METER

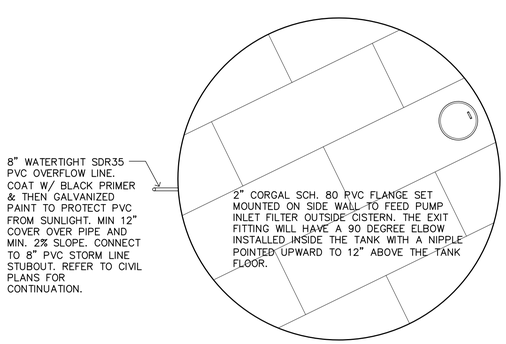

14 WATER STORAGE TANK TOP VIEW SD001
1/4" = 1'-0"

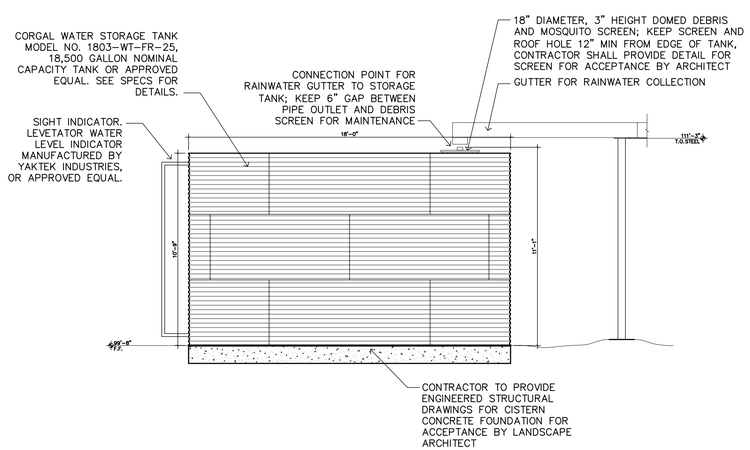

13 WATER STORAGE TANK ELEVATION SD001
1/4" = 1'-0"

CISTERN NOTES

1) THIS SYSTEM IS DESIGNED AND INTENDED TO PROVIDE A METHOD TO STOR WATER COLLECTED FROM THE FIRE STATION/EMS ROOF FOR LANDSCAPE IRRIGATION USE ONLY. IT IS NOT TO BE USED AS A POTABLE WATER SYSTEM.

2) GALVANIZED CISTERN WITH PROTECTIVE COATING BY CORGAL WATER STORAGE TANKS HAVING A CAPACITY OF 18,500 U.S. GALLONS AND A CAPACITY OF 17,000 U.S. GALLONS BELOW THE SIDE OVERFLOW FITTING, OR APPROVED EQUAL. CONTRACTOR IS TO PROVIDE ALL CONSTRUCTION, EXCAVATION, FOOTING AND BACK FILL ENGINEERED DRAWINGS INCLUDING INSIDE AND OUTSIDE FINISHES, WATER PROOFING AND PROTECTION SPECIFICATIONS FOR CONSTRUCTION TO THE ARCHITECT/LANDSCAPE ARCHITECT FOR REVIEW AND ACCEPTANCE.

3) GALVANIZED TANK SHALL BE SET ON CONCRETE PAD. CONTRACTOR SHALL PROVIDE ENGINEERED DRAWINGS TO ARCHITECT/LANDSCAPE ARCHITECT FOR REVIEW AND ACCEPTANCE.

4) ALL CONNECTIONS, FITTINGS AND EQUIPMENT TO THE CISTERN ARE TO BE WATERTIGHT AND LIGHT TIGHT. ALL PIPE, FITTINGS AND APPURTENANCES EXPOSED TO SUNLIGHT SHALL BE GALVANIZED METAL OR COATED WITH BLACK PRIMER AND THEN GALVANIZED PAINT TO PROTECT FROM SUNLIGHT. ALL IRRIGATION AND CISTERN PIPING INSTALLED ABOVE GRADE SHALL BE GALVANIZED METAL OR COATED WITH BLACK PRIMER AND THEN GALVANIZED PAINT TO PROTECT FROM SUNLIGHT.

5) ALL OTHER COMPONENT PARTS, ATTACHMENTS AND ANCILLARY FITTINGS AND INSTALLATIONS NOT SPECIFICALLY NAMED BUT REQUIRED FOR THE SYSTEM TO FUNCTION WITHIN THE PARAMETERS AND INTENTION OF THE PLANS SHALL BE CONSIDERED TO BE A PART OF THE SYSTEM TO BE PROVIDED.

6) THE CONTRACTOR IS TO PROVIDE SUFFICIENT INFORMATION REGARDING ALL EQUIPMENT AND METHODS TO THE ARCHITECT/LANDSCAPE ARCHITECT FOR ACCEPTANCE PRIOR TO INSTALLATION.

7) ACTUATOR VALVE TO BE HARD WIRED TO 4-STATION IRRIGATION CONTROL PANEL BY LICENSED ELECTRICIAN, REF. MEP.

8) SIGHT INDICATOR TO BE INSTALLED ON CISTERN. SIGHT INDICATOR SHALL BE LEVETATOR WATER LEVEL INDICATOR MANUFACTURED BY YAKTEK INDUSTRIES (WWW.YAKTEK.COM.AU), OR APPROVED EQUAL.

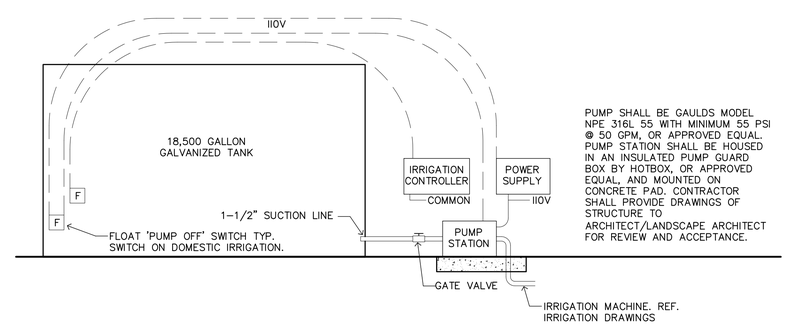

12 DIAGRAMATIC IRRIGATION STORAGE CISTERN LAYOUT SD001
1/4" = 1'-0"

REGISTERED ARCHITECT MARK E. WATFORD 9241 STATE OF TEXAS
09/23/16

BROWN REYNOLDS WATFORD ARCHITECTS
2700 EARL RUDDER FRWY SOUTH
SUITE 400D
COLLEGE STATION, TEXAS 77845
979.694.1791
WWW.BRWARCH.COM
BRW

AUSTIN ONION CREEK
FIRE & EMS STATION
11112 OLD SAN ANTONIO ROAD
AUSTIN, TEXAS 78748

REVISIONS

DATE	9/23/2016
DRAWN BY	LA, MW
CHECKED BY	RH
PROJECT NO.	214106.00

AS1.2
SITE DETAILS

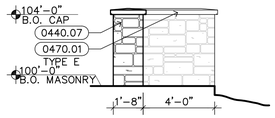

5 ELEVATION
1/4" = 1'-0"
SD001

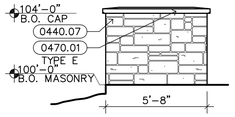

4 ELEVATION
1/4" = 1'-0"
SD001

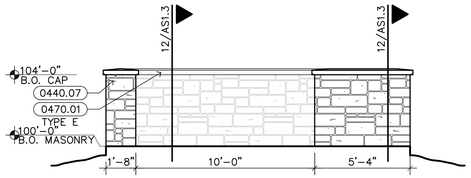

3 ELEVATION
1/4" = 1'-0"
SD001

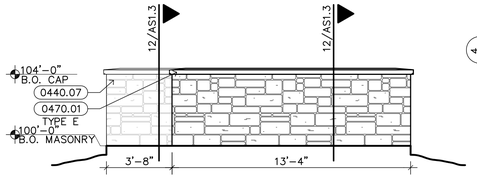

2 ELEVATION
1/4" = 1'-0"
SD001

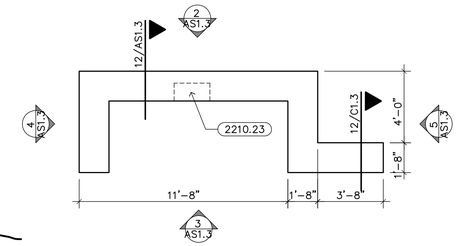

1 ENLARGED PLAN
1/4" = 1'-0"
SD001

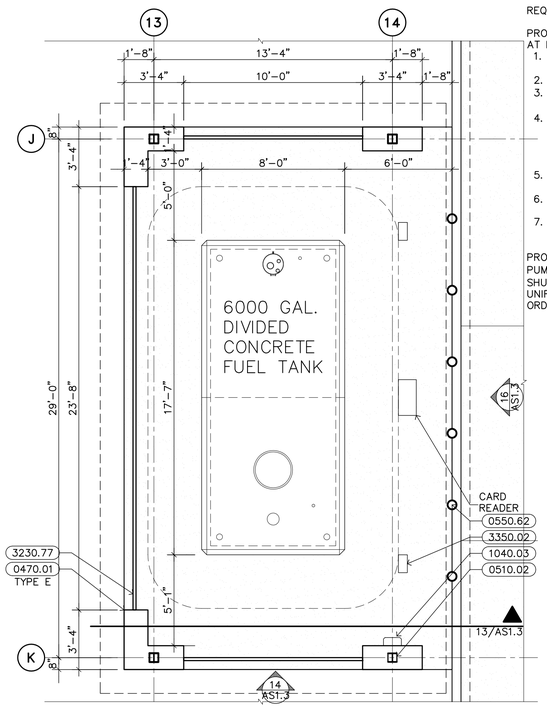

15 ENLARGED PLAN
1/4" = 1'-0"
SD001

REQUIRED SIGNAGE

PROVIDE PERMANENTLY ATTACHED SIGNAGE AT FUEL DISPENSING STATION

1. A SIGN STATING THE MATERIAL STORED WITHIN THE TANK.
2. "NO SMOKING"
3. "SIMULTANEOUS TANK FILLING AND FUEL DISPENSING IS PROHIBITED"
4. "IN CASE OF FIRE OR SPILL"
   USE EMERGENCY PUMP SHUTOFF
   REPORT THE ACCIDENT
   FIRE DEPARTMENT NO._____
   FACILITY ADDRESS _____
5. A SIGN SHOWING THE 90% FULL CAPACITY OF THE TANK. LETTERING TO HAVE 1" STROKE.
6. A SIGN REQUIRING MOTORS TO BE STOPPED DURING FUELING OPERATIONS
7. A SIGN PROHIBITING DISPENSING INTO UNAPPROVED CONTAINERS

PROVIDE AN ENGRAVED PLASTIC 3" X 8" SIGN AT THE PUMP MASTER SWITCH LABELED "EMERGENCY PUMP SHUTOFF" PROVIDE OTHER SIGNAGE AS REQUIRED BY THE UNIFORM FIRE CODE AND THE CITY OF AUSTIN LOCAL ORDINANCE NO. 321001-L

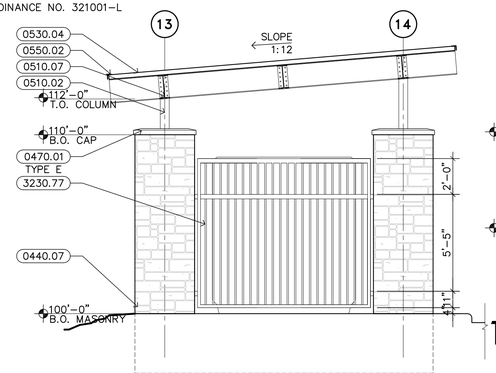

14 ELEVATION
1/4" = 1'-0"
SD001

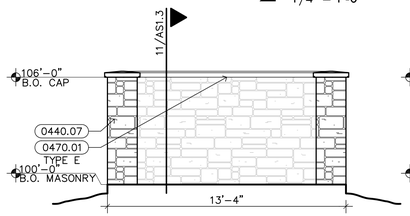

8 ELEVATION
1/4" = 1'-0"
SD001

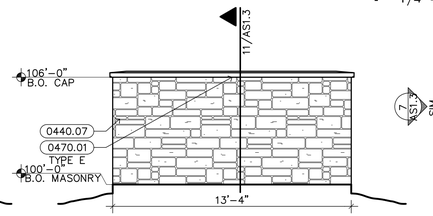

7 ELEVATION
1/4" = 1'-0"
SD001

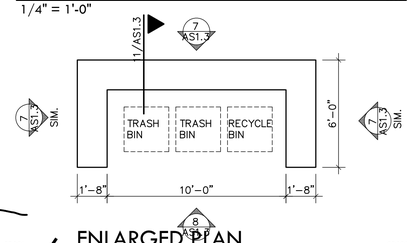

6 ENLARGED PLAN
1/4" = 1'-0"
SD001

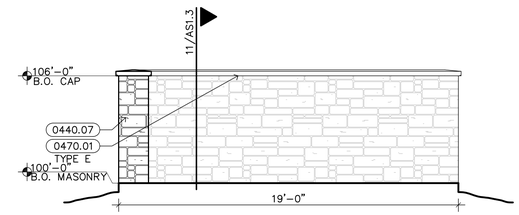

10 ELEVATION
1/4" = 1'-0"
SD001

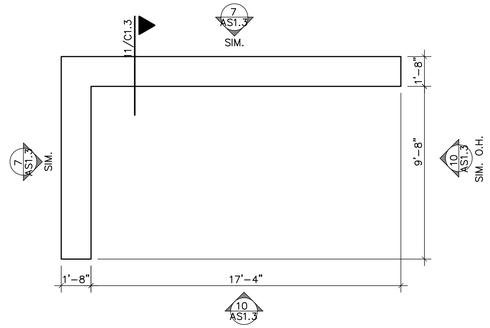

9 ENLARGED PLAN
1/4" = 1'-0"
SD001

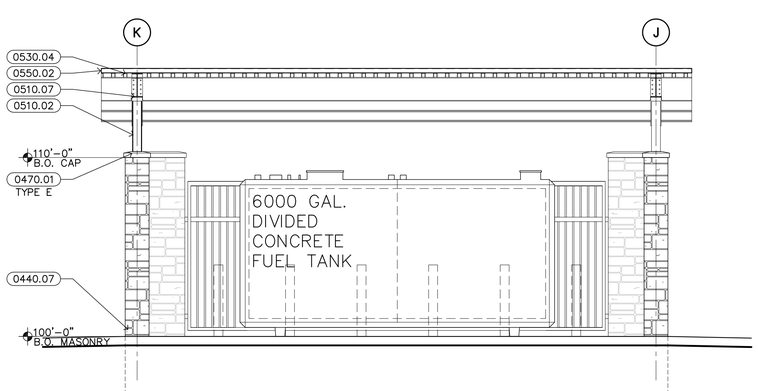

16 ELEVATION
1/4" = 1'-0"
SD001

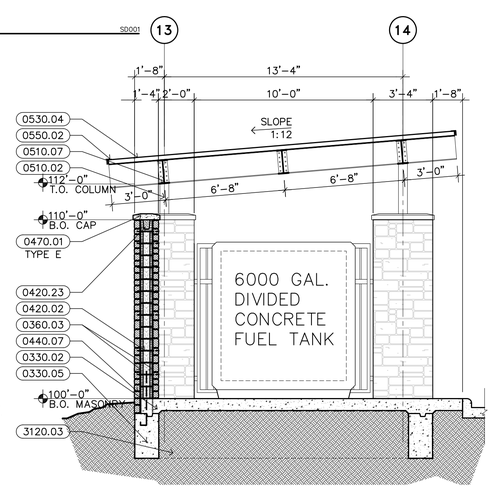

13 FUEL STATION SECTION
1/4" = 1'-0"
SD001

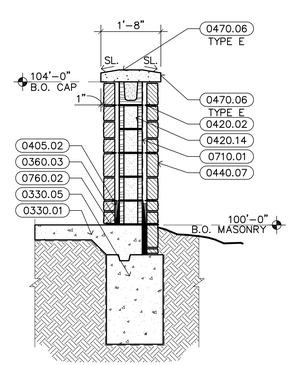

12 GRILL WALL SECTION
1/4" = 1'-0"
SD001

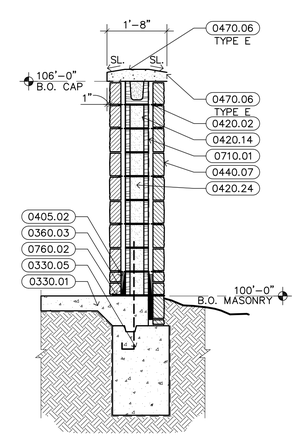

11 SCREEN WALL SECTION
1/4" = 1'-0"
SD001

KEYNOTES

DIVISION 03 – CONCRETE

0330.01 CONCRETE (RE: STRUCTURAL)
0330.02 CONCRETE SLAB (RE: STRUCTURAL)
0330.05 CONCRETE GRADE BEAM (RE: STRUCTURAL)
0360.03 FILL WITH GROUT

DIVISION 04 – MASONRY

0405.02 MORTAR NET
0420.02 HORIZONTAL REINFORCING AT 16" O.C. VERTICALLY
0420.14 8" CONCRETE MASONRY UNITS
0420.23 CONCRETE MASONRY UNIT BOND BEAM
0420.24 VERTICAL REINFORCING IN CONCRETE MASONRY UNITS (RE: STRUCTURAL)
0440.07 STONE VENEER
0470.01 CAST STONE
0470.06 CAST STONE CAP – PIN BOLT CONNECTIONS

DIVISION 05 – METALS

0510.02 STEEL COLUMN (RE: STRUCTURAL)
0510.07 STEEL BEAM (RE: STRUCTURAL)
0530.04 METAL ROOF DECK (RE: STRUCTURAL)
0550.02 3" X 3" X 1/4" STEEL ANGLE
0550.62 6" PIPE BOLLARD. FILL WITH CONCRETE

DIVISION 07 – THERMAL & MOISTURE PROTECTION

0710.01 BITUMINOUS DAMPPROOFING MASTIC
0760.02 THROUGH-WALL FLASHING

DIVISION 10 – SPECIALTIES

1040.03 FIRE EXTINGUISHER AND SEMI-RECESSED CABINET

DIVISION 22 – PLUMBING (RE: PLUMBING)

2210.23 WEATHERPROOF PLUMBING ENCLOSURE

DIVISION 31 – EARTHWORK

3120.03 COMPACTED SUBGRADE

DIVISION 32 – EXTERIOR IMPROVEMENTS

3230.77 ORNAMENTAL FIBERGLASS FENCE

DIVISION 33 – UTILITIES (RE: CIVIL & MEP)

3350.02 FUEL DISPENSER

BROWN REYNOLDS WATFORD ARCHITECTS
2700 EARL RUDDER FRWY SOUTH
SUITE 400C
COLLEGE STATION, TEXAS 77845
979.694.1791
WWW.BRWARCH.COM

AUSTIN ONION CREEK FIRE & EMS STATION

11112 OLD SAN ANTONIO ROAD
AUSTIN, TEXAS 78748

REVISIONS

DATE	9/23/2016
DRAWN BY	LA, MW
CHECKED BY	RH
PROJECT NO.	214106.00

AS1.3

SITE DETAILS

ONION CREEK FIRE & EMS STATION FACILITY

11112 OLD SAN ANTONIO ROAD
SITE DEVELOPMENT IMPROVEMENTS

PROJECT TITLE: ONION CREEK FIRE & EMS STATION FACILITY

PROJECT LEGAL DESCRIPTION: LOT 3 BLOCK A COLONIAL GRAND AT CITYWAY SUBDIVISION

PROJECT STREET ADDRESS: 11112 OLD SAN ANTONIO ROAD
AUSTIN, TEXAS 78748

PROPERTY OWNER: CITY OF AUSTIN
ADDRESS: P.O. BOX 1088, AUSTIN TX. 78748

PHONE NO.: (512) 974-7157
FAX NO.: (512) 974-7222

CIVIL ENGINEER: CHAN & PARTNERS ENGINEERING, LLC.
ADDRESS: 4319 JAMES CASEY STREET #300 AUSTIN TX. 78745
PHONE NO.: (512) 480-8155
FAX NO.: (512) 480-8811

ARCHITECT: BROWN REYNOLDS WATFORD ARCHITECTS, INC.
ADDRESS: 2700 EARL RUDDER FREEWAY SOUTH, SUITE 4000
COLLEGE STATION, TX. 77845
PHONE NO.: (979) 694-1791
FAX NO.: (979) 694-8293

LANDSCAPE ARCHITECT: COLEMAN & ASSOCIATES LANDSCAPE ARCHITECTURE
ADDRESS: 9890 SILVER MOUNTAIN DR., AUSTIN TX. 78737
PHONE NO.: (512) 476-2090
FAX NO.: (512) 476-2099

MEP ENGINEER: JOSE I GUERRA, INC.
ADDRESS: 2401 SOUTH IH-35, SUITE 210 AUSTIN TX. 78741
PHONE NO.: (512) 445-2090
FAX NO.: (512) 445-2099

STRUCTURAL ENGINEER: JQ + TSEN
ADDRESS: 1608 WEST 6TH STREET, SUITE 200, AUSTIN, TX 78703
PHONE NO.: (512) 474-4001

CITY GRID NUMBER : L-11

FLOODPLAIN NOTE:

NO PORTION OF THIS PROJECT IS WITHIN THE 100-YEAR FLOOD PLAIN BOUNDARY AS SHOWN ON THE FLOOD INSURANCE RATE MAP COMMUNITY - PANEL NUMBER 48453C0595J, EFFECTIVE DATE SEPTEMBER 26, 2008.

AQUIFER NOTE:

THIS PROJECT IS NOT LOCATED IN THE EDWARD'S AQUIFER RECHARGE ZONE.

WATERSHED NOTE:

THIS SITE IS LOCATED IN THE ONION CREEK WATERSHED, CLASSIFIED AS SUBURBAN WATERSHED. THERE ARE NO KNOWN CRITICAL ENVIRONMENTAL FEATURES EVIDENT ON THE SITE OR WITHIN 150' OF THE SITE. THE SITE PLAN COMPLIES WITH THE CITY OF AUSTIN'S LAND DEVELOPMENT CODE CHAPTER 25-8.

COMMERCIAL DESIGN STANDARDS NOTE:
THIS SITE PLAN IS SUBJECT TO SUBCHAPTER E OF THE LAND DEVELOPMENT CODE. PRINCIPAL ROADWAY IS OLD SAN ANTONIO ROAD, WHICH IS CLASSIFIED AS A SUBURBAN ROADWAY. FOR SUBCHAPTER E PURPOSES, THIS PROJECT INCORPORATES 7-FT WIDE CLEAR ZONE SIDEWALK, 8-FT WIDE PLANTING ZONE AND SHADING ALONG THE SIDEWALK AS ALTERNATIVE COMPLIANCE TO SUBCHAPTER E REQUIREMENTS FOR BUILDING PLACEMENT AND SIDEWALK CONFIGURATION.

ZONING CASE NUMBERS:
C14-2013-0123

LEED NOTE:
ALL BUILDINGS WILL REQUIRE SILVER LEED CERTIFICATION.

CUT / FILL NOTE:
NO ADMINISTRATIVE VARIANCE REQUIRED.

FIRE PROTECTION NOTE:
CONSTRUCTION OF BUILDING WILL BE TYPE V-B. ALL BUILDINGS ARE TO BE SPRINKLERED TO NFPA STANDARDS.

WATER PRESSURE ZONE NOTE:
THIS PROJECT IS LOCATED IN THE SOUTH PRESSURE ZONE AREA.

WATER PRESSURE ZONE: SOUTH

TOTAL FIRE FLOW DEMAND: 1,500 GPM

FIRE SPRINKLER FLOW DEMAND: 600 GPM

MIN. FIRE HYDRANT FLOW DEMAND: 900 GPM

BUILDING FIRE AREA: 9,640 SF

BUILDING TYPE: V-B

STATIC PRESSURE: 90 PSI

PRV REQUIRED ON OWNER SIDE FOR LOTS WITH PRESSURE HIGHER THAN 65 PSI. SET PRV TO 65 PSI.

AFD FIRE HYDRANT FLOW TEST
AUSTIN FIRE DEPARTMENT CONDUCTED FIRE HYDRANT FLOW TEST ON NOVEMBER, 17 2015 WITH THE FOLLOWING RESULTS:

RESIDUAL HYDRANT# 213557
STATIC PRESSURE= 90 PSI
RESIDUAL PRESSURE= 83 PSI

FLOW HYDRANT# 213491
STATIC PRESSURE= 94 PSI
VELOCITY PRESSURE= 48 PSI
FLOW RATE= 1163 GPM

STORM WATER DETENTION AND TREATMENT:
STORM WATER DETENTION AND WATER QUALITY TREATMENT FOR THIS SITE (LOT 3 OF PLAT) IS PROVIDED BY THE COLONIAL GRAND AT CITY WAY DETENTION AND WATER QUALITY POND (SP-2010-0246C) ASSUMING A MAXIMUM IMPERVIOUS COVER OF 80% FOR THE SITE.

INNOVATION WATER QUALITY MANAGEMENT:
STORM WATER FROM THE ROOF WILL DRAIN VIA GUTTERS TO A RAINWATER COLLECTION TANK. OVERFLOW STORM WATER WILL DRAIN TO THE EXISTING WATER QUALITY TREATMENT POND. RAIN WATER COLLECTION TANK WATER WILL BE USED TO IRRIGATE 6,928 SQ. FT. OF LANDSCAPE.

ELECTRICAL EASEMENT NOTE
ALL ELECTRICAL EASEMENTS MUST BE SHOWN ON ALL PLAN SHEETS, LEFT CLEAR FOR ELECTRIC USE AND MAINTENANCE ON A 24/7 BASIS IN PERPETUITY AND MAINTAIN NECESSARY CLEARANCES FROM ANY PROPOSED STRUCTURES, VEGETATION, ETC. AT ALL TIMES. NECESSARY CLEARANCE INFORMATION (AE, OSHA, NESC & NEC) MAY BE FOUND IN AUSTIN ENERGY'S DESIGN CRITERIA MANUAL- SECTION 1.5.3.9. THE MANUAL IS AVAILABLE ON AUSTIN ENERGY'S WEBSITE UNDER CONCTRACTORS/ELECTRIC SERVICE DESIGN AND PLANNING.

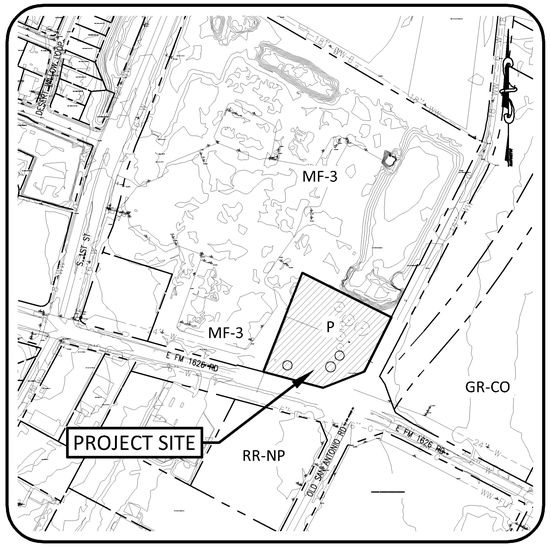

LOCATION MAP
NOT-TO-SCALE

MAPSCO - PAGE # 703
GRID NUMBER - L11

REVISIONS / CORRECTIONS

NO.	DESCRIPTION	REVISE (R) ADD (A) VOID (V) SHEET NO.'S	TOTAL # SHTS. IN PLAN SET	NET CHANGE IMP. COVER (SQ. FT.)	TOTAL SITE IMP. COVER (SQ./FT.)/ [%]	CITY OF AUSTIN APPROVAL / DATE	DATE IMAGED

COMPLIANCE WITH THE COMMERCIAL AND MULTI-FAMILY RECYCLING ORDINANCE IS MANDATORY FOR MULTI-FAMILY COMPLEXES, BUSINESSES, AND OFFICE BUILDINGS.

APPROVAL OF THESE PLANS BY THE CITY OF AUSTIN INDICATES COMPLIANCE WITH APPLICABLE CITY REGULATIONS ONLY. APPROVAL BY OTHER GOVERNMENTAL ENTITIES MAY BE REQUIRED PRIOR TO THE START OF CONSTRUCTION. THE APPLICANT IS RESPONSIBLE FOR DETERMINING WHAT ADDITIONAL APPROVAL MAY BE NECESSARY.

THE DISTURBED AREAS WITHIN THIS PROJECT SHALL BE REVEGETATED AND ALL PERMANENT EROSION/SEDIMENTATION CONTROLS COMPLETED PRIOR TO THE RELEASE OF FISCAL SECURITY FOR THE PROJECT.

SHEET LIST TABLE

SHEET DESC.	SHEET TITLE
C1.0	COVER SHEET
C1.1	GENERAL NOTES
C1.2	SUBDIVISION PLAT
C1.3	EXISTING CONDITIONS & DEMOLITION PLAN
C2.0	SITE PLAN
C2.1	ES & TREE PROTECTION PLAN
C2.2	ES DETAILS
C2.3	ES DETAILS 2
C3.0	DRAINAGE PLAN
C4.0	GRADING AND STORM DRAIN PLAN
C4.1	STORM DRAIN PROFILE SHEET 1
C4.2	STORM DRAIN PROFILE SHEET 2
C4.3	EXCAVATION AND BACKFILL PLAN
C5.0	PAVEMENT PLAN
C5.1	PAVEMENT DETAIL SHEET
C6.0	WATER & WASTEWATER PLAN
C6.1	WATER & WASTEWATER PROFILES
C6.2	WATER & WASTEWATER DETAILS SHEET 1 OF 2
C6.3	WATER & WASTEWATER DETAILS SHEET 2 OF 2
C7.0	STANDARD DETAIL SHEET 1 OF 5
C7.1	STANDARD DETAIL SHEET 2 OF 5
C7.2	STANDARD DETAIL SHEET 3 OF 5
C7.3	STANDARD DETAIL SHEET 4 OF 5
C7.4	STANDARD DETAIL SHEET 5 OF 5
C8.0	TRAFFIC CONTROL SEGMENT 1
C8.1	TRAFFIC CONTROL SEGMENT 2
C8.2	TRAFFIC CONTROL DETAILS SHEET 1
C8.3	TRAFFIC CONTROL DETAILS SHEET 2
C8.4	TRAFFIC CONTROL DETAILS SHEET 3
C8.5	TRAFFIC CONTROL DETAILS SHEET 4
L100	LANDSCAPE PLAN
L101	LANDSCAPE DETAILS
L102	PLANTING SCHEDULE & NOTES
A1.1	FLOOR PLAN
A2.1	EXTERIOR ELEVATIONS SHEET 1
A2.2	EXTERIOR ELEVATIONS SHEET 2
A2.3	BUILDING SECTIONS SHEET 1
A2.4	BUILDING SECTIONS SHEET 2

DATE OF SUBMITTAL: 6-22-2016

SUBMITTED BY:
CHAN & PARTNERS ENGINEERING, LLC. DATE

REVIEWED BY:
PLANNING AND DEVELOPMENT REVIEW DEPARTMENT DATE

SPC-2016-0287C
SITE PLAN / DEVELOPMENT PERMIT NUMBER DATE

APPROVED BY:
INDUSTRIAL WASTE DATE

APPROVED BY:
AUSTIN WATER UTILITY DATE

APPROVED BY:
CITY OF AUSTIN, FIRE DEPT. DATE

RELEASE OF THIS APPLICATION DOES NOT CONSTITUTE A VERIFICATION OF ALL DATA, INFORMATION AND CALCULATIONS SUPPLIED BY THE APPLICANT. THE ENGINEER OF RECORD IS SOLELY RESPONSIBLE FOR THE COMPLETENESS, ACCURACY AND ADEQUACY OF HIS/HER SUBMITTAL, WHETHER OR NOT THE APPLICATION IS REVIEWED FOR CODE COMPLIANCE BY CITY ENGINEERS.

THE PLAN IS COMPLETE, ACCURATE AND IN COMPLIANCE WITH SUBCHAPTER A OF THE LAND DEVELOPMENT CODE.

90% CONSTRUCTION DOCUMENTS

STATE OF TEXAS
JOHN R. KING
59429
LICENSED
PROFESSIONAL ENGINEER
9/22/2016

CHAN & PARTNERS
CONSULTING CIVIL ENGINEERS
CHAN & PARTNERS ENGINEERING, LLC
4319 JAMES CASEY STREET, #300
AUSTIN, TEXAS 78745
512-480-8155 (PH) • 512-480-8811 (FAX)
E-mail: info@chanpartners.com
WWW.CHANPARTNERS.COM
TEXAS REGISTRATION NO. F-10013

AUSTIN ONION CREEK
FIRE & EMS STATION
11112 OLD SAN ANTONIO ROAD
AUSTIN, TEXAS 78748

CITY OF AUSTIN • 1839 • FOUNDED

REVISIONS

DATE 9/22/2016
DRAWN BY CD
CHECKED BY JRK
PROJECT NO. 214106.00

COVER SHEET

C1.0

CITY OF AUSTIN GENERAL CONSTRUCTION NOTES:

1. ALL RESPONSIBILITY FOR THE ADEQUACY OF THESE PLANS REMAINS WITH THE ENGINEER WHO PREPARED THEM. IN REVIEWING THESE PLANS, THE CITY OF AUSTIN MUST RELY ON THE ADEQUACY OF THE WORK OF THE DESIGN ENGINEER.
2. CONTRACTOR SHALL CALL TEXAS 811 (811 OR 1-800-344-8377) FOR UTILITY LOCATIONS PRIOR TO ANY WORK IN CITY EASEMENTS OR STREET R.O.W.
3. CONTRACTOR SHALL NOTIFY THE CITY OF AUSTIN - SITE & SUBDIVISION DIVISION TO SUBMIT REQUIRED DOCUMENTATION, PAY CONSTRUCTION INSPECTION FEES, AND TO SCHEDULE THE REQUIRED SITE AND SUBDIVISION PRE-CONSTRUCTION MEETING. THIS MEETING MUST BE HELD PRIOR TO ANY CONSTRUCTION ACTIVITIES WITHIN THE R.O.W. OR PUBLIC EASEMENTS. PLEASE VISIT http://austintexas.gov/page/commercial-site-and-subdivision-inspections FOR A LIST OF SUBMITTAL REQUIREMENTS, INFORMATION CONCERNING FEES, AND CONTACT INFORMATION.
4. FOR SLOPES OR TRENCHES GREATER THAN FIVE FEET IN DEPTH, A NOTE MUST BE ADDED STATING: ''ALL CONSTRUCTION OPERATIONS SHALL BE ACCOMPLISHED IN ACCORDANCE WITH APPLICABLE REGULATIONS OF THE U.S. OCCUPATIONAL SAFETY AND HEALTH ADMINISTRATION.'' (OSHA STANDARDS MAY BE PURCHASED FROM THE GOVERNMENT PRINTING OFFICE; INFORMATION AND RELATED REFERENCE MATERIALS MAY BE PURCHASED FROM OSHA, 611 EAST 6TH STREET, AUSTIN TEXAS.)
5. ALL SITE WORK MUST ALSO COMPLY WITH ENVIRONMENTAL REQUIREMENTS.
6. UPON COMPLETION OF THE PROPOSED SITE IMPROVEMENTS AND PRIOR TO THE FOLLOWING, THE ENGINEER SHALL CERTIFY IN WRITING THAT THE PROPOSED DRAINAGE, FILTRATION AND DETENTION FACILITIES WERE CONSTRUCTED IN CONFORMANCE WITH THE APPROVED PLANS:

   ☐ RELEASE OF THE CERTIFICATION OF OCCUPANCY BY THE DEVELOPMENT SERVICES DEPARTMENT (INSIDE THE CITY LIMITS); OR

   ☐ INSTALLATION OF AN ELECTRIC OR WATER METER (IN THE FIVE-MILE ETJ)

CONTRACTOR NOTES:

1. THE INFORMATION SHOWN ON THESE DRAWINGS INDICATING TYPE AND LOCATION OF UNDERGROUND, SURFACE, AND AERIAL UTILITIES IS NOT GUARANTEED TO BE EXACT OR COMPLETE. THE CONTRACTOR IS RESPONSIBLE FOR DETERMINING THE EXACT TYPE AND LOCATION OF ALL UTILITIES AFFECTED BY CONSTRUCTION FOR THIS PROJECT IN ORDER TO AVOID DAMAGE TO THOSE UTILITIES. IF DAMAGE OCCURS, THE CONTRACTOR SHALL A) IMMEDIATELY ARRANGE FOR REPAIR AND RESTORATION OF CONTRACTOR-DAMAGED UTILITIES, AND B) PAY FOR SAME.

2. SLOPES OF ROADWAY CUTS AND EMBANKMENTS DAMAGED BY ANY OPERATION OF THE CONTRACTOR DURING THE EXECUTION OF THIS PROJECT SHALL BE REPAIRED AND RESTORED TO THE ORIGINAL PRE-CONSTRUCTION CONDITION IN ACCORDANCE WITH ALL APPLICABLE PROVISIONS OF THE STANDARD SPECIFICATIONS. BACK FILL AND FILL PLACED DURING REMEDIAL GRADING SHALL BE COMPACTED TO A DENSITY EQUAL TO OR GREATER THAN THAT OF THE ORIGINAL CONDITIONS AND TO THE SATISFACTION OF THE ENGINEER AND GOVERNING AUTHORITIES.

3. WHERE REMOVAL OF BASE AND PAVEMENT IS NECESSARY FOR THIS PROJECT ALL BASE AND PAVEMENT SHALL BE REPLACED IN ACCORDANCE WITH THE CONSTRUCTION DOCUMENTS, CITY'S STANDARD SPECIFICATIONS AND STANDARD SPECIFICATIONS FOR CUTS IN PUBLIC RIGHT OF WAY. ALL PAVEMENT CUTS SHALL BE SAWCUT PRIOR TO PLACEMENT OF H.M.A.C.

4. THE CONTRACTOR SHALL IMMEDIATELY NOTIFY THE ENGINEER OF ANY UNREPORTED OBSTACLES THAT MAY IMPEDE OR PREVENT THE PROPER CONSTRUCTION OF THIS PROJECT.

5. BEFORE DISCONNECTING ANY WATER LINE OR GAS LINE, CONTRACTOR MUST PROVIDE TWENTY-FOUR (24) HOUR NOTICE TO THE OWNER EXCEPT IN THE CASE OF A BONA FIDE EMERGENCY.

6. THE CONTRACTOR SHALL NOT DISPOSE OF SURPLUS EXCAVATED MATERIAL FROM THE SITE WITHOUT NOTIFYING THE PLANNING AND DEVELOPMENT REVIEW DEPARTMENT AT 974-2278 AT LEAST 48 HOURS PRIOR WITH THE LOCATION AND A COPY OF THE PERMIT ISSUED TO RECEIVE THE MATERIAL.

EXCAVATION AND BACKFILL:

1. CONTRACTOR/REPAIR CREW MUST NOTIFY CITY INSPECTOR AT LEAST TWENTY FOUR (24) HOURS PRIOR TO BEGINNING PERMANENT BACK FILL OPERATIONS.

2. ALL EXCAVATION FOR THIS PROJECT SHALL BE UNCLASSIFIED

3. BACK FILL DENSITY FOR UTILITY PIPES OUTSIDE THE FOOTPRINT OF THE BUILDING SHALL BE AS SPECIFIED IN ITEM 510 OF THE STANDARD SPECIFICATIONS. DENSITY FOR ALL BACK FILL OF BUILDING FOUNDATION AND FOUNDATION SUBGRADE SHALL BE AS SPECIFIED IN ITEM 401S OF THE STANDARD SPECIFICATION. TEST METHODS SHALL BE AS SPECIFIED IN THE STANDARD SPECIFICATIONS UNLESS INDICATED OTHERWISE IN WRITING BY THE ENGINEER.

4. THE CONTRACTOR SHALL OBTAIN ALL NECESSARY PERMITS THAT ARE REQUIRED TO COMPLY WITH SECTIONS 15-12-161 AND 15-12-181 OF THE CITY CODE REGARDING EXCAVATION IN PUBLIC RIGHT OF WAY.

ELECTRIC NOTES:

1. AUSTIN ENERGY HAS THE RIGHT TO PRUNE AND/OR REMOVE TREES, SHRUBBERY AND OTHER OBSTRUCTIONS TO THE EXTENT NECESSARY TO KEEP THE EASEMENTS CLEAR. AUSTIN ENERGY WILL PERFORM ALL TREE WORK IN COMPLIANCE WITH CHAPTER 25-8, SUBCHAPTER B OF THE CITY OF AUSTIN LAND DEVELOPMENT CODE.

2. THE OWNER/DEVELOPER OF THIS SUBDIVISION/LOT SHALL PROVIDE AUSTIN ENERGY WITH ANY EASEMENT AND/OR ACCESS REQUIRED, IN ADDITION TO THOSE INDICATED, FOR THE INSTALLATION AND ONGOING MAINTENANCE OF OVERHEAD AND UNDERGROUND ELECTRIC FACILITIES. THESE EASEMENT AND/OR ACCESS ARE REQUIRED TO PROVIDE ELECTRIC SERVICE TO THE BUILDING AND WILL NOT BE LOCATED SO AS TO CAUSE THE SITE TO BE OUT OF COMPLIANCE WITH CHAPTER 25-8 OF THE CITY OF AUSTIN LAND DEVELOPMENT CODE.

3. THE OWNER SHALL BE RESPONSIBLE FOR INSTALLATION OF TEMPORARY EROSION CONTROL, REVEGETATION AND TREE PROTECTION. IN ADDITION, THE OWNER SHALL BE RESPONSIBLE FOR ANY INITIAL TREE PRUNING AND TREE REMOVAL THAT IS WITHIN TEN FEET OF THE CENTER LINE OF THE PROPOSED OVERHEAD ELECTRICAL FACILITIES DESIGNED TO PROVIDE ELECTRIC SERVICE TO THIS PROJECT. THE OWNER SHALL INCLUDE AUSTIN ENERGY'S WORK WITHIN THE LIMITS OF CONSTRUCTION FOR THIS PROJECT.

4. THE OWNER OF THE PROPERTY IS RESPONSIBLE FOR MAINTAINING CLEARANCES REQUIRED BY THE NATIONAL ELECTRIC SAFETY CODE, OCCUPATIONAL SAFETY AND HEALTH ADMINISTRATION (OSHA) REGULATIONS, CITY OF AUSTIN RULES AND REGULATIONS AND TEXAS STATE LAWS PERTAINING TO CLEARANCES WHEN WORKING IN CLOSE PROXIMITY TO OVERHEAD POWER LINES AND EQUIPMENT. AUSTIN ENERGY WILL NOT RENDER ELECTRIC SERVICE UNLESS REQUIRED CLEARANCES ARE MAINTAINED.

TRENCH SAFETY NOTES:

1. IN ACCORDANCE WITH THE LAWS OF THE STATE OF TEXAS AND THE U.S. OCCUPATIONAL SAFETY AND HEALTH ADMINISTRATION REGULATIONS, ALL TRENCHES OVER 5 FEET IN DEPTH IN EITHER HARD AND COMPACT OR SOFT AND UNSTABLE SOIL SHALL BE SLOPED, SHORED, SHEETED, BRACED OR OTHERWISE SUPPORTED. FURTHERMORE, ALL TRENCHES LESS THAN 5 FEET IN DEPTH SHALL ALSO BE EFFECTIVELY PROTECTED WHEN HAZARDOUS GROUND MOVEMENT MAY BE EXPECTED.

2. IN ACCORDANCE WITH THE U.S. OCCUPATIONAL SAFETY AND HEALTH ADMINISTRATION REGULATIONS, WHEN EMPLOYEES ARE REQUIRED TO BE IN TRENCHES 4 FOOT DEEP OR MORE, ADEQUATE MEANS OF EXIT, SUCH AS A LADDER OR STEPS, MUST BE PROVIDED AND LOCATED SO AS TO REQUIRE NO MORE THAN 25 FEET OF LATERAL TRAVEL.

3. IF FOUND DURING CONSTRUCTION THAT TRENCHES ARE IN FACT GREATER THAN 5 FEET IN DEPTH, THE CONTRACTOR SHALL PROVIDE ACCEPTABLE TRENCH SAFETY PLANS DESIGNED BY A PROFESSIONAL ENGINEER IN ACCORDANCE WITH U.S. OSHA REGULATIONS.

APPENDIX P-4: - STANDARD SEQUENCE OF CONSTRUCTION

1. TEMPORARY EROSION AND SEDIMENTATION CONTROLS ARE TO BE INSTALLED AS INDICATED ON THE APPROVED SITE PLAN OR SUBDIVISION CONSTRUCTION PLAN AND IN ACCORDANCE WITH THE STORMWATER POLLUTION PREVENTION PLAN (SWPPP) THAT IS REQUIRED TO BE POSTED ON THE SITE. INSTALL TREE PROTECTION AND INITIATE TREE MITIGATION MEASURES.
2. THE ENVIRONMENTAL PROJECT MANAGER OR SITE SUPERVISOR MUST CONTACT THE WATERSHED PROTECTION DEPARTMENT, ENVIRONMENTAL INSPECTION, AT 512-974-2278, 72 HOURS PRIOR TO THE SCHEDULED DATE OF THE REQUIRED ON-SITE PRECONSTRUCTION MEETING.
3. THE ENVIRONMENTAL PROJECT MANAGER, AND/OR SITE SUPERVISOR, AND/OR DESIGNATED RESPONSIBLE PARTY AND THE GENERAL CONTRACTOR WILL FOLLOW THE STORM WATER POLLUTION PREVENTION PLAN (SWPPP) POSTED ON THE SITE. TEMPORARY EROSION AND SEDIMENTATION CONTROLS WILL BE REVISED, IF NEEDED, TO COMPLY WITH CITY INSPECTORS' DIRECTIVES, AND REVISED CONSTRUCTION SCHEDULE RELATIVE TO THE WATER QUALITY PLAN REQUIREMENTS AND THE EROSION PLAN.
4. ROUGH GRADE THE POND(S) AT 100% PROPOSED CAPACITY. EITHER THE PERMANENT OUTLET STRUCTURE OR A TEMPORARY OUTLET MUST BE CONSTRUCTED PRIOR TO DEVELOPMENT OF EMBANKMENT OR EXCAVATION THAT LEADS TO PONDING CONDITIONS. THE OUTLET SYSTEM MUST CONSIST OF A SUMP PIT OUTLET AND AN EMERGENCY SPILLWAY MEETING THE REQUIREMENTS OF THE DRAINAGE CRITERIA MANUAL AND/OR THE ENVIRONMENTAL CRITERIA MANUAL, AS REQUIRED. THE OUTLET SYSTEM SHALL BE PROTECTED FROM EROSION AND SHALL BE MAINTAINED THROUGHOUT THE COURSE OF CONSTRUCTION UNTIL INSTALLATION OF THE PERMANENT WATER QUALITY POND(S).
5. TEMPORARY EROSION AND SEDIMENTATION CONTROLS WILL BE INSPECTED AND MAINTAINED IN ACCORDANCE WITH THE STORM WATER POLLUTION PREVENTION PLAN (SWPPP) POSTED ON THE SITE.
6. BEGIN SITE CLEARING/CONSTRUCTION (OR DEMOLITION) ACTIVITIES.
7. IN THE BARTON SPRINGS ZONE, THE ENVIRONMENTAL PROJECT MANAGER OR SITE SUPERVISOR WILL SCHEDULE A MID-CONSTRUCTION CONFERENCE TO COORDINATE CHANGES IN THE CONSTRUCTION SCHEDULE AND EVALUATE EFFECTIVENESS OF THE EROSION CONTROL PLAN AFTER POSSIBLE CONSTRUCTION ALTERATIONS TO THE SITE. PARTICIPANTS SHALL INCLUDE THE CITY INSPECTOR, PROJECT ENGINEER, GENERAL CONTRACTOR AND ENVIRONMENTAL PROJECT MANAGER OR SITE SUPERVISOR. THE ANTICIPATED COMPLETION DATE AND FINAL CONSTRUCTION SEQUENCE AND INSPECTION SCHEDULE WILL BE COORDINATED WITH THE APPROPRIATE CITY INSPECTOR.
8. PERMANENT WATER QUALITY PONDS OR CONTROLS WILL BE CLEANED OUT AND FILTER MEDIA WILL BE INSTALLED PRIOR TO/CONCURRENTLY WITH REVEGETATION OF SITE.
9. COMPLETE CONSTRUCTION AND START REVEGETATION OF THE SITE AND INSTALLATION OF LANDSCAPING.
10. UPON COMPLETION OF THE SITE CONSTRUCTION AND REVEGETATION OF A PROJECT SITE, THE DESIGN ENGINEER SHALL SUBMIT AN ENGINEER'S LETTER OF CONCURRENCE TO THE WATERSHED PROTECTION AND DEVELOPMENT REVIEW DEPARTMENT INDICATING THAT CONSTRUCTION, INCLUDING REVEGETATION, IS COMPLETE AND IN SUBSTANTIAL CONFORMITY WITH THE APPROVED PLANS. AFTER RECEIVING THIS LETTER, A FINAL INSPECTION WILL BE SCHEDULED BY THE APPROPRIATE CITY INSPECTOR.
11. UPON COMPLETION OF LANDSCAPE INSTALLATION OF A PROJECT SITE, THE LANDSCAPE ARCHITECT SHALL SUBMIT A LETTER OF CONCURRENCE TO THE WATERSHED PROTECTION AND DEVELOPMENT REVIEW DEPARTMENT INDICATING THAT THE REQUIRED LANDSCAPING IS COMPLETE AND IN SUBSTANTIAL CONFORMITY WITH THE APPROVED PLANS. AFTER RECEIVING THIS LETTER, A FINAL INSPECTION WILL BE SCHEDULED BY THE APPROPRIATE CITY INSPECTOR.
12. AFTER A FINAL INSPECTION HAS BEEN CONDUCTED BY THE CITY INSPECTOR AND WITH APPROVAL FROM THE CITY INSPECTOR, REMOVE THE TEMPORARY EROSION AND SEDIMENTATION CONTROLS AND COMPLETE ANY NECESSARY FINAL REVEGETATION RESULTING FROM REMOVAL OF THE CONTROLS. CONDUCT ANY MAINTENANCE AND REHABILITATION OF THE WATER QUALITY PONDS OR CONTROLS.

SITE CLEAN UP & SAFETY REQUIREMENTS:

1. REMOVAL OF EXCAVATED MATERIALS AND DAILY CLEANUP OPERATIONS SHALL BE PERFORMED TO THE SPECIFICATIONS AND TO THE SATISFACTION OF THE OWNER AND ENGINEER.

2. CONTRACTOR SHALL MAINTAIN THE JOB SITE IN A SAFE, NEAT AND WORKMANLIKE MANNER AT ALL TIMES. JOB SITE SAFETY SHALL NOT BE COMPROMISED. ANY UNATTRACTIVE NUISANCE SHALL BE REMOVED OR CAMOUFLAGED BY CONTRACTOR WHEN DIRECTED BY THE OWNER OR ENGINEER.

3. UNATTENDED TRENCHES MUST BE COVERED WITH STEEL PLATES CAPABLE OF SUPPORTING VEHICULAR TRAFFIC. THESE STEEL PLATES MUST BE ADEQUATELY ANCHORED TO PREVENT THEM FROM BECOMING DISLODGED.

4. BARRICADES, FENCING, LIGHTS, AND/OR OTHER PROTECTIVE DEVICES SHALL ADEQUATELY PROTECT ALL HOLES, TRENCHES, AND OTHER HAZARDOUS AREAS AT ALL TIMES.

5. ALL CONSTRUCTION AND TRENCHING OPERATIONS SHALL BE ACCOMPLISHED IN ACCORDANCE WITH ALL APPLICABLE REGULATIONS OF THE U.S. OCCUPATIONAL SAFETY AND HEALTH ADMINISTRATION (OSHA). COPIES OF OSHA STANDARDS MAY BE PURCHASED FROM THE U.S. GOVERNMENT PRINTING OFFICE.

6. CONTRACTOR SHALL MAINTAIN A SUPERINTENDENT UPON THE PROJECT AT ALL TIMES WORK IS IN PROGRESS.

NATURAL GAS SERVICE CONNECTION :

1. OWNER IS RESPONSIBLE FOR CONTACTING "TEXAS GAS SERVICE" TO PROVIDE A GAS METER AND GAS SERVICE LINE OR METER / SERVICE UPGRADE TO SITE. CHAN & PARTNERS ENGINEERING LLC CAN PROVIDE THE GAS COMPANY WITH AN ELECTRONIC FILE OF THE SITE UPON REQUEST FROM THE OWNER AT SUCH TIME THE SERVICE APPLICATION IS GENERATED BY OWNER. OWNER SHALL CONTACT (NEW BUSINESS FACILITATOR) AT (512) 465-1134 WITH "TEXAS GAS SERVICE" FOR REQUIREMENTS, FEES, COSTS, SKETCHES AND INSTRUCTIONS ON HOW TO PROVIDE OR UPGRADE GAS SERVICE TO THE PROJECT SITE. AT THE REQUEST OF THE OWNER, CHAN & PARTNERS ENGINEERING LLC CAN SHOW THE PROPOSED GAS SERVICE LINE ON THE SITE UTILITY PLAN TO BE USED FOR INFORMATION PURPOSES ONLY.

PROJECT SPECIFIC NOTES:
(CONTRACTOR MUST READ PRIOR TO BIDDING)

1. THE CONTRACTOR SHALL IMMEDIATELY ARRANGE FOR REPAIR AND RESTORATION OF CONTRACTOR-DAMAGED UTILITIES AND THE CONTRACTOR SHALL PAY FOR SUCH REPAIRS. CONTRACTOR SHALL POTHOLE UTILITIES IN ADVANCE OF CONSTRUCTION TO VERIFY THAT LOCATIONS AND DEPTHS DO NOT CONFLICT WITH CONSTRUCTION. POTHOLING OPERATION AND POTHOLE PAVEMENT REPAIR SHALL BE SUBSIDIARY TO THE CONTRACT. CONTRACTOR SHALL IMMEDIATELY NOTIFY ENGINEER AND OWNER'S REPRESENTATIVE OF ANY APPARENT CONFLICTS. CONTRACTOR SHALL COORDINATE WITH UTILITY AND OWNER'S REPRESENTATIVE TO ACHIEVE A PROMPT RESOLUTION TO ANY CONFLICTS.

2. FOR CONSTRUCTION WITHIN OR ADJACENT TO FREQUENT FLOODING AREAS, CONTRACTOR SHALL REPAIR AND IS RESPONSIBLE FOR ALL DAMAGES DUE TO THE FLOOD EVENTS.

AMERICANS WITH DISABILITIES ACT

THE CITY OF AUSTIN HAS REVIEWED THIS PLAN FOR COMPLIANCE WITH CITY DEVELOPMENT REGULATIONS ONLY. THE APPLICANT, PROPERTY OWNER, AND OCCUPANT OF THE PREMISES ARE RESPONSIBLE FOR DETERMINING WHETHER THE PLAN COMPLIES WITH ALL OTHER LAWS, REGULATIONS, AND RESTRICTIONS WHICH MAY BE APPLICABLE TO THE PROPERTY AND ITS USE.

ADA ACCESSIBILITY NOTE:

CONTRACTOR SHALL CONSTRUCT ALL ADA ACCESSIBLE ROUTE SIDEWALK, RAMP AND DRIVEWAY CROSSING GRADES AND DIMENSIONS IN ACCORDANCE WITH THE TEXAS ACCESSIBILITY STANDARDS (TAS), ARCHITECTURAL BARRIERS GOVERNMENT CODE, ARCHITECTURAL BARRIERS ADMINISTRATIVE RULES AND TECHNICAL MEMORANDUM, LATEST EDITION. THE PROPOSED GRADES SHOWN ON THESE DRAWINGS WERE ESTABLISHED USING THE BEST AVAILABLE EXISTING GROUND INFORMATION AND ARE FOR GENERAL CONSTRUCTION AND BIDDING PURPOSES ONLY. CONTRACTOR SHALL ADJUST GRADES AND DIMENSIONS TO FIELD CONDITIONS AND TO COMPLY WITH TEXAS ACCESSIBILITY STANDARDS.

ORDINANCE REQUIREMENTS

1. ALL IMPROVEMENTS SHALL BE MADE IN ACCORDANCE WITH THE RELEASED SITE PLAN. ANY ADDITIONAL IMPROVEMENTS WILL REQUIRE A SITE PLAN AMENDMENT AND APPROVAL FROM THE PLANNING AND DEVELOPMENT REVIEW DEPARTMENT; MINOR CORRECTIONS MAY BE APPROVED BY THE BUILDING PLAN REVIEW SECTION AT THE TIME OF BUILDING PERMIT.

2. APPROVAL OF THIS SITE PLAN DOES NOT INCLUDE BUILDING CODE APPROVAL; FIRE CODE APPROVAL; OR BUILDING, DEMOLITION, OR RELOCATION PERMITS APPROVAL. A CITY DEMOLITION OR RELOCATION PERMIT CAN ONLY BE ISSUED ONCE THE HISTORIC REVIEW PROCESS IS COMPLETED.

3. ALL SIGNS MUST COMPLY WITH THE REQUIREMENTS OF THE LAND DEVELOPMENT CODE.

4. THE CONTRACTOR IS RESPONSIBLE FOR ALL COSTS FOR RELOCATION OF, OR DAMAGE TO, UTILITIES.

5. ADDITIONAL ELECTRIC EASEMENTS MAY BE REQUIRED AT A LATER DATE.

6. A DEVELOPMENT PERMIT MUST BE ISSUED PRIOR TO AN APPLICATION FOR BUILDING PERMIT FOR NON-CONSOLIDATED OR PLANNING COMMISSION APPROVED SITE PLAN.

FIRE DEPARTMENT

1. THE AUSTIN FIRE DEPARTMENT REQUIRES ASPHALT OR CONCRETE PAVEMENT PRIOR TO CONSTRUCTION AS AN "ALL-WEATHER DRIVING SURFACE".

2. HYDRANTS MUST BE INSTALLED WITH THE CENTER OF THE FOUR-INCH OPENING AT LEAST 18 INCHES ABOVE FINISHED GRADE. THE FOUR-INCH OPENING MUST FACE THE DRIVEWAY OR STREET WITH THREE- TO SIX-FOOT SETBACKS FROM THE CURB LINE(S). NO OBSTRUCTION IS ALLOWED WITHIN THREE FEET OF ANY HYDRANT AND THE FOUR-INCH OPENING MUST BE TOTALLY UNOBSTRUCTED FROM THE STREET.

3. TIMING OF INSTALLATION: WHEN FIRE PROTECTION FACILITIES ARE INSTALLED BY THE DEVELOPER, SUCH FACILITIES SHALL INCLUDE ALL SURFACE ACCESS ROADS WHICH SHALL BE INSTALLED AND MADE SERVICEABLE PRIOR TO AND DURING THE TIME OF CONSTRUCTION. WHERE ALTERNATIVE METHODS OF PROTECTION, AS APPROVED BY THE FIRE CHIEF, ARE PROVIDED, THE ABOVE MAY BE MODIFIED OR WAIVED.

4. ALL PERVIOUS/DECORATIVE PAVING SHALL BE ENGINEERED AND INSTALLED FOR 80,000 LB. LIVE-VEHICLE LOADS. ANY PERVIOUS/DECORATIVE PAVING WITHIN 100 FEET OF ANY BUILDING MUST BE APPROVED BY THE FIRE DEPARTMENTS.

5. COMMERCIAL DUMPSTERS AND CONTAINERS WITH AN INDIVIDUAL CAPACITY OF 1.5 CUBIC YARDS OR GREATER SHALL NOT BE STORED OR PLACED WITHIN TEN FEET OF OPENINGS, COMBUSTIBLE WALLS, OR COMBUSTIBLE EAVE LINES.

6. FIRE LANES DESIGNATED ON SITE PLAN SHALL BE REGISTERED WITH CITY OF AUSTIN FIRE MARSHAL'S OFFICE AND INSPECTED FOR FINAL APPROVAL.

7. VERTICAL CLEARANCE REQUIRED FOR FIRE APPARATUS IS 14 FEET FOR FULL WIDTH OF ACCESS DRIVE.

8. TRASH DUMPSTERS MAY NOT BE LOCATED WITHIN 10 FEET OF COMBUSTIBLE WALLS OR EAVES.

9. FIRE ACCESS LANES, AS DELINEATED ON THE SITE PLAN, REQUIRE RED BACK GROUND WITH WHITE LETTERING "FIRE ZONE/TOW AWAY ZONE" IN LETTERS 3-INCHES TALL AT INTERVALS OF 35-FEET MAXIMUM. LEAD FREE PAINT SHALL BE USED.

SPECIAL CONSTRUCTION TECHNIQUES ECM 3.5.4(D)

PRIOR TO EXCAVATION WITHIN TREE DRIPLINES OR THE REMOVAL OF TREES ADJACENT TO OTHER TREES THAT ARE TO REMAIN, MAKE A CLEAN CUT BETWEEN THE DISTURBED AND UNDISTURBED ROOT ZONES WITH A ROCK SAW OR SIMILAR EQUIPMENT TO MINIMIZE ROOT DAMAGE.

IN CRITICAL ROOT ZONE AREAS THAT CANNOT BE PROTECTED DURING CONSTRUCTION WITH FENCING AND WHERE HEAVY VEHICULAR TRAFFIC IS ANTICIPATED, COVER THOSE AREAS WITH A MINIMUM OF 12 INCHES OF ORGANIC MULCH TO MINIMIZE SOIL COMPACTION. IN AREAS WITH HIGH SOIL PLASTICITY GEOTEXTILE FABRIC, PER STANDARD SPECIFICATION 620S, SHOULD BE PLACED UNDER THE MULCH TO PREVENT EXCESSIVE MIXING OF THE SOIL AND MULCH. ADDITIONALLY, MATERIAL SUCH AS PLYWOOD AND METAL SHEETS, COULD BE REQUIRED BY THE CITY ARBORIST TO MINIMIZE ROOT IMPACTS FROM HEAVY EQUIPMENT. ONCE THE PROJECT IS COMPLETED, ALL MATERIALS SHOULD BE REMOVED, AND THE MULCH SHOULD BE REDUCED TO A DEPTH OF 3 INCHES.

PERFORM ALL GRADING WITHIN CRITICAL ROOT ZONE AREAS BY HAND OR WITH SMALL EQUIPMENT TO MINIMIZE ROOT DAMAGE.

WATER ALL TREES MOST HEAVILY IMPACTED BY CONSTRUCTION ACTIVITIES DEEPLY ONCE A WEEK DURING PERIODS OF HOT, DRY WEATHER. SPRAY TREE CROWNS WITH WATER PERIODICALLY TO REDUCE DUST ACCUMULATION ON THE LEAVES.

WHEN INSTALLING CONCRETE ADJACENT TO THE ROOT ZONE OF A TREE, USE A PLASTIC VAPOR BARRIER BEHIND THE CONCRETE TO PROHIBIT LEACHING OF LIME INTO THE SOIL."

APPENDIX P-1:
EROSION CONTROL NOTES

1. THE CONTRACTOR SHALL INSTALL EROSION/SEDIMENTATION CONTROLS AND TREE/NATURAL AREA PROTECTIVE FENCING PRIOR TO ANY SITE PREPARATION WORK (CLEARING, GRUBBING OR EXCAVATION).
2. THE PLACEMENT OF EROSION/SEDIMENTATION CONTROLS SHALL BE IN ACCORDANCE WITH THE ENVIRONMENTAL CRITERIA MANUAL AND THE APPROVED EROSION AND SEDIMENTATION CONTROL PLAN. THE COA ESC PLAN SHALL BE CONSULTED AND USED AS THE BASIS FOR A TPDES REQUIRED SWPPP. IF A SWPPP IS REQUIRED, IT SHALL BE AVAILABLE FOR REVIEW BY THE CITY OF AUSTIN ENVIRONMENTAL INSPECTOR AT ALL TIMES DURING CONSTRUCTION, INCLUDING AT THE PRE-CONSTRUCTION MEETING. THE CHECKLIST BELOW CONTAINS THE BASIC ELEMENTS THAT SHALL BE REVIEWED FOR PERMIT APPROVAL BY COA EV PLAN REVIEWERS AS WELL AS COA EV INSPECTORS.
   PLAN SHEETS SUBMITTED TO THE CITY OF AUSTIN **MUST** SHOW THE FOLLOWING:
   - DIRECTION OF FLOW DURING GRADING OPERATIONS.
   - LOCATION, DESCRIPTION, AND CALCULATIONS FOR OFF-SITE FLOW DIVERSION STRUCTURES.
   - AREAS THAT WILL NOT BE DISTURBED; NATURAL FEATURES TO BE PRESERVED.
   - DELINEATION OF CONTRIBUTING DRAINAGE AREA TO EACH PROPOSED BMP (E.G., SILT FENCE, SEDIMENT BASIN, ETC.)
   - LOCATION AND TYPE OF E&S BMPS FOR EACH PHASE OF DISTURBANCE.
   - CALCULATIONS FOR BMPS AS REQUIRED.
   - LOCATION AND DESCRIPTION OF TEMPORARY STABILIZATION MEASURES.
   - LOCATION OF ON-SITE SPOILS, DESCRIPTION OF HANDLING AND DISPOSAL OF BORROW MATERIALS, AND DESCRIPTION OF ON-SITE PERMANENT SPOILS DISPOSAL AREAS, INCLUDING SIZE, DEPTH OF FILL AND REVEGETATION PROCEDURES.

   DESCRIBE SEQUENCE OF CONSTRUCTION AS IT PERTAINS TO ESC INCLUDING THE FOLLOWING ELEMENTS:
   1. INSTALLATION SEQUENCE OF CONTROLS (E.G. PERIMETER CONTROLS, THEN SEDIMENT BASINS, THEN TEMPORARY STABILIZATION, THEN PERMANENT, ETC)
   2. PROJECT PHASING IF REQUIRED (LOC GREATER THAN 25 ACRES)
   3. SEQUENCE OF GRADING OPERATIONS AND NOTATION OF TEMPORARY STABILIZATION MEASURES TO BE USED
   4. SCHEDULE FOR CONVERTING TEMPORARY BASINS TO PERMANENT WQ CONTROLS
   5. SCHEDULE FOR REMOVAL OF TEMPORARY CONTROLS
   6. ANTICIPATED MAINTENANCE SCHEDULE FOR TEMPORARY CONTROLS

   CATEGORIZE EACH BMP UNDER ONE OF THE FOLLOWING AREAS OF BMP ACTIVITY AS DESCRIBED BELOW:
   3.1 MINIMIZE DISTURBED AREA AND PROTECT NATURAL FEATURES AND SOIL
   3.2 CONTROL STORMWATER FLOWING ONTO AND THROUGH THE PROJECT
   3.3 STABILIZE SOILS
   3.4 PROTECT SLOPES
   3.5 PROTECT STORM DRAIN INLETS
   3.6 ESTABLISH PERIMETER CONTROLS AND SEDIMENT BARRIERS
   3.7 RETAIN SEDIMENT ON-SITE AND CONTROL DEWATERING PRACTICES
   3.8 ESTABLISH STABILIZED CONSTRUCTION EXITS
   3.9 ANY ADDITIONAL BMPS

   NOTE THE LOCATION OF EACH BMP ON YOUR SITE MAP(S).
   FOR ANY STRUCTURAL BMPS, YOU SHOULD PROVIDE DESIGN SPECIFICATIONS AND DETAILS AND REFER TO THEM.
   FOR MORE INFORMATION, SEE CITY OF AUSTIN ENVIRONMENTAL CRITERIA MANUAL 1.4.
3. THE PLACEMENT OF TREE/NATURAL AREA PROTECTIVE FENCING SHALL BE IN ACCORDANCE WITH THE CITY OF AUSTIN STANDARD NOTES FOR TREE AND NATURAL AREA PROTECTION AND THE APPROVED GRADING/TREE AND NATURAL AREA PLAN.

4. A PRE-CONSTRUCTION CONFERENCE SHALL BE HELD ON-SITE WITH THE CONTRACTOR, DESIGN ENGINEER/PERMIT APPLICANT AND ENVIRONMENTAL INSPECTOR AFTER INSTALLATION OF THE EROSION/SEDIMENTATION CONTROLS AND TREE/NATURAL AREA PROTECTION MEASURES AND PRIOR TO BEGINNING ANY SITE PREPARATION WORK. THE OWNER OR OWNER'S REPRESENTATIVE SHALL NOTIFY THE PLANNING AND DEVELOPMENT REVIEW DEPARTMENT, 974-2278, AT LEAST THREE DAYS PRIOR TO THE MEETING DATE. COA APPROVED ESC PLAN AND TPDES SWPPP (IF REQUIRED) SHOULD BE REVIEWED BY COA EV INSPECTOR AT THIS TIME.

5. ANY MAJOR VARIATION IN MATERIALS OR LOCATIONS OF CONTROLS OR FENCES FROM THOSE SHOWN ON THE APPROVED PLANS WILL REQUIRE A REVISION AND MUST BE APPROVED BY THE REVIEWING ENGINEER, ENVIRONMENTAL SPECIALIST OR CITY ABORIST AS APPROPRIATE. MAJOR REVISIONS MUST BE APPROVED BY THE PLANNING AND DEVELOPMENT REVIEW DEPARTMENT. MINOR CHANGES TO BE MADE AS FIELD REVISIONS TO THE EROSION AND SEDIMENTATION CONTROL PLAN MAY BE REQUIRED BY THE ENVIRONMENTAL INSPECTOR DURING THE COURSE OF CONSTRUCTION TO CORRECT CONTROL INADEQUACIES.

6. THE CONTRACTOR IS REQUIRED TO PROVIDE A CERTIFIED INSPECTOR WITH EITHER A CERTIFIED PROFESSIONAL IN EROSION AND SEDIMENT CONTROL (CPESC), CERTIFIED EROSION, SEDIMENT AND STORMWATER-INSPECTOR (CESSWI) OR CERTIFIED INSPECTOR OF SEDIMENTATION AND EROSION CONTROLS (CISEC) CERTIFICATION TO INSPECT THE CONTROLS AND FENCES AT WEEKLY INTERVALS AND AFTER SIGNIFICANT RAINFALL EVENTS TO INSURE THAT THEY ARE FUNCTIONING PROPERLY. THE PERSON(S) RESPONSIBLE FOR MAINTENANCE OF CONTROLS AND FENCES SHALL IMMEDIATELY MAKE ANY NECESSARY REPAIRS TO DAMAGED AREAS. SILT ACCUMULATION AT CONTROLS MUST BE REMOVED WHEN THE DEPTH REACHES SIX (6) INCHES.

7. PRIOR TO FINAL ACCEPTANCE BY THE CITY, HAUL ROADS AND WATERWAY CROSSINGS CONSTRUCTED FOR TEMPORARY CONTRACTOR ACCESS MUST BE REMOVED, ACCUMULATED SEDIMENT REMOVED FROM THE WATERWAY AND THE AREA RESTORED TO THE ORIGINAL GRADE AND REVEGETATED. ALL LAND CLEARING DEBRIS SHALL BE DISPOSED OF IN APPROVED SPOIL DISPOSAL SITES.

8. ALL WORK MUST STOP IF A VOID IN THE ROCK SUBSTRATE IS DISCOVERED WHICH IS; ONE SQUARE FOOT IN TOTAL AREA; BLOWS AIR FROM WITHIN THE SUBSTRATE AND/OR CONSISTENTLY RECEIVES WATER DURING ANY RAIN EVENT. AT THIS TIME IT IS THE RESPONSIBILITY OF THE PROJECT MANAGER TO IMMEDIATELY CONTACT A CITY OF AUSTIN ENVIRONMENTAL INSPECTOR FOR FURTHER INVESTIGATION.

9. TEMPORARY AND PERMANENT EROSION CONTROL: ALL DISTURBED AREAS SHALL BE RESTORED AS NOTED BELOW.
   A. ALL DISTURBED AREAS TO BE REVEGETATED ARE REQUIRED TO PLACE A MINIMUM OF SIX (6) INCHES OF TOPSOIL [SEE STANDARD SPECIFICATION ITEM NO. 601S.3(A)]. DO NOT ADD TOPSOIL WITHIN THE CRITICAL ROOT ZONE OF EXISTING TREES. THE TOPSOIL SHALL BE COMPOSED OF 4 PARTS OF SOIL MIXED WITH 1 PART COMPOST, BY VOLUME. THE COMPOST SHALL MEET THE DEFINITION OF COMPOST AS DEFINED BY TXDOT SPECIFICATION ITEM 161. THE SOIL SHALL BE LOCALLY AVAILABLE NATIVE SOIL THAT MEETS THE FOLLOWING SPECIFICATIONS:
      - SHALL BE FREE OF TRASH, WEEDS, DELETERIOUS MATERIALS, ROCKS, AND DEBRIS.
      - 100% SHALL PASS THROUGH A 0.375 - INCH (3/8") SCREEN.
      - SOIL TEXTURE CLASS TO BE LOAM, SANDY CLAY LOAM, OR SANDY LOAM IN ACCORDANCE WITH THE USDA TEXTURE TRIANGLE. SOIL KNOWN LOCALLY AS "RED DEATH" OR AUSTIN SANDY LOAM IS NOT AN ALLOWABLE SOIL. TEXTURAL COMPOSITION SHALL MEET THE FOLLOWING CRITERIA:

TEXTURE CLASS	MINIMUM	MAXIMUM
CLAY	5%	50%
SILT	10%	50%
SAND	15%	67%

      - AN OWNER/ENGINEER MAY PROPOSE USE OF ONSITE SALVAGED TOPSOIL WHICH DOES NOT MEET THE SOIL TEXTURE CLASS REQUIRED ABOVE BY PROVIDING A SOIL ANALYSIS AND A WRITTEN STATEMENT FROM A QUALIFIED PROFESSIONAL IN SOILS, LANDSCAPE ARCHITECTURE, OR AGRONOMY INDICATING THE ONSITE TOPSOIL WILL PROVIDE AN EQUIVALENT GROWTH MEDIA AND SPECIFYING WHAT, IF ANY, SOIL AMENDMENTS ARE REQUIRED.
      - SOIL AMENDMENTS SHALL BE WORKED INTO THE EXISTING ONSITE TOPSOIL WITH A DISC OR TILLER TO CREATE A WELL-BLENDED MATERIAL.

TOPSOIL SALVAGED FROM THE EXISTING SITE MAY OFTEN BE USED, BUT IT SHOULD MEET THE SAME STANDARDS AS SET FORTH IN THESE STANDARDS.
THE VEGETATIVE STABILIZATION OF AREAS DISTURBED BY CONSTRUCTION SHALL BE AS FOLLOWS:

TEMPORARY VEGETATIVE STABILIZATION:

1. FROM SEPTEMBER 15 TO MARCH 1, SEEDING SHALL BE WITH COOL SEASON COVER CROPS (WHEAT AT 0.5 POUNDS PER 1000 SF, OATS AT 0.5 POUNDS PER 1000 SF, CEREAL RYE GRAIN AT 0.5 POUNDS PER 1000 SF) WITH A TOTAL RATE OF 1.5 POUNDS PER 1000 SF. COOL SEASON COVER CROPS ARE NOT PERMANENT EROSION CONTROL.
2. FROM MARCH 2 TO SEPTEMBER 14, SEEDING SHALL BE WITH HULLED BERMUDA AT A RATE OF 1 POUNDS PER 1000 SF.
   A. FERTILIZER SHALL BE WATER SOLUBLE WITH AN ANALYSIS OF 15-15-15 TO BE APPLIED ONCE AT PLANTING AND ONCE DURING THE PERIOD OF ESTABLISHMENT AT A RATE OF 1/2 POUND PER 1000 SF.
   B. HYDROMULCH SHALL COMPLY WITH TABLE1, BELOW.
   C. TEMPORARY EROSION CONTROL SHALL BE ACCEPTABLE WHEN THE GRASS HAS GROWN AT LEAST 1 1/2 INCHES HIGH WITH 95% COVERAGE, PROVIDED NO BARE SPOTS LARGER THAN 16 SQUARE FEET EXIST.
   D. WHEN REQUIRED, NATIVE GRASS SEEDING SHALL COMPLY WITH REQUIREMENTS OF THE CITY OF AUSTIN ENVIRONMENTAL CRITERIA MANUAL.

TABLE 1: HYDROMULCHING FOR TEMPORARY VEGETATIVE STABILIZATION

MATERIAL	DESCRIPTION	LONGEVITY	TYPICAL APPLICATIONS	APPLICATION RATES
100% OR ANY BLEND OF WOOD, CELLULOSE STRAW, AND/OR COTTON PLANT MATERIAL (EXCEPT NO MULCH SHALL EXCEED 30% PAPER)	70% OR GREATER WOOD/STRAW 30% OR LESS PAPER OR NATURAL FIBERS	0-3 MONTHS	MODERATE SLOPES; FROM FLAT TO 3:1	1500 TO 2000 LBS PER ACRE

PERMANENT VEGETATIVE STABILIZATION:

1. FROM SEPTEMBER 15 TO MARCH 1, SEEDING IS CONSIDERED TO BE TEMPORARY STABILIZATION ONLY. IF COOL SEASON COVER CROPS EXIST WHERE PERMANENT VEGETATIVE STABILIZATION IS DESIRED, THE GRASSES SHALL BE MOWED TO A HEIGHT OF LESS THAN ONE-HALF (1/2) INCH AND THE AREA SHALL BE RE-SEEDED IN ACCORDANCE WITH 2. BELOW.
2. FROM MARCH 2 TO SEPTEMBER 14, SEEDING SHALL BE WITH HULLED BERMUDA AT A RATE OF 1 POUND PER 1000 SF WITH A PURITY OF 95% WITH 85% GERMINATION. BERMUDA GRASS IS A WARM SEASON GRASS AND IS CONSIDERED PERMANENT EROSION CONTROL.
   A. FERTILIZER SHALL BE A WATER SOLUBLE WITH AN ANALYSIS OF 15-15-15 TO BE APPLIED ONCE AT PLANTING AND ONCE DURING THE PERIOD OF ESTABLISHMENT AT A RATE OF 1/2 POUND PER 1000 SF.
   B. HYDROMULCH SHALL COMPLY WITH TABLE 2, BELOW.
   C. THE PLANTED AREA SHALL BE IRRIGATED OR SPRINKLED IN A MANNER THAT WILL NOT ERODE THE TOPSOIL, BUT WILL SUFFICIENTLY SOAK THE SOIL TO A DEPTH OF SIX INCHES. THE IRRIGATION SHALL OCCUR AT DAILY INTERVALS (MINIMUM) DURING THE FIRST TWO MONTHS. RAINFALL OCCURRENCES OF ½ INCH OR MORE SHALL POSTPONE THE WATERING SCHEDULE FOR ONE WEEK.
   D. PERMANENT EROSION CONTROL SHALL BE ACCEPTABLE WHEN THE GRASS HAS GROWN AT LEAST 1½ INCHES HIGH WITH 95% COVERAGE, PROVIDED NO BARE SPOTS LARGER THAN 16 SQUARE FEET EXIST.
   E. WHEN REQUIRED, NATIVE GRASS SEEDING SHALL COMPLY WITH REQUIREMENTS OF THE CITY OF AUSTIN ENVIRONMENTAL CRITERIA MANUAL.

TABLE 2: HYDROMULCHING FOR PERMANENT VEGETATIVE STABILIZATION

MATERIAL	DESCRIPTION	LONGEVITY	TYPICAL APPLICATIONS	APPLICATION RATES
BONDED FIBER MATRIX (BFM)	80% ORGANIC DEFIBRATED FIBERS 10% TACKIFIER	6 MONTHS	ON SLOPES UP TO 2:1 AND EROSIVE SOIL CONDITIONS	2500 TO 4000 LBS PER ACRE (SEE MANUFACTURERS RECOMMENDATIONS)
FIBER REINFORCED MATRIX (FRM)	65% ORGANIC DEFIBRATED FIBERS 25% REINFORCING FIBERS OR LESS 10% TACKIFIER	UP TO 12 MONTHS	ON SLOPES UP TO 1:1 AND EROSIVE SOIL CONDITIONS	3000 TO 4500 LBS PER ACRE (SEE MANUFACTURERS RECOMMENDATIONS)

10. DEVELOPER INFORMATION:
OWNER: CITY OF AUSTIN
PHONE # (512) 974-7157
ADDRESS: P.O. BOX 1088, AUSTIN TX. 78748
OWNER'S REPRESENTATIVE RESPONSIBLE FOR PLAN ALTERATIONS:
CHAN AND PARTNERS ENGINEERING PHONE # (512) 480-8155
PERSON OR FIRM RESPONSIBLE FOR EROSION/SEDIMENTATION CONTROL MAINTENANCE:
CONTRACTOR PHONE # (512) XXX-XXXX
PERSON OR FIRM RESPONSIBLE FOR TREE/NATURAL AREA PROTECTION MAINTENANCE:
CONTRACTOR PHONE # (512) XXX-XXXX

11. THE CONTRACTOR SHALL NOT DISPOSE OF SURPLUS EXCAVATED MATERIAL FROM THE SITE WITHOUT NOTIFYING THE PLANNING AND DEVELOPMENT REVIEW DEPARTMENT AT 974-2278 AT LEAST 48 HOURS PRIOR WITH THE LOCATION AND A COPY OF THE PERMIT ISSUED TO RECEIVE THE MATERIAL.
   A. IMMEDIATELY UPON PLACEMENT OF SEED, CONTRACTOR SHALL COVER ALL SLOPES 5:1 OR STEEPER WITH AN EROSION CONTROL BLANKET (CURLEX 1 OR APPROVED EQUAL). CONTRACTOR TO FASTEN IN ACCORDANCE WITH THE MANUFACTURER'S RECOMMENDATIONS.
   B. DUST CONTROL:
      DUST CONTROL METHODS ARE REQUIRED AS PER E.C.M. SECTION 1.4.5.D.
   C. TEMPORARY SPOILS DISPOSAL SITE:
      THE TEMPORARY SPOILS DISPOSAL SITE IS XX,XXX SF. THE SITE SHALL BEGIN BEING USED UPON COMMENCEMENT OF CONSTRUCTION. THE SPOILS ON THE SITE SHALL NOT BE ALLOWED TO REACH A DEPTH GREATER THAN 4'. UPON REACHING A DEPTH OF 4', THE SPOILS SHALL BE REMOVED TO AN APPROVED PERMANENT SPOILS DISPOSAL SITE. JUST PRIOR TO COMMENCEMENT OF THE RESTORATION OF THE SITE REVEGETATION, ALL REMAINING SPOILS SHALL BE DISPOSED OF AT AN APPROVED PERMANENT SPOILS DISPOSAL SITE. THE TEMPORARY SPOILS DISPOSAL SITE SHALL BE RESTORED AT THE SAME TIME AS THE REST OF THE CONSTRUCTION SITE.

APPENDIX P-6
REMEDIAL TREE CARE NOTES
AERATION AND SUPPLEMENTAL
NUTRIENT REQUIREMENTS
FOR N TREES WITHIN CONSTRUCTION
AREAS

AS A COMPONENT OF AN EFFECTIVE REMEDIAL TREE CARE PROGRAM PER ENVIRONMENTAL CRITERIA MANUAL SECTION 3.5.4, PRESERVED TREES WITHIN THE LIMITS OF CONSTRUCTION MAY REQUIRE SOIL AERATION AND SUPPLEMENTAL NUTRIENTS. SOIL AND/OR FOLIAR ANALYSIS SHOULD BE USED TO DETERMINE THE NEED FOR SUPPLEMENTAL NUTRIENTS. THE CITY ARBORIST MAY REQUIRE THESE ANALYSES AS PART OF A COMPREHENSIVE TREE CARE PLAN. SOIL PH SHALL BE CONSIDERED WHEN DETERMINING THE FERTILIZATION COMPOSITION AS SOIL PH INFLUENCES THE TREE'S ABILITY TO UPTAKE NUTRIENTS FROM THE SOIL. IF ANALYSES INDICATE THE NEED FOR SUPPLEMENTAL NUTRIENTS, THEN HUMATE/NUTRIENT SOLUTIONS WITH MYCORRHIZAE COMPONENTS ARE HIGHLY RECOMMENDED. IN ADDITION, SOIL ANALYSIS MAY BE NEEDED TO DETERMINE IF ORGANIC MATERIAL OR BENEFICIAL MICROORGANISMS ARE NEEDED TO IMPROVE SOIL HEALTH. MATERIALS AND METHODS ARE TO BE APPROVED BY THE CITY ARBORIST (512-974-1876) PRIOR TO APPLICATION. THE OWNER OR GENERAL CONTRACTOR SHALL SELECT A FERTILIZATION CONTRACTOR AND IENSURE COORDINATION WITH THE CITY ARBORIST.

PRE-CONSTRUCTION TREATMENT SHOULD BE APPLIED IN THE APPROPRIATE SEASON, IDEALLY THE SEASON PRECEDING THE PROPOSED CONSTRUCTION. MINIMALLY, AREAS TO BE TREATED INCLUDE THE ENTIRE CRITICAL ROOT ZONE OF TREES AS DEPICTED ON THE CITY APPROVED PLANS. TREATMENT SHOULD INCLUDE, BUT NOT LIMITED TO, FERTILIZATION, SOIL TREATMENT, MULCHING, AND PROPER PRUNING.

POST-CONSTRUCTION TREATMENT SHOULD OCCUR DURING FINAL REVEGETATION OR AS DETERMINED BY A QUALIFIED ARBORIST AFTER CONSTRUCTION. CONSTRUCTION ACTIVITIES OFTEN RESULT IN A REDUCTION IN SOIL MACRO AND MICRO PORES AND AN INCREASE IN SOIL BULK DENSITY. TO AMELIORATE THE DEGRADED SOIL CONDITIONS, AERATION VIA WATER AND/OR AIR INJECTED INTO THE SOIL IS NEEDED OR BY OTHER METHODS AS APPROVED BY THE CITY ARBORIST. THE PROPOSED NUTRIENT MIX SPECIFICATIONS AND SOIL AND/OR FOLIAR ANALYSIS RESULTS NEED TO BE PROVIDED TO AND APPROVED BY THE CITY ARBORIST PRIOR TO APPLICATION (FAX # 512-974-3010). CONSTRUCTION WHICH WILL BE COMPLETED IN LESS THAN 90 DAYS MAY USE MATERIALS AT ½ RECOMMENDED RATES. ALTERNATIVE ORGANIC FERTILIZER MATERIALS ARE ACCEPTABLE WHEN APPROVED BY THE CITY ARBORIST. WITHIN 7 DAYS AFTER FERTILIZATION IS PERFORMED, THE CONTRACTOR SHALL PROVIDE DOCUMENTATION OF THE WORK PERFORMED TO THE CITY ARBORIST, PLANNING AND DEVELOPMENT REVIEW DEPARTMENT. P.O. BOX 1088, AUSTIN, TX 78767. THIS NOTE SHOULD BE REFERENCED AS ITEM #1 IN THE SEQUENCE OF CONSTRUCTION.

NOTE:
FOR AUSTIN WATER UTILITY GENERAL CONSTRUCTION NOTES, SEE SHEET .

APPENDIX P-2:
CITY OF AUSTIN STANDARD NOTES
FOR TREE AND NATURAL AREA PROTECTION

1. ALL TREES AND NATURAL AREAS SHOWN ON PLAN TO BE PRESERVED SHALL BE PROTECTED DURING CONSTRUCTION WITH TEMPORARY FENCING.
2. PROTECTIVE FENCES SHALL BE ERECTED ACCORDING TO CITY OF AUSTIN STANDARDS FOR TREE PROTECTION.
3. PROTECTIVE FENCES SHALL BE INSTALLED PRIOR TO THE START OF ANY SITE PREPARATION WORK (CLEARING, GRUBBING OR GRADING), AND SHALL BE MAINTAINED THROUGHOUT ALL PHASES OF THE CONSTRUCTION PROJECT.
4. EROSION AND SEDIMENTATION CONTROL BARRIERS SHALL BE INSTALLED OR MAINTAINED IN A MANNER WHICH DOES NOT RESULT IN SOIL BUILD-UP WITHIN TREE DRIP LINES.
5. PROTECTIVE FENCES SHALL SURROUND THE TREES OR GROUP OF TREES, AND WILL BE LOCATED AT THE OUTERMOST LIMIT OF BRANCHES (DRIP LINE) , FOR NATURAL AREAS, PROTECTIVE FENCES SHALL FOLLOW THE LIMIT OF CONSTRUCTION LINE, IN ORDER TO PREVENT THE FOLLOWING:
   A. SOIL COMPACTION IN THE ROOT ZONE AREA RESULTING FROM VEHICULAR TRAFFIC OR STORAGE OF EQUIPMENT OR MATERIALS;
   B. ROOT ZONE DISTURBANCES DUE TO GRADE CHANGES (GREATER THAN 6 INCHES CUT OR FILL), OR TRENCHING NOT REVIEWED AND AUTHORIZED BY THE CITY ARBORIST;
   C. WOUNDS TO EXPOSED ROOTS, TRUNK OR LIMBS BY MECHANICAL EQUIPMENT;
   D. OTHER ACTIVITIES DETRIMENTAL TO TREES SUCH AS CHEMICAL STORAGE, CEMENT TRUCK CLEANING, AND FIRES.
6. EXCEPTIONS TO INSTALLING FENCES AT TREE DRIP LINES MAY BE PERMITTED IN THE FOLLOWING CASES:
   A. WHERE THERE IS TO BE AN APPROVED GRADE CHANGE, IMPERMEABLE PAVING SURFACE, TREE WELL, OR OTHER SUCH SITE DEVELOPMENT, ERECT THE FENCE APPROXIMATELY 2 TO 4 FEET BEYOND THE AREA DISTURBED;
   B. WHERE PERMEABLE PAVING IS TO BE INSTALLED WITHIN A TREE'S DRIP LINE, ERECT THE FENCE AT THE OUTER LIMITS OF THE PERMEABLE PAVING AREA (PRIOR TO SITE GRADING SO THAT THIS AREA IS GRADED SEPARATELY PRIOR TO PAVING INSTALLATION TO MINIMIZED ROOT DAMAGE);
   C. WHERE TREES ARE CLOSE TO PROPOSED BUILDINGS, ERECT THE FENCE TO ALLOW 6 TO 10 FEET OF WORK SPACE BETWEEN THE FENCE AND THE BUILDING;
   D. WHERE THERE ARE SEVERE SPACE CONSTRAINTS DUE TO TRACT SIZE, OR OTHER SPECIAL REQUIREMENTS, CONTACT THE CITY ARBORIST AT 974-1876 TO DISCUSS ALTERNATIVES.

   SPECIAL NOTE: FOR THE PROTECTION OF NATURAL AREAS, NO EXCEPTIONS TO INSTALLING FENCES AT THE LIMIT OF CONSTRUCTION LINE WILL BE PERMITTED.
7. WHERE ANY OF THE ABOVE EXCEPTIONS RESULT IN A FENCE BEING CLOSER THAN 4 FEET TO A TREE TRUNK, PROTECT THE TRUNK WITH STRAPPED-ON PLANKING TO A HEIGHT OF 8 FT (OR TO THE LIMITS OF LOWER BRANCHING) IN ADDITION TO THE REDUCED FENCING PROVIDED.
8. TREES APPROVED FOR REMOVAL SHALL BE REMOVED IN A MANNER WHICH DOES NOT IMPACT TREES TO BE PRESERVED.
9. ANY ROOTS EXPOSED BY CONSTRUCTION ACTIVITY SHALL BE PRUNED FLUSH WITH THE SOIL. BACKFILL ROOT AREAS WITH GOOD QUALITY TOP SOIL AS SOON AS POSSIBLE. IF EXPOSED ROOT AREAS ARE NOT BACKFILLED WITHIN 2 DAYS, COVER THEM WITH ORGANIC MATERIAL IN A MANNER WHICH REDUCES SOIL TEMPERATURE AND MINIMIZES WATER LOSS DUE TO EVAPORATION.
10. ANY TRENCHING REQUIRED FOR THE INSTALLATION OF LANDSCAPE IRRIGATION SHALL BE PLACED AS FAR FROM EXISTING TREE TRUNKS AS POSSIBLE.
11. NO LANDSCAPE TOPSOIL DRESSING GREATER THAN 4 INCHES SHALL BE PERMITTED WITHIN THE DRIP LINE OF TREES. NO SOIL IS PERMITTED ON THE ROOT FLARE OF ANY TREE.
12. PRUNING TO PROVIDE CLEARANCE FOR STRUCTURES, VEHICULAR TRAFFIC AND EQUIPMENT SHALL TAKE PLACE BEFORE DAMAGE OCCURS (RIPPING OF BRANCHES, ETC.).
13. ALL FINISHED PRUNING SHALL BE DONE ACCORDING TO RECOGNIZED, APPROVED STANDARDS OF THE INDUSTRY (REFERENCE THE NATIONAL ARBORIST ASSOCIATION PRUNING STANDARDS FOR SHADE TREES AVAILABLE ON REQUEST FROM THE CITY ARBORIST).
14. DEVIATIONS FROM THE ABOVE NOTES MAY BE CONSIDERED ORDINANCE VIOLATIONS IF THERE IS SUBSTANTIAL NON-COMPLIANCE OR IF A TREE SUSTAINS DAMAGE AS A RESULT.

90% CONSTRUCTION DOCUMENTS

STATE OF TEXAS
JOHN R. KING
58429
LICENSED
PROFESSIONAL ENGINEER
9/22/2016

CHAN & PARTNERS
CONSULTING CIVIL ENGINEERS
CHAN & PARTNERS ENGINEERING, LLC
4319 JAMES CASEY STREET, #300
AUSTIN, TEXAS 78745
512-480-8155 (PH) ♦ 512-480-8811 (FAX)
E-mail: info@chanpartners.com
WWW.CHANPARTNERS.COM
TEXAS REGISTRATION NO. F-13013

AUSTIN ONION CREEK
FIRE & EMS STATION
11112 OLD SAN ANTONIO ROAD
AUSTIN, TEXAS 78748

REVISIONS

DATE	9/22/2016
DRAWN BY	CD
CHECKED BY	JRK
PROJECT NO.	214106.00

GENERAL NOTES

C1.1

201100053

COLONIAL GRAND AT CITYWAY SUBDIVISION

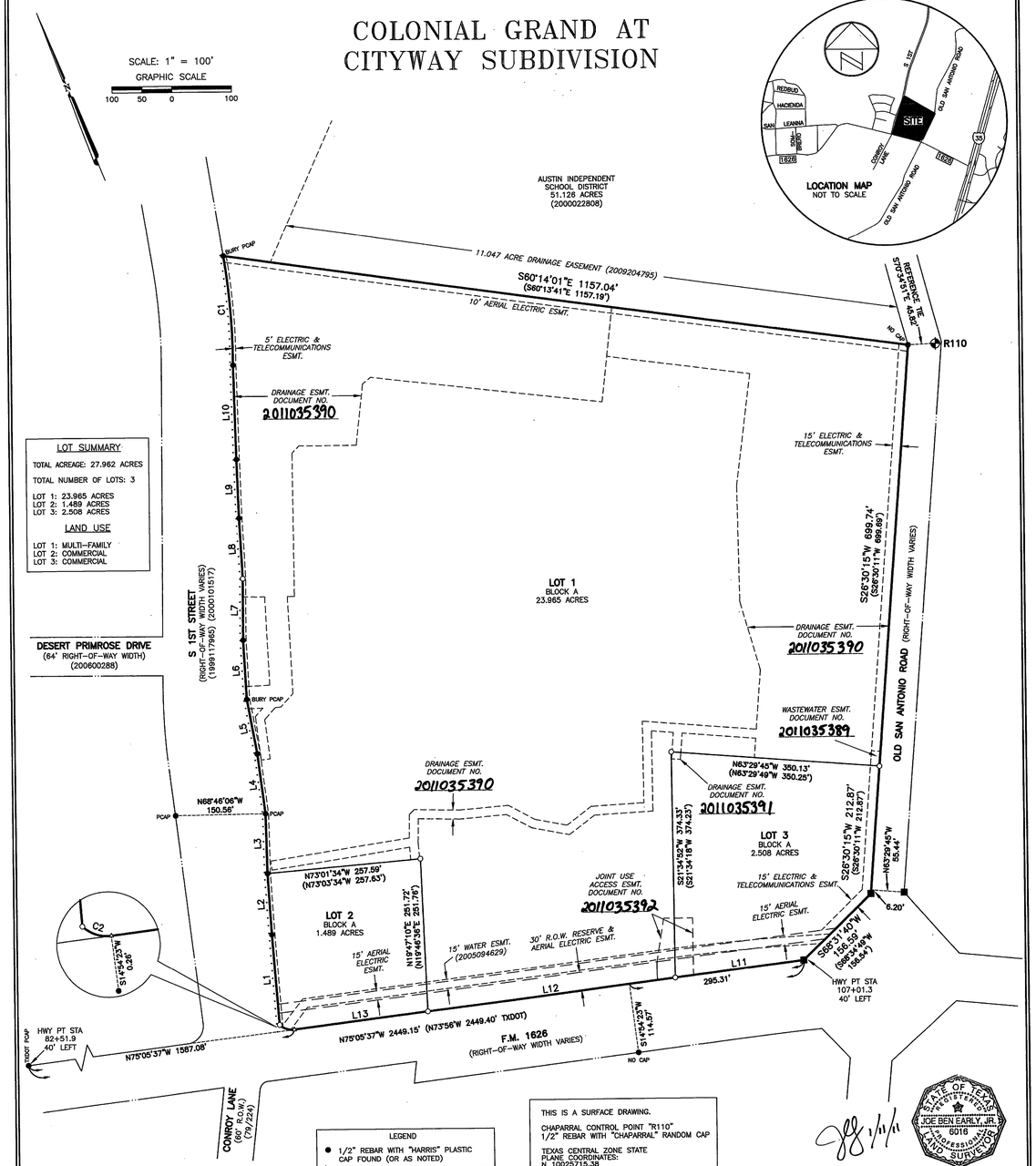

LOT SUMMARY	
TOTAL ACREAGE: 27.962 ACRES	
TOTAL NUMBER OF LOTS: 3	
LOT 1: 23.965 ACRES	
LOT 2: 1.489 ACRES	
LOT 3: 2.508 ACRES	
LAND USE	
LOT 1: MULTI-FAMILY	
LOT 2: COMMERCIAL	
LOT 3: COMMERCIAL	

LINE TABLE			
No.	BEARING	LENGTH	(RECORD)
L1	N17°35'46"E	149.57'	(N17°34'51"E 149.60')
L2	N18°19'59"E	100.26'	(N18°18'33"E 100.18')
L3	N20°45'32"E	98.70'	(N20°43'32"E 98.79')
L4	N14°50'48"E	101.77'	(N14°53'19"E 101.78')
L5	N11°30'38"E	91.71'	(N11°30'51"E 91.70')
L6	N19°00'29"E	98.12'	(N18°59'26"E 98.18')
L7	N22°17'14"E	99.99'	(N22°15'57"E 99.98')
L8	N18°51'17"E	100.17'	(N18°50'00"E 100.16')
L9	N20°08'04"E	100.03'	(N20°09'06"E 100.03')
L10	N20°28'06"E	156.32'	(N20°28'36"E 156.34')
L11	N75°05'37"W	217.62'	(N75°06'11"W 217.62')
L12	N75°05'37"W	418.50'	(N75°06'11"W 418.50')
L13	N75°05'37"W	225.95'	(N75°06'11"W 225.60')

CURVE TABLE							
NO.	DELTA	RADIUS	TAN	ARC	CHORD	BEARING	(RECORD CHORD)
C1	9°44'26"	1060.00'	90.32'	180.21'	179.99'	N17°23'00"E	(N17°23'48"E 180.01')
C2	50°05'11"	30.00'	14.02'	26.23'	25.40'	N50°23'19"W	(N50°45'33"W 25.70')

LEGEND

- ● 1/2" REBAR WITH "HARRIS" PLASTIC CAP FOUND (OR AS NOTED)
- ○ 1/2" REBAR WITH CHAPARRAL CAP SET
- ■ CONC. HIGHWAY MON. FOUND
- △ CALCULATED POINT
- ✥ CONTROL POINT LOCATION
- ( ) RECORD INFORMATION
- · · · · SIDEWALK LOCATION (SEE PLAT NOTE #15)

THIS IS A SURFACE DRAWING.

CHAPARRAL CONTROL POINT "R110"
1/2" REBAR WITH "CHAPARRAL" RANDOM CAP

TEXAS CENTRAL ZONE STATE PLANE COORDINATES:
N 10025715.38
E 3097291.05

SURFACE COORDINATES:
N 10026081.40
E 3097397.94

COMBINED SCALE FACTOR = 0.9999549
(FOR SURFACE TO GRID CONVERSION)

INVERSE SCALE FACTOR = 1.0000345111
(FOR GRID TO SURFACE CONVERSION)

SCALED ABOUT 0,0
TEXAS CENTRAL ZONE 4203

STATE OF TEXAS REGISTERED JOE BEN EARLY, JR. 6016 PROFESSIONAL LAND SURVEYOR

1/11/11

BEARING BASIS: GRID AZIMUTH FOR TEXAS CENTRAL ZONE STATE PLANE COORDINATES, 1983/93 HARN, BASED ON GPS SOLUTIONS FROM THE NATIONAL GEODETIC SURVEY (NGS) ON-LINE POSITIONING USER SERVICE (OPUS).

Chaparral
Professional Land Surveying, Inc.
Surveying and Mapping
3500 McCall Lane
Austin, Texas 78744
512-443-1724

PROJECT NO.: 586-013
DRAWING NO.: 586-013-PL1
PLOT DATE: 1/11/11
PLOT SCALE: 1" = 100'
DRAWN BY: JBE
SHEET 01 OF 02

C8-2010-0085.0A

COLONIAL GRAND AT CITYWAY SUBDIVISION

STATE OF TEXAS
COUNTY OF TRAVIS

KNOW ALL MEN BY THE PRESENTS:

THAT COLONIAL REALTY LIMITED PARTNERSHIP, A DELAWARE LIMITED PARTNERSHIP, BEING OWNER OF 23.965 ACRES, CONVEYED BY DEED OF RECORD IN DOCUMENT NO. 2006230896 OF THE OFFICIAL PUBLIC RECORDS OF TRAVIS COUNTY, TEXAS, THE RIDDELL FAMILY LIMITED PARTNERSHIP, A TEXAS LIMITED PARTNERSHIP, BEING OWNER OF 2.508 ACRES IN THE STEPHEN F. SLAUGHTER LEAGUE NO. 1, ABSTRACT NO. 20, TRAVIS COUNTY, TEXAS, CONVEYED BY DEED OF RECORD IN VOLUME 12246, PAGE 585 OF THE REAL PROPERTY RECORDS OF TRAVIS COUNTY, TEXAS AND BLEVCO II, L.L.C., A TEXAS LIMITED LIABILITY COMPANY, BEING OWNER OF 1.490 ACRES, CONVEYED BY DEED OF RECORD IN DOCUMENT NO. 2010195279 OF THE OFFICIAL PUBLIC RECORDS OF TRAVIS COUNTY, TEXAS,

DO HEREBY SUBDIVIDE 27.962 ACRES IN THE STEPHEN F. SLAUGHTER LEAGUE NO. 1, ABSTRACT NO. 20, TRAVIS COUNTY, TEXAS IN ACCORDANCE WITH THE MAP OR PLAT ATTACHED HERETO, TO BE KNOWN AS

COLONIAL GRAND AT CITYWAY SUBDIVISION

AND DO HEREBY DEDICATE TO THE PUBLIC THE USE OF ALL STREETS AND EASEMENTS SHOWN HEREON, SUBJECT TO ANY AND ALL EASEMENTS OR RESTRICTIONS HERETOFORE GRANTED AND NOT RELEASED.

WITNESS MY HAND THIS THE 21 DAY OF February, 2011 A.D.

BY: Ed Wright

EDWARD T. WRIGHT, EXECUTIVE VICE PRESIDENT
COLONIAL REALTY LIMITED PARTNERSHIP, A DELAWARE LIMITED PARTNERSHIP
BY: COLONIAL PROPERTIES TRUST, AN ALABAMA REAL ESTATE INVESTMENT TRUST,
ITS GENERAL PARTNER
2101 6TH AVENUE NORTH, SUITE 750
BIRMINGHAM, ALABAMA 35202

STATE OF ALABAMA

COUNTY OF JEFFERSON

BEFORE ME, THE UNDERSIGNED AUTHORITY, ON THIS DAY PERSONALLY APPEARED EDWARD T. WRIGHT, KNOWN TO ME TO BE THE PERSON WHOSE NAME IS SUBSCRIBED TO THE FOREGOING INSTRUMENT AND HE ACKNOWLEDGED TO ME THAT HE EXECUTED THE SAME FOR THE PURPOSES AND CONSIDERATIONS THEREIN EXPRESSED AND IN THE CAPACITY THEREIN STATED.

WITNESS MY HAND AND SEALED IN MY OFFICE, THIS THE 21 DAY OF February, 2011, AD.

Mary A. White
NOTARY PUBLIC, STATE OF
Mary A. White
PRINTED NAME

NOTARY PUBLIC STATE OF ALABAMA AT LARGE
MY COMMISSION EXPIRES: June 30, 2014
BONDED THRU NOTARY PUBLIC UNDERWRITERS
MY COMMISSION EXPIRES

MARY A. WHITE Commission Expires June 30, 2014 NOTARY PUBLIC ALABAMA STATE AT LARGE

WITNESS MY HAND THIS THE 4th DAY OF March, 2011 A.D.

SIGNATURE: James A. Henry

JAMES A. HENRY, MANAGING MEMBER
THE RIDDELL FAMILY LIMITED PARTNERSHIP, A TEXAS LIMITED PARTNERSHIP
BY: RIDDELL GP, LLC, A TEXAS LIMITED LIABILITY COMPANY
ITS GENERAL PARTNER
2028 E. BEN WHITE BLVD., SUITE 508
AUSTIN, TEXAS 78741

STATE OF TEXAS

COUNTY OF TRAVIS

BEFORE ME, THE UNDERSIGNED AUTHORITY, ON THIS DAY PERSONALLY APPEARED WAYNE J. RIDDELL, KNOWN TO ME TO BE THE PERSON WHOSE NAME IS SUBSCRIBED TO THE FOREGOING INSTRUMENT AND HE ACKNOWLEDGED TO ME THAT HE EXECUTED THE SAME FOR THE PURPOSES AND CONSIDERATIONS THEREIN EXPRESSED AND IN THE CAPACITY THEREIN STATED.

WITNESS MY HAND AND SEALED IN MY OFFICE, THIS THE 4th DAY OF March, 2011, AD.

Pam Koenig
NOTARY PUBLIC, STATE OF TEXAS
Pam Koenig
PRINTED NAME

2/21/2013
MY COMMISSION EXPIRES

PAM KOENIG NOTARY PUBLIC State of Texas My Comm. Exp. Feb. 27, 2013

WITNESS MY HAND THIS THE 23 DAY OF February, 2011 A.D.

SIGNATURE: Thomas Blevins

THOMAS C. BLEVINS, MANAGER
BLEVCO II, L.L.C., A TEXAS LIMITED LIABILITY COMPANY
7144 VALBURN DRIVE
AUSTIN, TEXAS 78731

STATE OF TEXAS

COUNTY OF TRAVIS

BEFORE ME, THE UNDERSIGNED AUTHORITY, ON THIS DAY PERSONALLY APPEARED THOMAS C. BLEVINS, KNOWN TO ME TO BE THE PERSON WHOSE NAME IS SUBSCRIBED TO THE FOREGOING INSTRUMENT AND HE ACKNOWLEDGED TO ME THAT HE EXECUTED THE SAME FOR THE PURPOSES AND CONSIDERATIONS THEREIN EXPRESSED AND IN THE CAPACITY THEREIN STATED.

WITNESS MY HAND AND SEALED IN MY OFFICE, THIS THE 23 DAY OF February, 2011, AD.

NOTARY PUBLIC, STATE OF TEXAS
Jamie Goodwin
PRINTED NAME

6/12/13
MY COMMISSION EXPIRES

JAMIE A. GOODWIN Notary Public, State of Texas My Commission Expires June 12, 2013

SURVEYOR'S CERTIFICATION

I, JOE BEN EARLY, JR., AM AUTHORIZED UNDER THE LAWS OF THE STATE OF TEXAS TO PRACTICE THE PROFESSION OF SURVEYING AND HEREBY CERTIFY THAT THIS PLAT COMPLIES WITH THE SURVEYING RELATED PORTIONS OF TITLE 25 OF THE AUSTIN CITY CODE OF 1999 AS AMENDED, IS TRUE AND CORRECT, AND WAS PREPARED FROM AN ACTUAL SURVEY OF THE PROPERTY MADE BY ME OR MADE UNDER MY SUPERVISION, MADE ON THE GROUND, JANUARY 27, 2010.

1/11/11

JOE BEN EARLY, JR., R.P.L.S. 6016

STATE OF TEXAS REGISTERED JOE BEN EARLY, JR. 6016 PROFESSIONAL LAND SURVEYOR

SURVEYING BY:
CHAPARRAL PROFESSIONAL LAND SURVEYING, INC.
3500 MCCALL LANE
AUSTIN, TEXAS 78744
(512) 443-1724

ENGINEER'S CERTIFICATION:

I, JOSEPH WILLRICH, AM AUTHORIZED UNDER THE LAWS OF THE STATE OF TEXAS TO PRACTICE THE PROFESSION OF ENGINEERING, AND HEREBY CERTIFY THAT THIS PLAT IS FEASIBLE FROM AN ENGINEERING STANDPOINT AND COMPLIES WITH THE ENGINEERING RELATED PORTIONS OF TITLE 25 OF THE AUSTIN CITY CODE OF 1999, AS AMENDED, AND IS TRUE AND CORRECT TO THE BEST OF MY KNOWLEDGE.

NO PORTION OF THIS TRACT IS WITHIN THE BOUNDARIES OF THE 100 YEAR FLOOD OF A WATERWAY THAT IS WITHIN THE FEDERAL EMERGENCY MANAGEMENT AGENCY, NATIONAL FLOOD INSURANCE PROGRAM, AS SHOWN ON MAP NO. 48453C0595H, DATED SEPTEMBER 26, 2008, FOR TRAVIS COUNTY, TEXAS AND INCORPORATED AREAS.

Joseph Willrich 1/12/11
JOSEPH WILLRICH, P.E. 98415

STATE OF TEXAS JOSEPH G. WILLRICH 98415 LICENSED PROFESSIONAL ENGINEER

ENGINEERING BY:
KIMLEY-HORN AND ASSOCIATES, INC.
10415 MORADO CIRCLE, BLDG. I, SUITE 300
AUSTIN, TEXAS 78759
OFFICE: 512-418-1771
FAX: 512-418-1791

1. THIS SUBDIVISION IS NOT LOCATED OVER THE EDWARDS AQUIFER RECHARGE ZONE OR CONTRIBUTING ZONE.

2. WATER QUALITY CONTROLS ARE REQUIRED FOR ALL DEVELOPMENTS WITH IMPERVIOUS COVER IN EXCESS OF 20% OF NET SITE AREA, PURSUANT TO LAND DEVELOPMENT CODE SECTION 25-8-211.

3. THERE ARE NO NATURAL SLOPES IN THE SUBDIVISION IN EXCESS OF 15%

4. WATERSHED STATUS – THIS PROJECT IS LOCATED IN THE ONION CREEK WATERSHED AND IS CLASSIFIED AS SUBURBAN.

5. WATER AND SEWER SERVICE FOR THIS SUBDIVISION WILL BE PROVIDED BY THE CITY OF AUSTIN.

6. NO LOT WILL BE OCCUPIED UNTIL THE STRUCTURE IS CONNECTED TO THE CITY OF AUSTIN WATER AND WASTEWATER SYSTEM.

7. ALL WATER AND WASTEWATER SYSTEM IMPROVEMENTS MUST BE IN ACCORDANCE WITH CITY OF AUSTIN WATER AND WASTEWATER SYSTEM DESIGN CRITERIA AND SPECIFICATIONS. ALL WATER AND WASTEWATER PLANS MUST BE PRESENTED TO THE CITY OF AUSTIN WATER AND WASTEWATER UTILITY FOR REVIEW AND APPROVAL. ALL WATER AND WASTEWATER CONNECTIONS MUST BE INSPECTED BY THE CITY OF AUSTIN.

8. BY APPROVING THIS PLAT, THE CITY OF AUSTIN ASSUMES NO OBLIGATION TO CONSTRUCT ANY INFRASTRUCTURE IN CONNECTION WITH THIS SUBDIVISION. ANY SUBDIVISION INFRASTRUCTURE REQUIRED FOR THE DEVELOPMENT OF THE LOTS IN THIS SUBDIVISION IS THE RESPONSIBILITY OF THE DEVELOPER AND/OR THE OWNERS OF THE LOTS. FAILURE TO CONSTRUCT ANY REQUIRED INFRASTRUCTURE TO CITY STANDARDS MAY BE JUST CAUSE FOR THE CITY TO DENY APPLICATIONS FOR CERTAIN DEVELOPMENT PERMITS, INCLUDING BUILDING PERMITS, SITE PLAN APPROVALS, AND/OR CERTIFICATES OF OCCUPANCY.

9. THE OWNER OF THIS SUBDIVISION, AND HIS OR HER SUCCESSORS AND ASSIGNS, ASSUMES RESPONSIBILITY FOR PLANS FOR CONSTRUCTION OF SUBDIVISION IMPROVEMENTS WHICH COMPLY WITH APPLICABLE CODES AND REQUIREMENTS OF THE CITY OF AUSTIN. THE OWNER UNDERSTANDS AND ACKNOWLEDGES THAT PLAT VACATION OR REPLATTING MAY BE REQUIRED, AT THE OWNER'S SOLE EXPENSE, IF PLANS TO CONSTRUCT THIS SUBDIVISION DO NOT COMPLY WITH SUCH CODES AND REQUIREMENTS.

10. PRIOR TO CONSTRUCTION ON LOTS IN THIS SUBDIVISION, DRAINAGE PLANS WILL BE SUBMITTED TO THE CITY OF AUSTIN FOR REVIEW. RAINFALL RUN-OFF SHALL BE HELD TO THE AMOUNT ESTABLISHED BY THE REGIONAL DETENTION PLANS APPROVED BY THE CITY OF AUSTIN, EXCEPT THAT RUN-OFF IN EXCESS OF THE AMOUNT ESTABLISHED FOR THE REGIONAL DETENTION SYSTEM SHALL BE DETAINED BY THE USE OF ONSITE PONDING OR OTHER APPROVED METHODS.

11. AUSTIN ENERGY HAS THE RIGHT TO PRUNE AND/OR REMOVE TREES, SHRUBBERY AND OTHER OBSTRUCTIONS AS NECESSARY TO KEEP THE EASEMENTS CLEAR. AUSTIN ENERGY WILL PERFORM ALL TREE WORK IN COMPLIANCE WITH CHAPTER 25-8, SUBCHAPTER B OF THE CITY OF AUSTIN LAND DEVELOPMENT CODE.

12. THE OWNER/DEVELOPER OF THIS SUBDIVISION/LOT SHALL PROVIDE AUSTIN ENERGY WITH ANY EASEMENT AND/OR ACCESS REQUIRED, IN ADDITION TO THOSE INDICATED, FOR THE INSTALLATION AND ONGOING MAINTENANCE OF OVERHEAD AND UNDERGROUND ELECTRIC FACILITIES. THESE EASEMENTS AND/OR ACCESS ARE REQUIRED TO PROVIDE ELECTRIC SERVICE TO THE BUILDING AND WILL NOT BE LOCATED SO AS TO CAUSE THE SITE TO BE OUT OF COMPLIANCE WITH CHAPTER 25-8 OF THE CITY OF AUSTIN LAND DEVELOPMENT CODE.

13. THE OWNER SHALL BE RESPONSIBLE FOR INSTALLATION OF TEMPORARY EROSION CONTROL, REVEGETATION AND TREE PROTECTION. IN ADDITION, THE OWNER SHALL BE RESPONSIBLE FOR ANY INITIAL TREE PRUNING AND TREE REMOVAL THAT IS WITHIN TEN FEET OF THE CENTER LINE OF THE PROPOSED OVERHEAD ELECTRICAL FACILITIES DESIGNED TO PROVIDE ELECTRIC SERVICE TO THIS PROJECT. THE OWNER SHALL INCLUDE AUSTIN ENERGY'S WORK WITHIN THE LIMITS OF CONSTRUCTION FOR THIS PROJECT.

14. BUILDING SETBACK LINES SHALL BE IN CONFORMANCE WITH CITY OF AUSTIN ZONING ORDINANCE REQUIREMENTS.

15. PUBLIC SIDEWALKS, BUILT TO CITY OF AUSTIN STANDARDS, ARE REQUIRED ALONG THE FOLLOWING STREETS AS SHOWN BY A DOTTED LINE ON THE FACE OF THE PLAT: ALONG S 1ST STREET. THESE SIDEWALKS SHALL BE IN PLACE PRIOR TO THE LOT BEING OCCUPIED. FAILURE TO CONSTRUCT THE REQUIRED SIDEWALKS MAY RESULT IN THE WITHHOLDING OF CERTIFICATES OF OCCUPANCY, BUILDING PERMITS, OR UTILITY CONNECTIONS BY THE GOVERNING BODY OR UTILITY COMPANY.

16. EROSION/SEDIMENTATION CONTROLS AREA REQUIRED FOR ALL CONSTRUCTION IN THIS SUBDIVISION PURSUANT TO LAND DEVELOPMENT CODE SECTION 25-8-181.

17. NO STRUCTURES, INCLUDING BUT NOT LIMITED TO, BUILDINGS, FENCES, OR LANDSCAPING SHALL BE ALLOWED IN A DRAINAGE EASEMENT EXCEPT AS APPROVED BY THE CITY OF AUSTIN.

18. PROPERTY OWNER SHALL PROVIDE ACCESS TO THE DRAINAGE EASEMENT AS MAY BE NECESSARY AND SHALL NOT PROHIBIT ACCESS BY GOVERNMENTAL AUTHORITIES.

19. ALL DRAINAGE EASEMENTS SHALL BE MAINTAINED BY THE OWNERS OR HIS/HER ASSIGNS.

20. PRIOR TO CONSTRUCTION, EXCEPT DETACHED SINGLE FAMILY ON ANY LOT IN THIS SUBDIVISION, A SITE DEVELOPMENT PERMIT MUST BE OBTAINED FROM THE CITY OF AUSTIN.

21. ALL PUBLIC STREETS ARE TO BE CONSTRUCTED TO CITY OF AUSTIN STANDARDS PER LDC 25-6-171(A).

22. PARKLAND FEES ARE REQUIRED PER ORDINANCE 20070621-027, OR AS AMENDED, PRIOR TO APPROVAL OF ANY SITE PLAN IN THIS SUBDIVISION.

THIS SUBDIVISION PLAT IS LOCATED WITHIN THE FULL PURPOSE LIMITS OF THE CITY OF AUSTIN ON THIS THE 11th DAY OF MARCH, 2011.

APPROVED, ACCEPTED AND AUTHORIZED FOR RECORD BY THE DIRECTOR, PLANNING & DEVELOPMENT REVIEW DEPARTMENT, CITY OF AUSTIN, COUNTY OF TRAVIS, THIS THE 11th DAY OF MARCH, 2011 AD.

GREG GUERNSEY, DIRECTOR
PLANNING & DEVELOPMENT REVIEW DEPARTMENT

THE STATE OF TEXAS
COUNTY OF TRAVIS

I, DANA DEBEAUVOIR, CLERK OF TRAVIS COUNTY, TEXAS, DO HEREBY CERTIFY THAT THE FOREGOING INSTRUMENT OF WRITING, WITH ITS CERTIFICATE OF AUTHENTICATION WAS FILED FOR RECORD IN MY OFFICE

ON THE 21st DAY OF March A.D. 2011 AT 10:45 O'CLOCK A M., AND DULY

RECORDED ON THE 21st DAY OF March, A.D. 2011 AT 10:45 O'CLOCK A M., IN SAID COUNTY

AND STATE, IN DOCUMENT NUMBER 201100053 OF THE OFFICIAL PUBLIC RECORDS OF TRAVIS COUNTY, TEXAS,

WITNESS MY HAND AND SEAL OF OFFICE OF THE COUNTY CLERK, THE 21st DAY OF March

2011 A.D.

DANA DEBEAUVOIR, COUNTY CLERK, TRAVIS COUNTY, TEXAS

BY T Perez
DEPUTY T. PEREZ

SEAL OF COUNTY CLERK TRAVIS COUNTY, TEXAS

SITE PLAN APPROVAL SHEET 2 OF 77
FILE NUMBER SP-2010-0246C APPLICATION DATE 8/25/2010
APPROVED BY COMMISSION ON N/A UNDER SECTION 112 OF
CHAPTER 25-5 OF THE CITY OF AUSTIN CODE.
EXPIRATION DATE (25-5-81,LDC) 3/31/14 CASE MANAGER Wheeler
PROJECT EXPIRATION DATE (ORD.#970905-A) 3/31/13 DWFZ DDZ X

Director, Watershed Protection and Development Review
RELEASED FOR GENERAL COMPLIANCE 3/31/11 ZONING MF-3-CO
Rev. 1 _____ Correction 1 _____
Rev. 2 _____ Correction 2 _____
Rev. 3 _____ Correction 3 _____
Final plat must be recorded by the Project Expiration Date, if applicable. Subsequent Site Plans which do not comply with the Code current at the time of filing, and all required Building Permits and/or a notice of construction (if a building permit is not required), must also be approved prior to the Project Expiration Date.

Chaparral
Professional Land Surveying, Inc.
Surveying and Mapping
3500 McCall Lane
Austin, Texas 78744
512-443-1724

PROJECT NO.: 586-013
DRAWING NO.: 586-013-PL1
PLOT DATE: 1/11/11
PLOT SCALE: 1" = 100'
DRAWN BY: JBE
SHEET 02 OF 02

C8-2010-0085.0A
SP-2010-0246C

2 of 77

STATE OF TEXAS JOHN R. KING 59429 LICENSED PROFESSIONAL ENGINEER 9/22/2016

CHAN & PARTNERS CONSULTING CIVIL ENGINEERS

CHAN & PARTNERS ENGINEERING, LLC
4319 JAMES CASEY STREET, #300
AUSTIN, TEXAS 78745
512-469-8155 (PH) • 512-469-8811 (FAX)
E-mail: info@chanpartners.com
WWW.CHANPARTNERS.COM
TEXAS REGISTRATION NO. F-13013

AUSTIN ONION CREEK FIRE & EMS STATION
11112 OLD SAN ANTONIO ROAD
AUSTIN, TEXAS 78748

CITY OF AUSTIN FOUNDED 1839

REVISIONS

DATE	9/22/2016
DRAWN BY	CD
CHECKED BY	JRK
PROJECT NO.	214106.00

SUBDIVISION PLAT

C1.2

IF THIS SHEET IS NOT 36" X 24", IT IS A REDUCED PRINT. Sep 22, 2016 - 3:30pm Drawing name: J:\1139-Onion Creek Fire EMS\00-DRAWINGS\PERMIT\1139--C-SUBDIVISION PLAT.dwg

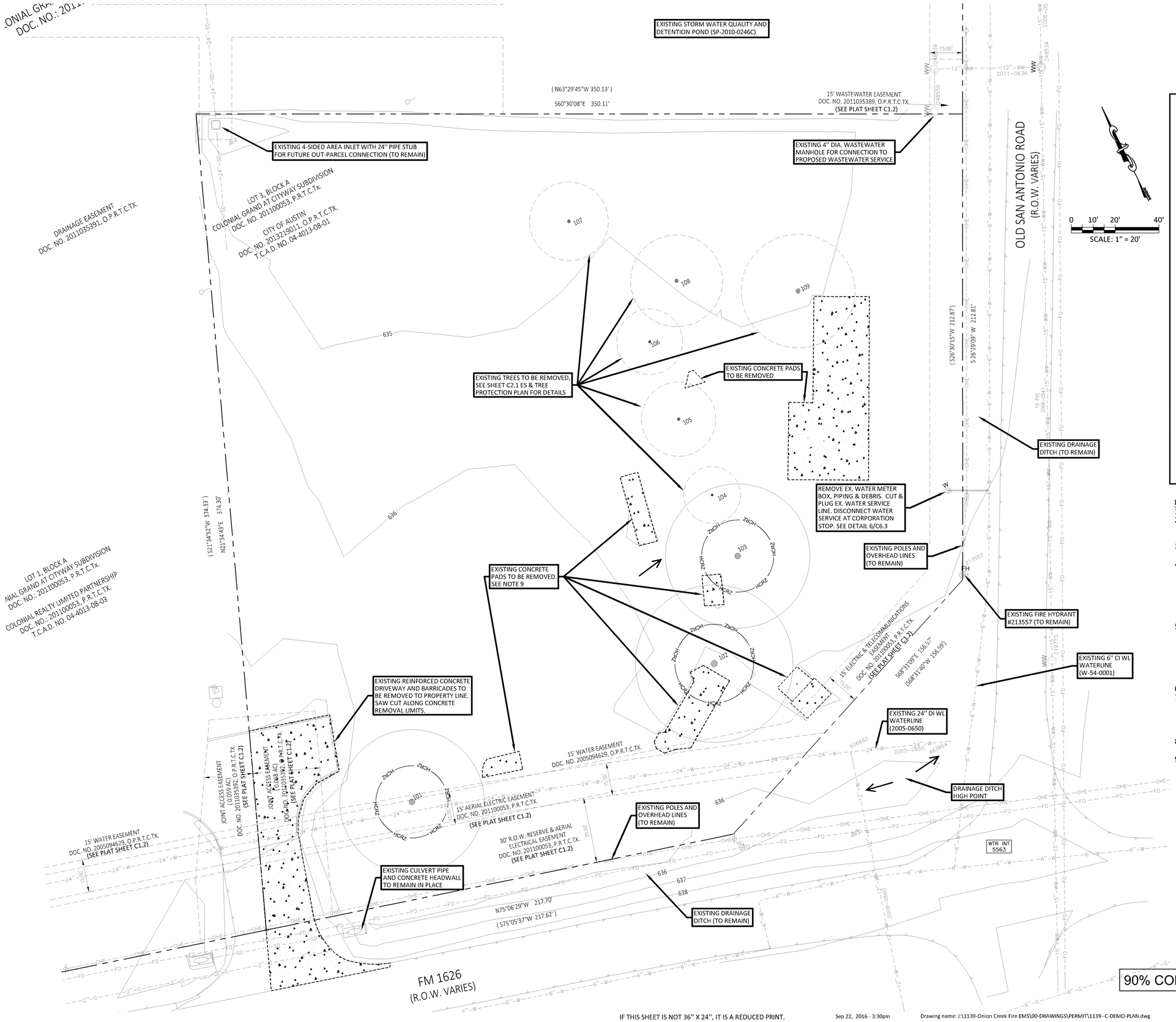

LEGEND

EXISTING SITE

- EXISTING R.O.W./PROPERTY LINE
- EXISTING EASEMENT LINE
- EXISTING PAVEMENT

493 — EX. CONTOURS	EX. TELEPHONE MANHOLE
W — EX. WATER LINE	EX. TELEPHONE MARKER
WW — EX. WASTEWATER	EX. FIBER OPTICS MARKER
SD — EX. STORM DRAIN	EX. TELEPHONE BOX
OHU — EX. OVERHEAD UTILITIES	EX. TRAFFIC SIGNAL POLE
OHE — EX. OVERHEAD ELECTRIC	EX. TRAFFIC SIGNAL BOX
UE — EX. UNDERGROUND ELECTRIC	EX. GAS VALVE
TS — EX. UNDERGROUND TRAFFIC SIGNAL	EX. GAS METER
UT — EX. UNDERGROUND TELEPHONE	EX. GAS MARKER
FO — EX. UNDERGROUND FIBEROPTICS	EX. MAIL BOX
G — EX. GAS LINE	EX. PARKING METER
OO — EX. CHAINLINK FENCE	EX. SIGN
X — EX. WIRE FENCE	EX. POWER POLE
// — EX. WOOD FENCE	EX. GUY WIRE
EX. GUARD RAIL	EX. LIGHT POLE
100-YFP — CITY OF AUSTIN FULLY DEVELOPED 100-YR FLOODPLAIN	EX. ELECTRIC MANHOLE
100Y-FEMA — 100-YR FEMA FLOODPLAIN	EX. ELECTRIC BOX
CWQZ — CRITICAL WATER QUALITY ZONE	EX. ELECTRIC MARKER
WQTZ — WATER QUALITY TRANSITION ZONE	EX. SPRINKLER VALVE
	EX. WATER VALVE
	EX. FIRE HYDRANT
	EX. WATER METER
	EX. STORM DRAIN INLET WITH LATERAL
	EX. STORM DRAIN MANHOLE
	EX. WASTEWATER MANHOLE
	CONTROL POINT
EXISTING TREE (TO REMAIN)	EXISTING TREE (TO BE REMOVED)
EXISTING BUILDING	EXISTING TREE HALF CRITICAL ROOT ZONE
LOC — LIMITS OF CONSTRUCTION	
TP — TREE PROTECTION	
REMOVE EX. CONDUIT	

NOTES:

1. SEE SHEET C2.1 FOR TREE LIST.
2. CONTRACTOR SHALL COMPLY WITH TXDOT DRIVEWAY PERMIT FOR REMOVAL OF EXISTING DRIVEWAY WITHIN FM 1626 ROW.
3. PROVIDE TRAFFIC CONTROLS FOR ALL DEMOLITION WORK WITHIN ROW.
4. HEAVY EQUIPMENT WITHIN THE 1/2 CRITICAL ROOT ZONE IS PROHIBITED AND ANY WORK REQUIRED WITHIN THIS ZONE SHALL BE HAND EXCAVATED. WHEN WORKING WITHIN THE FULL CRITICAL ZONE, WEIGHT DISTRIBUTION MATS OR OTHER SOIL COMPACTION PROTECTION SHALL BE PROVIDED.
5. ANY DEMOLITION WORK THAT IS TO BE DONE WITHIN THE 1/2 CRITICAL ROOT ZONE OF EXISTING TREE WHICH REQUIRES MOVING THE TREE PROTECTION FENCING IN ORDER TO DO WORK, THIS FENCE MUST BE INSTALLED IMMEDIATELY AFTER WORK IS CONCLUDED PER COA STANDARD SPECIFICATIONS.
6. SEE SHEET C2.1 FOR LIMITS OF CONSTRUCTION.
7. A PRE-CONSTRUCTION MEETING WITH THE ENVIRONMENTAL INSPECTOR AND APPROVAL OF EROSION CONTROL AND TREE PROTECTION MEASURES IS REQUIRED PRIOR TO ANY SITE DISTURBANCE.
8. THERE ARE NO OPPOSING DRIVEWAYS ALONG OLD SAN ANTONIO ROAD OR ALONG F.M. 1626.
9. INSTALL TREE PLANKING WHERE SLAB DEMOLITION EXTENDS INTO 1/2 CRZ. SEE ESC PLAN SHEET C2.1.

90% CONSTRUCTION DOCUMENTS

IF THIS SHEET IS NOT 36" X 24", IT IS A REDUCED PRINT.

Sep 22, 2016 - 3:30pm

Drawing name: J:\1139-Onion Creek Fire EMS\00-DRAWINGS\PERMIT\1139--C-DEMO-PLAN.dwg

STATE OF TEXAS
JOHN R. KING
58429
LICENSED PROFESSIONAL ENGINEER
9/22/2016

CHAN & PARTNERS CONSULTING CIVIL ENGINEERS
CHAN & PARTNERS ENGINEERING, LLC
4319 JAMES CASEY STREET, #300
AUSTIN, TEXAS 78745
512-469-8195 (PH) • 512-469-8811 (FAX)
E-mail: info@chanpartners.com
WWW.CHANPARTNERS.COM
TEXAS REGISTRATION NO. F-13013

AUSTIN ONION CREEK FIRE & EMS STATION

11112 OLD SAN ANTONIO ROAD
AUSTIN, TEXAS 78748

CITY OF AUSTIN FOUNDED 1839

REVISIONS

DATE	9/22/2016
DRAWN BY	CD
CHECKED BY	JRK
PROJECT NO.	214106.00

EXISTING CONDITIONS & DEMOLITION PLAN

C1.3

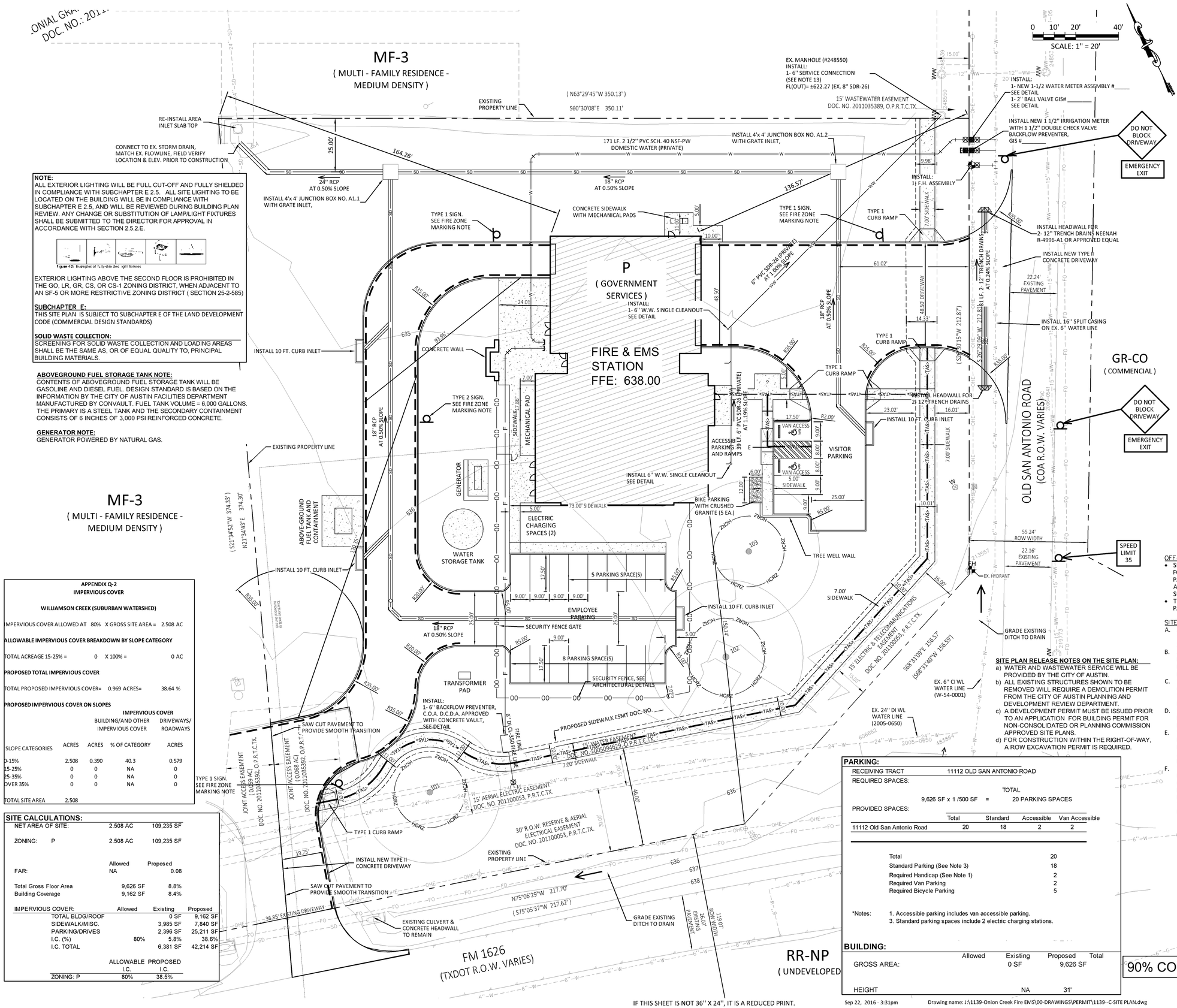

NOTE:
ALL EXTERIOR LIGHTING WILL BE FULL CUT-OFF AND FULLY SHIELDED IN COMPLIANCE WITH SUBCHAPTER E 2.5. ALL SITE LIGHTING TO BE LOCATED ON THE BUILDING WILL BE IN COMPLIANCE WITH SUBCHAPTER E 2.5, AND WILL BE REVIEWED DURING BUILDING PLAN REVIEW. ANY CHANGE OR SUBSTITUTION OF LAMP/LIGHT FIXTURES SHALL BE SUBMITTED TO THE DIRECTOR FOR APPROVAL IN ACCORDANCE WITH SECTION 2.5.2.E.

Figure 42: Examples of fully-shielded light fixtures

EXTERIOR LIGHTING ABOVE THE SECOND FLOOR IS PROHIBITED IN THE GO, LR, GR, CS, OR CS-1 ZONING DISTRICT, WHEN ADJACENT TO AN SF-5 OR MORE RESTRICTIVE ZONING DISTRICT (SECTION 25-2-585)

SUBCHAPTER E:
THIS SITE PLAN IS SUBJECT TO SUBCHAPTER E OF THE LAND DEVELOPMENT CODE (COMMERCIAL DESIGN STANDARDS)

SOLID WASTE COLLECTION:
SCREENING FOR SOLID WASTE COLLECTION AND LOADING AREAS SHALL BE THE SAME AS, OR OF EQUAL QUALITY TO, PRINCIPAL BUILDING MATERIALS.

ABOVEGROUND FUEL STORAGE TANK NOTE:
CONTENTS OF ABOVEGROUND FUEL STORAGE TANK WILL BE GASOLINE AND DIESEL FUEL. DESIGN STANDARD IS BASED ON THE INFORMATION BY THE CITY OF AUSTIN FACILITIES DEPARTMENT MANUFACTURED BY CONVAULT. FUEL TANK VOLUME = 6,000 GALLONS. THE PRIMARY IS A STEEL TANK AND THE SECONDARY CONTAINMENT CONSISTS OF 6 INCHES OF 3,000 PSI REINFORCED CONCRETE.

GENERATOR NOTE:
GENERATOR POWERED BY NATURAL GAS.

APPENDIX Q-2
IMPERVIOUS COVER

WILLIAMSON CREEK (SUBURBAN WATERSHED)

IMPERVIOUS COVER ALLOWED AT 80% X GROSS SITE AREA = 2.508 AC

ALLOWABLE IMPERVIOUS COVER BREAKDOWN BY SLOPE CATEGORY

TOTAL ACREAGE 15-25% = 0 X 100% = 0 AC

PROPOSED TOTAL IMPERVIOUS COVER

TOTAL PROPOSED IMPERVIOUS COVER= 0.969 ACRES= 38.64 %

PROPOSED IMPERVIOUS COVER ON SLOPES

SLOPE CATEGORIES	ACRES	IMPERVIOUS COVER: BUILDING/AND OTHER IMPERVIOUS COVER ACRES	% OF CATEGORY	DRIVEWAYS/ ROADWAYS ACRES
0-15%	2.508	0.390	40.3	0.579
15-25%	0	0	NA	0
25-35%	0	0	NA	0
OVER 35%	0	0	NA	0
TOTAL SITE AREA	2.508			

SITE CALCULATIONS:

NET AREA OF SITE:	2.508 AC	109,235 SF	
ZONING: P	2.508 AC	109,235 SF	
	Allowed	Proposed	
FAR:	NA	0.08	
Total Gross Floor Area	9,626 SF	8.8%	
Building Coverage	9,162 SF	8.4%	

IMPERVIOUS COVER:	Allowed	Existing	Proposed
TOTAL BLDG/ROOF		0 SF	9,162 SF
SIDEWALK/MISC.		3,985 SF	7,840 SF
PARKING/DRIVES		2,396 SF	25,211 SF
I.C. (%)	80%	5.8%	38.6%
I.C. TOTAL		6,381 SF	42,214 SF

	ALLOWABLE I.C.	PROPOSED I.C.
ZONING: P	80%	38.5%

PARKING:

RECEIVING TRACT 11112 OLD SAN ANTONIO ROAD

REQUIRED SPACES:

TOTAL
9,626 SF x 1 /500 SF = 20 PARKING SPACES

PROVIDED SPACES:

	Total	Standard	Accessible	Van Accessible
11112 Old San Antonio Road	20	18	2	2

Total	20
Standard Parking (See Note 3)	18
Required Handicap (See Note 1)	2
Required Van Parking	2
Required Bicycle Parking	5

*Notes: 1. Accessible parking includes van accessible parking.
3. Standard parking spaces include 2 electric charging stations.

BUILDING:

	Allowed	Existing	Proposed	Total
GROSS AREA:		0 SF	9,626 SF	
HEIGHT		NA	31'	

SITE PLAN RELEASE NOTES ON THE SITE PLAN:
a) WATER AND WASTEWATER SERVICE WILL BE PROVIDED BY THE CITY OF AUSTIN.
b) ALL EXISTING STRUCTURES SHOWN TO BE REMOVED WILL REQUIRE A DEMOLITION PERMIT FROM THE CITY OF AUSTIN PLANNING AND DEVELOPMENT REVIEW DEPARTMENT.
c) A DEVELOPMENT PERMIT MUST BE ISSUED PRIOR TO AN APPLICATION FOR BUILDING PERMIT FOR NON-CONSOLIDATED OR PLANNING COMMISSION APPROVED SITE PLANS.
d) FOR CONSTRUCTION WITHIN THE RIGHT-OF-WAY, A ROW EXCAVATION PERMIT IS REQUIRED.

SITE LEGEND

- PROJECT BOUNDARY LINE
- EXISTING R.O.W./PROPERTY LINE
- EXISTING EASEMENT LINE
- EXISTING PAVEMENT
- PROPOSED CURB & GUTTER
- <TAS> TAS ACCESSIBLE ROUTE
- BUILDING LINE
- DETAIL NUMBER / SHEET NUMBER — DETAIL / NAME — DETAIL CALLOUT REFERENCE

FIRE ZONE MARKINGS:
FIRE LANES TO BE MARKED BY PAINTING THE CURB RED WITH WHITE STENCILING READING "FIRE ZONE/TOW-AWAY ZONE" WITH LETTERING AT LEAST 3 INCHES IN HEIGHT. SUCH STENCILING SHALL BE AT INTERVALS OF 35 FEET OR LESS. IN ADDITION, SIGNS SHALL BE POSTED AT BOTH ENDS OF A FIRE ZONE. SEE DETAIL: 5/C7.4

RESTRICTED PARKING MARKINGS:
RESTRICTED PARKING LANES TO BE MARKED BY YELLOW PAINTED CURB WITH BLACK STENCILING READING "NO PARKING 7-8 AM AND 2-3 PM" WITH LETTERING AT LEAST 3 INCHES IN HEIGHT. SUCH STENCILING SHALL BE AT INTERVALS OF 35 FEET OR LESS.

NOTES:

1. DIMENSIONS ARE SHOWN ON THE DIMENSIONAL CONTROL PLAN. FOR PRECISE DIMENSIONS AND LOCATION OF SITE IMPROVEMENTS, ELECTRONIC FILES OF THE SITE LAYOUT WILL BE MADE AVAILABLE TO THE CONTRACTOR AND HIS SURVEYOR UPON REQUEST. FOR BUILDING DIMENSIONS, CONTRACTOR SHALL USE ARCHITECTURAL AND STRUCTURAL PLANS.
2. EXISTING UTILITIES ARE SHOWN PER SURVEY DRAWINGS AND CITY OF AUSTIN RECORD DRAWINGS.
3. TAS ACCESSIBLE ROUTES MAY NOT EXCEED A CROSS SLOPE OF 1:50 (2%) OR EXCEED A RUNNING SLOPE OF 1:20 (5%) UNLESS DESIGNED AS A RAMP. THE MAXIMUM RUNNING SLOPE OF A RAMP IN NEW CONSTRUCTION IS 1:12 (8.33%). THE MAXIMUM RISE FOR ANY RAMP RUN IS 30 INCHES. REFER TO GRADING SHEET(S).
4. APPROVAL OF THESE PLANS BY THE CITY OF AUSTIN INDICATES COMPLIANCE WITH APPLICABLE CITY REGULATIONS ONLY. COMPLIANCE WITH ACCESSIBILITY STANDARDS SUCH AS THE 2010 STANDARDS FOR ACCESSIBLE DESIGN OR THE 2012 TEXAS ACCESSIBILITY STANDARDS WAS NOT VERIFIED. THE APPLICANT IS RESPONSIBLE FOR COMPLIANCE WITH ALL APPLICABLE ACCESSIBILITY STANDARDS.

OFF-SITE SIGNAGE NOTE:
- SIGNAGE SHALL BE PROVIDED INDICATING OFF-SITE PARKING AS FOLLOWS: ONE SIGN SHALL BE PROVIDED AT THE OFF-SITE PARKING INDICATING THE PROPERTY OR USE WHICH IT SERVES, AND ONE SIGN SHALL BE PROVIDED ON THE SITE OF THE USE SERVED INDICATING THE LOCATION OF THE OFF-SITE PARKING.
- THERE WILL BE NO RESTRICTIONS ON WHEN THE OFFSITE PARKING MAY BE USED BY THE RECEIVING TRACT

SITE PLAN COMPATIBILITY NOTES:
A. ALL EXTERIOR LIGHTING WILL BE HOODED OR SHIELDED FROM THE VIEW OF ADJACENT RESIDENTIAL PROPERTY. [SECTION 25-2-1064].
B. ALL DUMPSTERS AND ANY PERMANENTLY PLACED REFUSE RECEPTACLES WILL BE LOCATED AT A MINIMUM OF TWENTY (20) FEET FROM A PROPERTY USED OR ZONED AS SF-5 OR MORE RESTRICTIVE. [SECTION 25-2-1067).
C. THE USE OF HIGHLY REFLECTIVE SURFACES, SUCH AS REFLECTIVE GLASS AND REFLECTIVE METAL ROOFS, WHOSE PITCH IS MORE THAN A RUN OF SEVEN (7) TO A RISE OF TWELVE (12), WILL BE PROHIBITED. [SECTION 25-2-1067].
D. THE NOISE LEVEL OF MECHANICAL EQUIPMENT WILL NOT EXCEED 70 DBA AT THE PROPERTY LINE ADJACENT TO RESIDENTIAL USES. [SECTION 25-2-1067).
E. YARDS, FENCES, VEGETATIVE SCREENING OR BERMS SHALL BE PROVIDED TO SCREEN ADJACENT SF-5 OR MORE RESTRICTIVE RESIDENTIAL DISTRICTS FROM VIEWS OF OFF-STREE PARKING AREAS, MECHANICAL EQUIPMENT, STORAGE AREAS, AND FOR REFUSE COLLECTION.
F. THIS PROPERTY IS WITHIN THE CONTROLLED COMPATIBLE LAND USE AREA DEFINED BY CHAPTER 241 OF THE LOCAL GOVERNMENT CODE. DEVELOPMENT ON THIS PROPERTY IS LIMITED BY CHAPTER 25-13 OF THE AUSTIN CITY CODE. AIRPORT HAZARDS AS DEFINED IN FEDERAL AVIATION REGULATIONS PART 77, AS ADOPTED BY THE CITY IN SECTIONS 25-13-23, ARE PROHIBITED.

90% CONSTRUCTION DOCUMENTS

IF THIS SHEET IS NOT 36" X 24", IT IS A REDUCED PRINT.

Sep 22, 2016 - 3:31pm Drawing name: J:\1139-Onion Creek Fire EMS\00-DRAWINGS\PERMIT\1139--C-SITE PLAN.dwg

STATE OF TEXAS
JOHN R. KING
59429
LICENSED PROFESSIONAL ENGINEER
9/22/2016

CHAN & PARTNERS CONSULTING CIVIL ENGINEERS
CHAN & PARTNERS ENGINEERING, LLC
4319 JAMES CASEY STREET, #300
AUSTIN, TEXAS 78745
512-469-8195 (PH) • 512-469-9811 (FAX)
E-mail: info@chanpartners.com
WWW.CHANPARTNERS.COM
TEXAS REGISTRATION NO. F-10813

AUSTIN ONION CREEK
FIRE & EMS STATION
11112 OLD SAN ANTONIO ROAD
AUSTIN, TEXAS 78748

CITY OF AUSTIN FOUNDED 1839

REVISIONS

DATE	9/22/2016
DRAWN BY	CD
CHECKED BY	JRK
PROJECT NO.	214106.00

SITE PLAN

C2.0

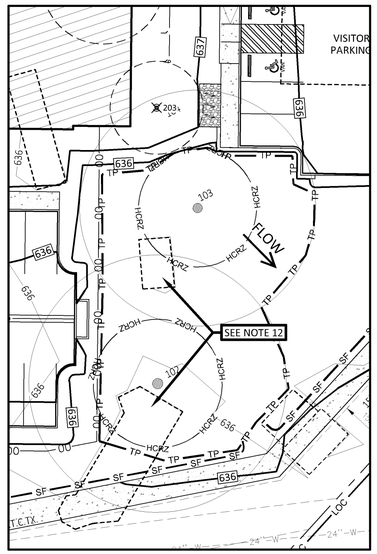

GRADING DETAIL 1/C2.1
SCALE= 1"= 20'

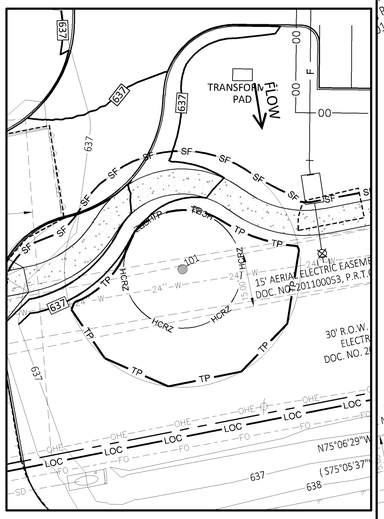

GRADING DETAIL 2/C2.1
SCALE= 1"= 20'

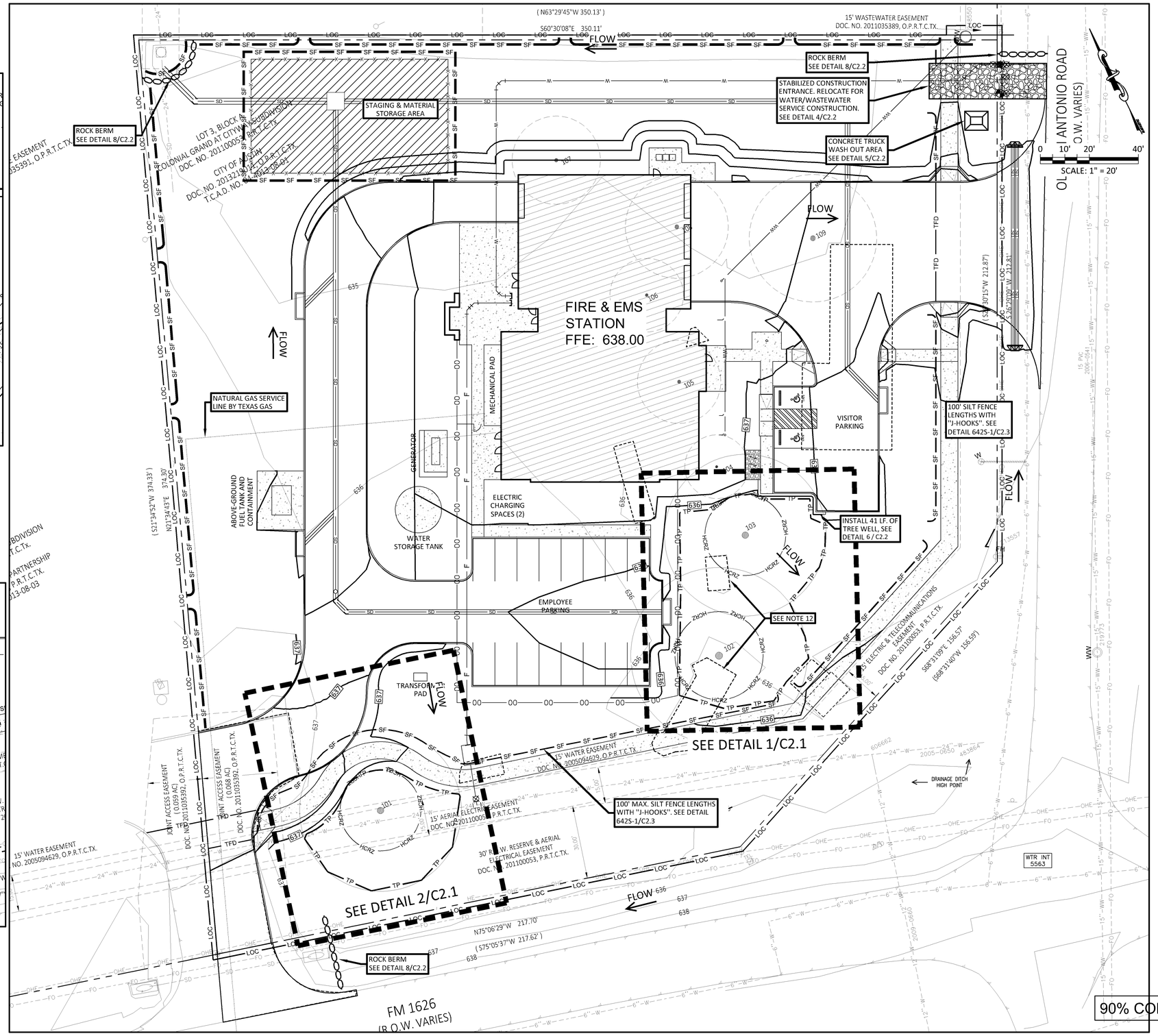

TREE LIST

(SURVEY DATE: 9/10/2015)

TAG NO.	SIZE/TYPE
101	33" MULTI-TRUNK ASH, TEXAS
102	36" MULBERRY
103	33" MULBERRY
R104	13" MULBERRY
R105	17" TWIN MULBERRY
R106	15" MULBERRY
R107	18" ASH, TEXAS
R108	21" ASH, TEXAS
R109	26" ASH, TEXAS (H)

R- TREES TO REMOVE
H- HERITAGE TREE

EROSION / SEDIMENTATION AND TREE PROTECTION LEGEND

- LOC — LIMITS OF CONSTRUCTION
- DRAINAGE FLOW DIRECTION
- TP — TREE PROTECTION FENCE (C.O.A. DETAIL 610S-1 & 610S-4)
- REINFORCED ROCK BERM (C.O.A. DETAIL 639S-1)
- MS — MULCH SOCK
- OMF — ORANGE MESH SAFETY FENCE
- SF — SILT FENCE
- F — D, F==D— F==D — FILTER DIKE CURB INLET PROTECTION (C.O.A. DETAIL 628S-2)
- TFD — TRIANGULAR FILTER DIKE
- HALF CRITICAL ROOT ZONE
- STABILIZED CONSTRUCTION ENTRANCE (SCE) (C.O.A. DETAIL 641S-1)
- TEMPORARY SPOILS SITE
- CONSTRUCTION STAGING AREA
- EROSION CONTROL BLANKET
- CONCRETE WASHOUT AREA
- 1000 — EXISTING TREES (TO REMAIN)
- 1000 — EXISTING TREES (TO BE REMOVED)
- DETAIL NUMBER / SHEET NUMBER — DETAIL NAME — DETAIL CALLOUT REFERENCE

NOTES:

1. THE ENVIRONMENTAL INSPECTOR HAS THE AUTHORITY TO ADD AND/OR MODIFY EROSION/ SEDIMENTATION CONTROLS ON SITE TO KEEP PROJECT IN COMPLIANCE WITH THE CITY OF AUSTIN RULES AND REGULATIONS.
2. CONTRACTOR SHALL UTILIZE DUST CONTROL MEASURES DURING SITE CONSTRUCTION SUCH AS IRRIGATION TRUCKS AND MULCHING AS PER ECM 1.4.5(D), OR AS DIRECTED BY THE ENVIRONMENTAL INSPECTOR.
3. SILT FENCE TYPE AND INSTALLATION SHALL COMPLY WITH ECM 1.4.2(G).
4. ALL DISTURBED AREAS SHALL BE REVEGETATED WITH NATIVE GRASSES (REFER TO NOTE SHEET FOR SPECS). ALL DISTURBED AREAS WITH SLOPES 5:1 OR STEEPER, WHICH ARE NOT ARMORED OTHERWISE, SHALL HAVE A SOIL RETENTION BLANKET (EXCELSIOR II OR APPROVED EQUAL) INSTALLED TO ASSIST WITH REVEGETATION.
5. IF DISTURBED AREA IS NOT TO BE WORKED ON FOR MORE THAN 14 DAYS, DISTRUBED AREA NEEDS TO BE STABILIZED BY REVEGETATION, MULCH, TARP OR REVEGETATION MATTING. (ECM 1.4.4.B.3, SECTION 5.1)
6. THE CONTRACTOR WILL CLEAN UP SPOILS THAT MIGRATE ONTO THE ROADS A MINIMUM OF ONCE DAILY. (ECM 1.4.4.D.4)
7. PROPOSED TREE WELL AT TREES #103 SHOWN ON SHEET C4.0 GRADING PLAN. TREE WELL WALL TO BE ALIGNED OUTSIDE 1/2 CRZ.
8. THE DISTURBED AREAS WITHIN THIS PROJECT SHALL BE RE-VEGETATED AND ALL PERMANENT EROSION/SEDIMENTATION CONTROLS COMPLETED PRIOR TO THE RELEASE OF FISCAL SECURITY FOR THE PROJECT.
9. SEE SHEET C1.1 FOR CITY OF AUSTIN ENVIROMMENTAL CRITERIA MANUAL (ECM) APPENDIX NOTES.
10. CONTRACTOR IS RESPONSIBLE FOR REMOVING ANY SEDIMENT TRANSPORTED FROM THE LOC TO THE OFFSITE DETENTION/WATER QUALITY POND.
11. FOR THE EXISTING TREES THAT REMAIN ON SITE: (A) MINIMUM OF 50% OF THE CRZ MUST BE PRESERVED AT NATURAL GRADE WITH NATURAL GROUND COVER, (B) CUT OR FILL IS LIMITED TO 4 INCHES FROM THE 1/2 CRZ TO THE 1/4 CRZ, AND (C) NO CUT OR FILL IS PERMITTED WITHIN THE 1/4 CRZ.
12. INSTALL TREE PLANKING PRIOR TO DEMOLITION OF SLABS WHERE SLABS EXTEND INTO 1/2 CRZ. SEE DETAIL 3/C2.2

90% CONSTRUCTION DOCUMENTS

STATE OF TEXAS
JOHN R. KING
59429
LICENSED
PROFESSIONAL ENGINEER
9/22/2016

CHAN & PARTNERS
CONSULTING CIVIL ENGINEERS
CHAN & PARTNERS ENGINEERING, LLC
4319 JAMES CASEY STREET, #300
AUSTIN, TEXAS 78745
512-469-8195 (PH) • 512-469-9811 (FAX)
E-mail: info@chanpartners.com
WWW.CHANPARTNERS.COM
TEXAS REGISTRATION NO. F-13013

AUSTIN ONION CREEK
FIRE & EMS STATION
11112 OLD SAN ANTONIO ROAD
AUSTIN, TEXAS 78748

CITY OF AUSTIN — FOUNDED 1839

REVISIONS

DATE	9/22/2016
DRAWN BY	CD
CHECKED BY	JRK
PROJECT NO.	214106.00

ES & TREE PROTECTION PLAN

C2.1

IF THIS SHEET IS NOT 36" X 24", IT IS A REDUCED PRINT.

Sep 22, 2016 - 3:31pm

Drawing name: J:\1139-Onion Creek Fire EMS\00-DRAWINGS\PERMIT\1139--C-ES PLAN.dwg

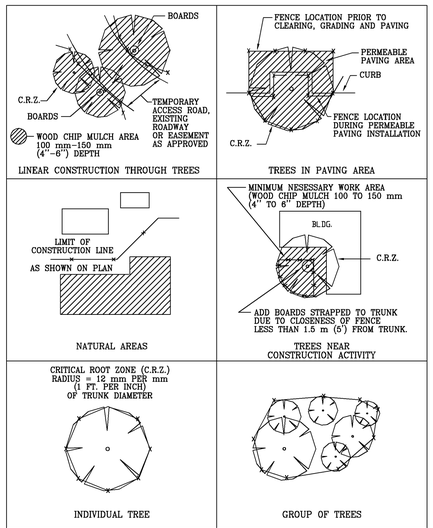

CITY OF AUSTIN WATERSHED PROTECTION DEPARTMENT	TREE PROTECTION FENCE LOCATIONS	
RECORD COPY SIGNED BY J. PATRICK MURPHY 11/15/99 ADOPTED	THE ARCHITECT/ENGINEER ASSUMES RESPONSIBILITY FOR APPROPRIATE USE OF THIS STANDARD.	STANDARD NO. 610S–1

1 / C2.2

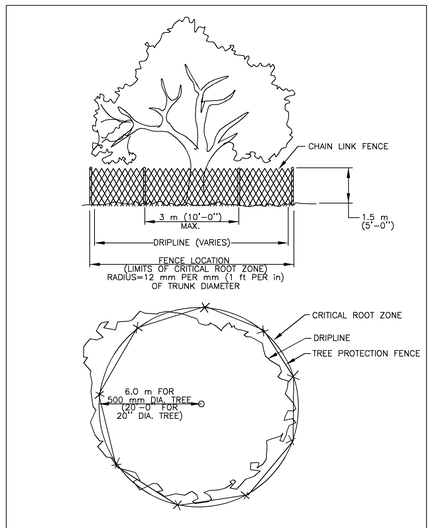

CITY OF AUSTIN WATERSHED PROTECTION DEPARTMENT	TREE PROPTECTION FENCE TYPE A – CHAIN LINK	
RECORD COPY SIGNED BY J. PATRICK MURPHY 11/15/99 ADOPTED	THE ARCHITECT/ENGINEER ASSUMES RESPONSIBILITY FOR APPROPRIATE USE OF THIS STANDARD.	STANDARD NO. 610S–2

2 / C2.2

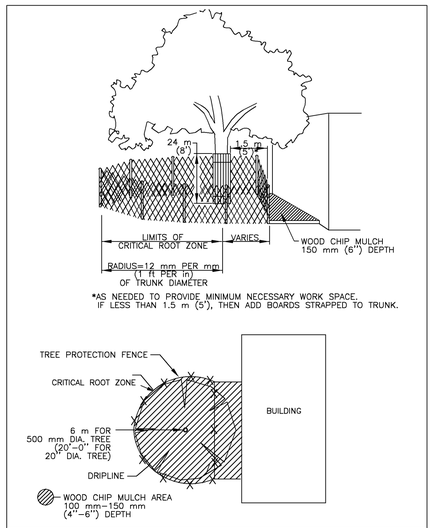

CITY OF AUSTIN WATERSHED PROTECTION DEPARTMENT	TREE PROTECTION FENCE MODIFIED TYPE A – CHAIN LINK	
RECORD COPY SIGNED BY J. PATRICK MURPHY 11/15/99 ADOPTED	THE ARCHITECT/ENGINEER ASSUMES RESPONSIBILITY FOR APPROPRIATE USE OF THIS STANDARD.	STANDARD NO. 610S–4

3 / C2.2

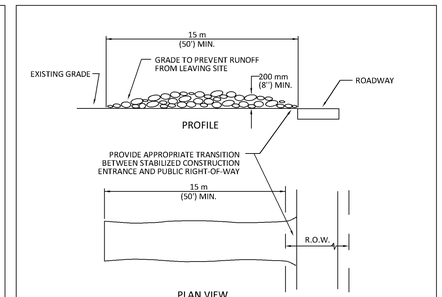

NOTES:
1. STONE SIZE: 75-125 mm (3-5") OPEN GRADED ROCK.
2. LENGTH: AS EFFECTIVE BUT NOT LESS THAN 15 m (50').
3. THICKNESS: NOT LESS THAN 200 mm (8").
4. WIDTH: NOT LESS THAN FULL WIDTH OF ALL POINTS OF INGRESS/EGRESS.
5. WASHING: WHEN NECESSARY, VEHICLE WHEELS SHALL BE CLEANED TO REMOVE SEDIMENT PRIOR TO ENTRANCE ONTO PUBLIC ROADWAY. WHEN WASHING IS REQUIRED, IT SHALL BE DONE ON AN AREA STABILIZED WITH CRUSHED STONE AND DRAINS INTO AN APPROVED TRAP OR SEDIMENT BASIN. ALL SEDIMENT SHALL BE PREVENTED FROM ENTERING ANY STORM DRAIN, DITCH OR WATERCOURSE USING APPROVED METHODS.
6. MAINTENANCE: THE ENTRANCE SHALL BE MAINTAINED IN A CONDITION THAT WILL PREVENT TRACKING OR FLOWING OF SEDIMENT ONTO PUBLIC ROADWAY. THIS MAY REQUIRE PERIODIC TOP DRESSING WITH ADDITIONAL STONE AS CONDITIONS DEMAND, AS WELL AS REPAIR AND CLEAN OUT OF ANY MEASURE DEVICES USED TO TRAP SEDIMENT. ALL SEDIMENTS THAT IS SPILLED, DROPPED, WASHED OR TRACKED ONTO PUBLIC ROADWAY MUST BE REMOVED IMMEDIATELY.
7. DRAINAGE: ENTRANCE MUST BE PROPERLY GRADED OR INCORPORATE A DRAINAGE SWALE TO PREVENT RUNOFF FROM LEAVING THE CONSTRUCTION SITE.

CITY OF AUSTIN WATERSHED PROTECTION DEPARTMENT	STABILIZED CONSTRUCTION ENTRANCE	
RECORD COPY SIGNED BY J. PATRICK MURPHY 5/23/00 ADOPTED	THE ARCHITECT/ENGINEER ASSUMES RESPONSIBILITY FOR APPROPRIATE USE OF THIS STANDARD.	STANDARD NO. 641S-1

4 / C2.2

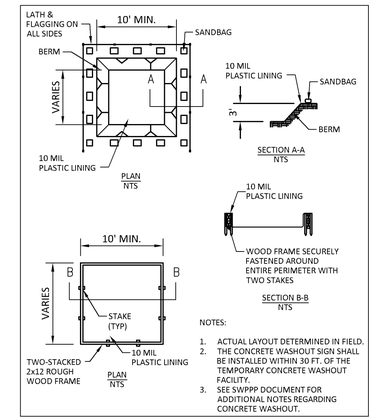

NOTES:
1. ACTUAL LAYOUT DETERMINED IN FIELD.
2. THE CONCRETE WASHOUT SIGN SHALL BE INSTALLED WITHIN 30 FT. OF THE TEMPORARY CONCRETE WASHOUT FACILITY.
3. SEE SWPPP DOCUMENT FOR ADDITIONAL NOTES REGARDING CONCRETE WASHOUT.

5 / C2.2

CONCRETE TRUCK WASHOUT DETAIL

SCALE: NONE

CUST- 360

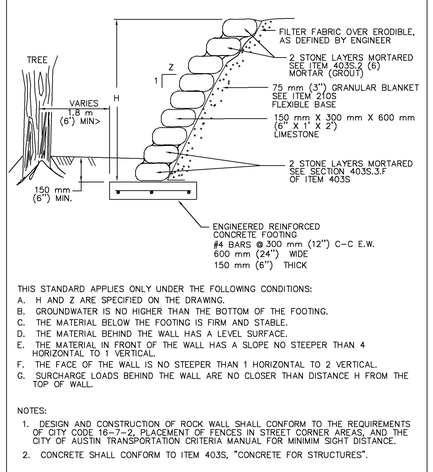

THIS STANDARD APPLIES ONLY UNDER THE FOLLOWING CONDITIONS:
A. H AND Z ARE SPECIFIED ON THE DRAWING.
B. GROUNDWATER IS NO HIGHER THAN THE BOTTOM OF THE FOOTING.
C. THE MATERIAL BELOW THE FOOTING IS FIRM AND STABLE.
D. THE MATERIAL BEHIND THE WALL HAS A LEVEL SURFACE.
E. THE MATERIAL IN FRONT OF THE WALL HAS A SLOPE NO STEEPER THAN 4 HORIZONTAL TO 1 VERTICAL.
F. THE FACE OF THE WALL IS NO STEEPER THAN 1 HORIZONTAL TO 2 VERTICAL.
G. SURCHARGE LOADS BEHIND THE WALL ARE NO CLOSER THAN DISTANCE H FROM THE TOF OF WALL.

NOTES:
1. DESIGN AND CONSTRUCTION OF ROCK WALL SHALL CONFORM TO THE REQUIREMENTS OF CITY CODE 16–7–2, PLACEMENT OF FENCES IN STREET CORNER AREAS, AND THE CITY OF AUSTIN TRANSPORTATION CRITERIA MANUAL FOR MINIMIM SIGHT DISTANCE.
2. CONCRETE SHALL CONFORM TO ITEM 403S, "CONCRETE FOR STRUCTURES".

CITY OF AUSTIN DEPARTMENT OF WATERSHED PROTECTION AND DEVELOPMENT REVIEW	SLOPE PROTECTION AND TREE WELLS	
RECORD COPY SIGNED BY J. PATRICK MURPHY 03/13/06 ADOPTED	THE ARCHITECT/ENGINEER ASSUMES RESPONSIBILITY FOR APPROPRIATE USE OF THIS STANDARD.	STANDARD NO. 610S–6 1 OF 2

6 / C2.2

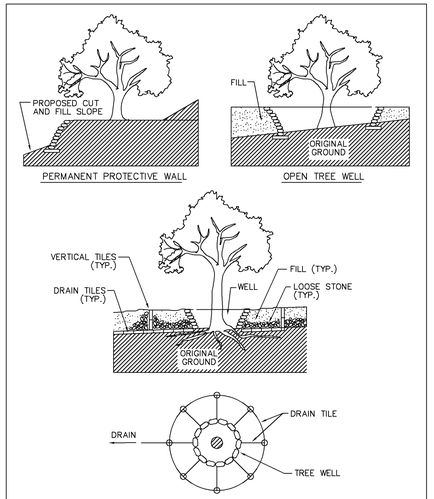

CITY OF AUSTIN DEPARTMENT OF WATERSHED PROTECTION AND DEVELOPMENT REVIEW	SLOPE PROTECTION AND TREE WELLS	
RECORD COPY SIGNED BY J. PATRICK MURPHY 03/13/06 ADOPTED	THE ARCHITECT/ENGINEER ASSUMES RESPONSIBILITY FOR APPROPRIATE USE OF THIS STANDARD.	STANDARD NO. 610S–6 2 OF 2

6 / C2.2

NOTES:

1. MATERIAL ˙ THE FPBRIC MUST CORRESPOND TO THE FOLLWNG REQUIREMENTS:

PROPERTY	ASTM TEST METHOD	REQUIREMENTS
FABRIC WEIGHT	D 3776	≥3.0 OUNCES/SQUARE YPAD
ULTRAVIOLET (UV) RADIATION STABILITY	D 4355	70% STRENGTH RETAINB) MIN. AFTER 500 HOURS IN XENON ARC DEVICE
MUUEN BURST STRENGTH	D 3786	≥120 POUND PER SQUPRE INCH
WATER FLOW RATE	D 4491	≥ 275 GALLONS/MINUTE/SQUARE FEET

2. THIS MATERIAL SHOULD HAVE A MAXIMUM EXPECTED USEFULLIFE OF APPROXIMATELY EIGHTEEN (18) MONTHS. THE INLET PROTECTION DEVICES SHOULD BE CONSTRUCTED IN A MANNER THAT WILL FACILITATE CLEAN OUT AND DISPOSAL OF TRAPPED SEDIMENT VILE MINIMIZING INTERFERENCE WITH CONSTRUCTION ACT IVITIES. THEY SHOU LD ALSO BE CONSTRUCTED SUCH THAT ANY PONDING OF STORM WATER WILL NOT CAUSE EXCESSIVE R O.W. FLOODING (I.E. ˜4 INCHES OF STANDING WATER) OR DPMAGETO THESTRUCTURE OR ADJACENT ˙AREAS.

3˙ COVERAGE THE FABRIC/WIRE SHOULD COMPLETELY COVER THE OPENING OF THE INLET AND DEVICES SHOULD BE INSTALLED WITHOUT PROTRUDING PARTS THAT COULD BE A TRAFFIC, WORKER, OR PEDESTRIAN HAZARD. WHERE SECTIONS OF THE FABRIC OVERLAP, THEY SHALL ˙OVERLAP AT LEAST THREE (3) INCHES.

4. THE INLET FILTER SHALL BE ATTACHED IN A WAY THAT THEY CAN EASILY BE REMOVED AND ARE NOT SECURED OR ATTACHED BY THE USE OF SAND BAGS. THE INLET FILTER MUST BE REMOMD UPON COMPLETION OF WORK˙ IF REMOVAL DAMAGES THE CONCREE CURB, THE CURB MUST BE REPAIRED IMMEDIATELY˙

5. DAILY INSPECTION SHALL BE MADE BY THE CONTRACTOR AND SILT ACCUMULATION MUST BE REMOVED WHEN THE DEPTH REACHES 50 MM (2 INCHES) INCHES OR ONE THIRD THE HEIGHT OF THE INLET THROAT,AND DISPOSED OF IN A MANNER WHICH WILL NOT CWSE ADDITIONAL SILTATION.

6. CONTRACTOR SHALL MONITOR THE PERFORMANCE OF INLET PROTECTION DURING EACH RAINFALL E VENT AND IMMEDIATELY REMOVE THE INLET PROTECTIONS IF THE STORMWATER BEGINS TO OVERTOP THE CURB.

7. INLET PROTECTIONS SHALL BE REMOVED AS SOON AS THE SOURCE OF SEDIMENT HAS ACHIEVED FINAL STABILIZATION CONDITIONS.

CITY OF AUSTIN WATERSHED PROTECTION DEPARTMENT	FILTER DIKE CURB INLET PROTECTION	
RECORD COPY SIGNED BY MAPI VIGIL 10/30/09 ADOPTED	THE ARCHITECT/ENGINEER ASSUMES RESPONSIBILITY FOR APPROPRIATE USE OF THIS STANDARD.	STANDARD NO. 628S-2

7 / C2.2

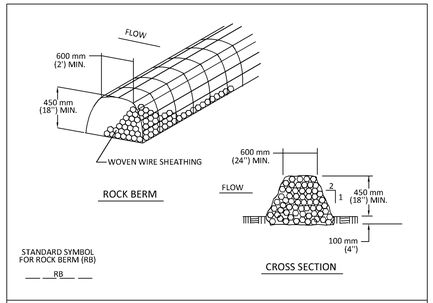

NOTES:
1. USE ONLY OPEN GRADED ROCK 75 to 125 mm (3 to 5") DIAMETER FOR ALL CONDITIONS.
2. THE ROCK BERM SHALL BE SECURED WITH A WOVEN WIRE SHEATHING HAVING MAXIMUM 25 mm (1") OPENING AND MINIMUM WIRE DIAMETER OF 12.9 mm (20 GAUGE).
3. THE ROCK BERM SHALL BE INSPECTED DAILY OR AFTER EACH RAIN, AND THE STONE AND/OR FABRIC CORE-WOVEN SHEATHING SHALL BE REPLACED WHEN THE STRUCTURE CEASES TO FUNCTION AS INTENDED, DUE TO SEDIMENT ACCUMULATION AMONG THE ROCKS, WASHOUT, CONSTRUCTION TRAFFIC DAMAGE, ETC.
4. IF SEDIMENT REACHES A DEPTH EQUAL TO ONE-THIRD THE HEIGHT OF THE BERM OR 150 mm (6"), WHICHEVER IS LESS, THE SEDIMENT SHALL BE REMOVED AND DISPOSED OF ON AN APPROVED SITE AND IN A MANNER THAT WILL NOT CREATE A SEDIMENTION PROBLEM.
5. WHEN THE SITE IS COMPLETELY STABIIUZED,THE BERM AND ACCUMULATED SEDIMENT SHALL BE REMOVED AND DISPOSED OF IN AN APPROVED MANNER.

CITY OF AUSTIN WATERSHED PROTECTION DEPARTMENT	ROCK BERM	
RECORD COPY SIGNED BY MORGAN BYARS 8/24/2010 ADOPTED	THE ARCHITECT/ENGINEER ASSUMES RESPONSIBILITY FOR APPROPRIATE USE OF THIS STANDARD.	STANDARD NO. 639S-1

8 / C2.2

90% CONSTRUCTION DOCUMENTS

IF THIS SHEET IS NOT 36" X 24", IT IS A REDUCED PRINT.

Sep 22, 2016 - 3:32pm

Drawing name: J:\1139-Onion Creek Fire EMS\00-DRAWINGS\PERMIT\1139--C-ES PLAN.dwg

STATE OF TEXAS
JOHN R. KING
59429
LICENSED PROFESSIONAL ENGINEER
9/22/2016

CHAN & PARTNERS CONSULTING CIVIL ENGINEERS
CHAN & PARTNERS ENGINEERING, LLC
4319 JAMES CASEY STREET, #300
AUSTIN, TEXAS 78745
512-469-8155 (PH) ♦ 512-469-9811 (FAX)
E-mail: info@chanpartners.com
WWW.CHANPARTNERS.COM
TEXAS REGISTRATION NO. F-10813

AUSTIN ONION CREEK FIRE & EMS STATION
11112 OLD SAN ANTONIO ROAD
AUSTIN, TEXAS 78748

CITY OF AUSTIN FOUNDED 1839

REVISIONS

DATE	9/22/2016
DRAWN BY	CD
CHECKED BY	JRK
PROJECT NO.	214106.00

ES DETAILS

C2.2

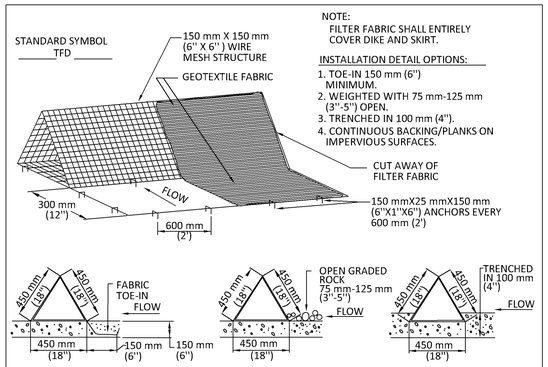

NOTE:
FILTER FABRIC SHALL ENTIRELY COVER DIKE AND SKIRT.

INSTALLATION DETAIL OPTIONS:

1. TOE-IN 150 mm (6'') MINIMUM.
2. WEIGHTED WITH 75 mm-125 mm (3''-5'') OPEN.
3. TRENCHED IN 100 mm (4'').
4. CONTINUOUS BACKING/PLANKS ON IMPERVIOUS SURFACES.

GENERAL NOTES

1. DIKES SHALL BE PLACED IN A ROW WITH ENDS TIGHTLY ABUTTING THE ADJACENT DIKE.
2. THE FABRIC COVER AND SKIRT SHALL BE A CONTINUOUS WRAPPING OF GEOTEXTILE. THE SKIRT SHALL BE A CONTINUOUS EXTENSION OF THE FABRIC ON THE UPSTREAM FACE.
3. THE SKIRT SHALL BE WEIGHTED WITH A CONTINUOUS LAYER OF 75-125 mm (3-5'') OPEN GRADED ROCK OR TOED-IN 150 mm (6'') WITH MECHANICALLY COMPACTED MATERIAL. OTHERWISE, THE ENTIRE STRUCTURE SHALL BE TRENCHED IN 100 mm (4'').
4. DIKES AND SKIRT SHALL BE SECURELY ANCHORED IN PLACE USING 150 mm (6'') WIRE STAPLES ON 600 mm (2') CENTERS ON BOTH EDGES AND SKIRT, OR STAKE USING 10M (3/8 '') DIAMETER RE-BAR WITH TEE ENDS.
5. FILTER MATERIAL SHALL BE LAPPED OVER ENDS 150 mm (6'') TO COVER DIKE TO DIKE JOINTS. JOINTS SHALL BE FASTENED WITH GALVANIZED SHOAT RINGS.
6. THE DIKE STRUCTURE SHALL BE MW40-150 mmX150 mm (6 GA. 6''X6'') WIRE MESH, 450 mm (18'') ON A SIDE.
7. INSPECTION SHALL BE MADE WEEKLY OR AFTER EACH RAINFALL EVENT AND REPAIR OR REPLACEMENT SHALL BE MADE PROMPTLY AS NEEDED BY THE CONTRACTOR.
8. ACCUMULATED SILT SHALL BE REMOVED WHEN IT REACHES A DEPTH OF 150 mm (6'') AND DISPOSED OF IN A MANNER WHICH WILL NOT CAUSE ADDITIONAL SILTATION.
9. AFTER THE DEVELOPMENT SITE IS COMPLETLY STABILIZED, THE DIKES AND ANY REMAINING SILT SHALL BE REMOVED. SILT SHALL BE DISPOSED OF AS INDICATED IN GENERAL NOTE 8 ABOVE.

CITY OF AUSTIN WATERSHED PROTECTION DEPARTMENT		TRIANGULAR SEDIMENT FILTER DIKE	
RECORD COPY SIGNED BY J. PATRICK MURPHY	3/27/00 ADOPTED	THE ARCHITECT/ENGINEER ASSUMES RESPONSIBILITY FOR APPROPRIATE USE OF THIS STANDARD.	STANDARD NO. 628S

1 / C2.3

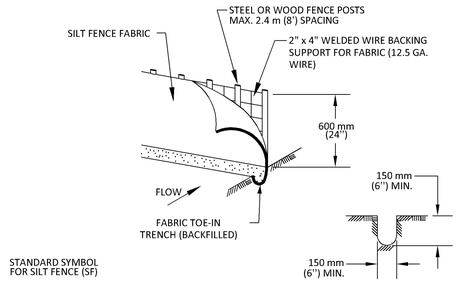

TRENCH CROSS SECTION

1. STEEL OR WOOD POSTS WHICH SUPPORT THE SILT FENCE SHALL BE INSTALLED ON A SLIGHT ANGLE TOWARD THE ANTICIPATED RUNOFF SOURCE. POST MUST BE EMBEDDED A MINIMUM OF 300 mm (12 INCHES). IF WOOD POSTS CANNOT ACHIEVE 300 mm (12 inches) DEPTH, USE STEEL POSTS.

2. THE TOE OF THE SILT FENCE SHALL BE TRENCHED IN WITH A SPADE OR MECHANICAL TRENCHER, SO THAT THE DOWNSLOPE FACE OF THE TRENCH IS FLAT AND PERPENDICULAR TO THE LINE OF FLOW.

3. THE TRENCH MUST BE A MINIMUM OF 150 mm (6 inches) DEEP AND 150 mm (6 inches) WIDE TO ALLOW FOR THE SILT FENCE FABRIC TO BE LAID IN THE GROUND AND BACKFILLED WITH COMPACTED MATERIAL.

4. SILT FENCE FABRIC SHOULD BE SECURELY FASTENED TO EACH STEEL OR WOOD SUPPORT POST OR TO WOVEN WIRE , WHICH IS IN TURN ATTACHED TO THE STEEL OR WOOD FENCE POST.

5. INSPECTION SHALL BE MADE WEEKLY OR AFTER EACH RAINFALL EVENT AND REPAIR OR REPLACEMENT SHALL BE MADE PROMPTY AS NEEDED.

6. SILT FENCE SHALL BE REMOVED WHEN THE SITE IS COMPLETELY STABILIZED SO AS NOT TO BLOCK OR IMPEDE STORM FLOW OR DRAINAGE.

7. ACCUMULATED SILT SHALL BE REMOVED WHEN IT REACHES A DEPTH OF 150 mm (6 inches). THE SILT SHALL BE DISPOSED OF ON AN APPROVED SITE AND IN SUCH A MANNER THAT WILL NOT CONTRIBUTE TO ADDITIONAL SILTATION.

CITY OF AUSTIN WATERSHED PROTECTION DEPARTMENT		SILT FENCE	
RECORD COPY SIGNED BY MORGAN BYARS	*09/01/2011* ADOPTED	THE ARCHITECT/ENGINEER ASSUMES RESPONSIBILITY FOR APPROPRIATE USE OF THIS STANDARD.	STANDARD NO. 642S-1

2 / C2.3

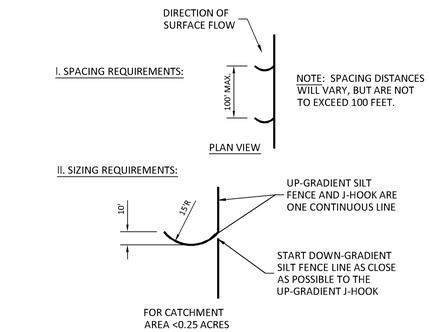

NOTE:
J-HOOKS SHALL ALSO BE USED WHEN THE SILT FENCE IS INSTALLED AT AN ANGLE OF 30 DEGREES OR GREATER FROM PARALLEL TO THE CONTOURS.

3 / C2.3

SILT FENCE "J" - HOOK DETAIL

SCALE: NONE (COA DETAIL: ECM FIGURE 1.4.5.G.4)

CUST 388

90% CONSTRUCTION DOCUMENTS

IF THIS SHEET IS NOT 36'' X 24'', IT IS A REDUCED PRINT.

Sep 22, 2016 - 3:32pm Drawing name: J:\1139-Onion Creek Fire EMS\00-DRAWINGS\PERMIT\1139--C-ES PLAN.dwg

CHAN & PARTNERS
CONSULTING CIVIL ENGINEERS
CHAN & PARTNERS ENGINEERING, LLC
4319 JAMES CASEY STREET, #300
AUSTIN, TEXAS 78745
512-490-8165 (PH) ♦ 512-490-8811 (FAX)
E-mail: info@chanpartners.com
WWW.CHANPARTNERS.COM
TEXAS REGISTRATION NO. F-13013

AUSTIN ONION CREEK
FIRE & EMS STATION
11112 OLD SAN ANTONIO ROAD
AUSTIN, TEXAS 78748

CITY OF AUSTIN • 1839 • FOUNDED

REVISIONS

DATE	9/22/2016
DRAWN BY	CD
CHECKED BY	JRK
PROJECT NO.	214106.00

ES DETAILS 2

C2.3

SITE LEGEND

- PROJECT BOUNDARY LINE
- EXISTING R.O.W./PROPERTY LINE
- EXISTING EASEMENT LINE
- EXISTING PAVEMENT
- PROPOSED CURB & GUTTER
- DRAINAGE BOUNDARY LINE
- (DA) DRAINAGE BOUNDARY LABEL

EXISTING DRAINAGE CONDITIONS

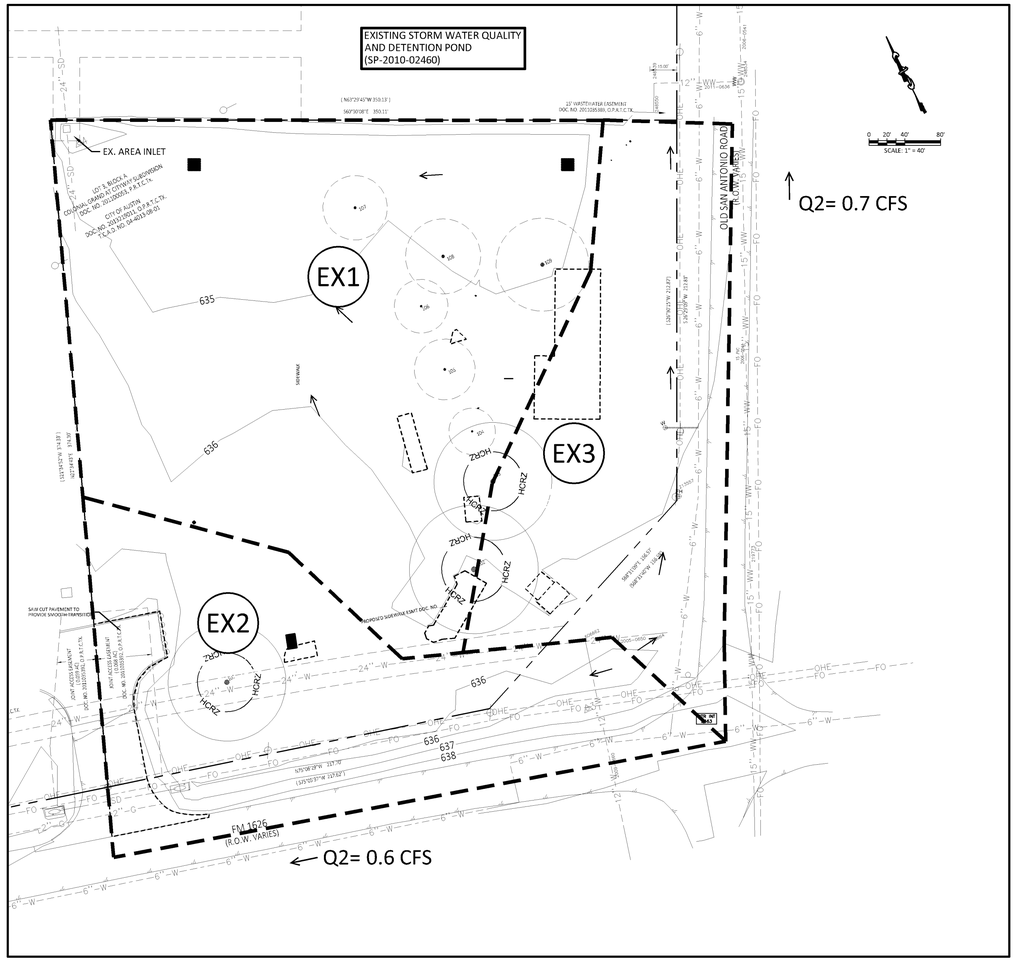

PROPOSED DRAINAGE CONDITIONS

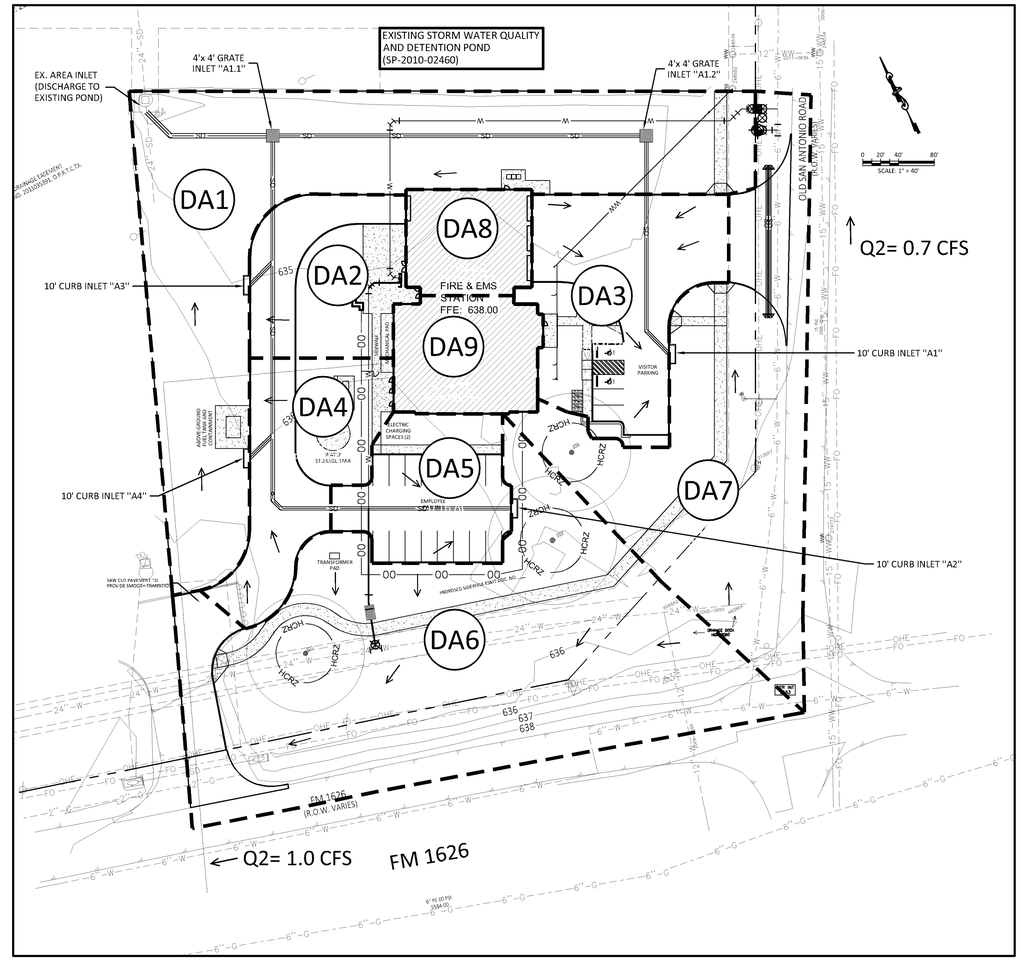

NOTES:

1. STORM WATER DETENTION AND WATER QUALITY TREATMENT FOR THIS SITE IS PROVIDED BY THE COLONIAL GRAND AT CITY WAY DETENTION AND WATER QUALITY POND (SP-2010-0246C).
2. PROPOSED CONDITIONS Q25/Q100 DISCHARGE INTO OLD SAN ANTONIO ROAD. SHOULDER DITCH AT DA7= 1.5/2.2 CFS. EXISTING CONDITIONS Q25/Q100 DISCHARGE INTO OLD SAN ANTONIO ROAD SHOULDER DITCH AT EX3= 1.5/2.3 CFS
3. PROPOSED CONDITIONS Q25/Q100 DISCHARGE INTO F.M. 1626 SHOULDER DITCH AT DA6= 2.2/3.4 CFS. EXISTING CONDITIONS Q25/Q100 DISCHARGE INTO F.M. 1626 SHOULDER DITCH AT EX2= 1.5/2.3 CFS. HOWEVER, UNDER PROPOSED AND EXISTING CONDITIONS, Q25/Q100 FLOWS ARE CONTAINED WITHIN THE ROW DRAINAGE DITCH.
4. THE EXISTING AREA INLET (SP-2010-0246C) WAS DESIGNED FOR PEAK Q100= 21. 1/5 CFS AT 80% IMPERVIOUS COVER.

ON-SITE CONTROL OF TWO-YEAR STORM (Q2)

1. Q2 ALONG OLD SAN ANTONIO ROAD SHOULDER DITCH:
   EXISTING CONDITIONS= 0.7 CFS
   PROPOSED CONDITIONS= 0.7 CFS

ONSITE CONTROL OF Q2 IS ACHIEVED FOR DISCHARGE IN OLD SAN ANTONIO ROAD SHOULDER DITCH.

2. Q2 ALONG FM 1626 SHOULDER DITCH:
   EXISTING CONDITIONS= 0.6 CFS
   PROPOSED CONDITIONS= 1.0 CFS
   Δ = 0.4 CFS

MAX. SHEAR STRESS= 0.043 PSF FOR PROPOSED CONDITIONS. GRASS-LINED SHOULDER DITCH IS SUFFICIENT TO PREVENT EROSION UNDER Q2 CONDITIONS. ON-SITE CONTROL OF Q2 IS ACHIEVED FOR DISCHARGE IN FM 1626 SHOULDER DITCH.

EXISTING HYDROLOGY CALCULATIONS

Drainage Area	Area Acres	T_c min	I_2	I_{10}	I_{25}	I_{100}	C_2	C_{10}	C_{25}	C_{100}	Q_2 cfs	Q_{10} cfs	Q_{25} cfs	Q_{100} cfs	Notes
EX 1	1.55	36.85	2.37	3.60	4.35	5.73	0.21	0.25	0.29	0.36	0.8	1.4	2.0	3.2	DISCHARGES TO EX. AREA INLET
EX 2	0.85	31.38	2.61	3.96	4.77	6.27	0.28	0.32	0.36	0.43	0.6	1.1	1.5	2.3	DISCHARGES TO FM1626 SHOULDER DITCH
EX 3	0.75	32.83	2.54	3.86	4.65	6.12	0.34	0.39	0.43	0.51	0.7	1.1	1.5	2.3	DISCHARGES TO OLD SAN ANTONIO ROAD SHOULDER DITCH

PROPOSED - HYDROLOGY CALCULATIONS

Drainage Area	Area Acres	T_c min	I_2	I_{10}	I_{25}	I_{100}	C_2	C_{10}	C_{25}	C_{100}	Q_2 cfs	Q_{10} cfs	Q_{25} cfs	Q_{100} cfs	Notes
DA 1	0.72	21.87	3.21	4.84	5.80	7.55	0.21	0.26	0.30	0.37	0.5	0.9	1.2	2.0	DISCHARGES TO EX. AREA INLET AND PROP. GRATE INLETS A1.1 AND A1.2
DA 2	0.17	6.27	5.41	8.06	9.53	11.91	0.55	0.62	0.67	0.75	0.5	0.9	1.1	1.6	DISCHARGES TO PROP. CURB INLET A3
DA 3	0.27	5.00	5.76	8.57	10.11	12.54	0.64	0.72	0.76	0.85	1.0	1.7	2.1	2.9	DISCHARGES TO PROP. CURB INLET A1
DA 4	0.19	6.35	5.39	8.03	9.50	11.87	0.58	0.65	0.70	0.78	0.6	1.0	1.3	1.8	DISCHARGES TO PROP. CURB INLET A4
DA 5	0.16	5.00	5.76	8.57	10.11	12.54	0.64	0.71	0.76	0.85	0.6	0.9	1.2	1.7	DISCHARGES TO PROP. CURB INLET A2
DA 6	0.89	21.31	3.26	4.90	5.88	7.65	0.36	0.42	0.46	0.54	1.0	1.8	2.4	3.6	DISCHARGES TO FM1626 SHOULDER DITCH
DA 7	0.54	21.06	3.28	4.93	5.91	7.69	0.40	0.46	0.50	0.58	0.7	1.2	1.6	2.4	DISCHARGES TO OLD SAN ANTONIO ROAD SHOULDER DITCH
DA 8	0.09	5.00	5.76	8.57	10.11	12.54	0.73	0.81	0.86	0.95	0.4	0.7	0.8	1.1	DISCHARGES TO DRAINAGE AREA DA2
DA 9	0.12	5.00	5.76	8.57	10.11	12.54	0.73	0.81	0.86	0.95	0.5	0.8	1.0	1.4	DISCHARGES TO DRAINAGE AREA DA5

90% CONSTRUCTION DOCUMENTS

IF THIS SHEET IS NOT 36" X 24", IT IS A REDUCED PRINT.

Sep 22, 2016 - 3:32pm

Drawing name: J:\1139-Onion Creek Fire EMS\00-DRAWINGS\PERMIT\1139--C-Proposed DA.dwg

STATE OF TEXAS
JOHN R. KING
58429
LICENSED PROFESSIONAL ENGINEER
9/22/2016

CHAN & PARTNERS CONSULTING CIVIL ENGINEERS
CHAN & PARTNERS ENGINEERING, LLC
4319 JAMES CASEY STREET, #300
AUSTIN, TEXAS 78745
512-469-8195 (PH) • 512-469-8811 (FAX)
E-mail: info@chanpartners.com
WWW.CHANPARTNERS.COM
TEXAS REGISTRATION NO. F-10813

AUSTIN ONION CREEK
FIRE & EMS STATION
11112 OLD SAN ANTONIO ROAD
AUSTIN, TEXAS 78748

CITY OF AUSTIN • FOUNDED 1839

REVISIONS

DATE	9/22/2016
DRAWN BY	CD
CHECKED BY	JRK
PROJECT NO.	214106.00

DRAINAGE PLAN

C3.0

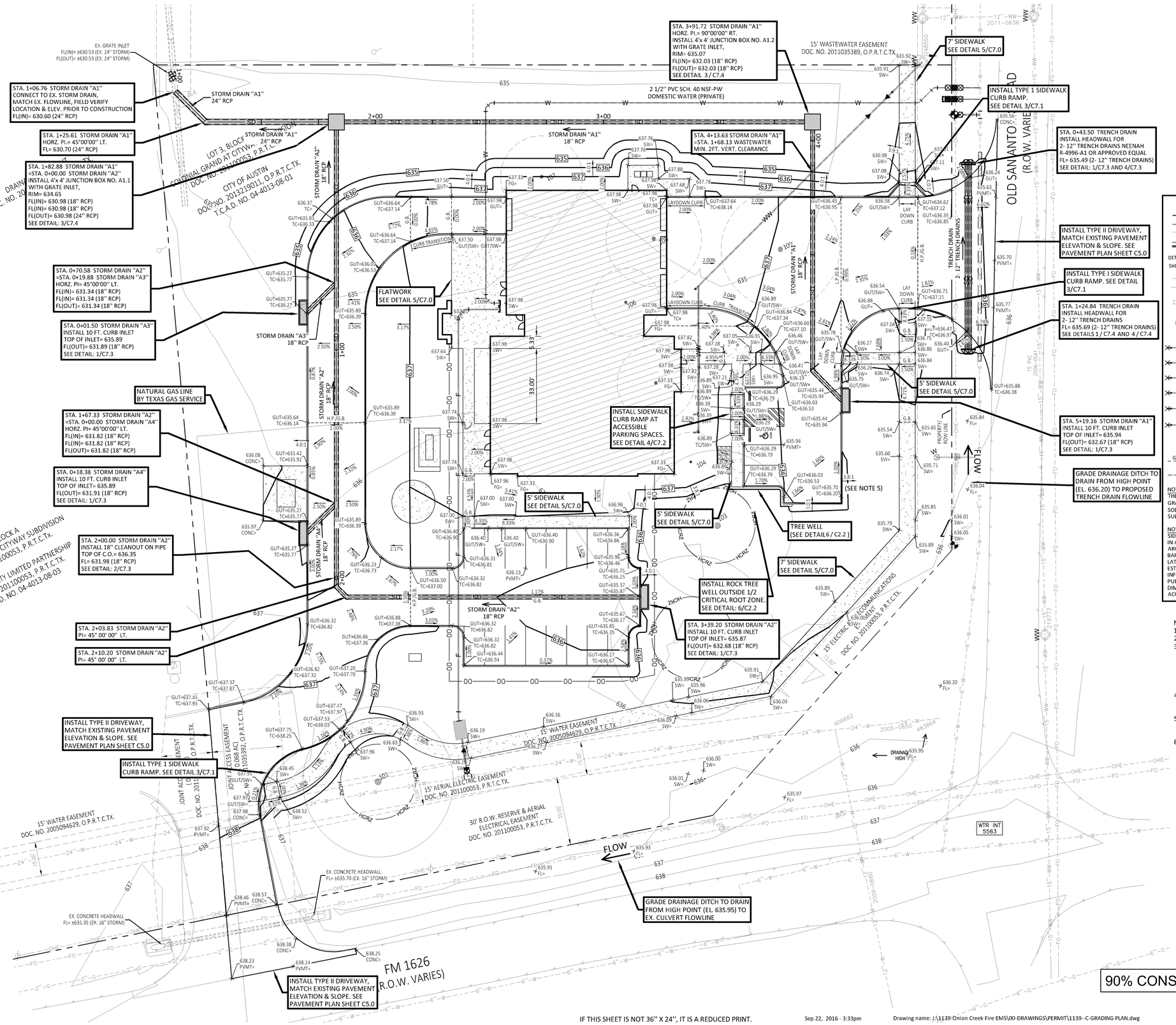

GRADING LEGEND

	EXISTING R.O.W./PROPERTY LINE
	EXISTING EASEMENT LINE
	EXISTING PAVEMENT
	PROPOSED CURB & GUTTER
	PROPOSED LAYDOWN CURB
DETAIL NUMBER / SHEET NUMBER — X / XX — DETAIL / NAME	DETAIL CALLOUT REFERENCE
493 — 50	EX. CONTOURS
493	PROP. CONTOURS
	EX. STORM DRAIN
SD	PROP. STORM DRAIN
	EX. STORM DRAIN INLET WITH LATERAL
	PROP. STORM DRAIN INLET WITH LATERAL
100	EXISTING TREE (TO REMAIN)
100	EXISTING TREE (TO BE REMOVED)
493.00 NG=	EXISTING GROUND ELEVATION
493.00 PAV=	PROPOSED PAVEMENT ELEVATION
493.00 EX/PAV=	EXISTING EDGE OF PAVEMENT
493.00 GUT=	PROPOSED GUTTER ELEVATION
493.00 EX/GUT=	EXISTING GUTTER
493.00 TC=	PROPOSED TOP OF CURB
493.00 EX/SW=	EXISTING SIDEWALK
493.00 TW=	PROPOSED TOP OF WALL
493.00 FF=	PROPOSED FINISH FLOOR ELEVATION
493.00 SW=	PROPOSED TOP OF SIDEWALK
493.00 FG=	PROPOSED FINISH GRADE
493.00 FL=	PROPOSED FLOW LINE
-1.00%	PROPOSED SLOPE (SLOPE DOWN)
G.B. OR GRADE BREAK	PROPOSED GRADE BREAK ON SURFACE (CNC., PVMT., GRASS, ETC.)
SPILL SPILL	DENOTES THE CURB & GUTTER SHALL BE A SPILL CURB.

NOTE: FINISHED GROUND (FG=) SPOT ELEVATION CALLOUTS INDICATE THE ELEVATION OF FINAL GRADING INCLUDING THE INSTALLATION OF GRASS AND/OR REVEGETATION. IF THE CONTRACTOR INSTALLS GRASS SOD AND / OR TOP SOIL, THE THICKNESS OF THE MATERIAL SHOULD BE SUBTRACTED FROM THE FINISHED GROUND ELEVATIONS CALLOUTS.

NOTE: CONTRACTOR SHALL CONSTRUCT ALL TAS ACCESSIBLE ROUTES SIDEWALK, RAMP AND DRIVEWAY CROSSING GRADES AND DIMENSIONS IN ACCORDANCE WITH THE TEXAS ACCESSIBILITY STANDARDS, ARCHITECTURAL BARRIERS GOVERNMENT CODE, ARCHITECTURAL BARRIERS ADMINISTRATIVE RULES AND TECHNICAL MEMORANDUM, LATEST EDITION. THE GRADES SHOWN ON THESE DRAWINGS WERE ESTABLISHED USING THE BEST AVAILABLE EXISTING GROUND INFORMATION AND ARE FOR GENERAL CONSTRUCTION AND BIDDING PURPOSES ONLY. CONTRACTOR SHALL ADJUST GRADES AND DIMENSIONS TO FIELD CONDITIONS AND TO COMPLY WITH TEXAS ACCESSIBILITY STANDARDS.

NOTES:
1. NO CUT OR FILL SHALL EXCEED 4 FEET.
2. SEE SHEET C2.0 FOR GEOMETRIC LAYOUT.
3. FOR THE EXISTING TREES THAT REMAIN ON SITE: (A) MINIMUM OF 50% OF THE CRZ MUST BE PRESERVED AT NATURAL GRADE WITH NATURAL GROUND COVER, (B) CUT OR FILL IS LIMITED TO 4 INCHES FROM THE 1/2 CRZ TO THE 1/4 CRZ, AND (C) NO CUT OR FILL IS PERMITTED WITHIN THE 1/4 CRZ.
4. SEE SHEET C4.1 FOR PROFILE OF PROPOSED OLD SAN ANTONIO ROAD SHOULDER DITCH AND DRIVEWAY CULVERT.
5. INSTALL LANDLOK TRM450 TURF REINFORCEMENT MAT, OR APPROVED EQUAL, ON ALL SLOPES 5H;1V OR FLATTER.
6. INSTALL LANDLOK TRM450 TURF REINFORCEMENT MAT, OR APPROVED EQUAL ON ALL SOIL DISTURBED SURFACES WITHIN DITCH.

IF THIS SHEET IS NOT 36" X 24", IT IS A REDUCED PRINT.

Sep 22, 2016 - 3:33pm

Drawing name: J:\1139-Onion Creek Fire EMS\00-DRAWINGS\PERMIT\1139--C-GRADING PLAN.dwg

STATE OF TEXAS
JOHN R. KING
58429
LICENSED PROFESSIONAL ENGINEER
9/22/2016

CHAN & PARTNERS CONSULTING CIVIL ENGINEERS
CHAN & PARTNERS ENGINEERING, LLC
4319 JAMES CASEY STREET, #300
AUSTIN, TEXAS 78745
512-469-8195 (PH) • 512-469-8811 (FAX)
E-mail: info@chanpartners.com
WWW.CHANPARTNERS.COM
TEXAS REGISTRATION NO. F-13013

AUSTIN ONION CREEK FIRE & EMS STATION

11112 OLD SAN ANTONIO ROAD
AUSTIN, TEXAS 78748

CITY OF AUSTIN — BEST FOUNDED

REVISIONS

DATE	9/22/2016
DRAWN BY	CD
CHECKED BY	JRK
PROJECT NO.	214106.00

GRADING AND STORM DRAIN PLAN

C4.0

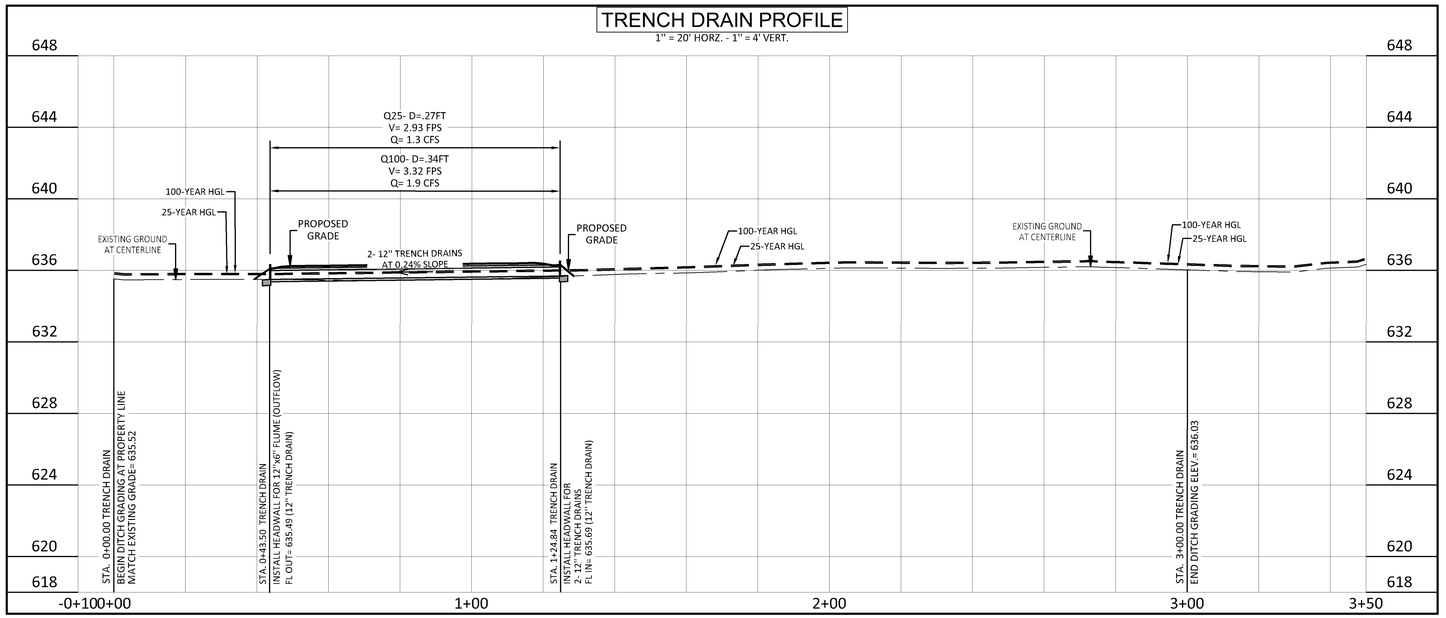

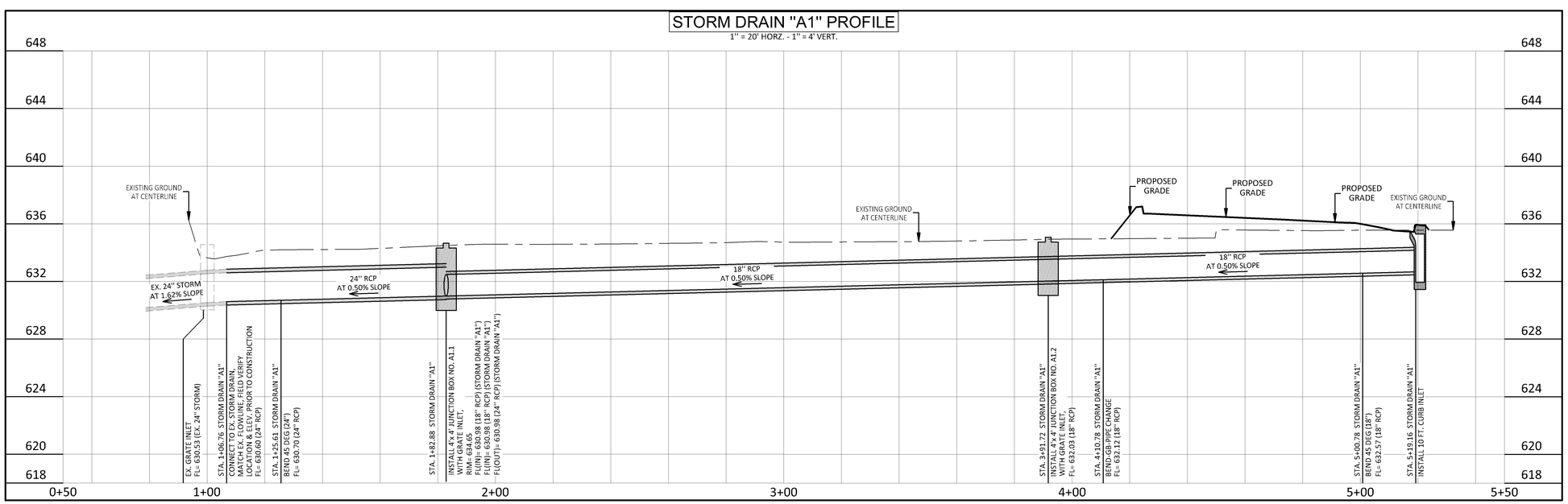

90% CONSTRUCTION DOCUMENTS

IF THIS SHEET IS NOT 36" X 24", IT IS A REDUCED PRINT.

Sep 22, 2016 - 3:56pm

Drawing name: J:\1139-Onion Creek Fire EMS\00-DRAWINGS\PERMIT\1139--C-GRADING PLAN.dwg

STATE OF TEXAS
JOHN R. KING
58429
LICENSED
PROFESSIONAL ENGINEER
9/22/2016

CHAN & PARTNERS
CONSULTING CIVIL ENGINEERS

CHAN & PARTNERS ENGINEERING, LLC
4319 JAMES CASEY STREET, #300
AUSTIN, TEXAS 78745
512-469-8195 (PH) ♦ 512-469-9811 (FAX)
E-mail: info@chanpartners.com
WWW.CHANPARTNERS.COM
TEXAS REGISTRATION NO. F-10013

AUSTIN ONION CREEK
FIRE & EMS STATION
11112 OLD SAN ANTONIO ROAD
AUSTIN, TEXAS 78748

CITY OF AUSTIN FOUNDED 1839

REVISIONS

DATE	9/22/2016
DRAWN BY	CD
CHECKED BY	JRK
PROJECT NO.	214106.00

STORM DRAIN
PROFILE
SHEET 1

C4.1

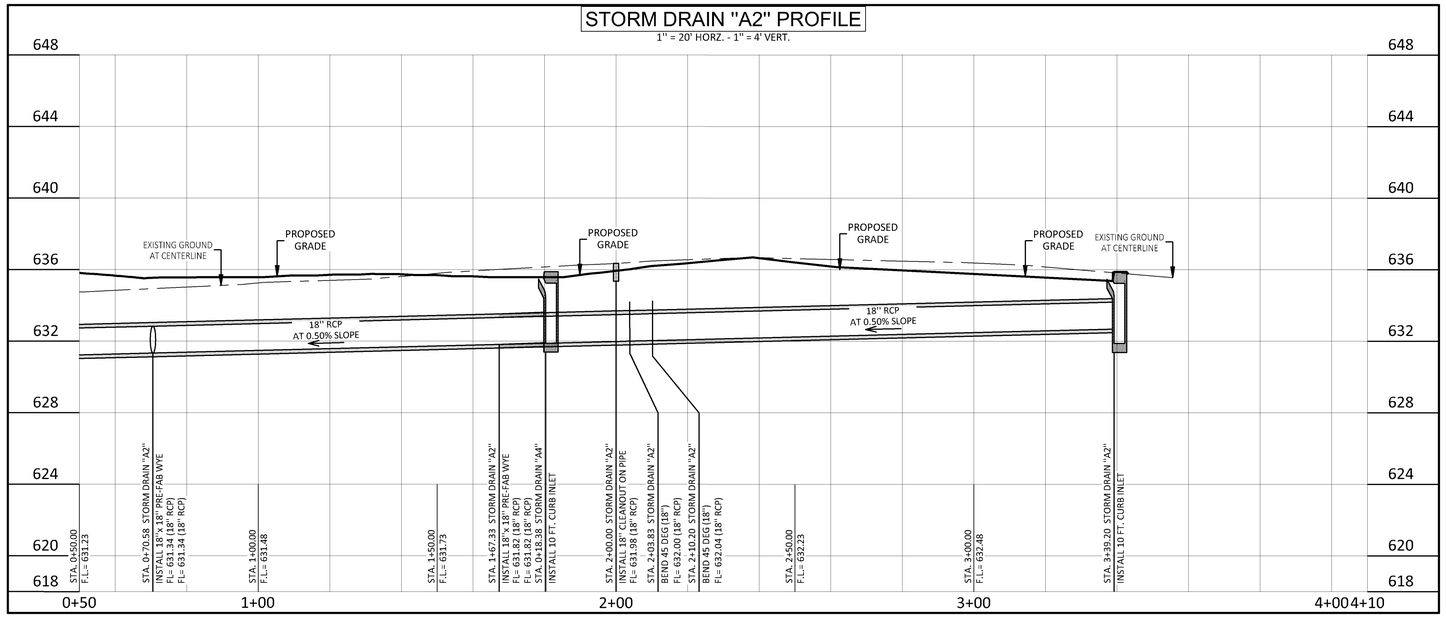

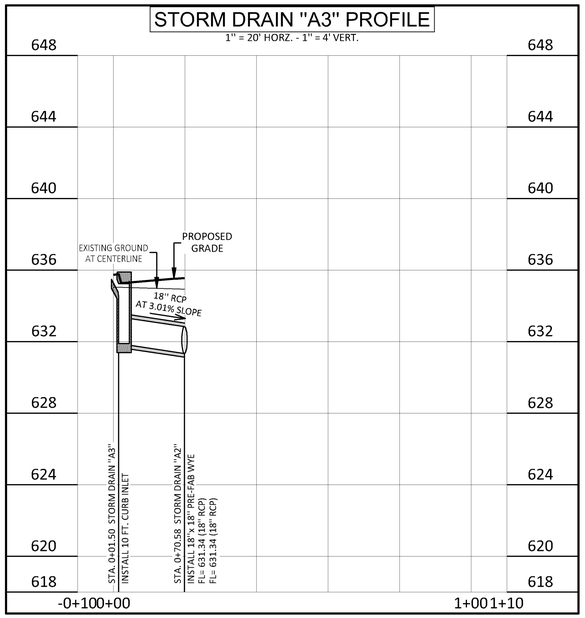

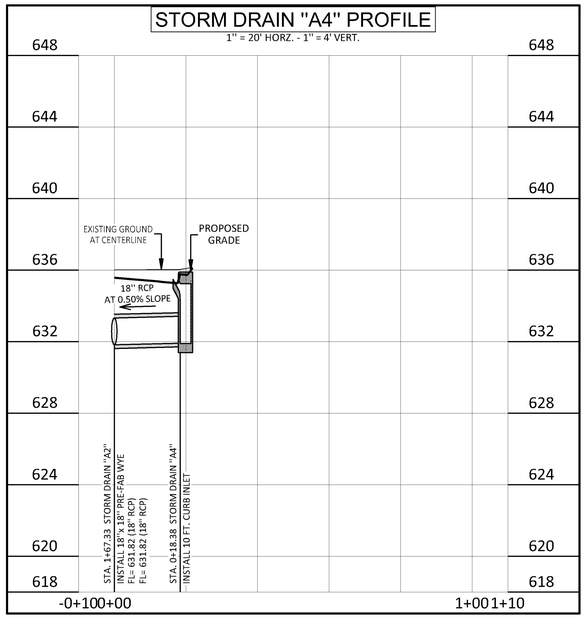

90% CONSTRUCTION DOCUMENTS

IF THIS SHEET IS NOT 36" X 24", IT IS A REDUCED PRINT.

Sep 22, 2016 - 3:56pm

Drawing name: J:\1139-Onion Creek Fire EMS\00-DRAWINGS\PERMIT\1139--C-GRADING PLAN.dwg

STATE OF TEXAS
JOHN R. KING
58429
LICENSED
PROFESSIONAL ENGINEER
9/22/2016

CHAN & PARTNERS
CONSULTING CIVIL ENGINEERS

CHAN & PARTNERS ENGINEERING, LLC
4319 JAMES CASEY STREET, #300
AUSTIN, TEXAS 78745
512-469-8195 (PH) ♦ 512-469-3811 (FAX)
E-mail: info@chanpartners.com
WWW.CHANPARTNERS.COM
TEXAS REGISTRATION NO. F-10013

AUSTIN ONION CREEK
FIRE & EMS STATION
11112 OLD SAN ANTONIO ROAD
AUSTIN, TEXAS 78748

CITY OF AUSTIN • 1839 FOUNDED

REVISIONS

DATE	9/22/2016
DRAWN BY	CD
CHECKED BY	JRK
PROJECT NO.	214106.00

STORM DRAIN
PROFILE
SHEET 2

C4.2

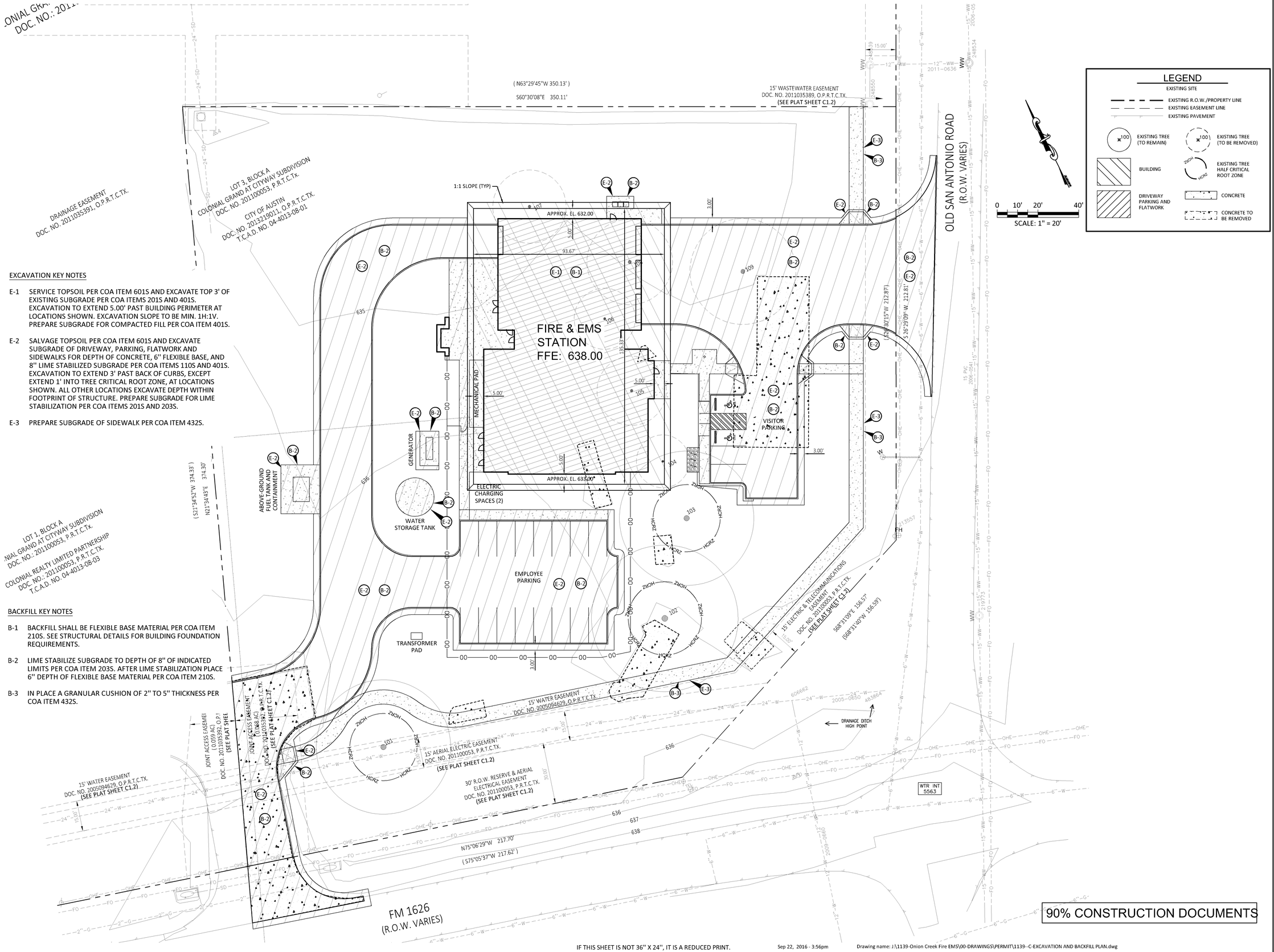

EXCAVATION KEY NOTES

E-1 SERVICE TOPSOIL PER COA ITEM 601S AND EXCAVATE TOP 3' OF EXISTING SUBGRADE PER COA ITEMS 201S AND 401S. EXCAVATION TO EXTEND 5.00' PAST BUILDING PERIMETER AT LOCATIONS SHOWN. EXCAVATION SLOPE TO BE MIN. 1H:1V. PREPARE SUBGRADE FOR COMPACTED FILL PER COA ITEM 401S.

E-2 SALVAGE TOPSOIL PER COA ITEM 601S AND EXCAVATE SUBGRADE OF DRIVEWAY, PARKING, FLATWORK AND SIDEWALKS FOR DEPTH OF CONCRETE, 6'' FLEXIBLE BASE, AND 8'' LIME STABILIZED SUBGRADE PER COA ITEMS 110S AND 401S. EXCAVATION TO EXTEND 3' PAST BACK OF CURBS, EXCEPT EXTEND 1' INTO TREE CRITICAL ROOT ZONE, AT LOCATIONS SHOWN. ALL OTHER LOCATIONS EXCAVATE DEPTH WITHIN FOOTPRINT OF STRUCTURE. PREPARE SUBGRADE FOR LIME STABILIZATION PER COA ITEMS 201S AND 203S.

E-3 PREPARE SUBGRADE OF SIDEWALK PER COA ITEM 432S.

BACKFILL KEY NOTES

B-1 BACKFILL SHALL BE FLEXIBLE BASE MATERIAL PER COA ITEM 210S. SEE STRUCTURAL DETAILS FOR BUILDING FOUNDATION REQUIREMENTS.

B-2 LIME STABILIZE SUBGRADE TO DEPTH OF 8" OF INDICATED LIMITS PER COA ITEM 203S. AFTER LIME STABILIZATION PLACE 6'' DEPTH OF FLEXIBLE BASE MATERIAL PER COA ITEM 210S.

B-3 IN PLACE A GRANULAR CUSHION OF 2" TO 5" THICKNESS PER COA ITEM 432S.

90% CONSTRUCTION DOCUMENTS

IF THIS SHEET IS NOT 36" X 24", IT IS A REDUCED PRINT.

Sep 22, 2016 - 3:56pm

Drawing name: J:\1139-Onion Creek Fire EMS\00-DRAWINGS\PERMIT\1139--C-EXCAVATION AND BACKFILL PLAN.dwg

STATE OF TEXAS
JOHN R. KING
58429
LICENSED
PROFESSIONAL ENGINEER
9/22/2016

CHAN & PARTNERS
CONSULTING CIVIL ENGINEERS

CHAN & PARTNERS ENGINEERING, LLC
4319 JAMES CASEY STREET, #300
AUSTIN, TEXAS 78745
512-469-8155 (PH) ♦ 512-469-9811 (FAX)
E-mail: info@chanpartners.com
WWW.CHANPARTNERS.COM
TEXAS REGISTRATION NO. F-13013

AUSTIN ONION CREEK
FIRE & EMS STATION
11112 OLD SAN ANTONIO ROAD
AUSTIN, TEXAS 78748

CITY OF AUSTIN · AUSTIN FOUNDED

REVISIONS

DATE	9/22/2016
DRAWN BY	CD
CHECKED BY	JRK
PROJECT NO.	214106.00

EXCAVATION AND BACKFILL PLAN

C4.3

PAVEMENT KEY NOTES

1. DOWEL PAVEMENT TO EXISTING PAVEMENT SLAB. SEE DETAIL 2 / C5.1
2. DOWEL PAVEMENT TO CURB INLETS. SEE DETAIL 2 / C5.1
3. PAVEMENT SECTION WITH CURB. SEE DETAIL 3 / C5.1
4. PAVEMENT SECTION WITHOUT CURB. SEE DETAIL 4 / C5.1
5. CURB TERMINATION WITH 45° SLOPE FACE
6. BEGIN 10-FT CURB TRANSITION TO FULL HEIGHT
7. CURB RAMP FLARE CURB TRANSITION. SEE DETAIL3 / C7.1 FOR GEOMETRY.
8. CURB INLET GUTTER TRANSITION. SEE DETAIL6 / C7.2 FOR GEOMETRY.
9. SIDEWALK/FLATWORK ISOLATION FROM ADJACENT BUILDING OR SLAB STRUCTURE. SEE DETAIL 5 / C5.1
10. EXPANSION JOINT WITH SMOOTH DOWELS. SEE DETAIL 8 / C5.1

LEGEND

- CONCRETE PAVEMENT (SEE NOTE 1)
- CONCRETE SIDEWALK AND FLAT WORK (SEE NOTE 2)
- REINFORCED CONCRETE SLAB (SEE NOTE 3)

NOTES:

1. TYPICAL REINFORCED CONCRETE PAVEMENT AND DRIVEWAY SECTION (SEE DETAIL 1/C5.1)
   - REINFORCED CONCRETE 10''
   - FLEXIBLE BASE 6''
   - LIME STABILIZED SUBGRADE 8''
2. CONCRETE SIDEWALK AND FLAT WORK (SEE DETAIL 5 / C7.0)
   - REINFORCED CONCRETE 5 1/2''
   - SAND CUSHION 2''
3. SEE STRUCTURAL DETAILS FOR FUEL TANK, PAD, TRANSFORMER PAD, WATER STORAGE TANK PAD, EMERGENCY GENERATOR PAD AND MECHANICAL PAD SECTIONS.
4. SEE GRADING PLAN SHEET C4.0 FOR PAVEMENT FINISHED GRADES.
5. SEE DEMOLITION PLAN SHEET C1.3 FOR REMOVAL OF EXISTING STRUCTURES AND TREES.
6. ALL PAVEMENT DIMENSIONS ARE FACE OF CURB TO FACE OF CURB UNLESS SHOWN OTHERWISE.
7. SEE GEO-TECHNICAL REPORT FOR DETAILED RECOMMENDED PAVEMENT DESIGN INFORMATION.
8. FOR FURTHER INFORMATION REGARDING THE PLACEMENT OF CONCRETE AND REINFORCEMENT REFER TO COA ITEM 360S.
9. CONTRACTOR SHALL PREPARE SUBGRADE IN ACCORDANCE WITH COA ITEMS 201S AND 360S. SEE EXCAVATION PLAN SHEET C4.3
10. CONSTRUCTION JOINTS SHALL BE LOCATED AT THE JOINT LOCATIONS AND AS THE TYPE OF JOINT SHOWN ON THIS PLAN. CONSTRUCTION AND CONTRACTION JOINTS IN ADDITION TO THOSE SHOWN ON THE DRAWINGS MUST BE APPROVED BY THE ENGINEER.
11. UNDOWLED ISOLATION JOINTS AND BOND BREAKERS SHALL BE USED TO ISOLATE THE RIGID PAVEMENT FROM A SMALLER FIXED STRUCTURE SUCH AS A UTILITY CASTING.
12. ALL JOINTS SHALL BE SEALED AS SHOWN ON THE DRAWINGS. SEALANT DIMENSIONS AND THICKNESS SHOWN ON THE DRAWINGS ARE APPROXIMATE. CONTRACTOR SHALL FOLLOW THE MANUFACTURE'S RECOMMENDATIONS FOR PROPER SEALANT INSTALLATION.
13. DOWEL BARS SHALL BE HELD SECURELY IN POSITION USING A DOWEL BAR ASSEMBLY OR FABRICATED-STEEL SUPPORTING UNITS OR BASKETS. THE FREE ENDS OF ALL DOWEL BARS SHALL BE ENCASED IN A CAP THAT COMPLIES WITH COA ITEM 360S, AND THE FREE ENDS SHALL BE COATED WITH A BOND BREAKER THAT COMPLIES WITH COA ITEM 360S. DOWELS PLACED IN HARDENED CONCRETE SHALL BE DRILLED AND EPOXY GROUTED IN PLACE.
14. UNLESS INDICATED OTHERWISE ON THE PAVEMENT PLAN, ALL PAVEMENT JOINTS SHALL BE CONTRACTION JOINT WITH DOWELS. SEE DETAIL 7 / C5.1
15. JOINTS SHALL EXTEND THROUGH CURBS. ALL CONTRACTION JOINT SAW-CUTS SHALL BE CONTINUOUS THROUGH THE CURB AND MADE AT A DEPTH IN ACCORDANCE WITH THE METHOD OF SAW-CUTTING AND WITH COA ITEM 360S.
16. CURBS SHALL BE CONSTRUCTED MONOLITHICALLY WITH PAVEMENT SLABS.

90% CONSTRUCTION DOCUMENTS

IF THIS SHEET IS NOT 36'' X 24'', IT IS A REDUCED PRINT.

Sep 22, 2016 - 3:57pm

Drawing name: J:\1139-Onion Creek Fire EMS\00-DRAWINGS\PERMIT\1139--C-PAVEMENT PLAN.dwg

STATE OF TEXAS
JOHN R. KING
59429
LICENSED
PROFESSIONAL ENGINEER
9/22/2016

CHAN & PARTNERS CONSULTING CIVIL ENGINEERS
CHAN & PARTNERS ENGINEERING, LLC
4319 JAMES CASEY STREET, #300
AUSTIN, TEXAS 78745
512-469-8195 (PH) ♦ 512-469-3811 (FAX)
E-mail: info@chanpartners.com
WWW.CHANPARTNERS.COM
TEXAS REGISTRATION NO. F-13013

AUSTIN ONION CREEK
FIRE & EMS STATION
11112 OLD SAN ANTONIO ROAD
AUSTIN, TEXAS 78748

CITY OF AUSTIN · BEST FOUNDED

REVISIONS

DATE	9/22/2016
DRAWN BY	CD
CHECKED BY	JRK
PROJECT NO.	214106.00

PAVEMENT PLAN

C5.0

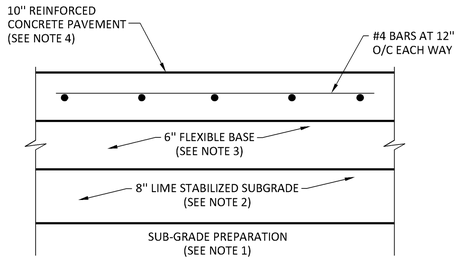

NOTES
1. SUBGRADE PREPARATION IN ACCORDANCE WITH COA ITEM 201S.
2. LIME STABILIZED SUBGRADE IN ACCORDANCE WITH COA ITEM 203S.
3. FLEXIBLE BASE IN ACCORDANCE WITH COA ITEM 210S.
4. REINFORCED CONCRETE PAVEMENT IN ACCORDANCE WITH COA ITEM 360S.

1 / C5.1 TYPICAL REINFORCED CONCRETE PAVEMENT AND DRIVEWAY SECTION

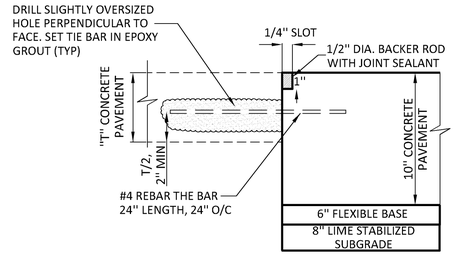

2 / C5.1 DOWEL TO ADJACENT SLAB

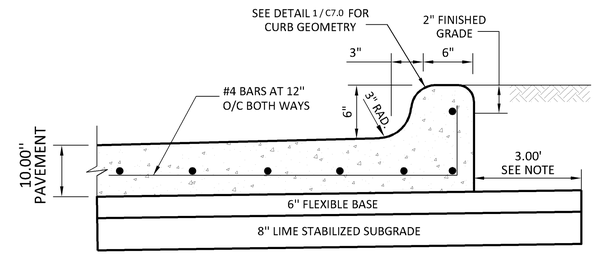

NOTE: FLEXIBLE BASE AND LIME STABILIZED SUB-GRADE TO EXTEND 12" BEHIND BACK OF CURB WITHIN AN EXISTING TREE CRITICAL ROOT ZONE TO MINIMIZE ROOT DAMAGE.

3 / C5.1 PAVEMENT SECTION WITH CURB

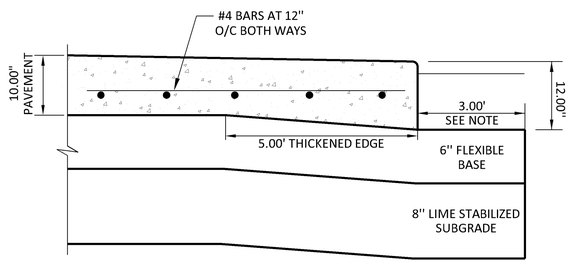

NOTE:FLEXIBLE BASE AND LIME STABILIZED SUB-GRADE TO EXTEND 12" PAST EDGE OF PAVEMENT WITHIN AN EXISTING TREE CRITICAL ROOT ZONE TO MINIMIZE ROOT DAMAGE

4 / C5.1 PAVEMENT SECTION WITHOUT CURB

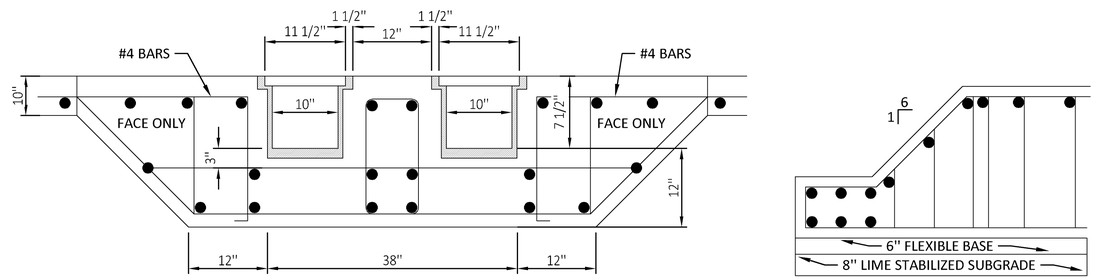

6 / C5.1 PAVEMENT AT TRENCH DRAIN REINFORCEMENT

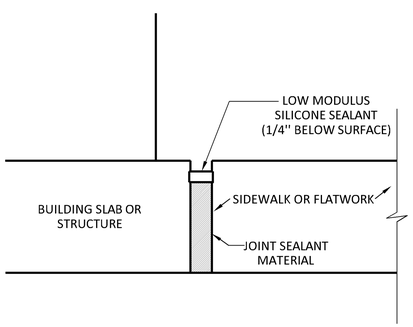

5 / C5.1 ISOLATION JOINT AT STRUCTURE OR CASTING

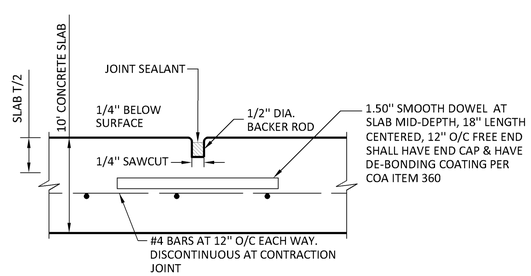

7 / C5.1 CONTRACTION JOINT WITH DOWELS

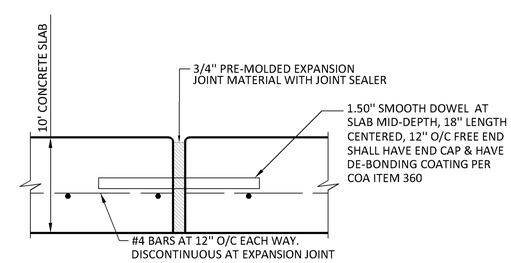

8 / C5.1 EXPANSION JOINT WITH DOWEL

90% CONSTRUCTION DOCUMENTS

IF THIS SHEET IS NOT 36" X 24", IT IS A REDUCED PRINT.

Sep 22, 2016 - 3:57pm

Drawing name: J:\1139-Onion Creek Fire EMS\00-DRAWINGS\PERMIT\1139--C-PAVEMENT PLAN.dwg

STATE OF TEXAS
JOHN R. KING
59429
LICENSED PROFESSIONAL ENGINEER
9/22/2016

CHAN & PARTNERS CONSULTING CIVIL ENGINEERS
CHAN & PARTNERS ENGINEERING, LLC
4319 JAMES CASEY STREET, #300
AUSTIN, TEXAS 78745
512-469-8195 (PH) ♦ 512-469-3811 (FAX)
E-mail: info@chanpartners.com
WWW.CHANPARTNERS.COM
TEXAS REGISTRATION NO. F-10813

AUSTIN ONION CREEK FIRE & EMS STATION
11112 OLD SAN ANTONIO ROAD
AUSTIN, TEXAS 78748

CITY OF AUSTIN · FOUNDED 1839

REVISIONS

DATE	9/22/2016
DRAWN BY	CD
CHECKED BY	JRK
PROJECT NO.	214106.00

PAVEMENT DETAIL SHEET

C5.1

LEAD FREE NOTE:

ALL POTABLE WATER SYSTEM COMPONENTS INSTALLED AFTER JANUARY 4, 2014, SHALL BE ESSENTIALLY "LEAD FREE" ACCORDING TO THE US SAFE DRINKING WATER ACT. EXAMPLES ARE VALVES (CORPORATION STOPS, CURB STOP, AND PRESSURE REDUCING VALVES), NIPPLE BUSHINGS, PIPE, FITTINGS AND BACKFLOW PREVENTERS. FIRE HYDRANTS, TAPPING SADDLES, 2-INCHES AND LARGER GATE VALVES ARE THE ONLY COMPONENTS EXEMPT FROM THIS REQUIREMENT. COMPONENTS THAT ARE NOT CLEARLY IDENTIFIED BY THE MANUFACTURER AS MEETING THIS REQUIREMENT EITHER BY MARKINGS ON THE COMPONENT OR ON THE PACKAGING SHALL NOT BE INSTALLED.

IRRIGATION SYSTEM SYSTEM CALLOUTS	
NO.	CALLOUT
I-1	STA. 1+00.00 IRRIGATION LINE INSTALL: NEW 2" SERVICE LINE, SEE DETAIL 3 / C6.3
I-2	STA. 1+11.38 IRRIGATION LINE INSTALL: NEW 1 1/2" IRRIGATION METER (SEE DETAIL3 / C6.3) 1- 2" BALL VALVE GIS# _____ (SEE DETAIL3 / C6.3)
I-3	STA. 1+14.18 IRRIGATION LINE INSTALL: 1- 2" BALL VALVE (SEE NOTE 14) (SEE DETAIL3 / C6.3) PRIVATE WATER CUT-OFF 1- 2"x 2 1/2" REDUCER 1- 2 1/2" PRIVATE REDUCED PRESSURE ZONE BACKFLOW PREVENTER (SEE NOTE 15)
I-4	STA. 1+16.51 IRRIGATION LINE SEE IRRIGATION PLAN FOR CONTINUATION

6" WATER SYSTEM CALLOUTS	
NO.	CALLOUT
W-1	STA. 0+00.00 EX. 6" WATER LINE INSTALL: 1- 6"x 6" WET CONNECTION CONNECT TO EXISTING 6" WL. RESTRAIN CONNECION (SEE NOTE 8)
W-2	STA. 0+16.10 EX. 6" WATER LINE BEGIN INSTALLATION OF STEEL SPLIT CASING PIPE SEE DETAIL 4 / C6.3
W-3	STA. 1+24.09 EX. 6" WATER LINE INSTALL: 1- 6"x 6" SWIVEL TEE FOR FIRE LINE
W-4	STA. 1+30.95 EX. 6" WATER LINE INSTALL: 1- 2" SERVICE CLAMP FOR 2" IRRIGATION WATER SERVICE
W-5	STA. 1+35.99 EX. 6" WATER LINE INSTALL: 1- 2" SERVICE CLAMP FOR 2" DOMESTIC WATER SERVICE
W-6	STA. 1+45.01 EX. 6" WATER LINE INSTALL: 1- 6"x 6" WET CONNECTION CONNECT TO EXISTING 6" CI WL AT PROPERTY LINE. RESTRAIN CONNECTION (SEE NOTE 8)

DOMESTIC WATER SYSTEM CALLOUTS	
NO.	CALLOUT
D-1	STA. 1+00.00 DOMESTIC WATER INSTALL NEW 2" SERVICE LINE, SEE DETAIL 3 / C6.3
D-2	STA. 1+11.42 DOMESTIC WATER INSTALL: 1- NEW 1-1/2 WATER METER ASSEMBLY #_____ SEE DETAIL 1- 2" BALL VALVE GIS# _____ SEE DETAIL 3 / C6.3
D-3	STA. 1+14.15 DOMESTIC WATER INSTALL: 1- 2" BALL VALVE (SEE NOTE 14) SEE DETAIL PRIVATE WATER CUT-OFF 1- 2"x 2-1/2" REDUCER SEE DETAIL 3 / C6.3
D-4	STA. 1+16.61 DOMESTIC WATER INSTALL: 1- 2-1/2" PRIVATE REDUCED PRESSURE ZONE BACKFLOW PREVENTER (SEE NOTE 15)
D-5	STA. 1+20.30 DOMESTIC WATER INSTALL: 1- 2 1/2" 45° BEND LT.
D-6	STA. 1+29.72 DOMESTIC WATER INSTALL: 1- 2 1/2" 45° BEND RT.
D-9	STA. 1+46.05 DOMESTIC WATER =STA. 1+31.73 WASTEWATER SYSTEM UTILITY CROSSING: MIN. 2 FT. VERTICAL CLEARANCE
D-10	STA. 3+17.40 DOMESTIC WATER INSTALL: 1- 2 1/2" 45° BEND LT.
D-11	STA. 3+20.48 DOMESTIC WATER INSTALL: 1- 2 1/2" 45° BEND LT.
D-12	STA. 3+26.65 DOMESTIC WATER =STA. 2+48.38 STORM DRAIN "A1" UTILITY CROSSING: MIN. 2 FT. VERTICAL CLEARANCE
D-13	STA. 4+03.93 DOMESTIC WATER INSTALL: 1- 2 1/2" 45° BEND LT.
D-14	STA. 4+07.00 DOMESTIC WATER INSTALL: 1- 2 1/2" 45° BEND LT.
D-15	STA. 4+11.16 DOMESTIC WATER CONNECT TO WATER LINE FROM BUILDING REFER TO ARCH./M.E.P. DWGS FOR CONTINUATION

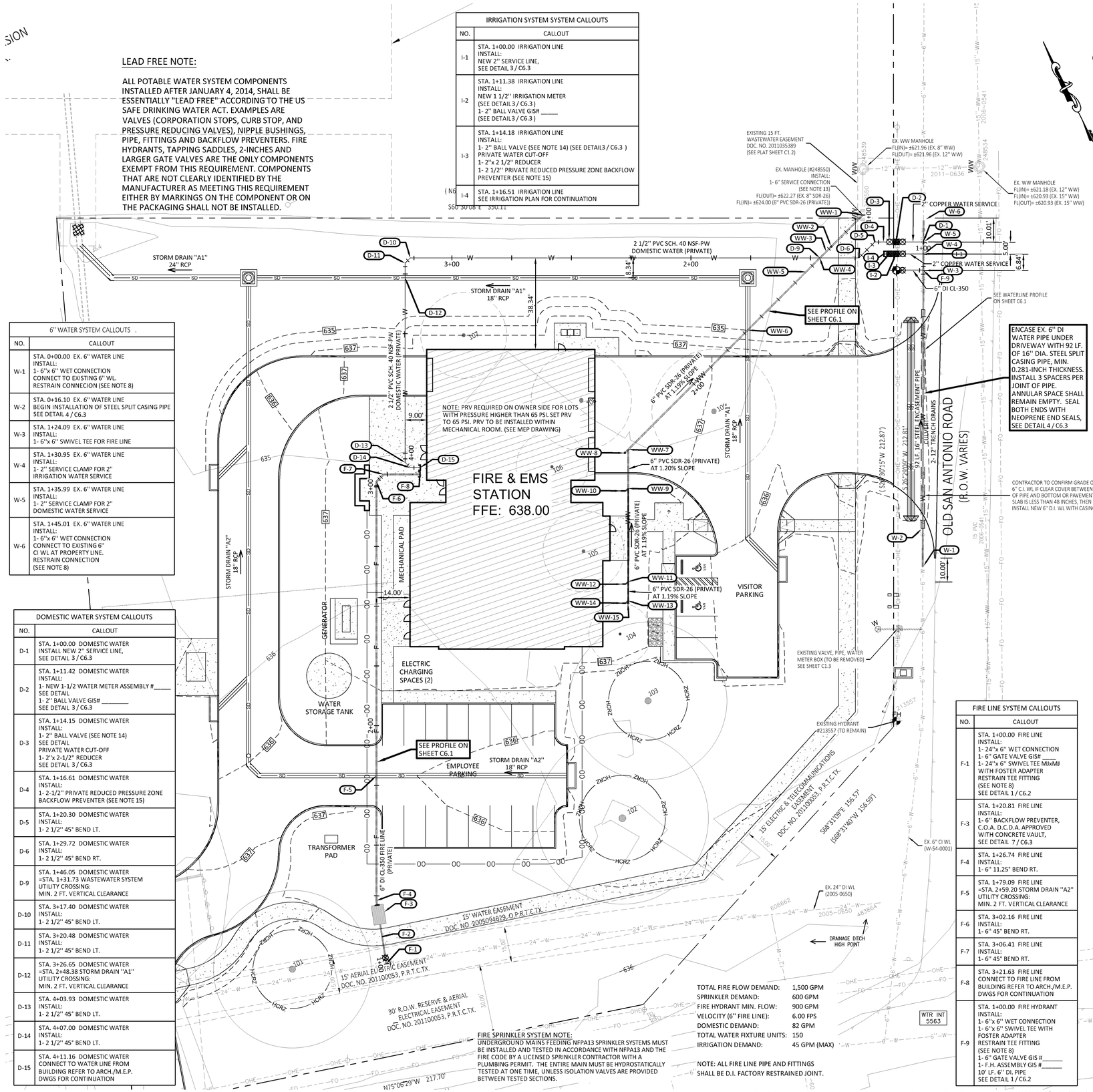

WASTEWATER SYSTEM CALLOUTS	
NO.	CALLOUT
WW-1	STA. 1+00.00 WASTEWATER EX. MANHOLE (#248550) INSTALL: 1- 6" SERVICE CONNECTION (SEE NOTE 13) FL(OUT)= ±622.27 (EX. 8" SDR-26) FL(IN)= 624.00 (6" PVC SDR-26 (PRIVATE))
WW-2	STA. 1+18.65 WASTEWATER INSTALL: 1- 6" W.W. DOUBLE CLEANOUT SEE DETAIL 5 / C6.3 FL(IN)= 624.19 (6" PVC SDR-26 (PRIVATE)) FL(OUT)= 624.19 (6" PVC SDR-26 (PRIVATE))
WW-3	STA. 1+21.65 WASTEWATER INSTALL: 1- 6" 22.5° VERT. BEND FL(IN)= 624.22 (6" PVC SDR-26 (PRIVATE)) FL(OUT)= 624.22 (6" PVC SDR-26 (PRIVATE))
WW-4	STA. 1+25.38 WASTEWATER =STA. 1+46.05 DOMESTIC WATER UTILITY CROSSING: MIN. 2 FT. VERTICAL CLEARANCE FL(IN)= 625.69 (6" PVC SDR-26 (PRIVATE)) FL(OUT)= 625.69 (6" PVC SDR-26 (PRIVATE))
WW-5	STA. 1+33.65 WASTEWATER INSTALL: 1- 6" 22.5° VERT. BEND FL(IN)= 628.96 (6" PVC SDR-26 (PRIVATE)) FL(OUT)= 628.96 (6" PVC SDR-26 (PRIVATE))
WW-6	STA. 1+68.08 WASTEWATER =STA. 4+43.57 STORM DRAIN "A" UTILITY CROSSING: MIN. 2 FT. VERTICAL CLEARANCE FL(IN)= 629.37 (6" PVC SDR-26 (PRIVATE)) FL(OUT)= 629.37 (6" PVC SDR-26 (PRIVATE))
WW-7	STA. 2+38.80 WASTEWATER INSTALL WYE FL(IN)= 630.22 (6" PVC SDR-26 (PRIVATE)) FL(IN)= 630.22 (6" PVC SDR-26 (PRIVATE)) FL(OUT)= 630.22 (6" PVC SDR-26 (PRIVATE))
WW-8	STA. 2+40.22 WASTEWATER INSTALL: 1- 6" W.W. SINGLE CLEANOUT SEE DETAIL 5 / C6.3 FL(OUT)= 630.36 (6" PVC SDR-26 (PRIVATE))
WW-9	STA. 2+55.14 WASTEWATER INSTALL WYE FL(IN)= 630.41 (6" PVC SDR-26 (PRIVATE)) FL(IN)= 630.41 (6" PVC SDR-26 (PRIVATE)) FL(OUT)= 630.41 (6" PVC SDR-26 (PRIVATE))
WW-10	STA. 2+56.14 WASTEWATER INSTALL: 1- 6" WW. DOUBLE CLEANOUT SEE DETAIL 5 / C6.3 CONNECT TO WASTEWATER LINE FROM BUILDING REFER TO ARCH./M.E.P. DWGS FOR CONTINUATION FL(OUT)= 633.00 (6" PVC SDR-26 (PRIVATE))
WW-11	STA. 2+94.14 WASTEWATER INSTALL WYE FL(IN)= 630.88 (6" PVC SDR-26 (PRIVATE)) FL(IN)= 630.88 (6" PVC SDR-26 (PRIVATE)) FL(OUT)= 630.88 (6" PVC SDR-26 (PRIVATE))
WW-12	STA. 2+95.14 WASTEWATER INSTALL: 1- 6" WW. DOUBLE CLEANOUT SEE DETAIL CONNECT TO WASTEWATER LINE FROM BUILDING REFER TO ARCH./M.E.P. DWGS FOR CONTINUATION FL(OUT)= 633.00 (6" PVC SDR-26 (PRIVATE))
WW-13	STA. 3+02.08 WASTEWATER INSTALL WYE FL(IN)= 630.97 (6" PVC SDR-26 (PRIVATE)) FL(IN)= 630.97 (6" PVC SDR-26 (PRIVATE)) FL(OUT)= 630.97 (6" PVC SDR-26 (PRIVATE))
WW-14	STA. 3+03.08 WASTEWATER INSTALL: 1- 6" WW. DOUBLE CLEANOUT SEE DETAIL 5 / C6.3 CONNECT TO WASTEWATER LINE FROM BUILDING REFER TO ARCH./M.E.P. DWGS FOR CONTINUATION FL(OUT)= 633.00 (6" PVC SDR-26 (PRIVATE))
WW-15	STA. 3+03.08 WASTEWATER INSTALL 6" W.W. SINGLE CLEANOUT SEE DETAIL 5 / C6.3

FIRE LINE SYSTEM CALLOUTS	
NO.	CALLOUT
F-1	STA. 1+00.00 FIRE LINE INSTALL: 1- 24"x 6" WET CONNECTION 1- 6" GATE VALVE GIS# _____ 1- 24"x 6" SWIVEL TEE MJxMJ WITH FOSTER ADAPTER RESTRAIN TEE FITTING (SEE NOTE 8) SEE DETAIL 1 / C6.2
F-3	STA. 1+20.81 FIRE LINE INSTALL: 1- 6" BACKFLOW PREVENTER, C.O.A. D.C.D.A. APPROVED WITH CONCRETE VAULT, SEE DETAIL 7 / C6.3
F-4	STA. 1+26.74 FIRE LINE INSTALL: 1- 6" 11.25° BEND RT.
F-5	STA. 1+79.09 FIRE LINE =STA. 2+59.20 STORM DRAIN "A2" UTILITY CROSSING: MIN. 2 FT. VERTICAL CLEARANCE
F-6	STA. 3+02.16 FIRE LINE INSTALL: 1- 6" 45° BEND RT.
F-7	STA. 3+06.41 FIRE LINE INSTALL: 1- 6" 45° BEND RT.
F-8	STA. 3+21.63 FIRE LINE CONNECT TO FIRE LINE FROM BUILDING REFER TO ARCH./M.E.P. DWGS FOR CONTINUATION
F-9	STA. 1+00.00 FIRE HYDRANT INSTALL: 1- 6"x 6" WET CONNECTION 1- 6"x 6" SWIVEL TEE WITH FOSTER ADAPTER RESTRAIN TEE FITTING (SEE NOTE 8) 1- 6" GATE VALVE GIS #_____ 1- F.H. ASSEMBLY GIS #_____ 10' LF. 6" DI. PIPE SEE DETAIL 1 / C6.2

TOTAL FIRE FLOW DEMAND:	1,500 GPM
SPRINKLER DEMAND:	600 GPM
FIRE HYDRANT MIN. FLOW:	900 GPM
VELOCITY (6" FIRE LINE):	6.00 FPS
DOMESTIC DEMAND:	82 GPM
TOTAL WATER FIXTURE UNITS:	150
IRRIGATION DEMAND:	45 GPM (MAX)

NOTE: ALL FIRE LINE PIPE AND FITTINGS SHALL BE D.I. FACTORY RESTRAINED JOINT.

FIRE SPRINKLER SYSTEM NOTE:
UNDERGROUND MAINS FEEDING NFPA13 SPRINKLER SYSTEMS MUST BE INSTALLED AND TESTED IN ACCORDANCE WITH NFPA13 AND THE FIRE CODE BY A LICENSED SPRINKLER CONTRACTOR WITH A PLUMBING PERMIT. THE ENTIRE MAIN MUST BE HYDROSTATICALLY TESTED AT ONE TIME, UNLESS ISOLATION VALVES ARE PROVIDED BETWEEN TESTED SECTIONS.

LEGEND

- PROJECT PROPERTY LINE
- EXISTING R.O.W./PROPERTY LINE
- EXISTING EASEMENT LINE
- EXISTING PAVEMENT
- PROPOSED CURB & GUTTER
- EX. CONTOURS / PROP. CONTOURS
- EX. WATER LINE / PROP. WATER LINE
- FLOW ARROW / PROP. FIRE LINE
- EX. WASTEWATER / PROP. WASTEWATER
- EX. STORM DRAIN / PROP. STORM DRAIN
- EX. WATER VALVE / PROP. WATER VALVE
- EX. FIRE HYDRANT / PROP. FIRE HYDRANT
- EX. WATER METER / PROP. WATER METER
- EX. WASTEWATER MANHOLE / PROP. WASTEWATER M.H.
- EX. STORM DRAIN MANHOLE / PROP. STORM DRAIN M.H.
- EX. STORM DRAIN INLET WITH LATERAL / PROP. STORM DRAIN INLET WITH LATERAL
- CONTROL POINT / EX. TELEPHONE MANHOLE
- EX. SIGN / EX. TELEPHONE MARKER
- EX. POWER POLE / EX. FIBER OPTICS MARKER
- EX. GUY WIRE / EX. TELEPHONE BOX
- EX. LIGHT POLE / EX. TRAFFIC SIGNAL POLE
- EX. ELECTRIC MANHOLE / EX. TRAFFIC SIGNAL BOX
- EX. ELECTRIC BOX / EX. GAS VALVE
- EX. ELECTRIC BOX / EX. GAS METER
- EX. ELECTRIC MARKER / EX. GAS MARKER
- EX. SPRINKLER VALVE / EX. MAIL BOX
- EX. PARKING METER
- EXISTING TREE (TO REMAIN) / EXISTING TREE (TO BE REMOVED)
- EX. OVERHEAD UTILITIES / EX. CHAINLINK FENCE
- EX. WIRE FENCE
- EX. OVERHEAD ELECTRIC / EX. WOOD FENCE
- EX. UNDERGROUND ELECTRIC / EX. GUARD RAIL
- EX. UNDERGROUND TRAFFIC SIGNAL / CITY OF AUSTIN FULLY DEVELOPED 100-YR FLOODPLAIN
- EX. UNDERGROUND TELEPHONE / 100-YR FEMA FLOODPLAIN
- EX. UNDERGROUND FIBEROPTICS / CRITICAL WATER QUALITY ZONE
- EX. GAS LINE / WATER QUALITY TRANSITION ZONE
- BH-1 GEOTECHNICAL BORE HOLE LOCATION

WATER & WASTEWATER NOTES:

1. CONTRACTOR TO CONFIRM ALIGNMENT AND GRADE OF EXISTING WATER LINE AND WASTEWATER LINE AT ALL CONNECTIONS.
2. SEE SHEET C6.1 FOR AUSTIN WATER UTILITY STANDARD NOTES.
3. SEE SHEETS C6.2 THROUGH C6.3 FOR WATER & WASTEWATER STANDARD DETAILS.
4. ALL DUCTILE IRON PIPE 12" DIA. AND LESS SHALL BE CLASS 350. ALL DUCTILE IRON PIPE GREATER THAN 12" DIA. SHALL BE CLASS 250 MIN.
5. ALL DUCTILE IRON WATER LINES 4" DIA. AND LARGER SHALL HAVE FACTORY RESTRAINED JOINTS AND FITTINGS AND SHALL COMPLY WITH CITY OF AUSTIN SPL WW-27F. ALL CONNECTIONS TO EXISTING WATER PIPE SHALL HAVE FIELD-INSTALLED RESTRAINED JOINTS (SEE NOTE 8).
6. ALL DUCTILE IRON WATER PIPE FITTINGS SHALL BE RESTRAINED IN ACCORDANCE WITH CITY OF AUSTIN SP WW-27F.
7. ALL 4" AND LARGER GATE VALVES SHALL BE RESILENT SEATED AND SHALL COMPLY WITH CITY OF AUSTIN SPL WW-282. BALL VALVES SHALL COMPLY WITH CITY OF AUSTIN SPL WW-276.
8. ALL FIELD INSTALLED JOINT RESTRAINTS SHALL BE MEGALUG SERIES 1100 OR APPROVED EQUAL.
9. ADJUST PROPOSED WATER LINE ALIGNMENT WHERE ALIGNMENT IS IN CONFLICT WITH EXISTING UTILITIES THAT ARE NOT TO BE RELOCATED.
10. CONTRACTOR SHALL LOCATE EXISTING UTILITIES ALONG PROPOSED WATER LINE AND WASTEWATER LINE ALIGNMENT.
11. IF AN EXISTING WATER OR WASTEWATER PIPE IS ABANDONED IN PLACE, BUT IS NOT GROUT-FILLED AND IS CUT TO INSTALL A NEW WATER MAIN, BOTH SIDES OF THE CUT ABANDONED PIPE MUST BE PLUGGED WITH A PRE-CAST STOPPER GROUTED IN PLACE.
12. WASTEWATER PIPE SHALL BE PVC SDR-26 AND SHALL COMPLY WITH CITY OF AUSTIN SPL WW-227.
13. CONNECT PROPOSED 6" PVC SDR-26 PIPE TO EXISTING WASTEWATER MANHOLE #248550 IN ACCORDANCE WITH COA ITEM 506.5.F. PROVIDE A MINIMUM OF 12" CLEARANCE BETWEEN THE EXISTING PIPE ID AND THE NEW CORE HOLE ID. MEASURED ON THE INSIDE SURFACE OF THE MANHOLE. SEAL PIPE PENETRATION THROUGH MANHOLE WALL WITH NON-SHRINK GROUT AND WITH RESILIENT CONNECTOR (BOOT) FOR CORED MANHOLE THAT COMPLIES WITH COA SPL NO WW-146D. RECONSTRUCT MANHOLE INVERT TO CONFORM TO COA ITEM 506.5.H. REHABILITATE THE INTERIOR WALL OF EXISTING MANHOLE WITH STRUCTURAL LINING MATERIAL THAT COMPLIES WITH COA SPL WW-511A AND WITH COA ITEM 506.5.J. AND COAT INTERIOR WALL OF MANHOLE WITH ORGANIC LINING THAT COMPLIES WITH COA SPL WW-511 AND COA ITEM 506.5.R.
14. CUSTOMER CUT-OFF BALL VALVE SHALL COMPLY WITH COA SPL-WW-276
15. REDUCED PRESSURE ZONE (RPZ) BACKFLOW PREVENTER SHALL COMPLY WITH CITY OF AUSTIN SPL-WW-292. RPZ VAULT SHALL BE COMPATIBLE WITH LAYOUT OF RPZ AND SHALL COMPLY WITH CITY OF AUSTIN UTILITY CRITERIA MANUAL SECTION 2.3.3 AND SHALL COMPLY WITH ASSE 060 WITH AT LEAST CLASS 2 FREEZE PROTECTION.

NOTE:
THE INFORMATION SHOWN ON THESE DRAWINGS INDICATING TYPE AND LOCATION OF UNDERGROUND, SURFACE AND AERIAL UTILITIES IS NOT GUARANTEED TO BE EXACT OR COMPLETE. THE CONTRACTOR IS RESPONSIBLE FOR DETERMINING THE EXACT TYPE AND LOCATION OF ALL UTILITIES AFFECTED BY CONSTRUCTION FOR THIS PROJECT IN ORDER TO AVOID DAMAGING THOSE UTILITIES. THE CONTRACTOR SHALL IMMEDIATELY ARRANGE FOR REPAIR AND RESTORATION OF CONTRACTOR-DAMAGED UTILITIES AND THE CONTRACTOR SHALL PAY FOR SUCH REPAIRS. CONTRACTOR SHALL POTHOLE UTILITIES IN ADVANCE OF CONSTRUCTION TO VERIFY THAT LOCATIONS AND DEPTHS DO NOT CONFLICT WITH CONSTRUCTION. POTHOLING OPERATION AND POTHOLE PAVEMENT REPAIR SHALL BE SUBSIDIARY TO THE CONTRACT. CONTRACTOR SHALL IMMEDIATELY NOTIFY UTILITY AND OWNER'S REPRESENTATIVE OF ANY APPARENT CONFLICTS. CONTRACTOR SHALL COORDINATE WITH UTILITY AND OWNER'S REPRESENTATIVE TO ACHIEVE A PROMPT RESOLUTION TO ANY CONFLICTS.

90% CONSTRUCTION DOCUMENTS

IF THIS SHEET IS NOT 36" X 24", IT IS A REDUCED PRINT.

Sep 22, 2016 - 4:48pm Drawing name: J:\1139-Onion Creek Fire EMS\00-DRAWINGS\PERMIT\1139--C-WWW PLAN.dwg

STATE OF TEXAS
JOHN R. KING
59429
LICENSED PROFESSIONAL ENGINEER
9/22/2016

CHAN & PARTNERS CONSULTING CIVIL ENGINEERS
CHAN & PARTNERS ENGINEERING, LLC
4319 JAMES CASEY STREET, #300
AUSTIN, TEXAS 78745
512-469-8195 (PH) • 512-469-8811 (FAX)
E-mail: info@chanpartners.com
WWW.CHANPARTNERS.COM
TEXAS REGISTRATION NO. F-10013

AUSTIN ONION CREEK FIRE & EMS STATION
11112 OLD SAN ANTONIO ROAD
AUSTIN, TEXAS 78748

CITY OF AUSTIN FOUNDED 1839

REVISIONS

DATE	9/22/2016
DRAWN BY	CD
CHECKED BY	JRK
PROJECT NO.	214106.00

WATER & WASTEWATER PLAN

C6.0

AUSTIN WATER GENERAL CONSTRUCTION NOTES

JUNE 07, 2016

1. THE CITY STANDARD CONSTRUCTION SPECIFICATIONS CURRENT AT THE TIME OF BIDDING SHALL COVER MATERIAL AND METHODS USED TO DO THIS WORK.

2. CONTRACTOR MUST OBTAIN A STREET CUT PERMIT FROM AUSTIN TRANSPORTATION DEPARTMENT, RIGHT OF WAY MANAGEMENT DIVISION BEFORE BEGINNING CONSTRUCTION WITHIN THE RIGHT-OF-WAY OF A PUBLIC STREET OR ALLEY.

3. AT LEAST 48 HOURS BEFORE BEGINNING ANY WATER AND WASTEWATER CONSTRUCTION IN PUBLIC R.O.W. OR PUBLIC EASEMENT, THE CONTRACTOR SHALL NOTIFY AUSTIN TRANSPORTATION INSPECTION OR DEVELOPMENT SERVICES DEPARTMENT, SITES AND SUBDIVISION INSPECTION, AT THE NUMBER INDICATED ON THE PLANS BY THE AW PLAN REVIEWER.

4. THE CONTRACTOR SHALL CONTACT THE AUSTIN AREA "ONE CALL" SYSTEM AT 1-800-344-8377 FOR EXISTING UTILITY LOCATIONS PRIOR TO ANY EXCAVATION IN ADVANCE OF CONSTRUCTION. THE CONTRACTOR SHALL VERIFY THE LOCATIONS OF ALL UTILITIES TO BE EXTENDED, TIED TO, OR ALTERED, OR SUBJECT TO DAMAGE/INCONVENIENCE BY THE CONSTRUCTION OPERATIONS. THE AUSTIN WATER MAINTENANCE RESPONSIBILITY ENDS AT R.O.W./EASEMENT LINES.

5. NO OTHER UTILITY SERVICE/APPURTENANCES SHALL BE PLACED NEAR THE PROPERTY LINE, OR OTHER ASSIGNED LOCATION DESIGNATED FOR WATER, RECLAIMED WATER AND WASTEWATER UTILITY SERVICE THAT WOULD INTERFERE WITH THE WATER, RECLAIMED WATER AND WASTEWATER SERVICES.

6. THE CITY SPECIFICATION ITEM 509S WILL BE REQUIRED AS A MINIMUM TRENCH SAFETY MEASURE.

7. ALL MATERIALS TESTS, INCLUDING SOIL DENSITY TESTS AND DETAILED SOIL ANALYSES, SHALL BE CONDUCTED BY AN INDEPENDENT LABORATORY AND FUNDED BY THE OWNER IN ACCORDANCE WITH CITY STANDARD SPECIFICATION ITEM 1804S.04.

8. PRESSURE TAPS SHALL BE IN ACCORDANCE WITH CITY STANDARD SPECIFICATION ITEM 510.3(24). THE CONTRACTOR SHALL PERFORM EXCAVATION ETC., AND SHALL FURNISH, INSTALL AND AIR TEST THE SLEEVE AND VALVE. WHEN CONTRACTORS MAKE THE TAP A CITY INSPECTOR MUST BE PRESENT AND 2 WORKING DAYS (MIN.) NOTICE MUST BE GIVEN. "SIZE ON SIZE" TAPS WILL NOT BE PERMITTED, UNLESS, IT HAS BEEN DEMONSTRATED THAT A MORE ACCEPTABLE CONNECTION WOULD INVOLVE CONSIDERABLE HARDSHIP TO THE UTILITY SYSTEM. ALL TAPS SHALL BE MADE BY USE OF AN APPROVED FULL CIRCLE-GASKETED CAST IRON OR DUCTILE IRON TAPPING SLEEVE. CONCRETE BLOCKING SHALL BE PLACED UNDER ALL TAP SLEEVES PRIOR TO MAKING THE PRESSURE TAP AND THE USE OF PRECAST BLOCKS MAY BE USED TO HOLD THE TAP IN ITS CORRECT POSITION PRIOR TO BLOCKING. THE BLOCKING BEHIND AND UNDER THE TAP SHALL HAVE A MINIMUM OF 24 HOURS CURING TIME BEFORE THE VALVE CAN BE RE-OPENED FOR SERVICE FROM THAT TAP.

9. THRUST RESTRAINT SHALL BE IN ACCORDANCE WITH CITY STANDARD SPECIFICATION ITEM 510.3 (22).

10. ALL BRANCH CONNECTIONS SHALL HAVE THE VALVE BOLTED TO THE MAIN BY METHODS OF FLANGE OR SWIVEL TEES. FOSTER ADAPTORS MAY BE USED IN LIEU OF FLANGE OR SWIVEL TEES WHEN CALLED OUT ON THE PLANS BY THE DESIGN ENGINEER.

11. A). FIRE HYDRANTS SHALL BE SET IN ACCORDANCE WITH CITY STANDARD SPECIFICATION ITEM 511S.4 B). FIRE HYDRANTS SHALL BE PAINTED FLYNT ALUMINUM OR EQUAL.

12. WATER LINE TESTING AND STERILIZATION SHALL BE PERFORMED IN ACCORDANCE WITH CITY STANDARD SPECIFICATION ITEMS 510.3 (27)-(29). FORCE MAIN PRESSURE TESTING SHALL BE CONDUCTED AND FALL UNDER THE SPECIFICATIONS AS WATER LINES (PRESSURE PIPE) OR AT THE PRESSURES SHOWN ON THE APPROVED PLANS.

13. ALL MATERIAL USED ON THIS PROJECT MUST BE LISTED ON THE STANDARD PRODUCTS LISTING. ANY MATERIAL NOT LISTED HAS TO GO THROUGH THE REVIEW OF THE STANDARDS COMMITTEE FOR REVIEW AND APPROVAL PRIOR TO START OF PROJECT. TESTING AND EVALUATION OF PRODUCTS ARE REQUIRED BEFORE APPROVAL WILL BE GIVEN ANY CONSIDERATION.

14. WHEN WATER SERVICES ARE DAMAGED AND THE SERVICE MATERIAL IS PE, THE LINE SHALL BE REPAIRED ONLY BY HEAT FUSION WELD OR REPLACED THE FULL LENGTH WITH TYPE K COPPER MATERIAL. ANY TIME PB IS DAMAGED OR TAMPERED WITH IN ANY WAY, THE SERVICE LINE SHALL BE REPLACED FULL LENGTH WITH TYPE K COPPER MATERIAL. NOTE: FULL LENGTH IS FROM CORPORATION STOP TO METER.

15. WHEN AN EXISTING WATERLINE SHUT OUT IS NECESSARY AND POSSIBLE, THE CONTRACTOR SHALL NOTIFY THE CONSTRUCTION INSPECTOR WHO WILL THEN NOTIFY THE AUSTIN WATER DISPATCH AND THE AFFECTED CUSTOMERS A MINIMUM OF SEVENTY-TWO (72) HOURS IN ADVANCE.

16. THE CONTRACTOR SHALL NOTIFY THE CONSTRUCTION INSPECTOR SO THAT HE CAN NOTIFY THE AUSTIN WATER AT 972--0000 AT A MINIMUM OF 72 HOURS PRIOR TO RELOCATING ANY DOMESTIC OR FIRE DEMAND WATER METERS. THE CONTRACTOR SHALL CAREFULLY REMOVE ALL METERS AND METERS BOXES THAT ARE INDICATED TO BE RELOCATED OR SALVAGED. THE CONTRACTOR SHALL INSTALL THE REMOVED METER OR CITY PROVIDED METER AT THE NEW LOCATION INDICATED ON THE CONSTRUCTION PLANS.

17. ALL MANHOLES IN UNPAVED AREAS PROVIDING DIRECT ACCESS TO A WASTEWATER LINE SHALL BE WATERTIGHT AND BEAR THE WORDING AND INSIGNIA FOR THE CITY OF AUSTIN.

18. THE CONTRACTOR SHALL VERIFY ALL VERTICAL AND HORIZONTAL LOCATIONS OF EXISTING UTILITIES PRIOR TO STARTING ONSITE UTILITY WORK.

19. ALL RESPONSIBILITY FOR THE ADEQUACY OF THESE PLANS REMAINS WITH THE ENGINEER WHO PREPARED THEM. APPROVAL OF THESE PLANS BY THE CITY OF AUSTIN DOES NOT REMOVE THESE RESPONSIBILITIES.

20. REVIEW BY AUSTIN WATER APPLIES ONLY TO FACILITIES WITHIN PUBLIC STREETS OR PUBLIC UTILITY EASEMENTS. ALL OTHER WATER, RECLAIMED WATER AND WASTEWATER FACILITIES INSIDE PRIVATE PROPERTY ARE UNDER THE JURISDICTION OF BUILDING INSPECTION.

21. ALL WATER, RECLAIMED WATER AND WASTEWATER MAINS SHALL BE INSTALLED IN ACCORDANCE WITH THE SEPARATION DISTANCES INDICATED IN CHAPTER 290 - DRINKING WATER STANDARDS, CHAPTER 210 - USE OF RECLAIMED WATER AND CHAPTER 217 - DESIGN CRITERIA FOR SEWERAGE SYSTEMS, OF TCEQ RULES.

22. CONTRACTOR'S PERSONNEL THAT PERFORM BUTT FUSION AND ELECTROFUSIONON ON OR TO HDPE PIPE AND FITTINGS MUST HAVE CURRENT QUALIFICATION TRAINING CERTIFICATE ISSUED BY MCELROY OR COMPARABLE TRAINING PROGRAM.

23. SHOP DRAWINGS SHALL BE SUBMITTED FOR AW APPROVAL FOR LARGE DIAMETER PRE-CAST MANHOLES, JUNCTION BOXES, WET WELLS, AND SIMILAR STRUCTURES. THE SHOP DRAWINGS SHALL INCLUDE FLOWLINE ELEVATIONS OF ALL INCOMING AND OUTGOING PIPES, ELEVATION OF TRANSITION FROM LARGE DIAMETER SECTIONS TO 48" ID SECTION, TOP OF MANHOLE ELEVATION, SURROUNDING GROUND ELEVATION, AS WELL AS SPECIAL CONSTRUCTION CONSIDERATIONS THAT ARE SPECIFIED IN THE CONTRACT DRAWINGS.

24. VALVE STEM EXTENSIONS SHALL CONSIST OF A SINGLE PIECE OF IRON ROD OF THE REQUIRED LENGTH WITH A SOCKET ON ONE END AND NUT ON THE OTHER.

25. ASBESTOS CONCRETE PIPE (AC PIPE) HAS BEEN INSTALLED IN THE PAST AS PART OF AUSTIN WATER'S WATER DISTRIBUTION AND WASTEWATER COLLECTION SYSTEMS. AUSTIN WATER'S INFRASTRUCTURE INCLUDES AC PIPE THAT IS CURRENTLY IN SERVICE AS WELL AS AC PIPE THAT HAS BEEN ABANDONED AND IS NO LONGER IN SERVICE. RECORD INFORMATION MAY NOT BE COMPLETE FOR THE PROJECT. CONTRACTORS AND SUBCONTRACTORS MUST BE ALERT TO THE POSSIBLE PRESENCE OF AC PIPE WITHIN THE LIMITS OF THE PROJECT AND BE KNOWLEDGEABLE OF HOW TO IDENTIFY IT. DISTURBANCE, REMOVAL OR CUTTING OF ASBESTOS CONTAINING PIPE IS TO BE CONDUCTED IN ACCORDANCE WITH THE REQUIREMENTS OF TEXAS ADMINISTRATIVE CODE 25, SECTION 15, ARTICLE 4477-3A AND 29 CFR 1926.1101. CONTACT THE CITY OF AUSTIN ASBESTOS MANAGER AT 512-974-7154 THIRTY (30) DAYS PRIOR TO THE PLANNED DISTURBANCE OF THE AC PIPE. ONLY STATE LICENSED PERSONNEL ARE PERMITTED TO DISTURB, REMOVE, TRANSPORT AND DISPOSE OF AC PIPE.

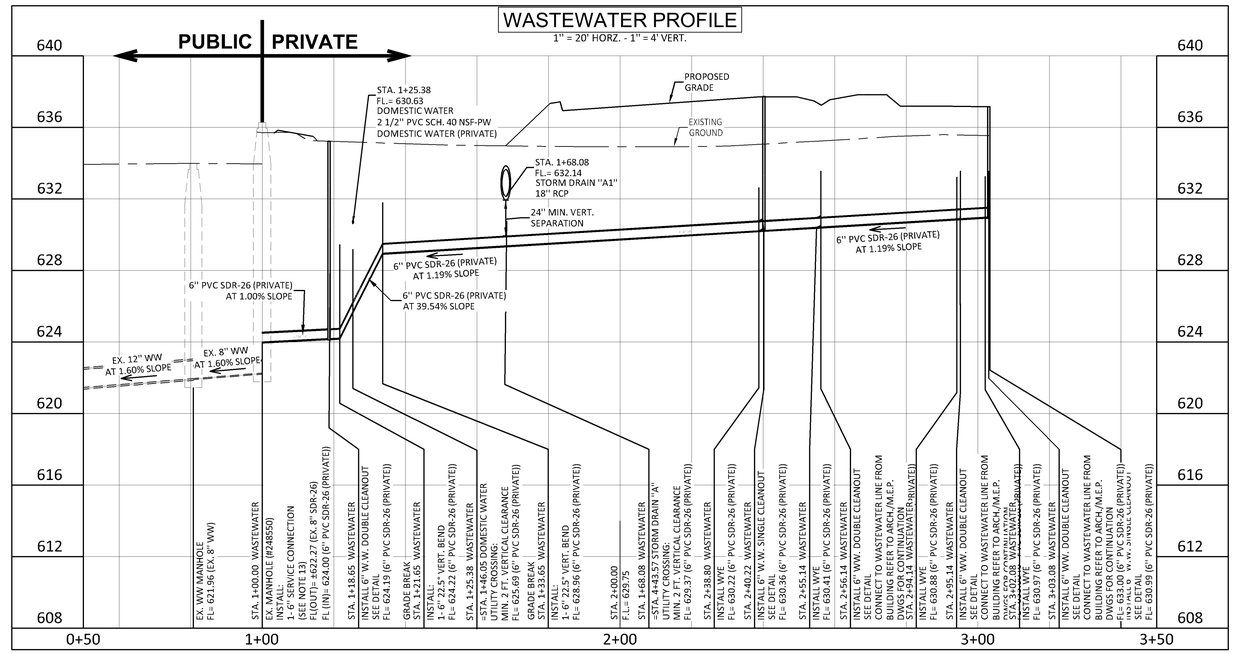

1 / C6.1 — 6" WASTEWATER PIPE CONNECTION TO EXISTING WASTEWATER MANHOLE

SCALE: HORIZ. 1" = 20' - VERT. 1" = 4'

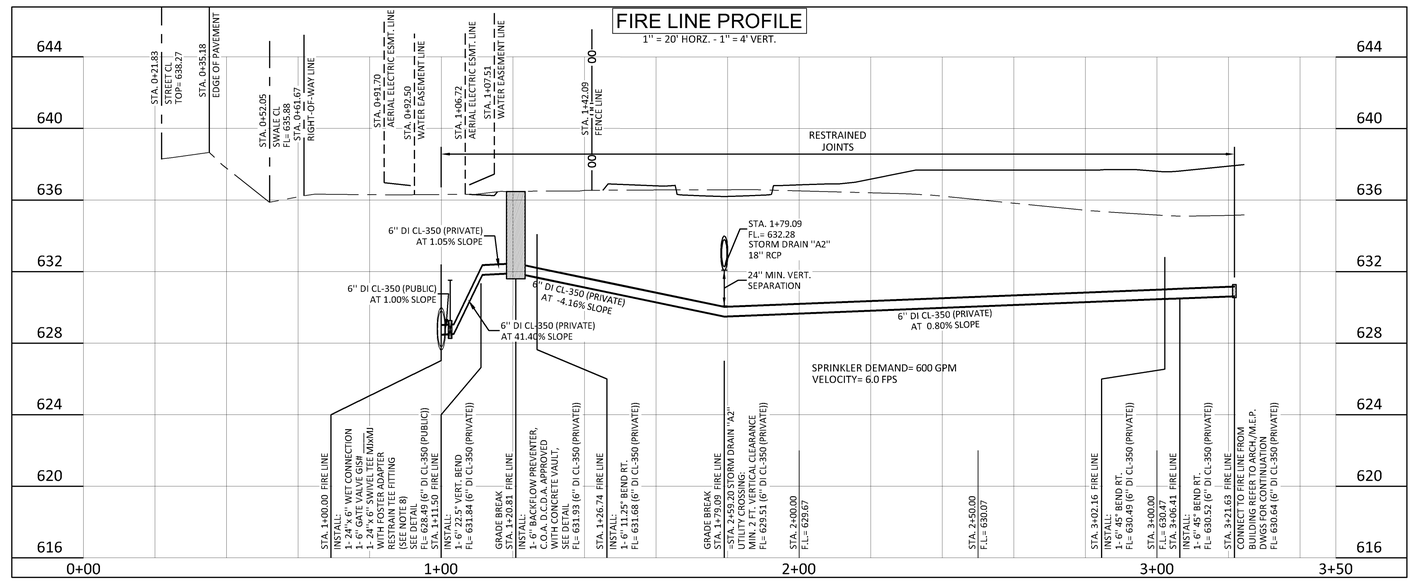

2 / C6.1 — 6" FIRE LINE PROFILE (IN R.O.W.)

SCALE: HORIZ. 1" = 20' - VERT. 1" = 4'

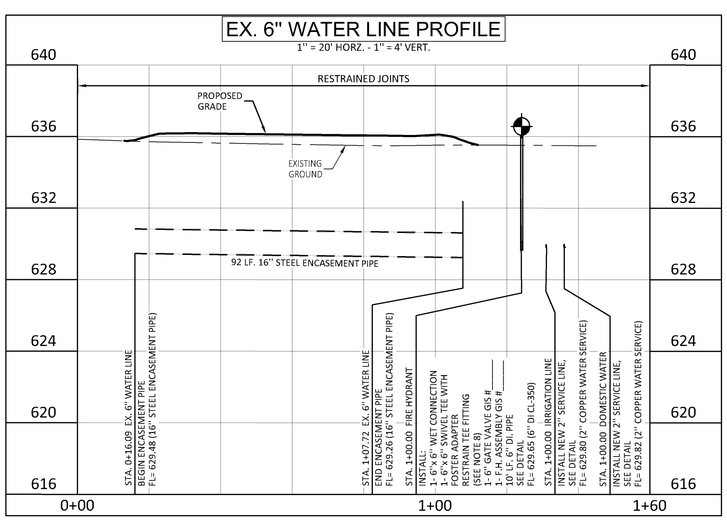

3 / C6.1 — EX. 6" WATER LINE SPLIT ENCASEMENT PROFILE

LEAD FREE NOTE:

ALL POTABLE WATER SYSTEM COMPONENTS INSTALLED AFTER JANUARY 4, 2014, SHALL BE ESSENTIALLY "LEAD FREE" ACCORDING TO THE US SAFE DRINKING WATER ACT. EXAMPLES ARE VALVES (CORPORATION STOPS, CURB STOP, AND PRESSURE REDUCING VALVES), NIPPLE BUSHINGS, PIPE, FITTINGS AND BACKFLOW PREVENTERS. FIRE HYDRANTS, TAPPING SADDLES, 2-INCHES AND LARGER GATE VALVES ARE THE ONLY COMPONENTS EXEMPT FROM THIS REQUIREMENT. COMPONENTS THAT ARE NOT CLEARLY IDENTIFIED BY THE MANUFACTURER AS MEETING THIS REQUIREMENT EITHER BY MARKINGS ON THE COMPONENT OR ON THE PACKAGING SHALL NOT BE INSTALLED.

WATER/WASTEWATER SPECIAL NOTE:

THE CONTRACTOR IS RESPONSIBLE FOR OBTAINING AND PAYING FOR A CITY OF AUSTIN UTILITY PERMIT (CONTACT CORY HARMON, UTILITY COORDINATOR, 512-974-5660) PRIOR TO INSTALLING ANY ON-SITE WATER, WASTEWATER, OR GAS LINES. CONTRACTOR IS REQUIRED TO HAVE A LICENSED PLUMBER FOR INSTALLATION OF THE ABOVE UTILITY LINES, AND A FIRE SPRINKLER CONTRACTOR OR RMEU LICENSED PERSONNEL FOR INSTALLATION OF A FIRE LINE TO SERVICE A SPRINKLER SYSTEM. CONTRACTOR WILL NEED TO PROVIDE COPIES OF THE APPROVED "RED-STAMPED" SITE DEVELOPMENT DRAWINGS AND COPIES OF THE WATER/WASTEWATER TAP RECEIPTS (PROVIDED BY OWNER) TO OBTAIN THE UTILITY PERMIT.

NOTE:

THE INFORMATION SHOWN ON THESE DRAWINGS INDICATING TYPE AND LOCATION OF UNDERGROUND, SURFACE AND AERIAL UTILITIES IS NOT GUARANTEED TO BE EXACT OR COMPLETE. THE CONTRACTOR IS RESPONSIBLE FOR DETERMINING THE EXACT TYPE AND LOCATION OF ALL UTILITIES AFFECTED BY CONSTRUCTION FOR THIS PROJECT IN ORDER TO AVOID DAMAGING THOSE UTILITIES. THE CONTRACTOR SHALL IMMEDIATELY ARRANGE FOR REPAIR AND RESTORATION OF CONTRACTOR-DAMAGED UTILITIES AND THE CONTRACTOR SHALL PAY FOR SUCH REPAIRS. CONTRACTOR SHALL POTHOLE UTILITIES IN ADVANCE OF CONSTRUCTION TO VERIFY THAT LOCATIONS AND DEPTHS DO NOT CONFLICT WITH CONSTRUCTION. POTHOLING OPERATION AND POTHOLE PAVEMENT REPAIR SHALL BE SUBSIDIARY TO THE CONTRACT. CONTRACTOR SHALL IMMEDIATELY NOTIFY UTILITY AND OWNER'S REPRESENTATIVE OF ANY APPARENT CONFLICTS. CONTRACTOR SHALL COORDINATE WITH UTILITY AND OWNER'S REPRESENTATIVE TO ACHIEVE A PROMPT RESOLUTION TO ANY CONFLICTS.

90% CONSTRUCTION DOCUMENTS

IF THIS SHEET IS NOT 36" X 24", IT IS A REDUCED PRINT. Sep 20, 2016 - 4:37pm Drawing name: J:\1139-Onion Creek Fire EMS\00-DRAWINGS\PERMIT\1139--C-WWW PLAN.dwg

STATE OF TEXAS — JOHN R. KING — 59429 — LICENSED PROFESSIONAL ENGINEER — 9/20/2016

CHAN & PARTNERS CONSULTING CIVIL ENGINEERS
CHAN & PARTNERS ENGINEERING, LLC
4319 JAMES CASEY STREET, #300
AUSTIN, TEXAS 78745
512-469-8195 (PH) ♦ 512-469-9811 (FAX)
E-mail: info@chanpartners.com
WWW.CHANPARTNERS.COM
TEXAS REGISTRATION NO. F-10813

AUSTIN ONION CREEK FIRE & EMS STATION
11112 OLD SAN ANTONIO ROAD
AUSTIN, TEXAS 78748

CITY OF AUSTIN — ACRE FOUNDED

REVISIONS

DATE	9/20/2016
DRAWN BY	CD
CHECKED BY	JRK
PROJECT NO.	214106.00

WATER & WASTEWATER PROFILES

C6.1

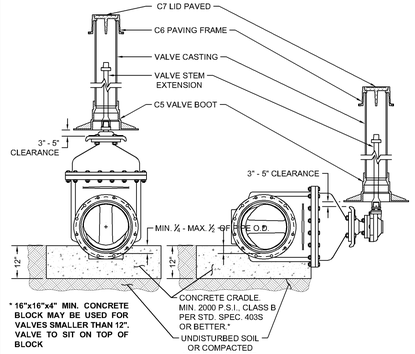

VERTICAL VALVE

HORIZONTAL VALVE
ONLY TO BE USED WHEN CALLED OUT ON THE DRAWINGS.

NOTES:
1. WELD SOCKET 2½" x 2" DEEP TO 1" SCH. 40 CARBON STEEL ROUND STEM EXTENSION, FITTED ON OPERATING NUT. [SCH. 80 FOR LENGTHS OVER 10'.]
2. VALVE CASTING SHALL BE 6" DI PIPE WITH BELL OR COLLAR CENTERED OVER VALVE BOOT.
3. NUT AT TOP OF VALVE EXTENSION ROD SHALL BE SQUARE 2" LONG WELDED TO TOP OF ROD.
4. VALVE STEM EXTENSIONS ARE REQUIRED ON ALL VALVES THAT EXCEED 3' DEEP FROM FINISHED GRADE. VALVE EXTENSIONS SHALL BE PLACED SUCH THAT THE EXTENSION NUT IS BETWEEN 12" AND 18" FROM FINISHED GRADE.

RECLAIMED WATER: ALL RECLAIMED PVC PIPE SHALL BE MANUFACTURED PURPLE PIPE. HDPE PIPE SHALL BE MANUFACTURED WITH PURPLE STRIPES. ALL OTHER PIPE AND APPURTENANCES SHALL BE MANUFACTURED PURPLE IF AVAILABLE. ALL PIPE AND FITTINGS THAT ARE NOT AVAILABLE FROM THE MANUFACTURER IN PURPLE SHALL BE PAINTED PURPLE PER SPL WW-3C. ALL BURIED DI AND CI PIPE AND FITTINGS SHALL ALSO BE WRAPPED IN PURPLE POLYETHYLENE PER SPL WW-27D. ALL COVERS SHALL HAVE **"RECLAIMED WATER"** CAST INTO THEM.

CITY OF AUSTIN AUSTIN WATER	TYPICAL GATE VALVE 4" - 16"	
RECORD COPY SIGNED BY KATHI L FLOWERS *05/18/2016* ADOPTED	THE ARCHITECT/ENGINEER ASSUMES RESPONSIBILITY FOR APPROPRIATE USE OF THIS STANDARD.	STANDARD NO. 511-AW-01 1 OF 4

1 / C6.2

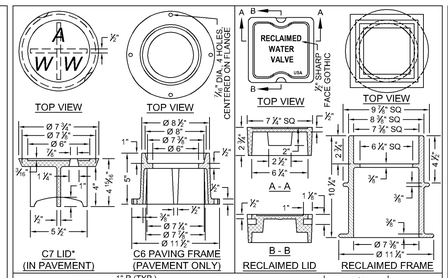

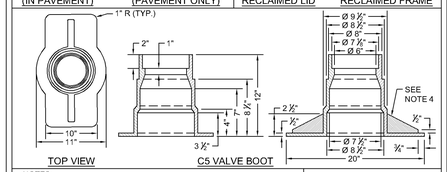

NOTES:
1. MATERIAL SHALL BE GRAY CAST IRON, ASTM A48, GRADE 30B.
2. THE MANUFACTURER'S IDENTIFICATION AND CASTING NUMBER AND THE COUNTRY WHERE CAST, SHALL BE DISTINCTLY CAST ONTO EACH LID, FRAME, COLLAR AND BASE.
3. DRAFT AND SHRINKAGE ALLOWANCE SHALL BE IN ACCORDANCE WITH NORMAL FOUNDRY PRACTICE.
4. CASTING FINISH BY MANUFACTURER SHALL INCLUDE REMOVAL OF FINS AND FLASHING, AND PAINT WITH BLACK ASPHALT COATING.

WEIGHTS:
C7 LID: 13 LBS
RECLAIMED LID: 15 LBS
C6 FRAME: 23 LBS
RECLAIMED FRAME: 33 LBS
C5 BASE: 78 LBS

* LETTERING SHALL BE 1½" 2 PICK BAR SLOTS REQUIRED

CITY OF AUSTIN AUSTIN WATER	TYPICAL GATE VALVE 4" - 16"	
RECORD COPY SIGNED BY KATHI L FLOWERS *05/18/2016* ADOPTED	THE ARCHITECT/ENGINEER ASSUMES RESPONSIBILITY FOR APPROPRIATE USE OF THIS STANDARD.	STANDARD NO. 511-AW-01 2 OF 4

1 / C6.2

FULL DEPTH CONCRETE & UNPAVED AREAS

CONCRETE & H.M.A.C.

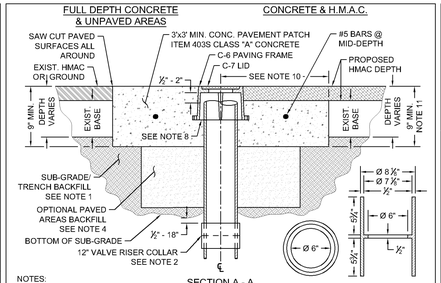

NOTES:
1. SUB-GRADE/TRENCH BACKFILL SHALL BE COMPACTED AS PER ITEM 201S, SUB-GRADE PREPARATION.
2. TO ADJUST VALVE CASTINGS TO FINAL GRADE, REMOVE RISER PIPE BELOW SUB-GRADE AND INSTALL APPROPRIATE LENGTH OF NEW RISER PIPE TO ACHIEVE FINAL GRADE. CONNECT THE TWO PIECES OF RISER PIPE WITH A 6" COLLAR MIN. 12" LENGTH APPROXIMATELY CENTERED ON THE JOINT WITH THE TOP OF SLEEVE LOCATED ½" - 18" BELOW SUB-GRADE. THE INSIDE "LIP" OF COLLAR TO BE PAINTED WITH FLUORESCENT WHITE PAINT OR COVERED WITH FLUORESCENT WHITE TAPE. ALTERNATE: FOR OPTIONAL SINGLE PIECE RISER INSTALLATION SEE SHEET 4 OF 4.
3. CLEAN VALVE BOX OF ALL DEBRIS DOWN TO THE NUT OF THE VALVE; NUT SHALL OPERATE WITH NO OBSTRUCTION.
4. WHERE CASTINGS TO BE REMOVED REQUIRE EXCAVATION GREATER THAN 20" DEEP, CONTRACTOR MAY ELECT TO FILL EXCAVATION WITH CONTROLLED LOW STRENGTH MATERIAL (SPEC. ITEM 402S) TO THE UNDERSIDE OF THE CONCRETE. PAVEMENT PATCH IN LIEU OF COMPACTED BACKFILL.
5. REINFORCING STEEL SHALL MEET SPEC. ITEM 406S.7.
6. NO MORE THAN 2 SECTIONS OF PIPE SHALL BE USED FROM VALVE TO FINAL GRADE.
7. BELL AND SPIGOT IS ACCEPTABLE FOR DEPTH OVER 18'.

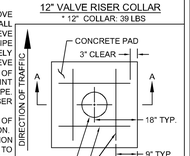

CITY OF AUSTIN AUSTIN WATER	TYPICAL GATE VALVE 4" - 16"	
RECORD COPY SIGNED BY KATHI L FLOWERS *05/18/2016* ADOPTED	THE ARCHITECT/ENGINEER ASSUMES RESPONSIBILITY FOR APPROPRIATE USE OF THIS STANDARD.	STANDARD NO. 511-AW-01 3 OF 4

1 / C6.2

NOTES (CON'T):
8. PAVING FRAME SHALL BE FLUSH WITH THE CONC. PAD AND PLACED ½" - 2" ABOVE RISER PIPE (FRAME SHALL NOT REST ON RISER.)
9. IN UNPAVED AREAS, INSTALL ONE DELINEATOR STAKE IMMEDIATELY ADJACENT TO THE EDGE OF THE CONCRETE PAD. DELINEATOR SHALL BE BLUE FOR POTABLE WATER AND PURPLE FOR RECLAIMED WATER AND SHALL EXTEND AT LEAST 60" ABOVE GROUND. DELINEATORS SHALL HAVE 2" WIDE, WHITE IN COLOR, TYPE I REFLECTIVE TAPE MOUNTED DIAGONALLY AT 12" SPACING ON BOTH SIDES.
10. VALVE SHALL TYPICALLY BE CENTERED IN CONCRETE DIAMOND BUT MAY BE OFFSET WITH A MIN. OF 12" FROM CENTER OF VALVE LID TO EDGE OF CONCRETE IN ALL DIRECTIONS.
11. MIN. TOTAL DEPTH OF ASPHALT PLUS CONC. IS 9" AND MIN. DEPTH OF CONC. PAD SHALL BE 5"

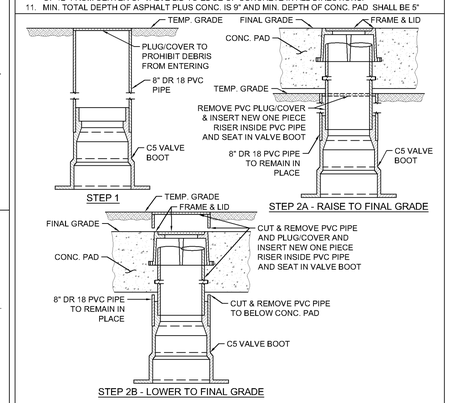

CITY OF AUSTIN AUSTIN WATER	TYPICAL GATE VALVE 4" - 16"	
RECORD COPY SIGNED BY KATHI L FLOWERS *05/18/2016* ADOPTED	THE ARCHITECT/ENGINEER ASSUMES RESPONSIBILITY FOR APPROPRIATE USE OF THIS STANDARD.	STANDARD NO. 511-AW-01 4 OF 4

1 / C6.2

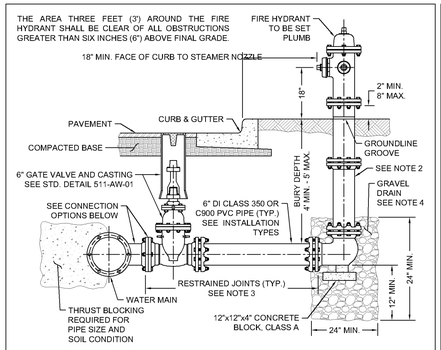

CONNECTION TO MAIN

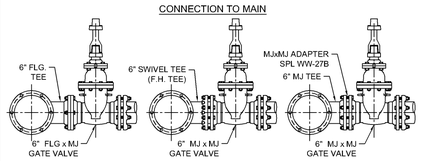

CITY OF AUSTIN AUSTIN WATER	FIRE HYDRANT	
RECORD COPY SIGNED BY KATHI L FLOWERS *05/18/2016* ADOPTED	THE ARCHITECT/ENGINEER ASSUMES RESPONSIBILITY FOR APPROPRIATE USE OF THIS STANDARD.	STANDARD NO. 511-AW-02 1 OF 3

2 / C6.2

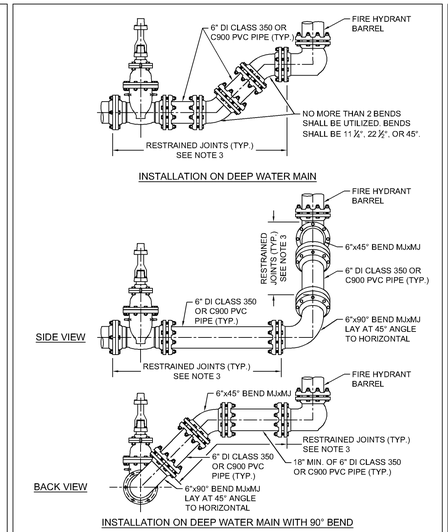

CITY OF AUSTIN AUSTIN WATER	FIRE HYDRANT	
RECORD COPY SIGNED BY KATHI L FLOWERS *05/18/2016* ADOPTED	THE ARCHITECT/ENGINEER ASSUMES RESPONSIBILITY FOR APPROPRIATE USE OF THIS STANDARD.	STANDARD NO. 511-AW-02 2 OF 3

2 / C6.2

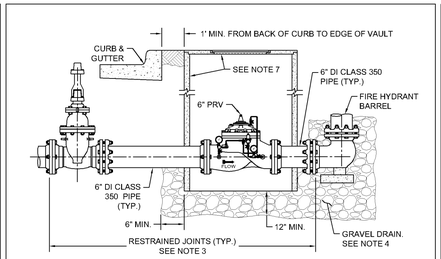

NOTES: APPLICABLE TO ALL INSTALLATION TYPES.
1. NO PART OF A HYDRANT OR ITS NOZZLE CAPS SHALL BE WITHIN 6" OF ANY SIDEWALK OR PEDESTRIAN RAMP. ANY FIRE HYDRANT PLACED NEAR A STREET CORNER SHALL BE LOCATED OUTSIDE THE CURVE RADIUS AND A MINIMUM OF 4' FROM RAMPS.
2. ONE BARREL EXTENSION NOT EXCEEDING 2' LENGTH MAY BE INSTALLED DIRECTLY BELOW THE FIRE HYDRANT IN ORDER TO MEET THE REQUIRED BURY DEPTH OF 4' - 5'. BREAK AWAY BOLTS (SHOE TYPES) SHALL BE PROPERLY SPACED AND PLACED.
3. FIRE LINE SHALL HAVE ALL JOINTS RESTRAINED FROM MAIN TO FIRE HYDRANT. JOINTS SHOWN MAY VARY. SEE SPL WW-27, WW-27A, AND WW-27B FOR RESTRAINT OPTIONS.
4. BELOW EACH HYDRANT, A DRAINAGE PIT 24" IN DIAMETER AND 12" DEEP SHALL BE EXCAVATED AND FILLED WITH COMPACTED COARSE GRAVEL OR BROKEN STONE MIXED WITH COARSE SAND UNDER AND AROUND THE BOWL OF THE HYDRANT, AND TO A LEVEL 12" ABOVE THE HYDRANT DRAIN OPENING (SEE STD. SPEC. 510). THE HYDRANT DRAINAGE PIT SHALL NOT BE CONNECTED TO A SANITARY SEWER. THE DRAIN GRAVEL SHALL BE COVERED WITH FILTER FABRIC PER STD. SPEC. 620S. FOR PRV, GRAVEL SHALL EXTEND UNDER THE PRV VAULT 12" MIN. DEPTH UNDER THE VAULT AND 6" MIN. BEYOND VAULT.
5. FOR FIRE HYDRANT LEADS AT A MAIN OUTLET LARGER THAN 6" DIAMETER, OUTLET SHALL BE FLANGED AND A FLG x FLG REDUCER SHALL BE INSTALLED DIRECTLY ON THE OUTLET.
6. WRAP 8 MIL POLY-FILM WRAP ON ALL BURIED PIPE AND FITTINGS.
7. FOR HYDRANTS WITH PRV, CLASS III RCP VAULT 60" MIN. I.D. WITH REINFORCED PRECAST CONCRETE LID (AASHTO H-20 LOADING) WITH COA FRAME AND 32" COVER WITH LETTERING MODIFIED FOR WATER.

CITY OF AUSTIN AUSTIN WATER	FIRE HYDRANT	
RECORD COPY SIGNED BY KATHI L FLOWERS *05/18/2016* ADOPTED	THE ARCHITECT/ENGINEER ASSUMES RESPONSIBILITY FOR APPROPRIATE USE OF THIS STANDARD.	STANDARD NO. 511-AW-02 3 OF 3

2 / C6.2

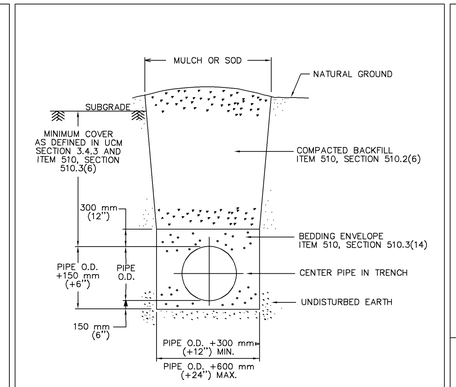

REFERENCES:
1. UTILITY CRITERIA MANUAL SECTION 3.4.3, "FINAL DESIGN"
2. STANDARD SPECIFICATION MANUAL ITEM 510,
   SECTION 510.2(6), "SELECT BACKFILL OR BORROW";
   SECTION 510.3(6), "TRENCH DEPTH AND DEPTH OF COVER";
   SECTION 510.3(14), "PIPE BEDDING ENVELOPE"

CITY OF AUSTIN DEPARTMENT OF PUBLIC WORKS	TYPICAL TRENCH DETAIL WITH UNFINISHED SURFACE	
RECORD COPY SIGNED BY BILL GARDNER 03/13/06 ADOPTED	THE ARCHITECT/ENGINEER ASSUMES RESPONSIBILITY FOR APPROPRIATE USE OF THIS STANDARD.	STANDARD NO. 510S-5

3 / C6.2

THIS DETAIL FOR USE ONLY ON CITY OF AUSTIN C.I.P. PROJECTS.

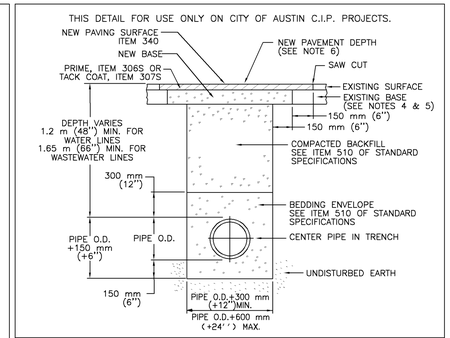

NOTES:
1. THE EXISTING PAVING SURFACE SHALL BE SAW CUT IN A STRAIGHT LINE A MINIMUM OF 300 mm (12") WIDER THAN THE UNDISTURBED SIDES OF THE TRENCH, SYMETRICAL ABOUT THE CENTER LINE OF THE EXCAVATION.
2. ANY CONCRETE PAVING SHALL BE SAW CUT 150 mm (6") WIDER THAN UNDISTURBED SIDES OF EXCAVATION.
3. IF EXCAVATION AREA IS OPEN FOR TEMPORARY PUBLIC USE, THE SURFACE SHALL BE MAINTAINED LEVEL WITH ADJACENT RIDING SURFACE WITH COLD MIX OR TEMPORARY HOT MIX ASPHALTIC CONCRETE.
4. ROAD BASE AND SURFACE MATERIALS IN THE TRENCH CUT SHALL BE REPLACED IN KIND OF EQUAL THICKNESS, OR MINIMUM BASE THICKNESS OF 250 mm (10"), WHICHEVER IS GREATER.
5. ALL DAMAGED AREAS OF PAVEMENT OUTSIDE THE TRENCH CUT SHALL BE REMOVED AND REPLACED WITH MINIMUM OF 200 mm (8") OF BASE OR MATCH EXISTING THICKNESS, WHICHEVER IS GREATER.
6. SURFACE PAVEMENT SHALL BE OF THE KIND AND THICKNESS AS EXISTING, OR MINIMUM 50 mm (2"), WHICHEVER IS GREATER.

CITY OF AUSTIN WATER AND WASTEWATER UTILITY	TYPICAL TRENCH WITH PAVED SURFACE	
RECORD COPY SIGNED BY KATHI L. FLOWERS *8/19/02* ADOPTED	THE ARCHITECT/ENGINEER ASSUMES RESPONSIBILITY FOR APPROPRIATE USE OF THIS STANDARD.	STANDARD NO. 510S-3

4 / C6.2

90% CONSTRUCTION DOCUMENTS

IF THIS SHEET IS NOT 36" X 24", IT IS A REDUCED PRINT.

Sep 22, 2016 - 3:37pm

Drawing name: J:\1139-Onion Creek Fire EMS\00-DRAWINGS\PERMIT\1139--C-DETAILS.dwg

STATE OF TEXAS
JOHN R. KING
59429
LICENSED PROFESSIONAL ENGINEER
9/22/2016

CHAN & PARTNERS
CONSULTING CIVIL ENGINEERS

CHAN & PARTNERS ENGINEERING, LLC
4319 JAMES CASEY STREET, #300
AUSTIN, TEXAS 78745
512-469-8195 (PH) ♦ 512-490-3811 (FAX)
E-mail: info@chanpartners.com
WWW.CHANPARTNERS.COM
TEXAS REGISTRATION NO. F-13013

AUSTIN ONION CREEK
FIRE & EMS STATION
11112 OLD SAN ANTONIO ROAD
AUSTIN, TEXAS 78748

REVISIONS

DATE	9/22/2016
DRAWN BY	CD
CHECKED BY	JRK
PROJECT NO.	214106.00

WATER & WASTEWATER DETAILS
SHEET 1 OF 2

C6.2

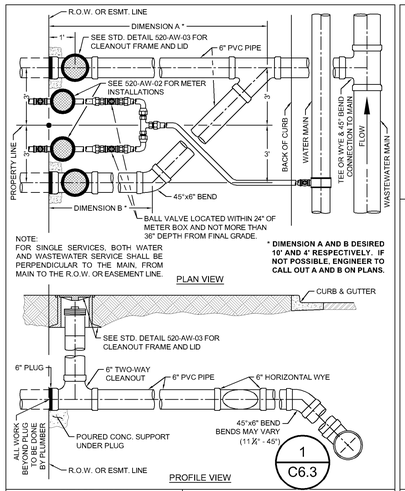

CITY OF AUSTIN AUSTIN WATER		WATER SERVICE & WASTEWATER SERVICE CONNECTION	
RECORD COPY SIGNED BY KATHI L FLOWERS	05/18/2016 ADOPTED	THE ARCHITECT/ENGINEER ASSUMES RESPONSIBILITY FOR APPROPRIATE USE OF THIS STANDARD.	STANDARD NO. 520-AW-01 1 OF 4

NOTES:

1. DURING SUBDIVISION CONSTRUCTION UTILITY CONTRACTOR INSTALLS WASTEWATER CONNECTION TO MAIN, 6" STUB, HORIZONTAL WYE FOR DOUBLE SERVICES, 6" SERVICE BRANCH WITH 2-WAY-CLEANOUT(S) AND RISER, FRAME, AND COVER CLEANOUT(S) PLUGGED AT PROPERTY LINE OR EASEMENT LINE END. ALL WASTEWATER PIPING SHALL HAVE ELASTOMERIC GASKET TYPE JOINTS AND SLOPE DOWNWARD TO MAIN 1% MIN. TO 45° MAX. DEPTH OF SERVICE AT PROPERTY LINE WILL BE SHOWN ON PLANS BY ENGINEER IF GREATER THAN 4', OTHERWISE THE INSTALLED DEPTH WILL BE 4' MIN. AND 6' MAX. AT PROPERTY LINE. IF WASTEWATER SERVICE LINE TO MAIN REQUIRES DEFLECTION EXCEEDING 45°, SEE SHEET 3 OF 4. UTILITY CONTRACTOR ALSO INSTALLS WATER CONNECTION TO MAIN WATER PIPE, FITTINGS AND VALVES INCLUDING STOP VALVE. REFER TO DETAIL 520-AW-02.
2. PIPING AND TUBING IN STREET RIGHT-OF-WAY AND IN EASEMENT AREA SHALL BE BEDDED IN GRANULAR MATERIALS AS REQUIRED BY CITY OF AUSTIN STANDARD SPECIFICATION 510.3 (14); MATERIALS SHALL BE AS SPECIFIED IN 510.2 (2)(A) AND (3)(B); BACKFILL ABOVE THE GRANULAR BEDDING SHALL BE AS REQUIRED BY SECTION 510.3 (25). SERVICE LINES IN THESE AREAS SHALL HAVE A MIN. COVER BELOW FINAL STREET GRADE OF 42".
3. NO METER BOX, BALL VALVE OR CLEAN-OUT SHALL BE SET IN SIDEWALK OR DRIVEWAY AREA AND SHALL BE A MINIMUM OF 9' FROM ALL PAVED AREAS.
4. PLUMBER SHALL REMOVE PLUG AND CONNECT TO 2-WAY CLEANOUT. NO CONNECTION TO CLEANOUT STACK IS ALLOWED.

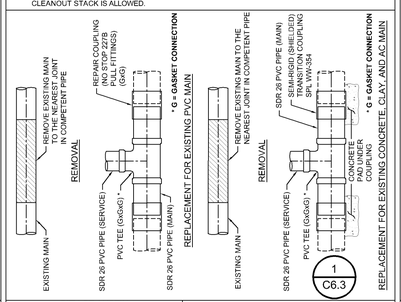

CITY OF AUSTIN AUSTIN WATER		WATER SERVICE & WASTEWATER SERVICE CONNECTION	
RECORD COPY SIGNED BY KATHI L FLOWERS	05/18/2016 ADOPTED	THE ARCHITECT/ENGINEER ASSUMES RESPONSIBILITY FOR APPROPRIATE USE OF THIS STANDARD.	STANDARD NO. 520-AW-01 2 OF 4

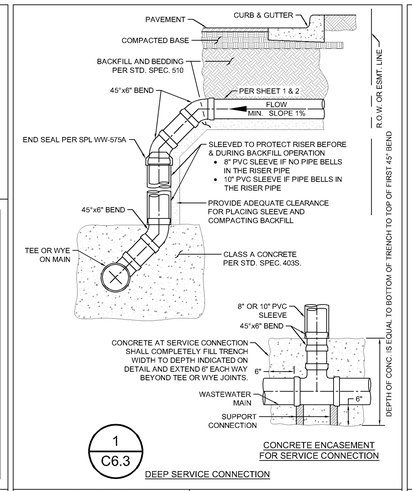

CITY OF AUSTIN AUSTIN WATER		WATER SERVICE & WASTEWATER SERVICE CONNECTION	
RECORD COPY SIGNED BY KATHI L FLOWERS	05/18/2016 ADOPTED	THE ARCHITECT/ENGINEER ASSUMES RESPONSIBILITY FOR APPROPRIATE USE OF THIS STANDARD.	STANDARD NO. 520-AW-01 3 OF 4

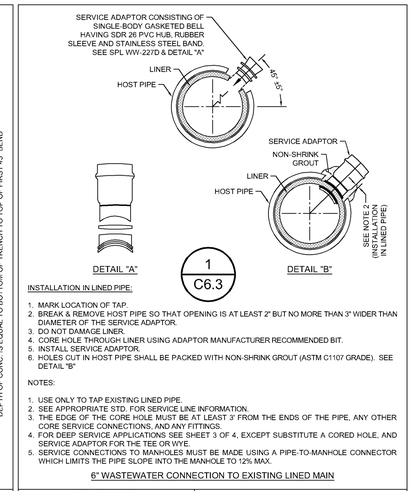

INSTALLATION IN LINED PIPE:

1. MARK LOCATION OF TAP.
2. BREAK & REMOVE HOST PIPE SO THAT OPENING IS AT LEAST 2" BUT NO MORE THAN 3" WIDER THAN DIAMETER OF THE SERVICE ADAPTOR.
3. DO NOT DAMAGE LINER.
4. CORE HOLE THROUGH LINER USING ADAPTOR MANUFACTURER RECOMMENDED BIT.
5. INSTALL SERVICE ADAPTOR.
6. HOLES CUT IN HOST PIPE SHALL BE PACKED WITH NON-SHRINK GROUT (ASTM C1107 GRADE). SEE DETAIL "B"

NOTES:

1. USE ONLY TO TAP EXISTING LINED PIPE.
2. SEE APPROPRIATE STD. FOR SERVICE LINE INFORMATION.
3. THE EDGE OF THE CORE HOLE MUST BE AT LEAST 3' FROM THE ENDS OF THE PIPE, ANY OTHER CORE SERVICE CONNECTIONS, AND ANY FITTINGS.
4. FOR DEEP SERVICE APPLICATIONS SEE SHEET 3 OF 4, EXCEPT SUBSTITUTE A CORED HOLE, AND SERVICE ADAPTOR FOR THE TEE OR WYE.
5. SERVICE CONNECTIONS TO MANHOLES MUST BE MADE USING A PIPE-TO-MANHOLE CONNECTOR WHICH LIMITS THE PIPE SLOPE INTO THE MANHOLE TO 12% MAX.

6" WASTEWATER CONNECTION TO EXISTING LINED MAIN

CITY OF AUSTIN AUSTIN WATER		WATER SERVICE & WASTEWATER SERVICE CONNECTION	
RECORD COPY SIGNED BY KATHI L FLOWERS	05/18/2016 ADOPTED	THE ARCHITECT/ENGINEER ASSUMES RESPONSIBILITY FOR APPROPRIATE USE OF THIS STANDARD.	STANDARD NO. 520-AW-01 4 OF 4

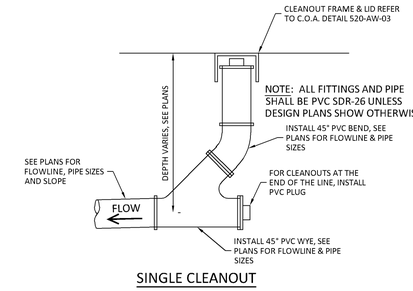

5 / C6.3 CLEANOUT DETAIL

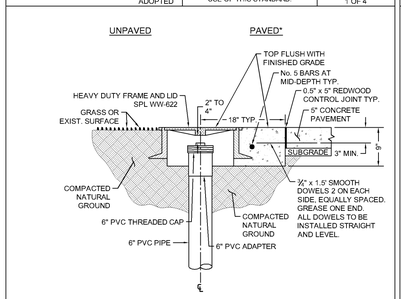

*** CLEAN-OUTS MAY NOT BE PLACED IN PAVED AREAS - I.E. SIDEWALKS, DRIVEWAYS, OR PARKING LOTS, AND MUST BE LOCATED A MINIMUM OF 6" FROM ALL PAVED AREAS.**

NOTES:

1. SUB-GRADE SHALL BE COMPACTED AS PER STD. SPEC. 201S, SUB-GRADE PREPARATION.
2. REINFORCING STEEL SHALL MEET ITEM 406S, REINFORCING STEEL.
3. CONCRETE SHALL MEET ITEM 403S CLASS "A".
4. ALL PVC SHALL BE SDR 26.

CLEAN-OUT FRAME AND LID

2 / C6.3

CITY OF AUSTIN AUSTIN WATER		WASTEWATER CLEAN-OUT FRAME AND LID	
RECORD COPY SIGNED BY KATHI L FLOWERS	05/18/2016 DATE	THE ARCHITECT/ENGINEER ASSUMES RESPONSIBILITY FOR APPROPRIATE USE OF THIS STANDARD.	STANDARD NO. 520-AW-03 1 OF 2

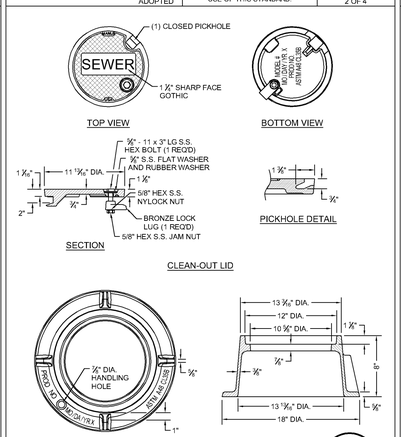

CITY OF AUSTIN AUSTIN WATER		WASTEWATER CLEAN-OUT FRAME AND LID	
RECORD COPY SIGNED BY KATHI L FLOWERS	05/18/2016 DATE	THE ARCHITECT/ENGINEER ASSUMES RESPONSIBILITY FOR APPROPRIATE USE OF THIS STANDARD.	STANDARD NO. 520-AW-03 2 OF 2

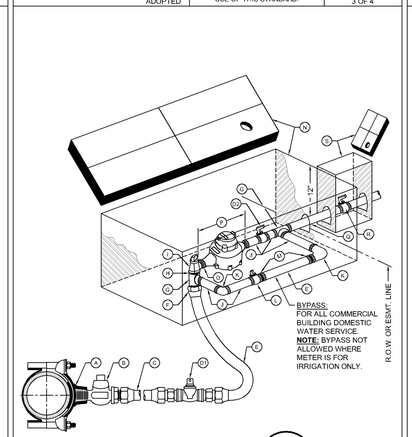

CITY OF AUSTIN AUSTIN WATER		1 1/2" - 2" METER INSTALLATION SHOWING OPTIONAL BYPASS	
RECORD COPY SIGNED BY KATHI L FLOWERS	05/18/2016 ADOPTED	THE ARCHITECT/ENGINEER ASSUMES RESPONSIBILITY FOR APPROPRIATE USE OF THIS STANDARD.	STANDARD NO. 520-AW-04 1 OF 2

MATERIALS LIST:

A. 2" SERVICE CLAMP
B. 2" CORPORATION STOP MALE THREAD INLET BY COMPRESSION OUTLET
C. 2" COPPER WATER SERVICE TUBING EXTENDED BEYOND PAVEMENT
D1. 2" BALL VALVE, SPL WW-275
D2. 2" BALL VALVE, SPL WW-275
E. 2" COPPER SERVICE TUBING
F. 2" BRASS COUPLING - COMPRESSION TO MALE IPT
G. 2" BRASS TEE
H. 2" BRASS CLOSE-NIPPLE
I. 2" ANGLE METER STOP; SERVICE TUBING INLET x FLANGED OUTLET
J. 2" BRASS NIPPLE
K. 2" BRASS ELBOW
L. 2" LOCKABLE CURB STOP - FEMALE IPT INLET BY COMPRESSION OUTLET
M. 2" BRASS COUPLING - SERVICE TUBING TO MALE IPT
N. RECTANGULAR METER BOX AND COVER, SPL WW-145A
O. BRASS ADAPTER (2" x 1 1/2") FOR 1 1/2" METER ONLY
P. WATER METER, LENGTH 13", (PURCHASED FROM AUSTIN WATER)
Q. 2" COPPER SERVICE TUBING (PRIVATE PLUMBING PER CODE)
R. CUSTOMER CUT-OFF VALVE
S. CUSTOMER VALVE BOX AND LID

NOTES:

1. SERVICE CLAMP SHALL BE WRAPPED COMPLETELY WITH 8 MIL POLYETHYLENE FILM.
2. BRANCH CONNECTIONS AND ALL ANGLE METER STOPS MUST BE INSTALLED PRIOR TO ANY METER INSTALLATION.
3. TOP OF BOXES SHOULD BE 1" ABOVE GROUND.
4. PIPING AND TUBING IN STREET RIGHT-OF-WAY SHALL BE BEDDED IN GRANULAR MATERIALS AS REQUIRED BY SECTION 510.3 (14) OF THE CITY OF AUSTIN STANDARD SPECIFICATIONS; BACKFILL ABOVE GRANULAR BEDDING AS REQUIRED BY SECTION 510.3 (25).
5. BOX MUST BE BEHIND CURB NEXT TO PROPERTY LINE OR EASEMENT AND OUT OF VEHICULAR TRAFFIC AREA AND SIDEWALK.
6. BALL VALVE "D1" SHALL NOT BE LOCATED UNDER SIDEWALK, CURB, OR PAVEMENT, AND NOT BE LOCATED MORE THAN 24" HORIZONTALLY FROM METER BOX OR 36" BELOW FINAL GRADE.
7. COPPER SERVICE SHALL BE COPPER TUBING SIZE ANNEALED SEAMLESS TYPE "K" MEETING ASTM B88 WITH NO SWEAT OR SOLDERED JOINTS.

3 / C6.3

RECLAIMED WATER:

FOR RECLAIMED WATER SERVICES AND METERS, ALL RECLAIMED TUBING SHALL BE MANUFACTURED PURPLE TUBING. ALL OTHER TUBING AND APPURTENANCES SHALL BE MANUFACTURED PURPLE IF AVAILABLE. ALL TUBING AND FITTINGS THAT ARE NOT AVAILABLE FROM THE MANUFACTURER IN PURPLE SHALL BE PAINTED PURPLE PER SPL WW-3C. ALL BURIED DI AND CI PIPE AND FITTINGS SHALL ALSO BE WRAPPED IN PURPLE POLYETHYLENE PER SPL WW-27D. ALL COVERS SHALL HAVE **"RECLAIMED WATER"** CAST INTO THEM.

CITY OF AUSTIN AUSTIN WATER		1 1/2" - 2" METER INSTALLATION SHOWING OPTIONAL BYPASS	
RECORD COPY SIGNED BY KATHI L FLOWERS	05/18/2016 ADOPTED	THE ARCHITECT/ENGINEER ASSUMES RESPONSIBILITY FOR APPROPRIATE USE OF THIS STANDARD.	STANDARD NO. 520-AW-04 2 OF 2

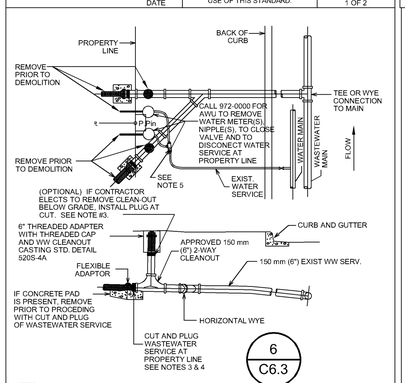

NOTES:

1. CONTRACTOR SHALL PROTECT EXISTING CLEAN-OUT FROM DAMAGE DURING CONSTRUCTION AND SHALL BE RESPONSIBLE FOR REPAIR OR REPLACEMENT IF DAMAGED. CONTRACTOR HAS THE OPTION TO REMOVE CLEAN-OUT AND REPLACE WHEN SERVICE IS RE-ESTABLISHED.
2. DISCONNECTS MUST BE COMPLETE AND INSPECTED PRIOR TO COMMENCEMENT OF DEMOLITION.
3. PLUG SHALL BE LISTED ON SPL WW-227C. PVC PIPE MAY USE PVC PLISH ON CAP.
4. CONTRACTOR SHALL CALL 972-0000 TO REQUEST INSPECTION OF WASTEWATER CUT & PLUG THREE (3) BUSINESS DAYS PRIOR TO THE TIME THAT THE INSPECTION WILL BE NEEDED.
5. BALL VALVE SHALL NOT BE LOCATED UNDER CURB OR PAVEMENT, AND NOT BE LOCATED MORE THAN 24" HORIZONTALLY FROM METER BOX.

CITY OF AUSTIN AUSTIN WATER UTILITY		TEMPORARY CUT AND PLUG OF W/WW SERVICE LINES FOR DEMOLITION PERMIT	
RECORD COPY SIGNED BY KATHI L FLOWERS	06/01/10 ADOPTED	THE ARCHITECT/ENGINEER ASSUMES RESPONSIBILITY FOR APPROPRIATE USE OF THIS STANDARD.	STANDARD NO. 520S-2

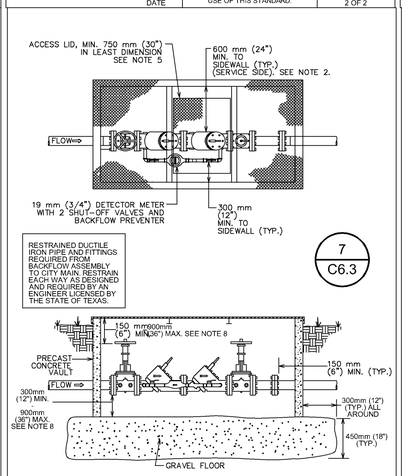

CITY OF AUSTIN WATER AND WASTEWATER UTILITY		STANDARD FIRE LINE INSTALLATION WITHOUT MASTER METER	
RECORD COPY SIGNED BY KATHI L FLOWERS	08/31/2011	THE ARCHITECT/ENGINEER ASSUMES RESPONSIBILITY FOR APPROPRIATE USE OF THIS STANDARD.	STANDARD NO. 520S-19C 1 OF 2

NOTES:

1. ALL BACKFLOW PREVENTION ASSEMBLIES SHALL HAVE LAB AND FIELD APPROVAL FROM THE UNIVERSITY OF SOUTHERN CALIFORNIA FOUNDATION FOR CROSS CONNECTION CONTROL AND HYDRAULIC RESEARCH.
2. ALL TEST PORTS SHALL BE DIRECTED UPWARD AND PLUGGED. TEST PORTS ARE LOCATED ON SERVICE SIDE. PLUGS SHALL BE NON-FERROUS.
3. BACKFLOW PREVENTION ASSEMBLIES SHALL BE INSTALLED IN THE UPRIGHT HORIZONTAL POSITION, UNLESS OTHERWISE APPROVED. BACKFLOW PREVENTION ASSEMBLIES SHALL NOT BE ROTATED ON THEIR AXES.
4. CLEARANCE SHALL BE AS INDICATED,AND IN THE STANDARD CROSS CONNECTION ORDINANCES AND UCM.
5. ACCESS OPENING MUST BE LARGE ENOUGH TO REMOVE LARGEST PORTION OF BACKFLOW PREVENTER, BUT NOT LESS THAN 750 mm (30") IN LEAST DIMENSION.
6. TEST AND MAINTENANCE REPORT SHALL BE RECEIVED BY AUSTIN WATER UTILITY'S SPECIAL SERVICE DIVISION WITHIN 5 DAYS AFTER BEING INSTALLED.
7. VAULT SHALL NOT BE INSTALLED IN TRAFFIC AREA.
8. VAULT DEPTH MAY NOT EXCEED 1.8m (72"), BOTTOM OF LID TO TOP OF FLOOR.
9. HAND WHEELS SHALL BE HORIZONTALLY LOCATED WITHIN 300mm (12") OF ACCESS OPENING.
10. FOR ACCESS DOORS SEE SPL WW-614 OR APPROVED EQUAL (H20 LOADING REQUIRED).
11. FOR VAULT SEE SPL WW-298 OR APPROVED EQUAL (H20 LOADING REQUIRED).
12. VAULT PIPE WALL VOIDS SHALL BE SEALED WITH NON-SHRINK GROUT OR SEALANT PER SPL WW-146A OR APPROVED EQUAL.
13. THE TOP OF THE METER VAULT SHALL BE AT AN ELEVATION SUCH THAT THE SURROUNDING GROUND SLOPES AWAY FROM THE VAULT. ADDITIONAL DRAINAGE CONSIDERATION SUCH AS CONNECTION OF VAULT TO STORM SEWER, LATERAL DRAIN LINES FROM GRAVEL BED OR OTHER MEANS SHALL BE REQUIRED IF CONDITIONS CAUSE WATER TO COLLECT IN VAULT.

7 / C6.3

CITY OF AUSTIN WATER AND WASTEWATER UTILITY		STANDARD FIRE LINE INSTALLATION WITHOUT MASTER METER	
RECORD COPY SIGNED BY KATHI L FLOWERS	08/31/2011	THE ARCHITECT/ENGINEER ASSUMES RESPONSIBILITY FOR APPROPRIATE USE OF THIS STANDARD.	STANDARD NO. 520S-19C 2 OF 2

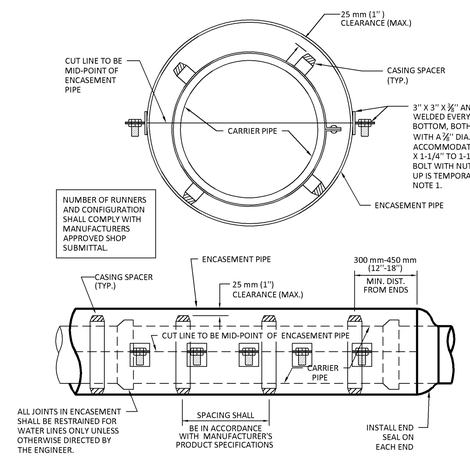

APPLICABLE REFERENCES

STANDARD SPECIFICATION: ITEM 510S.3 (19) W/WW STANDARD PRODUCTS LIST: SPLWW-575 FOR CASING SPACER AND SPLWW-575A FOR END SEAL.

NOTES:

1. THE TWO SEMI-CURCULAR PIPE SECTIONS SHALL BE JOINED BY A CONTINUOUS WELD FROM END TO END WITHOUT ANY TRACEABLE VOIDS.

2. BACKFILL UNDER THE ENCASEMENT PIPE W/ CONTROLLED LOW STRENGTH MATERIAL PER STANDARD SPECIFICATION ITEM NO. 402S.

4 / C6.3 SPLIT ENCASEMENT WITH CASING SPACERS DETAIL

90% CONSTRUCTION DOCUMENTS

STATE OF TEXAS
JOHN R. KING
59429
LICENSED PROFESSIONAL ENGINEER
9/22/2016

CHAN & PARTNERS CONSULTING CIVIL ENGINEERS

CHAN & PARTNERS ENGINEERING, LLC
4319 JAMES CASEY STREET, #300
AUSTIN, TEXAS 78745
512-469-8195 (PH) ♦ 512-469-9811 (FAX)
E-mail: info@chanpartners.com
WWW.CHANPARTNERS.COM
TEXAS REGISTRATION NO. F-10813

AUSTIN ONION CREEK FIRE & EMS STATION
11112 OLD SAN ANTONIO ROAD
AUSTIN, TEXAS 78748

CITY OF AUSTIN SEAL FOUNDED

REVISIONS

DATE	9/22/2016
DRAWN BY	CD
CHECKED BY	JRK
PROJECT NO.	214106.00

WATER & WASTEWATER DETAILS SHEET 2 OF 2

C6.3

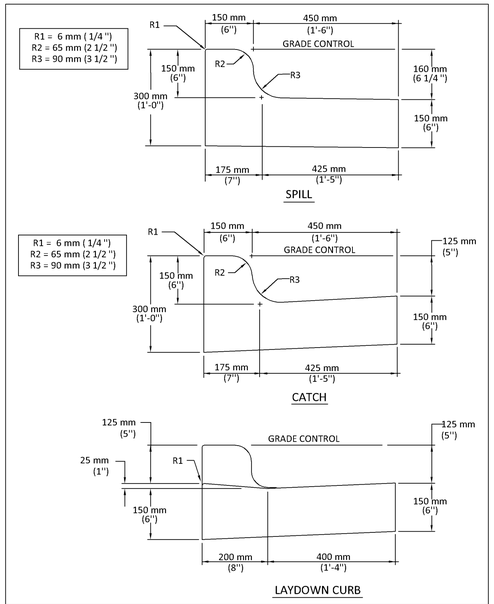

CITY OF AUSTIN DEPARTMENT OF PUBLIC WORKS AND TRANSPORTATION		CURB AND GUTTER SECTION	
RECORD COPY SIGNED BY LINO RIVERA	9/29/99 ADOPTED	THE ARCHITECT/ENGINEER ASSUMES RESPONSIBILITY FOR APPROPRIATE USE OF THIS STANDARD.	STANDARD NO. 430S-1

1 / C7.0

NOTE: THIS DETAIL APPLIES ONLY WITH HMAC PAVEMENT.

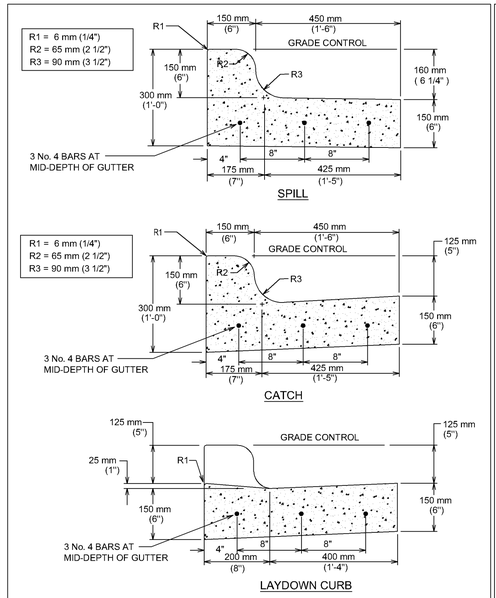

CITY OF AUSTIN DEPARTMENT OF PUBLIC WORKS		REINFORCED CURB AND GUTTER SECTION	
RECORD COPY SIGNED BY SAM ANGOORI	01/04/10 ADOPTED	THE ARCHITECT/ENGINEER ASSUMES RESPONSIBILITY FOR APPROPRIATE USE OF THIS STANDARD.	STANDARD NO. 430S-2

2 / C7.0

NOTE: THIS DETAIL APPLIES ONLY WITH HMAC PAVEMENT.

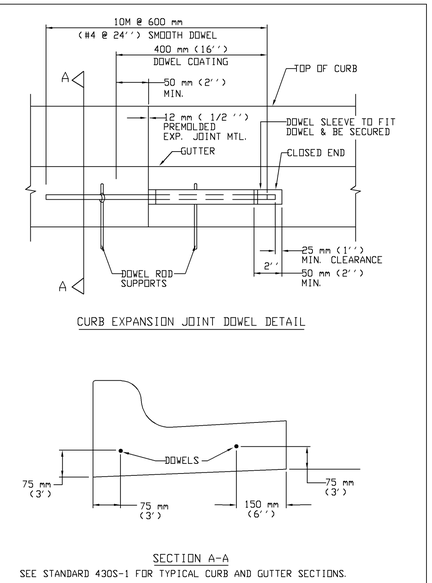

SEE STANDARD 430S-1 FOR TYPICAL CURB AND GUTTER SECTIONS.

CITY OF AUSTIN DEPARTMENT OF PUBLIC WORKS AND TRANSPORTATION		CURB EXPANSION JOINT DOWEL DETAIL	
RECORD COPY SIGNED BY LINO RIVERA	9/29/99 ADOPTED	THE ARCHITECT/ENGINEER ASSUMES RESPONSIBILITY FOR APPROPRIATE USE OF THIS STANDARD.	STANDARD NO. 430S-3

3 / C7.0

NOTE: THIS DETAIL APPLIES ONLY WITH HMAC PAVEMENT.

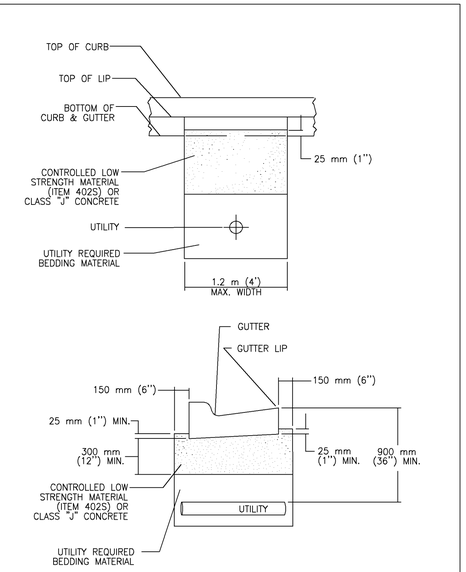

CITY OF AUSTIN DEPARTMENT OF PUBLIC WORKS AND TRANSPORTATION		CONCRETE BACKFILL UNDER CURB & GUTTER	
RECORD COPY SIGNED BY LINO RIVERA	9/29/99 ADOPTED	THE ARCHITECT/ENGINEER ASSUMES RESPONSIBILITY FOR APPROPRIATE USE OF THIS STANDARD.	STANDARD NO. 430S-4

4 / C7.0

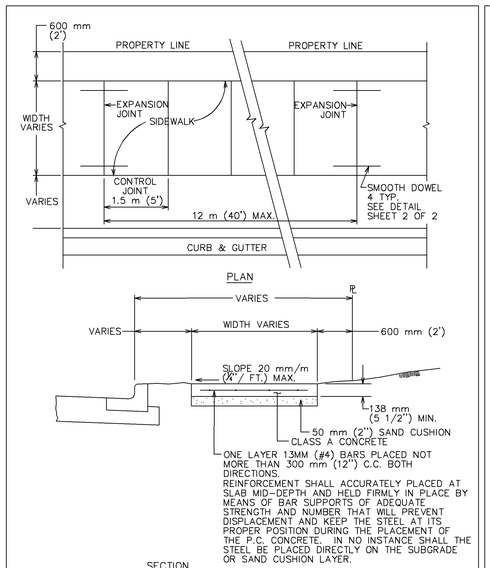

		SIDEWALK	
		THE ARCHITECT/ENGINEER ASSUMES RESPONSIBILITY FOR APPROPRIATE USE OF THIS STANDARD.	STANDARD NO. SD 432S-1 1 OF 3

5 / C7.0

NOTE:CONCRETE FLATWORK SHALL COMPLY WITH STRUCTURAL AND DIMENSIONAL REQUIREMENTS OF THIS DETAIL.

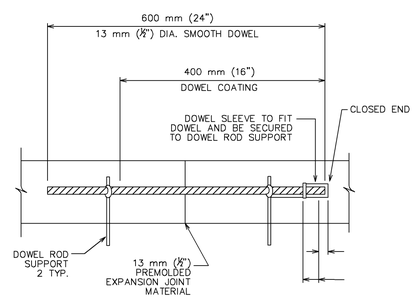

		SIDEWALK	
DEPARTMENT OF PUBLIC WORKS		THE ARCHITECT/ENGINEER ASSUMES RESPONSIBILITY FOR APPROPRIATE USE OF THIS STANDARD.	STANDARD NO. SD 432S-1 2 OF 3

5 / C7.0

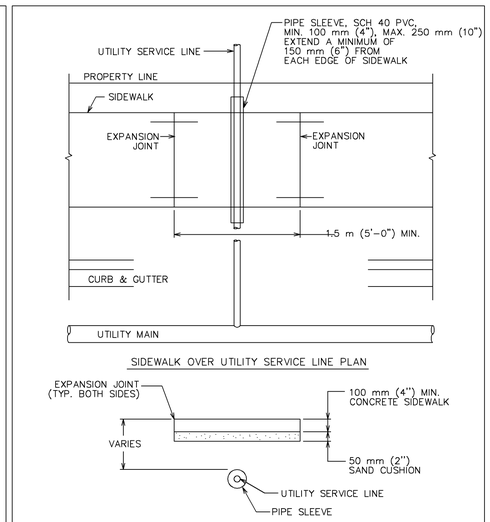

NOTES:
1. THIS STANDARD APPLIES TO THE INSTALLATION OF NEW UTILITIES OR UTILITIES BEING REPLACED BY A NEW LINE.
2. NO JOINTS IN UTILITY SERVICE PIPE TO BE LOCATED INSIDE PVC PIPE SLEEVE.

		SIDEWALK	
		THE ARCHITECT/ENGINEER ASSUMES RESPONSIBILITY FOR APPROPRIATE USE OF THIS STANDARD.	STANDARD NO. SD 432S-1 3 OF 3

5 / C7.0

90% CONSTRUCTION DOCUMENTS

IF THIS SHEET IS NOT 36" X 24", IT IS A REDUCED PRINT.

Sep 22, 2016 - 3:38pm

Drawing name: J:\1139-Onion Creek Fire EMS\00-DRAWINGS\PERMIT\1139--C-DETAILS.dwg

STATE OF TEXAS
JOHN R. KING
59429
LICENSED
PROFESSIONAL ENGINEER
9/22/2016

CHAN & PARTNERS
CONSULTING CIVIL ENGINEERS
CHAN & PARTNERS ENGINEERING, LLC
4319 JAMES CASEY STREET, #300
AUSTIN, TEXAS 78745
512-469-8195 (PH) ♦ 512-490-3811 (FAX)
E-mail: info@chanpartners.com
WWW.CHANPARTNERS.COM
TEXAS REGISTRATION NO. F-13013

AUSTIN ONION CREEK
FIRE & EMS STATION
11112 OLD SAN ANTONIO ROAD
AUSTIN, TEXAS 78748

CITY OF AUSTIN · FOUNDED 1839

REVISIONS

DATE	9/22/2016
DRAWN BY	CD
CHECKED BY	JRK
PROJECT NO.	214106.00

STANDARD DETAIL SHEET
1 OF 5

C7.0

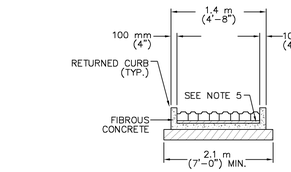

SECTION B–B

GENERAL NOTES:

1. THIS STANDARD IS APPLICABLE FOR RAMP CONSTRUCTION WITHIN RIGHT–OF–WAY OR EASEMENT ONLY.
2. PAVERS WILL HAVE DETECTABLE WARNING THAT CONSISTS OF RAISED TRUNCATED DOMES WITH A DIAMETER OF 23 mm (0.9"), A NOMINAL HEIGHT OF 5 mm (0.2") AND A NOMINAL CENTER TO CENTER SPACING OF 60 mm (2.35") AND SHALL CONTRAST VISUALLY WITH ADJOINING SURFACES, EITHER LIGHT–ON–DARK OR DARK–ON–LIGHT (Re: ADAAG SECTION 4.29.2). MATERIAL USED TO PROVIDE CONTRAST SHALL BE AN INTEGRAL PART OF THE WALKING SURFACE. A BASKET WEAVE PAVER PATTERN SHALL BE USED UNLESS DIRECTED BY THE ENGINEER OR DESIGNATED REPRESENTATIVE. PAVER PATTERN VARIES PER MANUFACTURER'S RECOMMENDATIONS. REFER TO STANDARD DETAIL 432S–5 FOR PAVER BASE PREPARATION DETAILS.
3. THE CURB, GUTTER AND RAMP SYSTEM SHALL BE CONFIGURED TO MAINTAIN ALL RUNOFF FROM A 25 YEAR FREQUENCY STORM WITHIN THE RIGHT–OF–WAY (DRAINAGE CRITERIA MANUAL SECTION 1.2.2.B).
4. TYPICAL SIDEWALK WIDTHS AND CURB RADII ARE SHOWN FOR ILLUSTRATION ONLY. REFER TO THE TRANSPORTATION CRITERIA MANUAL FOR SIDEWALK WIDTHS, CURB RADII AND CURB BASIC REQUIREMENTS.
5. THE PERMISSIBLE CONSTRUCTION JOINT BETWEEN THE PAVERS AND THE ADJOINING SURFACE SHALL BE LIMITED TO 6 mm (¼") JOINT SIZE. GAPS LARGER THAN 6 mm (¼") MUST BE APPROVED BY THE ENGINEER OR DESIGNATED REPRESENTATIVE. ALL JOINTS BETWEEN BRICKS AND ADJOINING SURFACE SHALL BE MORTAR FILLED UNLESS DIRECTED OTHERWISE BY THE ENGINEER OR DESIGNATED REPRESENTATIVE.
6. MORTAR SHALL CONFORM TO STD. SPECIFICATION ITEM SECTION 403S.3.5, MORTAR AND GROUT. ALL OTHER CONCRETE SHALL CONFORM TO STD. SPECIFICATION ITEM 403S, CONCRETE FOR STRUCTURES, UNLESS OTHERWISE NOTED.
7. CURB RAMPS WITH 100 mm (4") CONCRETE VALLEY MAY ONLY BE USED WHERE PEDESTRIANS WOULD NOT NORMALLY WALK DIAGONALLY ACROSS THE RAMP.

CITY OF AUSTIN DEPARTMENT OF PUBLIC WORKS		COMBINED SIDEWALK CURB RAMP WITH PAVERS	
RECORD COPY SIGNED BY BILL GARDNER	03/13/06 ADOPTED	THE ARCHITECT/ENGINEER ASSUMES RESPONSIBILITY FOR APPROPRIATE USE OF THIS STANDARD.	STANDARD NO. 432S–3F 2 OF 2

SEE NOTE 1

1 C7.1

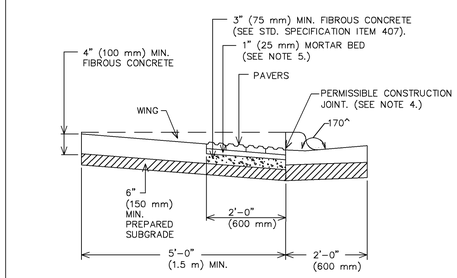

CROSS SECTION

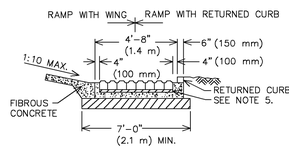

FRONT END VIEW

CITY OF AUSTIN DEPARTMENT OF PUBLIC WORKS		DETECTABLE WARNING–PAVER (CITY PROPERTY/EASEMENTS)	
RECORD COPY SIGNED BY BILL GARDNER	06/21/07 ADOPTED	THE ARCHITECT/ENGINEER ASSUMES RESPONSIBILITY FOR APPROPRIATE USE OF THIS STANDARD.	STANDARD NO. 432S–2A 1 OF 2

SEE NOTE 1

2 C7.1

GENERAL NOTES:

1. THIS STANDARD IS APPLICABLE FOR RAMP CONSTRUCTION ON CITY PROPERTY AND EASEMENT AREAS ONLY.

2. PAVERS ARE REQUIRED FOR ALL CURB RAMP INSTALLATIONS.

3. PAVERS WILL HAVE DETECTABLE WARNING THAT CONSISTS OF RAISED TRUNCATED DOMES WITH A DIAMETER OF 0.9" (23 mm), A NOMINAL HEIGHT OF 0.2" (5 mm) AND A NOMINAL CENTER TO CENTER SPACING OF 2.35" (60 mm) AND SHALL CONSTRAST VISUALLY WITH ADJOINING SURFACES, EITHER LIGHT–ON–DARK OR DARK–ON–LIGHT (Re: ADAAG SECTION 4.29.2). MATERIAL USED TO PROVIDE CONTRAST SHALL BE AN INTEGRAL PART OF THE WALKING SURFACE. PAVER PATTERN SHALL BE BASKET WEAVE UNLESS DIRECTED OTHERWISE BY THE ENGINEER OR DESIGNATED REPRESENTATIVE.

4. TYPICAL SIDEWALK WIDTHS AND CURB RADII ARE SHOWN FOR ILLUSTRATION ONLY. REFER TO THE TRANSPORTATION CRITERIA MANUAL FOR SIDEWALK WIDTHS, CURB RADII AND CURB BASIS.

5. THE PERMISSIBLE CONSTRUCTION JOINT BETWEEN THE PAVERS AND THE ADJOINING SURFACE SHALL BE LIMITED TO 1/4" (6 mm) JOINT SIZE. GAPS LARGER THAN 1/4" (6 mm) MUST BE APPROVED BY THE ENGINEER OR DESIGNATED REPRESENTATIVE. ALL JOINTS BETWEEN BRICKS AND ADJOINING SURFACE SHALL BE MORTAR FILLED UNLESS DIRECTED OTHERWISE BY THE ENGINEER OR DESIGNATED REPRESENTATIVE.

6. MORTAR SHALL CONFORM TO STD. SPECIFICATION ITEM SECTION 403S.3.5, MORTAR AND GROUT. ALL OTHER CONCRETE SHALL CONFORM TO STD. SPECIFICATION ITEM 403S, CONCRETE FOR STRUCTURES, UNLESS OTHERWISE NOTED.

7. CURB RAMPS WITH RETURNED CURB MAY ONLY BE USED WHERE PEDESTRIANS WOULD NOT NORMALLY WALK DIAGONALLY ACROSS THE RAMP.

CITY OF AUSTIN DEPARTMENT OF PUBLIC WORKS		DETECTABLE WARNING–PAVER (CITY PROPERTY/EASMENTS)	
RECORD COPY SIGNED BY BILL GARDNER	06/21/07 ADOPTED	THE ARCHITECT/ENGINEER ASSUMES RESPONSIBILITY FOR APPROPRIATE USE OF THIS STANDARD.	STANDARD NO. 432S–2A 2 OF 2

SEE NOTE 1

2 C7.1

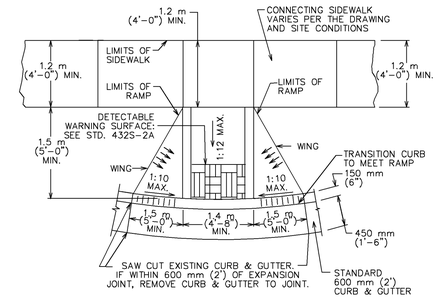

CITY OF AUSTIN DEPARTMENT OF PUBLIC WORKS		TYPE 1 SIDEWALK CURB RAMP	
RECORD COPY SIGNED BY BILL GARDNER	9/14/05 ADOPTED	THE ARCHITECT/ENGINEER ASSUMES RESPONSIBILITY FOR APPROPRIATE USE OF THIS STANDARD.	STANDARD NO. 432S–5

SEE NOTE 1

3 C7.1

NOTES:
1. REINFORCED CONCRETE RAMP THICKNESS SHALL BE MINIMUM 5 1/2" (130MM). REINFORCING STEEL SHALL BE ONE LAYER OF #4 (13MM) BARS PLACED ON CHAIRS AT MID-DEPTH OF SLAB AT NO MORE THAN 12" (300MM) O.C. BOTH DIRECTIONS

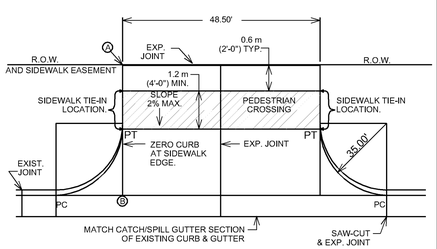

PLAN

NOTE: ALL DRIVEWAYS SHALL BE SLOPED TOWARDS THE STREET FROM THE R.O.W. LINE. ELEVATION OF POINT (A) ABOVE POINT (B) IS, TYPICALLY A MINIMUM OF 150 mm (6") PLUS 20 mm/m (¼" RISE/FOOT) OVER DISTANCE "X" IN METERS (FEET).

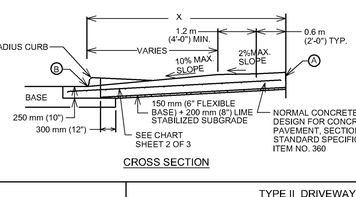

CROSS SECTION

	TYPE II DRIVEWAY	
	THE ARCHITECT/ENGINEER ASSUMES RESPONSIBILITY FOR APPROPRIATE USE OF THIS STANDARD.	STANDARD NO. SD 433S-2 1 OF 2

4 C7.1

USE	THICKNESS	REINFORCEMENT
COMMERCIAL	250 mm (10") MIN.	250 mm (10") MIN. CONCRETE WITH ONE LAYER OF13M (#4) BARS PLACED ON CHAIRS AT MID-DEPTH OFSLAB AT NO MORE THAN 300 mm (12") O.C. BOTH DIRECTIONS.

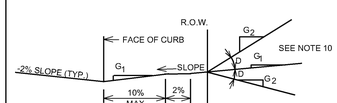

ALLOWABLE GRADES

DRIVEWAY VOLUME (ADT)	D=GRADE CHANGE STD.	MAX
>1500	0%	3%
500-1500	3%	6%
< 500	6%	15%

NOTES:

1.ALL TYPE II DRIVEWAYS SHALL HAVE RADIUS ENDS.

2.DRIVEWAY WIDTHS AND RADII DIMENSIONS, ONE/TWO WAY TRAVEL REQUIREMENTS, AND GEOMETRIC LAY-OUT ARE HIGHLY VARIABLE, SUBJECT TO SITE SPECIFIC CONDITIONS AND REQUIREMENTS. SEE TRANSPORTATION CRITERIA MANUAL, SECTION 5 "DRIVEWAYS".

3.THE DRIVEWAY EDGE SHALL BE SMOOTHLY TRANSITITIONED INTO THE SIDEWALK TIE-IN LOCATION BEGINNING AT THE RADIUS PC LINE.

4."ZERO" CURB AT PT OR SIDEWALK EDGE, WHICHEVER IS ENCOUNTERED FIRST.

5.PLACE AN EXPANSION JOINT DOWN THE CENTER OF DRIVEWAY ALL DRIVEWAYS.

6.IF DIMENSION IS LESS THAN 1.5 METERS (5 FEET), REMOVE CURB AND GUTTER TO EXISTING JOINT AND POUR MONOLITHICALLY WITH DRIVEWAY.

7.IF THE BASE IS OVER-EXCAVATED WHERE THE CURB AND GUTTER WERE REMOVED, BACKFILL WITH CONCRETE MONOLITHICALLY WITH THE DRIVEWAY.

8.TYPE II DRIVEWAYS ARE TO BE LOCATED NO CLOSER TO THE CORNER OF INTERSECTING RIGHT OF WAY THAN 60% OF PARCEL FRONTAGE AT 30 METERS (100 FEET): WHICHEVER IS LESS.

9.DRIVEWAY SHALL NOT BE CONSTRUCTED WITHIN THE CURB RETURN OF A STREET INTERSECTION.

10.WHILE THE PROPERTY OWNER REMAINS RESPONSIBLE FOR GRADE BREAKS WITHIN PRIVATE PROPERTY, THE FIRE DEPARTMENT SHALL BE CONSULTED WHERE THE DRIVEWAY IS ESSENTIAL TO EMERGENCY VEHICLE ACCESS AND "G2 IS GREATER THAN 15%.

11.USE 12 MM (1/2") ASPHALT BOARD OR OTHER APPROVED MATERIAL FOR CURB AND GUTTER EXPANSION JOINTS. SIDEWALK, AT THE R.O.W. LINE AND AT MIDWIDTH. SEE NOTE 5.

12.SEE TRANSPORTATION CRITERIA MANUAL, SECTION 5 FOR OTHER DRIVEWAY REQUIREMENTS.

13.THE SIDEWALK, REGARDLESS OF IT'S LOCATION WITH RESPECT TO THE CURB OR PROPERTY LINE, SHALL BE CONNECTED TO THE DRIVEWAY AT THESE LOCATIONS.

14.WATER METER BOXES AND WASTEWATER CLEAN OUT'S ARE PROHIBITED FROM BEING LOCATED IN DRIVEWAY AREAS.

	TYPE II DRIVEWAY	
	THE ARCHITECT/ENGINEER ASSUMES RESPONSIBILITY FOR APPROPRIATE USE OF THIS STANDARD.	STANDARD NO. SD 433S-2 2 OF 2

4 C7.1

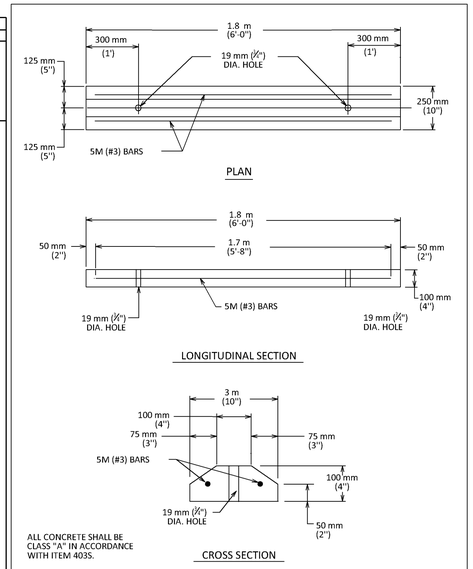

CITY OF AUSTIN DEPARTMENT OF PUBLIC WORKS		PARKING LOT BUMPER CURB	
RECORD COPY SIGNED BY BILL GARDNER APPROVED	3/15/05 ADOPTED	THE ARCHITECT/ENGINEER ASSUMES RESPONSIBILITY FOR APPROPRIATE USE OF THIS STANDARD.	STANDARD NO. 439S-1

5 C7.1

90% CONSTRUCTION DOCUMENTS

IF THIS SHEET IS NOT 36" X 24", IT IS A REDUCED PRINT.

Sep 22, 2016 - 3:38pm

Drawing name: J:\1139-Onion Creek Fire EMS\00-DRAWINGS\PERMIT\1139--C-DETAILS.dwg

STATE OF TEXAS
JOHN R. KING
58429
LICENSED
PROFESSIONAL ENGINEER
9/22/2016

CHAN & PARTNERS
CONSULTING CIVIL ENGINEERS
CHAN & PARTNERS ENGINEERING, LLC
4319 JAMES CASEY STREET, #300
AUSTIN, TEXAS 78745
512-469-8195 (PH) ♦ 512-469-3811 (FAX)
E-mail: info@chanpartners.com
WWW.CHANPARTNERS.COM
TEXAS REGISTRATION NO. F-13013

AUSTIN ONION CREEK
FIRE & EMS STATION
11112 OLD SAN ANTONIO ROAD
AUSTIN, TEXAS 78748

CITY OF AUSTIN FOUNDED 1839

REVISIONS

DATE	9/22/2016
DRAWN BY	CD
CHECKED BY	JRK
PROJECT NO.	214106.00

STANDARD
DETAIL SHEET
2 OF 5

C7.1

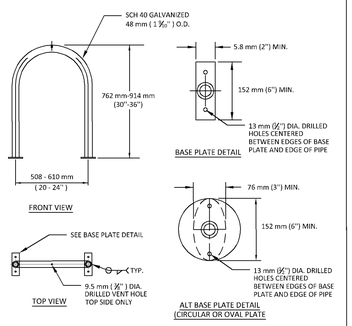

GENERAL NOTES:
1. RACK INSTALLATION METHOD SHALL COMPLY WITH CITY STANDARD DETAIL 710S-3, 710S-4 OR 710S-5
2. RACK PLACEMENT SHALL COMPLY WITH APPLICABLE CITY STANDARD DETAILS 710S-6A, 710S-6B, OR 710S-6C AND IN COMPLIANCE WITH CITY OF AUSTIN CODE SECTION 25-6-477 OR ITS SUCCESSOR.
3. BASE PLATES TO BE 6.35 mm (¼") PLATES, ASTM A-36 1010-1018 LOW CARBON PRIME STEEL.

CITY OF AUSTIN DEPARTMENT OF PUBLIC WORKS	CLASS III STYLE BICYCLE PARKING	
9/26/12 ADOPTED	THE ARCHITECT/ENGINEER ASSUMES RESPONSIBILITY FOR APPROPRIATE USE OF THIS STANDARD.	STANDARD NO. 710S-1 1 OF 1

1 / C7.2

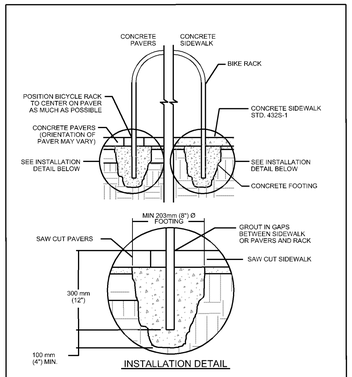

INSTALLATION DETAIL

GENERAL NOTES:
1. RACKS SHALL COMPLY WITH CITY STANDARD DETAIL 710S-1 OR 710S-2.
2. RACK PLACEMENT SHALL COMPLY WITH APPLICABLE CITY STANDARD DETAILS 710S-6A, 710S-6B, OR 710S-6C AND IN COMPLIANCE WITH CITY OF AUSTIN CODE SECTION 25-6-477 OR ITS SUCCESSOR.

CITY OF AUSTIN DEPARTMENT OF PUBLIC WORKS	BICYCLE RACK INSTALLATION IN SIDEWALKS-ALTERNATE 2	
RECORD COPY SIGNED BY COUNG TRAN 09/26/12 ADOPTED	THE ARCHITECT/ENGINEER ASSUMES RESPONSIBILITY FOR APPROPRIATE USE OF THIS STANDARD.	STANDARD NO. 710S-5 1 OF 1

2 / C7.2

NOTE: THIS DETAIL SHALL APPLY FOR BICYCLE RACK INSTALLATION IN CONCRETE SIDEWALK PAVEMENT OR IN CRUSHED GRANITE SURFACE.

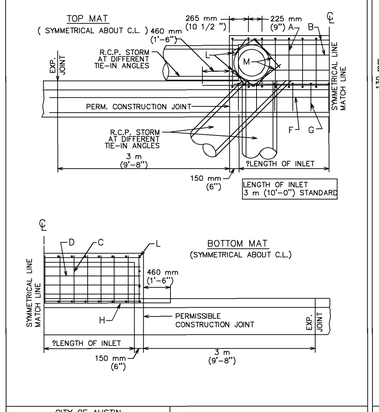

CITY OF AUSTIN DEPARTMENT OF PUBLIC WORKS	TYPICAL DETAILS FOR CURB INLET	
RECORD COPY SIGNED BY BILL GARDNER 12/09/08 ADOPTED	THE ARCHITECT/ENGINEER ASSUMES RESPONSIBILITY FOR APPROPRIATE USE OF THIS STANDARD.	STANDARD NO. 508S-3 1 OF 4

6 / C7.2

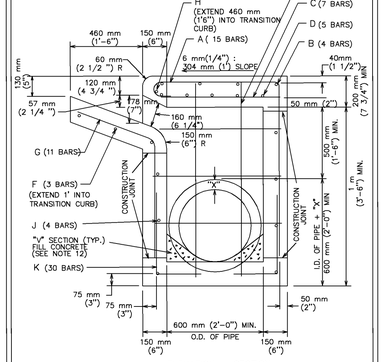

ELEVATION – SECTION

CITY OF AUSTIN DEPARTMENT OF PUBLIC WORKS	TYPICAL DETAILS FOR CURB INLET	
RECORD COPY SIGNED BY BILL GARDNER 12/09/08 ADOPTED	THE ARCHITECT/ENGINEER ASSUMES RESPONSIBILITY FOR APPROPRIATE USE OF THIS STANDARD.	STANDARD NO. 508S-3 2 OF 4

6 / C7.2

TABLE OF QUANTITIES
FOR 18" OUTLET PIPE
REINFORCING STEEL QUANTITIES

BARS	SIZE	SPACING	NUMBER	LENGTH	WEIGHT
A	4	230mm (9")*	15	2 m (7'-0")	73
B	4	250 mm (10")	4	3.25 m (10'-8")	29
C	4	460 mm (18")	7	760 mm (2'-6")	12
D	6	150 mm (6")	5	3.25 m (10'-8")	80
E	4	300 mm (12")	6	760 mm (2'-6")	10
F	4	250 mm (10")	3	4 m (13'-0")	35
G	4	300 mm (12")	11	1.25 m (4'-3")	31
H	6	—	1	4.25 m (14'-0")	20
J	4	300 mm (12")	7	3.25 m (10'-8")	50
K	4	230 mm (9")*	30	800 mm (2'-7 1/2")	52
L	4	300 mm (12")*	6	1.3 m (4'-4")	17
M	4	–	4	500 mm (1'-8") AVG	4
TOTAL STEEL, LB.					413
TOTAL CONCRETE, C.Y.					4.06

* EXCEPT AS SHOWN ON PLAN

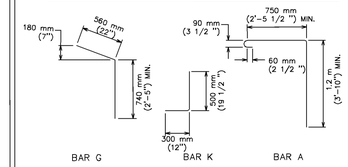

CITY OF AUSTIN DEPARTMENT OF PUBLIC WORKS	TYPICAL DETAILS FOR CURB INLET	
RECORD COPY SIGNED BY BILL GARDNER 12/09/08 ADOPTED	THE ARCHITECT/ENGINEER ASSUMES RESPONSIBILITY FOR APPROPRIATE USE OF THIS STANDARD.	STANDARD NO. 508S-3 3 OF 4

6 / C7.2

NOTES:
1. ALL CONCRETE SHALL BE CLASS "A"
2. ALL REINFORCING STEEL SHALL BE GRADE 60
3. DIMENSIONS RELATING TO REINFORCING STEEL ARE TO CENTERS OF BARS.
4. VERTICAL STEEL MAY BE SPLICED (380 mm or 15" MIN. LAP) IN THE LOWER ONE-HALF OF ALL INLET WALLS.5. IN AREAS OF CONFLICT BETWEEN REINFORCING STEEL, PIPES AND MANHOLE FRAME, THE REINFORCEMENT SHALL BE BENT OR ADJUSTED TO CLEAR AS DIRECTED BY THE ENGINEER.
6. QUANTITIES SHOWN HEREON ARE FOR THE CONTRACTOR'S INFORMATION ONLY. PAYMENT WILL BE MADE FOR EACH INLET OF THE TYPE SPECIFIED, COMPLETE IN PLACE INCLUDING MANHOLE FRAME AND OVER.
7. CHAMFER ALL EXPOSED EDGES 20 mm (3/4 ").
8. MANHOLE FRAME AND COVER SHALL BE IN ACCORDANCE WITH CITY OF AUSTIN STANDARD 503S-1.
9. THE CONTRACTOR MAY PROPOSE ALTERNATE PROCEDURES FOR THE CONSTRUCTION OF INLETS, INCLUDING PRECAST UNITS. PLANS FOR SUCH PROPOSED ALTERNATES SHALL BE SUBMITTED TO THE ENGINEER FOR REVIEW AND APPROVAL BEFORE CONSTRUCTION.
10. ALL INLET WALLS SHALL BE FORMED EXCEPT WHERE THE NATURE OF THE SURROUNDING MATERIAL IS SUCH THAT IT CAN BE TRIMMED TO A SMOOTH VERTICAL FACE. WHEN INLET WALLS ARE PLACED TO NEAT EXCAVATION LINES THE WALL THICKNESS SHALL NOT EXCEED 10 INCHES.
11. PAYMENT FOR INLET AT THE CONTRACT PRICE SHALL INCLUDE THE TRANSITION CURB.
12. INVERT OF INLET SHALL BE SLOPED 1:20 WITH FILL CONCRETE, SHAPED AS "V" SECTION
13. NO SPLICING OF REINFORCING STEEL SHALL BE PERMITTED UNLESS OTHERWISE NOTED ON THE PLANS OR PERMITTED IN WRITING BY THE ENGINEER.

REFERENCES:

FOR EXPANSION JOINT DOWEL AND DOWEL LOCATION DETAILS SEE STD. 430S-3, "CURB EXPANSION JOINT DOWEL DETAIL".

FOR 18" MANHOLE FRAME AND COVER DETAILS SEE STD. 503S-1, "18" COVER AND FRAME".

CITY OF AUSTIN DEPARTMENT OF PUBLIC WORKS	TYPICAL DETAILS FOR CURB INLET	
RECORD COPY SIGNED BY BILL GARDNER 12/09/08 ADOPTED	THE ARCHITECT/ENGINEER ASSUMES RESPONSIBILITY FOR APPROPRIATE USE OF THIS STANDARD.	STANDARD NO. 508S-3 4 OF 4

6 / C7.2

NOTES:
1. REINFORCED CONCRETE RAMP THICKNESS SHALL BE MINIMUM 5 1/2" (130MM). REINFORCING STEEL SHALL BE ONE LAYER OF #4 (13MM) BARS PLACED ON CHAIRS AT MID-DEPTH OF SLAB AT NO MORE THAN 12" (300MM) O.C. BOTH DIRECTIONS

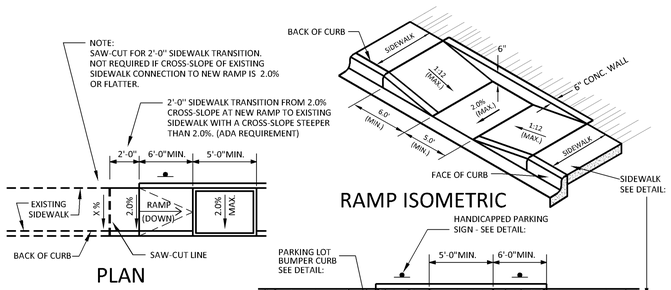

PAINTED STRIPE SHALL CONFORM TO CITY OF AUSTIN STANDARD SPECIFICATIONS

3 / C7.2 TYPICAL ACCESSIBLE PARKING SPACE LAYOUT WITH PARALLEL RAMPS CUST-066

SCALE: NONE

NOTE: REINFORCED CONCRETE SIDEWALK AND RAMP THICKNESS SHALL BE MINIMUM 5 1/2" (138MM). REINFORCING STEEL SHALL BE ONE LAYER OF #4 (13MM) BARS PLACED ON CHAIRS AT MID-DEPTH OF SLAB AT NO MORE THAN 12" (300MM) O.C. BOTH DIRECTIONS.

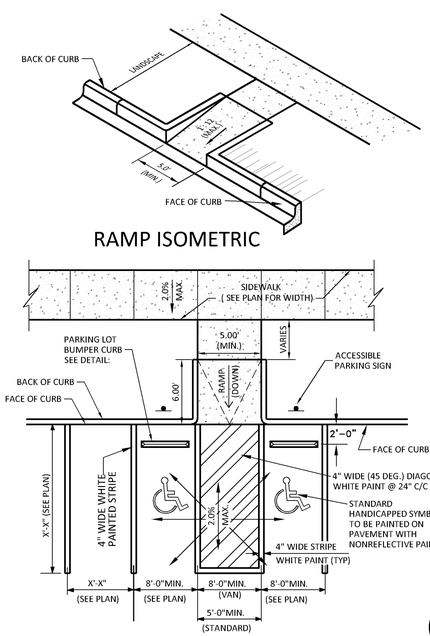

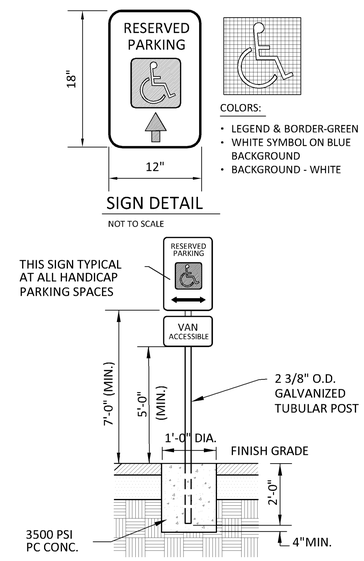

4 / C7.2 VAN AND STANDARD ACCESSIBLE PARKING SIGN

SCALE: NONE CUST-021

5 / C7.2 TRAFFIC SIGNS

SCALE: NONE

90% CONSTRUCTION DOCUMENTS

IF THIS SHEET IS NOT 36" X 24", IT IS A REDUCED PRINT. Sep 22, 2016 - 3:38pm Drawing name: J:\1139-Onion Creek Fire EMS\00-DRAWINGS\PERMIT\1139--C-DETAILS.dwg

STATE OF TEXAS
JOHN R. KING
58429
LICENSED PROFESSIONAL ENGINEER
9/22/2016

CHAN & PARTNERS CONSULTING CIVIL ENGINEERS
CHAN & PARTNERS ENGINEERING, LLC
4319 JAMES CASEY STREET, #300
AUSTIN, TEXAS 78745
512-469-8155 (PH) • 512-469-8811 (FAX)
E-mail: info@chanpartners.com
WWW.CHANPARTNERS.COM
TEXAS REGISTRATION NO. F-13013

AUSTIN ONION CREEK FIRE & EMS STATION
11112 OLD SAN ANTONIO ROAD
AUSTIN, TEXAS 78748

REVISIONS

DATE	9/22/2016
DRAWN BY	CD
CHECKED BY	JRK
PROJECT NO.	214106.00

STANDARD DETAIL SHEET 3 OF 5

C7.2

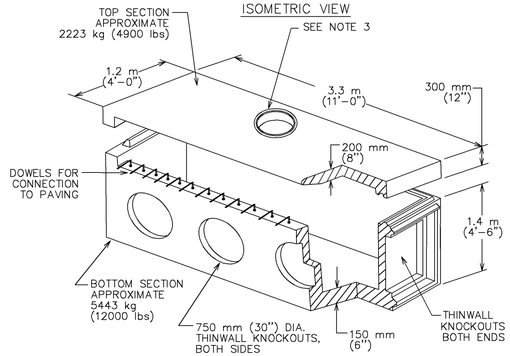

NOTES:
1. ALL CONCRETE SHALL BE CLASS "A" AS PER ITEM 403S.
2. ALL REINFORCING STEEL SHALL BE GRADE 60
3. MANHOLE FRAME AND COVER SHALL BE IN ACCORDANCE WITH CITY OF AUSTIN STANDARD 503S-1.
4. DIMENSIONS RELATING TO REINFORCING STEEL ARE TO CENTERS OF BARS.
5. IN AREAS OF CONFLICT BETWEEN REINFORCING STEEL, PIPES AND MANHOLE FRAME, THE REINFORCEMENT SHALL BE BENT OR ADJUSTED TO CLEAR AS DIRECTED BY THE ENGINEER.
6. PAYMENT FOR INLET AT THE CONTRACT PRICE SHALL INCLUDE THE TRANSITION CURB, IN ACCORDANCE WITH CITY OF AUSTIN STANDARD INLET DESIGN.
7. INVERT OF INLET SHALL BE SLOPED 1:20 WITH FILL CONCRETE BY CONTRACTOR, SHAPED AS "V" SECTION
8. THE INLET AS DESIGNED EXCEEDS THE REQUIREMENTS OF ASTM C478.
9. THIS STANDARD COMPLIES WITH THE CITY OF AUSTIN STANDARD SPECIFICATIONS ITEM NO. 508S.
10. FOR INLET CONNECTION VARIATIONS FOR MAKING A 6 m (20'-0") CURB INLET FROM STANDARD 3 m (10'-0") INLETS, SEE DALWORTH CURB INLET CONNECTION DETAIL SHEET DQ-86-103.

CITY OF AUSTIN DEPARTMENT OF PUBLIC WORKS	CURB INLET 3 m (10') PRECAST TYPE 1 OR TYPE 1-R	
RECORD COPY SIGNED BY BILL GARDNER 12/09/08 ADOPTED	THE ARCHITECT/ENGINEER ASSUMES RESPONSIBILITY FOR APPROPRIATE USE OF THIS STANDARD.	STANDARD NO. 508S-4 1 OF 5

1 / C7.3

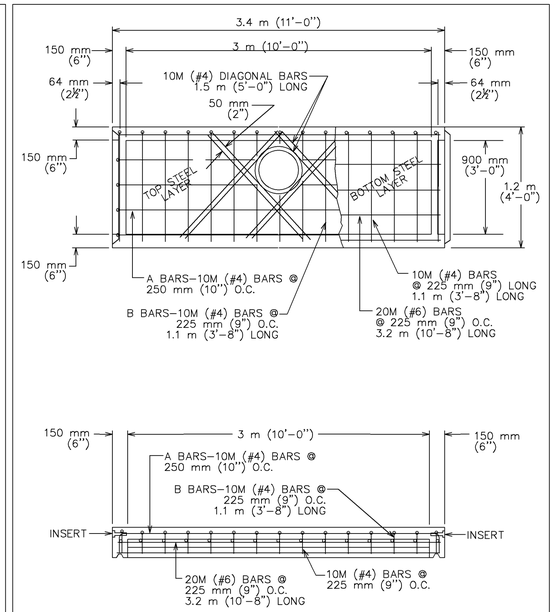

CITY OF AUSTIN DEPARTMENT OF PUBLIC WORKS	CURB INLET 3 m (10') PRECAST TYPE 1 OR TYPE 1-R	
RECORD COPY SIGNED BY BILL GARDNER 12/09/08 ADOPTED	THE ARCHITECT/ENGINEER ASSUMES RESPONSIBILITY FOR APPROPRIATE USE OF THIS STANDARD.	STANDARD NO. 508S-4 2 OF 5

1 / C7.3

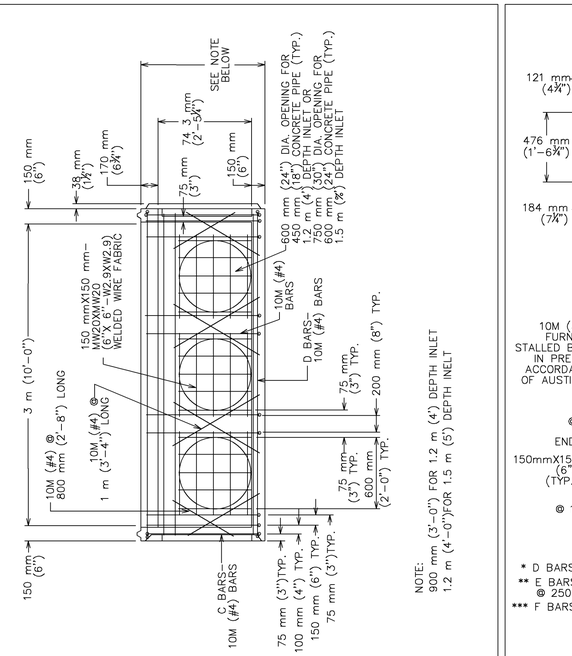

CITY OF AUSTIN DEPARTMENT OF PUBLIC WORKS	CURB INLET 3 m (10') PRECAST TYPE 1 OR TYPE 1-R	
RECORD COPY SIGNED BY BILL GARDNER 12/09/08 ADOPTED	THE ARCHITECT/ENGINEER ASSUMES RESPONSIBILITY FOR APPROPRIATE USE OF THIS STANDARD.	STANDARD NO. 508S-4 3 OF 5

1 / C7.3

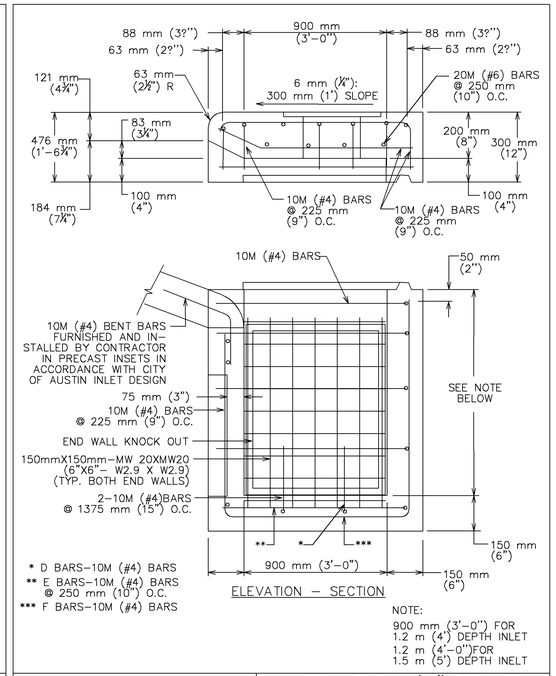

CITY OF AUSTIN DEPARTMENT OF PUBLIC WORKS	CURB INLET 3 m (10') PRECAST TYPE 1 OR TYPE 1-R	
RECORD COPY SIGNED BY BILL GARDNER 12/09/08 ADOPTED	THE ARCHITECT/ENGINEER ASSUMES RESPONSIBILITY FOR APPROPRIATE USE OF THIS STANDARD.	STANDARD NO. 508S-4 4 OF 5

1 / C7.3

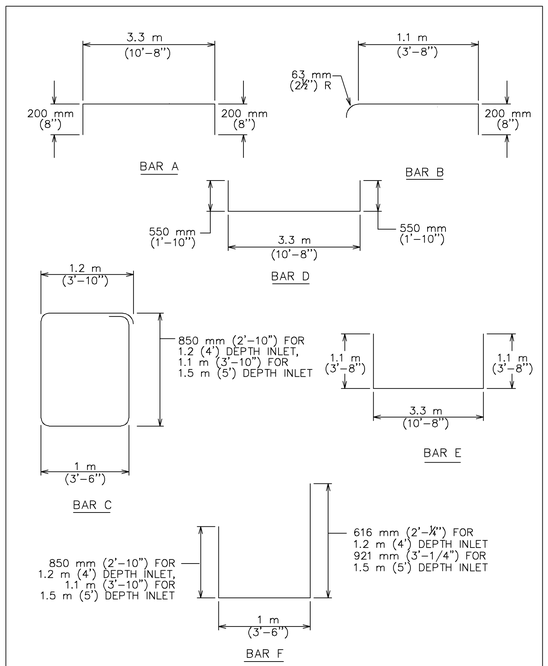

CITY OF AUSTIN DEPARTMENT OF PUBLIC WORKS	CURB INLET 3 m (10') PRECAST TYPE 1 OR TYPE 1-R	
RECORD COPY SIGNED BY BILL GARDNER 12/09/08 ADOPTED	THE ARCHITECT/ENGINEER ASSUMES RESPONSIBILITY FOR APPROPRIATE USE OF THIS STANDARD.	STANDARD NO. 508S-4 5 OF 5

1 / C7.3

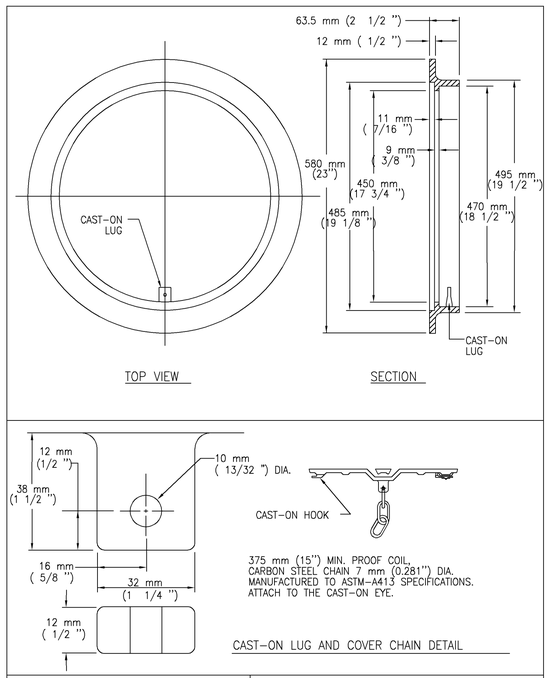

CITY OF AUSTIN DEPARTMENT OF WATERSHED PROTECTION AND DEVELOPMENT REVIEW	457 mm (18") COVER AND FRAME	
RECORD COPY SIGNED BY GEORGE E. OSWALD 2/14/02 ADOPTED	THE ARCHITECT/ENGINEER ASSUMES RESPONSIBILITY FOR APPROPRIATE USE OF THIS STANDARD.	STANDARD NO. 503S-1 1 OF 2

2 / C7.3

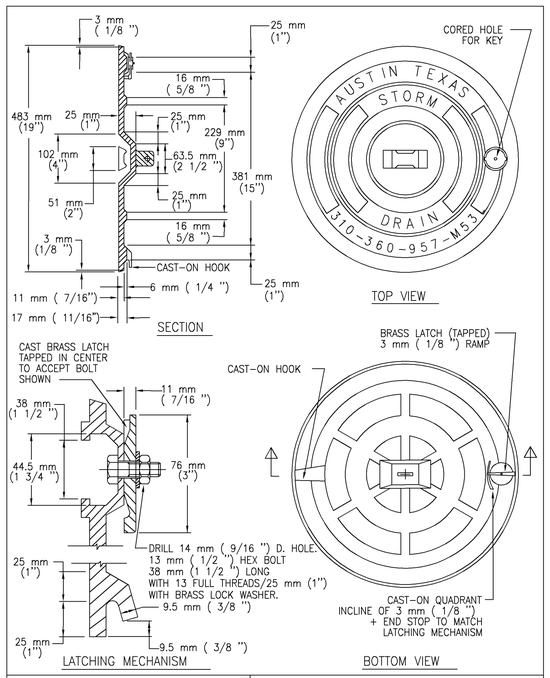

CITY OF AUSTIN DEPARTMENT OF WATERSHED PROTECTION AND DEVELOPMENT REVIEW	457 mm (18") COVER AND FRAME	
RECORD COPY SIGNED BY GEORGE E. OSWALD 2/14/02 ADOPTED	THE ARCHITECT/ENGINEER ASSUMES RESPONSIBILITY FOR APPROPRIATE USE OF THIS STANDARD.	STANDARD NO. 503S-1 2 OF 2

2 / C7.3

90% CONSTRUCTION DOCUMENTS

IF THIS SHEET IS NOT 36" X 24", IT IS A REDUCED PRINT. Sep 22, 2016 - 3:39pm Drawing name: J:\1139-Onion Creek Fire EMS\00-DRAWINGS\PERMIT\1139--C-DETAILS.dwg

STATE OF TEXAS JOHN R. KING 58429 LICENSED PROFESSIONAL ENGINEER 9/22/2016

CHAN & PARTNERS CONSULTING CIVIL ENGINEERS
CHAN & PARTNERS ENGINEERING, LLC
4319 JAMES CASEY STREET, #300
AUSTIN, TEXAS 78745
512-469-8195 (PH) • 512-469-9811 (FAX)
E-mail: info@chanpartners.com
WWW.CHANPARTNERS.COM
TEXAS REGISTRATION NO. F-13013

AUSTIN ONION CREEK FIRE & EMS STATION
11112 OLD SAN ANTONIO ROAD
AUSTIN, TEXAS 78748

CITY OF AUSTIN FOUNDED 1839

REVISIONS

DATE	9/22/2016
DRAWN BY	CD
CHECKED BY	JRK
PROJECT NO.	214106.00

STANDARD DETAIL SHEET 4 OF 5

C7.3

R-4996 TYPE M TRENCH FRAME WITH GRATED COVER

CAST IRON TRENCH ASSEMBLIES - MEDIUM OR HEAVY DUTY - FOR USE IN SIDEWALK, DRIVEWAYS, GARAGES, LOADING DOCKS, ETC.

READ CAREFULLY BEFORE ORDERING

SPECIFY:

1. COMPLETE CATALOG NUMBER. MEDIUM OR HEAVY DUTY.
2. OVERALL LENGTH OF COVER REQUIRED.
3. LID SOLID, FLAT GRATED, OR DIAGONALLY BARRED CONVEX GRATE.
4. LOCATION OF OUTLET, SIDE, BOTTOM OR END (GIVE DIMENSIONAL LOCATION AND PIPE SIZE).
5. WHETHER ONE END OR BOTH ENDS ARE TO BE OPEN OR CLOSED.
6. PERMA-GRIP SURFACE IF REQUIRED. (SEE PAGE 229.)
7.

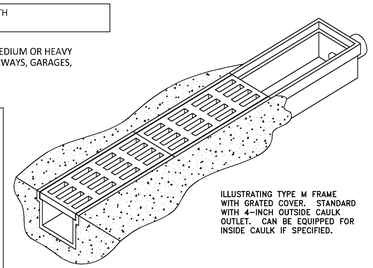

ILLUSTRATING TYPE M FRAME WITH GRATED COVER. STANDARD WITH 4-INCH OUTSIDE CAULK OUTLET. CAN BE EQUIPPED FOR INSIDE CAULK IF SPECIFIED.

TRENCH COVERS ARE USED OVER AREAS REQUIRING LONG DRAINAGE ASSEMBLIES. CAN BE SUPPLIED IN A VARIETY OF SIZES AND LENGTHS TO MEET SPECIAL NEEDS. FOR TRENCHES OF IRREGULAR PATTERN, ARRANGEMENTS CAN BE MADE TO FURNISH COVER TO FIT.

STANDARD 4-INCH OUTLET AT END OF DRAIN. SPECIAL SIZE OUTLETS ARE AVAILABLE ON SPECIAL ORDER. SIDE AND BOTTOM OUTLETS OPTIONAL AND FURNISHED ONLY WHEN SPECIFIED.

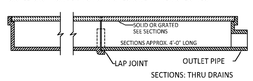

SECTIONS: THRU DRAINS

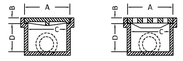

SOLID GRATED

SECTIONS: THRU DRAINS, TYPE M

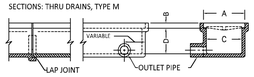

SECTIONS APPROX. 4'-0" LONG

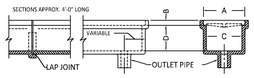

ALTERNATE SECTIONS - SIDE AND BOTTOM OUTLETS

CATALOG NO.	DESCRIPTION	DIMENSIONS IN INCHES A	B	C	D	LENGTH
STANDARD SIZES	HEAVY DUTY					
R-4996-A1**	WITH GRATED COVER	11-1/2	1-1/2	10	6	AS ORDERED x2
R-4996-A2*	WITH GRATED COVER	7	1-1/4	5	6-1/4	AS ORDERED
R-4996-B1	WITH SOLID COVER	11-1/2	1-1/2	10	6	AS ORDERED
R-4996-B2	WITH SOLID COVER	7	1-1/4	5	6-1/4	AS ORDERED

ABOVE STANDARD FRAMES MADE IN 4 FT. SECTIONS, COVERS IN 2 FT. LENGTHS.
*AVAILABLE WITH TYPE "B" GRATE ONLY (SEE PAGE 216).
**FRAMES AND COVERS FURNISHED IN 3 FOOT LENGTHS.

"NEENAH" TRENCH DRAIN R-4996 OR APPROVED EQUAL

1 / C7.4

SCALE: NONE CUST-042

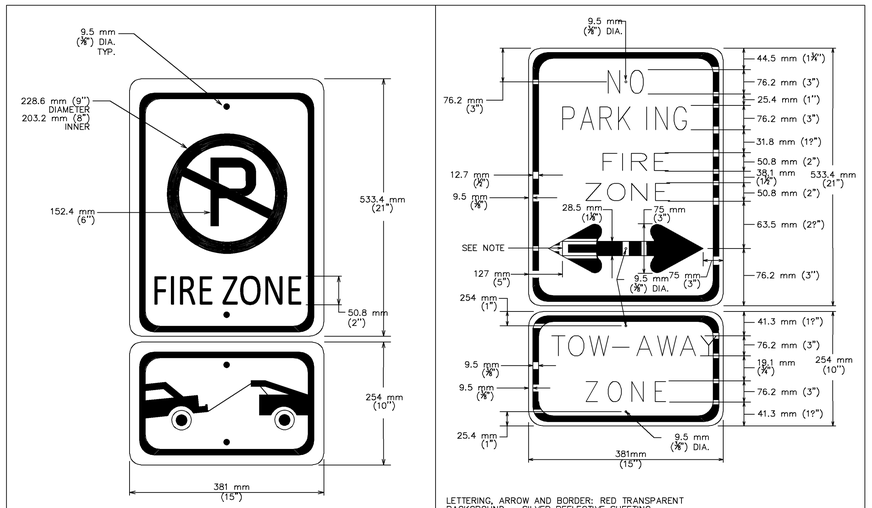

LETTERING, ARROW AND BORDER: RED TRANSPARENT BACKGROUND – SILVER REFLECTIVE SHEETING

NOTE – ARROW MAY BE LEFT, RIGHT, OR DOUBLE

CITY OF AUSTIN FIRE DEPARTMENT	RESTRICTED ZONE SIGNS, TYPE I		CITY OF AUSTIN FIRE DEPARTMENT	RESTRICTED ZONE SIGNS, TYPE II	
RECORD COPY SIGNED BY CARL D. WREN 9/14/05 ADOPTED	THE ARCHITECT/ENGINEER ASSUMES RESPONSIBILITY FOR APPROPRIATE USE OF THIS STANDARD.	STANDARD NO. 901S–5	RECORD COPY SIGNED BY CARL D. WREN 9/14/05 ADOPTED	THE ARCHITECT/ENGINEER ASSUMES RESPONSIBILITY FOR APPROPRIATE USE OF THIS STANDARD.	STANDARD NO. 901S–6

FIRE LANE SIGNS

2 / C7.4

SCALE: NONE

PAGE

48"x48" CATCH BASINS WITH INTERLOCKING EXTENSIONS

STANDARD FEATURES

6" Walls and Floor
Reinforced for H-20 Loading with Grade 60 Rebar
4500 PSI Concrete
Knockouts in all sides for up to 36" RCP
2" Lift Holes in Extensions
Galvanized Steel Heavy Duty Grate

WEIGHTS

Base 6200 LBS.
Extension 1400 LBS.

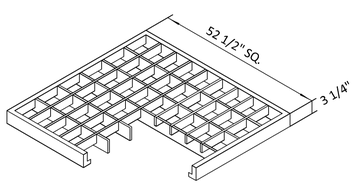

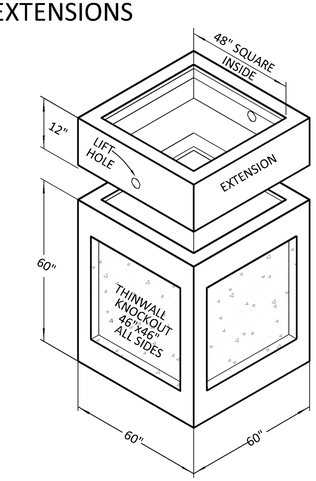

HILL COUNTRY CONCRETE PRODUCTS INC. P.O. BOX 357 Kyle, Tx 78640 (512) 268-9711
REVISION # 2 DATE 4/1/98 DRAWN BY: AB DRAWING NAME: HCCP 6-5 Austin Phone (512) 476-5838

"HILL COUNTRY" 4' X 4' GRATE INLET (OR APPROVED EQUAL)

3 / C7.4

SCALE: NONE CUST-284

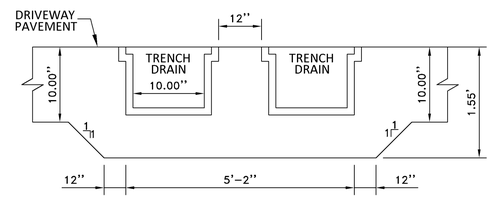

FRONT VIEW

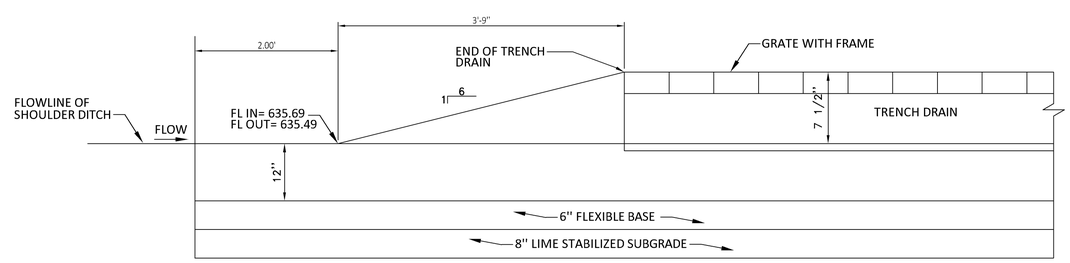

SECTION VIEW

NOTES:

1. TRENCH DRAIN SHALL BE NEENAH R-4996-A1 OR APPROVED EQUAL. SEE DETAIL 1/C7.3.
2. SEE SHEETS C5.0 AND C5.1 FOR PAVEMENT REINFORCEMENT AND JOINTS.

HEADWALL FOR DRIVEWAY TRENCH DRAIN

4 / C7.4

SCALE: NONE

90% CONSTRUCTION DOCUMENTS

IF THIS SHEET IS NOT 36" X 24", IT IS A REDUCED PRINT. Sep 22, 2016 - 3:39pm Drawing name: J:\1139-Onion Creek Fire EMS\00-DRAWINGS\PERMIT\1139--C-DETAILS.dwg

STATE OF TEXAS JOHN R. KING 58429 LICENSED PROFESSIONAL ENGINEER
9/22/2016

CPE CHAN & PARTNERS CONSULTING CIVIL ENGINEERS
CHAN & PARTNERS ENGINEERING, LLC
4319 JAMES CASEY STREET, #300
AUSTIN, TEXAS 78745
512-469-8195 (PH) ♦ 512-480-9811 (FAX)
E-mail: info@chanpartners.com
WWW.CHANPARTNERS.COM
TEXAS REGISTRATION NO. F-13013

AUSTIN ONION CREEK FIRE & EMS STATION
11112 OLD SAN ANTONIO ROAD
AUSTIN, TEXAS 78748

CITY OF AUSTIN 1839 FOUNDED

REVISIONS

DATE	9/22/2016
DRAWN BY	CD
CHECKED BY	JRK
PROJECT NO.	214106.00

STANDARD DETAIL SHEET 5 OF 5

C7.4

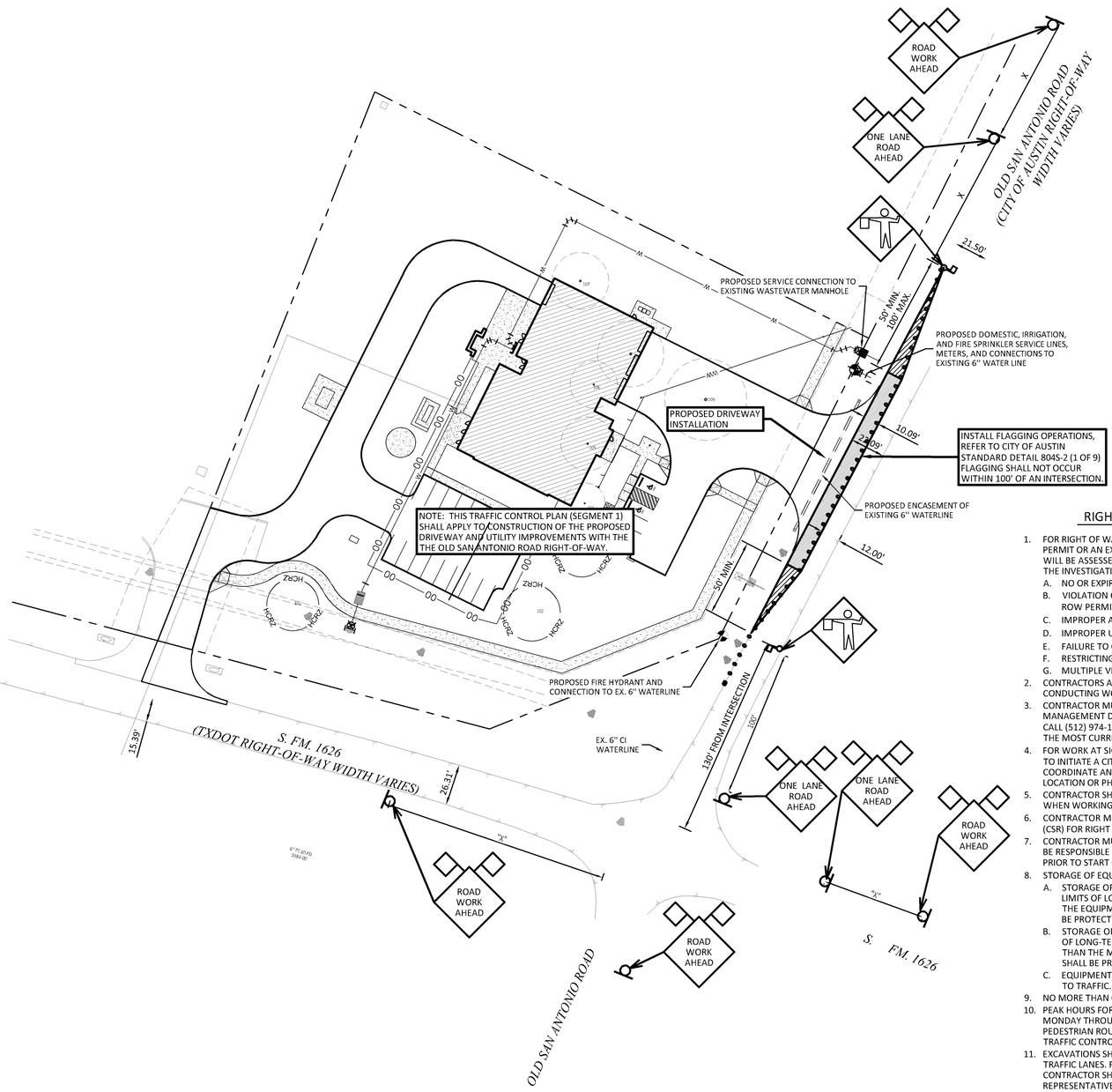

0 20' 40' 80'

SCALE: 1" = 40'

TRAFFIC CONTROL LEGEND

- SIGN
- TYPE III BARRICADE
- WORK ZONE/SEGMENT
- LANE CLOSED TO TRAFFIC
- FLAGGER
- CHANNELIZING DEVICES (DRUMS)
- DETAIL NUMBER / SHEET NUMBER — DETAIL NAME — DETAIL CALLOUT REFERENCE

POSTED SPEED LIMITS:

STREET NAME	SPEED(MPH)
OLD SAN ANTONIO RD.	35
S. FM. 1626	55

RIGHT-OF-WAY MANAGEMENT STANDARD NOTES:

1. FOR RIGHT OF WAY VIOLATIONS INCLUDING BUT NOT LIMITED TO WORKING WITHOUT A PERMIT OR AN EXPIRED PERMIT WITHIN THE CITY OF AUSTIN ROW AN INVESTIGATION FEE WILL BE ASSESSED FOR EACH OFFENSE UNTIL THE VIOLATION IS CORRECTED. FOLLOWING IS THE INVESTIGATION FEE SCHEDULE FOR VIOLATIONS OF PUBLIC SAFETY:
   - A. NO OR EXPIRED PERMIT = EQUAL TO THE COST OF THE PERMIT
   - B. VIOLATION OF PERMIT CONDITIONS, RESTRICTION LIMITS, TIMES AND LOCATIONS ON ROW PERMIT = $250
   - C. IMPROPER ADVANCE WARNING SIGN = $250
   - D. IMPROPER USE OF DEVICE = $250
   - E. FAILURE TO CORRECT DEFICIENCY = $500
   - F. RESTRICTING TRAFFIC DURING PEAK HOURS = EQUAL TO THE COST OF THE PERMIT
   - G. MULTIPLE VIOLATIONS = UP TO A 4 DAY SUSPENSION OF WORK
2. CONTRACTORS AND THEIR SUBCONTRACTORS MUST BE LICENSED BY THE CITY OF AUSTIN FOR CONDUCTING WORK WITHIN THE RIGHT OF WAY.
3. CONTRACTOR MUST OBTAIN RIGHT OF WAY EXCAVATION PERMITS FROM RIGHT OF WAY MANAGEMENT DIVISION, FOR EACH STREET PRIOR TO COMMENCEMENT OF WORK. PLEASE CALL (512) 974-1150 FOR ADDITIONAL INFORMATION REGARDING PERMITTING PROCESS AND THE MOST CURRENT RIGHT OF WAY PERMITTING FEE SCHEDULE.
4. FOR WORK AT SIGNALIZED INTERSECTIONS CONTRACTOR MUST DIAL 311 OR (512) 974-2000 TO INITIATE A CITIZENS SERVICE REQUEST (CSR) FOR THE TRAFFIC SIGNALS GROUP; TO COORDINATE AND GAIN APPROVAL A MINIMUM OF 1 WEEK PRIOR TO CHANGE OF PROJECT LOCATION OR PHASE.
5. CONTRACTOR SHALL HAVE AN APPROVED RIGHT OF WAY PERMIT ON SITE AT ALL TIMES WHEN WORKING IN THE ROW.
6. CONTRACTOR MUST DIAL 311 OR (512) 974-2000 TO INITIATE A CITIZENS SERVICE REQUEST (CSR) FOR RIGHT OF WAY MANAGEMENT A MINIMUM OF 1 WEEK PRIOR TO START OF WORK.
7. CONTRACTOR MUST PROVIDE TRAINING CERTIFICATION OF COMPETENT PERSON THAT WILL BE RESPONSIBLE FOR THE TRAFFIC CONTROL PLACEMENT, TO RIGHT OF WAY INSPECTOR, PRIOR TO START OF WORK.
8. STORAGE OF EQUIPMENT AND/OR MATERIAL WITHIN THE ROW.
   - A. STORAGE OF EQUIPMENT IN THE ROW IS PERMISSIBLE ONLY WITHIN THE CURRENT LIMITS OF LONG-TERM OR INTERMEDIATE-TERM CLOSURES AND SHALL BE LIMITED TO THE EQUIPMENT REQUIRED FOR THE CURRENT WORK ACTIVITY. THIS EQUIPMENT SHALL BE PROTECTED BEHIND BARRICADES.
   - B. STORAGE OF MATERIAL IN THE ROW IS PERMISSIBLE ONLY WITHIN THE CURRENT LIMITS OF LONG-TERM OR INTERMEDIATE-TERM CLOSURES AND SHALL BE LIMITED TO NO MORE THAN THE MATERIAL REQUIRED FOR THREE DAYS OF PRODUCTION. THIS MATERIAL SHALL BE PROTECTED BEHIND WATER-FILLED BARRIER.
   - C. EQUIPMENT OR MATERIAL STORED IN THE ROW SHALL NOT CREATE A VISUAL BARRIER TO TRAFFIC.
9. NO MORE THAN ONE WORK ZONE LOCATION MAY BE SET AT ONE TIME.
10. PEAK HOURS FOR ARTERIAL AND COLLECTOR STREETS ARE 6AM TO 9AM AND 4PM TO 6 PM, MONDAY THROUGH FRIDAY. NO DISRUPTION OR REDUCTION OF ACTIVE ROADWAY OR PEDESTRIAN ROUTE CAPACITY SHALL OCCUR DURING THESE TIMES, UNLESS ALLOWED BY TRAFFIC CONTROL PLAN.
11. EXCAVATIONS SHALL BE BACKFILLED OR PLATED WHEN REQUIRED TO OPEN IMPACTED TRAFFIC LANES. FOR EXCAVATIONS EXCEEDING A TRANSVERSE WIDTH OF 6 FEET, THE CONTRACTOR SHALL PROVIDE AN ENGINEERED PLATING PLAN TO THE OWNER'S REPRESENTATIVE FOR REVIEW BY RIGHT OF WAY MANAGEMENT DIVISION. PER 804S-4, 5 OF 9
12. EXISTING SIDEWALKS AND BEATEN PATHS SHALL BE MAINTAINED AS ADA COMPLIANT THROUGHOUT THE PROJECT DURATION WITH THE EXCEPTION OF FINAL FLATWORK AND UTILITY TIE-INS. ANY WORK OVERHEAD WITHIN 25 FEET OF EXISTING PEDESTRIAN PATHWAYS WILL REQUIRE PEDESTRIAN COVERED WALKWAYS. SIDEWALK CLOSURES FOR MAJOR SIDEWALK IMPROVEMENTS HAVE A 14-DAY MAXIMUM PERIOD AND SHALL BE COMPLETED IN PHASES AS TO NOT CLOSE MORE THAN ONE BLOCK AT A TIME.
13. "ROAD WORK AHEAD" AND "CONSTRUCTION ENTRANCE AHEAD" SIGNS MUST BE PLACED AT ALL APPROACHES TO STABILIZED CONSTRUCTION ENTRANCE. SEE THE CITY OF AUSTIN STANDARD DETAILS FOR SIGN SPACING.
14. DRIVEWAYS SHALL NOT BE CLOSED FOR MORE THAN 3 CONSECUTIVE CALENDAR DAYS
15. ADA COMPLIANCE SHALL BE MAINTAINED THROUGH STABILIZED CONSTRUCTION ENTRANCE.
16. BARRIER SHALL BE PLACED WITHIN GUIDELINES SET FORTH BY THE TMUTCD CRASH TESTING REQUIREMENTS (NCHRP REPORT 350) FOR THAT PARTICULAR BARRIER USED. ANY MODIFICATIONS TO THAT TESTING APPLICATION SHALL BE APPROVED BY THE ENGINEER OF RECORD.
17. FOR OVERNIGHT PROTECTION OF WORK ZONES WITHIN THE ROW, REFER TO CITY OF AUSTIN STANDARD 804S-4 SERIES DETAILS.
18. ALL TEMPORARY PAVING SHALL CONFORM TO CITY OF AUSTIN STANDARD DETAIL 1100S-4.
19. INITIAL AND PHASE CHANGE TRAFFIC CONTROL CHANGES SHALL BE INSTALLED ON THE WEEKENDS.
20. THE NAME AND TELEPHONE NUMBER OF THE CONTRACTOR OR SUPPLIER SHALL BE SHOWN ON THE NON-REFLECTIVE SURFACE OF ALL CHANNELIZING DEVICES IN ACCORDANCE WITH THE CITY OF AUSTIN STANDARD 800 SERIES DETAILS.

BARRICADING SUMMARY TABLES

Streets

Street	Classsification	Protection	Street From	Street To	Planned Improvements	Traffic Control Plan Sheet / Detail	Allowed Barricading Hours	Duration	Comments
Old San Antonio Road	Collector	NA	11112 Old San Antonio Rd.	11100 Old San Antonio Rd.	6" Water Line Encasement; Driveway	C8.0/804S-2, 1 of 8 Sheet C8.2	9am-2:30pm Mon-Fri; 7am-7pm Weekends	2 Week	Dates to be determined by Contractor in coordination with ROWMAN.

Intersections

Street Intersection	Planned Improvements	Traffic Control Plan Sheet / Detail	Allowed Barricading Hours	Duration	Comments
Old San Antonio Road & FM 1626	NA	C8.0 & C8.1	NA		

TRAFFIC CONTROL - SEGMENT 1

SCALE: 1" = 40'

90% CONSTRUCTION DOCUMENTS

IF THIS SHEET IS NOT 36" X 24", IT IS A REDUCED PRINT.

Sep 20, 2016 - 4:20pm Drawing name: J:\1139-Onion Creek Fire EMS\00-DRAWINGS\PERMIT\1139--C-TRAFFIC CONTROL.dwg

STATE OF TEXAS
JOHN R. KING
59429
LICENSED PROFESSIONAL ENGINEER
9/20/2016

CHAN & PARTNERS CONSULTING CIVIL ENGINEERS
CHAN & PARTNERS ENGINEERING, LLC
4319 JAMES CASEY STREET, #300
AUSTIN, TEXAS 78745
512-469-8195 (PH) • 512-469-3811 (FAX)
E-mail: info@chanpartners.com
WWW.CHANPARTNERS.COM
TEXAS REGISTRATION NO. F-13013

AUSTIN ONION CREEK FIRE & EMS STATION
11112 OLD SAN ANTONIO ROAD
AUSTIN, TEXAS 78748

CITY OF AUSTIN FOUNDED 1839

REVISIONS

DATE	9/20/2016
DRAWN BY	CD
CHECKED BY	JRK
PROJECT NO.	214106.00

TRAFFIC CONTROL SEGMENT 1

C8.0

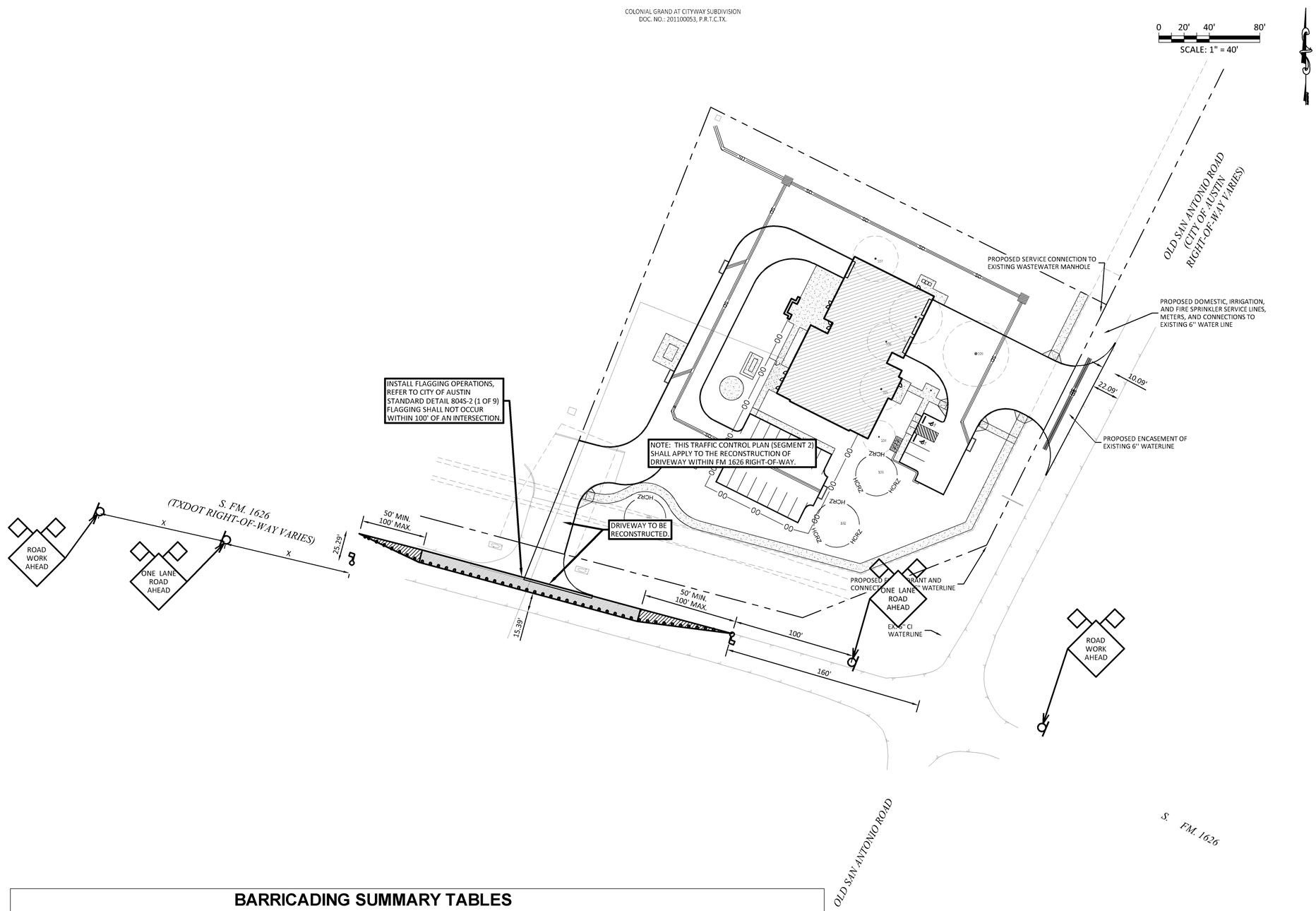

TRAFFIC CONTROL LEGEND

- SIGN
- TYPE III BARRICADE
- WORK ZONE/SEGMENT
- LANE CLOSED TO TRAFFIC
- FLAGGER
- CHANNELIZING DEVICES (DRUMS)

DETAIL NUMBER — X — DETAIL NAME
SHEET NUMBER — XX — DETAIL CALLOUT REFERENCE

POSTED SPEED LIMITS:

STREET NAME	SPEED(MPH)
OLD SAN ANTONIO RD.	35
S. FM. 1626	55

BARRICADING SUMMARY TABLES

Streets

Street	Classsification	Protection	Street From	Street To	Planned Improvements	Traffic Control Plan Sheet / Detail	Allowed Barricading Hours	Duration	Comments
FM 1626	Major Arterial	NA	11112 Old San Antonio Rd.	300 E FM 1626	Driveway	C8.1/804S-2, 2 of 8, Sheet C8.2	9am-2:30pm Mon-Fri; 7am-7pm Weekends	1 Week	Dates to be determined by Contractor in coordination with TXDOT.

Intersections

Street Intersection	Planned Improvements	Traffic Control Plan Sheet / Detail	Allowed Barricading Hours	Duration	Comments
Old San Antonio Road & FM 1626	NA	C8.0 & C8.1	NA		

TRAFFIC CONTROL - SEGMENT 2

SCALE: 1" = 40'

90% CONSTRUCTION DOCUMENTS

IF THIS SHEET IS NOT 36" X 24", IT IS A REDUCED PRINT.

Sep 20, 2016 - 4:20pm

Drawing name: J:\1139-Onion Creek Fire EMS\00-DRAWINGS\PERMIT\1139--C-TRAFFIC CONTROL.dwg

STATE OF TEXAS
JOHN R. KING
59429
LICENSED
PROFESSIONAL ENGINEER
9/20/2016

CHAN & PARTNERS CONSULTING CIVIL ENGINEERS

CHAN & PARTNERS ENGINEERING, LLC
4319 JAMES CASEY STREET, #300
AUSTIN, TEXAS 78745
512-469-8155 (PH) ♦ 512-469-3811 (FAX)
E-mail: info@chanpartners.com
WWW.CHANPARTNERS.COM
TEXAS REGISTRATION NO. F-13013

AUSTIN ONION CREEK FIRE & EMS STATION
11112 OLD SAN ANTONIO ROAD
AUSTIN, TEXAS 78748

CITY OF AUSTIN FOUNDED 1839

REVISIONS

DATE	9/20/2016
DRAWN BY	CD
CHECKED BY	JRK
PROJECT NO.	214106.00

TRAFFIC CONTROL SEGMENT 2

C8.1

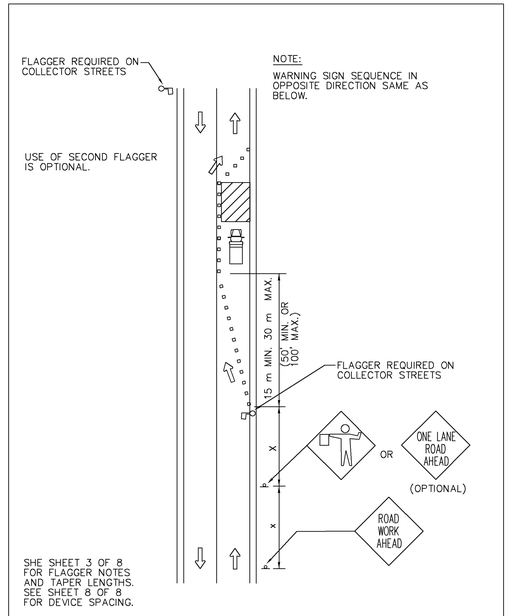

DEPARTMENT OF PUBLIC WORKS		COLLECTOR / RESIDENTIAL STREET FLAGGING OPERATIONS	
RECORD COPY SIGNED BY BILL GARDNER	03/13/06 ADOPTED	THE ARCHITECT/ENGINEER ASSUMES RESPONSIBILITY FOR APPROPRIATE USE OF THIS STANDARD.	STANDARD NO. 804S–2 1 OF 8

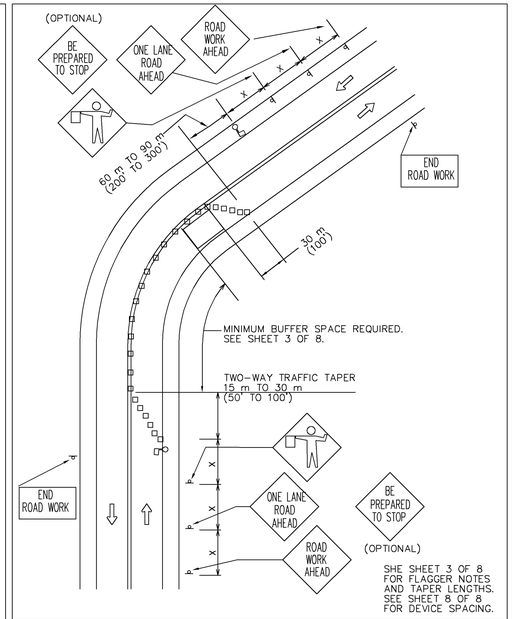

DEPARTMENT OF PUBLIC WORKS		FLAGGER SETUP FOR 2 LANE ROADWAY	
RECORD COPY SIGNED BY BILL GARDNER	03/13/06 ADOPTED	THE ARCHITECT/ENGINEER ASSUMES RESPONSIBILITY FOR APPROPRIATE USE OF THIS STANDARD.	STANDARD NO. 804S–2 2 OF 8

1. FOR DAYTIME WORK, THE FLAGGER SHALL WEAR AN APPROVED BRIGHTLY COLORED VEST. FOR NIGHTTIME WORK, THE VEST SHALL BE RETROFLECTIVE. THE RETRO–REFLECTIVE MATERIAL SHALL BE ORANGE, YELLOW, WHITE, SILVER, STRONG YELLOW–GREEN OR A FLOURESCENT VERSION OF THESE COLORS AND SHALL BE VISIBLE AT A MINIMUM DISTANCE OF 305 m (1,000').
2. FOR LOW–VOLUME APPLICATIONS, A SINGLE FLAGGER MAY BE ADEQUATE. WHERE ONE FLAGGER CAN BE USED, SUCH AS FOR SHORT WORK AREAS ON STRAIGHT ROADWAYS, THE FLAGGER MUST BE VISIBLE TO APPROACHING TRAFFIC FROM BOTH DIRECTIONS.
3. FLAGGERS SHALL USE ONLY STOP/SLOW PADDLE TO DIRECT TRAFFIC UNLESS WORKING IN A SIGNALIZED INTERSECTION WHERE DRIVERS MAY BE CONFUSED BY THE SIGN PADDLE. HAND SIGNAL MAY BE USED IN THESE SITUATIONS.
4. FLAGGERS SHALL ENSURE THAT ALL REQUIRED SIGNING IS IN PLACE PRIOR TO BEGINNING FLAGGING OPERATIONS.
5. FLAGGERS SHALL NOT PERFORM WORK THAT IS NOT RELATED TO FLAGGING WHILE ON DUTY.
6. FLAGGERS MAY CARRY AIR HORNS OR WHISTLES TO WARN WORKERS OF AN EMERGENCY CONDITION.
7. FLAGGERS SHALL BE REQUIRED TO USE TWO–WAY RADIOS WHEN OUT OF CLEAR VIEW OF EACH OTHER.
8. FLOODLIGHTS SHOULD BE PROVIDED TO MARK FLAGGER STATIONS AT NIGHT AS NEEDED.

TAPER LENGTHS

SPEED (kmph)	SPEED* (mph)	LENGTH (meters)	LENGTH (feet)
30	20	11	35
40	25	17	55
50	30	26	85
55	35	36	120
65	40	51	170
70	45	66	220
80	50	84	280
90	55	101	335
95	60	125	415
105	65	146	485

*POSTED SPEED

DEPARTMENT OF PUBLIC WORKS		FLAGGER SETUP FOR 2 LANE ROADWAY	
RECORD COPY SIGNED BY BILL GARDNER	03/13/06 ADOPTED	THE ARCHITECT/ENGINEER ASSUMES RESPONSIBILITY FOR APPROPRIATE USE OF THIS STANDARD.	STANDARD NO. 804S–2 3 OF 8

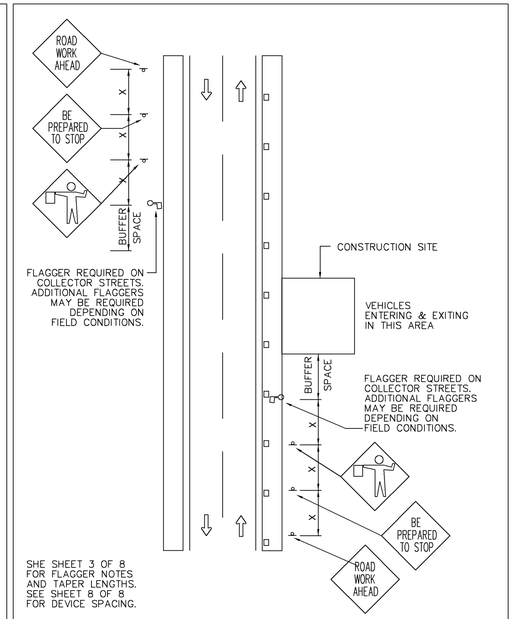

DEPARTMENT OF PUBLIC WORKS		FLAGGER SETUP FOR VEHICLES ENTERING AND EXITING WORK SITE	
RECORD COPY SIGNED BY BILL GARDNER	03/13/06 ADOPTED	THE ARCHITECT/ENGINEER ASSUMES RESPONSIBILITY FOR APPROPRIATE USE OF THIS STANDARD.	STANDARD NO. 804S–2 4 OF 8

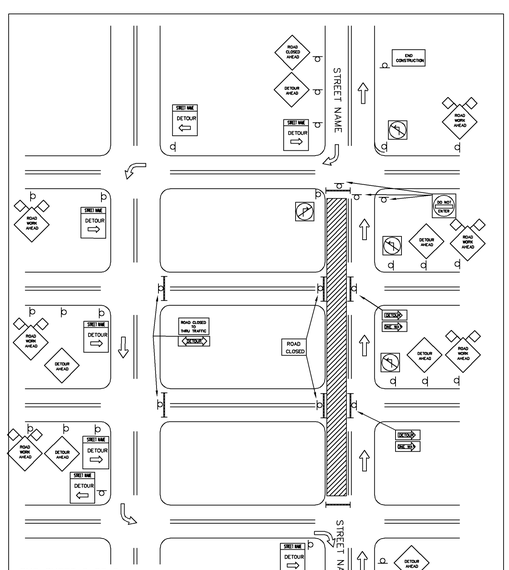

DEPARTMENT OF PUBLIC WORKS		STREET DETOUR SINGLE DIRECTION	
RECORD COPY SIGNED BY BILL GARDNER	03/13/06 ADOPTED	THE ARCHITECT/ENGINEER ASSUMES RESPONSIBILITY FOR APPROPRIATE USE OF THIS STANDARD.	STANDARD NO. 804S–2 5 OF 8

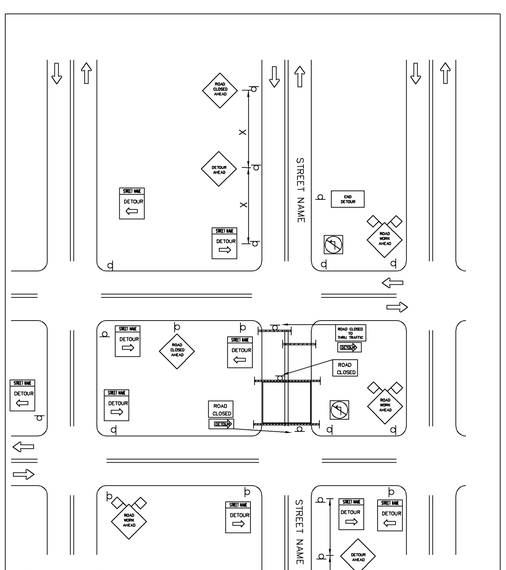

DEPARTMENT OF PUBLIC WORKS		STREET DETOUR BOTH DIRECTIONS	
RECORD COPY SIGNED BY BILL GARDNER	03/13/06 ADOPTED	THE ARCHITECT/ENGINEER ASSUMES RESPONSIBILITY FOR APPROPRIATE USE OF THIS STANDARD.	STANDARD NO. 804S–2 6 OF 8

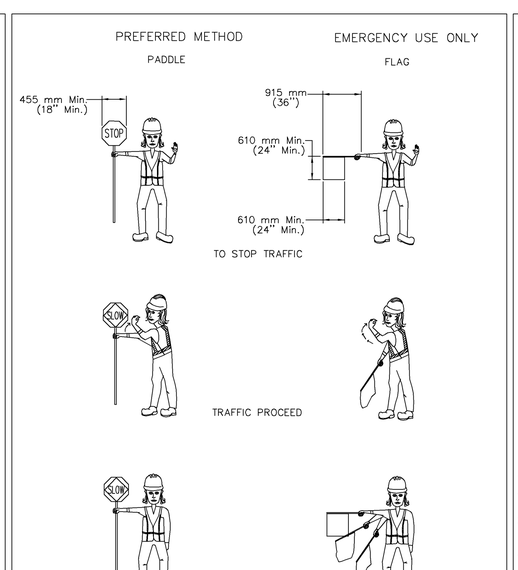

DEPARTMENT OF PUBLIC WORKS		USE OF HAND SIGNALING DEVICES	
RECORD COPY SIGNED BY BILL GARDNER	03/13/06 ADOPTED	THE ARCHITECT/ENGINEER ASSUMES RESPONSIBILITY FOR APPROPRIATE USE OF THIS STANDARD.	STANDARD NO. 804S–2 7 OF 8

Typical Transition Lengths and Suggested Maximum Spacing of Devices

Speed KMPH	Posted Speed MPH	Formula	Minimum Desirable Taper Lengths (L) Meters (Feet) 3.0(10) Offset Meters (feet)	3.3(11) Offset Meters (feet)	3.6(12) Offset Meters (feet)	Suggested Max. Device Spacing On a taper Meters (feet)	On a tangent Meters (feet)	Suggested Sign Spacing Meters (Feet) "X" Dimension
50	30	$L=\frac{WS^2}{60}$	45 (150)	50 (165)	55 (180)	9 (30)	15–20 (60–75)	40 (120)
55	35		65 (205)	70 (225)	75 (245)	10 (35)	25–25 (70–90)	50 (160)
65	40		80 (265)	90 (295)	100 (320)	12 (40)	25–30 (80–100)	75 (240)
70	45	L=WS	135 (450)	150 (495)	165 (540)	13 (45)	25–30 (90–110)	100 (320)
80	50		150 (500)	165 (550)	180 (600)	15 (50)	30–35 (100–125)	120 (400)
90	55		165 (550)	185 (605)	200 (660)	16 (55)	35–40 (110–140)	150 (500)
95	60		180 (600)	200 (660)	220 (720)	18 (60)	40–45 (120–150)	180 (600)
105	65		195 (650)	215 (715)	235 (780)	19 (65)	40–50 (130–165)	210 (700)
115	70		215 (700)	235 (770)	255 (840)	21 (70)	45–55 (140–175)	240 (800)

LEGEND
- Channelizing devices
- Trailer mounted flashing arrow board
- Flagger

TRAFFIC DETOUR NOTES:

1. "STREET CLOSED" AND "STREET CLOSED TO THRU TRAFFIC" MAY BE USED IN PLACE OF "ROAD CLOSED" AND "ROAD CLOSED TO THRU TRAFFIC".
2. THE USE OF A STREET SIGN NAME NAME MOUNTED WITH THE M4–9 DETOUR SIGN** IS REQUIRED. THE STREET NAME PLATE SHOULD BE PLACED ABOVE THE DETOUR SIGN. THE PLATE MAY HAVE EITHER A WHITE–ON–GREEN OR A BLACK–ON–ORANGE LEGEND.
3. ADDITIONAL "DO NOT ENTER SIGNS" MAY BE DESIRABLE AT INTERSECTIONS WITH INTERVENING STREETS.
4. A M4–9 DETOUR SIGN** WITH AN ADVANCE TURN ARROW MAY BE USED IN ADVANCE OF A TURN. ON MULTI–LANE STREETS, SUCH SIGNS SHOULD BE USED.
5. M4–9 DETOUR SIGNS** MAY BE LOCATED ON THE FAR SIDE OF INTERSECTIONS.

** TEXAS MANUAL ON UNIFORM TRAFFIC CONTROL DEVICES

DEPARTMENT OF PUBLIC WORKS		TYPICAL LENGTHS & SPACING OF DEVICES, LEGEND and GENERAL NOTES	
RECORD COPY SIGNED BY BILL GARDNER	03/13/06 ADOPTED	THE ARCHITECT/ENGINEER ASSUMES RESPONSIBILITY FOR APPROPRIATE USE OF THIS STANDARD.	STANDARD NO. 804S–2 8 OF 8

90% CONSTRUCTION DOCUMENTS

IF THIS SHEET IS NOT 36" X 24", IT IS A REDUCED PRINT. Sep 20, 2016 - 4:20pm Drawing name: J:\1139-Onion Creek Fire EMS\00-DRAWINGS\PERMIT\1139--C-TRAFFIC CONTROL.dwg

STATE OF TEXAS
JOHN R. KING
59429
LICENSED
PROFESSIONAL ENGINEER
9/20/2016

CHAN & PARTNERS CONSULTING CIVIL ENGINEERS
CHAN & PARTNERS ENGINEERING, LLC
4319 JAMES CASEY STREET, #300
AUSTIN, TEXAS 78745
512-469-8155 (PH) ♦ 512-469-3811 (FAX)
E-mail: info@chanpartners.com
WWW.CHANPARTNERS.COM
TEXAS REGISTRATION NO. F-13013

AUSTIN ONION CREEK FIRE & EMS STATION
11112 OLD SAN ANTONIO ROAD
AUSTIN, TEXAS 78748

CITY OF AUSTIN FOUNDED 1839

REVISIONS

DATE	9/20/2016
DRAWN BY	CD
CHECKED BY	JRK
PROJECT NO.	214106.00

TRAFFIC CONTROL DETAILS SHEET 1

C8.2

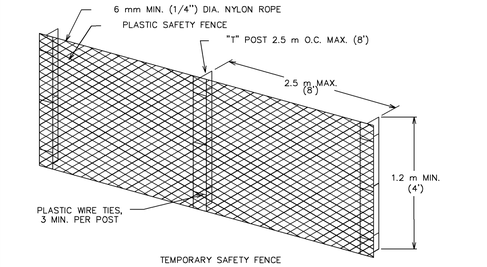

TEMPORARY SAFETY FENCE

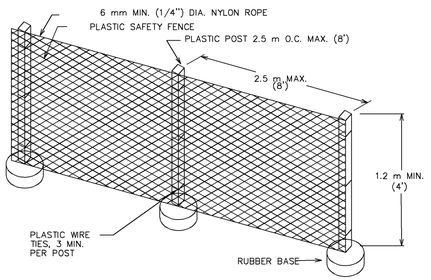

PORTABLE SAFETY FENCE

CITY OF AUSTIN DEPARTMENT OF PUBLIC WORKS	SAFETY FENCE	
RECORD COPY SIGNED BY SAM ANGOORI 04/03/09 ADOPTED	THE ARCHITECT/ENGINEER ASSUMES RESPONSIBILITY FOR APPROPRIATE USE OF THIS STANDARD.	STANDARD NO. 804S–4 1 OF 9

1. SAFETY FENCE SHALL BE USED TO PROTECT ALL EXCAVATIONS IN THE RIGHT–OF–WAY.
2. SAFETY FENCES SHALL BE USED TO SEPARATE CONSTRUCTION ACTIVITIES FROM PEDESTRIAN.
3. ALL SAFETY FENCING SHALL BE PLASTIC, 1,200 mm (48") MINIMUM HEIGHT AND ORANGE IN COLOR.
4. SAFETY FENCE USED WITHIN THE ROADWAY SHALL BE REFLECTORIZED WITH A MINIMUM OF TWO (2) STRIPS OF RETROREFLECTIVE MATERIAL, A MINIMUM OF 25 mm (1') WIDE, THE LENGTH OF THE FENCE OR DELINEATED BY CHANNELIZING DEVICES.
5. SAFETY FENCE USED TO SEPARATE SIDEWALKS FROM CONSTRUCTION ACTIVITIES SHALL HAVE MINIMUM ENCROACHMENT TO THE SIDEWALK.
6. AS A MINIMUM, SAFETY FENCING IS REQUIRED IN AREAS ADJACENT TO EXCAVATIONS GREATER THAN OR EQUAL TO 150 mm (6").
7. SAFETY FENCING SHALL BE PAID FOR UNDER ITEM 803S, "BARRICADES, SIGNS AND TRAFFIC HANDLING", PAY ITEM NO. 803S–SF.
8. PORTABLE SAFETY FENCE MOUNTS SHALL BE APPROVED BY THE TRANSPORTATION DIVISION PRIOR TO CONSTRUCTION.

CITY OF AUSTIN DEPARTMENT OF PUBLIC WORKS	SAFETY FENCE	
RECORD COPY SIGNED BY SAM ANGOORI 04/03/09 ADOPTED	THE ARCHITECT/ENGINEER ASSUMES RESPONSIBILITY FOR APPROPRIATE USE OF THIS STANDARD.	STANDARD NO. 804S–4 2 OF 9

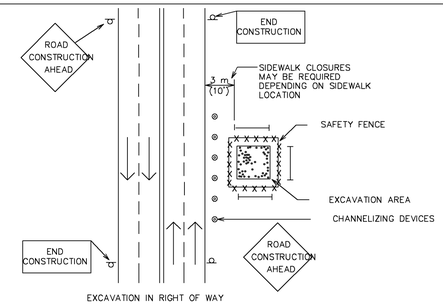

EXCAVATION IN RIGHT OF WAY

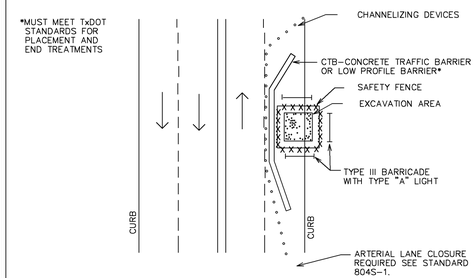

EXCAVATION IN ROADWAY

CITY OF AUSTIN DEPARTMENT OF PUBLIC WORKS	LARGE EXCAVATION	
RECORD COPY SIGNED BY SAM ANGOORI 04/03/09 ADOPTED	THE ARCHITECT/ENGINEER ASSUMES RESPONSIBILITY FOR APPROPRIATE USE OF THIS STANDARD.	STANDARD NO. 804S–4 3 OF 9

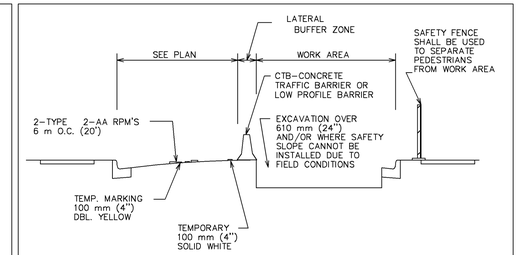

POSITIVE BARRIERS
TYPICAL CROSS SECTION

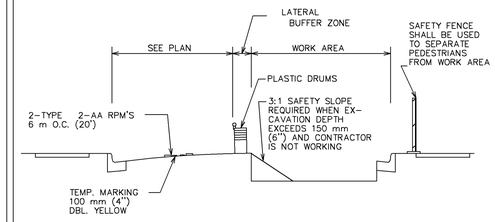

SAFETY SLOPE
TYPICAL CROSS SECTION

CITY OF AUSTIN DEPARTMENT OF PUBLIC WORKS	WORK AREA PROTECTION	
RECORD COPY SIGNED BY SAM ANGOORI 04/03/09 ADOPTED	THE ARCHITECT/ENGINEER ASSUMES RESPONSIBILITY FOR APPROPRIATE USE OF THIS STANDARD.	STANDARD NO. 804S–4 4 OF 9

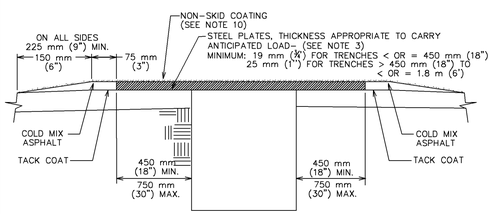

TYPICAL CROSS SECTION

CASE I– LOW TRAFFIC VOLUME/LIMITED IN–SERVICE TIME

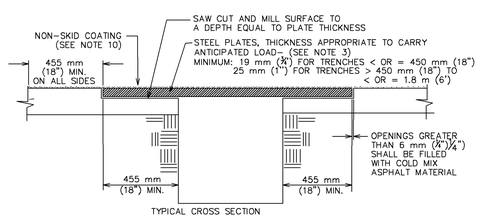

TYPICAL CROSS SECTION

CASE II– EXTENDED IN–SERVICE PLATING AND/OR HEAVILY–TRAFFICKED ROADS/STREETS (HMAC PAVEMENTS ONLY)

CITY OF AUSTIN DEPARTMENT OF PUBLIC WORKS	STEEL PLATING	
RECORD COPY SIGNED BY SAM ANGOORI 04/03/09 ADOPTED	THE ARCHITECT/ENGINEER ASSUMES RESPONSIBILITY FOR APPROPRIATE USE OF THIS STANDARD.	STANDARD NO. 804S–4 6 OF 9

NOTES:

1. WHERE TRAFFIC MUST CROSS TRENCHES, THE CONTRACTOR SHALL PROVIDE SUITABLE BRIDGES.
2. THE USE OF STEEL PLATES SHALL BE APPROVED BY THE RIGHT OF WAY MANAGEMENT DIVISION OF WATERSHED PROTECTION AND DEVLOPMENT DEPARTMENT PRIOR TO INITIATION OF CONSTRUCTION.
3. THE THICKNESS OF PLATES FOR TRENCH WIDTHS EXCEEDING 1.8 m (6') SHALL BE ESTABLISHED IN AN ANALYSIS COMPLETED BY A LICENSED PROFESSIONAL ENGINEER, REGISTERED IN THE STATE OF TEXAS. THE ANALYSIS SHALL BE BASED ON HS–20 TRAFFIC LOADING WITH A MAXIMUM PLATE DEFLECTION OF 50 mm (½") WHEN EXPERIENCING SAID LOADING. FOR SITUATIONS WHERE MULTIPLE LAYERS OF PLATES (OR STACKED PLATES) ARE TO BE EMPLOYED, THE SEAMS (IE. THE INTER–FACE BETWEEN PLACED SIDE–BY–SIDE) OF THE UPPER LAYER SHALL BE PLACED PERPENDICULAR TO THE SEAMS OF THE UNDERLYING PLATES.
4. WHEN APPROVED, THE TYPE OF PLATE INSTALLATION SHALL BE BASED ON THE ANTICIPATED LENGTH OF TIME THE PLATE WILL BE IN SERVICE:
   CASE I: A CASE I INSTALLATION SHALL APPLY FOR NO LONGER THAN A 2 WEEK PERIOD.
   CASE II: A CASE II INSTALLATION SHALL APPLY FOR NO LONGER THAN 2 WEEK PERIOD.
5. THE TOPSIDE OF THE STEEL PLATE SHALL BE FLAT AND FREE OF ANY CLIPS, CHAINS, ATTACHMENTS, WELDMENTS OR SURFACE IRREGULARITIES.
6. PLATES WITH A PERMANENT DISPLACEMENT (I.E. DISPLACEMENT ANYWHERE ON THE SURFACE OF THE PLATE WITH RESPECT TO A PLANE FORMED BY THE OUTSIDE EDGES) THAT EXCEEDS 12 mm (½") SHALL NOT BE USED FOR PLATING PURPOSES. PLATES THAT DEVELOP A PERMANENT DISPLACEMENT EXCEEDING 12 mm (½") DURING SERVICE SHALL BE REMOVED AND REPLACED.
7. THE PLATES SHALL BE PROVIDED WITH APPROPRIATE NUMBER OF KEYHOLE SLOTS OR CIRCULAR HOLES FOR HANDLING, LIFTING, INSTALLATION AND REMOVAL PURPOSES.
8. THE CONTRACTOR SHOULD AVOID USING A LONG SERIES OF PLATES THAT RUN PARALLEL TO VEHICULAR TRAFFIC WHEELS PATHS.
9. ADDITIONAL METHODS OF SECURING PLATES MAY BE REQUIRED DEPENDING ON FIELD CONDITIONS.
10. FOR PLATES 1.8 M (6') OR GREATER IN DIRECTION OF TRAFFIC, A NON–SKID COATING SHOULD BE APPLIED TO THE ENTIRE SURFACE AREA OF ALL PLATES, AS WELL AS ADJACENT AREAS. THE NON–SKID COATING SHALL BE TCA (TEXTURED COATING OF AMERICA, INC.) STRATA–GRIP DECK COATING SYSTEM; SLIPFIX, INC. SPS (SLIP PROTECTION SURFACE) OR AN EQUIVALENT PRODUCT APPROVED BY THE ENGINEER OR DESIGNATED REPRESENTATIVE.

CITY OF AUSTIN DEPARTMENT OF PUBLIC WORKS	STEEL PLATING	
RECORD COPY SIGNED BY SAM ANGOORI 04/03/09 ADOPTED	THE ARCHITECT/ENGINEER ASSUMES RESPONSIBILITY FOR APPROPRIATE USE OF THIS STANDARD.	STANDARD NO. 804S–4 7 OF 9

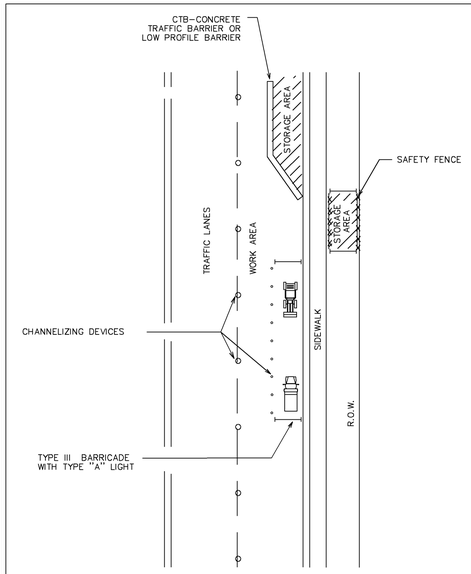

CITY OF AUSTIN DEPARTMENT OF PUBLIC WORKS	MATERIAL AND EQUIPMENT STORAGE	
RECORD COPY SIGNED BY SAM ANGOORI 04/03/09 ADOPTED	THE ARCHITECT/ENGINEER ASSUMES RESPONSIBILITY FOR APPROPRIATE USE OF THIS STANDARD.	STANDARD NO. 804S–4 8 OF 9

1. STORAGE OF EQUIPMENT AND MATERIALS SHALL BE RESTRICTED TO LOCATIONS WHERE DRIVER SIGHT DISTANCES TO TRAFFIC, PEDESTRIANS, BUSINESSES AND SIDE STREET INTERSECTIONS ARE NOT OBSTRUCTED OR WHERE AN UNSIGHTLY APPEARANCE. AS DETERMINED BY THE ENGINEER, WILL NOT EXIST.
2. EQUIPMENT MUST BE PARKED AS FAR AWAY FROM THE TRAVELWAYS AS PRACTICAL.
3. TOTAL AREA USED FOR EQUIPMENT STORAGE SHALL BE KEPT TO A MINIMUM.
4. ALL MATERIALS STORED IN THE RIGHT–OF–WAY MUST BE MAINTAINED IN A NEAT AND ORGANIZED MANNER.
5. MATERIALS STORED MAY NOT BE MORE THAN 915 mm (36") IN HEIGHT.
6. ALL MATERIALS STORED MUST BE USED WITHIN THREE (3) DAYS.

CITY OF AUSTIN DEPARTMENT OF PUBLIC WORKS	MATERIAL AND EQUIPMENT STORAGE	
RECORD COPY SIGNED BY SAM ANGOORI 04/03/09 ADOPTED	THE ARCHITECT/ENGINEER ASSUMES RESPONSIBILITY FOR APPROPRIATE USE OF THIS STANDARD.	STANDARD NO. 804S–4 9 OF 9

90% CONSTRUCTION DOCUMENTS

IF THIS SHEET IS NOT 36" X 24", IT IS A REDUCED PRINT.

Sep 20, 2016 - 4:21pm

Drawing name: J:\1139-Onion Creek Fire EMS\00-DRAWINGS\PERMIT\1139--C-TRAFFIC CONTROL.dwg

STATE OF TEXAS
JOHN R. KING
58429
LICENSED PROFESSIONAL ENGINEER
9/20/2016

CHAN & PARTNERS CONSULTING CIVIL ENGINEERS
CHAN & PARTNERS ENGINEERING, LLC
4319 JAMES CASEY STREET, #300
AUSTIN, TEXAS 78745
512-469-8155 (PH) ♦ 512-469-8811 (FAX)
E-mail: info@chanpartners.com
WWW.CHANPARTNERS.COM
TEXAS REGISTRATION NO. F-13013

AUSTIN ONION CREEK FIRE & EMS STATION
11112 OLD SAN ANTONIO ROAD
AUSTIN, TEXAS 78748

CITY OF AUSTIN EST. 1839 FOUNDED

REVISIONS

DATE	9/20/2016
DRAWN BY	CD
CHECKED BY	JRK
PROJECT NO.	214106.00

TRAFFIC CONTROL DETAILS SHEET 2

C8.3

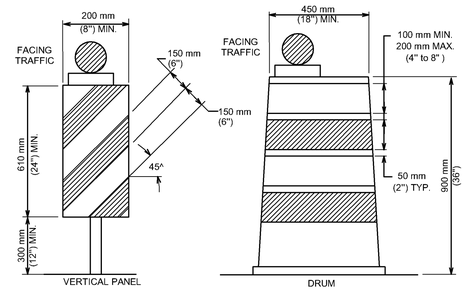

LONG TERM AND INTERMEDIATE TERM STATIONARY WORK

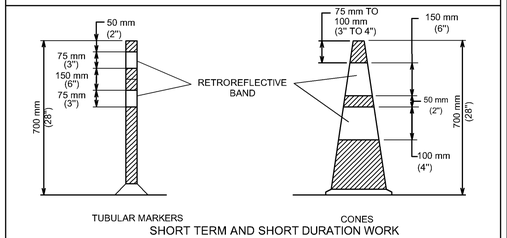

SHORT TERM AND SHORT DURATION WORK

SEE STANDARD 804S-5
SHEET 12 OF 13 AND SHEET 13 OF 13
FOR GENERAL NOTES AND DEVICE SPACING.

CITY OF AUSTIN DEPARTMENT OF PUBLIC WORKS		CHANNELIZING DEVICES	
RECORD COPY SIGNED BY SAM ANGOORI	01/04/10 ADOPTED	THE ARCHITECT/ENGINEER ASSUMES RESPONSIBILITY FOR APPROPRIATE USE OF THIS STANDARD.	STANDARD NO. 804S-5 1 OF 13

CHANNELIZING DEVICES

1. ALL CHANNELIZING DEVICES SHALL HAVE WARNING LIGHTS OR LARGE REFLECTORS WHEN USED AT NIGHT. FLASHING WARNING LIGHTS MAY BE PLACED ON CHANNELIZING DEVICES USED SINGULARLY OR IN GROUPS TO MARK A SPOT CONDITION. WARNING LIGHTS ON CHANNELIZING DEVICES USED IN A SERIES SHALL BE STEADY-BURN. CHANNELIZING DEVICES IN TAPERS AT NIGHT SHALL HAVE TYPE C WARNING LIGHTS.
2. THE RETROREFLECTIVE MATERIAL USED ON CHANNELIZING DEVICES SHALL HAVE A SMOOTH, SEALED OUTER SURFACE.
3. THE NAME AND TELEPHONE NUMBER OF THE AGENCY, CONTRACTOR OR SUPPLIER SHALL BE SHOWN ON THE NON-RETROREFLECTIVE SURFACE OF ALL CHANNELIZING DEVICES. THE LETTERS AND NUMBERS SHALL BE A NON-RETROREFLECTIVE COLOR AND NOT OVER 50 mm (2") IN HEIGHT.
4. PARTICULAR ATTENTION SHOULD BE GIVEN TO ASSURE THAT CHANNELIZING DEVICES ARE MAINTAINED AND KEPT CLEAN, VISIBLE AND PROPERLY POSTITIONED AT ALL TIMES. DEVICES SHALL BE REPLACED THAT ARE DAMAGED AND HAVE LOST A SIGNIFICANT AMOUNT OF THEIR RETROREFLECTIVITY AND EFFECTIVENESS.

CONES

CONES SHALL PREDOMINANTLY BE ORANGE, FLUORESCENT RED-ORANGE, OR FLUORESCENT YELLOW-ORANGE IN COLOR, NOT LESS THAN 70 mm (28") IN HEIGHT, AND SHALL BE MADE OF A MATERIAL THAT CAN BE STRUCK WITHOUT DAMAGING VEHICLES ON IMPACT. FOR NIGHT TIME USE, CONES SHALL BE RETROREFLECTIVE OR EQUIPPED WITH LIGHTING DEVICES FOR MAXIMUM VISIBLITY. RETROREFLECTION OF CONES SHALL BE PROVIDED BY A WHITE BOND 150 mm (6") WIDE, NO MORE THAN 75 TO 100 mm (3 TO 4") FROM THE TOP OF THE CONE, AND AN ADDITIONAL 100 mm (4") WHITE BAND A MINIMUM OF 50 mm (2") BELOW THE 150 mm (6") BAND. TRAFFIC CONES ARE NORMALLY USED FOR SHORT-TERM STATIONARY AND SHORT DURATION WORK. HOWEVER, CONES MAY BE USED FOR INTERMEDIATE-TERM STATIONARY WORK AT NIGHT, IF THE SITE IS CONTINUOUSLY MANNED.

TUBULAR MARKERS

TUBULAR MARKERS SHALL PREDOMINANTLY BE ORANGE IN COLOR, NOT LESS THAN 700 mm (28") IN HEIGHT , A MINIMUM 50 mm (2") WIDE WHEN FACING TRAFFIC AND MADE OF A MATERIAL THAT CAN BE STRUCK WITHOUT DAMAGING VEHICLES. FOR NIGHT TIME USE, TUBULAR MARKERS SHALL BE RETROREFLECTIVE PROVIDED BY TWO (2) 75 mm (3") WIDE WHITE BANDS PLACED A MAXIMUM OF 50 mm (2") FROM THE TOP, WITH A MAXIMUM OF 150 mm (6") BETWEEN BANDS. TUBULAR MARKERS ARE NORMALLY USED FOR SHORT-TERM STATIONARY AND SHORT DURATION WORK. HOWEVER, TUBULAR MARKERS MAY BE USED FOR INTERMEDIATE-TERM STATIONARY WORK AT NIGHT, IF THE SITE IS CONTINUOUSLY MANNED.

VERTICAL PANELS

VERTICAL PANELS SHALL BE 200 TO 300 mm (8 TO 12") WIDE AND AT LEAST 600 mm (24") IN HEIGHT. THEY SHALL HAVE ORANGE AND WHITE STRIPES, AND BE RETROREFLECTIVE. PANEL STRIPE WIDTHS SHALL BE 150 mm (6") EXCEPT WHERE PANEL HEIGHTS ARE LESS THAN 900 mm (36"), WHEN 100 mm (4") STRIPES MAY BE USED. IF USED FOR TWO-WAY TRAFFIC, BACK-TO-BACK PANELS SHALL BE USED.

DRUMS

1. DRUMS USED FOR TRAFFIC WARNING OR CHANNELIZATION SHALL BE CONSTRUCTED OF LIGHT-WEIGHT FLEXIBLE AND DEFORMABLE MATERIALS AND BE A MINIMUM OF 900 mm (36") IN HEIGHT, AND HAVE AT LEAST 450 mm (18") MINIMUM WIDTH, REGARDLESS OF OREINTATION. STEEL DRUMS SHALL NOT BE USED. THE MARKINGS ON DRUMS SHALL BE HORIZONTAL, CIRCUNFERENTIAL, ALTERNATING ORANGE AND WHITE RETROREFLECTIVE STRIPES 100 TO 200 mm (4 TO 8") WIDE. EACH DRUM SHALL HAVE A MINIMUM OF TWO (2) ORANGE AND TWO (2) WHITE STRIPES. ANY NON-RETROREFLECTIVE SPACES BETWEEN THE HORIZONTAL ORANGE AND WHITE STRIPES, SHALL NOT EXCEED 50 mm (2") WIDE. DRUMS SHALL HAVE CLOSED TOPS THAT WILL NOT ALLOW COLLECTION OF ROADWORK OR OTHER DEBRIS.
2. DRUMS SHOULD NOT BE WEIGHTED WITH SAND, WATER OR ANY MATERIAL TO AN EXTENT THAT WOULD MAKE THE HAZARDOUS TO MOTORISTS, PEDESTRIANS OR WORKERS. WHEN THEY ARE USED IN REGIONS SUSCEPTIBLE TO FREEZING, THEY SHOULD HAVE DRAINAGE HOLES IN THE BOTTOM SO WATER WILL NOT ACCUMULATE AND FREEZE,CAUSING A HAZARD IF STRUCK BY A MOTORIST. BALLAST SHALL NOT BE PLACED ON TOP OF THE DRUM.

CITY OF AUSTIN DEPARTMENT OF PUBLIC WORKS		CHANNELIZING DEVICES	
RECORD COPY SIGNED BY SAM ANGOORI	01/04/10 ADOPTED	THE ARCHITECT/ENGINEER ASSUMES RESPONSIBILITY FOR APPROPRIATE USE OF THIS STANDARD.	STANDARD NO. 804S-5 2 OF 13

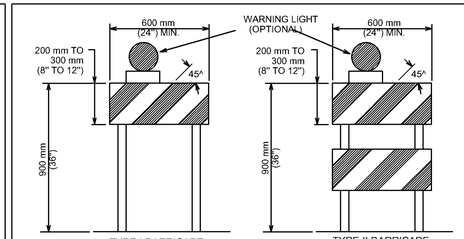

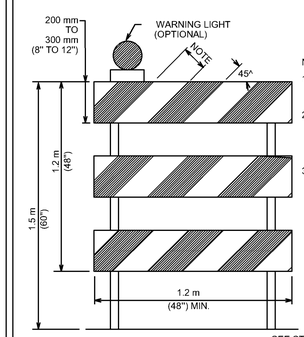

NOTES:

1. NOMINAL LUMBER DIMENSIONS ARE SATISFACTORY FOR BARRICADE RAIL WIDTH DIMENSIONS.
2. RAIL STRIPE WIDTHS SHALL BE 150 mm (6") EXCEPT WHERE RAIL LEGNTHS ARE LESS THAN 900 mm (36"), THEN 100 mm (4") WIDE STRIPES MAY BE USED.
3. THE SIDE OF BARRICADES FACING TRAFFIC SHALL HAVE RETRO-REFLECTIVE RAIL FACES.

SEE STANDARD 804S-5
SHEET 12 OF 13 AND SHEET 13 OF 13
FOR GENERAL NOTES AND DEVICE SPACING.

CITY OF AUSTIN DEPARTMENT OF PUBLIC WORKS		BARRICADES	
RECORD COPY SIGNED BY SAM ANGOORI	01/04/10 ADOPTED	THE ARCHITECT/ENGINEER ASSUMES RESPONSIBILITY FOR APPROPRIATE USE OF THIS STANDARD.	STANDARD NO. 804S-5 3 OF 13

BARRICADES

1. BARRICADES SHALL BE OF THREE TYPES: TYPE I, TYPE II OR TYPE III.
2. STRIPES ON BARRICADE RAILS SHALL BE ALTERNATING ORANGE AND WHITE RETRO-REFLECTIVE STRIPES (SLOPING DOWNWARD AT AN ANGLE OF 45 DEGREES IN THE DIRECTION TRAFFIC IS TO PASS). THE STRIPES SHALL BE 150 mm (6") WIDE, EXCEPT WHERE RAIL LENGTHS ARE LESS THAN 900 mm (36"), WHEN 100 mm (4") WIDE STRIPES MAY BE USED.
3. WHERE A BARRICADE EXTENDS ENTIRELY ACROSS A ROADWAY, THE SURFACE STRIPES SHOULD SLOPE DOWNWARD IN THE DIRECTION TOWARD WHICH TRAFFIC MUST TURN. WHERE BOTH RIGHT AND LEFT TURNS ARE PROVIDED, THE STRIPES MAY SLOPE DOWN-WARD IN BOTH DIRECTIONS FROM THE CENTER OF THE BARRICADE OR BARRICADES. WHERE NO TURNS ARE INTENDED, THE STRIPES SHOULD SLOPE DOWNWARD TOWARD THE CENTER OF THE BARRICADE OR BARRICADES.
4. BARRICADE RAILS SHOULD BE SUPPORTED IN A MANNER THAT WILL ALLOW THEM TO BE SEEN BY THE MOTORIST AND PROVIDE A STABLE SUPPORT NOT EASILY BLOWN OVER BY THE WIND OR TRAFFIC. FOR TYPE I BARRICADES, THE SUPPORT MAY INCLUDE OTHER UNSTRIPED HORIZONTAL PANELS NECESSARY TO PROVIDE STABILITY.
5. BARRICADES ARE LOCATED ADJACENT TO TRAFFIC AND ARE THEREFORE SUBJECT TO IMPACT WITH ERRANT VEHICLES. BECAUSE OF THEIR VULNERABLE POSITION AND THE HAZARD THEY COULD CREATE, THEY SHOULD BE CONSTRUCTED OF LIGHTWEIGHT MATERIALS AND HAVE NO RIGID STAY BRACING FOR A-FRAME DESIGNS. ALL BARRICADE SYSTEMS SHOULD BE CRASHWORTHY.
6. ON HIGH-SPEED EXPRESSWAYS OR IN OTHER SITUATION WHERE BARRICADES MAY BE SUSCEPTIBLE TO OVERTURING IN THE WIND, SANDBAGS SHOULD BE USED FOR BALLASTING. SANDBAGS MAY BE PLACED ON PARTS OF THE FRAME OR STAYS TO PROVIDE THE REQUIRED BALLAST BUT SHALL NOT BE PLACED ON TOP OF ANY STRIPED RAIL. BARRICADES SHALL NOT BE BALLASTED BY HEAVY OBJECTS SUCH AS ROCKS OR CHUNKS OF CONCRETE.

CITY OF AUSTIN DEPARTMENT OF PUBLIC WORKS		BARRICADES	
RECORD COPY SIGNED BY SAM ANGOORI	01/04/10 ADOPTED	THE ARCHITECT/ENGINEER ASSUMES RESPONSIBILITY FOR APPROPRIATE USE OF THIS STANDARD.	STANDARD NO. 804S-5 4 OF 13

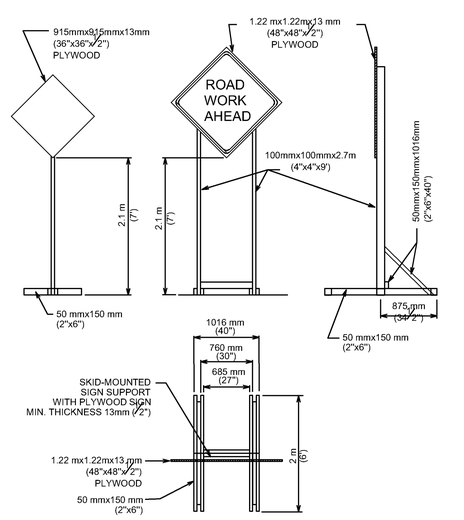

(LONG TERM AND INTERMEDIATE-TERM STATIONARY WORK)

TEMPORARY SIGN SUPPORT

SEE STANDARD 804S-5
SHEET 12 OF 13 AND SHEET 13 OF 13
FOR GENERAL NOTES AND DEVICE SPACING.

CITY OF AUSTIN DEPARTMENT OF PUBLIC WORKS		TRAFFIC CONTROL SIGNS	
RECORD COPY SIGNED BY SAM ANGOORI	01/04/10 ADOPTED	THE ARCHITECT/ENGINEER ASSUMES RESPONSIBILITY FOR APPROPRIATE USE OF THIS STANDARD.	STANDARD NO. 804S-5 5 OF 13

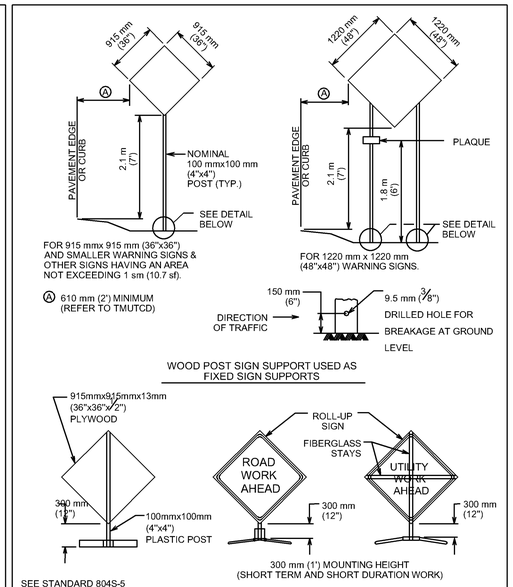

SEE STANDARD 804S-5
SHEET 12 OF 13 AND
SHEET 13 OF 13 FOR
GENERAL NOTES AND DEVICE SPACING.

CITY OF AUSTIN DEPARTMENT OF PUBLIC WORKS		TRAFFIC CONTROL SIGNS	
RECORD COPY SIGNED BY SAM ANGOORI	01/04/10 ADOPTED	THE ARCHITECT/ENGINEER ASSUMES RESPONSIBILITY FOR APPROPRIATE USE OF THIS STANDARD.	STANDARD NO. 804S-5 6 OF 13

1. WARNING SIGNS SHALL BE ORANGE. FLUORESCENT RED-ORANGE OR FLUORESCENT YELLOW-ORANGE IN COLOR. THE FLUORESCENT VERSIONS OF ORANGE PROVIDE HIGHER CONSPICUITY THAN STANDARD ORANGE, ESPECIALLY DURING TWILGHT. ALL SIGNS USED AT NIGHT SHALL BE EITHER RETRORE-FLECTIVE, WITH A MATERIAL THAT HAS A SMOOTH, SEALED OUTER SURFACE, OR ILLUMINATED TO SHOW SIMILAR SHAPE AND COLOR BOTH DAY AND NIGHT. SIGN ILLUMINATION MAY BE EITHER IN-TERNAL OR EXTERNAL. ROADWAY LIGHTING DOES NOT MEET THE REQUIREMENTS FOR SIGN ILLUMINATION.
2. TYPE A FLASHING WARNING LIGHTS MAY BE USED IN CONJUNCTION WITH SIGNS AT NIGHT. STANDARD ORANGE FLAGS MAY BE USED FOR DAY TIME OPERATIONS. HOWEVER, NEITHER LIGHTS NOR FLAGS MAY BLOCK THE SIGN LEGEND
3. SIGNS SHOULD BE LOCATED ON THE RIGHT-HAND SIDE OF THE ROADWAY. WHEN SPECIAL EMPHASIS IS NEEDED, SIGNS MAY BE PLACE ON BOTH THE LEFT AND RIGHT SIDES OF ROADWAY. SIGNS SHALL BE PLACED ON BOTH THE LEFT AND RIGHT SIDES OF ONE-WAY OR DIVIDED ROADWAYS. SIGNS USED FOR LONG-TERM STATIONARY AND INTERMEDIATE-TERM STATIONARY WORK SHALL BE MOUNTED AT A HEIGHT OF AT LEAST 2.1 m (7'), MEASURED FROM THE BOTTOM OF THE SIGN. THE HEIGHT TO THE BOTTOM OF A SECONDARY SIGN MOUNTED BELOW ANOTHER SIGN MAY BE O.3 m (1') LESS THAN THE APPROPRIATE HEIGHT ABOVE.
4. SIGNS MAY BE MOUNTED ON PORTABLE SUPPORTS FOR SHORT-TERM, SHORT DURATION, MOBILE CON-DITIONS AND EMERGENCIES. SIGNS MOUNTED ON PORTABLE SUPPORTS SHALL BE AT A HEIGHT OF AT LEAST 0.3 m (1'), MEASURED FROM THE BOTTOM OF THE SIGN.
5. ALL SIGN SYSTEMS SHOULD BE CRASHWORTHY. NO SIGN MOUNTS SHALL BLOCK OR IMPEDE SIDEALKS UNLESS NO OTHER OPTION IS AVAILABLE. ONLY SANDBAGS SHOULD BE USED FOR BALLASTING SIGN MOUNTS.

TABLE VI-3 TYPICAL CONSTRUCTION WARNING SIGN SIZE AND SPACING

Roadway Classification	Posted Speed	Sign Spacing ★	Long-term Stationary Or Intermediate-term Stationary Approaching Warning Signs CW20 Series And CW22-1 Sign		Short-term Stationary Or Short Duration Approach Warning Signs CW22 Series		Other Warning Signs
			Standard	Minimum[4]	Standard	Minimum[4]	Standard
Conven.	KPH (MPH)	meter (feet)	mm (inches)	mm (inches)	mm (inches)	mm (inches)	mm (inches)
	50 (30)	40 (120)	1220x1220 (48x48)	915x915 (36x36)			
	55 (35)	50 (160)			915x915 (36x36)		915x915 (36x36)
	60 (40)	75 (240)					
	70 (45)	100 (320)		Use Standard Size		Use Standard Size	
	80 (50)	120 (400)					
	90 (55)	150 (500) 2					
	100 (60)	180 (600) 2			1220x1220 (48x48)		1220x1220 (48x48)
	105 (65)	210 (700) 2					
	115 (70)	240 (800) 2					
Exp. or Fwy	★★	★★ 3			★★★	★★★	★★★

★ MINIMUM DISTANCE FROM WORK TO 1st ADVANCE WARNING SIGN AND/OR DISTANCE BETWEEN EACH ADDITIONAL SIGN.
★★ FOR TYPICAL SIGN SPACINGS ON EXPRESSWAYS AND FREEWAYS. REFER TO THE CURRENT ADDITION OF TMUTCD.
★★★ SMALLER SIGN SIZES MAY BE USED WHERE SIGN DESIGNS HAVE NOT BEEN INCLUDED IN THE "STANDARD HIGHWAY SIGNS DESIGN MANUAL".

1. SPECIAL OR LARGER SIZE SIGNS MAY BE USED AS NECESSARY.
2. DISTANCE BETWEEN SIGNS SHOULD BE INCREASED AS REQUIRED TO HAVE 450 m (1500') OR MORE ADVANCE WARNING.
3. DISTANCE BETWEEN SIGNS SHOULD BE INCREASED AS REQUIRED TO HAVE A 0.8 km (½ MILE) OR MORE ADVANCE WARNING.
4. FOR USE ONLY ON SECONDARY ROADS OR CITY STREETS WHERE SPEEDS ARE LOW.

CITY OF AUSTIN DEPARTMENT OF PUBLIC WORKS		TRAFFIC CONTROL SIGNS	
RECORD COPY SIGNED BY SAM ANGOORI	01/04/10 ADOPTED	THE ARCHITECT/ENGINEER ASSUMES RESPONSIBILITY FOR APPROPRIATE USE OF THIS STANDARD.	STANDARD NO. 804S-5 7 OF 13

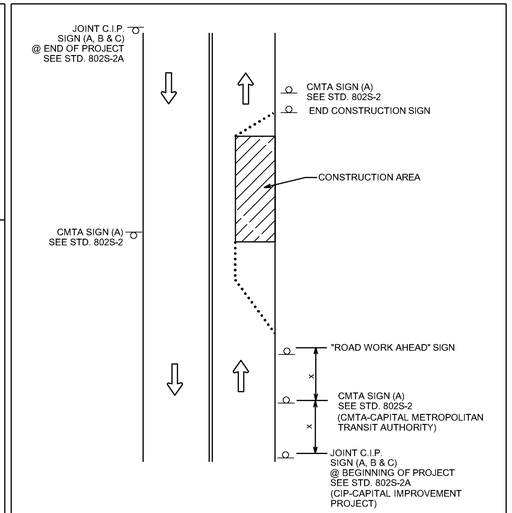

NOTES:

1. OTHER REQUIRED SIGNS NOT SHOWN FOR CLARITY.
2. "X" DISTANCES SAME AS STANDARD TABLE SHOWN ON SHEET 13 OF 13.

SEE STANDARD 804S-5
SHEET 12 OF 13 AND SHEET 13 OF 13
FOR GENERAL NOTES AND DEVICE SPACING.

CITY OF AUSTIN DEPARTMENT OF PUBLIC WORKS		TYPICAL CMTA/C.I.P. SIGN LOCATIONS	
RECORD COPY SIGNED BY SAM ANGOORI	01/04/10 ADOPTED	THE ARCHITECT/ENGINEER ASSUMES RESPONSIBILITY FOR APPROPRIATE USE OF THIS STANDARD.	STANDARD NO. 804S-5 8 OF 13

90% CONSTRUCTION DOCUMENTS

IF THIS SHEET IS NOT 36" X 24", IT IS A REDUCED PRINT.

Sep 20, 2016 - 4:21pm Drawing name: J:\1139-Onion Creek Fire EMS\00-DRAWINGS\PERMIT\1139--C-TRAFFIC CONTROL.dwg

STATE OF TEXAS
JOHN R. KING
59429
LICENSED PROFESSIONAL ENGINEER
9/20/2016

CHAN & PARTNERS CONSULTING CIVIL ENGINEERS
CHAN & PARTNERS ENGINEERING, LLC
4319 JAMES CASEY STREET, #300
AUSTIN, TEXAS 78745
512-469-8155 (PH) ★ 512-469-9811 (FAX)
E-mail: info@chanpartners.com
WWW.CHANPARTNERS.COM
TEXAS REGISTRATION NO. F-13013

AUSTIN ONION CREEK
FIRE & EMS STATION
11112 OLD SAN ANTONIO ROAD
AUSTIN, TEXAS 78748

REVISIONS

DATE	9/20/2016
DRAWN BY	CD
CHECKED BY	JRK
PROJECT NO.	214106.00

TRAFFIC CONTROL DETAILS SHEET 3

C8.4

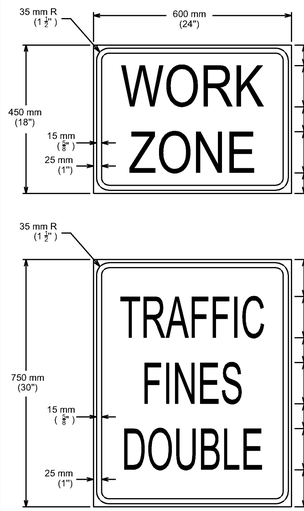

LETTERS - BLACK
BORDER - BLACK
BACKGROUND - ORANGE
REFL.

LETTERS - BLACK
BORDER - BLACK
BACKGROUND - WHITE
REFL.

SEE STANDARD DETAIL 804S-5
SHEET 5 OF 13 FOR SKID-
MOUNTED SIGN SUPPORT.

CITY OF AUSTIN DEPARTMENT OF PUBLIC WORKS		SPECIAL WORK ZONE SIGNS	
RECORD COPY SIGNED BY SAM ANGOORI	01/04/10 ADOPTED	THE ARCHITECT/ENGINEER ASSUMES RESPONSIBILITY FOR APPROPRIATE USE OF THIS STANDARD.	STANDARD NO. 804S-5 9 OF 13

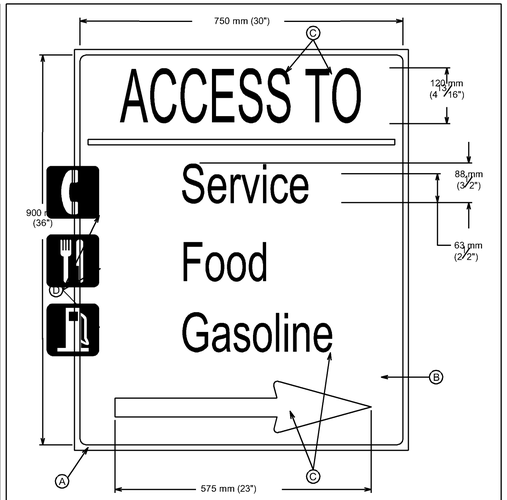

(A) 50 mm (1/2") WHITE RETROREFLECTIVE BORDER
(B) BLUE RETROFEFLECTIVE BACKGROUND
(C) WHITE RETROREFLECTIVE ARROW AND LETTERS
(D) WHITE RETROREFELCTIVE BUSINESS LOGO

NOTES:

1. CONTRACTORS CAN MAKE BUSINESS NAMES REMOVABLE/CHANGEABLE AS AN OPTION.
2. BUSINESS LOGO ARE OPTIONAL. IF USED LETTERING MUST BE MINIMIZED.

CITY OF AUSTIN DEPARTMENT OF PUBLIC WORKS		SPECIAL WORK ZONE SIGNS	
RECORD COPY SIGNED BY SAM ANGOORI	01/04/10 ADOPTED	THE ARCHITECT/ENGINEER ASSUMES RESPONSIBILITY FOR APPROPRIATE USE OF THIS STANDARD.	STANDARD NO. 804S-5 10 OF 13

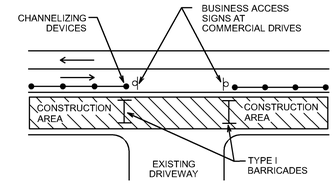

DRIVEWAY ACCESS BARRICADE DETAIL

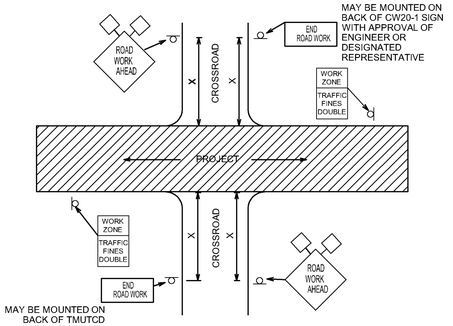

MAY BE MOUNTED ON
BACK OF TMUTCD
CW20-1 SIGN WITH
APPROVAL OF ENGINEER
OR DESIGNATED
REPRESENTATIVE
(TMUTCD-TEXAS MANUAL
FOR UNIFORM TRAFFIC
CONTROL DEVICES)

CROSSROAD SIGNING AND BARRICADING

SEE STANDARD 804S-5
SHEET 12 OF 13 AND SHEET 13 OF 13
FOR GENERAL NOTES AND DEVICE SPACING.

CITY OF AUSTIN DEPARTMENT OF PUBLIC WORKS		SIGNING AND BARRICADING CROSSROAD & DRIVEWAY	
RECORD COPY SIGNED BY SAM ANGOORI	01/04/10 ADOPTED	THE ARCHITECT/ENGINEER ASSUMES RESPONSIBILITY FOR APPROPRIATE USE OF THIS STANDARD.	STANDARD NO. 804S-5 11 OF 13

1. ALL TRAFFIC CONTROL DEVICES, SIGNS, BARRICADES AND WARNING SIGNS SHALL BE FURNISHED, PLACED, CONSTRUCTED AND MAINTAINED IN THE APPROPRIATE TYPES AND SIZES AND FLAGGER OPERATIONS EXECUTED IN ACCORDANCE WITH THE CURRENT EDITION OF THE TEXAS MANUAL ON UNIFORM CONTROL DEVICES (TMUTCD), THE CITY OF AUSTIN STANDARD SPECIFICATIONS SERIES 800 AND THE CITY OF AUSTIN TRANSPORTATION CRITERIA MANUAL, OR AS DIRECTED BY THE ENGINEER OR DESIGNATED REPRESENTATIVE. IF A CONFLICT ARISES THEN THE CITY OF AUSTIN TRANSPORTATION CRITERIA MANUAL SHALL CONTROL UNLESS OTHERWISE INSTRUCTED BY THE ENGINEER OR DESIGNATED REPRESENTATIVE.
2. THE CONTRACTOR SHALL NOTIFY THE TRANSPORTATION DIVISION OF THE DEPARTMENT OF PUBLIC WORKS AT 974-7024 NO LATER THAN THE MONDAY OF THE WEEK DURING WHICH THE CONTRACTOR INTENDS TO SET UP BARRICADES TO START CONSTRUCTION.
3. PROPOSED CONSTRUCTION TRAFFIC MOVEMENTS MAY REQUIRE EXISTING SIGNAL HEADS TO BE RELOCATED. THE CITY OF AUSTIN WILL REVIEW SIGNAL HEAD LOCATIONS DURING CONSTRUCTION AND PERFORM THE REQUIRED ADJUSTMENTS. THE CONTRACTOR SHALL CONTACT THE TRANSPORTATION DIVISION OF THE DEPARTMENT OF PUBLIC WORKS AT 974-7024, THREE (3) DAYS PRIOR TO PLACMENT ANY TRAFFIC CONTROLS WHICH MAY REQUIRE SIGNAL HEAD ADJUSTMENTS/RELOCATION.
4. THE CONTRACTOR SHALL PROVIDE ONE (1) FULL-TIME OFF-DUTY, UNIFORMED AUSTIN POLICE DEPARTMENT CERTIFIED PEACE OFFICER AND ONE (1) VEHICLE OF THE TYPE APPROVED BY THE ENGINEER OR DESIGNATED REPRESENTATIVE FOR TEMPORARY LANE CLOSURES WHEN UNDERSEALING, MILLING, PAVING AND WHEN WORKING IN INTERSECTIONS AS PART OF THE TRAFFIC CONTROL OPERATIONS. THE PEACE OFFICER SHALL BE ABLE TO SHOW PROOF OF CERTIFICATION BY THE TEXAS COMMISSION ON LAW ENFORCEMENT OFFICER STANDARDS.
5. THE CONTRACTOR SHALL NOTIFY ALL OTHER GOVERNMENTAL AGENCIES WHOSE RIGHTS-OF-WAY ARE AFFECTED BY HIS WORK ACTIVITIES. THE CONTRACTOR SHALL PROVIDE ANY ADDITIONAL TRAFFIC CONTROL DEVICES THAT THEY MAY NEED.
6. THE CONTRACTOR SHALL MAINTAIN ONE (1) DUST-FREE LANE OF TRAFFIC IN EACH DIRECTION AT ALL TIMES, UNLESS OTHERWISE NOTED IN THE DRAWINGS OR APPROVED THE ENGINEER OR DESIGNATED REPRESENTATIVE.
7. THERE SHALL BE A MINIMUM OF THREE (3) METERS (10 FEET) CLEAR WIDTH FOR EACH LANE OF TRAFFIC IN CHANNELIZED AREAS, UNLESS OTHERWISE NOTED ON THE DRAWINGS OR APPROVED BY THE ENGINEER OR DESIGNATED REPRESENTATIVE.
8. THE CONTRACTOR SHALL MAINTAIN DRIVEWAY ACCESS AT ALL TIMES. IF ACCESS CANNOT BE MAINTAINED, THE CONTRACTOR WITH THE APPROVAL OF THE ENGINEER OR DESIGNATED REPRESENTATIVE SHALL PROVIDE AT LEAST 24 HOUR WRITTEN NOTICE OF LIMITED ACCESS TO AFFECTED PROPERTY OWNERS. THE CONTRACTOR SHALL PROVIDE BUSINESS ACCESS SIGNS AS NEEDED TO NFORM DRIVERS OF THE LOCATIONS OF ALL DRIVEWAYS.
9. TEMPORARY LANE CLOSURES IN THE CENTRAL BUSINESS DISTRICT (CBD) OR ON ARTERIAL STREETS SHALL NOT BE PERMITTED DURING THE HOURS OF 7 AM TO 9 AM AND 4 PM TO 6PM MONDAY THROUGH FRIDAY UNLESS PRIOR APPROVAL HAS BEEN OBTAINED FROM THE TRANSPORTATION DIVISION.
10. TRAFFIC CONTROL SHOWN ON STANDARD DETAILS IS TYPICAL. ADDITIONAL SIGNING AND/OR BARRICADING, AS WELL AS TEMPORARY PAVEMENT MARKINGS AND OBLITERATION/RESTORATION OF EXISTING PAVEMENT MARKINGS, MAY BE REQUIRED DEPENDING ON FIELD CONDITIONS. FIELD ADJUSTMENTS TO TRAFFIC CONTROLS WILL NOT BE PAID FOR DIRECTLY, BUT WILL BE CONSIDERED SUBSIDIARY TO ITEM NO. 803S "BARRICADES, SIGNS AND TRAFFIC HANDLING".
11. THE CONTRACTOR SHALL DESIGNATE A COMPETENT PERSON FOR TRAFFIC CONTROL. THE COMPETENT PERSON SHALL MAKE INSPECTIONS OF THE TRAFFIC CONTROL DEVICES AT LEAST TWO (2) TIMES A DAY (ONCE AT THE BEGINNING OF THE DAY AND ONCE AT THE END OF THE DAY), INCLUDING NON-WORKING DAYS, ENSURING THAT ALL DEVICES ARE IN THEIR PROPER PLACE AND ARE IN WORKING ORDER.
12. ALL DEVICES SHALL BE MADE USING MATERIALS LISTED ON THE TxDOT APPROVED PRODUCTS LIST.

CITY OF AUSTIN DEPARTMENT OF PUBLIC WORKS		GENERAL TRAFFIC CONTROL NOTES	
RECORD COPY SIGNED BY SAM ANGOORI	01/04/10 ADOPTED	THE ARCHITECT/ENGINEER ASSUMES RESPONSIBILITY FOR APPROPRIATE USE OF THIS STANDARD.	STANDARD NO. 804S-5 12 OF 13

13. ALL PERSONS WORKING WITHIN THE RIGHT-OF-WAY SHALL WEAR A BRIGHTLY COLORED SAFETY VEST. FOR NIGHTTIME WORK THE VEST SHALL BE RETROREFLECTIVE.
14. WHEN AN INTERSECTION IS CLOSED FOR CONSTRUCTION, THE CONTRACTOR SHALL PROCEED WITH CONSTRUCTION IN SUCH A MANNER THAT THE CLOSURE TIME IS MINIMIZED.
15. THE CONTRACTOR SHALL NOTIFY THE CAPITAL METRO DISPATCHER AT 385-4295 ONE (1) WEEK PRIOR TO LANE CLOSURES ADJAGENT TO BUS STOPS.

DURATION OF WORK
WORK DURATION IS A MAJOR FACTOR IN DETERMINING THE NUMBER AND TYPES OF DEVICES USED IN TEMPORARY TRAFFIC ZONES. THE FIVE (5) CATEGORIES OF WORK DURATION AND THEIR TIME AT A LOCATION ARE AS FOLLOWS:

- LONG-TERM STATIONARY-WORK THAT OCCUPIES A LOCATION FOR MORE THAN 3 DAYS.
- INTERMEDIATE-TERM STATIONARY-WORK THAT OCCUPIES A LOCATION FROM OVERNIGHT TO 3 DAYS.
- SHORT-TERM STATIONARY-DAYTIME WORK THAT OCCUPIES A LOCATION FROM 1 TO 12 HOURS.
- SHORT-DURATION WORK THAT OCCUPIES A LOCATION UP TO 1 HOUR.
- MOBILE-WORK THAT MOVES INTERMITTENTLY OR CONTINUOUSLY.

Typical Transition Lengths and
Suggested Maximum Spacing of Devices

Posted Speed KPH (MPH)	Formula	Minimum Desirable Taper Lengths (L) Meters (Feet): 3.0(10) Offset Meters (feet)	3.3(11) Offset Meters (feet)	3.6(12) Offset Meters (feet)	Suggested Max. Device Spacing: On a taper Meters (feet)	On a tangent Meters (feet)	Suggested Sign Spacing Meters (Feet): "X" Dimension
50 (30)	$L=\frac{WS^2}{60}$	45 (150)	50 (165)	55 (180)	9 (30)	15-20 (60-75)	40 (120)
55 (35)		65 (205)	70 (225)	75 (245)	10 (35)	25-25 (70-90)	50 (160)
65 (40)		80 (265)	90 (295)	100 (320)	12 (40)	25-30 (80-100)	75 (240)
70 (45)	L=WS	135 (450)	(495)	165 (540)	13 (45)	25-30 (90-110)	100 (320)
80 (50)		150 (500)	165 (550)	180 (600)	15 (50)	30-35 (100-125)	120 (400)
90 (55)		165 (550)	185 (605)	200 (660)	16 (55)	35-40 (110-140)	150 (500)
100 (60)		180 (600)	200 (660)	220 (720)	18 (60)	40-45 (120-150)	180 (600)
105 (65)		195 (650)	215 (715)	235 (780)	19 (65)	40-50 (130-165)	210 (700)
115 (70)		215 (700)	235 (770)	255 (840)	21 (70)	45-55 (140-175)	240 (800)

CITY OF AUSTIN DEPARTMENT OF PUBLIC WORKS		GENERAL TRAFFIC CONTROL NOTES	
RECORD COPY SIGNED BY SAM ANGOORI	01/04/10 ADOPTED	THE ARCHITECT/ENGINEER ASSUMES RESPONSIBILITY FOR APPROPRIATE USE OF THIS STANDARD.	STANDARD NO. 804S-5 13 OF 13

90% CONSTRUCTION DOCUMENTS

IF THIS SHEET IS NOT 36" X 24", IT IS A REDUCED PRINT.

Sep 20, 2016 - 4:22pm

Drawing name: J:\1139-Onion Creek Fire EMS\00-DRAWINGS\PERMIT\1139--C-TRAFFIC CONTROL.dwg

STATE OF TEXAS
JOHN R. KING
59429
LICENSED
PROFESSIONAL ENGINEER
9/20/2016

CHAN & PARTNERS
CONSULTING CIVIL ENGINEERS

CHAN & PARTNERS ENGINEERING, LLC
4319 JAMES CASEY STREET, #300
AUSTIN, TEXAS 78745
512-469-8195 (PH) ♦ 512-469-9811 (FAX)
E-mail: info@chanpartners.com
WWW.CHANPARTNERS.COM
TEXAS REGISTRATION NO. F-13013

AUSTIN ONION CREEK
FIRE & EMS STATION
11112 OLD SAN ANTONIO ROAD
AUSTIN, TEXAS 78748

CITY OF AUSTIN FOUNDED 1839

REVISIONS

DATE	9/20/2016
DRAWN BY	CD
CHECKED BY	JRK
PROJECT NO.	214106.00

TRAFFIC
CONTROL
DETAILS
SHEET 4

C8.5

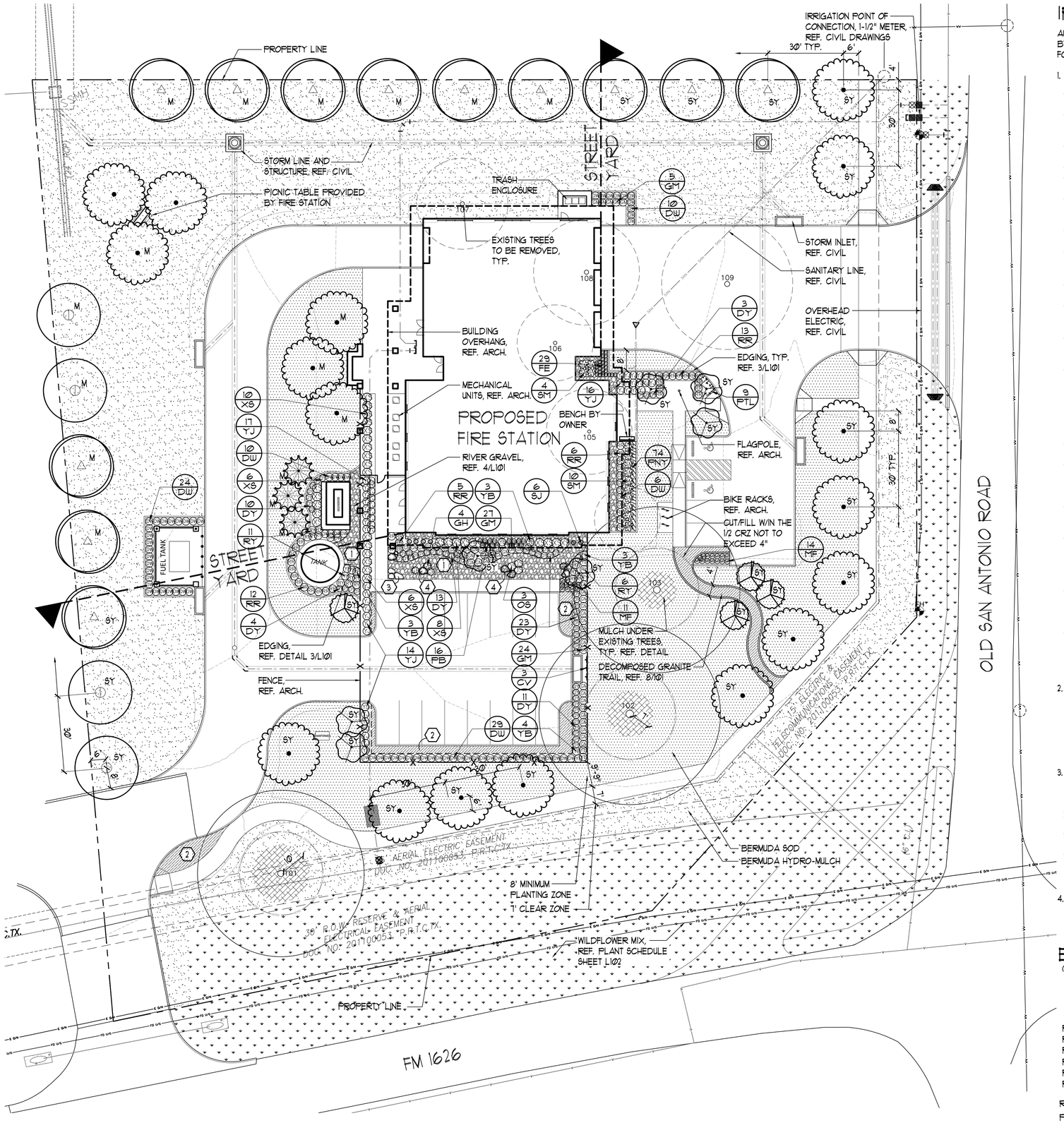

IRRIGATION NOTES.:

AUTOMATIC IRRIGATION SYSTEM SHALL BE DESIGNED AND SEALED BY A LICENCED IRRIGATOR AND SHALL COMPLY WITH THE FOLLOWING REQUIREMENTS.:

1. IRRIGATION SYSTEM MUST BE DESIGNED AND INSTALLED SO THAT.:
   - 1.1. THERE IS NOT DIRECT OVERSPRAY ONTO NON-IRRIGATED AREAS.
   - 1.2. THE SYSTEM DOES NOT INCLUDE SPRAY IRRIGATION ON AREAS LESS THAN SIX (6) FEET WIDE (SUCH AS MEDIANS, BUFFER STRIPS, AND PARKING LOT ISLANDS.)
   - 1.3. ABOVE-GROUND IRRIGATION EMISSION DEVISES ARE SET BACK AT LEAST 6 (6) INCHES FROM IMPERVIOUS SURFACES.
   - 1.4. THE IRRIGATION SYSTEM HAS A MASTER VALVE.
   - 1.5. CIRCUIT REMOTE CONTROL VALVES HAVE ADJUSTABLE FLOW CONTROLS.
   - 1.6. SERVICEABLE IN-HEAD CHECK VALVES ARE ADJACENT TO PAVED AREAS WHERE ELEVATION DIFFERENCES MAY CAUSE LOW HEAD DRAINAGE.
   - 1.7. THE IRRIGATION SYSTEM HAS S CITY-APPROVED WEATHER BASED CONTROLLER.
   - 1.8. AN AUTOMATIC RAIN SHUT-OFF DEVICE SHUTS OFF THE IRRIGATION SYSTEM AUTOMATICALLY AFTER NOT MORE THAN A ONE-HALF INCH ($\frac{1}{2}$") RAINFALL.
   - 1.9. ZONE VALVES ARE CIRCUITS ARE SEPARATED BASED ON PLANT WATER REQUIREMENTS.
   - 1.10. AN IRRIGATION EMISSION DEVICE (SUCH AS SPRAY, ROTOR, OR DRIP EMITTER) DOES NOT EXCEED THE MANUFACTURER'S RECOMMENDED OPERATING PRESSURE.
   - 1.11. NO COMPONENT OF THE IRRIGATION SYSTEM DEVIATES FROM THE MANUFACTURER'S RECOMMENDED USE OF THE PRODUCT.
   - 1.12. ALL MAINLINE AND LATERAL LINE PIPING AND CONTROL WIRES UNDER PAVING SHALL BE TWICE (2X) THE DIAMETER OF THE PIPE TO BE SLEEVED. MAINLINE SLEEVES SHALL BE ADEQUATE SIZE TO ALLOW FOR REMOVAL AND REPAIR OF PIPING. CONTROL WIRE SLEEVES SHALL BE OF SUFFICIENT SIZE FOR THE REQUIRED NUMBER OF WIRES UNDER PAVING.
   - 1.13. ALL SLEEVES, MAIN LINES, AND LATERAL LINES SHALL BE SCHEDULE 40 PIPE. NO CLASS PIPE WILL BE ALLOWED.
   - 1.14. CONTRACTOR TO INSTALL ALL BACKFLOW PREVENTION DEVICES AND ALL PIPING BETWEEN THE POINT OF CONNECTION AND THE BACKFLOW PREVENTER AS PER LOCAL AND GOVERNING AUTHORITIES.
   - 1.15. FINAL LOCATION OF THE BACKFLOW PREVENTER AND AUTOMATIC CONTROLLER(S) SHALL BE APPROVED BY THE OWNER'S AUTHORIZED REPRESENTATIVE.
   - 1.16. 120 VAC ELECTRICAL POWER SOURCES AT CONTROLLER LOCATION SHALL BE PROVIDED BY OTHERS. THE IRRIGATION CONTRACTOR SHALL MAKE THE FINAL CONNECTION FROM THE ELECTRICAL SOURCE TO THE CONTROLLER.
   - 1.17. ALL HEADS, VALVE BOXES, ETC. SHALL BE BLACK IN COLOR UNLESS OWNER OPTS TO INSTALL NON-POTABLE WATER SOURCE, IN WHICH CASE ALL COMPONENTS SHALL BE PURPLE.
   - 1.18. THE IRRIGATION CONTRACTOR SHALL FLUSH AND ADJUST SPRINKLER HEADS AND VALVES FOR OPTIMUM COVERAGE WITH MINIMAL OVERSPRAY ONTO WALKS, STREETS, WALLS, ETC.
2. THE MAXIMUM SPACING BETWEEN SPRAY OR ROTARY SPRINKLER HEADS MUST NOT EXCEED THE RADIUS OF THROW OF THE HEAD UNLESS MANUFACTURER OF THE SPRINKLER HEAD SPECIFICALLY RECOMMENDS A GREATER SPACING. THE RADIUS OF THROW IS DETERMINED BY REFERENCE TO THE MANUFACTURER'S SPECIFICATIONS FOR A SPECIFIC NOZZLE AT A SPECIFIC OPERATING PRESSURE.
3. THE IRRIGATION INSTALLER SHALL DEVELOP AND PROVIDE AN AS-BUILT DESIGN PLAN AND WATER BUDGET TO THE LOCAL JURISDICTION AT THE TIME THE FINAL INSPECTION IS PERFORMED. THE WATER BUDGET SHALL INCLUDE.:
   - 3.1. A CHART CONTAINING ZONE NUMBERS, PRECIPITATION RATE, AND GALLONS PER MINUTE.
   - 3.2. THE LOCATION OF THE EMERGENCY IRRIGATION SYSTEM SHUT-OFF VALVE.
   - 3.3. A LAMINATED COPY OF THE WATER BUDGET SHALL BE PERMANENTLY INSTALLED INSIDE THE IRRIGATION CONTROLLER DOOR.
4. THE IRRIGATION INSTALLER SHALL PROVIDE A REPORT TO THE JURISDICTION ON A FORM CERTIFYING COMPLIANCE WITH LOCAL/STATE CODE WHEN THE FINAL PLUMBING INSPECTION IS PERFORMED.

EXISTING TREE LIST.:

(SURVEYED 9/10/2015)

	TAG NO.	SIZE/TYPE
	101	33" MULTI-TRUNK TEXAS ASH
	102	36" TEXAS MULBERRY
	103	33" TEXAS MULBERRY
R	~~104~~	~~13" TEXAS MULBERRY~~
R	~~105~~	~~17" TWIN MULBERRY~~
R	~~106~~	~~15" TEXAS MULBERRY~~
R	~~107~~	~~18" TEXAS ASH~~ PH
R	~~108~~	~~21" TEXAS ASH~~
R	~~109~~	~~26" TEXAS ASH~~ (H)

R= TREE TO REMOVE

PH= TREE IN POOR HEALTH, REDUCE REQUIRED MITIGATION BY 25%

SITE DEVELOPMENT PERMIT LANDSCAPE NOTES.:

1. ALL LANDSCAPED AREAS TO BE PROTECTED BY 6 INCH CURBS, WHEEL-STOPS OR OTHER APPROVED BARRIERS AS PER ECM 2.4.7(A).
2. THE OWNER WILL CONTINUOUSLY MAINTAIN THE REQUIRED LANDSCAPING IN ACCORDANCE WITH LDC 25-2-984.
3. EXISTING TREES TO BE SAVED SHALL BE PROTECTED BY FENCING BEFORE CONSTRUCTION BEGINS. NO EQUIPMENT OR MATERIALS SHALL BE STORED OR OPERATED WITHIN THE FENCED-IN AREAS. FENCES SHALL BE AT THE DRIP LINE AND COMPLETELY SURROUND THE TREE OR CLUSTERS OF TREES. NO BURNING OF DEBRIS, CLEANING FLUIDS, CONCRETE SPILLS, ETC. WILL BE ALLOWED WITHIN THESE AREAS.
4. BUFFERING OF THE STREET YARD WILL BE ACCOMPLISHED THROUGH THE COMBINATION OF TREES, SHRUBS, GRADE CHANGES, AND FENCES.
5. GRADE CHANGES THAT DO NOT APPEAR ON THE SITE PLANS SHALL BE BROUGHT TO THE ATTENTION OF THE LANDSCAPE ARCHITECT BY THE GENERAL CONTRACTOR PRIOR TO CONSTRUCTION.
6. TRENCHING SHALL NOT OCCUR WITHIN THE FENCED DRIP LINE AREAS OF EXISTING TREES.
7. SHRUB MATERIAL NOT TO EXCEED 36" O.C. UNLESS OTHERWISE SPECIFIED. GROUNDCOVERS NOT TO EXCEED 18" O.C. DURING THE TIME OF MARCH 15-OCTOBER 15 INSTALLATION OF HYDROMULCH SHALL BE COMMON BERMUDA OR SAHARA BERMUDA FOR OCTOBER 16 -MARCH 14 INSTALLATION OF HYDROMULCH SHALL BE ANNUAL OR PERENNIAL RYE WITH A SPRING APPLICATION OF COMMON BERMUDA OR SAHARA BERMUDA.
8. EDGING SHALL BE PLACED AT ALL GROUNDCOVER BEDS THAT ARE ADJACENT TO LAWNS.
9. ALL LAWN AREAS WITHIN THE LIMITS OF CONSTRUCTION SHALL BE RE-VEGETATED WITH BERMUDA SOD OR UNLESS BERMUDA 'SAHARA' OR WILFLOWER MIX IS SPECIFIED.
10. NOT MORE THAN 50% OF THE TREES AND 50% OF SHRUBS PROPOSED WILL BE OF THE SAME SPECIES.
11. AN AUTOMATIC IRRIGATION SYSTEM SHALL BE INSTALLED. SEE IRRIGATION NOTES IN THESE DRAWINGS FOR REQUIREMENT.
12. IF ESTABLISHING VEGETATION DURING ANY STAGE OF DROUGHT, SECTION 6-4-30 MAY REQUIRE A VARIANCE. CONTACT AUSTIN WATER CONSERVATION STAFF AT (512-974-2199 OR AT WATERUSECOMPVAR@AUSTINTEXAS.GOV.

TREE LABEL LEGEND.:

SY= REQUIRED STREET YARD OR SUBCHAPTER E TREE, COUNTING MITIGATION OVER 15"

M= PROPOSED TREE COUNTING FULL MITIGATION

CONSTRUCTION NOTES.:

1. RIVER GRAVEL, REF. DETAIL 4/L101
2. GRANITE GRAVEL, REF. DETAIL 5/L101
3. FLAGSTONE, REF. DETAIL 7/L101
4. LIMESTONE BOULDERS, 24"Wx24"-36"Lx12"H REF. DETAIL 6A/L101 (QTY.: 6)

LANDSCAPE CERTIFICATION

I, MICHAEL R. FISHBAUGH, DO HEREBY CERTIFY THAT THE PLANS FOR THE DEVELOPMENT PROJECT LOCATED AT F.M. 1626 AND OLD SAN ANTONIO ROAD, SATISFY THE REQUIREMENTS OF THE LDC-25-2 OF THE CITY OF AUSTIN LAND DEVELOPMENT CODE, AND ALL AMENDMENTS.

MICHAEL R. FISHBAUGH — 9/23/2016 DATE

COLEMAN & ASSOCIATES

ALL RESPONSIBILITY FOR THE ADEQUACY OF THESE PLANS REMAINS WITH THE LANDSCAPE ARCHITECT WHO PREPARED THEM. IN REVIEWING THESE PLANS, THE CITY OF AUSTIN MUST RELY ON THE ADEQUACY OF THE WORK OF THE LANDSCAPE ARCHITECT.

NORTH — SCALE IN FEET (1"=20')

0 5 10 20 50

SITE PLAN RELEASE — Sheet ___ of ___

FILE NUMBER: SP-2016-0281C EXPIRATION DATE:
CASE MANAGER: LYNDA COURTNEY APPLICATION DATE:
APPROVED ADMINISTRATIVELY ON:
APPROVED BY PLANNING COMMISSION ON:
APPROVED BY CITY COUNCIL ON:
Under Section 142 of Chapter 25-5 of the Austin City Code.

Signing For Director, Planning and Development Review Department

DATE OF RELEASE: ZONING: P
Rev. 1 Correction 1
Rev. 2 Correction 2
Rev. 3 Correction 3

RELEASE OF THIS APPLICATION DOES NOT CONSTITUTE A VERIFICATION OF ALL DATA. INFORMATION AND CALCULATIONS SUPPLIED BY THE APPLICANT. THE ENGINEER OF RECORD IS SOLELY RESPONSIBLE FOR THE COMPLETENESS, ACCURACY AND ADEQUACY OF HIS/HER SUBMITTAL, WHETHER OR NOT THE APPLICATION IS REVIEWED FOR CODE COMPLIANCE BY CITY ENGINEERS.

COLEMAN & ASSOCIATES
Landscape Architecture
Environmental Design

9890 Silver Mountain Drive
Austin, Texas 78737
Ph: 512-476-2090
F: 512-476-2099

1926 Cambria
San Antonio, Texas 78258
Ph: 210-492-4550
F: 210-492-9930

9511 Modesto Ave. NE
Albuquerque, New Mexico 87122
Ph: 505-433-3426

9/23/16

LANDSCAPE PLAN
ISSUE FOR BIDDING

ONION CREEK FIRE STATION
11112 OLD SAN ANTONIO RD.
AUSTIN, TX

REVISIONS

SCALE:	1"-20'-0"
DRAWN BY:	JET
CHECKED BY:	MRF
APP. BY:	MRF
PROJECT NO.	342-15-01JT
DATE:	09-23-2016

SHEET:

L100

OF

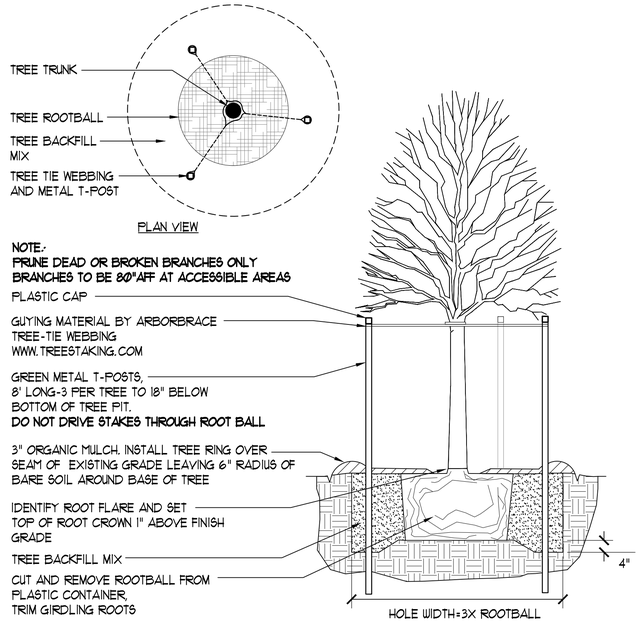

1 LARGE TREE PLANTING-CONTAINER
SECTION
SCALE: 1/2"=1'-0"

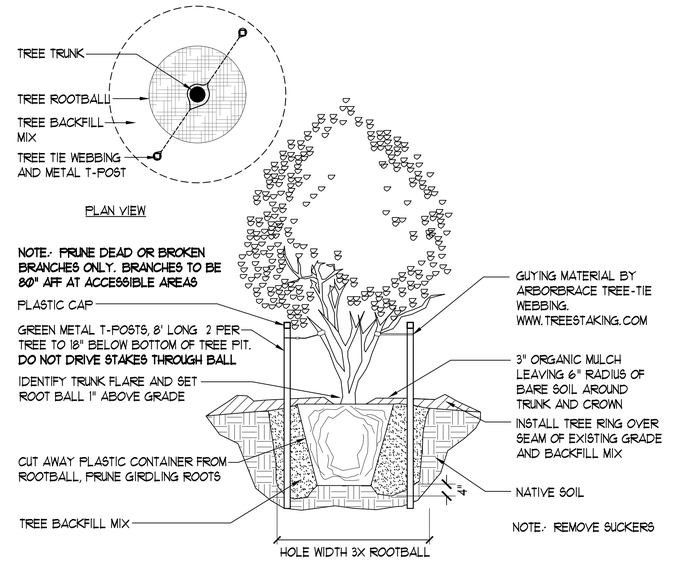

2 SMALL TREE PLANTING-CONTAINER
SECTION
SCALE: 1/2"=1'-0"

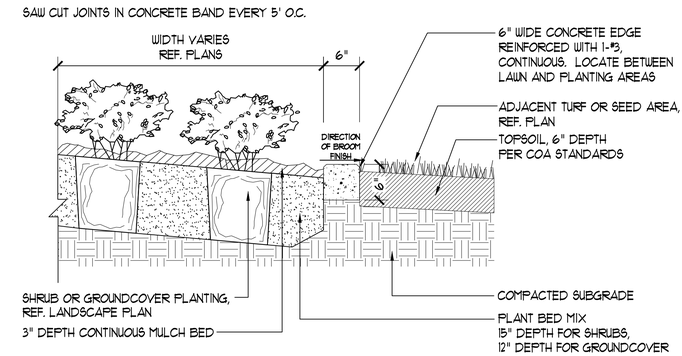

3 SHRUB PLANTING - CONCRETE EDGE
SECTION
SCALE: 1"=1'-0"

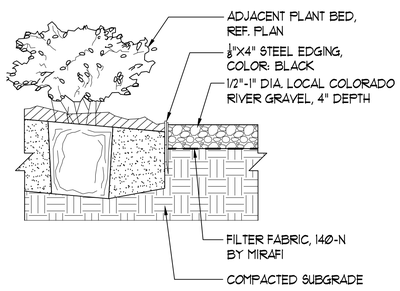

4 RIVER GRAVEL
SECTION
SCALE: 1"=1'-0"

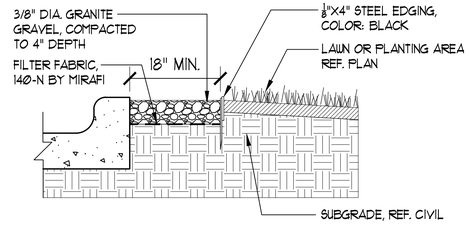

5 GRANITE GRAVEL
SECTION
SCALE: 1"=1'-0"

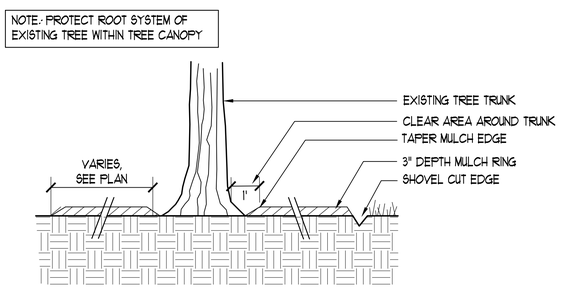

6 MULCH AT EXISTING TREE
SECTION
SCALE: 1/2"=1'-0"

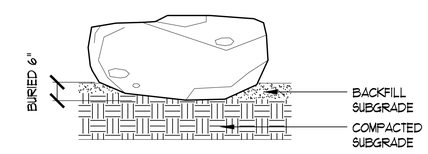

6A LIMESTONE BOULDER
SECTION
SCALE: 1/2"=1'-0"

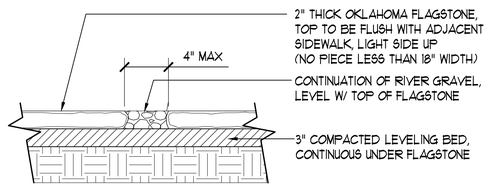

7 FLAGSTONE
SECTION
SCALE: 1"=1'-0"

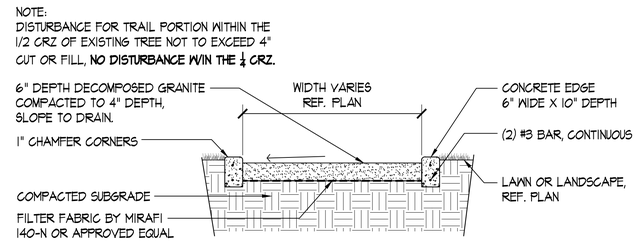

8 DECOMPOSED GRANITE TRAIL
SECTION
SCALE: 1/2"=1'-0"

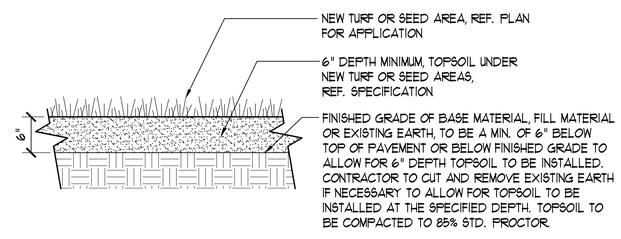

9 TOPSOIL FOR NEW TURF
SECTION
SCALE: 1"=1'-0"

Sheet ____ of ____
FILE NUMBER: SPC-2016-0281C EXPIRATION DATE: _____
CASE MANAGER: LYNDA COURTNEY APPLICATION DATE: _____
APPROVED ADMINISTRATIVELY ON: _____
APPROVED BY PLANNING COMMISSION ON: _____
APPROVED BY CITY COUNCIL ON: _____
Under Section 142 of Chapter 25-5 of the Austin City Code.

Signing For Director, Planning and Development Review Department

DATE OF RELEASE: _____ ZONING: P
Rev. 1 _____ Correction 1 _____
Rev. 2 _____ Correction 2 _____
Rev. 3 _____ Correction 3 _____

RELEASE OF THIS APPLICATION DOES NOT CONSTITUTE A VERIFICATION OF ALL DATA, INFORMATION AND CALCULATIONS SUPPLIED BY THE APPLICANT. THE ENGINEER OF RECORD IS SOLELY RESPONSIBLE FOR THE COMPLETENESS, ACCURACY AND ADEQUACY OF HIS/HER SUBMITTAL, WHETHER OR NOT THE APPLICATION IS REVIEWED FOR CODE COMPLIANCE BY CITY ENGINEERS.

COLEMAN & ASSOCIATES
Landscape Architecture
Environmental Design

9890 Silver Mountain Drive
Austin, Texas 78737
Ph: 512-476-2090
F: 512-476-2099

1926 Cambria
San Antonio, Texas 78258
Ph: 210-492-4550
F: 210-492-9930

9511 Modesto Ave. NE
Albuquerque, New Mexico 87122
Ph: 505-433-3426

9/23/16

LANDSCAPE DETAILS
ISSUE FOR BIDDING

ONION CREEK FIRE STATION
11112 OLD SAN ANTONIO RD.
AUSTIN, TX

REVISIONS

SCALE:	VARIES
DRAWN BY:	JET
CHECKED BY:	MRF
APP. BY:	MRF
PROJECT NO.	342-15-01JT
DATE:	9-23-2016

SHEET:
L101
OF

COLEMAN & ASSOCIATES

Tree Evaluation

Project: Onion Creek Fire Station
Date: 07-11-2016

Tree Evaluation – Existing tree #107

Tree Evaluation Factors:

1. **Condition: 1** (Poor)
2. **Type: 3** (tree included in appendix F, 8-18.9")
3. **Size of tree trunk: 3** (14"-18.9")
4. **Aesthetics: 1** (Poor)
5. **Energy Conservation: 1** (Poor)
6. **Safety: 2** (Hazardous; medium mitigation potential)
7. **Adjacent Trees: 3** (Few adjacent trees)
8. **Water Quality Protection: 1** (Poor)
9. **Wildlife Habitat: 2** (Fair)
10. **Historical Significance: 1** (Less than 40 years old)

TOTAL EVALUATION SCORE: 18 (Low Value)

9890 SILVER MOUNTAIN DR • AUSTIN, TX 78737 • 512.476.2090 • FAX 512.476.2099
1926 CAMBRIA • SAN ANTONIO, TX 78258 • 210.492.4550
9511 MODESTO AVE. NE • ALBUQUERQUE, NM 87122 • 505.433.3426

PLANTING SCHEDULE

SMALL TREES	QTY	COMMON NAME / BOTANICAL NAME	CONT	MIN. CALIPER	HEIGHT
	3	ARIZONA CYPRESS / CUPRESSUS ARIZONICA	B & B	3" CAL.	8'-10' HT.
	7	TEXAS MOUNTAIN LAUREL / SOPHORA SECUNDIFLORA	45 GAL	3" CAL.	6'-7' HT.
	4	TREE YAUPON / ILEX VOMITORIA	45 GAL	3" CAL.	7'-8' HT.

LARGE TREES	QTY	COMMON NAME / BOTANICAL NAME	MIN. CONT	MIN. CALIPER	HEIGHT
	17	CEDAR ELM / ULMUS CRASSIFOLIA	100 GAL	4" CAL.	14'-16' HT.
	4	MONTEREY OAK / QUERCUS POLYMORPHA	100 GAL	4" CAL.	14'-16' HT.
	12	SOUTHERN LIVE OAK / QUERCUS VIRGINIANA	100 GAL	4" CAL.	14'-16' HT.

SHRUBS	QTY	COMMON NAME / BOTANICAL NAME	MIN. CONT	MAX SPACING
FE	27	BLUE FESCUE / FESTUCA GLAUCA 'ELIJAH BLUE'	1 GAL	18" o.c.
GH	4	GIANT HESPERALOE / HESPERALOE FUNIFERA	7 GAL	36" o.c.
RR	36	DOUBLE KNOCK OUT ROSE / ROSA X 'RADTKO'	5 GAL	36" o.c.
RY	17	RED YUCCA / HESPERALOE PARVIFLORA	3 GAL	36" o.c.
OS	3	SPINELESS PRICKLY PEAR / OPTUNTIA CACANAPA 'ELLISIANA'	5 GAL	36" o.c.
DW	79	DWARF WAX MYRTLE / MYRICA PUSILLA	3 GAL	36" o.c.
DY	61	DWARF YAUPON / ILEX VOMITORIA 'SCHILLINGS DWARF'	3 GAL	30" o.c.
SM	14	DWARF PALMETTO / SABAL MINOR	15 GAL	42" o.c.
SJ	6	SKYROCKET JUNIPER / JUNIPERUS SCOPULORUM 'SKYROCKET'	15 GAL	24" o.c.
XS	29	TEXAS SAGE / LEUCOPHYLLUM FRUTESCENS 'SILVERADO'	3 GAL	42" o.c.
YB	13	YELLOW BELLS / TECOMA X 'SIERRA APRICOT'	3 GAL	36" o.c.
GM	51	GULF MUHLY / MUHLENBERGIA CAPILLARIS 'REGAL MIST'	3 GAL	36" o.c.
MF	25	MEXICAN FEATHER GRASS / STIPA TENUISSIMA	1 GAL	24" o.c.
YJ	47	DWARF MAIDEN GRASS / MISCANTHUS SINENSIS 'YAKU JIMA'	3 GAL	36" o.c.
PB	16	PRIDE OF BARBADOS / CAESALPHINIA PULCHERRIMA	3 GAL	24" o.c.
CV	3	CROSS VINE / BIGNONIA CAPREOLATA 'TANGERINE BEAUTY'	3 GAL STAKED	36" o.c.

GROUND COVERS	CODE	QTY	COMMON NAME / BOTANICAL NAME	MIN. CONT	MAX SPACING
	PTL	9	PURPLE TRAILING LANTANA / LANTANA MONTEVIDENSIS 'PURPLE'	1 GAL	18" o.c.
	PNY	74	SILVER PONYFOOT / DICHONDRA ARGENTEA	4" POT	12" o.c.

TURF	CODE	QTY	COMMON NAME / BOTANICAL NAME	CONT
	SOD	REF. PLAN	BERMUDA GRASS / CYNODON DACTYLON 'TIF 419' INSTALL PER COA 609S STANDARDS	SOD
	SBG	REF. PLAN	SAHARA BERMUDA GRASS / CYNODON DACTYLON 'SAHARA' INSTALL PER COA 609S STANDARDS	HYDRO-MULCH
	WW	REF. PLAN	WILDFLOWER MIX - NATIVE TRAIL MIX BY NATIVE AMERICAN SEED - APPLY AT ¼ LB. PER 250 SF. INSTALL PER COA 609S STANDARDS	HYDRO-MULCH

NOTES:
QUANTITIES ABOVE ARE FOR CONTRACTOR'S CONVENIENCE FOR PRICING ONLY.
ALL PLANT QUANTITIES TO BE VERIFIED ON PLANS. PLAN GRAPHICS SHALL PREVAIL FOR ANY DISCREPANCIES.

STREETYARD

	REQUIRED	PROVIDED
TOTAL SITE AREA		109,235 S.F.
TOTAL STREETYARD AREA		68,268 S.F.
STREETYARD LANDSCAPE (20%) + EXISTING TREE CREDIT	13,653 S.F.	43,738 S.F.
TREES (STREET YARD)	34	34
EXISTING TREE CREDIT (225 SF X 1.25=)		0 SF
2" DIAMETER TO 6" DIAMETER		0 X 1 = 0
6" DIAMETER OR GREATER		3 X 2 =6
PROPOSED TREES		28

PARKING LOT LANDSCAPE AREA

20 PARKING SPOTS IN THE STREETYARD
LANDSCAPE AREA REQ.: 20 SPACES / 12 = 1.67 1.67 x 90 = 150 S.F.
LANDSCAPE AREA PROVIDED = 427 S.F.
0 PARKING SPOTS IN NON-STREETYARD

INNOVATIVE WATER MANAGEMENT

TOTAL REQUIRED LANDSCAPE AREA	13,856 S.F.
50% OF TOTAL REQUIRED LANDSCAPE AREA	6,928 S.F.
PROVIDED IRRIGATION AREA BY CISTERN	19,152 S.F.
SHRUB AND GROUNDCOVER BEDS	3,410 S.F.
ALL SOD AREAS	15,742 S.F.

COORDINATE W/ CIVIL/ARCHITECTURAL PLANS FOR IRRIGATION BY CISTERN

BUFFERING POINTS

	SIZE	QTY	PREFERRED		PROVIDED	
EXISTING TREES	6" CALIPER MIN.	2	9 POINTS		18	POINTS
LARGER TREES	4" CALIPER	0	9 POINTS		0	POINTS
SMALL TREES	1.5" CALIPER	0	3 POINTS		0	POINTS
LARGE SHRUBS	5 GALLON	0	3 POINTS		0	POINTS
DECORATIVE FENCE (3' MINIMUM HEIGHT)	LN. FT.	155	3 POINTS		465	POINTS
			REQUIRED		PROVIDED	
			203	POINTS	483	POINTS

REPLACEMENT TREES FOR SITE

TREES REMOVED		
TREES 24" OR GREATER REMOVED (IN APP. F)	26.00	INCHES
TREES 19" OR GREATER REMOVED (IN APP. F)	21.00	INCHES
TREES 8"-18.9" REMOVED (IN APP. F)	63.00	INCHES
TREES 19" OR GREATER REMOVED (NOT APP. F)	00.00	INCHES
TREES LESS THAN 19" REMOVED (NOT. APP. F)	00.00	INCHES
TOTAL.:	**110.00**	**INCHES**
REPLACEMENT INCHES REQUIRED		
TREES 24" OR GREATER (IN APP. F) (300%)	78.00	INCHES
TREES 19" OR GREATER (IN APP. F) (100%)	21.00	INCHES
TREES 8"-18.9" REMOVED (IN APP. F) (50%)	31.50	INCHES
TREES 19" OR GREATER (NOT APP. F) (50%)	00.00	INCHES
TREES LESS THAN 19" REMOVED (NOT APP. F) (25%)	00.00	INCHES
18" CALIPER TREE IN POOR HEALTH (ADDITIONAL 25% REDUCTION)	-6.75	INCHES
TOTAL.:	**123.75**	**INCHES**
REPLACEMENT INCHES PROVIDED		
17 SHADE TREES (4" CAL. APPLYING 2.5")	42.50	INCHES
14 SHADE TREES (4" CAL. APPLYING 4")	56.00	INCHES
11 SMALL TREES (3" CAL. APPLYING 1.5")	16.50	INCHES
3 SMALL TREES (3" CAL. APPLYING 3")	9.00	INCHES
TOTAL.:	**124.00**	**INCHES**
MITIGATION DEFICIT (REPLACE @ $200/INCH)	00.00	INCHES

SHADED SIDEWALK CALCULATIONS

TOTAL AREA.:	3,120 S.F.
TOTAL SHADED AREA.:	1,751 S.F.
PERCENT SHADED.:	56% SHADE

URBAN FORESTRY INFORMATION

1. TOTAL APPENDIX F TREE INCHES SURVEYED	212.00
2. TOTAL APPENDIX F TREE INCHES REMOVED	110.00
3. TOTAL NON-APPENDIX F TREE INCHES REMOVED	00.00
4. TOTAL INVASIVE TREE INCHES REMOVED	00.00
5. TOTAL MITIGATION INCHES PLANTED ON SITE	124.00
6. AMOUNT TO BE PAID INTO URBAN TREE FUND	$00.00

Sheet ____ of ____
FILE NUMBER: SPC-2016-0218C EXPIRATION DATE: ____
CASE MANAGER: LYNDA COURTNEY APPLICATION DATE: ____
APPROVED ADMINISTRATIVELY ON: ____
APPROVED BY PLANNING COMMISSION ON: ____
APPROVED BY CITY COUNCIL ON: ____
Under Section 142 of Chapter 25-5 of the Austin City Code.

Signing For Director, Planning and Development Review Department

DATE OF RELEASE: ____ ZONING: P
Rev. 1 ____ Correction 1 ____
Rev. 2 ____ Correction 2 ____
Rev. 3 ____ Correction 3 ____

RELEASE OF THIS APPLICATION DOES NOT CONSTITUTE A VERIFICATION OF ALL DATA. INFORMATION AND CALCULATIONS SUPPLIED BY THE APPLICANT. THE ENGINEER OF RECORD IS SOLELY RESPONSIBLE FOR THE COMPLETENESS, ACCURACY AND ADEQUACY OF HIS/HER SUBMITTAL, WHETHER OR NOT THE APPLICATION IS REVIEWED FOR CODE COMPLIANCE BY CITY ENGINEERS.

COLEMAN & ASSOCIATES
Landscape Architecture
Environmental Design

9890 Silver Mountain Drive
Austin, Texas 78737
Ph: 512-476-2090
F: 512-476-2099

1926 Cambria
San Antonio, Texas 78258
Ph: 210-492-4550
F: 210-492-9930

9511 Modesto Ave. NE
Albuquerque, New Mexico 87122
Ph: 505-433-3426

9/23/16
REGISTERED LANDSCAPE ARCHITECT MICHAEL R. FISHER 2453 STATE OF TEXAS

PLANTING SCHEDULE + NOTES
ISSUE FOR BIDDING

ONION CREEK FIRE STATION
11112 OLD SAN ANTONIO RD.
AUSTIN, TX

REVISIONS

SCALE:	NONE
DRAWN BY:	JET
CHECKED BY:	MRF
APP. BY:	MRF
PROJECT NO.	342-15-01JT
DATE:	9-23-2016

SHEET:
L102
OF

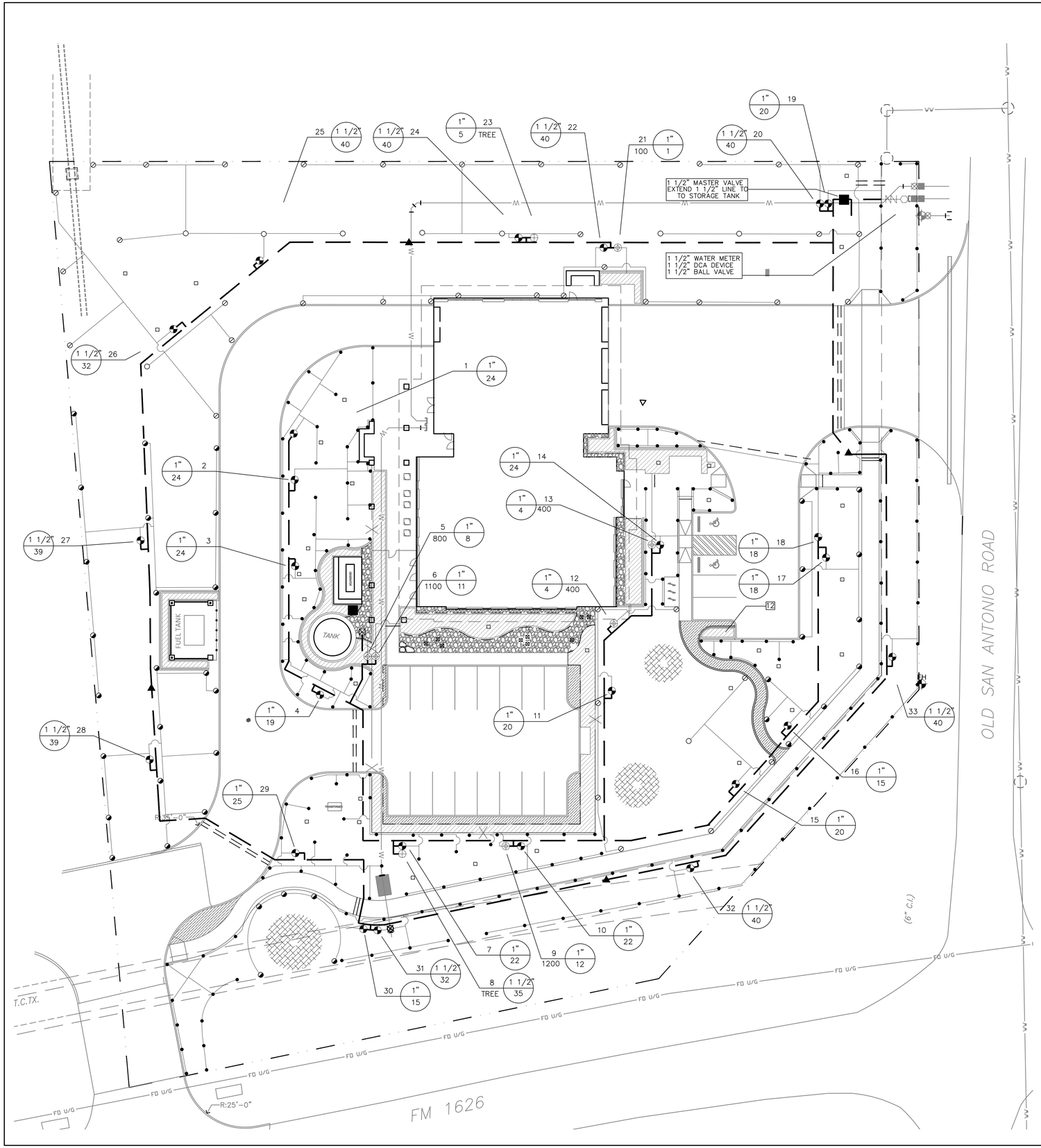

LEGEND

- HUNTER PROS-06-NSI-PRS30 SERIES POP UP SPRAY HEADS WITH HUNTER MSBN-50H STREAM BUBBLER NOZZLES. (TWO PER TREE). SEE INSTALLATION NOTE # 13 FOR LATERAL PIPE.
- HUNTER PROS-04-PRS30 POP UP SPRAY HEAD WITH PRO SPRAY NOZZLE AS NOTED BELOW
- RAINBIRD XERI-BUG SINGLE / MULTI OUTLET (XB-T-10-PC / XBT-10-6) POINT SOURCE DRIP EMITTERS. SEE INSTALLATION NOTE #16 REGARDING LAYOUT AND CONNECTION.
- NETAFIM TECHLINE TLHCVXR5-12 SERIES DRIP TUBE IN SHRUB BED INSTALLED AT 2" DEPTH SEE INSTALLATION NOTE #16 REGARDING DRIP TUBE LAYOUT IN SHRUB BEDS.
- HUNTER PGP ULTRA, ADJ. ARC 4" POP UP ROTARY HEAD, PART CIRCLE, #2.5 BLUE NOZZLE
- HUNTER PGP ULTRA, ADJ. ARC 4" POP UP ROTARY HEAD, PART CIRCLE, #4.0 BLUE NOZZLE
- HUNTER PGP ULTRA, 4" POP UP ROTARY HEAD, FULL CIRCLE, #8.0 BLUE NOZZLE
- HUNTER ICV SERIES ELECTRIC REMOTE CONTROL VALVE
- HUNTER ICV SERIES ELECTRIC REMOTE CONTROL, "TREE BUBBLER ZONE" VALVE SEE INSTALLATION NOTE #13 REGARDING TREE BUBBLER LATERAL PIPE
- NETAFIM LVCZ SERIES DRIP VALVE ASSEMBLY WITH 42 PSI REGULATOR AND 140 MESH FILTER
  USE MODEL LVCZS8010075-LF FOR DRIP ZONES WITH .25 TO 4 GPM FLOW RATE
  USE MODEL LVCZS8010075-HF FOR DRIP ZONES WITH 5 TO 12 GPM FLOW RATE
- HUNTER HQ-33-LRC-R QUICK COUPLING VALVE WITH PURPLE COVER AND 3/4" PVC BALL VALVE
- LASCO "V101N" SERIES SCH. 80 PVC TRUE UNION BALL VALVE, MAINLINE SIZE
- WILKINS 350 SERIES D.C.A. INSTALLED PER CITY CODE, WITH SAME SIZE WILKINS 850 SERIES BRONZE BALL VALVE AND WILKINS YB SERIES BRONZE 20 MESH WYE FILTER.
- 1 1/2" IRRIGATION WATER METER AND TAP
- HUNTER IC-3600M SERIES AUTOMATIC CONTROLLER WITH WIRELESS SOLAR SYNC ET SENSOR LOCATE SENSOR AS FIELD DIRECTED BY THE LANDSCAPE ARCHITECT
- FLOODED SUCTION VARIABLE SPEED BOOSTER PUMP PROVIDING UP TO 26 GPM AT 55 PSI. PUMP, PRESSURE START, HEATED ENCLOSURE, AND LEVEL SENSOR CONTROLS SHALL ALL AS PROVIDED BY SITE ONE GREEN TECH COMPANY. CONTACT MR. BILL ROSSER 214.283.2851
- CLASS 200 PVC MAINLINE PIPE, SIZED TO ALLOW A MAXIMUM FLOW VELOCITY OF 5 F.P.S.
- CLASS 200 (EXCEPT 1/2 INCH #315) PVC LATERAL PIPE, SIZED TO ALLOW 5 F.P.S. VELOCITY
- ONE 4" CLASS 200 PVC SLEEVE PIPES
- ONE 4" AND ONE 2" CLASS 200 SLEEVE PIPES

L.I.C. SHALL SELECT PRO-SPRAY SPRAY NOZZLES FOR "HEAD-TO-HEAD" COVERAGE, ADJUSTED FOR NO OVERSPRAY ONTO WALLS AND WALKS. NO OVERSPRAY INTO STREETS IS PERMITTED.

ZONES #1 THROUGH #18 SHALL INCLUDE PURPLE PIPE AND NON-POTABLE HEAD TOPS AND VALVE BOXES.

WATER SOURCE COORDINATION

ZONES 1 THROUGH 18 SHALL BE SERVED BY CAPTURED RAINWATER AS SHOWN ON THE PLANS. ZONES 19 THROUGH 33 ARE TO BE SERVED BY METERED WATER ONLY. AN 18,000 GALLON RAINWATER STORAGE TANK SHALL PROVIDE WATER THROUGH A FLOODED SUCTION BOOSTER PUMP.

LEVEL SENSOR CONTROLS SHALL ACTIVATE A 1" SOLENOID VALVE CONNECTED TO THE IRRIGATION SYSTEM WATER METER TO MAINTAIN A MINIMUM WATER LEVEL IN THE TANK. A 1 1/2" FILL LINE FROM THE METER TO THE TANK SHALL EMPLOY AN "AIR GAP" AT THE TOP OF THE TANK.

RAINWATER SYSTEM COMPONENTS TO BE PROVIDED BY THE IRRIGATION CONTRACTOR INCLUDE:

A. FLOODED SUCTION BOOSTER PUMP AND LEVEL SENSOR CONTROLS.
B. 1 1/2" "BACK-UP" LINE TO THE TANK, WITH 1" SOLENOID VALVE.
C. HEATED ENCLOSURE.

RAINWATER SYSTEM COMPONENTS TO BE PROVIDED BY THE GENERAL CONTRACTOR INCLUDE:

A. ELECTRIC POWER TO THE PUMP.
B. 18,500 GALLON ABOVE=GROUND STORAGE TANK WITH PRE-FILTER.
C. INLET PIPES FROM THE ROOF GUTTER TO THE TANK.
D. OVERFLOW PIPE FROM THE TANK TO STORM DRAIN.

CONTROLLER STATION — VALVE SIZE / FLOW IN G.P.M. / APPROX. LINEAR FOOTAGE OF DRIP TUBE

NORTH — SCALE IN FEET (1"=20')

0 5 10 20 50

James Pole
IRRIGATION CONSULTANTS
IRRIGATION DESIGN, CONSULTING, AND LANDSCAPE WATER MANAGEMENT
TEXAS L.I.C. #658
100 N. LOCUST ST., SUITE 3
DENTON, TEXAS 76201
PHONE: 940.243.2364
FAX: 940.382.2475
james@jamespoleirrigation.com

EPA WaterSense PARTNER

IRRIGATION IN TEXAS IS REGULATED BY THE TEXAS COMMISION ON ENVIRONMENTAL QUALITY (TCEQ) (MC-178) P.O. BOX 13087 T.C.E.Q.'S WEB SITE IS: WWW.TCEQ.STATE.TX.US

SITE PLAN RELEASE — Sheet ____ of ____

FILE NUMBER: ____ EXPIRATION DATE: ____
CASE MANAGER: ____ APPLICATION DATE: ____
APPROVED ADMINISTRATIVELY ON: ____
APPROVED BY PLANNING COMMISSION ON: ____
APPROVED BY CITY COUNCIL ON: ____
Under Section ____ of Chapter ____ of the Austin City Code.

Signing For Director, Planning and Development Review Department

DATE OF RELEASE: ____ ZONING: ____
Rev. 1 ____ Correction 1 ____
Rev. 2 ____ Correction 2 ____
Rev. 3 ____ Correction 3 ____

RELEASE OF THIS APPLICATION DOES NOT CONSTITUTE A VERIFICATION OF ALL DATA. INFORMATION AND CALCULATIONS SUPPLIED BY THE APPLICANT. THE ENGINEER OF RECORD IS SOLELY RESPONSIBLE FOR THE COMPLETENESS, ACCURACY AND ADEQUACY OF HIS/HER SUBMITTAL, WHETHER OR NOT THE APPLICATION IS REVIEWED FOR CODE COMPLIANCE BY CITY ENGINEERS.

COLEMAN & ASSOCIATES
Landscape Architecture
Environmental Design
9890 Silver Mountain Drive
Austin, Texas 78737
Ph: 512-476-2090
F: 512-476-2099
1926 Cambria
San Antonio, Texas 78258
Ph: 210-492-4550
F: 210-492-9930
9511 Modesto Ave. NE
Albuquerque, New Mexico 87122
Ph: 505-433-3426

STATE OF TEXAS — JAMES POLE — 658 — LICENSED IRRIGATOR — 09 / 23 / 2016

IRRIGATION PLAN
ISSUE FOR BIDDING

ONION CREEK FIRE STATION
11112 OLD SAN ANTONIO RD.
AUSTIN, TX

REVISIONS

SCALE:	1"=20'-0"
DRAWN BY:	ZW
CHECKED BY:	CD
APP. BY:	JP
PROJECT NO.	342-15-01JT
DATE:	09-23-2016

SHEET:
IR200
OF

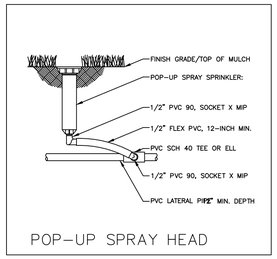

POP-UP SPRAY HEAD

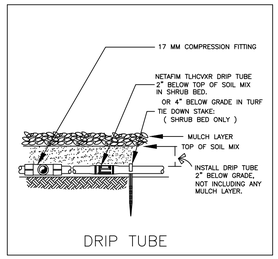

DRIP TUBE

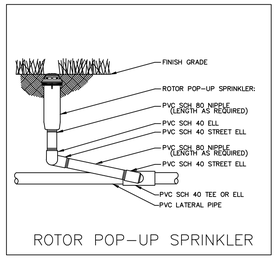

ROTOR POP-UP SPRINKLER

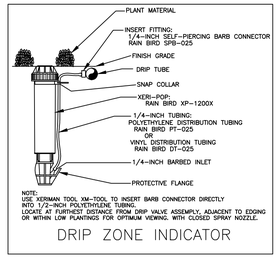

DRIP ZONE INDICATOR

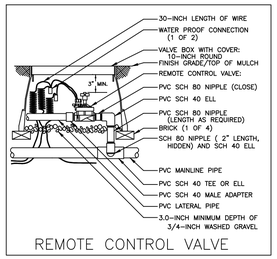

REMOTE CONTROL VALVE

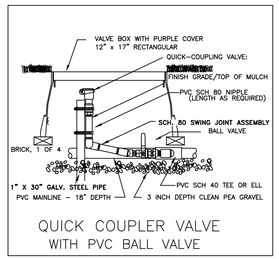

QUICK COUPLER VALVE
WITH PVC BALL VALVE

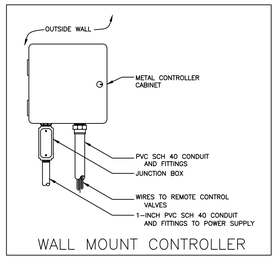

WALL MOUNT CONTROLLER

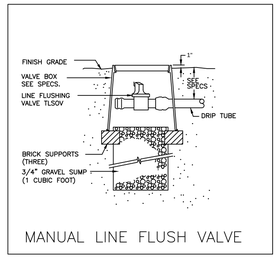

MANUAL LINE FLUSH VALVE

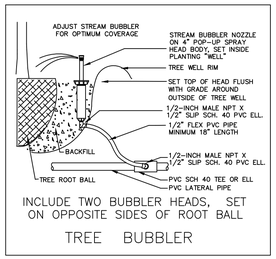

INCLUDE TWO BUBBLER HEADS, SET
ON OPPOSITE SIDES OF ROOT BALL

TREE BUBBLER

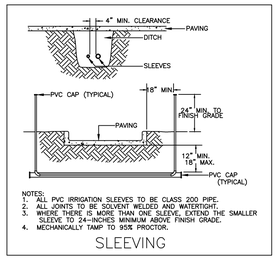

NOTES:
1. ALL PVC IRRIGATION SLEEVES TO BE CLASS 200 PIPE.
2. ALL JOINTS TO BE SOLVENT WELDED AND WATERTIGHT.
3. WHERE THERE IS MORE THAN ONE SLEEVE, EXTEND THE SMALLER SLEEVE TO 24-INCHES MINIMUM ABOVE FINISH GRADE.
4. MECHANICALLY TAMP TO 95% PROCTOR.

SLEEVING

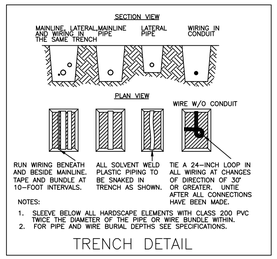

NOTES:
1. SLEEVE BELOW ALL HARDSCAPE ELEMENTS WITH CLASS 200 PVC TWICE THE DIAMETER OF THE PIPE OR WIRE BUNDLE WITHIN.
2. FOR PIPE AND WIRE BURIAL DEPTHS SEE SPECIFICATIONS.

TRENCH DETAIL

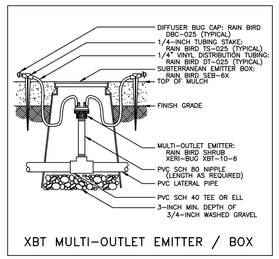

XBT MULTI-OUTLET EMITTER / BOX

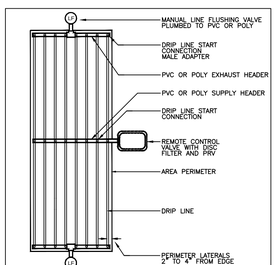

SUPPLY AND EXHAUST HEADERS SHALL BE CLASS 200 PVC PIPE, OF THE SAME DIAMETER AS THE ZONE VALVE SIZE.

USE DRIP TUBE FOR SUPPLY AND EXHAUST HEADERS ON GRIDS WITH FLOW SMALLER THAN 5 GPM ONLY.

DRIP CENTER FEED LAYOUT

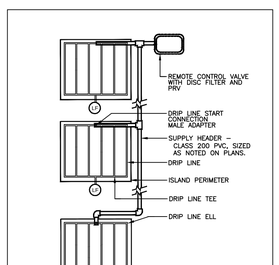

USE DRIP TUBE FOR SUPPLY AND EXHAUST HEADERS ON GRIDS WITH FLOW SMALLER THAN 5 GPM ONLY.

DRIP ISLAND LAYOUT

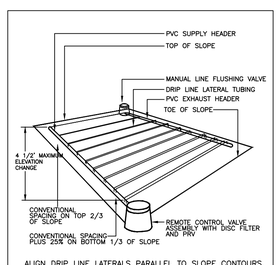

ALIGN DRIP LINE LATERALS PARALLEL TO SLOPE CONTOURS

SUPPLY AND EXHAUST HEADERS SHALL BE CLASS 200 PVC PIPE, OF THE SAME DIAMETER AS THE ZONE VALVE SIZE.

USE DRIP TUBE FOR SUPPLY AND EXHAUST HEADERS ON GRIDS WITH FLOW SMALLER THAN 5 GPM ONLY.

DRIP SLOPE FEED LAYOUT

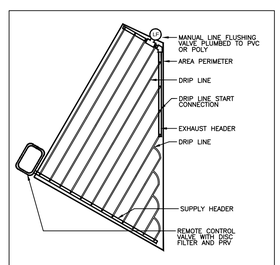

SUPPLY AND EXHAUST HEADERS SHALL BE CLASS 200 PVC PIPE, OF THE SAME DIAMETER AS THE ZONE VALVE SIZE.

USE DRIP TUBE FOR SUPPLY AND EXHAUST HEADERS ON GRIDS WITH FLOW SMALLER THAN 5 GPM ONLY.

IRREGULAR AREA DRIP LAYOUT

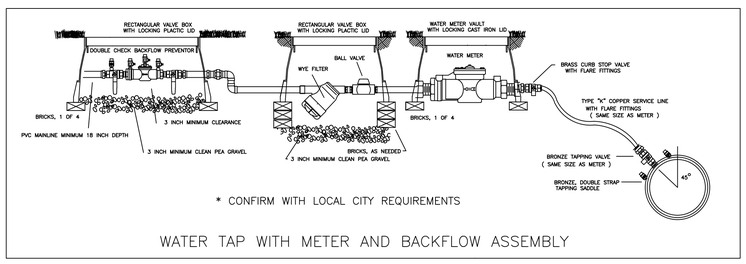

* CONFIRM WITH LOCAL CITY REQUIREMENTS

WATER TAP WITH METER AND BACKFLOW ASSEMBLY

INSTALLATION NOTES

1. COORDINATE IRRIGATION INSTALLATION WITH PLANTING PLAN AND SITE CONDITIONS TO PROVIDE COMPLETE COVERAGE WITH MINIMUM OVERSPRAY. THE IRRIGATION CONTRACTOR SHALL MAKE MINOR ADJUSTMENTS TO ENSURE PROPER COVERAGE AT NO ADDITIONAL COST TO THE OWNER.
   THE IRRIGATION CONTRACTOR SHALL COMPLY WITH ALL LOCAL AND STATE MANDATED IRRIGATION ORDINANCES AND CODES, AND WILL SECURE ALL REQUIRED PERMITS. L.I.C. SHALL PAY ANY ASSOCIATED FEES UNLESS OTHERWISE NOTED. ALL LOCAL CODES SHALL PREVAIL OVER ANY DISCREPANCIES HEREIN AND SHALL BE ADDRESSED BEFORE ANY CONSTRUCTION BEGINS.
2. NO MACHINE TRENCHING SHALL BE PERMITTED WITHIN THE ROOT ZONE OF EXISTING TREES. HAND-DIG ONLY, WITHIN THE ROOT ZONES OF EXISTING TREES. NO ROOTS OVER 1" DIAMETER SHALL BE CUT. STAKE ALL PROPOSED TRENCH ROUTES NEAR EXISTING TREES FOR APPROVAL BY THE LANDSCAPE ARCHITECT BEFORE DIGGING BEGINS.
3. CONFIRM MINIMUM STATIC WATER PRESSURE OF 60 PSI AT THE HIGHEST ELEVATION OF THE SYSTEM LIMITS, AND MAXIMUM STATIC WATER PRESSURE OF 90 P.S.I. AT THE LOWEST ELEVATION OF THE SYSTEM LIMITS AT LEAST 7 DAYS BEFORE BEGINNING WORK. IF STATIC WATER PRESSURE IS OUTSIDE THE RANGE STATED ABOVE, DO NOT PROCEED UNTIL DIRECTED BY THE LANDSCAPE ARCHITECT.
4. LATERAL PIPE SHALL BE INSTALLED AT A MINIMUM DEPTH OF 12 INCHES. MAINLINE PIPE AND WIRES SHALL BE INSTALLED AT A MINIMUM DEPTH OF 18 INCHES. NO MACHINE TRENCHING SHALL BE PERMITTED WITHIN EXISTING TREE ROOT ZONES. WHEN HAND - TRENCHING WITHIN EXISTING TREE ROOT ZONES, NO ROOTS LARGER THAN 1" DIAMETER SHALL BE CUT.
5. UNSLEEVED PIPES MAY BE SHOWN UNDER PAVEMENT FOR GRAPHIC CLARITY ONLY. INSTALL THESE PIPES IN ADJACENT LANDSCAPED AREAS.
6. ELECTRIC POWER SHALL BE PROVIDED WITHIN FIVE FEET OF CONTROLLER AND PUMP LOCATIONS BY GENERAL CONTRACTOR. L.I.C. TO PROVIDE FINAL HARD-WIRE CONNECTIONS.
7. 24 VOLT VALVE WIRE SHALL BE A MINIMUM OF #14 GAUGE, U.F. APPROVED FOR DIRECT BURIAL, SINGLE CONDUCTOR "IRRIGATION WIRE". WIRE SPLICES SHALL INCLUDE DBY CONNECTORS AS MANUFACTURED BY 3M COMPANY. ALL FIELD SPLICES SHALL BE LOCATED IN A ROUND VALVE BOX OF SUFFICIENT SIZE TO ALLOW INSPECTION.
8. VALVE BOXES SHALL BE INSTALLED FLUSH WITH GRADE, SUPPORTED BY BRICKS IF NEEDED, WITH 3 INCHES OF CLEAN PEA GRAVEL LOCATED BELOW THE VALVE. USE 12" x 17" RECTANGULAR VALVE BOXES WITH PURPLE LID FOR QUICK COUPLING VALVES, AND 10" ROUND BOXES FOR ELECTRIC VALVES UNLESS NOTED OTHERWISE. D.C.A., WITH UPSTREAM BALL VALVE AND WYE FILTER SHALL BE BOXED AND LOCATED ACCORDING TO LOCAL CODE.
9. USE RIGID SCH. 80 PVC SWING JOINT ASSEMBLIES TO CONNECT ALL ROTARY HEADS AND QUICK COUPLERS.
10. ALL SPRAY HEADS SHALL BE CONNECTED WITH A 12" MINIMUM LENGTH OF 1/2" FLEX PVC. THE FLEX PVC SHALL BE SOLVENT WELDED TO SCHEDULE 40 PVC FITTINGS WITH WELD-ON #795 SOLVENT AND #P-70 PRIMER.
11. PROVIDE ONE QUICK COUPLER KEY WITH SWIVEL HOSE ELL FOR EVERY SIX Q.C. VALVES. (MINIMUM ONE SET).
12. CONTRACTOR IS TO CONTACT APPROPRIATE AUTHORITIES AND LOCATE ALL UTILITIES PRIOR TO CONSTRUCTION.
13. LATERAL PIPE TO TREE STREAM BUBBLER HEADS IS OMITTED FOR GRAPHIC CLARITY. CONNECT TREE BUBBLER HEADS TO VALVES AS SHOWN WITH CLASS 200 PVC PIPE SIZED TO ALLOW A MAXIMUM FLOW VELOCITY OF 5 FEET PER SECOND
14. THE PROPOSED LOCATIONS OF ALL ABOVE- GROUND EQUIPMENT INCLUDING BACKFLOW PREVENTORS, CONTROLLERS AND WEATHER SENSORS SHALL BE STAKED BY THE CONTRACTOR FOR APPROVAL BY THE LANDSCAPE ARCHITECT OR OWNER'S REPRESENTATIVE BEFORE THESE ITEMS ARE INSTALLED.
15. ALL HEADS SHALL BE INSTALLED A MINIMUM OF 4" FROM PAVEMENT EDGES. (6" OR GREATER WHERE REQUIRED BY LOCAL CODE) FINAL HEAD ADJUSTMENTS BY THE CONTRACTOR SHALL INCLUDE THE ADDITION OF CHECK VALVES WHERE NEEDED TO PREVENT EXCESSIVE LOW HEAD DRAINAGE. THE CONTRACTOR SHALL BUDGET FOR, AND INSTALL CHECK VALVES FOR UP 10 % OF THE TOTAL NUMBER OF HEADS WHEN NEEDED, WITH NO ADDITIONAL COST TO THE OWNER.
16. WHERE SHOWN ON THE PLANS, MASS SHRUB / GROUNDCOVER BEDS SHALL INCLUDE HUNTER PLD SERIES DRIP TUBE WITH PRE-INSTALLED .6 GPH DRIP EMITTERS EVERY 12" (PLD-06-12) , INSTALLED IN CENTER-FED GRIDS WITH ROWS SPACED 18" APART. INDIVIDUAL DRIP TUBE RUNS SHALL NOT EXCEED 200 L.F. SEE DRIP GRID DETAILS FOR HEADER AND EXHAUST PIPE SIZES. WHERE REQUIRED, PVC LATERAL "TRUNK" LINES SHALL BE INSTALLED 10" DEEP. DRIP TUBE SHALL BE SET 2" BELOW FINISHED SOIL GRADE (NOT INCLUDING MULCH LAYER), SECURED WITH 6" WIRE STAPLES OR STAKES EVERY 18". MANUAL FLUSH VALVES (1/2" PVC BALL VALVE) SHALL BE INSTALLED AT THE FARTHEST POINTS FROM THE ZONE VALVE. USE 17 MM BARBED FITTINGS FOR DRIP LINE CONNECTIONS, PRESSURE TESTING ALL CONNECTIONS BEFORE BACKFILLING. ALL DRIP TUBING SHALL BE INSTALLED PERPENDICULAR TO SLOPE FACE. EACH DRIP ZONE SHALL INCLUDE ONE "MAINTENANCE FLAG" WHICH SHALL CONSIST OF A 12" POP-UP SPRAY HEAD AND COMPLETELY CLOSED SPRAY NOZZLE. THE POP-UP HEAD SHALL BE CONNECTED TO THE DRIP ZONE PIPE, SET FLUSH WITH GRADE, AND LOCATED AT THE FARTHEST DISTANCE FROM THE DRIP VALVE ASSEMBLY.

SPARSLEY SPACED, INDIVIDUAL SHRUB PLANTINGS MAY INCLUDE RAINBIRD #XBT-10 SINGLE-OUTLET EMITTERS OR RAINBIRD #XBT-10-6 MULTI-OUTLET EMITTERS INSTALLED AS DETAILED. PROVIDE MINIMUM TWO, 1 G.P.H. OUTLETS PER INDIVIDUAL SHRUB. SINGLE / MULTI-OUTLET EMITTERS MAY BE CONNECTED TO THE SAME DRIP ZONE VALVE WHICH SERVES ADJACENT DRIP TUBE GRIDS, UNLESS NOTED OTHERWISE.

WATER SOURCE COORDINATION

ZONES 1 THROUGH 18 SHALL BE SERVED BY CAPTURED RAINWATER AS SHOWN ON THE PLANS.
ZONES 19 THROUGH 33 ARE TO BE SERVED BY METERED WATER ONLY. AN 18,000 GALLON RAINWATER STORAGE TANK SHALL PROVIDE WATER THROUGH A FLOODED SUCTION BOOSTER PUMP.

LEVEL SENSOR CONTROLS SHALL ACTIVATE A 1" SOLENOID VALVE CONNECTED TO THE IRRIGATION SYSTEM WATER METER TO MAINTAIN A MINIMUM WATER LEVEL IN THE TANK. A 1 1/2" FILL LINE FROM THE METER TO THE TANK SHALL EMPLOY AN "AIR GAP" AT THE TOP OF THE TANK.

RAINWATER SYSTEM COMPONENTS TO BE PROVIDED BY THE IRRIGATION CONTRACTOR INCLUDE:
- A. FLOODED SUCTION BOOSTER PUMP AND LEVEL SENSOR CONTROLS.
- B. 1 1/2" "BACK-UP" LINE TO THE TANK, WITH 1" SOLENOID VALVE.
- C. HEATED ENCLOSURE.

RAINWATER SYSTEM COMPONENTS TO BE PROVIDED BY THE GENERAL CONTRACTOR INCLUDE:
- A. ELECTRIC POWER TO THE PUMP.
- B. 18,500 GALLON ABOVE=GROUND STORAGE TANK WITH PRE-FILTER.
- C. INLET PIPES FROM THE ROOF GUTTER TO THE TANK.
- D. OVERFLOW PIPE FROM THE TANK TO STORM DRAIN.

NORTH — SCALE IN FEET (1"=20')
0 5 10 20 50

James Pole
IRRIGATION CONSULTANTS
IRRIGATION DESIGN, CONSULTING, AND
LANDSCAPE WATER MANAGEMENT
TEXAS L.I.C. #658
100 N. LOCUST ST., SUITE 3
DENTON, TEXAS 76201
PHONE: 940.243.2364
FAX: 940.382.2475
james@jamespoleirrigation.com

EPA WaterSense PARTNER

IRRIGATION IN TEXAS IS REGULATED BY THE TEXAS COMMISION ON ENVIRONMENTAL QUALITY (TCEQ) (MC-178) P.O. BOX 13087 T.C.E.Q.'S WEB SITE IS: WWW.TCEQ.STATE.TX.US

SITE PLAN RELEASE — Sheet ____ of ____
FILE NUMBER: _____ EXPIRATION DATE: _____
CASE MANAGER: _____ APPLICATION DATE: _____
APPROVED ADMINISTRATIVELY ON: _____
APPROVED BY PLANNING COMMISSION ON: _____
APPROVED BY CITY COUNCIL ON: _____
Under Section _____ of Chapter _____ of the Austin City Code.

Signing For Director, Planning and Development Review Department

DATE OF RELEASE: _____ ZONING: _____
Rev. 1 _____ Correction 1 _____
Rev. 2 _____ Correction 2 _____
Rev. 3 _____ Correction 3 _____

RELEASE OF THIS APPLICATION DOES NOT CONSTITUTE A VERIFICATION OF ALL DATA. INFORMATION AND CALCULATIONS SUPPLIED BY THE APPLICANT. THE ENGINEER OF RECORD IS SOLELY RESPONSIBLE FOR THE COMPLETENESS, ACCURACY AND ADEQUACY OF HIS/HER SUBMITTAL, WHETHER OR NOT THE APPLICATION IS REVIEWED FOR CODE COMPLIANCE BY CITY ENGINEERS.

COLEMAN & ASSOCIATES
Landscape Architecture
Environmental Design

9890 Silver Mountain Drive
Austin, Texas 78737
Ph: 512-476-2090
F: 512-476-2099

1926 Cambria
San Antonio, Texas 78258
Ph: 210-492-4550
F: 210-492-9930

9511 Modesto Ave. NE
Albuquerque, New Mexico 87122
Ph: 505-433-3426

STATE OF TEXAS — JAMES POLE — 658 — LICENSED IRRIGATOR — 09 / 23 / 2016

IRRIGATION DETAILS
ISSUE FOR BIDDING

ONION CREEK FIRE STATION
11112 OLD SAN ANTONIO RD.
AUSTIN, TX

REVISIONS

SCALE:	none
DRAWN BY:	ZW
CHECKED BY:	CD
APP. BY:	JP
PROJECT NO.	342-15-01JT
DATE:	09-23-2016

SHEET:
IR201
OF

S T R U C T U R A L   N O T E S

COORDINATION

A. The Contractor shall compare the Architectural, Structural, Mechanical, Electrical, Plumbing, and other series drawings and report any discrepancies between each set of drawings and within each set of drawings prior to fabrication and installation of any structural members.

B. Only larger sleeve openings and framed openings in structural framing component members are indicated on the Structural Drawings. However, all sleeves, inserts and openings, including frames and/or sleeves shall be provided for passage, provision and/or incorporation of the work of the contract, including but not limited to Mechanical, Electrical and Plumbing work. This work shall include the coordination of sizes, alignment, dimensions, position, locations, elevations and grades as required to serve the intended purpose. Openings not indicated on the Structural Drawings, but required as noted above, shall be submitted to the Engineer for review.

C. Refer to Architectural, Mechanical, Electrical and Plumbing drawings for floor elevations, slopes, drains and location of depressed and elevated floor areas.

D. Compatibility of the structure and provisions for building equipment supported on or from structural components shall be verified as to size, dimensions, clearances, accessibility, weights and reaction with the equipment for which the structure has been designed prior to submission of shop drawings and data for each piece of equipment and for structural components. Differences shall be noted on the submittals.

E. Shop drawings shall be prepared for all structural items and submitted for review by the Engineer. Structural Drawings shall not be reproduced and used as shop drawings. All items deviating from the Structural Drawings or from previously submitted shop drawings shall be clouded.

F. The details designated as "Typical Details" apply generally to the Structural Drawings in all areas where conditions are similar to those described in the details.

G. All dimensions and conditions of existing construction shall be verified at the job site prior to the preparation of shop drawings. Differences between existing construction and that shown on the Structural Drawings shall be referred to the Architect. Differences shall also be clouded on the shop drawings.

H. All structural elements of the project have been designed by the Engineer to resist the required code vertical and lateral forces that could occur in the final completed structure only. It is the responsibility of the Contractor to provide all required bracing during construction to maintain the stability and safety of all structural elements during the construction process until the lateral-load resisting or stability-providing system is completely installed and the structure is completely tied together. Temporary supports shall not result in the overstress or damage of the elements to be braced nor any elements used as brace supports.

I. The Contract Structural Drawings and Specifications represent the finished structure, and except where specifically shown, do not indicate the means or methods of construction. The Contractor and their Sub-Contractors shall supervise and direct the Work and shall be solely responsible for all construction means, methods, procedures, techniques, sequences and safety measures including, but not limited to, adherences to all OSHA guidelines. The Engineer shall not have control of, and shall not be responsible for, construction means, methods, techniques, sequences or procedures, for safety precautions and programs in connection with the Work, for the acts or omissions of the Contractor, Subcontractors, or any other person performing any of the Work, or for the failure of any of these persons to carry out the Work in accordance with the Structural Contract Documents.

J. Where conflict exists among the various parts of the Structural Contract Documents, Structural Drawings, General Notes, and Specifications, the strictest requirements, as indicated by the Engineer, shall govern.

K. Periodic site observation by field representatives of JQ is solely for the purpose of determining if the Work is proceeding in accordance with the Structural Contract Documents. This limited site observation is not intended to be a check of the quality or quantity of the Work, but rather a periodic check in an effort to inform the Owner against defects and deficiencies in the work of the Contractor.

SUBSTITUTIONS

A. All requests for substitutions of materials or details shown in the Structural Contract Documents shall be submitted for approval during the bidding period.

B. Once bids are accepted, proposed substitutions will be considered only when they are officially submitted with an identified savings or duration to be deducted from the contract and/or schedule impact. Submittals not satisfying the above criteria will not be considered.

CODES

A. The General Building Code used as the basis for the structural design is as follows:
   1. International Building Code, 2012 Edition

B. Structural Concrete: Building Code Requirements for Reinforced Concrete, American Concrete Institute, ACI 318, as referenced by the General Building Code.

C. Concrete Masonry: Building Code Requirements for Concrete Masonry Structures, American Concrete Institute, ACI 530, as referenced by the General Building Code.

D. Structural Steel: Manual of Steel Construction, American Institute of Steel Construction Inc., Thirteenth Edition, ANSI/AISC 360, as referenced by the General Building Code.

E. Wood Framing: National Design Specifications for Wood Construction with Supplement, National Forest and Paper Products Association, as referenced by the General Building Code.

F. Structural Plywood: Plywood Design Specification, American Plywood Association, as referenced by the General Building Code.

G. Prefabricated Metal Plate Connected Wood Trusses: Design Standard for Metal Plate Connected Wood Truss Construction, ANSI/TPI 1.

DESIGN LOADS

A. Dead Loads include the self-weight of the structural elements and the following superimposed loads:

1.	Ceiling and Mechanical at roof	10 psf
2.	Ceiling and Mechanical at floors	5 psf
3.	Roofing and rigid insulation	8 psf

B. Live Loads

	OCCUPANCY OR USE	UNIFORM (psf)	CONCENTRATED (lbs.)
1.	Vehicle Maintenance Bays	150	HS20-44
2.	Roof	20	N/A
3.	Vehicular barriers (see note 1)	N/A	6000

Notes:
1. Vehicular Barrier Load is applied horizontally and 18" above floor on which it acts.

C. Snow loads
   1. Ground snow load, Pg — 5 psf

D. Wind loads
   1. Wind lateral load on structural frame is based on ASCE 7-10 using the following:
      a. Basic Wind Speed (Ultimate) — 115 mph
      b. Exposure — C
      c. Internal Pressure Coefficient, Gcpi — +/-0.18
      d. Occupancy Category — II
   2. Components and cladding wind pressures:

Surface	(PSF)	Zone	Area At (ft2)
Exterior walls	+30.5	Interior and edge	10 or less
	-33.1	Interior	10 or less
	-40.7	Edge	10 or less
	+22.9	Interior and edge	500 or greater
	-25.4	Interior and edge	500 or greater
Roof	-33.4	Interior	10 or less
	-56.0	Edges	10 or less
	-84.2	Corners	10 or less
	-30.5	Interior	100 or greater
	-36.2	Edges	100 or greater
	-36.2	Corners	100 or greater

- Pressures for Tributary Areas in between the listed values may be linearly interpolated.
- Negative value signifies pressure acting away from the surface (suction).
- Edge and Corner zone distances shall be determined in accordance with referenced standard.
- Pressures on parapets shall be determined by combining positive and negative wall pressures or wall and roof pressures listed above in accordance with the referenced standard.

* Pressures are for gross uplift conditions. Refer to roof plan(s) for net uplift values for design of joists, joist girders, and bridging.

E. Seismic Loads
   1. The structure and structural components of the building have been designed in accordance with General Building Code with the following criteria:
      a. Seismic Importance Factor, IE — 1.15
      b. Risk Category — IV
      c. Mapped Spectral Response Accelerations
         i. Ss (%g) — 0.064g
         ii. S1 (%g) — 0.032g
      d. Site Class — D
      e. Spectral Response Coefficients
         i. SDS — 0.069
         ii. SD1 — 0.051
      f. Seismic Design Category — A

F. Mechanical/Kitchen Equipment Loads
   1. Loading for mechanical rooms and kitchens are based on the weights of equipment and concrete pads as indicated on the Structural Drawings. The Contractor shall submit actual weights of equipment to be used in the project to the Structural Engineer for verification of loads used in the design at least three weeks prior to fabrication and construction of the supporting structure. Any revisions in equipment type, size, or quantity shall be reported to the Architect immediately for verification of the structural design.

G. Balcony Railing and Guardrails: The balcony railings and guardrails shall be designed for 50 pounds/ft load applied horizontally at right angles to the top rail or a 200 pound concentrated load applied in any direction at any point along the top rail, whichever is greater. The railing shall have attachment devices to adequately anchor to the supporting structure for the loading indicated. Intermediate rails and panel fillers shall be designed to withstand a horizontally applied normal load of 50 pounds on an area not to exceed 12-inches by 12-inches including openings and space between rails and located so as to produce the maximum load effect. Resulting reactions due to these loads need not be combined with the design loads for handrails or guardrails.

H. Stair Rails: The handrails and supporting structure shall be capable of withstanding a 200 pound load applied in any direction at any point on the rail.

I. Concentrated Load for Stair Treads and Ladder Rungs: The individual stair treads and ladder rungs shall be designed to support a 300 pound concentrated load placed in a position, which would cause maximum stress.

BUILDING PAD PREPARATION

A. Non-expansive select fill should be utilized for all fill applications within the building limits. The select fill should consist of crushed limestone base material meeting the requirements of the Texas Department of Transportation (TxDOT) 2014 Standard Specification Item 247, Type A, Grade 3 or 'Flex Base' as specified in City of Austin Standard Specification Item 210s.

B. Prior to placing fill material, the upper 3 feet (or more) of the high plasticity clay soils shall be removed for a distance of 5 feet beyond the building line. All exposed surfaces shall then be proof-rolled with a heavy (minimum 20 ton) rubber tired vehicle such as a loaded dump truck. Soils that are observed to rut or deflect excessively under the moving load should be under-cut and replaced with compacted select fill. All proof-rolling and under-cutting activities should be performed during a period of dry weather. Just prior to placement of select fill, the proof-rolled subgrade should be scarified to a depth of 6 inches, watered as required and recompacted to a minimum of 95 percent of the maximum dry density as defined by Tex-114-E.

D. Structural fill shall be placed in 8 inch loose lifts to final subgrade elevation, watered as required and compacted to a minimum of 95% as determined by TxDOT Method Tex-113-E for coarse-grained soils or TxDOT Method Tex-114-E for fine grained soils. The moisture content of the select fill should be above the optimum moisture content at the time of compaction.

E. Compaction and moisture content of subgrade and each lift of structural fill shall be inspected and approved by a qualified engineering technician, supervised by a Geotechnical Engineer.

G. Provide a vapor retarder that conforms to ASTM E1745, Class A or better with a maximum water vapor permeance of 0.01 perms per ASTM E96. Vapor retarder shall be no less than 15 mils thick.

H. Building pad preparation information is based on a geotechnical report provided by HVJ Associates, Inc. dated March 15, 2016.

CONCRETE FOOTINGS

A. Concrete footing design is based on an allowable net bearing capacity of 3000 psf. Slab on grade design is based on a modulus of subgrade reaction of 100. These values are in accordance with with the geotechnical report dated March 15, 2016 by HVJ Associates.

B. Bearing stratum shown on the footing details is 2 feet below grade.

C. Footings not specifically located on the plan shall be located on centerline of pilaster or column above. Where no pilaster or column occurs, locate on centerline of wall or beam.

D. Provide dowels from footings into concrete above using same bar size and number as shown for pilaster or column above. Where no pilaster or column occurs, use 4 #7 dowels. Extend dowels 30 bar diameters into pier and wall, beam, pilaster or column, unless noted otherwise on the Structural Drawings.

E. Elevation of top of plinths/footings, unless noted otherwise on the Structural Drawings, is at the bottom of the deepest intersecting beam or wall supported by the footing.

F. Footing excavations shall be to neat lines and shall be free of loose or wet materials.

G. Footing reinforcing and concrete shall be placed immediately after excavations are complete; in no case shall a footing be excavated that cannot be placed by the end of the workday.

H. Reinforcing steel shop drawings shall include placing drawings for templates to set dowels in footings.

I. All footings shall be inspected by a representative of HVJ Associates, Inc. in order to ensure that the proposed bearing material has been reached in accordance with the recommendations given in the geotechnical report and that the footing has been constructed to specified size, with detailed reinforcing, and to specified tolerances.

CAST-IN-PLACE CONCRETE

A. CLASSES OF CONCRETE
All concrete shall conform to the requirements as specified in the table below.

Concrete Mix Schedule:

Conc. Class	Minimum Strength (psi)	Agg. Type	Max w/c	Notes
C	3600	NWT	0.45	See note c.

   a. "NWT" refers to normal concrete having air dry unit weight of approximately 145 PCF (ASTM C33 aggregate).
   b. "Strength" is required compressive cylinder strength at an age of 28 days.
   c. As described in the City of Austin Item 403S "Concrete for Structures" Table 5.

Mix Usage Schedule:

Description of use	Concrete Class	Aggregate Grade	Slump	Air entrainment
Reinforced Footings and Slab on grade	C	4	1"-3"	4.5%

   a. Slump values shown are for when a high range water reducer (HRWR) is not used. When a HRWR is used, maximum allowable placement slump will be 9 inches.

B. A minimum of 20% and a maximum of 35% of the cementitious materials used in mix designs may be replaced with class F fly ash.

C. Horizontal construction joints in concrete placements shall be permitted only where indicated on the Structural Drawings. All vertical construction joints shall be made in the center of spans in accordance with the typical details. Contractor shall submit proposed locations for construction joints not shown on the Structural Drawings for review by the Architect and Engineer. Additional construction joints may require additional reinforcing as specified by the Engineer which shall be provided by the contractor at no additional cost to the owner.

D. Embedded conduits, pipes, and sleeves shall meet the requirements of ACI 318, Section 6.3, including the following:
   1. Conduits and pipes embedded within a slab, wall, or beam (other than those passing through) shall not be larger in outside dimension than 1/3 the overall thickness of the slab, wall or beam in which they are embedded.
   2. Conduits, pipes and sleeves shall not be spaced closer than three diameters or widths on center.

E. Concrete placements shall not exceed 10,000 square feet or 100 linear feet on each side without prior approval by the Architect for each placement.

CAST-IN-PLACE CONCRETE CONT'D

F. Submittal: Submit proposed mix designs in accordance with ACI 301, chapter 3.9. Each proposed mix design shall be accompanied by a record of past performance based on at least 30 consecutive strength tests, or by three laboratory trial mixtures with confirmation tests.

G. Grade beams in contact with earth shall be formed both sides unless noted otherwise in details.

H. Concrete sampling for quality assurance: Concrete that is pumped shall be sampled at the point of discharge from the truck.

CONCRETE REINFORCING

A. Concrete reinforcement for the project shall conform to the following:
   1. All reinforcing steel shall be new billet steel in accordance ASTM A615, Grade 60, unless noted otherwise in the Structural Drawings or these notes.

B. Detailing of reinforcing steel shall conform to the American Concrete Institute 315 Detailing Manual and all hooks and bends in reinforcing bars shall conform to ACI detailing standards, unless noted otherwise on the Structural Drawings.

C. Welded Wire Reinforcement shall be continuous across the entire concrete surface and not interrupted by beams or girders and properly lapped one cross wire spacing plus 2".

D. Reinforcement in Housekeeping Pads shall be welded smooth wire reinforcement 6 x 6 W2.9 x W2.9 minimum in all housekeeping pads supporting mechanical equipment whether shown on the Structural Drawings or not unless heavier reinforcement is called for on the Structural Drawings.

E. In unscheduled grade beams, walls, and slabs, detail reinforcing as follows:
   1. Class A lap beam top reinforcing bars at mid span.
   2. Class A lap beam bottom reinforcing bars at the supports.
   3. Provide Class B lap at other location pending Engineer's approval.
   4. Provide standard hooks in top bars at cantilever and discontinuous ends of beams, walls and slabs.
   5. Provide corner bars for all horizontal bars at the inside and outside faces of intersecting beams or walls. Corner bars are not required if horizontal bars are hooked.
   6. Provide 2-#4 diagonal bars at all slab re-entrant corners placed under the top mat of steel.

F. Welding of reinforcing steel will not be permitted unless specifically shown on the Structural Drawings.

G. Heat shall not be used in the fabrication or installation of reinforcement.

H. Reinforcing steel clear cover shall be as follows:
   1. Earth-formed grade beams — 1 1/2" top, 3" sides, 3" bottom
   2. Footings — 3"
   3. Slab-on-grade — 3/4" top

I. Submittal: Submit shop drawings for fabrication, bending, and placement of concrete reinforcement. Comply with ACI 315 "Details and Detailing of Concrete Reinforcement". Do not reproduce the Structural Drawings for use as shop drawings.

STRUCTURAL MASONRY

A. Minimum compressive strength of the masonry (f'm) shall be 1,500 pounds per square inch.

B. Mortar shall conform to ASTM C270, Type S. Masonry cement shall not be used.

C. Concrete masonry units shall be hollow load bearing units which conform to ASTM C90, with a minimum net compressive strength as follows:

f'm (psi)	Net area Compressive Strength of CMU Block (psi)
1500	1900

D. Chases shall be built in and not cut in. Chases shall be plumb and shall be minimum one□unit length from jambs of openings. Anchors, wall plugs, accessories and other items to be built in shall be installed as the masonry work progresses. All cutting and fitting of masonry, including that required to accommodate the work of other sections shall be done by masons with masonry saws.

E. Coarse grout shall conform to ASTM C476, with a maximum aggregate size of 1/2" and a minimum compressive strength equal to the specified minimum compressive strength, f'm, but not less than 2000 psi. Course grout shall be placed in accordance with ACI 530.01 3.5.

F. Reinforce concrete masonry unit joints with ladder type hot dip galvanized cold-drawn steel conforming to ANSI/ASTM A82, with [W1.7 or W2.8]side rods with W1.7 cross rods.
   1. Space joint reinforcing at 16 inches o.c. unless noted otherwise.
   2. Lap joint reinforcing 14 inches at splices.
   3. Provide prefabricated joint reinforcing corner pieces at all wall corners and intersections.
   4. Joint reinforcing shall be discontinuous at control and expansion joints.

G. Lap reinforcing bars in grouted masonry as noted below. Splices in reinforcing shall be staggered so that not more than 1/2 of all bars are spliced at the same location.
   1. Vertical bars: — 60 bar diameters
   2. Bond beams: — 40 bar diameters
   3. Lintels: — Do not splice

H. Z-ties shall be provided in all masonry surfaces used as a form for grout at 16 inches on center each way in vertical masonry surfaces and at 8 inches on center each way in horizontal masonry surfaces. The leg embedded in the masonry joint shall have its hook placed 3/4 inch from the outside face of the masonry.

I. Z-ties shall be manufactured from 3/16 inch diameter cold drawn wire. Ties shall be hot dip galvanized, 6 inches long with a 2 inches hook at each end, unless noted otherwise on the Structural Drawings.

J. Provide 1 inch clear cover between ties or longitudinal reinforcing and the inside face of masonry used as forms in grouted beams, pilasters and columns.

POST-INSTALLED ANCHORS AND DOWELS

A. Expansion Anchors:
   1. In Concrete: Expansion Anchors shall be one of the following:
      a. Kwik Bolt TZ, Hilti Inc.
      b. Strong Bolt 2, Simpson Strong-Tie Co., Inc.
   2. In Grouted Masonry: Installation shall not be allowed within 1 1/2 inches of a head (vertical) mortar joint. Qualifying anchors shall be one of the following products:
      a. Kwik Bolt 3, Hilti Inc.
      b. Wedge-All, Simpson Strong-Tie Co., Inc.
      c. Strong-Bolt 2, Simpson Strong-Tie Co., Inc.

B. Screw Anchors:
   1. In Concrete: Qualifying anchors shall be one of the following:
      a. Kwik HUS-EZ, Hilti Inc.
      b. Titen HD, Simpson Strong-Tie Co., Inc.
   2. In Grouted Masonry: Installation permitted in both the top and face of wall. Qualifying anchors shall be one of the following products:
      a. Titen HD, Simpson Strong-Tie Co., Inc.
      b. Kwik HUS-EZ and HUS-EZ I, Hilti Inc.

C. Adhesive Anchors with Threaded Rod:
   1. In Concrete: Qualifying anchors shall be one of the following products:
      a. Epoxy: HIT-RE 500-SD, Hilti Inc.
      b. Epoxy: SET-XP, Simpson Strong-Tie Co., Inc.
      c. Acrylic: HIT-HY 200 SAFE SET adhesive with HIT-Z anchor or HOLLOW DRILL BIT with HAS anchor, Hilti Inc.
      d. Acrylic: AT-XP (IAPMO-ER-0281), Simpson Strong-Tie Co., Inc.
   2. In Grouted Concrete Masonry: Installation permitted in the top and face of wall. Qualifying anchors shall be one of the following:
      a. Acrylic: HIT HY-70 (ICC-ES ESR-3342), Hilti, Inc.
      b. Epoxy: SET, Simpson Strong-Tie Co., Inc.
      c. Acrylic: AT-XP, Simpson Strong-Tie Co., Inc.
   3. In Ungrouted Concrete Masonry:
      a. Epoxy: SET, Simpson Strong-Tie Co., Inc.
      b. Acrylic: HIT HY-70, Hilti, Inc.
   4. Threaded anchor rod shall be one of the following:
      a. Hilti adhesive: "HIT-Z" AISI 1038
      a. Hilti adhesive: "HIT-Z-R" AISI type 304/316 stainless steel
      a. Hilti adhesive: "HAS-E" standard ISO 898 Class 5.8
      a. Hilti adhesive: "HAS-Super" ASTM A193, grade B7
      a. Hilti adhesive: Type "HAS" AISI type 304/316 stainless steel
      b. Simpson adhesive: Steel meeting the requirements of ASTM A1554, grade 36.
      b. Simpson adhesive: Steel meeting the requirements of ASTM A1554, grade 36, hot dip galvanized.
      b. Simpson adhesive: 304 Stainless steel meeting the requirements of ASTM A193, grade B8.
      c. Anchor rod shall have a chamfered end on one end to accept a nut and washer; it may have a 45-degree chisel point on the other end.

D. Adhesive Rebar Dowelling
   1. Qualifying anchors shall be one of the following products:
      a. Epoxy: HIT-RE 500-SD, Hilti Inc.
      b. Epoxy: SET-XP, Simpson Strong-Tie Co., Inc.
      c. Acrylic: HIT-HY 200 SAFE SET with hollow drill bit, Hilti, Inc.

E. Anchor and Dowel Installation
   1. Anchors and dowels of the size and embedment shown on the Drawings shall be installed in accordance with the Contract Documents, the manufacturer's recommendations, and the manufacturer's current evaluation (ICC-ES or IAPMO-ES) report for the anchor. If conflicts exist between these referenced documents, the most stringent requirements shall govern.
   2. The Contractor shall locate all existing reinforcing steel and other embedded items contained in the concrete using non-destructive methods and shall position anchor locations to avoid conflicts with existing embedded items. Anchor or dowel locations can be adjusted by a maximum of 1 1/2" from detailed locations to avoid conflicts, but shall neither change arrangement nor move closer to a concrete edge.
   3. Based on field verified locations of reinforcing steel and embedded items, the Contractor shall create templates for each anchor group. Submit template dimensions for review prior to fabrication of connection plates.
   4. Holes for anchors and dowels shall be drilled in a continuous operation using the drill-bit type and size recommended by the anchor manufacturer. Holes shall be drilled perpendicular to the concrete surface and shall not be enlarged or redirected at any point along its length. Holes shall be drilled using a hammer drill, coring shall not be allowed, unless noted otherwise.
   5. Oil free compressed air shall be used to blow out the holes; shop vacs, squeeze bulbs, etc. shall not be used. Refer to manufacturer's information for detailed cleaning instructions.
      a. Hilti Safe-Set system may be used to eliminate hole cleaning with adhesive anchors.
   6. All abandoned holes shall be filled with non-metallic nonshrink grout capable of reaching a design compressive strength of 5,000 psi at 28 days.
   7. Holes in connection plates shall be no more than 1/16" larger than the anchor diameter. If larger holes are required for erection purposes, Contractor shall notify Engineer such that a plate washer size can be provided.
   8. Concrete shall have a compressive strength of 2500 psi minimum at an age of 21 days.
   9. Adhesive anchors and dowels: Concrete and masonry substrates shall have the following minimum and maximum temperatures at the time of adhesive anchor and dowel installation:

	Minimum (°F)	Maximum (°F)
Hilti HIT RE-500V3 SAFE SET	None specified	
Simpson SET-XP	50	100
Hilti HY-70	41	104
Hilti HY-200 SAFE SET	14	104
Simpson SET	40	110
Simpson AT	0	100

F. For adhesive anchors installed in a horizontal orientation subject to sustained tension loading and all upwardly inclined (including soffit installations) orientation:
   1. Per ACI 318-11 (D.9.2.2): Installation shall be performed by personnel certified by ACI/CRSI "Adhesive Anchor Installer Certification Program." Certification shall include written and performance tests.

STATE OF TEXAS
STEPHANIE RAE TSEN
97275
LICENSED
PROFESSIONAL ENGINEER
9.28.16

JQ + TSEN
JQ + TSEN, LLC
1608 WEST 6TH STREET, SUITE 200
AUSTIN, TEXAS 78703
512.474.4001
JQENG.COM
JQT PROJECT NO:9140025
TBPE FIRM F-12778

AUSTIN ONION CREEK
FIRE & EMS STATION
11112 OLD SAN ANTONIO ROAD
AUSTIN, TEXAS 78748

CITY OF AUSTIN FOUNDED 1839

REVISIONS

DATE	09/23/16
DRAWN BY	TG
CHECKED BY	ST
PROJECT NO.	214106.00

S1.1

S T R U C T U R A L   N O T E S

STRUCTURAL STEEL

A. Material
  1. All hot rolled steel members shall be new and conform to ASTM specification A6.
  2. ASTM Specification and Grade - clearly mark the grade on each member.
  3. Unless Noted otherwise on the Structural Drawings, structural steel members shall be:
    a. W-shapes shall conform to ASTM A992.
    b. Channels shall conform to ASTM A36.
    c. Angles shall conform to ASTM A36.
    d. Steel pipe shall conform to ASTM A53, Type E or S, Grade B.
    e. Round hollow structural shape members shall conform to ASTM A500, Grade B Fy = 42 ksi.
    f. Square or rectangular hollow structural shape members shall conform to ASTM A500 Grade B, Fy = 46 ksi.
    g. Structural steel plate shall conform to ASTM A36.
    h. Any other steel shall conform to ASTM A36.

B. Fabrication
  1. Splicing of structural steel members is prohibited without prior approval of the Engineer as to location and type of splice to be made. Any member having splice not shown and detailed on shop drawings will be rejected.
  2. Dimensional tolerances of fabricated structural steel shall conform to Section 6.4 of the AISC Code of Standard Practice unless noted otherwise on the Structural Drawings.
  3. Shop painting: Paint structural steel with one coat of manufacturer's standard red oxide primer applied at a rate to provide a uniform dry film thickness of 2.5 mils.

C. Erection
  1. Erection tolerances of anchor bolts, embedded items, and all structural steel unless specified otherwise on the Structural Drawings shall conform to the AISC Code of Standard Practice.
  2. Field cutting of structural steel or any field modifications to structural steel shall not be made without prior approval of the Engineer.
  3. Contractor shall protect any unprimed structural steel from detrimental effects of corrosion, as required, until the steel is enclosed and protected by the new construction.
  4. Hot dip galvanize after fabrication all structural steel items and connections permanently exposed to the weather, whether specified on the Structural Drawings or not. Such items include, but are not limited to:
    a. All embedded plates in concrete
    b. Building cladding support steel in space not air conditioned and/or exposed to moisture outside the exterior waterproofing surface if any.
    c. Railing exposed to weather.
    d. Examine the Architectural and Structural Drawings for other items required to be hot dipped galvanized. Galvanize all nuts, bolts, and washers used in connection with such steel. Field welded connections shall have welds protected with “Z.R.C. Cold Galvanizing Compound” as manufactured by Z.R.C. Company.

D. Contractor shall coordinate structural steel fireproofing requirements. All interior structural steel, including steel joists, scheduled or indicated to receive spray applied fireproofing shall be delivered to the project site unprimed. Steel exposed to corrosive conditions after installation shall be primed with a protective coating which does not diminish the bond between the spray applied fireproofing, and the steel substrate. Any primer, and/or coating applied to structural steel shall be approved for use in the applicable U.L. Fire Resistance Assembly used on the project.

STRUCTURAL STEEL CONNECTIONS

A. Welded Connections
  1. All welding shall conform to ANSI/AWS D1.1, latest edition.
  2. Fillet welds with no size specified shall be 3/16 inch or minimum size required by AISC, whichever is larger.

B. Bolted Connections
  1. Unless noted otherwise on the Structural Drawings, bolts shall be 3/4 inch diameter and conform to ASTM A325. Bolts shall be designed using values for bearing type bolts with thread allowed in the shear plane.
  2. Bolts shall be tightened to “snug tight” as defined by AISC, unless noted otherwise on the Structural Drawings.
  3. Bolts noted as “Slip Critical” throughout the documents shall be tightened to the Minimum Pretensioned amounts according to Section J of the AISC specification using one of the following methods: Turn-of-the-nut Method, Calibrated Torque Wrench, Twist-off Type Tension Control, or Direct Tension Indicators.

C. Structural steel connections not specifically detailed on the Structural Drawings shall be designed and detailed by the Contractor under the direct supervision of a professional engineer licensed in the state having jurisdiction at the project site. Sealed calculations for all connections designed by the Contractor shall be submitted for the Architect's files.

D. Beam connections shall be designed and detailed as follows, unless noted otherwise on the Structural Drawings:
  1. Connections shall be AISC type 2 simple framing connections. Shear tab connections shall not be used unless specifically detailed on the Structural Drawings, or connections are designed and detailed by the fabricator’s registered professional engineer licensed in the State of TX and sealed calculations are submitted.
  2. In general, shop connections shall be bolted or welded and field connections shall be bolted.
  3. Where indicated, connections shall be designed for the scheduled shear force. The shear force is indicated on the Structural Drawings as "R = ", and the horizontal force indicated as "H = ".
  4. If not indicated on the Structural Drawings, connections shall be designed for 55 percent of the total load capacity for the beam span shown in the beam tables in the AISC Manual, thirteenth edition.
  5. Short slotted holes shall be permitted provided washers are installed in accordance with AISC requirements. Washers shall be hardened where A325 bolts are utilized.

E. Wind brace and truss connections shall be designed and detailed as follows, unless noted otherwise on the Structural Drawings:
  1. Connections shall be welded.
  2. Connections shall be designed and detailed by the fabricator’s registered professional engineer licensed in the state having jurisdiction at the project site for the forces shown on the Structural Drawings.
  3. If forces are not indicated on the Structural Drawings, connections shall be designed to develop the full tensile capacity of the members.

F. Moment Connections
  1. Where indicated, moment connections shall be designed for the scheduled moment envelope. The moment is indicated on the Structural Drawings as "(M =)".
  2. If not indicated on the Structural Drawings, moment connections shall be welded to develop the full capacity of the member.
  3. All welds denoted as moment connection or complete joint penetration (CJP) weld shall be ultrasonically or x-ray certified by an independent testing agency.

G. All beam shears, reactions, member forces, moments, etc. shown on the Structural Drawings are unfactored loads conforming to the requirements of AISC Load and Resistance Factor Design (LRFD).

H. Roof edge angles shall be continuous and shall be spliced only at supports. Splices shall be butt welded to develop full capacity of the member.

I. Base Plates
  1. Column base plates shall be set to the elevation indicated on the Structural Drawings and leveled using shims or by double nuts on anchor bolts. Base plates shall then be grouted with a non-shrink, high strength nonmetallic grout. Tighten anchor bolts after supported members have been positioned and plumbed.

J. Anchor rods shall be:
  2. High Strength: ASTM F1554, Gr. 55, Weldable.

K. For connections not specifically addressed by these notes or the Structural Drawings, provide fillet welds at all contact surfaces sufficient to develop the tensile strength of the smaller member at the joint.

METAL DECKS

A. Metal Roof Deck
  1. Metal Roof Deck Schedule:

Location	Gauge	SDI Deck Type	Deck Depth (in)	Sheet Width (in)	Min. Ix (in4)	Min. Sp (in3)	Min. Sn (in3)
Typ. UNO	20	WR	1.5	36	0.212	0.234	0.245

Sp = positive section modulus in3

Sn = negative section modulus in3

I = moment of inertia in4

  2. Roof deck shall be [galvanized OR primer painted OR galvanized or primer painter as indicated on the Structural Drawings.]
  3. Sheet steel for galvanized roof deck and accessories shall conform to ASTM A653, Structural Quality, with a minimum yield strength of 33 ksi. Galvanizing shall conform to ASTM A653 with a minimum coating of {G60 OR G90} as defined in A653.
  4. Sheet steel for prime painted roof deck and accessories shall conform to ASTM A1008 with a minimum yield strength of 33 ksi.
  5. Roof deck shall be continuous over four or more supports.
  6. Place deck panels on structural supports and adjust to final position with ends lapped 2 inches over structural supports. Provide minimum end bearing of 2 inches.
  7. Roof deck connections shall be as follows:

Location	Support Connx Pattern	Support Fastener	Sidelap Fastener/ No per span
Typical Building			
Interior Field	36/4	5/8 PW	#10 Tek/ 3
Perimeter Band	36/7	5/8 PW	#10 Tek/ 5
Ridge Band	36/7	5/8 PW	#10 Tek/ 5
Corner Zones	36/7	5/8 PW	#10 Tek/ 5
Clerestory			
Interior Field	36/4	5/8 PW	#10 Tek/ 3
Perimeter Band	36/7	5/8 PW	#10 Tek/ 5
Ridge Band	36/7	5/8 PW	#10 Tek/ 5
Corner Zones	36/7	5/8 PW	#10 Tek/ 5

See Design Wind Load information or plans for “a” dimension and Interior Fields, Perimeter Band, Ridge Band, and Corner Zones wind loads.

PW = Puddle Weld

  8. Roof deck connections shall conform to the requirements of Factory Mutual Class 1-90 (Data Sheet 1-28, January 2012). For connection purposes, the width of the roof corners and perimeter, including ridges, is defined as the smaller of:
    a. 0.1 times the building lesser plan dimension.
    b. 0.4 times the eave height
    c. Minimum with of 4 feet.
  9. Power driven fasteners shall be selected by the Contractor for the combinations of deck gauge and deck support member thickness. Submit proposed fasteners with complete manufacturer's information, including diaphragm shear values for the Engineer to review.
  10. Puddle welds shall be 5/8" minimum diameter and shall be made through weld washers for decking lighter than 22 gauge.
  11. Mechanical, electrical and plumbing systems shall not be supported by the metal roof deck.
  12. Submittal: Submit deck layout plans and details indicating deck type, fastening methods and layout, support locations, projections, openings and reinforcement, and any other pertinent details and accessories.

TIMBER FRAMING

A. Unless noted otherwise on the Structural Drawings, all structural framing lumber shall be clearly marked No. 2 Southern yellow pine or Douglas fir, except that non-load bearing interior walls may be stud grade Southern yellow pine, Douglas fir, or Spruce-pine-fir.

B. Studs shall be 2 x 4's at 16 inches on center, typical, unless noted otherwise on the Structural Drawings.

C. Wood Preservative Treated Lumber (Pressure Treated):
  1. Preservative Treated Lumber shall be Southern Yellow Pine and shall be treated as described below.
  2. Preservative Treatment by Pressure Process should be performed according to the AWPA methods described below. The preservative chemicals shall be waterborne and can include Alkaline Copper Quat (ACQ-C, ACQ-D) and Copper Azole (CBA-C & CA-B) for interior or exterior uses and Inorganic Boron (SBX) for interior use only. Preservative shall not contain arsenic or chromium and shall not contain ammonia carriers.
  3. Wood Installed for above ground use shall be preservative treated using water-borne preservatives in accordance with AWPA U2, use category UC3B. The locations to be treated are as follows:
    a. Wood joists or wood floor without joists are closer than 18 inches or wood girders are closer than 12 inches to the exposed ground in crawl space.
    b. Wood Framing members including wood sheathing which rest on exterior foundation walls and are less than 8inches from the exposed earth.
    c. Wood framing members or furring strips attached directly to the interior of exterior or concrete walls below grade.
    d. Wood sleepers and sill plates on concrete or masonry slab that is in direct contact with earth.
    e. Wood Girder ends supported by exterior masonry or concrete walls unless 1/2 inch airspace is provided on top, sides, and end.
    f. Wood Siding closer than 6 inches to earth.
    g. Posts or columns supported directly on a footing unless separated by an impervious moisture barrier and a minimum 6 inches above grade and 1 inch above slab where a slab exists or 8 inches above earth on a concrete pier where no slab exists.
    h. Portions of Glued-laminated timbers exposed to weather.
  4. Wood in contact with Ground (exposed earth) or fresh water shall be preservative treated using water-borne preservatives in accordance with AWPA U1, with use category UC4C.
  5. Wood member that form supports of buildings, balconies, porches, or similar permanent building appurtenances where such members are exposed to the weather without adequate protection from the roof, eave, overhang, etc. to prevent water accumulation on the surface or between joints shall be preservative treated using water-borne preservatives in accordance with AWPA U1 with use category UC3A.
  6. Other wood members noted in the drawings shall be preservative treated using water-borne preservatives in accordance with AWPA U1 with use category UC3A.

D. All wood headers, beams, and top plates shall be no. 2 Southern Yellow Pine or Douglas Fir.

E. All wood stud walls shall be full height without intermediate plate line unless detailed otherwise.

F. All load bearing walls shall have solid 2x blocking at 4'□0" on center maximum vertically. End nail with 2-16d nails or side toe nail with 2-16d nails.

G. Provide double studs at all wall corners and on each side of all openings, unless noted or detailed otherwise.

TIMBER FRAMING CONT'D

H. Floor sheathing: 3/4" APA rated tongue and groove sheathing with an Exposure 1 rating (or) 3/4" grade C-D tongue and groove plywood with exterior glue. Floor sheathing shall be glued to the wood support members with a wet use adhesive, in addition to being nailed to the supports with 10d ring shank nails at 6" on center at supported edges and 12" on center at intermediate supports. Stagger joints in sheathing.

I. Roof sheathing: 1/2" APA rated sheathing with an exposure 1 rating (or) 1/2" grade C-D plywood with exterior glue. Panels shall be continuous over two or more spans with the long dimension oriented perpendicular to the framing members. Nail with 8d common nails at 6" on center at supported edges and 12" on center at intermediate supports. Stagger joints in sheathing.

J. All corners of wall framing shall be braced by a 4'□0" wide x 1/2" panel of APA rated sheathing with an exposure 1 rating extending from the top plate to the sill plate. Also provide panels at 25'-0” on center maximum, but not less than 16% of the total exterior wall surface. Where wall is taller than 8'-0", provide multiple panels as required to extend from sill plate to top plate. Provide 2x blocking as required to support all panel edges. Nail with 8d common nails at 6" on center at supported edges and 12" on center at intermediate supports.

K. Solid 2x blocking or bandboard shall be provided at supports and cantilever ends of all wood joists, and between supports in rows not exceeding 8'-0" apart.

L. All framing members framing into the side of a header shall be attached using metal joist hangers of type “LU” as manufactured by the Simpson Company or equal. The hanger shall be sized and installed in accordance with the manufacturer’s recommendations for the size of joist supported.

M. Nailing and attachment of all framing members and sheathing shall be as specified in the International Building Code Nailing Schedule unless noted otherwise on the Structural Drawings. Common wire nails or spikes, or galvanized box nails shall be used for all framing unless noted otherwise on the Structural Drawings.

N. Place a single plate at the bottom and a double plate at the top of all stud walls.

O. Simpson Strong Tie steel connectors in contact with Pressure Treated Lumber shall the following composition/ finish:

Usage	Type of Preservative Retention Level	Simpson Finish
Interior	SBX/DOT	G90
Interior/Exterior	ACQ (All) / 0.40 pcf (max)	HDG / ZMAX
Interior/Exterior	CBA-A / 0.41 pcf (max)	HDG / ZMAX
Interior/Exterior	CA-B / 0.21 pcf (max)	HDG / ZMAX

Uncertain or retention levels greater than noted above will require Type 304 or 316 Stainless Steel connectors and fasteners.

P. As an alternate, plates may be attached to concrete foundation elements with power actuated fasteners. Provide washers at least 0.08 inches thick, and 1.1 inches square or 1.425 inches in diameter at each fastener. Fasteners shall be 3" long and shall have a minimum shank diameter of 0.145 inches. Provide two fasteners located 6 and 10 inches from the end of each sill plate piece, and then at a maximum spacing of 18 inches on center maximum at exterior walls and at interior party walls. At interior non-load bearing partitions, fasteners may be spaced at 36" on center, maximum. Fasteners shall be Hilti X-CR 72P8 pins or equal. Submit manufacturer’s information on fastener to be used prior to start of construction.

Q. Provide double joists under all interior partition walls oriented parallel to the joists.

R. All bolts and lag screws shall have standard washers. All anchor and expansion bolts used in wood to concrete connections in crawlspace areas shall be hot dip galvanized or stainless steel.

S. Refer to the Architectural Drawings for additional wood framing members. Provide additional wood framing members shown on the Architectural Drawings even though they may not be shown on the Structural Drawings.

DESIGN BY OTHERS

A. In accordance with the Specifications the items listed below are not included in the Contract Documents. Design of these elements shall be the responsibility of the Contractor, and shall be designed and sealed by a registered professional engineer licensed in the state having jurisdiction at the project site.
  1. Steel Connections
  2. Stairs
  3. Guardrail and Handrail Systems
  4. Wood Trusses
  5. Pre-Fabricated Awnings and Canopies

B. Design of the items listed above shall be in accordance with the General Building Code, and shall include all attachments to the structure.

PREFABRICATED METAL PLATE CONNECTED WOOD TRUSSES

A. Trusses shall be designed by the Contractor in accordance with the Truss Plate Institute "National Design Standard for Metal Plate Connected Wood Truss Construction" (ANSI/TPI 1).

B. Truss members shall be clamped in a mechanical or hydraulic jig with sufficient pressure to bring members into reasonable contact at all joints during application of connector plates.

C. Provide adequate erection bracing in accordance with Truss Plate Institute publication BCSI-1-06.

D. Truss Manufacturer shall provide permanent bracing as required by the design of the trusses. Erection bracing may remain in place as permanent bracing where it does not interfere with the architectural finishes.

E. All timber truss members shall be Southern Yellow Pine with a maximum moisture content of 19%. Chord members shall be no. 2 or better and web members shall be no. 3 or better.

F. Connection plates shall be manufactured by a WTCA member plate manufacturer. Plates shall be 20 gauge minimum, ASTM A653 grade 33 steel, with a G60 galvanized coating.

G. Trusses shall be designed in accordance with the following requirements:
  1. Top chords shall be designed to resist the local bending induced by the floor or roof uniform load on the top chord.
  2. Walls are not designed for thrust from the trusses. Trusses shall not impart a horizontal thrust load to the supporting wall.
  3. Limit live load deflection of trusses to L/360. Total load deflections shall be limited to L/240.
  4. Truss members and connections shall be proportioned with a maximum allowable stress increase for duration of load as follows:
    a. Roof Loads — 25 percent
    b. Wind Loads — 33 percent
    c. Seismic Loads — 33 percent
  5. Trusses shall be designed for the superimposed dead, live and snow loads as noted in the Structural Notes and as indicated on the Structural Drawings. Superimposed dead loads shall not be less than the following:
    a. Roof Trusses:
      1 Dead Load
        i. Top Chord — 15 psf
        ii. Bottom Chord — 5 psf
      2 Live Load
        i. Top Chord — 16 psf
        ii. Bottom Chord — 4 psf
    a. Roof - Flat Trusses:
      1 Dead Load
        i. Top Chord — 15 psf
        ii. Bottom Chord — 5 psf
      2 Live Load
        i. Top Chord — 16 psf
        ii. Bottom Chord — 4 psf
    b. Roof - Flat Trusses at Mechanical:
      1 Dead Load
        i. Top Chord — 15 psf
        ii. Bottom Chord — 5 psf
      2 Live Load
        i. Top Chord — 40 psf
        ii. Bottom Chord — 10 psf
  6. Trusses shall be designed for the superimposed wind loads in accordance with the specified General Building Code and the specified basic wind speed, exposure, and importance factor. Increase member sizes or provide additional bridging as required to resist uplift forces.

H. Connect roof trusses to bearing wall or beam support at each end with a type H2.5 framing anchor as manufactured by the Simpson Company or accepted equal.

I. For size and location of mechanical openings, see Mechanical Drawings.

J. Truss manufacturer shall submit shop drawings and calculations for review. Shop drawings shall bear the seal of a registered professional engineer licensed in the state having jurisdiction at the project site.

K. Tag all connection points on web members where permanent lateral bracing is required by design.

L. At roof ridges and valleys not framed with hip trusses, provide blocking between trusses as required to provide continuous support for roof sheathing.

M. All truss-to-truss, truss-to-beam and truss-to-wall connections shall be designed and supplied by the truss manufacturer. All beam-to-truss connections shall be provided by the engineer of record.

DEFERRED SUBMITTALS

A. In accordance with the General Building Code, Section 107.3.4.2, the following submittals will not be issued at the time of permit application, and will be “deferred” to a later date. Deferred submittals are required to be submitted to the Building Official. However, these submittals shall be submitted and approved by the Registered Design Professional in Responsible Charge (RDPiRC) prior to submitting to the Building Official. Deferred submittals are design items being delegated to the Contractor which shall be designed and sealed by a registered professional engineer licensed in the state having jurisdiction at the project site.

B. The following structural components shall be treated as deferred submittals:
  1. Steel Connections
  2. Stairs
  3. Guardrail and Handrail Systems
  4. Wood Trusses
  5. Pre-Fabricated Awnings and Canopies

C. Design of the items listed above shall be in accordance with the General Building Code, and shall include all attachments to the structure.

D. Work associated with Deferred Submittals shall not be performed until the deferred submittal documents have been approved by the Building Official.

E. Refer to the Contract Documents for additional Deferred Submittal items.

STATE OF TEXAS
STEPHANIE RAE TSEN
97275
LICENSED
PROFESSIONAL ENGINEER
9.28.16

JQ+TSEN
JQ + TSEN, LLC
1608 WEST 6TH STREET, SUITE 200
512.474.4001
JQT PROJECT NO:9140025
AUSTIN, TEXAS 78703
JQENG.COM
TBPE FIRM F-12778

AUSTIN ONION CREEK
FIRE & EMS STATION
11112 OLD SAN ANTONIO ROAD
AUSTIN, TEXAS 78748

REVISIONS

DATE 09/23/16
DRAWN BY TG
CHECKED BY ST
PROJECT NO. 214106.00

S1.2

SPECIAL INSPECTION TABLES FOR STRUCTURAL ELEMENTS - 2012

SPECIAL INSPECTIONS

1. Special Inspections shall be performed in accordance with Chapter 17 of the 2012 International Building Code (IBC) by a Special Inspector hired by the Owner to perform the Special Inspections listed below. The Special Inspector shall be qualified by an approved agency according to the City's building official to perform the special inspections for which they will be undertaking. The Contractor shall coordinate with and notify the Special Inspector of all tests. The Special Inspector shall be responsible to verify that the items detailed in the Construction Documents were built accordingly and shall prepare, sign, and furnish inspection reports to the building official and the Architect for all time spent at the site. The Inspector shall bring discrepancies to the immediate attention of the General Contractor for correction. If the discrepancies are not corrected, the discrepancies shall be brought to the attention of the building official and to the Architect prior to the completion of that phase of the work. These special inspections are in addition to the other inspections listed in these Structural Notes or Project Specifications.

2. Where structural load-bearing members and assemblies are shop fabricated, the Special Inspector shall verify that the fabricator maintains detailed fabrication and quality control procedures that provide a basis for inspection control of the workmanship and the fabricator's ability to conform to the Construction Documents and Referenced Standards, unless the fabricator is registered and approved to perform such work without special inspection.

VERIFICATION AND INSPECTION TASKS FOR WELDING OF STRUCTURAL STEEL (AISC 360-10 Table N5.4)

SPECIAL INSPECTION REQUIRED	VERIFICATION AND INSPECTION	INSPECTION FREQUENCY		REFERENCED STANDARD	IBC REFERENCE
		CONTINUOUS	PERIODIC		
	1. Inspection tasks prior to welding:				
YES	a. Welding procedure specifications (WPSs) available	X	--	AISC 360-10 N5.4-1: AWS D1.1	1705.2.1
YES	b. Manufacturer certifications for welding consumables available	X	--		
YES	c. Material identification (type/grade)	--	X		
YES	d. Welder identification system	--	X		
YES	e. Fit-up of groove welds (including joint geometry) 1) Joint preparation 2) Dimensions (alignment, root opening, root face, bevel) 3) Cleanliness (condition of steel surfaces) 4) Tacking (tack weld quality and location) 5) Backing type and fit (if applicable)	--	X		
YES	f. Configuration and finish of access holes.	--	X		
YES	g. Fit-up of fillet welds 1) Dimensions (alignment, gaps at root) 2) Cleanliness (condition of steel surfaces) 3) Tacking (tack weld quality and location)	--	X		
	2. Inspection tasks during welding:				
YES	a. Use of qualified welders	--	X	AISC 360-10 N5.4-2: AWS D1.1	1705.2.1
YES	b. Control and handling of welding consumables 1) Packaging 2) Exposure control	--	X		
YES	c. No welding over cracked tack welds	--	X		
YES	d. Environmental conditions 1) Wind speed within limits 2) Precipitation and temperature	--	X		
YES	e. WPS followed 1) Settings on weld equipment 2) Travel speed 3) Selected welding materials 4) Shielding gas type/flow rate 5) Preheat applied 6) Interpass temperature maintained (min./max.) 7) Proper position (F, V, H, OH)	--	X		
YES	f. Welding techniques 1) Interpass and final cleaning 2) Each pass within profile limitations 3) Each pass meets quality requirements	--	X		
	3. Inspection tasks after welding:				
YES	a. Welds cleaned	--	X	AISC 360-10 N5.4-2: AWS D1.1	1705.2.1
YES	b. Size, length and location of welds	X	--		
YES	c. Welds meet visual acceptance criteria 1) Crack prohibition 2) Weld/base-metal fusion 3) Crater cross section 4) Weld profiles 5) Weld size 6) Undercut 7) Porosity	X	--		
YES	d. Arc strikes	X	--		
YES	e. k-area	X	--		
YES	f. Backing removed and weld tabs removed (if required)	X	--		
YES	g. Repair activities	X	--		
YES	h. Document acceptance or rejection of welded joint or member	X	--		

1. Inspection tasks noted in this table are the responsibility of the Special Inspector or Quality Assurance Inspector (QAI). The fabricator and erector are responsible for all inspection tasks indicated in AISC 360-10 Section N5 and assigned to the Quality Control Inspector (QCI)

2. Inspection tasks may be coordinated with the fabricator or erector's Quality Control Inspector (QCI) where indicated with this footnote. All other tasks shall be performed by the Special Inspector.

3. When welding of doubler plates, continuity plates or stiffeners has been performed in the k-area, visually inspect the web k-area for cracks within 3 in. (75 mm) of the weld.

VERIFICATION AND INSPECTION TASKS FOR BOLTING STRUCTURAL STEEL (AISC 360-10 Tables N5.6)

SPECIAL INSPECTION REQUIRED	VERIFICATION AND INSPECTION	INSPECTION FREQUENCY		REFERENCED STANDARD	IBC REFERENCE
		CONTINUOUS	PERIODIC		
	1. Inspection tasks prior to bolting:				
YES	a. Manufacturer's certifications available for fastener materials	X	--	AISC 360-10 N5.6-1	1705.2.1
YES	b. Fasteners marked in accordance with ASTM requirements	--	X		
YES	c. Proper fasteners selected for the joint detail (grade, type, bolt length if threads are to be excluded from shear plane)	--	X		
YES	d. Proper bolting procedure selected for joint detail	--	X		
YES	e. Connecting elements, including the appropriate faying surface condition and hole preparation, if specified, meet applicable requirements	--	X		
YES	f. Pre-installation verification testing by installation personnel observed and documented for fastener assemblies and methods used	--	X		
YES	g. Proper storage provided for bolts, nuts, washers and other fastener components	--	X		
	2. Inspection tasks during bolting:				
YES	a. Fastener assemblies, of suitable condition, placed in all holes and washers (if required) are positioned as required	--	X	AISC 360-10 N5.6-2	1705.2.1
YES	b. Joint brought to the snug-tight condition prior to the pretensioning operation	--	X		
YES	c. Fastener component not turned by the wrench prevented from rotating.	--	X		
YES	d. Fasteners are pretensioned in accordance with the RCSC Specification, progressing systematically from the most rigid point toward the free edges	--	X		
	3. Inspection tasks after bolting:				
YES	a. Document acceptance or rejection of bolted connections	X	--	AISC 360-10 N5.6-3	1705.2.1

1. Inspection tasks noted in this table are the responsibility of the Special Inspector or Quality Assurance Inspector (QAI). The fabricator and erector are responsible for all inspection tasks indicated in AISC 360-10 Section N5 and assigned to the Quality Control Inspector (QCI)

2. Inspection tasks may be coordinated with the fabricator or erector's Quality Control Inspector (QCI) where indicated with this footnote. All other tasks shall be performed by the Special Inspector.

VERIFICATION AND INSPECTION OF STEEL CONSTRUCTION OTHER THAN STRUCTURAL STEEL (IBC Table 1705.2.2)

SPECIAL INSPECTION REQUIRED	VERIFICATION AND INSPECTION	INSPECTION FREQUENCY		REFERENCED STANDARD	IBC REFERENCE
		CONTINUOUS	PERIODIC		
	1. Material verification of cold-formed steel deck:				
YES	a. Identification markings to conform to ASTM standards specified in the approved construction documents	--	X	Applicable ASTM Materials Standards	1705.2.2
YES	b. Manufacturer's certified test reports	--	X		
	2. Inspection of welding other than structural steel:				
	a. Cold-formed steel deck:	--	X		
YES	1. Floor and roof deck welds	--	X	AWS D1.3	--
	b. Reinforcing steel:				
YES	1. Verification of weldability of reinforcing steel other than ASTM A 706	--	X	AWS D1.4 ACI 318: Section 3.5.2	1705.2.2
YES	2. Reinforcing steel resisting flexural and axial forces in intermediate and special moment frames, and boundary elements of special structural walls of concrete and shear reinforcement	X	--		
YES	3. Shear reinforcement	X	--		
YES	4. Other reinforcing steel	--	X		

VERIFICATION AND INSPECTION OF CONCRETE CONSTRUCTION (IBC TABLE 1705.3)

SPECIAL INSPECTION REQUIRED	VERIFICATION AND INSPECTION	INSPECTION FREQUENCY		REFERENCED STANDARD	IBC REFERENCE
		CONTINUOUS	PERIODIC		
YES	1. Inspection of reinforcing steel, including prestressing tendons, and placement.	--	X	ACI 318: 3.5, 7.1-7.7	1910.4
YES	2. Inspection of reinforcing steel welding in accordance with Table 1705.2.2, Item 2b.	--	--	AWS D1.4 ACI 318: 3.5.2	--
YES	3. Inspection of anchors cast in concrete where allowable loads have been increased or where strength design is used.	--	X	ACI 318: 8.1.3, 21.2.8	1908.5, 1909.1
YES	4. Inspection of adhesive anchors installed in hardened concrete. Special Inspector must be certified by ACI/CRSI "Adhesive Anchor Installer. A report must be submitted to the licensed design professional and building official documenting, stating how anchor was installed and the Manufacturer's Printed Installation Instructions per ACI 318-11 (D.9.2.2 and D.9.2.4)	X	--	ACI 318: Appendix D	1909.1
YES	5. Inspection of mechanical anchors installed in hardened concrete.	--	X	ACI 318: 3.8.6, 8.1.3, 21.2.8	1909.1
YES	6. Verifying use of required design mix.	--	X	ACI 318: Ch. 4, 5.2-5.4	1904.2, 1910.2, 1910.3
YES	7. At the time fresh concrete is sampled to fabricate specimens for strength tests, perform slump and air content tests, and determine the temperature of the concrete.	X	--	ASTM C 172 ASTM C 31 ACI 318: 5.6, 5.8	1910.10
YES	8. Inspection of concrete and shotcrete placement for proper application techniques.	X	--	ACI 318: 5.9, 5.10	1910.6, 1910.7, 1910.8
YES	9. Inspection for maintenance of specified curing temperature and techniques.	--	X	ACI 318: 5.11-5.13	1910.9
	10. Inspection of prestressed concrete:				
YES	a. Application of prestressing forces:	X	--	ACI 318: 18.20 ACI 318: 18.18.4	--
YES	b. Grouting of bonded prestressing tendons in the seismic-force-resisting system:	X	--		
YES	11. Erection of precast concrete members.	--	X	ACI 318: Ch. 16	--
YES	12. Verification of in-situ concrete strength, prior to stressing of tendons in post-tensioned concrete and prior to removal of shores and forms from beams and structural slabs.	--	X	ACI 318: 6.2	--
YES	13. Inspect formwork for shape, location and dimensions of the concrete members being formed.	--	X	ACI 318: 6.1.1	--

STATE OF TEXAS
STEPHANIE RAE TSEN
97275
LICENSED
PROFESSIONAL ENGINEER
9.28.16

JQ TSEN
JQ-TSEN, LLC
2500 WEST 7TH STREET, SUITE 200
512.474.4001
AUSTIN, TEXAS 78703
JQENG.COM
TBPE FIRM # 13778
JQT PROJECT NO 914-00325

AUSTIN ONION CREEK
FIRE & EMS STATION
11112 OLD SAN ANTONIO ROAD
AUSTIN, TEXAS 78748

REVISIONS

DATE	09/23/16
DRAWN BY	TG
CHECKED BY	ST
PROJECT NO.	214106.00

S1.3

SPECIAL INSPECTION TABLES FOR STRUCTURAL ELEMENTS - 2012

LEVEL C VERIFICATION AND INSPECTION OF MASONRY CONSTRUCTION (ACI 530 Table 1.18.3)			
SPECIAL INSPECTION REQUIRED	VERIFICATION, INSPECTION AND TESTING	INSPECTION FREQUENCY	
		CONTINUOUS	PERIODIC
MINIMUM TESTS			
YES	Verification of f'm AND f'AAC in accordance with article 1.4 B prior to construction and for every 5,000 sq. ft. (464.5m) during construction	--	--
YES	Verification of proportions of materials in premixed or preblended mortar, prestressing grout, and grout other than self-consolidating grout as delivered to the site	--	--
NO	Verification of Slump flow and VSI as delivered to the site in accordance with article 1.5 B.1.b.3 for self-consolidating grout	--	--
INSPECTION TASKS			
YES	1. Verify compliance with the approved submittals	--	X
	2. Verify that the following are in compliance:		
YES	a. Proportions of site-mixed mortar, grout and prestressing grout for bonded tendons.	--	X
YES	b. Grade, type and size of reinforcement and anchor bolts, and prestressing tendons and anchorages	--	X
YES	c. Placement of masonry units and construction of mortar joints	--	X
YES	d. Placement of reinforcement, connectors and prestressing tendons and anchorages	X	--
YES	e. Grout space prior to grouting	X	--
YES	f. Placement of grout and prestressing grout for bonded tendons	X	--
YES	g. Size and location of structural elements	--	X
YES	h. Type, size and location of anchors including other details of anchorage of masonry to structural members, frames or other construction	X	--
YES	i. Welding of reinforcement	X	--
YES	j. Preparation, construction and protection of masonry during cold weather (temperature below 40°F (4.4°C)) or hot weather (temperature above 90°F (32.2°C))	--	X
NO	k. Application and measurement of prestressing force	X	--
YES	3. Observe preparation of grout specimens, mortar specimens, and/or prisms	X	--

VERIFICATION AND INSPECTION OF WOOD (IBC 1705.5)			
SPECIAL INSPECTION REQUIRED	VERIFICATION, INSPECTION AND TESTING	INSPECTION FREQUENCY	
		CONTINUOUS	PERIODIC
YES	1. Fabrication process of prefabricated wood structural elements and assemblies shall be in accordance with IBC 1704.2.5 and local amendments	--	X
	2. Inspect lateral resisting elements, including shear walls, braces, diaphragms, collectors (drag struts), and hold-downs for the following:		
YES	a. Grade and thickness of framing members on building plans.	--	X
YES	b. Nominal size of framing members at adjoining panel edges for diaphragms and shear walls.	--	X
YES	c. Nail or staple diameter and length for diaphragms and shear walls.	--	X
YES	d. Number of fastener lines and the spacing between fasteners in each line and at edge margins	--	X
YES	e. Bolting, anchoring, and other fastening of components.	--	X
	3. Trusses with clear span 60'-0" or greater, inspector shall verify the following:		
YES	a. Temporary installation restraint/bracing installed per approved truss submittal.	X	--
YES	b. Permanent individual truss member restraint/bracing installed per approved truss submittal.	X	--

VERIFICATION AND INSPECTION OF SOILS (IBC TABLE 1705.6)			
SPECIAL INSPECTION REQUIRED	VERIFICATION, INSPECTION AND TESTING	INSPECTION FREQUENCY	
		CONTINUOUS	PERIODIC
YES	1. Verify materials below shallow foundations are adequate to achieve the design bearing capacity.	--	X
YES	2. Verify excavations are extended to proper depth and have reached proper material.	--	X
YES	3. Perform classification and testing of controlled fill materials.	--	X
YES	4. Verify use of proper materials, densities and lift thicknesses during placement and compaction of controlled fill.	X	--
YES	5. Prior to placement of compacted fill, observe subgrade and verify that site has been prepared properly.	--	X

VERIFICATION AND INSPECTION FOR WIND RESISTANCE (IBC 1705.10)					
SPECIAL INSPECTION REQUIRED	VERIFICATION AND INSPECTION	INSPECTION FREQUENCY		REFERENCED STANDARD	IBC REFERENCE
		CONTINUOUS	PERIODIC		
	1. Structural Wood:				
YES	a. Field gluing of elements of the main windforce-resisting system.	X	--	--	1705.10.1
YES	b. Nailing, bolting, anchoring and other fastening of components within the main windforce-resisting system, including wood shear walls, wood diaphragms, collectors, braces and HOLDOWNs. Except if fastener spacing exceeds 4" O.C.	--	X		
	2. Cold-Formed Steel Light-Frame Construction:				
NO	a. Welding operations of elements of the main windforce-resisting system	--	X	--	1705.10.2
NO	b. Screw attachment, bolting, anchoring and other fastening of components within the main windforce-resisting system, including shear walls, braces, diaphragms, collectors and HOLDOWNs. Except if the sheathing is gypsum or fiberboard or if fastener spacing exceeds 4" O.C.	--	X		
	3. Wind-resisting Components:				
YES	a. Installation of roof cladding	--	X	--	1705.10.3
YES	b. Installation of wall cladding	--	X		

STATE OF TEXAS
STEPHANIE RAE TSEN
97275
LICENSED
PROFESSIONAL ENGINEER
9.28.16

JQ TSEN

JQ-TSEN, LLC
2500 WEST 7TH STREET, SUITE 200
512.474.4001
AUSTIN, TEXAS 78703
JQENG.COM
TBPE FIRM # F-13778
JQT PROJECT NO 914-00025

AUSTIN ONION CREEK
FIRE & EMS STATION
11112 OLD SAN ANTONIO ROAD
AUSTIN, TEXAS 78748

CITY OF AUSTIN 1839 FOUNDED

REVISIONS

DATE	09/23/16
DRAWN BY	TG
CHECKED BY	ST
PROJECT NO.	214106.00

S1.4

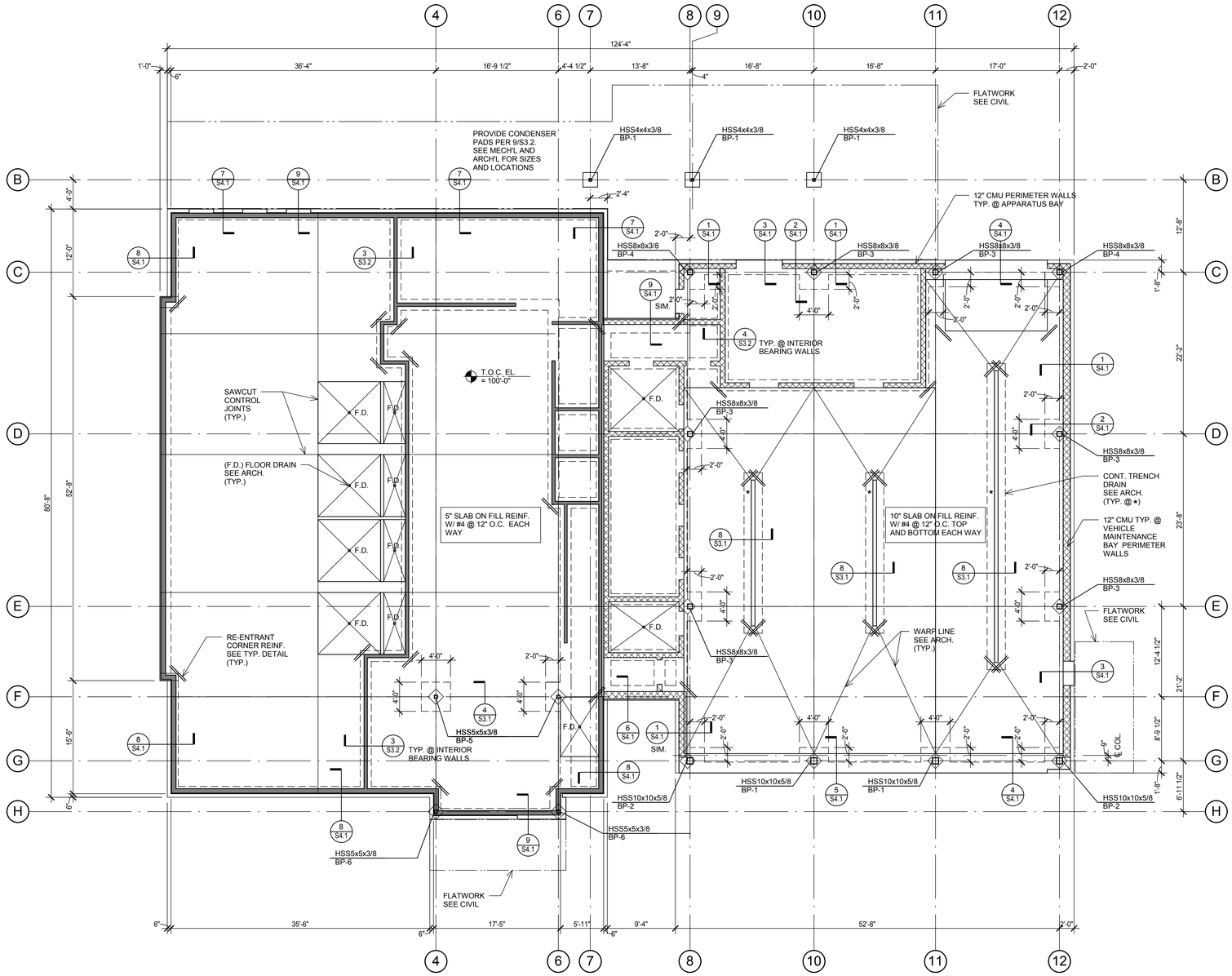

true north

plan north

1 FOUNDATION PLAN

SCALE: 1/8" = 1'-0"

PLAN NOTES:

1. FINISH FLOOR ELEVATION = 100'-0", UNLESS NOTED OTHERWISE. ACTUAL ELEVATION 638.0' = 100'-0".
2. TOP OF CONCRETE ELEVATION (T.O.C. EL.) = FINISH FLOOR UNLESS RECESSED TO RECEIVE FLOORING MATERIALS.
3. REFER TO THE ARCHITECTURAL DRAWINGS FOR EXACT LOCATIONS OF FLOOR RECESSES, DROPS AND SLOPES NOT DIMENSIONED ON PLAN.
4. "BP-#" INDICATES BASEPLATE TYPES. SEE S5.1 FOR BASEPLATE TYPES.

SYMBOLS LEGEND	
SYMBOL	DESCRIPTION
COLUMN SIZE / BASE PLATE TYPE	STEEL COLUMN
	DROP IN SLAB OR DECK
	DROP AND SLOPE IN SLAB OR DECK
	SLOPE IN SLAB OR DECK
	MASONRY WALL
	LOAD-BEARING WALL

STATE OF TEXAS
STEPHANIE RAE TSEN
97275
LICENSED
PROFESSIONAL ENGINEER
9.28.16

JQ TSEN
JQ-TSEN, LLC
2900 WEST 6TH STREET, SUITE 200
512.474.4001
AUSTIN, TEXAS 78703
JQTSEN.COM
TBPE FIRM # F-13778
JQT PROJECT NO: 914-00025

AUSTIN ONION CREEK
FIRE & EMS STATION
11112 OLD SAN ANTONIO ROAD
AUSTIN, TEXAS 78748

CITY OF AUSTIN SEAL FOUNDED

REVISIONS

DATE	09/23/16
DRAWN BY	TG
CHECKED BY	ST
PROJECT NO.	214106.00

S2.1

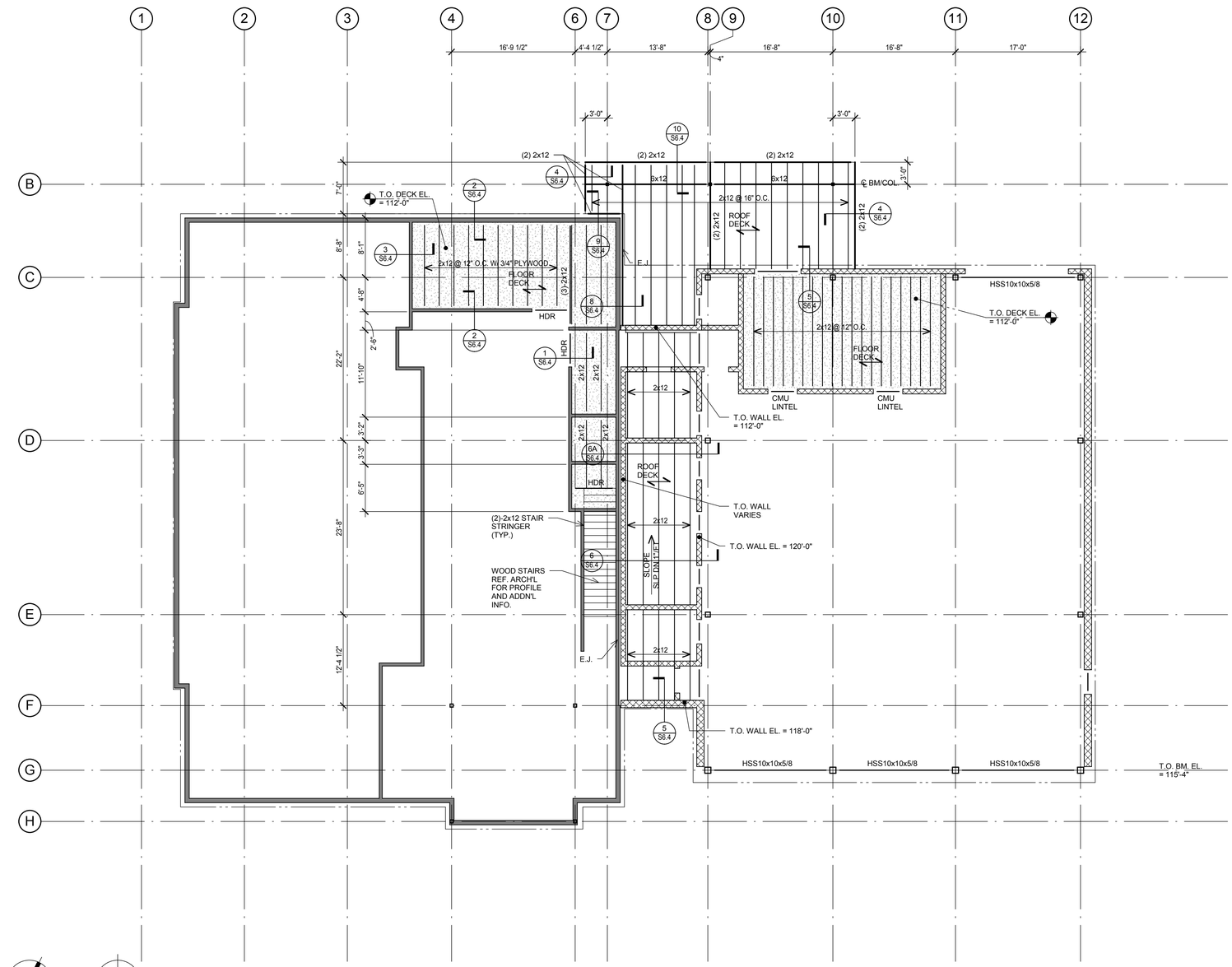

true north

plan north

1 MEZZANINE & LOW ROOF FRAMING PLAN

SCALE: 1/8" = 1'-0"

PLAN NOTES:

1. FINISH FLOOR ELEVATION = 112'-0" AT MEZZANINE.
2. SEE ARCHITECTURAL DRAWINGS FOR EXACT LOCATIONS OF ROOF SLOPES.
3. VERIFY AND COORDINATE ALL DIMENSIONS W/ ARCHITECTURAL DRAWINGS.
4. SEE STRUCTURAL NOTES FOR WALL FRAMING SIZES, SPACING, AND SPECIES.
5. REFER TO WOOD BEAM/HEADER SCHEDULE FOR ALL HEADERS IN INTERIOR WOOD FRAMED WALLS.
6. ROOF DIAPHRAM SHALL BE INSTALLED AS DIAPHRAM AS DEFINED BY BUILDING CODE.
7. REFER TO MECHANICAL, ELECTRICAL, AND PLUMBING DRAWINGS FOR LOCATION AND DIMENSIONS FOR PENETRATIONS NOT DIMENSIONED ON PLAN. CONTRACTOR TO COORDINATE.
8. - INDICATES FLOOR AREAS.

SYMBOLS LEGEND

SYMBOL	DESCRIPTION
	SLAB OR DECK SPAN DIRECTION
	NONLOAD-BEARING WALL
	LOAD-BEARING WALL, SEE SCHEDULE
	WINDOW IN LOAD-BEARING WALL
	DOOR IN LOAD-BEARING WALL

STATE OF TEXAS
STEPHANIE RAE TSEN
97275
LICENSED
PROFESSIONAL ENGINEER
9.28.16

JQ TSEN

JQ-TSEN, LLC
2900 WEST 6TH STREET, SUITE 200
512.474.4001
AUSTIN, TEXAS 78703
JQENG.COM
TBPE FIRM # F-13778
JQT PROJECT NO 09-0400325

AUSTIN ONION CREEK
FIRE & EMS STATION
11112 OLD SAN ANTONIO ROAD
AUSTIN, TEXAS 78748

CITY OF AUSTIN FOUNDED 1839

REVISIONS

DATE	09/23/16
DRAWN BY	TG
CHECKED BY	ST
PROJECT NO.	214106.00

S2.2

PLAN NOTES:

1. SEE ARCHITECTURAL DRAWINGS FOR EXACT LOCATIONS OF ROOF SLOPES, HIPS, VALLEYS, AND RIDGES NOT SPECIFICALLY DIMENSIONED.
2. VERIFY AND COORDINATE ALL DIMENSIONS W/ ARCHITECTURAL DRAWINGS.
3. SEE SHEET S2.4 FOR LOADBEARING WALL STUD SCHEDULE.
4. SEE SHEET S2.5 FOR SHEAR WALL SCHEDULE.
5. REFER TO WOOD BEAM/HEADER SCHEDULE FOR ALL HEADERS IN INTERIOR WOOD FRAMED WALLS.
6. TRUSSES ARE SHOWN ON PLAN TO INDICATE DIRECTION OF FRAMING - LAYOUT TO BE DETERMINED BY TRUSS SUPPLIER.
7. TRUSS BLOCKS SHALL BE DESIGNED FOR DRAG STRUT FORCE (DF) - 500#.
8. ROOF DECK AT TOWER AND AT APPARATUS BAY SHALL BE 1 1/2" DEEP TYPE "B" 22 GAUGE GALVANIZED METAL DECK.
9. ◄ - INDICATES MOMENT CONNECTION.

SHEET INDEX:

TYPICAL STEEL FRAMING DETAILS -S5.1
TYPICAL CMU DETAILS -S5.2
TYPICAL WOOD FRAMING DETAILS -S5.3

SYMBOLS LEGEND	
SYMBOL	DESCRIPTION
	SLAB OR DECK SPAN DIRECTION
	DROP IN SLAB OR DECK
	DROP AND SLOPE IN SLAB OR DECK
	SLOPE IN SLAB OR DECK
	NONLOAD-BEARING WALL
	LOAD-BEARING WALL, SEE SCHEDULE
	WINDOW IN LOAD-BEARING WALL
	DOOR IN LOAD-BEARING WALL

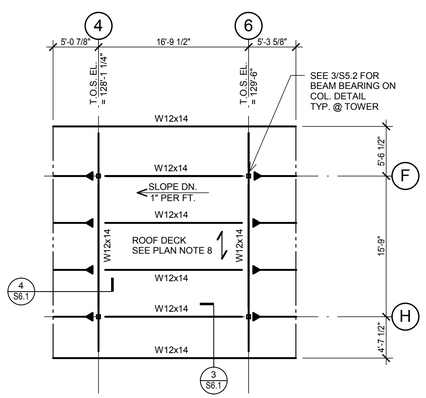

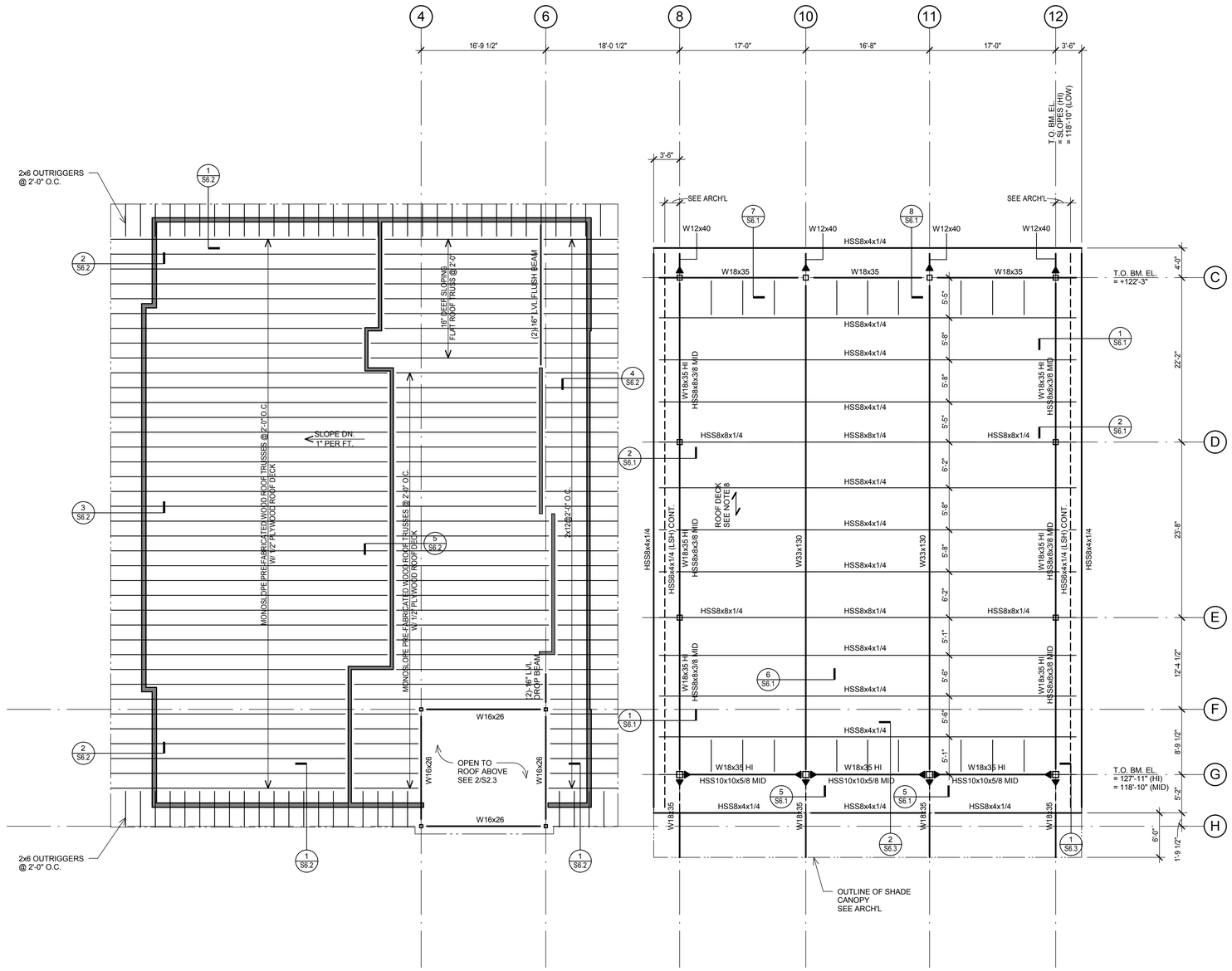

true north

plan north

2 HIGH ROOF FRAMING PLAN

SCALE: 1/8" = 1'-0"

true north

plan north

1 ROOF FRAMING PLAN

SCALE: 1/8" = 1'-0"

STATE OF TEXAS
STEPHANIE RAE TSEN
97275
LICENSED
PROFESSIONAL ENGINEER
9.28.16

JQ TSEN, LLC
2500 WEST 7TH STREET, SUITE 200
512.474.4001
AUSTIN, TEXAS 78703
JQENG.COM
TBPE FIRM # F-13778
JQT PROJECT NO: 914-00325

AUSTIN ONION CREEK
FIRE & EMS STATION
11112 OLD SAN ANTONIO ROAD
AUSTIN, TEXAS 78748

REVISIONS

DATE	09/23/16
DRAWN BY	TG
CHECKED BY	ST
PROJECT NO.	214106.00

S2.3

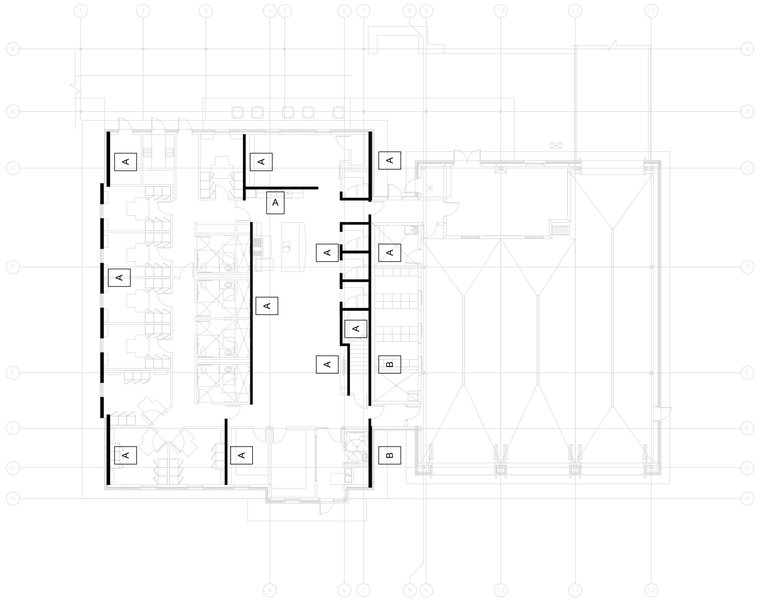

true north

plan north

1 LOAD-BEARING WALL STUD PLAN

SCALE: 1/16" = 1'-0"

STUD SCHEDULE							
STUD MARK	SPECIES: GRADE: FLOOR:	S.Y.P. #2	S.Y.P. STUD	D.FIR #2	D.FIR STUD	S.P.F. #2	S.P.F. STUD
A	FIRST:	16"	12"	16"	12"	16"	12"
B	FIRST:	16"D	12"D	16"D	12"D	12"D	16"D
C	FIRST:	16"	12"	16"	12"	12"	16"D
D	FIRST:	16"	16"	16"	16"	16"	16"

1. A. "S.Y.P." REFERS TO SOUTHERN YELLOW PINE. "S.P.F." REFERS TO SPRUCE PINE FIR "D.FIR" REFERS TO DOUGLAS FIR LARCH.

   B. STUDS NOTED WITH A "D" SHALL BE DOUBLED. DOUBLED STUDS SHALL BE NAILED TOGETHER WITH 3"x.148"ø NAILS AT 16" O.C. MAXIMUM.

   C. STUDS NOTED WITH A "*" SHALL BE CHANGED TO DOUBLE STUDS AT 12" O.C. AT CORNER CONDITIONS. A "CORNER CONDITION" EXISTS WITHIN 10 FEET OF AN EXTERIOR CORNER OF A WALL.

   D. NON-LOAD BEARING INTERIOR WALLS MAY BE STUD GRADE SOUTHERN YELLOW PINE, DOUGLAS FIR, OR SPRUCE PINE FIR.

   E. ALL INTERIOR LOAD BEARING STUDS SHALL BE TYPE "A" AND ALL EXTERIOR LOAD BEARING STUDS SHALL BE TYPE "B" UNLESS NOTED OTHERWISE.

   F. SEE PLAN FOR TYPE "C" & "D" LOCATIONS.

2. ALL WOOD STUD WALLS SHALL BE FULL HEIGHT WITHOUT INTERMEDIATE PLATE LINE UNLESS DETAILED OTHERWISE.

3. PROVIDE DOUBLE STUDS AT ALL WALL CORNERS AND ON EACH SIDE OF ALL OPENINGS, UNLESS NOTED OR DETAILED OTHERWISE.

2 TYPICAL STUD SCHEDULE

NO SCALE

STATE OF TEXAS
STEPHANIE RAE TSEN
97275
LICENSED
PROFESSIONAL ENGINEER
9.28.16

JQ TSEN
JQ-TSEN, LLC
2500 WEST 7TH STREET, SUITE 200
512.474.4001
AUSTIN, TEXAS 78703
JQENG.COM
TBPE FIRM # F-13778
JQT PROJECT NO 914-00325

AUSTIN ONION CREEK
FIRE & EMS STATION
11112 OLD SAN ANTONIO ROAD
AUSTIN, TEXAS 78748

CITY OF AUSTIN FOUNDED 1839

REVISIONS

DATE	09/23/16
DRAWN BY	TG
CHECKED BY	ST
PROJECT NO.	214106.00

S2.4

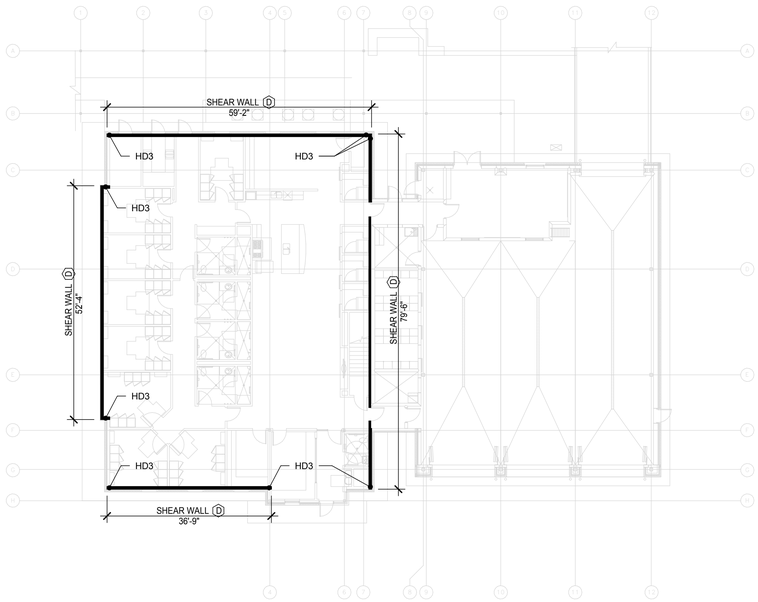

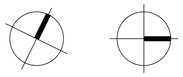

1 SHEAR WALL PLAN

SCALE: 1/16" = 1'-0"

SHEAR WALL SCHEDULE:

(6) (7) (8) (9) (10) (11) (14) (15)

W.S.P. SHEAR WALL TYPES "A", "B", "C", AND "D" CAPACITIES HAVE BEEN INCREASED BY 40% FOR WIND LOAD PER IBC 2306.4.1

SHEAR WALL TYPE	SHEATHING TYPE			LOCATION		EDGE NAILING (3) (4)	FIELD NAILING (3) (4)	BLOCKED EDGES	SILL OR SILL PLATE ANCHORAGE TO FOUNDATION	NAILING OF BOTTOM PLATE TO FLOOR FRAMING	CAPACITY (PLF)	SHEAR WALL TYPE
⬡	15/32" W.S.P.	5/8" GYP. WLBRD. OR 5/8" GYP. SHEATH	1/2" GYP. WLBRD. OR 1/2" GYP. SHEATH	SHEATH 1 FACE OF WALL	SHEATH BOTH FACE OF WALL	-3/8" MIN. EDGE DISTANCE	-NAIL @ ALL OTHER SUPPORTS	-VERTICAL & HORIZ. JOINTS (WIDTH OF BLOCK TO MATCH WIDTH OF WALL)	ANCHOR BOLT -3" MINIMUM EMBEDMENT INTO CONCRETE -A307	-16dx3 1/2" COMMON NAILS -USE STAGGERED NAILING PATTERN (U.N.O.) -SEE DIAGRAM BELOW FOR NAILING PATTERNS	-S.Y.P. OR D.F.I. STUDS	⬡
A	∘			∘		10d COMMON NAILS @ 2" O.C.	10d COMMON NAILS @ 12" O.C.	4X	5/8"ø @ 15" O.C.	2 ROWS @ 4" O.C.	1,078	A
B	∘			∘		10d COMMON NAILS @ 3" O.C.	10d COMMON NAILS @ 12" O.C.	4X	5/8"ø @ 20" O.C.	2 ROWS @ 4" O.C.	840	B
C	∘			∘		10d COMMON NAILS @ 4" O.C.	10d COMMON NAILS @ 12" O.C.	2X	1/2"ø @ 18" O.C.	1 ROW @ 2 1/2" O.C.	644	C
D	∘			∘		10d COMMON NAILS @ 6" O.C.	10d COMMON NAILS @ 12" O.C.	2X	1/2"ø @ 24" O.C.	1 ROW @ 4" O.C.	434	D
E (1)		∘		∘		6d WB @ 7" O.C.	6d WB @ 7" O.C.	NO	1/2"ø @ 48" O.C.	16" O.C.	115	E (1)
			∘			5d WB @ 7" O.C.	5d WB @ 7" O.C.				110	
F		∘		∘		6d WB @ 4" O.C.	6d WB @ 4" O.C.	NO	1/2"ø @ 48" O.C.	12" O.C.	145	F
G			∘	∘		5d WB @ 4" O.C.	5d WB @ 4" O.C.	2X	1/2"ø @ 48" O.C.	12" O.C.	150	G
H		∘		∘		6d WB @ 4" O.C.	6d WB @ 4" O.C.	2X	1/2"ø @ 48" O.C.	10" O.C.	175	H
J			∘	∘		6d WB @ 4" O.C.	6d WB @ 4" O.C.	NO	1/2"ø @ 48" O.C.	16" O.C.	125	J
L (1)		∘			∘	6d WB @ 7" O.C.	6d WB @ 7" O.C.	NO	1/2"ø @ 48" O.C.	8" O.C.	230	L (1)
			∘			5d WB @ 7" O.C.	5d WB @ 7" O.C.				200	
M			∘		∘	5d WB @ 4" O.C.	5d WB @ 4" O.C.	2X	1/2"ø @ 30" O.C.	4" O.C.	300	M
N		∘			∘	6d WB @ 4" O.C.	6d WB @ 4" O.C.	2X	1/2"ø @ 30" O.C.	4" O.C.	350	N

NOTES:

1. "E" OR "L" TYPE SHEAR WALLS CAN USE EITHER 5/8" OR 1/2" GYP. WALLBOARD OR GYP. SHEATHING.
2. WB=WALLBOARD NAILS: 5d WB = COOLER (0.086" @, 1-5/8"LONG, 1664" HEAD) OR WALLBOARD (0.086" @, 1-5/8" LONG, 9/32" HEAD) NAILS; 6d WB = COOLER (0.092" @, 1-7/8" LONG, 1/4" HEAD) OR WALLBOARD (0.0915" @, 1-7/8" LONG, 19/64" HEAD) NAILS. 10 COMMON NAIL = 0.148"ø x 3" LONG.
3. ON THE EXTERIOR FACE OF EXTERIOR GYPSUM SHEAR WALLS USE NO. 11 GAGE, 1-3/4" LONG 7/16" HEAD DIAMOND POINT, GALVANIZED NAILS. THIS REQUIREMENT REPLACES 5d WB AND 6d WB NAILS SPECIFIED IN THE SHEAR WALL SCHEDULE BUT THE SPACING REQUIREMENT IS AS SPECIFIED.
4. IT SHALL BE THE CONTRACTORS RESPONSIBILITY TO PROVIDE AND USE PACHOMETERS AND OTHER EQUIPMENT NECESSARY TO LOCATE ALL POST TENSIONING TENDONS SUCH THAT NO DAMAGE OCCURS FROM PLACEMENT OF POWDER ACTUATED FASTENER OR EXPANSION ANCHOR ALTERNATES.
5. IT SHALL BE THE CONTRACTORS RESPONSIBILITY TO INSURE THAT THE PLACEMENT OF POWDER ACTUATED FASTENERS OR EXPANSION ANCHOR ALTERNATES ARE IN ACCORDANCE WITH MANUFACTURES RECOMMENDATIONS AND IN COMPLIANCE WITH ALL APPLICABLE BUILDING CODES (SPECIAL INSPECTORS SHALL BE PROVIDED IF SPECIFIED BY THE APPLICABLE BUILDING CODE).
6. REFERENCE SHEAR WALL ANCHORAGE SCHEDULE FOR REQUIRED SHEAR WALL END POST/STUDS. IF NO ANCHOR IS USED, PROVIDE 2-2X FULL HEIGHT STUDS (MIN.) AT EACH END OF SHEAR WALL.
7. SHEAR WALL FRAMING SHALL BE 2X STUDS AT 16" O.C. MAXIMUM SPACING, SEE BRACING PLANS FOR TYPES AND LOCATIONS.
8. W.S.P. = WOOD STRUCTURAL PANEL, PLYWOOD OR ORIENTED STRAND BOARD (OSB).
9. N/A NOT APPLICABLE.
10. NAIL SIZES: 16d SINKERS = 0.148" ø x 3 1/4" LONG; 16d BOX = 0.135" ø x 3 1/2" LONG; 16d COMMON = 0.162" ø x 3 1/2" LONG
    8d COMMON = 0.131"ø x 2 1/2" LONG
    10d COMMON = 0.148"ø x 3" LONG
11. WHERE PANELS ARE APPLIED ON BOTH FACES OF A WALL AND NAIL SPACING IS LESS THAN 6" ON CENTER ON EITHER SIDE, PANEL JOINTS SHALL BE OFFSET TO FALL ON DIFFERENT FRAMING MEMBERS.
12. NO SUBSTITUTIONS OF SHEAR WALLS INDICATED ON BRACING PLANS MAY BE MADE UNLESS VERIFIED BY ENGINEER AND FOLLOWED BY AN R.F.I.

3 SHEAR WALL SCHEDULE

NO SCALE

HOLD DOWN SCHEDULE

MARK	HOLD DOWN	ANCHOR BOLT (4)	CHORD MEMBERS (8)	HOLD DOWN TO CHORD FASTENERS	HOLD DOWN CAPACITY (POUNDS)
HD-3	HDQ8-SDS3	7/8"ø x 12" EMBED.	3-2x6 STUDS (1)	20-SDS 1/4"x3" SCREWS	9230 DF/SP 6645 SPF/HF

HOLD DOWN NOTES:

1. STUDS SHALL BE FASTENED TOGETHER W/ 3"x.148"ø NAILS W/ 2 ROW STAGGERED @ 4" O.C.
2. SEE DETAIL x/Sx.x FOR ADDITIONAL REINFORCEMENT AT SIMPSON HD12 HOLD DOWN LOCATIONS.
3. STANDARD CUT WASHER IS REQUIRED UNDER ANCHOR NUT.
4. PER ASTM TEST STANDARDS, ANCHOR BOLT NUT SHOULD BE FINGER TIGHTENED IMMEDIATELY PRIOR TO CLOSE IN.
5. HOLD DOWNS SHALL BE INSTALLED CENTERED ALONG THE WIDTH OF THE ATTACHED POST.
6. THREADED ROD SHALL BE ASTM A36 WITH THE MINIMUM Fu=58 KSI.
7. HOLD DOWN SHALL BE INSTALLED ABOVE AND BELOW FLOOR CAVITY AS SHOWN IN DETAIL x/Sx.x.
8. CHORD MEMBERS SHALL BE PLACED IN FLOOR CAVITIES AND WALLS BELOW UNTIL SUPPORTED BY FOUNDATION, BEAM/HEADER, OR COLUMN OF GREATER AXIAL CAPACITY.
9. DF/SP = DOUGLAS FIR OR SOUTHERN PINE, SPF/HF = SPRUCE PINE FIR OR HEM FIR.

2 HOLD DOWN SCHEDULE

NO SCALE

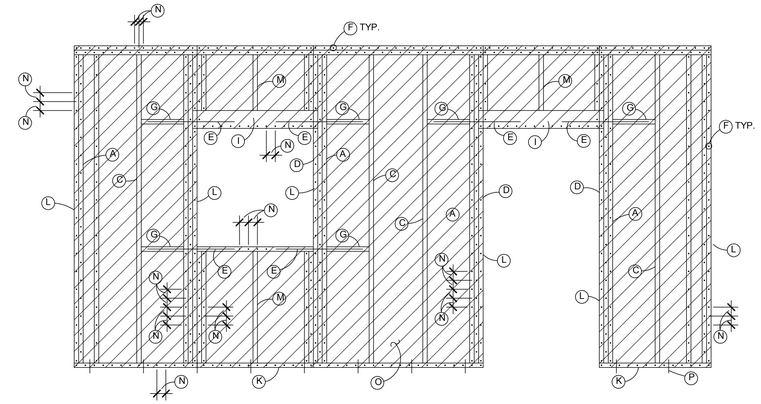

- (A) SHEAR WALL PANEL END STUDS (KING STUDS AT OPENING). NAIL THESE TOGETHER WITH SHEAR WALL BOTTOM PLATE NAILING (2 STUDS MIN.) EDGE NAIL WOOD STRUCTURAL PANEL SHEAR WALL TO THESE STUDS.
- (B) NOTE NOT USED
- (C) TYPICAL STUDS (OR JACK STUDS) AT 16" O.C. MAX. SPACING. FIELD NAIL WOOD STRUCTURAL PANEL SHEAR WALLS TO STUDS. EDGE NAIL AT PANEL EDGES.
- (D) TRIMMER STUDS, CONTINUE EDGE NAILING FROM KING STUDS AND NAIL STUDS TOGETHER WITH SHEAR WALL BOTTOM PLATE NAILING.
- (E) LS24 STRAP WITH 9-3"x.148"ø NAILS IN BLOCKING AND HEADER OR WINDOW PLATE.
- (F) SHEAR WALL EDGE NAILING.
- (G) 2x BLOCKING (WIDTH TO MATCH STUDS).
- (H) WINDOW PLATE (2x MIN., WIDTH TO MATCH STUD).
- (I) HEADER (2-2x6 MIN.) WITH SHEAR WALL EDGE NAILING.
- (J) DOUBLE TOP PLATE WITH SHEAR WALL EDGE NAILING.
- (K) BOTTOM PLATE WITH SHEAR WALL EDGE NAILING AND BOLTED OR NAILED BELOW.
- (L) WOOD STRUCTURAL PANEL EDGE.
- (M) CRIPPLE STUDS AT 16" O.C. MAX. (WIDTH TO MATCH STUD).
- (N) SHEAR WALL EDGE OF PANEL NAIL SPACING.
- (O) SHEAR WALL PANEL.
- (P) SOLE OR SILL PLATE ANCHORAGE TO FOUNDATION.

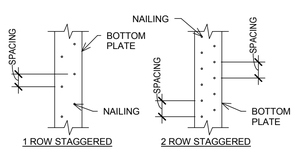

TYPICAL NAILING PATTERN DETAIL

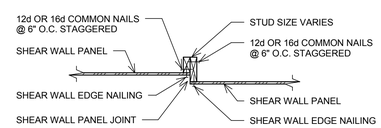

TYPICAL STUD CHANGE IN SHEAR WALL

STATE OF TEXAS
STEPHANIE RAE TSEN
97275
LICENSED
PROFESSIONAL ENGINEER
9.28.16

JQ TSEN
JQ-TSEN, LLC
2500 WEST 7TH STREET, SUITE 200
512.474.4001
AUSTIN, TEXAS 78703
JQTSEN.COM
TBPE FIRM # F-13778
JQT PROJECT NO 914-00025

AUSTIN ONION CREEK
FIRE & EMS STATION
11112 OLD SAN ANTONIO ROAD
AUSTIN, TEXAS 78748

CITY OF AUSTIN FOUNDED 1839

REVISIONS

DATE	09/23/16
DRAWN BY	TG
CHECKED BY	ST
PROJECT NO.	214106.00

S2.5

NOT USED

1

SCALE: 3/4" = 1'-0"

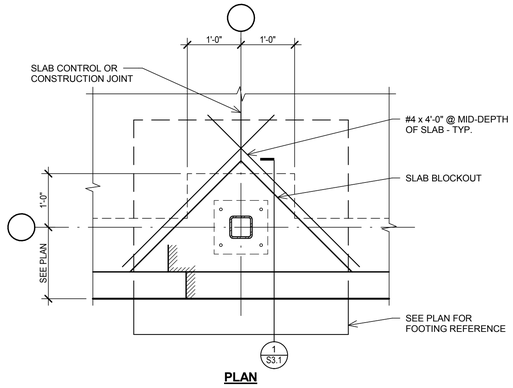

2 TYPICAL TOP OF EXTERIOR FOOTING DETAIL
NO SCALE

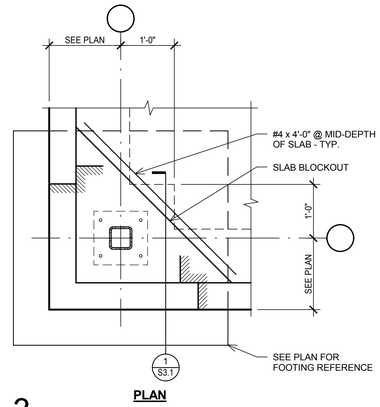

3 TYPICAL TOP OF EXTERIOR FOOTING DETAIL
NO SCALE

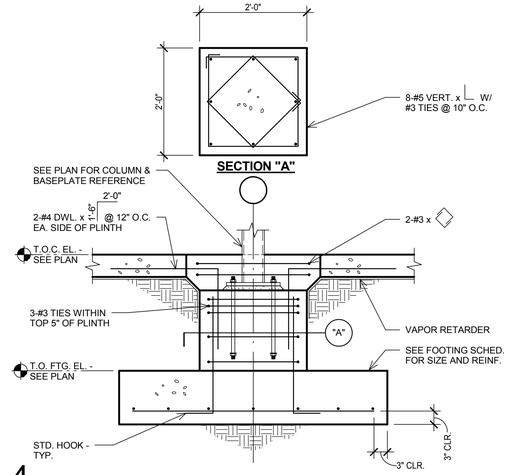

4 TYPICAL INTERIOR FOOTING DETAIL
NO SCALE

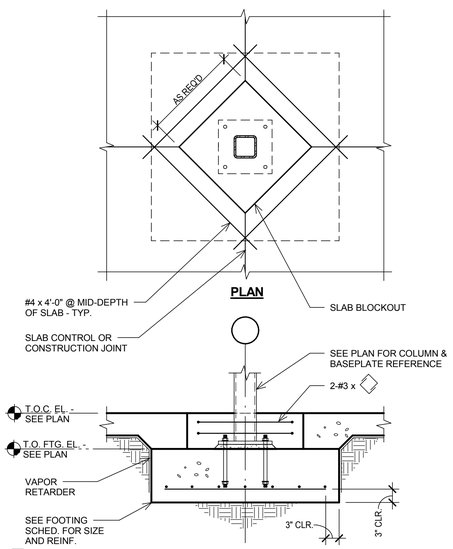

5 TYPICAL INTERIOR FOOTING DETAIL
NO SCALE

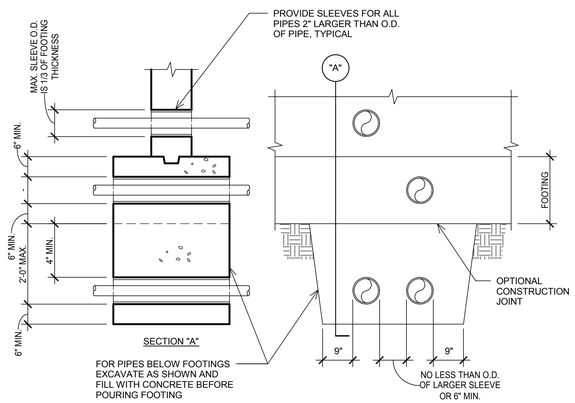

NOTES:

1. DO NOT PASS PIPES THROUGH ISOLATED FOOTINGS.
2. WHERE PIPES ARE MORE THAN 2'-0" BELOW FOOTING. BACKFILL WITH SOIL AS SPECIFIED.

6 TYPICAL PIPES AND TRENCHES AT FOOTINGS
NO SCALE

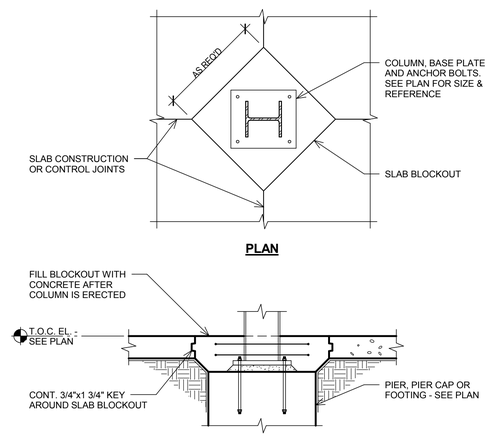

7 TYPICAL SLAB BLOCKOUT FOR INTERIOR COLUMN DETAIL
NO SCALE

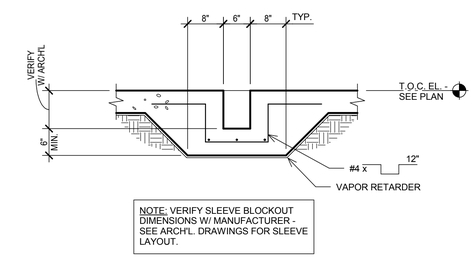

NOTE: VERIFY SLEEVE BLOCKOUT DIMENSIONS W/ MANUFACTURER - SEE ARCH'L. DRAWINGS FOR SLEEVE LAYOUT.

8 TYPICAL TRENCH DETAIL
NO SCALE

STATE OF TEXAS
STEPHANIE RAE TSEN
97275
LICENSED
PROFESSIONAL ENGINEER
9.28.16

JQ TSEN

JQ-TSEN, LLC
2500 WEST 7TH STREET, SUITE 200
512.474.4001
AUSTIN, TEXAS 78703
JQENG.COM
TBPE FIRM # F-13778
JQT PROJECT NO: 914-00025

AUSTIN ONION CREEK
FIRE & EMS STATION
11112 OLD SAN ANTONIO ROAD
AUSTIN, TEXAS 78748

CITY OF AUSTIN · ESTD 1839 · FOUNDED

REVISIONS

DATE	09/23/16
DRAWN BY	TG
CHECKED BY	ST
PROJECT NO.	214106.00

S3.1

NOTE:
PROVIDE ONE OF THE FOLLOWING SLIP DOWELS:
- PNA CONSTRUCTION TECHNOLOGIES 1/4" x 4 1/2" x 4 1/2" "DIAMOND DOWEL" PLATE DOWEL SYSTEM.
- GREENSTREAK 5/8" DIA. SMOOTH x 24" "SPEED DOWEL" SYSTEM.
- 1/2" DIA. x 2'-0" A36 SMOOTH ROD.

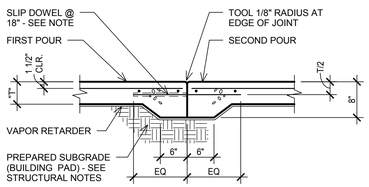

CONSTRUCTION JOINT

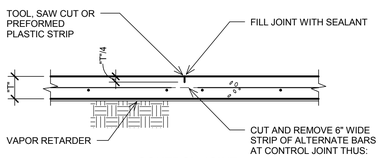

CONTROL JOINT

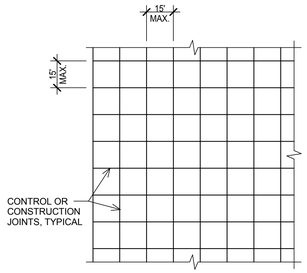

SLAB-ON-GRADE NOTES:

1. SEE PLAN FOR THICKNESS OF SLAB (T) AND REINFORCING.
2. SAWCUT JOINTS WITH IN THE TIME FRAME NOTED BELOW:
   a. 12 HOURS FOR SLABS COVERED BY FINISHES OR NON PUBLIC SPACES.
   b. 4 HOUR FOR SLABS EXPOSED TO PUBLIC VIEW OR WHERE NOTED "SOFF-CUT" BRAND SAW SHALL BE USED.
3. IF METAL FORMS ARE USED, REMOVE THEM BEFORE PLACING ADJACENT SLAB.
4. FOR SLABS WITH THICKNESS (T) GREATER THAN 6", THICKENED EDGES ARE NOT REQUIRED AT JOINTS.
5. PROVIDE A CONSTRUCTION OR A CONTROL JOINT ON THE CENTERLINES OF COLUMNS.
6. LAP REINFORCING 38 BAR DIAMETER MINIMUM.

1 TYPICAL SLAB-ON-GRADE DETAIL
NO SCALE

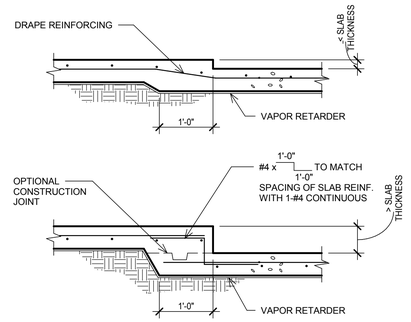

2 TYPICAL DROP IN SLAB-ON-GRADE DETAIL
NO SCALE

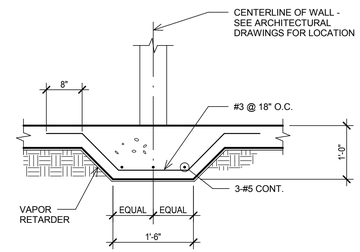

3 TYPICAL SLAB-ON-GRADE STIFFENER BEAM DETAIL
NO SCALE

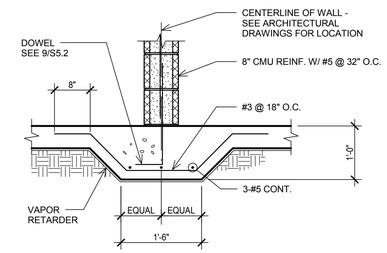

4 TYPICAL SLAB-ON-GRADE STIFFENER BEAM DETAIL
NO SCALE

NOTES:

1. MATCH SIZE, LOCATION AND NUMBER OF HORIZONTAL BEAM AND WALL BARS, EXCEPT THAT WHERE THERE ARE MORE THAN 2 TOP OR BOTTOM BARS, ONLY THE INSIDE AND OUTSIDE BARS MUST BE MATCHED.
2. WHERE 90 DEGREE HOOKS ARE PROVIDED FOR TOP BARS CORNER BARS MAY BE OMITTED AT TOP. WHERE 90 DEGREE HOOKS ARE PROVIDED FOR BOTTOM BARS, CORNER BARS MAY BE OMITTED AT BOTTOM.

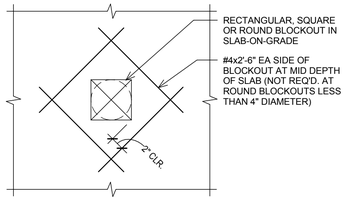

PLAN

5 TYPICAL ADDITIONAL REINFORCING AT BLOCKOUT IN SLAB-ON-GRADE DETAIL
NO SCALE

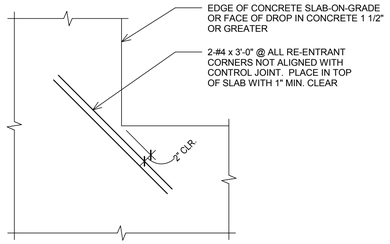

PLAN

6 TYPICAL SLAB-ON-GRADE RE-ENTRANT CORNER REINFORCING DETAIL
NO SCALE

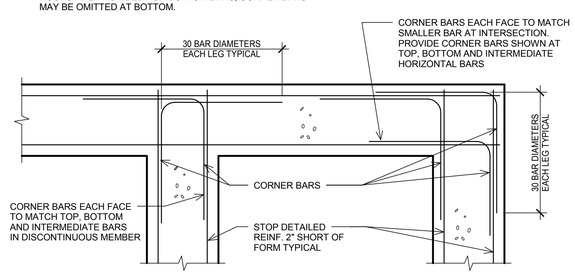

PLAN

7 TYPICAL CORNER BARS AT WALL OR GRADE BEAM INTERSECTION DETAIL
NO SCALE

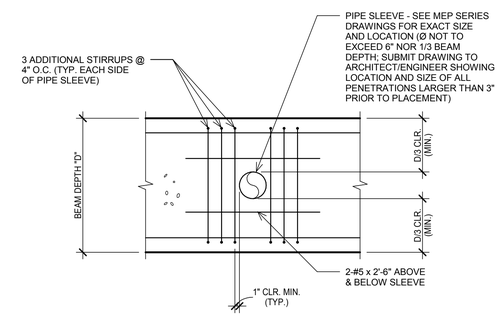

ELEVATION

8 TYPICAL HORIZONTAL GRADE BEAM PENETRATION DETAIL
NO SCALE

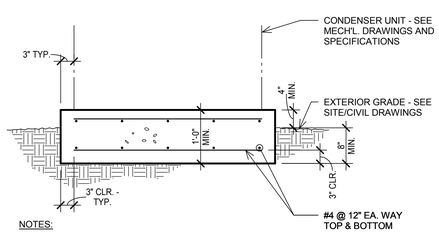

NOTES:

1. COORDINATE ANY EMBEDDED ITEMS IN PAD W/ MECHANICAL, ELECTRICAL & PLUMBING DRAWINGS.
2. VERIFY PAD DIMENSIONS WITH UNIT MANUFACTURER PRIOR TO CONSTRUCTION.
3. PAD SHALL BE PLACED ON UNDISTURBED EXISTING SOIL OR COMPACTED FILL.
4. SEE MEP, SITE AND/OR CIVIL DRAWINGS FOR PAD LOCATION.

9 CONDENSER UNIT PAD DETAIL
NO SCALE

STATE OF TEXAS
STEPHANIE RAE TSEN
97275
LICENSED
PROFESSIONAL ENGINEER
9.28.16

JQ TSEN
JQ TSEN, LLC
2500 WEST 7TH STREET, SUITE 200
512.474.4001
AUSTIN, TEXAS 78703
JQENG.COM
TBPE FIRM # F-13778
JQT PROJECT NO: 09-14-00325

AUSTIN ONION CREEK
FIRE & EMS STATION
11112 OLD SAN ANTONIO ROAD
AUSTIN, TEXAS 78748

REVISIONS

DATE	09/23/16
DRAWN BY	TG
CHECKED BY	ST
PROJECT NO.	214106.00

S3.2

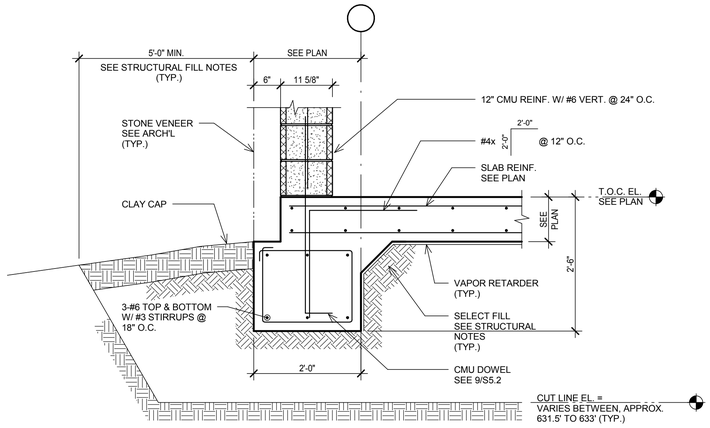

1
SCALE: 3/4" = 1'-0"

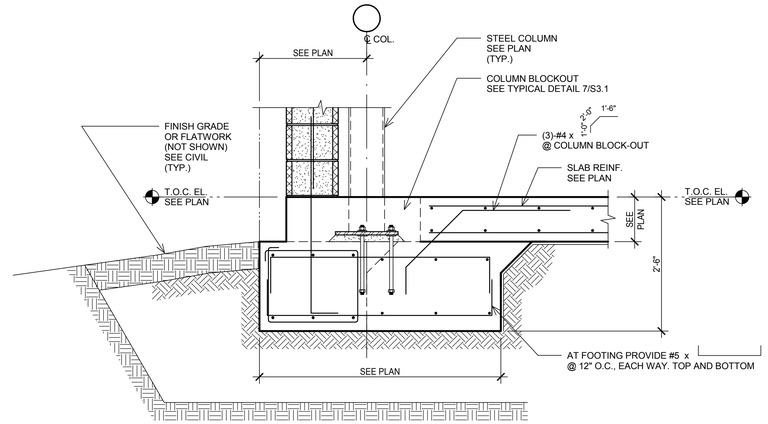

2
SCALE: 3/4" = 1'-0"

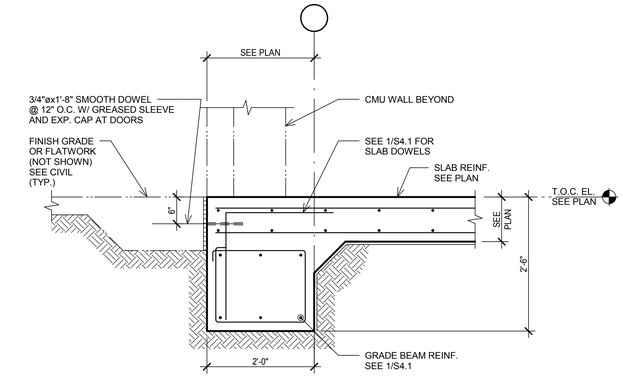

3
SCALE: 3/4" = 1'-0"

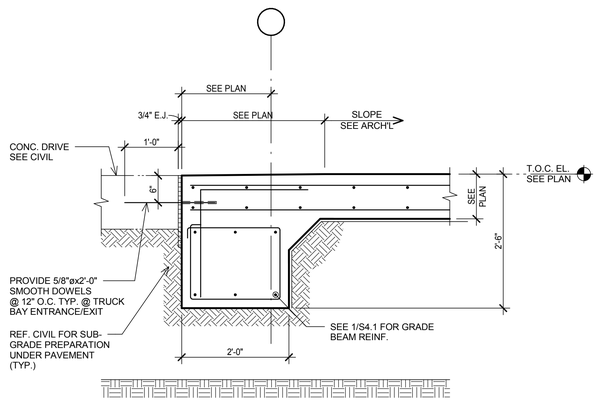

4
SCALE: 3/4" = 1'-0"

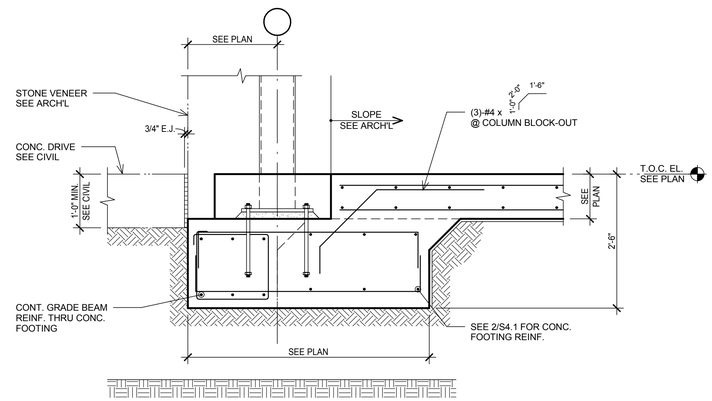

5
SCALE: 3/4" = 1'-0"

NOT USED

6
SCALE: 3/4" = 1'-0"

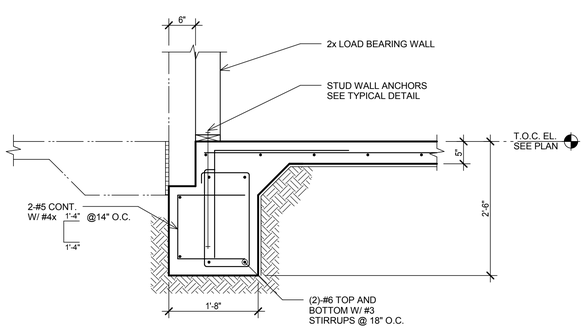

7
SCALE: 3/4" = 1'-0"

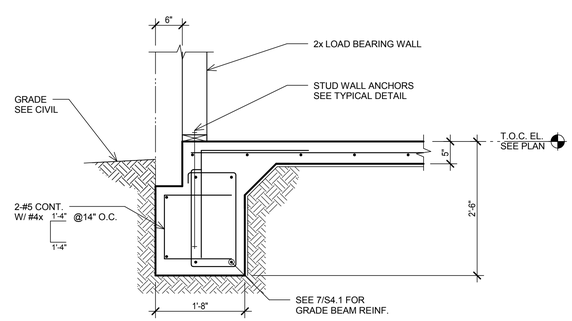

8
SCALE: 3/4" = 1'-0"

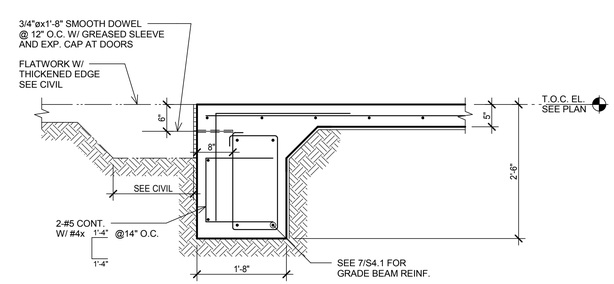

9
SCALE: 3/4" = 1'-0"

STATE OF TEXAS
STEPHANIE RAE TSEN
97275
LICENSED
PROFESSIONAL ENGINEER
9.28.16

JQ TSEN

JQ-TSEN, LLC
2500 WEST 7TH STREET, SUITE 200
512.474.4001
AUSTIN, TEXAS 78703
JQENG.COM
TBPE FIRM # F-13778
JQT PROJECT NO: 914-00025

AUSTIN ONION CREEK
FIRE & EMS STATION
11112 OLD SAN ANTONIO ROAD
AUSTIN, TEXAS 78748

CITY OF AUSTIN · FOUNDED 1839

REVISIONS

DATE	09/23/16
DRAWN BY	TG
CHECKED BY	ST
PROJECT NO.	214106.00

S4.1

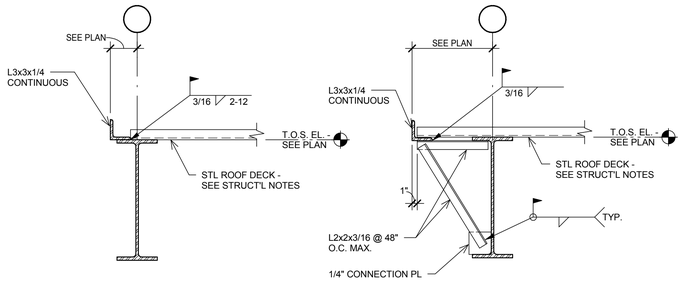

SECTION "A" **SECTION "B"**

NOTES:
1. USE SECTION "B" WHEN MIN. OVERLAP OF ANGLE ON BEAM OF 1" CANNOT BE MAINTAINED.

1 TYPICAL EXTERIOR BEAM DETAIL
NO SCALE

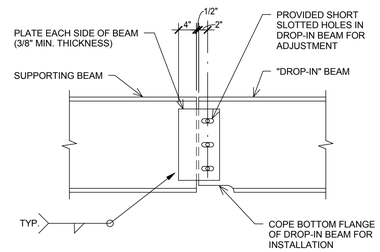

NOTES:
1. SPLICE CONNECTIONS SHALL BE DESIGNED BY THE CONTRACTOR TO MEET THE REQUIREMENTS SPECIFIED FOR STANDARD CONNECTIONS IN THE STRUCTURAL NOTES.
2. PROVIDE SHIM PLATES AS REQ'D & BETWEEN WEB AND SPLICE PLATES.

2 TYPICAL BOLTED BEAM SPLICE DETAIL
NO SCALE

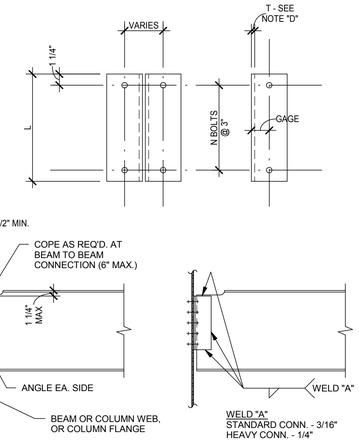

BOLTED/BOLTED CONNECTION **BOLTED/WELDED CONNECTION**

	STANDARD			HEAVY		
BEAM SIZE	ANGLE LENGTH (L)	NO. OF ROWS OF BOLTS (N)	MAX. BEAM REACTION (KIPS)	ANGLE LENGTH (L)	NO. OF ROWS OF BOLTS (N)	MAX. BEAM REACTION (KIPS)
W8	5 1/2"	2	17	-	-	N.A.
W10	5 1/2"	2	19	-	-	N.A.
W12	5 1/2"	2	20	8 1/2"	3	28
W14	8 1/2"	3	32	11 1/2"	4	42
W16	8 1/2"	3	35	11 1/2"	4	46
W18	11 1/2"	4	55	14 1/2"	5	68
W21	11 1/2"	4	64	17 1/2"	5	94
W24	14 1/2"	5	89	20 1/2"	7	123
W27	14 1/2"	5	89	23 1/2"	8	148
W30	17 1/2"	6	104	26 1/2"	9	167
W33	20 1/2"	7	119	29 1/2"	10	186
W36	23 1/2"	8	133	29 1/2"	10	186
W40	26 1/2"	9	147	29 1/2"	10	213
W44	29 1/2"	10	160	29 1/2"	10	213

NOTES:
A. RIGHT ANGLE CONNECTIONS SHALL BE DOUBLE ANGLE AS SCHEDULED. SKEWED CONNECTIONS SHALL BE BENT DOUBLE ANGLES OR BENT PLATES PER
B. NOTED REACTIONS ARE FOR SERVICE LOADS.
C. REFER TO "STRUCTURAL STEEL CONNECTIONS" IN STRUCTURAL NOTES FOR ADD'L INFO.
D. MINIMUM CONNECTION: ANGLE THICKNESS IS 1/4" TYPICAL AND 5/16" AT W33 AND DEEPER "HEAVY" CONNECTIONS.
E. BOLTS ARE 3/4" DIA. TYP. AND 7/8" DIA. AT W40 & W44 "HEAVY CONNECTIONS". BOLTS ARE A325N.
F. BEAM CONNECTIONS ARE "STANDARD" U.N.O. ON PLAN.
G. CONTRACTOR SHALL CHECK DESIGN OF ALL BEAMS REQUIRING COPES GREATER THAN SHOWN IN DETAIL BASED ON REACTIONS SHOWN IN TABLE. CONNECTION ANGLES, BOLTS AND WELDS SHALL NOT BE LESS THAN THAT SHOWN.

4 AISC TYPE 2 SIMPLE FRAMING CONNECTIONS
NO SCALE

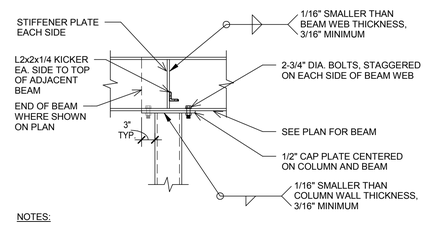

NOTES:
1. SEE ROOF PLAN FOR ROOF SLOPE. SLOPE CAP PLATES ACCORDINGLY.
2. STIFFENER PLATES SHALL BE EQUAL IN THICKNESS TO THE COLUMN WALL THICKNESS OR BEAM WEB THICKNESS, WHICHEVER IS GREATER.
3. CONNECT INTERSECTING BEAMS TO STIFFENER PLATES USING BOLTS IN SINGLE SHEAR DESIGNED FOR ECCENTRIC BEAM REACTION.

3 TYPICAL CAP PLATE - BOLTED CONNECTION DETAIL
NO SCALE

BEAM SIZE	PLATE LENGTH (L)	NO. OF BOLTS (N)	MAX BEAM REACTIONS (KIPS) 3/4" DIA	MAX BEAM REACTIONS (KIPS) 7/8" DIA
W8	6	2	21.2	25.6
W10	6	2	21.2	25.6
W12	9	3	31.8	38.4
W14	9	3	31.87	39.2
W16	12	4	42.4	52.2
W18	15	5	53	65.3
W21	18	6	63.6	78.3
W24	18	6	63.6	78.3
W27	21	7	74.2	91.3
W30	24	8	84.8	103.5
W33	27	9	95.4	115.6
W36	30	10	106	127.8
W40	33	11	116.6	139.9
W44	36	12	127.2	152.1

NOTES:
A. CONNECTIONS SHALL BE BASED ON REACTIONS SHOWN ON PLANS AND MAXIMUM BEAM REACTION IN ABOVE TABLE, U.N.O.
B. NOTED REACTIONS ARE FOR SERVICE LOADS.
C. SEE "STRUCTURAL STEEL CONNECTIONS" IN STRUCTURAL NOTES FOR ADDN'L INFO.
D. MINIMUM CONNECTION: PLATE THICKNESS IS 3/8" TYPICAL AND 7/16" AT W33 AND DEEPER "HEAVY" CONNECTIONS.
E. BOLTS ARE A325N, TYPICAL.
F. BEAM CONNECTIONS ARE "STANDARD" U.N.O. ON PLAN.

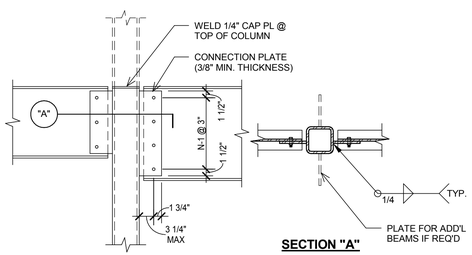

SECTION "A"

5 TYPICAL BEAM WEB TO TUBE COLUMN CONNECTION
NO SCALE

BASE PLATE & ANCHOR BOLT SCHEDULE									
MARK	BASE PLATE DIMENSIONS					DETAIL	ANCHOR BOLTS		
	V	W	Y	Z	T		NO./TYPE	DIA.	EMBED LENGTH
BP-1	20"	20"	7 1/2"	7 1/2"	1"	6/S5.1	4/AB-2	1"	1'-6"
BP-2	20"	15 1/2"	7 1/2"	7 1/2"	1"	8/S5.1	4/AB-2	1"	1'-6"
BP-3	18"	13 1/2"	6 1/2"	6 1/2"	1"	8/S5.1	4/AB-2	1"	1'-6"
BP-4	13 1/2"	13 1/2"	5 1/4"	5 1/4"	1"	9/S5.1	4/AB-2	1"	1'-6"
BP-5	12"	12"	4"	4"	3/4"	6/S5.1	4/AB-1	3/4"	1'-6"
BP-6	8 1/2"	8 1/2"	3 1/4"	3 1/4"	3/4"	9/S5.1	4/AB-1	3/4"	1'-0"

6 BASE PLATE & ANCHOR BOLT SCHEDULE
NO SCALE

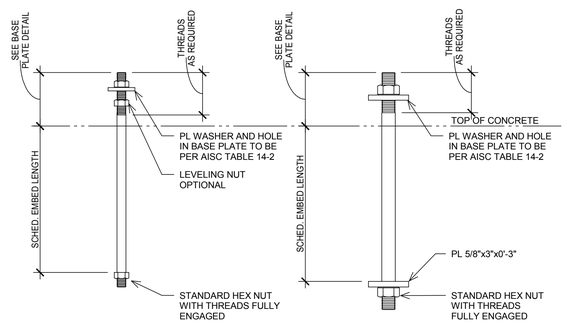

AB-1 **AB-2**

11 TYPICAL ANCHOR BOLT TYPES
NO SCALE

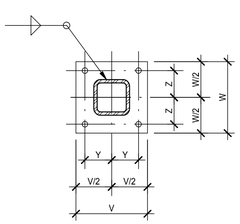

BP-1

NOTES:
1. WELD TO BE 1/16" SMALLER THAN THICKNESS OF TUBE.
2. SEE DETAIL10 / S5.1 FOR BASE PLATE ELEVATION.

7 TYPICAL BASE PLATE DETAIL
NO SCALE

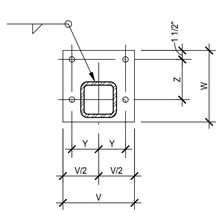

NOTES:
1. WELD TO BE 1/16" SMALLER THAN THICKNESS OF TUBE.
2. FOR BASE PLATE ELEVATION SEE DETAIL

8 TYPICAL BASE PLATE DETAIL - EDGE COLUMN
NO SCALE

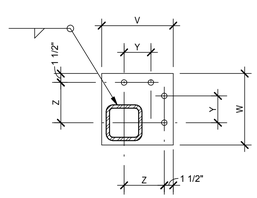

NOTES:
1. WELD TO BE 1/16" SMALLER THAN THICKNESS OF TUBE.
2. FOR BASE PLATE ELEVATION SEE DETAIL

9 TYPICAL BASE PLATE DETAIL - CORNER COLUMN
NO SCALE

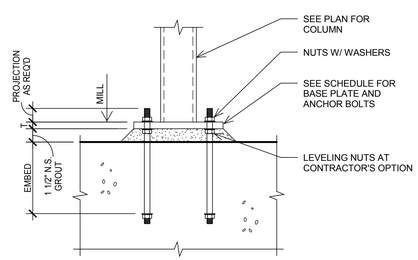

ELEVATION

10 TYPICAL COLUMN BASE PLATE DETAIL
NO SCALE

MASONRY LOOSE LINTEL SCHEDULE	
OPENING	LINTEL SIZE
UP TO 5'-0"	L4x4x1/4
5'-0" TO 7'-0"	L6x4x5/16 LLV
7'-0" TO 8'-0"	L6x4x3/8 LLV

NOTE:
1. LINTEL ANGLES SHALL BE HOT DIP GALVANIZED.
2. PROVIDE 3/8" GAP IN MORTAR AT ENDS OF ANGLE. FORM GAP WITH BACKER ROD.
3. PROVIDE 4" BEARING AT EACH END OF LINTEL ANGLE.

12 MASONRY LOOSE LINTEL SCHEDULE
NO SCALE

STATE OF TEXAS
STEPHANIE RAE TSEN
97275
LICENSED
PROFESSIONAL ENGINEER
9.28.16

JQ TSEN
JQ-TSEN, LLC
1500 WEST 6TH STREET, SUITE 200
512.474.4001
AUSTIN, TEXAS 78703
JQENG.COM
TBPE FIRM # 12778
JQT PROJECT NO 914-00025

AUSTIN ONION CREEK
FIRE & EMS STATION
11112 OLD SAN ANTONIO ROAD
AUSTIN, TEXAS 78748

REVISIONS

DATE	09/23/16
DRAWN BY	TG
CHECKED BY	ST
PROJECT NO.	214106.00

S5.1

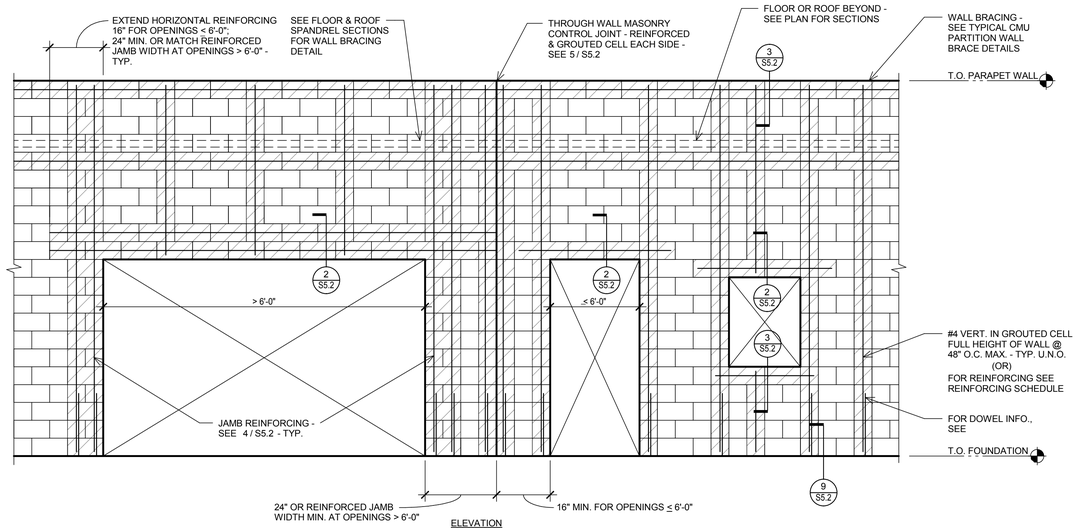

1 TYPICAL EXTERIOR CMU WALL REINFORCING DETAIL
NO SCALE

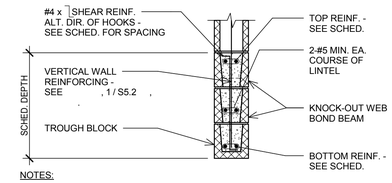

NOTES:

1. LINTELS SHALL REMAIN SHORED UNTIL MASONRY CONSTRUCTION ABOVE HAS CURED FOR A MINIMUM OF 14 DAYS.
2. SEE ARCHITECTURAL DRAWINGS FOR OPENING SIZE AND LOCATION.
3. EXTEND LINTELS PAST EDGES OF OPENINGS PER , 1 / S5.2 .
4. VERTICAL CONTROL JOINTS SHALL NOT CROSS LINTEL REINFORCING.

LINTEL REINFORCING SCHEDULE

CLEAR SPAN	LOCATION	DEPTH	BOTTOM REINF.	TOP REINF.	TIE SPA.	JAMB DETAIL
≤ 6'-0"	INTERIOR	8"	2-#5	N/A	N/A	4/S5.2
≤ 12'-0"	INTERIOR	16"	2-#6	2-#6	8"	4/S5.2
≤ 3'-8"	EXTERIOR	8"	2-#5	N/A	N/A	4/S5.2
≤ 7'-4"	EXTERIOR	16"	2-#6	2-#6	8"	4/S5.2
≤ 12'-0"	EXTERIOR	24"	2-#6	2-#6	8"	4/S5.2
≤ 14'-0"	EXTERIOR	32"	2-#6	2-#6	8"	4/S5.2
≤ 16'-8"	EXTERIOR	48"	2-#6	2-#6	8"	4/S5.2

2 TYPICAL CMU LINTEL DETAIL & REINFORCING SCHEDULE
NO SCALE

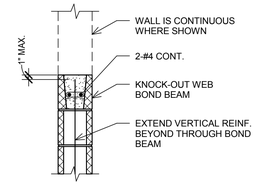

3 TYPICAL CMU BOND BEAM DETAIL
NO SCALE

NOTES

1. a.) FOR OPENING AT EXTERIOR WALL, EXTEND JAMB REINFORCING TO TOP OF WALL.

   b.) FOR OPENING AT INTERIOR WALL ≤ 6'-0", TERMINATE JAMB REINFORCING AT TOP OF LINTEL.

2. FOR REINFORCING DETAIL AT JAMB CONDITIONS SEI7 / S5.2

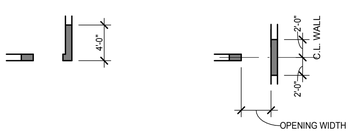

TYPE-3 OPENING

TYPE-4 OPENING

PLAN
NO SCALE

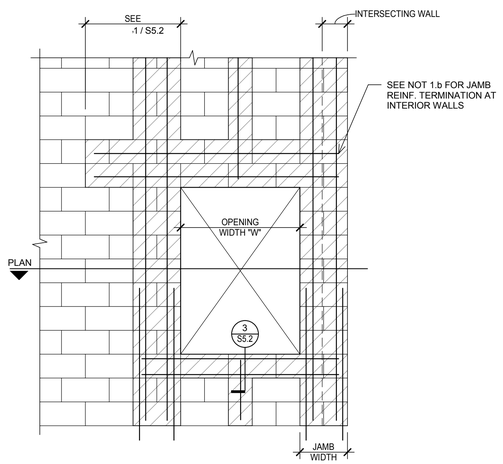

WALL ELEVATION
NO SCALE

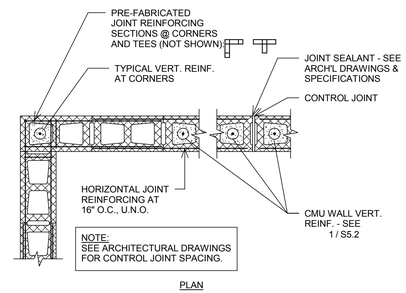

PLAN

5 TYPICAL CMU BAR PLACEMENT DETAIL
NO SCALE

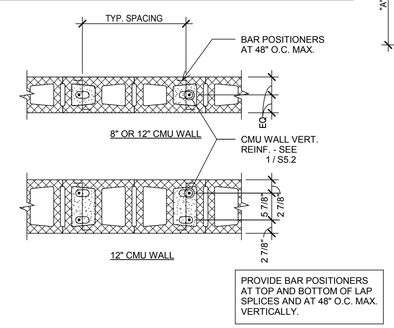

7 TYPICAL CMU BAR PLACEMENT DETAIL
NO SCALE

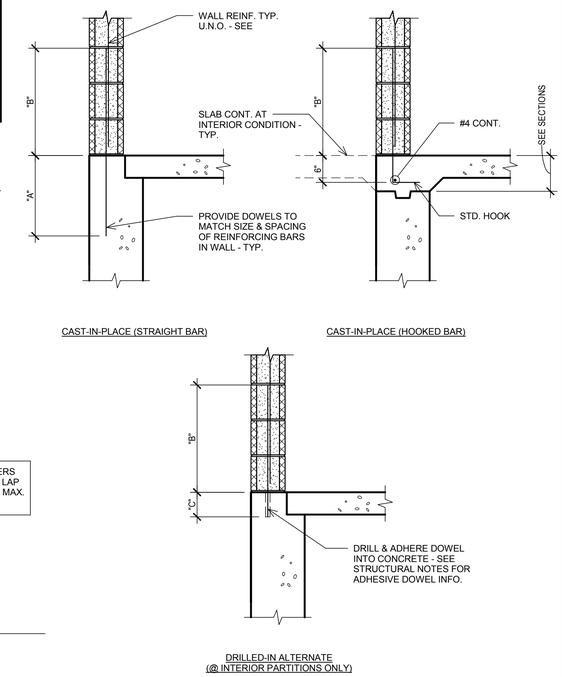

DOWEL SIZE	DIMENSIONS		
	"A"	"B"	"C"
#4	1'-6"	2'-6"	5 1/2"
#5	1'-6"	3'-2"	7"
#6	2'-0"	3'-9"	8 1/2"
#7	2'-6"	4'-5"	10"

NOTES:

1. AT WALLS WITH DOUBLE REINFORCING, PROVIDE SINGLE DOWEL AT SIZE AND SPACING OF SCHEDULED WALL REINFORCING. CENTER DOWEL ON WALL, U.N.O.
2. MASONRY DOWELS SHALL BE TIED IN OR DRILLED AND ADHERED. MASONRY DOWELS SHALL NOT BE "STABBED" IN.
3. HOLES FOR MASONRY DOWELS MUST BE CLEANED WITH A WIRE BRUSH AND COMPRESSED AIR. FOLLOW MANUFACTURER'S INSTALLATION INSTRUCTIONS.

9 TYPICAL MASONRY WALL DOWEL DETAIL
NO SCALE

JAMB WIDTH & REINFORCING SCHEDULE

WALL HEIGHT BETWEEN SUPPORTS *	CLEAR OPENING SIZE (W)				
	< 8'-0"	<10'-0"	<12'-0"	<14'-0"	<16'-8"
≤10'-0"	8" / 2-#5	8" / 2-#5	8" / 2-#5	8" / 2-#5	16" / 4-#6
≤12'-0"	8" / 2-#5	8" / 2-#5	8" / 2-#6	16" / 4-#6	16" / 4-#6
≤14'-0"	8" / 2-#6	8" / 2-#7	16" / 4-#5	16" / 4-#6	24" / 6-#6
≤16'-0"	16" / 2-#7	16" / 4-#6	16" / 4-#6	16" / 4-#7	24" / 6-#7
≤18'-0"	16" / 2-#7	16" / 4-#6	24" / 6-#6	24" / 6-#7	32" / 8-#7

* SUPPORTS ARE DEFINED AS FLOORS, ROOFS, GIRTS, ETC. THAT ARE CONNECTED TO THE WALL WHICH BRACE THE WALL OUT OF PLANE.

4 CMU WALL JAMB REINFORCING DETAIL - CORNER & TEE-CONDITIONS
NO SCALE

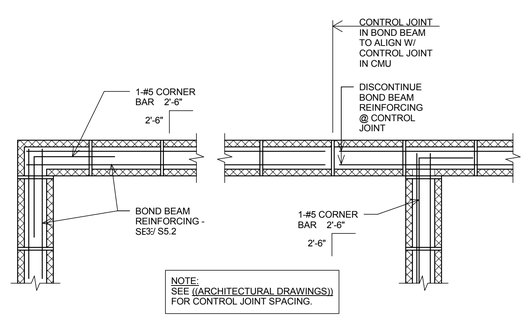

6 TYPICAL CORNER BARS AT BOND BEAMS DETAIL
NO SCALE

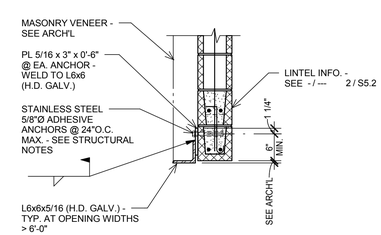

NOTES:

1. FOR VENEER SUPPORT AT OPENINGS EQUAL TO OR LESS THAN 6'-0" PROVIDE LOOSE LINTEL ANGLES PER
2. ADHESIVE ANCHORS SHALL NOT BE INSTALLED WITHIN 2" OF A MASONRY HEAD JOINT.
3. STEEL LEDGE ANGLE LENGTH SHALL BE LIMITED TO 20'-0". PROVIDE 3/8" CONTROL JOINT BETWEEN LEDGE ANGLE SECTIONS.

8 TYPICAL MASONRY VENEER SUPPORT AT CMU BACK-UP DETAIL
NO SCALE

STATE OF TEXAS
STEPHANIE RAE TSEN
97275
LICENSED
PROFESSIONAL ENGINEER
9.28.16

JQ TSEN
JQ-TSEN, LLC
2500 WEST 7TH STREET, SUITE 200
512.474.4001
AUSTIN, TEXAS 78703
JQTSEN.COM
TBPE FIRM # F-13778
JQT PROJECT NO 914-00025

AUSTIN ONION CREEK
FIRE & EMS STATION
11112 OLD SAN ANTONIO ROAD
AUSTIN, TEXAS 78748

CITY OF AUSTIN FOUNDED

REVISIONS

DATE	09/23/16
DRAWN BY	TG
CHECKED BY	ST
PROJECT NO.	214106.00

S5.2

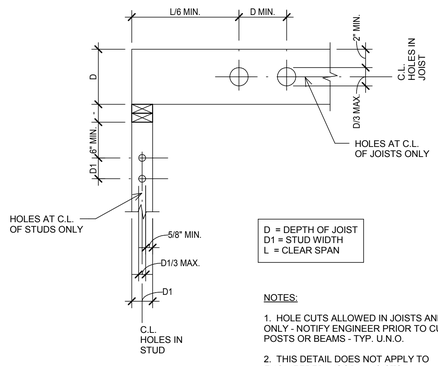

D = DEPTH OF JOIST
D1 = STUD WIDTH
L = CLEAR SPAN

NOTES:

1. HOLE CUTS ALLOWED IN JOISTS AND STUDS ONLY - NOTIFY ENGINEER PRIOR TO CUTTING POSTS OR BEAMS - TYP. U.N.O.

2. THIS DETAIL DOES NOT APPLY TO ENGINEERED WOOD "I" JOISTS.

1 TYPICAL HOLES IN WOOD DETAIL
NO SCALE

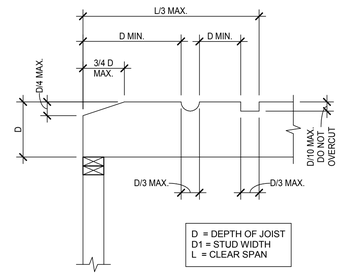

D = DEPTH OF JOIST
D1 = STUD WIDTH
L = CLEAR SPAN

NOTES:

1. NOTCH CUTS ALLOWED IN TOP OF JOISTS ONLY - NOTIFY ENGINEER PRIOR TO CUTTING BEAMS - TYP. U.N.O.

2. THIS DETAIL DOES NOT APPLY TO ENGINEERED WOOD "I" JOISTS.

2 TYPICAL NOTCHES IN WOOD DETAIL
NO SCALE

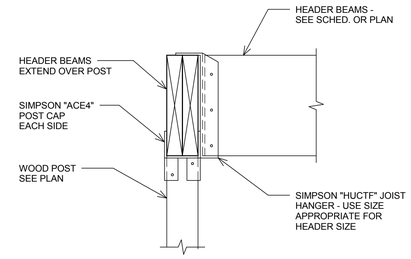

3 TYPICAL POST CAP DETAIL
NO SCALE

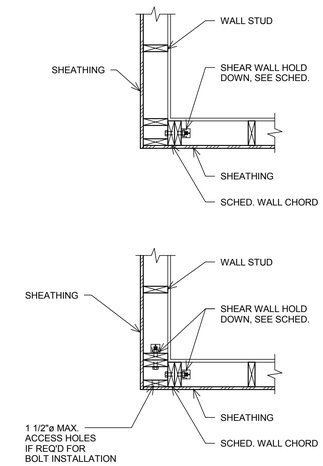

4 PLAN DETAIL AT HOLD-DOWN
NO SCALE

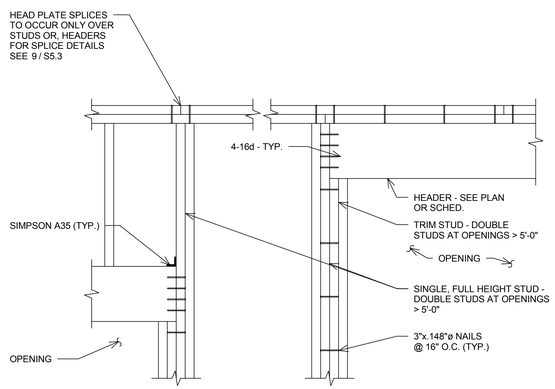

5 TYPICAL WALL FRAMING AT OPENING DETAIL
NO SCALE

HEADER BEAM SCHEDULE	
OPENING	HEADER SIZE
UP TO 4'-0"	2-2x8
4'-0" TO 6'-0"	2-2x10
6'-0" TO 8'-0"	2-2x12
8'-0" TO 12'-0"	2-MICROLAM LVL 1 3/4"x11 7/8"
12'-0" TO 16'-0"	2-MICROLAM LVL 1 3/4"x14"

NOTES:

1. PROVIDE HEADER BEAM SHOWN IN THE SCHEDULE U.N.O. ON PLAN.

2. ALL SOLID SAWN HEADER BEAMS SHALL BE NO.2 SOUTHERN YELLOW PINE OR DOUGLAS FIR.

6 TYPICAL WALL FRAMING AT OPENING DETAIL
NO SCALE

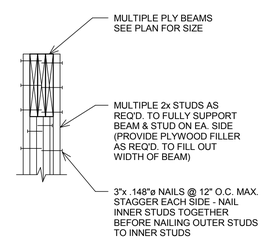

7 TYPICAL MULTIPLE PLY BEAM BEARING
NO SCALE

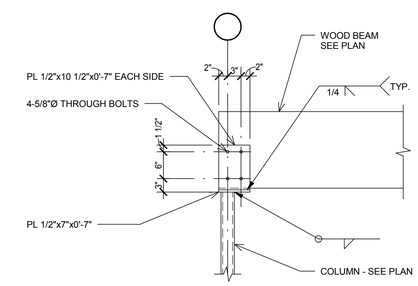

END SUPPORT

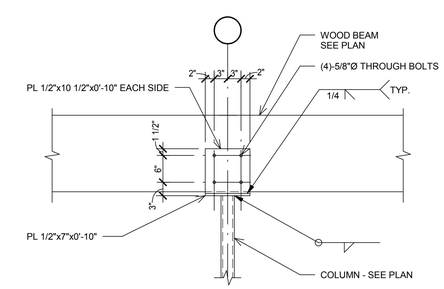

INTERIOR SUPPORT

8 TYPICAL WOOD BEAM BEARING
NO SCALE

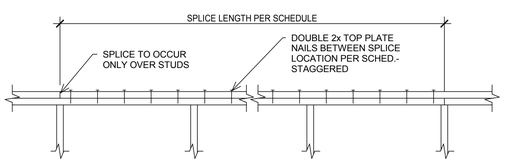

LENGTH OF WALL (BETWEEN CORNERS)	SPLICE LENGTH (MINIMUM)	NAILS ALONG SPLICE LENGTH
OVER 30'	4'-0"	18-3"x.148"ø
OVER 20'	2'-8"	10-3"x.148"ø
OVER 10'	1'-4"	6-3"x.148"ø
LESS THAN 10'	1'-4"	4-3"x.148"ø

NOTES:

1. DO NOT SPLICE TOP PLATES WITHIN 6'-0" OF ENDS OF WOOD STRUCTURAL PANEL SHEAR WALLS.

2. THIS DETAIL APPLIES AT ALL EXTERIOR WALLS AND INTERIOR SHEAR WALLS.

9 TYPICAL DETAIL @ SPLICE IN TOP PLATE
NO SCALE

STATE OF TEXAS
STEPHANIE RAE TSEN
97275
LICENSED
PROFESSIONAL ENGINEER
9.28.16

JQ TSEN
JQ-TSEN, LLC
2500 WEST 7TH STREET, SUITE 200
512.474.4001
AUSTIN, TEXAS 78703
JQENG.COM
TBPE FIRM # F-13778
JQT PROJECT NO: 914-00025

AUSTIN ONION CREEK
FIRE & EMS STATION
11112 OLD SAN ANTONIO ROAD
AUSTIN, TEXAS 78748

CITY OF AUSTIN FOUNDED

REVISIONS

DATE	09/23/16
DRAWN BY	TG
CHECKED BY	ST
PROJECT NO.	214106.00

S5.3

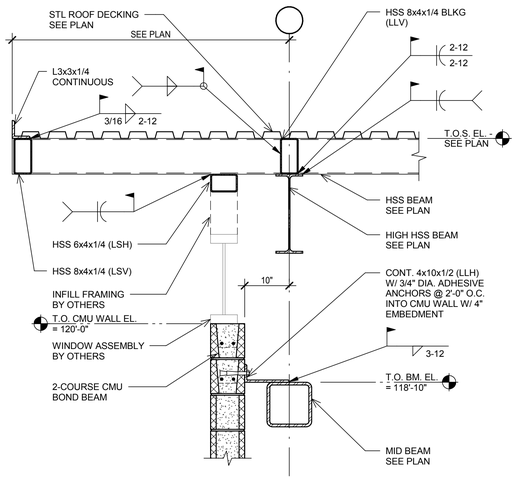

1 ROOF FRAMING AT CMU WALL
SCALE: 3/4" = 1'-0"

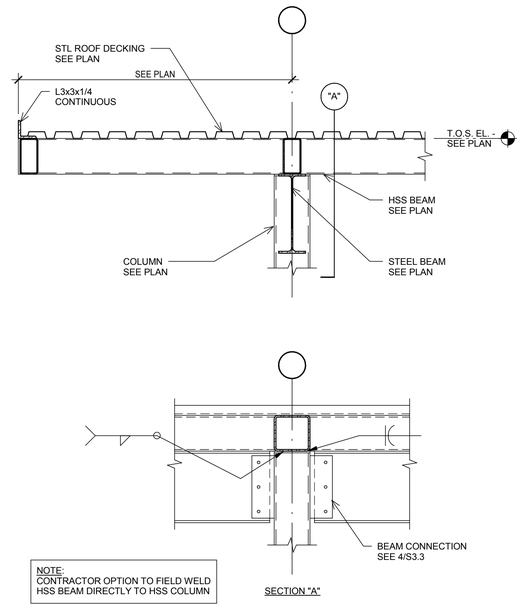

2 ROOF FRAMING AT HSS COLUMN
SCALE: 3/4" = 1'-0"

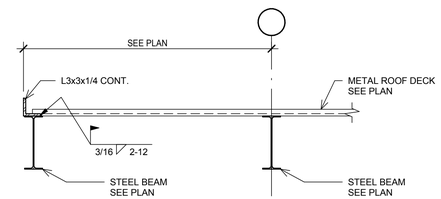

3
SCALE: 3/4" = 1'-0"

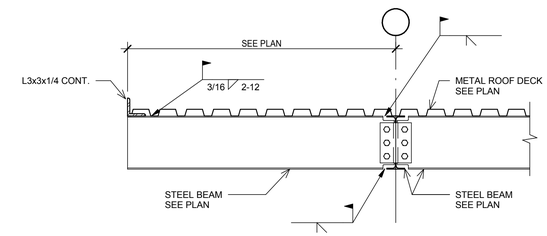

4
SCALE: 3/4" = 1'-0"

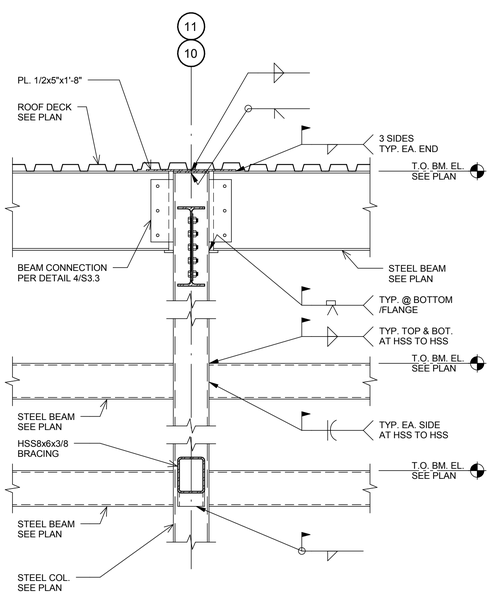

5 MOMENT FRAME CONNECTIONS
SCALE: 3/4" = 1'-0"

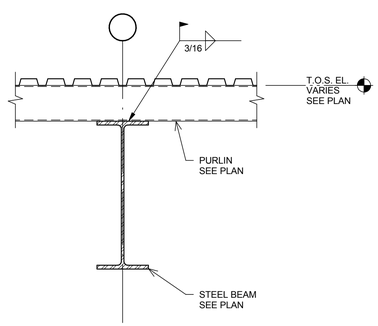

6
SCALE: 3/4" = 1'-0"

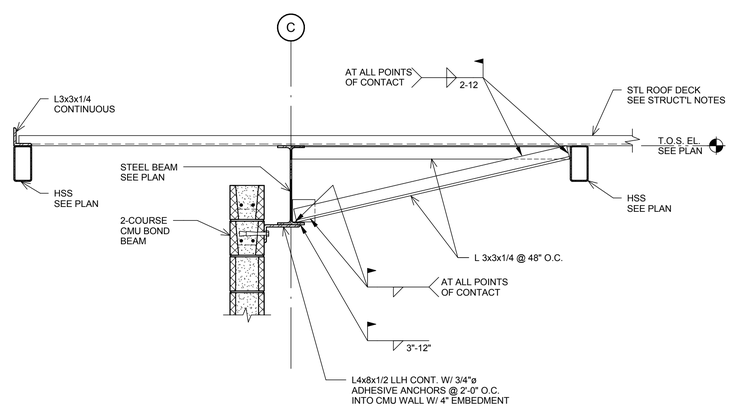

7 ROOF FRAMING AT CMU WALL
SCALE: 3/4" = 1'-0"

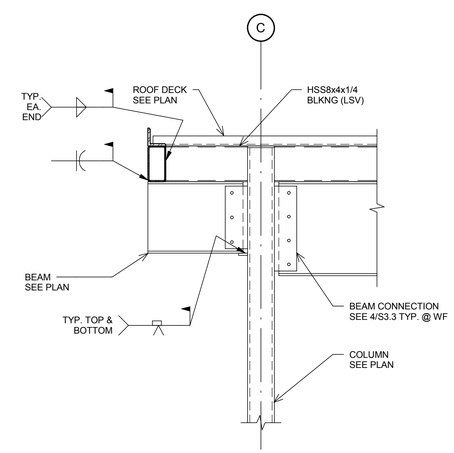

8 ROOF FRAMING AT CANTILEVERED BEAM
SCALE: 3/4" = 1'-0"

STATE OF TEXAS
STEPHANIE RAE TSEN
97275
LICENSED
PROFESSIONAL ENGINEER
9.28.16

JQ TSEN
JQ-TSEN, LLC
2500 WEST 7TH STREET, SUITE 200
512.474.4001
AUSTIN, TEXAS 78703
JQENG.COM
TBPE FIRM # 12778
JQT PROJECT NO 914-00025

AUSTIN ONION CREEK
FIRE & EMS STATION
11112 OLD SAN ANTONIO ROAD
AUSTIN, TEXAS 78748

CITY OF AUSTIN
SEAL
FOUNDED

REVISIONS

DATE	09/23/16
DRAWN BY	TG
CHECKED BY	ST
PROJECT NO.	214106.00

S6.1

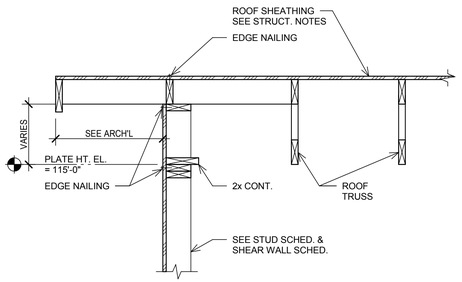

1
SCALE: 3/4" = 1'-0"

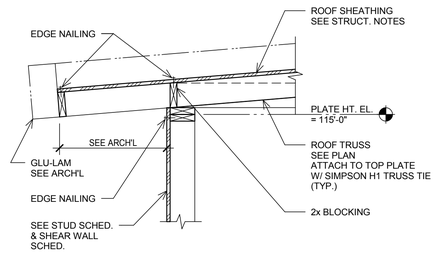

2
SCALE: 3/4" = 1'-0"

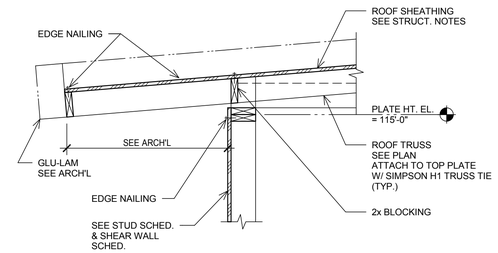

3
SCALE: 3/4" = 1'-0"

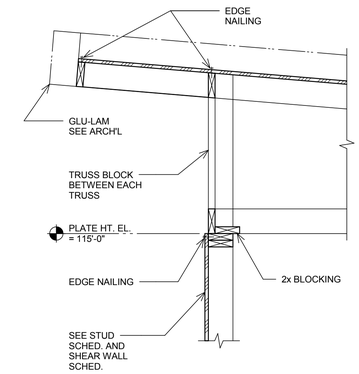

4
SCALE: 3/4" = 1'-0"

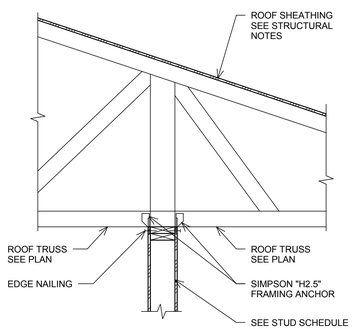

5 TYPICAL ROOF TRUSS BEARING AT INTERIOR WALL
NO SCALE

STATE OF TEXAS
STEPHANIE RAE TSEN
97275
LICENSED
PROFESSIONAL ENGINEER
9.28.16

JQ TSEN

JQ-TSEN, LLC
2500 WEST 7TH STREET, SUITE 200
512.474.4001
AUSTIN, TEXAS 78703
JQENG.COM
TBPE FIRM # F-13778
JQT PROJECT NO: 914-00025

AUSTIN ONION CREEK
FIRE & EMS STATION
11112 OLD SAN ANTONIO ROAD
AUSTIN, TEXAS 78748

CITY OF AUSTIN
FOUNDED 1839

REVISIONS

DATE	09/23/16
DRAWN BY	TG
CHECKED BY	ST
PROJECT NO.	214106.00

S6.2

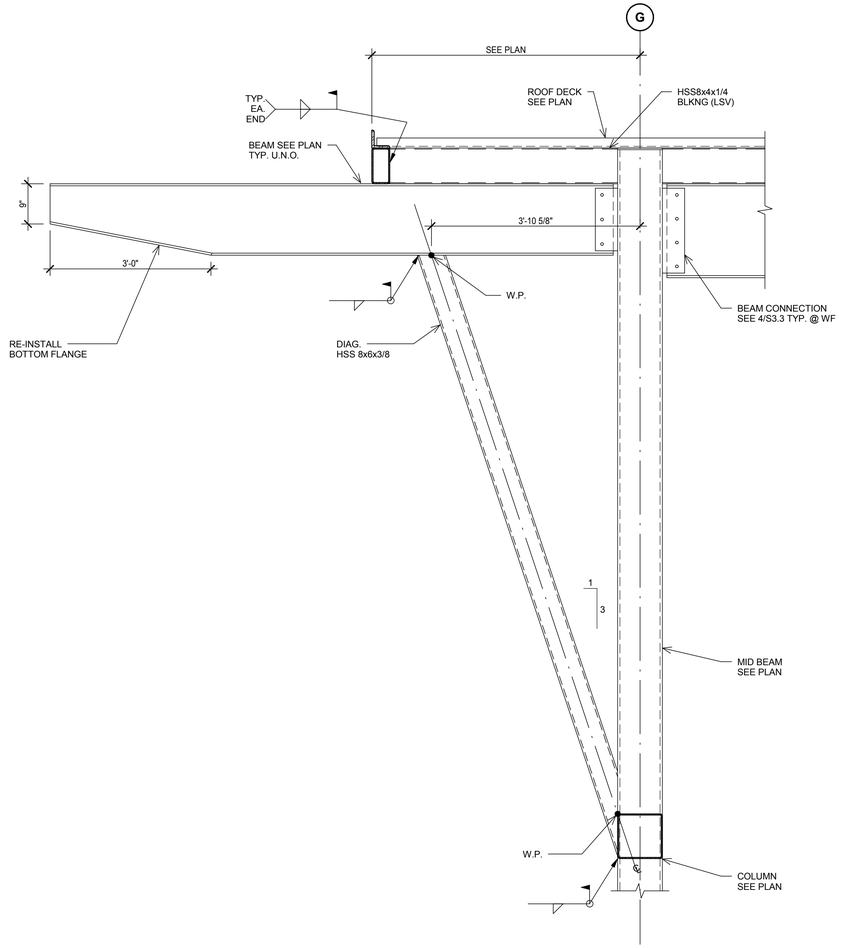

1 ROOF FRAMING AT CANT. BEAM
NO SCALE

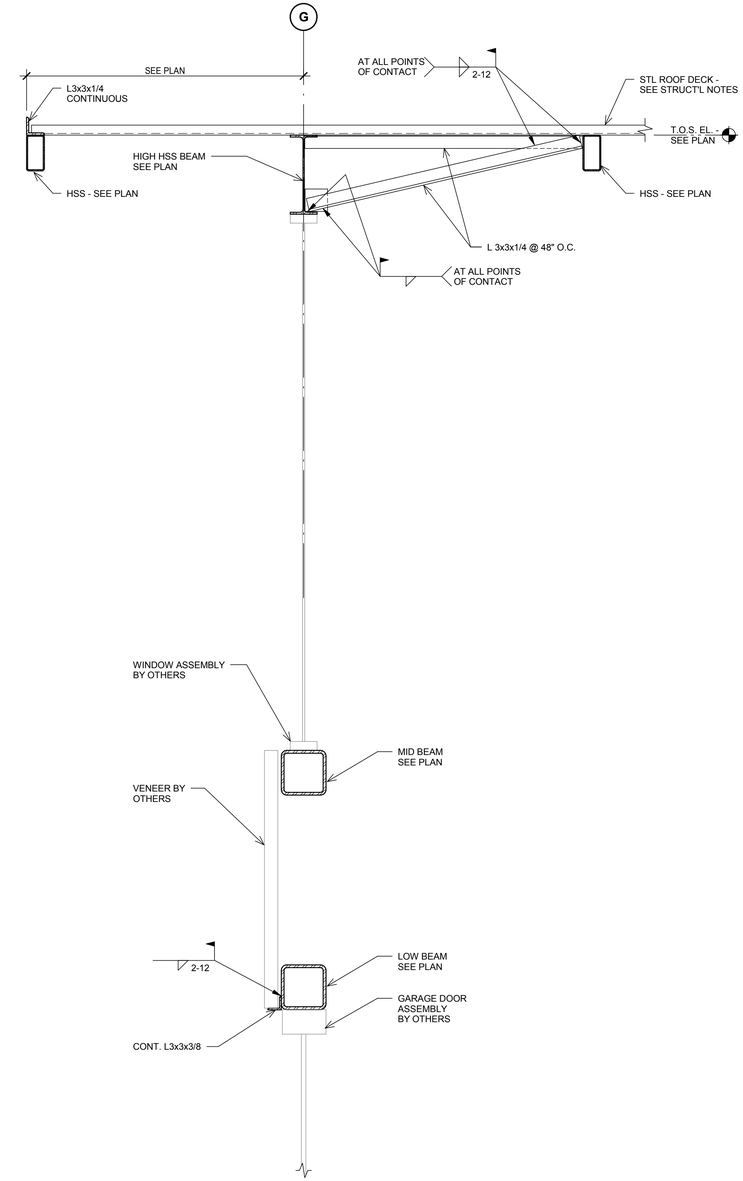

2 ROOF FRAMING AT GARAGE DOOR
NO SCALE

STATE OF TEXAS
STEPHANIE RAE TSEN
97275
LICENSED
PROFESSIONAL ENGINEER
9.28.16

JQ TSEN

JQ-TSEN, LLC
2500 WEST 7TH STREET, SUITE 200
512.474.4001

AUSTIN, TEXAS 78703
JQENG.COM
TBPE FIRM # F-3778

JOB PROJECT NO: 914-00025

AUSTIN ONION CREEK
FIRE & EMS STATION
11112 OLD SAN ANTONIO ROAD
AUSTIN, TEXAS 78748

CITY OF AUSTIN FOUNDED 1839

REVISIONS

DATE	09/23/16
DRAWN BY	TG
CHECKED BY	ST
PROJECT NO.	214106.00

S6.3

NOT USED

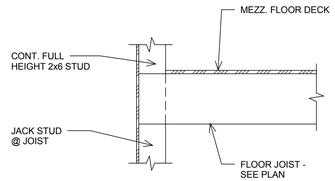

1
SCALE: 3/4" = 1'-0"

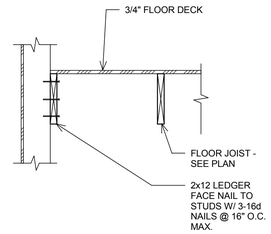

2
SCALE: 3/4" = 1'-0"

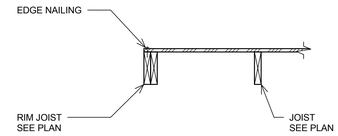

3
SCALE: 3/4" = 1'-0"

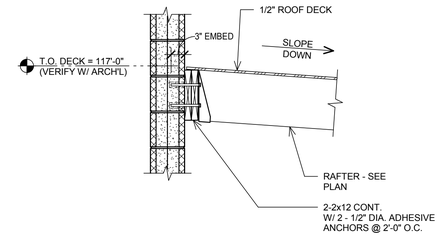

4
SCALE: 3/4" = 1'-0"

5
SCALE: 3/4" = 1'-0"

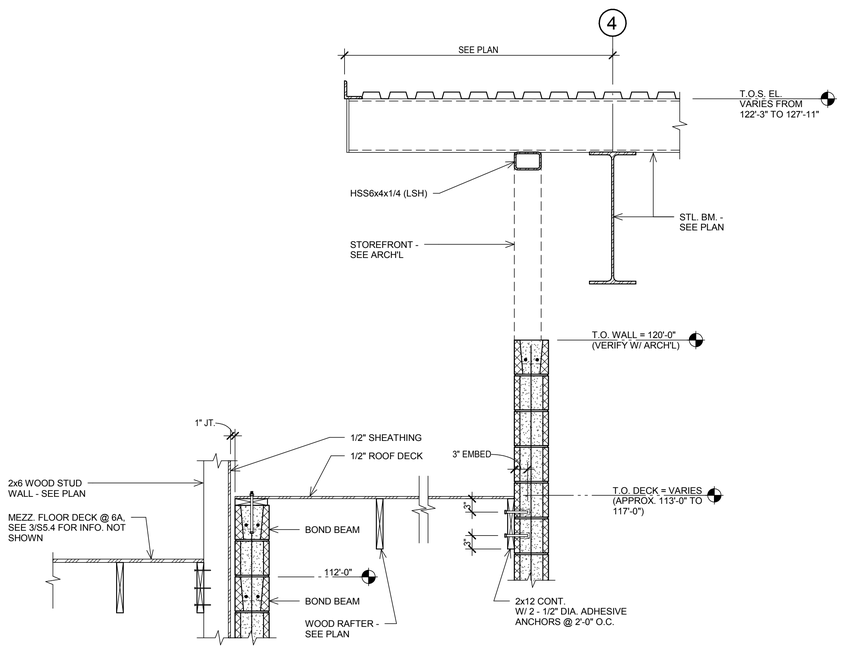

6,6A
SCALE: 3/4" = 1'-0"

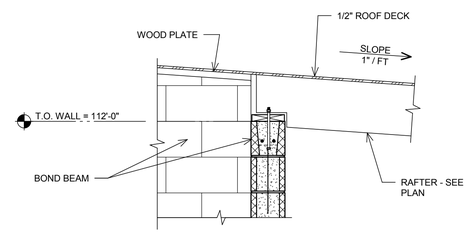

7
SCALE: 3/4" = 1'-0"

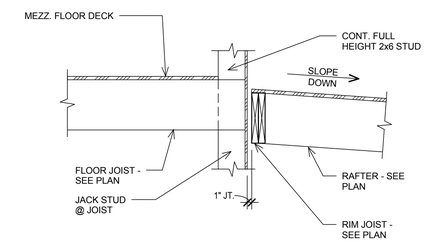

9
SCALE: 3/4" = 1'-0"

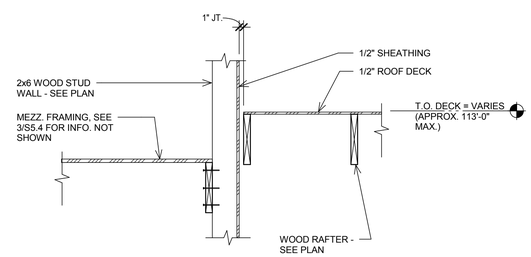

8
SCALE: 3/4" = 1'-0"

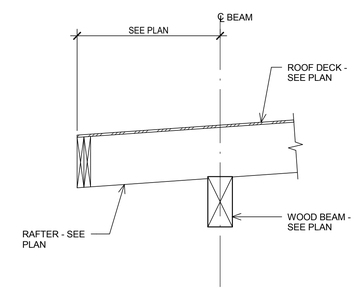

10
SCALE: 3/4" = 1'-0"

STATE OF TEXAS
STEPHANIE RAE TSEN
97275
LICENSED
PROFESSIONAL ENGINEER
9.28.16

JQ TSEN
JQ-TSEN, LLC
2500 WEST 7TH STREET, SUITE 200
512.474.4001
AUSTIN, TEXAS 78703
JQENG.COM
TBPE FIRM # F-3778
JQT PROJECT NO: 914-00025

AUSTIN ONION CREEK
FIRE & EMS STATION
11112 OLD SAN ANTONIO ROAD
AUSTIN, TEXAS 78748

CITY OF AUSTIN 1839 FOUNDED

REVISIONS

DATE	09/23/16
DRAWN BY	TG
CHECKED BY	ST
PROJECT NO.	214106.00

S6.4

BUSINESS 'B' OCCUPANCY

GROSS AREA: 2,726 SF

ALLOWABLE EXIT DISTANCE: 300'–0"
MAX DISTANCE TRAVELED: 90'–7"

COMMON PATH OF EGRESS TRAVEL
ALLOWABLE: 100'–0"
MAX DISTANCE TRAVELED: 86'–4'

OCCUPANT LOAD DETERMINATION:
– BUSINESS (100 SF/OCCUPANT)
1,514 SF, 16 OCCUPANTS
– KITCHEN (200 SF/OCCUPANT)
494 SF, 3 OCCUPANTS
– STORAGE (300 SF/OCCANT)
254 SF, 1 OCCUPANTS
– EQUIPMENT PLATFORM (300 SF/OCC.)
464 SF, 2 OCCUPANTS

TOTAL OCCUPANT LOAD: 22

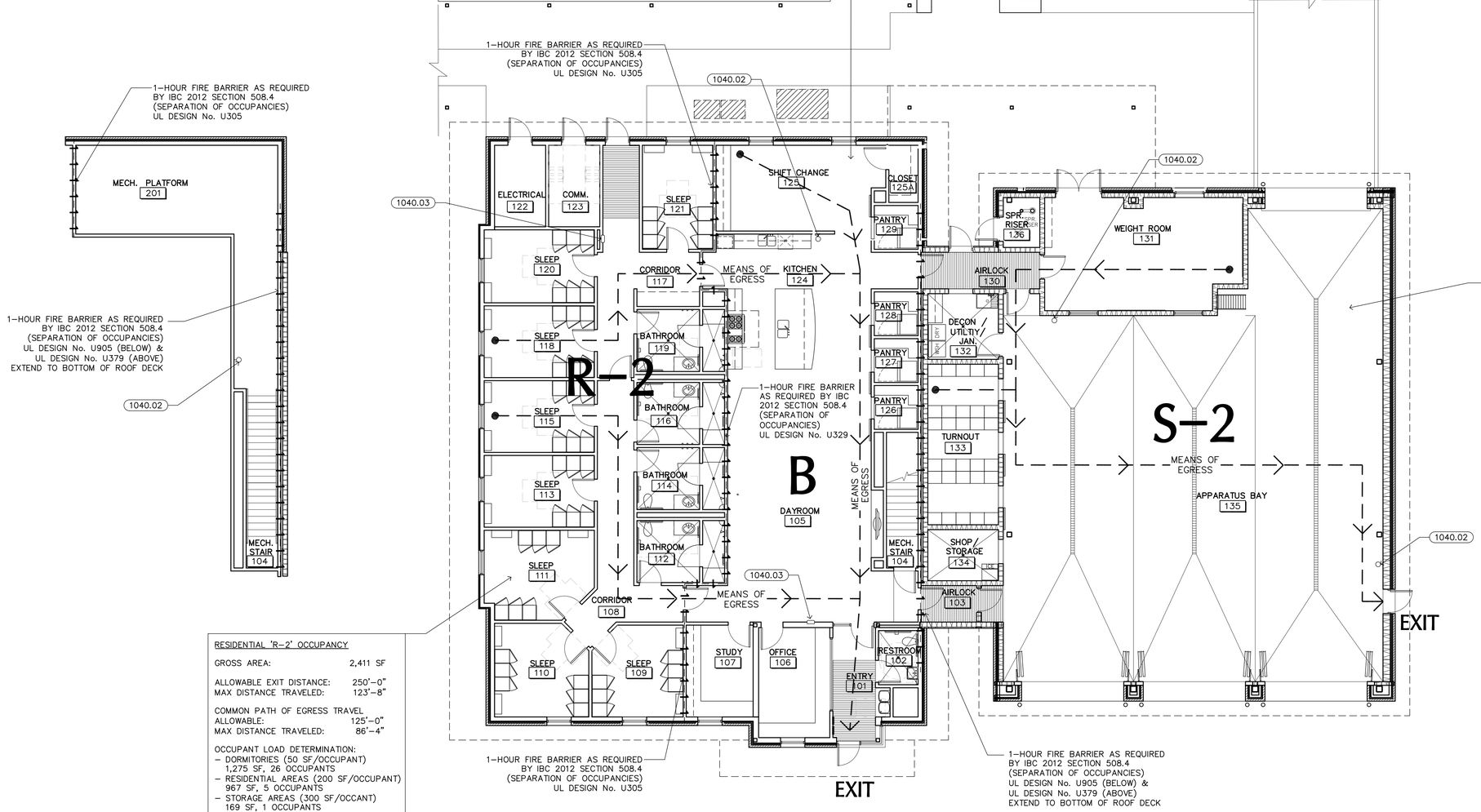

RESIDENTIAL 'R–2' OCCUPANCY

GROSS AREA: 2,411 SF

ALLOWABLE EXIT DISTANCE: 250'–0"
MAX DISTANCE TRAVELED: 123'–8"

COMMON PATH OF EGRESS TRAVEL
ALLOWABLE: 125'–0"
MAX DISTANCE TRAVELED: 86'–4"

OCCUPANT LOAD DETERMINATION:
– DORMITORIES (50 SF/OCCUPANT)
1,275 SF, 26 OCCUPANTS
– RESIDENTIAL AREAS (200 SF/OCCUPANT)
967 SF, 5 OCCUPANTS
– STORAGE AREAS (300 SF/OCCANT)
169 SF, 1 OCCUPANTS

TOTAL OCCUPANT LOAD: 32

STORAGE 'S–2' OCCUPANCY

GROSS AREA: 3,990 SF

ALLOWABLE EXIT DISTANCE: 400'–0"
MAX DISTANCE TRAVELED: 126'–8"

OCCUPANT LOAD DETERMINATION:
– PARKING GARAGE (200 SF/OCCUPANT)
3,195 SF, 16 OCCUPANTS
– STORAGE AREAS (300 SF/OCCUPANT)
371 SF, 2 OCCUPANTS
– EXERCISE ROOM (300 SF/OCCANT)
424 SF, 2 OCCUPANTS

TOTAL OCCUPANT LOAD: 20

KEYNOTES

DIVISION 10 – SPECIALTIES

1040.02 FIRE EXTINGUISHER AND WALL BRACKET
1040.03 FIRE EXTINGUISHER AND SEMI–RECESSED CABINET

EXIT	EXIT/ EXIT DISCHARGE
← — →	MEANS OF EGRESS PATH
—1/2—	1/2 HR FIRE PARTITION
—1—1—1—	1 HR FIRE BARRIER
—2—2—2—	2 HR FIRE BARRIER

PLAN NORTH TRUE NORTH

BP001

1 LIFE SAFETY PLAN

1/8" = 1'-0"

CODE INFORMATION

BUILDING CODE – WITH CITY OF AUSTIN AMENDMENTS	2012 IBC
MECHANICAL CODE	2012 IMC
ELECTRICAL CODE	2014 NEC
PLUMBING CODE	2012 IPC
FIRE CODE	2012 IFC
ENERGY CONSERVATION CODE	2012 IECC
ACCESSIBILITY	2012 TAS
OCCUPANCY CLASSIFICATION	MIXED OCCUPANCY: B, R–2, S–1
OCCUPANT LOAD	74
TYPE OF CONSTRUCTION	TYPE V B
ALLOWABLE BUILDING HEIGHT	60'–0"
BUILDING HIGH POINT	31'–0"

ALLOWABLE BUILDING HEIGHT	60'–0"
BUILDING HIGH POINT	31'–0"
ALLOWABLE BUILDING AREA PER FLOOR	
B OCCUPANCY	37,710 SQ. FT.
R–2 OCCUPANCY	29,330 SQ. FT.
S–2 OCCUPANCY	56,565 SQ. FT.
TOTAL	123,605 SQ. FT.
ACTUAL BUILDING AREA:	
FIRST FLOOR	9,176 SQ. FT.
EQUIPMENT PLATFORMS	464 SQ. FT.
SPRINKLER SYSTEM	FULL NFPA 13
SPRINKLERED AREA	ENTIRE BUILDING
NON–SPRINKLERED AREA	NONE

NOTE: AREA TABULATION IS FOR CITY USE ONLY. CONTRACTOR SHALL COMPLETE HIS/HER OWN TAKE–OFFS & CALCULATIONS.

ALLOWABLE BUILDING HEIGHTS AND AREAS (IBC 2012 CHAPTER 5)

506.1 GENERAL.

THE BUILDING AREAS LIMITED BY TABLE 503 SHALL BE PERMITTED TO BE INCREASED DUE TO FRONTAGE (I_F) AND AUTOMATIC SPRINKLER SYSTEM PROTECTION (I_S) IN ACCORDANCE WITH EQUATION 5–1:

$A_A = \{ A_T + [A_T \times I_F] + [A_T \times I_S] \}$ (EQUATION 5–1)

WHERE:
A_A = ALLOWABLE BUILDING AREA PER STORY (SQUARE FEET).
A_T = TABULAR BUILDING AREA PER STORY IN ACCORDANCE WITH TABLE 503 (SQUARE FEET).
I_F = AREA INCREASE FACTOR DUE TO FRONTAGE AS CALCULATED IN ACCORDANCE WITH SECTION 506.2.
I_S = AREA INCREASE FACTOR DUE TO SPRINKLER PROTECTION AS CALCULATED IN ACCORDANCE WITH SECTION 506.3.

B OCCUPANCY
$A_T = 9{,}000 \quad I_F = 0.19 \quad I_S = 3$

$A_A = \{ 9{,}000 + [9{,}000 \times 0.19] + [9{,}000 \times 3] \}$
$A_A = 9{,}000 + 1{,}710 + 27{,}000$
$A_A = 37{,}710$

R–2 OCCUPANCY
$A_T = 7{,}000 \quad I_F = 0.19 \quad I_S = 3$

$A_A = \{ 7{,}000 + [7{,}000 \times 0.19] + [7{,}000 \times 3] \}$
$A_A = 7{,}000 + 1{,}330 + 21{,}000$
$A_A = 29{,}330$

S–1 OCCUPANCY
$A_T = 13{,}400 \quad I_F = 0.19 \quad I_S = 3$

$A_A = \{ 13{,}500 + [13{,}500 \times 0.19] + [13{,}500 \times 3] \}$
$A_A = 13{,}500 + 2{,}565 + 40{,}500$
$A_A = 56{,}565$

506.2 FRONTAGE INCREASE.

EVERY BUILDING SHALL ADJOIN OR HAVE ACCESS TO A PUBLIC WAY TO RECEIVE A BUILDING AREA INCREASE FOR FRONTAGE. WHERE A BUILDING HAS MORE THAN 25 PERCENT OF ITS PERIMETER ON A PUBLIC WAY OR OPEN SPACE HAVING A WIDTH OF NOT LESS THAN 20 FEET (6096 MM), THE FRONTAGE INCREASE SHALL BE DETERMINED IN ACCORDANCE WITH EQUATION 5–2:

$I_F = [F/P - 0.25] W/30$ (EQUATION 5–2)

WHERE:
I_F = AREA INCREASE DUE TO FRONTAGE.
F = BUILDING PERIMETER THAT FRONTS ON A PUBLIC WAY OR OPEN SPACE HAVING 20 FEET (6096 MM) OPEN MINIMUM WIDTH (FEET).
P = PERIMETER OF ENTIRE BUILDING (FEET).
W = WIDTH OF PUBLIC WAY OR OPEN SPACE (FEET) IN ACCORDANCE WITH SECTION 506.2.1.

F = 252.5 P = 475.33 W = 20

$I_F = [252.5/475.33 - 0.25] 20/30$
$I_F = 0.28 \times 0.67$
$I_F = 0.19$

OCCUPANCY	ALLOWABLE STORIES	ALLOWABLE AREA	ALLOWABLE STORIES (MODIFIED)	ALLOWABLE AREA (MODIFIED)
B	2	9,000	2	37,710
R–2	2	7,000	3	29,330
S–2	1	13,500	2	56,565
TOTAL				123,605

09/23/16

BROWN REYNOLDS WATFORD ARCHITECTS
2700 EARL RUDDER FRWY SOUTH
SUITE 4000
COLLEGE STATION, TEXAS 77845
979.694.1791
WWW.BRWARCH.COM

AUSTIN ONION CREEK FIRE & EMS STATION
11112 OLD SAN ANTONIO ROAD
AUSTIN, TEXAS 78748

REVISIONS

DATE	9/23/2016
DRAWN BY	LA, MW
CHECKED BY	RH
PROJECT NO.	214106.00

LS1.1

LIFE SAFETY PLAN

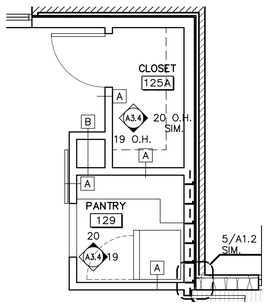

2 ENLARGED PLAN
1/4" = 1'-0"
BP001

PLAN NORTH TRUE NORTH

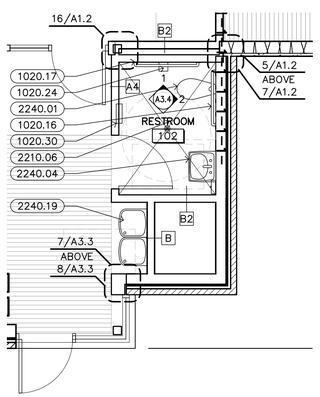

3 ENLARGED PLAN
1/4" = 1'-0"
BP001

PLAN NORTH TRUE NORTH

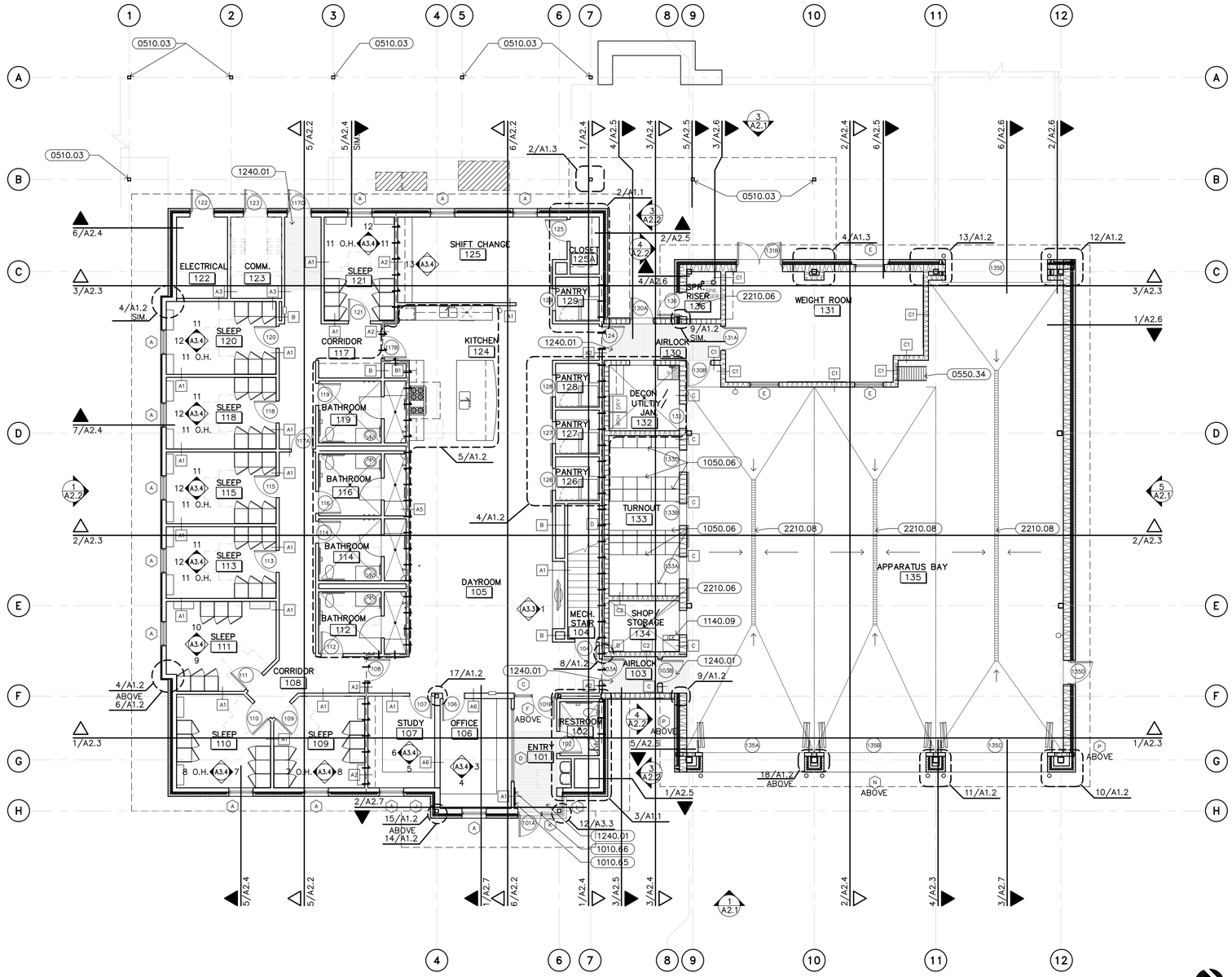

1 FIRST FLOOR PLAN
1/8" = 1'-0"
BP001

PLAN NORTH TRUE NORTH

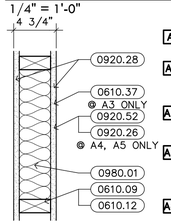

A 2 X 4 STUDS @ 16" O.C. (TO BOTTOM OF TRUSS)
(1) LAYER GYPSUM BOARD EA. SIDE

A1 2 X 4 STUDS @ 16" O.C. (TO BOTTOM OF TRUSS)
(1) LAYER GYPSUM BOARD EA. SIDE
W/ SOUND BATT

A2 2 X 4 STUDS @ 16" O.C. (TO UNDERSIDE OF DECK)
(1) LAYERS GYPSUM BOARD EA. SIDE (1 HR RATED)
W/ SOUND BATT

A3 2 X 4 STUDS @ 16" O.C. (TO BOTTOM OF TRUSS)
(1) LAYERS GYPSUM BOARD PUBLIC SIDE
(1) LAYERS 5/8" PLYWOOD ELEC. SIDE
W/ SOUND BATT

A4 2 X 4 STUDS @ 16" O.C. (TO BOTTOM OF TRUSS)
(1) LAYERS GYPSUM BOARD PUBLIC SIDE
(1) LAYER CEMENTITIOUS BACKER BOARD TILE SIDE
(1) LAYER MOISTURE RESISTANCE GYPSUM WET SIDE
W/ SOUND BATT

A5 2 X 4 STUDS @ 16" O.C. (TO UNDERSIDE OF DECK)
(1) LAYERS GYPSUM BOARD EA. SIDE (1 HR RATED)
(1) LAYER CEMENTITIOUS BACKER BOARD TILE SIDE
W/ SOUND BATT

A6 2 X 4 STUDS @ 16" O.C. (TO UNDERSIDE OF DECK)
(1) LAYERS GYPSUM BOARD EA. SIDE
W/ SOUND BATT

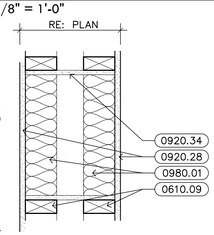

B STUDS @ 16" O.C.
TO BOTTOM OF TRUSS
W/ SOUND BATT

B1 STUDS @ 16" O.C.
TO BOTTOM OF TRUSS
(1) LAYERS GYPSUM BOARD EA. SIDE (1 HR RATED)
W/ SOUND BATT

B2 STUDS @ 16" O.C.
TO BOTTOM OF TRUSS
(1) LAYER CEMENTITIOUS BACKER BOARD TILE SIDE
(1) LAYER MOISTURE RESISTANCE GYPSUM WET SIDE
W/ SOUND BATT

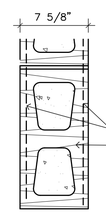

C 12" CMU (TO B.O. TRUSS)

C1 8" CMU
TO 12'-0" ABOVE FINISH FLOOR

C1 8" CMU
TO 10'-0" ABOVE FINISH FLOOR

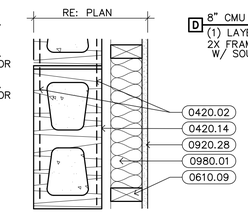

D 8" CMU (TO BOTTOM OF DECK 1 HR RATED)
(1) LAYER GYPSUM BOARD ON 7/8"
2X FRAMING @ CONDITIONED SIDE
W/ SOUND BATT

4 PARTITION TYPES
N.T.S.
ID00X

KEYNOTES

DIVISION 04 – MASONRY

0420.02 HORIZONTAL REINFORCING AT 16" O.C. VERTICALLY
0420.14 8" CONCRETE MASONRY UNITS
0420.18 12" CONCRETE MASONRY UNITS

DIVISION 05 – METALS

0510.03 STEEL TUBE COLUMN (RE: STRUCTURAL)
0550.34 METAL SHIPS LADDER

DIVISION 06 – WOOD, PLASTICS, & COMPOSITES

0610.09 2 X 4 WOOD STUDS AT 16" O.C.
0610.12 2 X 8 WOOD FRAMING
0610.37 5/8" PLYWOOD

DIVISION 09 – FINISHES

0920.26 5/8" CEMENTITIOUS BACKER BOARD
0920.28 5/8" GYPSUM BOARD (TYPE X)
0920.34 GYPSUM BOARD GUSSETS AT 16" O.C. VERTICALLY
0920.52 5/8" GYPSUM BOARD, MOISTURE RESISTANT (TYPE X)
0980.01 2" SOUND ATTENUATION INSULATION

DIVISION 10 – SPECIALTIES

1010.65 NO SMOKING SIGN
1010.66 EDUCATIONAL BROCHURE HOLDER
1020.16 STAINLESS STEEL 1 1/2" DIAMETER GRAB BAR (36" LONG)
1020.17 STAINLESS STEEL 1 1/2" DIAMETER GRAB BAR (42" LONG)
1020.24 STAINLESS STEEL SURFACE MOUNTED TOILET PAPER DISPENSER
1020.30 STAINLESS STEEL SEMI-RECESSED PAPER TOWEL DISPENSER / TRASH RECEPTACLE
1050.06 BUNKER GEAR RACK

DIVISION 11 – EQUIPMENT

1140.09 ICE MACHINE

DIVISION 12 – FURNISHINGS

1240.01 RECESSED WALK-OFF MAT

DIVISION 22 – PLUMBING (RE: PLUMBING)

2210.06 FLOOR DRAIN
2210.08 TRAFFIC RATED TRENCH DRAIN
2240.01 WATER CLOSET. ORIENT FLUSH VALVE TOWARDS ACCESSIBLE SPACE AT ACCESSIBLE STALLS / RESTROOMS
2240.04 LAVATORY
2240.19 WATER FOUNTAIN

BROWN REYNOLDS WATFORD ARCHITECTS
2700 EARL RUDDER FRWY SOUTH
SUITE 4000
COLLEGE STATION, TEXAS 77845
979.694.1791
WWW.BRWARCH.COM

AUSTIN ONION CREEK
FIRE & EMS STATION
11112 OLD SAN ANTONIO ROAD
AUSTIN, TEXAS 78748

REGISTERED ARCHITECT WILLIAM E. WATFORD 9241 STATE OF TEXAS
09/23/16

REVISIONS

DATE	9/23/2016
DRAWN BY	LA, MW
CHECKED BY	RH
PROJECT NO.	214106.00

A1.1
FLOOR PLAN

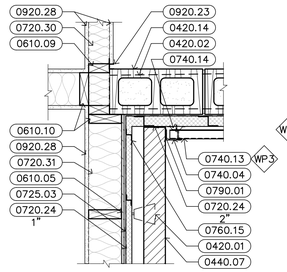

5 PLAN DETAIL PD001
1" = 1'-0"

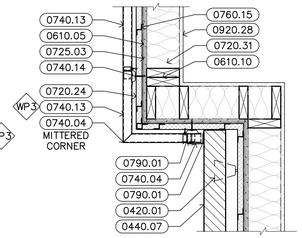

4 PLAN DETAIL PD001
1" = 1'-0"

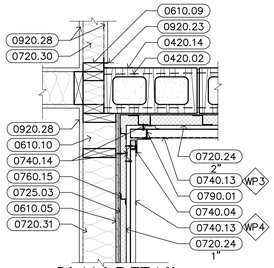

7 PLAN DETAIL PD001
1" = 1'-0"

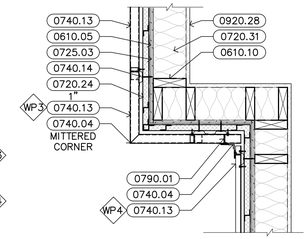

6 PLAN DETAIL PD001
1" = 1'-0"

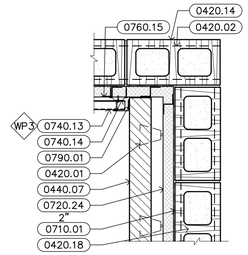

9 PLAN DETAIL PD001
1" = 1'-0"

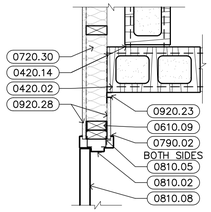

8 PLAN DETAIL PD001
1" = 1'-0"

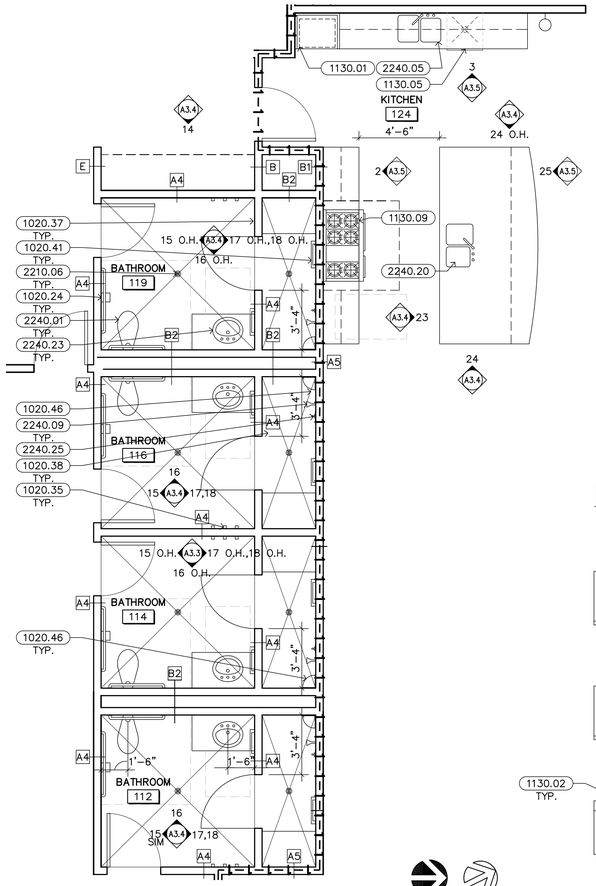

3 ENLARGED PLAN BP001
1/4" = 1'-0"

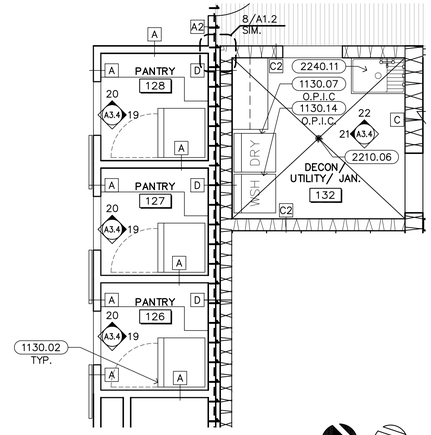

2 ENLARGED PLAN BP001
1/4" = 1'-0"

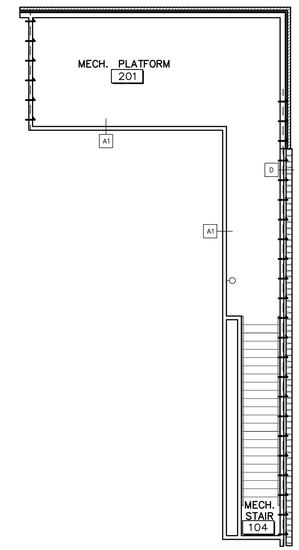

1 SECOND FLOOR PLAN BP001
1/8" = 1'-0"

PLAN NORTH TRUE NORTH

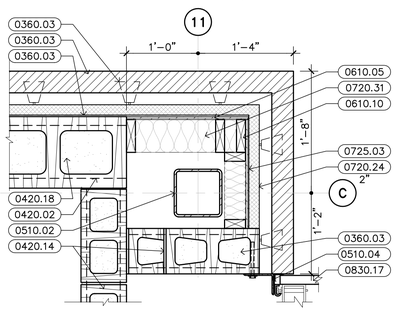

13 PLAN DETAIL PD001
1" = 1'-0"

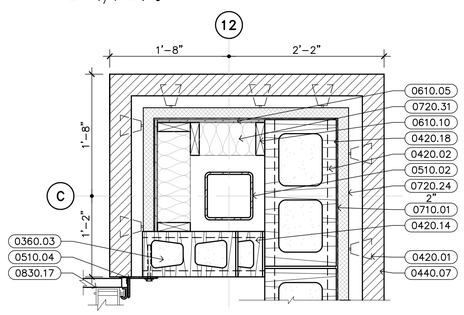

12 PLAN DETAIL PD001
1" = 1'-0"

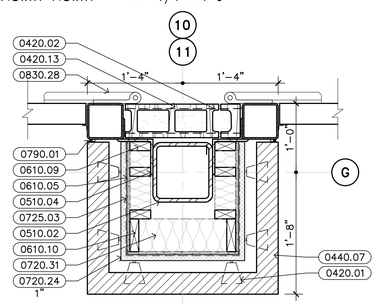

11 PLAN DETAIL PD001
1" = 1'-0"

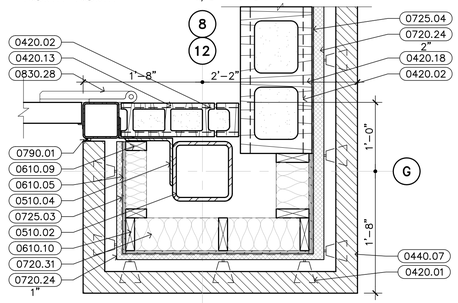

10 PLAN DETAIL PD001
1" = 1'-0"

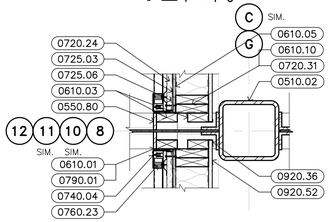

18 PLAN DETAIL PD001
1" = 1'-0"

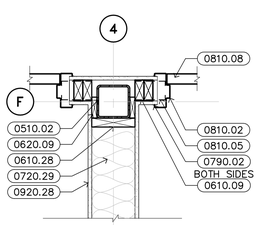

17 PLAN DETAIL PD001
1" = 1'-0"

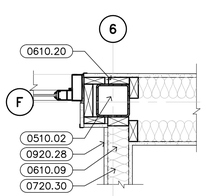

16 PLAN DETAIL PD001
1" = 1'-0"

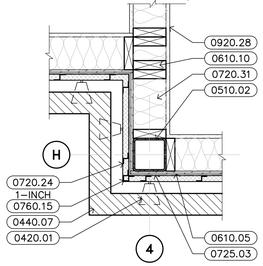

15 PLAN DETAIL PD001
1" = 1'-0"

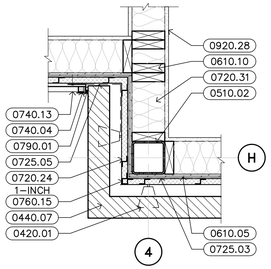

14 PLAN DETAIL PD001
1" = 1'-0"

KEYNOTES

DIVISION 03 – CONCRETE

0360.03 FILL WITH GROUT

DIVISION 04 – MASONRY

0420.01 ADJUSTABLE MASONRY WALL TIES AT 16" O.C.E.W.
0420.02 HORIZONTAL REINFORCING AT 16" O.C. VERTICALLY
0420.13 6" CONCRETE MASONRY UNITS
0420.14 8" CONCRETE MASONRY UNITS
0420.18 12" CONCRETE MASONRY UNITS
0440.07 STONE VENEER

DIVISION 05 – METALS

0510.02 STEEL COLUMN (RE: STRUCTURAL)
0510.04 STEEL ANGLE (RE: STRUCTURAL)
0550.80 1/2" STEEL PLATE (RE: STRUCTURAL)

DIVISION 06 – WOOD, PLASTICS, & COMPOSITES

0610.01 SHIM AS REQUIRED
0610.03 2X WOOD BLOCKING
0610.05 1/2" EXTERIOR GRADE PLYWOOD
0610.09 2 X 4 WOOD STUDS AT 16" O.C.
0610.10 2 X 6 WOOD STUDS AT 16" O.C.
0610.20 1X WOOD FURRING STRIP
0610.28 2 X 8 WOOD STUDS AT 16" O.C.
0620.09 WOOD STOP

DIVISION 07 – THERMAL & MOISTURE PROTECTION

0710.01 BITUMINOUS DAMPPROOFING MASTIC
0720.24 RIGID INSULATION
0720.29 8" BATT INSULATION
0720.30 2 1/2" BATT INSULATION
0720.31 5 1/2" BATT INSULATION (R-20 MIN.)
0725.03 PLASTIC FILM AIR BARRIER
0725.04 FLUID APPLIED MEMBRANE AIR BARRIER
0725.05 SELF-ADHERING MEMBRANE FLASHING
0725.06 SELF-ADHERING FLEXIBLE SURROUND FLASHING
0740.04 PREFINISHED METAL WALL PANEL TRIM
0740.13 PREFINISHED CONCEALED FASTENER METAL WALL PANELS
0740.14 METAL WALL PANEL SUB-GIRT
0760.15 PREFINISHED METAL Z-CLIP
0760.23 FOAM CLOSURE (TOP AND BOTTOM). ADHERE INTO PLACE. PAINT TO MATCH ADJACENT SURFACE
0790.01 SEALANT WITH BACKER ROD AS REQUIRED
0790.02 CAULKING

DIVISION 08 – OPENINGS

0810.02 HOLLOW METAL FRAME
0810.05 JAMB ANCHOR (3 PER JAMB)
0810.08 SOLID CORE WOOD DOOR
0830.17 UPWARD-ACTING SECTIONAL DOOR
0830.28 ELECTRIC OPERATED FOLDING DOORS

DIVISION 09 – FINISHES

0920.23 ALUMINUM "F" REGLET
0920.28 5/8" GYPSUM BOARD (TYPE X)
0920.36 J-MOULD, TYPICAL
0920.52 5/8" GYPSUM BOARD, MOISTURE RESISTANT (TYPE X)

DIVISION 10 – SPECIALTIES

1020.24 STAINLESS STEEL SURFACE MOUNTED TOILET PAPER DISPENSER
1020.35 ROBE / TOWEL HOOK
1020.37 WALL-MOUNTED FOLDING SHOWER SEAT. PROVIDE BLOCKING IN WALL AS REQUIRED
1020.38 STAINLESS STEEL SHOWER CURTAIN ROD WITH VINYL CURTAIN AND HOOKS.
1020.41 WALL MOUNTED TOWEL BAR
1020.46 SHOWER SHELF

DIVISION 11 – EQUIPMENT

1130.01 MICROWAVE
1130.02 REFRIGERATOR
1130.05 DISHWASHER
1130.07 CLOTHES DRYER
1130.09 GAS RANGE
1130.14 CLOTHES WASHER

DIVISION 22 – PLUMBING (RE: PLUMBING)

2210.06 FLOOR DRAIN
2240.01 WATER CLOSET. ORIENT FLUSH VALVE TOWARDS ACCESSIBLE SPACE AT ACCESSIBLE STALLS / RESTROOMS
2240.05 STAINLESS STEEL UNDERMOUNT SINK
2240.09 SHOWER HEAD
2240.11 MOP SINK
2240.20 ADA COMPLIANT KITCHEN SINK
2240.23 UNDERMOUNT SINK
2240.25 SHOWER VALVE

BROWN REYNOLDS WATFORD ARCHITECTS
2700 EARL RUDDER FRWY SOUTH
SUITE 400
COLLEGE STATION, TEXAS 77845
979.694.1791
WWW.BRWARCH.COM

AUSTIN ONION CREEK
FIRE & EMS STATION
11112 OLD SAN ANTONIO ROAD
AUSTIN, TEXAS 78748

REVISIONS

DATE	9/23/2016
DRAWN BY	LA, MW
CHECKED BY	RH
PROJECT NO.	214106.00

A1.2
FLOOR PLAN

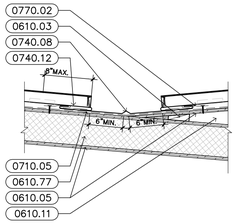

2 ROOF DETAIL RD001
1" = 1'-0"

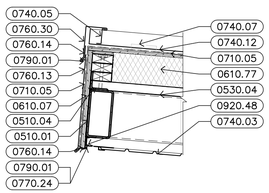

3 ROOF DETAIL RD001
1" = 1'-0"

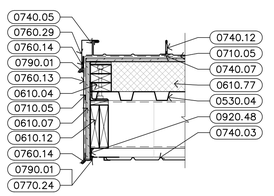

4 ROOF DETAIL RD001
1" = 1'-0"

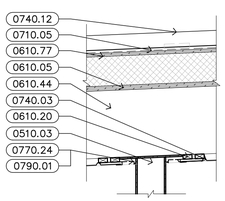

5 ROOF DETAIL RD001
1" = 1'-0"

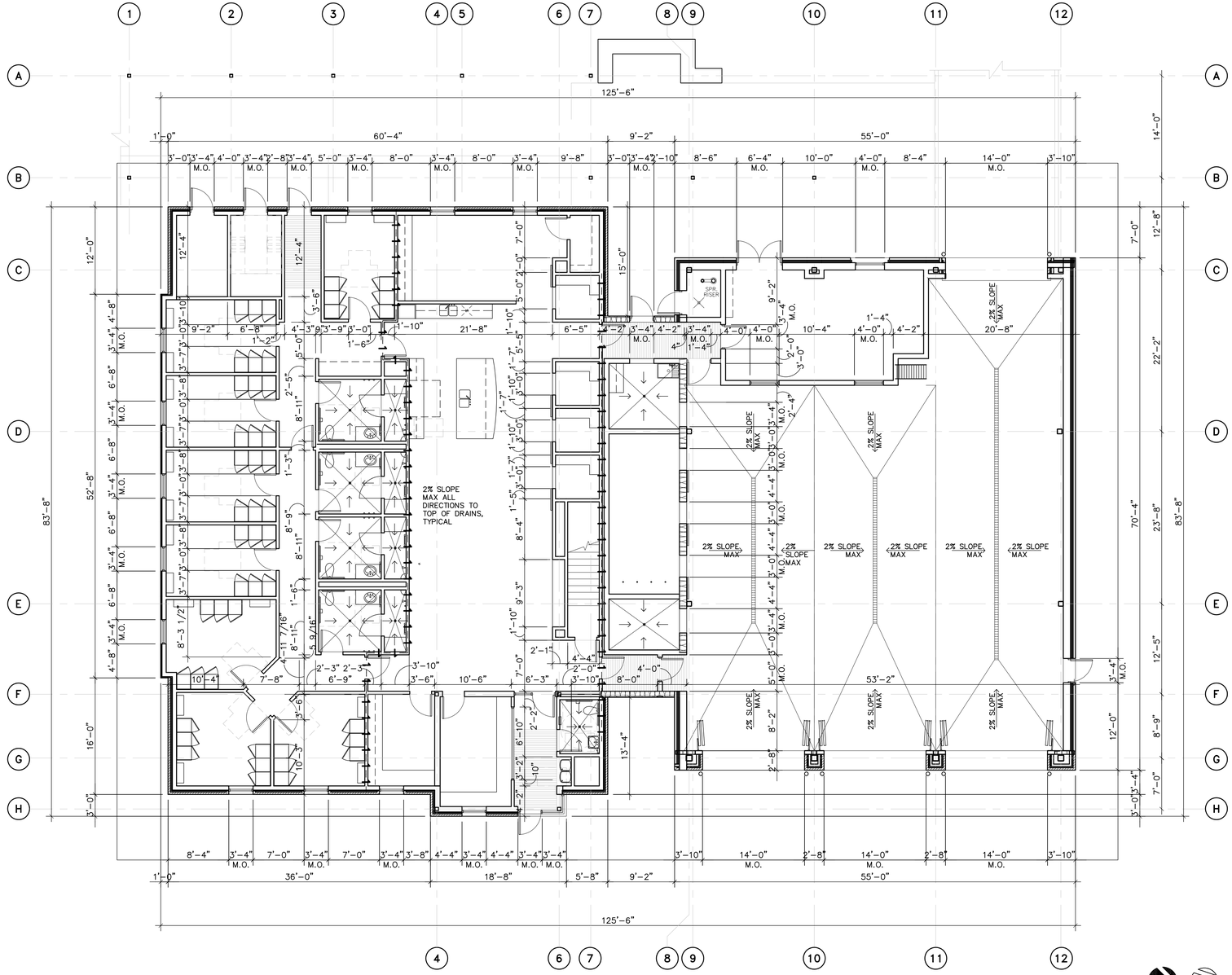

1 DIMENSION PLAN BP001
1/8" = 1'-0"

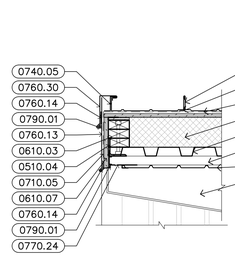

12 NOT USED RD001
1" = 1'-0"

11 NOT USED RD001
1" = 1'-0"

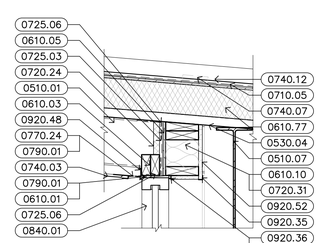

10 ROOF DETAIL RD001
1" = 1'-0"

9 ROOF DETAIL RD001
1" = 1'-0"

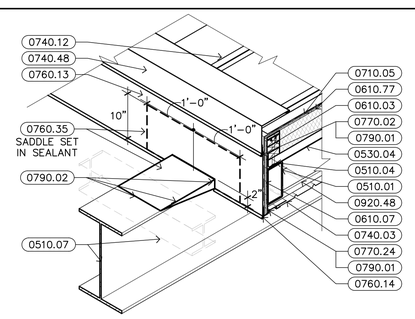

8 ROOF DETAIL (AXON) RD001
3/4" = 1'-0"

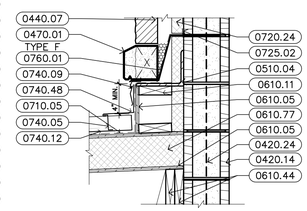

7 ROOF DETAIL RD001
1" = 1'-0"

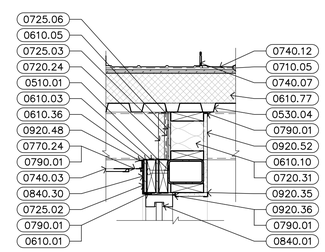

6 ROOF DETAIL RD001
1" = 1'-0"

KEYNOTES

DIVISION 04 – MASONRY

0420.14 8" CONCRETE MASONRY UNITS
0420.24 VERTICAL REINFORCING IN CONCRETE MASONRY UNITS (RE: STRUCTURAL)
0440.07 STONE VENEER
0470.01 CAST STONE

DIVISION 05 – METALS

0510.01 STEEL STRUCTURE (RE: STRUCTURAL)
0510.03 STEEL TUBE COLUMN (RE: STRUCTURAL)
0510.04 STEEL ANGLE (RE: STRUCTURAL)
0510.07 STEEL BEAM (RE: STRUCTURAL)
0530.04 METAL ROOF DECK (RE: STRUCTURAL)

DIVISION 06 – WOOD, PLASTICS, & COMPOSITES

0610.01 SHIM AS REQUIRED
0610.03 2X WOOD BLOCKING
0610.04 2X PRESSURE TREATED WOOD BLOCKING
0610.05 1/2" EXTERIOR GRADE PLYWOOD
0610.07 3/4" EXTERIOR GRADE PLYWOOD
0610.10 2 X 6 WOOD STUDS AT 16" O.C.
0610.11 2 X 6 WOOD FRAMING
0610.12 2 X 8 WOOD FRAMING
0610.20 1X WOOD FURRING STRIP
0610.36 1/2" PLYWOOD
0610.44 2X WOOD FRAMING (RE: STRUCTURAL)
0610.77 COMPOSITE NAIL BASE INSULATED ROOF SHEATHING

DIVISION 07 – THERMAL & MOISTURE PROTECTION

0710.05 ROOFING UNDERLAYMENT
0720.24 RIGID INSULATION
0720.31 5 1/2" BATT INSULATION (R–20 MIN.)
0725.02 SELF–ADHERING SHEET DAMPPROOFING
0725.03 PLASTIC FILM AIR BARRIER
0725.06 SELF–ADHERING FLEXIBLE SURROUND FLASHING
0740.03 PREFINISHED METAL WALL / SOFFIT PANEL WITH REVEALS
0740.05 Z–CLOSURE BY PREFINISHED METAL ROOFING MANUFACTURER
0740.07 CONCEALED STEEL CLIP BY STANDING SEAM METAL ROOF MANUFACTURER
0740.08 VALLEY FLASHING BY STANDING SEAM METAL ROOF MAUNFACTURER
0740.09 METAL REGLET W/ SEALANT & COUNTERFLASHING BY PREFINISHED METAL ROOFING MANUFACTURER
0740.12 PREFINISHED METAL STANDING SEAM ROOFING
0740.48 PREFINISHED HIGH EAVE FLASHING BY METAL ROOFING MANUFACTURER
0760.01 THROUGH–WALL FLASHING (WITH WEEPS AT 2'–0" O.C.) AND MORTAR NET
0760.13 PREFINISHED METAL FASCIA
0760.14 PREFINISHED METAL CLEAT
0760.29 PREFINISHED RAKEWALL TRIM
0760.30 PREFINISHED EAVE TRIM
0760.35 PREFINISHED METAL COUNTERFLASHING
0770.02 CONTINUOUS CLEAT
0770.24 VENTED SCREED (F–MOLDING)
0790.01 SEALANT WITH BACKER ROD AS REQUIRED
0790.02 CAULKING

DIVISION 08 – OPENINGS

0840.01 ALUMINUM STOREFRONT
0840.30 .060 ALUMINUM BRAKE METAL; FINISH TO MATCH STOREFRONT

DIVISION 09 – FINISHES

0920.35 CORNER BEAD, TYPICAL
0920.36 J–MOULD, TYPICAL
0920.48 1 1/2" NON–STRUCTURAL METAL CHANNEL
0920.52 5/8" GYPSUM BOARD, MOISTURE RESISTANT (TYPE X)

BROWN REYNOLDS WATFORD ARCHITECTS
2700 EARL RUDDER FRWY SOUTH
SUITE 4000
COLLEGE STATION, TEXAS 77845
979.694.1791
WWW.BRWARCH.COM

AUSTIN ONION CREEK
FIRE & EMS STATION
11112 OLD SAN ANTONIO ROAD
AUSTIN, TEXAS 78748

REVISIONS

DATE	9/23/2016
DRAWN BY	LA, MW
CHECKED BY	RH
PROJECT NO.	214106.00

A1.3

DIMENSION PLAN

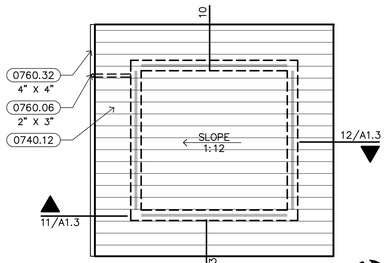

2 TOWER ROOF PLAN
1/8" = 1'-0" RP001

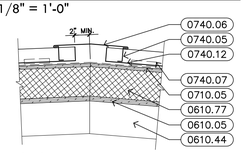

3 ROOF DETAIL
1" = 1'-0" RD001

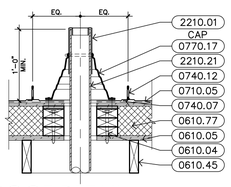

4 ROOF DETAIL
1" = 1'-0" RD001

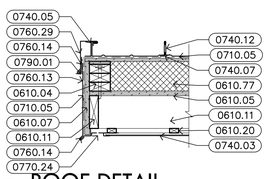

5 ROOF DETAIL
1" = 1'-0" RD001

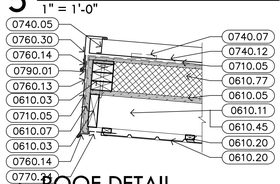

6 ROOF DETAIL
1" = 1'-0" RD001

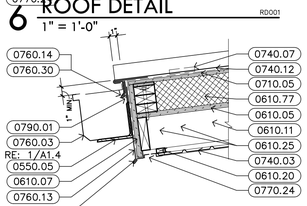

14 ROOF DETAIL
1" = 1'-0" RD001

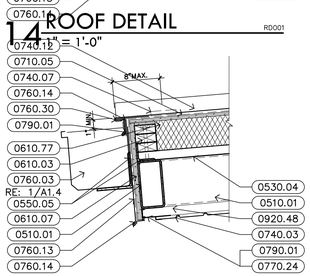

13 ROOF DETAIL
1" = 1'-0" RD001

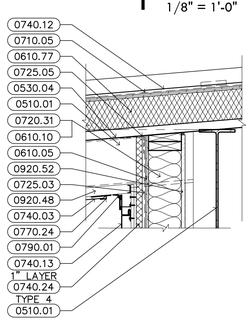

12 ROOF DETAIL
1" = 1'-0" RD001

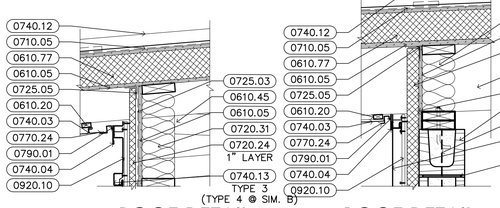

11 ROOF DETAIL
1" = 1'-0" RD001

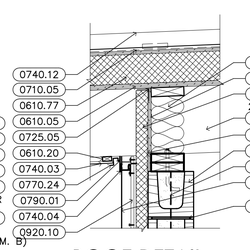

10 ROOF DETAIL
1" = 1'-0" RD001

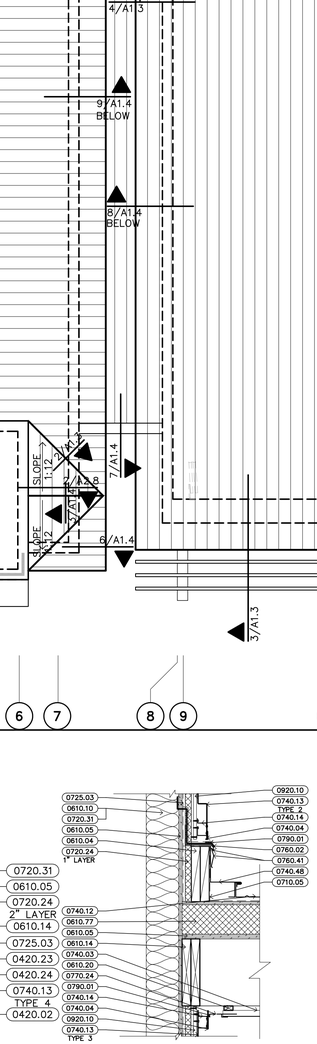

9 ROOF DETAIL
1" = 1'-0" RD001

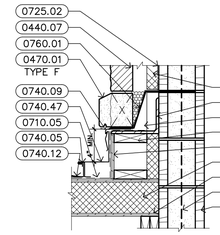

8 ROOF DETAIL
1" = 1'-0" RD001

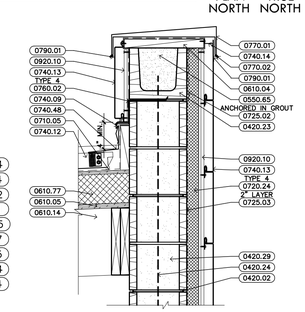

7 ROOF DETAIL
1" = 1'-0" RD001

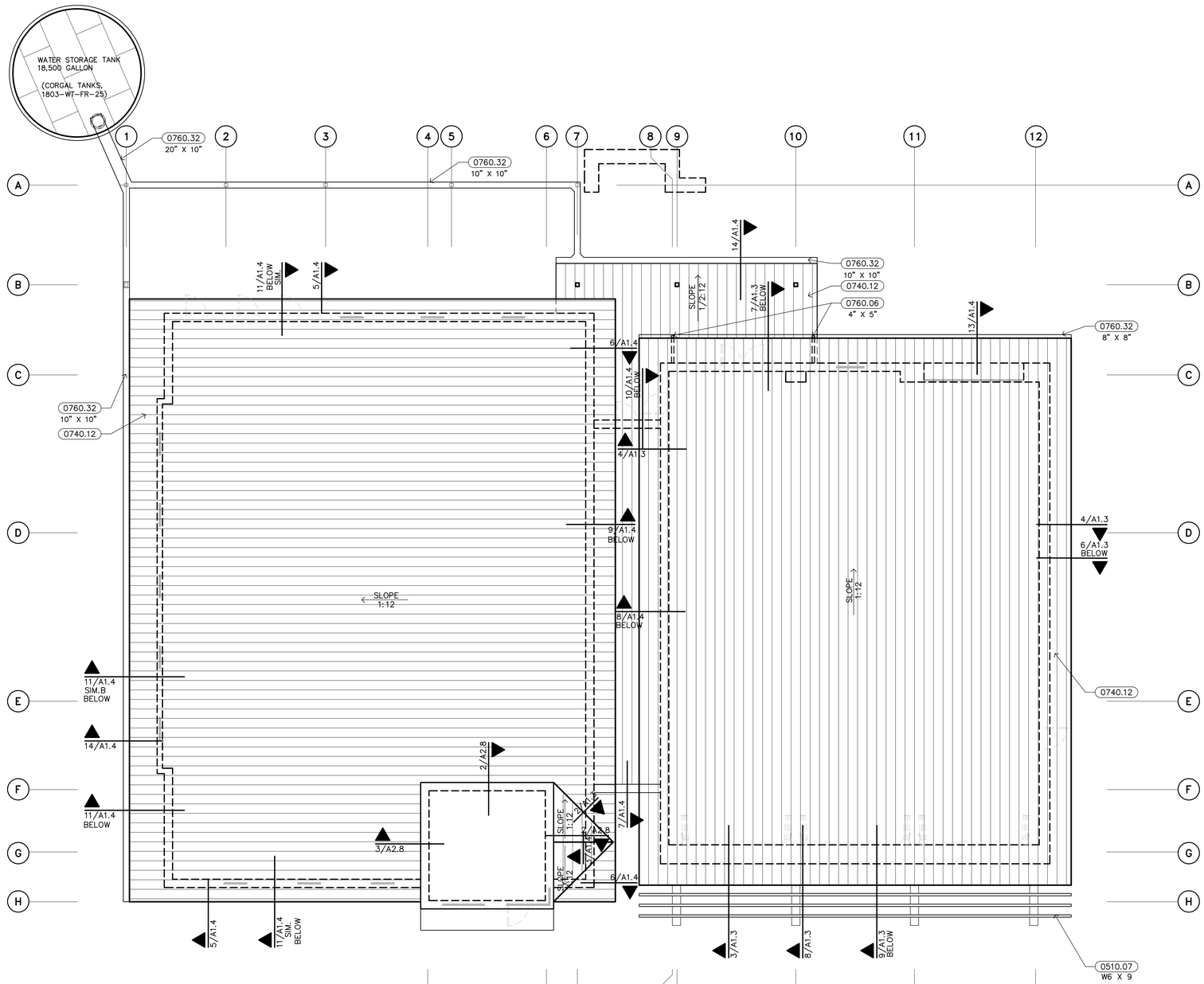

1 ROOF PLAN
1/8" = 1'-0" RP001

KEYNOTES

DIVISION 04 – MASONRY

0420.02 HORIZONTAL REINFORCING AT 16" O.C. VERTICALLY
0420.14 8" CONCRETE MASONRY UNITS
0420.23 CONCRETE MASONRY UNIT BOND BEAM
0420.24 VERTICAL REINFORCING IN CONCRETE MASONRY UNITS (RE: STRUCTURAL)
0420.29 10" CONCRETE MASONRY UNITS
0440.07 STONE VENEER
0470.01 CAST STONE

DIVISION 05 – METALS

0510.01 STEEL STRUCTURE (RE: STRUCTURAL)
0510.04 STEEL ANGLE (RE: STRUCTURAL)
0510.07 STEEL BEAM (RE: STRUCTURAL)
0530.04 METAL ROOF DECK (RE: STRUCTURAL)
0550.05 5" X 5" X 1/4" STEEL ANGLE
0550.65 METAL FASTENER

DIVISION 06 – WOOD, PLASTICS, & COMPOSITES

0610.03 2X WOOD BLOCKING
0610.04 2X PRESSURE TREATED WOOD BLOCKING
0610.05 1/2" EXTERIOR GRADE PLYWOOD
0610.07 3/4" EXTERIOR GRADE PLYWOOD
0610.10 2 X 6 WOOD STUDS AT 16" O.C.
0610.11 2 X 6 WOOD FRAMING
0610.14 2 X 12 WOOD FRAMING
0610.20 1X WOOD FURRING STRIP
0610.25 GLUE-LAMINATED BEAM
0610.44 2X WOOD FRAMING (RE: STRUCTURAL)
0610.45 PRE-FABRICATED WOOD TRUSS (RE: STRUCTURAL)
0610.77 COMPOSITE NAIL BASE INSULATED ROOF SHEATHING

DIVISION 07 – THERMAL & MOISTURE PROTECTION

0710.05 ROOFING UNDERLAYMENT
0720.24 RIGID INSULATION
0720.31 5 1/2" BATT INSULATION (R-20 MIN.)
0725.02 SELF-ADHERING SHEET DAMPPROOFING
0725.03 PLASTIC FILM AIR BARRIER
0725.05 SELF-ADHERING MEMBRANE FLASHING
0740.03 PREFINISHED METAL WALL / SOFFIT PANEL WITH REVEALS
0740.04 PREFINISHED METAL WALL PANEL TRIM
0740.05 Z-CLOSURE BY PREFINISHED METAL ROOFING MANUFACTURER
0740.06 RIDGE COVER BY PREFINISHED METAL ROOFING MANUFACTURER
0740.07 CONCEALED STEEL CLIP BY STANDING SEAM METAL ROOF MANUFACTURER
0740.09 METAL REGLET W/ SEALANT & COUNTERFLASHING BY PREFINISHED METAL ROOFING MANUFACTURER
0740.12 PREFINISHED METAL STANDING SEAM ROOFING
0740.13 PREFINISHED CONCEALED FASTENER METAL WALL PANELS
0740.14 METAL WALL PANEL SUB-GIRT
0740.24 VINYL SOFFIT (FULLY VENTED)
0740.47 PREFINISHED CONTINUOUS RAKE FLASHING BY METAL ROOFING MANUFACTURER
0740.48 PREFINISHED HIGH EAVE FLASHING BY METAL ROOFING MANUFACTURER
0760.01 THROUGH-WALL FLASHING (WITH WEEPS AT 2'-0" O.C.) AND MORTAR NET
0760.02 THROUGH-WALL FLASHING
0760.03 PREFINISHED METAL GUTTER
0760.06 PREFINISHED METAL DOWNSPOUT
0760.13 PREFINISHED METAL FASCIA
0760.14 PREFINISHED METAL CLEAT
0760.29 PREFINISHED RAKEWALL TRIM
0760.30 PREFINISHED EAVE TRIM
0760.32 PREFINISHED METAL GUTTER
0760.41 METAL REGLET WITH SEALANT AND COUNTERFLASHING
0770.01 PREFINISHED METAL COPING SYSTEM
0770.02 CONTINUOUS CLEAT
0770.17 PREFABRICATED PIPE BOOT/PORTAL SYSTEM WITH METAL COLLAR
0770.24 VENTED SCREED (F-MOLDING)
0790.01 SEALANT WITH BACKER ROD AS REQUIRED

DIVISION 09 – FINISHES

0920.10 7/8" FURRING CHANNELS AT 16" O.C.
0920.48 1 1/2" NON-STRUCTURAL METAL CHANNEL
0920.52 5/8" GYPSUM BOARD, MOISTURE RESISTANT (TYPE X)

DIVISION 22 – PLUMBING (RE: PLUMBING)

2210.01 PLUMBING VENT
2210.21 SANITARY WASTE AND VENT PIPING

BROWN REYNOLDS WATFORD ARCHITECTS
2700 EARL RUDDER FRWY SOUTH
SUITE 400
COLLEGE STATION, TEXAS 77845
979.694.1791
WWW.BRWARCH.COM

REGISTERED ARCHITECT MARK E. WATFORD 9241 STATE OF TEXAS
09/23/16

AUSTIN ONION CREEK
FIRE & EMS STATION
11112 OLD SAN ANTONIO ROAD
AUSTIN, TEXAS 78748

REVISIONS

DATE	9/23/2016
DRAWN BY	LA, MW
CHECKED BY	RH
PROJECT NO.	214106.00

A1.4

DIMENSION PLAN

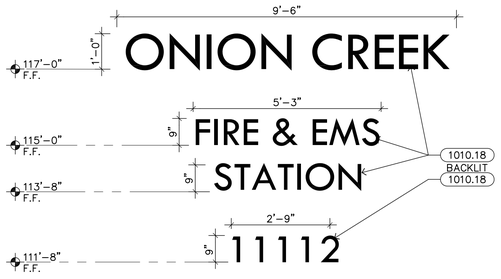

2 SIGNAGE DETAIL
1/2" = 1'-0"

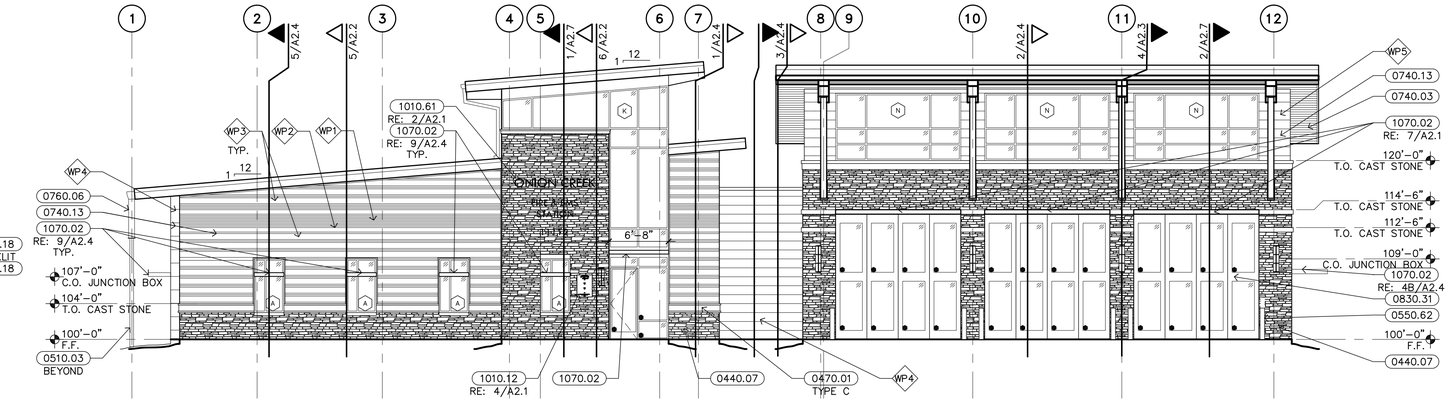

1 EAST ELEVATION
1/8" = 1'-0"

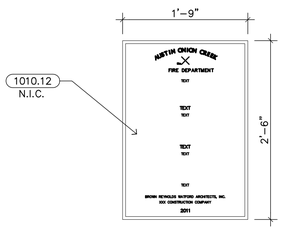

4 PLAQUE DETAIL
1/8" = 1'-0"

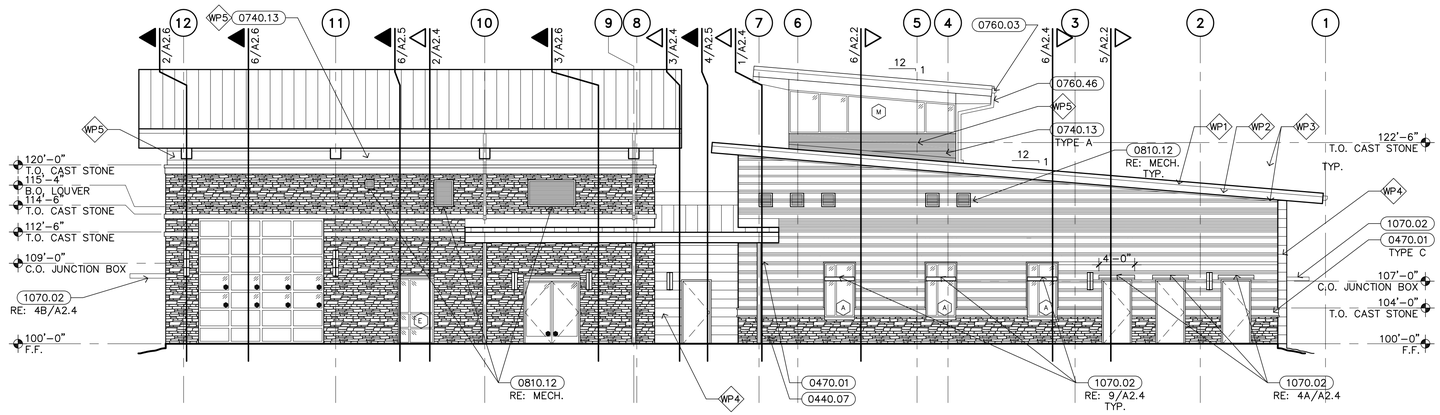

3 WEST ELEVATION
1/8" = 1'-0"

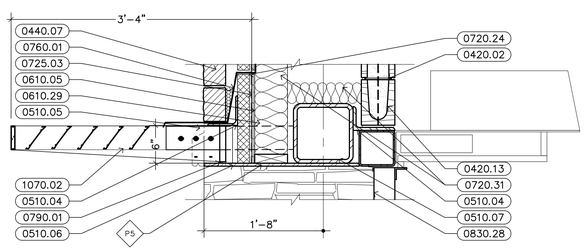

6 DOOR/SHADING DEVICE DETAIL
1" = 1'-0"

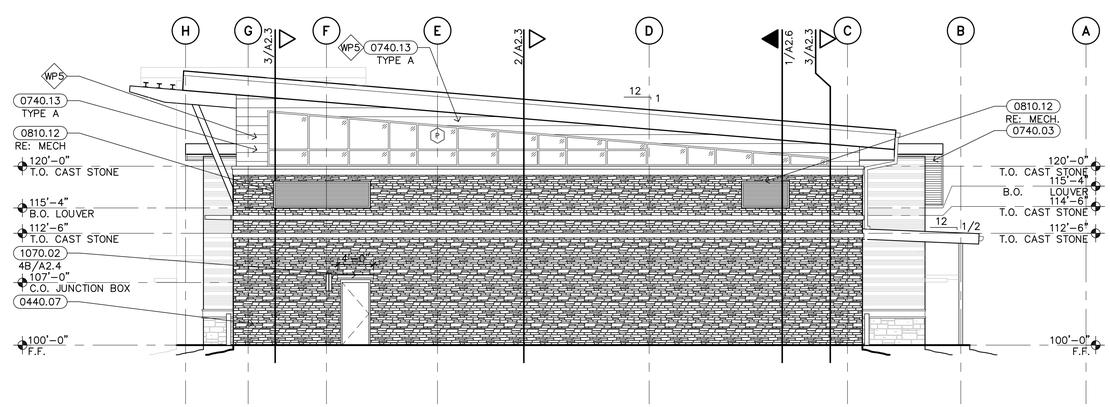

5 NORTH ELEVATION
1/8" = 1'-0"

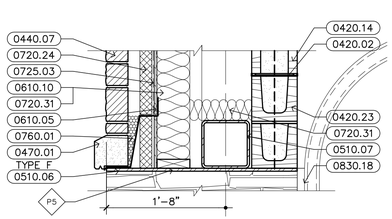

8 SECTIONAL DOOR DETAIL
1" = 1'-0"

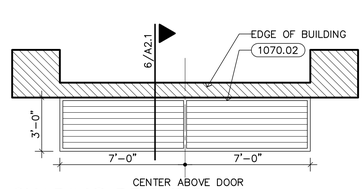

7 SHADING DEVICE PLAN
1/4" = 1'-0"

KEYNOTES

DIVISION 04 – MASONRY

0420.02 HORIZONTAL REINFORCING AT 16" O.C. VERTICALLY
0420.13 6" CONCRETE MASONRY UNITS
0440.07 STONE VENEER
0470.01 CAST STONE

DIVISION 05 – METALS

0510.03 STEEL TUBE COLUMN (RE: STRUCTURAL)
0510.04 STEEL ANGLE (RE: STRUCTURAL)
0510.05 STEEL CHANNEL (RE: STRUCTURAL)
0510.06 STEEL LINTEL / PLATE (RE: STRUCTURAL)
0510.07 STEEL BEAM (RE: STRUCTURAL)
0550.62 6" PIPE BOLLARD. FILL WITH CONCRETE

DIVISION 06 – WOOD, PLASTICS, & COMPOSITES

0610.05 1/2" EXTERIOR GRADE PLYWOOD
0610.29 2X WOOD HEADER (RE: STRUCTURAL)

DIVISION 07 – THERMAL & MOISTURE PROTECTION

0720.24 RIGID INSULATION
0720.31 5 1/2" BATT INSULATION (R-20 MIN.)
0725.03 PLASTIC FILM AIR BARRIER
0740.03 PREFINISHED METAL WALL / SOFFIT PANEL WITH REVEALS
0740.13 PREFINISHED CONCEALED FASTENER METAL WALL PANELS
0760.01 THROUGH-WALL FLASHING (WITH WEEPS AT 2'-0" O.C.) AND MORTAR NET
0760.03 PREFINISHED METAL GUTTER
0760.06 PREFINISHED METAL DOWNSPOUT
0760.46 PREFINISHED DOWNSPOUT
0790.01 SEALANT WITH BACKER ROD AS REQUIRED

DIVISION 08 – OPENINGS

0810.12 PREFINISHED ALUMINUM LOUVER
0830.28 ELECTRIC OPERATED FOLDING DOORS
0830.31 BIFOLD DOOR

DIVISION 10 – SPECIALTIES

1010.12 CAST BRONZE PLAQUE
1010.18 METAL LETTERING
1010.61 EXTERIOR METAL SIGNAGE
1070.02 PRE-MANUFACTERED EXTERIOR SUN CONTROL DEVICES

LEGEND

SYMBOL	DESCRIPTION
	SELF-ADHERING SHEET DAMP PROOFING AT ALL WALL-ABOVE-ROOF CONDITIONS
	STONE: "LEE VALLEY BLEND 4122" BY QUALITY STONE, LEDGESTONE
WP1	METAL PANEL: "MX 1.0" BY MORIN, 20 GA, DOVE GRAY
WP2	METAL PANEL: "MX 2.0" BY MORIN, 20 GA, DOVE GRAY
WP3	METAL PANEL: "MX 4.0" BY MORIN, 20 GA, DOVE GRAY
WP4	METAL PANEL: "F-12-S" BY MORIN, 20 GA, COLONIAL RED
WP5	METAL PANEL: "F-12-S" BY MORIN, 20 GA, DOVE GRAY

09/23/16

BROWN REYNOLDS WATFORD ARCHITECTS
2700 EARL RUDDER FRWY SOUTH
SUITE 4000
COLLEGE STATION, TEXAS 77845
979.694.1791
WWW.BRWARCH.COM

AUSTIN ONION CREEK FIRE & EMS STATION
11112 OLD SAN ANTONIO ROAD
AUSTIN, TEXAS 78748

REVISIONS

DATE	9/23/2016
DRAWN BY	LA, MW
CHECKED BY	RH
PROJECT NO.	214106.00

A2.1

EXTERIOR ELEVATIONS

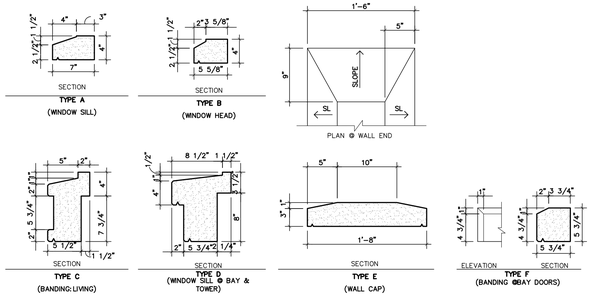

2 EXTERIOR DETAIL
1" = 1'-0"

ED001

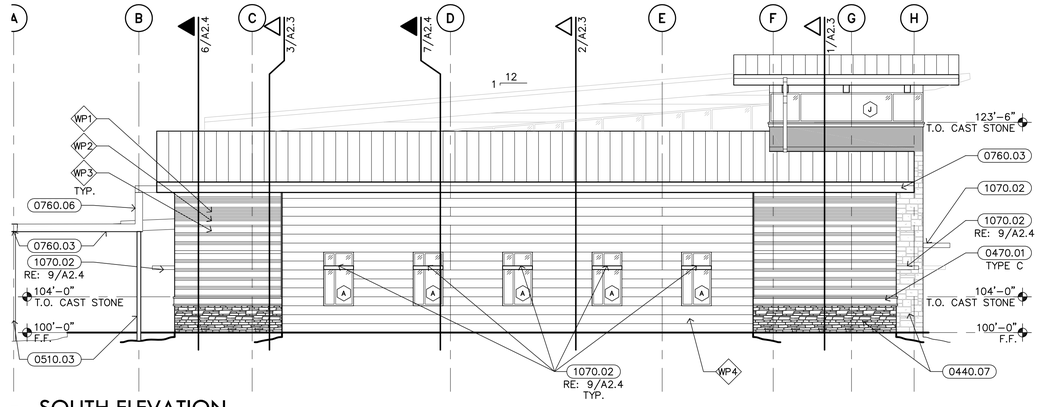

1 SOUTH ELEVATION
1/8" = 1'-0"

EE001

KEYNOTES

DIVISION 04 – MASONRY

0440.07 STONE VENEER
0470.01 CAST STONE

DIVISION 05 – METALS

0510.03 STEEL TUBE COLUMN (RE: STRUCTURAL)

DIVISION 06 – WOOD, PLASTICS, & COMPOSITES

0640.42 PLASTIC LAMINATE WARDROBE / LOCKER

DIVISION 07 – THERMAL & MOISTURE PROTECTION

0740.13 PREFINISHED CONCEALED FASTENER METAL WALL PANELS
0760.03 PREFINISHED METAL GUTTER
0760.06 PREFINISHED METAL DOWNSPOUT

DIVISION 08 – OPENINGS

0840.01 ALUMINUM STOREFRONT

DIVISION 09 – FINISHES

0950.01 SUSPENDED ACOUSTICAL LAY-IN TILE CEILING (2' X 2')
0960.13 4" RESILIENT BASE
0980.05 2" THICK, FABRIC-WRAPPED ACOUSTICAL WALL PANELS

DIVISION 10 – SPECIALTIES

1070.02 PRE-MANUFACTERED EXTERIOR SUN CONTROL DEVICES

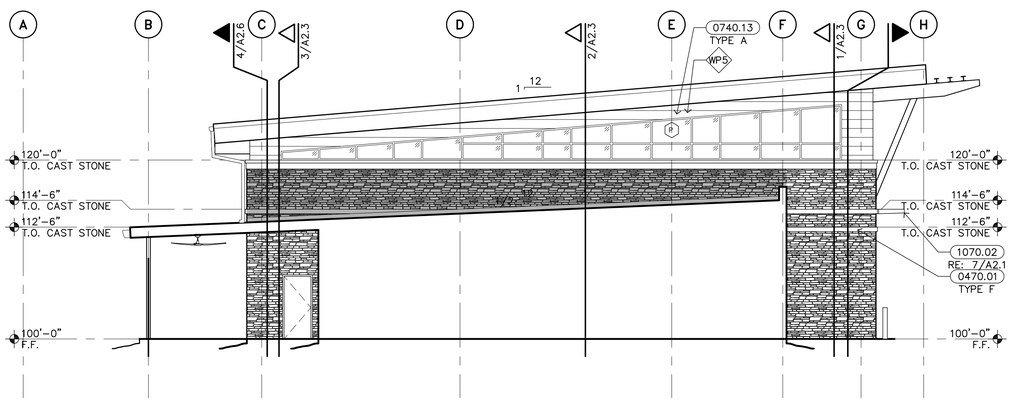

4 SOUTH ELEVATION
1/8" = 1'-0"

EE001

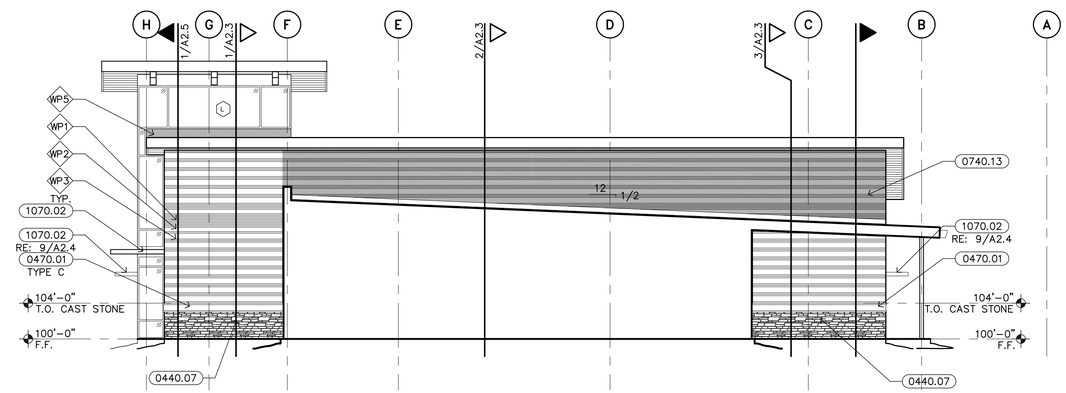

3 NORTH ELEVATION
1/8" = 1'-0"

EE001

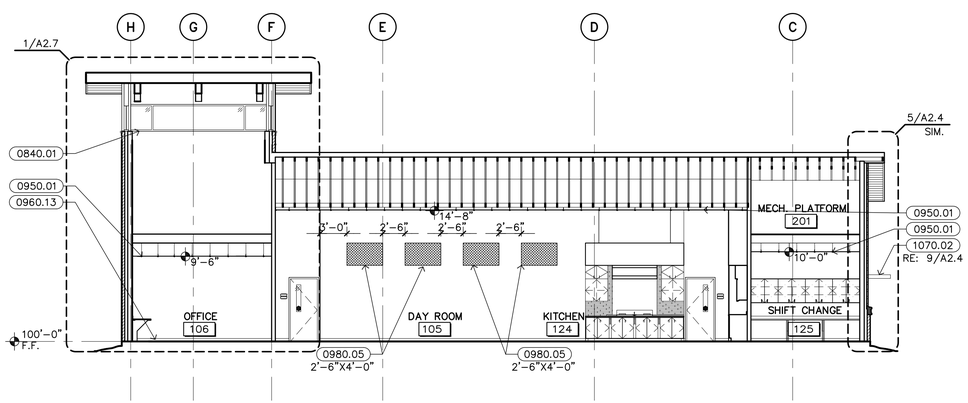

6 BUILDING SECTION
1/8" = 1'-0"

BS001

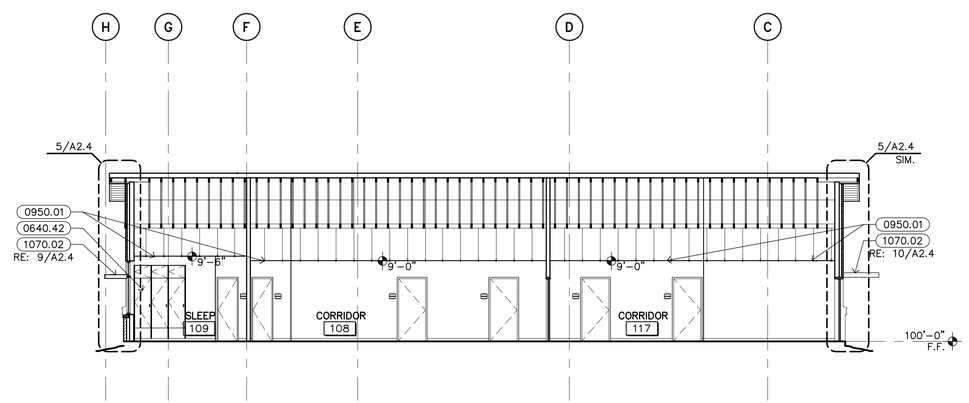

5 BUILDING SECTION
1/8" = 1'-0"

BS001

LEGEND

SYMBOL	DESCRIPTION
	SELF-ADHERING SHEET DAMP PROOFING AT ALL WALL-ABOVE-ROOF CONDITIONS
	STONE: "LEE VALLEY BLEND 4122" BY QUALITY STONE, LEDGESTONE
WP1	METAL PANEL: "MX 1.0" BY MORIN, 20 GA, DOVE GRAY
WP2	METAL PANEL: "MX 2.0" BY MORIN, 20 GA, DOVE GRAY
WP3	METAL PANEL: "MX 4.0" BY MORIN, 20 GA, DOVE GRAY
WP4	METAL PANEL: "F-12-S" BY MORIN, 20 GA, COLONIAL RED
WP5	METAL PANEL: "F-12-S" BY MORIN, 20 GA, DOVE GRAY

REVISIONS

BROWN REYNOLDS WATFORD ARCHITECTS
2700 EARL RUDDER FRWY SOUTH
SUITE 4000
COLLEGE STATION, TEXAS 77845
979.694.1791
WWW.BRWARCH.COM

REGISTERED ARCHITECT WILLIAM E. WATFORD 9241 STATE OF TEXAS
09/23/16

AUSTIN ONION CREEK FIRE & EMS STATION
11112 OLD SAN ANTONIO ROAD
AUSTIN, TEXAS 78748

DATE	9/23/2016
DRAWN BY	LA, MW
CHECKED BY	RH
PROJECT NO.	214106.00

A2.2

EXTERIOR ELEVATIONS

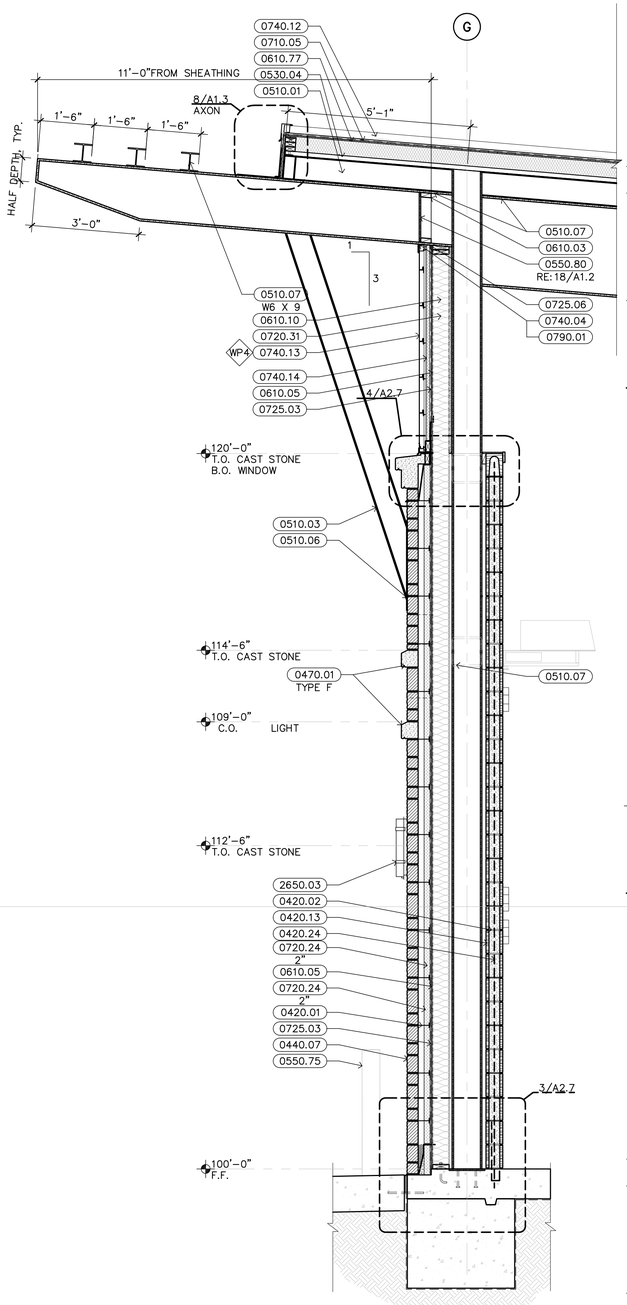

4 WALL SECTION
1/2" = 1'-0"

WS001

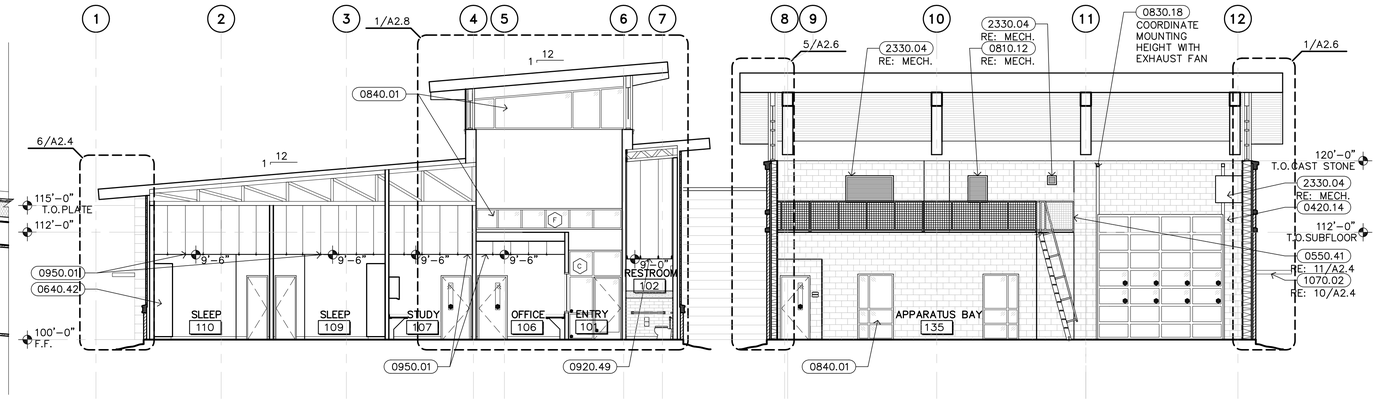

1 BUILDING SECTION
1/8" = 1'-0"

EE001

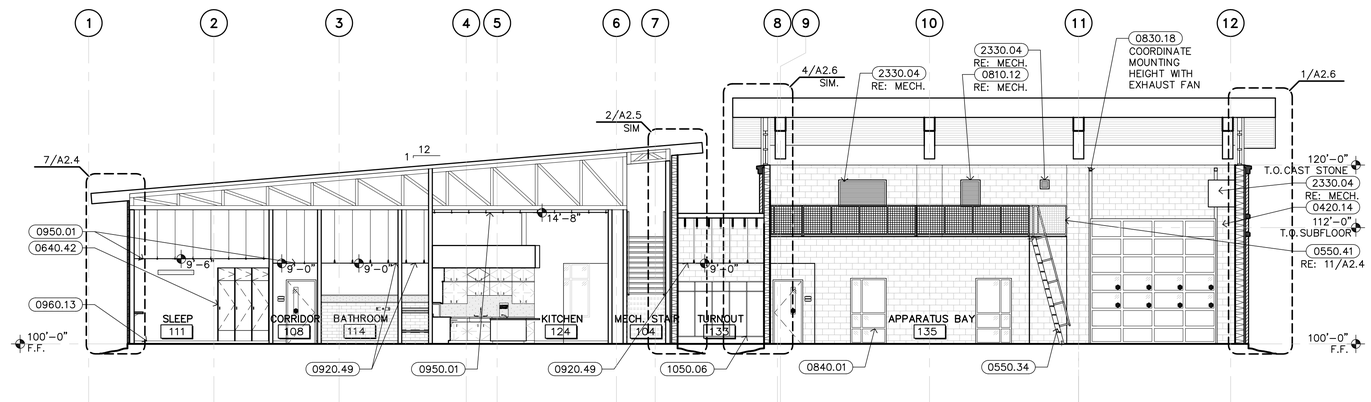

2 BUILDING SECTION
1/8" = 1'-0"

EE001

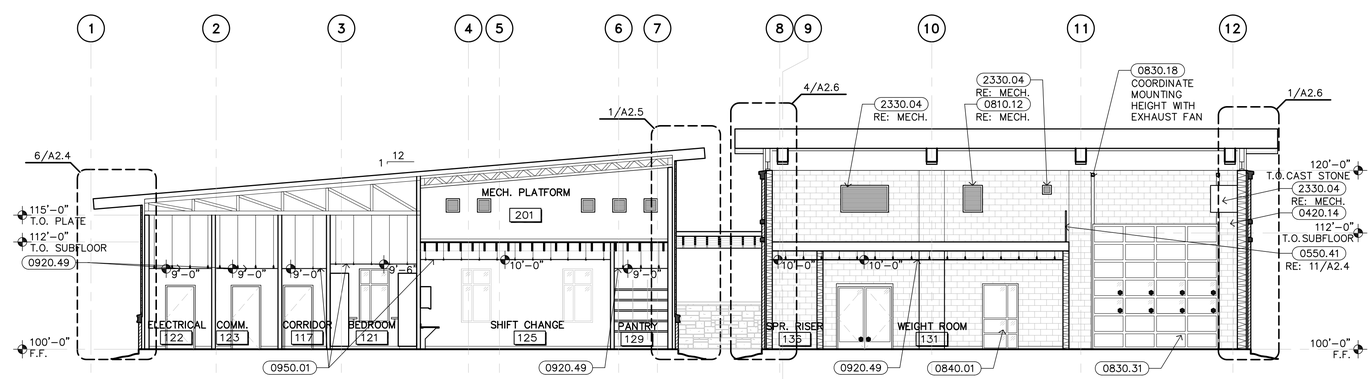

3 BUILDING SECTION
1/8" = 1'-0"

EE001

KEYNOTES

DIVISION 04 – MASONRY

0420.01 ADJUSTABLE MASONRY WALL TIES AT 16" O.C.E.W.
0420.02 HORIZONTAL REINFORCING AT 16" O.C. VERTICALLY
0420.13 6" CONCRETE MASONRY UNITS
0420.14 8" CONCRETE MASONRY UNITS
0420.24 VERTICAL REINFORCING IN CONCRETE MASONRY UNITS (RE: STRUCTURAL)
0440.07 STONE VENEER
0470.01 CAST STONE

DIVISION 05 – METALS

0510.01 STEEL STRUCTURE (RE: STRUCTURAL)
0510.03 STEEL TUBE COLUMN (RE: STRUCTURAL)
0510.06 STEEL LINTEL / PLATE (RE: STRUCTURAL)
0510.07 STEEL BEAM (RE: STRUCTURAL)
0530.04 METAL ROOF DECK (RE: STRUCTURAL)
0550.34 METAL SHIPS LADDER
0550.41 1 1/4" STANDARD STEEL PIPE GUARDRAIL (3'-6" HIGH)
0550.75 6" PIPE BOLLARD
0550.80 1/2" STEEL PLATE (RE: STRUCTURAL)

DIVISION 06 – WOOD, PLASTICS, & COMPOSITES

0610.03 2X WOOD BLOCKING
0610.05 1/2" EXTERIOR GRADE PLYWOOD
0610.10 2 X 6 WOOD STUDS AT 16" O.C.
0610.77 COMPOSITE NAIL BASE INSULATED ROOF SHEATHING
0640.42 PLASTIC LAMINATE WARDROBE / LOCKER

DIVISION 07 – THERMAL & MOISTURE PROTECTION

0710.05 ROOFING UNDERLAYMENT
0720.24 RIGID INSULATION
0720.31 5 1/2" BATT INSULATION (R–20 MIN.)
0725.03 PLASTIC FILM AIR BARRIER
0725.06 SELF–ADHERING FLEXIBLE SURROUND FLASHING
0740.04 PREFINISHED METAL WALL PANEL TRIM
0740.12 PREFINISHED METAL STANDING SEAM ROOFING
0740.13 PREFINISHED CONCEALED FASTENER METAL WALL PANELS
0740.14 METAL WALL PANEL SUB–GIRT
0790.01 SEALANT WITH BACKER ROD AS REQUIRED

DIVISION 08 – OPENINGS

0810.12 PREFINISHED ALUMINUM LOUVER
0830.18 UPWARD–ACTING SECTIONAL DOOR TRACK
0830.31 BIFOLD DOOR
0840.01 ALUMINUM STOREFRONT

DIVISION 09 – FINISHES

0920.49 5/8" GYPSUM BOARD ON METAL SUSPENSION SYSTEM
0950.01 SUSPENDED ACOUSTICAL LAY–IN TILE CEILING (2' X 2')
0960.13 4" RESILIENT BASE

DIVISION 10 – SPECIALTIES

1050.06 BUNKER GEAR RACK
1070.02 PRE–MANUFACTERED EXTERIOR SUN CONTROL DEVICES

DIVISION 23 – HEATING, VENTILATING, & AIR–CONDITIONING (HVAC) (RE: MECHANICAL)

2330.04 EXHAUST FAN

DIVISION 26 – ELECTRICAL (RE: ELECTRICAL)

2650.03 SURFACE–MOUNTED LIGHT FIXTURE

09/23/16

BROWN REYNOLDS WATFORD ARCHITECTS
2700 EARL RUDDER FRWY SOUTH
SUITE 4000
COLLEGE STATION, TEXAS 77845
979.694.1791
WWW.BRWARCH.COM

AUSTIN ONION CREEK
FIRE & EMS STATION
11112 OLD SAN ANTONIO ROAD
AUSTIN, TEXAS 78748

REVISIONS

DATE	9/23/2016
DRAWN BY	LA, MW
CHECKED BY	RH
PROJECT NO.	214106.00

A2.3

BUILDING SECTIONS

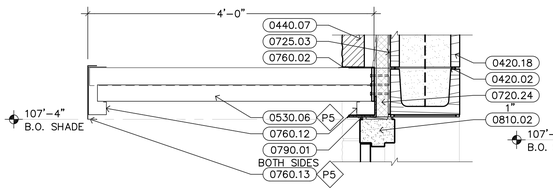

4B OVERHEAD CANOPY DETAIL
1" = 1'-0" ED006

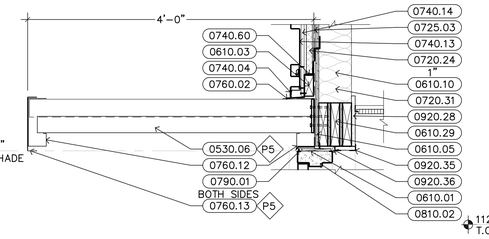

4A OVERHEAD CANOPY DETAIL
1" = 1'-0" ED006

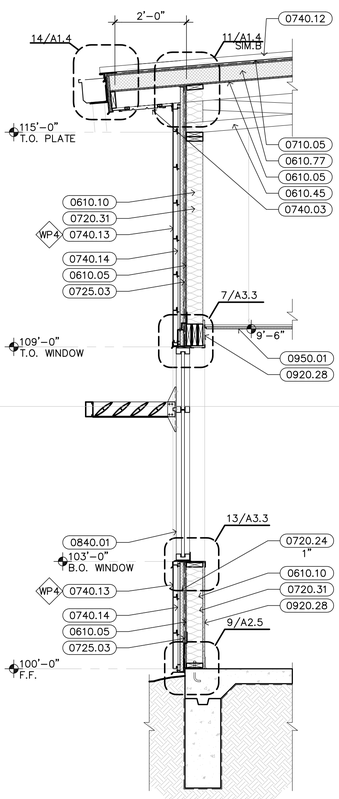

7 WALL SECTION
1/2" = 1'-0" WS001

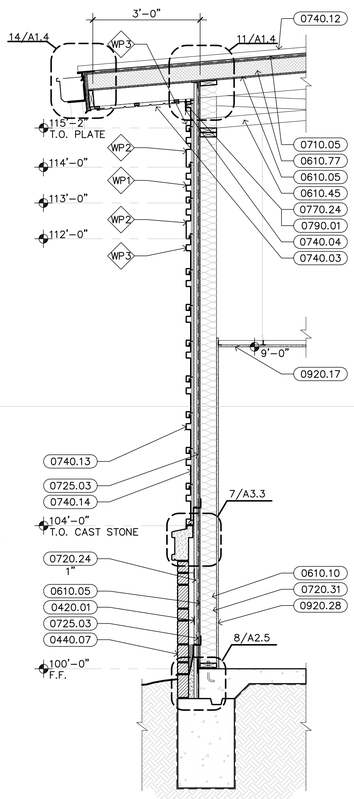

6 WALL SECTION
1/2" = 1'-0" WS001

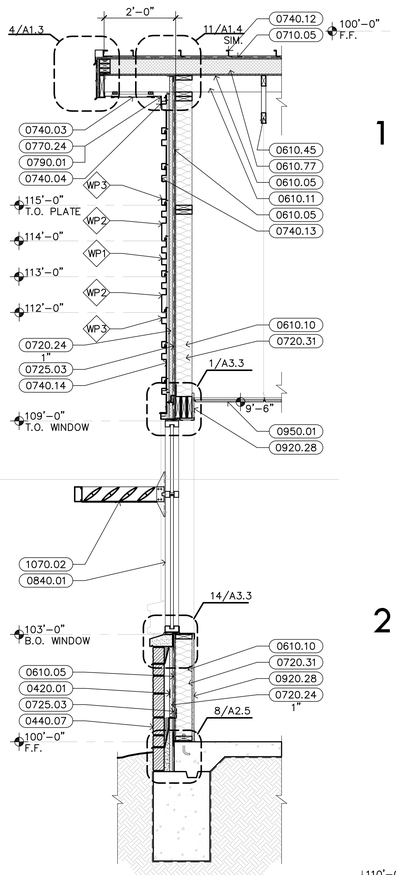

5 WALL SECTION
1/2" = 1'-0" WS001

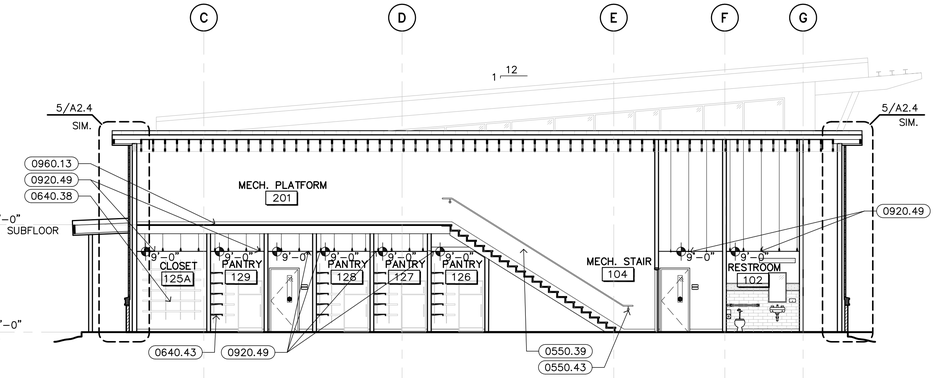

1 BUILDING SECTION
1/8" = 1'-0" BS001

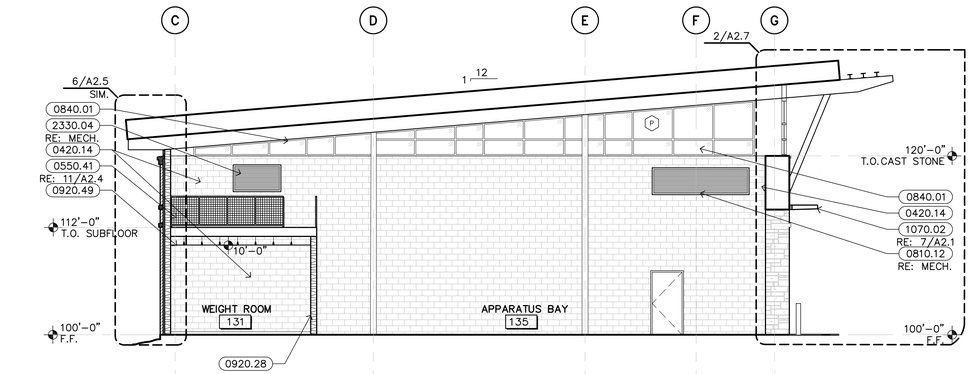

2 BUILDING SECTION
1/8" = 1'-0" BS001

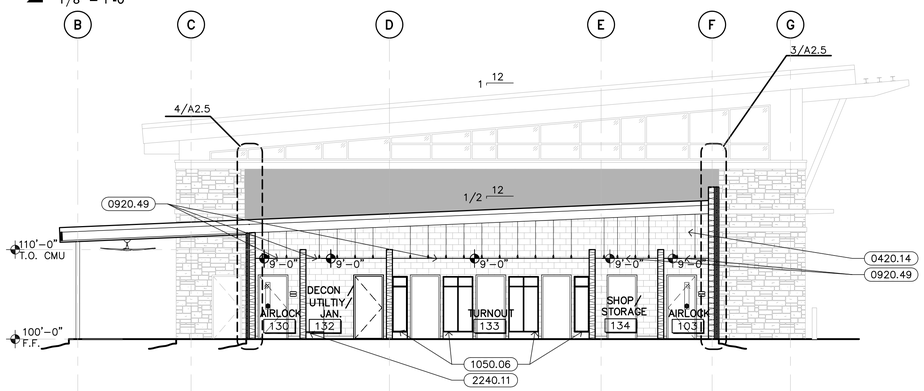

3 BUILDING SECTION
1/8" = 1'-0" BS001

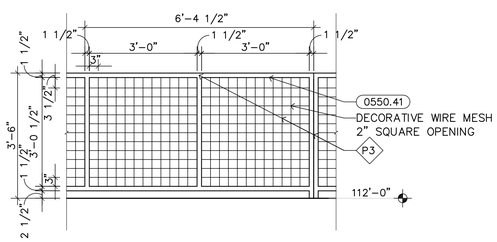

11 METAL RAILING DETAIL
1" = 1'-0" ID006

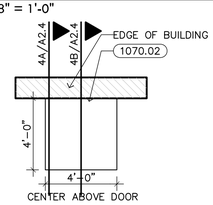

10 SHADING PLAN
1/4" = 1'-0" ED007

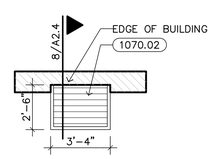

9 SHADING PLAN
1/4" = 1'-0" ED007

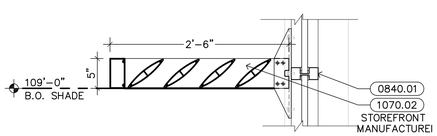

8 SHADING DEVICE DETAIL
1" = 1'-0" ED006

KEYNOTES

DIVISION 04 – MASONRY

0420.01 ADJUSTABLE MASONRY WALL TIES AT 16" O.C.E.W.
0420.02 HORIZONTAL REINFORCING AT 16" O.C. VERTICALLY
0420.14 8" CONCRETE MASONRY UNITS
0420.18 12" CONCRETE MASONRY UNITS
0440.07 STONE VENEER

DIVISION 05 – METALS

0530.06 2 3/4" METAL DECK
0550.39 1 1/4" DIAMETER STANDARD STEEL PIPE HANDRAIL (3'-0" HIGH U.N.O.)
0550.41 1 1/4" STANDARD STEEL PIPE GUARDRAIL (3'-6" HIGH)
0550.43 HANDRAIL BRACKET

DIVISION 06 – WOOD, PLASTICS, & COMPOSITES

0610.01 SHIM AS REQUIRED
0610.03 2X WOOD BLOCKING
0610.05 1/2" EXTERIOR GRADE PLYWOOD
0610.10 2 X 6 WOOD STUDS AT 16" O.C.
0610.11 2 X 6 WOOD FRAMING
0610.29 2X WOOD HEADER (RE: STRUCTURAL)
0610.45 PRE-FABRICATED WOOD TRUSS (RE: STRUCTURAL)
0610.77 COMPOSITE NAIL BASE INSULATED ROOF SHEATHING
0640.38 PLASTIC LAMINATE SHELF
0640.43 PLASTIC LAMINATE SUPPORT BRACKET

DIVISION 07 – THERMAL & MOISTURE PROTECTION

0710.05 ROOFING UNDERLAYMENT
0720.24 RIGID INSULATION
0720.31 5 1/2" BATT INSULATION (R-20 MIN.)
0725.03 PLASTIC FILM AIR BARRIER
0740.03 PREFINISHED METAL WALL / SOFFIT PANEL WITH REVEALS
0740.04 PREFINISHED METAL WALL PANEL TRIM
0740.12 PREFINISHED METAL STANDING SEAM ROOFING
0740.13 PREFINISHED CONCEALED FASTENER METAL WALL PANELS
0740.14 METAL WALL PANEL SUB-GIRT
0740.60 CONTINUOUS J-MOULDING
0760.02 THROUGH-WALL FLASHING
0760.12 PREFINISHED METAL CANOPY GUTTER / FASCIA
0760.13 PREFINISHED METAL FASCIA
0770.24 VENTED SCREED (F-MOLDING)
0790.01 SEALANT WITH BACKER ROD AS REQUIRED

DIVISION 08 – OPENINGS

0810.02 HOLLOW METAL FRAME
0810.12 PREFINISHED ALUMINUM LOUVER
0840.01 ALUMINUM STOREFRONT

DIVISION 09 – FINISHES

0920.17 SUSPENDED GYPSUM BOARD ON METAL SUSPENSION SYSTEM
0920.28 5/8" GYPSUM BOARD (TYPE X)
0920.35 CORNER BEAD, TYPICAL
0920.36 J-MOULD, TYPICAL
0920.49 5/8" GYPSUM BOARD ON METAL SUSPENSION SYSTEM
0950.01 SUSPENDED ACOUSTICAL LAY-IN TILE CEILING (2' X 2')
0960.13 4" RESILIENT BASE

DIVISION 10 – SPECIALTIES

1050.06 BUNKER GEAR RACK
1070.02 PRE-MANUFACTERED EXTERIOR SUN CONTROL DEVICES

DIVISION 22 – PLUMBING (RE: PLUMBING)

2240.11 MOP SINK

DIVISION 23 – HEATING, VENTILATING, & AIR-CONDITIONING (HVAC) (RE: MECHANICAL)

2330.04 EXHAUST FAN

REGISTERED ARCHITECT MARK E. WATFORD 9241 STATE OF TEXAS
09/23/16

BROWN REYNOLDS WATFORD ARCHITECTS
2700 EARL RUDDER FRWY SOUTH
SUITE 4000
COLLEGE STATION, TEXAS 77845
979.694.1791
WWW.BRWARCH.COM
BRW

AUSTIN ONION CREEK
FIRE & EMS STATION
11112 OLD SAN ANTONIO ROAD
AUSTIN, TEXAS 78748

CITY OF AUSTIN FOUNDED

REVISIONS

DATE	9/23/2016
DRAWN BY	LA, MW
CHECKED BY	RH
PROJECT NO.	214106.00

A2.4

BUILDING SECTIONS

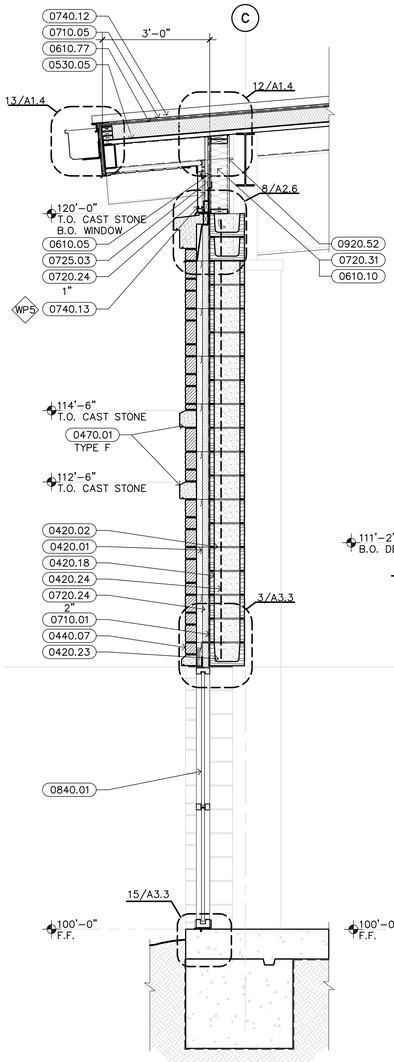

6 WALL SECTION WS001
1/2" = 1'-0"

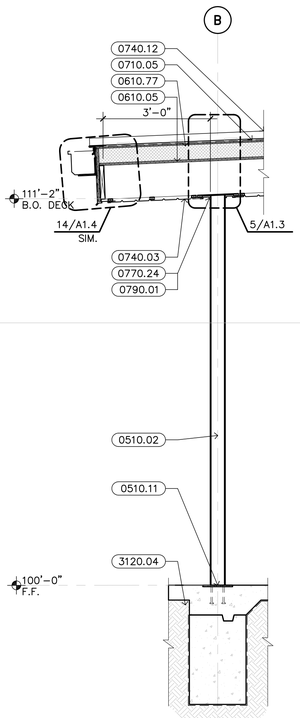

5 WALL SECTION WS001
1/2" = 1'-0"

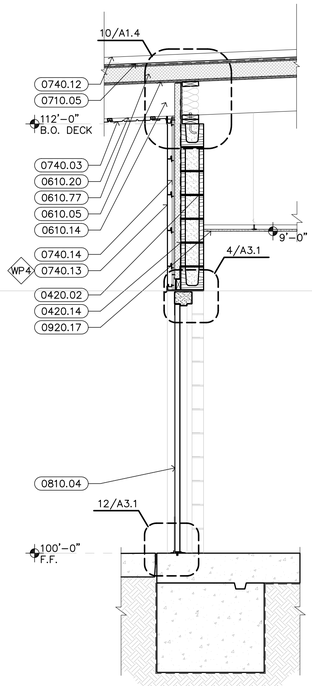

4 WALL SECTION WS001
1/2" = 1'-0"

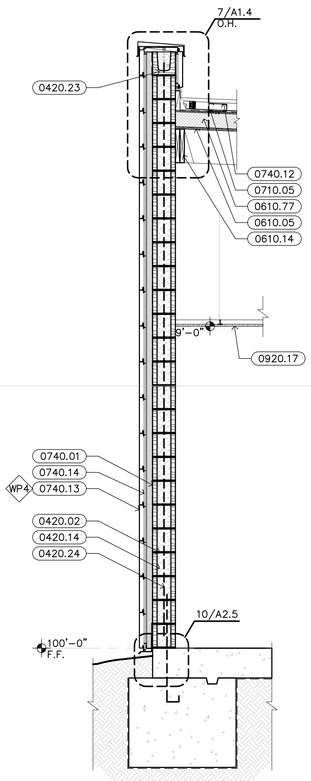

3 WALL SECTION WS001
1/2" = 1'-0"

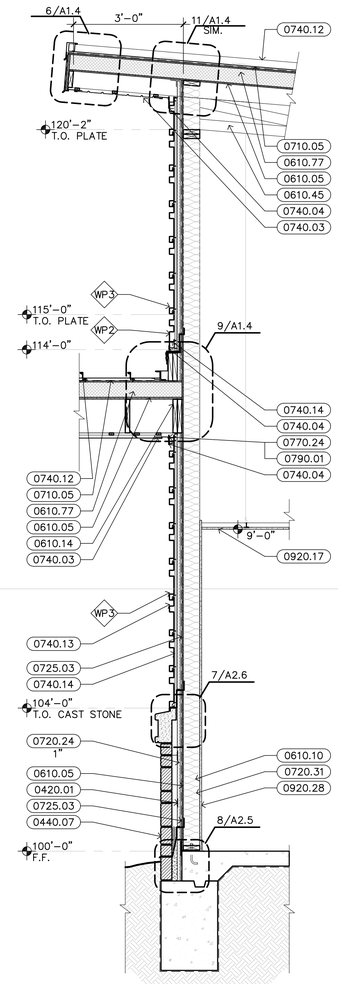

2 WALL SECTION WS001
1/2" = 1'-0"

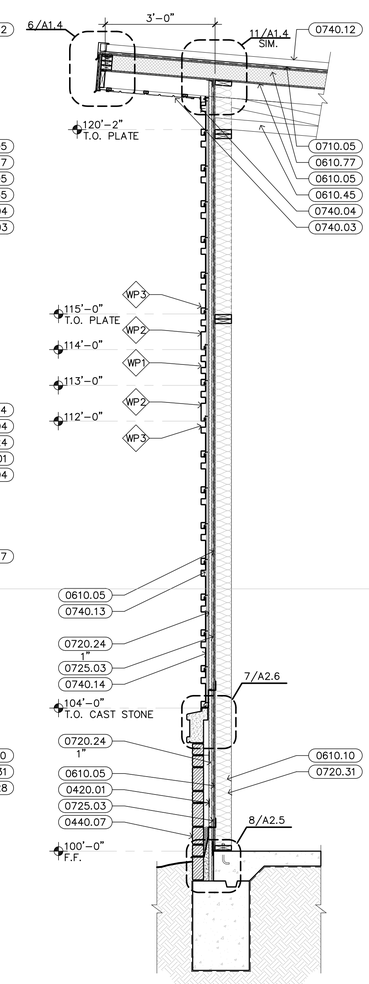

1 WALL SECTION WS001
1/2" = 1'-0"

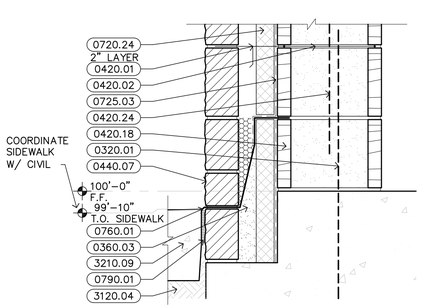

12 SECTION DETAIL WS001
1 1/2" = 1'-0"

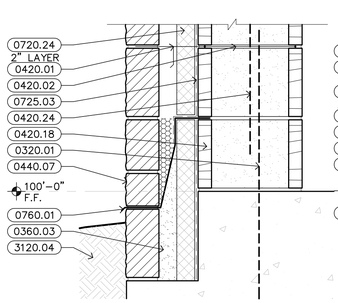

11 SECTION DETAIL ED004
1 1/2" = 1'-0"

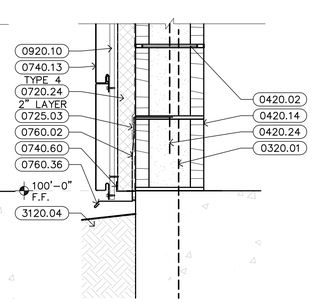

10 SECTION DETAIL ED004
1 1/2" = 1'-0"

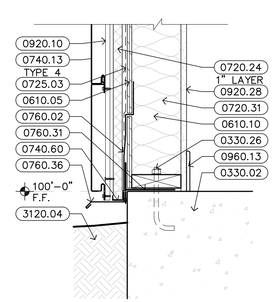

9 SECTION DETAIL ED004
1 1/2" = 1'-0"

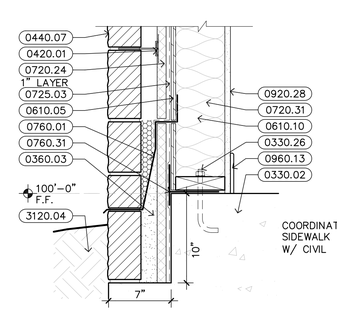

8 SECTION DETAIL ED004
1 1/2" = 1'-0"

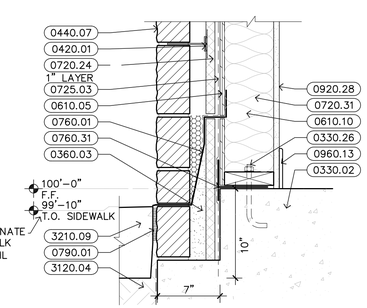

7 SECTION DETAIL ED003
1 1/2" = 1'-0"

KEYNOTES

DIVISION 03 – CONCRETE

0320.01 DOWEL INTO CONCRETE SLAB
0330.02 CONCRETE SLAB (RE: STRUCTURAL)
0330.26 ANCHOR BOLT
0360.03 FILL WITH GROUT

DIVISION 04 – MASONRY

0420.01 ADJUSTABLE MASONRY WALL TIES AT 16" O.C.E.W.
0420.02 HORIZONTAL REINFORCING AT 16" O.C. VERTICALLY
0420.14 8" CONCRETE MASONRY UNITS
0420.18 12" CONCRETE MASONRY UNITS
0420.23 CONCRETE MASONRY UNIT BOND BEAM
0420.24 VERTICAL REINFORCING IN CONCRETE MASONRY UNITS (RE: STRUCTURAL)
0440.07 STONE VENEER
0470.01 CAST STONE

DIVISION 05 – METALS

0510.02 STEEL COLUMN (RE: STRUCTURAL)
0510.11 METAL EMBED (RE: STRUCTURAL)
0530.05 ACOUSTICAL METAL DECK (RE: STRUCTURAL)

DIVISION 06 – WOOD, PLASTICS, & COMPOSITES

0610.05 1/2" EXTERIOR GRADE PLYWOOD
0610.10 2 X 6 WOOD STUDS AT 16" O.C.
0610.14 2 X 12 WOOD FRAMING
0610.20 1X WOOD FURRING STRIP
0610.45 PRE–FABRICATED WOOD TRUSS (RE: STRUCTURAL)
0610.77 COMPOSITE NAIL BASE INSULATED ROOF SHEATHING

DIVISION 07 – THERMAL & MOISTURE PROTECTION

0710.01 BITUMINOUS DAMPPROOFING MASTIC
0710.05 ROOFING UNDERLAYMENT
0720.24 RIGID INSULATION
0720.31 5 1/2" BATT INSULATION (R–20 MIN.)
0725.03 PLASTIC FILM AIR BARRIER
0740.01 PREFINISHED METAL ROOFING SYSTEM
0740.03 PREFINISHED METAL WALL / SOFFIT PANEL WITH REVEALS
0740.04 PREFINISHED METAL WALL PANEL TRIM
0740.12 PREFINISHED METAL STANDING SEAM ROOFING
0740.13 PREFINISHED CONCEALED FASTENER METAL WALL PANELS
0740.14 METAL WALL PANEL SUB–GIRT
0740.60 CONTINUOUS J–MOULDING
0760.01 THROUGH–WALL FLASHING (WITH WEEPS AT 2'–0" O.C.) AND MORTAR NET
0760.02 THROUGH–WALL FLASHING
0760.31 SILL SEALER
0760.36 PREFINISHED METAL FLASHING
0770.24 VENTED SCREED (F–MOLDING)
0790.01 SEALANT WITH BACKER ROD AS REQUIRED

DIVISION 08 – OPENINGS

0810.04 HOLLOW METAL DOOR AND FRAME
0840.01 ALUMINUM STOREFRONT

DIVISION 09 – FINISHES

0920.10 7/8" FURRING CHANNELS AT 16" O.C.
0920.17 SUSPENDED GYPSUM BOARD ON METAL SUSPENSION SYSTEM
0920.28 5/8" GYPSUM BOARD (TYPE X)
0920.52 5/8" GYPSUM BOARD, MOISTURE RESISTANT (TYPE X)
0960.13 4" RESILIENT BASE

DIVISION 31 – EARTHWORK

3120.04 EARTH

DIVISION 32 – EXTERIOR IMPROVEMENTS

3210.09 4" CONCRETE SIDEWALK WITH #3'S AT 18" O.C.E.W.

REGISTERED ARCHITECT ✡ STATE OF TEXAS ✡ MARK E. WATFORD 9241 09/23/16

BROWN REYNOLDS WATFORD ARCHITECTS
2700 EARL RUDDER FRWY SOUTH
SUITE 400A
COLLEGE STATION, TEXAS 77845
979.694.1791
WWW.BRWARCH.COM
BRW

AUSTIN ONION CREEK
FIRE & EMS STATION
11112 OLD SAN ANTONIO ROAD
AUSTIN, TEXAS 78748

CITY OF AUSTIN ✡ REPUBLIC FOUNDED

REVISIONS

DATE	9/23/2016
DRAWN BY	LA, MW
CHECKED BY	RH
PROJECT NO.	214106.00

A2.5
WALL SECTIONS

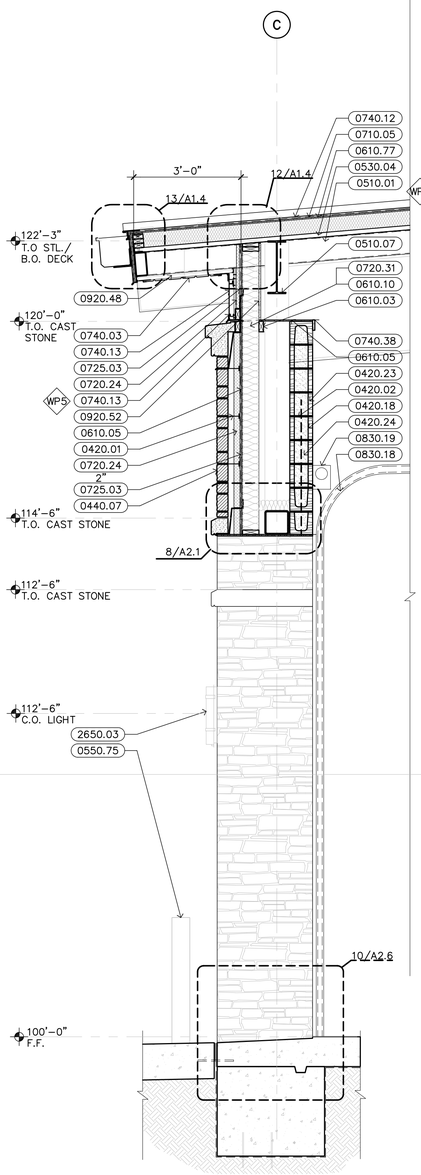

6 WALL SECTION
1/2" = 1'-0"
WS001

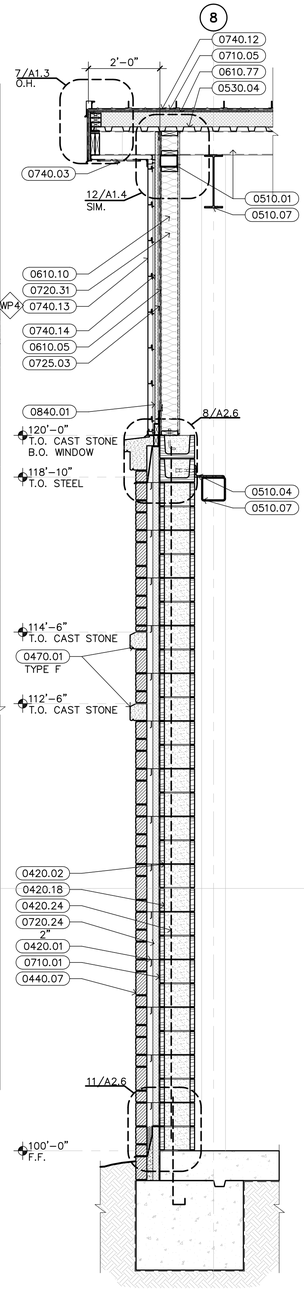

5 WALL SECTION
1/2" = 1'-0"
WS001

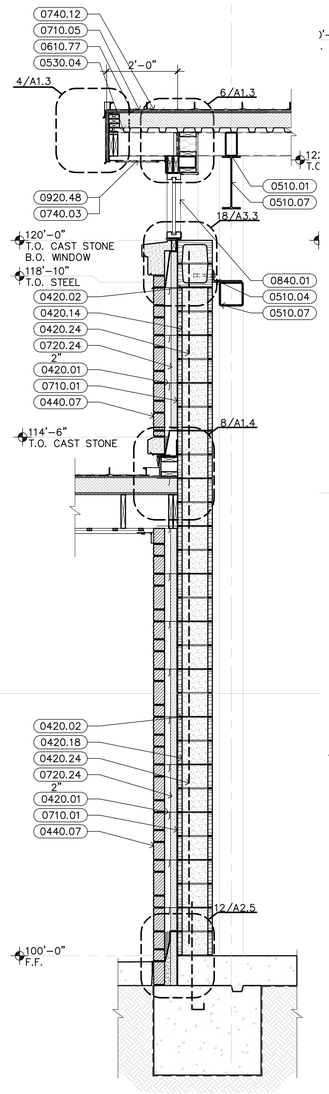

4 WALL SECTION
1/2" = 1'-0"
WS001

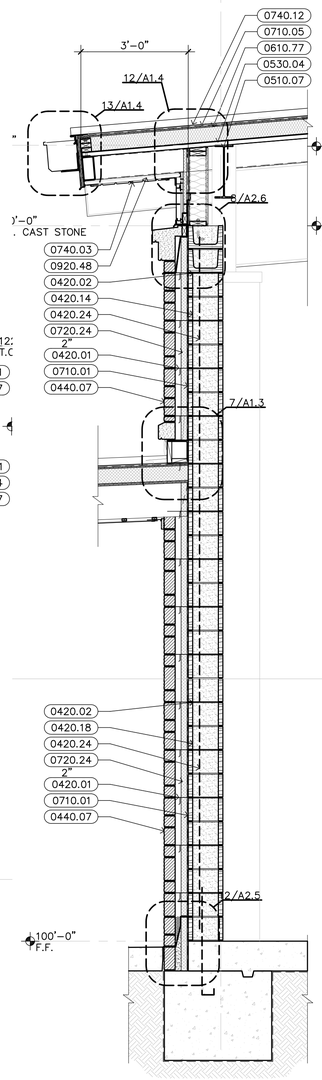

3 WALL SECTION
1/2" = 1'-0"
WS001

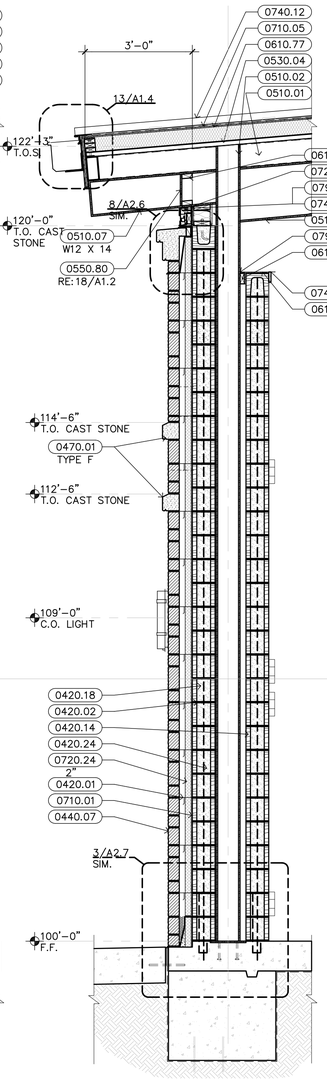

2 WALL SECTION
1/2" = 1'-0"
WS001

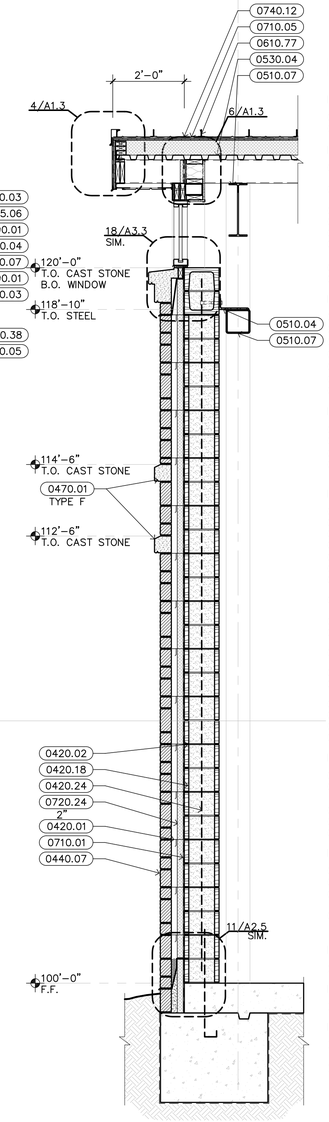

1 WALL SECTION
1/2" = 1'-0"
WS001

KEYNOTES

DIVISION 03 – CONCRETE

0320.01 DOWEL INTO CONCRETE SLAB
0330.02 CONCRETE SLAB (RE: STRUCTURAL)

DIVISION 04 – MASONRY

0420.01 ADJUSTABLE MASONRY WALL TIES AT 16" O.C.E.W.
0420.02 HORIZONTAL REINFORCING AT 16" O.C. VERTICALLY
0420.14 8" CONCRETE MASONRY UNITS
0420.18 12" CONCRETE MASONRY UNITS
0420.23 CONCRETE MASONRY UNIT BOND BEAM
0420.24 VERTICAL REINFORCING IN CONCRETE MASONRY UNITS (RE: STRUCTURAL)
0440.07 STONE VENEER
0470.01 CAST STONE

DIVISION 05 – METALS

0510.01 STEEL STRUCTURE (RE: STRUCTURAL)
0510.02 STEEL COLUMN (RE: STRUCTURAL)
0510.04 STEEL ANGLE (RE: STRUCTURAL)
0510.07 STEEL BEAM (RE: STRUCTURAL)
0530.04 METAL ROOF DECK (RE: STRUCTURAL)
0550.75 6" PIPE BOLLARD
0550.80 1/2" STEEL PLATE (RE: STRUCTURAL)

DIVISION 06 – WOOD, PLASTICS, & COMPOSITES

0610.03 2X WOOD BLOCKING
0610.05 1/2" EXTERIOR GRADE PLYWOOD
0610.10 2 X 6 WOOD STUDS AT 16" O.C.
0610.77 COMPOSITE NAIL BASE INSULATED ROOF SHEATHING

DIVISION 07 – THERMAL & MOISTURE PROTECTION

0710.01 BITUMINOUS DAMPPROOFING MASTIC
0710.05 ROOFING UNDERLAYMENT
0720.24 RIGID INSULATION
0720.31 5 1/2" BATT INSULATION (R–20 MIN.)
0725.01 UNDERSLAB VAPOR BARRIER
0725.03 PLASTIC FILM AIR BARRIER
0725.06 SELF–ADHERING FLEXIBLE SURROUND FLASHING
0740.03 PREFINISHED METAL WALL / SOFFIT PANEL WITH REVEALS
0740.04 PREFINISHED METAL WALL PANEL TRIM
0740.12 PREFINISHED METAL STANDING SEAM ROOFING
0740.13 PREFINISHED CONCEALED FASTENER METAL WALL PANELS
0740.14 METAL WALL PANEL SUB–GIRT
0740.38 1X4 FIBER REINFORCED CEMENTITIOUS TRIM
0760.02 THROUGH–WALL FLASHING
0760.14 PREFINISHED METAL CLEAT
0760.50 PREFINISHED METAL HEAD FLASHING
0790.01 SEALANT WITH BACKER ROD AS REQUIRED

DIVISION 08 – OPENINGS

0830.18 UPWARD–ACTING SECTIONAL DOOR TRACK
0830.19 UPWARD–ACTING SECTIONAL DOOR MOTOR / HOUSING
0830.28 ELECTRIC OPERATED FOLDING DOORS
0840.01 ALUMINUM STOREFRONT
0870.03 BRUSH SEAL

DIVISION 09 – FINISHES

0920.23 ALUMINUM "F" REGLET
0920.28 5/8" GYPSUM BOARD (TYPE X)
0920.48 1 1/2" NON–STRUCTURAL METAL CHANNEL
0920.52 5/8" GYPSUM BOARD, MOISTURE RESISTANT (TYPE X)

DIVISION 26 – ELECTRICAL (RE: ELECTRICAL)

2650.03 SURFACE–MOUNTED LIGHT FIXTURE

DIVISION 31 – EARTHWORK

3120.03 COMPACTED SUBGRADE

DIVISION 32 – EXTERIOR IMPROVEMENTS

3210.22 PAVING EXPANSION JOINT – FILL WITH JOINT SEALER 1/4" BELOW SURFACE
3210.50 12" CONCRETE PAVING WITH #3'S @ 1'–0" O.C.E.W. OVER COMPACTED SUBGRADE

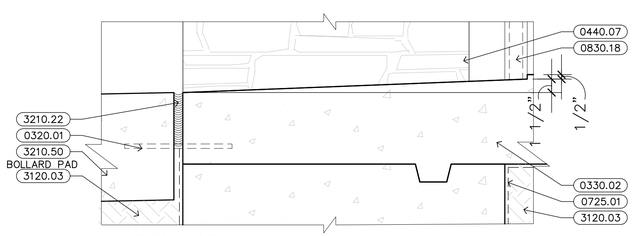

10 SECTION DETAIL
1 1/2" = 1'-0"
ED004

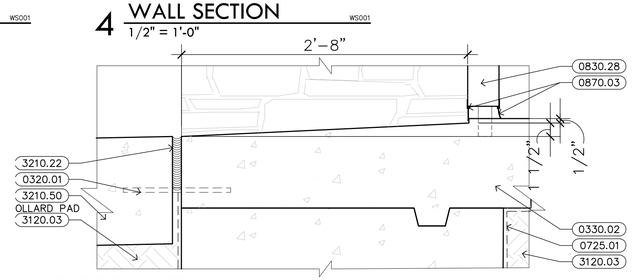

9 SECTION DETAIL
1 1/2" = 1'-0"
ED004

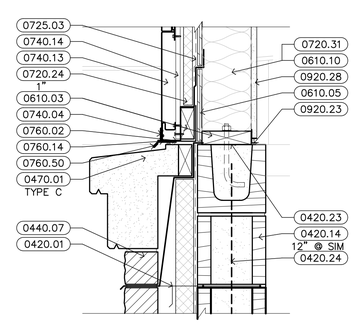

8 SECTION DETAIL
1 1/2" = 1'-0"
ED003

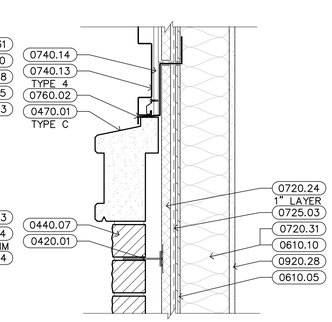

7 SECTION DETAIL
1 1/2" = 1'-0"
ED003

BROWN REYNOLDS WATFORD ARCHITECTS
2700 EARL RUDDER FRWY SOUTH
SUITE 400A
COLLEGE STATION, TEXAS 77845
979.694.1791
WWW.BRWARCH.COM

09/23/16

AUSTIN ONION CREEK
FIRE & EMS STATION
11112 OLD SAN ANTONIO ROAD
AUSTIN, TEXAS 78748

REVISIONS

DATE	9/23/2016
DRAWN BY	LA, MW
CHECKED BY	RH
PROJECT NO.	214106.00

A2.6

WALL SECTIONS

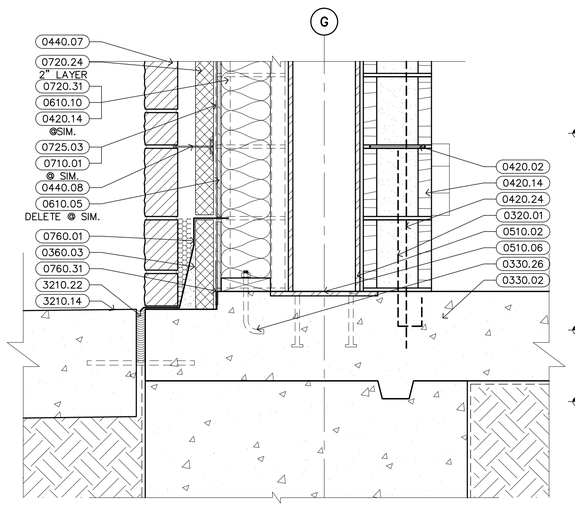

3 SECTION DETAIL
1-1/2" = 1'-0"
ED004

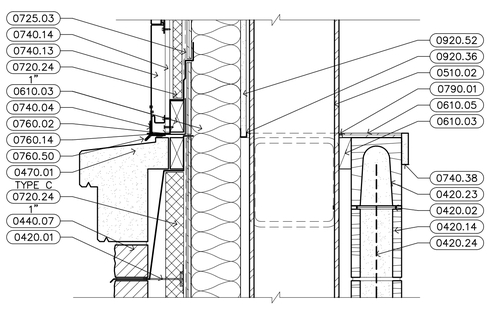

4 SECTION DETAIL
1-1/2" = 1'-0"
ED003

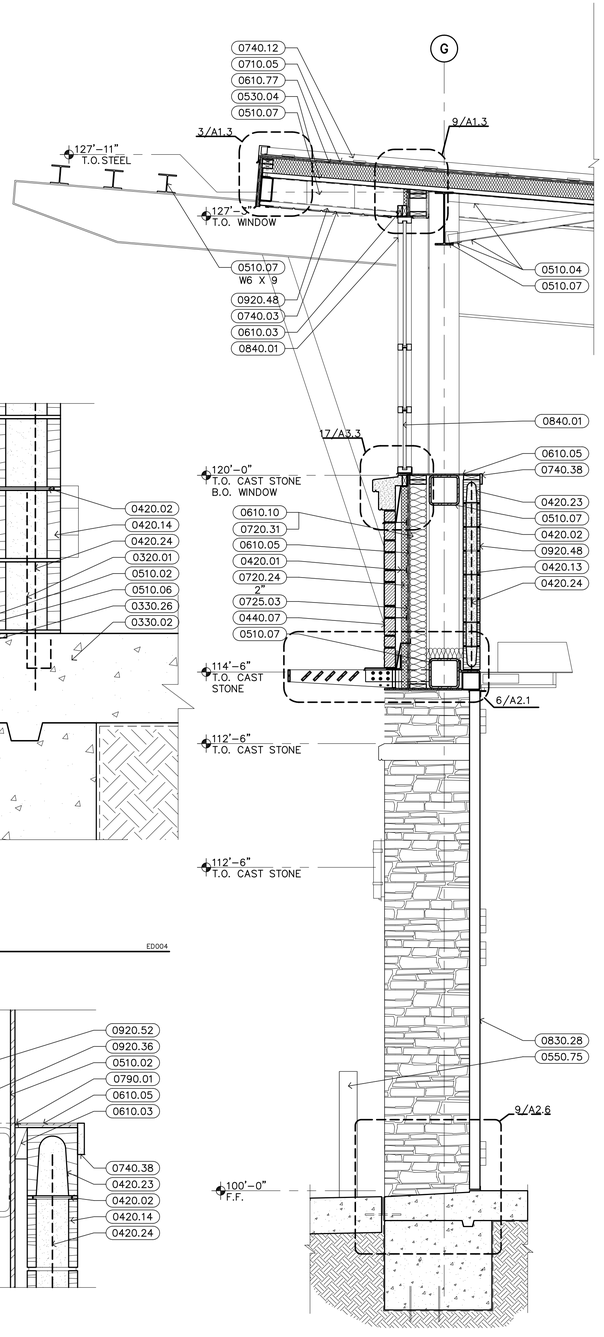

2 WALL SECTION
1/2" = 1'-0"
WS001

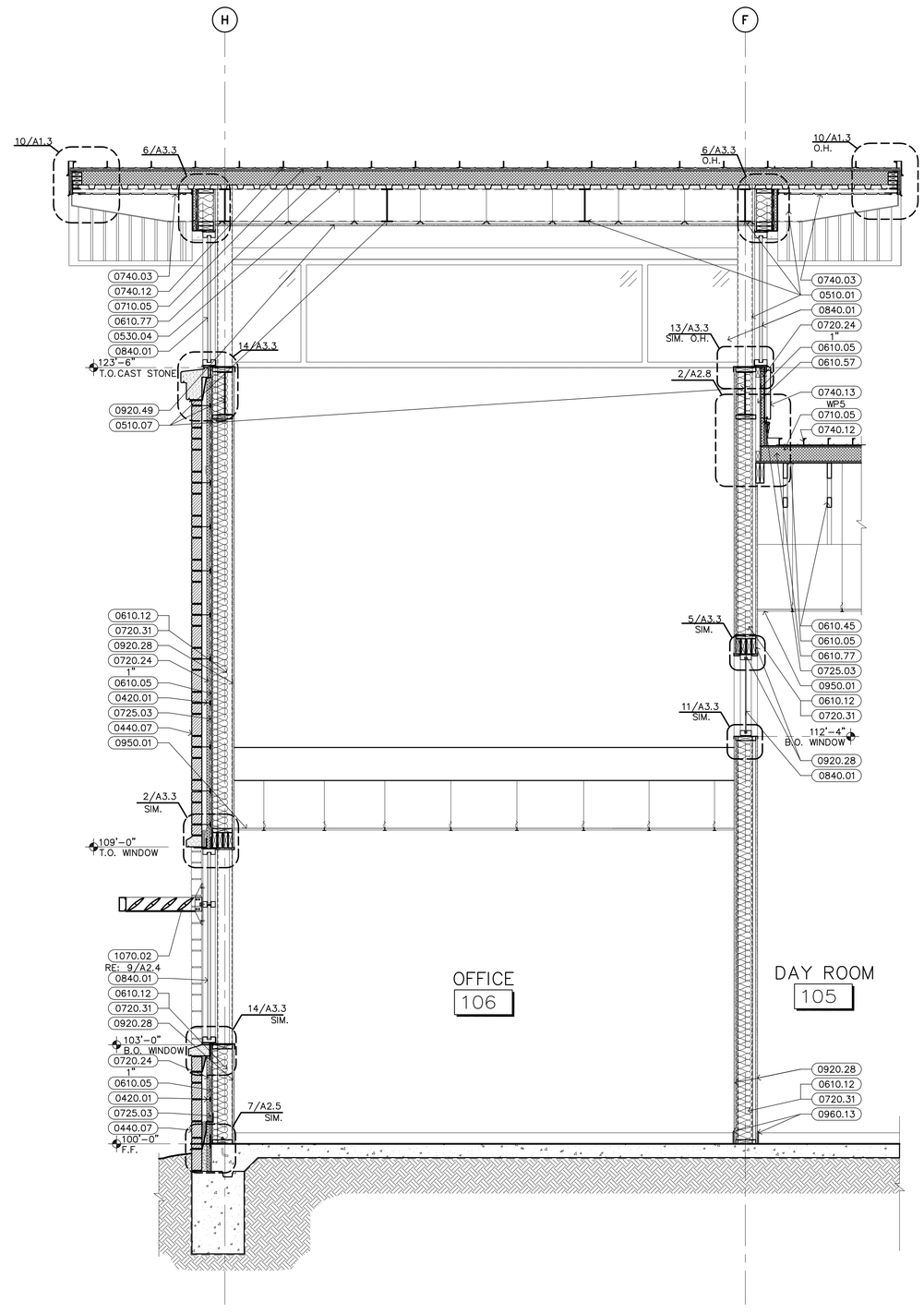

1 TOWER SECTION
1/2" = 1'-0"
WS001

KEYNOTES

DIVISION 04 – MASONRY

0420.01 ADJUSTABLE MASONRY WALL TIES AT 16" O.C.E.W.
0420.02 HORIZONTAL REINFORCING AT 16" O.C. VERTICALLY
0420.13 6" CONCRETE MASONRY UNITS
0420.23 CONCRETE MASONRY UNIT BOND BEAM
0420.24 VERTICAL REINFORCING IN CONCRETE MASONRY UNITS (RE: STRUCTURAL)
0440.07 STONE VENEER

DIVISION 05 – METALS

0510.01 STEEL STRUCTURE (RE: STRUCTURAL)
0510.04 STEEL ANGLE (RE: STRUCTURAL)
0510.07 STEEL BEAM (RE: STRUCTURAL)
0530.04 METAL ROOF DECK (RE: STRUCTURAL)
0550.75 6" PIPE BOLLARD

DIVISION 06 – WOOD, PLASTICS, & COMPOSITES

0610.03 2X WOOD BLOCKING
0610.05 1/2" EXTERIOR GRADE PLYWOOD
0610.10 2 X 6 WOOD STUDS AT 16" O.C.
0610.12 2 X 8 WOOD FRAMING
0610.45 PRE-FABRICATED WOOD TRUSS (RE: STRUCTURAL)
0610.57 2X WOOD FURRING STRIPS
0610.77 COMPOSITE NAIL BASE INSULATED ROOF SHEATHING

DIVISION 07 – THERMAL & MOISTURE PROTECTION

0710.05 ROOFING UNDERLAYMENT
0720.24 RIGID INSULATION
0720.31 5 1/2" BATT INSULATION (R-20 MIN.)
0725.03 PLASTIC FILM AIR BARRIER
0740.03 PREFINISHED METAL WALL / SOFFIT PANEL WITH REVEALS
0740.12 PREFINISHED METAL STANDING SEAM ROOFING
0740.13 PREFINISHED CONCEALED FASTENER METAL WALL PANELS
0740.38 1X4 FIBER REINFORCED CEMENTITIOUS TRIM

DIVISION 08 – OPENINGS

0830.28 ELECTRIC OPERATED FOLDING DOORS
0840.01 ALUMINUM STOREFRONT

DIVISION 09 – FINISHES

0920.28 5/8" GYPSUM BOARD (TYPE X)
0920.48 1 1/2" NON-STRUCTURAL METAL CHANNEL
0920.49 5/8" GYPSUM BOARD ON METAL SUSPENSION SYSTEM
0950.01 SUSPENDED ACOUSTICAL LAY-IN TILE CEILING (2' X 2')
0960.13 4" RESILIENT BASE

DIVISION 10 – SPECIALTIES

1070.02 PRE-MANUFACTERED EXTERIOR SUN CONTROL DEVICES

09/23/16

BROWN REYNOLDS WATFORD ARCHITECTS
2700 EARL RUDDER FRWY SOUTH
SUITE 4000
COLLEGE STATION, TEXAS 77845
979.694.1791
WWW.BRWARCH.COM

AUSTIN ONION CREEK
FIRE & EMS STATION
11112 OLD SAN ANTONIO ROAD
AUSTIN, TEXAS 78748

REVISIONS

DATE	9/23/2016
DRAWN BY	LA, MW
CHECKED BY	RH
PROJECT NO.	214106.00

A2.7

WALL SECTIONS

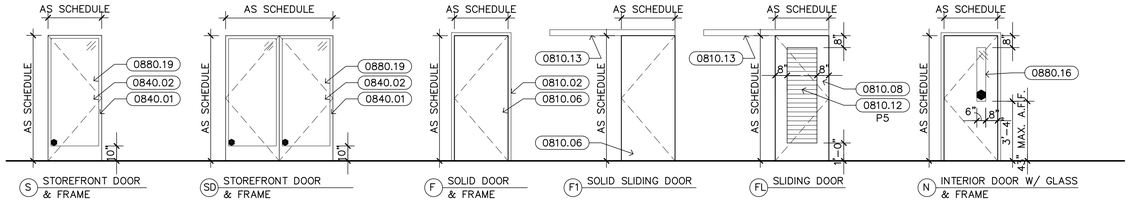

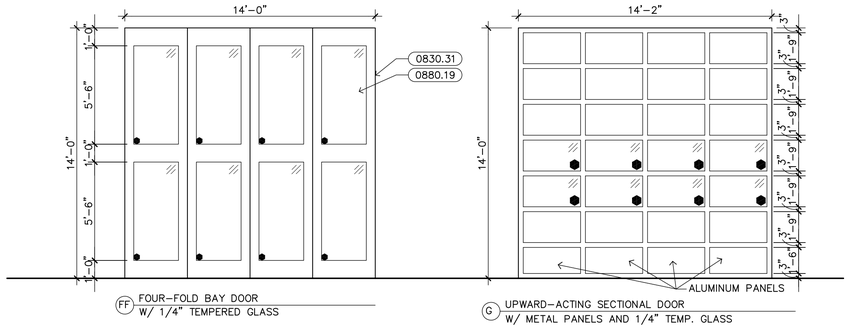

1 DOOR TYPES
1/4" = 1'-0"

ID003

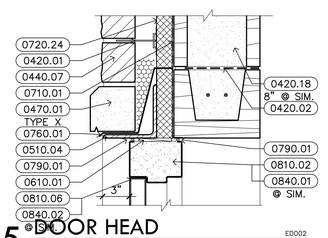

5 DOOR HEAD
1 1/2" = 1'-0"

ED002

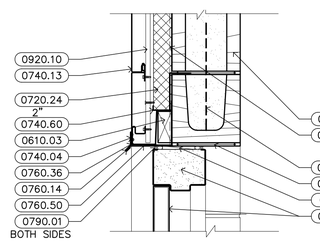

4 DOOR HEAD
1 1/2" = 1'-0"

ED002

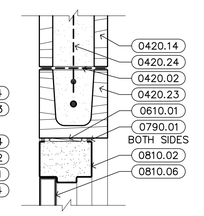

3 DOOR HEAD
1 1/2" = 1'-0"

ED002

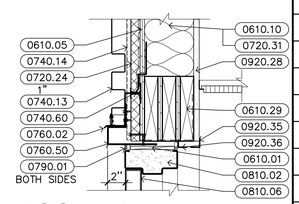

2 DOOR HEAD
1 1/2" = 1'-0"

ED002

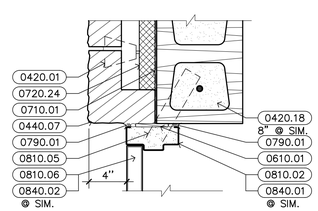

9 DOOR JAMB
1 1/2" = 1'-0"

ED002

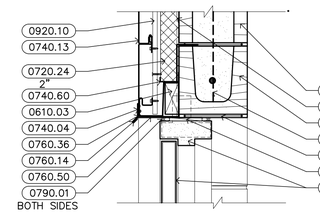

8 DOOR JAMB
1 1/2" = 1'-0"

ED002

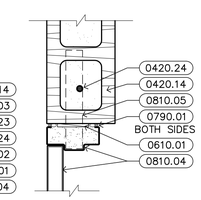

7 DOOR JAMB
1 1/2" = 1'-0"

ED002

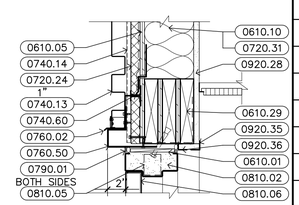

6 DOOR JAMB
1 1/2" = 1'-0"

ED002

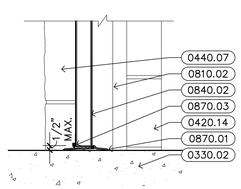

12 DOOR SILL
1 1/2" = 1'-0"

ED002

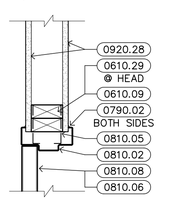

11 DOOR HEAD
1 1/2" = 1'-0"

ED002

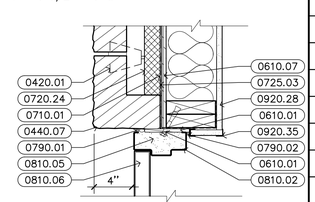

10 DOOR JAMB
1 1/2" = 1'-0"

ED002

DOOR SCHEDULE

092316

DOOR NUMBER ○	DOOR SIZE (WxHxTH)	FIRE RATING (MIN.)	DOOR MAT.	DOOR FINISH	FRAME MAT.	FRAME FINISH	TYPE	DETAIL NUMBER SILL	DETAIL NUMBER JAMB	DETAIL NUMBER HEAD	HDWR. SET	REMARKS
101A	3'–0" x 7'–0" x 1 3/4"		AL/GL	CLR ANO	AL	CLR ANO	S	12/A3.2	10/A3.2		1	CARD READER
101B	3'–0" x 7'–0" x 1 3/4"		AL/GL	CLR ANO	AL	CLR ANO	S		11/A3.2	11/A3.2	2	CARD READER
102	3'–0" x 7'–0" x 1 3/4"		WD	ST1	HM	P5	F		11/A3.1	11/A3.1	3	
103A	3'–0" x 7'–0" x 1 3/4"	45	WD	ST1	HM	P5	N		11/A3.1	11/A3.1	4	
103B	3'–0" x 7'–0" x 1 3/4"		HM	P5	HM	P5	N		7/A3.1	3/A3.1	5	
104	3'–0" x 7'–0" x 1 3/4"		WD	ST1	HM	P5	F		11/A3.1	11/A3.1	6	
106	3'–0" x 7'–0" x 1 3/4"		WD	ST1	HM	P5	N		11/A3.1	11/A3.1	7	
107	3'–0" x 7'–0" x 1 3/4"		WD	ST1	HM	P5	N		11/A3.1	11/A3.1	7	
108	3'–0" x 7'–0" x 1 3/4"	45	WD	ST1	HM	P5	N		11/A3.1	11/A3.1	8	
109	3'–0" x 7'–0" x 1 3/4"		WD	ST1	HM	P5	F		11/A3.1	11/A3.1	9	
110	3'–0" x 7'–0" x 1 3/4"		WD	ST1	HM	P5	F		11/A3.1	11/A3.1	9	
111	3'–0" x 7'–0" x 1 3/4"		WD	ST1	HM	P5	F		11/A3.1	11/A3.1	9	
112	3'–0" x 7'–0" x 1 3/4"		WD	ST1	HM	P5	F		11/A3.1	11/A3.1	10	
113	3'–0" x 7'–0" x 1 3/4"		WD	ST1	HM	P5	F		11/A3.1	11/A3.1	9	
114	3'–0" x 7'–0" x 1 3/4"		WD	ST1	HM	P5	F		11/A3.1	11/A3.1	10	
115	3'–0" x 7'–0" x 1 3/4"		WD	ST1	HM	P5	F		11/A3.1	11/A3.1	9	
116	3'–0" x 7'–0" x 1 3/4"		WD	ST1	HM	P5	F		11/A3.1	11/A3.1	10	
117A	3'–0" x 7'–0" x 1 3/4"		WD	ST1	HM	P5	N		11/A3.1	11/A3.1	9	
117B	3'–0" x 7'–0" x 1 3/4"	45	WD	ST1	HM	P5	N		11/A3.1	11/A3.1	9	
117C	3'–0" x 7'–0" x 1 3/4"		HM	P5	HM	P5	F	12/A3.1	6&10/A3.1	2/A3.1	1	CARD READER
118	3'–0" x 7'–0" x 1 3/4"		WD	ST1	HM	P5	F		11/A3.1	11/A3.1	9	
119	3'–0" x 7'–0" x 1 3/4"		WD	ST1	HM	P5	F		11/A3.1	11/A3.1	10	
120	3'–0" x 7'–0" x 1 3/4"		WD	ST1	HM	P5	F		11/A3.1	11/A3.1	9	
121	3'–0" x 7'–0" x 1 3/4"		WD	ST1	HM	P5	F		11/A3.1	11/A3.1	9	
122	3'–0" x 7'–0" x 1 3/4"		HM	P5	HM	P5	F	12/A3.1	6&10/A3.1	2/A3.1	12	
123	3'–0" x 7'–0" x 1 3/4"		HM	P5	HM	P5	F	12/A3.1	6&10/A3.1	2/A3.1	13	CARD READER
124	3'–0" x 7'–0" x 1 3/4"	45	WD	ST1	HM	P5	N		11/A3.1	11/A3.1	4	
125	3'–0" x 7'–0" x 1 3/4"		WD	ST1	HM	P5	F		11/A3.1	11/A3.1	14	
126	3'–0" x 7'–0" x 1 3/4"		WD	ST1	HM	P5	FL				15	
127	3'–0" x 7'–0" x 1 3/4"		WD	ST1	HM	P5	FL				15	
128	3'–0" x 7'–0" x 1 3/4"		WD	ST1	HM	P5	FL				15	
129	3'–0" x 7'–0" x 1 3/4"		WD	ST1	HM	P5	FL				16	
130A	3'–0" x 7'–0" x 1 3/4"		HM	P5	HM	P5	N	12/A3.1	8/A3.1	4/A3.1	11	CARD READER
130B	3'–0" x 7'–0" x 1 3/4"		HM	P5	HM	P5	N		7/A3.1	3/A3.1	5	
131A	3'–0" x 7'–0" x 1 3/4"		HM	P5	HM	P5	N		7/A3.1	3/A3.1	5	
131B	6'–0" x 7'–0" x 1 3/4"		AL/GL	CLR ANO	AL	CLR ANO	SD	12/A3.1	9/A3.1 SIM.	5/A3.1 SIM.	17	CARD READER
132	3'–0" x 7'–0" x 1 3/4"		HM	P5	HM	P5	F		7/A3.1	3/A3.1	6	
133A	3'–0" x 7'–0" x 1 3/4"		HM	P5	HM	P5	F1				16	
133B	3'–0" x 7'–0" x 1 3/4"		HM	P5	HM	P5	F1				16	
133C	3'–0" x 7'–0" x 1 3/4"		HM	P5	HM	P5	F1				16	
135A	14'–0" x 14'–0" x 1 3/4"		HM	–	HM	–	FF	9/A2.6	10&11/A1.2	6/A2.1	–	
135B	14'–0" x 14'–0" x 1 3/4"		HM	–	HM	–	FF	9/A2.6	11/A1.2	6/A2.1	–	
135C	14'–0" x 14'–0" x 1 3/4"		HM	–	HM	–	FF	9/A2.6	10&11/A1.2	6/A2.1	–	
135D	3'–0" x 7'–0" x 1 3/4"		HM	P5	HM	P5	F	12/A3.1	9/A3.1	5/A3.1	13	CARD READER
135E	14'–0" x 14'–0" x 1 3/4"		AL/GL	–	AL	–	G	10/A2.6	12&13/A1.2	8/A4.1		
136	3'–0" x 7'–0" x 1 3/4"		HM	P5	HM	P5	F	12/A3.1	9/A3.1	5/A3.1	12	

KEYNOTES

DIVISION 03 – CONCRETE

0330.02 CONCRETE SLAB (RE: STRUCTURAL)

DIVISION 04 – MASONRY

0420.01 ADJUSTABLE MASONRY WALL TIES AT 16" O.C.E.W.
0420.02 HORIZONTAL REINFORCING AT 16" O.C. VERTICALLY
0420.14 8" CONCRETE MASONRY UNITS
0420.18 12" CONCRETE MASONRY UNITS
0420.23 CONCRETE MASONRY UNIT BOND BEAM
0420.24 VERTICAL REINFORCING IN CONCRETE MASONRY UNITS (RE: STRUCTURAL)
0440.07 STONE VENEER
0470.01 CAST STONE

DIVISION 05 – METALS

0510.04 STEEL ANGLE (RE: STRUCTURAL)

DIVISION 06 – WOOD, PLASTICS, & COMPOSITES

0610.01 SHIM AS REQUIRED
0610.03 2X WOOD BLOCKING
0610.05 1/2" EXTERIOR GRADE PLYWOOD
0610.07 3/4" EXTERIOR GRADE PLYWOOD
0610.09 2 X 4 WOOD STUDS AT 16" O.C.
0610.10 2 X 6 WOOD STUDS AT 16" O.C.
0610.29 2X WOOD HEADER (RE: STRUCTURAL)

DIVISION 07 – THERMAL & MOISTURE PROTECTION

0710.01 BITUMINOUS DAMPPROOFING MASTIC
0720.24 RIGID INSULATION
0720.31 5 1/2" BATT INSULATION (R–20 MIN.)
0725.03 PLASTIC FILM AIR BARRIER
0740.04 PREFINISHED METAL WALL PANEL TRIM
0740.13 PREFINISHED CONCEALED FASTENER METAL WALL PANELS
0740.14 METAL WALL PANEL SUB–GIRT
0740.60 CONTINUOUS J–MOULDING
0760.01 THROUGH–WALL FLASHING (WITH WEEPS AT 2'–0" O.C.) AND MORTAR NET
0760.02 THROUGH–WALL FLASHING
0760.14 PREFINISHED METAL CLEAT
0760.36 PREFINISHED METAL FLASHING
0760.50 PREFINISHED METAL HEAD FLASHING
0790.01 SEALANT WITH BACKER ROD AS REQUIRED
0790.02 CAULKING

DIVISION 08 – OPENINGS

0810.02 HOLLOW METAL FRAME
0810.04 HOLLOW METAL DOOR AND FRAME
0810.05 JAMB ANCHOR (3 PER JAMB)
0810.06 HOLLOW METAL DOOR
0810.08 SOLID CORE WOOD DOOR
0810.12 PREFINISHED ALUMINUM LOUVER
0810.13 SLIDING TRACK
0830.31 BIFOLD DOOR
0840.01 ALUMINUM STOREFRONT
0840.02 ALUMINUM STOREFRONT DOOR
0870.01 METAL THRESHOLD. SET IN SEALANT
0870.03 BRUSH SEAL
0880.16 5/16" FIRE RATED GLASS
0880.19 1" TINTED GLASS, INSULATED, LOW–E, TEMPERED

DIVISION 09 – FINISHES

0920.10 7/8" FURRING CHANNELS AT 16" O.C.
0920.28 5/8" GYPSUM BOARD (TYPE X)
0920.35 CORNER BEAD, TYPICAL
0920.36 J–MOULD, TYPICAL

BROWN REYNOLDS WATFORD ARCHITECTS
2700 EARL RUDDER FRWY SOUTH
SUITE 400G
COLLEGE STATION, TEXAS 77845
979.694.1791
WWW.BRWARCH.COM

AUSTIN ONION CREEK
FIRE & EMS STATION
11112 OLD SAN ANTONIO ROAD
AUSTIN, TEXAS 78748

REVISIONS

DATE	9/23/2016
DRAWN BY	LA, MW
CHECKED BY	RH
PROJECT NO.	214106.00

A3.1

DOOR SCHEDULE

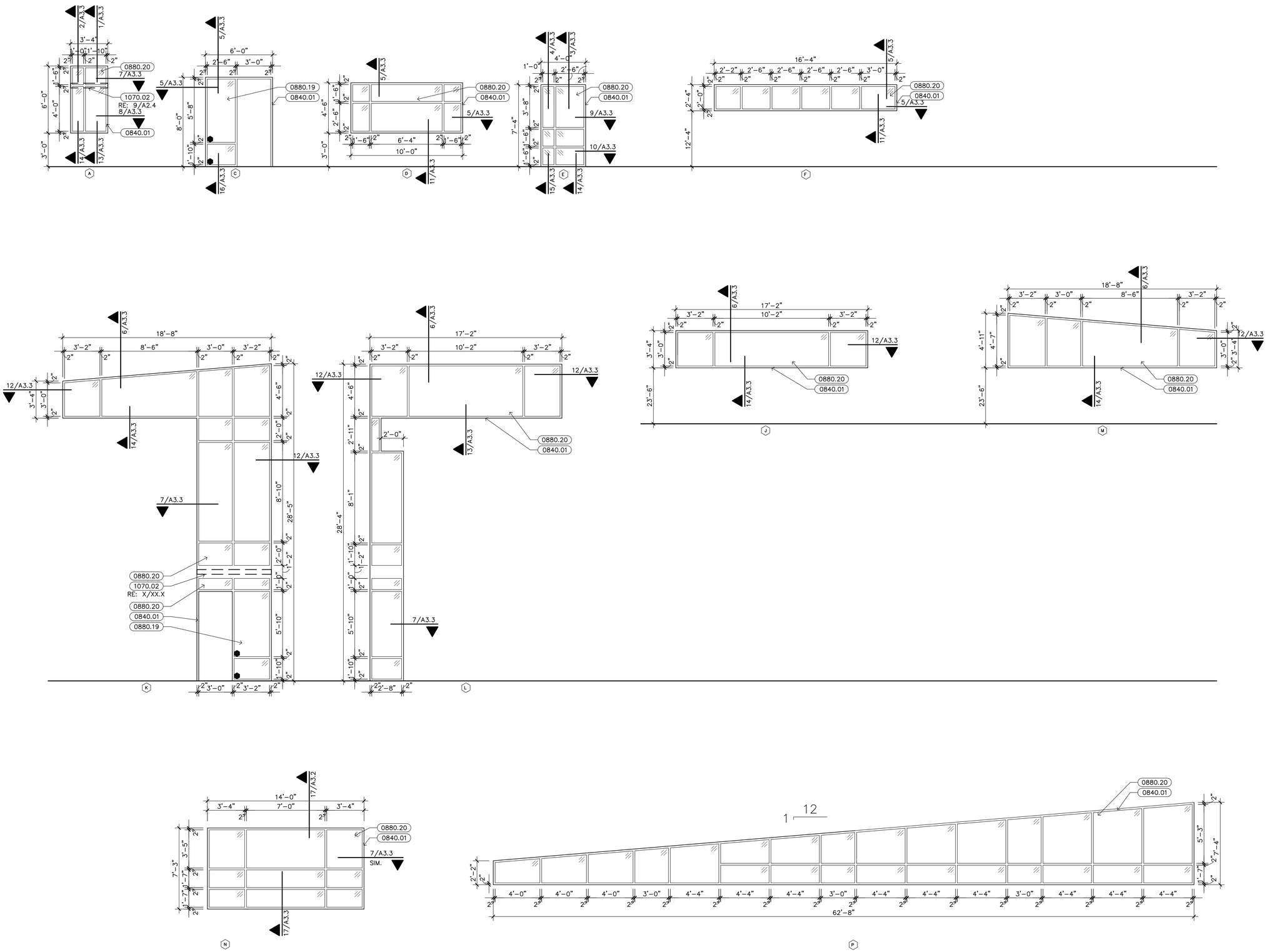

1 WINDOW TYPES
1/4" = 1'-0"

KEYNOTES

DIVISION 08 – OPENINGS

0840.01 ALUMINUM STOREFRONT
0880.19 1" TINTED GLASS, INSULATED, LOW-E, TEMPERED
0880.20 1" TINTED GLASS, INSULATED, LOW-E

DIVISION 10 – SPECIALTIES

1070.02 PRE-MANUFACTERED EXTERIOR SUN CONTROL DEVICES

09/23/16

BROWN REYNOLDS WATFORD ARCHITECTS
2700 EARL RUDDER FRWY SOUTH
SUITE 400
COLLEGE STATION, TEXAS 77845
979.694.1791
WWW.BRWARCH.COM

AUSTIN ONION CREEK FIRE & EMS STATION
11112 OLD SAN ANTONIO ROAD
AUSTIN, TEXAS 78748

REVISIONS

DATE	9/23/2016
DRAWN BY	LA, MW
CHECKED BY	RH
PROJECT NO.	214106.00

A3.2
WINDOW SCHEDULE

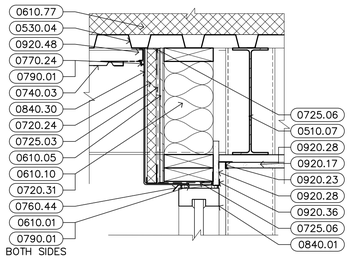

6 NOT USED
1 1/2" = 1'-0" ED003

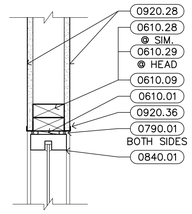

5 WINDOW HEAD/ JAMB
1 1/2" = 1'-0" ED003

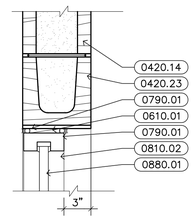

4 WINDOW HEAD
1 1/2" = 1'-0" ED003

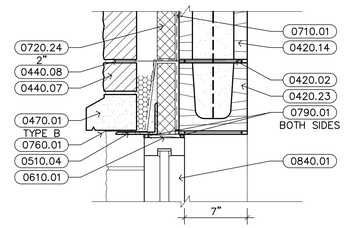

3 WINDOW HEAD
1 1/2" = 1'-0" ED003

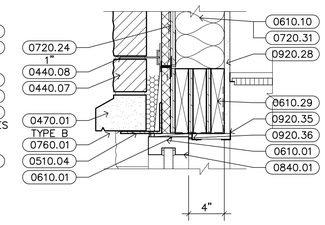

2 WINDOW HEAD
1 1/2" = 1'-0" ED003

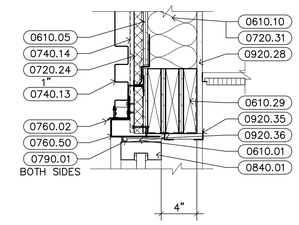

1 WINDOW HEAD
1 1/2" = 1'-0" ED003

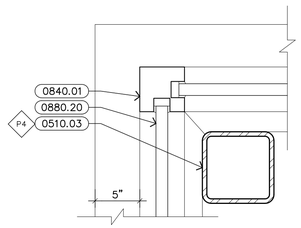

12 WINDOW JAMB
1 1/2" = 1'-0" ED003

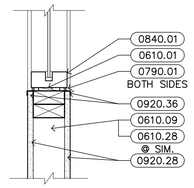

11 WINDOW SILL
1 1/2" = 1'-0" ED003

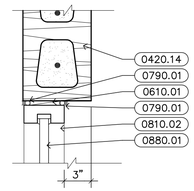

10 WINDOW JAMB
1 1/2" = 1'-0" ED003

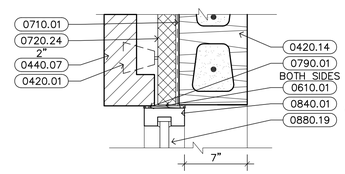

9 WINDOW JAMB
1 1/2" = 1'-0" ED003

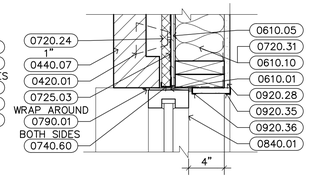

8 WINDOW JAMB
1 1/2" = 1'-0" ED003

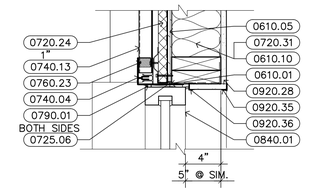

7 WINDOW JAMB
1 1/2" = 1'-0" ED003

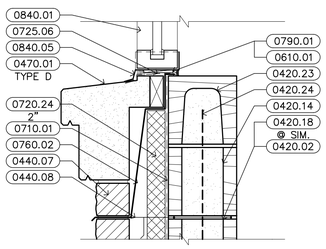

18 NOT USED
1 1/2" = 1'-0" ED003

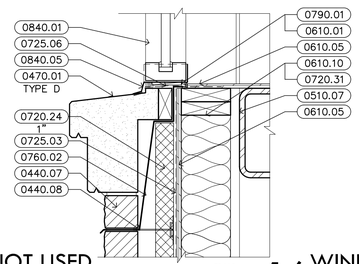

17 NOT USED
1 1/2" = 1'-0" ED003

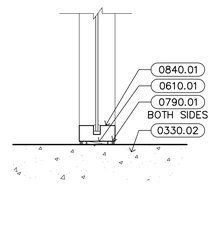

16 WINDOW SILL
1 1/2" = 1'-0" ED003

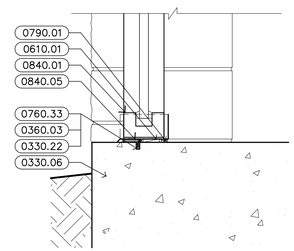

15 WINDOW SILL
1 1/2" = 1'-0" ED003

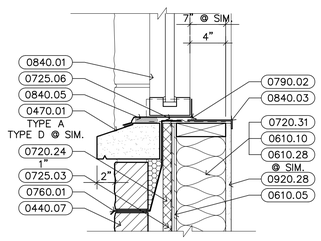

14 WINDOW SILL
1 1/2" = 1'-0" ED003

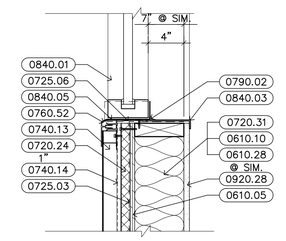

13 WINDOW SILL
1 1/2" = 1'-0" ED003

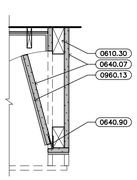

23 MILLWORK DETAIL
1" = 1'-0" ED003

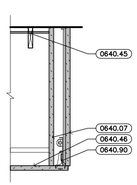

22 MILLWORK DETAIL
1" = 1'-0" ED003

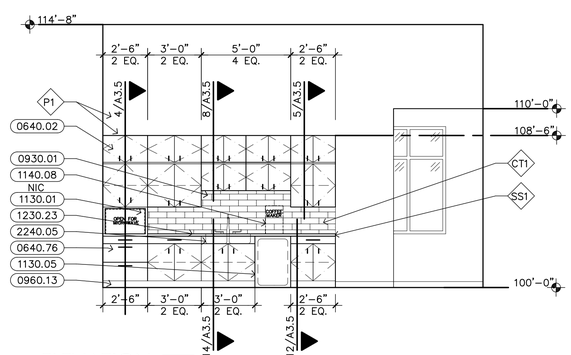

21 ELEVATION 124
1/4" = 1'-0" IE001

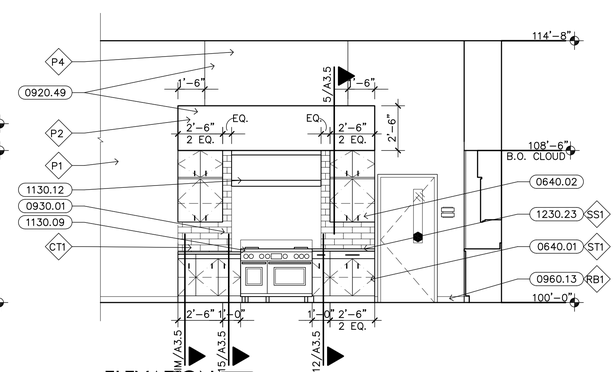

20 ELEVATION 124
1/4" = 1'-0" IE001

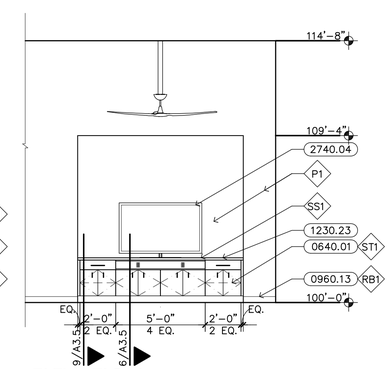

19 ELEVATION 105
1/4" = 1'-0" IE001

KEYNOTES

DIVISION 03 – CONCRETE

0330.02 CONCRETE SLAB (RE: STRUCTURAL)
0330.06 CONCRETE GRADE BEAM ON VOID FORMS (RE: STRUCTURAL)
0330.22 SAWCUT CONTROL JOINT
0360.03 FILL WITH GROUT

DIVISION 04 – MASONRY

0420.01 ADJUSTABLE MASONRY WALL TIES AT 16" O.C.E.W.
0420.02 HORIZONTAL REINFORCING AT 16" O.C. VERTICALLY
0420.14 8" CONCRETE MASONRY UNITS
0420.18 12" CONCRETE MASONRY UNITS
0420.23 CONCRETE MASONRY UNIT BOND BEAM
0420.24 VERTICAL REINFORCING IN CONCRETE MASONRY UNITS (RE: STRUCTURAL)
0440.07 STONE VENEER
0440.08 ADJUSTABLE MASONRY WALL TIES AT 16" O.C.E.W.
0470.01 CAST STONE

DIVISION 05 – METALS

0510.03 STEEL TUBE COLUMN (RE: STRUCTURAL)
0510.04 STEEL ANGLE (RE: STRUCTURAL)
0510.07 STEEL BEAM (RE: STRUCTURAL)
0530.04 METAL ROOF DECK (RE: STRUCTURAL)

DIVISION 06 – WOOD, PLASTICS, & COMPOSITES

0610.01 SHIM AS REQUIRED
0610.05 1/2" EXTERIOR GRADE PLYWOOD
0610.09 2 X 4 WOOD STUDS AT 16" O.C.
0610.10 2 X 6 WOOD STUDS AT 16" O.C.
0610.28 2 X 8 WOOD STUDS AT 16" O.C.
0610.29 2X WOOD HEADER (RE: STRUCTURAL)
0610.30 WOOD BLOCKING
0610.77 COMPOSITE NAIL BASE INSULATED ROOF SHEATHING
0640.01 HARDWOOD VENEER BASE CABINETS WITH ADJUSTABLE SHELVES
0640.02 HARDWOOD VENEER WALL CABINETS WITH ADJUSTABLE SHELVES
0640.07 3/4" PLYWOOD
0640.45 PLASTIC LAMINATE CABINET BACK
0640.46 PLASTIC LAMINATE CABINET DOOR
0640.76 HARDWOOD VENEER DRAWER
0640.90 PIVOT DOOR SLIDE

DIVISION 07 – THERMAL & MOISTURE PROTECTION

0710.01 BITUMINOUS DAMPPROOFING MASTIC
0720.24 RIGID INSULATION
0720.31 5 1/2" BATT INSULATION (R–20 MIN.)
0725.03 PLASTIC FILM AIR BARRIER
0725.06 SELF–ADHERING FLEXIBLE SURROUND FLASHING
0740.03 PREFINISHED METAL WALL / SOFFIT PANEL WITH REVEALS
0740.04 PREFINISHED METAL WALL PANEL TRIM
0740.13 PREFINISHED CONCEALED FASTENER METAL WALL PANELS
0740.14 METAL WALL PANEL SUB–GIRT
0740.60 CONTINUOUS J–MOULDING
0760.01 THROUGH–WALL FLASHING (WITH WEEPS AT 2'–0" O.C.) AND MORTAR NET
0760.02 THROUGH–WALL FLASHING
0760.23 FOAM CLOSURE (TOP AND BOTTOM). ADHERE INTO PLACE. PAINT TO MATCH ADJACENT SURFACE
0760.33 STAINLESS STEEL WATERSTOP FLASHING CONTINUOUS UNDER FRAME
0760.44 ALUMINUM HEAD FLASHING
0760.50 PREFINISHED METAL HEAD FLASHING
0760.52 PREFINISHED METAL SILL FLASHING
0770.24 VENTED SCREED (F–MOLDING)
0790.01 SEALANT WITH BACKER ROD AS REQUIRED
0790.02 CAULKING

DIVISION 08 – OPENINGS

0810.02 HOLLOW METAL FRAME
0840.01 ALUMINUM STOREFRONT
0840.03 .060 ALUMINUM SILL WITH HEMMED AND CLOSED ENDS
0840.05 CONTINUOUS ALUMINUM SILL FLASHING. SET IN SEALANT
0840.30 .060 ALUMINUM BRAKE METAL; FINISH TO MATCH STOREFRONT
0880.01 1/4" CLEAR GLASS
0880.19 1" TINTED GLASS, INSULATED, LOW–E, TEMPERED
0880.20 1" TINTED GLASS, INSULATED, LOW–E

DIVISION 09 – FINISHES

0920.17 SUSPENDED GYPSUM BOARD ON METAL SUSPENSION SYSTEM
0920.23 ALUMINUM "F" REGLET
0920.28 5/8" GYPSUM BOARD (TYPE X)
0920.35 CORNER BEAD, TYPICAL
0920.36 J–MOULD, TYPICAL
0920.48 1 1/2" NON–STRUCTURAL METAL CHANNEL
0920.49 5/8" GYPSUM BOARD ON METAL SUSPENSION SYSTEM
0930.01 CERAMIC TILE
0960.13 4" RESILIENT BASE

DIVISION 11 – EQUIPMENT

1130.01 MICROWAVE
1130.05 DISHWASHER
1130.09 GAS RANGE
1130.12 RANGE HOOD
1140.08 COMMERCIAL COFFEE MAKER

DIVISION 12 – FURNISHINGS

1230.23 QUARTZ COUNTERTOP WITH SPLASH AS SHOWN

DIVISION 22 – PLUMBING (RE: PLUMBING)

2240.05 STAINLESS STEEL UNDERMOUNT SINK

DIVISION 27 – COMMUNICATIONS

2740.04 TELEVISION OR MONITOR

NOTE

1.) ALL WOOD PRODUCTS TO BE FSC UNLESS OTHERWISE NOTED.

BROWN REYNOLDS WATFORD ARCHITECTS
2700 EARL RUDDER FRWY SOUTH
SUITE 400
COLLEGE STATION, TEXAS 77845
979.694.1791
WWW.BRWARCH.COM

AUSTIN ONION CREEK
FIRE & EMS STATION
11112 OLD SAN ANTONIO ROAD
AUSTIN, TEXAS 78748

REVISIONS

DATE	9/23/2016
DRAWN BY	LA, MW
CHECKED BY	RH
PROJECT NO.	214106.00

A3.3
DETAILS

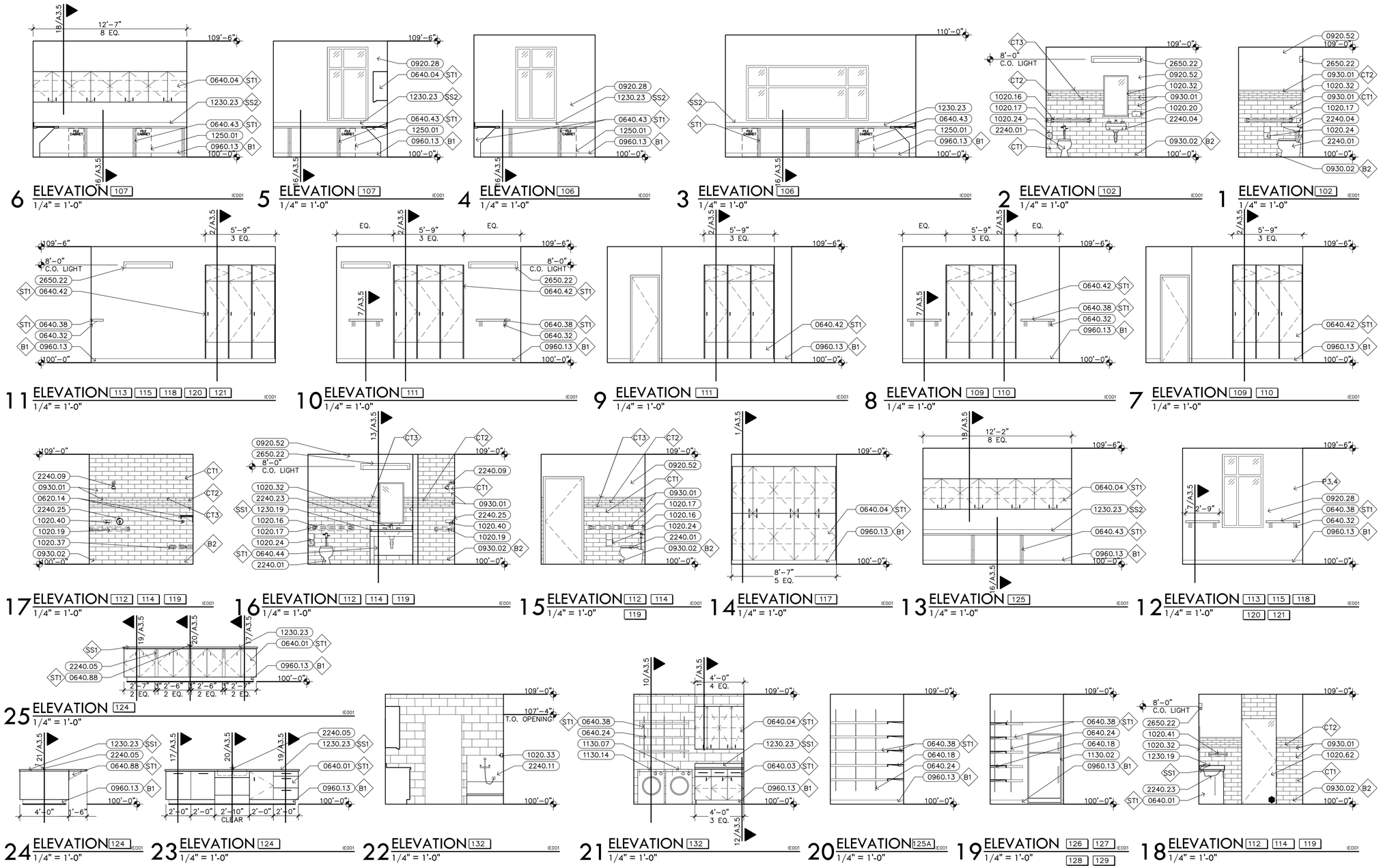

ADA ACCESSIBLE RESTROOMS:
102 RESTROOM
116 BATHROOM
119 BATHROOM

ADA ADAPTABLE RESTROOMS:
112 BATHROOM
114 BATHROOM

PROVIDE 2 X WOOD BLOCKING IN WALLS @ SHOWER STALLS FOR FUTURE INSTALLATION OF ADA GRAB BARS AND SHOWER SEAT (RE: MOUNTING HEIGHTS)

SIGNAGE SHALL BE MOUNTED ON THE WALL TO THE STRIKE SIDE OF DOOR, OR ON THE NEAREST ADJACENT WALL IF THERE IS NOT WALL SPACE ON THE STRIKE SIDE.

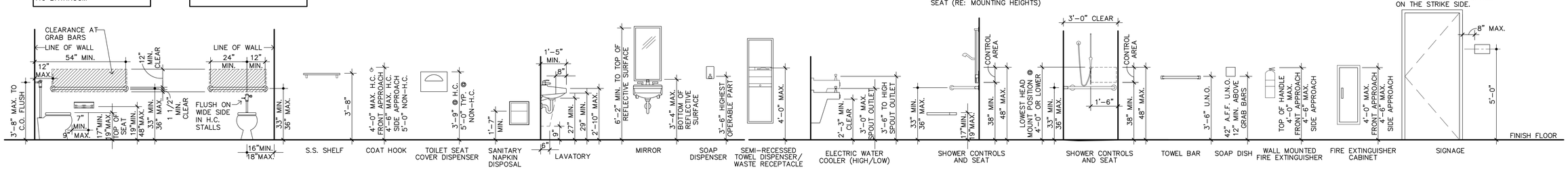

25 TYPICAL MOUNTING HEIGHTS
3/8" = 1'-0" ID002

KEYNOTES

DIVISION 06 – WOOD, PLASTICS, & COMPOSITES

0620.14 HARDWOOD VENEER PLYWOOD FIXED CLOSET SHELF WITH HEAVY DUTY COAT ROD
0640.01 HARDWOOD VENEER BASE CABINETS WITH ADJUSTABLE SHELVES
0640.03 PLASTIC LAMINATE VENEER BASE CABINETS WITH ADJUSTABLE SHELVES
0640.04 PLASTIC LAMINATE VENEER WALL CABINETS WITH ADJUSTABLE SHELVES
0640.18 ADJUSTABLE SHELVING
0640.24 ADJUSTABLE METAL SHELF STANDARDS. PROVIDE BLOCKING IN WALL AS REQUIRED
0640.32 SHELF BRACKET
0640.38 PLASTIC LAMINATE SHELF
0640.42 PLASTIC LAMINATE WARDROBE / LOCKER
0640.43 PLASTIC LAMINATE SUPPORT BRACKET
0640.44 PLASTIC LAMINATE REMOVABLE ACCESS PANEL
0640.88 HARDWOOD VENEER SUPPORT BRACKET

DIVISION 09 – FINISHES

0920.28 5/8" GYPSUM BOARD (TYPE X)
0920.52 5/8" GYPSUM BOARD, MOISTURE RESISTANT (TYPE X)
0930.01 CERAMIC TILE
0930.02 COVED CERAMIC TILE BASE
0960.13 4" RESILIENT BASE

DIVISION 10 – SPECIALTIES

1020.16 STAINLESS STEEL 1 1/2" DIAMETER GRAB BAR (36" LONG)
1020.17 STAINLESS STEEL 1 1/2" DIAMETER GRAB BAR (42" LONG)
1020.19 STAINLESS STEEL 1 1/2" DIAMETER GRAB BAR (L-SHAPED)
1020.20 SOAP DISPENSER (SURFACE-MOUNTED)
1020.24 STAINLESS STEEL SURFACE MOUNTED TOILET PAPER DISPENSER
1020.32 STAINLESS STEEL FRAMED MIRROR
1020.33 STAINLESS STEEL MOP RACK
1020.37 WALL-MOUNTED FOLDING SHOWER SEAT. PROVIDE BLOCKING IN WALL AS REQUIRED
1020.40 WALL MOUNTED SOAP DISH
1020.41 WALL MOUNTED TOWEL BAR
1020.62 GLASS SHOWER DOOR

DIVISION 11 – EQUIPMENT

1130.02 REFRIGERATOR
1130.07 CLOTHES DRYER
1130.14 CLOTHES WASHER

DIVISION 12 – FURNISHINGS

1230.19 SOLID SURFACE COUNTERTOP WITH 4" SPLASH AS SHOWN
1230.23 QUARTZ COUNTERTOP WITH SPLASH AS SHOWN
1250.01 FILE CABINET (N.I.C.)

DIVISION 22 – PLUMBING (RE: PLUMBING)

2240.01 WATER CLOSET. ORIENT FLUSH VALVE TOWARDS ACCESSIBLE SPACE AT ACCESSIBLE STALLS / RESTROOMS
2240.04 LAVATORY
2240.05 STAINLESS STEEL UNDERMOUNT SINK
2240.09 SHOWER HEAD
2240.11 MOP SINK
2240.23 UNDERMOUNT SINK
2240.25 SHOWER VALVE

DIVISION 26 – ELECTRICAL (RE: ELECTRICAL)

2650.22 INTERIOR LIGHT FIXTURE

NOTE

1.) ALL WOOD PRODUCTS TO BE FSC UNLESS OTHERWISE NOTED.

BROWN REYNOLDS WATFORD ARCHITECTS
2700 EARL RUDDER FRWY SOUTH
SUITE 4000
COLLEGE STATION, TEXAS 77845
979.694.1791
WWW.BRWARCH.COM

AUSTIN ONION CREEK
FIRE & EMS STATION
11112 OLD SAN ANTONIO ROAD
AUSTIN, TEXAS 78748

REVISIONS

DATE	9/23/2016
DRAWN BY	LA, MW
CHECKED BY	RH
PROJECT NO.	214106.00

A3.4

INTERIOR ELEVATIONS

NOTE: FIELD VERIFY MOUNTING HEIGHT WITH OWNER DURING CONSTRUCTION

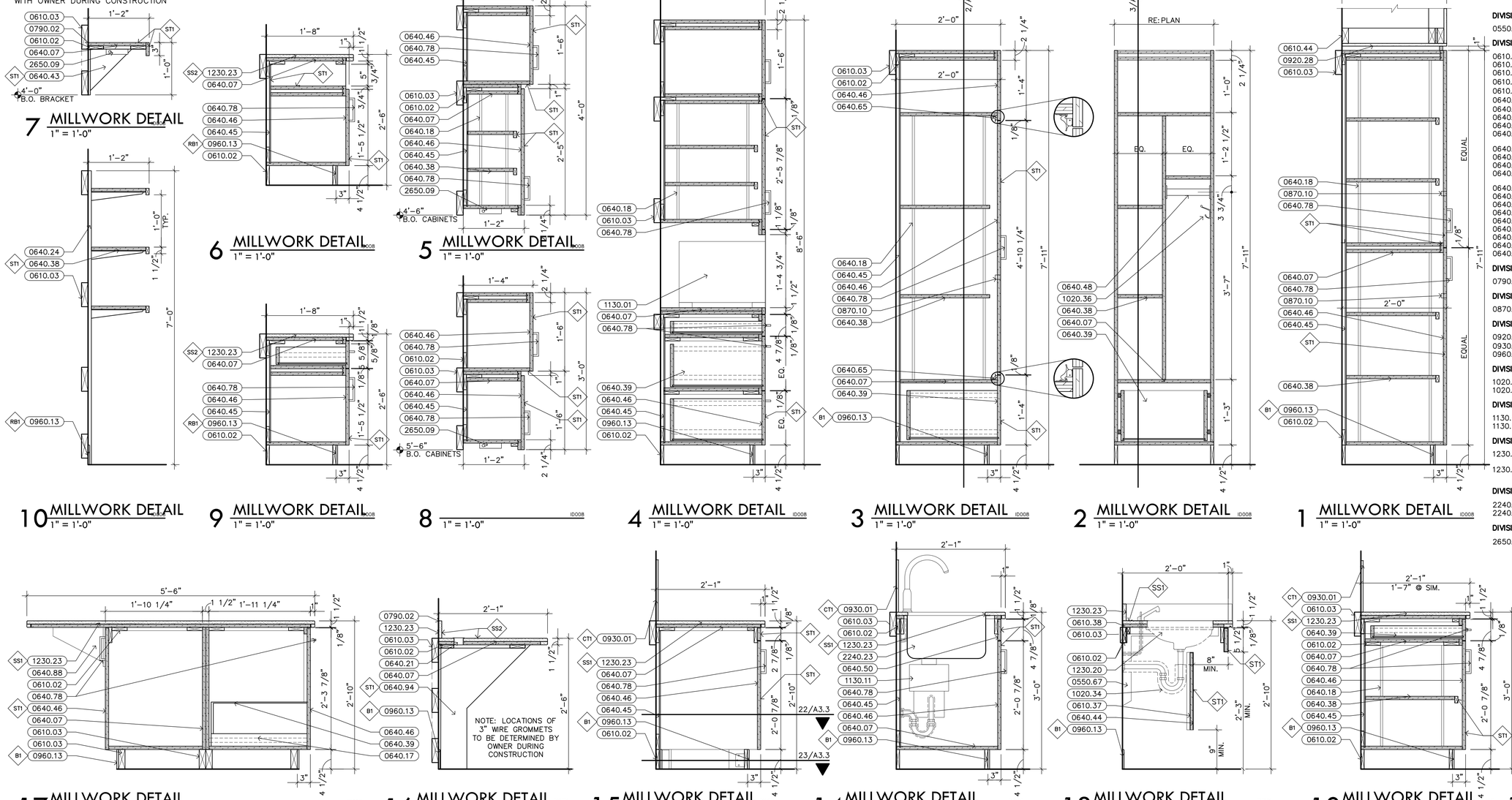

KEYNOTES

DIVISION 05 – METALS

0550.67 METAL SUPPORT BRACKET

DIVISION 06 – WOOD, PLASTICS, & COMPOSITES

0610.02 1X WOOD BLOCKING
0610.03 2X WOOD BLOCKING
0610.37 5/8" PLYWOOD
0610.38 3/4" PLYWOOD
0610.44 2X WOOD FRAMING (RE: STRUCTURAL)
0640.07 3/4" PLYWOOD
0640.17 DRAWER GLIDE
0640.18 ADJUSTABLE SHELVING
0640.21 3" WIRE GROMMET
0640.24 ADJUSTABLE METAL SHELF STANDARDS. PROVIDE BLOCKING IN WALL AS REQUIRED
0640.38 PLASTIC LAMINATE SHELF
0640.39 PLASTIC LAMINATE DRAWER
0640.43 PLASTIC LAMINATE SUPPORT BRACKET
0640.44 PLASTIC LAMINATE REMOVABLE ACCESS PANEL
0640.45 PLASTIC LAMINATE CABINET BACK
0640.46 PLASTIC LAMINATE CABINET DOOR
0640.47 TOE KICK
0640.48 HEAVY DUTY STEEL COAT ROD
0640.50 PLASTIC LAMINATE PANEL
0640.65 ELBOW CATCH
0640.78 BAR PULL
0640.88 HARDWOOD VENEER SUPPORT BRACKET
0640.94 HARDWOOD SUPPORT BRACKET

DIVISION 07 – THERMAL & MOISTURE PROTECTION

0790.02 CAULKING

DIVISION 08 – OPENINGS

0870.10 DISC TUMBLER LOCK

DIVISION 09 – FINISHES

0920.28 5/8" GYPSUM BOARD (TYPE X)
0930.01 CERAMIC TILE
0960.13 4" RESILIENT BASE

DIVISION 10 – SPECIALTIES

1020.34 VINYL-COATED PIPING WRAP
1020.36 COAT HOOK

DIVISION 11 – EQUIPMENT

1130.01 MICROWAVE
1130.11 FOOD DISPOSAL

DIVISION 12 – FURNISHINGS

1230.20 SOLID SURFACE COUNTERTOP WITH 4" SPLASH AS SHOWN AND INTEGRAL SINKS
1230.23 QUARTZ COUNTERTOP WITH SPLASH AS SHOWN

DIVISION 22 – PLUMBING (RE: PLUMBING)

2240.20 ADA COMPLIANT KITCHEN SINK
2240.23 UNDERMOUNT SINK

DIVISION 26 – ELECTRICAL (RE: ELECTRICAL)

2650.09 UNDER CABINET LIGHT

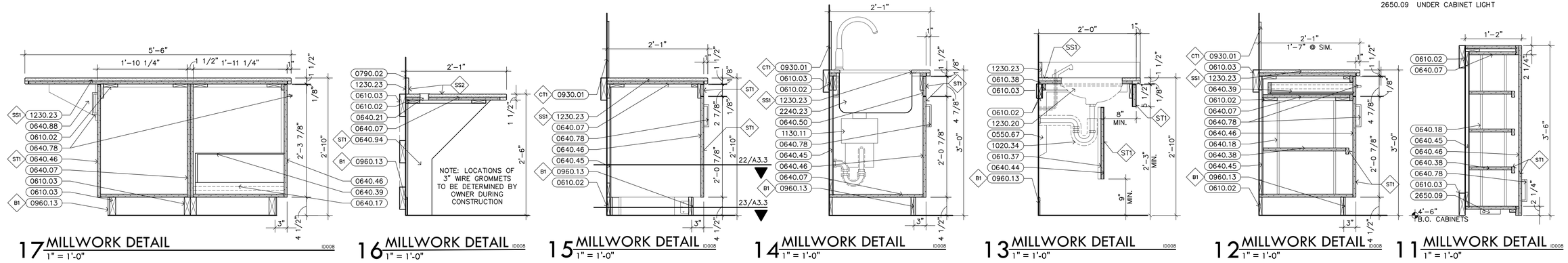

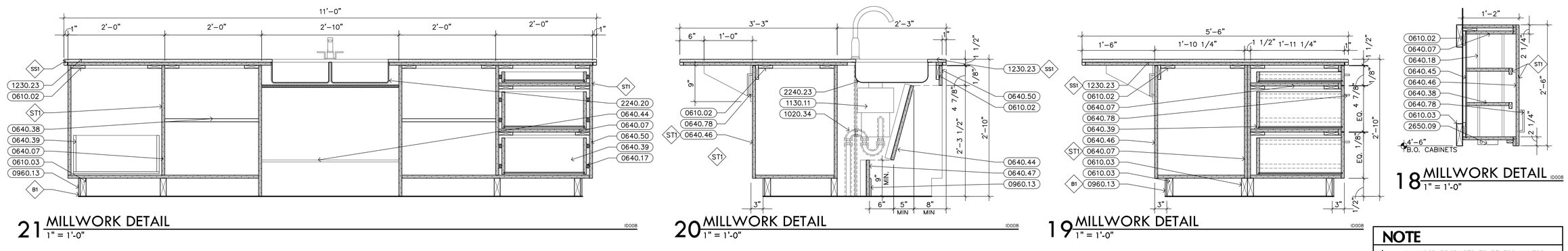

NOTE

1.) ALL WOOD PRODUCTS TO BE FSC UNLESS OTHERWISE NOTED.

BROWN REYNOLDS WATFORD ARCHITECTS
2700 EARL RUDDER FRWY SOUTH
SUITE 400G
COLLEGE STATION, TEXAS 77845
979.694.1791
WWW.BRWARCH.COM

AUSTIN ONION CREEK FIRE & EMS STATION
11112 OLD SAN ANTONIO ROAD
AUSTIN, TEXAS 78748

REGISTERED ARCHITECT WILLIAM E. WATFORD 9241 STATE OF TEXAS
09/23/16

REVISIONS

DATE	9/23/2016
DRAWN BY	LA, MW
CHECKED BY	RH
PROJECT NO.	214106.00

A3.5

MILLWORK DETAILS

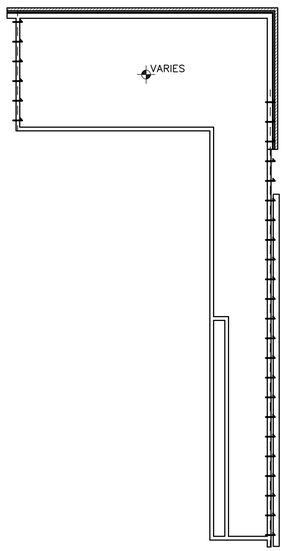

2 SECOND FLOOR REFLECTED CEILING PLAN BP001
1/8" = 1'-0"

PLAN NORTH TRUE NORTH

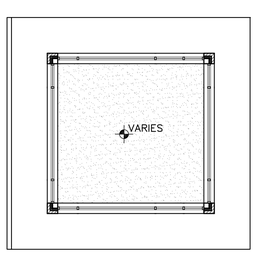

3 TOWER REFLECTED CEILING PLAN BP001
1/8" = 1'-0"

PLAN NORTH TRUE NORTH

1 FIRST FLOOR REFLECTED CEILING PLAN BP001
1/8" = 1'-0"

PLAN NORTH TRUE NORTH

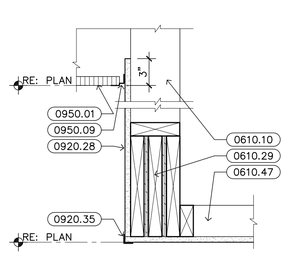

8 NOT USED ID004
1 1/2" = 1'-0"

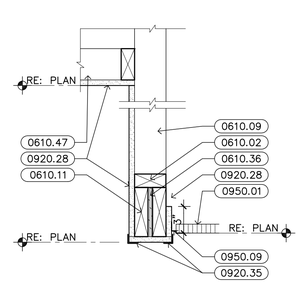

7 CEILING DETAIL ID004
1 1/2" = 1'-0"

6 CEILING DETAIL ID004
1 1/2" = 1'-0"

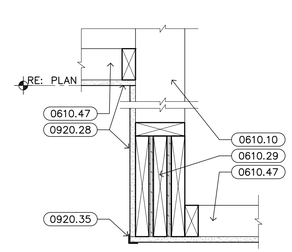

5 CEILING DETAIL ID004
1 1/2" = 1'-0"

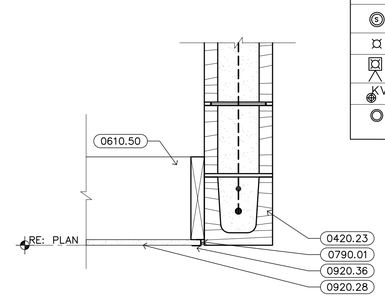

4 CEILING DETAIL ID004
1 1/2" = 1'-0"

KEYNOTES

DIVISION 04 – MASONRY

0420.23 CONCRETE MASONRY UNIT BOND BEAM

DIVISION 06 – WOOD, PLASTICS, & COMPOSITES

0610.02 1X WOOD BLOCKING
0610.09 2 X 4 WOOD STUDS AT 16" O.C.
0610.10 2 X 6 WOOD STUDS AT 16" O.C.
0610.11 2 X 6 WOOD FRAMING
0610.29 2X WOOD HEADER (RE: STRUCTURAL)
0610.36 1/2" PLYWOOD
0610.47 2 X 4 CEILING JOISTS @ 16" O.C.
0610.50 2 X 10 CEILING JOISTS @ 16" O.C.

DIVISION 07 – THERMAL & MOISTURE PROTECTION

0790.01 SEALANT WITH BACKER ROD AS REQUIRED

DIVISION 09 – FINISHES

0920.28 5/8" GYPSUM BOARD (TYPE X)
0920.35 CORNER BEAD, TYPICAL
0920.36 J-MOULD, TYPICAL
0950.01 SUSPENDED ACOUSTICAL LAY-IN TILE CEILING (2' X 2')
0950.09 ACOUSTICAL CEILING TILE TRANSITION STRIP

DIVISION 23 – HEATING, VENTILATING, & AIR-CONDITIONING (HVAC) (RE: MECHANICAL)

2330.19 CEILING FAN

LEGEND

SYMBOL	DESCRIPTION
	SUPPLY
	RETURN
	42" INTERIOR FAN 52" EXTERIOR FAN W/ HOR. BRACING KIT
	36" INTERIOR FAN W/ HOR. BRACING KIT
	2X4 FLUORESCENT
	2X4 FLUORESCENT (W/ EMERGENCY BATTERY BACK-UP)
	2X4 INDIRECT FLUORESCENT
	2X4 INDIRECT FLUORESCENT (W/ EMERGENCY BATTERY BACK-UP)
	1X4 FLUORESCENT
	1X4 FLUORESCENT (W/ EMERGENCY BATTERY BACK-UP)
	RECESSED INCANDESCENT LIGHT
	RECESSED INCANDESCENT LIGHT (W/ EMERGENCY BATTERY BACK-UP)
	BAY LIGHT
	BAY LIGHT (W/ EMERGENCY BATTERY BACK-UP)
	INTERIOR WALL SCONCE (BEDROOM)
	INTERIOR WALL SCONCE (BATH/RR)
	INTERIOR WALL SCONCE (STAIR)
	INTERIOR WALL SCONCE (STAIR) (W/ EMERGENCY BATTERY BACK-UP)
	INTERIOR WALL SCONCE (ATTIC)
	UNDER CABINET LIGHT
	EXTERIOR WALL SCONCE (SMALL)
	EXTERIOR WALL SCONCE (LARGE)
	WALL MOUNT EXIT LIGHT
SD	SMOKE DETECTOR
SD PH	SMOKE DETECTOR WITH HORN – PHOTOELECTRIC TYPE (HORN TO MEET 70 dB AT PILLOW LEVEL)
CO	CARBON MONOXIDE DETECTOR
S	TYPICAL P.A. SPEAKER
H	HEAT DETECTOR; COMBINATION FIXED TEMP. AND RATE OF RISE
S	TYPICAL WEATHERPROOF P.A. SPEAKER RECESSED INTO SOFFIT
	VISUAL NOTIFICATION APPLIANCE
	COMBINATION AUDIBLE & VISUAL NOTIFICATION APPLIANCE
KV	ALERT NOTIFICATION LIGHT
	RECESSED RED ALARM LIGHT

LEGEND

SYMBOL	DESCRIPTION
ALL FIXTURES	RE: ELECTRICAL
	2X2 CEILING TILES & GRID, TYP.
	GYPSUM BOARD CEILING, W/ C.J. @ SPECIFIED LOCATIONS TYP.
	1-HR RATED CEILING RE: 4/A3.3

09/23/16

BROWN REYNOLDS WATFORD ARCHITECTS
2700 EARL RUDDER FRWY SOUTH
SUITE 400D
COLLEGE STATION, TEXAS 77845
979.694.1791
WWW.BRWARCH.COM

AUSTIN ONION CREEK FIRE & EMS STATION

11112 OLD SAN ANTONIO ROAD
AUSTIN, TEXAS 78748

REVISIONS

DATE	9/23/2016
DRAWN BY	LA, MW
CHECKED BY	RH
PROJECT NO.	214106.00

A4.1

REFLECTED CEILING PLAN

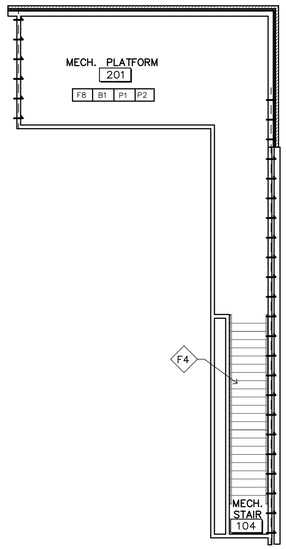

2 SECOND FLOOR FINISH PLAN
1/8" = 1'-0"

PLAN NORTH TRUE NORTH

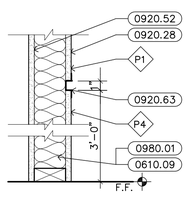

(SECTION VIEW)

3 REGLET DETAIL
1 1/2" = 1'-0"

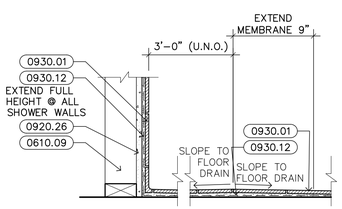

4 SHOWER DETAIL
1 1/2" = 1'-0"

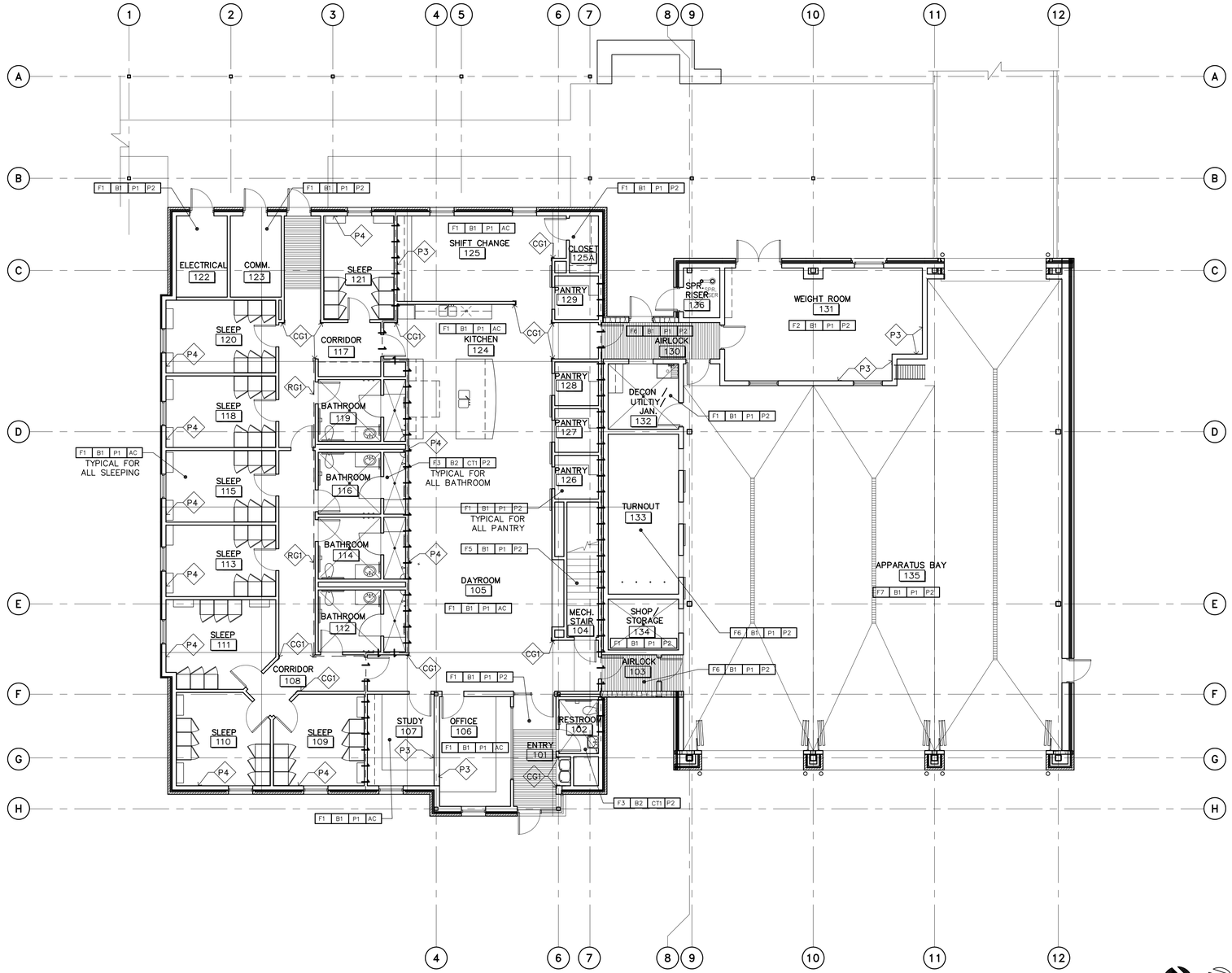

1 FIRST FLOOR FINISH PLAN
1/8" = 1'-0"

PLAN NORTH TRUE NORTH

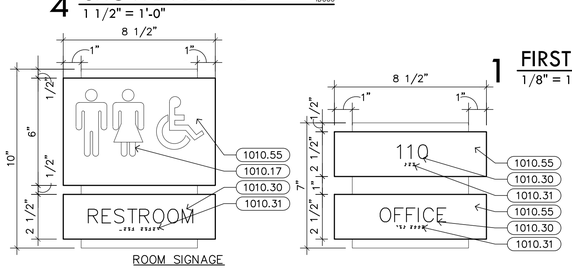

ROOM SIGNAGE

1. BACKGROUND (COLORS TO BE SELECTED BY ARCHITECT).
   USE $\frac{1}{32}$" RAISED LETTERS.
   USE GRADE 2 BRAILLE POSITIONED DIRECTLY BELOW TEXT.
   LOCATE ON WALL NEXT TO ROOM ENTRY.
   SIGNAGE MOUNTED ON GLASS SHALL HAVE A COORDINATED LAMINATE BACK.
2. EXIT/EGRESS SIGNAGE: PROVIDE INTERIOR TACTILE ROOM SIGNAGE AT ALL DOORS ALONG PASSAGEWAYS, EXIT STAIWAYS, AND EXIT DISCHARGE LEADING TO ACCESSIBLE MEANS OF EGRESS. REFER TO LIFE SAFETY PLAN.

9 PLAN DETAIL
1" = 1'-0"

EDUCATIONAL SIGN SCHEDULE

SIGN #	SIGNAGE TEXT	SIGN TYPE		QTY.
1	1		E	2
3	3	D		1
7	7	D		1
8	8	D		1
9	9	D		1
10	10	D		2
11	11	D		1
12	12	D		1
13	13	D		1
14	14	D		1
15	15	D		2
16	16	D		1

NOTE:
1. REF. X/A4.2 FOR TYPICAL MOUNTING HEIGHTS
2. FIELD VERIFY MOUNTING LOCATIONS WITH ARCHITECT PRIOR TO INSTALLATION

8 SCHEDULE
NOT TO SCALE

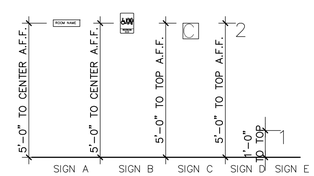

*BACKGROUND FOR SIGNS A, B & C (COLORS TO BE SELECTED BY ARCHITECT). USE GRADE 2 BRAILLE POSITIONED DIRECTLY BELOW TEXT.

7 TYPICAL MOUNTING HEIGHTS
NOT TO SCALE

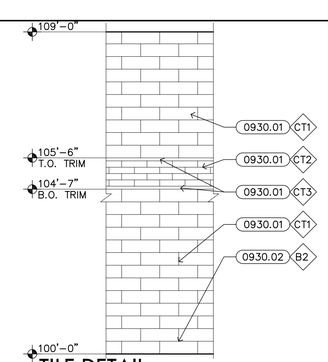

6 TILE DETAIL
1/2" = 1'-0"

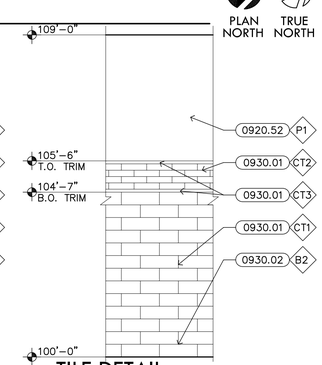

5 TILE DETAIL
1/2" = 1'-0"

KEYNOTES

DIVISION 06 – WOOD, PLASTICS, & COMPOSITES

0610.09 2 X 4 WOOD STUDS AT 16" O.C.

DIVISION 09 – FINISHES

0920.26 5/8" CEMENTITIOUS BACKER BOARD
0920.28 5/8" GYPSUM BOARD (TYPE X)
0920.52 5/8" GYPSUM BOARD, MOISTURE RESISTANT (TYPE X)
0920.63 ALUMINUM REVEAL
0930.01 CERAMIC TILE
0930.02 COVED CERAMIC TILE BASE
0930.12 FLUID–APPLIED, FABRIC–REINFORCED WATERPROOFING MEMBRANE
0980.01 2" SOUND ATTENUATION INSULATION

DIVISION 10 – SPECIALTIES

1010.17 VINYL / ACRYLIC GRAPHICS (RE: SIGNAGE CATALOG)
1010.30 RAISED LETTERS AND SYMBOLS
1010.31 RAISED BRAILLE LETTERING
1010.55 INTERIOR ROOM SIGNAGE

FINISH LEGEND

ROOM FINISH KEY

X	X	X	X	FIELD
X	–	X	–	ACCENT

FLOOR FINISH
BASE FINISH
WALL FINISH
CEILING FINISH

X SPECIAL FINISH KEY

FINISHES

AC 2 X 2 ACOUSTICAL TILE, NON–DIRECTIONAL

B1 RUBBER BASE
ROPPE, 193 BLACK BROWN

B2 CERAMIC TILE BUILT–UP COVE BASE 4X12
DALTILE, MODERN DIMENSIONS A–34C1, 0190 ARCTIC WHITE (GLOSS)

CG1 CORNER GUARD
ALUMINUM

CT1 CERAMIC WALL TILE 4X12
DALTILE, MODERN DIMENSIONS, 0190 ARCTIC WHITE (GLOSS)

CT2 CERAMIC WALL TILE ACCENT 2X8
DALTILE, MODERN DIMENSIONS, X114 DESERT GRAY (GLOSS)

CT3 CERAMIC WALL TILE TRIM 1X8–1/2
A–108 QUARTER ROUND, DALTILE, MODERN DIMENSIONS, X114 DESERT GRAY (GLOSS)

F1 SPECIAL CONCRETE FLOOR FINISH
EXPOSED AGGREGATE

F2 RUBBER FLOOR
ECO SURFACES, 910 JAILHOUSE ROCK (ROOM 131)

F3 PORCELAIN TILE 2X2
ARIZONA TILE, REGIS, BIANCO

F4 RESILIENT RUBBER STAIR TREAD, RISER, & 10" STRINGER
ROPPE RAISED CIRCULAR, 193 BLACK BROWN

F5 RUBBER TILE
ROPPE, 193 BLACK BROWN

F6 SEALED CONCRETE
(ROOMS 103, 130, 132, 133, 134)

F7 SPECIAL CONCRETE FLOOR FINISH
(ROOMS 135)

F8 PLYWOOD FLOOR

P1 PAINT (BASE WALLS)
SHERWIN WILLIAMS SW7532, URBAN PUTTY

P2 PAINT (CEILINGS)
SHERWIN WILLIAMS SW7010, WHITE DUCK

P3 PAINT (ACCENT WALLS)
SHERWIN WILLIAMS SW7592, CRABBY APPLE

P4 PAINT (ACCENT WALLS)
SHERWIN WILLIAMS SW0032, NEEDLEPOINT NAVY

P5 PAINT (H.M. FRAMES & H.M. DOORS)
SHERWIN WILLIAMS SW7020, BLACK FOX

RG1 REGLET
FRY REGLET, REVEAL REGLET 1", ALUMINUM
INSTALL 3'–0" A.F.F. (REFER TO DETAIL 3/A4.2)

SS1 QUARTZ SURFACE: DALTILE
MICRO FLECKS, NQ60 BRUSHED FLANNEL

SS2 QUARTZ SURFACE: DALTILE
MICRO FLECKS, NQ53 SEA SALTS

ST1 STAIN (MILLWORK, TRIM AND WOOD DOORS)
SHERWIN WILLIAMS SW3115–O BISTRO WALNUT

NOTES:

1. RE: SHEET A3.1 DOOR SCHEDULE FOR DOOR FINISHES
2. RE: SHEET A3.2 FOR INTERIOR ELEVATIONS
3. RE: SHEET A2.1 FOR EXTERIOR ELEVATIONS

NOTE

1.) WATERPROOFING MEMBRANE SHALL BE INSTALLED BEHIND TILE IN ALL AREAS.

2.) EXTEND CERAMIC TILE UNDER CABINETS TO WALL TYPICAL.

REGISTERED ARCHITECT MARK E. WATFORD 9241 STATE OF TEXAS
09/23/16

BROWN REYNOLDS WATFORD ARCHITECTS
2700 EARL RUDDER FRWY SOUTH
SUITE 4000
COLLEGE STATION, TEXAS 77845
979.694.1791
WWW.BRWARCH.COM

AUSTIN ONION CREEK FIRE & EMS STATION

11112 OLD SAN ANTONIO ROAD
AUSTIN, TEXAS 78748

REVISIONS

DATE	DRAWN BY	CHECKED BY	PROJECT NO.
9/23/2016	LA, MW	RH	214106.00

A4.2

FINISH PLAN

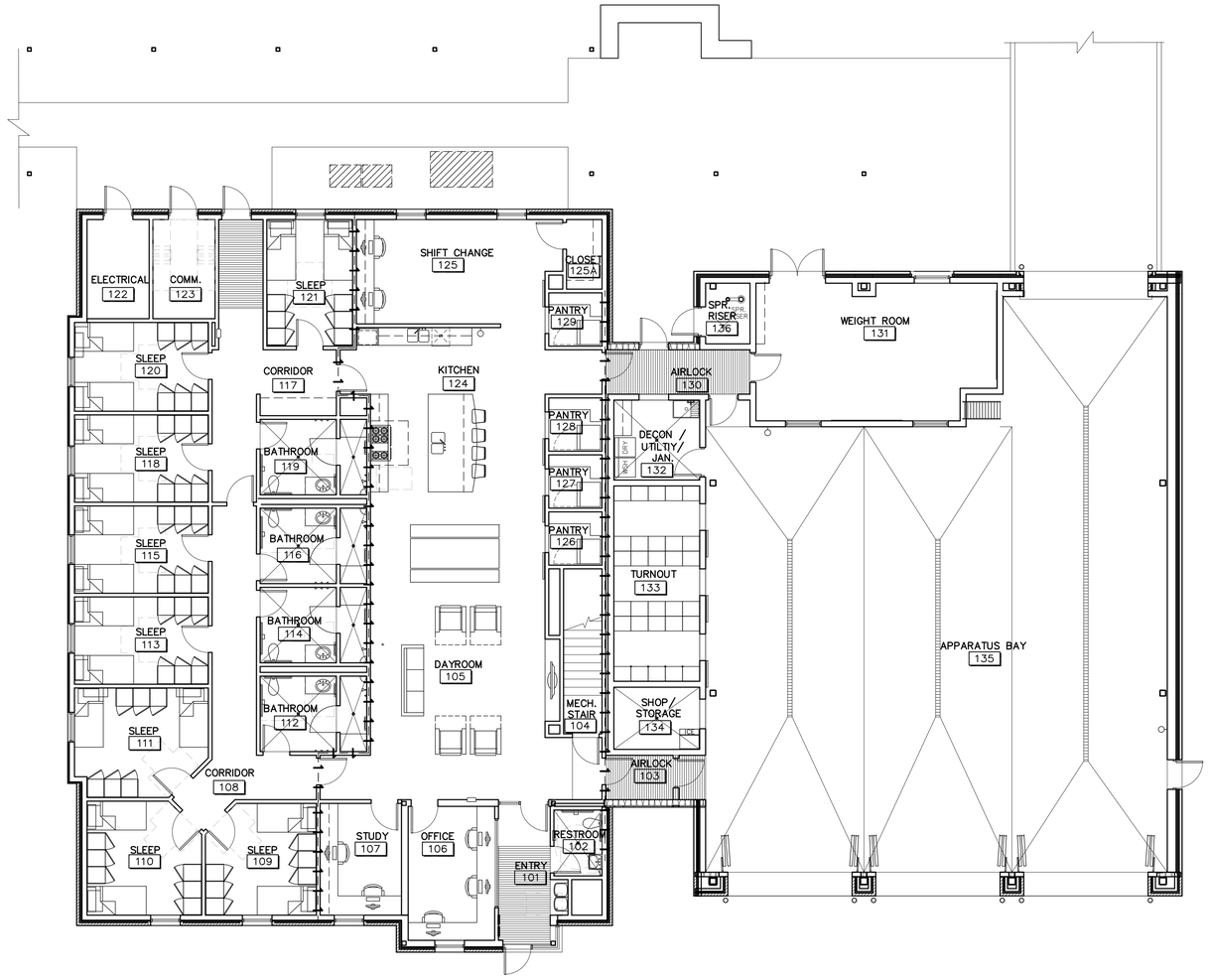

1 FIRST FLOOR FURNITURE PLAN (N.I.C.)
1/8" = 1'-0"

BP001

PLAN NORTH TRUE NORTH

NOTE:

FURNITURE/ EQUIPMENT LAYOUT PROVIDED FOR INFORMATION PURPOSES ONLY. ALL FURNITURE/ EQUIPMENT N.I.C. UNLESS OTHERWISE NOTED.

LEGEND

- DORMITORY BED
- LOUNGE CHAIR
- DESK CHAIR
- COUCH
- TELEVISION
- DINING TABLE

REGISTERED ARCHITECT MARK E. WATFORD 9241 STATE OF TEXAS
09/23/16

BROWN REYNOLDS WATFORD ARCHITECTS
2700 EARL RUDDER FRWY SOUTH
SUITE 400D
COLLEGE STATION, TEXAS 77845
979.694.1791
WWW.BRWARCH.COM

AUSTIN ONION CREEK FIRE & EMS STATION
11112 OLD SAN ANTONIO ROAD
AUSTIN, TEXAS 78748

REVISIONS

DATE	9/23/2016
DRAWN BY	LA, MW
CHECKED BY	RH
PROJECT NO.	214106.00

A4.3
FURNITURE PLAN

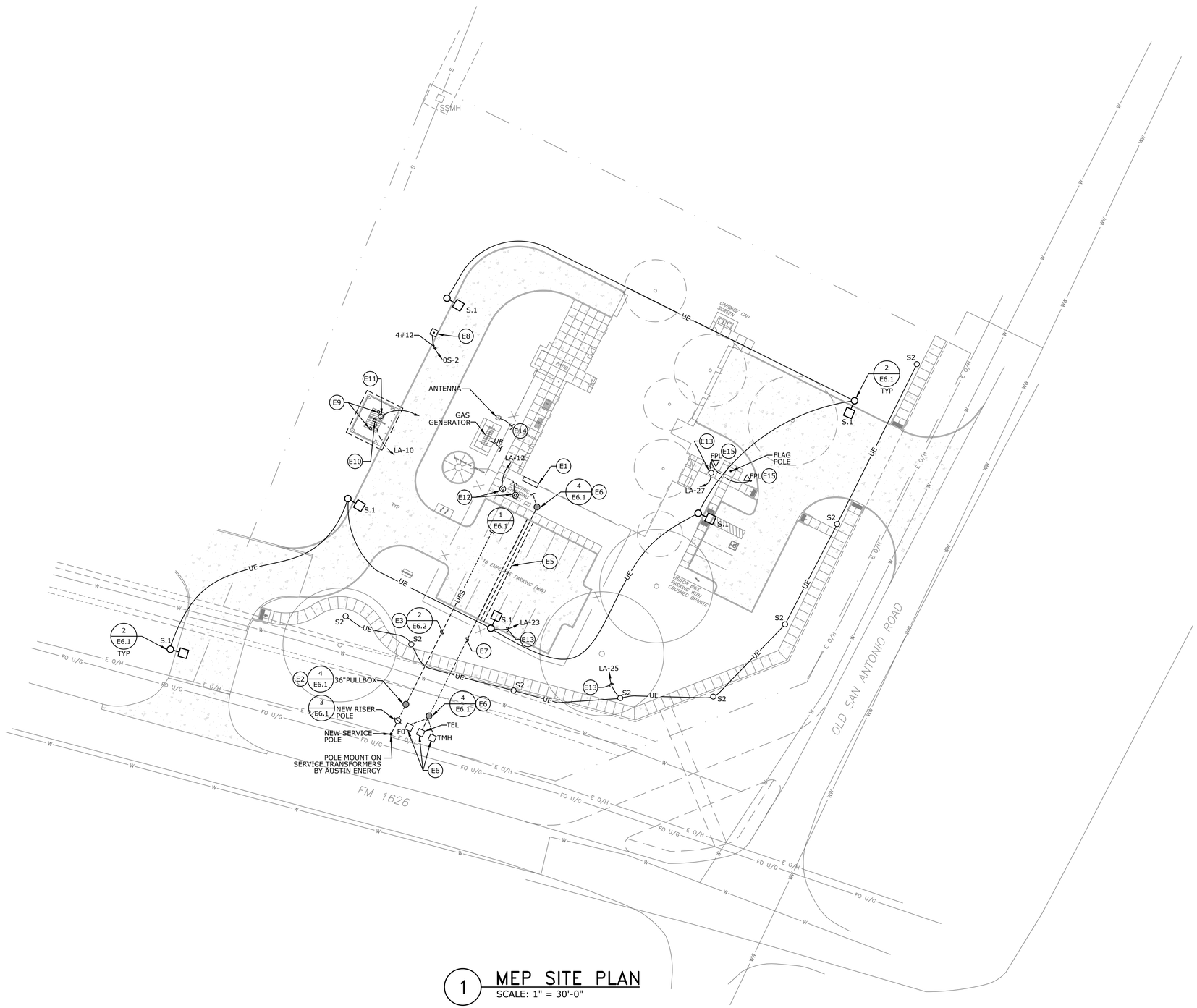

1 MEP SITE PLAN
SCALE: 1" = 30'-0"

GENERAL NOTES:

1. DRAWING IS DIAGRAMMATIC ONLY. CONTRACTOR SHALL COORDINATE EXACT LOCATION OF DUCTWORK, PIPING, CONDUIT, DEVICES AND EQUIPMENT WITH BUILDING ELEMENTS AND THE WORK OF OTHER TRADES.
2. PIPING AND CONDUITS ROUGH–IN AND FINAL CONNECTIONS TO/FROM OWNER PROVIDED EQUIPMENT SHALL BE COORDINATED AND PROVIDED BY THIS CONTRACTOR.

KEYED NOTES:

- E1 LOCATION FOR SERVICE METER, CT CABINET. MOUNT ON GALVANIZED STEEL C–CHANNEL SUPPORTED INDEPENDENTLY OF WALL.
- E2 ELECTRICAL SERVICE CONNECTION POINT. NEW PULL BOX AT BASE OF AE POLE.
- E3 SECONDARY SERVICE FEEDER ROUTED UNDERGROUND TO FUSED MAIN SERVICE DISCONNECT SWITCH.
- E4 REFER TO DETAIL 3 SHEET E2.1 FOR LOCATION OF NEW COMMUNICATION CONDUIT STUB–UP LOCATION IN COMM 123.
- E5 TRANSITION FROM PVC CONDUIT TO WRAPPED RGS CONDUIT WHERE ROUTED BELOW PARKING LOT.
- E6 PROVIDE COMMUNICATION PULL BOX FOR EXTENSION TO UTILITY SERVICE POINT. COORDINATE THESE SERVICE POINTS AND RACEWAY REQUIREMENTS WITH SERVICE PROVIDER.
- E7 TELEPHONE(S), LATV AND FUTURE GAATN CONDUIT, PROVIDE AS FOLLOWS.

  TELEPHONE– TWO 3" PVC–40 CONDUITS ONE WITH 3 INNER UNERS.

  FUTURE GAATN – ONE 3" PVC–40 CONDUIT

  CABLE TV – ONE 2" PVC–40 CONDUIT

  ROUTE ALL CONDUITS IN COMMON TRENCH FROM PULLBOX TO COMMUNICATION ROOM. PROVIDE EMPTY CONDUITS WITH LABELS AT BOTH ENDS AND NYLON PULL STRING.
- E8 EMERGENCY FUEL SHUT–OFF MUSHROOM BUTTON–VERIFY COMPATIBILITY WITH PUMPING SYSTEM AND SHUNT–TRIP EQUIPMENT. PROVIDE ENGRAVED/LAMINATED (WHITE LETTERS ON RED BACKGROUND) NAME PLATE " EMERGENCY FUEL PUMP SHUT–OFF". INTERFACE WITH SHUNT–TRIP PUMP POWER SUPPLY CIRCUIT BREAKERS. REFER TO ARCHITECTURAL DETAIL OF PEDESTAL.
- E9 COORDINATE GAS PUMP POWER TERMINATION WITH OWNER'S REPRESENTATIVE AND PUMPING EQUIPMENT. PROVIDE CONDUIT ROUTING AND SEALING FITTINGS PER NEC ART 514.
- E10 TYPE "Z" LIGHTING FIXTURE MOUNT DIRECTLY BELOW METAL DECK. COORDINATE WITH ARCHITECT AND FUEL DISPENSING EQUIPMENT FROM EXACT LOCATION. PROVIDE 2 #10, 1" C RGS CONDUIT TO PANEL "LA". PROVIDE CONDUIT AND SEAL FITTINGS IN COMPLIANCE WITH NEC ART. 514.
- E11 STUB–UP (4) 1" CONDUITS FOR VEEDER ROOT. REFER TO FUEL SYSTEM LAYOUT AND FLOOR PLAN SHEET E2.1
- E12 EXTEND ONE 1" CONDUIT TO PANEL LA FOR POWER AND ONE 1" CONDUIT TO COMM ROOM FOR POWER AND DATA RESPECTIVELY FOR ELECTRIC VEHICLE CHARGING STATIONS.
- E13 ROUTE BRANCH CIRCUIT THROUGH EXTERIOR LIGHTING CONTROL PANEL.
- E14 REFER TO SHEET E2.1 AND E4.1 FOR CONDUIT REQUIREMENTS. FOR ANTENNA AND GENERATOR.
- E15 INSTALL AT 15.0' FROM BASE OF FLAG POLE.

STATE OF TEXAS
JORGE A. OLIVARES
95828
LICENSED
PROFESSIONAL ENGINEER
9-23-2016

Jose I. Guerra, Inc.
Consulting Engineers
Structural • Civil • Mechanical • Electrical
TBPE FIRM F–3

AUSTIN ONION CREEK FIRE & EMS STATION
1112 OLD SAN ANTONIO ROAD
AUSTIN, TEXAS 78748

CITY OF AUSTIN 1839 FOUNDED

REVISIONS

DATE	9/23/2016
DRAWN BY	JD
CHECKED BY	JO
PROJECT NO.	214106.00

MEPO

M.E.P. SITE PLAN

CADFILE: F:\15071_Onion Creek Fire-EMS Station\DRAWINGS\CAD\15071_MEPO M.E.P. Site Plan.dwg Plotted: Thu., Sep. 22, 2016 @ 9:26 PM By: kshirazi Scale: 1:360

MECHANICAL LEGEND

SYMBOL	DESCRIPTION	SYMBOL	DESCRIPTION
	EXISTING EQUIPMENT TO REMAIN	— · —	DOMESTIC COLD WATER PIPING
	EXISTING EQUIPMENT TO BE REMOVED	— ·· —	DOMESTIC HOT WATER PIPING
	NEW EQUIPMENT	— ··· — — TW —	HOT WATER RECIRCULATION PIPING TEMPERED HOT WATER
	NEW EQUIPMENT ON ROOF OR NEXT HIGHER LEVEL	— SS —	SANITARY WASTE PIPING
	DUCT WITH VOLUME DAMPER	— GT —	GREASE TRAP WASTE PIPING
FD	DUCT WITH FIRE DAMPER	— SD —	STORM DRAIN PIPING
BD	DUCT WITH BACKDRAFT DAMPER	— OD —	OVERFLOW DRAIN PIPING
M	DUCT WITH MOTORIZED DAMPER	— — — —	SANITARY VENT PIPING
	DUCT MOUNTED SMOKE DETECTOR	— AR —	ACID RESISTANT WASTE PIPING
AD	DUCT WITH ACCESS DOOR	— AV —	ACID VENT PIPING
	ROUND DUCT ELBOW DOWN	— UG —	UNDERGROUND LINE
	MAIN DUCT WITH SPIN-IN FITTING AND VOLUME DAMPER	— G —	GAS PIPING
	FLEXIBLE DUCT	— D — — AD —	CONDENSATE DRAIN PIPING AUXILIARY CONDENSATE DRAIN PIPING
	SUPPLY AIR DIFFUSER	— HS —	HYDRONIC SUPPLY PIPING
	RETURN AIR GRILLE	— HR —	HYDRONIC RETURN PIPING
	EXHAUST AIR GRILLE	— RL —	REFRIGERANT LIQUID PIPING
	SUPPLY AIR DUCT UP	— RS —	REFRIGERANT SUCTION PIPING
	RETURN AIR DUCT UP	— CHWS — — CHWR —	CHILLED WATER SUPPLY CHILLED WATER RETURN
	EXHAUST AIR DUCT UP	— HWS — — HWR —	HEATING WATER SUPPLY HEATING WATER RETURN
	SUPPLY AIR DUCT DOWN	— F —	FIRE LINE
	RETURN AIR DUCT DOWN		PIPE ELBOW DOWN
	EXHAUST AIR DUCT DOWN		PIPE ELBOW UP
SCFM(X)	SUPPLY AIR DEVICE DESIGNATION		PIPE UNION
RCFM(X)	RETURN AIR DEVICE DESIGNATION		GATE VALVE
ECFM(X)	EXHAUST AIR DEVICE DESIGNATION		GLOBE VALVE
AS	AIR SEPARATOR		BALANCING VALVE
A.A.V.	AUTOMATIC AIR VENT		CONTROL VALVE, 2-WAY
	THERMOMETER		CONTROL VALVE, 3-WAY
	THERMOMETER WELL WITH CAP AND CHAIN		BALL VALVE
	VENTURI FLOW METER		BUTTERFLY VALVE
	FLEXIBLE CONNECTION		GAS VALVE
HB/ FPHB	HOSE BIB/ FREEZE PROOF HOSE BIBB		CHECK VALVE, SWING GATE
FS	FLOW SWITCH		PRESSURE GAUGE ASSEMBLY
PS	PRESSURE SWITCH		PRESSURE RELIEF VALVE
	PUMP		GAUGE COCK
H	PRIMARY THERMOSTAT/TEMPERATURE HUMIDISTAT		REDUCER, CONCENTRIC
T	SENSOR		REDUCER, ECCENTRIC
T_X	SECONDARY THERMOSTAT/ TEMPERATURE SENSOR		STRAINER
	POINT OF DISCONNECT		STRAINER, BLOWOFF
	POINT OF CONNECTION		CIRCUIT SETTER

NOTE: THIS LEGEND IS GENERAL IN NATURE. SOME OF THE LISTED SYMBOLS MAY NOT APPEAR IN THIS SET OF DRAWINGS.

ABBREVIATIONS

A. (AMP)	AMPERES	MBH	1000 BTU PER HOUR
A (SYM.)	AMPERES SYMMETRICAL	MC	MECHANICAL CONTRACTOR
AC	ALTERNATING CURRENT	MCP	MOTOR CIRCUIT PROTECTOR
AD	ACCESS DOOR	MIN.	MINIMUM
AFD	ADJUSTABLE FREQUENCY DRIVE	MTR.	MOTOR
AFF	ABOVE FINISHED FLOOR	MTD.	MOUNTED
AFG	ABOVE FINISHED GRADE	MVD	MANUAL VOLUME DAMPER
AHJ	AUTHORITY HAVING JURISDICTION	(N)	NEW
AIC	AMPS INTERRUPTING CAPACITY	NC	NORMALLY CLOSED
AR	ACID RESISTANT	N.C.	NOISE CRITERIA
ATP	AUTOMATIC TRAP PRIMER	NEMA	NATIONAL ELECTRICAL MANUFACTURERS ASSOCIATION
AVTR	ACID VENT THROUGH ROOF	NETA	NATIONAL ELECTRICAL TESTING ASSOCIATION
AW	ACID WASTE	NF	NON-FUSED
AWG	AMERICAN WIRE GAGE	NIC	NOT IN CONTRACT
BFG	BELOW FINAL GRADE	NO	NORMALLY OPEN
BLDG.	BUILDING	NO.	NUMBER
BTU	BRITISH THERMAL UNITS	OA	OUTSIDE AIR
BTUH	BRITISH THERMAL UNITS PER HOUR	OBD	OPPOSED BLADE DAMPER
C.	CONDUIT	OFCI	OWNER FURNISHED, CONTRACTOR INSTALLED
CAB.	CABINET	OHD	OPEN HUB DRAIN
C/B	CIRCUIT BREAKER	P.	POLE (S)
C/L	CENTERLINE	PB	PULL BOX, PUSH-BUTTON
CFH	CUBIC FEET PER HOUR	PD	PRESSURE DROP
CFM	CUBIC FEET PER MINUTE	PF	POWER FACTOR
CKT.	CIRCUIT	PH.	PHASE
CLG.	CEILING	PLBG.	PLUMBING
COM	COMMUNICATION CONDUIT	PNL.	PANELBOARD
CONT.	CONTINUE	POC	POINT OF CONNECTION
CONN.	CONNECT (ION)	PR.	PAIR
CO	CLEANOUT	QUAD.	QUADRUPLEX
COP	COEFFICIENT OF PERFORMANCE	RA	RETURN AIR
CT	CURRENT TRANSFORMER	RF.	ROOF
CW	DOMESTIC COLD WATER	RPM	REVOLUTIONS PER MINUTE
DB	DRY BULB	SA	SUPPLY AIR
DC	DIRECT CURRENT	SCCR	SHORT CIRCUIT CURRENT RATING
DISC.	DISCONNECT	SD	SOFT-DRAWN
DN	DOWN	SEER	SEASONAL ENERGY EFFICIENCY RATING
DS	DOWN SPOUT	SHT.	SHEET
DWGS.	DRAWINGS	SOV	SHUT-OFF VALVE
DYCO	DOUBLE YARD CLEANOUT	SP	STATIC PRESSURE
EA.	EACH	SPECS.	SPECIFICATIONS
EA	EXHAUST AIR	STL.	STEEL
EAT	ENTERING AIR TEMPERATURE	SW.	SWITCH
EC	ELECTRICAL CONTRACTOR	SWBD.	SWITCHBOARD
EER	ENERGY EFFICIENCY RATING	SWGR.	SWITCHGEAR
EFF.	EFFICIENCY	T.	TRIP
ENCL.	ENCLOSURE	T/S	TWISTED/SHIELDED
ESP	EXTERNAL STATIC PRESSURE	TERM.	TERMINATION
EXIST., (E)	EXISTING	T-M	THERMAL-MAGNETIC
F.	FUSE(D), FRAME	TR	TAMPER RESISTANT
FCO	FLOOR CLEANOUT	TSP	TOTAL STATIC PRESSURE
FLEX.	FLEXIBLE	TU	TERMINAL UNIT
FPI	FINS PER INCH	TYP.	TYPICAL
FRP	FIRE RETARDANT PIPE	UL	UNDERWRITERS LABORATORY
FVNR	FULL VOLTAGE NON-REVERSING	UNO	UNLESS NOTED OTHERWISE
GND.	GROUND	V.	VENT
GFI	GROUND FAULT CIRCUIT INTERRUPTER	VIB	VALVE IN BOX
GR.	GRADE	VAC	VOLTS AC
GRC	GALVANIZED RIGID CONDUIT	VDC	VOLTS DC
HB	HOSE BIBB	VFD	VARIABLE FREQUENCY DRIVE
HD	HARD-DRAWN	VTR	VENT THROUGH ROOF
HP	HORSEPOWER	VAV, VVT	VARIABLE AIR VOLUME TERMINAL
HW	DOMESTIC HOT WATER	VT	VOLTAGE TAP OR TRANSDUCER
HZ.	HERTZ (CYCLES PER SECOND)	W.	WATT, WIRE
IG	ISOLATED GROUND	W/	WITH
IMB	ICE MACHINE BOX	WB	WET BULB
ISO.	ISOLATION	WCO	WALL CLEANOUT
K	KILO / THOUSAND	WG	WATER GAUGE
KCMIL	THOUSAND CIRCULAR MILS	WHA	WATER HAMMER ARRESTER
KV	KILO-VOLTS	WIU	WHILE IN USE
KVA	KILO-VOLT x AMPERES	WMB	WASHING MACHINE BOX
KW	KILO-WATT	WP	WEATHERPROOF
KWHR	KILO-WATT HOUR (KW x HR.)	WPD	WATER PRESSURE DROP
LAT	LEAVING AIR TEMPERATURE	WR	WEATHER RESISTANT
LR	LONG RADIUS	XFMR.	TRANSFORMER
LTG.	LIGHTING	YCO	YARD CLEANOUT
MAX.	MAXIMUM		

NOTE: THIS LEGEND IS GENERAL IN NATURE. SOME OF THE LISTED SYMBOLS MAY NOT APPEAR IN THIS SET OF DRAWINGS.

GENERAL NOTES

1. IT IS THE INTENT OF THESE DOCUMENTS THAT A COMPLETE AND WORKABLE INSTALLATION BE PROVIDED. TO THIS END, THE CONTRACTOR SHALL FURNISH ALL LABOR, MATERIALS, EQUIPMENT, TOOLS, SUPERVISION, TRANSPORTATION, WAREHOUSING, AND OTHER SERVICES REQUIRED TO COMPLETE THE WORK IN AN EFFICIENT AND TIMELY MANNER.
2. ALL WORK, INCLUDING MATERIALS AND WORKMANSHIP, SHALL CONFORM TO THE REQUIREMENTS OF ALL LOCAL CODES, LAWS, AND ORDINANCES AND THE LATEST EDITION OF THE NEC, INTERNATIONAL MECHANICAL, PLUMBING, IECC, AND BUILDING CODES. WORK SHALL BE COMPLETE IN ALL RESPECTS AND IN ACCORDANCE WITH THE BEST ESTABLISHED AND ACCEPTED CONSTRUCTION PRACTICES.
3. CONTRACTOR SHALL PROCURE ALL REQUIRED PERMITS FROM THE LEGALLY CONSTITUTED AUTHORITIES, ARRANGE ALL INSPECTIONS AND PAY FOR ALL REQUIRED TESTING AND UTILITY CONNECTIONS.
4. CONTRACTOR SHALL FURNISH, INSTALL/ERECT AND MAINTAIN, FOR THE DURATION OF THE WORK, ALL GUARDRAILS, LIGHTS, WARNING SIGNS, STAGING, VENTILATION, ETC. REQUIRED BY LOCAL AND STATE LAWS AND ORDINANCES, INCLUDING THE SAFETY ORDERS OF OSHA.
5. THE CONTRACTOR SHALL VISIT THE SITE PRIOR TO BID AND SHALL BECOME THOROUGHLY FAMILIAR WITH THE EXISTING CONDITIONS. BY THE ACT OF SUBMITTING A BID, THIS CONTRACTOR ACCEPTS THE CONDITIONS UNDER WHICH THE WORK WILL BE PERFORMED.
6. SUBSTITUTIONS OR DEVIATIONS FROM THE PLANS AND SPECIFICATIONS WILL ONLY BE CONSIDERED PRIOR TO THE TIME OF BIDDING AND ONLY WHEN SUBMITTED IN WRITING. THE BURDEN OF PROOF THAT THE SUBSTITUTED ITEM IS EQUAL TO THE SPECIFIED ITEM RESTS WITH THE CONTRACTOR.
7. CONTRACTOR SHALL PROTECT EXISTING BUILDINGS, STRUCTURES AND UTILITIES FROM DAMAGE. ANY DAMAGE CAUSED BY THE CONTRACTOR SHALL BE REPAIRED AT NO EXPENSE TO THE OWNER.
8. THE DRAWINGS ARE ESSENTIALLY DIAGRAMMATIC TO THE EXTENT THAT ALL OFFSETS, BENDS, SPECIAL FITTINGS AND LOCATIONS ARE NOT EXACTLY LOCATED.
9. ALL INDICATED DIMENSIONS ARE APPROXIMATE AND ARE GIVEN FOR ESTIMATE PURPOSES ONLY. BEFORE PROCEEDING WITH THE WORK, CONTRACTOR SHALL CAREFULLY CHECK AND VERIFY ALL DIMENSIONS, SIZES, REQUIRED CLEARANCES AND SHALL ASSUME FULL RESPONSIBILITY FOR THE FITTING OF ALL EQUIPMENT AND MATERIALS HEREIN REQUIRED TO OTHER PARTS OF THE WORK AND TO THE WORK OF OTHER TRADES.
10. CONTRACTOR SHALL COMPLY WITH ALL CONTRACT DOCUMENTS IN LAYING OUT THE WORK AND EQUIPMENT. CONTRACTOR SHALL COORDINATE THE WORK WITH THE WORK OF OTHER TRADES AND ALL JOB CONDITIONS.
11. CONTRACTOR SHALL HAVE A COMPETENT SUPERINTENDENT PRESENT AT THE JOB SITE AT ALL TIMES, WITH AUTHORITY TO ACT FOR THE CONTRACTOR.
12. ALL CONTRACTOR PERSONNEL WILL BE RESTRICTED TO THE PARTICULAR JOB SITE OF THIS CONTRACT.
13. UNLESS NOTED OTHERWISE, ALL MATERIALS AND EQUIPMENT SHALL BE NEW AND OF THE HIGHEST QUALITY.
14. ALL EQUIPMENT SHALL BE INSTALLED IN STRICT ACCORDANCE WITH MANUFACTURER'S WRITTEN INSTRUCTIONS.
15. ANY APPARATUS, APPLIANCE, DEVICE, MATERIAL, OR WORK NOT SHOWN ON DRAWINGS BUT MENTIONED IN THE SPECIFICATIONS, OR VICE VERSA, OR ANY INCIDENTAL ACCESSORIES NECESSARY TO MAKE THE WORK COMPLETE AND OPERATIONAL IN ALL RESPECTS AND READY FOR TESTING AND OPERATION, EVEN IF NOT PARTICULARLY SPECIFIED, SHALL BE FURNISHED, DELIVERED, AND INSTALLED BY THE CONTRACTOR WITHOUT ADDITIONAL COST TO THE OWNER.
16. ALL MISCELLANEOUS IRON AND STEEL WORK REQUIRED TO PROPERLY INSTALL EQUIPMENT SHALL BE FURNISHED AND INSTALLED BY THE CONTRACTOR. WORK INCLUDES ALL HANGERS, SUPPORTS, RACKS, BRACKETS AND ANY WELDING REQUIRED.
17. ACCESS AND WORKING SPACE SHALL BE PROVIDED AND MAINTAINED AROUND ALL MECHANICAL, ELECTRICAL AND CONTROL EQUIPMENT TO PERMIT READY AND SAFE OPERATION, EXAMINATION AND MAINTENANCE.
18. DURING CONSTRUCTION, THE CONTRACTOR SHALL MAINTAIN A DAILY RECORD OF ALL DEVIATIONS FROM THE BID DRAWINGS. ALL DIMENSIONS AND OTHER INFORMATION NECESSARY TO COMPLETELY EXPLAIN AND LOCATE ALL ELEMENTS OF THESE DEVIATIONS SHALL BE RECORDED. UPON COMPLETION OF WORK, THE CONTRACTOR SHALL SUBMIT TO THE OWNER'S REPRESENTATIVE, ONE COMPLETE SET OF REPRODUCIBLE DRAWINGS CORRECTED TO REFLECT "AS-BUILT" CONDITIONS OF THE WORK.
19. THE CONTRACTOR SHALL AT ALL TIMES KEEP THE PREMISES FREE FROM ACCUMULATION OF WASTE MATERIAL OR RUBBISH; MAINTAIN THE WORK AREA IN A NEAT, ORDERLY MANNER, AND LEAVE THE PREMISES IN A BROOM-CLEAN CONDITION AT THE END OF EACH DAY. THE CONTRACTOR SHALL FURNISH TRASH BINS AND SHALL BE RESPONSIBLE FOR THE PROPER TRANSPORTATION AND DISPOSAL OF ALL WASTE MATERIAL.
20. ANY INTERRUPTIONS AND/OR SHUTDOWN OF EXISTING SERVICES SHALL BE MADE ONLY WITH THE APPROVAL OF AND AT TIMES DESIGNATED BY OWNER.
21. UPON COMPLETION OF WORK, THE CONTRACTOR SHALL DEMONSTRATE, TO THE OWNER'S SATISFACTION, THE OPERATION OF THE INSTALLED EQUIPMENT AND SYSTEMS TO THE INTENT OF THE DESIGN.
22. ALL WORK SHALL BE GUARANTEED FOR A PERIOD OF ONE YEAR FROM THE DATE OF FINAL ACCEPTANCE BY THE OWNER. DURING THIS PERIOD, ANY DEFECT FOUND IN MATERIAL OR WORKMANSHIP SHALL BE REPAIRED OR REPLACED TO OWNER'S SATISFACTION, AT THE CONTRACTOR'S EXPENSE.
23. COORDINATE THE INSTALLATION REQUIREMENTS OF EQUIPMENT WITH MANUFACTURERS WRITTEN INSTRUCTIONS. CHANGES REQUIRED FROM THE USE OF PRODUCTS THAT ARE OTHER THAN THE BASIS OF DESIGN SHALL BE BORNE BY THE CONTRACTOR.

STATE OF TEXAS — JORGE A. OLIVARES — 95828 — LICENSED PROFESSIONAL ENGINEER — 9-23-2016

STATE OF TEXAS — BRANDON N. REYES — 106528 — LICENSED PROFESSIONAL ENGINEER — 09-23-2016

9-23-2016 STATE OF TEXAS — ROBERTO DE LA CRUZ — 85431 — LICENSED PROFESSIONAL ENGINEER

Jose I. Guerra, Inc.
Consulting Engineers
Structural • Civil • Mechanical • Electrical
TBPE FIRM F-3

AUSTIN ONION CREEK FIRE & EMS STATION
1112 OLD SAN ANTONIO ROAD
AUSTIN, TEXAS 78748

REVISIONS

DATE	9/23/2016
DRAWN BY	JD
CHECKED BY	RC
PROJECT NO.	214106.00

MP1.0

MECH. & PLUMB. LEGENDS, ABBR. & GENERAL NOTES

CADFILE: F:\15071_Onion Creek Fire-EMS Station\DRAWINGS\CAD\15071_MP1-0 Mechanical Plumbing Legends, Abbr., & General Notes.dwg Plotted: Thu, Sep. 29, 2016 @ 2:21 PM By: kshirazi Scale: 1:1

GENERAL NOTES:

DRAWING IS DIAGRAMMATIC ONLY. CONTRACTOR SHALL COORDINATE EXACT LOCATION OF DUCTWORK, PIPING, DEVICES AND EQUIPMENT WITH BUILDING ELEMENTS AND THE WORK OF OTHER TRADES.

ALL SPIRAL AND FLEXIBLE DUCT RUNOUTS TO DIFFUSERS SHALL BE SAME SIZE AS SCHEDULED DIFFUSER NECKS.

MECHANICAL CONTRACTOR SHALL PROVIDE ALL CONTROL AND INTERLOCK WORK INCLUDING CONDUIT AND WIRING ACCORDING TO REQUIREMENTS SPECIFIED UNDER THE ELECTRICAL SPECIFICATIONS PORTION. MECHANICAL CONTRACTOR SHALL PROVIDE ALL CONTROLS WORK , DEVICES, INCLUDING AUTOMATIC DAMPERS, NOT PROVIDED BY THE VRF MANUFACTURER REPRESENTATIVE. MECHANICAL CONTRACTOR SHALL PROVIDE CONTROLS SUBMITTALS ON ALL SYSTEMS.

KEYED NOTES:

1. INSTALL ALL EQUIPMENT AS PER MANUFACTURERS RECOMMENDATIONS.
2. BALANCE TO 150 CFM.
3. PROVIDE RETRACTABLE HOSE REEL. BASIS OF DESIGN IS MONOXIVENT.
4. INTERLOCK WITH KEF-1 AND AHU-1. DAMPER SHALL OPEN WHEN KEF-1 IS ACTIVATED AND AHU-1 IS ACTIVATED INTO HIGH SPEED SETTING OF 1645 CFM. MOTORIZED DAMPER SHALL BE 120/1/60.
5. INTERLOCK LOUVER L-10 WITH EF-2 AND EF-4. LOUVER L-10 SHALL OPEN WHEN EF-2 AND EF-4 ARE ENERGIZED. MOTORIZED DAMPER SHALL BE 120/1/60.

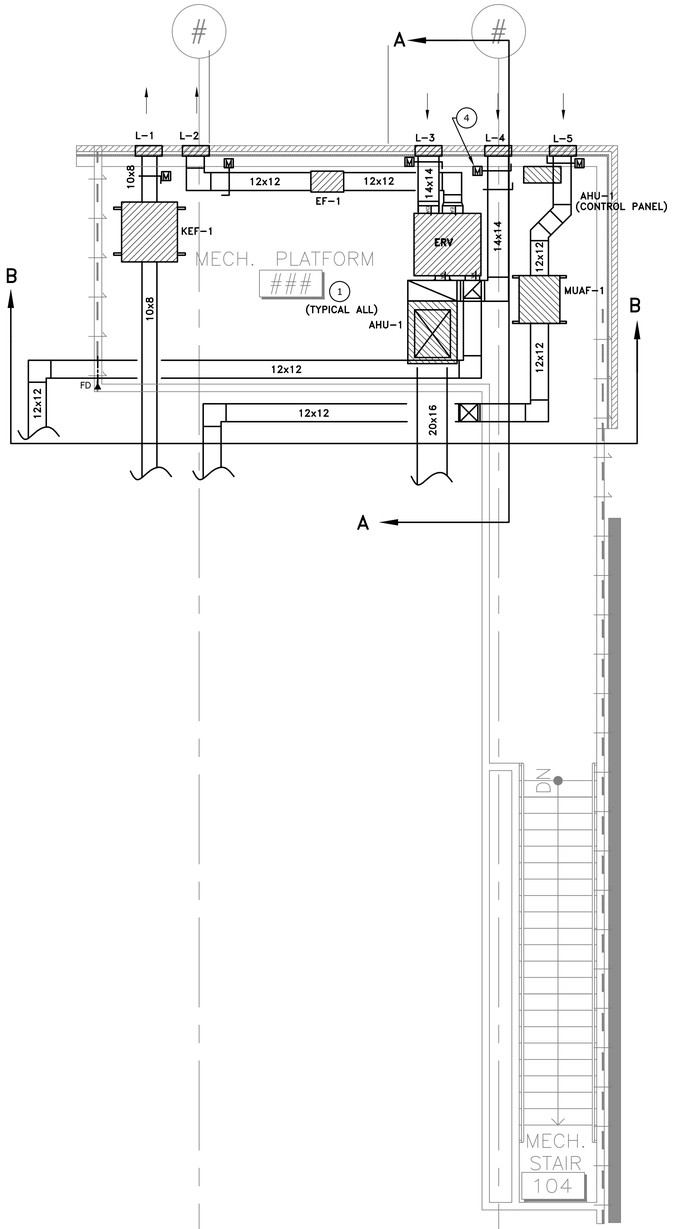

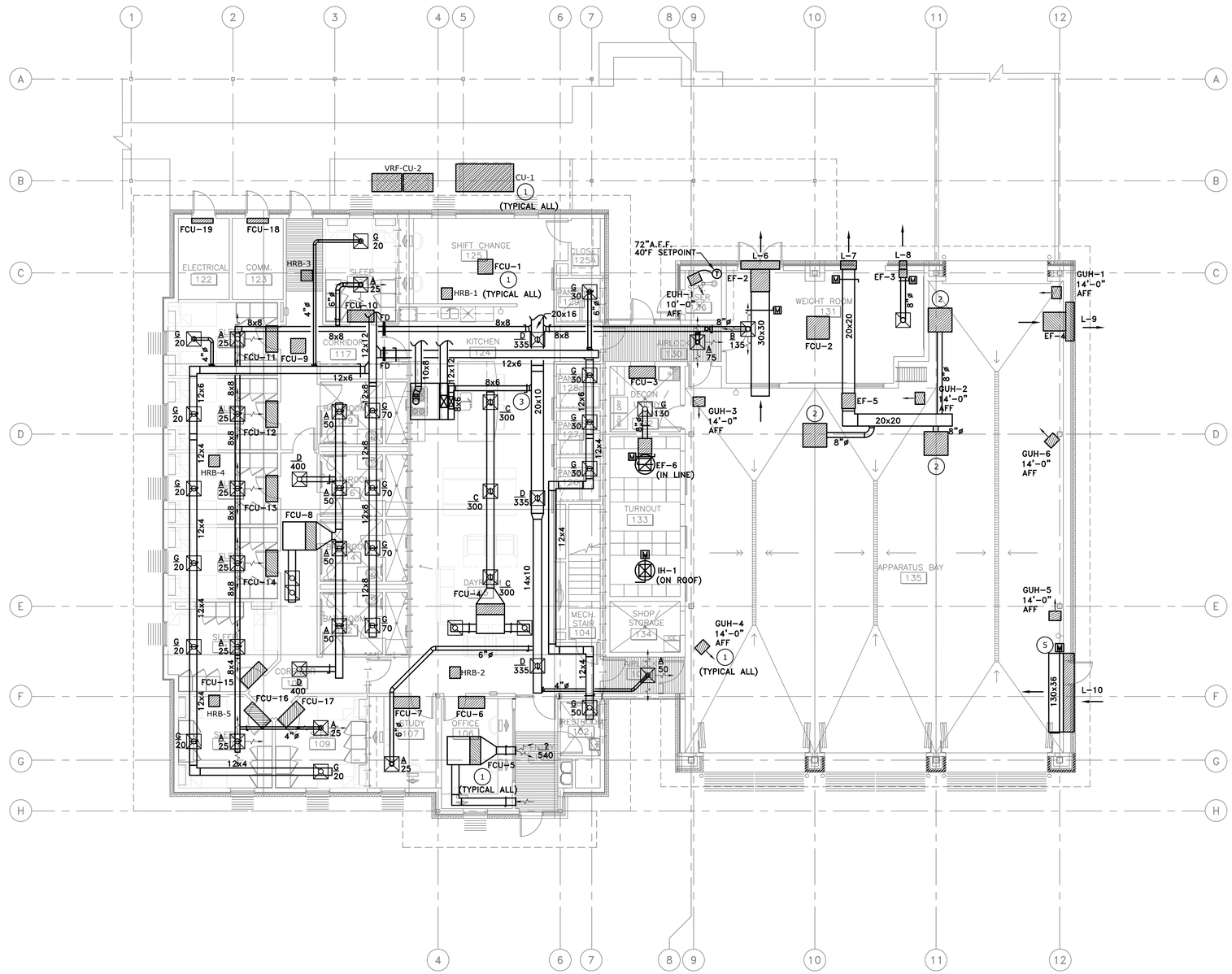

2 MECHANICAL PLAN – MECH. PLATFORM

SCALE: 1/4" = 1'-0"

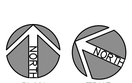

1 MECHANICAL PLAN – FIRST FLOOR

SCALE: 1/8" = 1'-0"

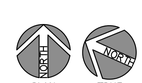

9-23-2016

STATE OF TEXAS
ROBERTO DE LA CRUZ
85431
LICENSED
PROFESSIONAL ENGINEER

Jose I. Guerra, Inc.
Consulting Engineers
Structural • Civil • Mechanical • Electrical
TBPE FIRM F-3

AUSTIN ONION CREEK FIRE & EMS STATION
1112 OLD SAN ANTONIO ROAD
AUSTIN, TEXAS 78748

REVISIONS

DATE	9/23/2016
DRAWN BY	DD
CHECKED BY	RC
PROJECT NO.	214106.00

M1.1

MECHANICAL FLOOR PLANS

CADFILE: F:\15071_Onion Creek Fire-EMS Station\DRAWINGS\CAD\15071_M1-1 Mechanical Floor Plans.dwg Plotted: Fri, Sep. 23, 2016 @ 10:43 AM By: kshiraz Scale: 1:48

GENERAL NOTES:

DRAWING IS DIAGRAMMATIC ONLY. CONTRACTOR SHALL COORDINATE EXACT LOCATION OF DUCTWORK, PIPING, DEVICES AND EQUIPMENT WITH BUILDING ELEMENTS AND THE WORK OF OTHER TRADES.

ALL SPIRAL AND FLEXIBLE DUCT RUNOUTS TO DIFFUSERS SHALL BE SAME SIZE AS SCHEDULED DIFFUSER NECKS.

KEYED NOTES:

1. INSTALL ALL EQUIPMENT AS PER MANUFACTURERS RECOMMENDATIONS.
2. PROVIDE RETRACTABLE HOSE REAL. BASIS OF DESIGN IS MONOXIVENT.

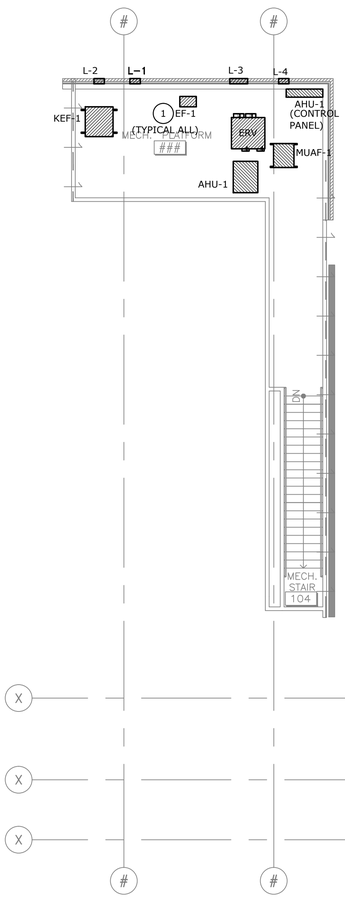

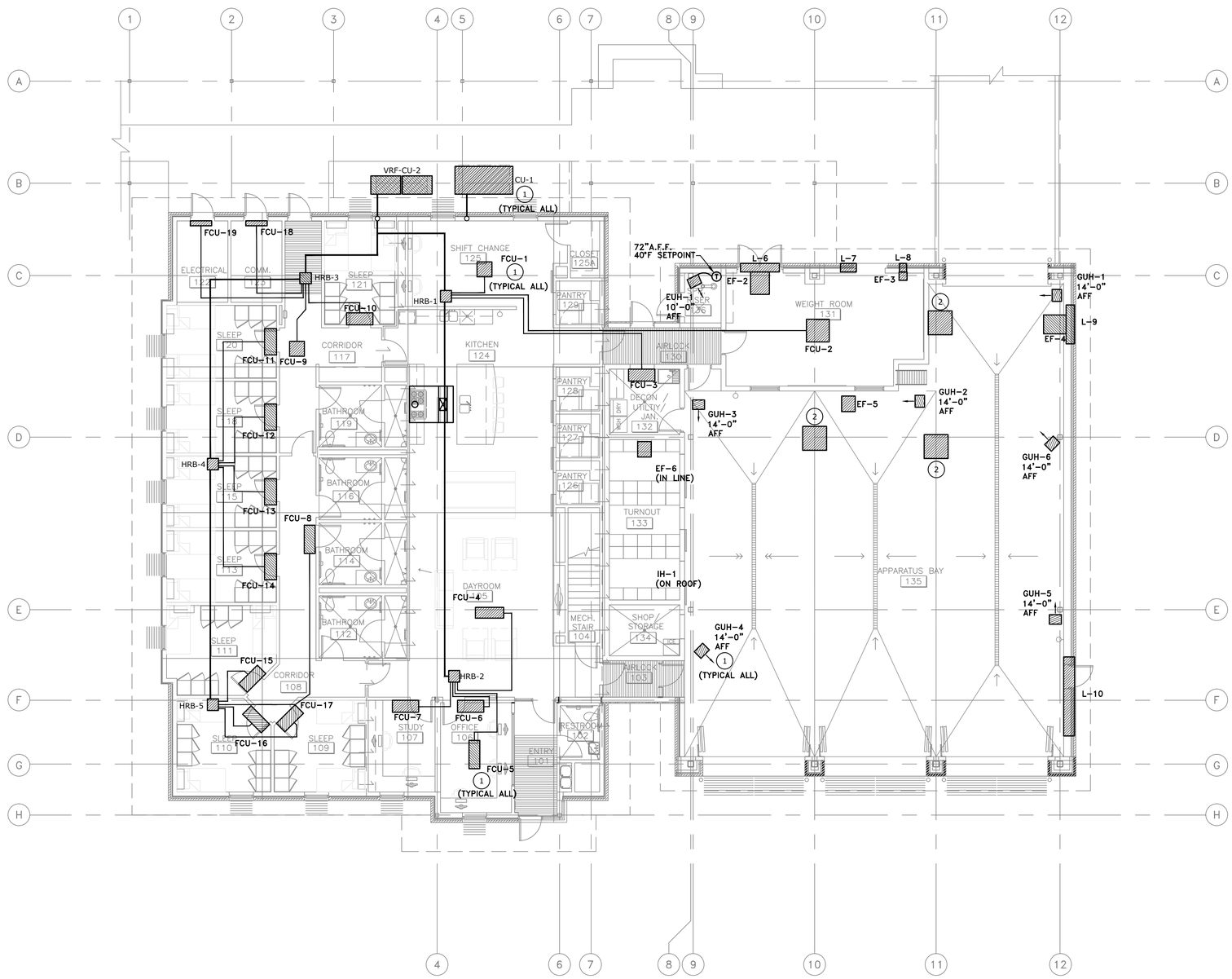

2 MECHANICAL PIPING PLAN – MECH. PLATFORM
SCALE: 1/8" = 1'-0"

1 MECHANICAL PIPING PLAN – FIRST FLOOR
SCALE: 1/8" = 1'-0"

NORTH PLAN NORTH TRUE

9-23-2016
STATE OF TEXAS
ROBERTO DE LA CRUZ
85431
LICENSED
PROFESSIONAL ENGINEER

Jose I. Guerra, Inc.
Consulting Engineers
Structural • Civil • Mechanical • Electrical
TBPE FIRM F-3

AUSTIN ONION CREEK FIRE & EMS STATION
1112 OLD SAN ANTONIO ROAD
AUSTIN, TEXAS 78748

CITY OF AUSTIN FOUNDED 1839

REVISIONS

DATE	9/23/2016
DRAWN BY	DD
CHECKED BY	RC
PROJECT NO.	214106.00

M1.2

MECHANICAL PIPING PLANS

CADFILE: F:\15071_Onion Creek Fire-EMS Station\DRAWINGS\CAD\15071_M1-2 Mechanical Piping Plans.dwg Plotted: Thu, Sep. 22, 2016 @ 8:47 PM By: kshirazi Scale: 1:96

GENERAL NOTES:

DRAWING IS DIAGRAMMATIC ONLY. CONTRACTOR SHALL COORDINATE EXACT LOCATION OF DUCTWORK, PIPING, DEVICES AND EQUIPMENT WITH BUILDING ELEMENTS AND THE WORK OF OTHER TRADES.

MECHANICAL CONTRACTOR SHALL PROVIDE ALL CONTROL AND INTERLOCK WORK INCLUDING CONDUIT AND WIRING ACCORDING TO REQUIREMENTS SPECIFIED UNDER THE ELECTRICAL SPECIFICATIONS PORTION. MECHANICAL CONTRACTOR SHALL PROVIDE ALL CONTROLS WORK , DEVICES, INCLUDING AUTOMATIC DAMPERS, NOT PROVIDED BY THE VRF MANUFACTURER REPRESENTATIVE. MECHANICAL CONTRACTOR SHALL PROVIDE CONTROLS SUBMITTALS ON ALL SYSTEMS.

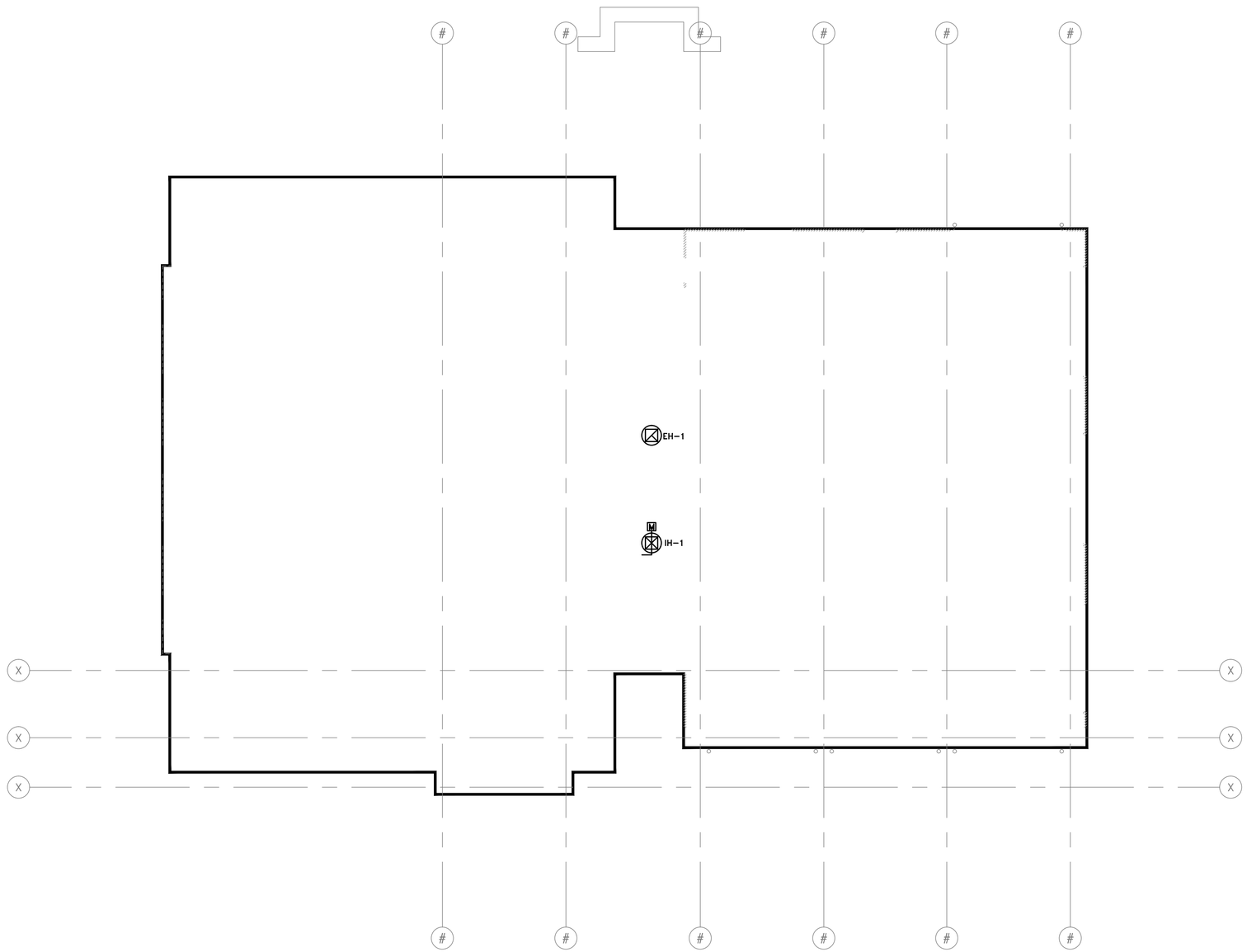

1 MECHANICAL ROOF PLAN
SCALE: 1/8" = 1'-0"

NORTH PLAN
NORTH TRUE

9-23-2016
STATE OF TEXAS
ROBERTO DE LA CRUZ
85431
LICENSED
PROFESSIONAL ENGINEER

Jose I. Guerra, Inc.
Consulting Engineers
Structural • Civil • Mechanical • Electrical
TBPE FIRM F-3

AUSTIN ONION CREEK
FIRE & EMS STATION
1112 OLD SAN ANTONIO ROAD
AUSTIN, TEXAS 78748

CITY OF AUSTIN • 1839 FOUNDED

REVISIONS

DATE	9/23/2016
DRAWN BY	DD
CHECKED BY	RC
PROJECT NO.	214106.00

M1.3
MECHANICAL ROOF PLAN

CADFILE: F:\15071_Onion Creek Fire-EMS Station\DRAWINGS\CAD\15071_M1-3 Mechanical Roof Plan.dwg Plotted: Thu., Sep. 22, 2016 @ 9:17 PM By: kshiraz Scale: 1:96

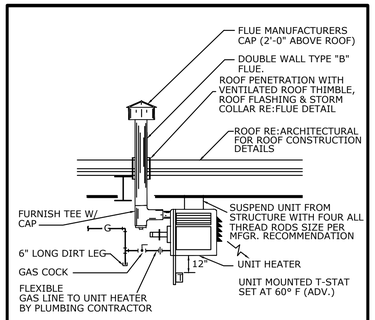

12 GAS UNIT HEATER MOUNTING
NOT TO SCALE

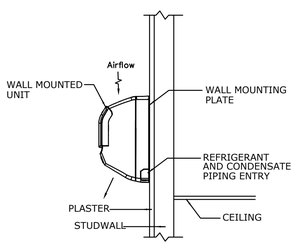

NOTE:
REFER TO MANUFACTURERS INSTALLATION INSTRUCTIONS FOR EXACT MOUNTING AND PIPING REQUIREMENTS AND FOLLOW MANUFACTURERS RECOMMENDATIONS

ROUTE CONDENSATE TO NEAREST HUB DRAIN.

13 WALL MOUNTED FAN COIL UNIT
NOT TO SCALE

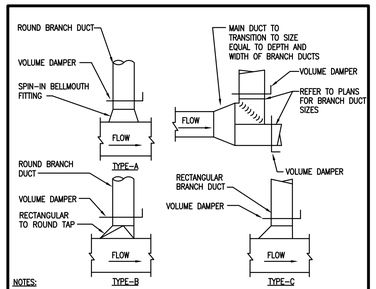

NOTES:
1. USE TYPE "A" CONNECTION ONLY FOR BRANCHES TO SINGLE DIFFUSERS, TERMINAL BOXES OR GRILLES FROM THE MAIN.
2. USE TYPE "B" OR "C" BRANCH WHERE BRANCH FLOW IS 20% OR LESS OF MAIN.
3. NO DAMPERS ARE REQ'D ON VAV SYSTEMS BETWEEN AIR HANDLING UNIT AND VAV TERMINAL BOXES.
4. USE TEE SPLIT WHERE BRANCH FLOW IS MORE THAN 20% OF MAIN.
5. FOR TYPE "A" CONNECTION TO DIFFSUERS, THE ROUND DUCT RUN-OUT SIZE SHALL BE THE SAME SIZE AS THE NECK OF DIFFUSER, UNLESS OTHERWISE INDICATED.
6. PROVIDE VOLUME DAMPERS ON SUPPLY, RETURN AND EXHAUST DUCT SYSTEMS AS SHOWN.

9 BRANCH DUCT DETAILS
NOT TO SCALE

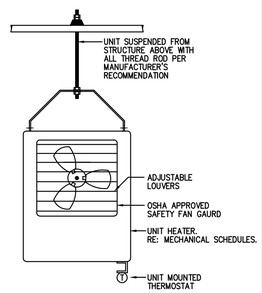

NOTE:
1. UNIT TO BE INSTALLED A MINIMUM OF 7'-0" ABOVE FINISHED FLOOR.
2. DO NOT ROUTE CONDUIT OR WIRING ABOVE UNIT HEATER.
3. REFER TO SPECIFICATIONS FOR HANGERS AND SUPPORTS.
4. REFER TO SPECIFICATIONS FOR VIBRATION CONTROL.

10 ELECTRIC UNIT HEATER DETAIL
NOT TO SCALE

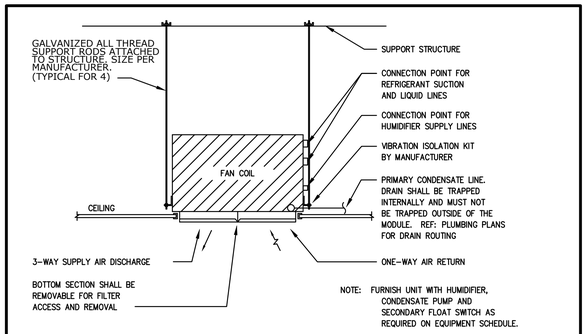

NOTE: FURNISH UNIT WITH HUMIDIFIER, CONDENSATE PUMP AND SECONDARY FLOAT SWITCH AS REQUIRED ON EQUIPMENT SCHEDULE.

11 SLEEP AREA FAN COIL UNIT INSTALLATION DETAIL
NOT TO SCALE

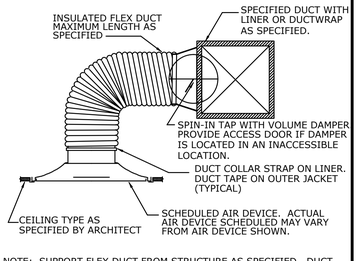

NOTE: SUPPORT FLEX DUCT FROM STRUCTURE AS SPECIFIED. DUCT SHALL NOT KINK, SAG OR REST ON LIGHT FIXTURES, CEILING SUPPORT TEES OR TILE. SAG OR REST ON LIGHT FIXTURES, CEILING SUPPORT TEES OR TILE.

5 CONICAL SPIN-IN
NOT TO SCALE

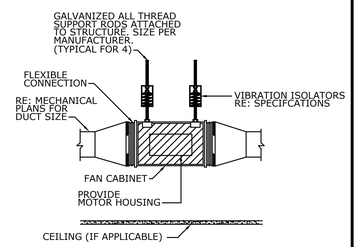

6 TYP. IN-LINE EXHAUST FAN
NOT TO SCALE

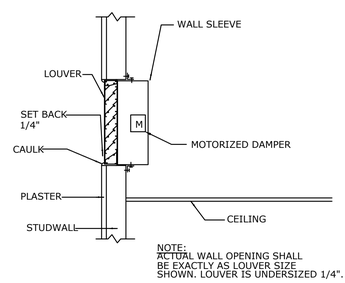

NOTE:
ACTUAL WALL OPENING SHALL BE EXACTLY AS LOUVER SIZE SHOWN. LOUVER IS UNDERSIZED 1/4".

7 LOUVER DETAIL
NOT TO SCALE

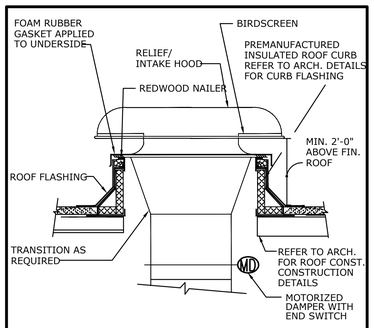

8 OA INTAKE
NOT TO SCALE

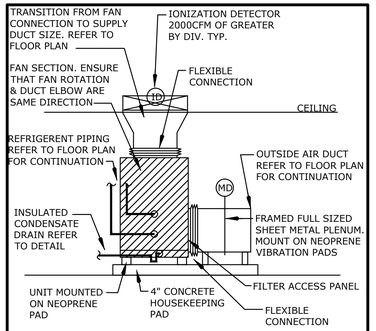

1 OUTSIDE AIR HANDLING UNIT (DX)
NOT TO SCALE

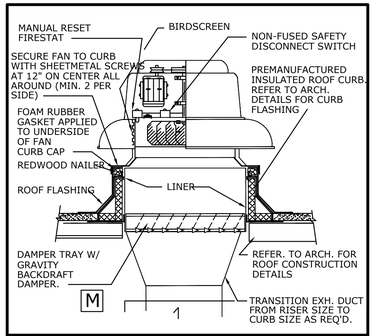

2 CENTRIFUGAL ROOF EXHAUST FAN
NOT TO SCALE

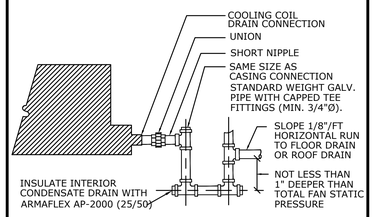

NOTE: MAINTAIN MINIMUM 1" AIR GAP AT FLOOR DRAIN OR ROOF DRAIN

3 CONDENSATE DRAIN DETAIL
NOT TO SCALE

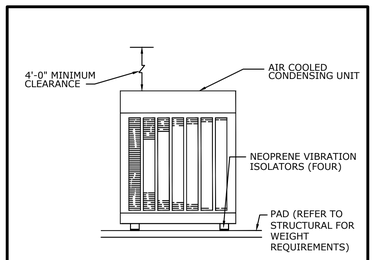

NOTE: PROVIDE 4'-0" MINIMUM ABOVE FOR AIR FLOW AND 30" MINIMUM SERVICE CLEARANCE AROUND UNIT.

4 CONDENSING UNIT
NOT TO SCALE

9-23-2016
STATE OF TEXAS
ROBERTO DE LA CRUZ
85431
LICENSED
PROFESSIONAL ENGINEER

Jose I. Guerra, Inc.
Consulting Engineers
Structural • Civil • Mechanical • Electrical
TBPE FIRM F-3

AUSTIN ONION CREEK
FIRE & EMS STATION
1112 OLD SAN ANTONIO ROAD
AUSTIN, TEXAS 78748

REVISIONS

DATE	9/23/2016
DRAWN BY	JD
CHECKED BY	RC
PROJECT NO.	214106.00

M3.1

MECHANICAL DETAILS

CADFILE: F:\15071_Onion Creek Fire-EMS Station\DRAWINGS\CAD\15071_M3-1 Mechanical Details.dwg Plotted: Thu., Sep. 22, 2016 @ 8:40 PM By: kshirazi Scale: 1:1

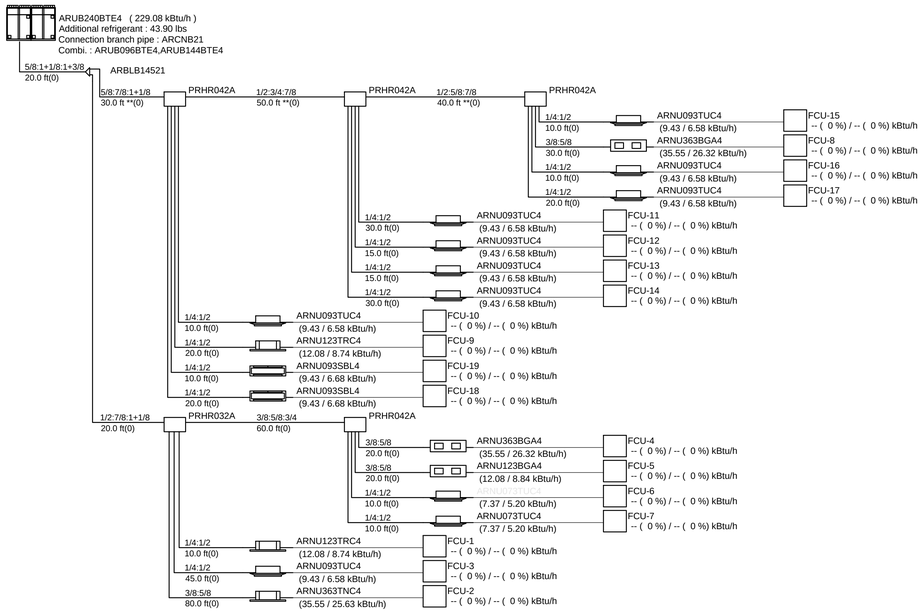

SYSTEM 1 TREE

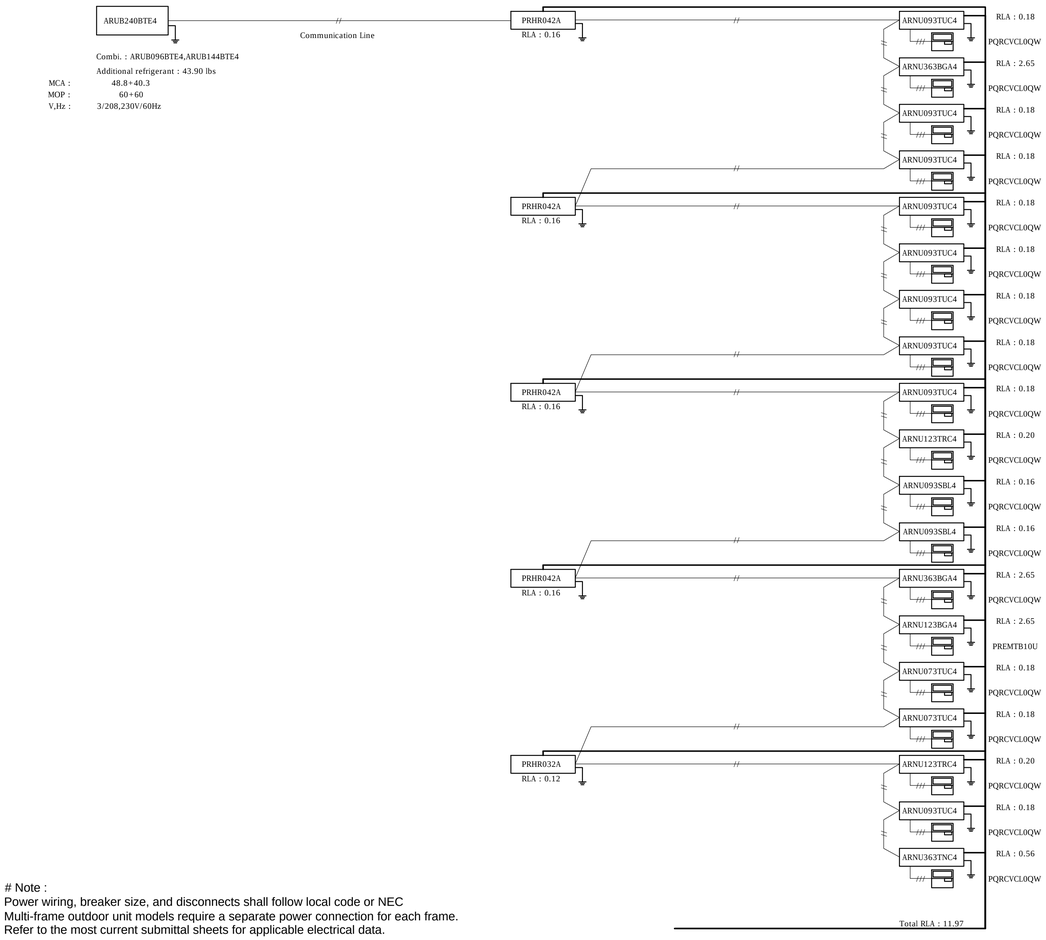

Note :
Power wiring, breaker size, and disconnects shall follow local code or NEC
Multi-frame outdoor unit models require a separate power connection for each frame.
Refer to the most current submittal sheets for applicable electrical data.

SYSTEM 1 DIAGRAM

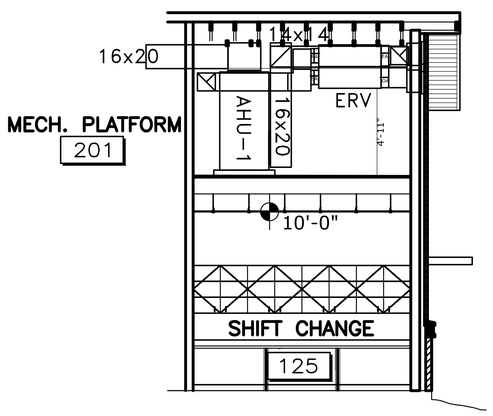

SECTION "A"

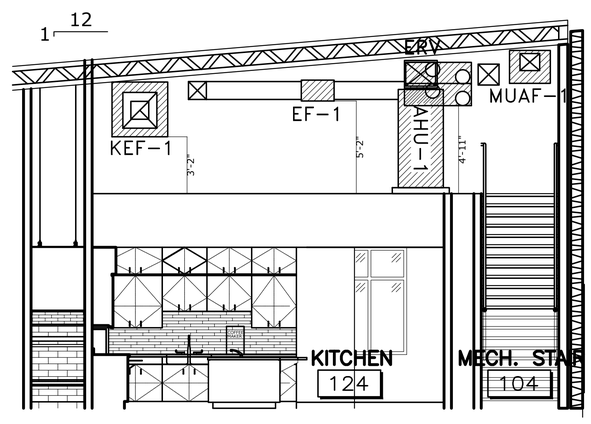

SECTION "B"

9-23-2016

STATE OF TEXAS
ROBERTO DE LA CRUZ
85431
LICENSED
PROFESSIONAL ENGINEER

Jose I. Guerra, Inc.
Consulting Engineers
Structural • Civil • Mechanical • Electrical
TBPE FIRM F-3

AUSTIN ONION CREEK
FIRE & EMS STATION
1112 OLD SAN ANTONIO ROAD
AUSTIN, TEXAS 78748

CITY OF AUSTIN FOUNDED 1839

REVISIONS

DATE	9/23/2016
DRAWN BY	DD
CHECKED BY	RC
PROJECT NO.	214106.00

M4.1

MECHANICAL DIAGRAMS AND SECTIONS

CADFILE: F:\15071_Onion Creek Fire-EMS Station\DRAWINGS\CAD\15071_M4-1 Mechanical Diagrams Sections.dwg Plotted: Thu., Sep. 22, 2016 @ 8:43 PM By: kshirazi Scale: 1:1

LG VRF EQUIPMENT SCHEDULE

SYSTEM NAME		INDOOR AND OUTDOOR UNIT INFORMATION: MARK #	SERVES	UNIT MODEL	TYPE OF UNIT	NOMINAL TONS	NOMINAL COOLING CAPACITY (BTU)	NOMINAL HEATING CAPACITY (BTU)	CFM L-H	ESP	VOLT	PH	IDU FLA	ODU MCA	ODUMOCP	NET WEIGHT	DIMENSIONS (WxDxH)	HEAT RECOVERY BOX INFORMATION: FED FROM HRB	PORT	CAPACITY (BTU/H) UNIT	CAPACITY (BTU/H) PORT	Electrical FLA	Electrical VOLTAGE	DIMENSIONS (WxDxH)	WEIGHT	MANUF.	MODEL	NOTES
VRF-CU-2	OUTDOOR UNIT	VRF-CU-2		ARUB240DTE4	OUTDOOR UNIT	20	240,000	270,000	-	-	208	3	-	89.1	120	1168	96x30x67	-	-	-	-	-	-	-	-	-	-	ALL
						-	-	-	-	-	-	-	-	-	-	-	-											
	INDOOR UNITS	FCU-1	125	ARNU123TRC4	4-Way Ceiling Cassette	1	12,300	13,600	247-307	-	208-230	1	0.2	-	-	32	24x24x10	HRB-1	-	192,000	54,000	0.16	208-230	18x19x9	49	LG	PRHR042A	ALL
		FCU-2	131	ARNU363TNC4	4-Way Ceiling Cassette	3	36,200	26,400	706-883	-	208-230	1	0.56	-	-	35	44x20x7	HRB-1	-	192,000	54,000	0.16	208-230	18x19x9	49	LG	PRHR042A	ALL
		FCU-3	118	ARNU093TUC4	1-Way Ceiling Cassette	0.75	9,600	10,900	290-325	-	208-230	1	0.18	-	-	35	44x20x7	HRB-1	-	192,000	54,000	0.16	208-230	18x19x9	49	LG	PRHR042A	ALL
		FCU-4	132	ARNU363BGA4	Ceiling Concealed Duct	3	36,200	40,600	770 - 1003	-	208-230	1	2.65	-	-	33	48.5x17.75x11.75	HRB-2	-	192,000	54,000	0.16	208-230	18x19x9	49	LG	PRHR042A	ALL
		FCU-5	124	ARNU123TRC4	Ceiling Concealed Duct	1	19,100	21,500	427-527	-	208-230	1	2.65	-	-	32	48.5x17.75x11.75	HRB-2	-	192,000	54,000	0.12	208-230	18x19x9	49	LG	PRHR042A	ALL
		FCU-6	130	ARNU073TUC4	1-Way Ceiling Cassette	1.5	19,100	21,500	353 - 396	-	208-230	1	0.18	-	-	33	44x20x7	HRB-2	-	192,000	54,000	0.16	208-230	18x19x9	45	LG	PRHR042A	ALL
		FCU-7	130	ARNU073TUC4	1-Way Ceiling Cassette	1.5	19,100	21,500	353 - 396	-	208-230	1	0.18	-	-	33	44x20x7	HRB-2	-	192,000	54,000	0.16	208-230	18x19x9	45	LG	PRHR042A	ALL
		FCU-8	132	ARNU363BGA4	Ceiling Concealed Duct	3	36,200	40,600	770 - 1003	-	208-230	1	2.65	-	-	33	48.5x17.75x11.75	HRB-5	-	192,000	54,000	0.16	208-230	18x19x9	49	LG	PRHR042A	ALL
		FCU-9	125	ARNU123TRC4	4-Way Ceiling Cassette	1	12,300	13,600	247-307	-	208-230	1	0.2	-	-	32	24x24x10	HRB-3	-	192,000	54,000	0.16	208-230	18x19x9	49	LG	PRHR042A	ALL
		FCU-10	109	ARNU093TUC4	1-Way Ceiling Cassette	0.75	9,600	10,900	290-325	-	208-230	1	0.18	-	-	35	44x20x7	HRB-3	-	192,000	54,000	0.16	208-230	18x19x9	49	LG	PRHR042A	ALL
		FCU-11	109	ARNU093TUC4	1-Way Ceiling Cassette	0.75	9,600	10,900	290-325	-	208-230	1	0.18	-	-	35	44x20x7	HRB-4	-	192,000	54,000	0.16	208-230	18x19x9	49	LG	PRHR042A	ALL
		FCU-12	109	ARNU093TUC4	1-Way Ceiling Cassette	0.75	9,600	10,900	290-325	-	208-230	1	0.18	-	-	35	44x20x7	HRB-4	-	192,000	54,000	0.16	208-230	18x19x9	49	LG	PRHR042A	ALL
		FCU-13	109	ARNU093TUC4	1-Way Ceiling Cassette	0.75	9,600	10,900	290-325	-	208-230	1	0.18	-	-	35	44x20x7	HRB-4	-	192,000	54,000	0.16	208-230	18x19x9	49	LG	PRHR042A	ALL
		FCU-14	109	ARNU093TUC4	1-Way Ceiling Cassette	0.75	9,600	10,900	290-325	-	208-230	1	0.18	-	-	35	44x20x7	HRB-4	-	192,000	54,000	0.16	208-230	18x19x9	49	LG	PRHR042A	ALL
		FCU-15	109	ARNU093TUC4	1-Way Ceiling Cassette	0.75	9,600	10,900	290-325	-	208-230	1	0.18	-	-	35	44x20x7	HRB-5	-	192,000	54,000	0.16	208-230	18x19x9	49	LG	PRHR042A	ALL
		FCU-16	109	ARNU093TUC4	1-Way Ceiling Cassette	0.75	9,600	10,900	290-325	-	208-230	1	0.18	-	-	35	44x20x7	HRB-5	-	192,000	54,000	0.16	208-230	18x19x9	49	LG	PRHR042A	ALL
		FCU-17	109	ARNU093TUC4	1-Way Ceiling Cassette	0.75	9,600	10,900	290-325	-	208-230	1	0.18	-	-	35	44x20x7	HRB-5	-	192,000	54,000	0.16	208-230	18x19x9	49	LG	PRHR042A	ALL
		FCU-18	122	ARNU093SBL4	Wall Mount	0.8	9600	10900	194-290	-	208-230	1	0.16	-	-	22	36x8x11	HRB-3	-	192,000	54,000	0.16	208-230	18x19x9	49	LG	PRHR042A	ALL
		FCU-19	122	ARNU093SBL4	Wall Mount	0.8	9600	10900	194-290	-	208-230	1	0.16	-	-	22	36x8x11	HRB-3	-	192,000	54,000	0.16	208-230	18x19x9	49	LG	PRHR042A	ALL

Design Information

Summer EAT	Winter EAT	Summer Ambient		Winter Ambient
75/62	68/64	105/78		25/24

VRF HEAT PUMP EQUIPMENT SCHEDULE NOTES - ACCEPTABLE MANUFACTURERS: LG AND DAIKIN

INDOOR UNIT SCHEDULE NOTES

1. Contractor to provide and install single pole, double throw light switch type disconnect on each indoor unit. The indoor unit/heat recovery boxes and the outdoor units require separate circuits.
2. Rated capacities listed above are based on ARI Conditions. Manufacturer to provide system based on specified conditions. Refer to refrigerant piping tree for de-rated capacities based on specified conditions.
3. Provide with direct drive fan.
4. Provide with factory mounted drain pump and overflow switch (Cassette/Ducted). Contractor to field install Aspen pump for wall, floor or ceiling mount units.
5. Coil shall be copper with aluminum fins.
6. Motor shall have permanently lubricated bearings and be a brushless DC fan motor.
7. Provide with 2 year parts warranty.
8. Unit shall have self diagnostic function, auto-restart and group control.
9. Provide cassette with decorative panel (field installed by contractor)
10. Provide 7-day programmable controller.
13. Provide with washable filter.

OUTDOOR UNIT SCHEDULE NOTES

1. Unit designed for use with R-410A refrigerant.
2. Rated capacities listed above are based on ARI Conditions. Manufacturer to provide system based on specified conditions. Refer to refrigerant piping tree for de-rated capacities based on specified conditions.
3. Unit capable of operation between -4 F - 110 F.
4. Compressors to be digitally controlled inverter driven scroll compressors. On/off compressors are not acceptable.
5. Unit will turndown to 10% of tonnage per module.
6. Electrician to provide separate circuit breaker and power feed with field disconnect per module. Refer to electrical. The indoor unit/heat recovery boxes and the outdoor units require separate circuits.
7. Dual and Triple frame outdoor units shall be field piped together by contractor.
8. Condenser fans to be direct drive, variable speed propeller type fans.
9. Condenser coil shall have factory applied corrosion protection.
10. Unit shall automatically monitor oil level and initiate an oil return mode only if oil level drops below factory determined low level mark. Automatic oil return cycles based on a timer are not acceptable.
11. All refrigerant lines to be insulated from outdoor unit to indoor unit with minimum insulation required per local code.
12. Roof mounted units shall be installed on contractor supplied and installed roof curbs.
13. Refrigerant piping on roof shall have anti-vibration risers, Airtec or equivalent, installed every 20 feet for vibration absorption.
14. Refrigerant piping routed on exterior wall shall be concealed within lineset cover, Airtec or equivalent.
15. Provide with 2 year parts warranty and 5 year parts only compressor warranty.
16. Maintain minimum clearances of 36" in front (NEC Code), 8" on sides and 12" in rear.
17. Factory trained technican to provide startup and commissioning assistance.
18. VRF manufacturer to offer at least 8 hours of classroom instruction within 6 months of job closeout to owner at training facility located within 200 miles of jobsite. Travel and lodging by owner
19. Provide field installed extruded metal hail guard over condensing section (Front and Back). Factory provided wire guard is not acceptable.
20. Provide AC Smart Touchscreen Control System with optional card for web scheduling. Contractor to provide outlet above ceiling within 8' of AC Smart. Owner to provide data drop and IP address.

HEAT RECOVERY BOX NOTES

1. Contractor to supply and install single pole, double throw light switch type disconnect on each heat recovery box. The indoor unit/heat recovery boxes and the outdoor units require separate circuits.
2. Provide with galvanized sheet metal finish and sound absorbing thermal insulation (flame resistant foam polyethylene)
3. Y-branches downstream of a port to accommodate more than one indoor unit per port is not acceptable unless specifically designed on the plans
4. Indoor units connected to the heat recovery box must be able to independently heat or cool regardless of mode of any other indoor unit on HRU.
5. Contractor to field install 2-position isolation valve (Min. 800 psi and 300 F rating) upstream of heat recovery box. Install valve 6"-12" upstream in an accessible location and provide access door if necessary.
6. Contractor to maintain service clearance of 18" on front (electrical connection), 12" on sides and 4" on top. Heat recovery box to have top and bottom access
7. Provide with one year parts and labor warranty and additional one year parts only warranty.
8. Contractor responsible for any costs incurred using alternate manufacturer heat recovery box including but not limited to electrical, condensate piping, refrigerant piping, or structural changes.
9. Elevation difference between heat recovery box and indoor unit shall not exceed 49 foot.

9-23-2016
STATE OF TEXAS
ROBERTO DE LA CRUZ
85431
LICENSED
PROFESSIONAL ENGINEER

Jose I. Guerra, Inc.
Consulting Engineers
Structural • Civil • Mechanical • Electrical
TBPE FIRM F-3

AUSTIN ONION CREEK
FIRE & EMS STATION
11112 OLD SAN ANTONIO ROAD
AUSTIN, TEXAS 78748

CITY OF AUSTIN FOUNDED 1839

REVISIONS

DATE 9/23/2016
DRAWN BY JD
CHECKED BY RC
PROJECT NO. 214106.00

M4.2

MECHANICAL SCHEDULES

CADFILE: F:\15071_Onion Creek Fire-EMS Station\DRAWINGS\CAD\15071_M4-2 Mechanical Schedules.dwg Plotted: Thu., Sep. 22, 2016 @ 8:40 PM By: kshirazi Scale: 1:1

ERV SCHEDULE

INDOOR UNIT	GENERAL	MARK	ERV
		SERVES	OUTSIDE AIR/EXHAUST
		SUPPLY AIR (CFM)	2000 MAX
		OUTSIDE AIR (CFM)	2000 MAX
		EXT. SP. (IN W.G.)	0.8
		FAN MOTOR WATTS	720
		VOLTS/PHASE/HERTZ	208/1/60
		FAN TYPE	DIRECT
	COOLING	ENTERING AIR TEMP. DB/WB (F)	105 / 78
		LEAVING AIR TEMP. DB/WB (F)	77 / 77
		MAX. FACE VELOCITY (FPM)	500
		NO. OF CIRCUITS	2
	HEATING	ENTERING AIR TEMP. DB/WB (F)	30
		LEAVING AIR TEMP. DB/WB (F)	66 / 66
		MAX. FACE VELOCITY (FPM)	500
		NO. OF CIRCUITS	2
	BASIS	MANUFACTURER	MULTI V
		MODEL	ARVU0932ZFA2
		WEIGHT (LBS)	331
		NOTES	1, 2

NOTES:

1. CONNECT TO AHU-1.
2. CONNECT TO EF-1.

AIR HANDLING UNIT/CONDENSING UNIT SCHEDULE (ELECTRIC HEAT)

INDOOR UNIT	GENERAL	MARK	AHU-1					
		SERVES	OUTSIDE AIR					
		SUPPLY AIR (CFM)	2000 MAX					
		OUTSIDE AIR (CFM)	2000 MAX					
		EXT. SP. (IN W.G.)	0.75					
		FAN MOTOR HORSEPOWER	2.5					
		VOLTS/PHASE/HERTZ	208/3/60					
		MCA	134					
		MOCP	150					
		MAX. FAN RPM	2,600					
		FAN TYPE	ECM					
		VFD/STARTER BY CONTRACTOR	FACTORY					
	COOLING COIL	TOTAL COOLING (MBH)	115.9					
		SENSIBLE COOLING (MBH)	89.1					
		ENTERING AIR TEMP. DB/WB (F)	105/78					
		LEAVING AIR TEMP. DB/WB (F)	62.03/61.32					
		MAX. FACE VELOCITY (FPM)	500					
		MIN. SUCTION TEMP (F)	33					
		NO. OF CIRCUITS	1					
	ELECTRIC HEAT	TOTAL HEATING (KW) / STAGES	35/ SCR					
		VOLTS/PHASE/HERTZ	208/3/60					
		ENTERING AIR TEMP. DB (F)	20					
		LEAVING AIR TEMP. DB (F)	75					
	BASIS	MANUFACTURER	AAON					
		MODEL	V3-CRB-3-0-142D-3ES					
		WEIGHT (LBS)	714					
		NOTES	4, 5, 6, 7, 8					
CONDENSING UNIT	GENERAL	MARK	CU-1					
		NUMBER OF COMPRESSORS	1					
		EER/SEER (ARI)	9.6					
		AMBIENT AIR	105					
	ELECTRIC	VOLTS/PHASE/HERTZ	208/3/60					
		MCA	67					
		MOCP	90					
	BASIS	MANUFACTURER	AAON					
		MODEL	CFA-011-B-0-3-DJOOK					
		NOMINAL TONS	11					
		WEIGHT (LBS)	1,068					
		NOTES	1, 2, 3, 4, 5, 6, 7, 8, 9					

NOTES:

1. PROVIDE CONDENSER COIL HAIL GUARDS.
2. PROVIDE LOW AMBIENT CONTROL.
3. INSTALL REFRIGERANT PIPING IN STRICT ACCORDANCE WITH MANUFACTURER'S RECOMMENDATIONS.
4. PROVIDE SINGLE POINT ELECTRICAL CONNECTION.
5. ELECTRIC HEAT SHALL BE CONNECTED TO FAN DISCHARGE.
6. PROVIDE FILTER MIXING BOX. PROVIDE SMOKE DETECTOR.
7. PROVIDE FLAT FILTER SECTION AND 36" FIELD FABRICATED RETURN PLENUM SECTION. MERV 13 OR BETTER.
8. FAN TO BE INTERLOCKED WITH KEF-1. BALANCE TO 825 CFM WHEN KEF-1 IS NOT ON. BALANCE TO 1580 CFM WHEN KEF-1 IS ON.
9. PROVIDE FACTORY APPLIED CONDENSER COATING PROVIDING 3,000 HOUR SALT SPRAY RESISTANCE PER ASTM B117-90.

AIR DEVICE SCHEDULE

MARK	CFM RANGE MIN.	CFM RANGE MAX.	FACE SIZE (IN.)	NECK SIZE (IN.)	MAX S.P. (IN.)	MAX. NC LEVEL	MAKE / MODEL	NOTES
A	0	100	12x12	6"Ø	0.10	25	SQUARE CONE DIFFUSERS NAILOR MODEL ARNS OR APPROVED ALTERNATE	1, 2, 3, 4, 6
B	0	125	24x24	6"Ø	0.10	25	SQUARE CONE DIFFUSERS NAILOR MODEL ARNS OR APPROVED ALTERNATE	1, 2, 3, 4, 6
C	126	300	24x24	8"Ø	0.10	25	SQUARE CONE DIFFUSERS NAILOR MODEL ARNS OR APPROVED ALTERNATE	1, 2, 3, 4, 6
D	301	450	24x24	10"Ø	0.10	25	SQUARE CONE DIFFUSERS NAILOR MODEL ARNS OR APPROVED ALTERNATE	1, 2, 3, 4, 6
E	451	650	24x24	12"Ø	0.10	25	SQUARE CONE DIFFUSERS NAILOR MODEL ARNS OR APPROVED ALTERNATE	1, 2, 3, 4, 6
F	0	1200	24x24	-	0.05	25	SQUARE EGGCRATE RETURN NAILOR MODEL 4260AA OR APPROVED ALTERNATE	1, 2, 3, 4, 5, 6
G	0	275	12x12	8"Ø	0.05	25	SQUARE EGGCRATE EXHAUST GRILLE WITH DAMPER NAILOR MODEL 4260AA OR APPROVED ALTERNATE	1, 2, 3, 4, 6
H	276	400	24x24	10"Ø	0.05	25	SQUARE EGGCRATE EXHAUST GRILLE WITH DAMPER NAILOR MODEL 4260AA OR APPROVED ALTERNATE	1, 2, 3, 4, 6
J	0	AS SHOWN	AS SHOWN	AS SHOWN	0.10	25	SIDEWALL SUPPLY DIFFUSER WITH DAMPER NAILOR MODEL 55DVOA OR APPROVED ALTERNATE	1, 2, 3, 4, 6
K	0	AS SHOWN	AS SHOWN	AS SHOWN	0.10	25	SIDEWALL SUPPLY DIFFUSER NAILOR MODEL 55DVOA OR APPROVED ALTERNATE	1, 2, 3, 4, 6
L	0	AS SHOWN	AS SHOWN	AS SHOWN	0.10	25	SIDEWALL RETURN GRILLE NAILOR MODEL 55DVOA OR APPROVED ALTERNATE	1, 2, 3, 4, 5, 6
MARK	0	70/FT	5.75x60	10"Ø	0.10	25	LINEAR 4-SLOT DIFFUSER - VERTICAL DISCHARGE NAILOR MODEL 5050 W/ SERIES 5300 "T" PLENUM OR APPROVED ALTERNATE	1, 2, 3, 4, 6

NOTES:

1. PROVIDE WITH FACTORY-APPLIED, OFF-WHITE ENAMEL FINISH.
2. PROVIDE WITH FLUSH MOUNT FRAME OR T-BAR MOUNT FRAME AS REQUIRED TO MATCH CEILING CONDITION.
3. FURNISH ALL SURFACE MOUNT SUPPLY AIR DEVICES WITH CONTINUOUS PERIMETER GASKET SEAL.
4. COORDINATE WITH ARCHITECT FOR COLOR AND REFER TO ARCHITECTURAL DRAWINGS FOR EXACT LOCATION.
5. PROVIDE RETURN AIR BOOT FOR RETURN GRILLES. REFER TO 2/ M-201.
6. ALL DIFFUSERS SHALL BE CONSTRUCTED OF ALUMINUM.

LOUVER SCHEDULE

MARK	LOCATION	SERVES	CFM	MAX S.P DROP	SIZE (LXWXH)(I.D.)	MAKE / MODEL	NOTES
L-1	WALL	KEF-1	750	0.10	18"x18"	RUSKIN - PHB-6375DX	ALL
L-2	WALL	EF-1	610	0.10	18"x18"	RUSKIN - PHB-6375DX	ALL
L-3	WALL	ERV	725	0.10	18"x18"	RUSKIN - PHB-6375DX	ALL
L-4	WALL	AHU-1	855	0.10	18"x18"	RUSKIN - PHB-6375DX	ALL
L-5	WALL	MUAF-1	525	0.10	18"x18"	RUSKIN - PHB-6375DX	ALL
L-6	WALL	EF-2	5860	0.10	64"x36"	RUSKIN - PHB-6375DX	ALL
L-7	WALL	EF-5	2400	0.10	26"x36"	RUSKIN - PHB-6375DX	ALL
L-8	WALL	EF-3	115	0.10	12"x12"	RUSKIN - PHB-6375DX	ALL
L-9	WALL	EF-4	5860	0.10	64"x36"	RUSKIN - PHB-6375DX	ALL
L-10	WALL	APPARATUS BAY	11715	0.10	130"x36"	RUSKIN - PHB-6375DX	ALL

NOTES:

1. INSTALLED IN WALL BY MECHANICAL CONTRACTOR.
2. PROVIDE BIRDSCREEN.
3. INSTALL WATER TIGHT.

EUH SCHEDULE

UNIT NO.	EUH-1
LOCATION	FIRE ROOM
AREA SERVED	FIRE ROOM
CFM - MINIMUM	REMARKS 1, 2
CAPACITY - KW	3
FAN TYPE	PROPELLER
DISCHARGE	VERTICAL
FAN MOTOR H.P.	REMARKS 3
FAN MOTOR RPM	REMARKS 3
VOLTS/HZ/PHASE	208/1/60
MOUNTING TYPE	HANGING
MFR. REZNOR	REMARKS 1, 2
MODEL # EGW	REMARKS 1, 2

REMARKS:

1. 3 KW UNIT HEATER, MOUNTED FROM STRUCTURE.
2. PROVIDE THERMOSTAT MOUNTED ON WALL.
3. REFER TO SUBMITTAL FOR EXACT INFORMATION.

INTAKE HOOD SCHEDULE

MARK	IH-1	EH-1
TOTAL FREE AIR SPACE MIN. (SQ. IN.)	134	134
OUTSID AIR	510	510
MANUFACTURER BASES OF DESIGN	COOK	COOK
MODEL NUMBER	GI	GI
NOTES	1,2	1,2

NOTES:

1. UNIT TO BE PROVIDED WITH A FACTORY CURB.
2. COORDINATE INSTALLATION WITH BONDED ROOFING CONTRACTOR.
3. INTERLOCK WITH EF-6. TO OPEN WHEN EF-6 IS ACTIVATED.

EXHAUST FAN SCHEDULE

MARK	LOCATION	SERVES	DRIVE	CFM	S.P. IN W.G.	ELECTRICAL DATA MOTOR RPM	HP	VOLTS	PHASE	HERTZ	FAN TYPE	CONTROL	MAKE / MODEL	WEIGHT
EF-1	SUSPENDED FROM STRUCTURE	GENERAL EXHAUST	BELT	610	1.0	1725	1/2	120	1	60	INLINE	BAS	COOK - 80SQN-B	125
EF-2	WALL MOUNTED	APPARATUS BAY	BELT	5860	0.7	1725	2	208	3	60	WALL MOUNTED	BAS	COOK - 20XMPH	
EF-3	WALL MOUNTED	WEIGHT ROOM	BELT	115	0.1	1550	1/8	120	1	60	WALL MOUNTED	BAS	COOK - 8XP28D15	
EF-4	WALL MOUNTED	APPARATUS BAY	BELT	5860	0.7	1725	2	120	1	60	WALL MOUNTED	BAS	COOK - 20XMPH	
EF-5	SUSPENDED FROM STRUCTURE	VEHICLE EXHAUST	BELT	2400	3.5	1725	3	208	3	60	INLINE	BAS	COOK - 135QMX-HP	
EF-6	SUSPENDED FROM STRUCTURE	TURNOUT	BELT	510	0.5	1550	1/8	120	1	60	INLINE	BAS	COOK - 100QMX-HP	
KEF-1	SUSPENDED FROM STRUCTURE	KITCHEN HOOD 1	BELT	750	1.0	962	1/2	120	1	60	INLINE	BAS	CAPTIVEAIRE - KB14	
MUAF-1	SUSPENDED FROM STRUCTURE	KITCHEN HOOD 1	BELT	525	1.0	476	1/2	120	1	60	INLINE	BAS	CAPTIVEAIRE - G10	

NOTES:

1. PROVIDE WITH FACTORY MOUNTING KIT.
2. PROVIDE WITH FACTORY DISCONNECT.
3. ALL CONTROLS, TECHNICAL SERVICES, AND INTEGRATION TO BUILDING AUTOMATION SYSTEM SHALL BE PROVIDED BY MECHANICAL CONTRACTOR
4. UL 762 LISTED FOR KITCHEN APPLICATION.
5. PROVIDE OSHA RATED MOTOR COVER.
6. PROVIDE FACTORY CURB.
7. FACTORY CURB TO BE INSTALLED BY BONDED ROOFING CONTRACTOR.

GUH SCHEDULE

UNIT NO.	GUH-1	GUH-2	GUH-3	GUH-4	GUH-5	GUH-6
LOCATION	135 APPARATUS BAY	135 APPARATUS BAY	135 APPARATUS BAY	135 APPARATUS BAY	135 APPARATUS BAY	135 APPARATUS BAY
AREA SERVED	135 APPARATUS BAY	135 APPARATUS BAY	135 APPARATUS BAY	135 APPARATUS BAY	135 APPARATUS BAY	135 APPARATUS BAY
CFM	2140	2140	2140	3995	2140	2140
CAPACITY - MBTU - (NATURAL GAS)	150	150	150	250	150	150
FAN TYPE	PROPELLER	PROPELLER	PROPELLER	PROPELLER	PROPELLER	PROPELLER
DISCHARGE	VERTICAL	VERTICAL	VERTICAL	VERTICAL	VERTICAL	VERTICAL
FAN MOTOR H.P.	1/6	1/6	1/6	1/3	1/6	1/6
FAN MOTOR RPM	1075	1075	1075	1075	1075	1075
VOLTS/HZ/PHASE	115/1/60	115/1/60	115/1/60	115/1/60	115/1/60	115/1/60
MOUNTING TYPE	HANGING	HANGING	HANGING	HANGING	HANGING	HANGING
MFR. MODINE	REMARKS 1, 2, 3	REMARKS 1, 2, 3	REMARKS 1, 2, 3	REMARKS 1, 2, 3	REMARKS 1, 2, 3	REMARKS 1, 2, 3
MODEL # PTS	REMARKS 1, 2, 3	REMARKS 1, 2, 3	REMARKS 1, 2, 3	REMARKS 1, 2, 3	REMARKS 1, 2, 3	REMARKS 1, 2, 3

REMARKS:

1. GAS UNIT HEATER, MOUNTED FROM STRUCTURE.
2. PROVIDE THERMOSTAT MOUNTED ON WALL.
3. REFER TO SUBMITTAL FOR EXACT INFORMATION.

9-23-2016

STATE OF TEXAS
ROBERTO DE LA CRUZ
85431
LICENSED
PROFESSIONAL ENGINEER

Jose I. Guerra, Inc.
Consulting Engineers
Structural • Civil • Mechanical • Electrical
TBPE FIRM F-3

AUSTIN ONION CREEK FIRE & EMS STATION
1112 OLD SAN ANTONIO ROAD
AUSTIN, TEXAS 78748

REVISIONS

DATE	9/23/2016
DRAWN BY	JD
CHECKED BY	RC
PROJECT NO.	214106.00

M4.3

MECHANICAL SCHEDULES

CADFILE: F:\15071_Onion Creek Fire-EMS Station\DRAWINGS\CAD\15071_M4-3 Mechanical Schedules.dwg Plotted: Fri., Sep. 23, 2016 @ 10:35 AM By: kshirazi Scale: 1:1

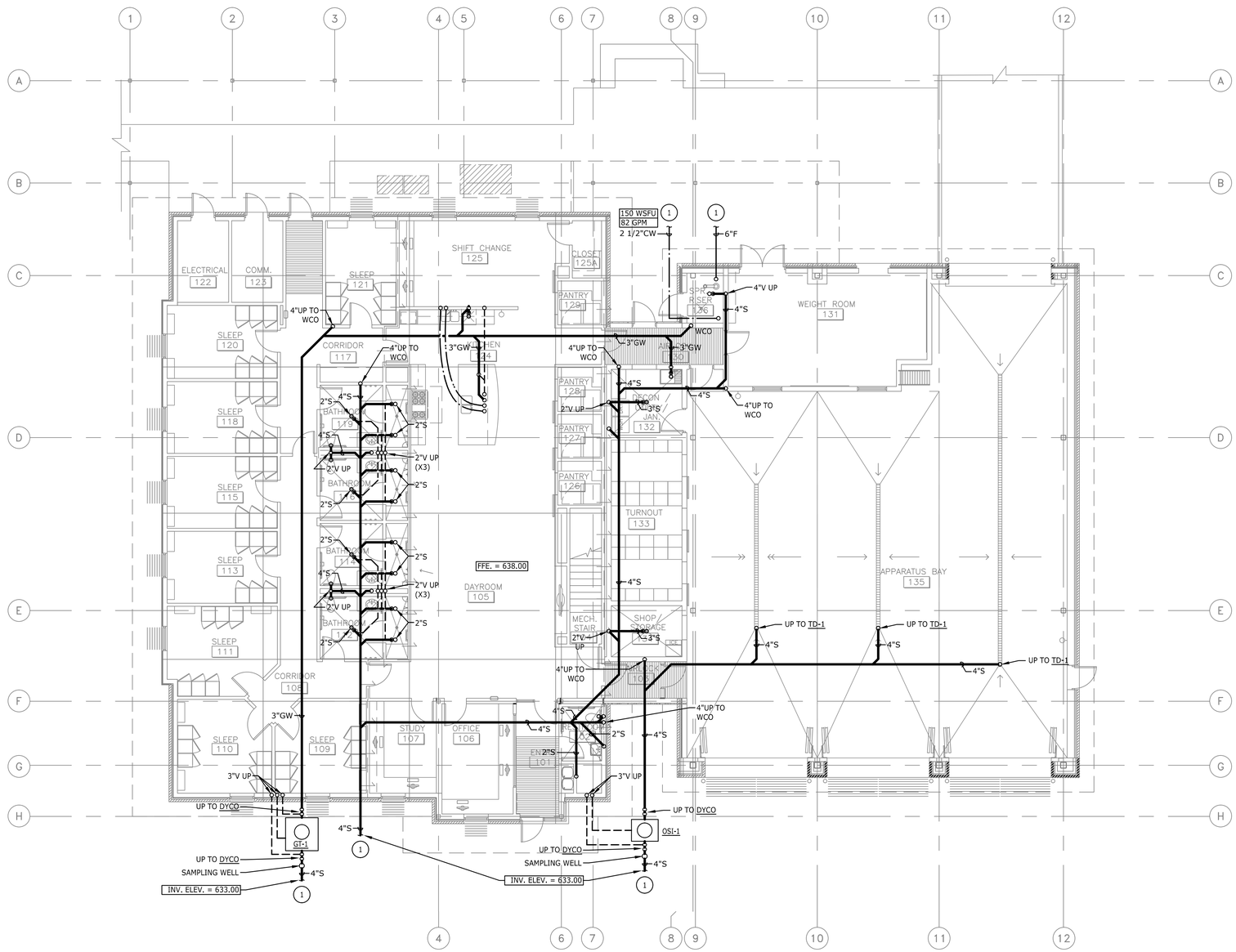

1 PLUMBING UNDERFLOOR PLAN – FIRST FLOOR
SCALE: 1/8" = 1'-0"

NORTH PLAN

NORTH TRUE

GENERAL NOTES:

1. DRAWING IS DIAGRAMMATIC ONLY. CONTRACTOR SHALL COORDINATE EXACT LOCATION OF PIPING, DEVICES AND EQUIPMENT WITH BUILDING ELEMENTS AND THE WORK OF OTHER TRADES.
2. FOR PIPE SIZES, VALVES, AND SPECIALTY FITTINGS NOT INDICATED ON DRAWING; SEE PLUMBING FIXTURE SCHEDULE, RISER DIAGRAMS, AND SPECIFICATIONS.
3. MINIMUM SIZE OF ANY DOMESTIC WATER PIPING SHALL BE 3/4" UNLESS NOTED OTHERWISE.
4. EVERY FLOOR DRAIN OR HUB DRAIN SHALL BE PROVIDED WITH A TRAP GUARD BY PROVENT SYSTEMS.
5. FLOOR DRAINS IN FINISHED AREAS SHALL BE LOCATED PER THE ARCHITECTURAL DRAWINGS.

KEYED NOTES:

1. CONTINUATION BY CIVIL.

STATE OF TEXAS
BRANDON N. REYES
106528
LICENSED PROFESSIONAL ENGINEER
09-23-2016

Jose I. Guerra, Inc.
Consulting Engineers
Structural • Civil • Mechanical • Electrical
TBPE FIRM F-3

AUSTIN ONION CREEK FIRE & EMS STATION
1112 OLD SAN ANTONIO ROAD
AUSTIN, TEXAS 78748

CITY OF AUSTIN FOUNDED 1839

REVISIONS

DATE	9/23/2016
DRAWN BY	ML
CHECKED BY	BR.
PROJECT NO.	214106.00

P1.1

PLUMBING UNDERFLOOR PLAN

CADFILE: F:\15071_Onion Creek Fire-EMS Station\DRAWINGS\CAD\15071_P1-1 Plumbing Underfloor Plan.dwg Plotted: Thu., Sep. 22, 2016 @ 9:34 PM By: kshirazi Scale: 1:96

GENERAL NOTES:

1. DRAWING IS DIAGRAMMATIC ONLY. CONTRACTOR SHALL COORDINATE EXACT LOCATION OF PIPING, DEVICES AND EQUIPMENT WITH BUILDING ELEMENTS AND THE WORK OF OTHER TRADES.
2. FOR PIPE SIZES, VALVES, AND SPECIALTY FITTINGS NOT INDICATED ON DRAWING; SEE PLUMBING FIXTURE SCHEDULE, RISER DIAGRAMS, AND SPECIFICATIONS.
3. MINIMUM SIZE OF ANY DOMESTIC WATER PIPING SHALL BE 3/4" UNLESS NOTED OTHERWISE.
4. PROVIDE EXTENDED VALVE STEMS ON DOMESTIC WATER PIPING, AND INSULATE OVER VALVES. REFER TO PLUMBING SPECIFICATIONS FOR FURTHER REQUIREMENTS.
5. EVERY FLOOR DRAIN OR HUB DRAIN SHALL BE PROVIDED WITH A TRAP GUARD BY PROVENT SYSTEMS.
6. FLOOR DRAINS IN FINISHED AREAS SHALL BE LOCATED PER THE ARCHITECTURAL DRAWINGS.

KEYED NOTES:

1. GAS METER & 2 PSIG OUTLET REGULATOR BY TEXAS GAS SERVICE.
2. NFPA 24 COMPLIANT 6" FIRE-SUPPRESSION WATER SUPPLY STUB-UP THROUGH FLOOR BY PLUMBING CONTRACTOR. CONTINUATION TO FIRE-RISER ASSEMBLY BY FIRE-SPRINKLER CONTRACTOR.
3. PROVIDE REDUCED PRESSURE ZONE (RPZ) TYPE BACKFLOW PREVENTER, FOLLOWED BY A PRESSURE REDUCING VALVE STATION, AT WATER ENTRY TO BLDG. SPILL RPZ DISCHARGE TO FLOOR SINK.
4. DIRECT VENT WITH 3" SCH. 80 PVC INTAKE AND EXHAUST WITH VERTICAL CONCENTRIC VENT TERMINATION KIT THROUGH ROOF (TYP). INSTALL PER MANUFACTURER'S INSTRUCTIONS.
5. 3/4"HW & CW FROM BELOW. PROVIDE ISLAND VENTING OF SINK P-TRAP WITH 2"V. RISE 6"MIN ABOVE FLOOD LEVEL RIM OF SINK BEFORE TURNING DOWN.
6. TO GAS UNIT HEATER. COORDINATE WITH MECHANICAL CONTRACTOR.

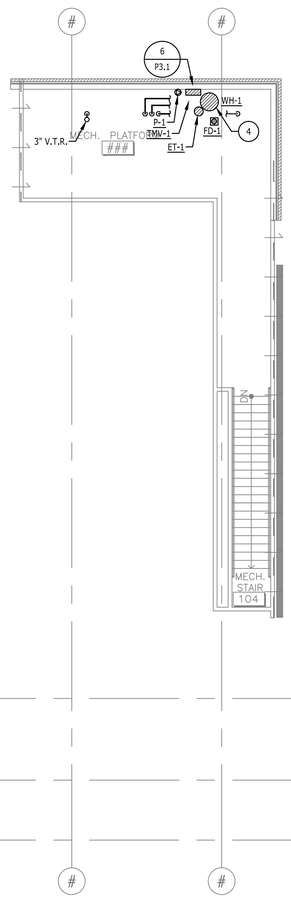

3 PLUMBING PLAN – MECH. PLATFORM
SCALE: 1/8" = 1'-0"

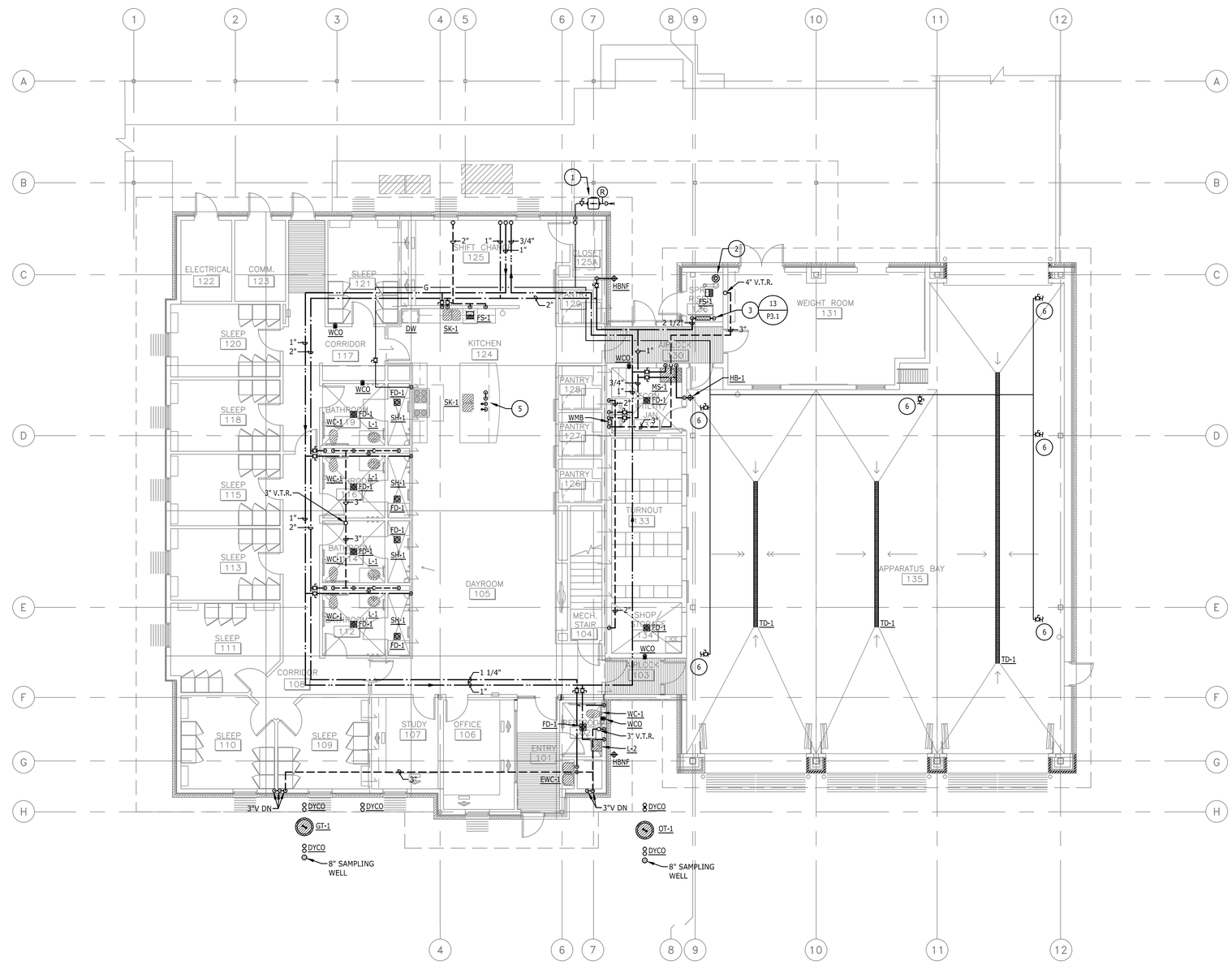

2 PLUMBING PLAN – FIRST FLOOR
SCALE: 1/8" = 1'-0"

NORTH PLAN TRUE

CADFILE: F:\15071_Onion Creek Fire-EMS Station\DRAWINGS\CAD\15071_P1-2 Plumbing Floor Plans.dwg Plotted: Thu, Sep. 22, 2016 @ 9:31 PM By: kshirazi Scale: 1:96

STATE OF TEXAS
BRANDON N. REYES
106528
LICENSED PROFESSIONAL ENGINEER
09-23-2016

Jose I. Guerra, Inc.
Consulting Engineers
Structural • Civil • Mechanical • Electrical
TBPE FIRM F-3

AUSTIN ONION CREEK FIRE & EMS STATION
1112 OLD SAN ANTONIO ROAD
AUSTIN, TEXAS 78748

REVISIONS

DATE	9/23/2016
DRAWN BY	ML
CHECKED BY	BR
PROJECT NO.	214106.00

P1.2

PLUMBING FLOOR PLANS

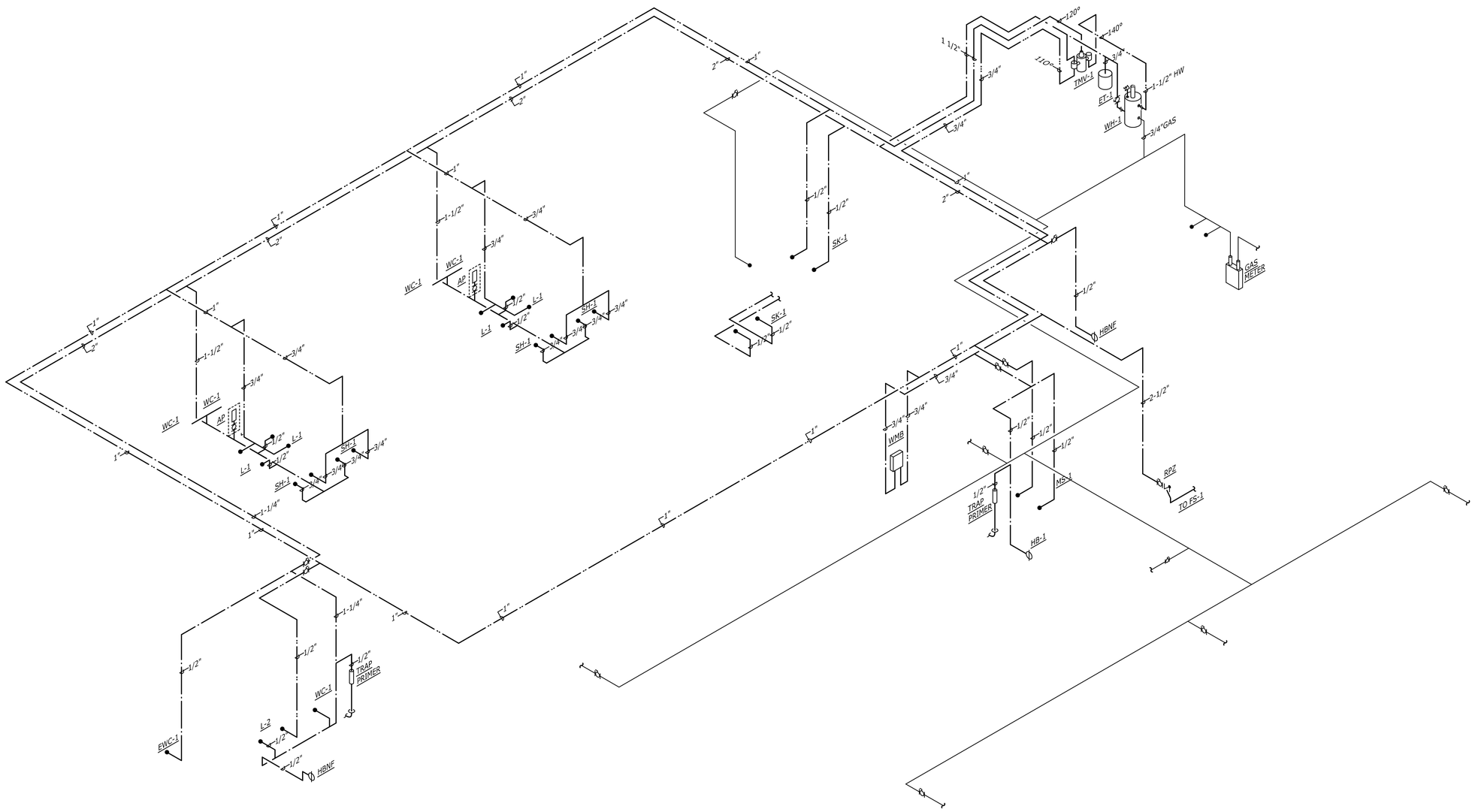

1 PLUMBING RISER DIAGRAM
NO SCALE

CADFILE: F:\15071_Onion Creek Fire-EMS Station\DRAWINGS\CAD\15071_P2-1 Plumbing Riser Diagram.dwg Plotted: Thu., Sep. 22, 2016 @ 9:32 PM By: kshirazi Scale: 1:96

STATE OF TEXAS
BRANDON N. REYES
106528
LICENSED PROFESSIONAL ENGINEER
09-23-2016

Jose I. Guerra, Inc.
Consulting Engineers
Structural • Civil • Mechanical • Electrical
TBPE FIRM F-3

AUSTIN ONION CREEK FIRE & EMS STATION
1112 OLD SAN ANTONIO ROAD
AUSTIN, TEXAS 78748

CITY OF AUSTIN FOUNDED 1839

REVISIONS

DATE	9/23/2016
DRAWN BY	ML
CHECKED BY	BR
PROJECT NO.	214106.00

P2.1

PLUMBING RISER DIAGRAM

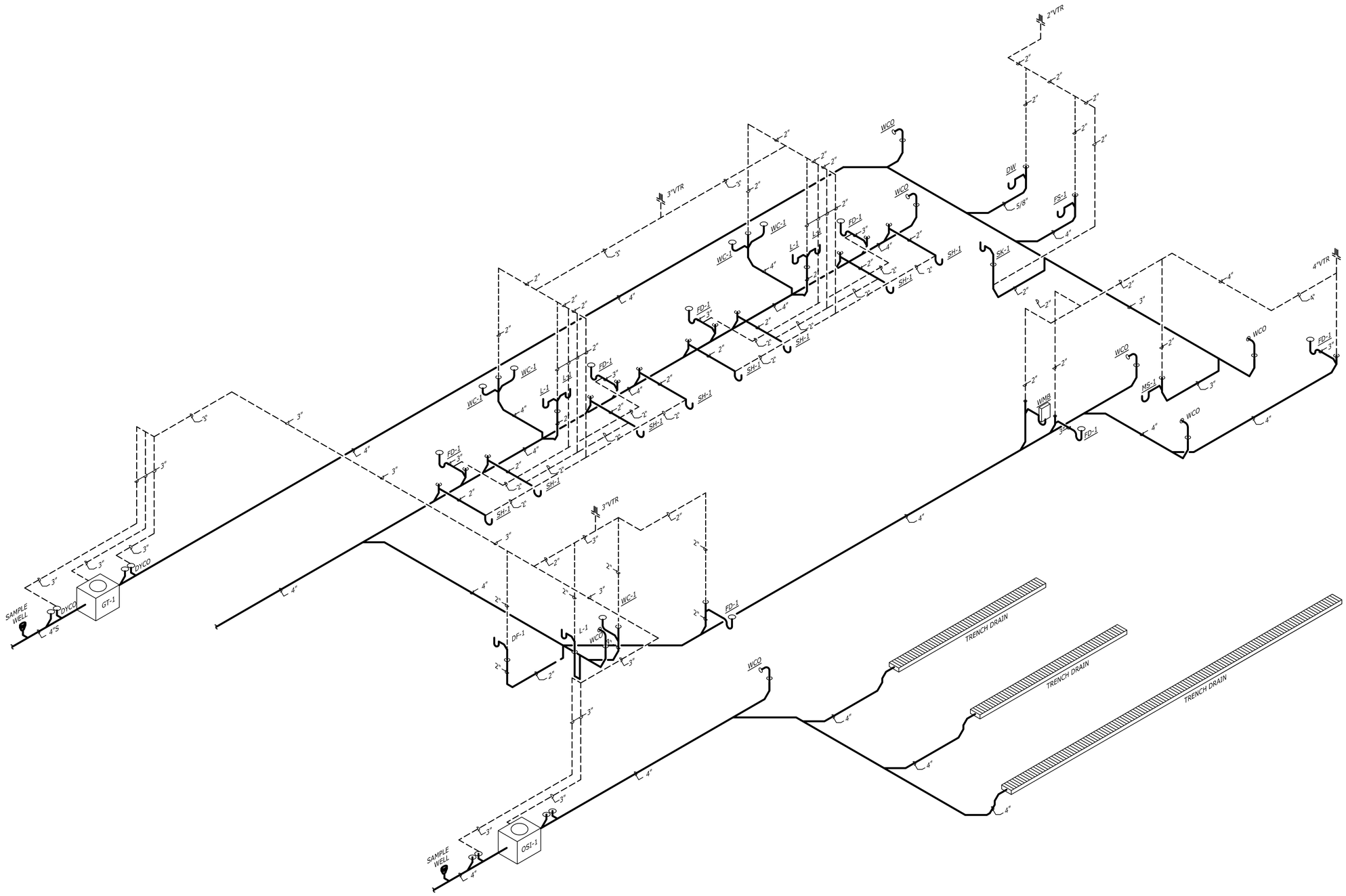

1 PLUMBING RISER DIAGRAM
NO SCALE

STATE OF TEXAS
BRANDON N. REYES
106528
LICENSED PROFESSIONAL ENGINEER
09-23-2016

Jose I. Guerra, Inc.
Consulting Engineers
Structural • Civil • Mechanical • Electrical
TBPE FIRM F-3

AUSTIN ONION CREEK
FIRE & EMS STATION
1112 OLD SAN ANTONIO ROAD
AUSTIN, TEXAS 78748

CITY OF AUSTIN FOUNDED 1839

REVISIONS

DATE	9/23/2016
DRAWN BY	ML
CHECKED BY	BR
PROJECT NO.	214106.00

P2.2

PLUMBING RISER DIAGRAM

CADFILE: F:\15071_Onion Creek Fire-EMS Station\DRAWINGS\CAD\15071_P2-2 Plumbing Riser Diagram.dwg Plotted: Thu., Sep. 22, 2016 @ 9:33 PM By: kshirazi Scale: 1:96

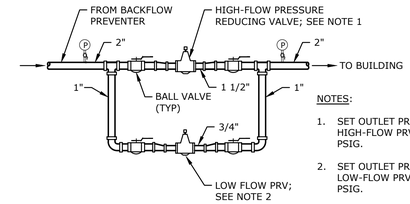

NOTES:

1. SET OUTLET PRESSURE OF HIGH-FLOW PRV TO 55 PSIG.
2. SET OUTLET PRESSURE OF LOW-FLOW PRV TO 65 PSIG.

13 DOMESTIC WATER PRESSURE REG. DETAIL
NO SCALE

NOTE:
A GAS SEDIMENT TRAP SHALL BE PROVIDED WITH ALL INSTALLATIONS; OMIT IF PROVIDED BY MANUFACTURER.

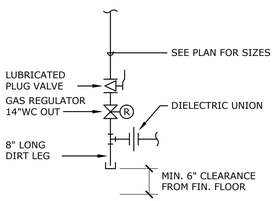

TYPICAL CONNECTION TO PAD MOUNTED GAS FIRED EQUIPMENT

12 GAS PIPING SUPPLY DETAIL
NO SCALE

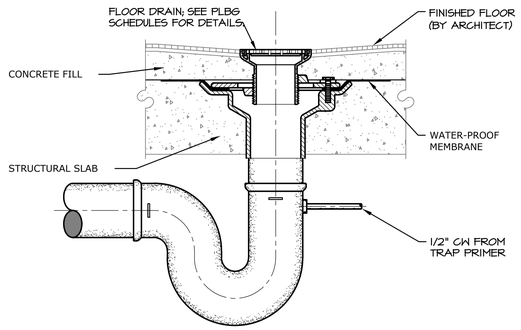

11 FLOOR DRAIN DETAIL
NO SCALE

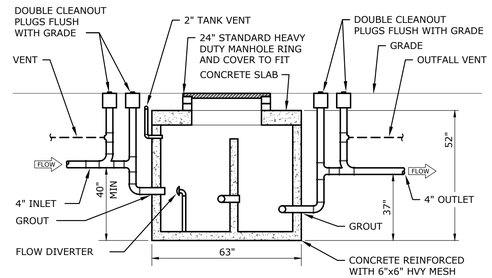

FLOW RATE:
SIZED PER C.O.A. WATER & WASTE CRITERIA.

10 GREASE INTERCEPTOR DETAIL
NO SCALE

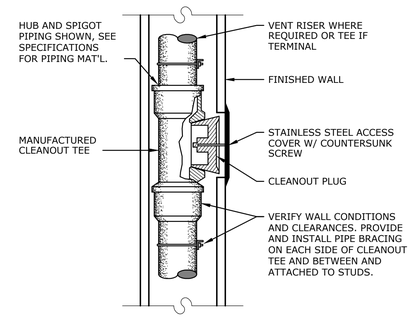

9 WALL CLEANOUT DETAIL
NO SCALE

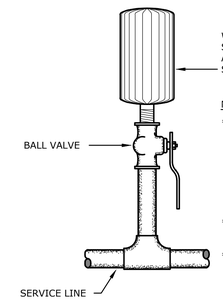

NOTES:

* WATER HAMMER ARRESTORS SHALL BE PROVIDED WHERE INDICATED ON THE DRAWINGS AND AS NECESSARY TO PREVENT WATER HAMMER FROM OCCURRING. A MINIMUM OF ONE ARRESTOR SHALL BE PROVIDED FOR EACH FIXTURE GROUP AND ON EACH SERVICE TO THAT GROUP.
* A GROUP FOR THIS REQUIREMENT SHALL MEAN ONE OR MORE FIXTURES.
* ACCESS SHALL BE PROVIDED FOR MAINTENANCE, REPAIR, & REPLACEMENT.

8 WATER HAMMER ARRESTOR DETAIL
NO SCALE

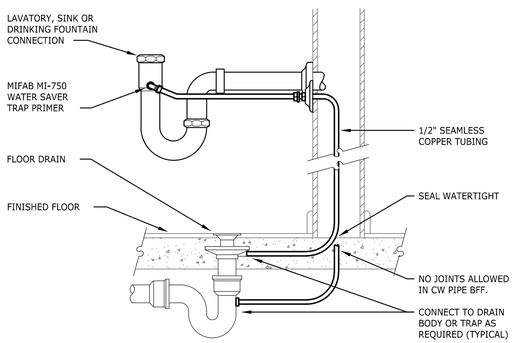

7 TAILPIECE TRAP SEAL PRIMER DETAIL
NO SCALE

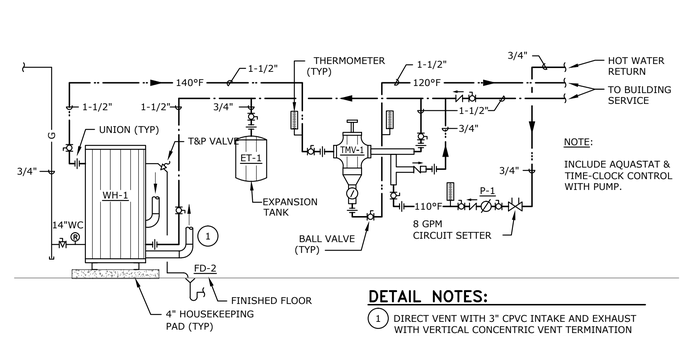

NOTE:
INCLUDE AQUASTAT & TIME-CLOCK CONTROL WITH PUMP.

DETAIL NOTES:

1. DIRECT VENT WITH 3" CPVC INTAKE AND EXHAUST WITH VERTICAL CONCENTRIC VENT TERMINATION KIT THROUGH ROOF. INCLUDE CONDENSATE TRAP/NEUTRALIZER AT BASE OF EXHAUST ELBOW AND PIPE TO FLOOR DRAIN.

6 WATER HEATER PIPING DETAIL
NO SCALE

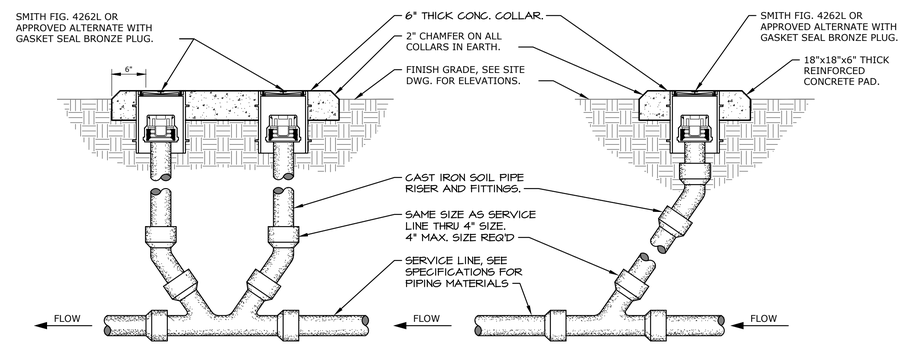

5 SINGLE AND DOUBLE YARD CLEANOUT DETAIL
NO SCALE

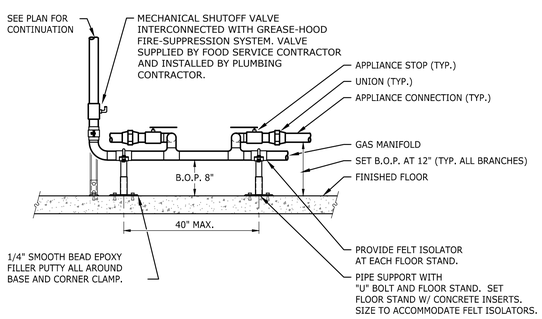

4 COOKING-LINE GAS PIPING DETAIL
NO SCALE

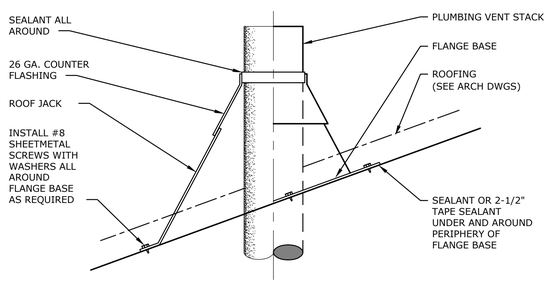

3 VENT THRU ROOF DETAIL
NO SCALE

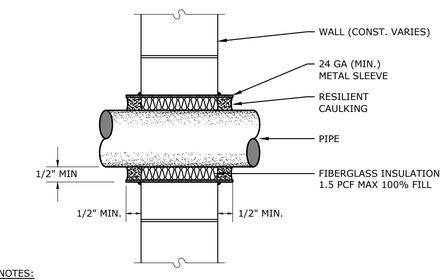

NOTES:

1. SPACE BETWEEN PIPE & SLEEVE TO BE FREE OF FOREIGN MATERIAL.
2. PIPE SHALL NOT CONTACT STRUCTURE AT ANY TIME. WEDGES SHALL NOT BE USED TO MAINTAIN PIPE POSITION.
3. NOT FOR EXTERIOR WALL PENETRATIONS.
4. INCLUDE ESCUTCHEON OVER WALL SLEEVE WHERE PENETRATION IS EXPOSED TO VIEW.

2 INTERIOR WALL PIPE-PENETRATION DETAIL
NO SCALE

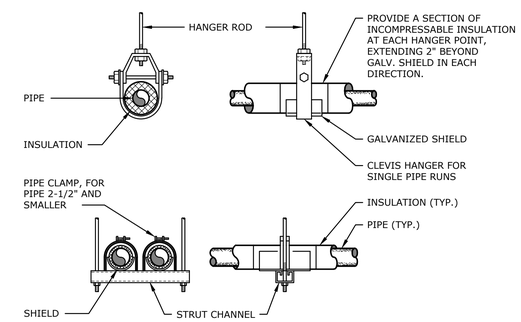

1 PIPE SUPPORT DETAIL
NO SCALE

STATE OF TEXAS
BRANDON N. REYES
106528
LICENSED PROFESSIONAL ENGINEER
09-23-2016

Jose I. Guerra, Inc.
Consulting Engineers
Structural • Civil • Mechanical • Electrical
TBPE FIRM F-3

AUSTIN ONION CREEK FIRE & EMS STATION
1112 OLD SAN ANTONIO ROAD
AUSTIN, TEXAS 78748

CITY OF AUSTIN FOUNDED 1839

REVISIONS

DATE	9/23/2016
DRAWN BY	ML
CHECKED BY	BR
PROJECT NO.	214106.00

P3.1

PLUMBING DETAILS

CADFILE: F:\15071_Onion Creek Fire-EMS Station\DRAWINGS\CAD\15071_P3-1 Plumbing Details.dwg Plotted: Thu., Sep. 22, 2016 @ 9:28 PM By: kshirazi Scale: 1:1

PLUMBING FIXTURE SCHEDULE

SYMBOL	DESCRIPTION	MANUFACTURER / MODEL NUMBER	WASTE	VENT	CW	HW	REMARKS
WC-1 (ADA)	WATER CLOSET: FLOOR MOUNTED, WHITE VITREOUS CHINA, SIPHON JET, 1.28 GALLON FLUSH, ELONGATED BOWL. SEAT: ELONGATED, OPEN-FRONT & SS CHECK HINGE. FLUSH VALVE: EXPOSED, DIAPHRAGM-TYPE, 1.28 GALLON FLUSH BOLT & WAX RING KIT:	KOHLER: K-4405 "HIGHLINE" BEMIS: 1955SSCT SLOAN: ROYAL 111-1.28 AS RECOMMENDED BY MANUF.	4"	2"	1-1/4"	-	TOP OF TOILET SEAT 17"-19" ABOVE FLOOR. - MANUAL FLUSH; MOUNT W/ HANDLE ON WIDE SIDE OF STALL.
L-1 (ADA)	LAVATORY: OVAL UNDERMOUNT, 19.25" X 16.25" WHITE VITREOUS CHINA FAUCET: 0.5 GPM, SINGLE HANDLE, WITH METAL WASTE ASSEMBLY STRAINER: POP-UP TRAP SUPPLIES: BRASS STOPS & COPPER RISERS, CHROME PLATED COVERS	KOHLER: K-2210 MOEN: L4621 (INCLUDED WITH BASE MODEL) McGUIRE: 8902 McGUIRE: 2165CCLK TRUEBRO: LAV GUARD2	2"	1-1/2"	3/4"	3/4"	 INCLUDE 0.5 GPM VANDAL PROOF NON-AERATING OUTLET 1-1/4" INLET X 1-1/2" OUTLET LOOSE KEY, 3/8" RISERS
L-2 (ADA)	LAVATORY: WALL-HUNG W/ SHROUD, 3-HOLE, 4" CENTERS WHITE VITREOUS CHINA FAUCET: 0.5 GPM, SINGLE HANDLE, WITH METAL WASTE ASSEMBLY STRAINER: GRID-TYPE, OFFSET TRAP SUPPLIES: BRASS STOPS & COPPER RISERS, CHROME PLATED COVERS CARRIER	KOHLER: K-1999 "BRENHAM" MOEN: L-4621 McGUIRE: 155WC McGUIRE: 8902 McGUIRE: 2165CCLK TRUEBRO: LAV GUARD2 ZURN, WATTS, OR JAY R SMITH	2"	1-1/2"	3/4"	3/4"	 1-1/4" INLET X 1-1/2" OUTLET LOOSE KEY, 3/8" RISERS COMPATIBLE WITH WALL CONSTRUCTION.
SK-1 (ADA)	SINK: COUNTER-MOUNTED, SELF-RIMMING, 3-HOLE, 4" CENTERS, #18 GAUGE, TYPE 304 STAINLESS STEEL, 6-1/2" DEEP, DOUBLE-BOWL FAUCET: SWING NECK, SINGLE HANDLE STRAINER: OFFSET, GRID-TYPE TRAP SUPPLIES: BRASS STOPS & COPPER RISERS, CHROME PLATED COVERS (NOT REQ'D IF ARCHITECTURAL COVER PROVIDED)	ELKAY: LRAD 3319 MOEN: 7425 McGUIRE: 1151AWC McGUIRE: 8903 McGUIRE: 2167CCLK TRUBRO: LAV GUARD2, 103 E-Z	2"	1-1/2"	3/4"	3/4"	OFF-CENTERED DRAIN OPENINGS INCLUDE 1.5 GPM VANDAL-RESISTANT AERATOR 1-1/2" INLET X 2" OUTLET LOOSE KEY, 1/2" RISERS FOR STOPS, STRAINER, AND P-TRAP
SH-1 (ADA)	SHOWER: BALL JOINT w/ ADJUSTABLE SHOWER PATTERN, 1.5 GPM HANDHELD SHOWER: 1.5 GPM, w/ GLIDE BAR MIXING VALVE: CAST-BRASS CONSTRUCTION, T/P TYPE DIVERTER: CAST BRONZE BODY, CHROME PLATED	ZURN: Z7000-6-1.5 POWERS: 141-150 POWERS: SERIES E700 POWERS: 141-600B	2"	1-1/2"	3/4"	3/4"	CHROME-PLATED BRASS ASSE 1016 COMPLIANT
FD-1	FLOOR DRAIN: STRAINER: NICKEL BRONZE OUTLET	SIOUX CHIEF: "FINISH LINE" SERIES	3"	2"	1/2"	-	FOR BATHROOMS, SHOWERS, & GENERAL AREAS. COMPATIBLE W/ WASTE PIPING.
FS-1	FLOOR SINK: 12"x12"SQUARE TOP x 6"MIN SUMP DEPTH BODY: CAST IRON w/ ACID RESISTANT ENAMEL COATED INTERIOR STRAINER: NICKEL-BRONZE, ACID RESISTANT ENAMEL COATED OUTLET	SIOUX CHIEF: 861-24XZD	4"	2"	-	-	INDIRECT WASTE RECEPTOR FOR SINKS & EQUIPMENT. INCLUDE ALUMINUM DOME BOTTOM STRAINER. HALF GRATE COMPATIBLE W/ WASTE PIPING.
EWC-1 (ADA)	ELECTRIC WATER COOLER: WALL-MOUNTED, GALVANIZED STEEL FRAME w/ STAINLESS STEEL TOP, POLISHED TO A LUSTER FINISH VANDAL-RESISTANT BUBBLERS KEYED INTO POSITION. HEAVY DUTY VANDAL-RESISTANT PUSH-BUTTON CONTROLS CANE APRON: TRAP: SUPPLIES: CHROME-PLATED BRASS STOP CARRIER:	EZSTL8C ELKAY McGUIRE: 8902 McGUIRE ELKAY	2"	1-1/2"	1/2"	-	INCLUDE WATER FILTER 115 V, 3-WIRE OUTLET BOX REQUIRED. PUSH-BUTTON CONTROLS ON FRONT AND SIDES. 1-1/4" INLET X 1-1/2" OUTLET LOOSE KEY WITH 3/8" BRAIDED, STAINLESS STEEL RISER INCLUDED w/ BASE MODEL SPECIFIED.
MS-1	MOP SINK: ONE PIECE, PRE-CAST TERRAZO CONSTRUCTION STAINLESS STEEL CAPS ON ALL CURBS FAUCET: w/ INTEGRAL VACUUM BREAKER	FIAT: TSB-100 FIAT: 830-AA	3"	2"	3/4"	3/4"	24" X 24" X 12" w/ ADJUSTABLE WALL BRACE & PAIL HOOK.
HB-1	HOSE BIBB: TWO CHECK VALVES, AUTOMATIC DRAIN CHROME FINISH	WOODFORD: MODEL 26	-	-	3/4"	-	INCLUDE METAL WHEEL HANDLE. FOR USE IN NON-FREEZING AREAS INACCESSIBLE TO THE PUBLIC.
HBNF	HOSE BIBB, NON-FREEZE: TWO CHECK VALVES, AUTOMATIC DRAIN, LOCKABLE WALL BOX ASSEMBLY, LOOSE KEY OPERATION	WOODFORD: MODEL B67	-	-	3/4"	-	FOR USE IN AREAS SUBJECT TO FREEZING. CHROME FINISH.
DW	DISHWASHER	(BY OTHERS)	5/8"	-	-	1/2"	CONNECT WASTE TUBE THROUGH CHROME-PLATED AIR-GAP FITTING ABOVE COUNTERTOP TO SINK TAILPIECE.
IMB	ICE MACHINE BOX:	SIOUX CHIEF: 696-10 SERIES "OX BOX"	-	-	3/4"	-	INCLUDE WATER HAMMER ARRESTOR.
IM	ICE MAKER	(BY OTHERS)	-	-	1/2"	-	INCLUDE REDUCED PRESSURE ZONE TYPE BACKFLOW PREVENTER w/ AIR GAP FITTING IN WATER SUPPLY. ROUTE RPZ RELIEF DRAIN TO FLOOR SINK BENEATH ICE MAKER.
WMB	WASHING MACHINE BOX	SIOUX CHIEF: 696-2313 "OX BOX"	2"	1-1/2"	3/4"	3/4"	INCLUDE DEEP SEAL TRAP & WATER HAMMER ARRESTORS.
CM	COFFEE MAKER	(BY OTHERS)	-	-	1/2"	-	INCLUDE FILTER AND DUAL CHECK VALVE IN WATER SUPPLY.

NOTES:

1) ALL FLOOR DRAIN P-TRAPS SHALL BE PROVIDED w/ A 1/2" TRAP PRIMER CONNECTION.
2) REFER TO THE ARCHITECTURAL DRAWINGS FOR EQUIPMENT AND ACCESSORY LOCATIONS. NOTIFY ARCHITECT AND ENGINEER OF ANY CONFLICTS.
3) REFER TO THE ARCHITECTURAL DRAWINGS FOR SPECIFIC MOUNTING HEIGHTS FOR ALL FIXTURES.

PLUMBING EQUIPMENT SCHEDULE

SYMBOL	DESCRIPTION	MANUFACTURER / MODEL NUMBER	CHARACTERISTICS	REMARKS
WH-1	WATER HEATER: STORAGE-TYPE, GAS-FIRED, LOW NOX	AO SMITH: BTH 199	CAPACITY: 100 GAL INPUT: 199,900 BTU/HR RECOVERY: 288 GAL/HR AT 80°F RISE THERMAL EFFICIENCY: 95% ELECTRICAL: 120V, 1-PHASE, 60 HZ	SET STORAGE TEMPERATURE TO 140°F. VENT WITH CPVC THROUGH ROOF.
P-1	CIRCULATOR PUMP: CAST IRON CASING, STAINLESS STEEL CARTRIDGE	TACO: 009-F5-IFC	FLOW RANGE: 0-10 GPM HEAD RANGE: 0-35 FEET ELECTRICAL: 115V, 1-PHASE, 60 HZ, 1/8 HP	WITH INTEGRAL FLOW CHECK VALVE
TMV-1	THERMOSTATIC MIXING VALVE: ASSE 1017 INTEGRAL CHECK VALVES & TEMP GUAGE	ARMSTRONG: RADA 425R	FLOW AT 5 PSI PRESSURE DROP: 15 GPM OUTLET TEMPERATURE: 120°F CONNECTIONS: 1" NPT	FOR HOT WATER DISTRIBUTION SYSTEM WITH CIRCULATION.
TMV-2	THERMOSTATIC MIXING VALVE: ASSE 1070 INTEGRAL CHECK VALVES & STRAINERS POINT-OF-USE	SYMMONS: MAXLINE 5-210	MAXIMUM FLOW: 6 GPM FLOW AT 5 PSI PRESSURE DROP: 1 GPM OUTLET TEMPERATURE: 110°F CONNECTIONS: 3/8" CW, HW, & TW	MOUNT BENEATH LAV. VERIFY OUTLET TEMP AFTER INSTALLATION & ADJUST AS NECESSARY.
ET-1	EXPANSION TANK	ELBI: DTS-19	CAPACITY: 5 GAL SYSTEM CONN: 3/4" NPT CW	-
SA-*	SHOCK ARRESTOR: PISTON-TYPE	SIOUX CHIEF: HYDRA-RESTER	-	PROVIDE ACCESS & BALL VALVE ISOLATION. SIZE IN ACCORDANCE w/ PDI STANDARDS.
DSB	DOWNSPOUT BOOT: EPOXY-COATED CAST IRON WITH COUNTERSUNK SECURING STRAP	WATTS: RD-980	DOWNSPOUT CONNECTION SIZES: 5"X4" PIPE CONNECTION SIZE: 4"	PROVIDE THRUST BLOCK AT BURIED ELBOW BENEATH PIPE CONNECTION.
TD-1	TRENCH DRAIN: WIDE REVEAL SYSTEM HIGH-DENSITY POLYETHYLENE (HDPE) BODY DUCTILE IRON GRATE	ZURN: Z886	PIPE CONNECTION SIZE: SEE DWGS	COORDINATE OUTLETS WITH ARRANGMENT INDICATED ON DRAWINGS. COORDINATE INSTALL WITH STRUCTURAL.
RPZ	REDUCED PRESSURE ZONE BACKFLOW PREVENTER: INCLUDE VALVES ON INLET & OUTLET	WATTS	PATTERN: HORIZONTAL OR "Z", AS REQUIRED SIZE: SAME AS IN-LINE PIPE SIZE ON DWGS	PROVIDE AIR GAP FITTING. FULL PORT BALL VALVES ON 2" & SMALLER BUTTERFLY VALVES ON 2-1/2" & LARGER
DYCO	DOUBLE YARD CLEANOUT	SIOUX CHIEF: 851 SERIES	CAST IRON COVER	PUSH-JOINT WASTE CONNECTION
FCO	FLOOR CLEANOUT	SIOUX CHIEF: 834 SERIES "FINISH LINE"	NICKEL-BRONZE COVER	COORDINATE OUTLET TYPE w/ PIPE MAT'L SPECIFIED.
WCO	WALL CLEANOUT	SIOUX CHIEF: 873 SERIES	20-GAUGE STAINLESS STEEL COVER	-
AP	ACCESS PANEL	SPECIFIED BY ARCHITECT	-	SIZE AS REQUIRED. COORDINATE PLACEMENT w/ ARCHITECT.
GI-1	GREASE TRAP/INTERCEPTOR: PRECAST 4,500 PSI CONCRETE, 8" TRAFFIC BEARING LID, GRADE 60 REINFORCING	HILL COUNTRY CONCRETE PRODUCTS	500 GALLON	INCLUDE PRECAST CONCRETE MANHOLE RISERS, GRADE RINGS, FRAMES, & COVERS AS REQUIRED.
OSI-1	OIL/SAND INTERCEPTOR: SEAMLESS MOLDED POLYETHYLENE TANK, GAS/WATER-TIGHT COMPOSITE COVER 50 GPM MAX FLOW RATE	SCHIER: OS- 50	LIQUID CAPACITY: 52 GALLONS SAND CAPACITY: 12.5 GALLONS OIL CAPACITY: 34.1 GALLONS CONNECTIONS: 4" INLET & OUTLET, 3"V	INCLUDE TELESLIDE MANHOLE RISERS, GRADE RINGS, FRAMES, & COVERS AS REQUIRED.

NOTES:

1) REFER TO THE ARCHITECTURAL DRAWINGS FOR EQUIPMENT AND ACCESSORY LOCATIONS. NOTIFY ARCHITECT AND ENGINEER OF ANY CONFLICTS.

STATE OF TEXAS
BRANDON N. REYES
106528
LICENSED PROFESSIONAL ENGINEER
09-23-2016

Jose I. Guerra, Inc.
Consulting Engineers
Structural • Civil • Mechanical • Electrical
TBPE FIRM F-3

AUSTIN ONION CREEK
FIRE & EMS STATION
1112 OLD SAN ANTONIO ROAD
AUSTIN, TEXAS 78748

CITY OF AUSTIN • FOUNDED 1839

REVISIONS

DATE	9/23/2016
DRAWN BY	ML
CHECKED BY	BR
PROJECT NO.	214106.00

P4.1

PLUMBING SCHEDULES

CADFILE: F:\15071_Onion Creek Fire-EMS Station\DRAWINGS\CAD\15071_P4-1 Plumbing Schedules.dwg Plotted: Thu., Sep. 22, 2016 @ 9:29 PM By: kshirazi Scale: 1:1

ELECTRICAL LEGEND

SYMBOL	DESCRIPTION	SYMBOL	DESCRIPTION
a X	LIGHT FIXTURE ('X'=TYPE a=SWITCH CONTROL I.D.)		125V. 20A. DUPLEX RECEPTACLE @ 18" AFF.
a X	RECESSED CAN LTG. FIXTURE ('X'=TYPE a=SWITCH CONTROL I.D.)		125V. 20A. QUADPLEX RECEPTACLE
a X	WALL BRACKET LTG. FIXTURE ('X'=TYPE a=SWITCH CONTROL I.D.)	EDF GFI WP WIU AFI CLG	125V, 20A DUPLEX RECEPTACLE ('GFI' = GROUND FAULT CIRCUIT INTERRUPTER, 'WP' = WEATHERPROOF/ WEATHER RESISTANT, 'WIU' = WHILE-IN-USE, 'AFI' = ARC FAULT CIRCUIT INTERRUPTER 'IG' = ISOLATED GROUND 'CLG' = CEILING MOUNTED) 'EDF'= ELEC DRINKING FOUNTAIN
a X	EMERGENCY LIGHT ('X'=TYPE a=SWITCH CONTROL I.D.)		
X	EMERGENCY LIGHT NIGHT LIGHT ('X')		125V, 20A DUPLEX OR QUADPLEX RECEPTACLE MOUNT @ 8" ABOVE COUNTERTOP, 42"AFF U.N.O
EX	CEILING MTD EXIT LIGHT WITH ARROWS ('EX' = TYPE)		SAME AS ABOVE EXCEPT FED FROM MODULAR WIRING SYSTEM
EX	WALL MOUNTED EXIT LIGHT ('EX' = TYPE)		(WALL, FLOOR) SPECIAL PURPOSE RECEPTACLE
S.X	SITE POLE LIGHT ('S.X' = TYPE)		RECEPTACLE IN FLOOR BOX
VS a	CEILING MOUNTED MANUAL ON DUAL TECHNOLOGY LOW VOLTAGE OCCUPANCY SENSOR. (a=SWITCH CONTROL I.D.)		125V. 20A. SIMPLEX RECEPTACLE @ 18" AFF.
AS a	CEILING MOUNTED AUTOMATIC ON DUAL TECHNOLOGY LOW VOLTAGE OCCUPANCY SENSOR. (a=SWITCH CONTROL I.D.)	JX CLG FLR	JUNCTION BOX IN WALL @ 18" AFF. (UNO) ('X'= NUMBER OF GANGS 'CLG' = CEILING MOUNTED, 'FLR' = FLOOR MOUNTED)
OS	WALL MOUNTED OCCUPANCY SENSOR @ +48"		
a	120-277V, 20A TOGGLE SWITCH @ 48" AFF. (a=SWITCH CONTROL I.D.)	HORIZONTAL SURFACE FEED CONCEALED FEED	SERVICE MOUNTED RACEWAY REFER TO DETAILS/SPECIFICATIONS
3 a	120-277V, 20A THREE WAY TOGGLE SWITCH @ 48" AFF. (a=SWITCH CONTROL I.D.)		
4 a	120-277V, 20A FOUR WAY TOGGLE SWITCH @ 48" AFF. (a=SWITCH CONTROL I.D.)	FBX	FLOOR BOX FOR POWER, DATACOM, AND A / V "X" IS THE TYPE, REFER TO SPECIFICATIONS
DXXXX a	120-277V, 20A DIMMER SWITCH (XXXX WATT-RATING) (a=SWITCH CONTROL I.D.)	PTX	FIRE RATED POKE-THRU, "X" IS THE TYPE REFER TO POKE-THRU SCHEDULE
DLV a	O-10V DIMMER SWITCH (a=SWITCH CONTROL I.D.)	C-X	CONTACTOR ('X' = DESIGNATION)
K a	120-277V, 20A KEYED SWITCH @ 48" AFF. (a=SWITCH CONTROL I.D.)	TC	TIME CLOCK
M	120-277V, 20A MOTOR RATED SWITCH		PUSHBUTTON @ 48" AFF.
P	120-277V, 20A TOGGLE SWITCH WITH PILOT "ON" FEATURE @ 48" AFF.	HD	HAND DRYER
EPO	120-277v, 20A EMERGENCY POWER OFF PUSHBUTTON WITH PROTECTIVE COVER @ 48" AFF	EE	ELECTRIC EYE FOR OVERHEAD DOOR
	SPECIAL SWITCHING DEVICE @ 48" AFF.	EL	ELECTRIC LOCK, BY SECURITY CONTRACTOR
XX	NON-FUSED DISCONNECT/SAFETY SWITCH ('XX' IS AMPERAGE RATING OF THE SWITCH)	TV TV	TELEVISION OUTLET
XX	FUSED DISCONNECT/SAFETY SWITCH ('XX' IS AMPERAGE RATING OF THE FUSE)	S CS	WALL SPEAKER, CEILING SPEAKER
XX	COMBINATION MOTOR STARTER/DISCONNECT SWITCH	VC	VOLUME CONTROL @ 48" AFF.
VFD	VARIABLE FREQUENCY DRIVE	C	CLOCK
	PANELBOARD ('XX' = DESIGNATION)		LV CABLING OUTLET @ 18" AFF.
	DRY-TYPE TRANSFORMER		LV CABLING OUTLET MOUNT @ 8" ABOVE COUNTERTOP
	GROUND BUS	CR	CARD ACCESS DEVICE @ 44" AFF.
	UNI-STRUT	AR	AMPLIFIER RACK
X	LOW VOLTAGE SLEEVE, WITH EMT BUSHINGS ON BOTH ENDS, ('X' INDICATES SIZE)	XX	CIRCUIT HOMERUN TO PANELBOARD ('XX' = PANELBOARD DESIGNATION)
LINE TYPE	NEW DEVICE/EQUIPMENT	XX	BELOW GRADE CIRCUIT HOMERUN TO PANELBOARD ('XX' = PANELBOARD DESIGNATION)
LINE TYPE	DEVICE/EQUIPMENT EXISTING TO REMAIN		ABOVE GRADE CONDUIT
LINE TYPE	DEVICE/EQUIPMENT TO BE REMOVED		BELOW GRADE CONDUIT
X XX	DETAIL/ENLARGED PLAN CALLOUT "X" IS DETAIL/ENLARGED PLAN NUMBER "XX" IS DRAWING NUMBER		BELL
		H	EXTERIOR HORN SPEAKER

NOTES: THIS LEGEND IS GENERAL IN NATURE. SOME OF THE LISTED SYMBOLS MAY NOT APPEAR IN THIS SET OF DRAWINGS.

ABBREVIATIONS

A. (AMP)	AMPERES	MBH	1000 BTU PER HOUR
A (SYM.)	AMPERES SYMMETRICAL	MC	MECHANICAL CONTRACTOR
AC	ALTERNATING CURRENT	MCP	MOTOR CIRCUIT PROTECTOR
AD	ACCESS DOOR	MIN.	MINIMUM
AFD	ADJUSTABLE FREQUENCY DRIVE	MTR.	MOTOR
AFF	ABOVE FINISHED FLOOR	MTD.	MOUNTED
AFG	ABOVE FINISHED GRADE	MVD	MANUAL VOLUME DAMPER
AHJ	AUTHORITY HAVING JURISDICTION	(N)	NEW
AIC	AMPS INTERRUPTING CAPACITY	NC	NORMALLY CLOSED
AR	ACID RESISTANT	N.C.	NOISE CRITERIA
ATP	AUTOMATIC TRAP PRIMER	NEMA	NATIONAL ELECTRICAL MANUFACTURERS ASSOCIATION
AVTR	ACID VENT THROUGH ROOF	NETA	NATIONAL ELECTRICAL TESTING ASSOCIATION
AW	ACID WASTE	NF	NON-FUSED
AWG	AMERICAN WIRE GAGE	NIC	NOT IN CONTRACT
BFG	BELOW FINAL GRADE	NO	NORMALLY OPEN
BLDG.	BUILDING	NO.	NUMBER
BTU	BRITISH THERMAL UNITS	OA	OUTSIDE AIR
BTUH	BRITISH THERMAL UNITS PER HOUR	OBD	OPPOSED BLADE DAMPER
C.	CONDUIT	OFCI	OWNER FURNISHED, CONTRACTOR INSTALLED
CAB.	CABINET	OHD	OPEN HUB DRAIN
C/B	CIRCUIT BREAKER	P.	POLE (S)
C/L	CENTERLINE	PB	PULL BOX, PUSH-BUTTON
CFH	CUBIC FEET PER HOUR	PD	PRESSURE DROP
CFM	CUBIC FEET PER MINUTE	PF	POWER FACTOR
CKT.	CIRCUIT	PH.	PHASE
CLG.	CEILING	PLBG.	PLUMBING
COM	COMMUNICATION CONDUIT	PNL.	PANELBOARD
CONT.	CONTINUE	POC	POINT OF CONNECTION
CONN.	CONNECT (ION)	PR.	PAIR
CO	CLEANOUT	QUAD.	QUADRUPLEX
COP	COEFFICIENT OF PERFORMANCE	RA	RETURN AIR
CT	CURRENT TRANSFORMER	RF.	ROOF
CW	DOMESTIC COLD WATER	RPM	REVOLUTIONS PER MINUTE
DB	DRY BULB	SA	SUPPLY AIR
DC	DIRECT CURRENT	SCCR	SHORT CIRCUIT CURRENT RATING
DISC.	DISCONNECT	SD	SOFT-DRAWN
DN	DOWN	SEER	SEASONAL ENERGY EFFICIENCY RATING
DS	DOWN SPOUT	SHT.	SHEET
DWGS.	DRAWINGS	SOV	SHUT-OFF VALVE
DYCO	DOUBLE YARD CLEANOUT	SP	STATIC PRESSURE
EA.	EACH	SPECS.	SPECIFICATIONS
EA	EXHAUST AIR	STL.	STEEL
EAT	ENTERING AIR TEMPERATURE	SW.	SWITCH
EC	ELECTRICAL CONTRACTOR	SWBD.	SWITCHBOARD
EER	ENERGY EFFICIENCY RATING	SWGR.	SWITCHGEAR
EFF.	EFFICIENCY	T.	TRIP
ENCL.	ENCLOSURE	T/S	TWISTED/SHIELDED
EPO	EMERGENCY POWER OFF PUSHBUTTON	TERM.	TERMINATION
EXIST., (E)	EXISTING	T-M	THERMAL-MAGNETIC
F.	FUSE(D), FRAME	TR	TAMPER RESISTANT
FCO	FLOOR CLEANOUT	TSP	TOTAL STATIC PRESSURE
FLEX.	FLEXIBLE	TU	TERMINAL UNIT
FPI	FINS PER INCH	TYP.	TYPICAL
FRP	FIRE RETARDANT PIPE	UL	UNDERWRITERS LABORATORY
FVNR	FULL VOLTAGE NON-REVERSING	UNO	UNLESS NOTED OTHERWISE
GND.	GROUND	V.	VENT
GFI	GROUND FAULT CIRCUIT INTERRUPTER	VIB	VALVE IN BOX
GR.	GRADE	VAC	VOLTS AC
GRC	GALVANIZED RIGID CONDUIT	VDC	VOLTS DC
HB	HOSE BIBB	VFD	VARIABLE FREQUENCY DRIVE
HD	HARD-DRAWN	VTR	VENT THROUGH ROOF
HP	HORSEPOWER	VAV, VVT	VARIABLE AIR VOLUME TERMINAL
HW	DOMESTIC HOT WATER	VT	VOLTAGE TAP OR TRANSDUCER
HZ.	HERTZ (CYCLES PER SECOND)	W.	WATT, WIRE
IG	ISOLATED GROUND	W/	WITH
IMB	ICE MACHINE BOX	WAP	WIRELESS ACCESS POINT
ISO.	ISOLATION	WB	WET BULB
K	KILO / THOUSAND	WCO	WALL CLEANOUT
KCMIL	THOUSAND CIRCULAR MILS	WG	WATER GAUGE
KV	KILO-VOLTS	WHA	WATER HAMMER ARRESTER
KVA	KILO-VOLT x AMPERES	WIU	WHILE IN USE
KW	KILO-WATT	WMB	WASHING MACHINE BOX
KWHR	KILO-WATT HOUR (KW x HR.)	WP	WEATHERPROOF
LAT	LEAVING AIR TEMPERATURE	WPD	WATER PRESSURE DROP
LR	LONG RADIUS	WR	WEATHER RESISTANT
LTG.	LIGHTING	XFMR.	TRANSFORMER
MAX.	MAXIMUM	YCO	YARD CLEANOUT

NOTE: THIS LEGEND IS GENERAL IN NATURE. SOME OF THE LISTED SYMBOLS MAY NOT APPEAR IN THIS SET OF DRAWINGS.

GENERAL NOTES

1. IT IS THE INTENT OF THESE DOCUMENTS THAT A COMPLETE AND WORKABLE INSTALLATION BE PROVIDED. TO THIS END, THE CONTRACTOR SHALL FURNISH ALL LABOR, MATERIALS, EQUIPMENT, TOOLS, SUPERVISION, TRANSPORTATION, WAREHOUSING, AND OTHER SERVICES REQUIRED TO COMPLETE THE WORK IN AN EFFICIENT AND TIMELY MANNER.

2. ALL WORK, INCLUDING MATERIALS AND WORKMANSHIP, SHALL CONFORM TO THE REQUIREMENTS OF ALL LOCAL CODES, LAWS, AND ORDINANCES AND THE NEC, IECC, INTERNATIONAL FIRE CODES,AND NFPA 101. WORK SHALL BE COMPLETE IN ALL RESPECTS AND IN ACCORDANCE WITH THE BEST ESTABLISHED AND ACCEPTED CONSTRUCTION PRACTICES.

3. CONTRACTOR SHALL FURNISH, INSTALL/ERECT AND MAINTAIN, FOR THE DURATION OF THE WORK, ALL GUARDRAILS, LIGHTS, WARNING SIGNS, STAGING, VENTILATION, ETC. REQUIRED BY LOCAL AND STATE LAWS AND ORDINANCES, INCLUDING THE SAFETY ORDERS OF OSHA.

4. THE CONTRACTOR SHALL VISIT THE SITE PRIOR TO BID AND SHALL BECOME THOROUGHLY FAMILIAR WITH THE EXISTING CONDITIONS. BY THE ACT OF SUBMITTING A BID, THIS CONTRACTOR ACCEPTS THE CONDITIONS UNDER WHICH THE WORK WILL BE PERFORMED.

5. CONTRACTOR SHALL PROTECT EXISTING BUILDINGS, STRUCTURES AND UTILITIES FROM DAMAGE. ANY DAMAGE CAUSED BY THE CONTRACTOR SHALL BE REPAIRED AT NO EXPENSE TO THE OWNER.

6. THE DRAWINGS ARE ESSENTIALLY DIAGRAMMATIC TO THE EXTENT THAT ALL OFFSETS, BENDS, SPECIAL FITTINGS AND LOCATIONS ARE NOT EXACTLY LOCATED.

7. ALL INDICATED DIMENSIONS ARE APPROXIMATE AND ARE GIVEN FOR ESTIMATE PURPOSES ONLY. BEFORE PROCEEDING WITH THE WORK, CONTRACTOR SHALL CAREFULLY CHECK AND VERIFY ALL DIMENSIONS, SIZES, REQUIRED CLEARANCES AND SHALL ASSUME FULL RESPONSIBILITY FOR THE FITTING OF ALL EQUIPMENT AND MATERIALS HEREIN REQUIRED TO OTHER PARTS OF THE WORK AND TO THE WORK OF OTHER TRADES.

8. CONTRACTOR SHALL COMPLY WITH ALL CONTRACT DOCUMENTS IN LAYING OUT THE WORK AND EQUIPMENT. CONTRACTOR SHALL COORDINATE THE WORK WITH THE WORK OF OTHER TRADES AND ALL JOB CONDITIONS.

9. CONTRACTOR SHALL HAVE A COMPETENT SUPERINTENDENT PRESENT AT THE JOB SITE AT ALL TIMES, WITH AUTHORITY TO ACT FOR THE CONTRACTOR.

10. ALL CONTRACTOR PERSONNEL WILL BE RESTRICTED TO THE PARTICULAR JOB SITE OF THIS CONTRACT.

11. UNLESS NOTED OTHERWISE, ALL MATERIALS AND EQUIPMENT SHALL BE NEW AND OF THE HIGHEST QUALITY.

12. ALL EQUIPMENT SHALL BE INSTALLED IN STRICT ACCORDANCE WITH MANUFACTURER'S WRITTEN INSTRUCTIONS.

13. ANY APPARATUS, APPLIANCE, DEVICE, MATERIAL, OR WORK NOT SHOWN ON DRAWINGS BUT MENTIONED IN THE SPECIFICATIONS, OR VICE VERSA, OR ANY INCIDENTAL ACCESSORIES NECESSARY TO MAKE THE WORK COMPLETE IN ALL RESPECTS AND READY FOR TESTING AND OPERATION, EVEN IF NOT PARTICULARLY SPECIFIED, SHALL BE FURNISHED, DELIVERED, AND INSTALLED BY THE CONTRACTOR WITHOUT ADDITIONAL COST TO THE OWNER.

14. ALL MISCELLANEOUS IRON AND STEEL WORK REQUIRED TO PROPERLY INSTALL EQUIPMENT SHALL BE FURNISHED AND INSTALLED BY THE CONTRACTOR. WORK INCLUDES ALL HANGERS, SUPPORTS, RACKS, BRACKETS AND ANY WELDING REQUIRED.

15. ACCESS AND WORKING SPACE SHALL BE PROVIDED AND MAINTAINED AROUND ALL MECHANICAL, ELECTRICAL AND CONTROL EQUIPMENT TO PERMIT READY AND SAFE OPERATION, EXAMINATION AND MAINTENANCE.

16. DURING CONSTRUCTION, THE CONTRACTOR SHALL MAINTAIN A DAILY RECORD OF ALL DEVIATIONS FROM THE BID DRAWINGS. ALL DIMENSIONS AND OTHER INFORMATION NECESSARY TO COMPLETELY EXPLAIN AND LOCATE ALL ELEMENTS OF THESE DEVIATIONS SHALL BE RECORDED. UPON COMPLETION OF WORK, THE CONTRACTOR SHALL SUBMIT TO THE OWNER'S REPRESENTATIVE, ONE COMPLETE SET OF REPRODUCIBLE DRAWINGS CORRECTED TO REFLECT "AS-BUILT" CONDITIONS OF THE WORK.

17. THE CONTRACTOR SHALL AT ALL TIMES KEEP THE PREMISES FREE FROM ACCUMULATION OF WASTE MATERIAL OR RUBBISH; MAINTAIN THE WORK AREA IN A NEAT, ORDERLY MANNER, AND LEAVE THE PREMISES IN A BROOM-CLEAN CONDITION AT THE END OF EACH DAY. THE CONTRACTOR SHALL FURNISH TRASH BINS AND SHALL BE RESPONSIBLE FOR THE PROPER TRANSPORTATION AND DISPOSAL OF ALL WASTE MATERIAL.

18. ANY INTERRUPTIONS AND/OR SHUTDOWN OF EXISTING SERVICES SHALL BE MADE ONLY WITH THE APPROVAL OF AND AT TIMES DESIGNATED BY OWNER.

19. UPON COMPLETION OF WORK, THE CONTRACTOR SHALL DEMONSTRATE, TO THE OWNER'S SATISFACTION, THE OPERATION OF THE INSTALLED EQUIPMENT AND SYSTEMS TO THE INTENT OF THE DESIGN.

20. ALL WORK SHALL BE GUARANTEED FOR A PERIOD OF ONE YEAR FROM THE DATE OF FINAL ACCEPTANCE BY THE OWNER. DURING THIS PERIOD, ANY DEFECT FOUND IN MATERIAL OR WORKMANSHIP SHALL BE REPAIRED OR REPLACED TO OWNER'S SATISFACTION, AT THE CONTRACTOR'S EXPENSE.

21. COORDINATE THE INSTALLATION REQUIREMENTS OF EQUIPMENT WITH MANUFACTURERS WRITTEN INSTRUCTIONS. CHANGES REQUIRED FROM THE USE OF PRODUCTS THAT ARE OTHER THAN THE BASIS OF DESIGN SHALL BE BORNE BY THE CONTRACTOR.

STATE OF TEXAS
JORGE A. OLIVARES
95828
LICENSED
PROFESSIONAL ENGINEER
9-23-2016

Jose I. Guerra, Inc.
Consulting Engineers
Structural • Civil • Mechanical • Electrical
TBPE FIRM F-3

AUSTIN ONION CREEK FIRE & EMS STATION
1112 OLD SAN ANTONIO ROAD
AUSTIN, TEXAS 78748

REVISIONS

DATE	9/23/2016
DRAWN BY	JD
CHECKED BY	JO
PROJECT NO.	214106.00

E1.0

ELECTRICAL LEGEND, ABBR., & GEN. NOTES

CADFILE: F:\15071_Onion Creek Fire-EMS Station\DRAWINGS\CAD\15071_E1-0 Electrical Legend, Abbr. & Gen. Notes.dwg Plotted: Thu., Sep. 22, 2016 @ 8:18 PM By: kshirazi Scale: 1:1

GENERAL NOTES:

1. DRAWING IS DIAGRAMMATIC ONLY. CONTRACTOR SHALL COORDINATE EXACT LOCATION OF CONDUIT, DEVICES AND EQUIPMENT WITH BUILDING ELEMENTS AND THE WORK OF OTHER TRADES.
2. SHARED NEUTRALS ARE NOT PERMISSIBLE.
3. CONTRACTOR SHALL INCREASE CIRCUIT CONDUCTOR AND CONDUIT SIZE AS REQUIRED TO LIMIT VOLTAGE DROP TO 2% MAXIMUM AT DESIGN LOAD FOR FEEDERS AND 3% MAXIMUM AT DESIGN LOAD FOR BRANCH CIRCUITS.

KEYED NOTES:

1. SWITCH LCG UP TO TYPE "S" LIGHTING FIXTURE AT STAIR TO MECHANICAL PLATFORM.
2. PROVIDE BAF HAIKO CEILING FAN EQUAL TO MODEL S3127-A2-BCS-04-02-C-01 WITH INTEGRAL INFARED OCCUPANCY SENSOR.
3. PROVIDE BAF HAIKO CEILING FAN EQUAL TO MODEL L3127-X5-FW-00-00-F VERIFY COLOR WITH ARCHITECT.
4. PROVIDE BAF HAIKO CEILING FAN EQUAL TO MODEL B3213-X4-AW-04-02-D VERIFY COLOR WITH ARCHITECT.
5. ROUTE CIRCUIT THROUGH EXTERIOR LIGHTING CONTROL PANEL.
6. PROVIDE BAE 1515 FAN OR EQUAL TO MODEL 15083.

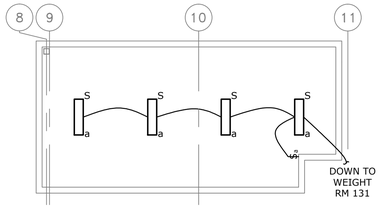

3 ELECTRICAL LIGHTING PLAN – STOR. PLATFORM
SCALE: 1/8" = 1'-0"

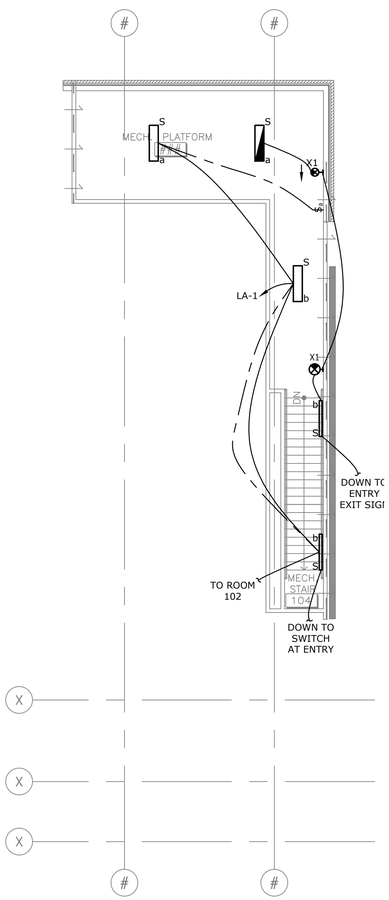

2 ELECTRICAL LIGHTING PLAN – MECH. PLATFORM
SCALE: 1/8" = 1'-0"

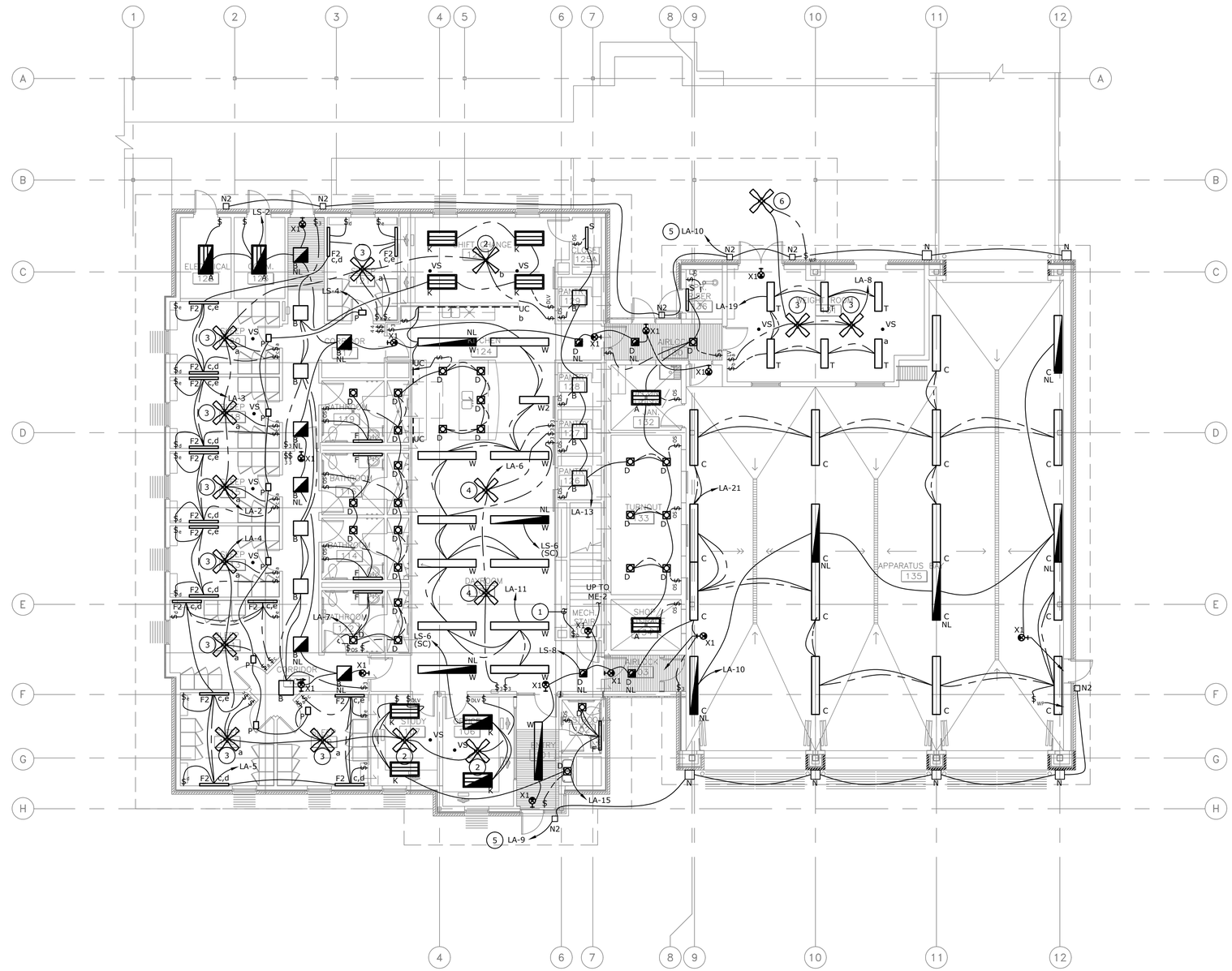

1 ELECTRICAL LIGHTING PLAN – FIRST FLOOR
SCALE: 1/8" = 1'-0"

CADFILE: F:\15071_Onion Creek Fire-EMS Station\DRAWINGS\CAD\15071_E1-2 Electrical Lighting Floor Plans.dwg Plotted: Fri., Sep. 23, 2016 @ 9:04 AM By: kshiraz: Scale: 1:96

Jose I. Guerra, Inc.
Consulting Engineers
Structural • Civil • Mechanical • Electrical
TBPE FIRM F-3

AUSTIN ONION CREEK FIRE & EMS STATION
1112 OLD SAN ANTONIO ROAD
AUSTIN, TEXAS 78748

REVISIONS

DATE	9/23/2016
DRAWN BY	JD
CHECKED BY	JO
PROJECT NO.	214106.00

E1.2

ELECTRICAL LIGHTING PLANS

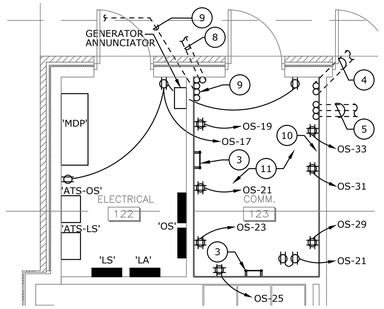

3 ENLARGED ELECTRICAL PLAN
SCALE: 1/4" = 1'-0"

PLAN TRUE

GENERAL NOTES:

1. DRAWING IS DIAGRAMMATIC ONLY. CONTRACTOR SHALL COORDINATE EXACT LOCATION OF CONDUIT, DEVICES AND EQUIPMENT WITH BUILDING ELEMENTS AND THE WORK OF OTHER TRADES.
2. SHARED NEUTRALS ARE NOT PERMISSIBLE.
3. CONTRACTOR SHALL INCREASE CIRCUIT CONDUCTOR AND CONDUIT SIZE AS REQUIRED TO LIMIT VOLTAGE DROP TO 2% MAXIMUM AT DESIGN LOAD FOR FEEDERS AND 3% MAXIMUM AT DESIGN LOAD FOR BRANCH CIRCUITS.

KEY NOTES:

1. PROVIDE QUAD USB CHARGER EQUAL TO P&S MODEL #TM8 USB 4XXC6. COLOR TO MATCH RECEPTACLE COLOR. PROVIDE WITH CORRESPONDING WALL PLATE. VERIFY MOUNTING HEIGHT WITH ARCHITECT.
2. PROVIDE DUPLEX RECEPTACLE WITH DUPLEX USB CHARGER EQUAL TO P&S MODEL # TM826 USB XXC6. COLOR TO MATCH STANDARD RECEPTACLE COLOR. PROVIDE WITH CORRESPONDING WALL PLATE.
3. 1/4"X2"X12" COPPER GROUNDING BAR WALL MOUNTED AT 12"AFF ON INSULATED STAND OFF BRACKETS. ROUTE #2 COPPER GROUNDING ELECTRODE CONDUCTOR TO PANEL "MDP" GROUND BUS.
4. PROVIDE 2-4" PVC CONDUITS (SCHEDULE 80) TO ANTENNA LOCATION. STUB UP AT PAD LOCATION INTO A NEMA 3R ENCLOSURE FOR FUTURE CABLING BY OWNER. PROVIDE BELL FITTING AT STUB-UP. PROVIDE WITH 45 DEG RADIUS BENDS.
5. PROVIDE 2-4" AND 1-1" PVC-40 CONDUITS TO SHIFT CHANGE RM 125 WITH NYLON PVC STRINGS TO FACILITATE CABLING BY OWNER. PROVIDE BELL FITTINGS AT STUP -UPS TO PROTECT CABLES. VERIFY STUP-UP LOCATION WITH OWNER.
6. PROVIDE 1-4" PVC CONDUITS TO ENTRY 101 WITH NYLON PULL STRINGS TO FACILITATE CABLING BY OWNER. PROVIDE BELL FITTINGS AT STUB-UP TO PROTECT CABLING. VERIFY STUB-UP LOCATION WITH OWNER.
7. PROVIDE 1-4" PVC CONDUITS TO OFFICE 106 WITH NYLON PULL STRING TO FACILITATE CABLING BY OWNER. PROVIDE BELL FITTINGS AT STUB-UP TO PROTECT CABLING. VERIFY STUB-UP LOCATION WITH OWNER.
8. PROVIDE 2-1" CONDUITS STUBBED UP FROM FUEL ISLAND FOR DATA/ COMMUNICATION LINES FOR FUEL CONTROL TERMINAL. PROVIDE CONDUIT SEALS PER NEC ART 514.
9. INCOMING DATA/COMM CONDUITS AS REQUIRED ON SHEET MEP0. PROVIDE BELL FITTING AT STUB-UP TO PROTECT CABLING.
10. PROVIDE 3/4" PLYWOOD (8' TALL) ON DRYWALL TO FACILITATE MOUNTING OF DATA/COMM EQUIPMENT. PAINT WHITE WITH TWO COATS OF FIRE RETARDANT PAINT ON ALL SIDES.
11. PROVIDE A LAMINATE NAME PLATE FOR EACH CONDUIT STUBBED UP IN ROOM. INDICATING ROOM OR AREA SERVED AND PURPOSE FOR CONDUIT.
12. PROVIDE CONDUITS ROUTING AND SEALING FITTINGS IN COMPLIANCE WITH THE NEC ART. 514. FOR ALL CONDUITS ROUTED TO FUEL DISPENSING AREA.
13. PROVIDE CORD REEL, 125V, 20A, 35 FOOT LENGTH WITH SINGLE 20 AMP TWIST LOCK CONNECTOR (NEMA L5-20R). PROVIDE RECEPTACLE ORIENTED TO FACE THE FLOOR AND ATTACHED TO BOTTOM OF STRUCTURE. PAINT COVER PLATE RED TO IDENTIFY POWER SOURCE.
14. PROVIDE 3/4" CONDUIT AT 18" AFF. WITH PULL STRING. PROVIDE WEATHER TIGHT SEAL AROUND CONDUIT AT WALL AND PROVIDE CAP FOR CONDUIT AT EXTERIOR.
15. STUB-UP LOCATION FOR CONDUITS EXTENDED FROM COMMUNICATION ROOM 123.
16. REFER TO KEYED NOTE E11 ON SHEET MEP0.

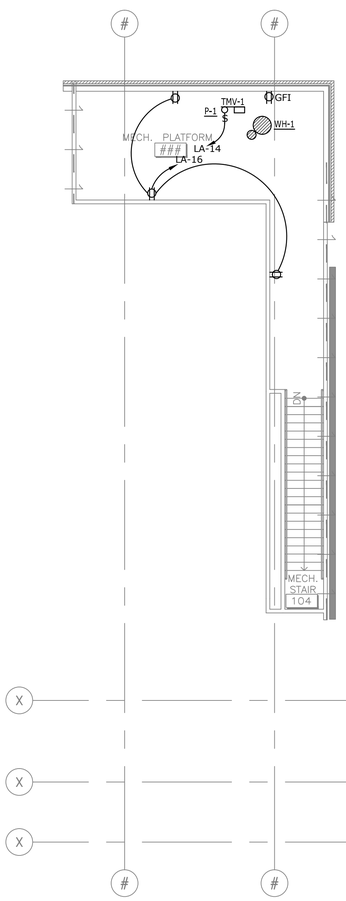

2 ELECTRICAL POWER PLAN – MECH. PLATFORM
SCALE: 1/8" = 1'-0"

PLAN TRUE

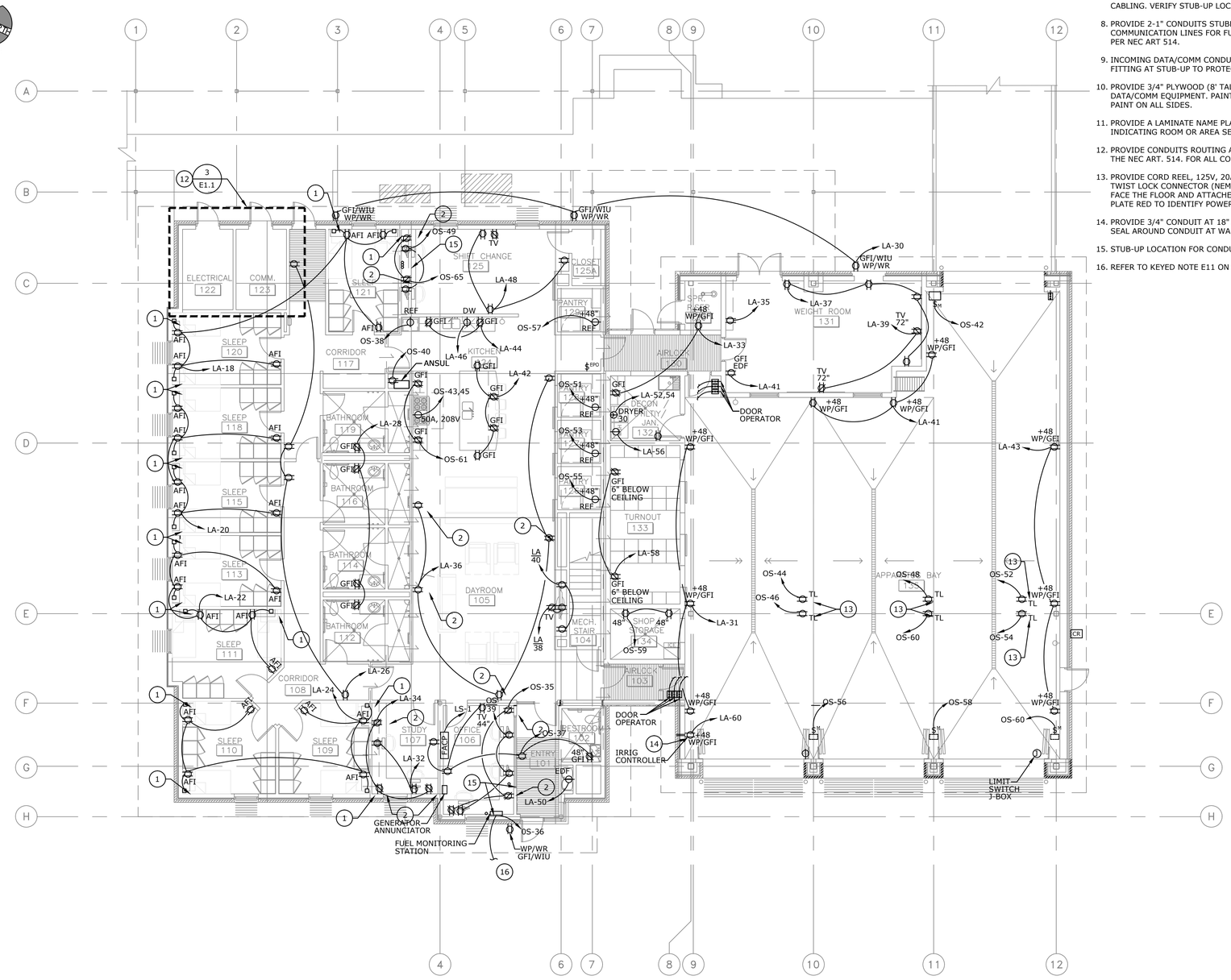

1 ELECTRICAL POWER PLAN – FIRST FLOOR
SCALE: 1/8" = 1'-0"

PLAN TRUE

CADFILE: F:\15071_Onion Creek Fire-EMS Station\DRAWINGS\CAD\15071_E2-1 Electrical Power Floor Plans.dwg Plotted: Thu., Sep. 22, 2016 @ 8:04 PM By: kshirazi Scale: 1:96

STATE OF TEXAS
JORGE A. OLIVARES
95828
LICENSED
PROFESSIONAL ENGINEER
9-23-2016

Jose I. Guerra, Inc.
Consulting Engineers
Structural • Civil • Mechanical • Electrical
TBPE FIRM F-3

AUSTIN ONION CREEK FIRE & EMS STATION
1112 OLD SAN ANTONIO ROAD
AUSTIN, TEXAS 78748

REVISIONS

DATE	9/23/2016
DRAWN BY	JD
CHECKED BY	JO
PROJECT NO.	214106.00

E2.1

ELECTRICAL POWER PLANS

GENERAL NOTES:

1. DRAWING IS DIAGRAMMATIC ONLY. CONTRACTOR SHALL COORDINATE EXACT LOCATION OF CONDUIT, DEVICES AND EQUIPMENT WITH BUILDING ELEMENTS AND THE WORK OF OTHER TRADES.
2. SHARED NEUTRALS ARE NOT PERMISSIBLE.
3. CONTRACTOR SHALL INCREASE CIRCUIT CONDUCTOR AND CONDUIT SIZE AS REQUIRED TO LIMIT VOLTAGE DROP TO 2% MAXIMUM AT DESIGN LOAD FOR FEEDERS AND 3% MAXIMUM AT DESIGN LOAD FOR BRANCH CIRCUITS.
4. REFER TO ELECTRICAL EQUIPMENT CONNECTION SCHEDULE FOR POWER AND CIRCUIT REQUIREMENT FOR TAGGED EQUIPMENT. REFER TO SHEET E5.1.

KEYED NOTES:

1. COORDINATE CONTROL SEQUENCE AND POWER REQUIREMENTS WITH MECHANICAL CONTRACTOR FOR MOTORIZED DAMPER.
2. PROVIDE MOTOR RATED TOGGLE SWITCH, 208 VOLT, 1 PHASE, 20A, 2 POLE IN NEMA 1 ENCLOSURE. TOGGLE SWITCH SHALL HAVE THERMAL OVERLOAD PROTECTION.

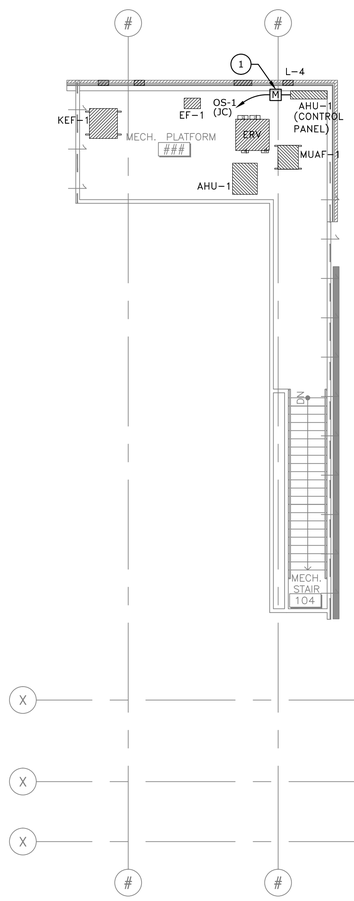

2 ELECTRICAL ABOVE CEILING PLAN – MECH. PLATFORM
SCALE: 1/8" = 1'-0"

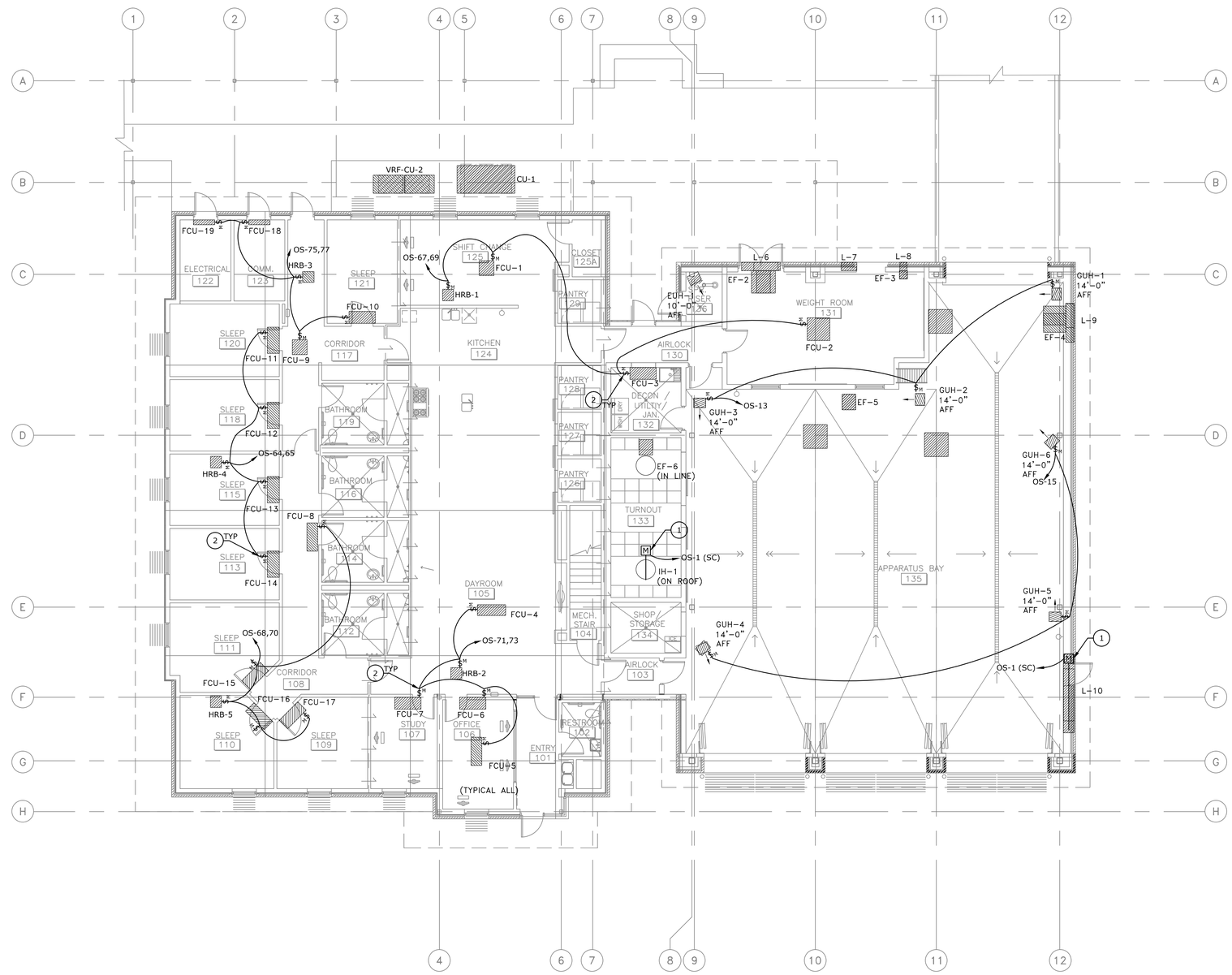

1 ELECTRICAL MECHANICAL PLAN – FIRST FLOOR
SCALE: 1/8" = 1'-0"

NORTH PLAN NORTH TRUE

STATE OF TEXAS
JORGE A. OLIVARES
95828
LICENSED
PROFESSIONAL ENGINEER
9-23-2016

Jose I. Guerra, Inc.
Consulting Engineers
Structural • Civil • Mechanical • Electrical
TBPE FIRM F-3

AUSTIN ONION CREEK
FIRE & EMS STATION
1112 OLD SAN ANTONIO ROAD
AUSTIN, TEXAS 78748

CITY OF AUSTIN FOUNDED 1839

REVISIONS

DATE	9/23/2016
DRAWN BY	JD
CHECKED BY	JO
PROJECT NO.	214106.00

E2.2

ELECTRICAL MECHANICAL PLANS

CADFILE: F:\15071_Onion Creek Fire-EMS Station\DRAWINGS\CAD\15071_E2-2 Electrical Above Ceiling Floor Plans.dwg Plotted: Fri., Sep. 23, 2016 @ 9:24 AM By: kshirazi Scale: 1:96

GENERAL NOTES:

1. DRAWING IS DIAGRAMMATIC ONLY. CONTRACTOR SHALL COORDINATE EXACT LOCATION OF CONDUIT, DEVICES AND EQUIPMENT WITH BUILDING ELEMENTS AND THE WORK OF OTHER TRADES.
2. SHARED NEUTRALS ARE NOT PERMISSIBLE.
3. CONTRACTOR SHALL INCREASE CIRCUIT CONDUCTOR AND CONDUIT SIZE AS REQUIRED TO LIMIT VOLTAGE DROP TO 2% MAXIMUM AT DESIGN LOAD FOR FEEDERS AND 3% MAXIMUM AT DESIGN LOAD FOR BRANCH CIRCUITS.

KEYED NOTES:

1. PROVIDE 2-TOGGLE SWITCHES FOR CONTROL OF ALL EXTERIOR HORNS AND TELEPHONE RINGERS. PROVIDE AN ENGRAVED LAMINATED COVER PLATE FOR IDENTIFICATION.
2. PAGING SPEAKER FOR SYSTEM TESTING.
3. EXTERIOR TELEPHONE RINGER AND VOLUME CONTROL AT 108" AFF.
4. PROVIDE DOOR BELL WITH VOLUME ADJUSTMENT MOUNTED AT 84" AT DOOR BELL.
5. REFER TO POWER PLANS AND FUEL STATION DETAIL FOR ADDITIONAL REQUIREMENTS. PROVIDE CONDUIT ROUTING AND SEAL FITTINGS PER NEC ART. 514.
6. REFER TO MEP0 FOR CONDUIT REQUIREMENTS.

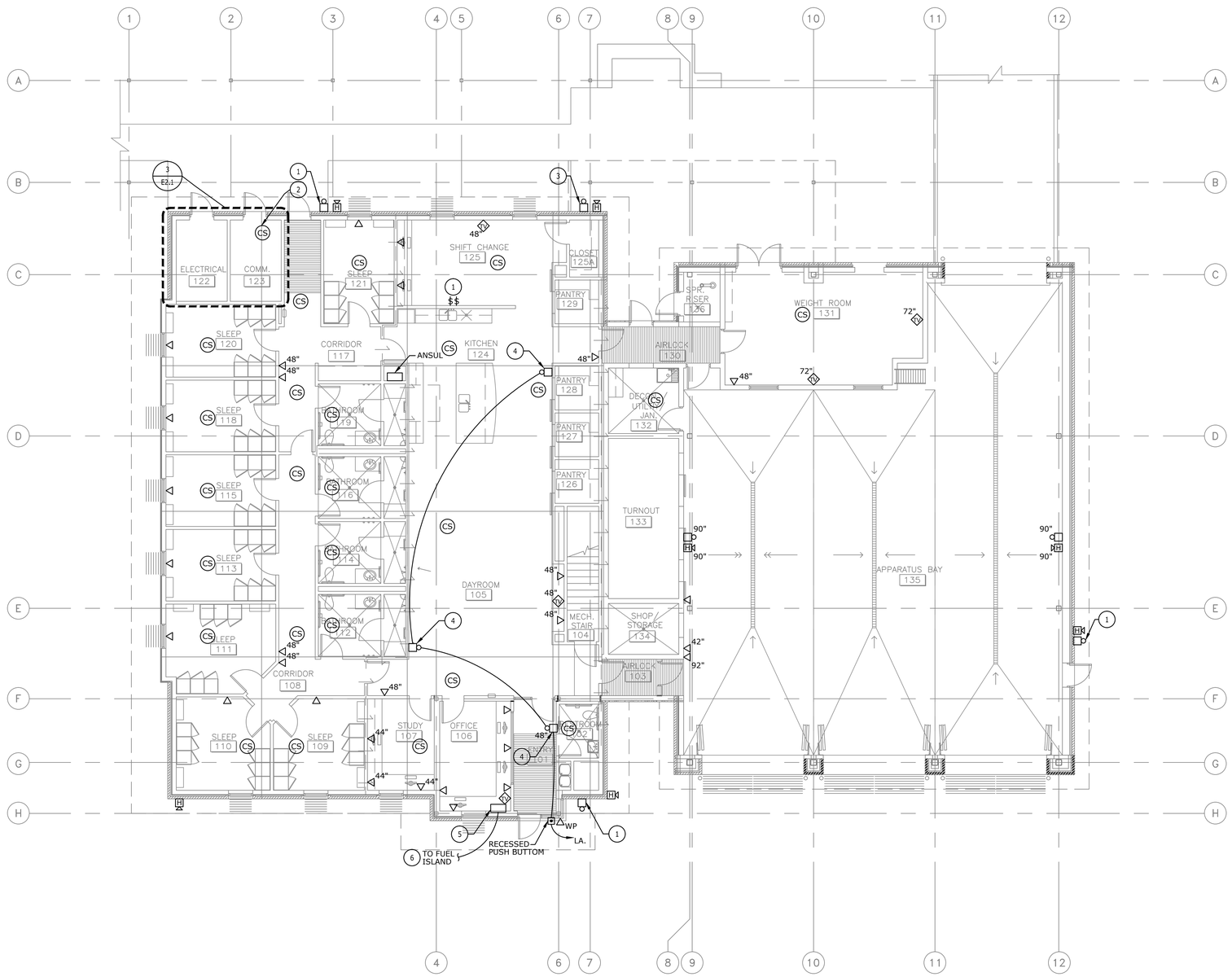

1 SPECIAL SYSTEMS PLAN – FIRST FLOOR
SCALE: 1/8" = 1'-0"

PLAN NORTH — TRUE NORTH

STATE OF TEXAS
JORGE A. OLIVARES
95828
LICENSED
PROFESSIONAL ENGINEER
9-23-2016

Jose I. Guerra, Inc.
Consulting Engineers
Structural • Civil • Mechanical • Electrical
TBPE FIRM F-3

AUSTIN ONION CREEK FIRE & EMS STATION
1112 OLD SAN ANTONIO ROAD
AUSTIN, TEXAS 78748

CITY OF AUSTIN FOUNDED 1839

REVISIONS

DATE	9/23/2016
DRAWN BY	JD
CHECKED BY	JO
PROJECT NO.	214106.00

E3.1

SPECIAL SYSTEMS PLAN

CADFILE: F:\15071_Onion Creek Fire-EMS Station\DRAWINGS\CAD\15071_E3-1 Special Systems.dwg Plotted: Fri, Sep. 23, 2016 @ 9:25 AM By: kshirazi Scale: 1:96

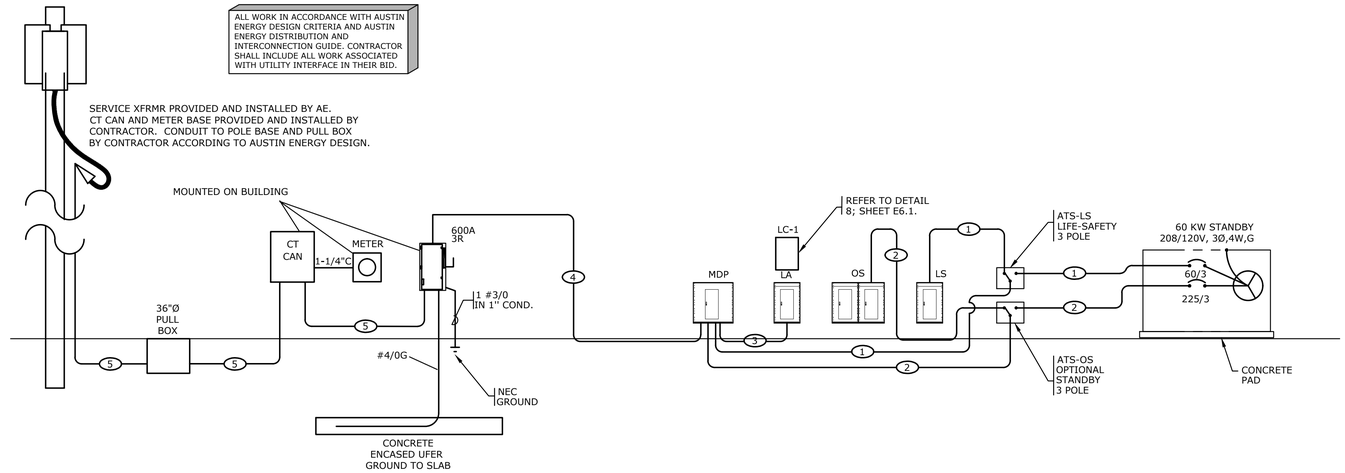

1 ELECTRICAL ONE-LINE DIAGRAM
NOT TO SCALE

FEEDER SCHEDULE

3 PHASE, 4 WIRE

TAG	CONDUIT		PHASE CONDUCTORS	NEUTRAL CONDUCTORS	GROUND CONDUCTORS
1	(1) 1"	ea. w/	(3)-#6	(1)-#6	(1)-#8
2	(1) 2-1/2"	ea. w/	(3)-4/0	(1)-4/0	(1)-#4
3	(1) 2"	ea. w/	(3)-4/0	(1)-4/0	(1)-#6
4	(3) 2"	ea. w/	(3)-3/0	(1)-3/0	(1)-#1
5	(2) 2-1/2"	ea. w/	(3)-350kCM	N/A	(1)-#1

NOTES:
1. CONDUIT SIZES ARE FOR EMT CONDUIT AND THHN, THWN INSULATED COPPER CONDUCTORS WITH MAXIMUM 40% FILL. CONTRACTOR SHALL ADJUST CONDUIT SIZE AS REQUIRED PER NEC APPENDIX C, CONDUIT FILL TABLES FOR ALL OTHER CONDUIT AND INSULATION TYPES.
2. REFER TO SPECIFICATIONS FOR ADDITIONAL CONDUIT APPLICATION AND INSTALLATION REQUIREMENTS.
3. PROVIDE LUGS AS REQUIRED FOR FEEDERS INDICATED

ONION CREEK EMS & FIRE
ELECTRICAL LOAD ANALYSIS

AREA: 9,323 SQUARE FEET — September 22, 2016

SYSTEM VOLTAGE - 208Y/120V, 3 PHASE, 4 WIRE + GND.

LOAD DESCRIPTION	CONNECTED kVA	DEMAND FACTOR	NEC LOAD kVA	NEC LOAD AMPERES	NOTE(S)
NEW LOADS					
LIGHTING: 9,074 VA	9.1	1.25	11.3	31	
GENERAL PURPOSE RECEPTACLES	23.2	-	14.1	39	3
EQUIPMENT	32.0	1.00	32.0	89	2
COMPUTERS	-	1.00	0.0	-	2
ELECTRIC HEAT	87.1	1.00	87.1	242	7
AIR CONDITIONING	24.1	N/A	N/A	-	7
FANS	13.9	1.25	17.3	48	2
ELEVATORS # OF ELEVATORS = 0	-	0.00	0.0	-	4
ELECTRIC WATER HEATERS	-	1.25	0.0	-	9
KITCHEN COOKING EQPT # UNITS OF COOKING EQPT = 1	6.0	1.00	6.0	17	6
LARGEST MOTOR	-	0.25	0.0	-	5
FIRE PUMP/ JOCKEY PUMP		1.00	0.0	-	
		TOTALS	167.8	466	
SERVICE ENTRANCE DESIGN				600	
SPARE CAPACITY				134	

22-Sep-16

NOTES:
1. PER NEC TABLE 220.12
2. PER NEC 215.2(a)(1)
3. PER NEC TABLE 220.44
4. PER NEC TABLE 620.14
5. PER NEC 430.24
6. PER NEC TABLE 220.56
7. THE GREATER VALUE OF NON-SIMULTANEOUS LOADS.
8. PER NEC 220.87
9. PER NEC 422.13

STATE OF TEXAS — JORGE A. OLIVARES — 95828 — LICENSED PROFESSIONAL ENGINEER
9-23-2016

Jose I. Guerra, Inc.
Consulting Engineers
Structural • Civil • Mechanical • Electrical
TBPE FIRM F-3

AUSTIN ONION CREEK FIRE & EMS STATION
1112 OLD SAN ANTONIO ROAD
AUSTIN, TEXAS 78748

CITY OF AUSTIN — FOUNDED 1839

REVISIONS

DATE	9/23/2016
DRAWN BY	JD
CHECKED BY	JO
PROJECT NO.	214106.00

E4.1
ELECTRICAL DETAILS

CADFILE: F:\15071_Onion Creek Fire-EMS Station\DRAWINGS\CAD\15071_E4-1 Electrical Details.dwg Plotted: Thu., Sep. 22, 2016 @ 7:54 PM By: kshirazi Scale: 1:1

EQUIPMENT CONNECTION SCHEDULE

TAG	PANEL CIRCUIT	DESCRIPTION	ELECTRICAL CHARACTERISTICS VOLT	PHASE	HP	KW	FLA	CIRCUIT BREAKER	SAFETY SWITCH/STARTER/VFD FRAME	POLE	FUSE	ENCLO.	STRTR.	RECEPT	BY	FEEDER SIZE	REMARKS
AHU-1	MDP 4	AIR HANDLING UNIT	208	3	2.50	35.00	134.00	150A/3P	100	3			VFD		UNIT MFGR	3#1/0 AWG., 1#6GND., 2"C.	NOTES 1,3,6
ERV	OS 72,74	AIR HANDLING UNIT	208	3	2.50	35.00	134.00	150A/3P	100	3			VFD		UNIT MFGR	3#1/0 AWG., 1#6GND., 2"C.	NOTES 1,3,6
CU-1	MDP 6	CONDENSING UNIT	208	3			67.00	90A/3P	100	3	NF	3R			EC	3#2 AWG., 1#8GND., 1-1/4"C.	NOTE 3
EUH-1	OS 8,10	ELECTRIC UNIT HEATER	208	1		3.00	14.40	25A/2P	30	3	NF	1			EC	2#10 AWG., 1#10GND., 1"C.	NOTE 3
VFR-CU2	MDP 5	CONDENSING UNIT	208	3			89.10	125A/3P	125	3	NF	3R			EC	3#1 AWG., 1#6GND., 1-1/2"C.	NOTE 3
EF-1	OS 12	EXHAUST FAN	120	1	1/2		4.90	15A/1P	20	1	NF	1			UNIT MFGR	2#12 AWG., 1#12GND., 3/4"C.	NOTE 3, 4
EF-2	OS 14,16,18	EXHAUST FAN	208	3	2.00		7.50	15A/3P	30	3	NF	3R			UNIT MFGR	3#12 AWG., 1#12 GND., 3/4"C.	NOTES 3
EF-3	OS 20	EXHAUST FAN	120	1	1/8		3.80	15A/1P	20	1	NF	3R			UNIT MFGR	2#12 AWG., 1#12GND., 3/4"C.	NOTE 3, 4
EF-4	OS 22	EXHAUST FAN	120	1	2.00		24.00	30A/1P	30	1	NF	3R			UNIT MFGR	2#10 AWG., 1#10 GND., 3/4"C.	NOTES 3, 4
EF-5	OS 24,26,28	VEHICLE EXHAUST	208	3	3.00		10.60	20A/3P	30	3	NF	3R			UNIT MFGR	3#12 AWG., 1#12 GND., 3/4"C.	NOTES 3
EF-6	OS 30	TURNOUT EXHAUST FAN	120	1	1/8		4.40	20A/1P	20	1	NF	1			UNIT MFGR	2#12 AWG., 1#12 GND., 3/4"C.	NOTES 3, 4
KEF-1	OS 32	KITCHEN EXHAUST HOOD	120	1	1/2		4.90	15A/1P	20	1	NF	1			UNIT MFGR	2#12 AWG., 1#12GND., 3/4"C.	NOTE 3, 4
MUAF-1	OS 34	KITCHEN MAKE UP AIR UNIT	120	1	1/2		4.90	15A/1P	20	1	NF	1			UNIT MFGR	2#12 AWG., 1#12GND., 3/4"C.	NOTE 3, 4

NOTES:
1. INTERLOCK WITH KEH-1, REFER TO MECHANICAL CONTROL DRAWINGS.
2. PLUG-IN EQUIPMENT. PROVIDE CORD CAP AS REQUIRED.
3. PROVIDE SINGLE POINT CONNECTION TO EQUIPMENT.
4. MANUAL MOTOR CONTROL TOGGLE SWITCH WITH THERMAL OVERLOAD PROTECTION.
5. VFD WITH INTEGRAL DISCONNECT SWITCH.
6. VFD/STARTER FURNISHED BY MECHANICAL CONTRACTOR, INSTALLED BY ELECTRICAL CONTRACTOR.
7. PROVIDE 115V/1PH CONNECTION TO MOTORIZED DAMPER SERVING ASSOCIATED GRAVITY VENT.
8. FED FROM CONDENSING UNIT.

LIGHTING FIXTURE SCHEDULE

TYPE	MANUFACTURER	CATALOG NUMBER	DESCRIPTION	LAMP QTY.	LAMP TYPE	BALLAST QTY.	BALLAST TYPE	MOUNTING	VOLTAGE	WATTAGE
A	COLUMBIA	LJT24-40ML-G-FAA12125-EU-FK24	2X4 LENSED LED TROFFER, FLUSH ALUMINUM WHITE FRAME, LED DRIVER	1	LED 4000K	-	LED DRIVER	CEILING	UNV	45
	LITHONIA	2GTL-4-48L-FW-LP840								
B	COLUMBIA	LTRE22-40HL-G-RFA-EU	2X2 LENSED LED TROFFER, FLUSH STEEL WHITE FRAME, LED DRIVER	1	LED 4000K	-	LED DRIVER	CEILING	UNV	36
	LITHONIA	2AVL2-30L-MDR-LP840								
C	COLUMBIA	MPL8-40LW-AD-EU-LWSQM10	8' LED INDUSTRIAL LOWBAY, DAMP LOCATION RATED, LOW WATT LUMEN OUTPUT, 10' AIRCRAFT CABLE	1	LED 4000K	-	LED DRIVER	PENDANT	UNV	98
	LITHONIA	ZL1N-L48-5000LM-L/LENS-MVOLT-40K-80CRI-WH								
D	ELITE	HH10-2000L-DM10-120-MD-40K-85-HH10-1501-CL-WH	10" ARCHITECTURAL HIGH LUMEN LED DOWNLIGHT, MEDIUM DISTRIBUTION, LED DRIVER	1	LED 4000K	-	LED DRIVER	CEILING	120	30
	LITHONIA	L8-15-401-G3-L800B-C-L-WET								
F	AXIS	BBRLED-B3-MF-1000-80-40-1.5P-4-W-UNV-D-1	RECESSED MOUNT LED, 4', WITH STEP LENS, EXTRUDED ALUMINUM HOUSING	1	LED 4000K	-	LED DRIVER	CEILING	UNV	39
	FINELITE	HP-4-WM-D-4-S-8-40-BG-120-SC-MB	WALL MOUNT AT 6" ABOVE VANITY MIRROR, ALUMINUM HOUSING					WALL		
F2	TERON	BY48-L76.7-ZE1050-120-WH-MSW-BFL	4' STEEL HOUSING, WITH BAFFLE FOR UP/DOWN LIGHTING, MULTI SWITCH	2	LED 4000K	-	2 - LED DRIVERS	WALL	120	(2) 42
	FINELITE	HP-4-WM-ID-4-S-8-40-F-F-120-MB-DC								
FP1	BEACON	AL-U-36NB-80-4K-2X2-UNV-SF3-FL-BZT	FLAG POLE LIGHT, NARROW SPOT, FULL LOUVER, LED	1	LED 4000K	-	LED DRIVER	2-3/8" TENON	UNV	80
K	COLUMBIA	LTRE24-40HL-G-RFA-EU	4' LED ENCLOSED HIGH EFFICIENCY ARCHITECTURAL LENS	1	LED 4000K	-	LED DRIVER	CEILING	UNV	52
	LITHONIA	2AVL4-50L-MDR-LP840								
N	TERON	GRDW24-CNL-L49.5-120-ZE1150-WAL-XX-40K	24" ARCHITECTURAL OUTDOOR, EXTRUDED ALUMINUM W/ MATTE SILVER FINISH, WET LOCATION LISTED	1	LED 4000K	-	LED DRIVER	CEILING	UNV	50
	VISA	OW1302-L40K-120-GSIL-PSS								
N2	TERON	GRDW36-CNL-L72.0-120-ZE714-WAL-XX-40K	36" ARCHITECTURAL OUTDOOR, EXTRUDED ALUMINUM W/ MATTE SILVER FINISH, WET LOCATION LISTED	1	LED 4000K	-	LED DRIVER	CEILING	UNV	72
	VISA	OW1304-L40K-120-GSIL-PSS								
P	LUMINAIRE	DWL512-15W-4000K-120-CP-WHT	CEILING MOUNT LED	1	LED 4000K	-	LED DRIVER	CEILING	UNV	15
	BEGA	33604								
S	COLUMBIA	LCL4-40-ML-EU-CSHC	4' LED LENSED STRIP LIGHT, WITH CHAIN HANGAR ASSEMBLY	1	LED 4000K	-	LED DRIVER	CEILING	UNV	48
	LITHONIA	ZL1N-L48-3000LM-L/LENS-MVOLT-40K-80CRI-WH								
S.1	KIM	1A-AR4-P70-80L-4K-UV-DB-NFO/SNS-25-40-7-AB	SITE LIGHTING FIXTURE, SINGLE HEAD, LED, 25' POLE	1	LED 4000K	-	LED DRIVER	25' POLE	UNV	188
S.2	STERNBERG	1-E450-10-FL-16L45T2-MDL10-DBT/450FP4-10-DBT	PATHWAY POST TOP LIGHTING FIXTURE, SINGLE HEAD, LED, 10' POLE	1	LED 5000K	-	LED DRIVER	10' POST	UNV	55
T	AXIS	BBRLED-B3-MF-1000-8-40-FL-X-W-UNV-D-1	RECESSED MOUNT LED, 4', FLUSH, EXTRUDED ALUMINUM HOUSING	1	LED 4000K	-	LED DRIVER	CEILING	UNV	39
	FINELITE	HP-4-R-4-H-80-40-120-SC-XX								
W	AXIS	SCDI-B4-300-500-80-40-FL-X-AP-120-D-2-CTSX	PENDANT, UP/DOWN, DIMMABLE, WITH 36" CABLE MOUNTING, 2 CIRCUIT	2	LED 4000K	-	2- LED DRIVERS	CEILING	UNV	3.3W/FT AND 4.3 W/FT
	FINELITE	HP4-ID-XX-H-8-40-F-F-120-DC-C4								
UC	ELITE	LED-EUL-24"-WH	LED UNDERCABINET LIGHTING FIXTURE, HARD WIRED, NO ROCKER SWITCH	1	LED	N/A	N/A	CEILING	120	
	LITHONIA	UCEL-24IN-40K-WH-UCERC24								
X1	DUAL LITE	LX-U-G-W-1	WHITE THERMOPLASTIC EMERGENCY LIGHT, NI-CAD BATTERY WITH INTEGRAL CHARGER	1	LED	N/A	N/A	CEILING	120	3.5 W
	LITHONIA	LQM-S-3-G-120-ELN-SD								

NOTES:
1. REFER TO ARCHITECTURAL DRAWINGS FOR INFORMATION REGARDING CEILING TYPES. PROVIDE MOUNTING HARDWARE, FLANGES AS REQUIRED. CEILING TYPE INDICATED IN ARCHITECTURAL DRAWINGS WILL TAKE PRECEDENCE OVER MOUNTING OPTION INDICATED IN PART NUMBER.
2. REFER TO SPECIFICATIONS FOR ADDITIONAL INFORMATION AND REQUIREMENTS.
3. (1) 1-LAMP BALLAST TO SERVE CENTER LAMP, (1) 2-LAMP BALLAST TO SERVE OUTER LAMPS
4. THE FIXTURES LISTED IN THE FIXTURE SCHEDULE HAVE BEEN SELECTED BASE ON A NUMBER OF FACTORS WHICH MAY OR MAY NOT BE UNIQUE TO THOSE FIXTURES. THE CONTRCTOR MAY PROPOSE SUBSTITUTIONS IN ACCORDANCE WITH THE REQUIREMENTS LISTED IN THE SPECIFICATIONS MANUAL.

STATE OF TEXAS
JORGE A. OLIVARES
95828
LICENSED
PROFESSIONAL ENGINEER
9-23-2016

Jose I. Guerra, Inc.
Consulting Engineers
Structural • Civil • Mechanical • Electrical
TBPE FIRM F-3

AUSTIN ONION CREEK
FIRE & EMS STATION
1112 OLD SAN ANTONIO ROAD
AUSTIN, TEXAS 78748

REVISIONS

DATE	9/23/2016
DRAWN BY	JD
CHECKED BY	JO
PROJECT NO.	214106.00

E5.1

ELECTRICAL SCHEDULES

CADFILE: F:\15071_Onion Creek Fire-EMS Station\DRAWINGS\CAD\15071_E5.1 Electrical Schedules.dwg Plotted: Fri., Sep. 23, 2016 @ 9:27 AM By: kshirazi Scale: 1:1

MAIN SWITCHBOARD 'MDP'

PROJECT : ONION CREEK EMS & FIRE
PROJECT # : 15071
LOCATION : ELECTRICAL 122
NOTES :
DATE : September 22, 2016

MAIN LUGS ONLY : 600-AMPS
BUSSING : 600-AMPS
VOLTAGE : 208/120V, 3PH, 4W
BRACING : 22 kAIC RMS SYM

ENCLOSURE : NEMA 1
MOUNTING : WALL
OCP TYPE : REFER TO SCHEDULE BELOW
PROVIDE : NEUTRAL BUS
GROUND BUS

0	RCPT	6	AIC								
1	LTG	7	FANS								
2	EQPT	8	ELEV								
3	WH	9	KITCHEN								
4	COMP	10	LG MTR								
5	HEAT	11	PH								

CKT	AMPS	POLE	CIRCUIT DESCRIPTION	LOAD	TYPE	PH	TYPE	LOAD	CIRCUIT DESCRIPTION	AMPS	POLE	CKT
1	150	3	PANEL 'LA'	9,928		A		1,122	ATS 'LS'	60	3	2
				11,939		B		610				
				13,595		C		300				
3	225	3	ATS 'OS'	19,649		A	5	16,092	AHU-1	150	3	4
				21,154		B	5	16,092				
				12,503		C	5	16,092				
5	125	3	VFR-CU-2	10,700	5	A	6	8,046	CU-1	90	3	6
				10,700	5	B	6	8,046				
				10,700	5	C	6	8,046				
7			BUSSED SPACE			A			BUSSED SPACE		3	8
						B						
						C						

	PANEL VA	SUB FEED	FEED THRU	TOTAL CONN	TOTAL DEMAND VA	TOTAL DEMAND AMPS
PHASE A	34,838	30,699	0	65,537	56,349	470
PHASE B	34,838	33,703	0	68,541	58,932	491
PHASE C	34,838	26,398	0	61,236	52,651	439
TOTAL	104,514	90,800	0	195,314	167,933	466

NOTES :

PANEL 'LA'

PROJECT : ONION CREEK EMS & FIRE
PROJECT # : 15071
LOCATION : ELECTRICAL 122
NOTES :
DATE : 22-Sep-2016

MAIN LUGS ONLY : 150-AMPS
BUSSING : 225-AMPS
VOLTAGE : 208/120V, 3PH, 4W
BRACING : 10 kAIC RMS SYM

ENCLOSURE : NEMA 1
MOUNTING : SURFACE
CB TYPE : BOLT-ON
PROVIDE : NEUTRAL BUS
GROUND BUS

0	RCPT	6	AIC								
1	LTG	7	FANS								
2	EQPT	8	ELEV								
3	WH	9	KITCHEN								
4	COMP	10	LG MTR								
5	HEAT	11	EXT LTG								

CKT	AMPS	POLE	CIRCUIT DESCRIPTION	LOAD	TYPE	PH	TYPE	LOAD	CIRCUIT DESCRIPTION	AMPS	POLE	CKT
1	20	1	LIGHTING	144	1	A	2	500	CEILING FANS	20	1	2
3	20	1	LIGHTING	504	1	B	2	700	CEILING FANS	20	1	4
5	20	1	LIGHTING	672	1	C	2	200	CEILING FANS	20	1	6
7	20	1	LIGHTING	668	1	A	2	500	CEILING FANS	20	1	8
9	20	1	EXTERIOR LIGHTING	345	1	B	1	900	FUEL BAY LIGHTING	20	1	10
11	20	1	LIGHTING	150	1	C	2	1,400	VEHICLE CHARGERS	20	1	12
13	20	1	LIGHTING	462	1	A	2	700	P-1	20	1	14
15	20	1	LIGHTING	254	1	B	0	540	RECEPTACLES	20	1	16
17	20	1	EXTERIOR LIGHTING	345	1	C	0	1,080	RECEPTACLES	20	1	18
19	20	1	LIGHTING	234	1	A	0	1,080	RECEPTACLES	20	1	20
21	20	1	LIGHTING	1,176	1	B	0	1,080	RECEPTACLES	20	1	22
23	20	1	SITE LIGHTING	1,128	1	C	0	1,080	RECEPTACLES	20	1	24
25	20	1	PATHWAY LIGHTS	500	1	A	0	900	RECEPTACLES	20	1	26
27	20	1	FLAG POLE LIGHTS	160	1	B	0	900	RECEPTACLES	20	1	28
29	20	1	SPARE			C	0	540	RECEPTACLES	20	1	30
31	20	1	RECEPTACLES	540	0	A	0	360	RECEPTACLES	20	1	32
33	20	1	RECEPTACLES	360	0	B	0	540	RECEPTACLES	20	1	34
35	20	1	RECEPTACLES	180	0	C	0	1,020	RECEPTACLES	20	1	36
37	20	1	RECEPTACLES	720	0	A	0	360	RECEPTACLES	20	1	38
39	20	1	RECEPTACLES	360	0	B	0	360	RECEPTACLES	20	1	40
41	20	1	EDF	1,000	2	C	0	900	RECEPTACLES	20	1	42
43	20	1	LIGHTING CONTROL PANEL	500	2	A	0	360	RECEPTACLES	20	1	44
45	20	1	SPARE			B	2	800	DISHWASHER	20	1	46
47	20	1	SPARE			C	0	900	RECEPTACLES	20	1	48
49	20	1	SPARE			A	2	7--	EWC	20	1	50
51	20	1	SPARE			B	2	2,600	DRYER	20	1	52
53	20	1	SPARE			C	2	2,600	-	20	1	54
55	20	1	SPARE			A	2	1,400	WASHER	20	1	56
57	20	1	SPARE			B	0	360	RECEPTACLES	20	1	58
59	20	1	SPARE			C	2	400	IRRIGATION CONTROLER	20	1	60

	PANEL VA	SUB FEED	FEED THRU	TOTAL CONN	TOTAL DEMAND VA	TOTAL DEMAND AMPS
PHASE A	9,928	0	0	9,928	9,830	82
PHASE B	11,939	0	0	11,939	11,821	99
PHASE C	13,595	0	0	13,595	13,461	112
TOTAL	35,462	0	0	35,462	35,113	98

NOTES :

PANEL 'LS'

PROJECT : ONION CREEK EMS & FIRE
PROJECT # : 15071
LOCATION : ELECTRICAL 122
NOTES :
DATE : 22-Sep-2016

MAIN LUGS ONLY : 60-AMPS
BUSSING : 60-AMPS
VOLTAGE : 208/120V, 3PH, 4W
BRACING : 10 kAIC RMS SYM

ENCLOSURE : NEMA 1
MOUNTING : SURFACE
CB TYPE : BOLT-ON
PROVIDE : NEUTRAL BUS
GROUND BUS

0	RCPT	6	AIC								
1	LTG	7	FANS								
2	EQPT	8	ELEV								
3	WH	9	KITCHEN								
4	COMP	10	LG MTR								
5	HEAT	11	EXT LTG								

CKT	AMPS	POLE	CIRCUIT DESCRIPTION	LOAD	TYPE	PH	TYPE	LOAD	CIRCUIT DESCRIPTION	AMPS	POLE	CKT
1	20	1	FACP	600	2	A	1	306	LIGHTING	20	1	2
3	20	1	SPARE			B	1	120	LIGHTING	20	1	4
5	20	1	SPARE			C	1	300	LIGHTING	20	1	6
7	20	1	SPARE			A	1	216	LIGHTING	20	1	8
9	20	1	SPARE			B	1	490	LIGHTING	20	1	10
11	20	1	SPARE			C			SPARE	20	1	12
13	20	1	SPARE			A			SPARE	20	1	14
15	20	1	BUSSED SPACE			B			BUSSED SPACE	20	1	16
17	20	1	BUSSED SPACE			C			BUSSED SPACE	20	1	18
19	20	1	BUSSED SPACE			A			BUSSED SPACE	20	1	20
21	20	1	BUSSED SPACE			B			BUSSED SPACE	20	1	22
23	20	1	BUSSED SPACE			C			BUSSED SPACE	20	1	24

	PANEL VA	SUB FEED	FEED THRU	TOTAL CONN	TOTAL DEMAND VA	TOTAL DEMAND AMPS
PHASE A	1,122	0	0	1,122	1,320	11
PHASE B	610	0	0	610	717	6
PHASE C	300	0	0	300	353	3
TOTAL	2,032	0	0	2,032	2,390	7

NOTES :

PANEL 'OS' SECTION 1

PROJECT : ONION CREEK EMS & FIRE
PROJECT # : 15071
LOCATION : ELECTRICAL 122
NOTES :
DATE : 22-Sep-2016

MAIN LUGS ONLY : 225-AMPS
BUSSING : 225-AMPS
VOLTAGE : 208/120V, 3PH, 4W
BRACING : 10 kAIC RMS SYM

ENCLOSURE : NEMA 1
MOUNTING : SURFACE
CB TYPE : BOLT-ON
PROVIDE : NEUTRAL BUS
GROUND BUS

0	RCPT	6	AIC								
1	LTG	7	FANS								
2	EQPT	8	ELEV								
3	WH	9	KITCHEN								
4	COMP	10	LG MTR								
5	HEAT	11	EXT LTG								

CKT	AMPS	POLE	CIRCUIT DESCRIPTION	LOAD	TYPE	PH	TYPE	LOAD	CIRCUIT DESCRIPTION	AMPS	POLE	CKT
1	20	1	DAMPER	300	2	A	2	300	FUEL EPO	20	1	2
3	20	1	SPARE			B	2	260	DISPATCH NIGHT LIGHT EMS	20	1	4
5	20	1	SPARE			C	2	130	DISPATCH NIGHT LIGHT FIRE	20	1	6
7	20	1	SPARE			A	5	1,875	EUH-1	20	2	8
9	20	1	SPARE			B	5	1,875	-	-	-	10
11	20	1	SPARE			C	7	1,176	EF-1	20	1	12
13	20	1	GUH	1,644	2	A	7	901	EF-2	20	1	14
15	30	1	GUH	2,001	2	B	7	901	-	20	1	16
17	20	1	RECEPTACLES	540	0	C	7	901	-	20	1	18
19	20	1	IT RECEPTACLES	360	0	A	7	437	EF-3	20	1	20
21	20	1	IT RECEPTACLES	360	0	B	7	2,880	EF-4	30	1	22
23	20	1	IT RECEPTACLES	360	0	C	7	1,273	EF-5	20	3	24
25	20	1	IT RECEPTACLES	360	0	A	7	1,273	-	-	-	26
27	20	1	IT RECEPTACLES	360	0	B	7	1,273	-	-	-	28
29	20	1	IT RECEPTACLES	360	0	C	7	506	EF-6	20	1	30
31	20	1	IT RECEPTACLES	360	0	A	7	1,176	KEF-1	20	1	32
33	20	1	IT RECEPTACLES	360	0	B	7	1,176	MUAF-1	20	1	34
35	20	1	RECEPTACLES	540	0	C	2	400	FUEL MONITOR	20	1	36
37	20	1	RECEPTACLES	900	0	A	2	1,500	REFRIGERATOR	20	1	38
39	20	1	RECEPTACLES	540	0	B	2	500	ANSUL SYSTEM	20	1	40
41	20	1	SPARE			C	2	1,000	OVERHEAD BAY DOORS	20	1	42

	PANEL VA	SUB FEED	FEED THRU	TOTAL CONN	TOTAL DEMAND VA	TOTAL DEMAND AMPS
PHASE A	11,386	0	8,263	19,649	20,043	167
PHASE B	12,486	0	8,668	21,154	21,578	180
PHASE C	7,186	0	5,317	12,503	12,754	106
TOTAL	31,058	0	22,248	53,306	54,374	151

NOTES :
1. PROVIDE WITH FEED-THRU LUGS.

PANEL 'OS' SECTION 2

PROJECT : ONION CREEK EMS & FIRE
PROJECT # : 15071
LOCATION : ELECTRICAL 122
NOTES :
DATE : 23-Sep-2016

MAIN LUGS ONLY : 225-AMPS
BUSSING : 225-AMPS
VOLTAGE : 208/120V, 3PH, 4W
BRACING : 10 kAIC RMS SYM

ENCLOSURE : NEMA 1
MOUNTING : SURFACE
CB TYPE : BOLT-ON
PROVIDE : NEUTRAL BUS
GROUND BUS

0	RCPT	6	AIC								
1	LTG	7	FANS								
2	EQPT	8	ELEV								
3	WH	9	KITCHEN								
4	COMP	10	LG MTR								
5	HEAT	11	EXT LTG								

CKT	AMPS	POLE	CIRCUIT DESCRIPTION	LOAD	TYPE	PH	TYPE	LOAD	CIRCUIT DESCRIPTION	AMPS	POLE	CKT
43	50	2	RANGE	3,120	2	A	0	360	RECEPTACLES	20	1	44
45	-	-	-	3,120	2	B	0	360	RECEPTACLES	20	1	46
47	20	1	SHUNT TRIP SPACE			C	0	360	RECEPTACLES	20	1	48
49	20	1	RECEPTACLES	360	0	A	0	360	RECEPTACLES	20	1	50
51	20	1	REFRIGERATOR	1,500	9	B	0	360	RECEPTACLES	20	1	52
53	20	1	REFRIGERATOR	1,500	9	C	0	360	RECEPTACLES	20	1	54
55	20	1	REFRIGERATOR	1,500	9	A	2	1,000	OVERHEAD BAY DOORS	20	1	56
57	20	1	REFRIGERATOR	1,500	9	B	2	1,000	OVERHEAD BAY DOORS	20	1	58
59	20	1	ICE MAKER	800	2	C	2	1,000	OVERHEAD BAY DOORS	20	1	60
61	20	1	RECEPTACLES	360	0	A			SPARE	20	1	62
63	20	1	SHUNT TRIP SPACE			B	5	142	HRB-4	20	2	64
65	20	1	RECEPTACLES	360	0	C	5	142	-	-	-	66
67	20	2	HRB-1	148	5	A	5	399	HRB-5	20	2	68
69	-	-	-	148	5	B	5	399	-	-	-	70
71	20	2	HRB-2	656	5	C	6	350	ERV	20	2	72
73	-	-	-	656	5	A	6	350	-	-	-	74
75	20	2	HRB-3	139	5	B			SPARE	20	1	76
77	-	-	-	139	5	C			SPARE	20	1	78
79	20	1	SPARE			A			SPARE	20	1	80
81	20	1	SPARE			B			SPARE	20	1	82
83	20	1	SPARE			C			SPARE	20	1	84

	PANEL VA	SUB FEED	FEED THRU	TOTAL CONN	TOTAL DEMAND VA	TOTAL DEMAND AMPS
PHASE A	8,613	0	0	8,613	7,449	62
PHASE B	8,668	0	0	8,668	7,497	62
PHASE C	5,667	0	0	5,667	4,901	41
TOTAL	22,948	0	0	22,948	19,848	55

NOTES :

STATE OF TEXAS
JORGE A. OLIVARES
95828
LICENSED
PROFESSIONAL ENGINEER
9-23-2016

Jose I. Guerra, Inc.
Consulting Engineers
Structural • Civil • Mechanical • Electrical
TBPE FIRM F-3

AUSTIN ONION CREEK
FIRE & EMS STATION
1112 OLD SAN ANTONIO ROAD
AUSTIN, TEXAS 78748

CITY OF AUSTIN — SEEL FOUNDED

REVISIONS

DATE	9/23/2016
DRAWN BY	JD
CHECKED BY	JO
PROJECT NO.	214106.00

E5.2

ELECTRICAL SCHEDULES

CADFILE: F:\15071_Onion Creek Fire-EMS Station\DRAWINGS\CAD\15071_E5.2 Electrical Schedules.dwg Plotted: Fri., Sep. 23, 2016 @ 9:28 AM By: kshirazi Scale: 1:1

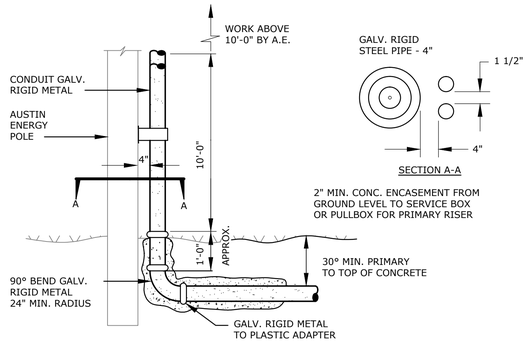

NOTE. * GALV. CONDUIT TO GROUND LINE
* GALV. 90° BEND ON PRIMARY AND SECONDARY WILL HAVE CONCRETE ENCASEMENT.

3 POLE RISER DIAGRAM DETAIL
NO SCALE

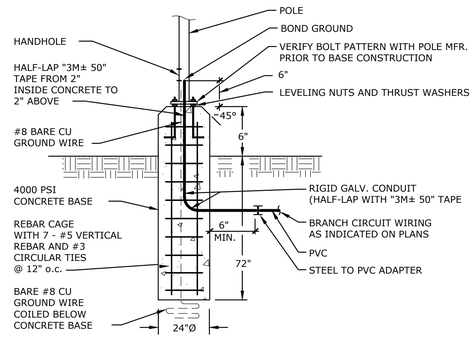

2 POLE LIGHTING BASE DETAIL
NO SCALE

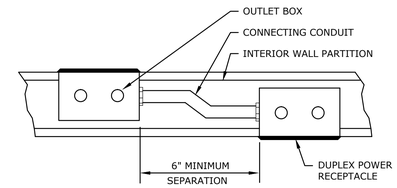

NOTE: INSTALLATION SIMILAR IN BLOCK WALL CONDITIONS.

1 INSTALLATION DETAIL OF BACK TO BACK RECEPTACLES
NO SCALE

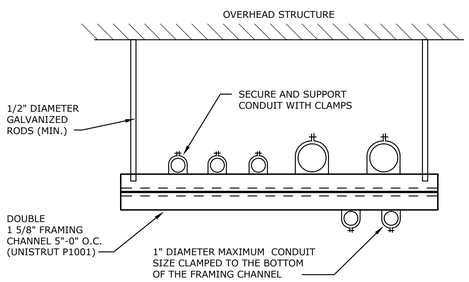

6 SUPPORT DETAIL FOR MULTIPLE HORIZONTAL CONDUIT ROUTING
NO SCALE

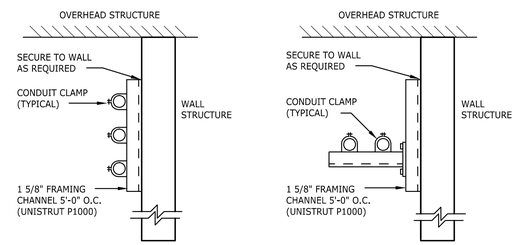

5 WALL MOUNTED CONDUITS (1" AND SMALLER), MOUNTING DETAILS
NO SCALE

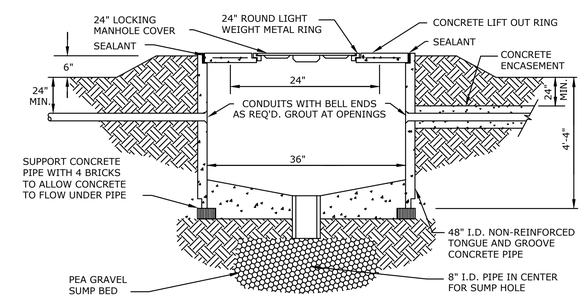

NOTE: THE CUSTOMER SHALL FURNISH, INSTALL, OWN, AND MAINTAIN STUB-UP FROM SERVICE BOX/PULLBOX TO POLE AND FIRST 10-FOOT SECTION OF RIGID, GALVANIZED STEEL RISER CONDUIT UP THE POLE. THE RISERS 90° BEND WITH MINIMUM 24" RADIUS INSTALLED BY CUSTOMER SHALL BE RIGID METAL CONDUIT AND ENCASED IN CONCRETE. THE NUMBER AND SIZE OF RISER CONDUITS WILL BE DETERMINED BY AE DESIGN.

4 36" PULLBOX DETAIL
NO SCALE

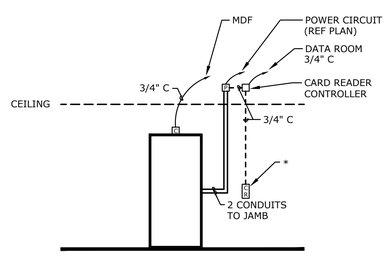

CARD READER

* WEATHERPROOF BOX AT EXTERIOR LOCATIONS

* CONTRACTOR TO PROVIDE ALL ROUGH-IN FOR ALL HARDWARE & ACCESS CONTROLS. EQUIPMENT IS BY OTHERS.

* AT DOUBLE LEAF DOORS, PROVIDE ROUGH-IN FOR EACH LEAF EQUALLY.

D = DOOR CONTACTS
C = CARD READER
P = 110V POWER
M = MAGNET DEVICE

DETAILS ARE GENERIC/ FOR BID ONLY. VERIFY W/ OWNER'S REP. & ARCH.

9 ELECTRICAL/HARDWARE DETAIL
NO SCALE

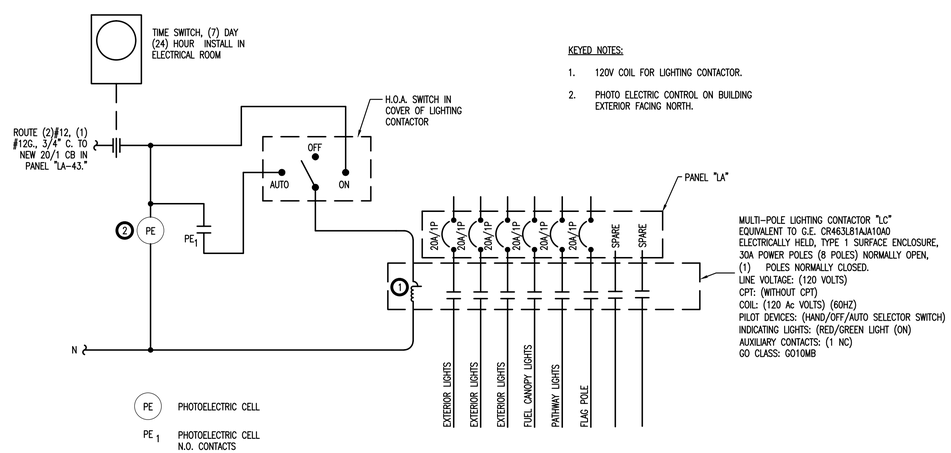

KEYED NOTES:

1. 120V COIL FOR LIGHTING CONTACTOR.
2. PHOTO ELECTRIC CONTROL ON BUILDING EXTERIOR FACING NORTH.

8 LIGHTING CONTACTOR CONTROL CIRCUIT DIAGRAM
NO SCALE

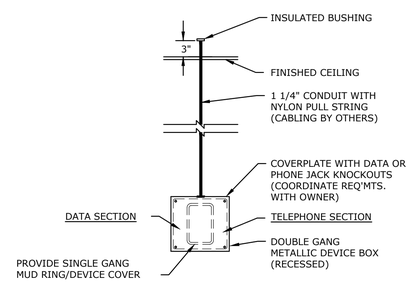

7 TYPICAL DATA/ TELEPHONE SINGLE OUTLET DETAIL
NO SCALE

STATE OF TEXAS
JORGE A. OLIVARES
95828
LICENSED
PROFESSIONAL ENGINEER
9-23-2016

Jose I. Guerra, Inc.
Consulting Engineers
Structural • Civil • Mechanical • Electrical
TBPE FIRM F-3

AUSTIN ONION CREEK
FIRE & EMS STATION
1112 OLD SAN ANTONIO ROAD
AUSTIN, TEXAS 78748

REVISIONS

DATE	9/23/2016
DRAWN BY	JD
CHECKED BY	JO
PROJECT NO.	214106.00

E6.1

ELECTRICAL DETAILS

CADFILE: F:\15071_Onion Creek Fire-EMS Station\DRAWINGS\CAD\15071_E6-1 Electrical Details.dwg Plotted: Thu., Sep. 22, 2016 @ 9:42 PM By: kshirazi Scale: 1:1

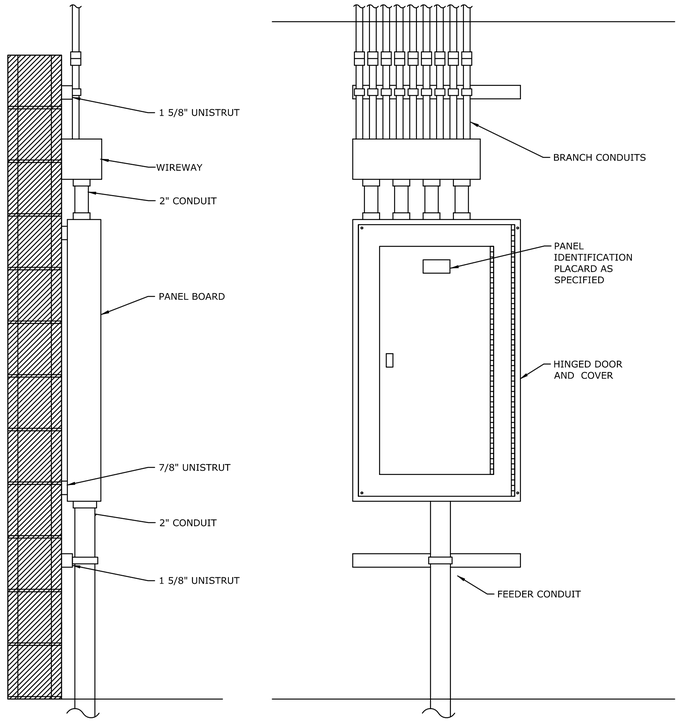

3 TYPICAL SURFACE MOUNTED PANELBOARD DETAIL
NO SCALE

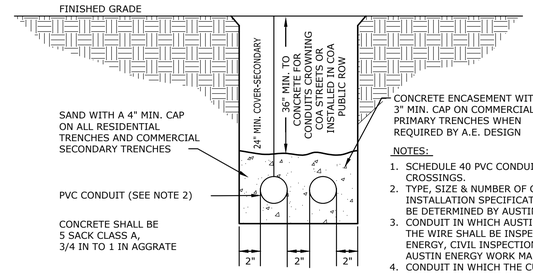

NOTES:

1. SCHEDULE 40 PVC CONDUIT ON STREET CROSSINGS.
2. TYPE, SIZE & NUMBER OF CONDUITS, & INSTALLATION SPECIFICATIONS SHALL BE DETERMINED BY AUSTIN ENERGY DESIGN.
3. CONDUIT IN WHICH AUSTIN ENERGY INSTALLS THE WIRE SHALL BE INSPECTED BY AUSTIN ENERGY, CIVIL INSPECTION SECTION, OR AUSTIN ENERGY WORK MANAGEMENT.
4. CONDUIT IN WHICH THE CUSTOMER/ELECTRICIAN INSTALLS THE WIRE SHALL BE INSPECTED BY THE DEVELOPMENT REVIEW & INSPECTION DEPARTMENT, ELECTRIC INSPECTION SECTION. (PVC CONDUIT SHALL BE SCHEDULE 40)

2 ELECTRICAL SERVICE DUCTBANK DETAIL
NO SCALE

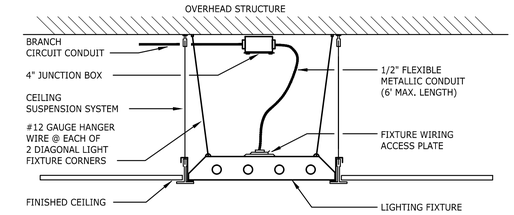

1 TYPICAL LAY-IN LIGHTING FIXTURE MOUNTING DETAIL
NO SCALE

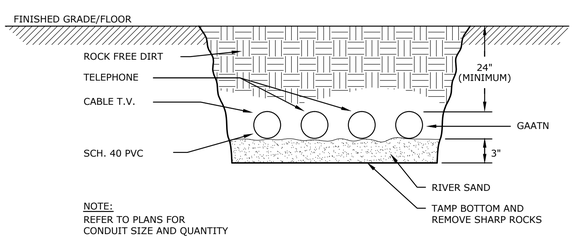

NOTE:
REFER TO PLANS FOR CONDUIT SIZE AND QUANTITY

6 COMMUNICATIONS DUCTBANK DETAIL
NO SCALE

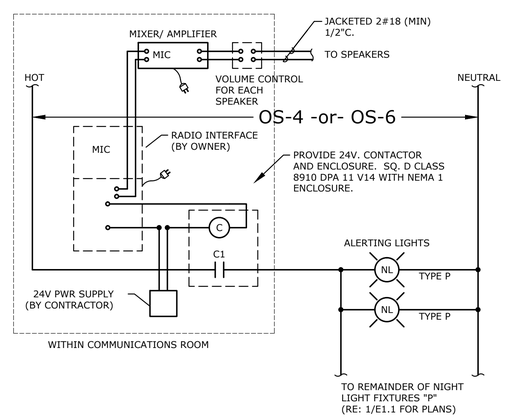

NOTE: PROVIDE SEPARATE ALERT/ DISPATCH AND NIGHT LIGHT SYSTEMS - ONE FOR FIRE AND ONE FOR EMS.

5 ALERT/ DISPATCH AND NIGHT LIGHT SYSTEM WIRING DIAGRAM
NO SCALE

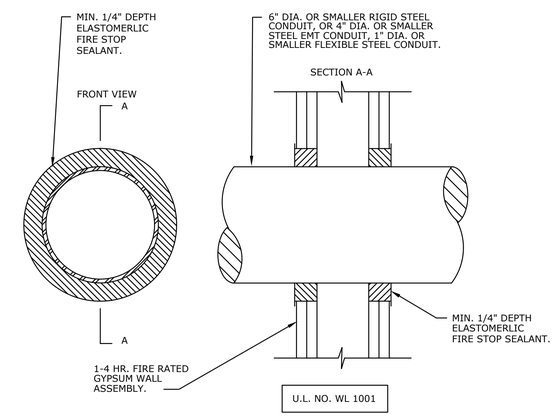

ANNULAR SPACE REQUIREMENTS

MAXIMUM PIPE OR CONDUIT DIAMETER	ANNULAR SPACE
1 in.	0-3/16 in.
4 in.	0-1/4 in.
6 in.	1/4-1/2 in.

1. INSTALL THE FIRESTOP SYMMETRICALLY ON BOTH SIDES OF THE WALL ASSEMBLY.
2. CAULK IS TO BE FORCED INTO THE ANNULAR SPACE TO THE MAXIMUM EXTENT POSSIBLE WITH A MINIMUM 1/4-in. DIAMETER BEAD OF CAULK APPLIED TO THE PERIMETER OF THE CONDUIT AT ITS EGRESS FROM THE WALL.

4 CONDUIT FIRE STOP DETAIL
NO SCALE

STATE OF TEXAS
JORGE A. OLIVARES
95828
LICENSED
PROFESSIONAL ENGINEER
9-23-2016

Jose I. Guerra, Inc.
Consulting Engineers
Structural • Civil • Mechanical • Electrical
TBPE FIRM F-3

AUSTIN ONION CREEK
FIRE & EMS STATION
1112 OLD SAN ANTONIO ROAD
AUSTIN, TEXAS 78748

CITY OF AUSTIN FOUNDED 1839

REVISIONS

DATE	9/23/2016
DRAWN BY	JD
CHECKED BY	JO
PROJECT NO.	214106.00

E6.2

ELECTRICAL DETAILS

CADFILE: F:\15071_Onion Creek Fire-EMS Station\DRAWINGS\CAD\15071_E6-2 Electrical Details.dwg Plotted: Thu., Sep. 22, 2016 @ 7:56 PM By: kshirazi Scale: 1:1

NOTIFICATION SCHEDULE & NOTES:

ROOM DESCRIPTION:	VISUAL
CORRIDORS	YES
VESTIBULES	YES
BATHROOMS	YES
COMMON AREAS	YES
BREAK ROOMS	YES
LAUNDRY ROOMS	YES
STORAGE ROOMS	YES
JANITOR ROOMS	YES
KITCHENS	YES
OFFICES	YES
ADA SLEEPING UNITS	YES
NON-ADA SLEEPING UNITS	NO
MECHANICAL & ELECTRICAL ROOMS	NO
DATA/COMM CLOSETS	NO
CLOSETS	NO

AUDIBILITY NOTES:

1. MAXIMUM AUDIBLE ALARM SOUND LEVEL SHALL BE NOT MORE THAN 110 DBA. MINIMUM AUDIBLE ALARM SOUND LEVEL SHALL BE IN ACCORDANCE WITH NFPA 72 AND THE SOUND LEVEL OF EACH SPACE THROUGHOUT.

VISUAL NOTIFICATION NOTES:

1. VISUAL NOTIFICATION SHALL BE PROVIDED THROUGHOUT THE SPACES INDICATED, IN ACCORDANCE WITH THE AMERICANS WITH DISABILITIES ACT (ADA) AND TEXAS ACCESSIBILITY STANDARDS (TAS). COVERAGE SHALL BE DETERMINED BASED ON NFPA 72 (2010 ED.), TABLES 18.5.4.3.1 (a) AND (b), AND THE UL LISTING OF THE INSTALLED DEVICES.

FIRE ALARM NOTES:

SCOPE OF WORK

1. PROVIDE NEW FIRE ALARM SYSTEM (INCLUDING EQUIPMENT, CIRCUITS, INITIATING DEVICES, AND NOTIFICATION APPLIANCES) IN ACCORDANCE WITH THE AUTHORITY HAVING JURISDICTION; MANUFACTURER'S INSTRUCTIONS AND UL LISTINGS; THE REQUIREMENTS OF NFPA 70, 72, AND 101; AS WELL AS ADA AND TEXAS ACCESSIBILITY STANDARDS (TAS).

GENERAL

1. THESE DOCUMENTS DESCRIBE ANY SYSTEM OR DEVICE FUNCTION, PLACEMENT, OR OPERATION THAT MAY BE NEEDED TO CORRECTLY PLAN A COMPLETE FIRE ALARM SYSTEM IN COMPLIANCE WITH PRESCRIBED CODES. THE PLANNING OF THE SYSTEM SHALL BE BY THE FIRE ALARM CONTRACTOR.

2. PROVIDE UNIT PRICING WITH BID FOR INITIATING AND NOTIFICATION DEVICES IN SCOPE OF WORK. UNIT PRICES SHALL INCLUDE THE DEVICE, INSTALLATION, 20 FEET OF CONDUIT, WIRE, PROGRAMMING, AND ANY OTHER REQUIRED INSTALLATION FOR ADDITIONS AND/OR MODIFICATIONS (CHANGE ORDERS, INCLUDING ADDS AND DEDUCTS).

3. RECORD ALL DEVIATIONS FROM DESIGNED SYSTEM. UPON COMPLETION OF PROJECT, PROVIDE THE OWNER WITH THE FOLLOWING: ELECTRONIC CAPTURE SYSTEM PROGRAMMING, COMPLETED INSTALLATION INSPECTION FORM, INSTALLATION CERTIFICATE, SYSTEM DEMONSTRATION FORM, EQUIPMENT OPERATION AND MAINTENANCE DOCUMENTS, AND AS-BUILT DRAWINGS.

NOTIFICATION APPLIANCES

1. LOCATE MOUNTING HEIGHT OF WALL-MOUNTED STROBE LIGHTS AND COMBINATION HORN/STROBE LIGHTS IN ACCORDANCE WITH NFPA 72.

2. STROBE LIGHTS AND COMBINATION HORN/STROBE LIGHTS MAY BE LOCATED EITHER AS SHOWN, OR AS OTHERWISE PREFERRED BY THE SHOP DRAWING DESIGNER. EITHER WAY, FINAL LOCATIONS AND INTENSITIES OF STROBE LIGHTS MUST BE IN ACCORDANCE WITH NFPA 72, TABLES 18.5.4.3.1 (A) AND (B), 2010 EDITION.

3. MAXIMUM AUDIBLE ALARM SOUND LEVEL SHALL BE NOT MORE THAN 110 DBA. MINIMUM AUDIBLE ALARM SOUND LEVEL SHALL BE IN ACCORDANCE WITH NFPA 72 AND THE SOUND LEVEL OF EACH SPACE. CONTRACTOR MAY REDUCE OR ADD DEVICES AT HIS DISCRETION IN ORDER TO MEET THESE MINIMUM SOUND LEVELS.

4. EXTERIOR DEVICES WITH ASSOCIATED JUNCTION BOXES AND WIRING SHALL BE RATED FOR OUTDOOR USE.

INITIATING DEVICES

1. LOCATE MANUAL PULL STATIONS NEXT TO THE FACP AND EACH BUILDING EXIT.

2. INITIATING DEVICES SHALL BE ADDRESSABLE, POWERED FROM THE SIGNALING LINE CIRCUIT (SLC), AND BE LISTED AND APPROVED FOR USE WITH THE FACP.

3. DO NOT INSTALL SMOKE DETECTORS CLOSER THAN 36" OF HVAC SUPPLY DIFFUSER OR RETURN AIR OPENING.

4. AUXILIARY RELAYS TO INITIATE CONTROL OF FIRE SAFETY FUNCTIONS SHALL BE LOCATED WITHIN 36" OF THE CONTROLLED CIRCUIT OR DEVICE, AND SHALL BE FULLY-RATED FOR THE REQUIRED AMPACITY.

POWER SUPPLIES

1. POWER SUPPLY UNITS FOR NOTIFICATION DEVICES SHALL BE CLEARLY INDICATED ON SHOP DRAWINGS, AND LOCATIONS SHALL BE CONFIRMED, PRIOR TO INSTALLATION.

2. DO NOT EXCEED 80% OF NAC CIRCUIT CAPACITY, INCLUDING ROOM FOR EXPANSION OF INITIATING DEVICES AND NAC CIRCUITS BY 20%. VERIFY WITH NEW BATTERY AND VOLTAGE DROP CALCULATIONS.

3. CONTRACTOR TO DETERMINE NECESSITY AND LOCATION OF REMOTE POWER SUPPLIES (RPS) UNITS. INCLUDE CEILING SMOKE DETECTOR ABOVE ALL RPS LOCATIONS.

CIRCUITS AND PATHWAYS

1. INITIATING DEVICE CIRCUITS (IDC) AND NOTIFICATION APPLIANCE CIRCUITS (NAC) SHALL BE CLASS "B". SIGNALING LINE CIRCUITS (SLC) SHALL BE CLASS "A".

2. EACH IDC, NAC, AND SLC SHALL BE DESIGNED TO ALLOW FOR THE FUTURE ADDITION OF INITIATING AND NOTIFICATION DEVICES BY 20% WITHOUT EXCEEDING THE ALLOWABLE VOLTAGE DROP.

3. FIRE ALARM WIRING IN ALL LOCATIONS OTHER THAN ABOVE ACCESSIBLE HUNG CEILINGS SHALL BE RUN IN 3/4" MINIMUM CONDUIT.

4. FIRE ALARM WIRING NOT REQUIRED TO BE IN CONDUIT SHALL BE PLENUM RATED AND SUPPORTED OFF OF THE BUILDING STRUCTURE, INDEPENDENTLY FROM ALL OTHER BUILDING WIRING SYSTEMS, AND NOT WRAPPED AROUND, DRAPED OVER, OR ATTACHED TO ANY OTHER BUILDING SYSTEM COMPONENT.

5. IF FIRE ALARM WIRING IS ROUTED IN A COMMON CABLE TRAY WITH OTHER NON FIRE-ALARM SYSTEM CONDUCTORS, A DIVIDER OR OTHER MEANS OF SEPARATION SHALL BE PROVIDED IN COMPLIANCE WITH NFPA 70, ARTICLE 760.

6. NO ADDITIONAL AC WIRING (FAN CONTROL, EXIT LIGHTS, PAGING SPEAKERS, ETC.) SHALL BE RUN IN FIRE ALARM CONDUIT. ONLY FIRE ALARM CONDUCTORS SHALL BE INSTALLED IN FIRE ALARM CONDUIT.

7. PROVIDE PLASTIC BUSHINGS ON ALL CONDUIT OPEN ENDS AND ON ALL BOX CONNECTORS TO PROTECT WIRING FROM SCRAPING AND CUTTING.

8. NEW JUNCTION AND PULL BOX COVERS SHALL BE PAINTED RED AND LABELED WITH WORDING, "FIRE ALARM."

9. LABEL EACH SLC-ATTACHED BASE AND MODULE OR DEVICE WITH THE DEVICE ADDRESS. USE DURABLE, MACHINE PRINTED, EASY-TO-READ LABELS.

COORDINATION

1. UNLESS APPROVAL IS GIVEN BY THE ARCHITECT, LOCATE CENTER OF ALL CEILING-MOUNTED DEVICES AS FOLLOWS:

   1.1. IN CENTER OF 2X2 ACOUSTIC CEILING TILES.
   1.2. ALIGNED WITH LIGHTS, DIFFUSERS, FIRE SPRINKLERS, & OTHER CEILING ELEMENTS IN HARD CEILINGS.

2. CONFIRM CEILING AND STRUCTURAL CONDITIONS PRIOR TO SUBMISSION OF SHOP DRAWINGS, TO CONFIRM ADEQUATE COVERAGE OF ALL DEVICES IS INCLUDED.

3. COORDINATE 120 VAC PRIMARY POWER SUPPLY TO CONTROL PANELS AND POWER SUPPLY UNITS WITH ELECTRICAL CONTRACTOR. WHERE NEW 120 VAC POWER SUPPLIES ARE REQUIRED TO LOCATIONS OTHER THAN THE FACP, CONTRACTOR SHALL INCLUDE IN BID AND COORDINATE WITH ELECTRICAL SUB-CONTRACTOR.

QUALITY CONTROL

1. PROTECT ALL FIRE ALARM DEVICES FROM CONSTRUCTION DUST AND DAMAGE. CLEAN AND TEST IN ACCORDANCE WITH NFPA STANDARDS.

2. REFER TO FIRE ALARM SPECIFICATIONS FOR FURTHER REQUIREMENTS.

FIRE ALARM FUNCTIONAL SCHEDULE

SYSTEM INPUTS	SYSTEM OUTPUTS/ACTIONS											
	TROUBLE INDICATION AT FACP	TROUBLE INDICATION TO SUPERVISING STATION	SUPERVISORY INDICATION AT FACP	SUPERVISORY INDICATION TO SUPERVISING STATION	ALARM INDICATION AT FACP	ALARM INDICATION TO SUPERVISING STATION	RECORD STATUS CHANGE IN SYSTEM MEMORY	A/V ALARM SIGNALING THROUGHOUT THE FACILITY	ACTIVATE EXTERIOR A/V DEVICE AT F.D. RESPONSE POINT	ACTIVATE SOUNDER BASE AT SMOKE DETECTORS	CLOSE ASSOCIATED FIRE/SMOKE DAMPERS	SHUTDOWN ASSOCIATED HVAC EQUIPMENT
MANUAL PULL STATION					●	●	●	●	●	●		
SMOKE DETECTOR - AREA					●	●	●	●	●	●		
SMOKE DETECTOR - DUCT MOUNTED			●	●			●				●	●
SMOKE DETECTOR WITH SOUNDER BASE - SLEEPING UNIT			●	●			●			●		
WATER FLOW SWITCH					●	●	●	●	●	●	●	
FIRE-SPRINKLER VALVE TAMPER SWITCH			●	●			●					
FIRE ALARM AC POWER FAILURE	●	●					●					
FIRE ALARM SYSTEM LOW BATTERY	●	●					●					
BROKEN WIRE (OPEN), GROUND FAULT, OR SHORT ON F/A CIRCUIT	●	●					●					
LOSS OF COMMUNICATION TO ANY INTELLIGENT F/A DEVICE	●	●					●					
SENSITIVITY/MAINTENANCE ISSUE WITH DETECTOR	●	●					●					

NOTES:

1. THIS TABLE REPRESENTS THE MINIMUM OWNER-REQUIRED FUNCTIONAL REQUIREMENTS OF THE FIRE ALARM SYSTEM. CONTRACTOR SHALL PROVIDE ALL FUNCTIONS REQUIRED BY NFPA 72, NFPA 101, AND THE AUTHORITY HAVING JURISDICTION (AHJ), REGARDLESS OF WHETHER OR NOT THEY ARE LISTED IN THIS SCHEDULE.

2. RECEPTION AREA WILL BE A CONSTANTLY ATTENDED LOCATION.

FIRE ALARM SYMBOLS:

NOTE: SYMBOL LIST IS GENERAL IN NATURE; NOT ALL SYMBOLS LISTED MAY BE APPLICABLE TO THIS PROJECT.

F	MANUAL PULL STATION
H	WALL-MOUNTED HORN
V	WALL-MOUNTED VISUAL-ONLY APPLIANCE
H	WALL-MOUNTED HORN/STROBE APPLIANCE
V	CEILING-MOUNTED VISUAL-ONLY APPLIANCE
HV	CEILING-MOUNTED HORN/STROBE APPLIANCE
	SMOKE DETECTOR
SB	SMOKE DETECTOR WITH 520 HZ SOUNDER BASE
	HEAT DETECTOR, FIXED TEMPERATURE
D	HVAC SYSTEM SMOKE OR FIRE/SMOKE DAMPER
R	FAN SHUTDOWN RELAY
FACP	FIRE ALARM CONTROL PANEL
RA	FIRE ALARM REMOTE ANNUNCIATOR PANEL
WF	WATER FLOW SWITCH
VS	VALVE SUPERVISORY/TAMPER SWITCH
PS	PRESSURE SWITCH
MM	MONITOR MODULE
CR	CONTROL RELAY MODULE
	ELECTRIC EXTERIOR ALARM BELL, 24V

ABBREVIATIONS USED WITH DEVICE SYMBOLS:

(WP) WEATHER PROOF

STATE OF TEXAS
BRANDON N. REYES
106528
LICENSED PROFESSIONAL ENGINEER
09-23-2016

Jose I. Guerra, Inc.
Consulting Engineers
Structural • Civil • Mechanical • Electrical
TBPE FIRM F-3

AUSTIN ONION CREEK
FIRE & EMS STATION
1112 OLD SAN ANTONIO ROAD
AUSTIN, TEXAS 78748

REVISIONS

DATE	9/23/2016
DRAWN BY	JD
CHECKED BY	BR
PROJECT NO.	214106.00

FA1.0

FIRE ALARM SCHEDULES & NOTES

CADFILE: F:\15071_Onion Creek Fire-EMS Station\DRAWINGS\CAD\15071_FA1-0 Fire Alarm Schedules & Notes.dwg Plotted: Thu, Sep. 22, 2016 @ 8:25 PM By: kshirazi Scale: 1:1

GENERAL NOTES:

1. THIS DOCUMENT DESCRIBES ANY SYSTEM OR DEVICE FUNCTION, PLACEMENT, OR OPERATION THAT MAY BE NEEDED TO CORRECTLY PLAN A COMPLETE SYSTEM IN COMPLIANCE WITH PRESCRIBED CODES. THE PLANNING OF THE SYSTEM SHALL BE BY THE FIRE ALARM CONTRACTOR.
2. SUPPLY ALL MATERIAL, LABOR, AND EQUIPMENT NECESSARY TO ATTAIN A COMPLETE AND OPERATIONAL FIRE ALARM SYSTEM THROUGHOUT THE FACILITY.
3. PROPOSED NEW LAYOUT IS FOR SCOPE, PRICING, AND GENERAL LOCATION OF SYSTEM EQUIPMENT AND DEVICES. CONTRACTOR SHALL BE RESPONSIBLE FOR THE FINAL DETAILED LAYOUT OF ALL NEW SYSTEM COMPONENTS.
4. DRAWING IS DIAGRAMMATIC ONLY. COORDINATE LOCATION OF EQUIPMENT, DEVICES, CONDUIT, ETC. WITH BUILDING ELEMENTS AND THE WORK OF OTHER TRADES. NO CONSTRUCTION SHALL COMMENCE PRIOR TO RECEIVING FULL ARCHITECTURAL AND ENGINEERING APPROVAL.
5. SEE SHEET FA1.0 FOR DESIGN CRITERIA, FUNCTIONAL SCHEDULE, & ADDITIONAL NOTES.
6. SEE ARCHITECTURAL DRAWINGS FOR BUILDING SECTIONS, ELEVATIONS, DETAILS, AND CEILING HEIGHTS.

KEYED NOTES:

1. PROVIDE SUPPLY-SIDE DUCT SMOKE DETECTOR WITH FULLY-RATED RELAY SUCH THAT UPON ACTIVATION OF DUCT DETECTOR ALARM, HVAC AIR HANDLING UNIT SHUTS DOWN.
2. ELECTRIC GONG PROVIDED BY FIRE SUPPRESSION CONTRACTOR AND INSTALLED BY FIRE ALARM CONTRACTOR.

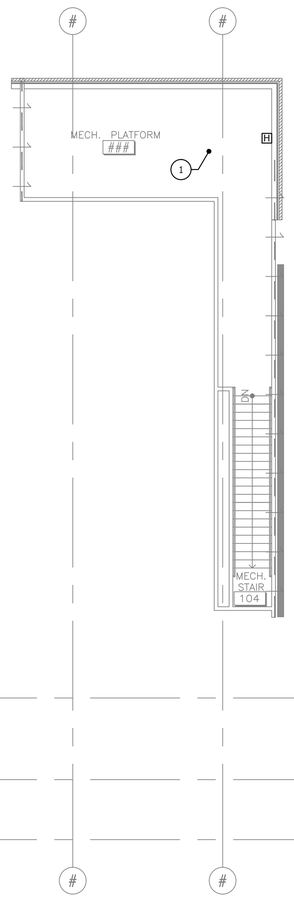

2 FIRE ALARM PLAN – MECH. PLATFORM
SCALE: 1/8" = 1'-0"

1 FIRE ALARM PLAN – FIRST FLOOR
SCALE: 1/8" = 1'-0"

STATE OF TEXAS
BRANDON N. REYES
106528
LICENSED PROFESSIONAL ENGINEER
09-23-2016

Jose I. Guerra, Inc.
Consulting Engineers
Structural • Civil • Mechanical • Electrical
TBPE FIRM F-3

AUSTIN ONION CREEK FIRE & EMS STATION
1112 OLD SAN ANTONIO ROAD
AUSTIN, TEXAS 78748

REVISIONS

DATE	9/23/2016
DRAWN BY	ML
CHECKED BY	BR
PROJECT NO.	214106.00

FA1.1

FIRE ALARM FLOOR PLANS

CADFILE: F:\15071_Onion Creek Fire-EMS Station\DRAWINGS\CAD\15071_FA1-1 Fire Alarm Floor Plans.dwg Plotted: Fri., Sep. 23, 2016 @ 9:43 AM By: kshirazi Scale: 1:96

HYDRANT FLOW TEST RESULTS:

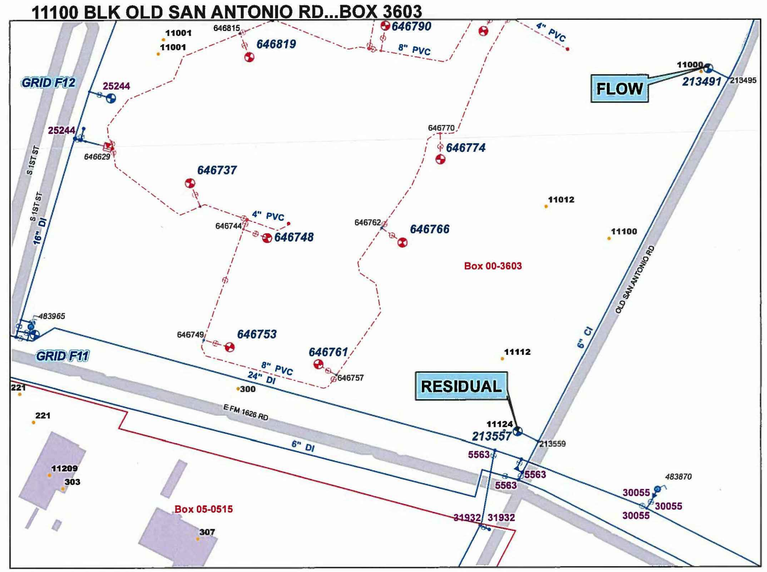

AUSTIN FIRE DEPARTMENT - FIRE PREVENTION DIVISION
Engineering Services Section
One Texas Center, Ste 200 - 505 Barton Springs Road
Austin, Texas 78704
Telephone (512) 974-0160 - Facsimile (512) 974-0162

Austin Fire Department Hydrant Flow Test Report

TEST DATE:	11/17/15			COMPANY:	PREV
TIME:	1511 HRS		SHIFT:	OFFICER:	SHARPE

RESIDUAL HYDRANT

MAP GRID #	HYDRANT #	PIPE INTERSECTION #	MAIN SIZE	AFD BOX #
F11	213557	5563	6	3603

BLK #	DIRECTION	STREET NAME	TYPE
11100		OLD SAN ANTONIO	RD

STATIC PRESSURE (PSI): 90 RESIDUAL PRESSURE (PSI): 83

COMMENTS:

FLOW HYDRANT

MAP GRID #	HYDRANT #	PIPE INTERSECTION #	MAIN SIZE	AFD BOX #
F11	213491	5563	6	3603

BLK #	DIRECTION	STREET NAME	TYPE
11000		OLD SAN ANTONIO	RD

STATIC PRESSURE (PSI): 94 VELOCITY PRESSURE (PSI): 48

dc = discharge coefficient straight 2½" butt = .9 w/45° elbow = .75: .9

diffuser = N/A

FLOW RATE (GPM) = 1163

NOTE: This information represents the water supply characteristics in the immediate area on the date and time tested. The City of Austin does not guarantee this data will be representative of the water supply characteristics at any time in the future. It is the requesting party's responsibility to ensure that this test information is appropriate to the location of the project in question and that any differences in elevation between the test location and project are accounted for and included in the hydraulic calculations.

FIRE SUPPRESSION DESIGN CRITERIA:

1. USE QUICK-RESPONSE SPRINKLERS UNLESS OTHERWISE INDICATED OR REQUIRED BY NFPA 13.
2. SPRINKLERS WITH AN ORDINARY TEMPERATURE RATING SHALL BE USED THROUGHOUT, UNLESS OTHERWISE INDICATED BY NFPA 13 OR AS FOLLOWS:

   SPRINKLERS UNDER SKYLIGHTS, OR IN SPACES WITHOUT A COOLING SYSTEM, SHALL HAVE AN INTERMEDIATE TEMPERATURE RATING.
3. SPRINKLERS SHALL BE INSTALLED IN STRICT CONFORMANCE WITH THEIR LISTINGS AND APPROVALS.
4. FIRE SPRINKLER CONTRACTOR TO OBTAIN FIRE HYDRANT FLOW TEST FROM HYDRANTS NEAREST SITE, PRIOR TO PREPARING HYDRAULIC CALCULATIONS.
5. A WET-PIPE SPRINKLER SYSTEM SHALL BE INSTALLED THROUGHOUT ALL HEATED SPACES.
6. ADD 10 PSI OR 10% (WHICHEVER IS GREATER) CONTINGENCY FACTOR TO HYDRAULIC CALCULATIONS.
7. DESIGN DENSITIES INDICATED BELOW ARE THE MINIMUM REQUIRED. THE LISTING AND APPROVAL REQUIREMENT FOR A GIVEN SPRINKLER MAY REQUIRE A DENSITY GREATER THAN THAT LISTED BELOW.
8. DESIGN DENSITIES:

   LIGHT HAZARD SPACES

   SPACES INCLUDED: SLEEPING ROOMS, ENTRY, DAYROOM, KITCHEN, WEIGHT ROOM, OFFICES, CONFERENCE ROOMS, BATHROOMS, CORRIDORS, & SIMILAR SPACES

   DESIGN DENSITY: 0.10 GPM/1500 SF.
   INSIDE HOSE ALLOWANCE: 0 GPM
   OUTSIDE HOSE ALLOWANCE: 100 GPM
   MAX PROTECTION AREA / STANDARD COVERAGE SPRINKLER: 225 SF.

   ORDINARY HAZARD GROUP 1 SPACES

   SPACES INCLUDED: MEZZANINE, PANTRY, & APPARATUS BAY & MECHANICAL, ELECTRICAL, COMMUNICATION, PANTRY, STORAGE, & LAUNDRY ROOMS

   DESIGN DENSITY: 0.15 GPM/1500 SF.
   INSIDE HOSE ALLOWANCE: 0 GPM
   OUTSIDE HOSE ALLOWANCE: 250 GPM
   MAX PROTECTION AREA / STANDARD COVERAGE SPRINKLER: 130 SF.

GENERAL NOTES:

1. THESE DOCUMENTS DESCRIBE ANY SYSTEM OR DEVICE FUNCTION, PLACEMENT, OR OPERATION THAT MAY BE NEEDED TO CORRECTLY PLAN A COMPLETE SYSTEM IN COMPLIANCE WITH PRESCRIBED CODES. THE PLANNING AND DETAILED LAYOUT OF THE SYSTEM SHALL BE BY THE FIRE SUPPRESSION CONTRACTOR.
2. THE FIRE SUPPRESSION SYSTEM SHALL BE DESIGNED AND INSTALLED PER THE INTERNATIONAL FIRE CODE WITH ALL LOCAL AMENDMENTS: SPRINKLER SYSTEM PER NFPA 13, UNDERGROUND PER NFPA 24, & FLOW AND TAMPER SWITCHES PER NFPA 72.
3. EXPOSED SPRINKLER PIPING TO RUN TIGHT TO CEILING CONSTRUCTION.
4. ENDS OF ALL CROSS MAINS SHALL BE PROVIDED WITH CONNECTIONS FOR FLUSHING.
5. SPRINKLER PIPE PENETRATIONS OF FIRE RATED WALLS SHALL BE MADE USING UL APPROVED FIRESTOP ASSEMBLIES. FIRESTOP ASSEMBLIES SHALL BE INSPECTED BY A FIRESTOP INSPECTOR NOT EMPLOYED BY THE SPRINKLER CONTRACTOR.
6. STEEL SPRINKLER PIPE SHALL BE INTERNALLY COATED AND WARRANTED BY THE MANUFACTURER TO RESIST THE EFFECTS OF MICROBIOLOGICALLY INFLUENCED CORROSION.
7. LOCATE NEW PENDENT SPRINKLERS AS FOLLOWS:

   7.1. IN CENTER OF 2X2 ACOUSTIC CEILING TILES.
   7.2. ALIGNED WITH LIGHTS, DIFFUSERS, & OTHER CEILING ELEMENTS IN EXPOSED OR HARD CEILINGS.
8. PROVIDE AUXILIARY DRAINS OR OTHER MEANS FOR DRAINING TRAPPED SECTIONS OF SPRINKLER PIPING, PER NFPA 13.
9. PROVIDE TEST CONNECTION WITH 1" PIPE AND VALVE AT MOST HYDRAULICALLY REMOTE POINT OF MAIN PORTION OF EACH SPRINKLER SYSTEM. DISCHARGE ORIFICE SHALL BE SIZED TO MATCH DIAMETER OF SMALLEST SPRINKLER ORIFICE IN THE SYSTEM. TEST PIPE SHALL BE CONNECTED TO SPRINKLER PIPE AT LEAST 1-1/4" IN SIZE AND SHALL DISCHARGE OUTSIDE BUILDING WITH GALVANIZED 45° ELBOW.
10. IF NECESSARY, LOCATE PIPING WITHIN SOFFITS & USE SIDEWALL STANDARD & EXTENDED COVERAGE SPRINKLER HEADS AS REQUIRED IN ORDER TO AVOID EXPOSED SPRINKLER PIPING (ENSURE SPRINKLERS ARE LISTED FOR USE WITH APPLICABLE CEILING CONSTRUCTION). WHERE EXPOSED PIPING IS UNAVOIDABLE, RUN PIPING TIGHT TO CEILING CONSTRUCTION & COORDINATE CAREFULLY WITH ARCHITECTURAL PREFERENCES.

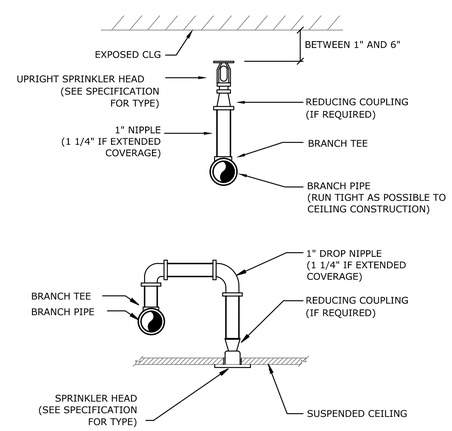

2 SPRINKLER HEAD DETAIL
NO SCALE

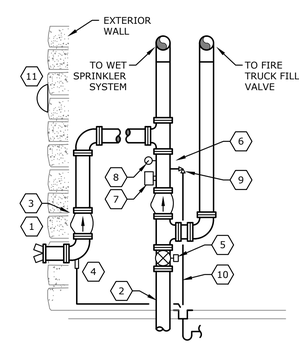

DETAIL NOTES:

1. FIRE DEPT. CONNECTION W/ KNOX FDC PLUGS
2. FIRE LINE ENTRY BY PLUMBING CONTRACTOR
3. CHECK VALVE
4. AUTOMATIC BALL DRIP VALVE
5. INDICATING VALVE WITH TAMPER SWITCH (TYP)
6. RISER MANIFOLD: PRE-PACKAGED DEVICE INCLUDING ITEMS 7, 8, & 9
7. FLOW SWITCH WITH FIELD ADJUSTABLE RETARD FEATURE
8. PRESSURE GAUGE W/ 3-WAY VALVE (TYP)
9. INSPECTOR'S TEST VALVE & 2" DRAIN: SIMILAR TO MODEL 2500 TESTANDRAIN BY AGF MANUFACTURING
10. ROUTE SPRINKLER DRAIN TO FLOOR SINK
11. ELECTRIC BELL

* BACKFLOW PREVENTER BY CIVIL

1 FIRE RISER ASSEMBLY DETAIL
NO SCALE

STATE OF TEXAS
BRANDON N. REYES
106528
LICENSED PROFESSIONAL ENGINEER
09-23-2016

Jose I. Guerra, Inc.
Consulting Engineers
Structural • Civil • Mechanical • Electrical
TBPE FIRM F-3

AUSTIN ONION CREEK
FIRE & EMS STATION
1112 OLD SAN ANTONIO ROAD
AUSTIN, TEXAS 78748

REVISIONS

DATE	9/23/2016
DRAWN BY	JD
CHECKED BY	BR
PROJECT NO.	214106.00

FS1.0

FIRE SUPPRESSION DETAILS

CADFILE: F:\15071_Onion Creek Fire-EMS Station\DRAWINGS\CAD\15071_FS1-0 Fire Suppression Details & Notes.dwg Plotted: Fri., Sep. 23, 2016 @ 9:29 AM By: kshiraz1 Scale: 1:1

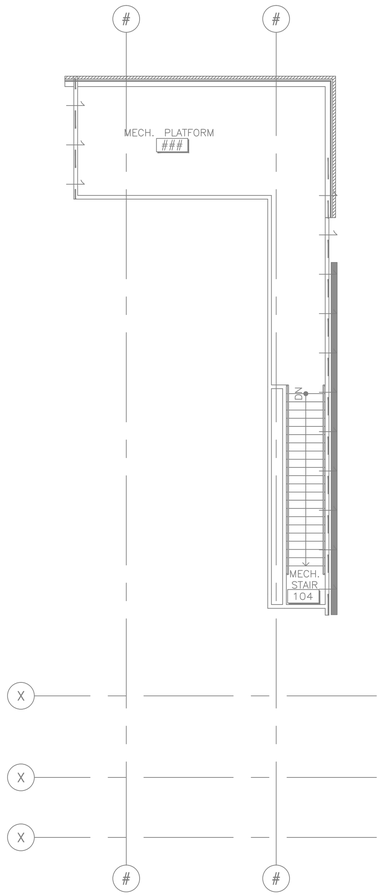

2 FIRE SUPPRESSION PLAN – MECH. PLATFORM
SCALE: 1/8" = 1'-0"

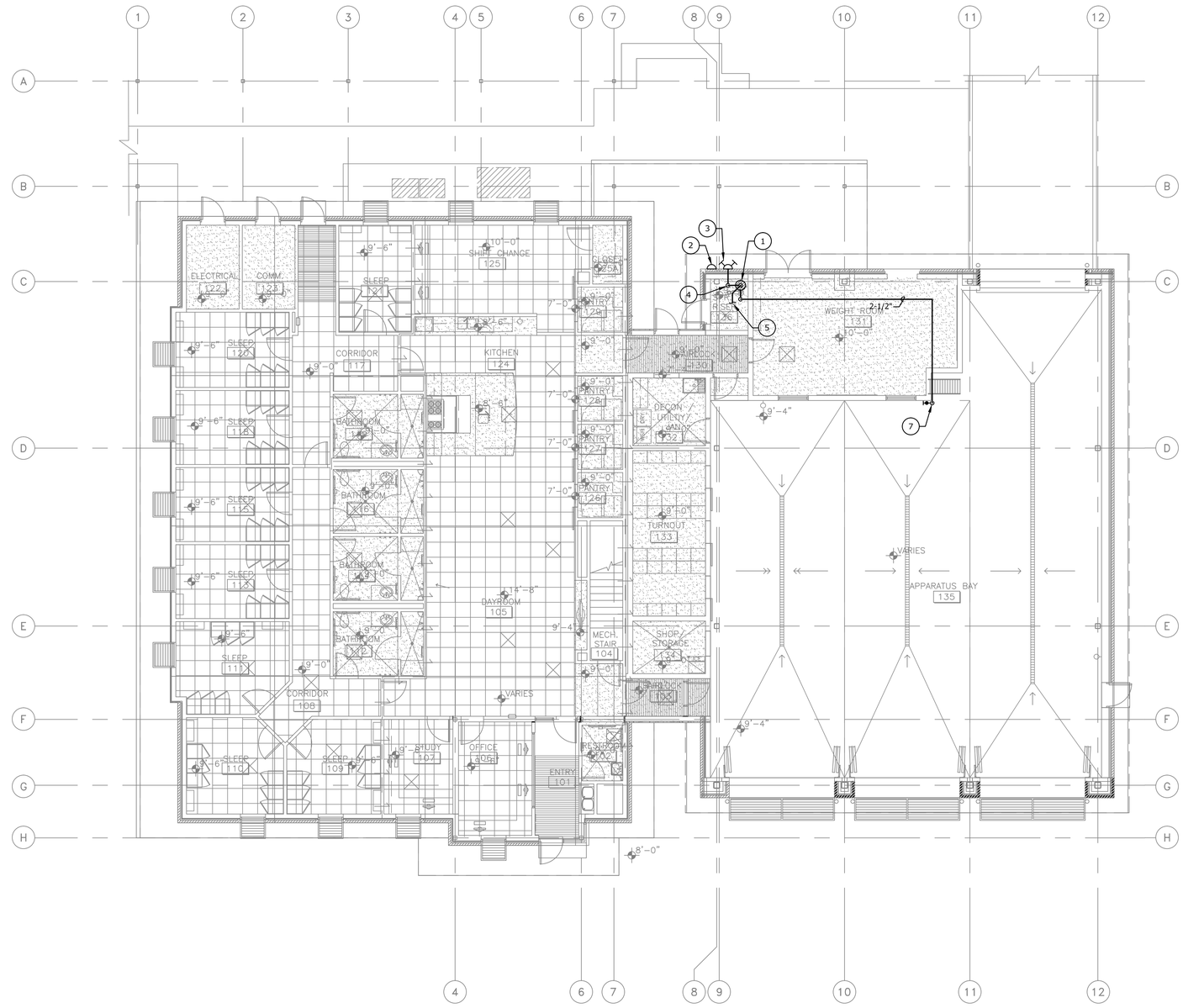

1 FIRE SUPPRESSION PLAN – FIRST FLOOR
SCALE: 1/8" = 1'-0"

GENERAL NOTES:

1. THIS DOCUMENT DESCRIBES ANY SYSTEM OR DEVICE FUNCTION, PLACEMENT, OR OPERATION THAT MAY BE NEEDED TO CORRECTLY PLAN A COMPLETE SYSTEM IN COMPLIANCE WITH PRESCRIBED CODES. THE PLANNING AND DETAILED LAYOUT OF THE SYSTEM SHALL BE BY THE FIRE-SUPPRESSION SUBCONTRACTOR.
2. DRAWING IS DIAGRAMMATIC ONLY. CONTRACTOR SHALL COORDINATE LOCATION OF PIPE, SPRINKLER HEADS, ETC. WITH BUILDING ELEMENTS AND THE WORK OF OTHER TRADES. NO PIPING SHALL BE INSTALLED PRIOR TO RECEIVING FULL ARCHITECTURAL AND ENGINEERING APPROVAL.
3. SEE SHEET FS1.0 FOR DESIGN CRITERIA, DETAILS, & ADDITIONAL NOTES.
4. SEE ARCHITECTURAL DRAWINGS FOR BUILDING SECTIONS, DETAILS, AND CEILING HEIGHTS.

KEYED NOTES:

1. FIRE RISER ASSEMBLY. SEE DWG FS1.0, DETAIL 1.
2. ELECTRIC GONG.
3. SIAMESE FIRE DEPT. CONNECTION WITH KNOX FDC PLUGS. LABEL "AUTO SPKR".
4. PROVIDE CHECK VALVE & AUTOMATIC BALL DRIP AT BOTTOM ELBOW. ROUTE DRAINAGE TO FLOOR SINK & SPILL INDIRECT.
5. TO BUILDING WET-PIPE SPRINKLER SYSTEM.
6. SUPERVISED POST INDICATOR VALVE THROUGH WALL.
7. DROP TO 2-1/2" FIRE HOSE VALVE FOR FILLING FIRE TRUCK WATER TANKS.

STATE OF TEXAS
BRANDON N. REYES
106528
LICENSED PROFESSIONAL ENGINEER
09-23-2016

Jose I. Guerra, Inc.
Consulting Engineers
Structural • Civil • Mechanical • Electrical
TBPE FIRM F-3

AUSTIN ONION CREEK
FIRE & EMS STATION
1112 OLD SAN ANTONIO ROAD
AUSTIN, TEXAS 78748

REVISIONS

DATE	9/23/2016
DRAWN BY	ML
CHECKED BY	BR
PROJECT NO.	214106.00

FS1.1

FIRE SUPPRESSION FLOOR PLANS

CADFILE: F:\15071_Onion Creek Fire-EMS Station\DRAWINGS\CAD\15071_FS1-1 Fire Suppression Floor Plans.dwg Plotted: Fri., Sep. 23, 2016 @ 9:45 AM By: kshirazi Scale: 1:96