The Strength of a National Company With Local Customer Service
PAVESTONE
Improving Your Landscape™
pavestone.com

Tech Spec 5

icpi
Interlocking Concrete Pavement Institute®

Cleaning, Sealing and Joint Sand Stabilization of Interlocking Concrete Pavement

When properly installed, interlocking concrete pavements have very low maintenance and provide an attractive surface for decades. Under foot and vehicular traffic, they can become exposed to dirt, stains and wear. This is common to all pavements. This technical bulletin addresses various steps to ensure the durability of interlocking concrete pavements and to help restore their original appearance. These steps include removing stains and cleaning, plus joint stabilization or sealing if required.

Stains on specific areas should be removed first. A cleaner should be used next to remove any efflorescence and dirt from the entire pavement. A newly cleaned pavement can be an opportune time to apply joint sand stabilizers or seal it. In order to achieve maximum results, use stain removers, cleaners, joint sand stabilizers, and sealers specifically for concrete pavers. These may be purchased from a manufacturer, contractor, dealer or associate member of the Interlocking Concrete Pavement Institute.

Removing Stains

Commercial stain removers available specifically for concrete pavers provide a high degree of certainty in removing stains. Many kinds of stains can be removed while minimizing the risk of discoloring or damaging the pavers. The container label often provides a list of stains that can be removed. If there are questions, the supplier should be contacted for help with determining the effectiveness of the chemical in removing specific stains.

Figure 1. Many sealers enhance the appearance of concrete pavers and protect against staining.

Identify the stains prior to applying the cleaner. A test application should be evaluated in a small, inconspicuous stained area for cleaning effectiveness. Some stains may require repeated applications of the remover to achieve effective cleaning. This is often the case for deep set oil stains. With all stain removers, cleaners, joint sand stabilizers, and sealers, the label directions and warnings should be read and carefully followed for all precautions.

Start removal of stains at the bottom of the pavement and work up the slope in manageable sections. By working up the slope, cleaning fluids will drain down the pavement. This technique assists in uniform removal while allowing the used cleaner to be rinsed away consistently. The surface remains dry ahead of the cleaner-soaked wet areas, allowing better visibility of the stains to be removed.

Take care in selecting and applying cleaning products, as acidic ones may harm vegetation and grass. These cleaners should not run onto vegetation. When using strong acidic stain removers or cleaners that might drain onto vegetation, saturate the vegetation with water prior to using acidic cleaners. This will minimize absorption of cleaner rinse water and reduce risk of damage to vegetation.

Removal of Common Stains

There are proprietary cleaning products specifically designed for concrete pavers. Many have been developed through extensive laboratory and field testing to ensure cleaning effectiveness. These chemicals should be used whenever possible. Using manufactured cleaning chemicals for specific stains relieves the user from the uncertainty of attaining the proper mixture of chemicals.

If no proprietary stain removal products are available, a comprehensive source of information on stain removal is found in *Removing Stains from Concrete* by William H. Kuenning. It describes chemicals, detergents or poultice (scrubbing) materials recommended for removing particular stains, and the steps to be followed in removal. This publication recognizes that some of the treatments involve hazardous chemicals and it advises specific precautions.

Removal of several common stains from *Removing Stains from Concrete* are listed below (1). Most involve typical house-

hold chemicals. Searching the internet using the key phrases mentioned below can provide additional information. The ICPI disclaims any and all responsibility for the application of the information. The user is advised to use cleaners specifically made to remove stains that commonly occur on concrete pavers. They will likely be more effective.

Asphalt and emulsified asphalt—Chill with ice (if warm outside), scrape away and scrub the surface with scouring or abrasive powder. Rinse thoroughly with water.

Cutback asphalt and roofing tar—Use a poultice made with talc or diatomaceous earth. Mix with kerosene, scrub, let dry and brush off. Repeat as needed.

Blood, candy, ketchup, mustard, grease drippings from food—For stubborn stains, apply liquid detergent full strength and allow it to penetrate for 20 to 30 minutes. Scrub and rinse with hot water. Removal is easier if these stains are treated immediately.

Caulking—Scrape off excess and scrub with a poultice of denatured alcohol. Rinse with hot water and detergent. Acrylic latex caulk—follow guidelines for removal of latex paint.

Chewing gum—Same as caulking, or scrub with naphtha.

Clay soil—Scrape off dry material, scrub and rinse with hot water and strong detergent.

Creosote—Apply a poultice with paint thinner and talc. Scrub and allow to dry. Scrape off, scrub with scouring powder and rinse with water.

Leaf, wood rot, or tobacco stains—apply household bleach and scrub with a stiff bristled brush.

Mortar—Let harden and carefully remove hardened spots with a trowel, putty knife or chisel.

Smoke—Scrub with a poultice of talc with bleach diluted 1:5 with water. Rinse with water.

Oil or grease that has penetrated—Mop up any excess oil with rags. Cover the area with oil absorbent (kitty litter). Talc, fuller's earth, diatomaceous earth can be used. Leave it on the stain for a day then sweep up.

Paint—Fresh paint should be mopped up immediately with rags or paper towels by blotting. Do not wipe as this will spread the paint and extend the job of removal. If the paint is latex and water based, soak and then scrub the area with hot water, scouring powder and a stiff brush until no more improvement is seen. Let the remaining paint dry and remove as described below.

Dried paint—Scrape any excess oil based paint, varnish or water based latex paint off the surface. Apply a commercial paint remover and let it sit for 20 to 30 minutes. Loosen with gentle scrubbing. Do not rub the loosened paint into the surface of the paver. Instead, blot up the loosened paint and thinner. Repeat as necessary.

Tire skid marks—Scrub black area with water, detergent and scouring powder.

In the case of small stained areas, removal and replacement with new pavers may be an option.

Overall Cleaning

Overall cleaning of the pavement can start after stains are removed. In preparation for cleaning, low tree branches, shrubs and vegetation adjacent to the pavement should be tied back or covered to protect from overspray of cleaning solutions or sealers. The area should be inspected for any cracked or broken units. These should be replaced. Badly stained units can be replaced, but it is usually easier to clean stains and less costly than replacing the pavers.

When pavers have stains too difficult to remove, replace them with the same type of units. Refer to *ICPI Tech Spec 6, Reinstatement of Interlocking Concrete Pavements*, for a full description on replacing pavers. If pavers must be replaced, there may be a difference in color from the surrounding pavers. This variation should eventually disappear. If color variation is unacceptable, controlled use of proprietary cleaners designed to improve the color of concrete pavers can minimize variation.

Removal of accumulated dirt and efflorescence is the objective of cleaning. It is essential in preparing the pavers for sealing as well. Many cleaners effective in removing dirt and efflorescence are a mix of detergent and acid. Cleaners with strong acids will change the color of the pavers slightly. The degree of change can be controlled by the type of acid in the cleaner, its concentration and the length of time on the pavers. Proprietary cleaners will give specific instructions on their application. These directions should be followed. In order to achieve proper results, cleaners should be tried on a small area to test results and any color changes. The concentration and time on the pavement can be adjusted accordingly. Protective clothing and goggles should always be worn when using acidic solutions.

Anticipate where the cleaning fluids will drain, i.e, across the pavement and not onto grass or vegetation. Sediment or cleaners allowed to pond in low spots may stain the pavers. If unsure of the runoff direction, test drainage with ordinary water first to identify any trouble spots. Be sure to rinse these areas thoroughly. Turn off all automatic sprinkler systems during cleaning, sealing and drying.

Professional Cleaning Methods

For most jobs, cleaning should be handled by a professional company experienced in the use of cleaners and spray equipment. Professionals typically use a pressure washer and an applicator to apply efflorescence cleaner (when needed). The various methods for applying joint sand stabilizers and sealers are covered later.

A high pressure sprayer applies cleaner and water between 600 and 2,000 psi (4.1 and 13.8 MPa), and at a rate between 6 and 12 gallons/minute (22 and 45 liters/minute). See Figure 2. The rate of flow is adjusted to ensure sufficient rinsing. The pressure loosens dirt and pushes water from the surface without the need for scrub brushes. The nozzle type and its distance from the paver surface influences the effectiveness of the cleaning as well. A nozzle that creates a wide spray enables a large area to be covered efficiently and prevents sand from being washed from the joints. A low angle of attack from a wide nozzle spray will also reduce the risk of dislodging joint sand.

Cleaners to remove efflorescence are applied with a low pressure pump spray 30 to 100 psi (0.2 to 0.7 MPa). A shower type spray nozzle will help ensure even distribution of the cleaner. Cleaning

chemicals are applied, allowed to sit an appropriate time, then rinsed away with a high pressure sprayer. The final rinse should be water only. A large amount of water is more important to rinsing than high pressure.

For small areas, an adequate cleaning job can be achieved without this equipment. Such areas include residential patios, walks, or small driveways. Cleaners can be applied by hand, the pavers scrubbed to remove dirt and efflorescence, then thoroughly rinsed with water from a garden hose. Scrub brushes with steel bristles are not recommended. They will loosen from the brush, rust, and leave stains. Brass or plastic bristles are acceptable. This method of cleaning is for do-it-yourselfers who wish to refurbish a small area of pavers.

The additional time required to clean and seal pavers without the help of a professional should be weighed against investing in a competent company to do the job. Professionals have the equipment and experience with the various chemicals. They can achieve the highest level of results in the least amount of time.

Efflorescence and Its Removal

Efflorescence is a whitish powder-like deposit which can appear on concrete products. When cement hydrates (hardens after adding water), a significant amount of calcium hydroxide is formed. The calcium hydroxide is soluble in water and migrates by capillary action to the surface of the concrete. A reaction occurs between the calcium hydroxide and carbon dioxide (from the air) to form calcium carbonate, then called efflorescence.

Efflorescence does not affect the structural performance or durability of concrete pavers. The reaction that takes place is the formation of water soluble calcium bicarbonate from calcium carbonate, carbon dioxide and water. It may appear immediately or within months following installation. Efflorescence may reach its peak in as short as 60 days after installation. It may remain for months and some of it may wear away. If installation takes place during dry period of the year, the next cycle of wet weather may sometimes be necessary for efflorescence to materialize.

If there is a need to remove deposits before they wear away, best results can be obtained by using a proprietary efflorescence remover. The acid in proprietary cleaning chemicals is buffered and blended with other chemicals to provide effective cleaning without damage to the paver surface. Always refer to the paver supplier or chemical company supplying the chemicals for recommendations on proper dilution and application of chemicals for removal of efflorescence. They are generally applied in sections beginning at the top of slope of the pavement. If the area is large, a sprayer is an efficient means to apply the cleaner. The chemicals are scrubbed on the surface, then rinsed away. Results can be verified after letting the area dry for at least 24 hours. In most instances one application is sufficient. However, in severe instances of efflorescence, a second application may be necessary. Contact the manufacturer of the cleaning product to determine if a second application will not discolor the pavers or expose some aggregates. Note: Protective clothing, chemical resistant rubber boots and gloves, and eye goggles should be worn when applying acid or alkalies.

Figure 2. Pressurized cleaning equipment used by professional cleaning and sealing companies can bring out the best appearance from pavers.

Joint Sand Stabilizers And Sealers

Stabilizer and sealers are two distinct products sometimes with overlapping functions. Joint sand stabilizers help secure sand in the joint after it has been installed. Their primary function reduces the risk of removal of joint sand from flowing water, wind, aggressive cleaning, tire action and intrusion of organic matter, seeds and ants.

Joint sand stabilizers come in liquid and dry applied forms. Some liquid stabilizers are made of the same materials as sealers, but with a higher solids content with additional wetting agents. When applied to the paver surface and joints, stabilizers can make the surface easier to clean and prevent staining in a manner similar to sealers. Depending on the chemical contents, liquid stabilizers may or may not change the appearance of the paver surface.

All surface sealers are applied as liquids. Their primary function is providing additional protection to concrete paver surfaces. Such chemicals can be similar to products used to seal cast-in-place concrete slabs. Sealers are applied to the entire surface of an installation to add further protection from stains, oils, dirt, or water. Occasionally, sealers are applied to pavers during manufacturing. Whether applied in a factory or on a site, most sealers change the appearance of the paver surface by darkening it and enhancing the surface color. Since liquid sealers penetrate the joint sand to some extent during application, they secondarily provide some stabilization.

Joint Sand Stabilizers

Liquid and dry applied stabilizers provide initial protection against joint sand loss. They accelerate joint sealing that can normally occur from a combination of atmospheric dust deposits, dirt and sediment that finds its way to the pavement, and contributions from passing tires. Stain removal, efflorescence removal, and overall surface cleaning should precede application of liquid stabilizers in new construction. None of these preparatory treatments are needed prior to the application of a dry applied stabilizer. It is applied first with the joint sand to complete the paver surface and begin interlock. Stain and efflorescence removal, cleaning and sealing can be done subsequently.

Given the wide range of joint sand stabilizers and proprietary formulations, it is best to consult with the manufacture to determine expected lifespan and/or reapplication rates.

Joint sand stabilization is generally optional and not required for many interlocking concrete pavements. Sand in joints will likely stabilize over time without additional treatment as a result of silts or other fines working their way into spaces between the

Figure 3. This liquid joint sand stabilizer is applied with a low-pressure sprayer and squeegeed across the surface after allowing some time for soaking into the joints. This helps maintain slip and skid resistance of the paver surface.

Figure 4. Liquid joint sand stabilizers can deepen the surface color slightly and they provide some surface sealing as well. Tumbled pavers shown here have wider joints than other shapes. These type of pavers can require stabilization of the joint sand.

Figure 5. Joint sand can be pre-mixed and delivered to the site (typically in bags), or mixed with stabilizer at the site, then swept into the joints, compacted for consolidation in them to create interlock, and wetted to activate the stabilizer.

sand particles. The rate of stabilization depends on the amount and sources of traffic, plus sources of fines that work their way into the joints from traffic over time.

There are some applications where early stabilization of the joints is important to maintaining functional performance of the paver surface. For example, stabilization is recommended on high slope applications over 7% and on applications where the slope is less than 1.5%. Applications on high slopes will help prevent washout of joint sand. Stabilizers in very low slope or flat areas can help reduce infiltration of standing water.

Stabilization benefits pavements subject to aggressive, regular cleaning. Examples might include amusement parks and restaurant exteriors. Pavements that see regular, heavy rainfall can benefit from stabilization of the joint sand. Surfaces that experience concentrated water flow such as gutters receiving sheet flow from large areas or at the drip lines under the eaves of buildings will better resist erosion of joint sand if stabilized.

Stabilizers have been effective in securing joint sand in places subject to high winds such as in desert climates. They can prevent joint sand displacement from high-speed tire traffic. Like sealers, joint and stabilization materials reduce the potential for weeds and ants in the joints. In residential applications stabilization at downspouts and under eaves helps keep joint sand in place. Tumbled pavers (cobble stone-like units) and circular patterns have wider joints than other paver shapes. Tumbled pavers may require stabilized joint sand between them if they have slightly irregular sides and wide joints.

Figure 6. Whether using liquid or dry joint stabilization materials, the surface of the pavers should be cleaned with a blower or broom after the joint sand is compacted into the joints.

Figure 7. Dry-applied joint sand with a stabilizer is wetted in order to activate it and stiffen the sand. Once the joints dry, they are stabilized.

Studies on the permeability of the surface of interlocking concrete pavements have indicated ranges between 10% and 20% perviousness (2). The rate of permeability depends on several factors. They include the fineness of the joint sand (percent of material passing the No. 200 or 0.075 mm sieve), the joint widths, slope, consolidation of the sand plus the age of the installation. Newly placed pavers have higher permeability (as much as 25%) than installations trafficked for several years. Sealers and joint sand stabilizers can contribute to long-term performance by reducing infiltration of water to the bedding sand and base.

Liquid Penetrating Stabilizers

These are water or solvent-based with the primary resin or bonding agent being an acrylic, epoxy, modified acrylic, or other polymers as solids (by volume) typically 18% to 28%. Solvent or water carries the solids into the joint sand. They will evaporate and leave the solids behind as the binding agent. Modifiers such as epoxy resins may also add to the ability of the product to create a solid matrix in the joint sand. When initially applied, liquid stabilization materials should be allowed to penetrate at least 3/4 inch (20 mm) into the joint sand. A mock-up is beneficial in determining application rates for specific products, joint sands, and for specific job site conditions.

Joint sand gradation can affect the depth of penetration of the liquid stabilizer. The amount of fines or material passing the No. 200 (0.075 mm sieve) can influence the depth of penetration. A joint sand gradation with less than 5% passing the No. 200 (0.075 mm) sieve can allow better penetration of liquid stabilizers. A job site mock-up should be tried to determine the penetration rate. The mock-up also will determine the appropriate application rate.

Prior to applying liquid materials, the surface should be clean and dry and any efflorescence removed from the pavers. Either a broom or leaf blower can efficiently remove excess sand.

Some successful methods of application involve applying liquid joint stabilizers with low pressure, high volume spray, followed immediately by a squeegee to move the material into the joints. See Figure 3. Other methods use rollers, watering cans, or hand pumped, garden-type sprayers. Some equipment has multiple spray nozzles and mechanized rollers and/or squeegees. All application methods must provide uniform dispersion and effective penetration.

Liquid stabilizers bind the sand in the joint and secondarily provide sealing of the concrete paver surface. All liquid based stabilizers create some change in the appearance of the pavers. This ranges from a slight color enhancement, a modest sheen, to a high gloss. Like sealers, cured liquid stabilizers that remain on the surface of the pavers enhance their color, inhibit fading, and protect against staining. It also makes the paver surface easier to clean and maintain (Figure 4). However, joint sand stabilization will last significantly longer than the enhancement of the surface appearance.

Dry Joint Sand Stabilizers

These are dry additives mixed with joint sand. The additives are organic, inorganic, or polymer compounds that stiffen and stabilize the joints when activated by water applied to the joint sand. Additives come either pre-mixed with bagged joint sand, or are sold separately as an additive mixed with the joint sand on the job site per the supplier's instructions. The additive is often mechanically mixed for consistency. Dry stabilizers are appropriate for residential settings, parking lots, bike lanes, plazas, and other areas with low velocity wheel loads or areas without concentrated water flow. They are convenient for application by homeowners. Some dry stabilizers have been successfully used in high traffic streets.

The pavers are initially compacted into the bedding sand. Joint sand is applied to the surface with a stabilizer additive mixed in it. See Figure 5. It is then compacted into the joints with a plate compactor like all interlocking concrete pavement installations. After compaction and removal of all sand from the paver surface, the joints are wetted. When dry, the material in the sand stabilizes the full depth of the joint and it helps maintain interlock among the pavers. For either pre-mixed or job site mixed additives, a job site mock-up is beneficial for determining the depth of stabilization. The mock-up will determine the rate and application method of water to ensure full activation of the stabilizer. A mock-up will confirm a consistent method for uniform distribution of the additive in the sand for job site mixed additives in particular.

Prior to application, blowing or sweeping the surface clean is recommended. See Figure 6. Since water activates these products, no moisture should be present on the surface or in the joints until they are ready to be placed in the joints. Once the pavers and joint sand are compacted, the joints are full of sand, and all excess sand is removed from the surface, water is added to activate the bonding agent. The water is applied as a light, wide spray, and allowed to collect and soak into the joints (Figure 7). A narrow spray should not be used because it can dislodge sand from the joints. It is imperative to immediately remove any excess moist joint sand that inadvertently gets on the surface of the pavers. Otherwise, once it is moistened and allowed to cure on the surface, the sand will need to be removed with hot water. Some stabilizers may require removal with a wire brush or a pressure washer. Dry products will not leave a surface sheen like liquid stabilization products. This can be beneficial for a contractor or owner who needs to stabilize isolated areas through selected application of the product.

Installation, Functional and Structural Considerations

Liquid and dry applied joint stabilizers are not a substitute for recommended installation practices. Prior to their application, all liquid stabilization products require that the joint sand be compacted and consolidated in the joints until full. Some dry stabilizers require mixing with joint sand then sweeping, filling, and compacting the sand and pavers until the joints are full. Other stabilizers are premixed in bags and are ready for filling the joints. Stabilizers resist many of environmental conditions that lead to functional deterioration of the paver surface. However, stabilizers do not add to the structural (load bearing) capacity of the pavement. Therefore, structural calculations for base thickness design should not consider a joint sand stabilizer.

Sealers

Uses

Sealers reduce the intrusion of water, stains, oils and dirt into the paver surfaces. Like stabilizers, application of a sealer follows stain removal, efflorescence removal and overall surface cleaning. Sealers are used for visual and functional reasons. They offer visual improvement by intensifying the paver colors. Some will add a

Figure 8. Before and after application of an acrylic sealer shows how it deepens the appearance of concrete pavers.

Figure 9. Sealers resist stains which makes them ideal for high use areas where they might occur.

Photo courtesy of Resiblock

glossy sheen or "wet" look to the pavement (see Figure 8). Other sealers offer some color enhancement and produce a low sheen, or a flat finish.

Sealers offer many functional advantages. They can protect pavers from stain penetration. They are useful around trash receptacles, fast food restaurants, driveways, other areas subject to stains, and where oil drippings are not wanted (see Figure 9).

Like stabilizers, sealers are also useful in stopping unwanted insects and weeds. Sealers can stabilize joint sand between pavers cleaned by vacuum sweeping equipment. They can help maintain the sand in the joints under high velocity water flows. Where solvents may be spilled onto pavers, elastomeric urethanes and certain water based sealers have been successfully used to prevent their penetration. Likewise, special urethane sealers have been used to seal and stabilize joint sand subject to propeller wash, jet engine fuels and exhaust in commercial and military airports (2).

Types of Sealers for Concrete Pavers

Table 1 lists the various types of sealer for concrete pavers. The table suggests applications and compares important properties (3). The sealer manufacturer or supplier should be consulted prior to using any sealer to verify that their product will perform in the environment planned for its use. Sealers not recommended for use with pavers are alkyds, esters, and polyvinyl acetates. Epoxies and silicones are generally not used on concrete pavers.

Solvent and Water Based Sealers

Like stabilizers, sealers can be either solvent or water based. Solvent based sealers consist of solids dissolved in a liquid. Solvent based products carry the dissolved solids as deep as the solvent will penetrate into the concrete paver. After the solvent evaporates, the sealer remains.

Water based sealers are emulsions, or very small particles of the sealer dispersed in water. Water based sealers penetrate concrete as far as the size of the particles will permit. After the water evaporates, typically at a slower rate than solvents, the remaining particles bond with the concrete and to each other. These particles cannot penetrate as deeply as those carried by solvents. Water based sealer curing time will vary with the temperature, wind conditions and humidity.

Silanes/Siloxanes

Silanes and siloxanes penetrate concrete well. Silanes are the simpler form that, when exposed to moisture, begin to link up to other silanes. Siloxanes do the same linking together. Both chemicals become a polymer, curing as a film in the capillaries of the concrete. A hydrophobic barrier to moisture is created, preventing moisture from entering but allowing the concrete to "breathe" or release water vapor.

Because silanes and siloxanes reduce moisture from entering the concrete, they can deter efflorescence from appearing on the surface of concrete pavers. They initially enhance colors and produce a flat, no-gloss finish on the paver surface. This makes silanes and siloxanes very suitable on exterior areas for resisting efflorescence when a glossy surface is not desired.

Silanes and siloxanes do not resist penetration of petroleum stains unless they have additives specifically for that purpose. When required, proprietary mixtures with additives can increase petroleum stain resistance. Other additives can ensure greater consistency in the color of pavers and avoid a blotchy appearance.

Silanes have smaller molecules, so they penetrate farther into the concrete than larger siloxane molecules. However, they are more volatile (tend to evaporate) until they bond to the concrete paver. Silane sealers generally require a higher percent of solids to counteract their rate of evaporation. Therefore, silanes tend to be more expensive than siloxanes.

Silanes and siloxanes are typically used as water repellents for concrete bridge decks, parking garages, and masonry walls. Their primary use for reinforced concrete structures is to prevent the ingress of chloride ions from deicing salts (4). This intrusion causes reinforcing steel corrosion in the concrete, and a weakened structure. Their ability to decrease intrusion of chloride materials provides additional protection of pavers subject to deicing salts or salt air, such as walks, streets, parking lots, plaza roof and parking decks. They are also useful around pool decks to minimize degradation from chlorine.

Most silane and siloxane sealers are solvent based. Certain manufacturers offer water based products as well. These products may have a very short shelf life after the silane or siloxane has been diluted with water. The user should check with the manufacturer on the useful life of the product.

Acrylics

Acrylic sealers can be solvent or water based. They enhance paver colors well and create a gloss on the surface. Acrylic sealers provide good stain resistance. Their durability depends on traffic, the quality of the acrylic and the percentage of solids content. They provide longer protection from surface wear than silanes or siloxanes.

Acrylic sealants are widely used in residential and commercial paver applications. They generally last for a few years in these applications before re-coating is required. Acrylics specifically developed for concrete pavers do not yellow over time. When they become soiled or worn, pavers with acrylics can be easily cleaned and resealed without the use of extremely hazardous materials.

Acrylics should not be used on high abrasion areas such as industrial pavements or floors. Water based acrylics perform well for interior applications. They may be allowed by municipalities that regulate the release of volatile organic contents (VOCs) in the atmosphere.

Urethanes

As either solvent or water based, polyurethanes produce a high gloss and enhance the color of pavers. Aromatic urethanes should contain an ultra-violet (UV) inhibitor to reduce yellowing over time. The product label should state that the sealer is UV stable. Urethanes themselves are more resistant to chemicals than acrylics.

While aliphatic urethanes can be used for coating the surface of pavers, elastomeric (aromatic or aliphatic) urethanes should be used where the primary need is to stabilize joint sand. For airfield

and gas station applications, the urethane should have a minimum elongation of 100% per ASTM D 2370, *Standard Test Method for Tensile Properties of Organic Coatings*. Urethanes resist degradation from petroleum based products and de-icing chemicals. This makes them suitable for heavy industrial areas, as well as airfield and gas station pavements.

Urethanes cannot be rejuvenated simply by re-coating. If urethane sealers must be removed, methylene chloride or sand blasting is often necessary. Methylene chloride is a hazardous chemical, and is not acceptable for flushing into storm drains. It should not be allowed to soak into the soil. Therefore, urethane removal is best handled by professionals.

Table 1—Properties of Sealers for Concrete Pavers—Confirm application and properties with supplier.

	Patios, walks, pool decks	Residential/ Com1ercial drives	Gas Stations Airports	Areas subject to chlorine & heavy de-icing salts	Finish	Enhances color	Joint sand stabilizer	UV resistant	Can be re-coated	Ease of removal	Price
Silane	Yes	Yes		Yes	Flat	*		Yes	Yes	Mod.	++
Siloxane	Yes	Yes		Yes	Flat	*		Yes	Yes	Diff.	++
Acrylic	Yes	Yes			Gloss	Yes	Yes	Varies	Yes	Diff.	+
Urethane	Yes	Yes	Yes	Yes	Gloss	Yes	Yes	Varies	No	V. Diff.	++
Water-based Epoxy	Yes	Yes	Yes	Yes	Semi-Gloss	Yes	Yes	Yes	Yes	Mod.	++

*Initially, then diminishes. Diff.=Difficult V. Diff.=Very Difficult +=Moderate Price ++=Higher price

Water Based Epoxy Sealers

Water based epoxy sealers combine other types of sealers with epoxy. They cure by chemical reaction as well as by evaporation. They have very fine solids allowing them to penetrate deep into concrete while still leaving a slight sheen to enhance the color of the pavers. They generally do not change the skid resistance of the surface. When applied, water based epoxy sealers create an open surface matrix that allows the paver surface to breathe thereby reducing the risk of trapping efflorescence under the sealer should it rise to the surface. They resist most chemicals and degradation from UV radiation. These characteristics make these types of sealers suitable for high use areas such as theme parks and shopping malls. The elasticity and adhesion of these sealers make them appropriate for heavily trafficked street projects and areas subject to aggressive cleaning practices.

Sealing Procedures

All dirt, oil stains and efflorescence must be removed prior to sealing. The cleaned surface must be completely dry prior to applying most sealers. Allow at least 24 hours without moisture or surface dampness before application. The pavers may draw efflorescence to the surface, or the sealer or liquid stabilizer may whiten under any one of these conditions:

- The surface and joints are not dry
- The pavers have not had an adequate period of exposure to moisture
- There is a source of efflorescence under the pavers (i.e, in the sand, base, or soil) moving through the joint sand and/or pavers
- The sealer is not breathable, i.e., does not allow moisture to move through to the surface of the paver and evaporate.

If the base under the pavers drains poorly, the sealer is applied to saturated sand in the joints, or is applied too thick, the sealer can become cloudy and diminish the appearance of the pavers. In this situation, the sealer must be removed or re-dissolved. Consult your sealer supplier for advice on treating this situation.

Cover and protect all surfaces and vegetation around the area to be sealed. For exterior (low-pressure) sprayed applications, the wind should be calm so that it does not cause an uneven application, or blow the sealer onto other surfaces. For many sealers, especially those with high VOC's, wear protective clothing and mask recommended by the sealer manufacturer to protect the lungs and eyes.

Sealers can be applied with a hand roller if the area is small (under 1000 ft^2 or 100 m^2). For larger areas, more efficient application methods include a powered roller, or a low pressure sprayer. Sealers are often applied with a foam roller to dry pavers having clean surfaces and chamfers. However, the use of a squeegee to spread the sealer will avoid pulling joint sand out of the joints. See Figure 10.

Sealer should be spread and allowed to stand in the chamfers, soaking into the joints. Penetration into the joint sand should be at least 3/4 inch (20 mm). The excess sealer on the surface is pushed to an unsealed area with a rubber squeegee. The action of a squeegee wipes most of the sealer from the surface of the pavers while leaving some remaining in the chamfers to eventually soak into the joints. Generally only one coat is required.

For other applications, follow the sealer manufacturer's recommendation for application and for the protective gear to be worn during the job. With some sealers that recommend two coats, the first coat

Figure 10. Urethane is applied with squeegees to stabilize joint sand between pavers on aircraft pavement.

is usually applied to saturation. A light second coat, if needed, can be applied for a glossy finish. Be careful not to over apply the sealers such that the surface becomes slippery when cured. For water based sealers requiring two coats, always apply the second coat while the first coat is still very tacky. Prevent all traffic from entering the area until the sealer is completely dry, typically 24 hours.

If spraying sealer on the pavers, care should be taken to prevent the spray nozzle from clogging and causing large droplets to be unevenly distributed on them. This is most important for water based sealers. This can cause a poor appearance and performance.

Sealers normally require reapplication after a period of wear and weather. The period of reapplication will depend on the use, climate, and quality of the sealer.

Safety Considerations

Adequate slip (foot) and skid (tire) resistance of concrete pavers should be maintained with properly applied joint sand stabilizer or surface sealers. See *ICPI Tech Spec 13 – Slip and Skid Resistance of Interlocking Concrete Pavements* for test methods and guidelines. See www.icpi.org to obtain this and all ICPI Tech Spec technical bulletins. The manufacturers of stabilization and sealers should be consulted concerning slip and skid resistance performance characteristics under wet and dry conditions.

Some commercial or industrial pavement use painted pavement markings. Consult with the stabilizer and sealer manufacturers for compatibility of their materials with pavement markings. Where there are pavement markings, applications using high gloss materials should be avoided as they can increase the difficulty of reading pavement markings under certain light conditions.

Federal, state/provincial, and some municipal governments regulate building materials with high volatile organic contents (VOCs). The restrictions usually apply to solvent based sealers. The VOC level of a sealer refers to the pounds per gallon (or grams per liter) of solvent which evaporates from the sealer, excluding the water. VOCs have been regulated since they can contribute to smog. Most water based sealers comply with VOC restrictions and some solvent based products may comply as well. The user should check with the sealer supplier to verify VOC compliance in those areas that have restrictions.

Many solvent based products are combustible and emit hazardous fumes. Therefore, flame and sparks should be prevented in the area to be sealed. Never use solvent based sealers in poorly ventilated or confined areas.

Persons applying joint sand stabilizers and sealers should wear breathing and eye protection as recommended by the manufacturer, as well as protective equipment mandated by local, state/provincial, or federal safety agencies. Follow all label precautions and warnings concerning handling, storage, application, disposal of unused materials, and those required by all government agencies.

The U.S. Federal Government and Canadian Government require that all shipments of hazardous materials by common carrier must be accompanied by a Material Safety Data Sheet (MSDS). All chemical manufacturers must supply sheets to shippers, distributors and dealers of cleaners, joint sand stabilizers, and sealers if the materials are hazardous. The MSDS must accompany all shipments and be available to the purchaser on request. The MSDS lists the active ingredients, compatibility and incompatibility with other materials, safety precautions and an emergency telephone number if there is a problem in shipping, handling or use. The user should refer to the MSDS for this information.

References

1. Kuenning, W., *Removing Stains from Concrete*, The Aberdeen Group, Addison, Illinois, 1993.
2. Madrid, G. G., et al., "Water Infiltration through Concrete Block Pavements up to 26 Years Old," in *Proceedings of the 7th International Conference on Concrete Block Paving*, Concrete Manufacturers Association, South Africa, 2003.
3. Emery, J. A., Stabilization of Jointing Sand in Block Paving, *ASCE Journal of Transportation Engineering*, Vol. 119, No.1 January/February, 1993, American Society of Civil Engineers, New York, pp. 142-148.
4. Thorp, E., "Protection of Concrete with Sealers, Coatings and Membranes," *Concrete Repair Bulletin*, March/April 1993, International Concrete Repair Institute, Des Plaines, Illinois, pp. 4 ff.
5. Cady, P.D., "Sealers for Portland Cement Concrete Highway Facilities," *Synthesis of Highway Practice 209*, National Cooperative Highway Research Program, Transportation Research Board, National Academy Press, Washington, D.C., 1994.

icpi
Interlocking Concrete Pavement Institute®

14801 Murdock Street
Suite 230
Chantilly, VA 20151

Tel: 703.657.6900
Fax: 703.657.6901
E-mail: icpi@icpi.org
www.icpi.org

In Canada:
P.O. Box 1150
Uxbridge, ON L9P 1N4
Canada

The content of ICPI Tech Spec technical bulletins is intended for use only as a guideline. It is not intended for use or reliance upon as an industry standard, certification or as a specification. ICPI makes no promises, representations or warranties of any kind, expressed or implied, as to the content of the Tech Spec Technical Bulletins and disclaims any liability for damages resulting from the use of Tech Spec Technical Bulletins. Professional assistance should be sought with respect to the design, specifications and construction of each project.

The Strength of a National Company With Local Customer Service
PAVESTONE
Improving Your Landscape™
pavestone.com

Tech Spec 6

icpi
Interlocking Concrete Pavement Institute

Reinstatement of Interlocking Concrete Pavements

Introduction

Concrete pavers can act as a zipper in the pavement. When the need arises to make underground repairs, interlocking concrete pavements can be removed and replaced using the same material. Unlike asphalt or poured-in-place concrete, segmental pavement can be opened and closed without using jack hammers on the surface and with less construction equipment. This results in no ugly patches and no reduction in pavement service life. In addition, no curing means fast repairs with reduced user delays and related costs.

The process of reusing the same paving units is called reinstatement. This Tech Spec covers how to reinstate or "unzip and zip" interlocking concrete pavement. The following step-by-step procedure applies to any interlocking concrete pavement, including pedestrian areas, parking lots, driveways, streets, industrial, port and airport pavements.

The methods described here will work for permeable interlocking concrete pavements with a few exceptions. The excavation through the open graded base and subbase aggregates will require shallower side slopes. This will require a larger area of of pavers to be removed before excavation. Additionally, aggregates placed back into the excavation and compacted should be new materials meeting the specifications of the original project.

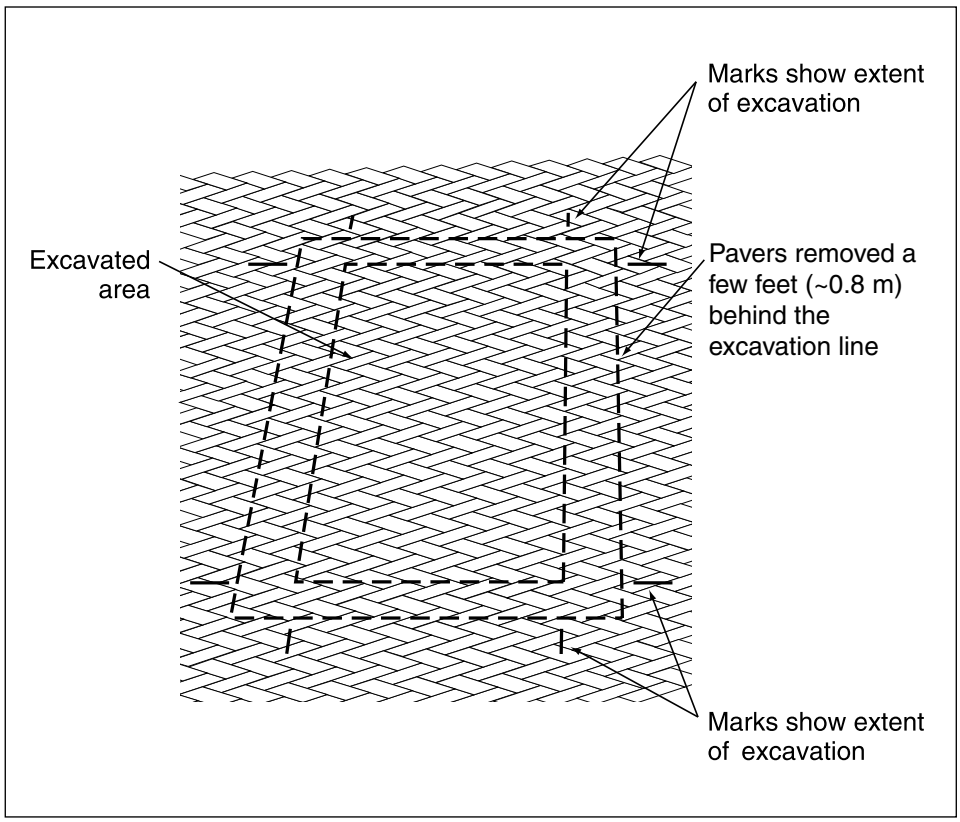

Figure 1. Pavement markings show the extent of paver removal and trench area.

© 1996 ICPI Tech Spec No. 6 • Interlocking Concrete Pavement Institute—Revised October 2014

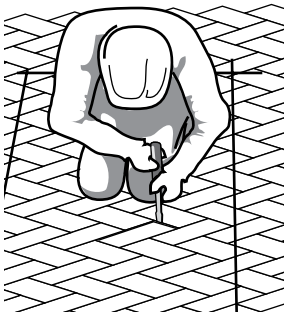

Figure 2. Removing joint sand surrounding the first paver to be removed.

Figure 3. Prying the paver upwards with two large screwdrivers.

Figure 4. Prying with a screwdriver and pulling the paver out.

Step 1—Locate Underground Utilities in the Area to be Excavated

The location and depth of existing utilities should be established prior to excavating. Many localities have one telephone number to call for obtaining marked utility locations. Set cones, traffic signs, or barricades around the area to be excavated according to local and state or provincial standards.

Determine and mark the area of pavers to be removed. Remove pavers a few feet (~0.8 m) wider on each side of the trench opening. This shoulder around the opening should consist of undisturbed bedding sand. It will be used as a guide for reinstating the sand and pavers later (Figure 1).

Paint or crayon should be used to mark the area of pavers for removal. The trench area can be marked on the pavers as well. Paint may be necessary to establish a more permanent marking than crayon, especially if there is vehicular traffic, or if there will be an extended period of time between marking and excavation. The same paving units will be reused, so in some instances paint on them may not be desirable, especially if there is little traffic to wear it away over time.

Figure 5. Using a paver extractor to remove a paver

Step 2—Remove the First Paver

Locate the first paver to be removed. This is typically at one end of the marked area. Scrape the sand from the joints around the first paver using a putty knife or small trowel (Figure 2). Carefully pry each side upward with one or two large screwdrivers. Begin prying on the short ends of the paver. The paver will rise a small distance with each prying (Figure 3). When the paver is high enough to grasp, wiggle it loose, pulling upward. If necessary, pry with a screwdriver using one hand while pulling upward with the other (Figure 4). Sometimes, one end of the paver can be pulled above the others so a pry bar can be inserted under it. The paver can then be pried out.

Paver extractors can also be used to remove the first paver and subsequent ones (Figure 5). They are designed to clamp the paver tightly. These work most efficiently in removing the first paver if some of the joint sand is removed before clamping and pulling. Water can be applied to lubricate the joint sand to facilitate extraction.

If the pavement has been subject to vehicular traffic for a length of time, the first paver may be need to be broken in order to be removed. A small sledge hammer (3 lb. maul) applied to an appropriate chisel will break a paver into small pieces. Protective eye goggles should be worn during this procedure. Remove all broken pieces from the space until the bedding sand is completely exposed. Pneumatic hammers or cutting saws are generally not required to remove the first unit.

Figure 6. Prying out the remaining pavers

Step 3—Remove the Remaining Pavers

After the first one is removed, surrounding pavers can be loosened and pried out (Figure 6). Grab the pavers by the short end, as it offers less resistance than the long side (Figure 7). Remove pavers to the marks on the pavement for the opening.

Figure 7. Pulling out a paver by the short end provides greater leverage and makes extraction easier.

Sand sticking to the sides and bottoms of pavers can interfere with their reinstatement and compaction into the bedding sand. Scrape off sand from each unit as it is being removed. A small trowel, wide putty knife, wire brush, or another paver works well.

The direction of removal should consider where pavers are going to be stacked. Stack the pavers neatly near the opening, out of the way of excavation equipment such as backhoes or dump trucks. If the pavers need to be removed from the site, stack them on wooden pallets and secure them tightly so there is no loss during transit.

Equipment used to move pallets with pavers should be capable of lifting in excess of 3,000 lbs. (1,365 kg). If the pavers need to be moved only a short distance, then stack them directly on a paver cart at the opening and set them nearby. They will then be ready for pick up by the paver cart when reinstated.

For every project, a small stockpile of spare pavers should be stored and used for repairs during the life of the pavement. Weathering, wear and stains may change the appearance of removed pavers compared to spares kept in storage for repairs. When pavers are removed for base or utility repairs, all undamaged units should be retained for future reinstatement. Pavers from the stockpile that replace damaged or broken units should be scattered among the pattern of the existing reinstated pavers. This will reduce the visual impact of color variations.

Step 4—Remove the Bedding Sand

The removed pavers will reveal compacted bedding sand. It may be removed and reused, or removed during excavation of the base. For some projects with time constraints, the

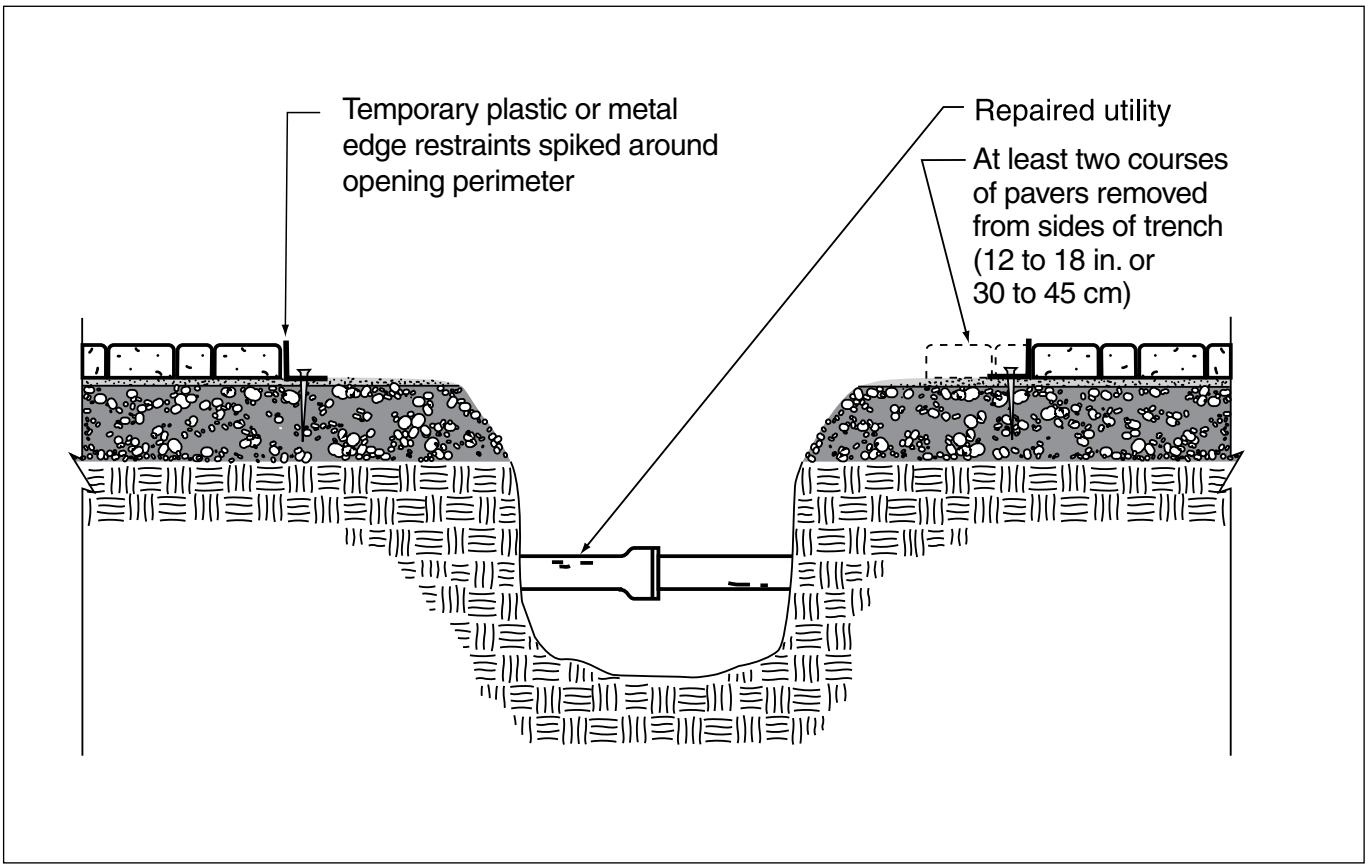

Figure 8. T-shaped cross section of the excavated opening

sand will probably be removed during excavation and not reused.

If the sand is reused, it may need to be loosened with rakes before removal by shoveling. The sand should be neatly stockpiled and kept free from soil, aggregate base, or foreign material. If the sand is mixed with these materials, it should not be reused, and it should be replaced with clean sand.

Whether or not it is reused, always leave an undisturbed area of sand 6 to 12 in. (15 to 30 cm) wide next to the undisturbed pavers. This area will provide a stable support for temporary edge restraints and for screeding the bedding sand after the base is reinstated.

Step 5—Excavate the Base Material and Soil

If aggregate base material is removed, it may be possible to stockpile it near the opening for reuse. Keep the aggregate base material separate from excavated subgrade soil. Any soil removed should be replaced with base material unless local regulations require reinstatement of the native soil. The final shape of the excavated opening should be T-shaped in cross section. (Figure 8). This helps prevent undermining and weakening of the adjacent pavement. Follow local codes on the use of shoring, as it may need to be inserted to prevent collapse of the trench sides.

Figure 9 illustrates temporary bracing with plastic or metal edge restraints around the perimeter of the opening. This is recommended practice. The restraints are pinned to the base using metal spikes. Bracing helps keep the undisturbed pavers in place during excavation and fill activities, and will enable reinstatement of units into the existing laying pattern without cutting them to fit.

Step 6—Replace the Base Material

After the repairs are complete, soil at the bottom of the trench should be compacted prior to placing and compacting the base material. Repairs typically use the same base material that was removed. A crushed stone aggregate base should be placed and compacted in 2 to 4 in. (50 to 100 mm) lifts (Figures 10 and 11). If the excavated base material was stabilized with asphalt or cement, it should be replaced with similar materials.

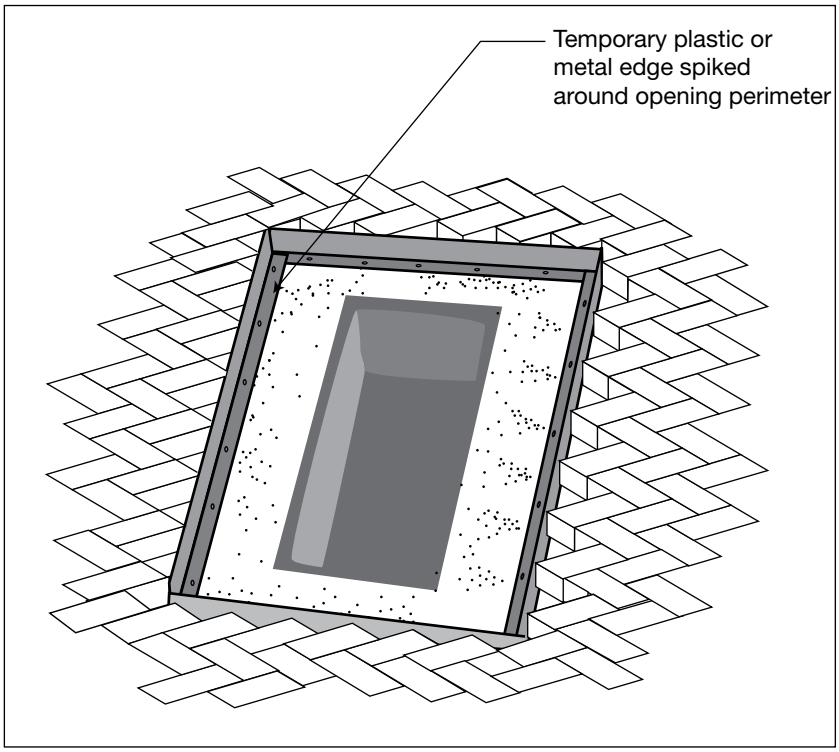

Figure 9. Temporary bracing at the pavement opening will help keep units in place during excavation, repairs and reinstatement.

Monitoring density of the compacted soil subgrade and base is *essential* to reinstating any pavement, including interlocking concrete pavements. It will help prevent rutting and premature failure. A dynamic cone penetrometer is an effective means for monitoring the density of each lift while working in the opening. If the soil or base material is too dry during compaction, a small amount of water can be sprayed over each lift prior to compacting. This will help achieve maximum density. A nuclear density gauge is recommended for checking the density of the completed compaction of the soil and base layers. A qualified civil engineer should monitor compaction for conformance to local standards.

If there are no local standards for compaction, a minimum of 98% standard Proctor density is recommended for the soil subgrade, and a minimum of 98% modified Proctor density for the base. Compaction equipment companies can provide guidelines on equipment selection and use on the soil and the base. For further guidance on compaction see *ICPI Tech Spec 2—Construction of Interlocking Concrete Pavements*.

The final elevation of the compacted base at the opening perimeter should match the bottom of the existing undisturbed sand layer that surrounds the opening. The elevation of the middle of the base fill placed in the opening should be slightly higher than its perimeter to compensate for minor settlement.

Controlled low-strength materials (CLSM) (sometimes called slurry mix, flowable fill, or unshrinkable fill) can be used in some applications as a replacement for unstabilized base materials (1). The fill can be made from aggregate bound with fly ash, pozzolans, or cement. Because it is poured from a truck, the fill will form around pipes and underground structures where soil or base backfill and compaction are difficult. Low-strength fill can be poured into undercuts and under pipes where it is impossible to fill and compact aggregate base. The material is also self-leveling.

Low-strength flowable fill requires a short curing time and can be used in freezing weather. It requires no compaction and with some mix designs, can be opened to traffic in 24 hours. Low-strength fill is stiffer than aggregate base and offers higher resistance to settling and rutting. This reduces deterioration of the pavement surface over time. In order to facilitate re-excavation, flowable fill should be made

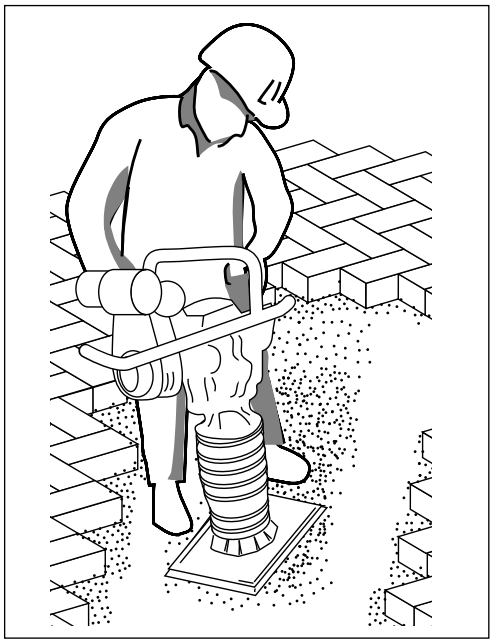

Figure 10. Compaction of the base in 2 to 4 in. (50 to 100 mm) lifts and monitoring density with a dynamic cone penetrometer or a nuclear density gauge are essential to minimizing settlement.

with a small amount of cement. Check with suppliers on the strength of in-place fill that is at least two years old, and on ease of excavation of these sites. The strength of the fill should not exceed 300 psi (2 MPa) after two years of service. Low-strength fill has been used successfully in Toronto and London, Ontario; Colorado Springs, Colorado; Cincinnati, Ohio, Kansas City, Missouri; Peoria, Illinois; and many other municipalities. It is generally more cost-effective than using aggregate base by reducing job time and future pavement repairs. Local ready-mix suppliers can be contacted for available mixes, strengths, installation methods and prices. See *ICPI Tech Spec 7—Repair of Utility Cuts with Interlocking Concrete Pavements* for further information on low-strength fill.

Step 7—Replace the Bedding Sand Layer

During the foregoing procedures, it is likely that the pavers and bedding sand around the opening were disturbed especially if no temporary edge restraints were placed to secure the pavers. If so, then remove an additional two rows of pavers, or back to an undisturbed course. Clean sand from these pavers and set them aside with the others. Be sure there is at least 6 to 8 in. (150 to 200 mm) of undisturbed bedding sand exposed after removal of the course(s) of pavers. This area of undisturbed sand can be used to guide screeding of fresh bedding sand over the compacted and leveled base. Prior to screeding, carefully remove any temporary edge restraints so that adjacent pavers remain undisturbed.

Spread the bedding sand across the base to about two thirds of its full thickness. Do not use the sand to compensate for low places in the surface of the base. Low areas should be filled with base material and compacted. Spread the remaining thickness of sand.

The undisturbed pavers on opposite sides of the opening can be used to guide screeding. It may be necessary to remove a few courses of pavers to straighten the edge of the pavers (Figure 12).

Metal screed pipes are placed on the base and in the bedding sand to control its thickness. The base should have a slight "crown" or rise in the center of the reinstated base. A crown helps compensate for minor settling after the pavers are replaced. Furthermore, as the pavers settle slightly from traffic, the reinstated surface will stiffen, increasing its structural capacity.

Step 8—Reinstate the Pavers

Pull and secure string lines across the opening along the pavement joints every 6 to 10 ft. (2 to 3 m). By following the string lines, joints of reinstated pavers will remain aligned with undisturbed ones. Lay the remaining pavers from the smaller end of the opening, generally working "uphill," i.e., from a lower elevation of the pavement to the higher one. Minor adjustments to the alignment and spacing of joints can be made with pry bars or large screw drivers. Make adjustments prior to compacting the pavers (Figure 13).

Place the pavers in the original laying pattern and compact them with at least two passes of a minimum 5,000 lbf. (22 kN) plate compactor. The path of the plate compactor should overlap onto the undisturbed pavers. Spread joint sand and compact again until the joints can no longer accept sand (Figure 14). Sweep away excess sand. The elevation of the reinstated pavers after compaction should be no higher than 1/8 in. (2 mm) at the edges and 3/16 in. (5 mm) at the center. Traffic and minor settlement will compact the pavers to a level surface. After a short period of time, the repaired area will be undetectable (Figure 15).

Applications such as airports or gas stations require joint sand stabilizers. If an area is reinstated in such uses, then a stabilizer will need to be re-applied to the joints. See *ICPI Tech Spec 5—Cleaning and Sealing Interlocking Concrete Pavements* for advice on sealers and joint sand stabilizers.

Production rates are highly variable and are dependent on several factors which include original installation methods, crew experience, weather, traffic, site access, a steady flow of

Figure 11. Trench filled with compacted aggregate base. Temporary edge restraints should be used around the opening perimeter.

Figure 12. Screeded bedding sand. Note that a few courses of pavers are removed to create even sides for screeding. Installing temporary edge restraints prior to excavating is preferred practice.

materials around the repair site, and the number of pavers to be cut. An experienced crew will reinstate pavers with little or no cutting, aligning reinstated pavers with existing joint lines, pattern, and spacing between the units.

Although existing pavers can be used in reinstatement, there may be projects where it is more cost-effective to remove and replace the area with new pavers. Stabilized joint sand may be difficult to remove and it will probably be more cost effective to discard the old pavers. An experienced paver installation contractor can provide guidance on cost-effective approaches for each reinstatement project.

Municipalities, utility companies and other users should use experienced ICPI Certified Installer to reinstate interlocking concrete pavers. Others may use in-house labor which should be trained in the procedures described above. Contact a local Interlocking Concrete Pavement Institute paver installation contractor member to assist with training. Successful reinstatement using experienced contractors will result in successful reinstatement jobs that leave no ugly patches nor do they weaken the pavement. See Figures 15 and 16.

Figure 13 (Left). Adjusting joint spacing and alignment. Figure 14 (Right). Second and final compaction of the pavers. The first compaction occurs after the pavers are placed (no sand in the joints). The second compaction works the sand on pavers into the joints. This process causes the pavers to interlock.

Figure 15 and 16. Reinstated pavers leave no ugly patches nor do they weaken the pavement.

References

1. *Controlled Low Strength Materials (CLSM)*, ACI 229R-94, American Concrete Institute, Farmington Hills, Michigan, 1994.

icpi
Interlocking Concrete Pavement Institute

14801 Murdock Street
Suite 230
Chantilly, VA 20151

Tel: 703.657.6900
Fax: 703.657.6901
E-mail: icpi@icpi.org
www.icpi.org

In Canada:
P.O. Box 1150
Uxbridge, ON L9P 1N4
Canada

The content of ICPI Tech Spec technical bulletins is intended for use only as a guideline. It is not intended for use or reliance upon as an industry standard, certification or as a specification. ICPI makes no promises, representations or warranties of any kind, expressed or implied, as to the content of the Tech Spec Technical Bulletins and disclaims any liability for damages resulting from the use of Tech Spec Technical Bulletins. Professional assistance should be sought with respect to the design, specifications and construction of each project.

The Strength of a National Company With Local Customer Service
PAVESTONE
Improving Your Landscape™
pavestone.com

Tech Spec 7

icpi
Interlocking Concrete Pavement Institute

Repair of Utility Cuts Using Interlocking Concrete Pavers

North American cities have thousands of utility cuts made in their streets each year. Figure 1 shows a daily occurrence in most cities: repairs to underground utility lines for water, sewer, gas, electric, steam, phone, fiber-optic, or cable services. A sample is given below of the number of annual utility cuts in a few cities.

Billings, Montana	650–730
Boston, Massachusetts	25–30,000
Chicago, Illinois	120,000
Cincinnati, Ohio	6,000
Oakland, California	5,000
San Francisco, California	10,000
Seattle, Washington	10–20,000
Toronto, Ontario	4,000

The Costs of Utility Cuts

The annual cost of utility cuts to cities is in the millions of dollars. These costs can be placed into three categories. First, there are the initial *pavement cut and repair costs*. These include labor, materials, equipment, and overhead for cutting, removing, replacing, and inspecting the pavement, plus repairs to the utility itself. Costs vary depending on the size and location of the cut, the materials used, waste disposal, hauling distances, and local labor rates.

Second, there are *user* costs incurred as a result of the repair. They include traffic delays, detours and denied access to streets by users, city service and emergency vehicles.

User costs depend on the location of the cut. A repair blocking traffic in a busy center city will impose higher costs and inconvenience from delays than a cut made in a suburban residential street. There are downstream costs to users from utility repairs such as lost productivity due to delays, and damage to vehicles from poor pavement riding quality. While these losses are difficult to quantify, they are very present.

The third cost is subtle and long term. It is the *cost of pavement damage* after the repair is made. Cuts damage the pavement. Damage can range from negligible to substantial, depending on the quality of the reinstated area and the condition of the surrounding pavement. The damage reduces pavement life and shortens the time to the next rehabilitation. The need to rehabilitate damaged pavements earlier rather than when normally required has costs associated with it.

Several studies have demonstrated a relationship between utility cuts and pavement damage. For example, streets in San Francisco, California, typically last 26 years prior to resurfacing. A study by the City of San Francisco Department of Public Works demonstrated that asphalt streets with three to nine utility cuts were expected to require resurfacing every 18 years (1). This represented a 30% reduction in service life

Figure 1. Repairs to utilities are a common sight in cities, incurring costs to cities and taxpayers.

© 1996 ICPI Tech Spec No. 7 Interlocking Concrete Pavement Institute—Revised September 2013.

compared to streets with less than three cuts. Streets with more than nine cuts were expected to be resurfaced every 13 years. This represents a 50% reduction in service compared to streets with less than three cuts.

The report concludes that while San Francisco has some of the highest standards for trench restoration, utility cuts produce damage that extends beyond the immediate trench. "...even the highest restoration standards do not remedy all the damage. Utility cuts cause the soil around the cut to be disturbed, cause the backfilled soil to be compacted to a different degree than the soil around the cut, and produce discontinuities in the soil and wearing surface. Therefore, the reduction in pavement service life due to utility cuts is an inherent consequence of the trenching process."

A 1985 study in Burlington, Vermont, demonstrated that pavements with patches from utility cuts required resurfacing more often than streets without patches. Pavement life was shortened by factors ranging between 1.70 and 2.53, or 41% to 60% (2). Research in Santa Monica, California, showed that streets with utility cuts saw an average decrease in life by a factor of 2.75, or 64% (3). A 1994 study by the City of Kansas City, Missouri, notes that "street cuts, no matter how well they are restored, weaken the pavement and shorten the life of the street." It further stated that permit fee revenue does not

$$\text{Annual cost of pavement damage from utility cuts to one category of streets (local, collector thoroughfare, etc.)} = \text{Annual cost of resurfacing streets damaged by utility cuts} - \left[\text{Annual cost of resurfacing streets damaged by utility cuts} \times \left(\frac{\text{Number of years of life remaining before resurfacing streets with utility cuts}}{\text{Expected years of life before resurfacing if there are no utility cuts}}\right)\right]$$

Where the:

$$\text{Annual cost of resurfacing streets damaged by utility cuts} = \left(\text{percent of all resurfaced streets that are damaged by cuts}\right) \times \left[\text{Total annual cost of resurfacing all streets} \times \left(\frac{\text{Total miles (km) of streets resurfaced that year of one category (local, collector thoughfare, etc.)}}{\text{total miles (km) of all streets resurfaced in that year}}\right)\right]$$

A damage fee would be derived by dividing the annual cost of resurfacing a particular category of street damaged by utility cuts by the number of years of life expected from those streets. The fee would be higher if a street to be cut had been recently resurfaced, and lower for a street that is about ready for resurfacing.

Table 1—Annual cost of pavement damage from utility cuts (4).

Figure 2. Removal of concrete pavers for a gas line repair in Dayton, Ohio.

Figure 3. Compaction of the base

Figure 4. Reinstatement of the pavers, bedding and joint sand

Figure 5. The final paver surface is continuous. There are no cuts or damage to the pavement.

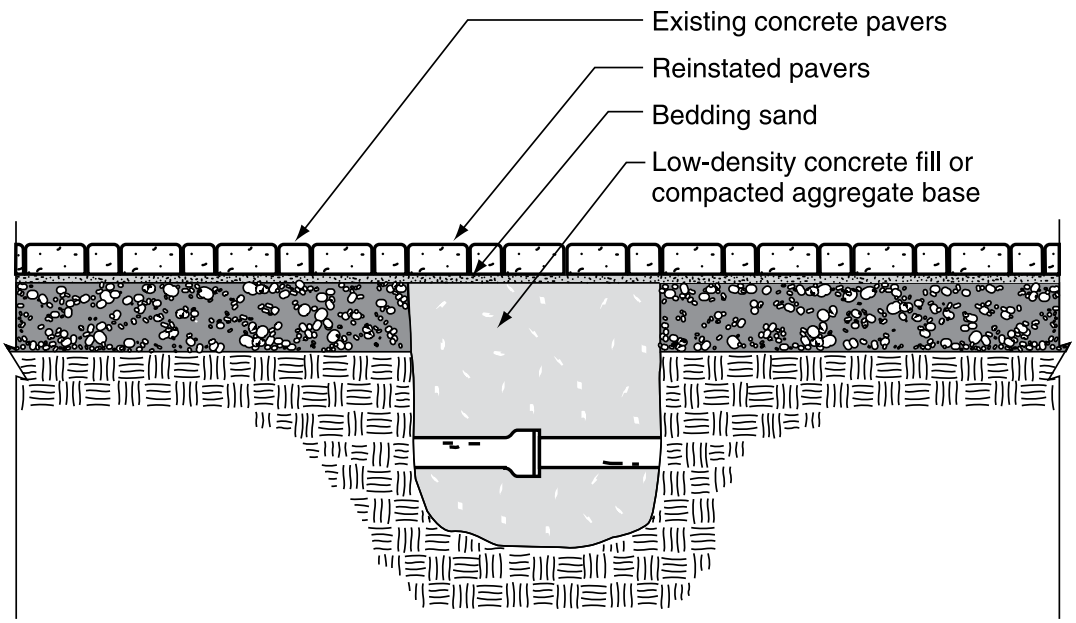

Figure 6. Cross section of reinstated utility cut into interlocking concrete pavement.

compensate the city for the lost value resulting from street cuts (4). A 1995 study by the city of Cincinnati, Ohio, showed that damage to the pavement extends up to three feet (1 m) from the edge of properly restored cuts (5).

The cost of pavement damage includes street resurfacing and rehabilitation to remedy damage from cuts. Permit fees charged by cities to those making cuts often do not fully account for pavement damage after the cut pavement is replaced. Some cities, however, are mitigating the long-term costs of pavement cuts by increasing fees or by charging a damage fee. They seek compensation for future resurfacing costs to remedy pavement damage. The rationale for fees to compensate for early resurfacing can be based on the following formula in Table 1.

Pavement damage fees may be necessary for conventional, monolithic pavements (asphalt and cast-in-place concrete) because they rely on the continuity of these materials for structural performance and durability. *Cuts reduce performance because the continuity of the pavement surface, base, and subgrade has been broken.* Traffic, weather, de-icing salts, and discontinuities in the surface, in the compacted base, and in the soil, shorten the life of the repaired cut. When pavement life is shortened, rehabilitative overlays are needed sooner than normal, thereby incurring maintenance costs sooner than normal.

Reducing Costs with Interlocking Concrete Pavements

Interlocking concrete pavements can reduce pavement cut and repair costs, and user costs. They can also reduce costs from long term pavement damage, and the fees to rehabilitate them.

Reducing Pavement Cut and Repair Costs— Costs to open interlocking concrete pavements can be competitive with monolithic pavements such as asphalt or poured concrete. Cost savings occur because saw-cutting equipment and pneumatic jack hammers are not required for removal. Since the same paver units are reinstated, additional savings can result from reducing waste and hauling. Minimizing waste material is important in urban street repairs because of compact working conditions and increased landfill costs.

Reducing User Costs—User costs due to traffic interruptions and delays are reduced because concrete pavers

Figure 7. Pavement damage from settlement and shrinkage of cold patch asphalt.

Figure 8. Utility cut repair in a residential area in London, Ontario.

require no curing. They can handle traffic immediately after reinstatement, reducing user delays. Furthermore, reinstated concrete pavers preserve the aesthetics of the street or sidewalk surface. There are no patches to detract from the character of the neighborhood, business district, or center city area. With many projects, concrete pavers help define the character of these areas. Character influences property values and taxes. Attractive paver streets and walks without ugly patches can positively affect this character.

Reducing Costs of Pavement Damage—Since interlocking concrete pavements are not monolithic, they do not suffer damage from cuts. The modular pavers and joints are superior to the cracks from cuts that typically result in accelerated wear to monolithic pavements. The role of joints in interlocking concrete pavement is the opposite from those in monolithic pavements. *Any* break in monolithic pavement, e.g., joints, cuts or cracks, normally shortens pavement life because the continuity of the material is broken. In contrast, the joints of the modular units in interlocking concrete pavements maintain structural continuity.

Figures 2, 3, 4, 5 and 6 show the process of repair and illustrate the continuity of the paver surface after it is completed. The reinstated units are knitted into existing ones through the interlocking paving pattern and sand filled joints. Besides providing a pavement surface without cuts, the joints distribute loads by shear transfer. The joints allow minor settlement in the pavers caused by discontinuities in the base or soil without cracking.

When pavers are reinstated on a properly compacted base, there is no damage to adjacent, undisturbed units. Unlike asphalt, concrete pavers do not deform, because they are made of high strength concrete. The need for street resurfacing caused by repeated utility cuts is eliminated because concrete pavers are not damaged in the reinstatement process. In addition, the use of low density concrete fill can help reestablish the broken continuity of the base and subgrade. This reduces the likelihood of settlement and helps eliminate damage to the pavement.

Therefore, long term costs of pavement damage from utility cuts to interlocking concrete pavement can be substantially lower when compared to monolithic pavements. This makes interlocking concrete pavement very cost effective for streets that will experience a number of utility repairs over their life. Furthermore, lower costs from less damage can mean lower fees for cuts when compared to those for cutting into monolithic pavements.

Utility Cut Repairs in Asphalt Pavements Using Interlocking Concrete Pavers

Tech Spec 6–Reinstatement of Interlocking Concrete Pavements, published by the Interlocking Concrete Pavement Institute, provides step-by-step guidance for repairs to vehicular and pedestrian pavements made with concrete pavers. A unique, experimental variation of the techniques in this technical bulletin is demonstrated in London, Ontario, where repairs to utility cuts in asphalt are made with interlocking concrete pavers (6). The local gas company normally reinstates cut pavement in the winter with cold patch asphalt after making repairs to gas lines. In the spring, the cold patch is typically removed and hot mix asphalt is placed in the openings.

Figure 7 shows the result of settlement and shrinkage of the cold patch asphalt in a London, Ontario, utility cut. The change in dimensions causes the edge of the cut asphalt to deteriorate, and settlement decreases riding quality.

Concrete pavers on low density concrete fill have been successfully used as a replacement for cold patch asphalt (Figures 8 and 9).They were first used as a temporary repair with the intent of being removed in the spring. However, the pavers performed so well that the City of London left them in place indefinitely. Several repairs were in streets subject to heavy truck traffic, as well as residential streets. Costs were less than using cold patch asphalt.

All repairs in London with concrete pavers and low-density concrete have produced a smooth surface transition from the asphalt to the pavers. The riding quality and safety has improved to the extent that the transition from one surface to the next can barely be discerned by the driver. The pavers were colored

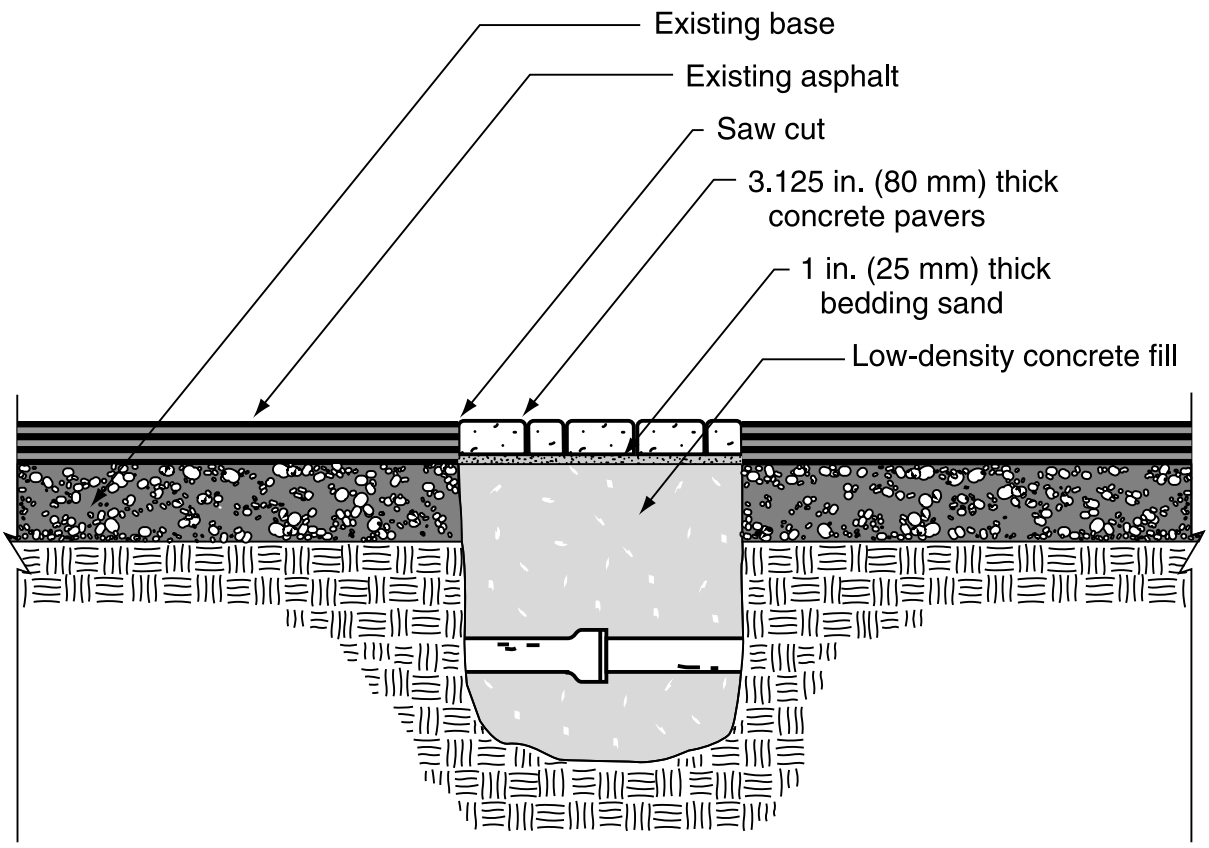

Figure 9. Cross section of utility cut repairs with concrete pavers in London, Ontario

to match the appearance of the asphalt so there would be no substantial differences in appearance. Figure 10 shows such a patch of pavers blending with the surrounding pavement.

The base material, controlled low-density concrete fill (sometimes called unshrinkable fill), is a low-strength concrete poured from a ready-mix truck into the trench opening. The concrete fill eliminates the need to replace the aggregate base. The concrete cures to a sufficient strength that the repair with concrete pavers can be opened to traffic within 24 hours, even in freezing weather.

Repair Guidelines for Using Concrete Pavers for Utility Cuts in Asphalt Pavement

The experimental repairs in London, Ontario, have been in place since 1994 and have performed well. The gas company and City continue to make repairs using this method. The ongoing repairs using this method demonstrate that it has particular application in cold climates as a substitute for cold patch asphalt. The use of low-density concrete fill has resulted in no settlement. The smooth riding pavement has increased the public image of the utility company and the City, and has reduced liability. By eliminating the need to remove cold patch asphalt in the spring, labor forces can be placed on more urgent work.

The following are guidelines from experience with many utility repairs with concrete pavers and low-density concrete fill in London, Ontario.

Signing such as warnings, arrows, flashers, cones and/or barricades should be placed around the area to be cut, according to local, state, or provincial standards.

Cuts in the asphalt pavement should be done with a saw using straight lines. A pneumatic hammer should not be used to cut the asphalt. The saw cuts must be vertical and made completely through the existing asphalt layer. In order to provide clean corners along the edge of the cut, the asphalt layer should not be fractured, suffer from alligator cracking, or be raveled.

The thickness of the asphalt at the opening should be at least 4 in. (100 mm). The sides of the asphalt provide a restraint for the 3.125 in. (80 mm) thick pavers and approximately 1 in. (25 mm) of bedding sand. The interior of the cut asphalt can be broken with a pneumatic hammer and removed with a

Figure 10. A patch of pavers in a heavily trafficked intersection in London, Ontario

Figure 11. Low density concrete fill (unshrinkable fill) poured into a utility trench from a ready-mix concrete truck.

front end loader. Pieces along the saw cuts should be removed carefully to prevent damage to the edges.

Excavation of the base and soil must be within the limits of the removed asphalt, and care must be taken to not undermine the adjacent pavement. Trench excavation, bracing, shoring, and/or sheeting should be done in accordance with the local authority. Equipment should be kept from the edges of the opening as loads may crack or break pieces from the cut asphalt edges. Excavated soil and base materials should be removed from the site. The trench should be kept free from standing water.

Unshrinkable fill poured into the trench is shown in Figure 11. The fills flows into undercuts, under the edge of the cut asphalt (providing additional support), and in places where the soil or base has fallen from the sides of the trench. These places are normally impossible to fill and compact with aggregate base or backfill material.

There are many mixes used for low-density concrete fill (7) (8). Proprietary mixtures include those made with fly-ash that harden rapidly. Others are made with cement. A recommended mix can be made with ASTM C 150 (9) Type I Portland cement (or Type 3 for winter repairs), or CAN3-A23.5-M type 10 (or type 30 Portland cement) (10). The slump of the concrete should be between 6 and 8 in. (150 and 200 mm) as specified in ASTM C 143 (11) or CAN3-A23.2.5C (10). When air entrainment is required to increase flowability, the total air content should be between 4 and 6% as measured in ASTM D 6023 *Standard Test Method for Density (Unit Weight), Yield, Cement Content, and Air Content (Gravimetric) of Controlled Low-Strength Material (CLSM)* or CAN3-A23.2-4C (10). Air content greater than 6% is not recommended as it may increase segregation of the mix.

A strength of 10 psi (0.07 Mpa) should be achieved within 24 hours. The maximum 28 day compressive strength should not exceed 50 psi (0.4 Mpa) as measured by ASTM C 39 (11) or CAN3-A23.2-9C (10). Cement content should be no greater than 42 lbs/cy (25 kg/m^3). The low maximum cement content and strength enables the material to be excavated in the future. Mixes containing supplementary cementing materials should be evaluated for excessive strength after 28 days.

Repaired utility lines are typically wrapped in plastic prior

to pouring the low density fill. This keeps the concrete from bonding to the lines and enables them to move independently. When the fill is poured, it is self-leveling. It should be poured to within 4 in. (100 mm) of the riding surface of the asphalt.

Bedding sand can be installed when the concrete is firm enough to walk on, generally within a few hours after placement. The bedding sand should be as hard as available and should conform to the grading requirements of ASTM C 33 (11) or CSA A23.1 (10). *Mason sand, limestone screenings or stone dust should not be used.* The sand should be moist, but not saturated or frozen. Screed the bedding with 1 in. (25 mm) diameter screed pipe. Remove excess sand from the opening.

Since the low-density concrete fill is self-leveling, it will create a flat surface for the bedding sand. In most cases, there will be a slope on the surface of the street. Adjustments to the thickness of the bedding sand may be necessary for the finished elevation of the pavers to follow the slope on the surface of the street. This can be accomplished by adjusting the height of the screed pipes.

Concrete pavers should be at least 3.125 in. (80 mm) thick and meet ASTM C 936 (12) or CSA A231.2 (13). They should be delivered in strapped bundles and placed around the opening in locations that don't interfere with excavation equipment or ready-mix trucks. The bundles should be covered with plastic to prevent water from freezing them together. The bundles need to be placed in locations close to the edge of the opening. Most bundles have several rows or bands of pavers strapped together. These are typically removed with a paver cart. The paver bundles should be oriented so that removal of the bands with carts is done away from the edge of the asphalt.

Rectangular concrete pavers [nominally 4 in. by 8 in. (100 mm x 200 mm)] should be placed against the cut asphalt sides as a border course. They should be placed in a sailor course, i.e., the long side against the asphalt. No cut paver should be smaller than one third of a unit. Place pavers between the border course in a 90 degree herringbone pattern (Figure 12). Joints between pavers should be between $^{1}/_{16}$ and $^{5}/_{16}$ in. (2 to 5 mm). Compact the pavers with a minimum 5,000 lbf (22 kN) plate compactor. Make at least four passes with the plate compactor. A small test area of pavers may need to be compacted to check the amount of settlement. The bedding sand thickness should

Figure 12. Pavers are laid in a 90 degree herringbone pattern between the border courses.

Figure 13. Concrete pavers in utility cuts can be painted as any other pavement.

be adjusted in thickness to yield pavers no higher than 1/8 in. (3 mm) above the edge of the asphalt.

Spread, sweep and compact sand into the joints. The joint sand is typically finer than the bedding sand, and should conform to the grading requirements of ASTM C 144 (11) or CSA A179 (10). The joints must be completely full of sand after compaction. Remove excess sand and other debris. The pavers may be painted with the same lane, traffic, or crosswalk markings as any other concrete pavements (Figure 13).

References

1. Tarakji, G., "The Effect of Utility Cuts on the Service Life of Pavements in San Francisco, Volume I: Study Procedure and Findings," Department of Public Works, City and County of San Francisco, California, May 1995.
2. Shahin, M.Y., Crovetti, J. A. and Franco, J. L., "Effects of Utility Cut Patching on Pavement Performance and Rehabilitation Costs," report prepared by ERES International for the City of Burlington, Vermont in 1985 and published with revisions for the 1986 Annual Meeting of the Transportation Research Board, December 23, 1985.
3. *Comprehensive Study to Evaluate Repair Patches for Asphalt Paved Streets*, a report prepared for Southern California Gas Company by ARE Engineering Consultants Inc., Scotts Valley, California, December 1989, p. 7.
4. *Performance Audit—Public Works Department Utility Cuts Program*, City Auditor's Office, City of Kansas City, Missouri, March 1994.
5. Bodocsi, A. et al., *Impact of Utility Cuts on Performance of Street Pavements,* The Cincinnati Infrastructure Research Institute, Department of Civil & Environmental Engineering, University of Cincinnati, Ohio, 1995.
6. Union Gas Limited, "Unshrinkable Backfill Study," Union Gas London Division, London, Ontario, 1994 with revisions in 1995.
7. "Unshrinkable Fill for Utility Trenches and Streets," Canadian Portland Cement Association, Publication No. CP004.01P, Ottawa, Ontario, 1989.
8. Emery, J. And Johnston T., "Unshrinkable Fill for Utility Cut Restorations," Transportation Research Board Annual Meeting, paper SP93-10, Washington, D.C., 1993.
9. *ASTM Annual Book of Standards*, Volume 4.01, American Society for Testing and Materials, West Conshohocken, Pennsylvania, 2013.
10. *Concrete Materials and Methods of Concrete Construction - Methods of Test for Concrete*, Canadian Standards Association, Rexdale, Ontario, 2009.
11. *ASTM Annual Book of Standards*, Volume 4.02, American Society for Testing and Materials, West Conshohocken, Pennsylvania, 2013.
12. *ASTM Annual Book of Standards,* Volume 4.05, American Society for Testing and Materials, West Conshohocken, Pennsylvania, 2013.
13. Canadian Standards Association, *Precast Concrete Pavers*, CSA-A231.2, Canadian Standards Association, Rexdale, Ontario, 2013.

Sources for additional information on low-density flowable fill include the Cement Association of Canada, 1500-60 Queen Street, Suite 609, Ottawa, Ontario K1P 5Y7, tel: 613-236-9471 and the National Concrete Ready-Mix Association, 900 Spring Street, Silver Spring, Maryland, 20910, tel: 301-587-9419. The American Concrete Institute offers publication 229R-94, "Controlled Low Strength Materials (CLSM)" at P.O. Box 9094, Farmington Hills, Michigan 48333-9094, tel: 810-848-3700.

Figures 8, 9, 10 and 11 are courtesy of Gavigan Contracting, Ltd., London, Ontario. Figure 1 iStock.com.

icpi
Interlocking Concrete Pavement Institute

14801 Murdock Street
Suite 230
Chantilly, VA 20151

Tel: 703.657.6900
Fax: 703.657.6901
E-mail: icpi@icpi.org
www.icpi.org

In Canada:
P.O. Box 1150
Uxbridge, ON L9P 1N4
Canada

The content of ICPI Tech Spec technical bulletins is intended for use only as a guideline. It is not intended for use or reliance upon as an industry standard, certification or as a specification. ICPI makes no promises, representations or warranties of any kind, expressed or implied, as to the content of the Tech Spec Technical Bulletins and disclaims any liability for damages resulting from the use of Tech Spec Technical Bulletins. Professional assistance should be sought with respect to the design, specifications and construction of each project.

The Strength of a National Company With Local Customer Service
PAVESTONE
Improving Your Landscape
pavestone.com

Tech Spec 10

icpi
Interlocking Concrete Pavement Institute

Application Guide for Interlocking Concrete Pavements

This technical bulletin provides an overview of interlocking concrete pavements for a range of applicatons. The Interlocking Concrete Pavement Institute (ICPI) technical bulletins, brochures, design manuals and software are referenced to assist project owners, design professionals and contractors on design, construction and maintenance. Visit icpi.org for guide specifications and detail drawings for a range of applications

Product Description

Applications: Interlocking concrete pavements are appropriate for any application that requires paving. These areas include patios, driveways, pool decks, sidewalks, parking lots, pedestrian plazas, roof plaza decks, roof ballast, roof parking decks, embankment stabilization, gas stations, medians, streets, industrial pavements, ports, and airports. Vehicle speeds are generally 45 mph (70 kph) or lower.

Composition and Materials: Interlocking concrete pavers are composed of portland cement, fine and coarse aggregates. Color pigment is often added. Admixtures are typically placed in the concrete mix to reduce efflorescence. These materials are combined with a small amount of water to make a "zero slump" concrete. Pavers are made in factory-controlled conditions with machines that apply pressure

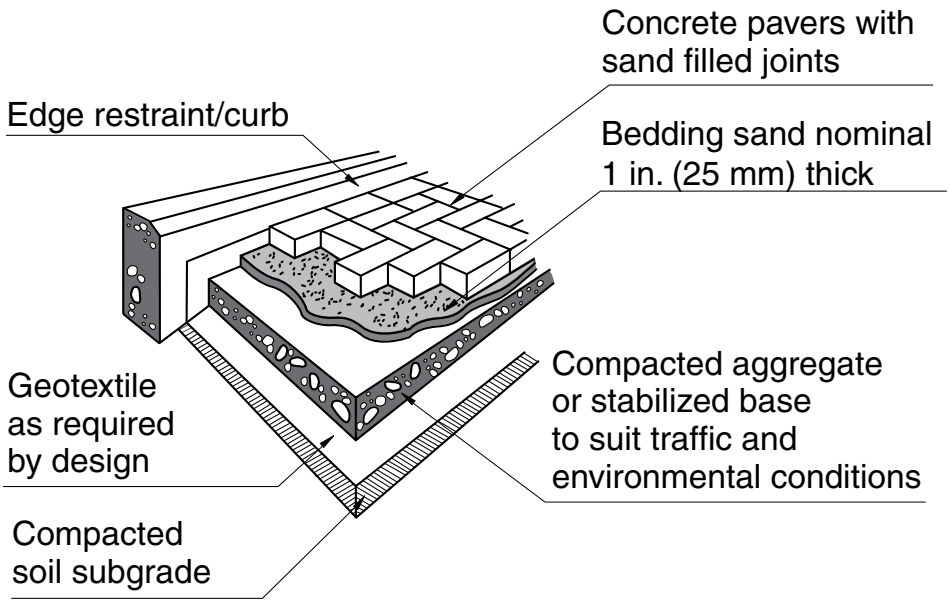

Figure 1. Typical components of an interlocking concrete pavement system

© 1999 ICPI Tech Spec No. 10 • Interlocking Concrete Pavement Institute • All rights reserved—Revised September 2012

and vibration. The result is a consistent, dense, high strength concrete molded into many shapes. Special surface finishes can be produced to give an upscale architectural appearance. These include unique aggregates, colors, tumbling, shot blasting, bush hammering, and polishing.

Technical Data

Physical Characteristics: When manufactured in the U.S., interlocking concrete pavers made by ICPI members typically meet the requirements in ASTM C 936, *Standard Specifications for Solid Interlocking Concrete Paving Units*. This standard defines concrete pavers as having a surface area no greater than 101 in.^{2} (0.065 m^2), and their overall length divided by thickness, or aspect ratio, does not exceed 4. The minimum thickness is 2 $^3/_8$ in. (60 mm).

Concrete pavers produced by Canadian ICPI members typically conform to Canadian Standards Association, CSA-A231.2, *Precast Concrete Pavers*. This standard defines a concrete paver as having a surface area less than or equal to 140 in.^{2} (0.09 m^2), an aspect ratio less than or equal to 4:1 for pedestrian applications, and less than or equal to 3:1 for vehicular applications. The minimum thickness is 2 $^3/_8$ in. (60 mm).

Design and Application Standards: For pedestrian applications and residential driveways, 2 $^3/_8$ in. (60 mm) thick pavers are recommended. Pavements subject to vehicular traffic typically require 3 $^1/_8$ in. (80 mm) thick pavers. Some heavy-duty industrial pavements use minimum 4 in. (100 mm) thick units.

Units with an overall length to thickness (aspect) ratio of 4:1 or greater should not be used in vehicular applications. Those with aspect ratios between 4:1 and 3:1 may be used in areas with limited automobile use such as residential driveways. Units with aspect ratios of 3:1 or less are suitable for all vehicular applications.

Interlocking concrete pavements are typically designed and constructed as flexible pavements on a compacted soil subgrade and compacted aggregate base. See Figure 1. Concrete pavers are then placed on a layer of bedding sand (1 in. or 25 mm thick), compacted, sand swept into the joints, and the units compacted again. When compacted, the pavers interlock, transferring vertical loads from vehicles to surrounding pavers by shear forces through the joint sand. The sand in the joints enables applied loads to be spread in a manner similar to asphalt, reducing the stresses on the base and subgrade.

Like other pavement systems, interlocking concrete pavement systems subject to vehicular applications require engineered design. Structural design should follow ASCE Standard 58-10 *Structural Design of Interlocking Concrete Pavement for Municipal Streets and Roadways* based on AASHTO flexible pavement design. In addition, *ICPI Tech Spec 4–Structural Design of Interlocking Concrete Pavements* provides flexible and rigid pavement design guidance. ICPI provides structural design software that follows the ASCE design standard as well and a mechanistic design-based program called Lockpave for streets and industrial pavements.

In addition, structural design for ports and container areas should follow the ICPI manual, *Port and Industrial Design with Concrete Pavers*, based on the British Ports Association design method. Airfield pavement design should follow the procedures in the ICPI manual, *Airfield Pavement Design with Concrete Pavers*. This manual applies U.S. Federal Aviation Administration design procedures to interlocking concrete pavements. ICPI publishes a manual of the same name for design of airfields in Canada. The manual follows Public Works Canada design methods. For street, industrial, port and airport pavement designs, consult with a qualified civil or geotechnical engineer familiar with local soils, pavement design methods, ICPI resources, materials, and construction practices.

Benefits: As interlocking concrete pavements receive traffic, they stiffen and increase their structural capacity over time. The structural contribution of the interlocking pavers and sand layer can exceed that of an equivalent thickness of asphalt. The interlock contributes to the structural performance of the pavement system. *ICPI Tech Spec 4–Structural Design of Interlocking Concrete Pavements* provides additional information on structural design of the pavers, bedding sand, and base. ICPI takes a conservative approach by not recognizing differences among shapes with respect to structural and functional performance. Certain manufacturers may have materials and data that discuss the potential benefits of shapes that impact functional and structural performance.

Concrete pavers arrive at the site ready to install, ready for traffic immediately after paving. This can reduce construction time and restore access quickly. The joints between each paver help reduce cracking occurrence typically seen on conventional asphalt and concrete pavement.

Unlike concrete or asphalt, concrete pavers do not rely on monolithic continuity of their material for structural integrity. Therefore, utility cuts can be reinstated without damage to the pavement surface. *ICPI Tech Spec 6–Reinstatement of Interlocking Concrete Pavements* covers this topic in detail. Repair to underground utilities and to local deformations in the base materials can be accessed by removing and later reinstating the same pavers. No pavement materials are wasted or hauled to the landfill. Jackhammers are not required to open interlocking pavements. The modular units enable changes in the layout of the pavement over its life.

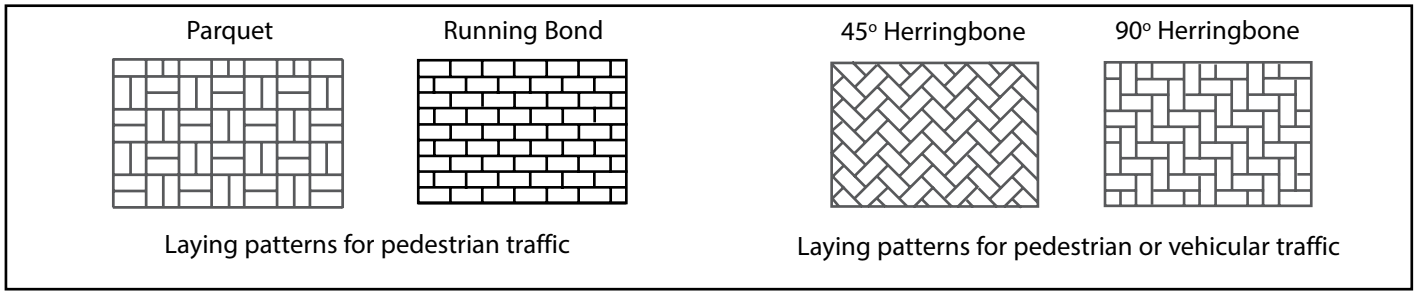

Figure 2. Typical laying patterns.

Colored units can be used for lane and parking delineations, traffic direction markings, utility markings, and artistic super graphic designs. Various colors, shapes, textures and laying patterns can help direct pedestrians and calm vehicular traffic in urban areas. Pavers can be manufactured with detectable warnings for use on pedestrian curb ramps at intersections or at rail platforms and crossings.

The chamfered joints in the pavement surface facilitate removal of surface water. This decreases nighttime glare when wet and enhances skid resistance. *ICPI Tech Spec 13–Slip and Skid Resistance of Interlocking Concrete Pavements* includes information on slip and skid resistance. Snow is removed as with any other pavement. Concrete pavers can have greater resistance to deicing salts than conventional paving materials due to high cement content, strength, density, and low absorption.

Sustainable Aspects: Interlocking concrete pavements can be eligible for LEED® credits including those under Sustainable Sites (e.g., high solar reflectance index), Materials & Resources. See *ICPI Tech Spec 16–Achieving LEED® Credits with Segmental Concrete Pavement*. In addition, permeable interlocking concrete pavements can earn Sustainable Site credits for reducing runoff and water pollution. See the ICPI manual, *Permeable Interlocking Concrete Pavements* for design, specification, construction and maintenance guidelines.

Installation

Installation should be performed by experienced contractors who hold a current certificate in the ICPI Concrete Paver Installer Certification Program. Contractors holding this certificate have been instructed and tested on knowledge of interlocking concrete pavement construction. ICPI guide specifications available on www.icpi.org and project specifications should require that the job foreman hold this certificate and be present on the job site during paver installation. A certified installer with an Advanced Residential Paver Technician and/or Commercial Paver Technician designation has demonstrated knowledge of best construction practices for these applications. Project specifications should reference these contractor qualifications as well.

The installation guidelines below apply to pedestrian and many vehicular applications.

Soil Subgrade: Once excavation is complete, the soil subgrade should be compacted prior to placing the aggregate base. Compaction should be at least 98% Proctor density (per ASTM D 698) for pedestrian areas and residential driveways, and at least 98% modified Proctor density (per ASTM D 1557) for areas under constant vehicular traffic. Consult compaction equipment manufacturers' recommendations for applying the proper equipment to compact a given soil type. Geotextiles are sometimes used over fine subgrade soils to extend the life of the base above and reduce the likelihood of deformation.

Some soils may not achieve these recommended minimum levels of density. These soils may have a low bearing capacity or be continually wet. If they are under a base that will receive constant vehicular traffic, the soils may need to be stabilized, or have drainage designed to remove excess water.

Aggregate Base: Aggregate base materials should conform to that used under asphalt. If no local, state, or provincial standards exist, then the requirements for aggregate base in ASTM D 2940 are recommended. The base should be compacted in maximum 6 in. (150 mm) lifts. The thickness of the base depends on the strength of the soil, drainage, climate, and traffic loads. Base thickness used under asphalt can typically be used under interlocking concrete pavers. Minimum aggregate base thickness for walks should be 4 to 6 in. (100 to 150 mm), driveways 6 to 8 in. (150 to 200 mm), and streets 8 to 12 in. (200 to 300 mm). Thicknesses may be greater depending on site conditions, freezing temperatures, and traffic, as well review by a qualified design professional.

Aggregate base compaction under pedestrian and residential driveway pavements should be at least 98% of standard Proctor density (per ASTM D 698). The aggregate base should be compacted to at least 98% modified Proctor den-

sity (per ASTM D 1557) for vehicular areas. Compaction equipment suppliers can provide information on the appropriate machines for compacting base material. These density recommendations for areas next to curbs, utility structures, lamp bases, and other protrusions in the pavement are essential to minimize settlement. Site inspection and testing of the compacted soil and base materials are recommended to ensure that compaction requirements have been met. Compacted base materials stabilized with asphalt or cement may be used in heavy load applications or over weak soil subgrades. The surface of the compacted base should be smooth with a maximum tolerance of ±3/8 in. (10 mm) over a 10 ft. (3 m) straightedge.

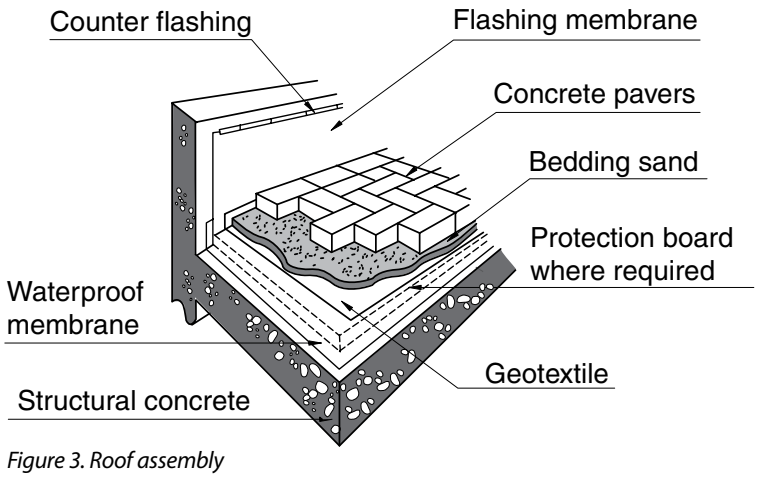

Figure 3. Roof assembly

Bedding Sand: Bedding sand should conform to the grading requirements of ASTM C 33 or CSA-A23.1-FA1. Do not use mason sand because it can be slow draining and unstable. Stone dust or waste screenings should not be used, as they can have an excessive amount of material passing the No. 200 (0.075 mm) sieve. *ICPI Tech Spec 17–Bedding Sands for Vehicular Applications* provides additional guidance on evaluating beddings sands under vehicular traffic. The sand should be screeded to a nominal 1 in. (25 mm) thickness. Do not use the sand to fill depressions in the base. These eventually will be reflected in the surface of the finished pavement. Fill any depressions with base material and compact.

Geotextile is recommended in the following places to prevent migration into joints and cracks. These areas are adjacent to curbs, roof parapets, drains, utility structures, and over asphalt or cement stabilized bases. When applied in these locations the fabric should be turned up against vertical surfaces to contain the bedding sand.

Joint Sand: Bedding sand may be used as joint sand; dry sand may be used that conforms to the grading requirements of ASTM-C144 or CSA-A179. This sand is often called mason sand and is used to make mortar. This sand should not be used for bedding sand.

Concrete Pavers: The shape of the concrete pavers deter-

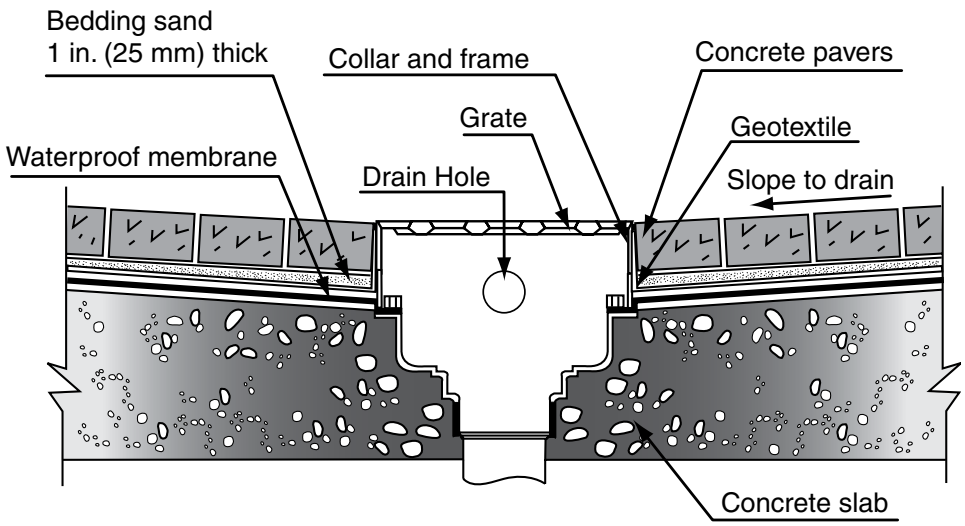

Figure 4. Roof drain holes at bottom of bedding sand layer

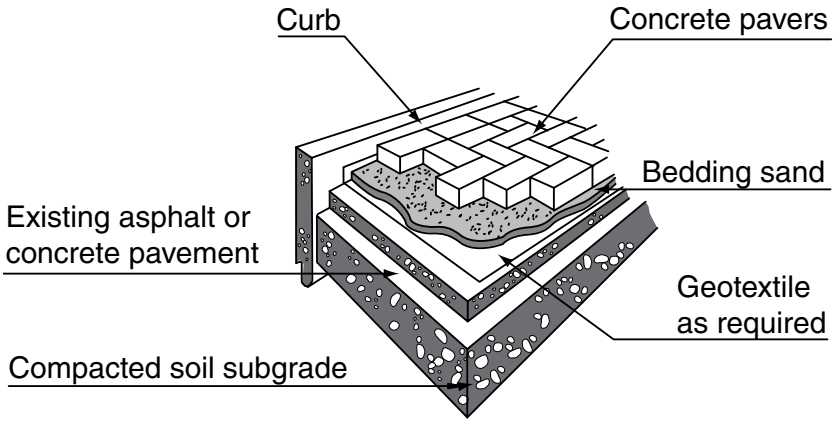

Figure 5. Typical overlay/inlay on existing pavement.

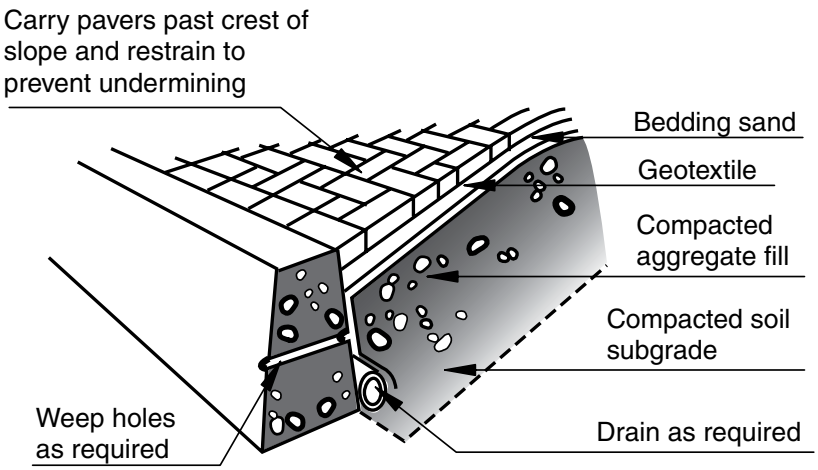

Figure 6. Embankment with concrete pavers

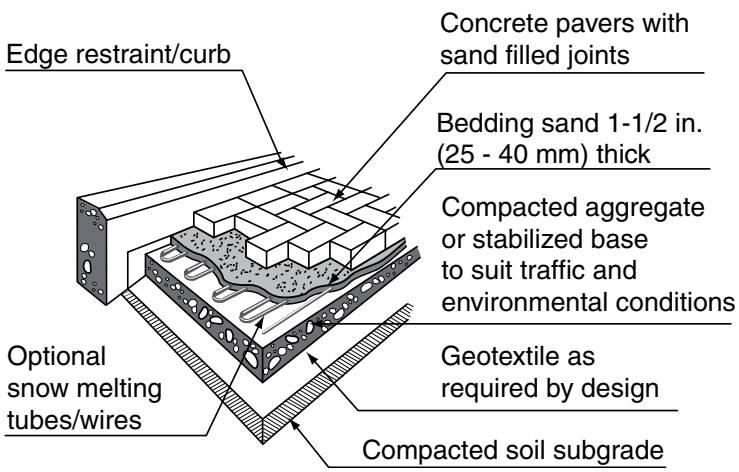

Figure 7. Snow melting system with concrete pavers for pedestrian areas or residential driveways

mines the range of laying patterns (Figure 2). 45° or 90° herringbone patterns are recommended in areas subject to continual vehicular traffic. They provide maximum interlock and structural performance. Some patterns have "edge" pavers specifically designed to fit against the pavement edge. Concrete pavers can be cut with a splitter or masonry saw to fit. Cut pavers should be no smaller than one-third of a unit when exposed to vehicular traffic. Joints between concrete pavers are typically 1/16 to 3/16 in. (2 to 5 mm) wide. They can be slightly wider for units with a stone like finish with rough edges and sides. Bond or joint lines tolerances should be +/- 1/2 in. over a 50 ft (15 m) string line.

Once the pavers are placed in their specified pattern(s), they are compacted into the bedding sand with a plate compactor. The compactor should have a minimum force of 5,000 lbs. (22 kN) and frequency of 75 to 100 hz. After the pavers are compacted, sand is swept and vibrated into the joints until they are full. All pavement not within 6 ft (2 m) of unfinished edges should have the joints full and be compacted by the end of each day. Final surface elevations of the pavers should be 1/8 to 1/4 in. (3 to 6 mm) above edges to allow for minor settlement. Final surface elevations around drains should not exceed 1/4 in. (6 mm) in pedestrian areas but may be as much as 3/8 in. (10 mm) in vehicular areas. Paver-to-paver lippage should not exceed 1/8 in. (3 mm). See *ICPI Tech Spec 2–Construction of Interlocking Concrete Pavements* for further information on construction. *ICPI Tech Spec 9–Guide Specifications for the Construction of Interlocking Concrete Pavements* provides a guide specification for installation. Detail drawings and other guide specifications are available at the ICPI web site, icpi.org.

Edge Restraints: Edge restraints around interlocking concrete pavement are essential to their performance. The pavers and sand are held together by them, enabling the system to remain

interlocked. For walks, patios, and driveways, edge restraints can be steel, aluminum, troweled concrete and submerged concrete curb, or plastic edging specifically designed for concrete pavers. Concrete restraints are recommended for crosswalks, parking lots, drives, streets, industrial, port, and airport pavements. Precast concrete and cut stone curbs are suitable for streets, drives, and parking lots. Edge restraints are typically placed before installing the bedding sand and concrete pavers. Some edge restraints such as plastic, steel, and aluminum can be installed after placing the concrete pavers. These edge restraints will require the compacted base to extend past the stakes that secure edging in the base. For residential projects, the distance from the stakes to the base perimeter should be consistent, not be greater than 10 in. (250 mm). For commercial applications, the distance should equal the base thickness. See *ICPI Tech Spec 3–Edge Restraints for Interlocking Concrete Pavements* for further information on edge restraints.

Drainage: Surface and subsurface drainage systems, as well as pavement grades, should conform to that used for any other flexible pavement.

Swimming Pools: High slip-resistance and rapid drainage of water make concrete pavers a desirable surface around commercial or residential swimming pools. Concrete will be the typical base as most backfill soils around pool walls will settle because they cannot be adequately compacted. When placed on a concrete base, drain holes are necessary at the lowest elevations to remove excess moisture in the bedding sand. A urethane or neoprene sealant and backer rod typical to pool construction should be placed between the course of pavers and the pool coping. This prevents water from entering this joint while allowing for differential movement between the pool wall and the adjacent pavement. Sealing the pavers and joints is recommended to keep sand in place

Roof Plaza/Parking Decks: Interlocking concrete pavements can be placed on parking garage roofs and pedestrian roof plazas. Concrete pavers provide an attractive ballast for the waterproof membrane (Figure 3). As a heat sink, the pavers reduce thermal stress on the membrane. The roof structure should be waterproofed, designed to withstand loads, and be sloped at least 2% to drain. Protection board should be applied according to the recommendations of the waterproof membrane manufacturer. Geotextile is applied around roof drains to prevent the migration of bedding sand. The drains should have holes at the level of the waterproof membrane to allow removal of subsurface water (Figure 4). See *Tech Spec 14–Concrete Paving Units for Roof Decks* for further information on roof plaza deck applications.

Pavement Overlay/Inlay: New or existing asphalt or concrete pavements can be overlaid or inlaid with concrete pavers (Figure 5). The surface of the existing pavement can be ground out and bedding sand and pavers placed in the milled area. Consideration should be given to draining excess moisture in the bedding sand. Drainage can be achieved by drilling/casting vertical holes at the lowest elevations of the pavement, or directing drain holes to catch basins. The drain holes should be covered with geotextile to prevent loss of bedding sand. Geotextile may need to be applied at pavement joints and cracks. Cracks 3/8 in. (10 mm) or larger in width should be patched prior to placing geotextile, bedding sand, and pavers. Thin paving units, 1 1/4 to 1 3/4 in. (30 to 45 mm) thick, have been used in overlays. The units are typically sand set on or adhered to a concrete base for pedestrian applications. They are not recommended for any vehicular application.

Embankments and Vehicular Pavements with High Slopes: Pavers provide a durable surface for control of soil erosion from embankments. A backfill of open-graded aggregate with drains at the bottom of the slope is recommended to relieve hydrostatic pressure (Figure 6). Concrete pavers restrained at the sides and top of the slope should have adjacent areas graded and slope in such a manner that water runs away from the restraints.

Vehicular pavements with slopes over 8% may require concrete header beams. Concrete header beams are recommended at the top and bottom of the sloped area. Intermittently placed beams along the sloped area are not recommended. Drainage of water in the bedding sand and base is essential along the upslope side of the concrete headers. For concrete pavers and bedding sand over aggregate base, removal of water can be accomplished with minimum 1 in. (25 mm) diameter horizontal weep holes spaced every 10 ft (3 m) and covered with geotextile to prevent loss of base fines or bedding sand. When pavers and bedding are over concrete or asphalt, there should be several vertical, geotextile-covered drain holes in these pavements on the upslope side of the header. The water collected by these drain holes or geocomposite drains should be directed beyond the edge restraints of the pavement.

The overall dimensions of, and the steel reinforcement within, the concrete headers will depend upon traffic loads and base design. Minimum recommended dimensions are 6 in. (150 mm) wide and 12 in. (300 mm) deep. The joint sand between the pavers should be stabilized to prevent washout. The crossfall of the pavement should be at least 2% from the center.

Snow Melting Systems: Interlocking concrete pavements can accommodate snow melting systems for pedestrian and vehicular applications (Figure 7). The systems consist of hot, liquid-filled tubing or radiant wires placed in the bedding sand,

in compacted aggregate or concrete bases. Snow melt systems can turn on automatically when a snowstorm starts, eliminating plowing, ice hazards, and the need for de-icing salts. The result is less potential for injuries from slipping on ice and decreased liability.

An aggregate base can be used to support the tubing or wires for pedestrian areas and residential driveways. Both systems must be secured to the base prior to placing the bedding sand. The systems are installed by specialty contractors (electricians and/or plumbers). The bedding sand may be as much as 2 in. (50 mm) thick to cover and protect the tubing or wires. For other vehicular areas, the tubing or wires should be placed in a concrete or asphalt base and these bases require drain holes at the lowest elevations. See *ICPI Tech Spec 12–Snow Melting Systems for Interlocking Concrete Pavements* for further information on snow melting systems.

Rigid Pavements: These pavements consist of a concrete base, a thin sand-asphalt bedding layer, an adhesive, and concrete pavers with sand-filled joints. This system is often called bitumen-set concrete pavers. Construction is slower and more expensive compared to sand-set installations. However, the result can be a very durable assembly. Draining excess water from the concrete base is accomplished with 2 to 3 in. (50 to 75 mm) diameter vertical holes through the concrete. Placed at lowest elevations, the holes are filled with washed pea gravel.

Bitumen-set concrete pavers subject to vehicular traffic follow this construction sequence. A tack coat is placed on a concrete base, the asphalt bed is placed, screeded, and then compacted. Adhesive is applied to the bed and the pavers are placed on it. The pavers are placed on the adhesive after it is dried and the pavers are compacted onto the adhesive. The joints are filled with sand or stabilized sand.

Reinstatement of bitumen-set pavers is impossible because the asphalt material adheres to the bottom of the pavers when removed. It is less expensive to discard the pavers rather than remove the asphalt from the units and attempt to reinstate them. Bitumen-set concrete pavers are not recommended over asphalt bases for vehicular applications or over aggregate bases for any application.

Mortared pavers should only be used in pedestrian areas in non-freeze-thaw areas. Mortared joints have a high risk of deterioration when subjected to vehicular traffic, freeze-thaw cycles and/or de-icing salts. Mortared pavers using liquid latex additives as thinset or thickset mixture are recommended for bonding pavers to existing concrete.

Polymer adhesives specially designed for adhering concrete pavers to concrete enable faster installation without the chance of accidentally staining the surface of the pavers with mortar. These adhesives can be used in areas with freezing climates. Pavers set with adhesives are not recommended for vehicular areas.

Mechanical Installation: Many laying patterns can be installed mechanically, saving construction time and costs compared to manual installation. Specialized installation equipment enables over a square yard (m^2) of concrete pavers to be placed in succession, rather than one paver at a time (Figure 8). Contact a local ICPI supplier for availability of laying patterns and for contractors experienced with mechanical installation equipment. See *ICPI Tech Spec 11–Mechanical Installation of Interlocking Concrete Pavements* and *ICPI Tech Spec 15–A Guide for the Specification of Mechanically Installed Interlocking Concrete Pavements* for further information on mechanical installation.

Availability and Price

Availability: Interlocking concrete pavers are available from ICPI members throughout the U.S. and Canada. ICPI members can be located by visiting www.icpi.org. Check with a local member for available shapes, thicknesses, and colors.

Price: Prices vary depending on the site location, pattern, thickness, color, area, base requirements, edge restraints, installation method and drainage.

Warranty

ICPI paver suppliers will typically provide laboratory test results demonstrating that the specified product meets the requirements of ASTM C 936 or CSA A231.2 as applicable. ICPI offers certification of laboratory test results to confirm that products meet applicable ASTM or CSA standards. A list of members with certified products is on www.icpi.org.

Maintenance

When properly installed, interlocking concrete pavements require little maintenance. As with all pavements, they will become soiled over time depending on the amount of use. Contact a local ICPI supplier for information on cleaning concrete pavers. ICPI publishes other technical bulletins on cleaning, sealing, including *ICPI Tech Spec 5–Cleaning, Sealing and Joint Sand Stabilization of Interlocking Concrete Pavements* and *ICPI Tech Spec 6–Reinstatement of Interlocking Concrete Pavements*. Unlike conventional pavements, interlocking concrete pavers can be reinstated after repairs thereby avoiding disposal costs and related

Figure 8. Mechanical installation equipment places concrete pavers rapidly.

environmental impacts. This provides lower down times and user costs especially on high use urban roads and sidewalks.

Management of interlocking concrete pavement can be accomplished using ASTM E2840 *Standard Practice for Pavement Condition Index Surveys for Interlocking Concrete Roads and Parking Lots*. This practice establishes survey procedures for determining the condition and wear severity of interlocking concrete pavements. The guide develops a pavement condition index or PCI value for the pavement that can be used to forecast when maintenance might be required. The PCI also enables performance comparisons to asphalt and concrete streets since ASTM E2840 uses evaluation methods similar to another ASTM standard used to evaluate asphalt and concrete pavements.

icpi
Interlocking Concrete
Pavement Institute

14801 Murdock Street
Suite 230
Chantilly, VA 20151

In Canada:
P.O. Box 1150
Uxbridge, ON L9P 1N4
Canada

Tel: 703.657.6900
Fax: 703.657.6901
E-mail: icpi@icpi.org
www.icpi.org

The content of ICPI Tech Spec technical bulletins is intended for use only as a guideline. It is not intended for use or reliance upon as an industry standard, certification or as a specification. ICPI makes no promises, representations or warranties of any kind, expressed or implied, as to the content of the Tech Spec Technical Bulletins and disclaims any liability for damages resulting from the use of Tech Spec Technical Bulletins. Professional assistance should be sought with respect to the design, specifications and construction of each project.