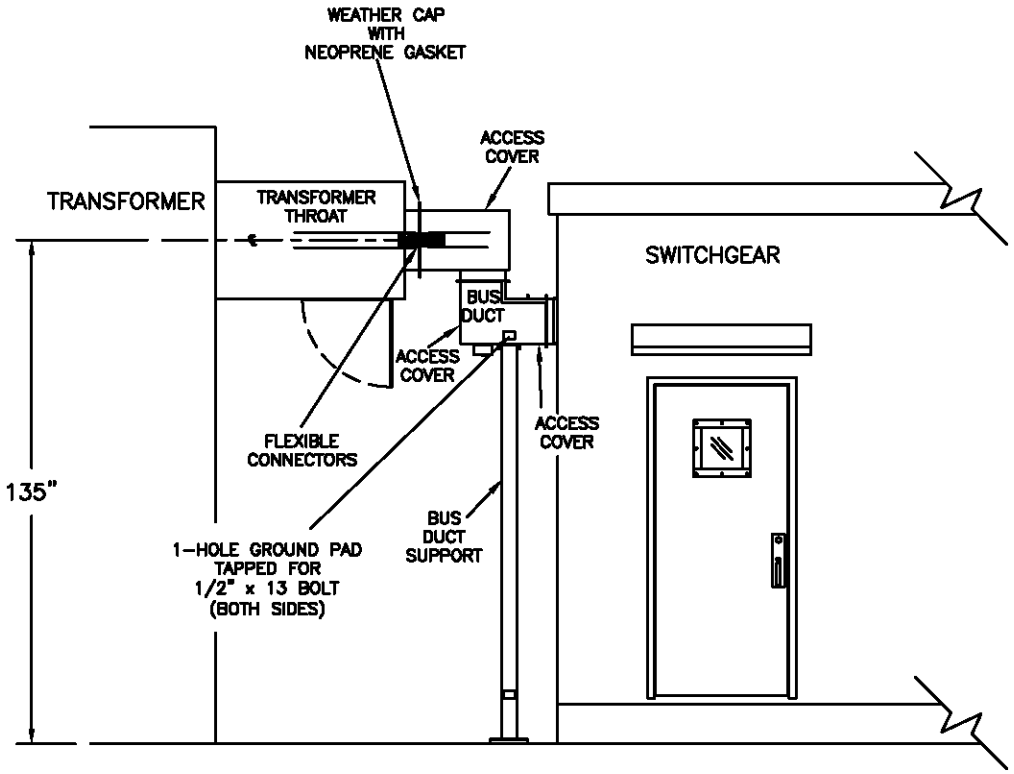

ELEVATION

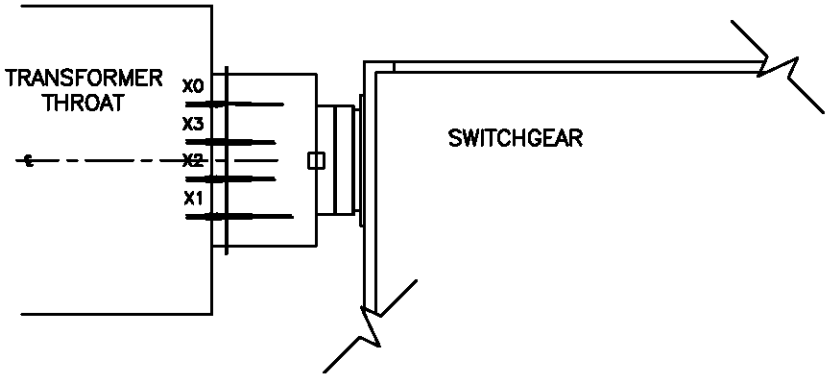

PLAN VIEW

AUSTIN ENERGY ELECTRIC SERVICE DELIVERY EQUIPMENT ENGINEERING	TITLE: BUS DUCT DETAILS #1	DRAWN: RRP	SCALE: NONE
		CHECKED:	FILENAME: E-1700-BD1
		DATE:	DRAWING NO.: E-1700-BD1

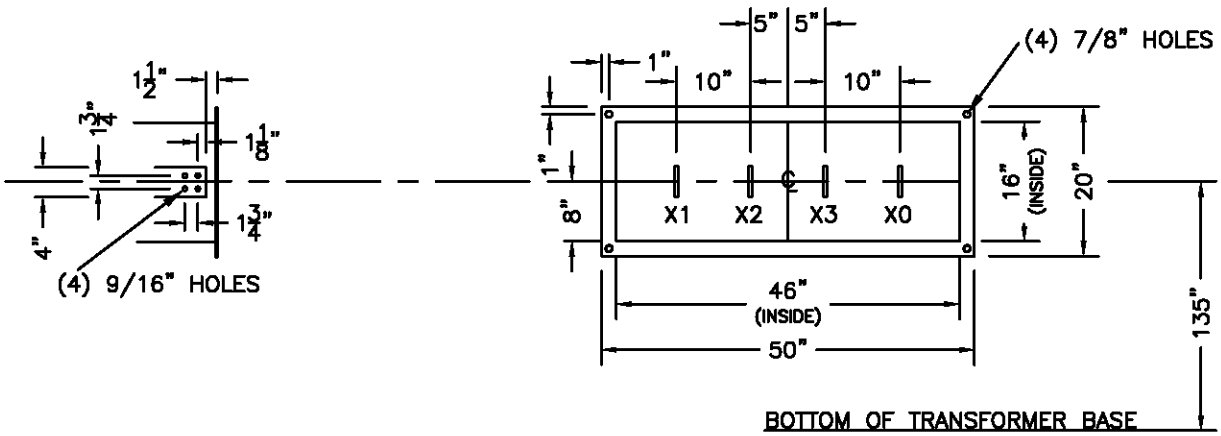

TRANSFORMER THROAT
SIDE VIEW

TRANSFORMER THROAT
FRONT VIEW

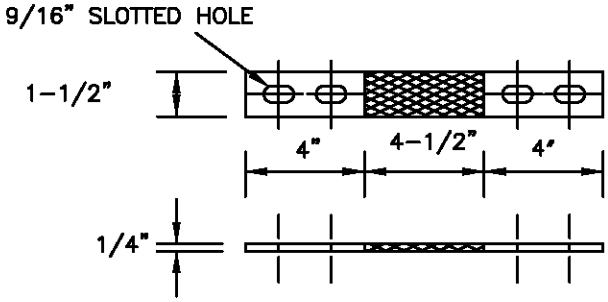

FLEXIBLE CONNECTOR DETAIL
(4 FLEX PER PHASE FOR 2000A)
(6 FLEX PER PHASE FOR 3000A)

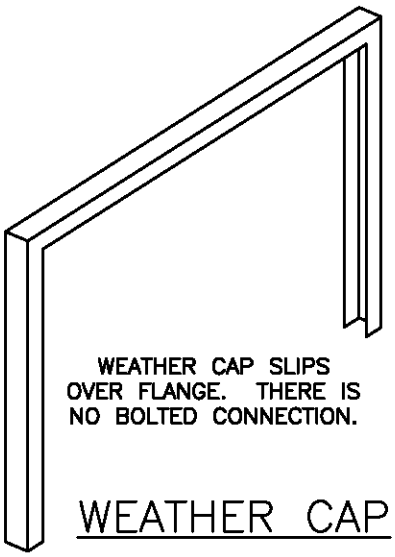

WEATHER CAP SLIPS OVER FLANGE. THERE IS NO BOLTED CONNECTION.

WEATHER CAP

ITEMS FURNISHED BY SWITCHGEAR SUPPLIER

1. STEEL WEATHER CAP
2. NEOPRENE GASKET WITH CEMENT
3. FLEXIBLE CONNECTORS

AUSTIN ENERGY ELECTRIC SERVICE DELIVERY EQUIPMENT ENGINEERING	TITLE: BUS DUCT DETAILS #2	DRAWN: RRP	SCALE: NONE
		CHECKED:	FILENAME: E-1700-BD2
		DATE:	DRAWING NO.: E-1700-BD2

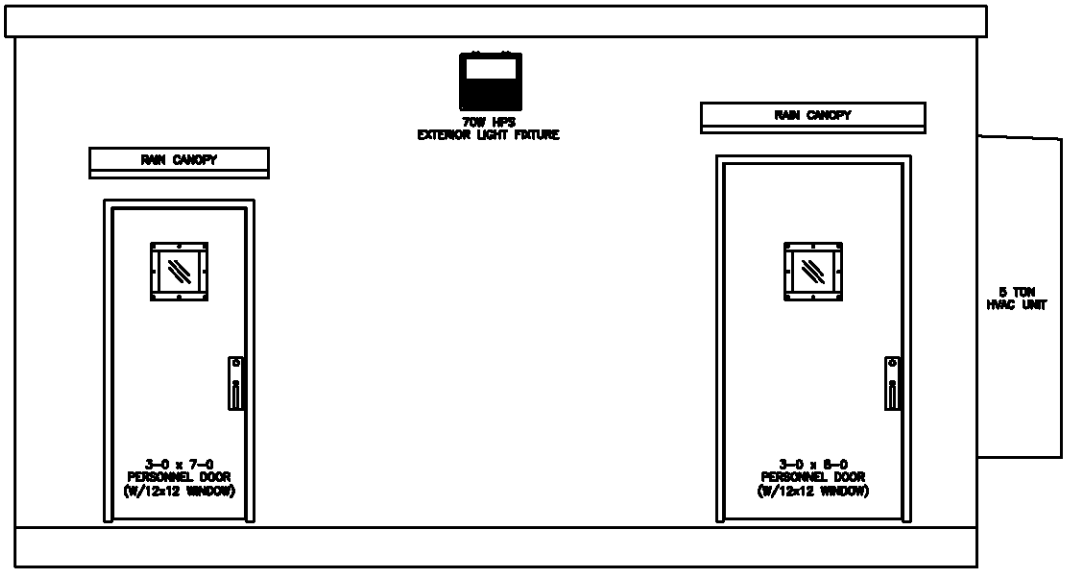

SIDE A

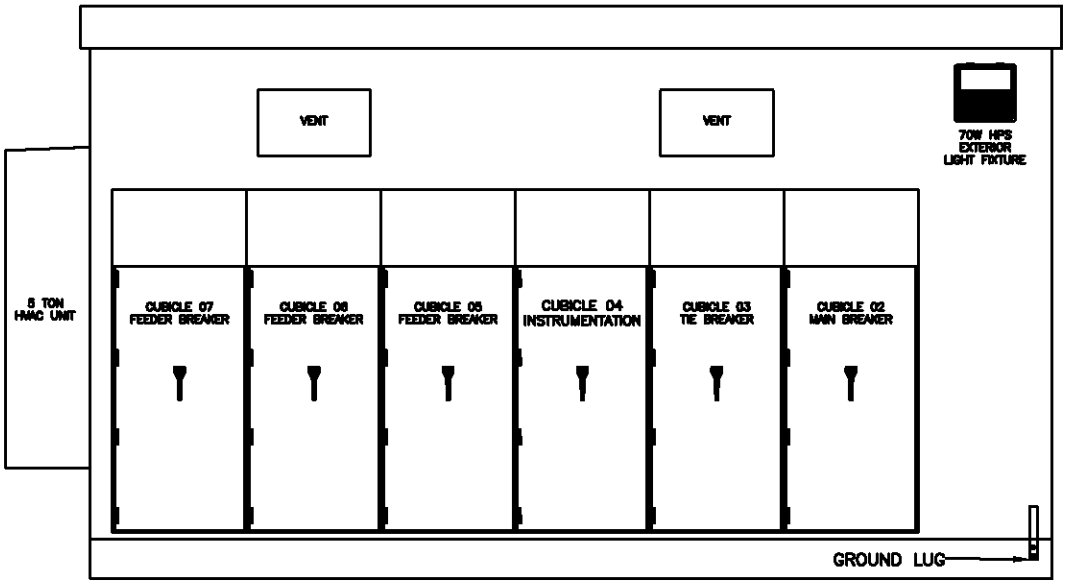

SIDE C

AUSTIN ENERGY ELECTRIC SERVICE DELIVERY EQUIPMENT ENGINEERING	TITLE: ENCLOSURE ELEVATONS SIDE A AND C	DRAWN: RRP CHECKED: DATE:	SCALE NONE FILENAME: E-1700-EE[1] DRAWING NO.: E-1700-EE1

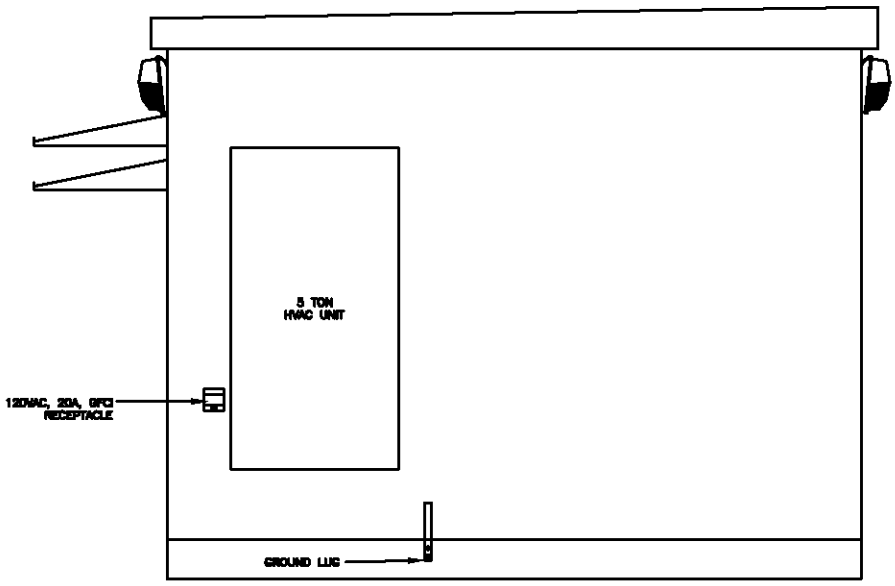

ELEVATION SIDE B

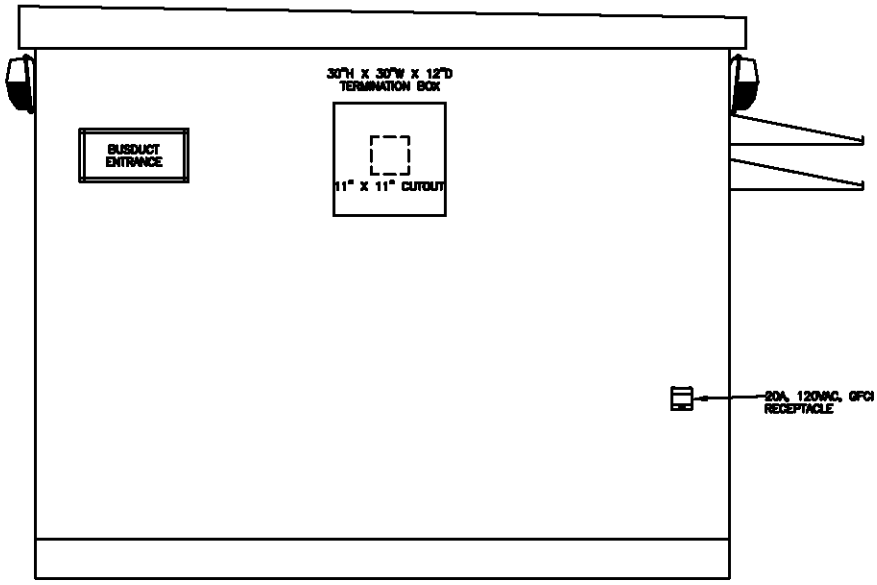

ELEVATION SIDE D

AUSTIN ENERGY ELECTRIC SERVICE DELIVERY EQUIPMENT ENGINEERING	TITLE: ENCLOSURE ELEVATIONS B AND D	DRAWN: RRP	SCALE: NONE
		CHECKED:	FILENAME: E-1700-EE2
		DATE:	DRAWING NO.: E-1700-EE2

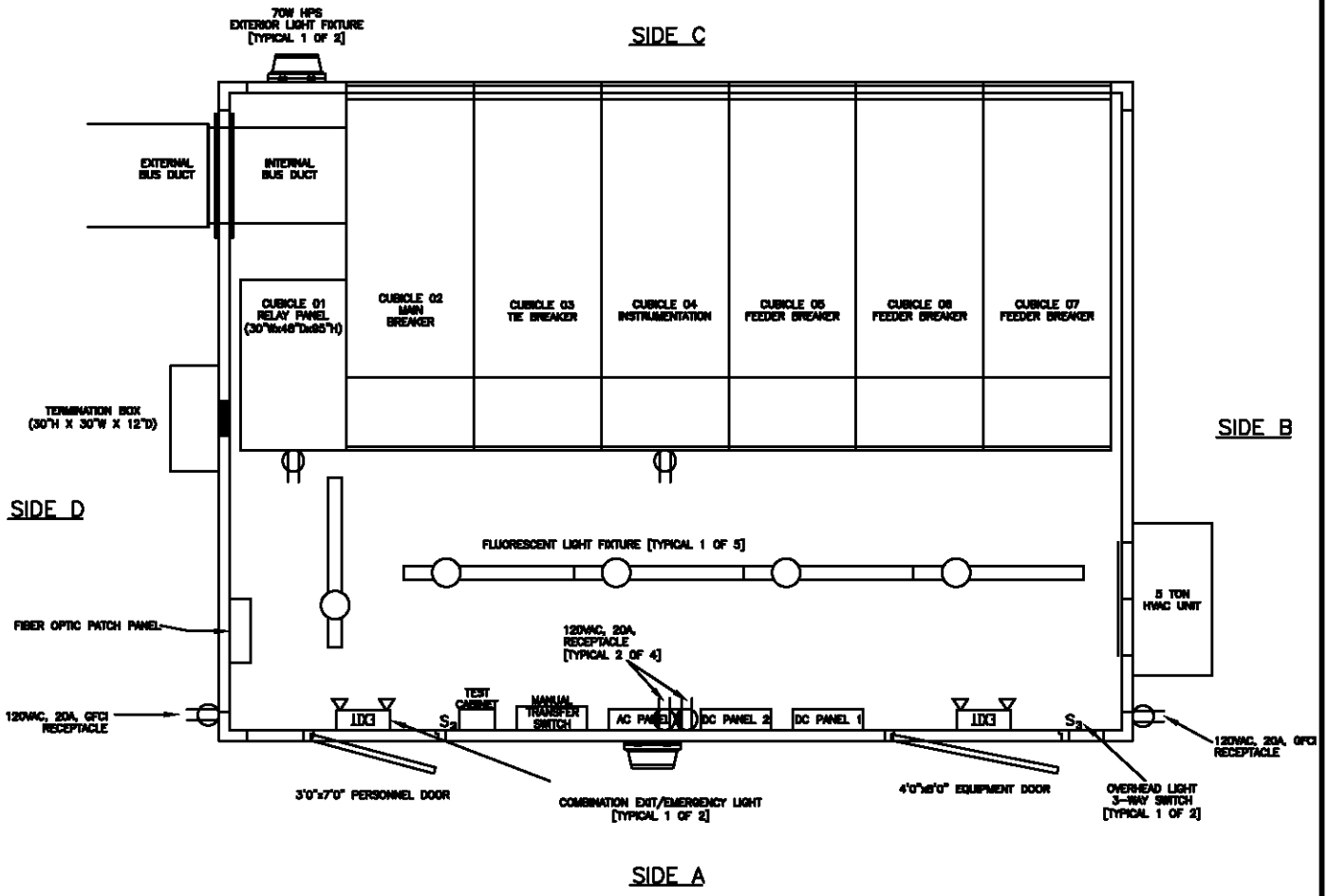

AUSTIN ENERGY ELECTRIC SERVICE DELIVERY EQUIPMENT ENGINEERING	TITLE: ENCLOSURE EQUIPMENT LAYOUT #1	DRAWN: RRP CHECKED: DATE:	SCALE NONE FILENAME: E-1700-EL1 DRAWING NO.: E-1700-EL1

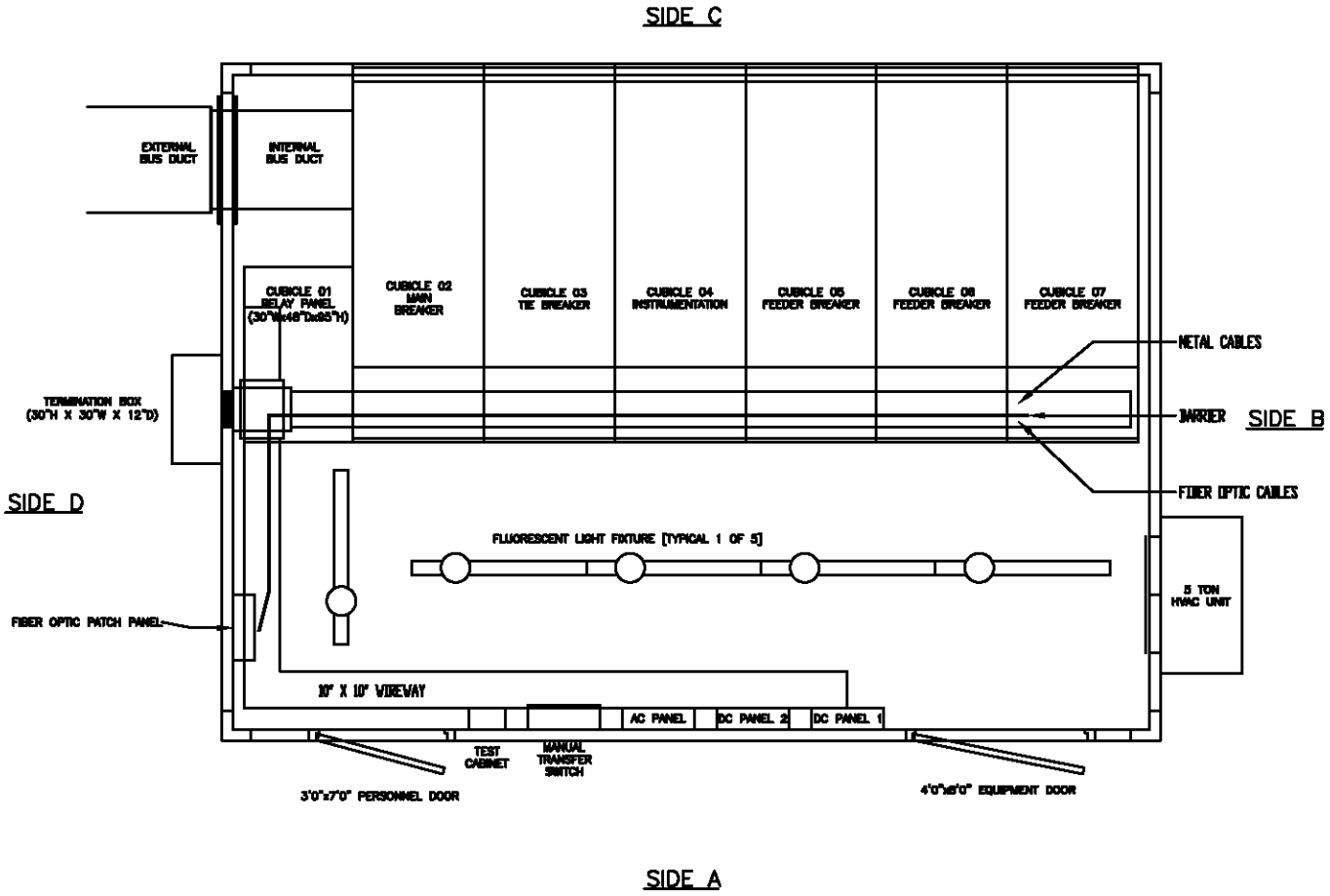

AUSTIN ENERGY ELECTRIC SERVICE DELIVERY EQUIPMENT ENGINEERING	TITLE: ENCLOSURE EQUIPMENT LAYOUT #2	DRAWN: RRP CHECKED: DATE:	SCALE NONE FILENAME: E-1700-EL2 DRAWING NO.: E-1700-EL2

SWITCHGEAR STANDARD

SWGR

Pkg	STDSWGR	Second Line	Third Line	CAD	MANUAL
X	R1.X	COVER SHEET		CAD	
X	R1.Z	CABLE SCHEDULE		CAD	
X	R2A	ONE LINE DIAGRAM	XX-123 UNIT SUB	CAD	
X	R3A.1	AC SCHEMATIC	XX-123 - UNIT 1	CAD	
X	R3A.2	AC SCHEMATIC XX-1234	XX-41 MAIN BKR - UNIT 2	CAD	
X	R3A.3	AC SCHEMATIC XX-123	XX-51 TIE BKR - UNIT 3	CAD	
X	R3A.4	AC SCHEMATIC XX-123	INCOMING PT'S & CPT - UNIT 4	CAD	
X	R3A.5	AC SCHEMATIC XX-123	FEEDER BREAKERS - UNITS 6,7	CAD	
X	R3A.6	AC SCHEMATIC XX-123	LTC PARALLELING SCHEMATIC	CAD	
X	R4A.1	DC SCHEMATIC	XX-601M CLOSE & TC1	CAD	
X	R4A.2	DC SCHEMATIC	XX-601M TC2	CAD	
X	R4A.3	DC SCHEMATIC	HI-SIDE 50/51H & CS BKR FAILURE (351S)	CAD	
X	R4A.4a	DC SCHEMATIC	XFMR XX-123	CAD	
X	R4A.4b	DC SCHEMATIC	XFMR XX-123 COOLING CTRL & SUDDEN PRESS.	CAD	
X	R4A.5	DC SCHEMATIC	XX-123 XFMR LOCKOUT 86T - UNIT 1	CAD	
X	R4A.6	DC SCHEMATIC	XX-123 XFMR DIFF 87T (387) RELAY - UNIT 1	CAD	
X	R4A.7	DC SCHEMATIC	XFMR BKR FAILURE LOCKOUT 86BF1 - UNIT 1	CAD	
X	R4A.8	DC SCHEMATIC	BUS DIFF RELAY 87B & LOR 86B - UNIT 2	CAD	
X	R4A.9	DC SCHEMATIC	BUS BKR FAIL LOCKOUT 86BF2 - UNIT 2	CAD	
X	R4A.10	DC SCHEMATIC	XX-41 MAIN BKR CLOSE & TC1 - UNIT 2	CAD	
X	R4A.11	DC SCHEMATIC	XX-41 MAIN BKR TC2 - UNIT 2	CAD	
X	R4A.12	DC SCHEMATIC	XX-41 50/62M (351S) RELAY - UNIT 2	CAD	
X	R4A.13	DC SCHEMATIC	XX-51 TIE BKR CLOSE & TC1 - UNIT 3	CAD	
X	R4A.14	DC SCHEMATIC	XX-51 TIE BKR TC2 - UNIT 3	CAD	
X	R4A.15	DC SCHEMATIC	XX-51 50/51BT (351S) RELAY - UNIT 3	CAD	
X	R4A.16	DC SCHEMATIC	XX-51 50/62BT (351-6) RELAY - UNIT 3	CAD	
X	R4A.17	DC SCHEMATIC	XX-51 TIE BKR CABLE DIFF L/O 86C - UNIT 3	CAD	
X	R4A.18	DC SCHEMATIC	XX-1 FDR BKR CLOSE & TC1 - UNIT 5	CAD	
X	R4A.19	DC SCHEMATIC	XX-1 FDR BKR TC2 - UNIT 5	CAD	
X	R4A.20	DC SCHEMATIC	XX-1 FDR BKR 50/51 (351S) RELAY - UNIT 5	CAD	
X	R4A.21	DC SCHEMATIC	XX-1 FDR 50/62 (351-6) RELAY - UNIT 5	CAD	
X	R4A.22	DC SCHEMATIC	XX-2 FDR BKR CLOSE & TC1 - UNIT 6	CAD	
X	R4A.23	DC SCHEMATIC	XX-2 FDR BKR TC2 - UNIT 6	CAD	
X	R4A.24	DC SCHEMATIC	XX-2 FDR BKR 50/51 (351S) RELAY - UNIT 6	CAD	
X	R4A.25	DC SCHEMATIC	XX-2 FDR 50/62 (351-6) RELAY - UNIT 6	CAD	
X	R4A.26	DC SCHEMATIC	XX-3 FDR BKR CLOSE & TC1 - UNIT 7	CAD	
X	R4A.27	DC SCHEMATIC	XX-3 FDR BKR TC2 - UNIT 7	CAD	
X	R4A.28	DC SCHEMATIC	XX-3 FDR BKR 50/51 (351S) RELAY - UNIT 7	CAD	
X	R4A.29	DC SCHEMATIC	XX-3 FDR BKR 50/62 (351-6) RELAY - UNIT 7	CAD	
X	R8A.2a	COMM SCHEMATIC	SWGR 123 SEL-3530 FIBER PLAN	CAD	
X	R8A.2b	COMM SCHEMATIC	XX-123 SEL-3530 RTAC UNIT 1	CAD	
X	R9A	STATION SERVICE	XX-123 UNIT SUB	CAD	
X	R12A.1	EXT CONNECTION	SWGR 123 INTERFACE / UNIT 1-3	CAD	
X	R12A.2	EXT CONNECTION	XX-123	CAD	
X	R14.X	MANUFACTURER DRAWING	XX-123 BKR LIGHT & SPACE HTR CKT	CAD	
X	R14.Ya	MANUFACTURER DRAWING	123 SWGR UNIT 1 & 2 TEST SW NAMEPLATE	CAD	
X	R14.Yb	MANUFACTURER DRAWING	123 SWGR UNIT 2 & 3 TEST SW NAMEPLATE	CAD	
X	R14.Yc	MANUFACTURER DRAWING	123 SWGR UNIT 4-7 TEST SW NAMEPLATE	CAD	

STANDARD REVISION HISTORY

Rev.	Engineer	Description	Issued
A		SWITCHGEAR STANDARD	05/01/08
B		SWITCHGEAR STANDARD	07/01/10
C	LEE	NEW SWITCHGEAR STANDARD	08/26/11
D			
E			
F			
G			
H			
I			
J			
K			
L			
M			
N			
O			
P			
Q			
R			
S			
T			

ISSUED FOR MANUFACTURING STANDARD - 26 AUGUST 2011

NO	DATE	REVISION	TASKNUM	DSGN	CHK	DWN	CHK	AS-BUILT	BY
6									
5									
4									
3									
2									
1									
0	08-26-11	REVISION C - NEW SWITCHGEAR STANDARD		TL	TL	JG			

FOR CONSTRUCTION / DATE

NOTICE
The data in this document incorporates proprietary rights of AUSTIN ENERGY. Any party accepting this document does so in confidence and agrees that it shall not be duplicated in whole or part, nor disclosed to others without the consent of AUSTIN ENERGY.

POWER DELIVERY DIVISION
TRANSMISSION ENGINEERING

TITLE :
SWITCHGREAR STANDARD
DRAWING INDEX

MASTER NO.: R01_STD_SWGR_X
SCALE: NTS
FILE NAME: XXXX_01_X.DWG
DRAWING NUMBER: 7B XXXX R1.X

CABLE	LTR	REV	SIZE	FROM	TO	FUNCTION
AC-	XX	1	3-1/C#3/0	AC PNL 1	SWGR 123 J-BOX	A/C POWER TO SWGR 123
AC-	YY	1	4/C#10	SWGR 123 1E-33AC	XX-601M	A/C POWER TO XX-601M
AC-	ZZ	1	3-1/C#6	SWGR 123 1E-38AC1	XFMR 123 LTC	A/C POWER TO XX-123 XFMR
AC-	XY	1	3-1/C#3/0	SWGR 123	AC TRANSFER SWITCH	AUX AC SUPPLY TO HOUSE
C-	XX	1	4/C#10	SWGR 123-1E	STRONG BKR PNL	XX-601M 50X TRIP TO XX-XXX
C-	YY	1	7/C#10	SWGR 123 1E	MB1 PNL	XX-601M T&LO FROM MB1 & BF1
C-	ZZ	1	3PR#16	RTU CAB B-B1	SWGR 123-1E-3530+	SWGR 123 3530 RELAY FAIL ALARMS
CT-	XX	1	4/C#10	XFMR 123	SWGR 123 87T	XFMR DIFF CT
CT-	YX	1	4/C#10	XFMR 123	SWGR 123 50/51H	XFMR HS CT
CT-	ZX	1	4/C#10	XFMR 123	MB1 PNL	MB1 DIFF CT
CT-	XY	1	4/C#10	XFMR 123 - NEUTRAL	SWGR 123 NEUT	XFMR NEUTRAL CT
CT-	YY	1	4/C#10	SWGR 456-1E	SWGR 123-1E	XX-52 CONTRIBUTION TO XX-51 TIE
DC-	XX	1	4/C#10	SWGR 123 1E-1P18	XX-601M	XX-601M CC & TC1
DC-	YY	1	4/C#10	SWGR 123 1E-2P13	XFMR 123 LTC	DC POWER SUPPLY
DC-	ZZ	1	3/C#2	DC PNL 1	SWGR 123 DCP-1	DC POWER SUPPLY
DC-	XY	1	3/C#2	DC PNL 2	SWGR 123 DCP-2	DC POWER SUPPLY
F-	XX	1	12PR FIBER	CNTL HSE PATCH PNL	SWGR 123 PATCH PNL	FIBER COMM
PT-	XX	1	4/C#10	PNL X	SWGR 123 -1E	XX-601M 50/51H RELAY POTENTIALS
PT-	YY	1	4/C#10	SWGR 123 BUS PT	XFMR 123 LTC	VB, VN PT INPUT
SC-	XX	1	12/C#10	SWGR 123 TSM1	XX-601M	TRIP & CLOSE CONTROL
SC-	YX	1	12/C#10	SWGR 123 TSM2	XX-601M	AUX CONTROL
SC-	ZX	1	3PR #16	SWGR 123 TSM3	XX-601M	XX-601M ALARMS HI / LO / ANN DCF
SC-	XY	1	3PR #16	SWGR 123 TSM3	XFMR 123 X5-55	FAN STAGE 1 & 2 IND
SC-	YY	1	4/C#10	SWGR 123 TSM4	XFMR 123 LTC	XFMR CONTROL
SC-	ZY	1	12/C#10	SWGR 123 TSM5	XFMR 123 LTC	XFMR CONTROL / ALARMS
SC-	XZ	1	7/C#10	SWGR 123 1E-86C 31	SWGR 456 1E-RC2	REMOTE TIE BKR
SC-	YZ	1	4/C#10	SWGR 123 1E-2P18	SWGR 456 1E-T3516-B13	XX-52 BF TO XX-51 86C
SF-	XX	1	1PR 62.5µ	XX-123 SEL-3530 PORT 1	XX-123 BECKWTITH LTC CONTROLLER	COMM (ORANGE FIBER)
SF-	YY	1	1-200µ	XX-123 XFMR RTD	SWGR 123 UNIT 1 387 PORT 3	COMM (BLUE FIBER)
T-	XX	1	6PR#24	HOUSE PUNCH BLOCK	SWGR 123 TELEPHONE	TELEPHONE

NO	DATE	REVISION	TASKNUM	DSGN	CHK	DWN	CHK	AS-BUILT	BY
6									
5									
4									
3									
2									
1									
0	08-26-11	REVISION C – NEW SWITCHGEAR STANDARD		TL	TL	JG			

FOR CONSTRUCTION / DATE

NOTICE
The data in this document incorporates proprietary rights of AUSTIN ENERGY. Any party accepting this document does so in confidence and agrees that it shall not be duplicated in whole or part, nor disclosed to others without the consent of AUSTIN ENERGY.

AUSTIN ENERGY
POWER DELIVERY DIVISION
TRANSMISSION ENGINEERING

TITLE :
NAME SUBSTATION
CABLE SCHEDULE

MASTER NO. R01_STD_SWGR_Z
SCALE NTS
FILE NAME XXXX_01_Z.DWG
DRAWING NUMBER 7B XXXX R1.Z

ISSUED FOR MANUFACTURING STANDARD - 26 AUGUST 2011

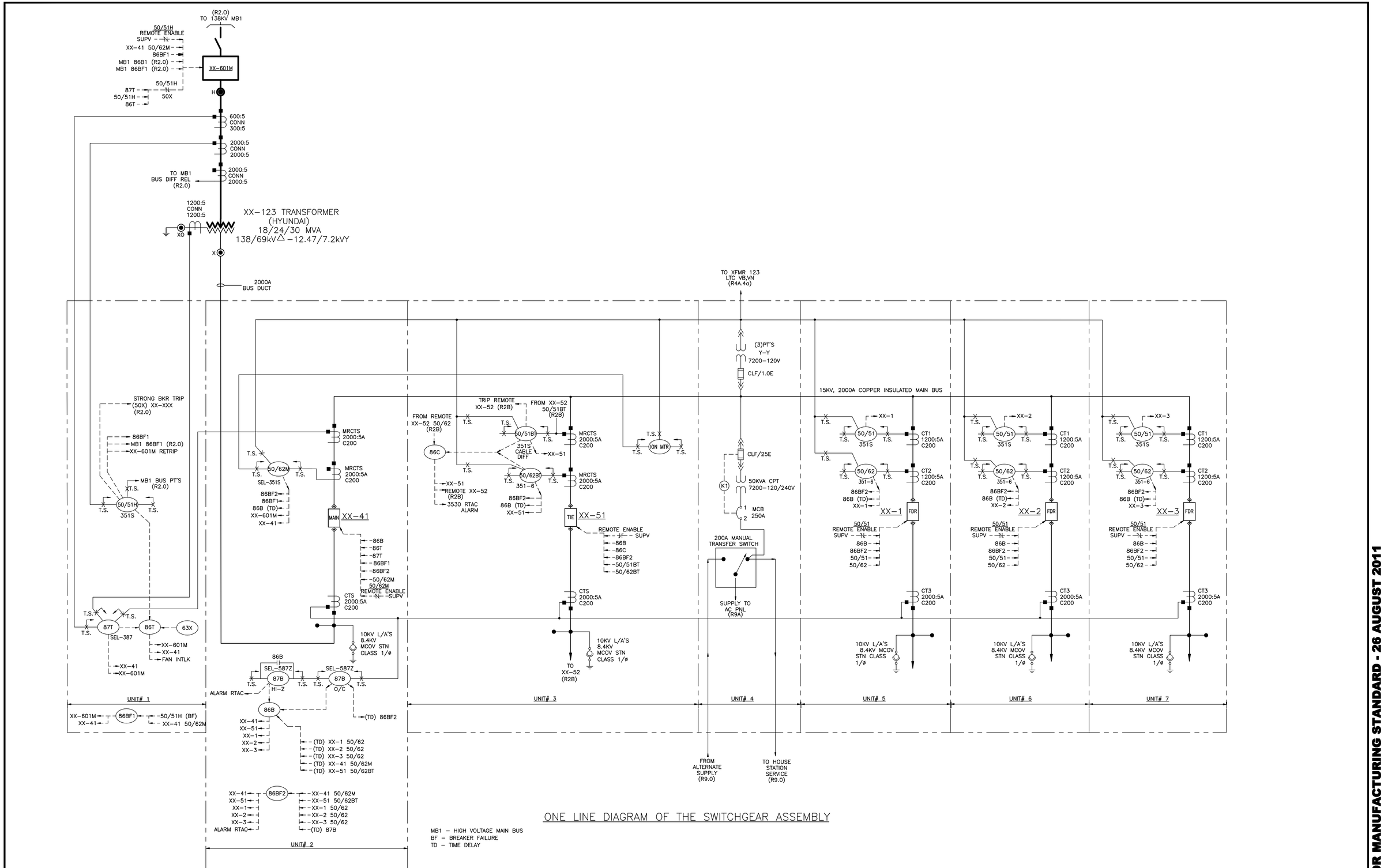

ONE LINE DIAGRAM OF THE SWITCHGEAR ASSEMBLY

MB1 – HIGH VOLTAGE MAIN BUS
BF – BREAKER FAILURE
TD – TIME DELAY

NO	DATE	REVISION	TASKNUM	DSGN	CHK	DWN	CHK	AS-BUILT	BY
6									
5									
4									
3									
2									
1									
0	08-26-11	REVISION C – NEW SWITCHGEAR STANDARD		TL	TL	JG			

FOR CONSTRUCTION / DATE

NOTICE
The data in this document incorporates proprietary rights of AUSTIN ENERGY. Any party accepting this document does so in confidence and agrees that it shall not be duplicated in whole or part, nor disclosed to others without the consent of AUSTIN ENERGY.

AUSTIN ENERGY
POWER DELIVERY DIVISION
TRANSMISSION ENGINEERING

TITLE :
NAME SUBSTATION
ONE-LINE DIAGRAM
XX-123 UNIT SUB

MASTER NO. R02A_STD_SWGR_X
SCALE NTS
FILE NAME XXXX_02A.DWG
DRAWING NUMBER 7B XXXX R2A

ISSUED FOR MANUFACTURING STANDARD - 26 AUGUST 2011

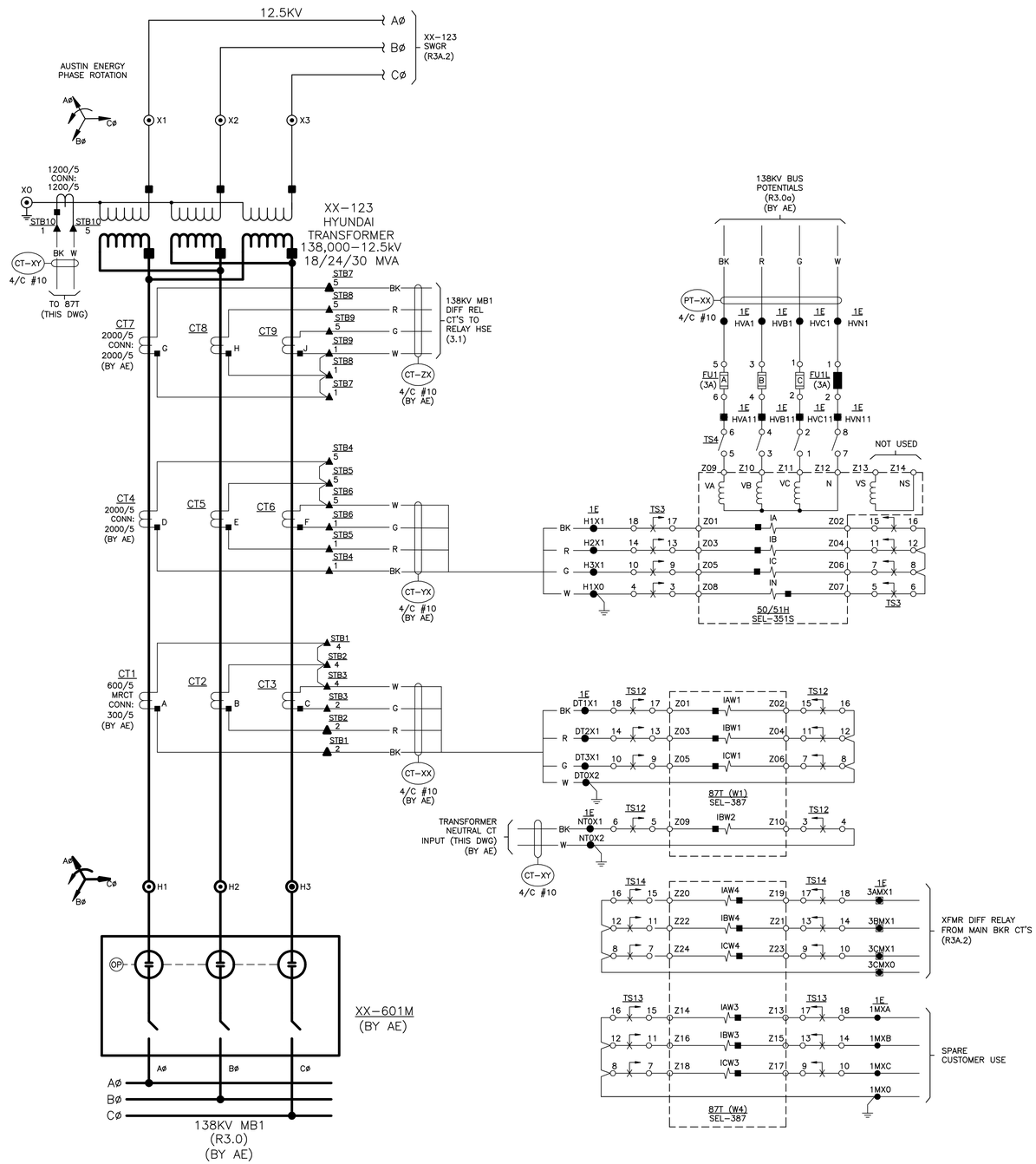

DEVICE LEGEND

87T	DIFFERENTIAL RELAY (SEL-387)
50/51T	TRANSFORMER OVERCURRENT RELAY (SEL-421)
TS	TEST SWITCH
50/51H	XFMR HIGH SIDE O/C RELAY & CKT SWITCHER FAIL RELAY (SEL-351S)

TERMINAL IDENTIFICATION

- □ TERMINAL ON LINE CONTROL PANEL
- ⊡ TERMINAL ON SUPV PANEL
- ○ TERMINAL ON DEVICE
- ✖ SHORTING BLOCK
- ▲ TERMINAL ON UNIT SUB TRANSFORMER
- ⊙ TRANSFORMER BUSHING
- ■ POLARITY MARK
- ≫ CIRCUIT DISCONNECT DEVICE
- • ELECTRICAL CONNECTION
- ● TERMINAL ON UNIT SUB SWITCHGEAR FOR CUSTOMER USE
- ■ TERMINAL ON UNIT SUB SWITCHGEAR FOR MFG INTERNAL USE

NO	DATE	REVISION	TASKNUM	DSGN	CHK	DWN	CHK	AS-BUILT	BY
6									
5									
4									
3									
2									
1									
0	08-26-11	REVISION C – NEW SWITCHGEAR STANDARD		TL	TL	JG			

FOR CONSTRUCTION / DATE

NOTICE
The data in this document incorporates proprietary rights of AUSTIN ENERGY. Any party accepting this document does so in confidence and agrees that it shall not be duplicated in whole or part, nor disclosed to others without the consent of AUSTIN ENERGY.

AUSTIN ENERGY
POWER DELIVERY DIVISION
TRANSMISSION ENGINEERING

TITLE :

NAME SUBSTATION
AC SCHEMATIC
XX-123 – UNIT 1

MASTER NO.	SCALE
R03A_STD_SWGR_01	NTS
FILE NAME	
XXXX_03A_01.DWG	
DRAWING NUMBER	
7B XXXX R3A.1	

ISSUED FOR MANUFACTURING STANDARD - 26 AUGUST 2011

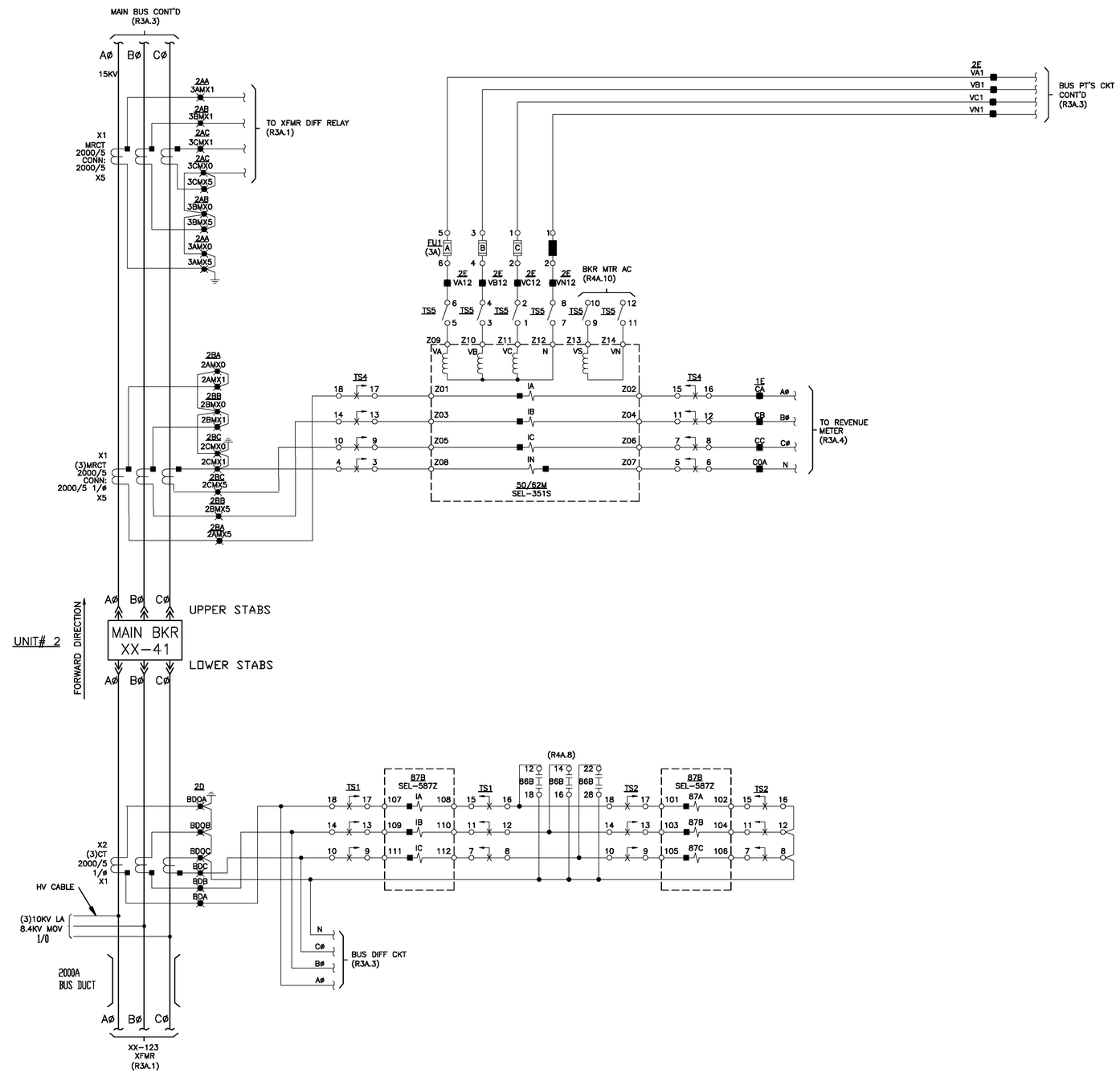

2000:5 MRCT	
RATIO	CONN.
300:5	X3–X4
400:5	X1–X2
500:5	X4–X5
800:5	X2–X3
1100:5	X2–X4
1200:5	X1–X3
1500:5	X1–X4
1600:5	X2–X5
2000:5	X1–X5

TERMINAL IDENTIFICATION

- □ TERMINAL ON LINE CONTROL PANEL
- ⊡ TERMINAL ON SUPV PANEL
- ○ TERMINAL ON DEVICE
- ⊠ SHORTING BLOCK
- ▲ TERMINAL ON UNIT SUB TRANSFORMER
- ⦿ TRANSFORMER BUSHING
- ■ POLARITY MARK
- ≫ CIRCUIT DISCONNECT DEVICE
- • ELECTRICAL CONNECTION
- ● TERMINAL ON UNIT SUB SWITCHGEAR FOR CUSTOMER USE
- ■ TERMINAL ON UNIT SUB SWITCHGEAR FOR MFG INTERNAL USE

NO	DATE	REVISION	TASKNUM	DSGN	CHK	DWN	CHK	AS-BUILT	BY
6									
5									
4									
3									
2									
1									
0	08–26–11	REVISION C – NEW SWITCHGEAR STANDARD		TL	TL	JG			

FOR CONSTRUCTION / DATE

NOTICE
The data in this document incorporates proprietary rights of AUSTIN ENERGY. Any party accepting this document does so in confidence and agrees that it shall not be duplicated in whole or part, nor disclosed to others without the consent of AUSTIN ENERGY.

AUSTIN ENERGY
POWER DELIVERY DIVISION
TRANSMISSION ENGINEERING

TITLE :

NAME SUBSTATION
AC SCHEMATIC XX–1234
XX–41 MAIN BKR – UNIT 2

MASTER NO.	SCALE
R03A_STD_SWGR_02	NTS
FILE NAME	
XXXX_03A_02.DWG	
DRAWING NUMBER	
7B XXXX R3A.2	

ISSUED FOR MANUFACTURING STANDARD - 26 AUGUST 2011

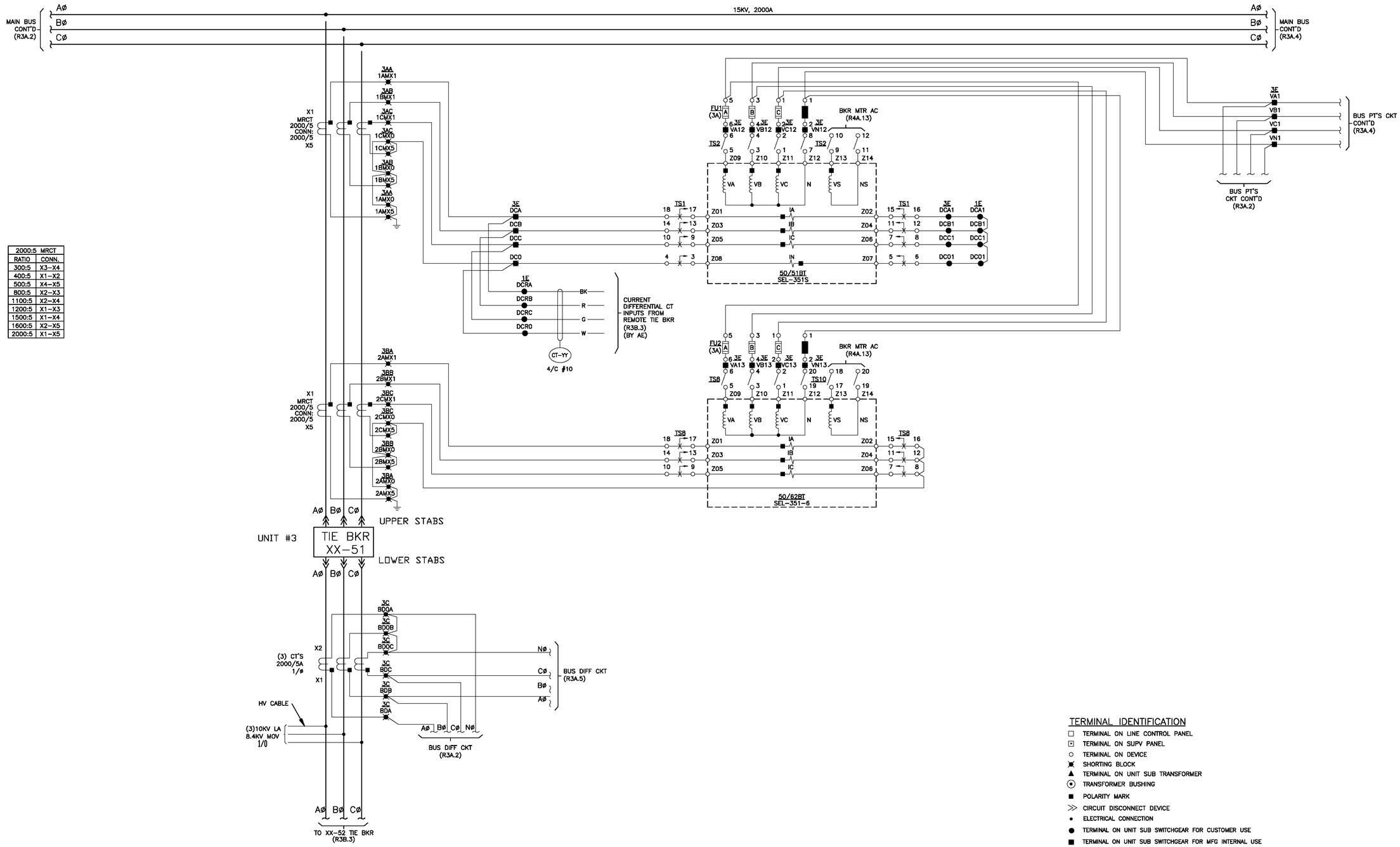

2000:5 MRCT	
RATIO	CONN.
300:5	X3-X4
400:5	X1-X2
500:5	X4-X5
800:5	X2-X3
1100:5	X2-X4
1200:5	X1-X3
1500:5	X1-X4
1600:5	X2-X5
2000:5	X1-X5

TERMINAL IDENTIFICATION

- TERMINAL ON LINE CONTROL PANEL
- TERMINAL ON SUPV PANEL
- TERMINAL ON DEVICE
- SHORTING BLOCK
- TERMINAL ON UNIT SUB TRANSFORMER
- TRANSFORMER BUSHING
- POLARITY MARK
- CIRCUIT DISCONNECT DEVICE
- ELECTRICAL CONNECTION
- TERMINAL ON UNIT SUB SWITCHGEAR FOR CUSTOMER USE
- TERMINAL ON UNIT SUB SWITCHGEAR FOR MFG INTERNAL USE

NO	DATE	REVISION	TASKNUM	DSGN	CHK	DWN	CHK	AS-BUILT	BY
8									
5									
4									
3									
2									
1									
0	08-26-11	REVISION C – NEW SWITCHGEAR STANDARD		TL	TL	JG			

FOR CONSTRUCTION / DATE

NOTICE
The data in this document incorporates proprietary rights of AUSTIN ENERGY. Any party accepting this document does so in confidence and agrees that it shall not be duplicated in whole or part, nor disclosed to others without the consent of AUSTIN ENERGY.

AUSTIN ENERGY
POWER DELIVERY DIVISION
TRANSMISSION ENGINEERING

TITLE :
NAME SUBSTATION
AC SCHEMATIC XX-123
XX-51 TIE BKR – UNIT 3

MASTER NO. R03A_STD_SWGR_03
SCALE NTS
FILE NAME XXXX_03A_03.DWG
DRAWING NUMBER 7B XXXX R3A.3

ISSUED FOR MANUFACTURING STANDARD - 26 AUGUST 2011

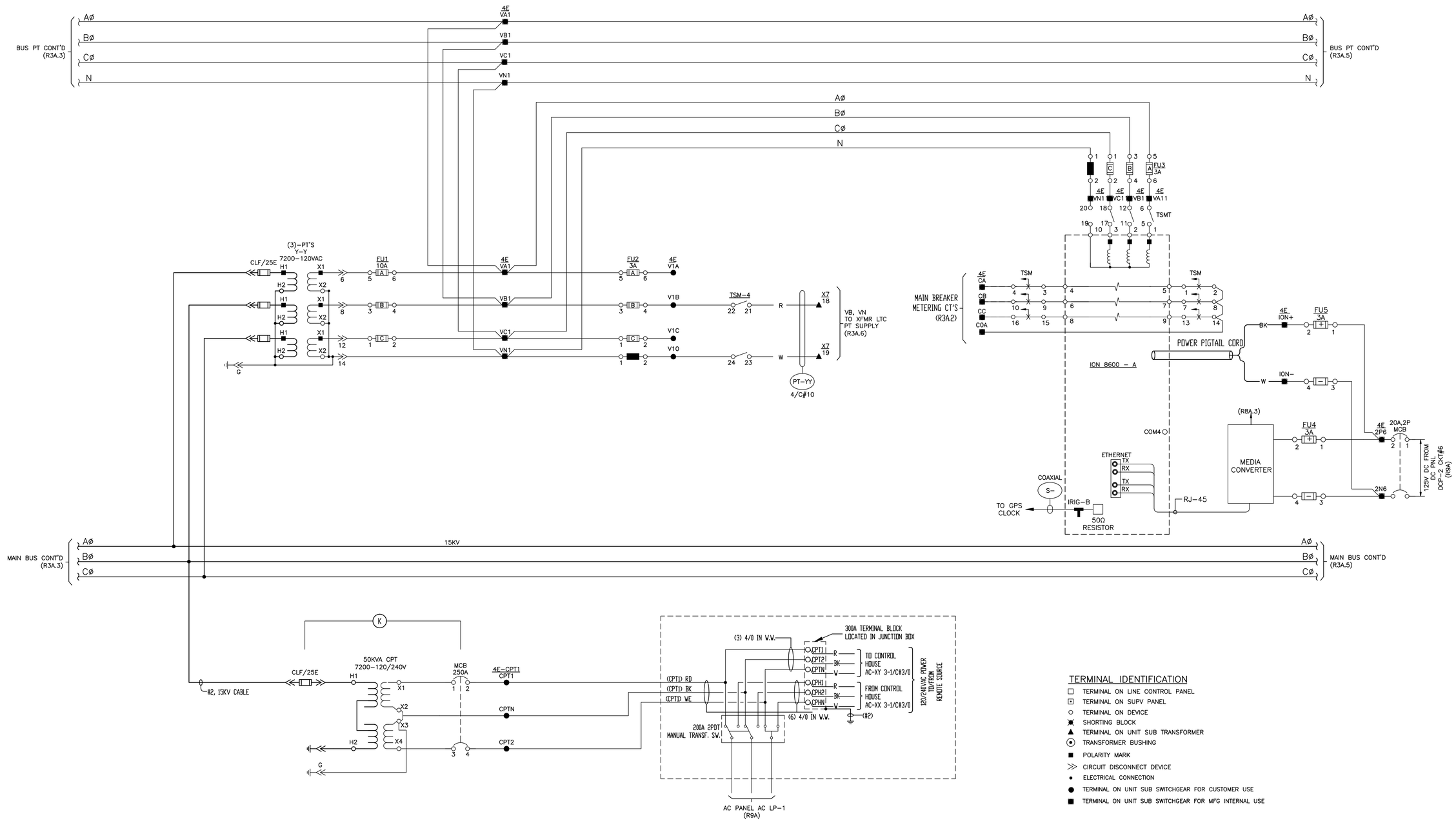

TERMINAL IDENTIFICATION

- □ TERMINAL ON LINE CONTROL PANEL
- ⊡ TERMINAL ON SUPV PANEL
- ○ TERMINAL ON DEVICE
- ✖ SHORTING BLOCK
- ▲ TERMINAL ON UNIT SUB TRANSFORMER
- ⊙ TRANSFORMER BUSHING
- ■ POLARITY MARK
- ≫ CIRCUIT DISCONNECT DEVICE
- • ELECTRICAL CONNECTION
- ● TERMINAL ON UNIT SUB SWITCHGEAR FOR CUSTOMER USE
- ■ TERMINAL ON UNIT SUB SWITCHGEAR FOR MFG INTERNAL USE

NO	DATE	REVISION	TASKNUM	DSGN	CHK	DWN	CHK	AS-BUILT	BY
6									
5									
4									
3									
2									
1									
0	08-26-11	REVISION C - NEW SWITCHGEAR STANDARD		TL	TL	JG			

FOR CONSTRUCTION / DATE

NOTICE
The data in this document incorporates proprietary rights of AUSTIN ENERGY. Any party accepting this document does so in confidence and agrees that it shall not be duplicated in whole or part, nor disclosed to others without the consent of AUSTIN ENERGY.

AUSTIN ENERGY
POWER DELIVERY DIVISION
TRANSMISSION ENGINEERING

TITLE :

NAME SUBSTATION
AC SCHEMATIC XX-123
INCOMING PT'S & CPT - UNIT 4

MASTER NO.	SCALE
R03A_SWGR_04_Rev C	NTS
FILE NAME	
XXXX_03A_04.DWG	
DRAWING NUMBER	
7B XXXX R3A.4	

ISSUED FOR MANUFACTURING STANDARD - 24 OCTOBER 2011

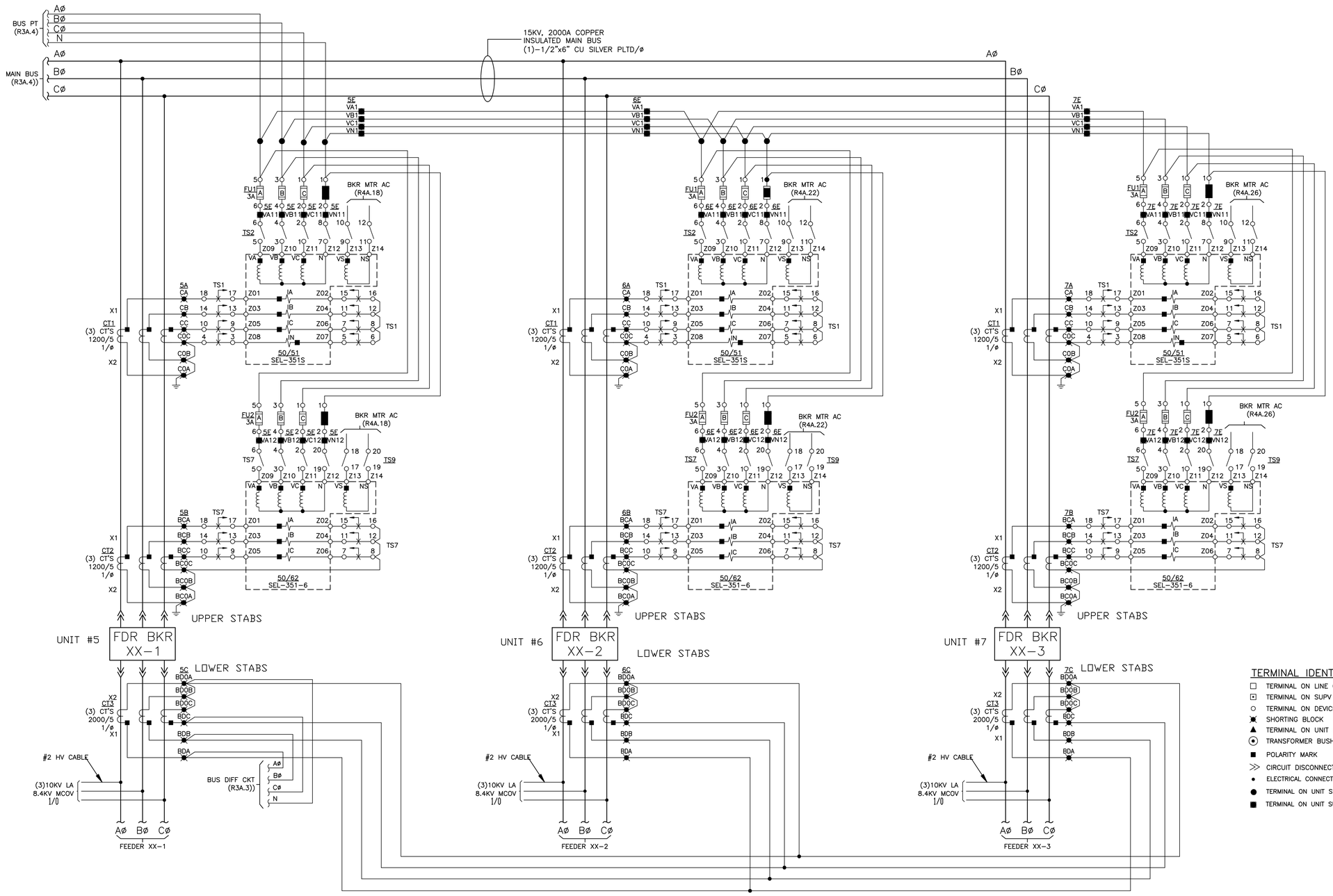

TERMINAL IDENTIFICATION

- TERMINAL ON LINE CONTROL PANEL
- TERMINAL ON SUPV PANEL
- TERMINAL ON DEVICE
- SHORTING BLOCK
- TERMINAL ON UNIT SUB TRANSFORMER
- TRANSFORMER BUSHING
- POLARITY MARK
- CIRCUIT DISCONNECT DEVICE
- ELECTRICAL CONNECTION
- TERMINAL ON UNIT SUB SWITCHGEAR FOR CUSTOMER USE
- TERMINAL ON UNIT SUB SWITCHGEAR FOR MFG INTERNAL USE

NO	DATE	REVISION	TASKNUM	DSGN	CHK	DWN	CHK	AS-BUILT	BY
6									
5									
4									
3									
2									
1									
0	08-26-11	REVISION C – NEW SWITCHGEAR STANDARD		TL	TL	JG			

FOR CONSTRUCTION / DATE

NOTICE
The data in this document incorporates proprietary rights of AUSTIN ENERGY. Any party accepting this document does so in confidence and agrees that it shall not be duplicated in whole or part, nor disclosed to others without the consent of AUSTIN ENERGY.

AUSTIN ENERGY
POWER DELIVERY DIVISION
TRANSMISSION ENGINEERING

TITLE :

NAME SUBSTATION
AC SCHEMATIC XX-123
FEEDER BREAKERS – UNITS 6,7

MASTER NO.	SCALE
R03A_STD_SWGR_05	NTS

FILE NAME: XXXX_03A_05.DWG

DRAWING NUMBER: 7B XXXX R3A.5

ISSUED FOR MANUFACTURING STANDARD - 26 AUGUST 2011

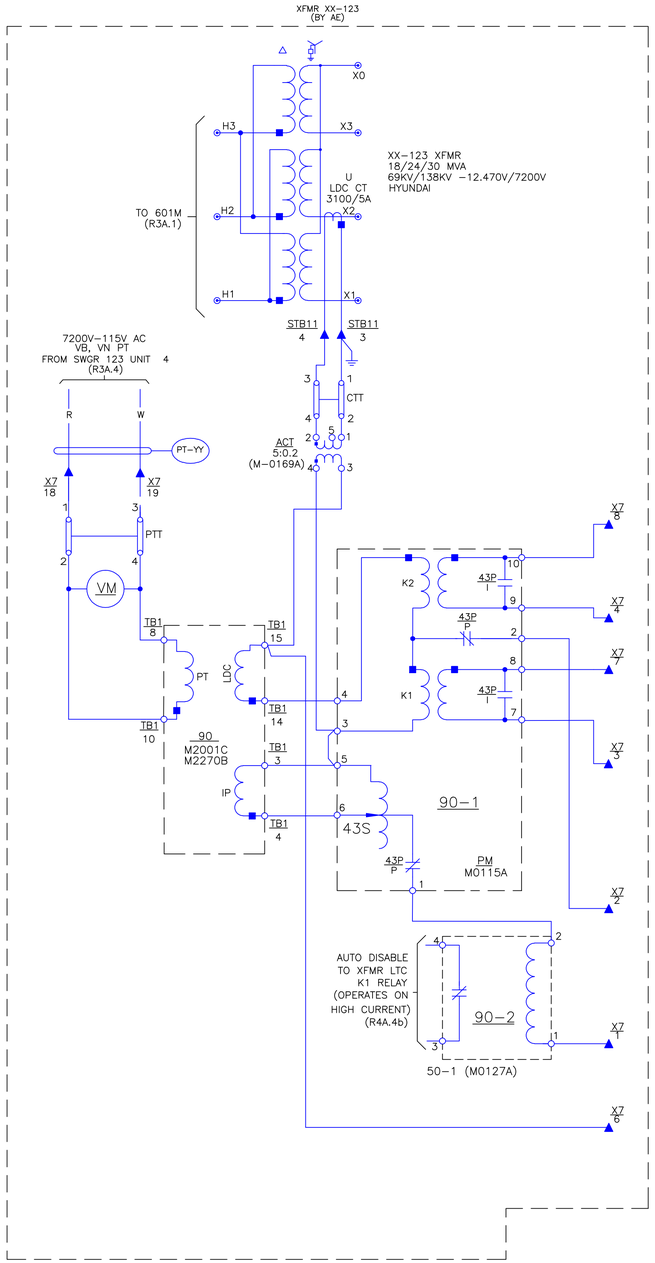

GENERAL NOTES:

PARALLELING SCHEME NOT USED
AND NOT IN SERVICE

TERMINAL INDENTIFICATION

- ● TERMINAL ON CKT SWITCHER
- □ RELAY PANEL TERMINAL
- ◉ TERMINAL POINT ON SHUNT TRIP UNITS
- » CIRCUIT DISCONNECT DEVICE
- ○ DEVICE TERMINAL
- ▣ SUPERVISORY, TONES, & TRANSDUCER PNL TB POINT
- • ELECTRICAL CONNECTION

NO	DATE	REVISION	TASKNUM	DSGN	CHK	DWN	CHK	AS-BUILT	BY
6									
5									
4									
3									
2									
1									
0	08-26-11	REVISION C - NEW SWITCHGEAR STANDARD		TL	TL	JG			

FOR CONSTRUCTION / DATE

NOTICE
The data in this document incorporates proprietary rights of AUSTIN ENERGY. Any party accepting this document does so in confidence and agrees that it shall not be duplicated in whole or part, nor disclosed to others without the consent of AUSTIN ENERGY.

AUSTIN ENERGY
POWER DELIVERY DIVISION
TRANSMISSION ENGINEERING

TITLE :

NAME SUBSTATION
AC SCHEMATIC XX-123
LTC PARALLELING SCHEMATIC

MASTER NO.	SCALE
R03A_STD_SWGR_06	NTS

FILE NAME: XXXX_03A_06.DWG

DRAWING NUMBER: 7B XXXX R3A.6

ISSUED FOR MANUFACTURING STANDARD - 26 AUGUST 2011

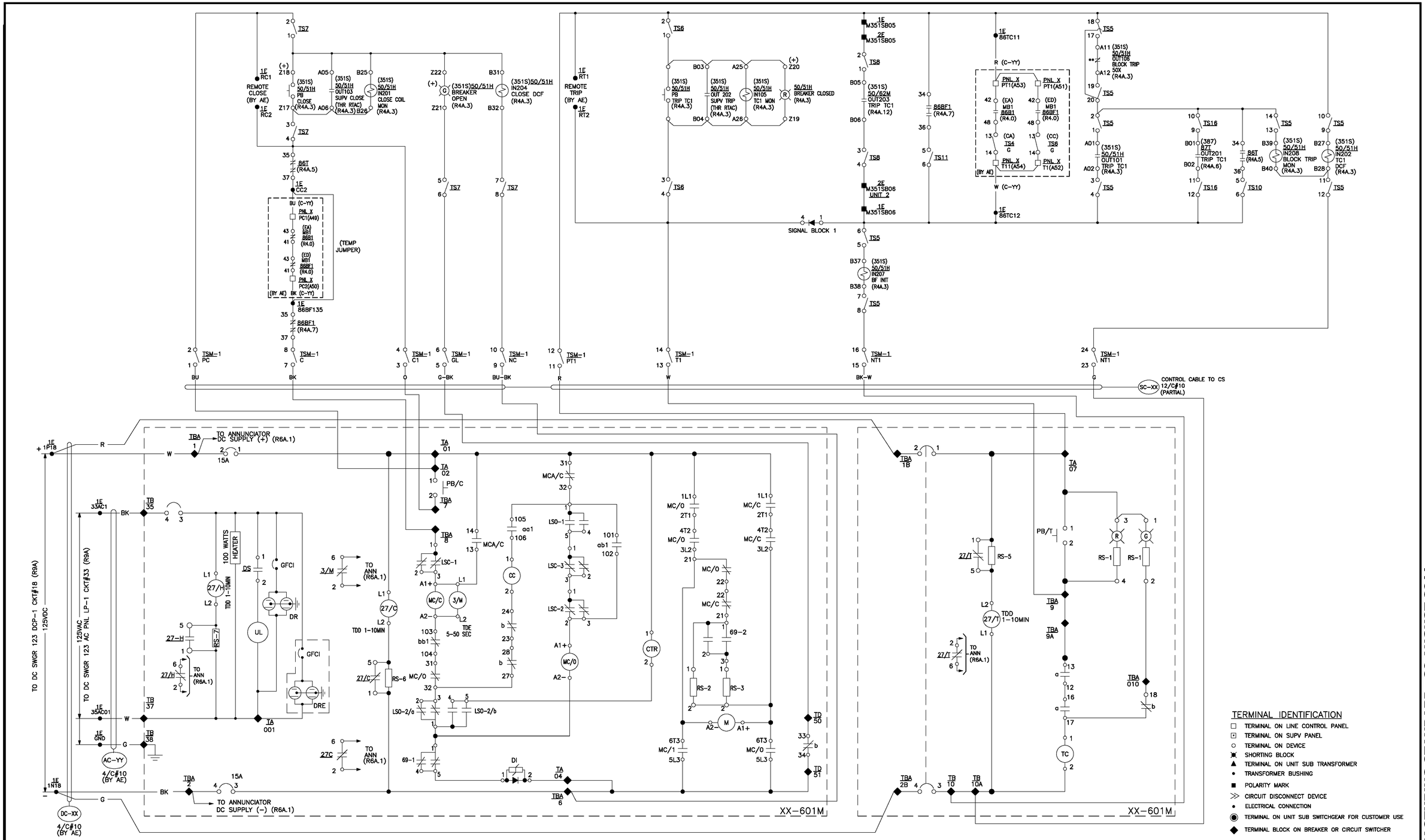

NO	DATE	REVISION	TASKNUM	DSGN	CHK	DWN	CHK	AS-BUILT	BY
6									
5									
4									
3									
2									
1									
0	08-26-11	REVISION C – NEW SWITCHGEAR STANDARD		TL	TL	JG			

FOR CONSTRUCTION / DATE

NOTICE
The data in this document incorporates proprietary rights of AUSTIN ENERGY. Any party accepting this document does so in confidence and agrees that it shall not be duplicated in whole or part, nor disclosed to others without the consent of AUSTIN ENERGY.

AUSTIN ENERGY
POWER DELIVERY DIVISION
TRANSMISSION ENGINEERING

TITLE :

NAME SUBSTATION
DC CONTROL SCHEMATIC
XX-601M CLOSE & TC1

MASTER NO.	SCALE
R04A_STD_SWGR_01	NTS
FILE NAME	
XXXX_04A_01.DWG	
DRAWING NUMBER	
7B XXXX R4A.1	

ISSUED FOR MANUFACTURING STANDARD - 26 AUGUST 2011

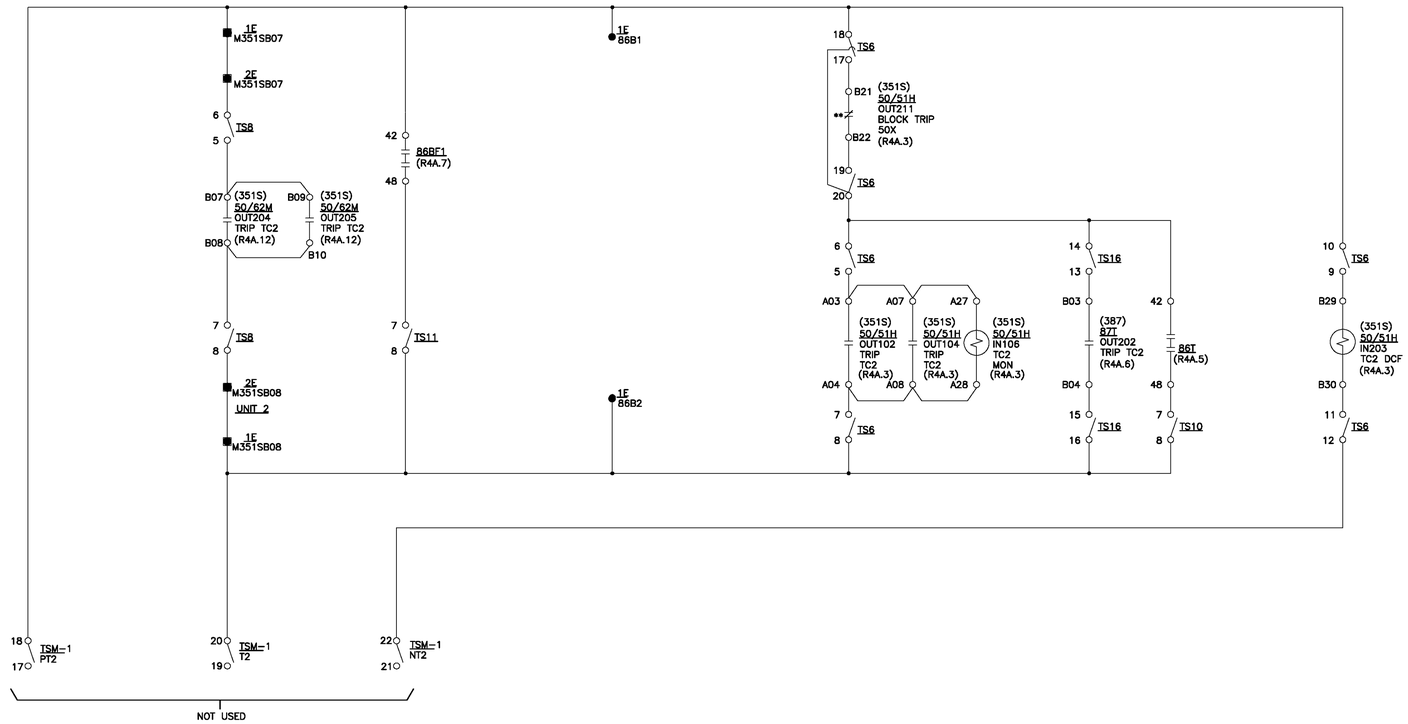

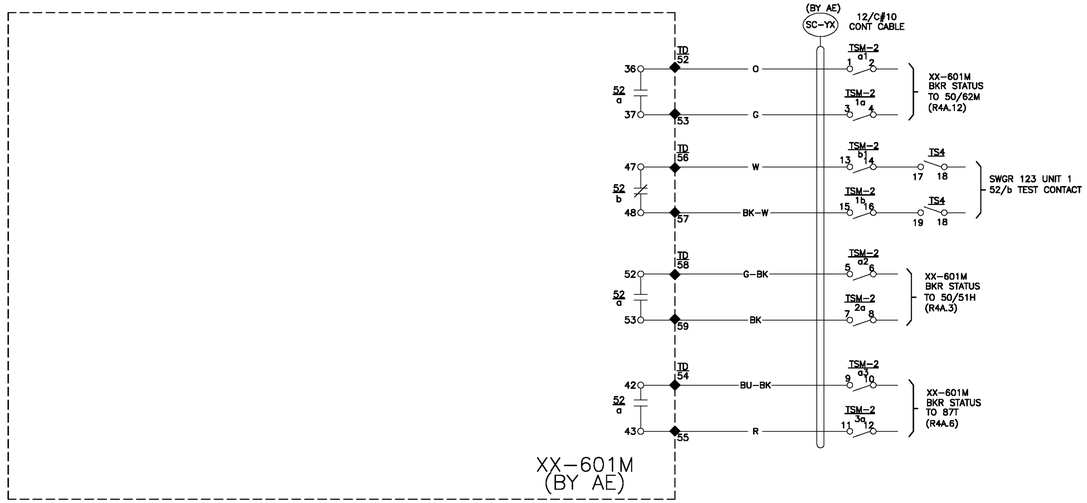

TERMINAL IDENTIFICATION

- TERMINAL ON LINE CONTROL PANEL
- TERMINAL ON SUPV PANEL
- TERMINAL ON DEVICE
- SHORTING BLOCK
- TERMINAL ON UNIT SUB TRANSFORMER
- TRANSFORMER BUSHING
- POLARITY MARK
- CIRCUIT DISCONNECT DEVICE
- ELECTRICAL CONNECTION
- TERMINAL ON UNIT SUB SWITCHGEAR FOR CUSTOMER USE
- TERMINAL ON UNIT SUB SWITCHGEAR FOR MFG INTERNAL USE
- TERMINAL BLOCK ON BREAKER OR CIRCUIT SWITCHER

ISSUED FOR MANUFACTURING STANDARD - 26 AUGUST 2011

NO	DATE	REVISION	TASKNUM	DSGN	CHK	DWN	CHK	AS-BUILT	BY
6									
5									
4									
3									
2									
1									
0	08-26-11	REVISION C – NEW SWITCHGEAR STANDARD		TL	TL	JG			

FOR CONSTRUCTION / DATE

NOTICE
The data in this document incorporates proprietary rights of AUSTIN ENERGY. Any party accepting this document does so in confidence and agrees that it shall not be duplicated in whole or part, nor disclosed to others without the consent of AUSTIN ENERGY.

AUSTIN ENERGY
POWER DELIVERY DIVISION
TRANSMISSION ENGINEERING

TITLE :
XXELLER SUBSTATION
DC CONTROL SCHEMATIC
XX-601M TC2

MASTER NO.	SCALE
R04A_STD_SWGR_02	NTS
FILE NAME	
XXXX_04A_02.DWG	
DRAWING NUMBER	
7B XXXX R4A.2	

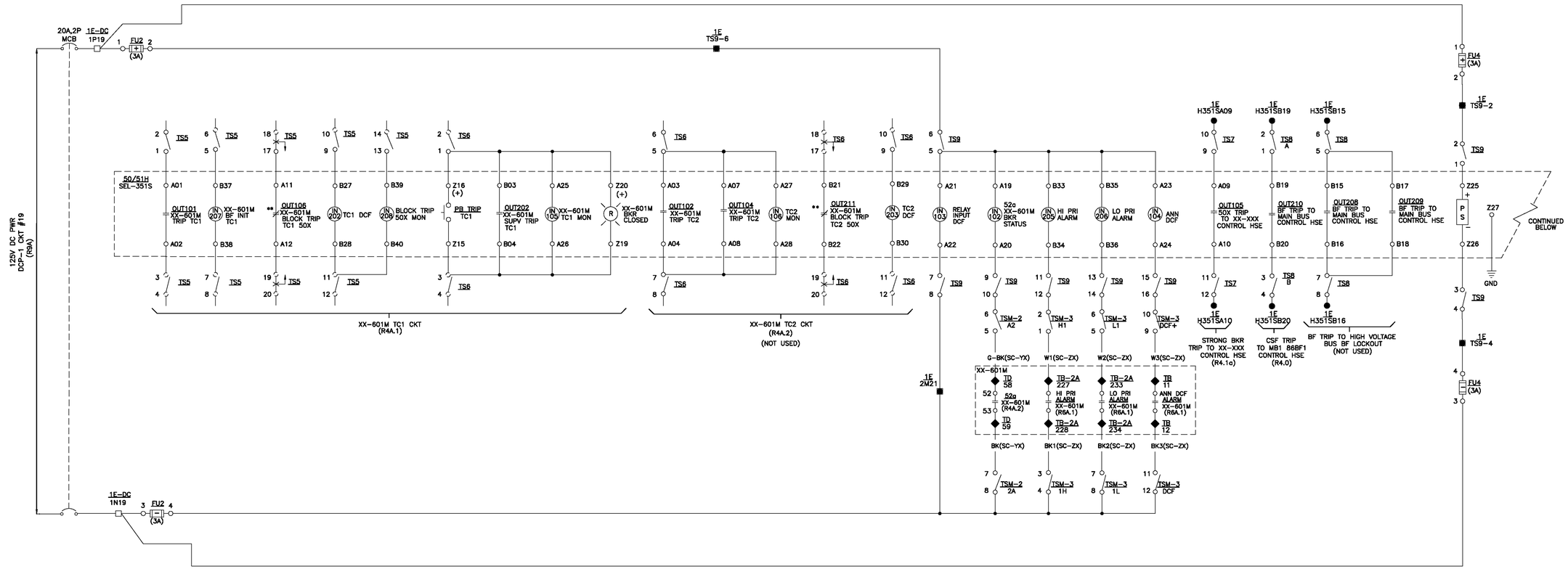

* NORMALLY OPEN CONTACT (ALARM STATE)

** NORMALLY CLOSED CONTACT

DEVICE	FUNCTION	STYLE NO.
50/51H	(SEL-351S)	

TERMINAL IDENTIFICATION

- □ TERMINAL ON LINE CONTROL PANEL
- ⊡ TERMINAL ON SUPV PANEL
- ○ TERMINAL ON DEVICE
- ⊗ SHORTING BLOCK
- ▲ TERMINAL ON UNIT SUB TRANSFORMER
- ⊙ TRANSFORMER BUSHING
- ■ POLARITY MARK
- ≫ CIRCUIT DISCONNECT DEVICE
- • ELECTRICAL CONNECTION
- ● TERMINAL ON UNIT SUB SWITCHGEAR FOR CUSTOMER USE
- ■ TERMINAL ON UNIT SUB SWITCHGEAR FOR MFG INTERNAL USE
- ◆ TERMINAL BLOCK ON BREAKER OR CIRCUIT SWITCHER

NO	DATE	REVISION	TASKNUM	DSGN	CHK	DWN	CHK	AS-BUILT	BY
6									
5									
4									
3									
2									
1									
0	08-26-11	REVISION C – NEW SWITCHGEAR STANDARD		TL	TL	JG			

FOR CONSTRUCTION / DATE

NOTICE
The data in this document incorporates proprietary rights of AUSTIN ENERGY. Any party accepting this document does so in confidence and agrees that it shall not be duplicated in whole or part, nor disclosed to others without the consent of AUSTIN ENERGY.

AUSTIN ENERGY
POWER DELIVERY DIVISION
TRANSMISSION ENGINEERING

TITLE :

NAME SUBSTATION
DC CONTROL SCHEMATIC
HI-SIDE 50/51H & CS BKR FAILURE (351S)

MASTER NO. R04A_STD_SWGR_03
SCALE NTS
FILE NAME XXXX_04A_03.DWG
DRAWING NUMBER 7B XXXX R4A.3

ISSUED FOR MANUFACTURING STANDARD - 26 AUGUST 2011

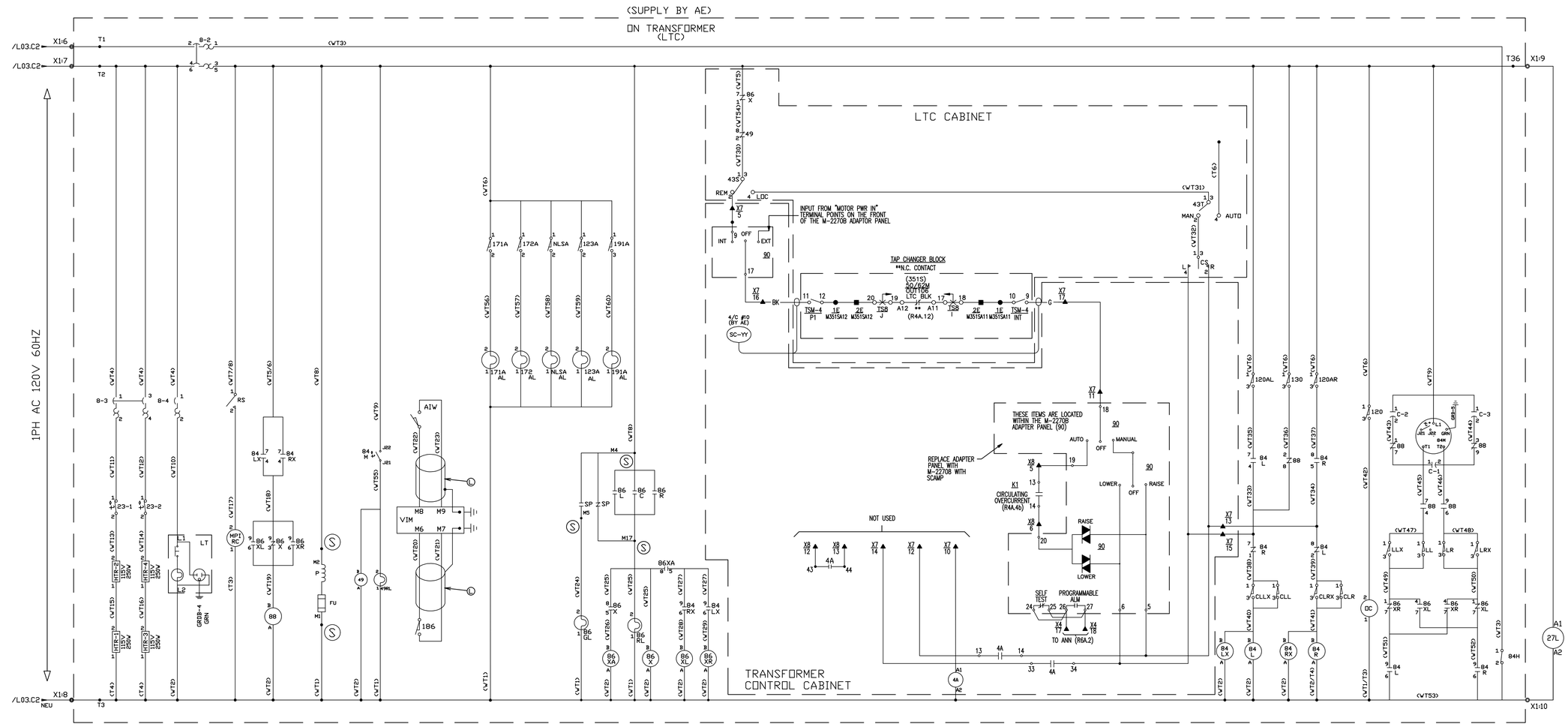

NO	DATE	REVISION	TASKNUM	DSGN	CHK	DWN	CHK	AS-BUILT	BY
6									
5									
4									
3									
2									
1									
0	08-26-11	REVISION C – NEW SWITCHGEAR STANDARD		TL	TL	JG			

DSN	06.07.22	1	REVISED BY COMMENTS	DSN	06.08.18	2	REVISED BY COMMENTS	DSN	06.09.26	3	REVISED BY COMMENTS	DSN	06.10.12	4	REVISED BY COMMENTS	DSN	06.11.09	5	CHANGED BY LTC CONTACT	DSN	06.11.14	6	CHANGED BY LTC CONTACT
CHK	J.S.LEE			CHK	J.S.LEE			CHK	J.S.LEE			CHK	J.S.LEE			CHK	J.S.LEE			CHK	J.S.LEE		
APP	06.07.22			APP	06.08.18			APP	06.09.26			APP	06.10.12			APP	06.11.09			APP	06.11.14		
APP	K.H.PARK			APP	K.H.PARK			APP	K.H.PARK			APP	K.H.PARK			APP	K.H.PARK			APP	K.H.PARK		
DRWN	06.07.22			DRWN	06.08.18			DRWN	06.09.26			DRWN	06.10.12			DRWN	06.11.09			DRWN	06.11.14		
DRWN	H.N.JEE			DRWN	H.N.JEE			DRWN	H.N.JEE			DRWN	H.N.JEE			DRWN	H.N.JEE			DRWN	H.N.JEE		

FOR CONSTRUCTION / DATE

NOTICE
The data in this document incorporates proprietary rights of AUSTIN ENERGY. Any party accepting this document does so in confidence and agrees that it shall not be duplicated in whole or part, nor disclosed to others without the consent of AUSTIN ENERGY.

AUSTIN ENERGY
POWER DELIVERY DIVISION
TRANSMISSION ENGINEERING

TITLE :
NAME SUBSTATION
LTC CONTROL SCHEMATIC
XFMR XX-123

DSN	CHK	APP	PRDJ.	3rd	TITLE 3PH 60Hz 30/40/50MVA 138/12.47kV
2006.05.15	2006.05.15	2006.05.15	UNIT	mm	SCHEMATIC DIAGRAM
			SCALE	N/S	PROJECT NO. 61134 - TGC011,012
K.H.CHOI	K.H.PARK	J.S.LEE	SIZE	A1	CAD. NO. SHT. NO. 4/7
HYUNDAI HEAVY INDUSTRIES CO.,LTD.			REF. NO.	-	FILE NO.06-77
			DWG. NO.	TL1234 - L04	REV. 6

MASTER NO.	SCALE
R04A_STD_SWGR_04a	NTS
FILE NAME	
XXXX_04A_04a.DWG	
DRAWING NUMBER	
7B XXXX R4A.4a	

ISSUED FOR MANUFACTURING STANDARD - 26 AUGUST 2011

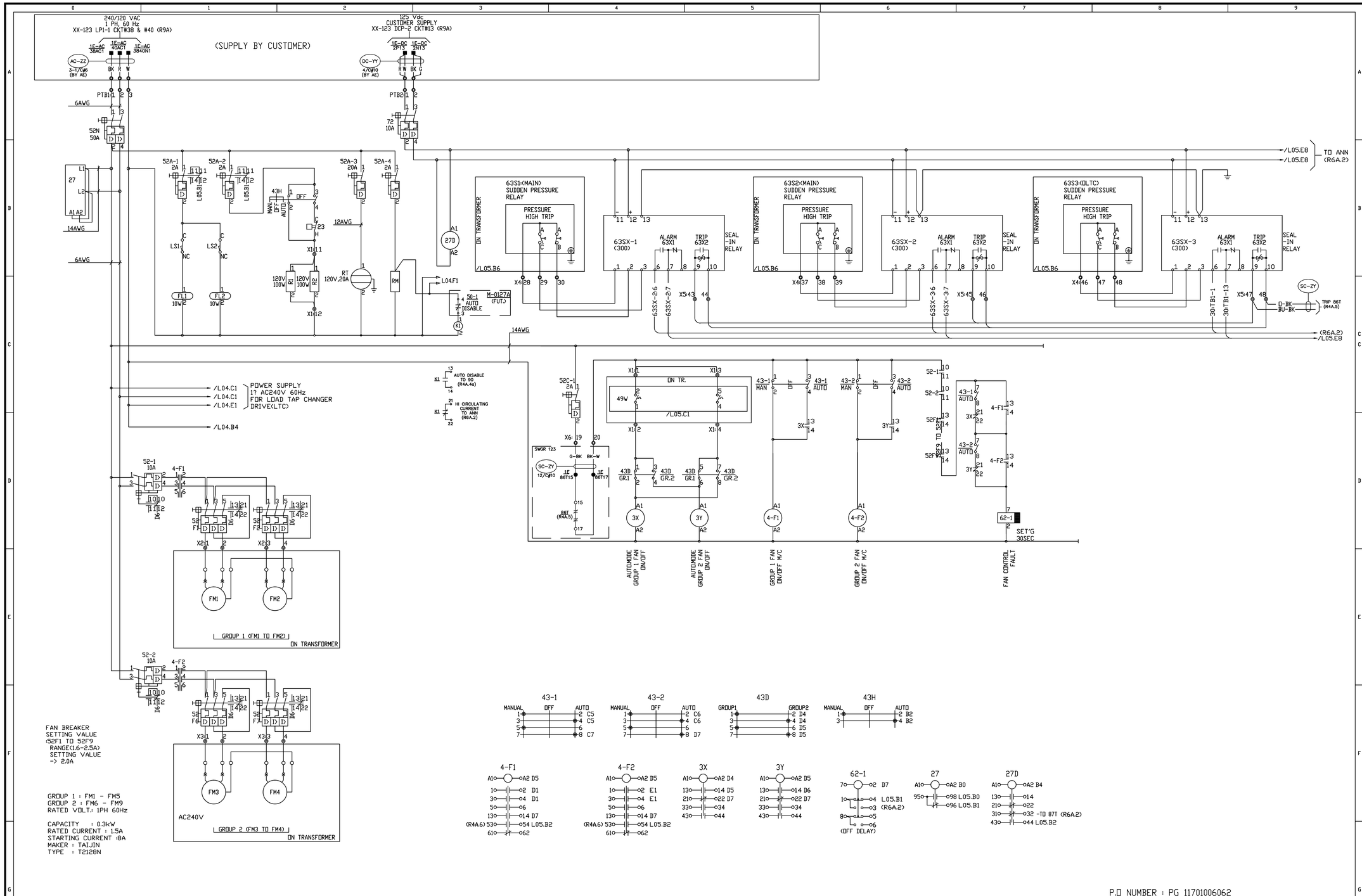

P.O NUMBER : PG 11701006062

APP	06.07.22 J.S.LEE	1	REVISED BY COMMENTS	APP	06.08.18 J.S.LEE	2	REVISED BY COMMENTS
CHK	06.07.22 K.H.PARK			CHK	06.08.18 K.H.PARK		
DWN	06.07.22 H.N.JEE			DWN	06.08.18 H.N.JEE		
APP	06.10.12 J.S.LEE	3	REVISED BY COMMENTS	APP	06.11.14 J.S.LEE	4	INCLUDE BY RM POWER SUPPLY & ETC..
CHK	06.10.12 K.H.PARK			CHK	06.11.14 K.H.PARK		
DWN	06.10.12 H.N.JEE			DWN	06.11.14 H.N.JEE		

DSN	CHK	APP	PROJ.	3rd	TITLE 3PH 60Hz 30/40/50MVA 138/12.47kV
2006.05.15	2006.05.15	2006.05.15	UNIT	mm	SCHEMATIC DIAGRAM
			SCALE	N/S	PROJECT NO. 61134 - TGC011,012
K.H.CHOI	K.H.PARK	J.S.LEE	SIZE	A1	CAD. NO. / SHT. NO. 3/7
					REF. NO. -
					DWG. NO. TL1234 - L03 REV. 4

HYUNDAI HEAVY INDUSTRIES CO.,LTD.

FILE NO:06-77

NO	DATE	REVISION	TASKNUM	DSGN	CHK	DWN	CHK	AS-BUILT	BY
6									
5									
4									
3									
2									
1									
0	08-26-11	REVISION C - NEW SWITCHGEAR STANDARD		TL	TL	JG			

FOR CONSTRUCTION / DATE

NOTICE
The data in this document incorporates proprietary rights of AUSTIN ENERGY. Any party accepting this document does so in confidence and agrees that it shall not be duplicated in whole or part, nor disclosed to others without the consent of AUSTIN ENERGY.

AUSTIN ENERGY
POWER DELIVERY DIVISION
TRANSMISSION ENGINEERING

TITLE :
NAME SUBSTATION
DC SCHEMATIC
XFMR XX-123 COOLING CTRL & SUDDEN PRESS.

MASTER NO.	SCALE
R04A_STD_SWGR_04b	NTS
FILE NAME	
XXXX_04A_04b.DWG	
DRAWING NUMBER	
7B XXXX R4A.4b	

ISSUED FOR MANUFACTURING STANDARD - 26 AUGUST 2011

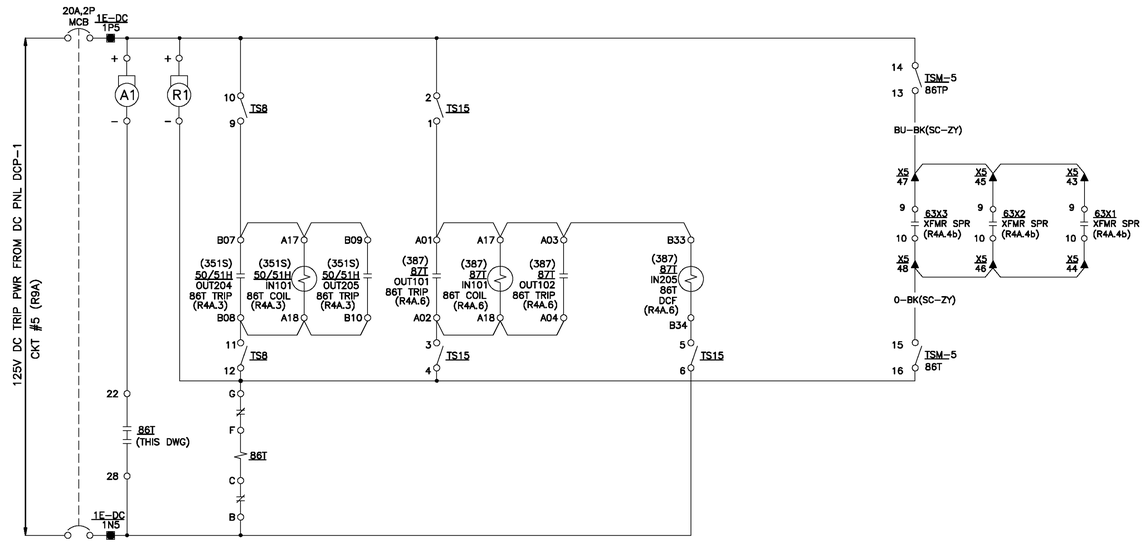

86T CIRCUIT SCHEMATIC

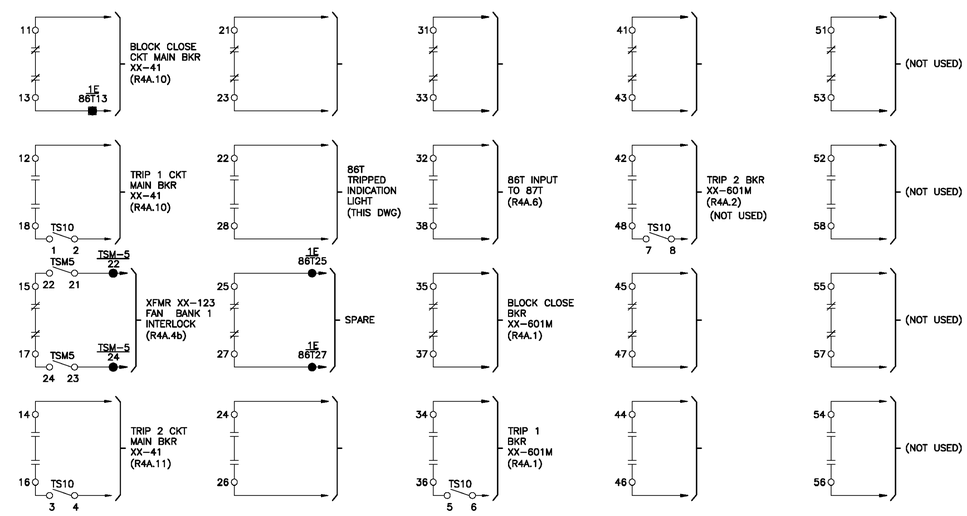

86T LOCK OUT RELAY

TERMINAL IDENTIFICATION

- TERMINAL ON LINE CONTROL PANEL
- TERMINAL ON SUPV PANEL
- TERMINAL ON DEVICE
- SHORTING BLOCK
- TERMINAL ON UNIT SUB TRANSFORMER
- TRANSFORMER BUSHING
- POLARITY MARK
- CIRCUIT DISCONNECT DEVICE
- ELECTRICAL CONNECTION
- TERMINAL ON UNIT SUB SWITCHGEAR FOR CUSTOMER USE
- TERMINAL ON UNIT SUB SWITCHGEAR FOR MFG INTERNAL USE

ISSUED FOR MANUFACTURING STANDARD - 26 AUGUST 2011

NO	DATE	REVISION	TASKNUM	DSGN	CHK	DWN	CHK	AS-BUILT	BY
6									
5									
4									
3									
2									
1									
0	08-26-11	REVISION C – NEW SWITCHGEAR STANDARD		TL	TL	JG			

FOR CONSTRUCTION / DATE

NOTICE
The data in this document incorporates proprietary rights of AUSTIN ENERGY. Any party accepting this document does so in confidence and agrees that it shall not be duplicated in whole or part, nor disclosed to others without the consent of AUSTIN ENERGY.

AUSTIN ENERGY
POWER DELIVERY DIVISION
TRANSMISSION ENGINEERING

TITLE :
NAME SUBSTATION
DC CONTROL SCHEMATIC
XX-123 XFMR LOCKOUT 86T – UNIT 1

MASTER NO. R04A_STD_SWGR_05
SCALE NTS
FILE NAME XXXX_04A_05.DWG
DRAWING NUMBER 7B XXXX R4A.5

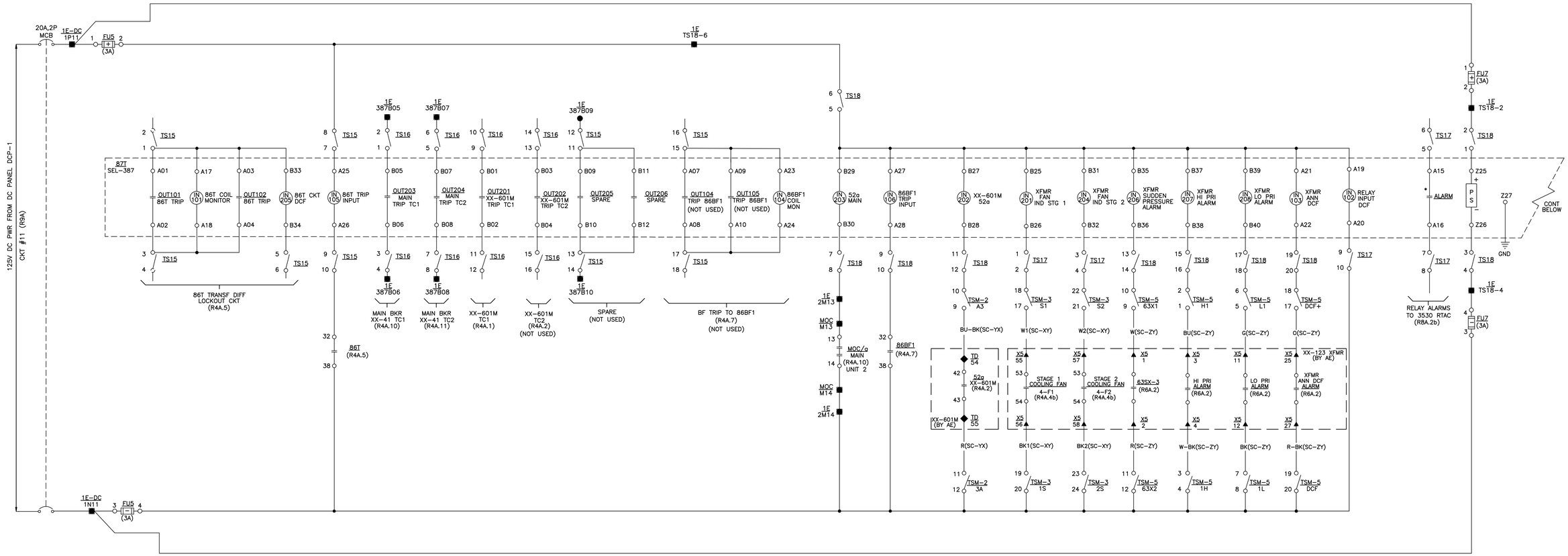

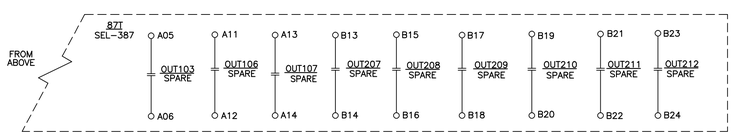

TERMINAL IDENTIFICATION

- □ TERMINAL ON LINE CONTROL PANEL
- ⊡ TERMINAL ON SUPV PANEL
- ○ TERMINAL ON DEVICE
- SHORTING BLOCK
- ▲ TERMINAL ON UNIT SUB TRANSFORMER
- ⊙ TRANSFORMER BUSHING
- ■ POLARITY MARK
- ≫ CIRCUIT DISCONNECT DEVICE
- • ELECTRICAL CONNECTION
- ● TERMINAL ON UNIT SUB SWITCHGEAR FOR CUSTOMER USE
- ■ TERMINAL ON UNIT SUB SWITCHGEAR FOR MFG INTERNAL USE
- ◆ TERMINAL BLOCK ON BREAKER OR CIRCUIT SWITCHER

DEVICE	FUNCTION	STYLE NO.
87T	(SEL-387)	

NO	DATE	REVISION	TASKNUM	DSGN	CHK	DWN	CHK	AS-BUILT	BY
6									
5									
4									
3									
2									
1									
0	08-26-11	REVISION C – NEW SWITCHGEAR STANDARD		TL	TL	JG			

FOR CONSTRUCTION / DATE

NOTICE
The data in this document incorporates proprietary rights of AUSTIN ENERGY. Any party accepting this document does so in confidence and agrees that it shall not be duplicated in whole or part, nor disclosed to others without the consent of AUSTIN ENERGY.

AUSTIN ENERGY
POWER DELIVERY DIVISION
TRANSMISSION ENGINEERING

TITLE :

NAME SUBSTATION
DC CONTROL SCHEMATIC
XX-123 XFMR DIFF 87T (387) RELAY – UNIT 1

MASTER NO. R04A_STD_SWGR_06
SCALE NTS
FILE NAME XXXX_04A_06.DWG
DRAWING NUMBER 7B XXXX R4A.6

ISSUED FOR MANUFACTURING STANDARD - 26 AUGUST 2011

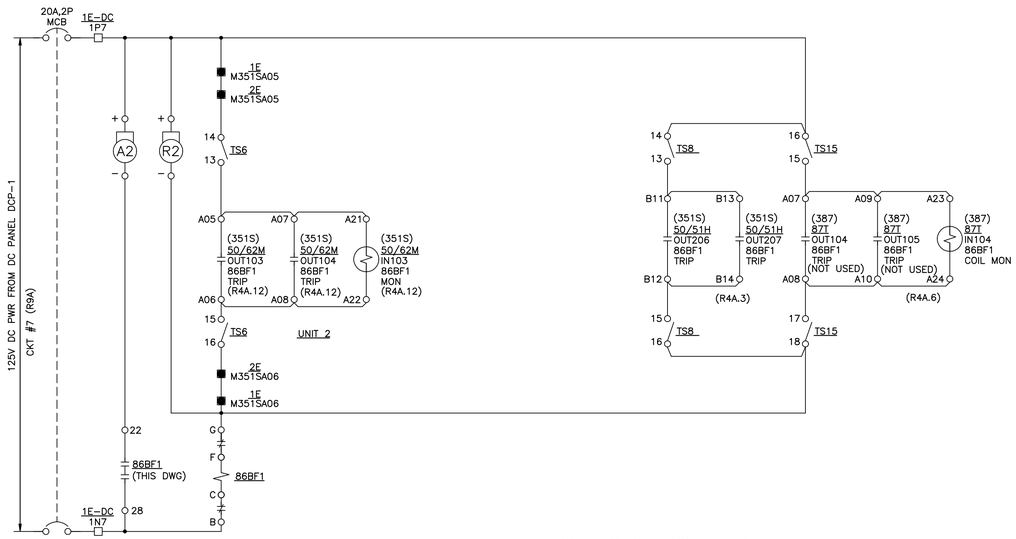

86BF1 CIRCUIT SCHEMATIC

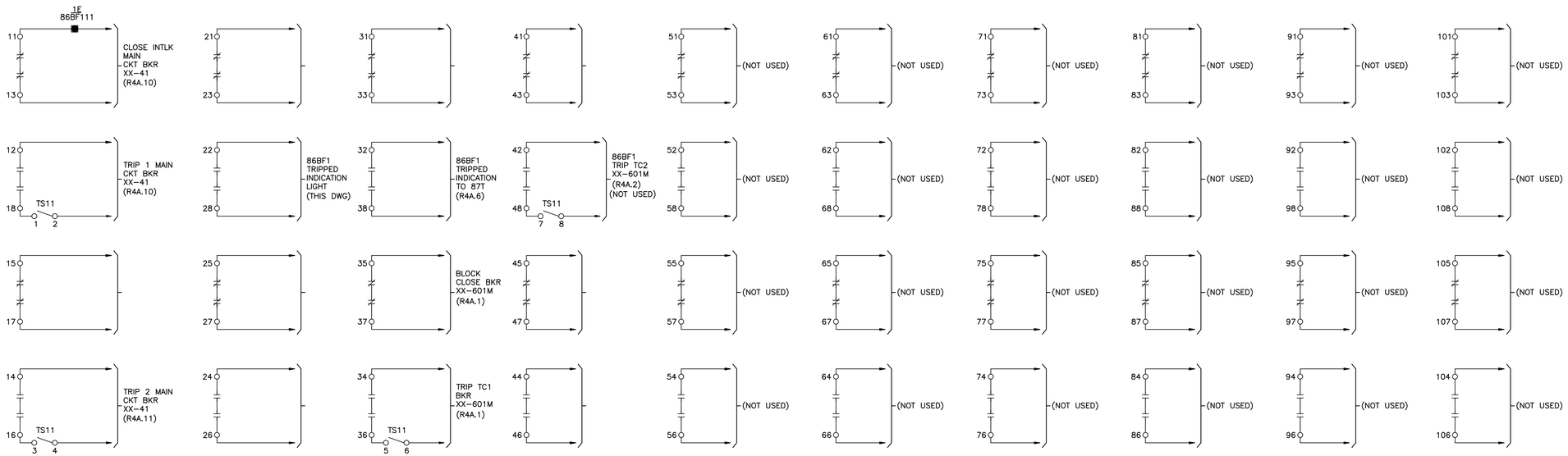

TERMINAL IDENTIFICATION

- TERMINAL ON LINE CONTROL PANEL
- TERMINAL ON SUPV PANEL
- TERMINAL ON DEVICE
- SHORTING BLOCK
- TERMINAL ON UNIT SUB TRANSFORMER
- TRANSFORMER BUSHING
- POLARITY MARK
- CIRCUIT DISCONNECT DEVICE
- ELECTRICAL CONNECTION
- TERMINAL ON UNIT SUB SWITCHGEAR FOR CUSTOMER USE
- TERMINAL ON UNIT SUB SWITCHGEAR FOR MFG INTERNAL USE

NO	DATE	REVISION	TASKNUM	DSGN	CHK	DWN	CHK	AS-BUILT	BY
6									
5									
4									
3									
2									
1									
0	08-26-11	REVISION C – NEW SWITCHGEAR STANDARD		TL	TL	JG			

FOR CONSTRUCTION / DATE

NOTICE
The data in this document incorporates proprietary rights of AUSTIN ENERGY. Any party accepting this document does so in confidence and agrees that it shall not be duplicated in whole or part, nor disclosed to others without the consent of AUSTIN ENERGY.

AUSTIN ENERGY

POWER DELIVERY DIVISION
TRANSMISSION ENGINEERING

TITLE :

NAME SUBSTATION
DC CONTROL SCHEMATIC
XFMR BKR FAILURE LOCKOUT 86BF1 – UNIT 1

MASTER NO.	SCALE
R04A_STD_SWGR_07	NTS

FILE NAME: XXXX_04A_07.DWG

DRAWING NUMBER: 7B XXXX R4A.7

ISSUED FOR MANUFACTURING STANDARD - 26 AUGUST 2011

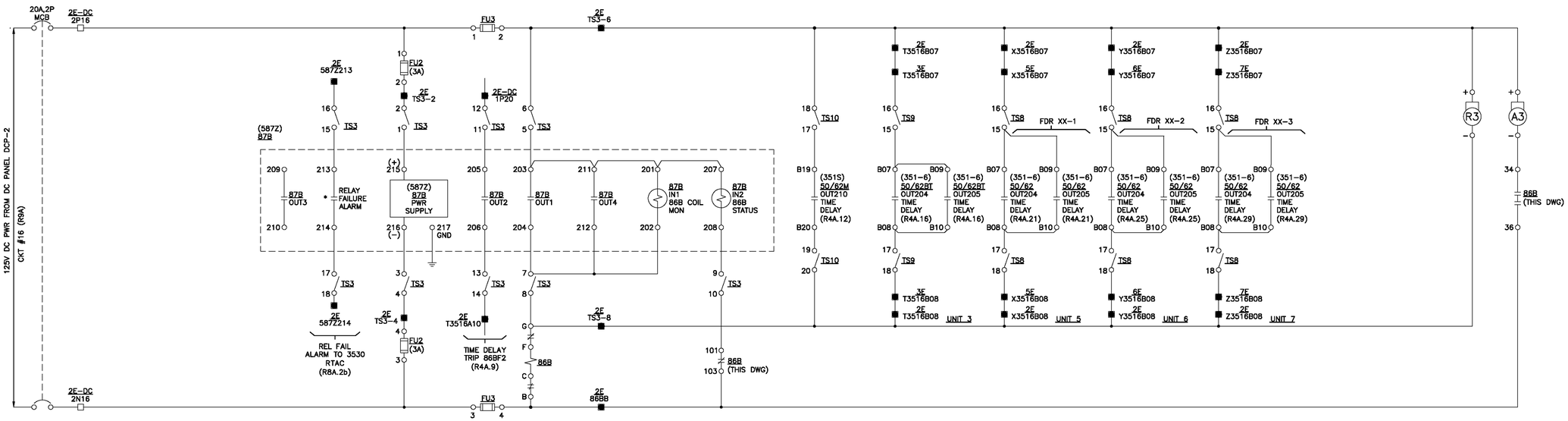

86B CIRCUIT SCHEMATIC

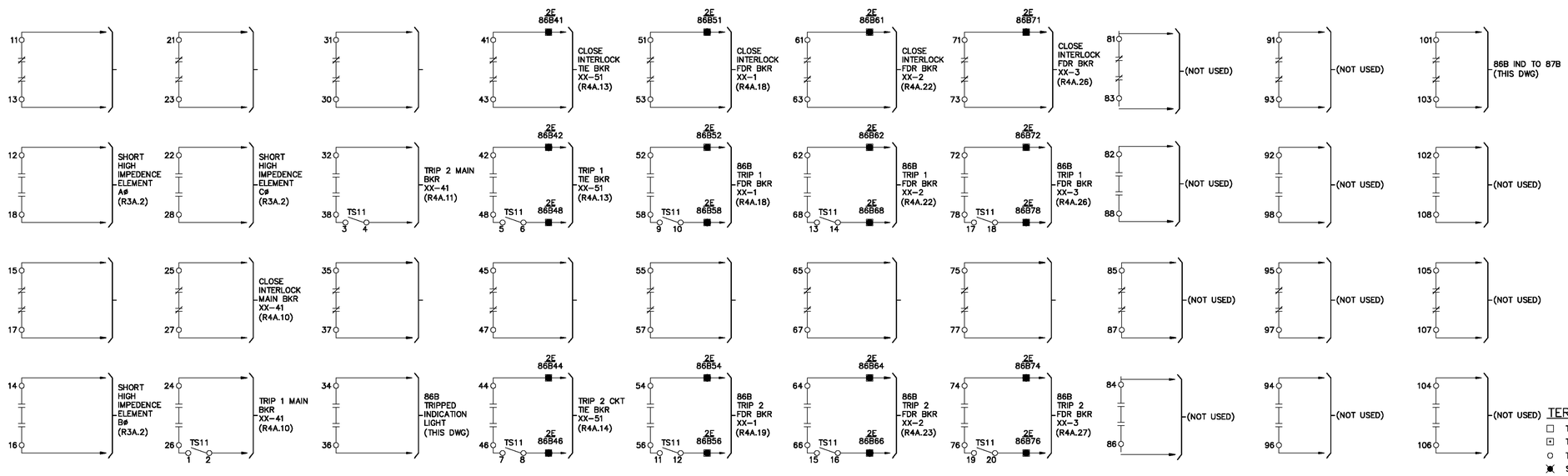

* NORMALLY OPEN CONTACT (ALARM STATE)

TERMINAL IDENTIFICATION

- TERMINAL ON LINE CONTROL PANEL
- TERMINAL ON SUPV PANEL
- TERMINAL ON DEVICE
- SHORTING BLOCK
- TERMINAL ON UNIT SUB TRANSFORMER
- TRANSFORMER BUSHING
- POLARITY MARK
- CIRCUIT DISCONNECT DEVICE
- ELECTRICAL CONNECTION
- TERMINAL ON UNIT SUB SWITCHGEAR FOR CUSTOMER USE
- TERMINAL ON UNIT SUB SWITCHGEAR FOR MFG INTERNAL USE

NO	DATE	REVISION	TASKNUM	DSGN	CHK	DWN	CHK	AS-BUILT	BY
6									
5									
4									
3									
2									
1									
0	08-26-11	REVISION C – NEW SWITCHGEAR STANDARD		TL	TL	JG			

FOR CONSTRUCTION / DATE

NOTICE
The data in this document incorporates proprietary rights of AUSTIN ENERGY. Any party accepting this document does so in confidence and agrees that it shall not be duplicated in whole or part, nor disclosed to others without the consent of AUSTIN ENERGY.

AUSTIN ENERGY
POWER DELIVERY DIVISION
TRANSMISSION ENGINEERING

TITLE :
NAME SUBSTATION
DC CONTROL SCHEMATIC
BUS DIFF RELAY 87B & LOR 86B – UNIT 2

MASTER NO.	SCALE
R04A_STD_SWGR_08	NTS
FILE NAME	
XXXX_04A_08.DWG	
DRAWING NUMBER	
7B XXXX R4A.8	

ISSUED FOR MANUFACTURING STANDARD - 26 AUGUST 2011

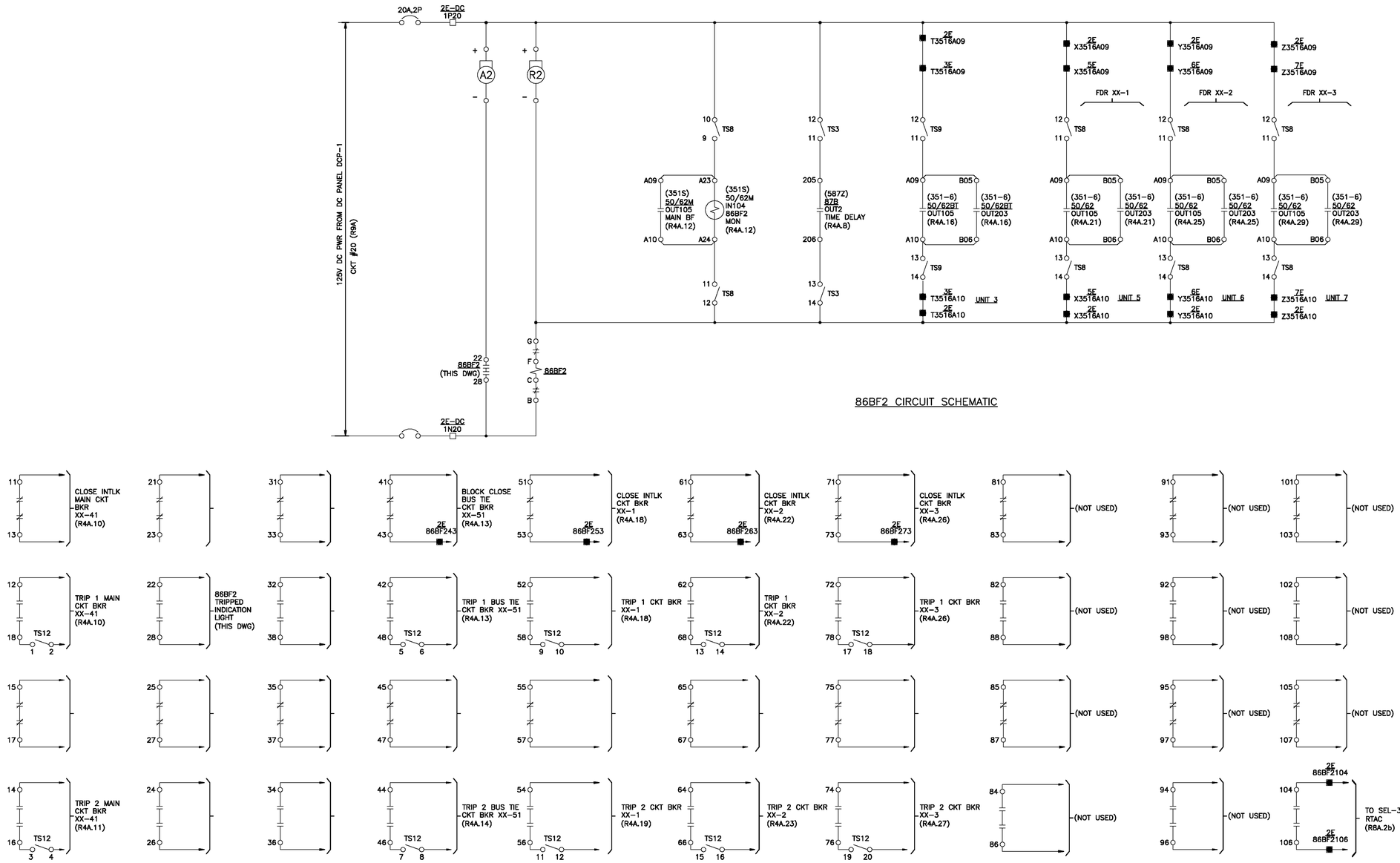

86BF2 CIRCUIT SCHEMATIC

TERMINAL IDENTIFICATION

- TERMINAL ON LINE CONTROL PANEL
- TERMINAL ON SUPV PANEL
- TERMINAL ON DEVICE
- SHORTING BLOCK
- TERMINAL ON UNIT SUB TRANSFORMER
- TRANSFORMER BUSHING
- POLARITY MARK
- CIRCUIT DISCONNECT DEVICE
- ELECTRICAL CONNECTION
- TERMINAL ON UNIT SUB SWITCHGEAR FOR CUSTOMER USE
- TERMINAL ON UNIT SUB SWITCHGEAR FOR MFG INTERNAL USE

NO	DATE	REVISION	TASKNUM	DSGN	CHK	DWN	CHK	AS-BUILT	BY
6									
5									
4									
3									
2									
1									
0	08-26-11	REVISION C – NEW SWITCHGEAR STANDARD		TL	TL	JG			

FOR CONSTRUCTION / DATE

NOTICE
The data in this document incorporates proprietary rights of AUSTIN ENERGY. Any party accepting this document does so in confidence and agrees that it shall not be duplicated in whole or part, nor disclosed to others without the consent of AUSTIN ENERGY.

POWER DELIVERY DIVISION
TRANSMISSION ENGINEERING

TITLE :

NAME SUBSTATION
DC CONTROL SCHEMATIC
BUS BKR FAIL LOCKOUT 86BF2 – UNIT 2

MASTER NO.	SCALE
R04A_STD_SWGR_09	NTS
FILE NAME	
XXXX_04A_09.DWG	
DRAWING NUMBER	
7B XXXX R4A.9	

ISSUED FOR MANUFACTURING STANDARD - 26 AUGUST 2011

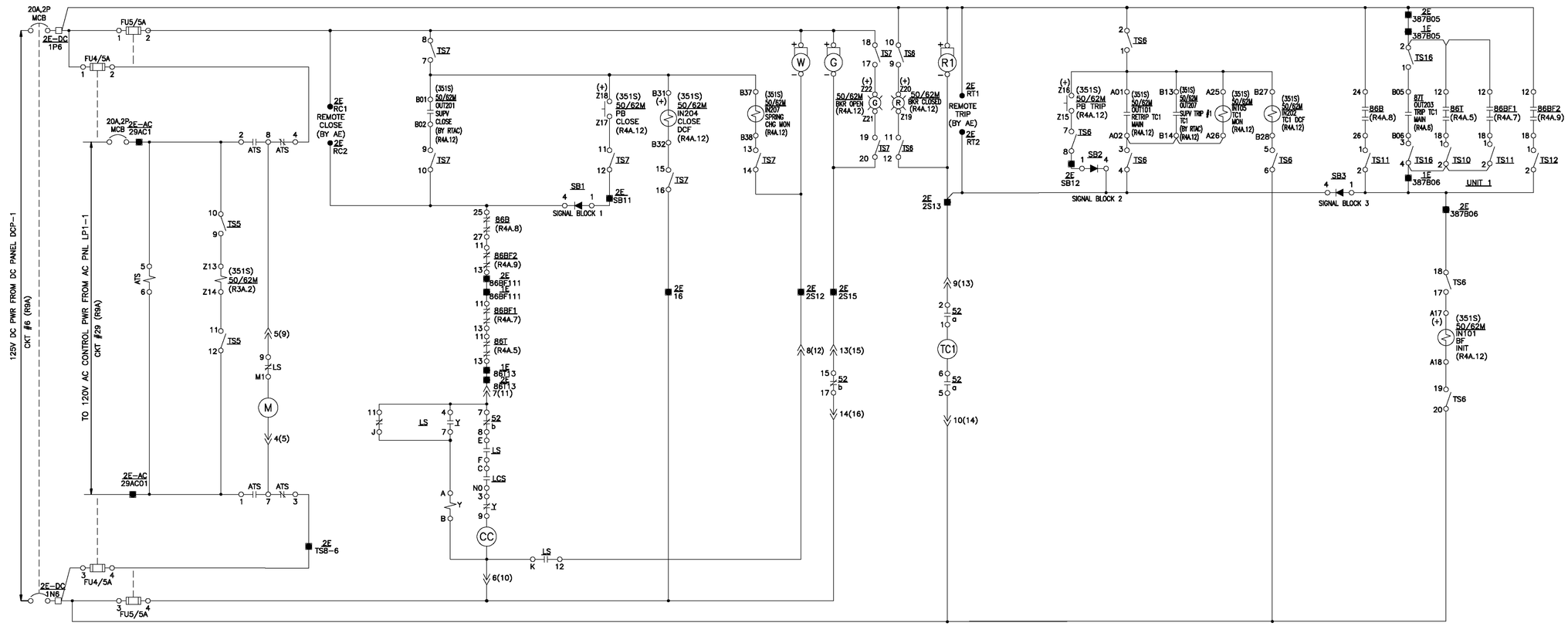

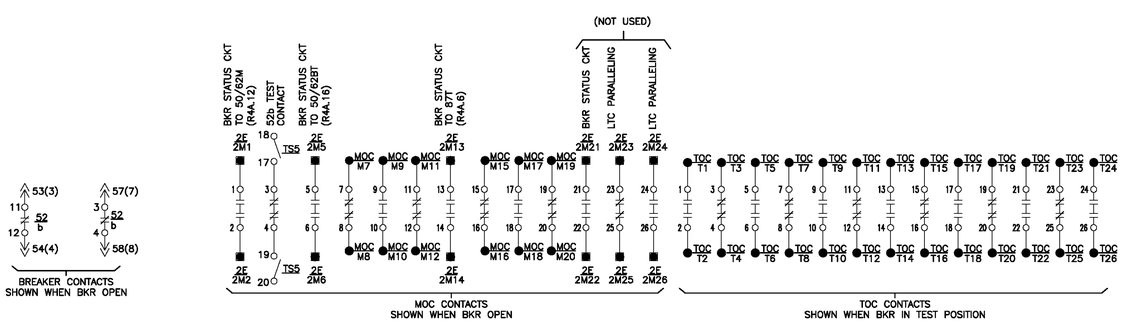

TERMINAL IDENTIFICATION

- □ TERMINAL ON LINE CONTROL PANEL
- ⊡ TERMINAL ON SUPV PANEL
- ○ TERMINAL ON DEVICE
- ✖ SHORTING BLOCK
- ▲ TERMINAL ON UNIT SUB TRANSFORMER
- ⊙ TRANSFORMER BUSHING
- ■ POLARITY MARK
- >> CIRCUIT DISCONNECT DEVICE
- • ELECTRICAL CONNECTION
- ● TERMINAL ON UNIT SUB SWITCHGEAR FOR CUSTOMER USE
- ■ TERMINAL ON UNIT SUB SWITCHGEAR FOR MFG INTERNAL USE

NO	DATE	REVISION	TASKNUM	DSGN	CHK	DWN	CHK	AS-BUILT	BY
6									
5									
4									
3									
2									
1									
0	08-26-11	REVISION C – NEW SWITCHGEAR STANDARD		TL	TL	JG			

FOR CONSTRUCTION / DATE

NOTICE
The data in this document incorporates proprietary rights of AUSTIN ENERGY. Any party accepting this document does so in confidence and agrees that it shall not be duplicated in whole or part, nor disclosed to others without the consent of AUSTIN ENERGY.

AUSTIN ENERGY
POWER DELIVERY DIVISION
TRANSMISSION ENGINEERING

TITLE :

NAME SUBSTATION
DC CONTROL SCHEMATIC
XX-41 MAIN BKR CLOSE & TC1 – UNIT 2

MASTER NO.	SCALE
R04A_STD_SWGR_10	NTS
FILE NAME	
XXXX_04A_10.DWG	
DRAWING NUMBER	
7B XXXX R4A.10	

ISSUED FOR MANUFACTURING STANDARD - 26 AUGUST 2011

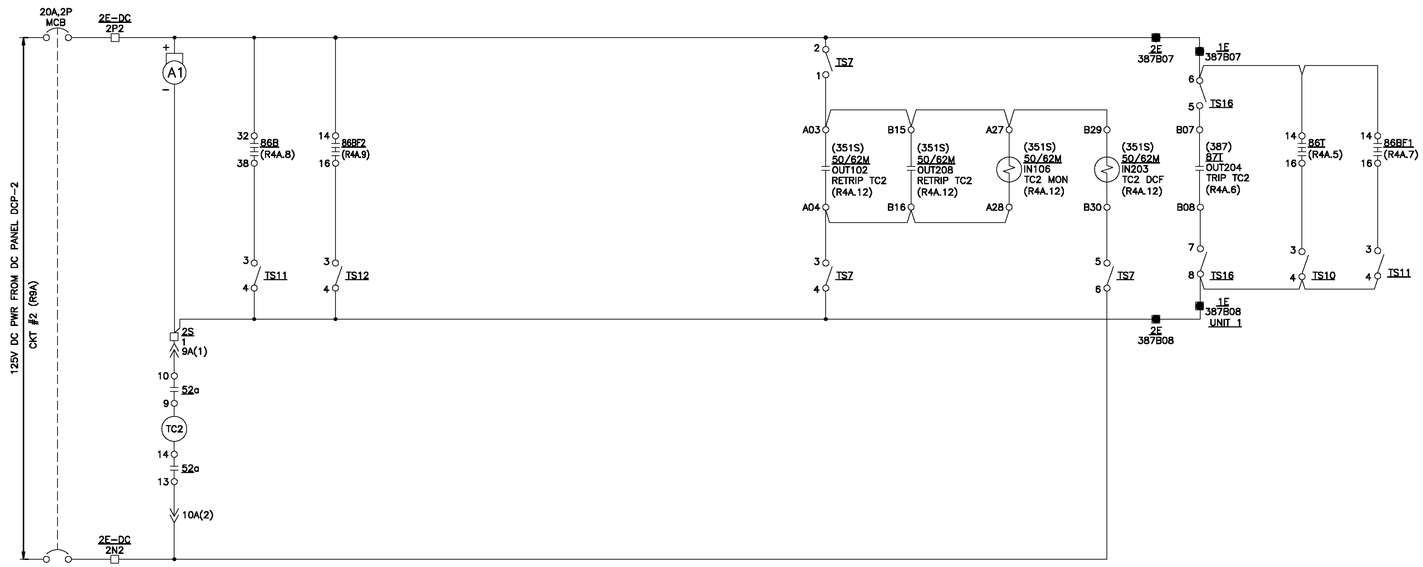

TERMINAL IDENTIFICATION

- TERMINAL ON LINE CONTROL PANEL
- TERMINAL ON SUPV PANEL
- TERMINAL ON DEVICE
- SHORTING BLOCK
- TERMINAL ON UNIT SUB TRANSFORMER
- TRANSFORMER BUSHING
- POLARITY MARK
- CIRCUIT DISCONNECT DEVICE
- ELECTRICAL CONNECTION
- TERMINAL ON UNIT SUB SWITCHGEAR FOR CUSTOMER USE
- TERMINAL ON UNIT SUB SWITCHGEAR FOR MFG INTERNAL USE

ISSUED FOR MANUFACTURING STANDARD - 26 AUGUST 2011

NO	DATE	REVISION	TASKNUM	DSGN	CHK	DWN	CHK	AS-BUILT	BY
6									
5									
4									
3									
2									
1									
0	08-26-11	REVISION C – NEW SWITCHGEAR STANDARD		TL	TL	JG			

FOR CONSTRUCTION / DATE

NOTICE
The data in this document incorporates proprietary rights of AUSTIN ENERGY. Any party accepting this document does so in confidence and agrees that it shall not be duplicated in whole or part, nor disclosed to others without the consent of AUSTIN ENERGY.

AUSTIN ENERGY
POWER DELIVERY DIVISION
TRANSMISSION ENGINEERING

TITLE :

NAME SUBSTATION
DC CONTROL SCHEMATIC
XX-41 MAIN BKR TC2 – UNIT 2

MASTER NO.	SCALE
R04A_STD_SWGR_11	NTS
FILE NAME	
XXXX_04A_11.DWG	
DRAWING NUMBER	
7B XXXX R4A.11	

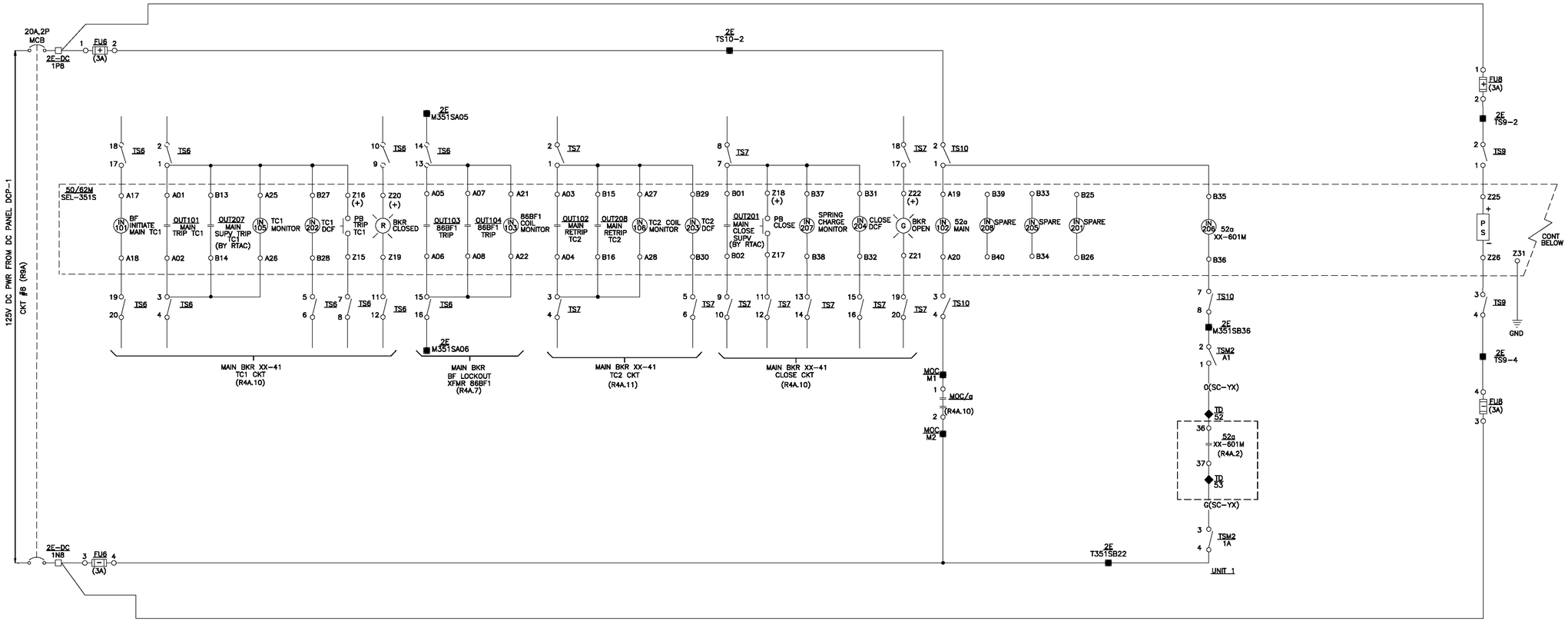

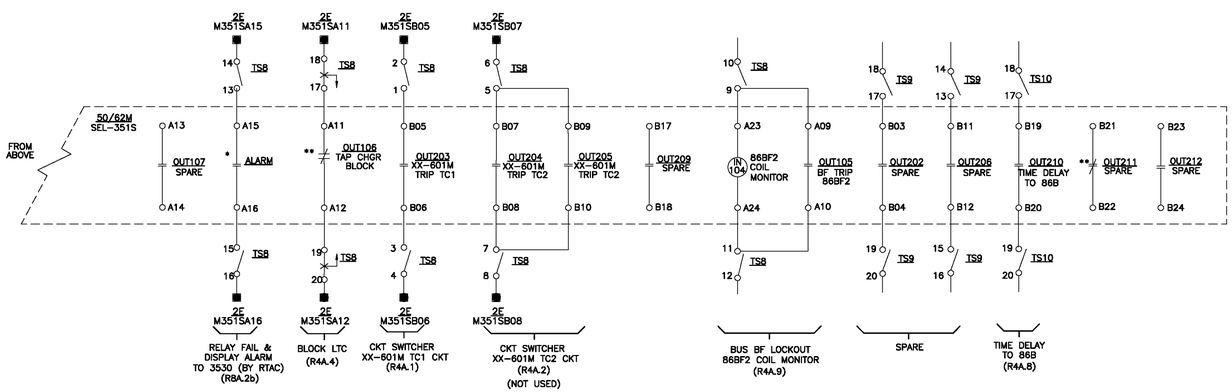

** NORMALLY CLOSED CONTACT

* NORMALLY OPEN CONTACT (ALARM STATE)

DEVICE	FUNCTION	STYLE NO.
50/62M	(SEL-351S)	

TERMINAL IDENTIFICATION

- □ TERMINAL ON LINE CONTROL PANEL
- ⊡ TERMINAL ON SUPV PANEL
- ○ TERMINAL ON DEVICE
- ⊠ SHORTING BLOCK
- ▲ TERMINAL ON UNIT SUB TRANSFORMER
- ⦿ TRANSFORMER BUSHING
- ■ POLARITY MARK
- ≫ CIRCUIT DISCONNECT DEVICE
- • ELECTRICAL CONNECTION
- ● TERMINAL ON UNIT SUB SWITCHGEAR FOR CUSTOMER USE
- ■ TERMINAL ON UNIT SUB SWITCHGEAR FOR MFG INTERNAL USE

NO	DATE	REVISION	TASKNUM	DSGN	CHK	DWN	CHK	AS-BUILT	BY
6									
5									
4									
3									
2									
1									
0	08-26-11	REVISION C – NEW SWITCHGEAR STANDARD		TL	TL	JG			

FOR CONSTRUCTION / DATE

NOTICE
The data in this document incorporates proprietary rights of AUSTIN ENERGY. Any party accepting this document does so in confidence and agrees that it shall not be duplicated in whole or part, nor disclosed to others without the consent of AUSTIN ENERGY.

AUSTIN ENERGY
POWER DELIVERY DIVISION
TRANSMISSION ENGINEERING

TITLE :

NAME SUBSTATION
DC CONTROL SCHEMATIC
XX-41 50/62M (351S) RELAY – UNIT 2

MASTER NO.	SCALE
R04A_STD_SWGR_12	NTS
FILE NAME	
XXXX_04A_12.DWG	
DRAWING NUMBER	
7B XXXX R4A.12	

ISSUED FOR MANUFACTURING STANDARD - 26 AUGUST 2011

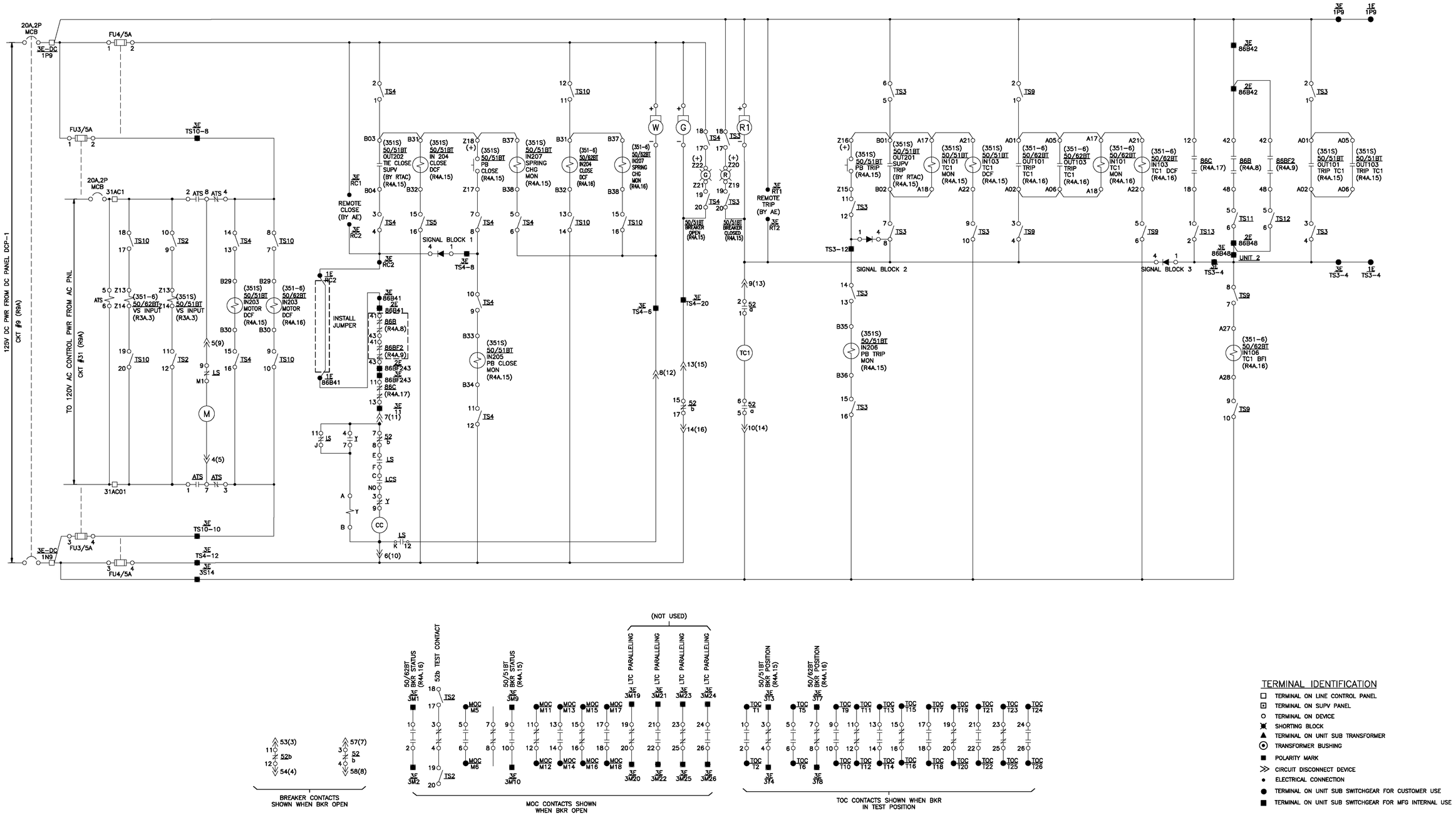

TERMINAL IDENTIFICATION

- TERMINAL ON LINE CONTROL PANEL
- TERMINAL ON SUPV PANEL
- TERMINAL ON DEVICE
- SHORTING BLOCK
- TERMINAL ON UNIT SUB TRANSFORMER
- TRANSFORMER BUSHING
- POLARITY MARK
- CIRCUIT DISCONNECT DEVICE
- ELECTRICAL CONNECTION
- TERMINAL ON UNIT SUB SWITCHGEAR FOR CUSTOMER USE
- TERMINAL ON UNIT SUB SWITCHGEAR FOR MFG INTERNAL USE

NO	DATE	REVISION	TASKNUM	DSGN	CHK	DWN	CHK	AS-BUILT	BY
6									
5									
4									
3									
2									
1									
0	08-26-11	REVISION C – NEW SWITCHGEAR STANDARD		TL	TL	JG			

FOR CONSTRUCTION / DATE

NOTICE
The data in this document incorporates proprietary rights of AUSTIN ENERGY. Any party accepting this document does so in confidence and agrees that it shall not be duplicated in whole or part, nor disclosed to others without the consent of AUSTIN ENERGY.

AUSTIN ENERGY
POWER DELIVERY DIVISION
TRANSMISSION ENGINEERING

TITLE :

NAME SUBSTATION
DC CONTROL SCHEMATIC
XX-51 TIE BKR CLOSE & TC1 – UNIT 3

MASTER NO.	SCALE
R04A_STD_SWGR_13	NTS
FILE NAME	
XXXX_04A_13.DWG	
DRAWING NUMBER	
7B XXXX R4A.13	

ISSUED FOR MANUFACTURING STANDARD - 26 AUGUST 2011

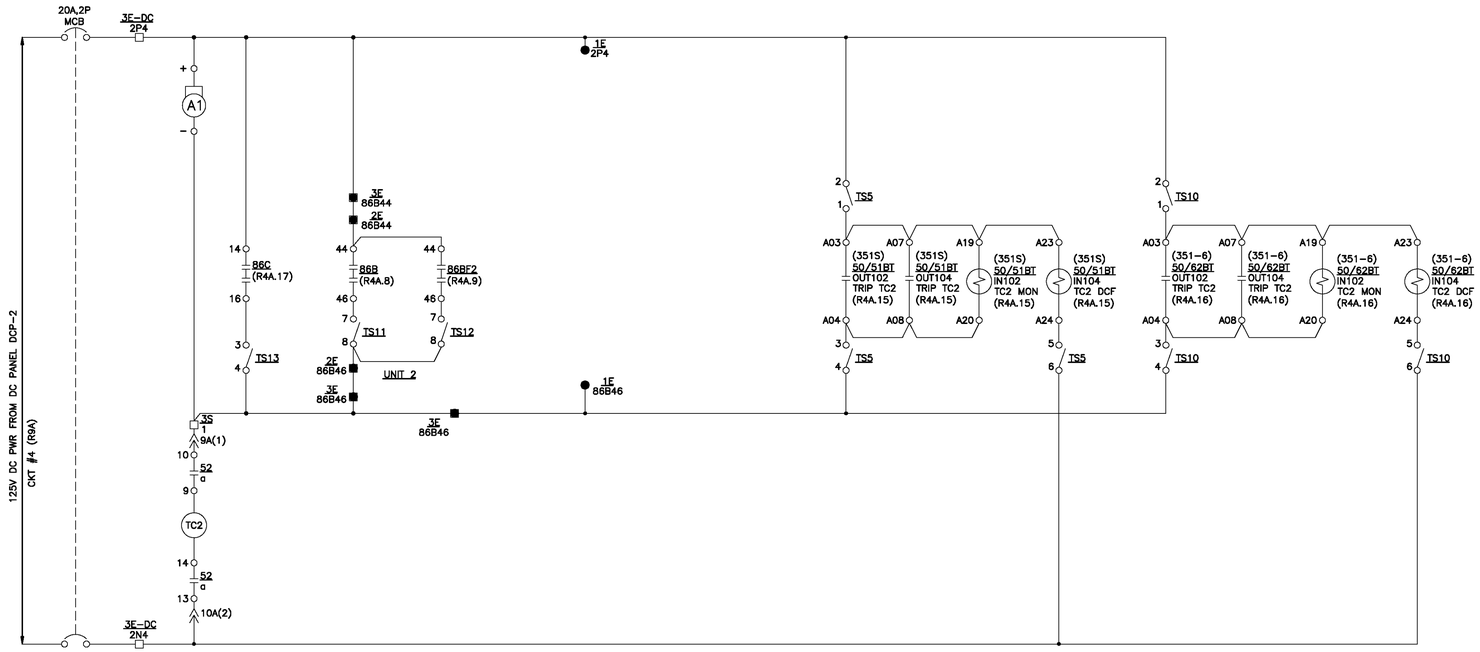

TERMINAL IDENTIFICATION

- TERMINAL ON LINE CONTROL PANEL
- TERMINAL ON SUPV PANEL
- TERMINAL ON DEVICE
- SHORTING BLOCK
- TERMINAL ON UNIT SUB TRANSFORMER
- TRANSFORMER BUSHING
- POLARITY MARK
- CIRCUIT DISCONNECT DEVICE
- ELECTRICAL CONNECTION
- TERMINAL ON UNIT SUB SWITCHGEAR FOR CUSTOMER USE
- TERMINAL ON UNIT SUB SWITCHGEAR FOR MFG INTERNAL USE

ISSUED FOR MANUFACTURING STANDARD - 26 AUGUST 2011

NO	DATE	REVISION	TASKNUM	DSGN	CHK	DWN	CHK	AS-BUILT	BY
6									
5									
4									
3									
2									
1									
0	08-26-11	REVISION C – NEW SWITCHGEAR STANDARD		TL	TL	JG			

FOR CONSTRUCTION / DATE

NOTICE
The data in this document incorporates proprietary rights of AUSTIN ENERGY. Any party accepting this document does so in confidence and agrees that it shall not be duplicated in whole or part, nor disclosed to others without the consent of AUSTIN ENERGY.

AUSTIN ENERGY
POWER DELIVERY DIVISION
TRANSMISSION ENGINEERING

TITLE :

NAME SUBSTATION
DC CONTROL SCHEMATIC
XX-51 TIE BKR TC2 – UNIT 3

MASTER NO.	SCALE
R04A_STD_SWGR_14	NTS
FILE NAME	
XXXX_04A_14.DWG	
DRAWING NUMBER	
7B XXXX R4A.14	

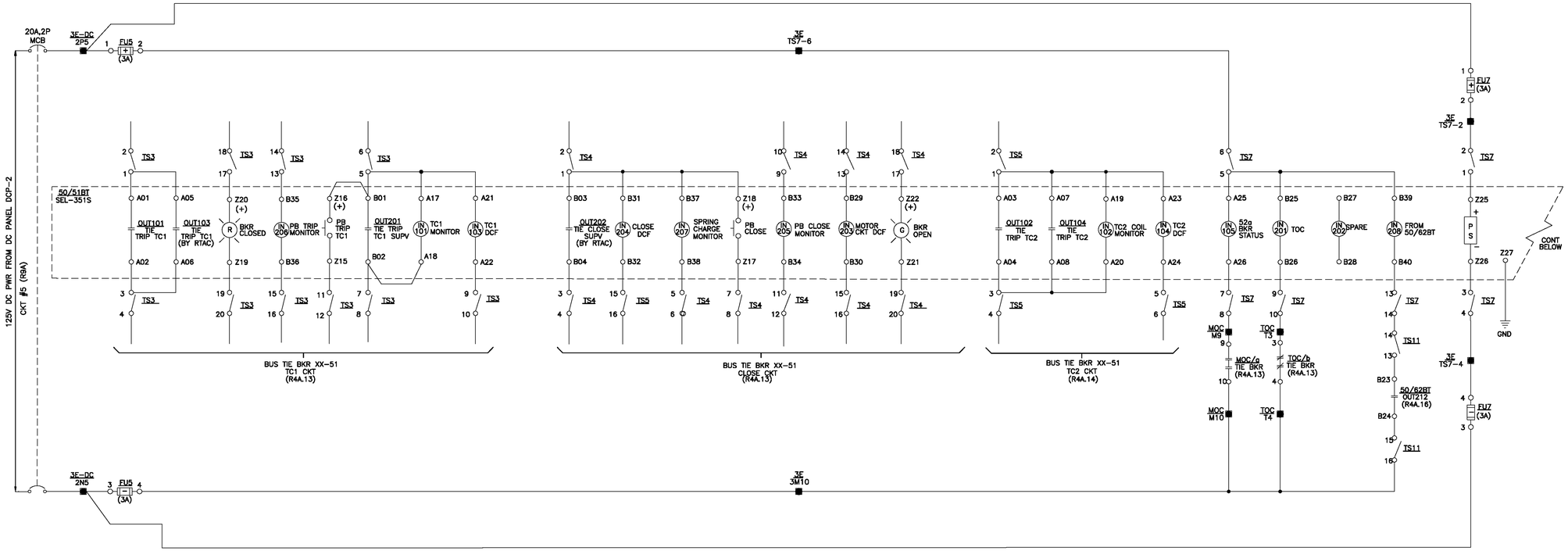

** NORMALLY CLOSED CONTACT

* NORMALLY OPEN CONTACT (ALARM STATE)

DEVICE	FUNCTION	STYLE NO.
50/51BT	(SEL-351S)	

TERMINAL IDENTIFICATION

- □ TERMINAL ON LINE CONTROL PANEL
- ⊡ TERMINAL ON SUPV PANEL
- ○ TERMINAL ON DEVICE
- ⊠ SHORTING BLOCK
- ▲ TERMINAL ON UNIT SUB TRANSFORMER
- ⊙ TRANSFORMER BUSHING
- ■ POLARITY MARK
- >> CIRCUIT DISCONNECT DEVICE
- • ELECTRICAL CONNECTION
- ● TERMINAL ON UNIT SUB SWITCHGEAR FOR CUSTOMER USE
- ■ TERMINAL ON UNIT SUB SWITCHGEAR FOR MFG INTERNAL USE

ISSUED FOR MANUFACTURING STANDARD - 26 AUGUST 2011

NO	DATE	REVISION	TASKNUM	DSGN	CHK	DWN	CHK	AS-BUILT	BY
6									
5									
4									
3									
2									
1									
0	08-26-11	REVISION C – NEW SWITCHGEAR STANDARD		TL	TL	JG			

FOR CONSTRUCTION / DATE

NOTICE
The data in this document incorporates proprietary rights of AUSTIN ENERGY. Any party accepting this document does so in confidence and agrees that it shall not be duplicated in whole or part, nor disclosed to others without the consent of AUSTIN ENERGY.

AUSTIN ENERGY

POWER DELIVERY DIVISION
TRANSMISSION ENGINEERING

TITLE :

NAME SUBSTATION
DC CONTROL SCHEMATIC
XX-51 50/51BT(351S) RELAY – UNIT 3

MASTER NO. R04A_STD_SWGR_15
SCALE NTS
FILE NAME XXXX_04A_15.DWG
DRAWING NUMBER 7B XXXX R4A.15

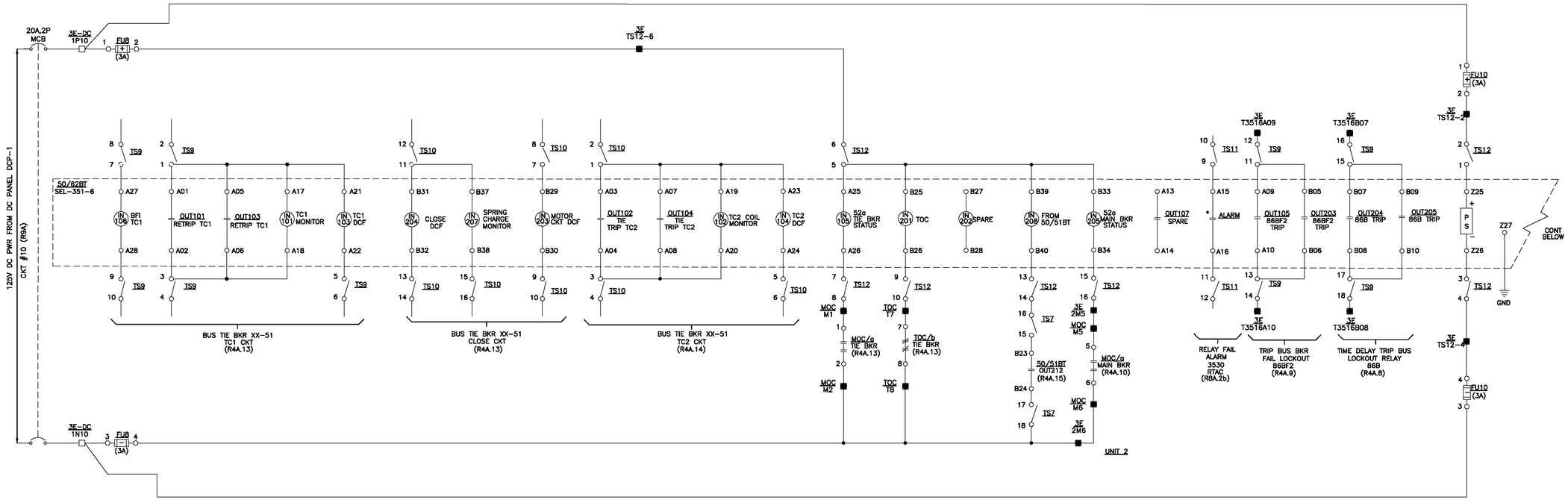

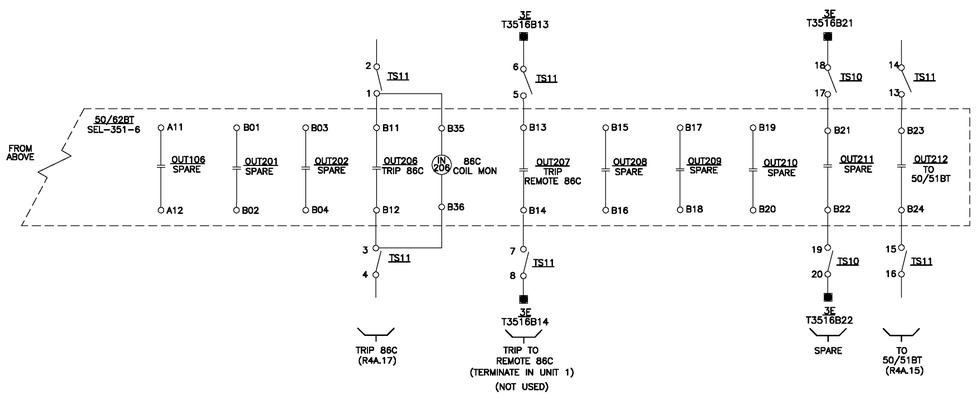

* NORMALLY OPEN CONTACT (ALARM STATE)

DEVICE	FUNCTION	STYLE NO.
50/62BT	(SEL-351-6)	

TERMINAL IDENTIFICATION

- TERMINAL ON LINE CONTROL PANEL
- TERMINAL ON SUPV PANEL
- TERMINAL ON DEVICE
- SHORTING BLOCK
- TERMINAL ON UNIT SUB TRANSFORMER
- TRANSFORMER BUSHING
- POLARITY MARK
- CIRCUIT DISCONNECT DEVICE
- ELECTRICAL CONNECTION
- TERMINAL ON UNIT SUB SWITCHGEAR FOR CUSTOMER USE
- TERMINAL ON UNIT SUB SWITCHGEAR FOR MFG INTERNAL USE

ISSUED FOR MANUFACTURING STANDARD - 26 AUGUST 2011

NO	DATE	REVISION	TASKNUM	DSGN	CHK	DWN	CHK	AS-BUILT	BY
6									
5									
4									
3									
2									
1									
0	08-26-11	REVISION C – NEW SWITCHGEAR STANDARD		TL	TL	JG			

FOR CONSTRUCTION / DATE

NOTICE
The data in this document incorporates proprietary rights of AUSTIN ENERGY. Any party accepting this document does so in confidence and agrees that it shall not be duplicated in whole or part, nor disclosed to others without the consent of AUSTIN ENERGY.

AUSTIN ENERGY
POWER DELIVERY DIVISION
TRANSMISSION ENGINEERING

TITLE :
NAME SUBSTATION
DC CONTROL SCHEMATIC
XX-51 50/62BT (351-6) RELAY – UNIT 3

MASTER NO. R04A_STD_SWGR_16
SCALE NTS
FILE NAME XXXX_04A_16.DWG
DRAWING NUMBER 7B XXXX R4A.16

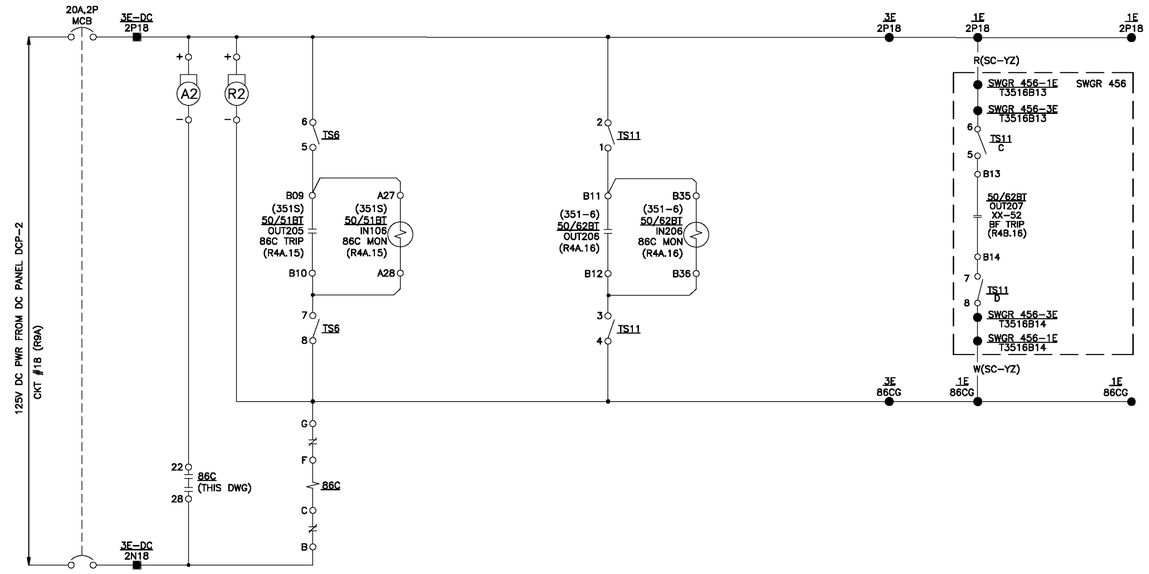

86C CIRCUIT SCHEMATIC

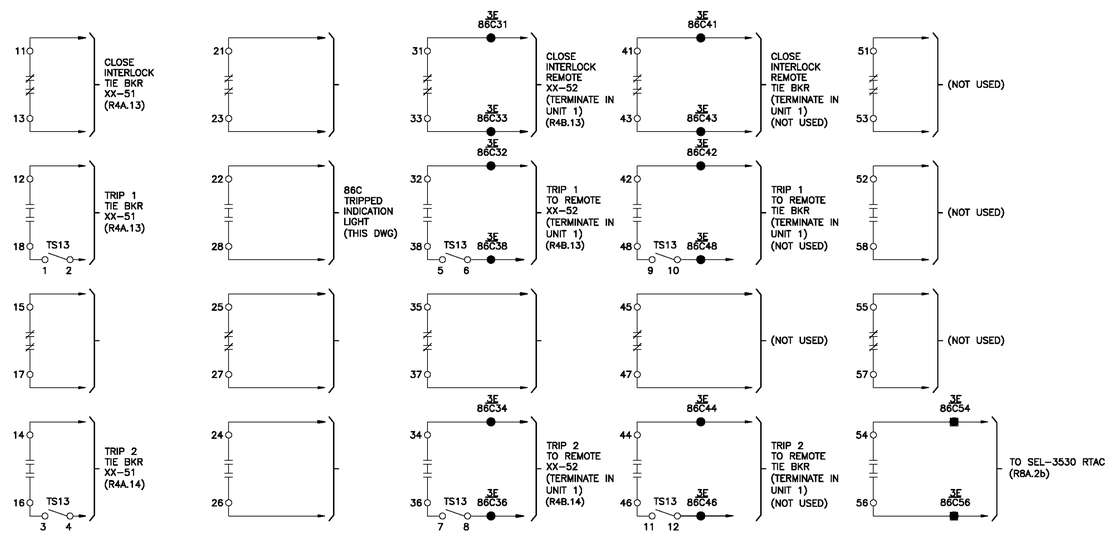

86C LOCK OUT RELAY

TERMINAL IDENTIFICATION

- TERMINAL ON LINE CONTROL PANEL
- TERMINAL ON SUPV PANEL
- TERMINAL ON DEVICE
- SHORTING BLOCK
- TERMINAL ON UNIT SUB TRANSFORMER
- TRANSFORMER BUSHING
- POLARITY MARK
- CIRCUIT DISCONNECT DEVICE
- ELECTRICAL CONNECTION
- TERMINAL ON UNIT SUB SWITCHGEAR FOR CUSTOMER USE
- TERMINAL ON UNIT SUB SWITCHGEAR FOR MFG INTERNAL USE

ISSUED FOR MANUFACTURING STANDARD - 26 AUGUST 2011

NO	DATE	REVISION	TASKNUM	DSGN	CHK	DWN	CHK	AS-BUILT	BY
6									
5									
4									
3									
2									
1									
0	08-26-11	REVISION C – NEW SWITCHGEAR STANDARD		TL	JG	TL			

FOR CONSTRUCTION / DATE

NOTICE
The data in this document incorporates proprietary rights of AUSTIN ENERGY. Any party accepting this document does so in confidence and agrees that it shall not be duplicated in whole or part, nor disclosed to others without the consent of AUSTIN ENERGY.

AUSTIN ENERGY
POWER DELIVERY DIVISION
TRANSMISSION ENGINEERING

TITLE :
NAME SUBSTATION
DC CONTROL SCHEMATIC
XX-51 TIE BKR CABLE DIFF L/O 86C – UNIT 3

MASTER NO.	SCALE
R04A_STD_SWGR_17	NTS
FILE NAME	
XXXX_04A_17.DWG	
DRAWING NUMBER	
7B XXXX R4A.17	

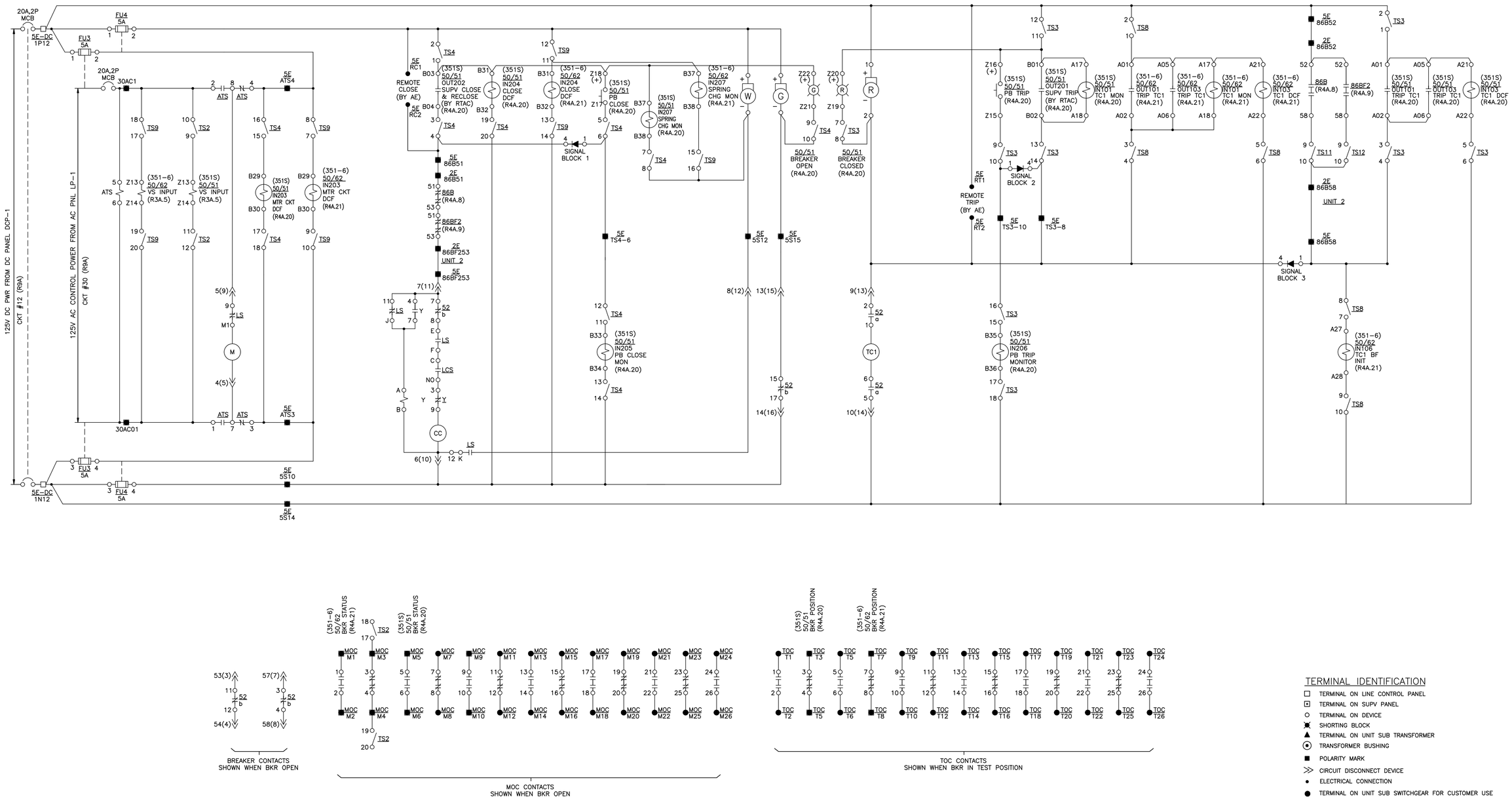

TERMINAL IDENTIFICATION

- TERMINAL ON LINE CONTROL PANEL
- TERMINAL ON SUPV PANEL
- TERMINAL ON DEVICE
- SHORTING BLOCK
- TERMINAL ON UNIT SUB TRANSFORMER
- TRANSFORMER BUSHING
- POLARITY MARK
- CIRCUIT DISCONNECT DEVICE
- ELECTRICAL CONNECTION
- TERMINAL ON UNIT SUB SWITCHGEAR FOR CUSTOMER USE
- TERMINAL ON UNIT SUB SWITCHGEAR FOR MFG INTERNAL USE

NO	DATE	REVISION	TASKNUM	DSGN	CHK	DWN	CHK	AS-BUILT	BY
6									
5									
4									
3									
2									
1									
0	08-26-11	REVISION C – NEW SWITCHGEAR STANDARD		TL	TL	JG			

FOR CONSTRUCTION / DATE

NOTICE
The data in this document incorporates proprietary rights of AUSTIN ENERGY. Any party accepting this document does so in confidence and agrees that it shall not be duplicated in whole or part, nor disclosed to others without the consent of AUSTIN ENERGY.

AUSTIN ENERGY
POWER DELIVERY DIVISION
TRANSMISSION ENGINEERING

TITLE :
NAME SUBSTATION
DC CONTROL SCHEMATIC
XX-1 FDR BKR CLOSE & TC1 – UNIT 5

MASTER NO. R04A_STD_SWGR_18
SCALE NTS
FILE NAME XXXX_04A_18.DWG
DRAWING NUMBER 7B XXXX R4A.18

ISSUED FOR MANUFACTURING STANDARD - 26 AUGUST 2011

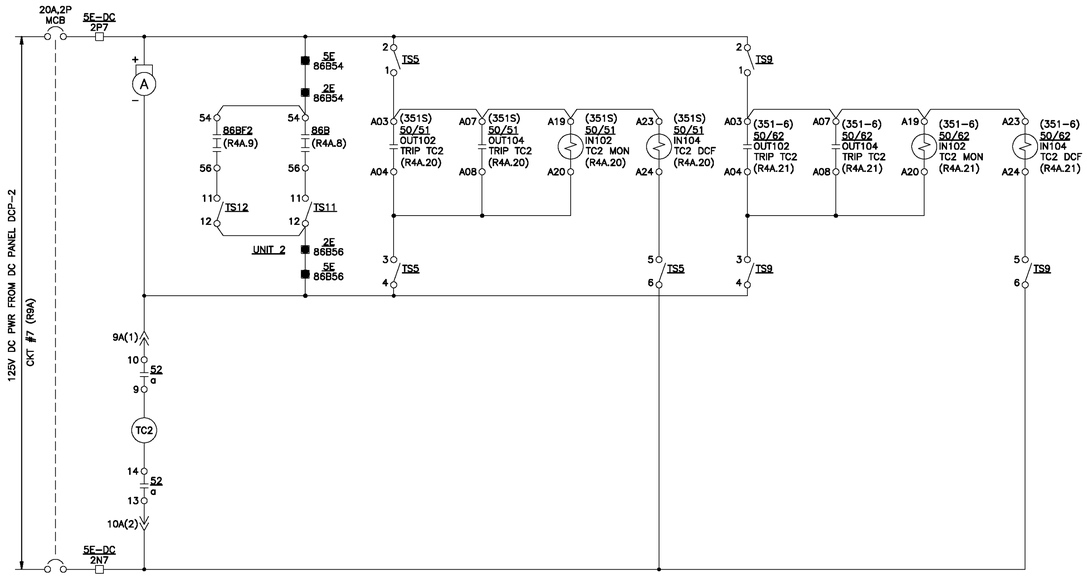

TERMINAL IDENTIFICATION

- TERMINAL ON LINE CONTROL PANEL
- TERMINAL ON SUPV PANEL
- TERMINAL ON DEVICE
- SHORTING BLOCK
- TERMINAL ON UNIT SUB TRANSFORMER
- TRANSFORMER BUSHING
- POLARITY MARK
- CIRCUIT DISCONNECT DEVICE
- ELECTRICAL CONNECTION
- TERMINAL ON UNIT SUB SWITCHGEAR FOR CUSTOMER USE
- TERMINAL ON UNIT SUB SWITCHGEAR FOR MFG INTERNAL USE

ISSUED FOR MANUFACTURING STANDARD - 26 AUGUST 2011

NO	DATE	REVISION	TASKNUM	DSGN	CHK	DWN	CHK	AS-BUILT	BY
6									
5									
4									
3									
2									
1									
0	08-26-11	REVISION C – NEW SWITCHGEAR STANDARD		TL	TL	JG			

FOR CONSTRUCTION / DATE

NOTICE
The data in this document incorporates proprietary rights of AUSTIN ENERGY. Any party accepting this document does so in confidence and agrees that it shall not be duplicated in whole or part, nor disclosed to others without the consent of AUSTIN ENERGY.

AUSTIN ENERGY
POWER DELIVERY DIVISION
TRANSMISSION ENGINEERING

TITLE :

NAME SUBSTATION
DC CONTROL SCHEMATIC
XX-1 FDR BKR TC2 – UNIT 5

MASTER NO.	SCALE
R04A_STD_SWGR_19	NTS
FILE NAME	
XXXX_04A_19.DWG	
DRAWING NUMBER	
7B XXXX R4A.19	

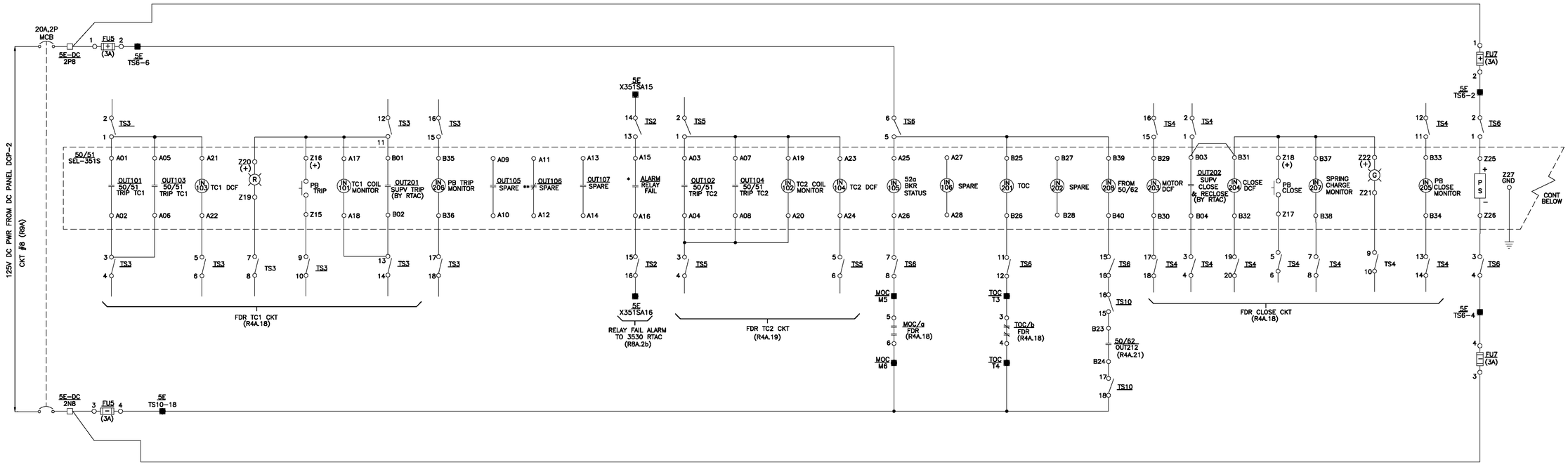

* NORMALLY OPEN CONTACT (ALARM STATE)

** NORMALLY CLOSED CONTACT

DEVICE	FUNCTION	STYLE NO.
50/51	(SEL-351S)	

TERMINAL IDENTIFICATION

- TERMINAL ON LINE CONTROL PANEL
- TERMINAL ON SUPV PANEL
- TERMINAL ON DEVICE
- SHORTING BLOCK
- TERMINAL ON UNIT SUB TRANSFORMER
- TRANSFORMER BUSHING
- POLARITY MARK
- CIRCUIT DISCONNECT DEVICE
- ELECTRICAL CONNECTION
- TERMINAL ON UNIT SUB SWITCHGEAR FOR CUSTOMER USE
- TERMINAL ON UNIT SUB SWITCHGEAR FOR MFG INTERNAL USE

NO	DATE	REVISION	TASKNUM	DSGN	CHK	DWN	CHK	AS-BUILT	BY
6									
5									
4									
3									
2									
1									
0	08-26-11	REVISION C – NEW SWITCHGEAR STANDARD		TL	TL	JG			

FOR CONSTRUCTION / DATE

NOTICE
The data in this document incorporates proprietary rights of AUSTIN ENERGY. Any party accepting this document does so in confidence and agrees that it shall not be duplicated in whole or part, nor disclosed to others without the consent of AUSTIN ENERGY.

AUSTIN ENERGY
POWER DELIVERY DIVISION
TRANSMISSION ENGINEERING

TITLE :
NAME SUBSTATION
DC CONTROL SCHEMATIC
XX-1 FDR BKR 50/51 (351S) RELAY – UNIT 5

MASTER NO. R04A_STD_SWGR_20
SCALE NTS
FILE NAME 1157_04A_20.DWG
DRAWING NUMBER 7B XXXX R4A.20

ISSUED FOR MANUFACTURING STANDARD - 26 AUGUST 2011

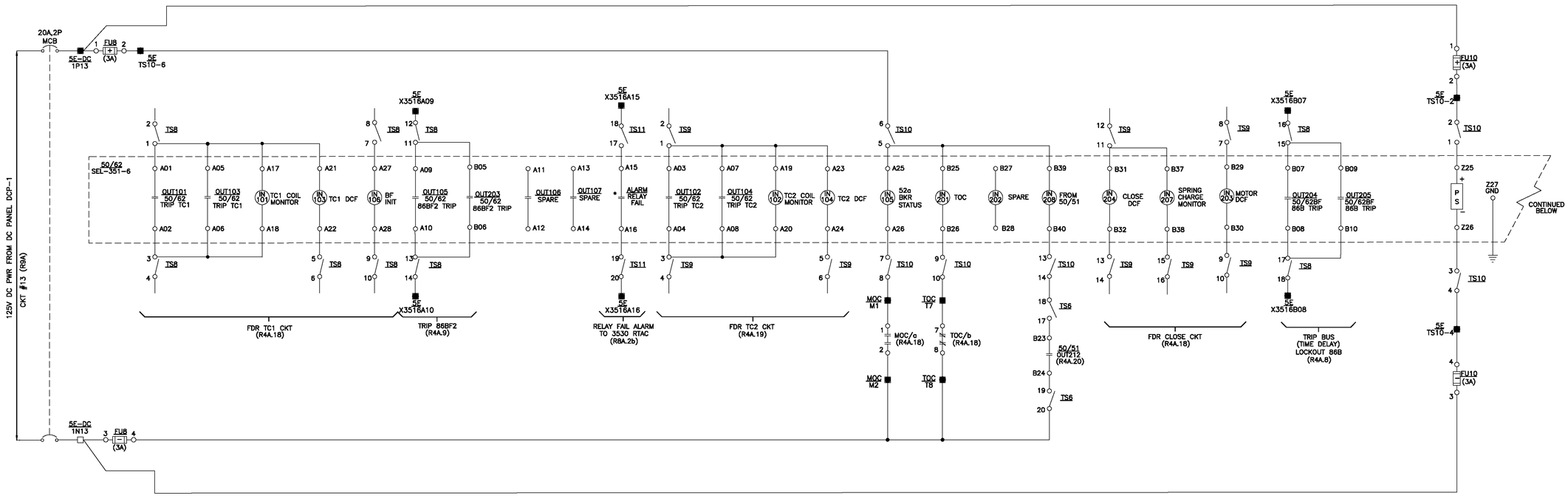

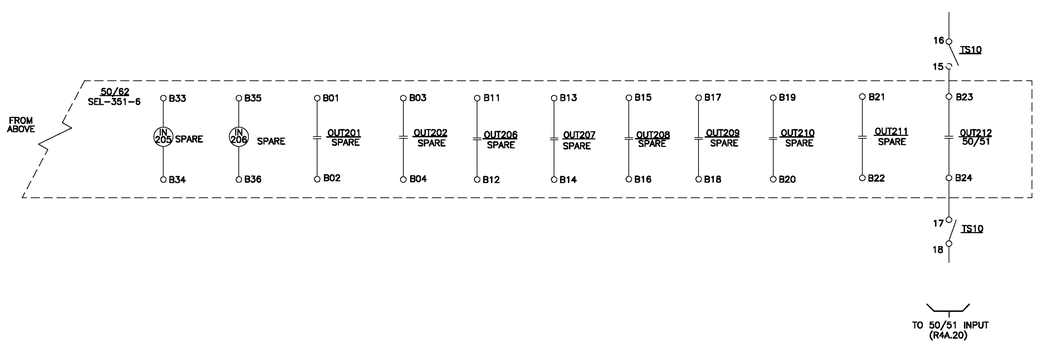

* NORMALLY OPEN CONTACT (ALARM STATE)

DEVICE	FUNCTION	STYLE NO.
50/62	(SEL-351-6)	

TERMINAL IDENTIFICATION

- TERMINAL ON LINE CONTROL PANEL
- TERMINAL ON SUPV PANEL
- TERMINAL ON DEVICE
- SHORTING BLOCK
- TERMINAL ON UNIT SUB TRANSFORMER
- TRANSFORMER BUSHING
- POLARITY MARK
- CIRCUIT DISCONNECT DEVICE
- ELECTRICAL CONNECTION
- TERMINAL ON UNIT SUB SWITCHGEAR FOR CUSTOMER USE
- TERMINAL ON UNIT SUB SWITCHGEAR FOR MFG INTERNAL USE

NO	DATE	REVISION	TASKNUM	DSGN	CHK	DWN	CHK	AS-BUILT	BY
6									
5									
4									
3									
2									
1									
0	08-26-11	REVISION C – NEW SWITCHGEAR STANDARD		TL	TL	JG			

FOR CONSTRUCTION / DATE

NOTICE
The data in this document incorporates proprietary rights of AUSTIN ENERGY. Any party accepting this document does so in confidence and agrees that it shall not be duplicated in whole or part, nor disclosed to others without the consent of AUSTIN ENERGY.

AUSTIN ENERGY
POWER DELIVERY DIVISION
TRANSMISSION ENGINEERING

TITLE :

NAME SUBSTATION
DC CONTROL SCHEMATIC
XX-1 FDR 50/62 (351-6) RELAY – UNIT 5

MASTER NO.	SCALE
R04A_STD_SWGR_21	NTS

FILE NAME: XXXX_04A_21.DWG

DRAWING NUMBER: 7B XXXX R4A.21

ISSUED FOR MANUFACTURING STANDARD - 26 AUGUST 2011

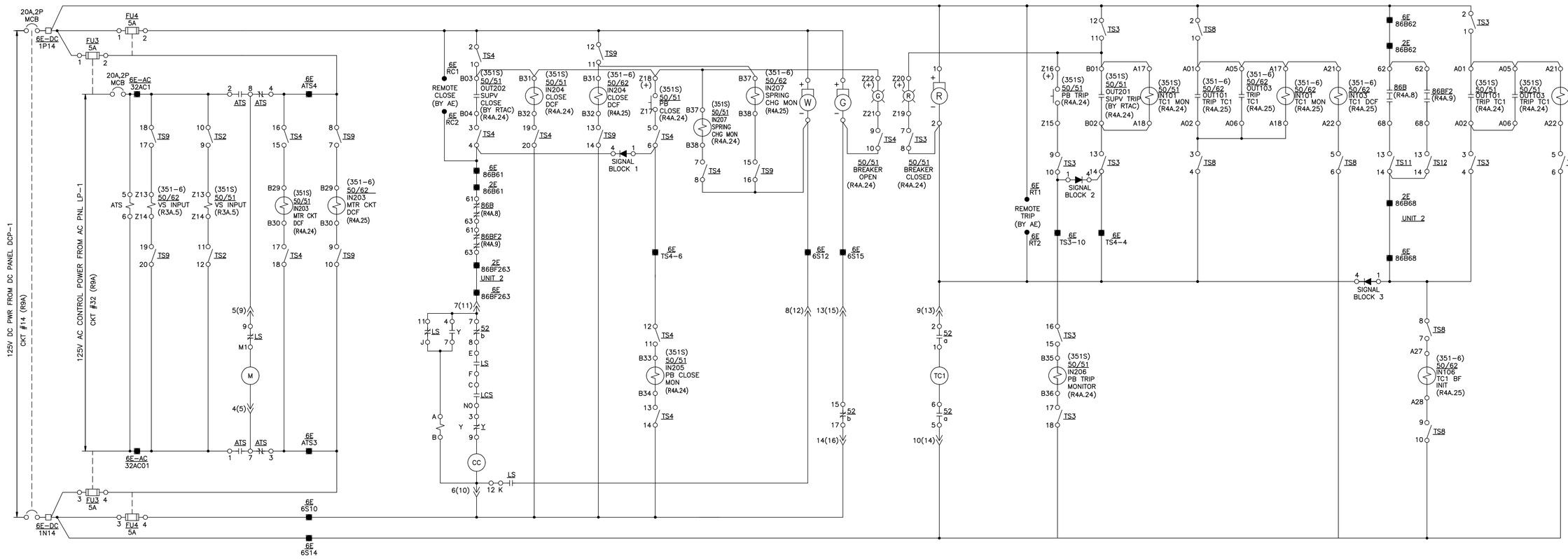

TERMINAL IDENTIFICATION

- TERMINAL ON LINE CONTROL PANEL
- TERMINAL ON SUPV PANEL
- TERMINAL ON DEVICE
- SHORTING BLOCK
- TERMINAL ON UNIT SUB TRANSFORMER
- TRANSFORMER BUSHING
- POLARITY MARK
- CIRCUIT DISCONNECT DEVICE
- ELECTRICAL CONNECTION
- TERMINAL ON UNIT SUB SWITCHGEAR FOR CUSTOMER USE
- TERMINAL ON UNIT SUB SWITCHGEAR FOR MFG INTERNAL USE

NO	DATE	REVISION	TASKNUM	DSGN	CHK	DWN	CHK	AS-BUILT	BY
6									
5									
4									
3									
2									
1									
0	08-26-11	REVISION C – NEW SWITCHGEAR STANDARD		TL	TL	JG			

FOR CONSTRUCTION / DATE

NOTICE
The data in this document incorporates proprietary rights of AUSTIN ENERGY. Any party accepting this document does so in confidence and agrees that it shall not be duplicated in whole or part, nor disclosed to others without the consent of AUSTIN ENERGY.

AUSTIN ENERGY
POWER DELIVERY DIVISION
TRANSMISSION ENGINEERING

TITLE :

NAME SUBSTATION
DC CONTROL SCHEMATIC
XX-2 FDR BKR CLOSE & TC1 – UNIT 6

MASTER NO.	SCALE
R04A_STD_SWGR_22	NTS
FILE NAME	
XXXX_04A_22.DWG	
DRAWING NUMBER	
7B XXXX R4A.22	

ISSUED FOR MANUFACTURING STANDARD - 26 AUGUST 2011

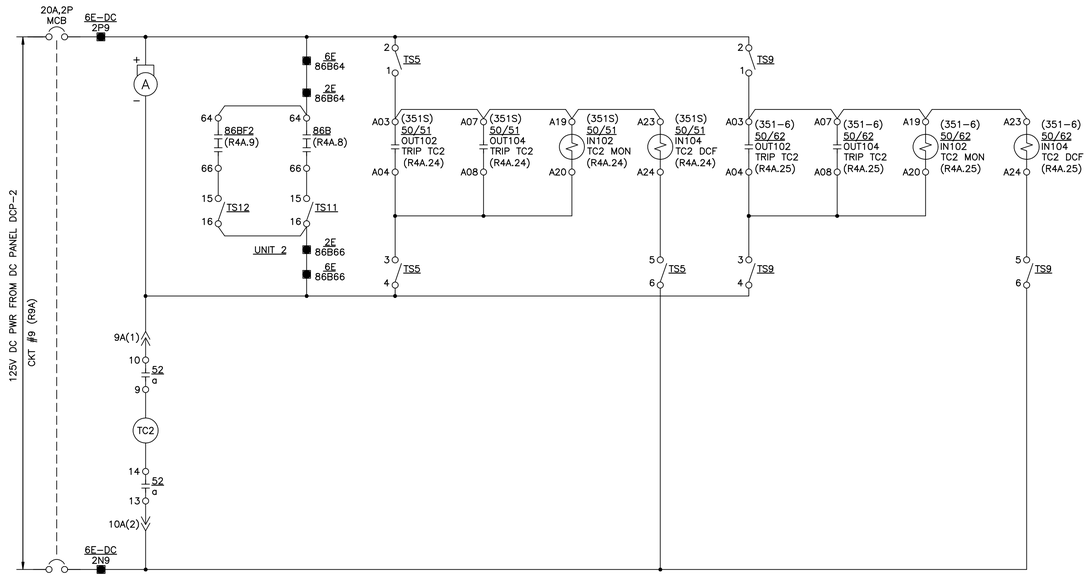

TERMINAL IDENTIFICATION

- TERMINAL ON LINE CONTROL PANEL
- TERMINAL ON SUPV PANEL
- TERMINAL ON DEVICE
- SHORTING BLOCK
- TERMINAL ON UNIT SUB TRANSFORMER
- TRANSFORMER BUSHING
- POLARITY MARK
- CIRCUIT DISCONNECT DEVICE
- ELECTRICAL CONNECTION
- TERMINAL ON UNIT SUB SWITCHGEAR FOR CUSTOMER USE
- TERMINAL ON UNIT SUB SWITCHGEAR FOR MFG INTERNAL USE

NO	DATE	REVISION	TASKNUM	DSGN	CHK	DWN	CHK	AS–BUILT	BY
6									
5									
4									
3									
2									
1									
0	08–26–11	REVISION C – NEW SWITCHGEAR STANDARD		TL	TL	JG			

FOR CONSTRUCTION / DATE

NOTICE
The data in this document incorporates proprietary rights of AUSTIN ENERGY. Any party accepting this document does so in confidence and agrees that it shall not be duplicated in whole or part, nor disclosed to others without the consent of AUSTIN ENERGY.

AUSTIN ENERGY
POWER DELIVERY DIVISION
TRANSMISSION ENGINEERING

TITLE :

NAME SUBSTATION
DC CONTROL SCHEMATIC
XX–2 FDR BKR TC2 – UNIT 6

MASTER NO.	SCALE
R04A_STD_SWGR_23	NTS
FILE NAME	
XXXX_04A_23.DWG	
DRAWING NUMBER	
7B XXXX R4A.23	

ISSUED FOR MANUFACTURING STANDARD - 26 AUGUST 2011

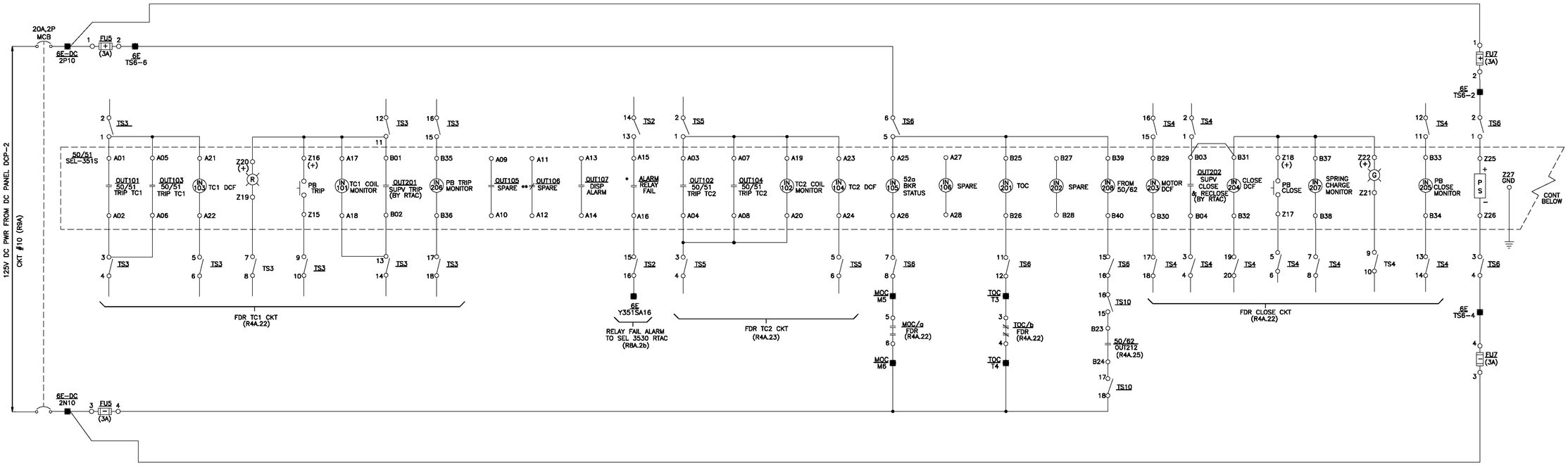

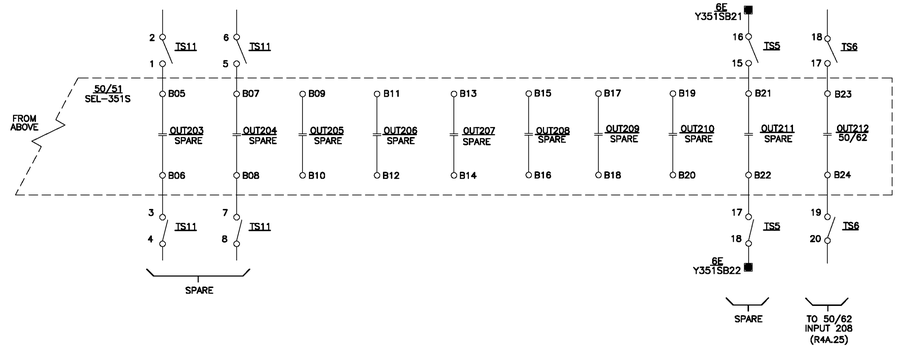

* NORMALLY OPEN CONTACT (ALARM STATE)

** NORMALLY CLOSED CONTACT

DEVICE	FUNCTION	STYLE NO.
50/51	(SEL-351S)	

TERMINAL IDENTIFICATION

- TERMINAL ON LINE CONTROL PANEL
- TERMINAL ON SUPV PANEL
- TERMINAL ON DEVICE
- SHORTING BLOCK
- TERMINAL ON UNIT SUB TRANSFORMER
- TRANSFORMER BUSHING
- POLARITY MARK
- CIRCUIT DISCONNECT DEVICE
- ELECTRICAL CONNECTION
- TERMINAL ON UNIT SUB SWITCHGEAR FOR CUSTOMER USE
- TERMINAL ON UNIT SUB SWITCHGEAR FOR MFG INTERNAL USE

NO	DATE	REVISION	TASKNUM	DSGN	CHK	DWN	CHK	AS-BUILT	BY
6									
5									
4									
3									
2									
1									
0	08-26-11	REVISION C – NEW SWITCHGEAR STANDARD		TL	TL	JG			

FOR CONSTRUCTION / DATE

NOTICE
The data in this document incorporates proprietary rights of AUSTIN ENERGY. Any party accepting this document does so in confidence and agrees that it shall not be duplicated in whole or part, nor disclosed to others without the consent of AUSTIN ENERGY.

AUSTIN ENERGY

POWER DELIVERY DIVISION
TRANSMISSION ENGINEERING

TITLE :

NAME SUBSTATION
DC CONTROL SCHEMATIC
XX-2 FDR BKR 50/51 (351S) RELAY – UNIT 6

MASTER NO.	SCALE
R04A_STD_SWGR_24	NTS

FILE NAME: XXXX_04A_24.DWG

DRAWING NUMBER: 7B XXXX R4A.24

ISSUED FOR MANUFACTURING STANDARD - 26 AUGUST 2011

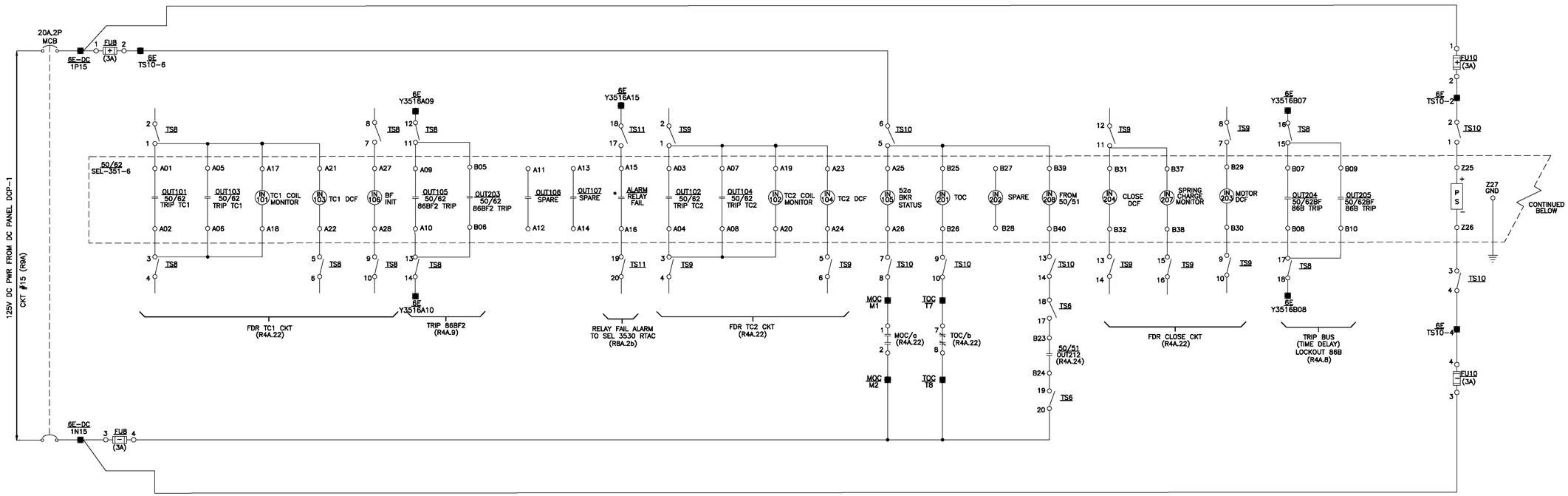

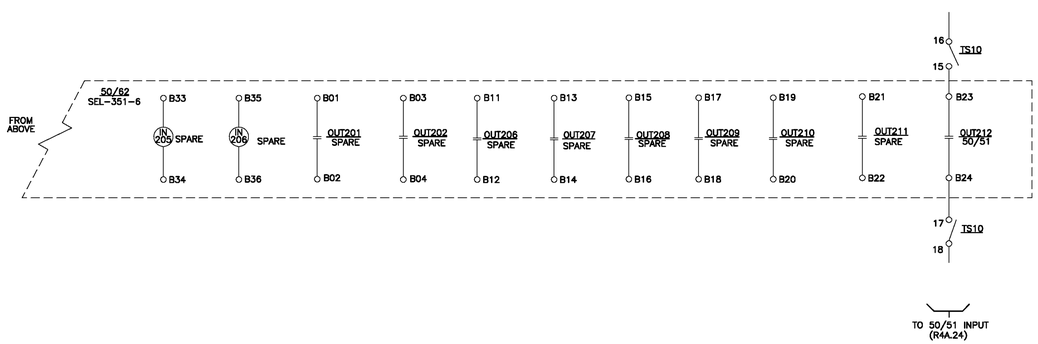

* NORMALLY OPEN CONTACT (ALARM STATE)

DEVICE	FUNCTION	STYLE NO.
50/62	(SEL-351-6)	

TERMINAL IDENTIFICATION

- TERMINAL ON LINE CONTROL PANEL
- TERMINAL ON SUPV PANEL
- TERMINAL ON DEVICE
- SHORTING BLOCK
- TERMINAL ON UNIT SUB TRANSFORMER
- TRANSFORMER BUSHING
- POLARITY MARK
- CIRCUIT DISCONNECT DEVICE
- ELECTRICAL CONNECTION
- TERMINAL ON UNIT SUB SWITCHGEAR FOR CUSTOMER USE
- TERMINAL ON UNIT SUB SWITCHGEAR FOR MFG INTERNAL USE

NO	DATE	REVISION	TASKNUM	DSGN	CHK	DWN	CHK	AS-BUILT	BY
6									
5									
4									
3									
2									
1									
0	08-26-11	REVISION C – NEW SWITCHGEAR STANDARD		TL	TL	JG			

FOR CONSTRUCTION / DATE

NOTICE
The data in this document incorporates proprietary rights of AUSTIN ENERGY. Any party accepting this document does so in confidence and agrees that it shall not be duplicated in whole or part, nor disclosed to others without the consent of AUSTIN ENERGY.

AUSTIN ENERGY
POWER DELIVERY DIVISION
TRANSMISSION ENGINEERING

TITLE :

NAME SUBSTATION
DC CONTROL SCHEMATIC
XX-2 FDR 50/62 (351-6) RELAY – UNIT 6

MASTER NO. R04A_STD_SWGR_25
SCALE NTS
FILE NAME XXXX_04A_25.DWG
DRAWING NUMBER 7B XXXX R4A.25

ISSUED FOR MANUFACTURING STANDARD - 26 AUGUST 2011

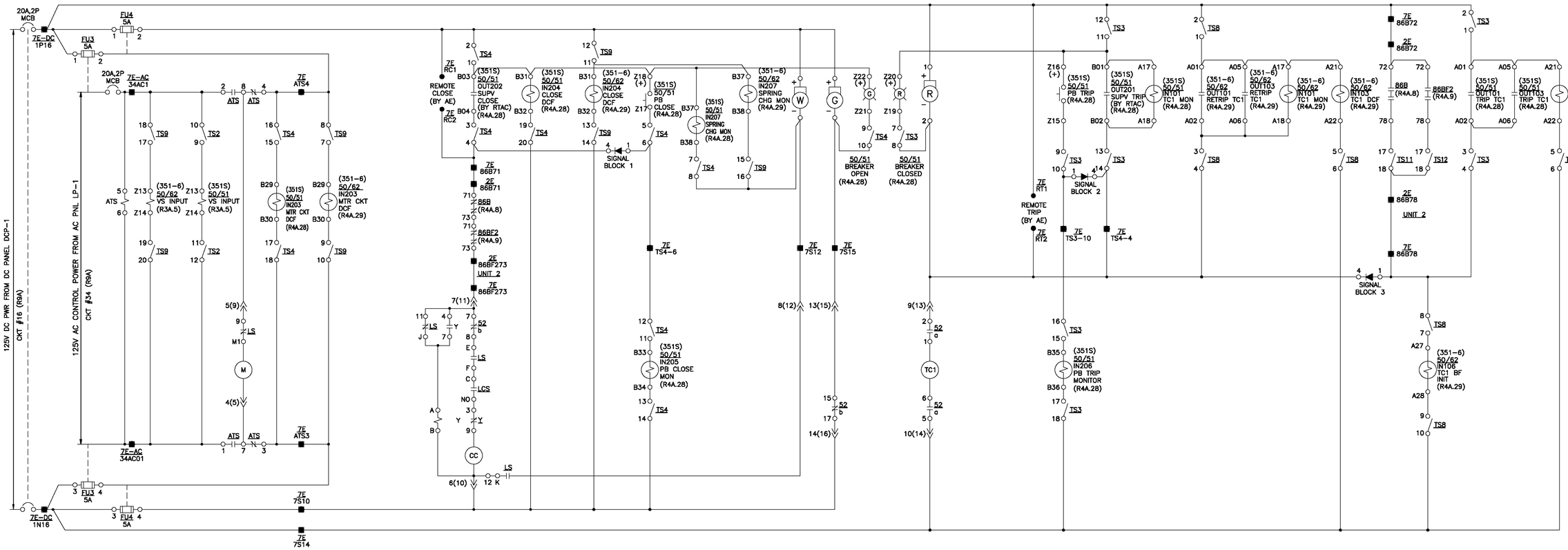

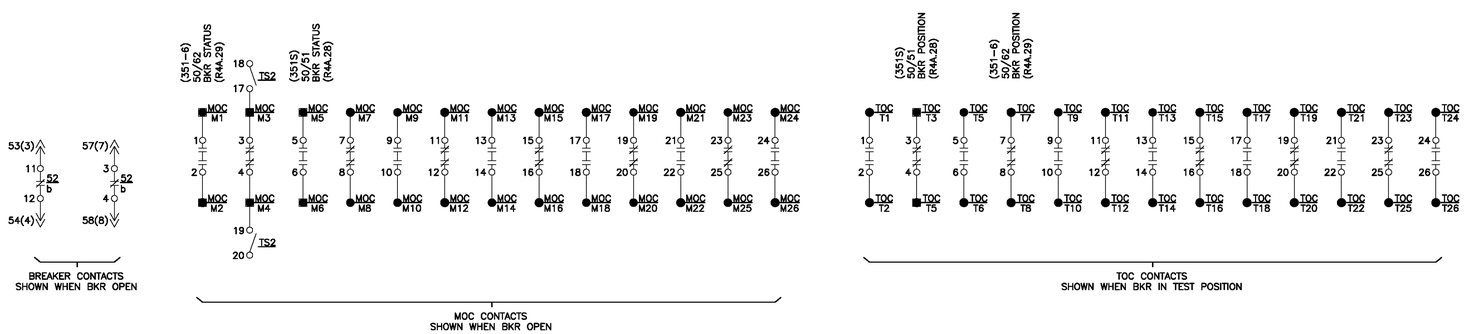

TERMINAL IDENTIFICATION

- TERMINAL ON LINE CONTROL PANEL
- TERMINAL ON SUPV PANEL
- TERMINAL ON DEVICE
- SHORTING BLOCK
- TERMINAL ON UNIT SUB TRANSFORMER
- TRANSFORMER BUSHING
- POLARITY MARK
- CIRCUIT DISCONNECT DEVICE
- ELECTRICAL CONNECTION
- TERMINAL ON UNIT SUB SWITCHGEAR FOR CUSTOMER USE
- TERMINAL ON UNIT SUB SWITCHGEAR FOR MFG INTERNAL USE

NO	DATE	REVISION	TASKNUM	DSGN	CHK	DWN	CHK	AS-BUILT	BY
6									
5									
4									
3									
2									
1									
0	08-26-11	REVISION C – NEW SWITCHGEAR STANDARD		TL	TL	JG			

FOR CONSTRUCTION / DATE

NOTICE
The data in this document incorporates proprietary rights of AUSTIN ENERGY. Any party accepting this document does so in confidence and agrees that it shall not be duplicated in whole or part, nor disclosed to others without the consent of AUSTIN ENERGY.

AUSTIN ENERGY
POWER DELIVERY DIVISION
TRANSMISSION ENGINEERING

TITLE :
NAME SUBSTATION
DC CONTROL SCHEMATIC
XX-3 FDR BKR CLOSE & TC1 – UNIT 7

MASTER NO. R04A_STD_SWGR_26
SCALE NTS
FILE NAME XXXX_04A_26.DWG
DRAWING NUMBER 7B XXXX R4A.26

ISSUED FOR MANUFACTURING STANDARD - 26 AUGUST 2011

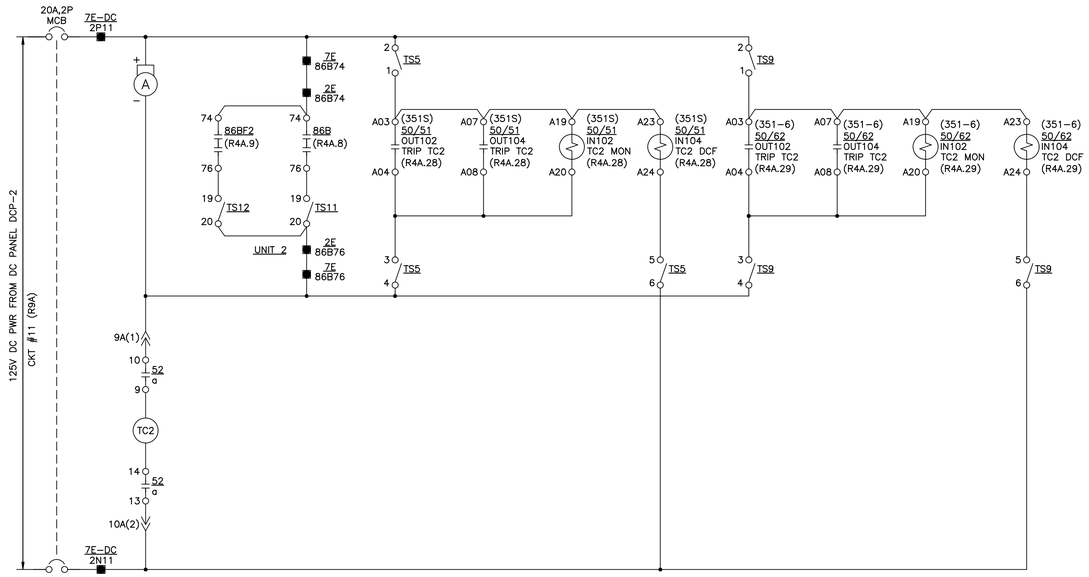

TERMINAL IDENTIFICATION

- TERMINAL ON LINE CONTROL PANEL
- TERMINAL ON SUPV PANEL
- TERMINAL ON DEVICE
- SHORTING BLOCK
- TERMINAL ON UNIT SUB TRANSFORMER
- TRANSFORMER BUSHING
- POLARITY MARK
- CIRCUIT DISCONNECT DEVICE
- ELECTRICAL CONNECTION
- TERMINAL ON UNIT SUB SWITCHGEAR FOR CUSTOMER USE
- TERMINAL ON UNIT SUB SWITCHGEAR FOR MFG INTERNAL USE

NO	DATE	REVISION	TASKNUM	DSGN	CHK	DWN	CHK	AS–BUILT	BY
6									
5									
4									
3									
2									
1									
0	08–26–11	REVISION C – NEW SWITCHGEAR STANDARD		TL	TL	JG			

FOR CONSTRUCTION / DATE

NOTICE
The data in this document incorporates proprietary rights of AUSTIN ENERGY. Any party accepting this document does so in confidence and agrees that it shall not be duplicated in whole or part, nor disclosed to others without the consent of AUSTIN ENERGY.

AUSTIN ENERGY
POWER DELIVERY DIVISION
TRANSMISSION ENGINEERING

TITLE :

NAME SUBSTATION
DC CONTROL SCHEMATIC
XX–3 FDR BKR TC2 – UNIT 7

MASTER NO.	SCALE
R04A_STD_SWGR_27	NTS
FILE NAME	
XXXX_04A_27.DWG	
DRAWING NUMBER	
7B XXXX R4A.27	

ISSUED FOR MANUFACTURING STANDARD - 26 AUGUST 2011

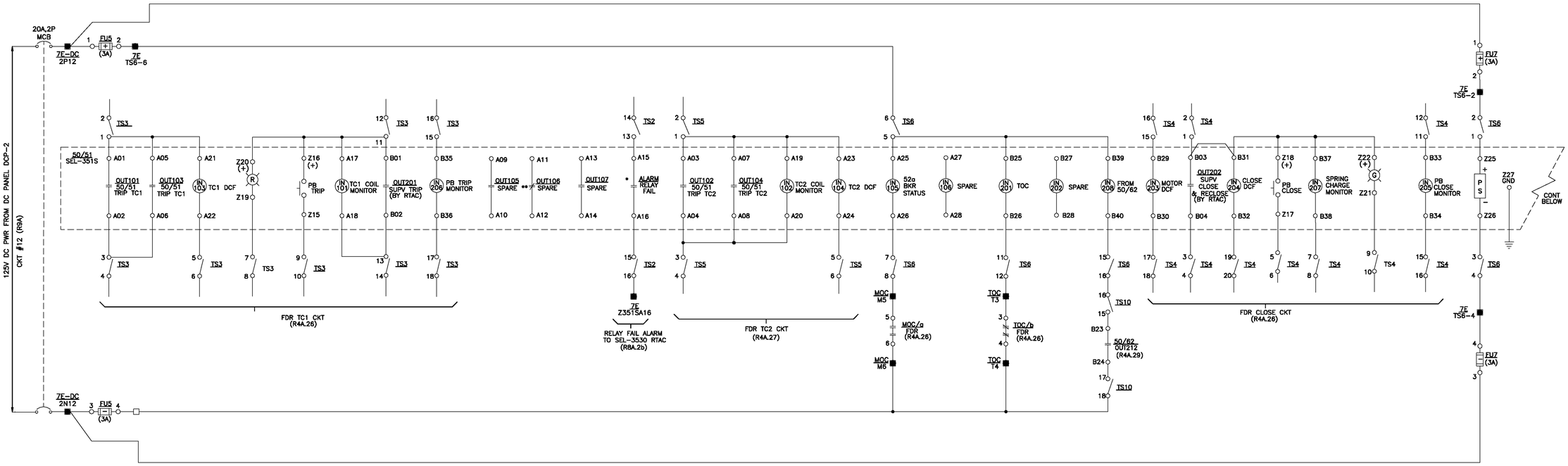

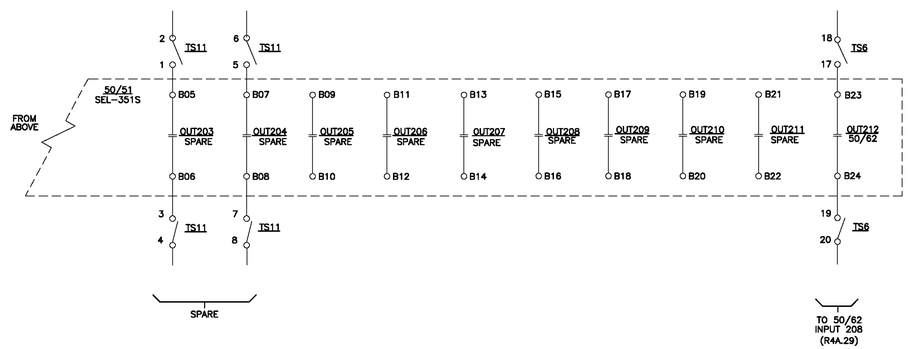

* NORMALLY OPEN CONTACT (ALARM STATE)

** NORMALLY CLOSE CONTACT

DEVICE	FUNCTION	STYLE NO.
50/51	(SEL-351S)	

TERMINAL IDENTIFICATION

- TERMINAL ON LINE CONTROL PANEL
- TERMINAL ON SUPV PANEL
- TERMINAL ON DEVICE
- SHORTING BLOCK
- TERMINAL ON UNIT SUB TRANSFORMER
- TRANSFORMER BUSHING
- POLARITY MARK
- CIRCUIT DISCONNECT DEVICE
- ELECTRICAL CONNECTION
- TERMINAL ON UNIT SUB SWITCHGEAR FOR CUSTOMER USE
- TERMINAL ON UNIT SUB SWITCHGEAR FOR MFG INTERNAL USE

NO	DATE	REVISION	TASKNUM	DSGN	CHK	DWN	CHK	AS-BUILT	BY
6									
5									
4									
3									
2									
1									
0	08-26-11	REVISION C – NEW SWITCHGEAR STANDARD		TL	TL	JG			

FOR CONSTRUCTION / DATE

NOTICE
The data in this document incorporates proprietary rights of AUSTIN ENERGY. Any party accepting this document does so in confidence and agrees that it shall not be duplicated in whole or part, nor disclosed to others without the consent of AUSTIN ENERGY.

AUSTIN ENERGY
POWER DELIVERY DIVISION
TRANSMISSION ENGINEERING

TITLE :

NAME SUBSTATION
DC CONTROL SCHEMATIC
XX-3 FDR BKR 50/51 (351S) RELAY – UNIT 7

MASTER NO. R04A_STD_SWGR_28
SCALE NTS
FILE NAME XXXX_04A_28.DWG
DRAWING NUMBER 7B XXXX R4A.28

ISSUED FOR MANUFACTURING STANDARD - 26 AUGUST 2011

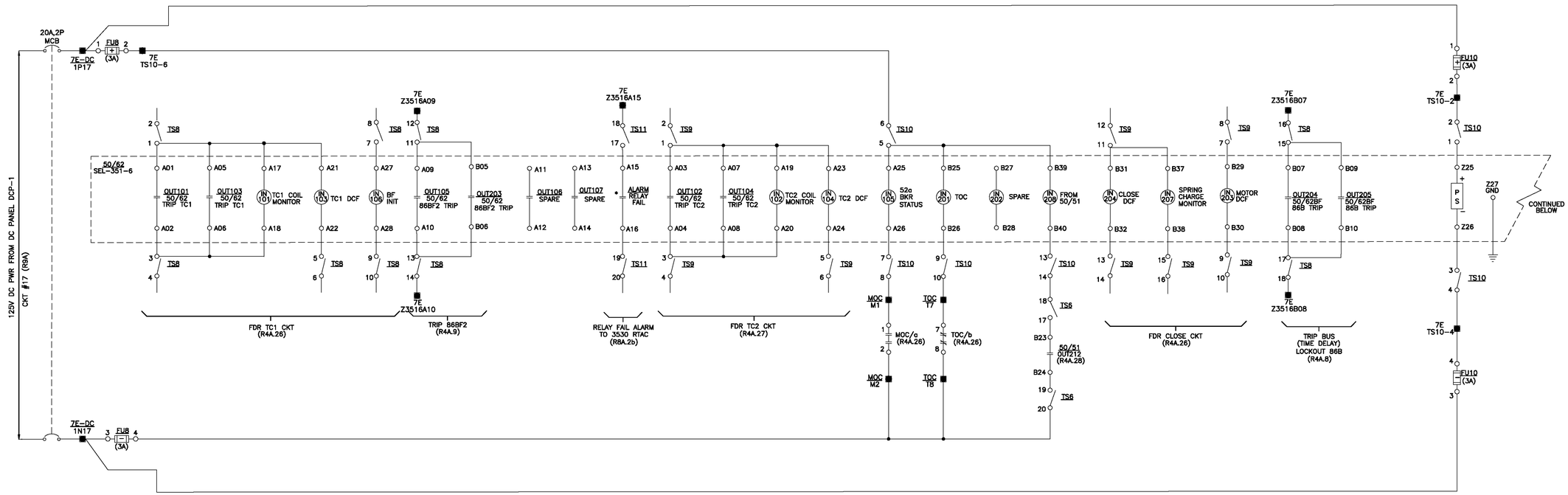

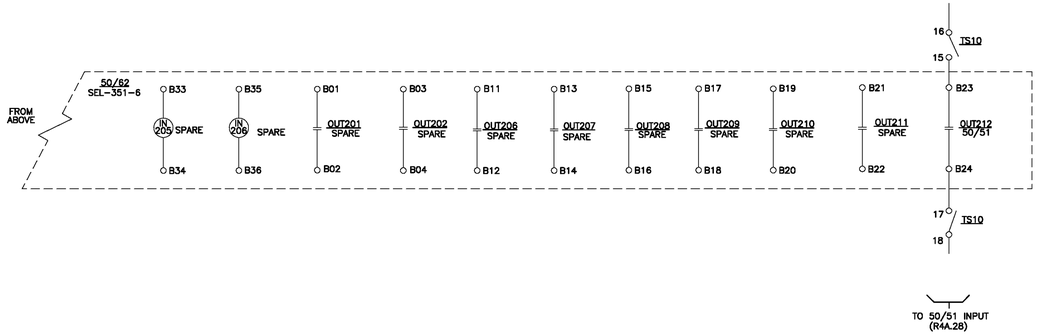

* NORMALLY OPEN CONTACT (ALARM STATE)

DEVICE	FUNCTION	STYLE NO.
50/62	(SEL-351-6)	

TERMINAL IDENTIFICATION

- TERMINAL ON LINE CONTROL PANEL
- TERMINAL ON SUPV PANEL
- TERMINAL ON DEVICE
- SHORTING BLOCK
- TERMINAL ON UNIT SUB TRANSFORMER
- TRANSFORMER BUSHING
- POLARITY MARK
- CIRCUIT DISCONNECT DEVICE
- ELECTRICAL CONNECTION
- TERMINAL ON UNIT SUB SWITCHGEAR FOR CUSTOMER USE
- TERMINAL ON UNIT SUB SWITCHGEAR FOR MFG INTERNAL USE

NO	DATE	REVISION	TASKNUM	DSGN	CHK	DWN	CHK	AS-BUILT	BY
6									
5									
4									
3									
2									
1									
0	08-26-11	REVISION C – NEW SWITCHGEAR STANDARD		TL	TL	JG			

FOR CONSTRUCTION / DATE

NOTICE
The data in this document incorporates proprietary rights of AUSTIN ENERGY. Any party accepting this document does so in confidence and agrees that it shall not be duplicated in whole or part, nor disclosed to others without the consent of AUSTIN ENERGY.

AUSTIN ENERGY
POWER DELIVERY DIVISION
TRANSMISSION ENGINEERING

TITLE :

NAME SUBSTATION
DC CONTROL SCHEMATIC
XX-3 FDR 50/62 (351-6) RELAY – UNIT 7

MASTER NO. R04A_STD_SWGR_29
SCALE NTS
FILE NAME XXXX_04A_29.DWG
DRAWING NUMBER 7B XXXX R4A.29

ISSUED FOR MANUFACTURING STANDARD - 26 AUGUST 2011

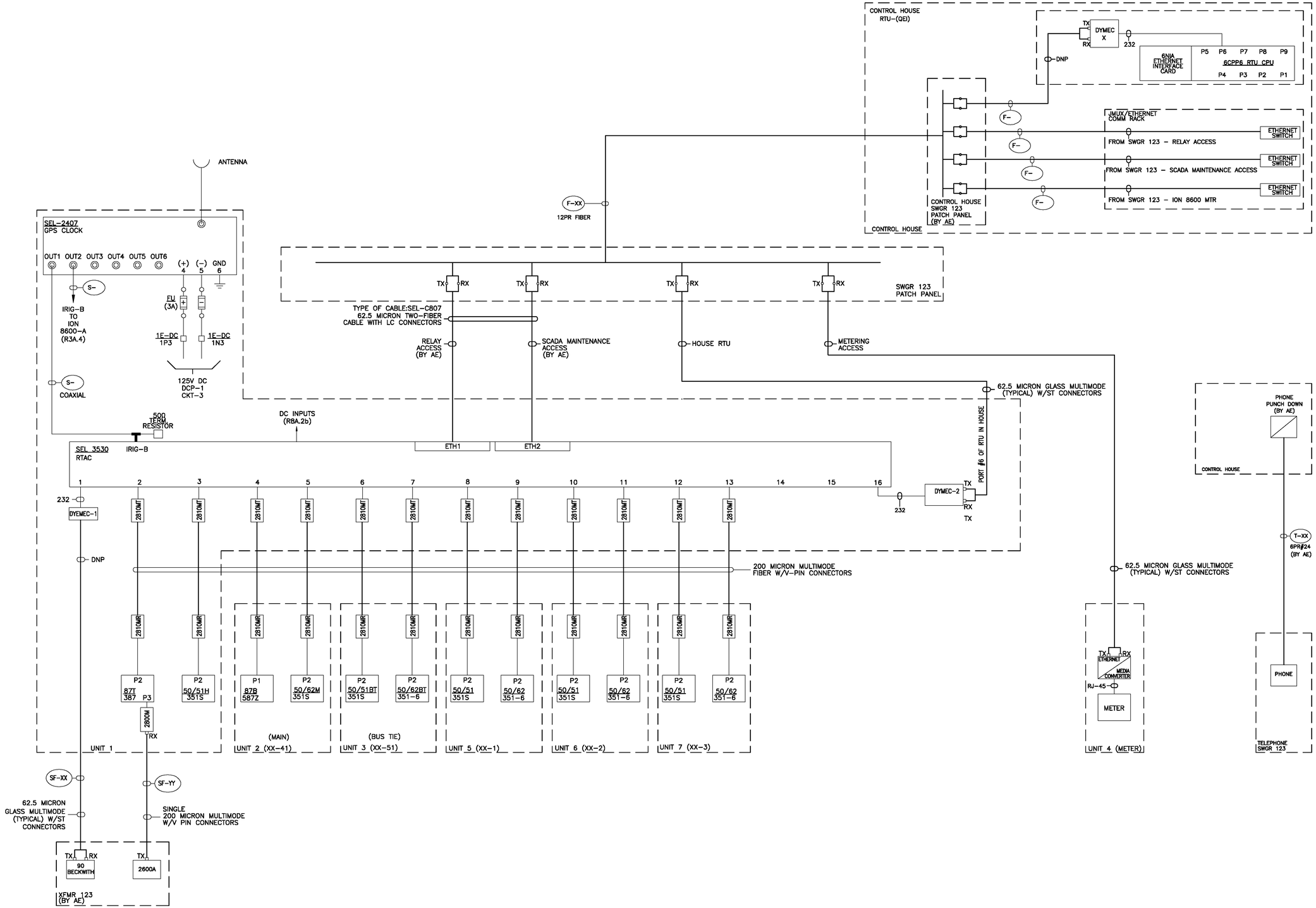

NO	DATE	REVISION	TASKNUM	DSGN	CHK	DWN	CHK	AS-BUILT	BY
6									
5									
4									
3									
2									
1									
0	08-26-11	REVISION C - NEW SWITCHGEAR STANDARD		TL	TL	JG			

FOR CONSTRUCTION / DATE

NOTICE
The data in this document incorporates proprietary rights of AUSTIN ENERGY. Any party accepting this document does so in confidence and agrees that it shall not be duplicated in whole or part, nor disclosed to others without the consent of AUSTIN ENERGY.

AUSTIN ENERGY
POWER DELIVERY DIVISION
TRANSMISSION ENGINEERING

TITLE :
NAME SUBSTATION
COMM SCHEMATIC
SWGR 123 SEL-3530 FIBER PLAN

MASTER NO. R08A_SWGR_02a_Rev C
SCALE NTS
FILE NAME XXXX_08A_2a.DWG
DRAWING NUMBER 7B XXXX R8A.2a

ISSUED FOR MANUFACTURING STANDARD - 24 OCTOBER 2011

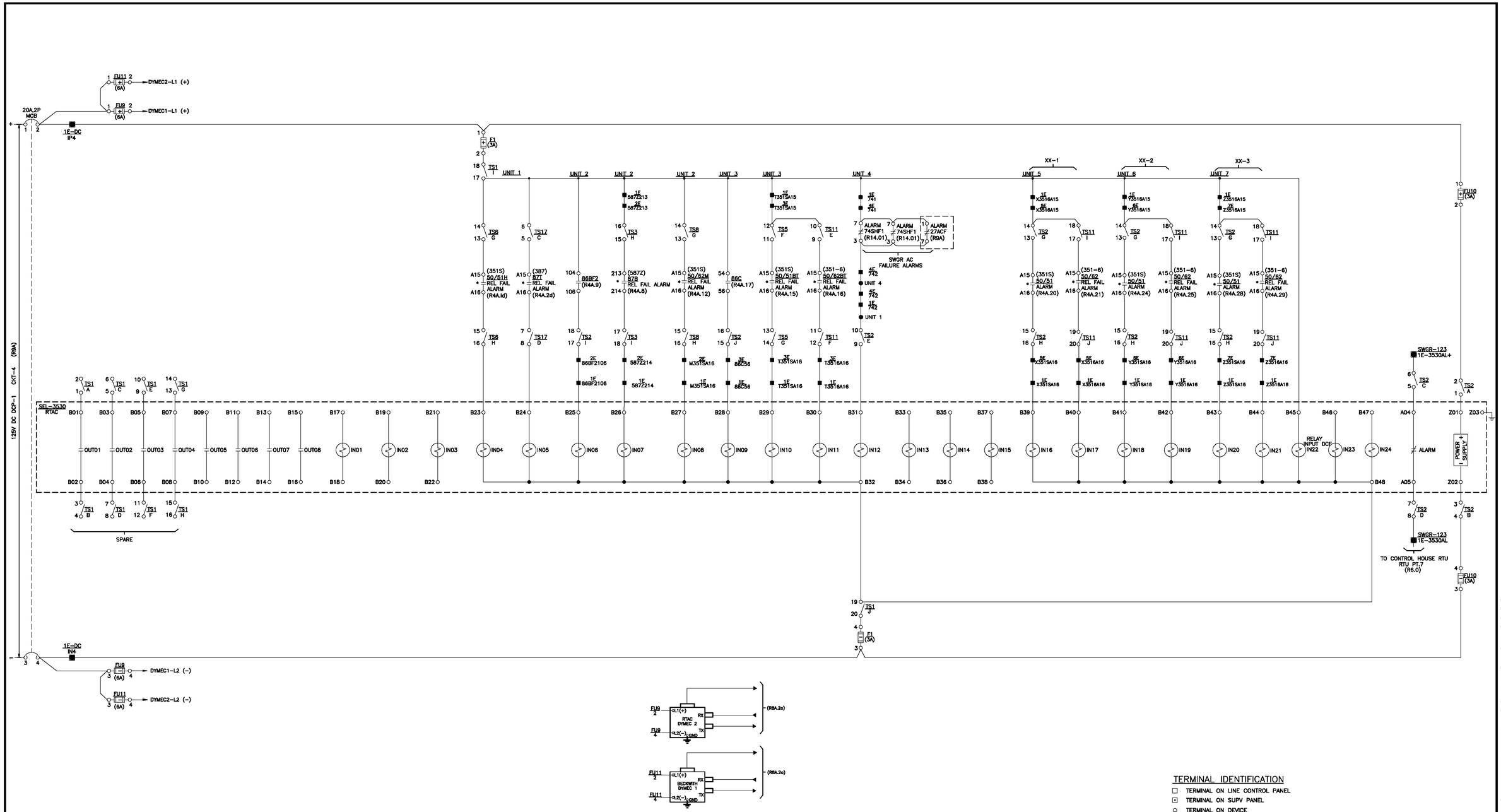

TERMINAL IDENTIFICATION

- □ TERMINAL ON LINE CONTROL PANEL
- ⊡ TERMINAL ON SUPV PANEL
- ○ TERMINAL ON DEVICE
- ⊠ SHORTING BLOCK
- ▲ TERMINAL ON UNIT SUB TRANSFORMER
- ⦿ TRANSFORMER BUSHING
- ■ POLARITY MARK
- ≫ CIRCUIT DISCONNECT DEVICE
- ● TERMINAL ON UNIT SUB SWITCHGEAR FOR CUSTOMER USE
- • ELECTRICAL CONNECTION

NO	DATE	REVISION	TASKNUM	DSGN	CHK	DWN	CHK	AS-BUILT	BY
6									
5									
4									
3									
2									
1									
0	08-26-11	REVISION C – NEW SWITCHGEAR STANDARD		TL	TL	JG			

FOR CONSTRUCTION / DATE

NOTICE
The data in this document incorporates proprietary rights of AUSTIN ENERGY. Any party accepting this document does so in confidence and agrees that it shall not be duplicated in whole or part, nor disclosed to others without the consent of AUSTIN ENERGY.

AUSTIN ENERGY
POWER DELIVERY DIVISION
TRANSMISSION ENGINEERING

TITLE :

NAME SUBSTATION
COMM SCHEMATIC
XX-123 SEL-3530 RTAC UNIT 1

MASTER NO.	SCALE
R08A_STD_SWGR_02b	NTS
FILE NAME	
XXXX_08A_02b.DWG	
DRAWING NUMBER	
7B XXXX R8A.2b	

ISSUED FOR MANUFACTURING STANDARD - 26 AUGUST 2011

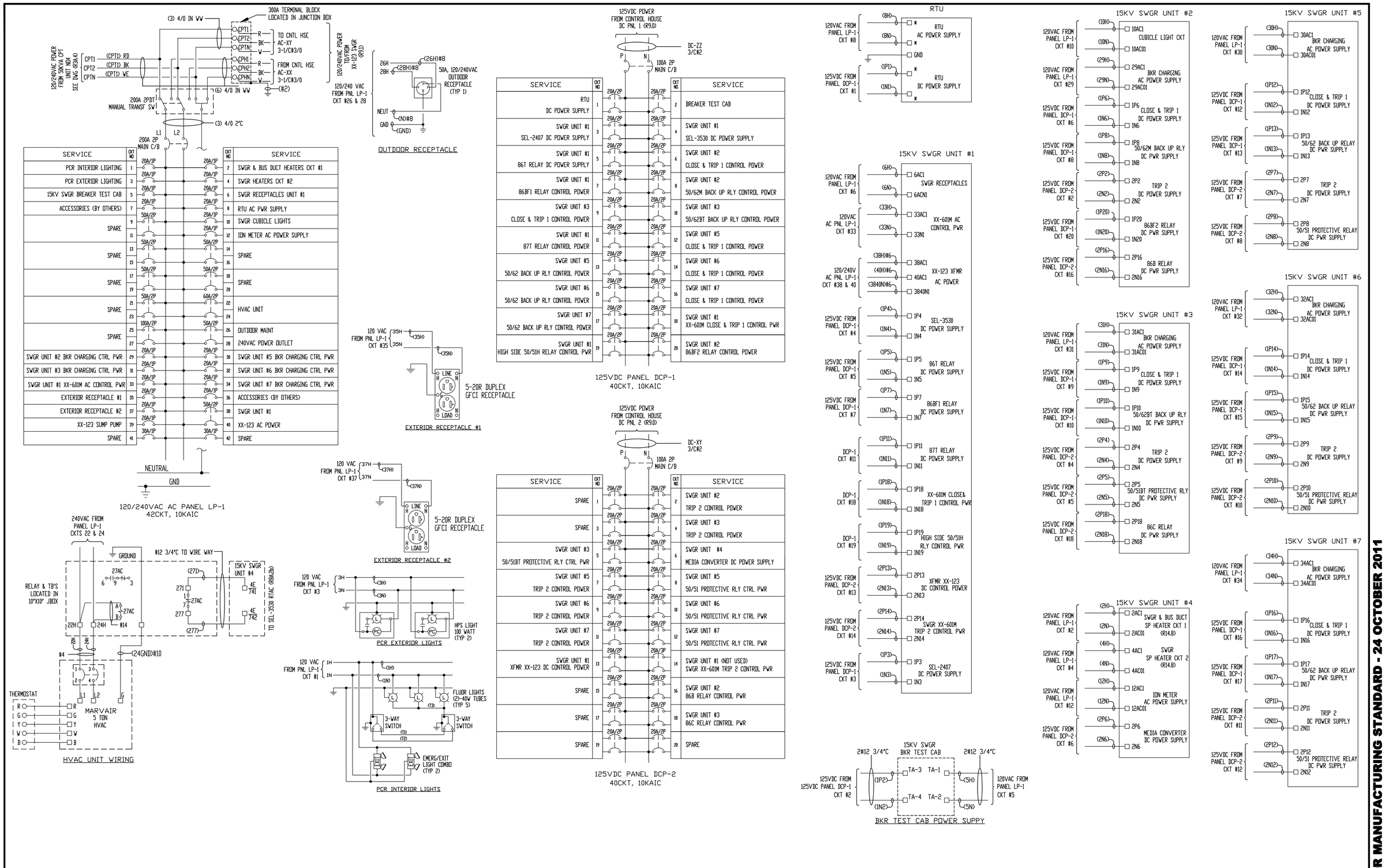

SERVICE	CKT NO			CKT NO	SERVICE
PCR INTERIOR LIGHTING	1	20A/1P	20A/1P	2	SWGR & BUS DUCT HEATERS CKT #1
PCR EXTERIOR LIGHTING	3	20A/1P	20A/1P	4	SWGR HEATERS CKT #2
15KV SWGR BREAKER TEST CAB	5	20A/1P	20A/1P	6	SWGR RECEPTACLES UNIT #1
ACCESSORIES (BY OTHERS)	7	20A/1P	20A/1P	8	RTU AC PWR SUPPLY
SPARE	9	50A/2P	20A/1P	10	SWGR CUBICLE LIGHTS
	11		20A/1P	12	IDN METER AC POWER SUPPLY
SPARE	13	50A/2P	50A/2P	14	SPARE
	15			16	
SPARE	17	50A/2P	50A/2P	18	SPARE
	19			20	
SPARE	21	50A/2P	60A/2P	22	HVAC UNIT
	23			24	
SPARE	25	100A/2P	50A/2P	26	OUTDOOR MAINT
	27			28	240VAC POWER OUTLET
SWGR UNIT #2 BKR CHARGING CTRL PWR	29	20A/1P	20A/1P	30	SWGR UNIT #5 BKR CHARGING CTRL PWR
SWGR UNIT #3 BKR CHARGING CTRL PWR	31	20A/1P	20A/1P	32	SWGR UNIT #6 BKR CHARGING CTRL PWR
SWGR UNIT #1 XX-601M AC CONTROL PWR	33	20A/1P	20A/1P	34	SWGR UNIT #7 BKR CHARGING CTRL PWR
EXTERIOR RECEPTACLE #1	35	20A/1P	20A/1P	36	ACCESSORIES (BY OTHERS)
EXTERIOR RECEPTACLE #2	37	20A/1P	50A/2P	38	SWGR UNIT #1
XX-123 SUMP PUMP	39	20A/1P		40	XX-123 AC POWER
SPARE	41	30A/1P	30A/1P	42	SPARE

SERVICE	CKT NO			CKT NO	SERVICE
RTU DC POWER SUPPLY	1	20A/2P	20A/2P	2	BREAKER TEST CAB
SWGR UNIT #1 SEL-2407 DC POWER SUPPLY	3	20A/2P	20A/2P	4	SWGR UNIT #1 SEL-3530 DC POWER SUPPLY
SWGR UNIT #1 86T RELAY DC POWER SUPPLY	5	20A/2P	20A/2P	6	SWGR UNIT #2 CLOSE & TRIP 1 CONTROL POWER
SWGR UNIT #1 86BF1 RELAY CONTROL POWER	7	20A/2P	20A/2P	8	SWGR UNIT #2 50/62M BACK UP RLY CONTROL POWER
SWGR UNIT #3 CLOSE & TRIP 1 CONTROL POWER	9	20A/2P	20A/2P	10	SWGR UNIT #3 50/62BT BACK UP RLY CONTROL POWER
SWGR UNIT #1 87T RELAY CONTROL POWER	11	20A/2P	20A/2P	12	SWGR UNIT #5 CLOSE & TRIP 1 CONTROL POWER
SWGR UNIT #5 50/62 BACK UP RLY CONTROL POWER	13	20A/2P	20A/2P	14	SWGR UNIT #6 CLOSE & TRIP 1 CONTROL POWER
SWGR UNIT #6 50/62 BACK UP RLY CONTROL POWER	15	20A/2P	20A/2P	16	SWGR UNIT #7 CLOSE & TRIP 1 CONTROL POWER
SWGR UNIT #7 50/62 BACK UP RLY CONTROL POWER	17	20A/2P	20A/2P	18	SWGR UNIT #1 XX-601M CLOSE & TRIP 1 CONTROL PWR
SWGR UNIT #1 HIGH SIDE 50/51H RELAY CONTROL PWR	19	20A/2P	20A/2P	20	SWGR UNIT #2 86BF2 RELAY CONTROL POWER

SERVICE	CKT NO			CKT NO	SERVICE
SPARE	1	20A/2P	20A/2P	2	SWGR UNIT #2 TRIP 2 CONTROL POWER
SPARE	3	20A/2P	20A/2P	4	SWGR UNIT #3 TRIP 2 CONTROL POWER
SWGR UNIT #3 50/51BT PROTECTIVE RLY CTRL PWR	5	20A/2P	20A/2P	6	SWGR UNIT #4 MEDIA CONVERTER DC POWER SUPPLY
SWGR UNIT #5 TRIP 2 CONTROL POWER	7	20A/2P	20A/2P	8	SWGR UNIT #5 50/51 PROTECTIVE RLY CTRL PWR
SWGR UNIT #6 TRIP 2 CONTROL POWER	9	20A/2P	20A/2P	10	SWGR UNIT #6 50/51 PROTECTIVE RLY CTRL PWR
SWGR UNIT #7 TRIP 2 CONTROL POWER	11	20A/2P	20A/2P	12	SWGR UNIT #7 50/51 PROTECTIVE RLY CTRL PWR
SWGR UNIT #1 XFMR XX-123 DC CONTROL POWER	13	20A/2P	20A/3P	14	SWGR UNIT #1 (NOT USED) SWGR XX-601M TRIP 2 CONTROL PWR
SPARE	15	20A/2P	20A/2P	16	SWGR UNIT #2 86B RELAY CONTROL PWR
SPARE	17	20A/2P	20A/2P	18	SWGR UNIT #3 86C RELAY CONTROL PWR
SPARE	19	20A/2P	20A/2P	20	SPARE

NO	DATE	REVISION	TASKNUM	DSGN	CHK	DWN	CHK	AS-BUILT	BY
6									
5									
4									
3									
2									
1									
0	08-26-11	REVISION C - NEW SWITCHGEAR STANDARD		TL	TL	JG			

FOR CONSTRUCTION / DATE

NOTICE
The data in this document incorporates proprietary rights of AUSTIN ENERGY. Any party accepting this document does so in confidence and agrees that it shall not be duplicated in whole or part, nor disclosed to others without the consent of AUSTIN ENERGY.

AUSTIN ENERGY
POWER DELIVERY DIVISION
TRANSMISSION ENGINEERING

TITLE :
NAME SUBSTATION
AC & DC STATION SERVICE
XX-123 UNIT SUB

MASTER NO. R09A_SWGR_X_Rev C
SCALE NTS
FILE NAME XXXX_09A.DWG
DRAWING NUMBER 7B XXXX R9A

ISSUED FOR MANUFACTURING STANDARD - 24 OCTOBER 2011

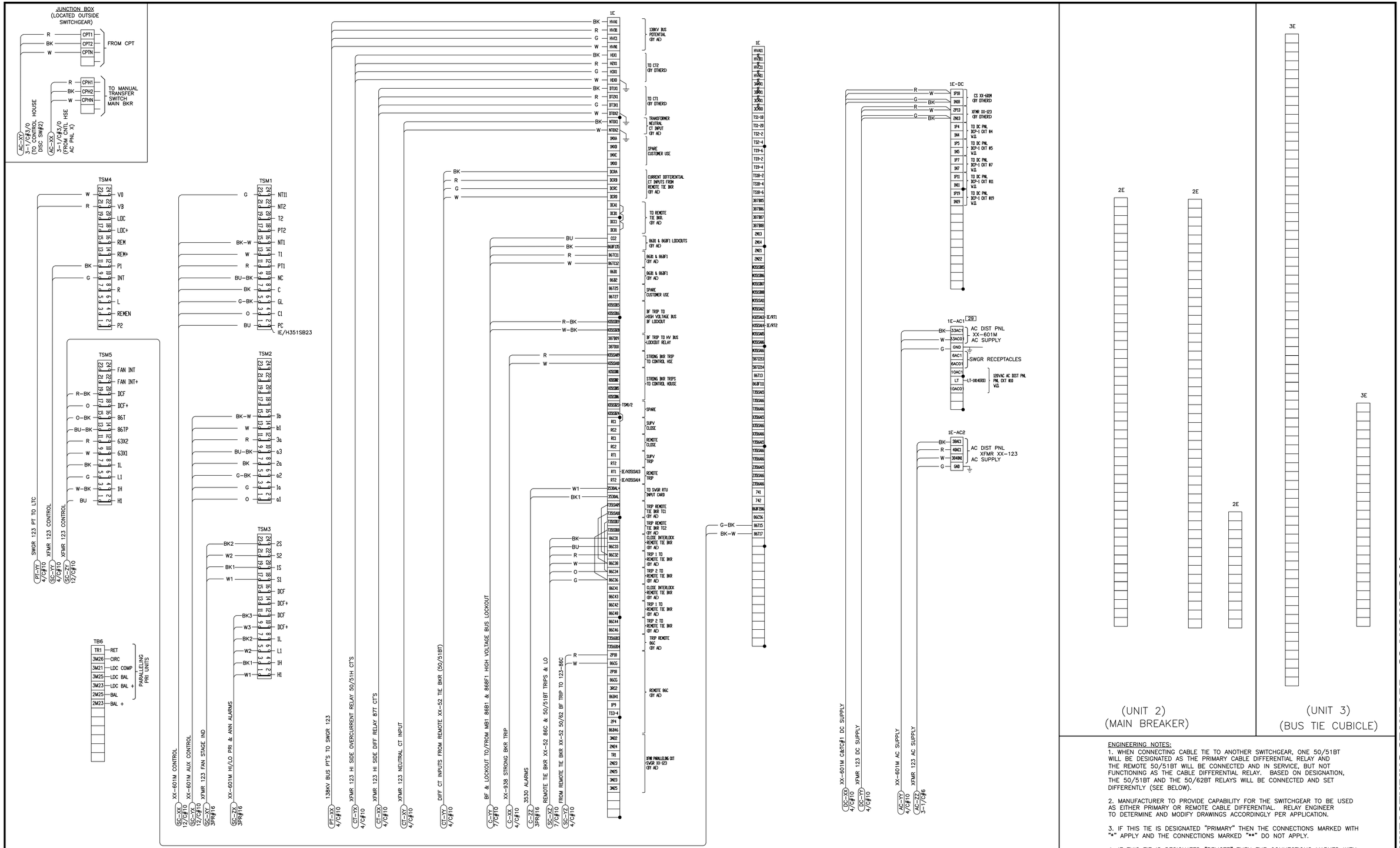

ENGINEERING NOTES:

1. WHEN CONNECTING CABLE TIE TO ANOTHER SWITCHGEAR, ONE 50/51BT WILL BE DESIGNATED AS THE PRIMARY CABLE DIFFERENTIAL RELAY AND THE REMOTE 50/51BT WILL BE CONNECTED AND IN SERVICE, BUT NOT FUNCTIONING AS THE CABLE DIFFERENTIAL RELAY. BASED ON DESIGNATION, THE 50/51BT AND THE 50/62BT RELAYS WILL BE CONNECTED AND SET DIFFERENTLY (SEE BELOW).

2. MANUFACTURER TO PROVIDE CAPABILITY FOR THE SWITCHGEAR TO BE USED AS EITHER PRIMARY OR REMOTE CABLE DIFFERENTIAL. RELAY ENGINEER TO DETERMINE AND MODIFY DRAWINGS ACCORDINGLY PER APPLICATION.

3. IF THIS TIE IS DESIGNATED "PRIMARY" THEN THE CONNECTIONS MARKED WITH "*" APPLY AND THE CONNECTIONS MARKED "**" DO NOT APPLY.

4. IF THIS TIE IS DESIGNATED "REMOTE" THEN THE CONNECTIONS MARKED WITH "**" APPLY AND THE CONNECTIONS MARKED "*" DO NOT APPLY.

NO	DATE	REVISION	TASKNUM	DSGN	CHK	DWN	CHK	AS-BUILT	BY
6									
5									
4									
3									
2									
1									
0	08-26-11	REVISION C – NEW SWITCHGEAR STANDARD		TL	TL	JG			

FOR CONSTRUCTION / DATE

NOTICE
The data in this document incorporates proprietary rights of AUSTIN ENERGY. Any party accepting this document does so in confidence and agrees that it shall not be duplicated in whole or part, nor disclosed to others without the consent of AUSTIN ENERGY.

AUSTIN ENERGY
POWER DELIVERY DIVISION
TRANSMISSION ENGINEERING

TITLE :

NAME SUBSTATION
EXTERNAL WIRING CONNECTION
SWGR 123 INTERFACE/ UNIT 1–3

MASTER NO.	SCALE
R12A_STD_SWGR_01	NTS
FILE NAME	
XXXX_12A_01.DWG	
DRAWING NUMBER	
7B XXXX R12A.1	

ISSUED FOR MANUFACTURING STANDARD - 26 AUGUST 2011

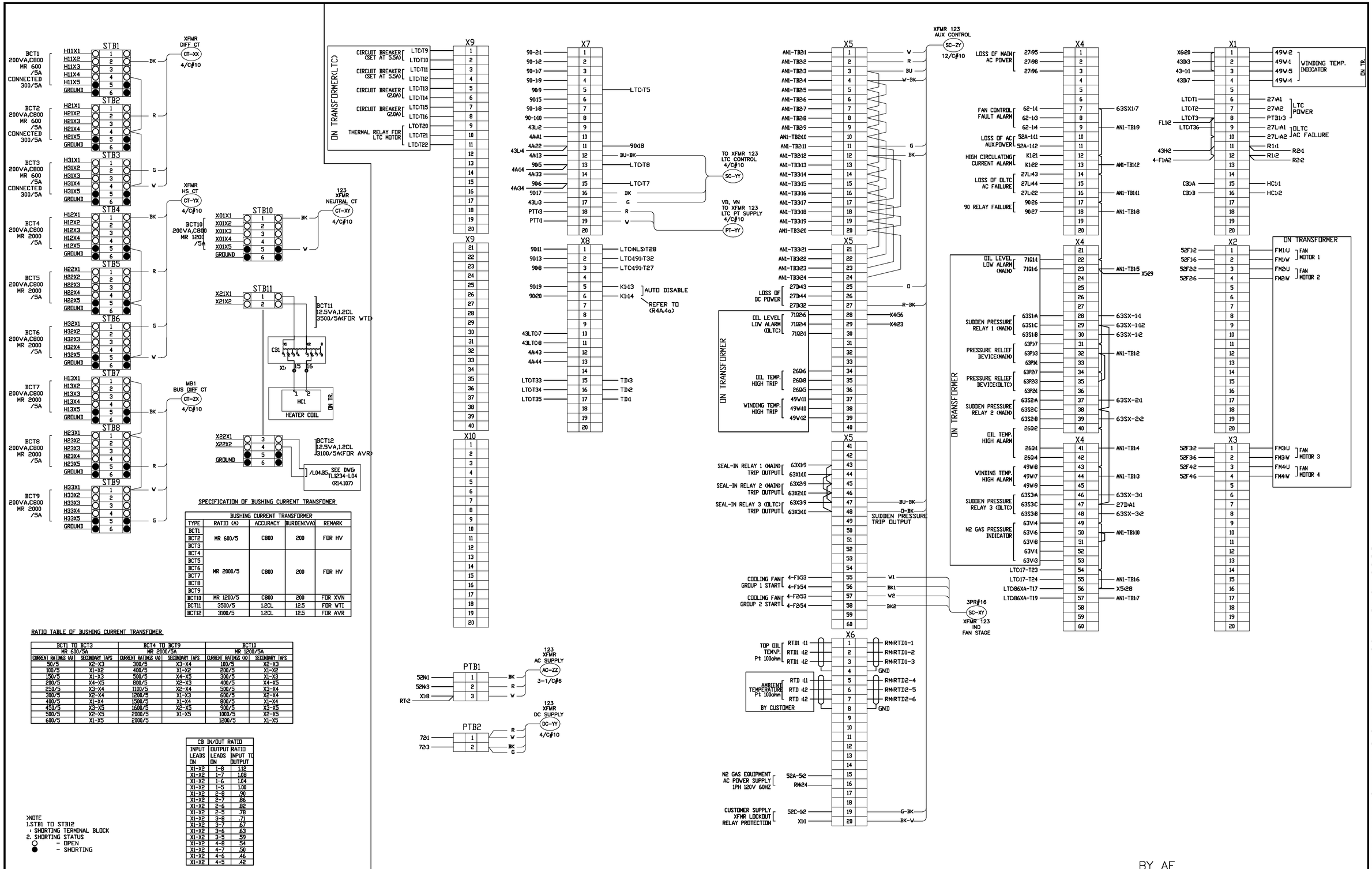

SPECIFICATION OF BUSHING CURRENT TRANSFOMER

BUSHING CURRENT TRANSFORMER				
TYPE	RATIO (A)	ACCURACY	BURDEN(VA)	REMARK
BCT1	MR 600/5	C800	200	FOR HV
BCT2				
BCT3				
BCT4	MR 2000/5	C800	200	FOR HV
BCT5				
BCT6				
BCT7				
BCT8				
BCT9				
BCT10	MR 1200/5	C800	200	FOR XVN
BCT11	3500/5	1.2CL	12.5	FOR WTI
BCT12	3100/5	1.2CL	12.5	FOR AVR

RATIO TABLE OF BUSHING CURRENT TRANSFOMER

BCT1 TO BCT3 MR 600/5A		BCT4 TO BCT9 MR 2000/5A		BCT10 MR 1200/5A	
CURRENT RATINGS (A)	SECONDARY TAPS	CURRENT RATINGS (A)	SECONDARY TAPS	CURRENT RATINGS (A)	SECONDARY TAPS
50/5	X2-X3	300/5	X3-X4	100/5	X2-X3
100/5	X1-X2	400/5	X1-X2	200/5	X1-X2
150/5	X1-X3	500/5	X4-X5	300/5	X1-X3
200/5	X4-X5	800/5	X2-X3	400/5	X4-X5
250/5	X3-X4	1100/5	X2-X4	500/5	X3-X4
300/5	X2-X4	1200/5	X1-X3	600/5	X2-X4
400/5	X1-X4	1500/5	X1-X4	800/5	X1-X4
450/5	X3-X5	1600/5	X2-X5	900/5	X3-X5
500/5	X2-X5	2000/5	X1-X5	1000/5	X2-X5
600/5	X1-X5	2000/5		1200/5	X1-X5

CB IN/OUT RATIO		
INPUT LEADS ON	OUTPUT LEADS ON	RATIO INPUT TO OUTPUT
X1-X2	1-8	1.12
X1-X2	1-7	1.08
X1-X2	1-6	1.04
X1-X2	1-5	1.00
X1-X2	2-8	.90
X1-X2	2-7	.86
X1-X2	2-6	.82
X1-X2	2-5	.78
X1-X2	3-8	.71
X1-X2	3-7	.67
X1-X2	3-6	.63
X1-X2	3-5	.59
X1-X2	4-8	.54
X1-X2	4-7	.50
X1-X2	4-6	.46
X1-X2	4-5	.42

>NOTE
1.STB1 TO STB12
▫ SHORTING TERMINAL BLOCK
2. SHORTING STATUS
○ - OPEN
● - SHORTING

BY AE

NO	DATE	REVISION	TASKNUM	DSGN	CHK	DWN	CHK	AS-BUILT	BY
6									
5									
4									
3									
2									
1									
0	08-26-11	REVISION C – NEW SWITCHGEAR STANDARD		TL	TL	JG			

FOR CONSTRUCTION / DATE

NOTICE
The data in this document incorporates proprietary rights of AUSTIN ENERGY. Any party accepting this document does so in confidence and agrees that it shall not be duplicated in whole or part, nor disclosed to others without the consent of AUSTIN ENERGY.

AUSTIN ENERGY
POWER DELIVERY DIVISION
TRANSMISSION ENGINEERING

TITLE :
NAME SUBSTATION
XFMR CONNECTION DIAGRAM
XX-123

MASTER NO.	SCALE
R12A_STD_SWGR_02	NTS
FILE NAME	
XXXX_12A_02.DWG	
DRAWING NUMBER	
7B XXXX R12A.2	

ISSUED FOR MANUFACTURING STANDARD - 26 AUGUST 2011

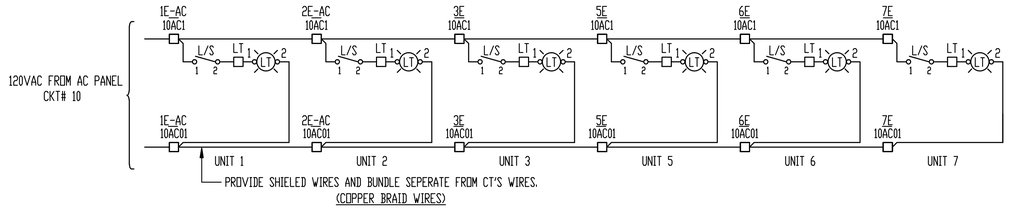

INTERIOR LIGHT CKT FOR SWGR ASSEMBLY

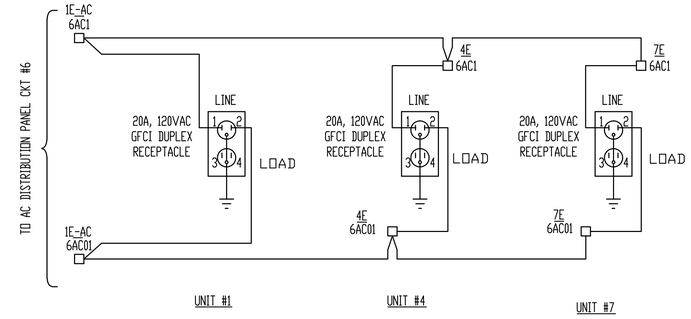

RECEPTACLE POWER CIRCUITS

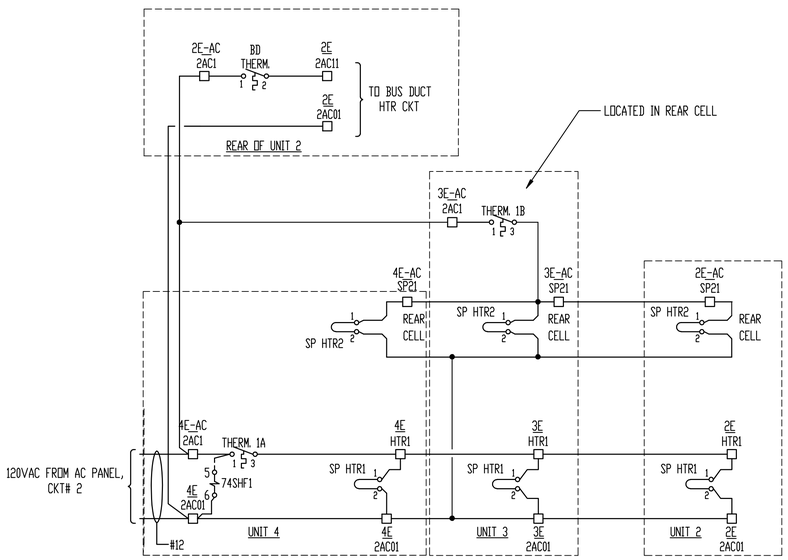

SWITCHGEAR SPACE HEATER CIRCUIT

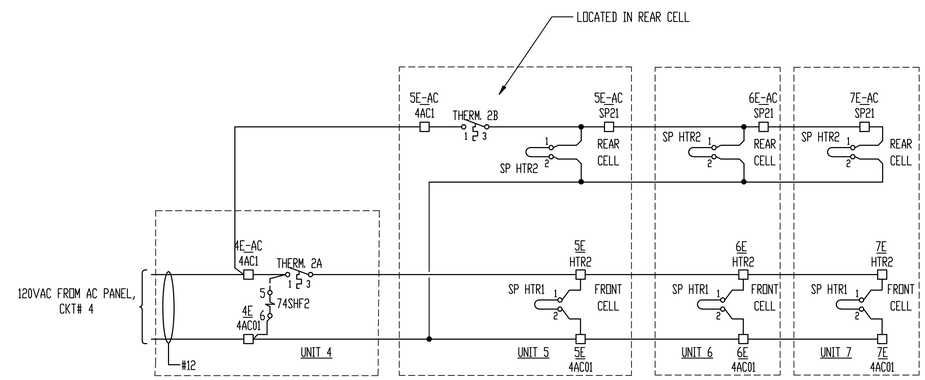

SWITCHGEAR SPACE HEATER CIRCUIT

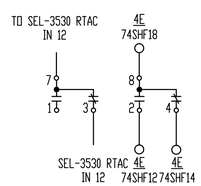

74SHF1 CONTACTS
FOR CUSTOMER USE
(CONTACTS SHOWN RELAY DE-ENERGIZED)
(WIRE TAGS MATCH TERMINAL NUMBERS)

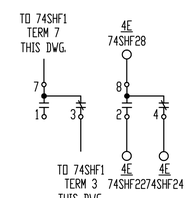

74SHF2 CONTACTS
FOR CUSTOMER USE
(CONTACTS SHOWN RELAY DE-ENERGIZED)
(WIRE TAGS MATCH TERMINAL NUMBERS)

TERMINAL IDENTIFICATION

- ☐ TERMINAL ON LINE CONTROL PANEL
- ⊡ TERMINAL ON SUPV PANEL
- ○ TERMINAL ON DEVICE
- ✖ SHORTING BLOCK
- ▲ TERMINAL ON UNIT SUB TRANSFORMER
- ⦿ TRANSFORMER BUSHING
- ■ POLARITY MARK
- ≫ CIRCUIT DISCONNECT DEVICE
- • ELECTRICAL CONNECTION
- ● TERMINAL ON UNIT SUB SWITCHGEAR FOR CUSTOMER USE
- ■ TERMINAL ON UNIT SUB SWITCHGEAR FOR MFG INTERNAL USE

NO	DATE	REVISION	TASKNUM	DSGN	CHK	DWN	CHK	AS-BUILT	BY
6									
5									
4									
3									
2									
1									
0	08-26-11	REVISION C – NEW SWITCHGEAR STANDARD		TL	TL	JG			

FOR CONSTRUCTION / DATE

NOTICE
The data in this document incorporates proprietary rights of AUSTIN ENERGY. Any party accepting this document does so in confidence and agrees that it shall not be duplicated in whole or part, nor disclosed to others without the consent of AUSTIN ENERGY.

AUSTIN ENERGY
POWER DELIVERY DIVISION
TRANSMISSION ENGINEERING

TITLE :
NAME SUBSTATION
XX-123
BKR LIGHT & SPACE HTR CKT

MASTER NO. R14_STD_SWGR_X
SCALE NTS
FILE NAME XXXX_14_X.DWG
DRAWING NUMBER 7B XXXX R14.X

ISSUED FOR MANUFACTURING STANDARD - 26 AUGUST 2011

NP 2 - TS1 UNIT 1 — 8.8200 × 1.7500 — QTY. 1

	3530 RTAC										
T S 1	OUT1 B01	B02	OUT2 B03	B04	OUT3 B05	B06	OUT4 B07	B08	INPUT COM (+)	(-)	
0.5500	0.5200	0.5200	0.5200	0.5200	0.5200	0.5200	0.5200	0.5200	0.5200	0.5200	0.5500

NP 3 - TS2 UNIT 1 — 8.8200 × 1.7500 — QTY. 1

	3530 RTAC		ADD.#1								
T S 2	125VDC POWER (+) Z01	(-) Z02	ALARM TO RTU A04	A05	SWGR ACF IN9 A25				86BF2 TRIPPED IN3 A13	86C TRIPPED IN6 A19	
0.5500	0.5200	0.5200	0.5200	0.5200	0.5200	0.5200	0.5200	0.5200	0.5200	0.5200	0.5500

NP 5 - TS3 UNIT 1 — 8.8200 × 1.7500 — QTY. 1

	50/51H CURRENTS										
T S 3		IN (-) Z08	IN (+) Z07	IC (-) Z06	IC (+) Z05	IB (-) Z04	IB (+) Z03	IA (-) Z02	IA (+) Z01		
0.5500	0.5200	0.5200	0.5200	0.5200	0.5200	0.5200	0.5200	0.5200	0.5200	0.5200	0.5500

NP 6 - TS4 UNIT 1 — 8.8200 × 1.7500 — QTY. 1

	50/51H POTENTIALS										
T S 4	VC Z11	VB Z10	VA Z09	VN Z12					CS 52b TEST CONT (+)	(-)	
0.5500	0.5200	0.5200	0.5200	0.5200	0.5200	0.5200	0.5200	0.5200	0.5200	0.5200	0.5500

NP 7 - TS5 UNIT 1 — 8.8200 × 1.7500 — QTY. 1

	50/51H TC1 CKT										
T S 5	TRIP CS TC1 OUT101 A01	A02	XX-601M BKR INIT IN207 B37	B38	TC1 DCF IN202 B27	B28	BLK-T MON IN208 B39		CS BLK TRIP TC1 OUT106 A11	A12	
0.5500	0.5200	0.5200	0.5200	0.5200	0.5200	0.5200	0.5200	0.5200	0.5200	0.5200	0.5500

NP 8 - TS6 UNIT 1 — 8.8200 × 1.7500 — QTY. 1

	50/51H TC1 & TC2 CKTS										
T S 6	PB/SUPV TRIP & TCM1 (+) Z16	(-) Z15	TRIP CS TC2 & TCM2 OUT102 A03	A04	TC2 DCF IN203 B29	B30	RELAY FAILURE ALARM A15	A16	CS BLK TRIP TC2 OUT211 B21	B22	
0.5500	0.5200	0.5200	0.5200	0.5200	0.5200	0.5200	0.5200	0.5200	0.5200	0.5200	0.5500

NP 9 - TS7 UNIT 1 — 8.8200 × 1.7500 — QTY. 1

	50/51H CLOSE & STRONG BKR TRIPS										
T S 7	PB/SUPV CLOSE & CCM (+) Z18	(-) Z17	GL OPEN IND Z21	CLOSE DCF IN204 B32	STRONG BKR TRIP OUT105 A09	A10	STRONG BKR TRIP OUT201 B01	B02	STRONG BKR TRIP OUT203 B05	B06	
0.5500	0.5200	0.5200	0.5200	0.5200	0.5200	0.5200	0.5200	0.5200	0.5200	0.5200	0.5500

NP 10 - TS8 UNIT 1 — 8.8200 × 1.7500 — QTY. 1

	50/51H LOCK-OUT CKTS										
T S 8	BF LO TO MAIN BUS OUT210 B19	B20	BF LO TO MAIN BUS OUT208 B15	B16	86T TRIP & 86T MON OUT204 B07	B08	86BF1 TRIP OUT206 B11	B12	SPARE OUT107 A13	A14	
0.5500	0.5200	0.5200	0.5200	0.5200	0.5200	0.5200	0.5200	0.5200	0.5200	0.5200	0.5500

NP 11 - TS9 UNIT 1 — 8.8200 × 1.7500 — QTY. 1

	50/51H INPUTS & MISC										
T S 9	125VDC POWER (+) Z25	(-) Z26	IN COM (+) Z21	52a MAIN IN103 A22	52a CS IN102 A20	HI PRI ALM IN205 B34	LO PRI ALM IN206 B36	ANN DCF IN104 A24	SPARE OUT212 B23	B24	
0.5500	0.5200	0.5200	0.5200	0.5200	0.5200	0.5200	0.5200	0.5200	0.5200	0.5200	0.5500

NP 12- TS10 UNIT 1 — 8.8200 × 1.7500 — QTY. 1

	86T										
T S 10	TRIP MAIN TC1 18	TRIP MAIN TC2 16	TRIP CS TC1 36	TRIP CS TC2 48							
0.5500	0.5200	0.5200	0.5200	0.5200	0.5200	0.5200	0.5200	0.5200	0.5200	0.5200	0.5500

NP 13- TS11 UNIT 1 — 8.8200 × 1.7500 — QTY. 1

	86BF1										
T S 11	86BF1 TRIP MAIN TC1 18	TC2 16	86BF1 TRIP CS TC1 36	TC2 48							
0.5500	0.5200	0.5200	0.5200	0.5200	0.5200	0.5200	0.5200	0.5200	0.5200	0.5200	0.5500

NP 22- TS12 UNIT 1 — 8.8200 × 1.7500 — QTY. 1

	87T CURRENTS (W1)										
T S 12		IBW2 (-) Z10	IBW2 (+) Z09	ICW1 (-) Z06	ICW1 (+) Z05	IBW1 (-) Z04	IBW1 (+) Z03	IAW1 (-) Z02	IAW1 (+) Z01		
0.5500	0.5200	0.5200	0.5200	0.5200	0.5200	0.5200	0.5200	0.5200	0.5200	0.5200	0.5500

NP 23- TS13 UNIT 1 — 8.8200 × 1.7500 — QTY. 1

	87T CURRENTS (W3)										
T S 13				ICW3 (-) Z18	ICW3 (+) Z17	IBW3 (-) Z16	IBW3 (+) Z15	IAW3 (-) Z14	IAW3 (+) Z13		
0.5500	0.5200	0.5200	0.5200	0.5200	0.5200	0.5200	0.5200	0.5200	0.5200	0.5200	0.5500

NP 24 - TS14 UNIT 1 — 8.8200 × 1.7500 — QTY. 1

	87T CURRENTS (W4)										
T S 14				ICW4 (-) Z24	ICW4 (+) Z23	IBW4 (-) Z22	IBW4 (+) Z21	IAW4 (-) Z20	IAW4 (+) Z19		
0.5500	0.5200	0.5200	0.5200	0.5200	0.5200	0.5200	0.5200	0.5200	0.5200	0.5200	0.5500

NP 25 - TS15 UNIT 1 — 8.8200 × 1.7500 — QTY. 1

	86T LOCK-OUT CKTS										
T S 15	86T TRIP & 86T MON OUT101 A01	A02	86T DCF IN205 B34	86T TRIP IND IN105 A25	A26	SPARE OUT205 B09	B10	BF TRIP TO 86BF1 OUT104 A07	A08		
0.5500	0.5200	0.5200	0.5200	0.5200	0.5200	0.5200	0.5200	0.5200	0.5200	0.5200	0.5500

NP 26 - TS16 UNIT 1 — 8.8200 × 1.7500 — QTY. 1

	87T TRIP CKTS										
T S 16	TRIP MAIN TC1 OUT203 B05	B06	TRIP MAIN TC2 OUT204 B07	B08	TRIP CS TC1 OUT201 B01	B02	TRIP CS TC2 OUT202 B03	B04			
0.5500	0.5200	0.5200	0.5200	0.5200	0.5200	0.5200	0.5200	0.5200	0.5200	0.5200	0.5500

NP 27 - TS17 UNIT 1 — 8.8200 × 1.7500 — QTY. 1

	87T INPUTS & MISC										
T S 17	XFMR STG 1 IN201 B26	XFMR STG 2 IN204 B32	RELAY FAILURE ALARM A15	A16	RELAY INPUT DCF IN102 A19	A20					
0.5500	0.5200	0.5200	0.5200	0.5200	0.5200	0.5200	0.5200	0.5200	0.5200	0.5200	0.5500

NP 28 - TS18 UNIT 1 — 8.8200 × 1.7500 — QTY. 1

	87T INPUTS & MISC										
T S 18	125VDC POWER (+) Z25	(-) Z26	IN COM (+) B29	52a MAIN IN203 B30	86BF1 IND IN106 A26	52a CS IN202 B28	XFMR SPR IN206 B36	XFMR HI PRI IN207 B38	XFMR LO PRI IN208 B40	XFMR ANN DCF IN103 A22	
0.5500	0.5200	0.5200	0.5200	0.5200	0.5200	0.5200	0.5200	0.5200	0.5200	0.5200	0.5500

NP 1 - TS1 UNIT 2 — 8.8200 × 1.7500 — QTY. 1

	87B CURRENTS O/C										
T S 1				IC (-) 112	IC (+) 111	IB (-) 110	IB (+) 109	IA (-) 108	IA (+) 107		
0.5500	0.5200	0.5200	0.5200	0.5200	0.5200	0.5200	0.5200	0.5200	0.5200	0.5200	0.5500

NP 2 - TS2 UNIT 2 — 8.8200 × 1.7500 — QTY. 1

	87B CURRENTS DIFF										
T S 2				87C (-) 106	87C (+) 105	87B (-) 104	87B (+) 103	87A (-) 102	87A (+) 101		
0.5500	0.5200	0.5200	0.5200	0.5200	0.5200	0.5200	0.5200	0.5200	0.5200	0.5200	0.5500

NP 3 - TS3 UNIT 2 — 8.8200 × 1.7500 — QTY. 1

	87B TRIPS & MISC										
T S 3	125VDC POWER (+) 215	(-) 216	TRIP 86B & 86B MON OUT1 203	204	86B IND IN2 208	TRIP 86BF2 OUT2 205	206	RELAY FAILURE ALARM 213	214		
0.5500	0.5200	0.5200	0.5200	0.5200	0.5200	0.5200	0.5200	0.5200	0.5200	0.5200	0.5500

NP 5 - TS4 UNIT 2 — 8.8200 × 1.7500 — QTY. 1

	50/62M CURRENTS										
T S 4		IN (-) Z08	IN (+) Z07	IC (-) Z06	IC (+) Z05	IB (-) Z04	IB (+) Z03	IA (-) Z02	IA (+) Z01		
0.5500	0.5200	0.5200	0.5200	0.5200	0.5200	0.5200	0.5200	0.5200	0.5200	0.5200	0.5500

NP 6 - TS5 UNIT 2 — 8.8200 × 1.7500 — QTY. 1

	50/62M POTENTIALS										
T S 5	VC Z11	VB Z10	VA Z09	VN Z12	MAIN BKR MTR AC VS Z13	NS Z14			52b TEST CONT (+)	(-)	
0.5500	0.5200	0.5200	0.5200	0.5200	0.5200	0.5200	0.5200	0.5200	0.5200	0.5200	0.5500

NP 7 - TS6 UNIT 2 — 8.8200 × 1.7500 — QTY. 1

	50/62M MAIN BKR & 86BF1 TRIP CKTS										
T S 6	RETRIP MAIN TC1 & TCM1 OUT101 A01	A02	TC1 DCF IN202 B28	PB TRIP TC1 Z15	RED LT CLOSED IND (+) Z20	(-) Z19	TRIP 86BF1 & 86BF1 MON OUT103 A05	A06	BF INIT MAIN TC1 IN 101 A17	A18	
0.5500	0.5200	0.5200	0.5200	0.5200	0.5200	0.5200	0.5200	0.5200	0.5200	0.5200	0.5500

NP 8 - TS7 UNIT 2 — 8.8200 × 1.7500 — QTY. 1

	50/62M MAIN BKR TC2 TRIP & CLOSE CKTS										
T S 7	RETRIP MAIN TC2 & TCM2 OUT102 A03	A04	TC2 DCF IN203 B30	SUPV CLOSE OUT201 B01	B02	PB CLOSE Z17	SPRG CHG IN207 B38	CLOSE DCF IN204 B32	GREEN LT OPEN IND (+) Z22	(-) Z21	
0.5500	0.5200	0.5200	0.5200	0.5200	0.5200	0.5200	0.5200	0.5200	0.5200	0.5200	0.5500

NO	DATE	REVISION	TASKNUM	DSGN	CHK	DWN	CHK	AS-BUILT	BY
6									
5									
4									
3									
2									
1									
0	08-26-11	REVISION C – NEW SWITCHGEAR STANDARD		TL	TL	JG			

FOR CONSTRUCTION / DATE

NOTICE
The data in this document incorporates proprietary rights of AUSTIN ENERGY. Any party accepting this document does so in confidence and agrees that it shall not be duplicated in whole or part, nor disclosed to others without the consent of AUSTIN ENERGY.

AUSTIN ENERGY
POWER DELIVERY DIVISION
TRANSMISSION ENGINEERING

TITLE :
NAME SUBSTATION
MANUFACTURER DRAWING
123 SWGR UNIT 1 & 2 TEST SW NAMEPLATE

MASTER NO.	SCALE
R14_STD_SWGR_Ya	NTS
FILE NAME	
XXXX_14_Ya.DWG	
DRAWING NUMBER	
7B XXXX R14.Ya	

ISSUED FOR MANUFACTURING STANDARD - 26 AUGUST 2011

8.8200 | 1.7500

TS 8	50/62M CS TRIPS, BF CKTS, & MISC										
	TRIP CS TC1 OUT203		TRIP CS TC2 OUT204		TRIP 86BF2 & 86BF2 MON IN104		RELAY FAILURE ALARM		XFMR LTC BLK OUT106		QTY. 1
	B05	B06	B07	B08	A23	A24	A15	A16	A11	A12	

0.5500 | 0.5200 | 0.5200 | 0.5200 | 0.5200 | 0.5200 | 0.5200 | 0.5200 | 0.5200 | 0.5200 | 0.5200 | 0.5500

NP 9 - TS8 UNIT 2

8.8200 | 1.7500

TS 9	50/62M SPARE		QTY. 1
	125VDC POWER (+) Z25	(-) Z26	

0.5500 | 0.5200 | 0.5200 | 0.5200 | 0.5200 | 0.5200 | 0.5200 | 0.5200 | 0.5200 | 0.5200 | 0.5200 | 0.5500

NP 10 - TS9 UNIT 2

8.8200 | 1.7500

TS 10	50/62M INPUTS & MISC										
	IN COM (+) A19	52a MAIN IN102 A20		52a CS IN206 B36					TIME DELAY TO 86B OUT210		QTY. 1

0.5500 | 0.5200 | 0.5200 | 0.5200 | 0.5200 | 0.5200 | 0.5200 | 0.5200 | 0.5200 | 0.5200 | 0.5200 | 0.5500

NP 12 - TS10 UNIT 2

8.8200 | 1.7500

TS 11	86B										
	TRIP MAIN TC1 26	TRIP MAIN TC2 38	TRIP TIE TC1 48	TRIP TIE TC2 46	TRIP FDR 1 TC1 58	TRIP FDR 1 TC2 56	TRIP FDR 2 TC1 68	TRIP FDR 2 TC2 66	TRIP FDR 3 TC1 78	TRIP FDR 3 TC2 76	QTY. 1

0.5500 | 0.5200 | 0.5200 | 0.5200 | 0.5200 | 0.5200 | 0.5200 | 0.5200 | 0.5200 | 0.5200 | 0.5200 | 0.5500

NP 13 - TS11 UNIT 2

8.8200 | 1.7500

TS 12	86BF2										
	TRIP MAIN TC1 18	TRIP MAIN TC2 16	TRIP TIE TC1 48	TRIP TIE TC2 46	TRIP FDR 1 TC1 58	TRIP FDR 1 TC2 56	TRIP FDR 2 TC1 68	TRIP FDR 2 TC2 66	TRIP FDR 3 TC1 78	TRIP FDR 3 TC2 76	QTY. 1

0.5500 | 0.5200 | 0.5200 | 0.5200 | 0.5200 | 0.5200 | 0.5200 | 0.5200 | 0.5200 | 0.5200 | 0.5200 | 0.5500

NP 14- TS12 UNIT 2

8.8200 | 1.7500

TS 1	50/51BT CURRENTS										
		IN (-) Z08	IN (+) Z07	IC (-) Z06	IC (+) Z05	IB (-) Z04	IB (+) Z03	IA (-) Z02	IA (+) Z01		QTY. 1

0.5500 | 0.5200 | 0.5200 | 0.5200 | 0.5200 | 0.5200 | 0.5200 | 0.5200 | 0.5200 | 0.5200 | 0.5200 | 0.5500

NP 1 - TS1 UNIT 3

8.8200 | 1.7500

TS 2	50/51BT POTENTIALS										
	VC Z11	VB Z10	VA Z09	VN Z12	TIE BKR MTR AC VS Z13	NS Z14			52b TEST CONT (+)	(-)	QTY. 1

0.5500 | 0.5200 | 0.5200 | 0.5200 | 0.5200 | 0.5200 | 0.5200 | 0.5200 | 0.5200 | 0.5200 | 0.5200 | 0.5500

NP 2 - TS2 UNIT 3

8.8200 | 1.7500

TS 3	50/51BT TC1										
	TRIP TIE TC1 OUT101		SUPV TRIP & TCM1 OUT201		TC1 DCF IN103	PB TRIP TC1	PB TRIP MON IN206		RED LT CLOSED IND (+)	(-)	QTY. 1
	A01	A02	B01	B02	A22	Z15	B35	B36	Z20	Z19	

0.5500 | 0.5200 | 0.5200 | 0.5200 | 0.5200 | 0.5200 | 0.5200 | 0.5200 | 0.5200 | 0.5200 | 0.5200 | 0.5500

NP 3 - TS3 UNIT 3

8.8200 | 1.7500

TS 4	50/51BT CLOSE & CHARGE CKT										
	SUPV CLOSE OUT 202		SPRG CHG IN207	PB CLOSE	PB CLOSE MON IN205		MTR DCF IN203		GREEN LT OPEN IND (+)	(-)	QTY. 1
	B03	B04	B38	Z17	B33	B34	B29	B30	Z22	Z21	

0.5500 | 0.5200 | 0.5200 | 0.5200 | 0.5200 | 0.5200 | 0.5200 | 0.5200 | 0.5200 | 0.5200 | 0.5200 | 0.5500

NP 5 - TS4 UNIT 3

8.8200 | 1.7500

TS 5	50/51BT TC2 & FAST BUS										
	TRIP TIE TC2 & TCM2 OUT102		TC2 DCF IN104	SPARE OUT211		RELAY FAILURE ALARM		CLOSE DCF IN204			QTY. 1
	A03	A04	A24	B21	B22	A15	A16	B32			

0.5500 | 0.5200 | 0.5200 | 0.5200 | 0.5200 | 0.5200 | 0.5200 | 0.5200 | 0.5200 | 0.5200 | 0.5200 | 0.5500

NP 6 - TS5 UNIT 3

8.8200 | 1.7500

TS 6	50/51BT LOCK-OUT TRIPS & MISC										
			TRIP 86C OUT205		TRIP REM TIE BKR TC1 OUT105		TRIP REM TIE BKR TC2 OUT209				QTY. 1
			B09	B10	A09	A10	B17	B18			

0.5500 | 0.5200 | 0.5200 | 0.5200 | 0.5200 | 0.5200 | 0.5200 | 0.5200 | 0.5200 | 0.5200 | 0.5200 | 0.5500

NP 7 - TS6 UNIT 3

8.8200 | 1.7500

TS 7	50/51BT INPUTS & MISC										
	125VDC POWER (+) Z25	(-) Z26	IN COM (+) A25	52a IND IN105 A26	TOC IND IN201 B26		50/62BT IND IN208 B40	TRIP IND TO 50/62BT OUT212 B23	B24		QTY. 1

0.5500 | 0.5200 | 0.5200 | 0.5200 | 0.5200 | 0.5200 | 0.5200 | 0.5200 | 0.5200 | 0.5200 | 0.5200 | 0.5500

NP 8 - TS7 UNIT 3

8.8200 | 1.7500

TS 8	50/62BT POTENTIALS & CURRENTS										
	VC Z11	VB Z10	VA Z09	IC (-) Z06	IC (+) Z05	IB (-) Z04	IB (+) Z03	IA (-) Z02	IA (+) Z01	VN Z12	QTY. 1

0.5500 | 0.5200 | 0.5200 | 0.5200 | 0.5200 | 0.5200 | 0.5200 | 0.5200 | 0.5200 | 0.5200 | 0.5200 | 0.5500

NP 9 - TS8 UNIT 3

8.8200 | 1.7500

TS 9	50/62BT TC1 & LO CKTS										
	RETRIP TC1 & TCM1 OUT101		TC1 DCF IN103	BF INIT IN106		TRIP 86BF2 OUT105		TRIP 86B OUT204			QTY. 1
	A01	A02	A22	A27	A28	A09	A10	B07	B08		

0.5500 | 0.5200 | 0.5200 | 0.5200 | 0.5200 | 0.5200 | 0.5200 | 0.5200 | 0.5200 | 0.5200 | 0.5200 | 0.5500

NP 10 - TS9 UNIT 3

8.8200 | 1.7500

TS 10	50/62BT TC2 & CLOSE CKTS										
	RETRIP TC2 & TCM2 OUT102		TC2 DCF IN104	MTR DCF IN203		CLOSE DCF IN204		SPRG CHG IN207	TIE BKR MTR AC VS	NS	QTY. 1
	A03	A04	A24	B29	B30	B31	B32	B38	Z13	Z14	

0.5500 | 0.5200 | 0.5200 | 0.5200 | 0.5200 | 0.5200 | 0.5200 | 0.5200 | 0.5200 | 0.5200 | 0.5200 | 0.5500

NP 11 - TS10 UNIT 3

8.8200 | 1.7500

TS 11	50/62BT 86C, ALARMS, & MISC										
	TRIP 86C OUT206		SPARE OUT207		RELAY FAILURE ALARM		TRIP IND TO 50/51BT OUT212				QTY. 1
	B11	B12	B13	B14	A15	A16	B23	B24			

0.5500 | 0.5200 | 0.5200 | 0.5200 | 0.5200 | 0.5200 | 0.5200 | 0.5200 | 0.5200 | 0.5200 | 0.5200 | 0.5500

NP 12 - TS11 UNIT 3

8.8200 | 1.7500

TS 12	50/62BT INPUTS & MISC										
	125VDC POWER (+) Z25	(-) Z26	IN COM (+) A25	52a IND IN105 A26	TOC IND IN201 B26		50/51BT IND IN208 B40	52a MAIN IN205 B34			QTY. 1

0.5500 | 0.5200 | 0.5200 | 0.5200 | 0.5200 | 0.5200 | 0.5200 | 0.5200 | 0.5200 | 0.5200 | 0.5200 | 0.5500

NP 13 - TS12 UNIT 3

8.8200 | 1.7500

TS 13	86C										
	TRIP TIE TC1 18	TRIP TIE TC2 16	TRIP REMOTE TC1 38	TRIP REMOTE TC2 36	TRIP REMOTE TC1 48	TRIP REMOTE TC2 46					QTY. 1

0.5500 | 0.5200 | 0.5200 | 0.5200 | 0.5200 | 0.5200 | 0.5200 | 0.5200 | 0.5200 | 0.5200 | 0.5200 | 0.5500

NP 15 - TS13 UNIT 3

ISSUED FOR MANUFACTURING STANDARD - 26 AUGUST 2011

NO	DATE	REVISION	TASKNUM	DSGN	CHK	DWN	CHK	AS-BUILT	BY
6									
5									
4									
3									
2									
1									
0	08-26-11	REVISION C – NEW SWITCHGEAR STANDARD		TL	TL	JG			

FOR CONSTRUCTION / DATE

NOTICE
The data in this document incorporates proprietary rights of AUSTIN ENERGY. Any party accepting this document does so in confidence and agrees that it shall not be duplicated in whole or part, nor disclosed to others without the consent of AUSTIN ENERGY.

AUSTIN ENERGY

POWER DELIVERY DIVISION
TRANSMISSION ENGINEERING

TITLE :

NAME SUBSTATION
MANUFACTURER DRAWING
123 SWGR UNIT 2 & 3 TEST SW NAMEPLATE

MASTER NO.	SCALE
R14_STD_SWGR_Yb	NTS
FILE NAME	
XXXX_14_Yb.DWG	
DRAWING NUMBER	
7B XXXX R14.Yb	

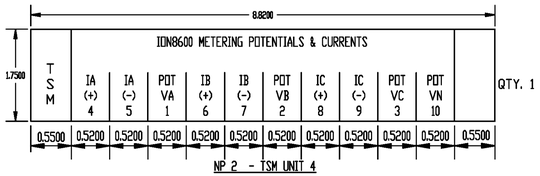

QTY. 1

NP 2 - TSM UNIT 4

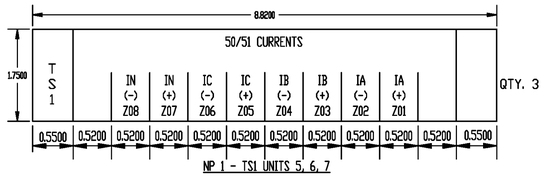

QTY. 3

NP 1 - TS1 UNITS 5, 6, 7

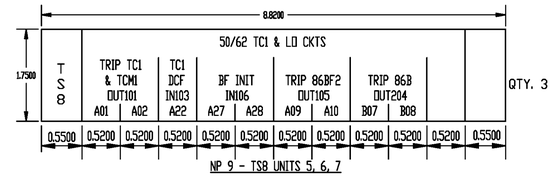

QTY. 3

NP 9 - TS8 UNITS 5, 6, 7

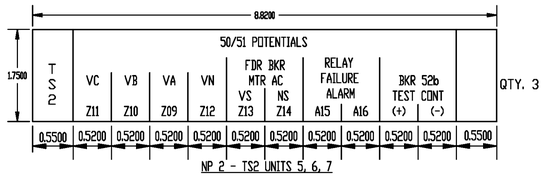

QTY. 3

NP 2 - TS2 UNITS 5, 6, 7

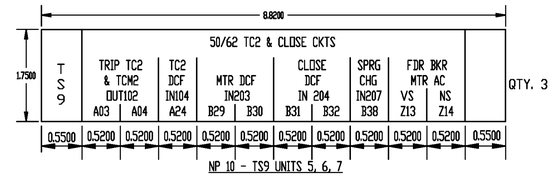

QTY. 3

NP 10 - TS9 UNITS 5, 6, 7

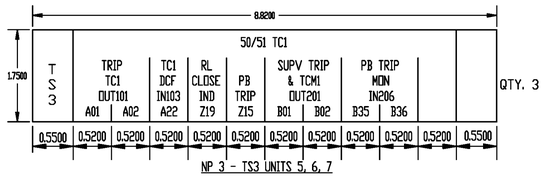

QTY. 3

NP 3 - TS3 UNITS 5, 6, 7

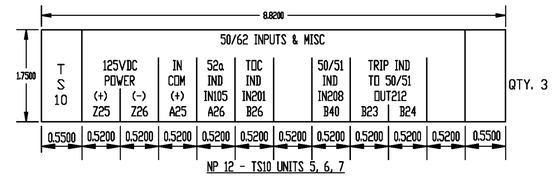

QTY. 3

NP 12 - TS10 UNITS 5, 6, 7

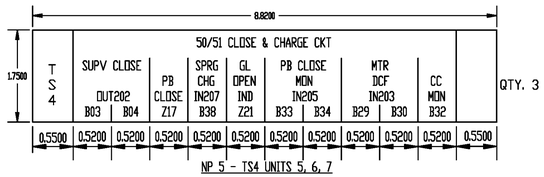

QTY. 3

NP 5 - TS4 UNITS 5, 6, 7

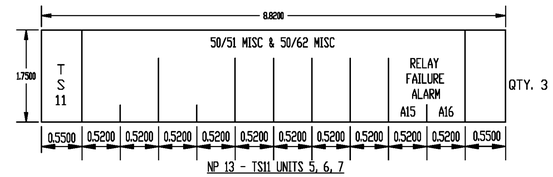

QTY. 3

NP 13 - TS11 UNITS 5, 6, 7

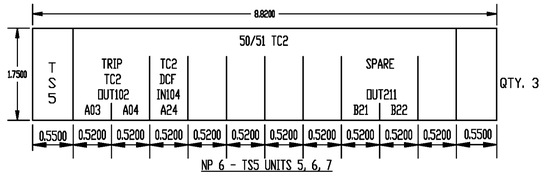

QTY. 3

NP 6 - TS5 UNITS 5, 6, 7

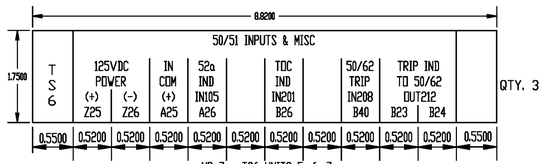

QTY. 3

NP 7 - TS6 UNITS 5, 6, 7

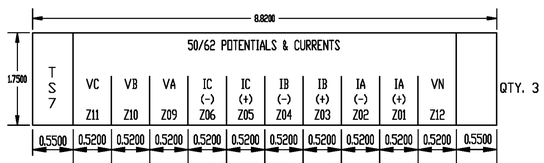

QTY. 3

NP 8 - TS7 UNITS 5, 6, 7

NO	DATE	REVISION	TASKNUM	DSGN	CHK	DWN	CHK	AS-BUILT	BY
6									
5									
4									
3									
2									
1									
0	08-26-11	REVISION C - NEW SWITCHGEAR STANDARD		TL	TL	JG			

FOR CONSTRUCTION / DATE

NOTICE
The data in this document incorporates proprietary rights of AUSTIN ENERGY. Any party accepting this document does so in confidence and agrees that it shall not be duplicated in whole or part, nor disclosed to others without the consent of AUSTIN ENERGY.

AUSTIN ENERGY

POWER DELIVERY DIVISION
TRANSMISSION ENGINEERING

TITLE :

NAME SUBSTATION
MANUFACTURER DRAWING
123 SWGR UNIT 4-7 TEST SW NAMEPLATE

MASTER NO.	SCALE
R14_STD_SWGR_Yc	NTS
FILE NAME	
XXXX_14_Yc.DWG	
DRAWING NUMBER	
7B XXXX R14.Yc	

ISSUED FOR MANUFACTURING STANDARD - 26 AUGUST 2011