ADDENDUM No. 3

Date: February 8, 2012

City of Austin

Project Name Boardwalk Trail at Lady Bird Lake

C.I.P. No. 7593.005

This Addendum forms a part of Contract and clarifies, corrects or modifies original Bid Documents, dated December 26, 2011. Acknowledge receipt of this addendum in space provided on bid form. Failure to do so may subject bidder to disqualification.

A. Project Manual Revisions:

1. Table of Contents – Delete in its entirety and replace with the attached Table of Contents Addendum No. 3. The TOC has been revised to include the following:

    a. City Standard Technical Specification 508S "Miscellaneous Structures and Appurtenances".

    b. City Standard Technical Specification 605S "Soil Retention Blanket".

    c. Special Provision 132S "Embankment".

    d. Special Provision 401S "Structural Excavation and Backfill".

    e. Special Provision 605S "Soil Retention Blanket".

    f. Special Provision 620S "Filter Fabric".

    g. Special Specification 11861 "Doggy Duty Station".

2. Section 00300U – Delete in its entirety and replace with Section 00300U Addendum No. 3, revised bid form incorporating the following changes:

    a. Bid Item 111S-B, Excavation; quantity revised to reflect drawings.

    b. Delete Bid Item 401S-A, Unclassified Structural Excavation.

    c. Bid Item 403S-CY-A, Concrete for Structures – Abutment; quantity revised to reflect drawings,

    d. Bid Item 420S-A-18in, Drilled Shaft – 18 in Dia.; quantity revised to reflect drawings,

    e. Pay Items 62 through 80, Metal for Structures; quantities revised to reflect drawings,

    f. Delete Bid Item 720S-B-BS1, Metal for Structure – Structural Steel HS – Bridge Support 1.

g. Add the following new pay items:

   i. Pay item no. 8, 403S-SY-DC, Concrete for Structures – Decorative Concrete at Lakeshore Plaza.

   ii. Pay Item no. 17, 435S, P.C. Concrete Steps.

   iii. Pay Item no. 19, 508S-H, Headwalls, Sloped, 12in Dia. Pipe.

   iv. Pay Item no. 20, 508S-IG, Miscellaneous Structures, Inlet, Grated, 2ft X 2ft.

   v. Pay Item no. 21, 510-ASD12inDia., Pipe, 12" Dia. High Density Polyethylene (all depths), including Excavation and Backfill.

   vi. Pay Item no. 144, SS11861, Doggy Duty Station.

h. Bid Item 623S-RW, Dry Stack Rock Wall; quantity revised to reflect drawings,

i. Delete Bid Item SP706S-PB, Bridge and Culvert Railing – Metal Pedestrian Guard Rail - Prefabricated Bridge Spans.

3. Add City Standard Technical Specification 508S, "Miscellaneous Structures and Appurtenances".

4. Add City Standard Technical Specification 605S, "Soil Retention Blanket".

5. Add Special Provision 132S, "Embankment".

6. Add Special Provision 401S, "Structural Excavation and Backfill".

7. Delete Special Provision 403S, "Concrete for Structures" in its entirety and replace with attached SP403S which includes descriptions of surface finishes for precast planks, mix design, and payment.

8. Special Provision 605S "Soil Retention Blanket" – Add in its entirety.

9. Special Provision 620S "Filter Fabric" – Add in its entirety.

10. Delete Special Provision 623S, "Dry Stack Rock Wall" in its entirety and replace with the attached SP623S.

11. Special Provision 706S "Bridge and Culvert Railing", modify SP706S to include the following:

    706S.3, Materials, **Add** the following paragraph:

    "Hot-dip galvanizing is the finish requirement for the guardrail, telephone post and sign posts."

12. Special Provision 720S, "Metal for Structures", modify SP720S to include the requirement of QA/QC program by the steel fabricator and further clarification on Bid Item SP720S-LS-SW, as follows:

    a. 720S.3, Structural Steel for Main Members, **add** the following paragraph:

       "D. QA/QC Program

Fabricators will provide a copy of their quality control plan to the Owner for review of the fabricator's means and method for achieving work that will satisfy Contract requirements. Owners may offer comments to the Fabricator about the plan as appropriate.

The QC plan will detail the procedures, personnel, policies, equipment, and records used during planning, ordering, fabrication, inspection, cleaning, painting, and shipping of fabricated members. The QCP shall describe the means and methods for ensuring satisfactory materials and workmanship.

Fabricator will provide the signature of the Quality Control Manager indicating the Fabricator's intent and commitment to implement the QCP to achieve a quality product."

b. 720S.4, Miscellaneous Steel, delete paragraph N. Stairway in its entirety and replace with the following (also see Drawing item B36 below):

"N. Stairway

Stairway stringers shall be constructed from two (2) structural hot rolled C15x33.9 channels, meeting the requirement of ASTM A36. Stair treads shall be constructed from ¼" McNichols Grip Strut plate with anti–skid surface.

Each stair shall have hand rails on two opposing sides. A minimum of 36" high, conforming to O.S.H A. requirements for such structures, unless otherwise specified.

Stairs shall have vertical adjustability of range of 4" in overall height, while at the same time not exceeding the maximum rise requirement prescribed in the IBC 2009.

Standard finish shall be hot-dip galvanized.

All components shall be installed per the manufacturer's approved installation instructions. Conformance to local building codes is the customer's responsibility, unless the manufacturer is notified in writing as to the dictating code and its specific requirements."

13. Special Provision 1301S, "Granite Gravel Hike and Bike Trail", modify SP1301S to include the following:

1301S.3, Materials, **Add** the following paragraph and Table:

"The following are Rock Gradation requirements for the base course of the permeable pavers."

Size Number	Nominal Size (Sieves with Square Openings)	Amounts Finer than Each Laboratory Sieve (Square-Openings), Mass Percent													
		100 mm (4 in.)	90 mm (3 ½ in.)	75 mm (3 in.)	63 mm (2 ½ in.)	50 mm (2 in.)	37.5 mm (1 ½ in.)	25.0 mm (1 in.)	19.0 mm (¾ in.)	12.5 mm (½ in.)	9.5 mm (3/8 in.)	4.75 mm (No. 4)	2.36 mm (No. 8)	1.18 mm (No. 16)	300 µm (No. 50)
57	25.0 to 4.75 mm (1 in. to No. 4)	-	-	-	-	-	100	95 to 100	-	25 to 60	-	0 to 10	0 to 5	-	-
8	9.5 to 2.36 mm (3/8 in. to No. 8)	-	-	-	-	-	-	-	-	100	85 to 100	10 to 30	0 to 10	0 to 5	-

14. Special Specification 10020, “Pedestrian Steel Truss Bridge Span”, modify SS10020 as follows:

    SS10020.3, Design, **Add** the following paragraph:

    “The floor deck height relative to the bottom chord may vary along each span to comply with TAS slope regulations, reference Sheets C-038 and C-039.”

15. Delete Special Specification 11860, “Trash Receptacle” in its entirety and replace with attached SS11860.

16. Add Special Specification 11861, “Doggy Duty Station”.

17. Special Specification 16540, “ Lighting Fixtures”, modify as follows:

    a. SS16540.2 Materials, **Add** the following paragraph and attachment;

       “Exterior lighting fixtures on the Rest Room shall be a Full Cut-Off Wall Mounted LED Fixture with emergency battery backup on an un-switched circuit, as referenced in the restroom electrical plan. LED Patriot Wall Sconce or approved equal, as shown in SS16540 Attachment B, shall be used.”

    b. SS16540.2 Materials, **Add** the following paragraph and attachment;

       “Exterior lighting fixtures located under the I-35 overpass shall be a LED Type Surface Exterior Lighting Fixture, as shown in SS16540 Attachment C. LED Canopy Light – Type III Medium, or approved equal shall be used.”

    c. SS16540.4, Measurement, **Add** the following paragraph;
       “NO MEASUREMENT shall be made for Exterior Lighting Fixtures on the Rest Room and shall be considered incidental to SS10010A – Rest Rooms.”

    d. SS16540.5, Payment, **Add** the following paragraph;
       “NO PAYMENT shall be made for Exterior Lighting Fixtures on the Rest Room and shall be considered incidental to SS10010A – Rest Rooms.”

B. Drawing Revisions:

1. Replace drawing C-021 entirely. Changes include spot elevation call outs for the Rock Block Retaining Wall at approximate Station 1+50 and Lake depth contours.

2. Replace drawing C-022 entirely. Changes include the addition of Lake depth contours.

3. Replace drawing C-023 entirely. Changes include the addition of Lake depth contours.

4. Revise drawing C-033 to delete the call-out note “5’ L panel retaining wall ref Construction Details B” and replace with “Reference details on sheet C054.2” (see Drawing item no. 17 below).

5. Add the attached detail "Tree Well Spot Elevations" to the plan view on drawing C-034, associated with the Rock Block Tree Well near station 53+25.

6. Add the attached "Storm Sewer Plan" detail to the plan view on drawing C-034 to include a 12-inch HDPE pipe, a concrete headwall, and an area inlet.

7. Add the attached "Area Inlet Detail" to drawing C-037 associated with the Storm Sewer Plan.

8. Add the attached "Headwall Detail" to drawing C-037 associated with the Storm Sewer Plan.

9. Delete the "Line Table" on drawing C-038 and replace with attached "Line Table" to reflect updated abutment references.

10. Replace drawing C-044 with attached drawing, revised to include updated wall profile.

11. Replace drawing C-045 with attached drawing, revised to include updated wall profile.

12. Replace drawing C-046 with attached drawing, revised to include updated wall profile.

13. Replace drawing C-047 with attached drawing, revised to include updated wall profile.

14. Replace drawing C-048 with attached drawing, revised to include updated wall profile.

15. Replace drawing C-052 entirely to reflect the following changes:

    a. Delete the details labeled "Rock Block Retaining Wall Detail B", "Rock Block Retaining Wall Detail C", "Decomposed Granite Trail – Cut High Side", "Decomposed Granite Trail – Fill Low Side", and "Decomposed Granite Trail – Balance Cut/Fill".

    b. Add the detail labeled "Decomposed Granite Trail with Walls".

    c. Add Tables and Notes pertaining to Rock Block Walls.

16. Revise drawing C-053.

    a. Add Note 3 to the existing notes in the Permeable Pavement Detail as follows:

       "3. All laydown curb for the permeable pavers will not be measured for separate payment but shall be considered subsidiary to Bid Item 480SNS, Concrete Paver Units for Sidewalks."

    b. Delete in its entirety the detail labeled "5 FT L Panel".

    c. Add the attached detail labeled "Reinforced Laydown Curb".

17. Create drawing C-054.2; which includes the following details:

    a. "6' T-Panel"
    b. "6FT Tall Panels"
    c. "6' L & T Panel"

18. Replace drawing E-008 in its entirety with the attached drawing, which adds underpass lighting.

19. Replace drawing E-009 in its entirety with the attached drawing, which adds underpass lighting.

20. Add the attached detail "Exterior Lighting" to drawing E-021, which revises the "Restroom Electrical Plan" to include an exterior LED light.

21. Delete the "Lighting Fixture Schedule" on drawing E-022 associated with Exterior Lighting and replace with the attached detail "Exterior Lighting."

22. Add the following General Note No. 1 on drawing L-034 associated with signs:

    "1. Owner will provide electronic image files to the Contractor for the use by the Sign Fabricator after contract is awarded".

23. Add drawing S-012A, "Abutment #15 (Harper's Bridge 2)".

24. Revise drawing S-014 as follows:

    a. Replace the details labeled "Column and Drilled Shafts", "Anchor Bolt", "1" Plate Detail" and "Section A-A" with the attached revised "Column and Drilled Shaft Details" (two pages).

    b. Add a General Note stating: "Anchor bolts shall be F1554 Gr 55."

    c. Replace third sentence of Note 1, which says, "Bottom of column is defined as 1 foot above the normal water elevation…" to read," Bottom of column is defined as 2 feet below the normal water elevation…".

    d. Revise Note 2 by adding, "Maintain spiral cover shown to outside edge of concrete".

25. Replace the third table on drawing S-042 with the attached revised table, which adds Abutment 15 (A15).

26. Revise Revise drawings S-044 thru S-048 as follows:

    a. Replace "Pier Elevation & Quantities Table" entirely with the attached revisions.
    b. Add Note 3 to each sheet, "Drilled shaft diameters given for estimating purposes only. All shafts extending 30 feet or more above actual top of rock shall be 36 inches in diameter."

27. Replace the table on drawing S-046 with the attached revised table which adds Abutment 15 (A15).

28. Revise General Notes on drawing S-053 as follows:

    a. Remove "Panels are to be cast face down" and add, "Round top edges to ¼" radius. Use ½" chamfers on bottom edges."
    b. Delete the 5th General Note and replace with the following: "See SP403S for panel surface treatment".

29. Revise drawing S-060.

    a. Delete the "Concrete Plank Placement" details entirely and replace with the attached revised Concrete Plank Placement Seg R2 & S2" details.
    b. Add Channel Elevation, Section A-A and Section B-B with attached details.

30. Revise General Notes on drawing S-063

    a. Delete the 5th General Note "Panels are to be cast face down" in its entirety and replace with: "Round top edges to ¼" radius. Use ½" chamfers on bottom edges."
    b. Delete the 6th General Note and replace with the following: "See SP403S for panel surface treatment".
    c. Create General Note 22, "Payment for the shade structure grates and associated support angles, anchor bolts, and support channel shown for segment types R2 & S2 will be subsidiary to the precast concrete planks."

31. Revise drawing S-073 as follows:

    a. Delete the existing "Bridge Table" and replace with the attached "Bridge Table" detail to reflect these changes;
        i) Change the length of Blunn Bridge 5 to 56.00 feet.
        ii) Change the end station of Blunn Bridge 5 to 1+64.23.

    b. In the Prefabricated Bridge General Notes, Materials 1st note remove, "The weathering steel truss members and connections shall not be in direct contact with the galvanized deck forms, galvanized rail or any other galvanized component." And replace with, "Deck forms and rail shall be galvanized."

32. Delete detail "Section B-B" from drawing S-075 and replace with the attached revised "Guardrail Details, Section B-B".

33. Delete detail labeled "Sign Mounting Detail" from drawing S-076 and replace with the attached revised "Guardrail Miscellaneous Details-1, Sign Mounting Detail".

34. Revise drawing S-077 as follows:

    a. Delete the "Emergency Telephone Posts Detail" and replace with the attached revised "Guardrail Miscellaneous Details-2, Emergency Telephone Post Detail".
    b. Delete the "Lighting Posts Detail" Elevation and replace with the attached revised "Guardrail Miscellaneous Details-2, Lighting Posts Elevation".

35. Replace drawing SS-001 in its entirety, reflecting the following changes:

    a. Table of Estimated Pier Lengths & Quantities at Belvederes has been revised.
    b. Table of Estimated Quantities at the Shade Structures has been added.
    c. Note 3 stating, "Belvedere 4 footing quantities are included in pay item 403S-CY-A" is added.

36. Revise drawing SS-015 by adding the attached detail "Blunn Creek Belvederes".

37. Revise drawing SS-021 as follows:

    a. Remove "Abutment 31" reference.
    b. Add details labeled "Harpers Branch Stair Plan View", "Harpers Branch Stair Plan 2", "Harpers Branch Stair Section 1", "Harpers Branch Stair Section 2", "Harpers Branch Stair Section 3", "Harpers Branch Stair Section 4", and "Harpers Branch Stair Section 5."

This addendum consists of 110 pages and 14 sheets

2.7.12

Approved by OWNER

Approved by ENGINEER/ARCHITECT

STATE OF TEXAS
ADAM N. KORANSKY
95988
LICENSED
PROFESSIONAL ENGINEER
2/7/12

END

Document Number		Title

VOLUME 1

INTRODUCTORY INFORMATION

05/06/11		Title Page
		Seals Page
09/20/11		Table of Contents

BIDDING REQUIREMENTS, CONTRACT FORMS, & CONDITIONS OF THE CONTRACT

Pre-Bid Information

00020	05/06/11	Invitation for Bids

Instructions to Bidders

00100	05/06/11	Instructions to Bidders

Information Available to Bidders

00220	05/06/11	Geotechnical Data

Bid Forms

00300U	05/06/11	Bid Form (Unit Price)

Supplements to Bid Forms

00400	05/06/11	Statement of Bidder's Experience
00405	09/25/05	Certificate of Non-Suspension or Debarment
00410	05/06/11	Statement of Bidder's Safety Experience
00425	05/06/11	Insurance Cost Form
00440	05/06/11	Affidavit - Prohibited Activities
00475	05/06/11	Nonresident Bidder Provisions

Agreement Form

00500	05/06/11	Agreement

Bonds and Certificates

00610	02/23/10	Performance Bond
00620	02/23/10	Payment Bond
00630	05/06/11	Nondiscrimination Certificate and Appendix A
00650	02/23/10	Certificate of Insurance
00670	09/13/10	Sales Tax Exemption Certificate
00680	06/05/06	Non-Use of Asbestos Affidavit (Prior to Construction)
00681	06/05/06	Non-Use of Asbestos Affidavit (After Construction)

General Conditions

00700	09/13/10	General Conditions

Supplementary Conditions

00810	05/06/11	Supplemental General Conditions
00820	05/06/11	Modifications to Bidding Requirements and Contract Forms
00830	06/05/06	Wage Rates and Payroll Reporting
00830BC	08/30/11	Wage Rates Building Construction Trades
00830HH	11/21/11	Wage Rates Highway Heavy

Document Number		Title

Addenda

00900	02/23/10	Addendum

SPECIFICATIONS

Division 1 - General Requirements

01010	02/23/10	Summary of Work
01020	12/12/11	Allowances
01030	12/14/11	Alternates
01050	09/13/10	Grades Lines & Levels
01095	07/21/03	Reference Standards and Definitions
01096	05/06/11	Stormwater Pollution Prevention Plan (SWPPP)
01200	05/06/11	Project Meetings
01300	05/06/11	Submittals
01352	02/23/10	Sustainable Construction Requirements
01380	05/06/11	Construction Photography & Videos
01500	05/06/11	Temporary Facilities
01505	09/13/10	Construction and Demolition Waste Management
01550	12/12/08	Public Safety and Convenience
01650	12/07/11	Facility Startup/Commissioning
01710	12/07/11	Final Cleaning
01730	12/07/11	Operation and Maintenance Data
01900	05/06/11	Prohibition of Asbestos Containing Materials
01900a	06/05/06	Statement of Non-Inclusion of Asbestos Containing Material (E/A Prior to Design)
01900b	06/05/06	Statement of Non-Inclusion of Asbestos Containing Material (E/A After Design)

VOL. 2
City Standard Technical Specifications

Series 100 - Earthwork

101S	01/04/11	Preparing ROW
102S	08/20/07	Clearing and Grubbing
111S	11/18/04	Excavation
132S	08/20/07	Embankment

Series 200 - Subgrade and Base Construction

201S	08/20/07	Subgrade Preparation
204S	08/18/00	Portland Cement Treatment for Materials in Place
210S	02/24/10	Flexible Base
220S	11/15/99	Sprinkling for Dust Control
232S	08/20/07	Rolling (Pneumatic Tire)
236S	08/20/07	Proof Rolling

Series 300 – Street Surface Courses

340S	07/01/09	Hot Mix Asphalt Concrete Pavement

Series 400 - Concrete and Structures

401S	11/13/07	Structural Excavation and Backfill
403S	01/04/11	Concrete for Structures

Document Number		Title
405S	11/13/07	Concrete Admixtures
406S	11/13/07	Reinforcing Steel
408S	11/13/07	Concrete Joint Materials
410S	11/13/07	Concrete Structures
411S	11/13/07	Surface Finish For Concrete
414S	11/13/07	Concrete Retaining Walls
416S	11/13/07	Waterstops
420S	11/13/07	Drilled Shaft Foundations
424S	11/13/07	Pressed Concrete Planks
430S	12/09/08	P.C. Concrete Curb and Gutter
432S	01/04/10	P.C. Concrete Sidewalks
433S	12/09/08	P.C. Concrete Driveways
435S	11/13/07	P.C. Concrete Steps
438S	11/13/07	Elastomeric Materials
439S	11/13/07	Parking Lot Bumper Curbs
470S	03/26/08	Curb Cuts for Sidewalk Ramps and Driveways
480S	01/04/10	Concrete Paver Units for Sidewalks and Streetscape Requirements
Series 500 – Pipe and Appurtenances		
508S	02/24/10	Miscellaneous Structures and Appurtenances
509S	02/24/10	Excavation Safety Systems
510	02/24/10	Pipe
511S	02/24/10	Water Valves
591S	03/26/08	Riprap for Slope Protection
594S	04/05/99	Gabions and Revet Mattresses
Series 600 - Environmental Enhancement		
601S	08/18/10	Salvaging and Placing Topsoil
604S	08/18/10	Seeding for Erosion Control
605S	06/21/07	Soil Retention Blanket
606S	06/21/07	Fertilizer
607S	05/23/00	Slope Stabilization Applications for Erosion Control
608S	06/16/08	Plantings
609S	08/18/10	Native Grassland Seeding and Planting for Erosion Control
610S	01/04/11	Preservation of Trees and Other Vegetation
620S	05/23/00	Filter Fabric
621S	11/26/01	Diversion (Temporary)
623S	02/24/10	Dry Stack Rock Wall
625S	06/21/07	Temporary Grade Stabilization Structure
640S	02/24/10	Mortared Rock Wall
641S	06/21/07	Stabilized Construction Entrance
648S	08/18/10	Mulch Sock
Series 700 - Incidental Construction		
700S	08/18/00	Mobilization
703	09/22/88	Fencing for Excavations
706S	09/29/99	Bridge and Culvert Railing
710S	11/21/05	Bicycle Racks
720S	03/26/08	Metal For Structures
721S	03/26/08	Steel Structures
722S	03/26/08	Paint and Painting

Document Number		Title
723	02/27/10	Structural Welding
725S	11/21/05	Survey Markers
Series 800 - Urban Transportation		
802S	02/24/10	Project Signs
803S	06/21/07	Barricades, Signs, and Traffic Handling
824S	02/24/10	Traffic Signs
860S	05/23/00	Pavement Marking Paint
Series 1300 - PARD		
1301S	08/16/04	Granite Gravel Hike and Bike Trail

Special Provisions to City Standard Technical Specifications

SP102S	12/14/11	Clearing and Grubbing
SP132S	02/01/12	Embankment
SP220S	06/14/10	Sprinkling for Dust Control
SP401S	02/02/12	Structural Excavation and Backfill
SP403S	06/14/10	Concrete for Structures
SP480S	12/14/11	Concrete Paver Units for Sidewalks and Streetscape Requirements
SP605S	02/03/12	Soil Retention Blanket
SP609S	12/06/11	Native Grassland Seeding and Planting for Erosion Control
SP610S	12/14/11	Preservation of Trees and Other Vegetation
SP623S	06/14/10	Dry Stack Rock Wall
SP641S	06/14/10	Stabilized Construction Entrance
SP700S	12/14/11	Mobilization
SP706S	12/14/11	Bridge and Culvert Railing
SP720S	12/14/11	Metal for Structures
SP1301S	12/14/11	Granite Gravel Hike and Bike Trail

Special Specifications

SS680	12/14/11	Shallow Water Construction Dewatering
SS720	12/14/11	Decking-Connecting Tissue
SS05522	12/14/11	Remove and Relocate Existing Concrete Vehicle Barrier
SS06600	12/14/11	Bollards
SS10010	12/07/11	Rest Rooms
SS10020	12/08/11	Pedestrian Steel Truss Bridge Span
SS10400	12/06/11	Way Finding Signs
SS10401	12/13/11	Donor Recognition Signs
SS11860	12/06/11	Trash Receptacle
SS11861	02/02/12	Doggy Duty Station
SS13030	12/06/11	Sphere Fountain
SS15010	05/03/10	General Requirements Mechanical and Plumbing System
SS15020	05/03/10	Basic Methods
SS15250	05/03/10	Insulation
SS15400	05/03/10	Plumbing
SS16050	05/03/10	Electrical General Requirements
SS16120	05/03/10	Wiring – Exterior
SS16540	12/07/11	Lighting Fixtures
SS16600	12/14/11	Emergency Phone Systems
042000	08/2009	Unit Masonary

Document Number		Title
074213	08/2009	Metal Wall Panels
076100	08/2009	Sheet Metal Roofing
081113	08/2009	Hollow Metal Doors and Frames
102113	08/2009	Toilet Compartments
102800	08/2009	Toilet, Bath, and Laundry Accessories
SS224713	12/07/11	Drinking Fountains

VOL. 3 10/09/00 **MBE/WBE Procurement Program Package**

VOL. 4 11/29/10 **ROCIP Project Safety Manual**

END

Document Number	Title

(This page intentionally left blank)

The undersigned, in compliance with your invitation for bids for construction of the following Project:
Boardwalk Trail at Lady Bird Lake (CIP ID# 7593.005) (IFB # 6100 CLMC347)
for the City of Austin, Texas, having examined the Project Manual, Drawings and Addenda, the site of the proposed Work and being familiar with all of the conditions surrounding construction of the proposed Project, having conducted all inquiries, tests and investigations deemed necessary and proper; hereby proposes to furnish all labor, permits, material, machinery, tools, supplies and equipment, and perform all Work required for construction of the Project in accordance with the Project Manual, Drawings and Addenda within the time indicated for the following prices of:

Note: The Bidder will enter the line item subtotal in the "Amount" column below, which is the product of the estimated "Quantity" multiplied by the "Unit Price". Any mathematical errors will be corrected for the purpose of determining the correct Amount to be entered in the Bid Form. The Amounts, including any corrected Amounts, will then be totaled to determine the actual amount of the Bid.

No.	Bid Item	Quantity	Unit	Item Description	Unit Price	Amount
1	101S-C	1.0	LS	Preparing Right of Way - Demolition of Existing Facilities	$	$
2	111S-B	2,816	CY	Excavation, Plan Quantity	$	$
3	132S-A	1,700	CY	Embankment	$	$
4	201S	3,750	SY	Subgrade Preparation	$	$
5	220S-F	50	1000 GAL	Sprinkling for Dust Control (Water and Flocculant)	$	$

No.	Bid Item	Quantity	Unit	Item Description	Unit Price	Amount
6	403S-CY-A	89	CY	Concrete for Structures - Abutment	$	$
7	403S-EA-SW	3	EA	Concrete for Structures - Sidewalk Flume	$	$
8	403S-SY-DC	58	SY	Concrete for Structures - Decorative Concrete at Lakeshore Plaza	$	$
9	414S-P	12	CY	Concrete for Structures - Precast Concrete Retaining Wall	$	$
10	420S-A-18in	1,027	LF	Drilled Shaft, 18in Dia.	$	$
11	420S-A-30in	3,412	LF	Drilled Shaft, 30in Dia.	$	$
12	420S-A-36in	4,571	LF	Drilled Shaft, 36in Dia.	$	$

No.	Bid Item	Quantity	Unit	Item Description	Unit Price	Amount
13	420S-A-42in	338	LF	Drilled Shaft, 42in Dia.	$	$
14	420S-A-30in-R	657	LF	Drilled Shaft, 30in Dia. - Rest Area	$	$
15	420S-A-36in-R	1,746	LF	Drilled Shaft, 36in Dia. - Rest Area	$	$
16	420S-A-42in-R	378	LF	Drilled Shaft, 42in Dia. - Rest Area	$	$
17	435S	15	LF	P.C. Concrete Steps	$	$
18	480SNS	11,325	SF	Concrete Paver Units for Sidewalks and Streetscape Requirements, 25mm	$	$
19	508S-H	1	EA	Headwalls, Sloped, 12in Dia. Pipe		

No.	Bid Item	Quantity	Unit	Item Description	Unit Price	Amount
20	508S-IG	1	EA	Miscellaneous Structures, Inlet, Grated, 2ft X 2ft	$	$
21	510-ASD12inDia	74	LF	Pipe, 12" Dia. High Density Polyethylene (all depths), including Excavation and Backfill	$	$
22	510-AW2inDia	610	LF	Pipe, 2" Dia. PVC Waterline (all depths), including Excavation and Backfill	$	$
23	510-JW2inx2inDia	2	EA	Pipe, Wet Connections, 2in Dia. X 2in Dia.	$	$
24	511S-A	2	EA	Water Valves, 2in Dia.	$	$
25	604S-A	9,000	SY	Seeding for Erosion Control - Non-Native, Fiber Mulch	$	$
26	604S-C	22,100	SY	Seeding for Erosion Control - Native Seeding, Fiber Mulch	$	$

No.	Bid Item	Quantity	Unit	Item Description	Unit Price	Amount
27	608S-1-S-P	315	EA	Planting, Shrub, Plug (per the Planting Schedule on the drawings)	$	$
28	608S-1-S-1	2,166	EA	Planting, Shrub, 1 Gal (per the Planting Schedule on the drawings)	$	$
29	608S-1-T-1.5in	10	EA	Planting, Tree Mitigation, 1.5" (per the Planting Schedule on the drawings)	$	$
30	608S-1-T-3in	38	EA	Planting, Tree Mitigation, 3" (per the Planting Schedule on the drawings)	$	$
31	608S-1-T-4in	20	EA	Planting, Tree Mitigation, 4" (per the Planting Schedule on the drawings)	$	$
32	609S-C	8,625	SY	Native Grassland Seeding and Planting	$	$
33	610S-B	1,400	LF	Protective Fencing Type B Wood Fence	$	$

No.	Bid Item	Quantity	Unit	Item Description	Unit Price	Amount
34	610S-R-8-19	79	EA	Removal of Existing Trees - 8" to 19" Dia.	$	$
35	610S-R-19->	12	EA	Removal of Existing Trees - 19" Dia. Or Over	$	$
36	623S	128	SF	Dry Stack Rock Wall	$	$
37	641S	2	EA	Stabilized Construction Entrance	$	$
38	648S	3,685	LF	Mulch Sock	$	$
39	700S-TM	1	LS	Total Mobilization Payment	$	$
40	703	1,400	LF	Safety Fencing	$	$

No.	Bid Item	Quantity	Unit	Item Description	Unit Price	Amount
41	710S-A	1	EA	Bicycle Racks - Class II	$	$
42	720S-B-HC-TS	224,900	LBS	Metal for Structures - Structural Steel-HS - Hammerhead Cap - Trail Segments	$	$
43	720S-B-HC-RA	62,805	LBS	Metal for Structures - Structural Steel-HS - Hammerhead Cap - Rest Areas	$	$
44	720S-B-R1	12,011	LBS	Metal for Structures - Structural Steel-HS - Framing Rest Area #1	$	$
45	720S-B-R2	12,011	LBS	Metal for Structures - Structural Steel-HS - Framing Rest Area #2	$	$
46	720S-B-R3	6,861	LBS	Metal for Structures - Structural Steel-HS - Framing Rest Area #3	$	$
47	720S-B-R4a	9,360	LBS	Metal for Structures - Structural Steel-HS - Framing Rest Area #4a	$	$

No.	Bid Item	Quantity	Unit	Item Description	Unit Price	Amount
48	720S-B-R4b	3,797	LBS	Metal for Structures - Structural Steel-HS - Framing Rest Area #4b	$	$
49	720S-B-R5	6,861	LBS	Metal for Structures - Structural Steel-HS - Framing Rest Area #5	$	$
50	720S-B-R6	3,797	LBS	Metal for Structures - Structural Steel-HS - Framing Rest Area #6	$	$
51	720S-B-R7	27,356	LBS	Metal for Structures - Structural Steel-HS - Framing Rest Area #7	$	$
52	720S-B-R8	25,362	LBS	Metal for Structures - Structural Steel-HS - Framing Rest Area #8	$	$
53	720S-B-R9	27,356	LBS	Metal for Structures - Structural Steel-HS - Framing Rest Area #9	$	$
54	720S-B-A	269,019	LBS	Metal for Structures - Structural Steel-HS - Framing Segment Type A	$	$

No.	Bid Item	Quantity	Unit	Item Description	Unit Price	Amount
55	720S-B-B1	49,257	LBS	Metal for Structures - Structural Steel-HS - Framing Segment Type B1	$	$
56	720S-B-B2	53,046	LBS	Metal for Structures - Structural Steel-HS - Framing Segment Type B2	$	$
57	720S-B-C	15,156	LBS	Metal for Structures - Structural Steel-HS - Framing Segment Type C	$	$
58	720S-B-D1	41,679	LBS	Metal for Structures - Structural Steel-HS - Framing Segment Type D1	$	$
59	720S-B-D2	41,679	LBS	Metal for Structures - Structural Steel-HS - Framing Segment Type D2	$	$
60	720S-B-E1	182,501	LBS	Metal for Structures - Structural Steel-HS - Framing Segment Type E1	$	$
61	720S-B-E2	178,618	LBS	Metal for Structures - Structural Steel-HS - Framing Segment Type E2	$	$

No.	Bid Item	Quantity	Unit	Item Description	Unit Price	Amount
62	720S-B-BV1	5,260.0	LBS	Metal for Structures - Structural Steel HS - Belvedere 1	$	$
63	720S-B-BV2	4,975.0	LBS	Metal for Structures - Structural Steel HS - Belvedere 2	$	$
64	720S-B-BV3	6,384.0	LBS	Metal for Structures - Structural Steel HS - Belvedere 3	$	$
65	720S-B-BV4	5,660.0	LBS	Metal for Structures - Structural Steel HS - Belvedere 4	$	$
66	720S-B-BV5	4,992.0	LBS	Metal for Structures - Structural Steel HS - Belvedere 5	$	$
67	720S-B-BV6	6,474.0	LBS	Metal for Structures - Structural Steel HS - Belvedere 6	$	$
68	720S-B-BV7	2,754.0	LBS	Metal for Structures - Structural Steel HS - Belvedere 7	$	$

No.	Bid Item	Quantity	Unit	Item Description	Unit Price	Amount
69	720S-B-BS2	1,486.0	LBS	Metal for Structures - Structural Steel HS - Bridge Support 2	$	$
70	720S-B-BS3	2,062.0	LBS	Metal for Structures - Structural Steel HS - Bridge Support 3	$	$
71	720S-B-BS4	1,548.0	LBS	Metal for Structures - Structural Steel HS - Bridge Support 4	$	$
72	720S-B-BS5	2,252.0	LBS	Metal for Structures - Structural Steel HS - Bridge Support 5	$	$
73	720S-B-BS6	1,548.0	LBS	Metal for Structures - Structural Steel HS - Bridge Support 6	$	$
74	720S-B-BS7	1,548.0	LBS	Metal for Structures - Structural Steel HS - Bridge Support 7	$	$
75	720S-B-BS8	1,548.0	LBS	Metal for Structures - Structural Steel HS - Bridge Support 8	$	$

No.	Bid Item	Quantity	Unit	Item Description	Unit Price	Amount
76	720S-B-BS9	1,548.0	LBS	Metal for Structures - Structural Steel HS - Bridge Support 9	$	$
77	720S-B-BS10	1,434.0	LBS	Metal for Structures - Structural Steel HS - Bridge Support 10	$	$
78	720S-B-BS11	1,776.0	LBS	Metal for Structures - Structural Steel HS - Bridge Support 11	$	$
79	720S-B-BS12	1,776.0	LBS	Metal for Structures - Structural Steel HS - Bridge Support 12	$	$
80	720S-B-BS13	1,205.0	LBS	Metal for Structures - Structural Steel HS - Bridge Support 13	$	$
81	725S-A	3	EA	Survey Markers - Type A	$	$
82	802S-B-Bond	4	EA	Bond Project Signs	$	$

No.	Bid Item	Quantity	Unit	Item Description	Unit Price	Amount
83	803-WD-R	10	WD	Barricades, Signs and Traffic Handling (Riverside)	$	$
84	1301S-B	2,994	SY	Granite Gravel Hike and Bike Trail	$	$
85	SP102S-D	26,140.0	SY	Clearing and Grubbing	$	$
86	SP403S-SF-R1	762	SF	Concrete for Structures - Precast Plank - Rest Area #1	$	$
87	SP403S-SF-R2	762	SF	Concrete for Structures - Precast Plank - Rest Area #2	$	$
88	SP403S-SF - R3	381	SF	Concrete for Structures - Precast Plank - Rest Area #3	$	$
89	SP403S-SF-R4a	571	SF	Concrete for Structures - Precast Plank - Rest Area #4a	$	$

No.	Bid Item	Quantity	Unit	Item Description	Unit Price	Amount
90	SP403S-SF-R4b	240	SF	Concrete for Structures - Precast Plank - Rest Area #4b	$	$
91	SP403S-SF-R5	381	SF	Concrete for Structures - Precast Plank - Rest Area #5	$	$
92	SP403S-SF-R6	240	SF	Concrete for Structures - Precast Plank - Rest Area #6	$	$
93	SP403S-SF-R7	1,787	SF	Concrete for Structures - Precast Plank - Rest Area #7	$	$
94	SP403S-SF-R8	1,694	SF	Concrete for Structures - Precast Plank - Rest Area #8	$	$
95	SP403S-SF-R9	1,787	SF	Concrete for Structures - Precast Plank - Rest Area #9	$	$
96	SP403S-SF-A	19,880	SF	Concrete for Structures - Precast Plank - Segment Type A	$	$

No.	Bid Item	Quantity	Unit	Item Description	Unit Price	Amount
97	SP403S-SF-B1	3,640	SF	Concrete for Structures - Precast Plank - Segment Type B1	$	$
98	SP403S-SF-B2	3,920	SF	Concrete for Structures - Precast Plank - Segment Type B2	$	$
99	SP403S-SF-C	1,120	SF	Concrete for Structures - Precast Plank - Segment Type C	$	$
100	SP403S-SF-D1	3,080	SF	Concrete for Structures - Precast Plank - Segment Type D1	$	$
101	SP403S-SF-D2	3,080	SF	Concrete for Structures - Precast Plank - Segment Type D2	$	$
102	SP403S-SF-E1	14,826	SF	Concrete for Structures - Precast Plank - Segment Type E1	$	$
103	SP403S-SF-E2	14,510	SF	Concrete for Structures - Precast Plank - Segment Type E2	$	$

No.	Bid Item	Quantity	Unit	Item Description	Unit Price	Amount
104	SP403S-SF-BV1	123	SF	Concrete for Structures - Precast Plank - Belvedere 1	$	$
105	SP403S-SF-BV2	123	SF	Concrete for Structures - Precast Plank - Belvedere 2	$	$
106	SP403S-SF-BV3	266	SF	Concrete for Structures - Precast Plank - Belvedere 3	$	$
107	SP403S-SF-BV4	250	SF	Concrete for Structures - Precast Plank - Belvedere 4	$	$
108	SP403S-SF-BV5	187	SF	Concrete for Structures - Precast Plank - Belvedere 5	$	$
109	SP403S-SF-BV6	187	SF	Concrete for Structures - Precast Plank - Belvedere 6	$	$
110	SP403S-SF-BV7	103	SF	Concrete for Structures - Precast Plank - Belvedere 7	$	$

No.	Bid Item	Quantity	Unit	Item Description	Unit Price	Amount
111	SP623S-RW	16,184	SF	Dry Stack Rock Wall - Retaining Wall	$	$
112	SP641S-WP	667	SY	Stabilized Construction Entrance - Wooden Pavement Pallets	$	$
113	SP641S-TD	2	EA	Stabilized Construction Entrance - Temporary Docks/Barges	$	$
114	SP641S-NS	1	LS	Stabilized Construction Entrance - Staging areas (See C-016)	$	$
115	SP706S-ET	10,027	LF	Bridge and Culvert Railing - Metal Pedestrian Guard Rail - Elevated Trail	$	$
116	SP706S-RBW	1,260	LF	Bridge and Culvert Railing - Metal Pedestrian Guard Rail - Rock Block Wall	$	$
117	SP720S-E-SS	3	EA	Metal for Structures - Structural Steel-HS - Shade Structures	$	$

No.	Bid Item	Quantity	Unit	Item Description	Unit Price	Amount
118	SP720S-LS-SW	1	LS	Metal for Structures - Structural Steel-HS - Stairway	$	$
119	SS680-BO	1	LS	Shallow Water Construction Dewatering - Bouldin Creek	$	$
120	SS680-BL	1	LS	Shallow Water Construction Dewatering - Blunn Creek	$	$
121	SS720S-F-CT	1,067	SF	Galvanized Metal Decking – Connecting Tissue	$	$
122	SS05522-CGR	113	LF	Remove and Relocate Existing Metal Beam Guard Railing	$	$
123	SS06600-TH	10	EA	Bollards - Trail Head	$	$
124	SS06600-RA	19	EA	Bollards - Rest Area	$	$

No.	Bid Item	Quantity	Unit	Item Description	Unit Price	Amount
125	SS10010	1	LS	Rest Room	$	$
126	SS10020-1	1	EA	Pedestrian Steel Truss Bridge Span - Blunn 1	$	$
127	SS10020-2	1	EA	Pedestrian Steel Truss Bridge Span - Blunn 2	$	$
128	SS10020-3	1	EA	Pedestrian Steel Truss Bridge Span - Blunn 3	$	$
129	SS10020-4	1	EA	Pedestrian Steel Truss Bridge Span - Blunn 4	$	$
130	SS10020-5	1	EA	Pedestrian Steel Truss Bridge Span - Blunn 5	$	$
131	SS10020-6	1	EA	Pedestrian Steel Truss Bridge Span - Harpers 1	$	$

No.	Bid Item	Quantity	Unit	Item Description	Unit Price	Amount
132	SS10020-7	1	EA	Pedestrian Steel Truss Bridge Span - Harpers 2	$	$
133	SS10020-8	1	EA	Pedestrian Steel Truss Bridge Span - Harpers 3	$	$
134	SS10020-9	1	EA	Pedestrian Steel Truss Bridge Span - Harpers 4	$	$
135	SS10400-A	10	EA	Sign-Place Name	$	$
136	SS10400-B	13	EA	Sign-Directional	$	$
137	SS10400-C	8	EA	Sign-Site Map	$	$
138	SS10400-D	1	EA	Sign-Where Are you	$	$

No.	Bid Item	Quantity	Unit	Item Description	Unit Price	Amount
139	SS10400-E	20	EA	Sign-TBD-Regulatory	$	$
140	SS10400-F	7	EA	Sign-Interpretive	$	$
141	SS10400-G	5	EA	Sign-Mileage Marker	$	$
142	SS10401	1	LS	Donor Recognition Sign	$	$
143	SS11860	10	EA	Trash Receptacle	$	$
144	SS11861	4	EA	Doggy Duty Station	$	$
145	SS13030	1	LS	Sphere Fountain	$	$

No.	Bid Item	Quantity	Unit	Item Description	Unit Price	Amount
146	SS16050-B	1	LS	Electrical System - Blunn	$	$
147	SS16050-H	1	LS	Electrical System - Harper	$	$
148	SS16050-L	1	LS	Electrical System - Lakeshore	$	$
149	SS16540-A	1,475	EA	Lighting Fixtures - LED Strip Light - Type A	$	$
150	SS16540-A2	78	EA	Lighting Fixtures - LED Strip Light - Type A2	$	$
151	SS16540-B	223	EA	Lighting Fixtures - LED Navigation Light- Type B	$	$
152	SS16540-PS	144	EA	Lighting Fixtures - LED Power Supply	$	$

No.	Bid Item	Quantity	Unit	Item Description	Unit Price	Amount
153	SS16540-TxDOT	2	EA	Lighting Fixtures -Lighting Fixtures –Standard TxDOT Light	$	$
154	SS224713	3	EA	Drinking Fountains	$	$
Allowance #1		1	LS	Parking Lot and Water Quality Treatment	$ 85,000	$
Allowance #2		1	LS	Fencing and Restoration at Breakers	$ 15,000	$

TOTAL ALLOWANCES: ..... $ $100,000

BASE BID: ..... $ _____
(Base Bid Includes Allowances)

ALTERNATE ITEMS

Alternate No.1: Emergency Phone Systems – Blunn, Harper, and Lakeshore Sub-Stations. Reference Sections 1010 and 1030, and Special Specification 16600. All work related to the complete construction and installation of the Sub-Stations, as described below.

Blunn Sub-System

Item Description	Quantity	Unit	Unit Price	Amount
A) Power System	1	LS	$	
B) Conduit/Wiring	3,204	LF	$	
C) Junction Boxes	13	EA	$	
D) Light Fixtures	3	EA	$	

Blunn Subtotal $_____

Harper Sub-System

Item Description	Quantity	Unit	Unit Price	Amount
A) Power System	1	LS	$	
B) Conduit/Wiring	5,509	LF	$	
C) Junction Boxes	27	EA	$	
D) Light Fixtures	6	EA	$	

Harper Subtotal $_____

Lakeshore Sub-System

Item Description	Quantity	Unit	Unit Price	Amount
A) Power System	1	LS	$	
B) Conduit/Wiring	350	LF	$	
C) Junction Boxes	6	EA	$	
D) Light Fixtures	2	EA	$	

Lakeshore Subtotal $_____

SUBTOTAL ALTERNATE #1……$_____

TOTAL BID (Base Bid Plus Alternate #1):……$_____

In the event of a mathematical error, the correct product, determined by using the "Unit Price" and "Quantity", and the correct sum, determined by totaling the correct line item Amounts, will prevail over the amount entered by the Bidder. The unit prices shown above will be the unit prices used to tabulate the Bid and used in the Contract, if awarded by the City.

Notes:

- For information pertaining to Rolling Owner Controlled Insurance Program (ROCIP), see Sections 00810 and 00820.
- For a more detailed explanation of allowances, see Section 01020.
- For a more detailed explanation of Bid alternates, see Section 01030.

Optional Information on Bid Prices Submitted by Computer Printout

In lieu of handwritten unit prices in figures in ink on the Bid forms above, Bidders, at their option, may submit an original computer printout sheet bearing certification by, and signature for, the Bidding firm. The unit prices shown on acceptable printouts will be the unit prices used to tabulate the Bid and used in the Contract if awarded by the City. As a minimum, computer printouts must contain all information and in the format shown on the attached page: "Example of Bid Prices Submitted by Computer Printout" form.

If a computer printout is used, the Bidder must still execute that portion of the unit price Bid form which acknowledges the Bid Guaranty, Time of Completion, Liquidated Damages, and all addenda that may have been issued.

Bids with unit prices by computer printout may be rejected, if:

1. The computer printout does not include the required certification, set forth in the attached "Example".
2. The computer printout is not signed in the name of the firm to whom the Project Manual was issued.
3. The computer printout is non-responsive or otherwise omits required Bid items or includes items not shown on the Bid forms in the Project Manual.
4. The other required Bid documents issued by the City are not fully executed as provided above.
5. The signed Section 00300U is not returned with the signed computer printout.

If the Bid submitted by the Bidder contains both the form furnished by the City, completed according the instructions, and also a computer printout, completed according to the instructions, unit prices of only one will be considered. In this situation, the unit Bid prices shown on the computer printout will be used to determine the Bid.

BID GUARANTY: A Bid guaranty must be enclosed with this Bid, as required in Section 00020 or Section 00020S, in the amount of not less than five percent (5%) of the total Bid. Following the Bid opening, submitted Bids may not be withdrawn for a period of (90) Calendar Days. Award of Contract will occur within this period, unless mutually agreed between the parties. The Bid guaranty may become the property of the OWNER, or the OWNER may pursue any other action allowed by law, if:

- Bidder withdraws a submitted Bid within the period stated above;
- Bidder fails to submit the required post Bid information within the period specified in Section 00020S or 00100, or any mutually agreed extension of that period;
- or Bidder fails to execute the Contract and furnish the prescribed documentation (bonds, insurance, etc.) needed to complete execution of the Contract within five (5) calendar days after notice of award, or any mutually agreed extension of that period.

The Bid includes all Automobile Liability and Builder's Risk Insurance premiums required to meet the insurance limits in the Supplemental General Conditions and includes all premiums for a Performance Bond and a Payment Bond in the sum of one hundred percent of the Contract Amount. The Bid excludes all costs for the insurance coverages and limits, up to the limits set forth in the Supplemental General Conditions, duplicated by those in the ROCIP, including the costs for all proposed Subcontractors for such coverages and limits as described in the Supplemental General Conditions, and as calculated in accordance with the Insurance Cost Form, Section 00425.

The Bid also includes the cost to provide and maintain through completion of Work all necessary safety rails, barricades, platforms, fences, covers, and signs necessary to adequately protect and safeguard all vehicular and pedestrian traffic within proximity of the Work. The safety information identified in the Project Safety Manual, and in the Supplemental General Conditions, outlines the

minimum safety requirements for the Project. CONTRACTOR shall not limit the amount of effort directed toward its safety program based on the requirements identified in the Project Safety Manual. This program is in addition to CONTRACTOR's existing safety program, not in lieu of that program.

TIME OF COMPLETION: The undersigned Bidder agrees to commence work on the date specified in the written "Notice to Proceed" to be issued by the OWNER and to **substantially** complete construction of the improvements, as required by the Project Manual, Drawings and Addenda for the Work within **five hundred forty (540) Calendar** Days. **If a Substantial Completion date has been specified, the Bidder further agrees to reach Final Completion within thirty (30) Calendar Days after Substantial Completion as required by the Project Manual, Drawings and Addenda for the work.** The Bidder further agrees that should the Bidder fail to **substantially complete the Work or to finally** complete the Work within the number of days indicated in the Bid or as subsequently adjusted, Bidder shall pay the liquidated damages for each consecutive day thereafter as provided below; unless the OWNER elects to pursue any other action allowed by law.

WAIVER OF ATTORNEY FEES: In submitting its bid, in consideration for the waiver of its right to attorney's fees by the OWNER, the Bidder knowingly and intentionally agrees to and shall waive the right to attorney's fees under Section 271.153 of the Texas Local Government Code in any administrative proceeding, alternative dispute resolution proceeding, or litigation arising out of or connected to any Contract awarded pursuant to this solicitation process.

LIQUIDATED DAMAGES: The Bidder understands and agrees that the timely completion of the described Work is of the essence. The Bidder and OWNER further agree that the OWNER's actual damages for delay caused by failure to timely complete the Project are difficult, if not impossible to measure. However, with respect to the additional administrative and consultant costs to be incurred by OWNER, the reasonable estimate of such damages has been calculated and agreed to by OWNER and Bidder. Therefore, the Bidder and the OWNER agree that for each and every **Calendar Day** the Work or any portion thereof, remains incomplete after the **Substantial Completion** date as established by the above paragraph, "Time of Completion", payment will be due to the Owner in the amount of **Two Thousand, Seven Hundred Thirty dollars ($2,730.00)** per **Calendar Day** as liquidated damages, not as a penalty, but for delay damages to the OWNER. **If both Substantial and Final Completion dates have been specified, the Bidder and the OWNER further agree that for each and every Calendar Day the Work or any portion thereof, remains incomplete after the Final date as established by the above paragraph, "Time of Completion", payment will be due to the OWNER in the amount of Nine Hundred Ten dollars ($910.00) per Calendar Day as liquidated damages, not as a penalty, but for delay damages to the OWNER.** Such amount shall be deducted by the OWNER from any Contract payment due. In the event of a default or breach by the CONTRACTOR and demand is made upon the surety to complete the project, in accordance with the Contract Documents, the surety shall be liable for liquidated damages pursuant to the Contract Documents in the same manner as the CONTRACTOR would have been.

OWNER reserves the right to reject any or all Bids and to waive any minor informality in any Bid or solicitation procedure (a minor informality is one that does not affect the competitiveness of the Bids).

The undersigned acknowledges receipt of the following addenda:

Addendum No. 1 dated _____ Received _____

Addendum No. 2 dated _____ Received _____

Addendum No. 3 dated _____ Received _____

Addendum No. 4 dated _____ Received _____

Addendum No. 5 dated _____ Received _____

_____	_____
Secretary, *if Bidder is a Corporation	Bidder
	_____
(Seal)	Authorized Signature
	_____
	Title
	_____
	Date
	_____
	_____
	Address
	_____
	Telephone Number / FAX Number
	_____
	Email Address for Person Signing Bid
	_____
	Email Address for Bidder's Primary Contact Person

* Copy of Corporate Resolution and minutes with certificate of officer of Bidder as to authority of signatory to bind Bidder is to be signed and dated no earlier than one week before Bid date, and attached to this document.

EXAMPLE: BID PRICES SUBMITTED BY COMPUTER PRINTOUT

Project Name:
CIP ID #:
IFB #:

No.	***Bid Item #***	***Bid Item Description***	***Unit***	***Qty***	***Unit Bid Price***	***Total Amount***
					Total Bid:	

(YOUR FIRM'S NAME) certifies that the unit prices shown on this completed computer printout for all of the bid items and the alternates contained in this proposal are the unit prices intended and that its Bid will be tabulated using these unit prices and no other information from this printout. (YOUR FIRM'S NAME) acknowledges and agrees that the total bid amount shown will be read as its total bid. *In the event of a mathematical error*, the correct product, determined by using the "Unit Price" and "Quantity", and the correct sum, determined by totaling the correct line item Amounts, will prevail over the amount entered by the Bidder.

Signed: _____

Title: _____

Date: _____

END

(This page intentionally left blank)

Item No. 508S
Miscellaneous Structures and Appurtenances

508S.1 Description

This item governs the construction of miscellaneous structures and appurtenances, complete in place or to the stage detailed and/or indicated in the Drawings, using the materials specified herein, including the excavation, installation, backfilling, placement of the concrete and when required, the furnishing and installation of frames, grates, rings, covers, safety end treatment and any concrete curb and gutter indicated on the Drawings.

This specification is applicable for projects or work involving either SI or inch-pound units. Within the text, the inch-pound units are given preference followed by SI units shown within parentheses

508S.2 Submittals

The submittal requirements of this specification item include:

A. Type of structure and appurtenances (inlets, headwalls, frames, grates, energy dissipators, etc.), construction methods and sequence (precast, cast in place), materials (bolts, nuts, plates, angles, etc.)

B. Aggregate types, gradations and physical characteristics for the Portland cement concrete mix.

C. Proposed proportioning of materials for the mortar mix.

D. Analysis and thickness calculations for temporary steel covers.

508S.3 Types

The various types of structures and appurtenances such as inlets, headwalls, energy dissipators, etc., are designated on the Drawings by letter or by number for the particular design of structure to be constructed in accordance with the details indicated on the Drawings. Unless otherwise indicated on the Drawings, the Contractor may have the option of furnishing cast in place or precast structures.

508S.4 Materials

A. Portland Cement Concrete

The Portland cement concrete shall conform to Item No. 403S, "Concrete For Structures", with the following classes:

Cast in Place Concrete	Class A
Precast Concrete	Class C

B. Mortar

Mortar shall be composed of 1 part Portland cement and 2 parts clean, sharp mortar sand suitably graded for the purpose by conforming in other respects to the provisions

of Standard Specification Item No. 403S, "Concrete for Structures" for fine aggregate. Hydrated lime or lime putty may be added to the mix, but in no case shall it exceed 10 percent by weight (mass) of the total dry mix.

C. Reinforcement and Steel

Reinforcing Steel shall conform to Standard Specification Item No. 406S,"Reinforcing Steel".

Structural Steel shall conform to Standard Specification Item No. 720S, "Metal for Structures".

D. Frames, Grates, Rings and Covers

Frames, grates, rings and covers shall conform to City of Austin Standard Specification Item No. 503S, “Frames, Grates, Rings and Covers".

E. Safety End Treatment for Structures

The safety end treatment for structures shall conform to TxDOT Specification Item No. 467, “Safety End Treatment”.

1. Bolts and Nuts. All bolts, nuts and associated hardware shall meet the specifications of ASTM A 307.
2. Plates and Angles. All plates and similar angles and brackets shall meet the specifications of ASTM A 36.
3. Pipe Runners. Pipe Runners shall conform to the requirements of ASTM A53, Grade B.
4. Galvanizing. All hardware including nuts, bolts and plates listed above shall be galvanized conforming to ASTM A 123 or A 153.

F. Miscellaneous Items

Cast iron for supports, steps and inlet units shall conform to the shape and dimensions indicated on the Drawings. The casting shall be clean and perfect, free from sand or blowholes or other defects. Cast iron castings shall meet the requirements of ASTM A 48, Class 30. Steel for temporary covers when used with stage construction shall be adequate for the loads imposed.

508S.5 Construction Methods

All concrete work shall be performed in accordance with Standard Specification Item No.410S, "Concrete Structures". Forms will be required for all cast-in-place concrete walls, except where the nature of the surrounding material is such that it can be trimmed to a smooth vertical face (the outside form for concrete bases). Where cast in place concrete is used in wall construction of storm sewers, the steps shall be cast into the wall when the concrete is placed.

The construction inlets shall be completed, as soon as is practicable after installation is complete of the sewer lines in the inlet. All sewer line shall be cut neatly at the inside face of the walls of the inlet and pointed up with mortar.

Bases for cast in place inlets may be placed prior to or at the Contractor's option after the sewer is constructed.

Bases for box sewers shall be cast as an integral part of the sewer. The manholes may be constructed prior to backfilling or if the Contractor so elects, the manhole opening may be covered temporarily with a steel plate to facilitate the compaction of backfill for the sewer as a whole. Thereafter, required excavation for the inlet shall be made and the inlet constructed and backfilled.

The inverts passing out or through an inlet shall be shaped and grouted across the floor of the inlet as indicated on the Drawings. This shaping may be accomplished by adding shaping mortar or concrete after the base is cast or by placing the required additional material with the base.

All miscellaneous structures shall be completed in accordance with the details indicated on the Drawings. Backfilling to original ground elevation shall be in accordance with the provisions of the appropriate items and as directed by the Engineer or designated representative.

Energy dissipators and headwalls shall be constructed in accordance with City of Austin Standard Detail 508S-13.

508S.6 Measurement

All miscellaneous structures and safety end treatments satisfactorily completed as indicated on the Drawings will be measured as completed units per each.

Concrete removal, excavation and backfill, riprap, pipe, headwalls, wing walls, collars and apron slabs will not be measured under this item but will be included in the unit price bid for the item of construction in which this item is used.

Frames, grates, rings, covers, safety end treatment and any concrete curb and gutter indicated will not be measured and paid for but shall be included in the unit price bid of one of the pay items identified in the contract bid form.

508S.7 Payment

A . Inlets

Payment for Inlets of the type indicated in place in accordance with these specifications and measured as prescribed above will be made at the unit bid price for each Inlet, of the type specified.

B. Energy Dissipators and Headwalls

Payment for special complete structures will be made at the unit price bid per each.

C Safety End Treatment

Payment for Safety End Treatment, complete in place, will be made at the unit bid price for each unit of the type indicated on the Drawings.

Payment will be made under one of the following:

Pay Item No. 508S-E:	Energy Dissipators, _____ In. Dia. -	Per Each.
Pay Item No. 508S-H:	Headwalls, Type _____, ___ In. Dia. Pipe -	Per Each.
Pay Item No. 508S-IG:	Inlet, Grated -	Per Each.
Pay Item No. 508S-SET	Safety End Treatment, Type ___ Size ___	Per Each
Pay Item No. 508S-I5R:	Inlet, Recessed -	Per Each.
Pay Item No. 508S-I10R:	Inlet, Recessed -	Per Each.
Pay Item No. 508S-I15R:	Inlet, Recessed -	Per Each.
Pay Item No. 508S-I20R:	Inlet, Recessed -	Per Each.
Pay Item No. 508S-I5S:	Inlet, Recessed -	Per Each.
Pay Item No. 508S-I10S:	Inlet, Standard -	Per Each.
Pay Item No. 508S-I15S:	Inlet, Standard -	Per Each.
Pay Item No. 508S-I20S:	Inlet, Standard -	Per Each.

End

SPECIFIED Cross Reference Materials
Standard Specification Item No. 508S, "Miscellaneous Structures and Appurtenances"

City of Austin Standard Specification Items

Designation	Description
Item No. 403S	Concrete For Structures
Item No. 406	Reinforcing Steel
Item No. 410	Concrete Structures
Item No. 720	Structural Steel
Item No. 503S	Frames, Grates, Rings and Covers

TxDOT Standard Specifications For Construction And Maintenance Of Highways, Streets, And Bridges

Designation	Description
Item 467	Safety End Treatment

American Society for Testing and Materials (ASTM)

Designation	Description
ASTM A36/36M	Specification for Structural Steel
ASTM A48	Specification for Gray Iron Castings
ASTM A53	Specification for Pipe, Steel, Black and Hot-Dipped, Zinc Coated Welded and Seamless
ASTM A123	Specification for Zinc (Hot-Dip Galvanized) Coatings on Iron and Steel Products
ASTM A153	Specification for Zinc Coating (Hot-Dip) on Iron and Steel Hardware
ASTM A307	Specifications for Carbon Steel Externally Threaded Standard Fasteners
ASTM C913	Specifications for Precast Concrete Water and Wastewater Structures

RELATED Cross Reference Materials

City of Austin Drainage Criteria Manual

Designation	Description
Section 6.6.0	Energy Dissipators

City of Austin Standard Specification Items

Designation	Description
Item No. 501S	Jacking or Boring Pipe
Item No. 504S	Adjusting Structures
Item No. 506	Manholes
Item No. 507S	Bulkheads
Item No. 510	Pipe

City of Austin Standard Details

Designation	Description
508S-13	Standard Headwall and Energy Dissipators
510S-1	Concrete Trench Cap

TxDOT Specifications

Designation	Description
Item 420	Concrete Structures
Item 421	Portland Cement Concrete
Section 421.2(5)	Fine Aggregate
Item 424	Precast Concrete Structures (Fabrication)
Item 440	Reinforcing Steel
Item 466	Headwalls and Wingwalls
Item 467	Safety End Treatment
Item 471	Frames, Grates, Rings and Covers
Item 529	Concrete Curb, Gutter and Combined Curb and Gutter

(This page intentionally left blank)

605S.1 Description

This item shall govern the provision and placement of wood, straw or coconut fiber mat, synthetic mat, paper mat, jute mesh or other material as a soil retention blanket for erosion control on slopes or ditches or short-term or long-term protection of seeded or sodded areas indicated on the Drawings or as specified by the Engineer or designated representative.

This specification is applicable for projects or work involving either inch-pound or SI units. Within the text, inch-pound units are given preference with SI units shown within parentheses.

605S.2 Submittals

The submittal requirements for this specification item shall include the soil retention blanket material type and sample, evidence that the material is listed on TxDoT/TTI Approved Products List, one (1) full set of Manufacturer's literature and installation recommendations, and any special details necessary for the proposed application.

605S.3 Materials

A. Soil Retention Blankets

All soil retention blankets must be listed on TxDoT Approved Products List or approved by the Engineer or designated representative.

The soil retention blanket shall be one (1) of the following classes and types as shown on the Drawings:

1. Class 1. "Slope Protection"
   - (a) Type A. Slopes 1:3 or flatter - Clay soils
   - (b) Type B. Slopes 1:3 or flatter - Sandy soils
   - (c) Type C Slopes steeper than 1:3 - Clay soils
   - (d) Type D Slopes steeper than 1:3 - Sandy soils
2. Class 2. "Flexible Channel Liner"
   - (a) Type E Short-term duration (Up to 2 years)
     Shear Stress (t_d) < 1 pound per square foot [psf] (48 Pa)
   - (b) Type F Short-term duration (Up to 2 years)
     Shear Stress (t_d) 1 to 2 psf (48 to 96 Pa)
   - (c) Type G Long-term duration (Longer than 2 years)
     Shear Stress (t_d) >2 to <5 psf (>96 to <239 Pa)
   - (d) Type H Long-term duration (Longer than 2 years)
     Shear Stress (t_d) ≥ 5 psf (≥ 239 Pa)

B. Fasteners

The fasteners shall conform to the recommendations of the manufacturer for the selected soil retention blanket.

605S.4 Construction Methods

A. General

The soil retention blanket shall conform to the class and type shown on the Drawings. The Contractor has the option of selecting an approved soil retention blanket conforming to the class and type shown on the Drawings which is included on the Approved Products List published by TxDoT/TTI Hydraulics and Erosion Control Laboratory.

B. Site Preparation:

Prior to placement of the soil retention blanket, the seedbed area to be covered shall be relatively free of all clods and rocks over 1 1/2 inches (37.5 mm) in maximum dimension and all sticks or other foreign matter that will prevent close contact of the preparation mat with the soil surface. The area shall be smooth and free of ruts and other depressions. If the prepared seedbed becomes crusted or eroded as a result of rain or if any eroded places, ruts or depressions exist for any reason, the Contractor shall be required to rework the soil until it is smooth and to reseed or resod the area at the Contractor's own expense. After the area has been properly prepared, the blanket shall be laid out flat, even and smooth, without stretching or crimping the material.

C. Installation

The Soil Retention Blanket, whether installed as slope protection or as flexible channel liner in accordance with the TxDoT/TTI Approved Products List, shall be placed within 24 hours after seeding (Standard Specification Item No. 604S), sodding (Standard Specification Item No. 602S) or native grassland seeding and planting (Standard Specification Item No. 609S) erosion control operations have been completed, or as approved by the Engineer or designated representative. The soil retention blanket shall be installed and anchored in accordance with the Manufacturer's recommendations. The Contractor shall contact the Engineer or designated representative three (3) days prior to the installation of the soil retention blanket to allow for inspection of the installation by City of Austin personnel.

605S.5 Measurement

This work and acceptable material for "Soil Retention Blanket" will be measured by the square yard (square meter: 1 square meter is equal to 1.196 square yards) of surface area covered, complete in place.

605S.6 Payment

The work performed and materials furnished in accordance with this Item and measured as provided under "Measurement" will be paid for at the unit bid price for "Soil Retention Blanket" of the class shown on the Drawings or approved by the Engineer or designated representative. The unit price shall include full compensation for furnishing all materials, labor, tools, equipment and incidentals necessary to complete the work. Anchors, checks, terminal and wire staples will not be paid for directly, but will be included in the unit price bid for this specification item.

Payment will be made under the following:

Pay Item No. 605S-A: Soil Retention Blanket Class__; Type __- Per Square Yard.

End

SPECIFIC CROSS REFERENCE MATERIALS
Specification 605S, "Soil Retention Blanket"

City of Austin Standard Specification Items

Designation	Description
Item No. 602S	Sodding for Erosion Control
Item No. 604S	Seeding for Erosion Control
Item No. 609S	Native Grassland Seeding and Planting for Erosion Control

RELATED CROSS REFERENCE MATERIALS

City of Austin Standard Specification Items

Designation	Description
Item No. 101S	Preparing Right of Way
Item No. 102S	Clearing and Grubbing
Item No. 111S	Excavation
Item No. 120S	Channel Excavation
Item No. 132S	Embankment
Item No. 606S	Fertilizer
Item No. 608S	Planting
Item No. 610S	Preservation of Trees and Other Vegetation

Texas Department of Transportation: Standard Specifications for Construction and Maintenance of Highways, Streets, and Bridges

Designation	Description
Item No. 100	Preparing Right of Way
Item No. 110	Excavation
Item No. 132	Embankment
Item No. 158	Specialized Excavation Work
Item No. 160	Furnishing and Placing Topsoil
Item No. 162	Sodding for Erosion Control
Item No. 164	Seeding for Erosion Control
Item No. 166	Fertilizer
Item No. 168	Vegetative Watering
Item No. 169	Soil Retention Blanket
Item No. 204	Sprinkling

(This page intentionally left blank)

SPECIAL PROVISION To
Standard Specification Item 132S (Version 8/20/07)
Embankment

For this project ITEM 132S Embankment of the City of Austin Standard Technical Specifications is hereby amended with respect to the clauses cited below. No other clauses or requirements of this Section of the City of Austin Standard Specifications are waived or changed.

1. 132S.4, Measurement, **Delete** the existing paragraph in its entirety and **Add** the following paragraphs:

   a. All accepted embankment, when included in the contract as a separate pay item, will be measured in place and the volume computed in cubic yards (cubic meters: 1 cubic meter is equal to 1.196 cubic yards) by the method of average end areas. No allowance shall be made for shrinkage.

   b. The following estimated embankments by work zone have been identified in Cubic Yards (CY):

      WZ 1 – 5
      WZ 2 – 127
      WZ 3 – 594
      WZ 5 – 307
      WZ 6 – 667

END

(This page intentionally left blank)

SPECIAL PROVISION To
Standard Specification Item 401S (Version 11/13/07)
Structural Excavation and Backfill

For this project ITEM 401S Structural Excavation and Backfill of the City of Austin Standard Technical Specifications is hereby amended with respect to the clauses cited below. No other clauses or requirements of this Section of the City of Austin Standard Specifications are waived or changed.

1. 401S.9, Measurement, **Delete** this section in its entirety and **Add** the following paragraphs:

   NO MEASUREMENT shall be made for the work specified in this section and shall be considered incidental to 403S – Concrete for Structures.

2. 401S.10, Payment, **Delete** this section in its entirety and **Add** the following paragraphs:

   NO PAYMENT shall be made for the work specified in this section and shall be considered incidental to 403S – Concrete for Structures.

   END

(This page intentionally left blank)

SPECIAL PROVISION To
Standard Specification Item 403S (Version 6/16/08)
Concrete for Structures

For this project ITEM 403S Concrete for Structures of the City of Austin Standard Technical Specifications is hereby amended with respect to the clauses cited below. No other clauses or requirements of this Section of the City of Austin Standard Specifications are waived or changed.

1. 403S.3, Materials, **Add** the following paragraphs:

   Precast Concrete Planks. The concrete for the precast concrete planks will include an integral color that is tan in nature with a reflectivity of 0.3 or greater. In the submittal the Contractor must provide the color manufacturer's specific color name (number) and get preapproval from the Owner before using the color in the planks. The concrete for the precast concrete planks can contain up to forty-five (45) percent fly ash. The surface finish for the precast concrete planks will be "broom finish." Between the sides and top of the precast planks, the edges should be rounded to a ¼" radius. Between the bottom and sides a maximum 3/8" radius is allowed. The surface of each match cast plank will have a scoring and striping pattern. The Architect and Owner will review the scoring pattern when the physical plank submittal is made. Adjustments in the scoring pattern may be possible. In an effort to provide some identification of the center of the trail, specific planks in each "kit of parts" segment will need to include a four inch wide by one-eighth inch deep "block out" indention section that creates a recessed surface across that one plank. There will be two such recessed "centerline stripe" sections in each span (as indicated on the plan sheets). Before beginning mass production of the precast panels, the Contractor must provide the Owner eight individual planks that will make up one span for Owners review. Owner assumes the Contractor will "match cast" each of the Concrete Planks at one time to the dimensions shown on the plans and then break out each of the individual planks for installation. Patching is prohibited on the concrete planks to allow for lifting inserts or thru-holes for lifting/setting.

   Structural Concrete. The wet mixed concrete for use in the structural elements will be tested upon delivery at the north shore staging area and at the Owner's discretion and expense may again be immediately tested before use on the south shore. The temperature of dry delivered concrete for use in structural elements will be tested once immediately before use on the south shore.

2. 403S.6, Mix Design, **Add** the following paragraph:

   Abutments shall be constructed with Class C concrete.

3. 403S.12, Payment, **Add** the following to the list of Pay Items:

   Pay Item No. SP403S-SF: (Structure or Structural Component) – Per Square Foot.

   END

(This page intentionally left blank)

SPECIAL PROVISION TO
Standard Specification Item 605S (Version 6/21/07)
Soil Retention Blanket

For this Project, Item No. 605S, "Soil Retention Blanket", of the Standard Specifications is hereby amended with respect to the clauses cited below and no other clauses or requirements of this item are waived or changed hereby.

1. 605S.3 Materials, **Delete** the existing paragraph it its entirety and **Add** the following paragraphs:

   A. Soil Retention Blankets

   This Soil Retention Blanket may be required on the downslope side of the rock block retaining wall.

   Permanent erosion control blanket must be able to withstand at least six (6) pounds per square foot (psf) of shear force and be no more than one-third biodegradable material (excelsior, straw or coir). Candidate products include:

   - EARTHLOCK - EROSION CONTROL SYSTEMS
   - ENKAMAT 7010 - COLBOND/AZKO NOBEL
   - ENKAMAT 7018 - COLBOND/AZKO NOBEL
   - TRM C-45 - CONTECH
   - TRM C-60 - CONTECH
   - RECYCLEX TRM - AMERICAN EXCELSIOR
   - C350 - NORTH AMERICAN GREEN
   - P300 - NORTH AMERICAN GREEN
   - SC250 - NORTH AMERICAN GREEN
   - LANDLOK TRM 1060 - SYNTHETIC INDUSTRIES
   - LANDLOK TRM 450 - SYNTHETIC INDUSTRIES
   - MULTIMAT 100 - TENAX
   - EROSION MAT - TENSAR

2. 605S.5 Measurement, **Delete** the existing paragraph it its entirety and **Add** the following paragraph:

   NO MEASUREMENT shall be made for the work specified in this section and shall be considered incidental to 623S – Dry Stack Rock Wall.

3. 605S.6 Payment, **Delete** the existing paragraph it its entirety and **Add** the following paragraph:

   NO PAYMENT shall be made for the work specified in this section and shall be considered incidental to 623S – Dry Stack Rock Wall.

END

(**This page intentionally left blank)**

SPECIAL PROVISION To
Standard Specification Item 620S (Version 5/23/00)
Filter Fabric

For this project ITEM 620S Filter Fabric of the City of Austin Standard Technical Specifications is hereby amended with respect to the clauses cited below. No other clauses or requirements of this Section of the City of Austin Standard Specifications are waived or changed.

1. 620S.5, Measurement, **Delete** this section in its entirety and **Add** the following paragraphs:

   NO MEASUREMENT shall be made for the work specified in this section and shall be considered incidental to SP623S-RW – Dry Stack Rock Wall – Retaining Wall.

2. 620S.6, Payment, **Delete** this section in its entirety and **Add** the following paragraphs:

   NO PAYMENT shall be made for the work specified in this section and shall be considered incidental to SP623S-RW – Dry Stack Rock Wall – Retaining Wall.

   END

(This page intentionally left blank)

SPECIAL PROVISION To
Standard Specification Item 623S (Version 2/24/10)
Dry Stack Rock Wall

For this project ITEM 623S, Dry Stack Rock Wall of the City of Austin Standard Technical Specifications is hereby amended with respect to the clauses cited below. No other clauses or requirements of this Section of the City of Austin Standard Specifications are waived or changed.

1. 623S.1, Description, **DELETE** all of the paragraphs and **REPLACE** with the following:

   This item shall govern furnishing and placing dry stack gravity rock walls *using large rock blocks* (Environmental Criteria Manual Section 1.8.2.B.6) in conformance with Standard Detail 623S.1, or *large block retaining wall as called out and detailed in construction documents* and as herein specified on a prepared subgrade, including the excavation and backfilling for the wall, to the height, lines, grades, details and locations indicated on the Drawings or as established by the Engineer or designated representative. *This specification includes all filter fabric, geocomposites, granular backfill, reinforcing geogrid or any other material necessary to install the rock retaining wall, complete in place.* While installing, Contractor should arrange for several lifts when necessary.

   Large block retaining wall plans shall be sealed by a Professional Engineer licensed in the State of Texas and submitted to the Owner for review.

   This specification is applicable for projects or work involving either inch-pound or SI units. Within the text, the inch-pound units are given preference following by SI units shown within parentheses.

2. 623S.2, Submittals, **DELETE** Paragraph E and **REPLACE** with the following:

   E. Description of filter fabric and reinforcing geogrid including characteristics, long-term design strength, test data and manufacturer's recommendations for installation.

   F. Detailed work plans for excavation and construction of the wall including temporary slope protection measure.

3. 623S.3, Materials, **DELETE** all of the paragraphs and **REPLACE** with the following:

   A. Rock

      Native Rock shall be durable weathered field limestone of suitable quality to ensure permanence in the structure *generally in blocks that measure 4'L x 2'W x 2'H*. The stone shall have a wearing loss less than 35 percent when the stone is tested with the Los Angeles Abrasion Machine in accordance with ASTM Test Method C535 (TxDOT Test Method Tex-410A). The loss of material experienced during five cycles of magnesium sulfate exposure conducted in accordance with TxDOT Test Method Tex-411A for Rock RipRap shall not exceed 18 percent.

      The minimum density of native rock shall be at least 150 pcf.

   B. Concrete

      Concrete for footings *if necessary* shall be Class A Concrete and conform to Standard Specification Item No. 403S, "Concrete for Structures".

C. Granular Blanket

Flexible Base aggregate conforming to Standard Specification Item No. 210S, “Flexible Base”, shall be used *for a leveling layer.*

D. Mortar

Mortar *if necessary* shall consist of 1 part masonry cement to 3 parts sand by volume, based on dry materials. Mortar which has been mixed longer than 30 minutes or which has developed its initial set shall not be used.

E. Filter Fabric

Filter Fabric conforming to Standard Specification Item No. 620S, “Filter Fabric”, shall be used for dry stack rock walls constructed in erodible soils*. Filter fabric shall be woven monofilament with and open area > 17%, Mullenburst ≥ 400 psi, AOS <50, and flowrate ≥ 140 gpm/ft.*

F. Drain Pipe

4” perforated schedule 40 pvc. Perforations shall be on the 1/3 circumference and every 8” in length.

G. Composite Drainage Layer

Prefabricated soil drainage sheet made of a drainage core and nonwoven filter fabric (eg Ameridrain 650). The physical properties of the nonwoven filter fabric shall be: Mullenburt > 450 psi, AOS < 40 Sieve, and a flow capacity per unit width ≥ 16 gpm / ft.

H. Geogrid Reinforcement

The soil reinforcement shall be manufactured from high density polyethylene (HDPE) uniaxial, polypropylene (PP) biaxial resins, or high tenacity polyester (PET) fibers that can develop the Long-Term Allowable Strength and Pullout Resistance as specified on the Drawings.

The soil reinforcement shall be stored between -20 and 140 degrees F (-29 and 60 degrees C).

4. 623S.4, Construction Methods, **DELETE** all of the paragraphs and **REPLACE** with the following:

Dry Stack Rock Wall shall be constructed in horizontal courses, on the prepared and compacted subgrade, granular blanket or concrete foundation as indicated on the Drawings and Standard Detail 623S.1, or *detail specified in drawings for large block retaining wall*. The horizontal and vertical joints of the two lower and upper stone layers shall be mortared. The remaining horizontal and vertical joints shall be dry or mortared as indicated on the Drawings.

A. Excavation

Contractor shall excavate to the lines and grades shown on the Drawings, or grades approved by the Engineer, and provide temporary slope protection measure, if necessary, as a subsidiary item to the Rock Wall payment

B. Subgrade Soil Preparation

Foundation soil shall be examined by the Engineer to ensure that the actual foundation soil strength meets or exceeds assumed design strength. Soil not meeting the required strength shall be removed and replaced with acceptable, compacted material as specified in Subgrade Preparation Specification or directed by the Engineer.

C. Leveling Pad Placement

Leveling Pad shall be placed as shown on the Drawings. Leveling Pad shall have a 8 inch minimum depth for walls bearing on competent soils and a 6 inch minimum depth for walls bearing on bedrock. Pad dimensions shall extend beyond the blocks in all directions to a distance as directed by Engineer.

D. Wall Installation

Ensure that units are in full contact with Leveling Pad. The backfill in front and back of entire base row shall be placed and compacted to firmly lock them in place. Check each block for proper alignment and level. Install Composite Drainage Layer and Pipe behind the wall.

For Any behind-wall backfill, employ methods using lightweight compaction equipment that will not disrupt the stability or batter of the wall. Hand-operated plate compaction equipment shall be used around the block and within 3 feet of the wall to achieve compaction.

Construction tolerance at the wall face is 1 degree vertically and 1 inch in 10 feet horizontally. All walls shall be installed in accordance with local building codes and requirements.

E. Geogrid Installation

The geogrid reinforcement shall be installed in accordance with the manufacturer's recommendations, unless otherwise modified by the specification. The geogrid reinforcement shall be placed within the layers of the compacted soil as shown on the Drawings.

Geogrid reinforcement shall be placed to lay flat and pulled tight prior to backfilling. After a layer of geogrid reinforcement has been placed, suitable means, such as pins or small piles of soil, shall be used to hold the geogrid reinforcement in position until the subsequent soil layer can be placed. Under no circumstances shall a track-type vehicle be allowed on the geogrid reinforcement before at least 6 inches of soil has been placed. Sudden braking and sharp turning, sufficient to displace fill, shall be avoided.

During construction, the surface of the fill should be kept approximately horizontal. Geogrid reinforcement shall be placed directly on the compacted horizontal fill surface. If wall block does not have a mechanical/positive connection between geogrid reinforcement and face block, geogrid reinforcement shall extend full embedment between blocks, and the design geogrid reinforcement length, as shown on the Drawings, shall be counted from the back of face blocks.

Correct orientation of the geogrid reinforcements shall be confirmed by the Engineer.

F. Soil Reinforcement Mat Installation

See Soil Reinforcement Mat Specification and Drawings for coverage and installation notes.

5. 623S.6, Payment, **ADD** the following

Pay Item No. SP623S-RW: Dry Stack Rock Wall – Retaining Wall Square Feet.

No separate measurement will be made for the geogrid reinforcement. Payment of geogrid reinforcement shall be included in the payment of Dry Stack Rock Wall – Retaining Wall.

END

Item No. SS11860
Trash Receptacle

SS11860.1 Description

This item shall govern furnishing, fabricating, and erecting the Trash Receptacles, where required per the Drawings. The trash receptacles shall be constructed in accordance as indicated on the Drawings.

SS11860.2 Materials

A. Trash Receptacle

Plainwell Litter Receptacle, Fair Weather TR-12, or other suitable material approved by the Engineer or designated representative. Unless indicated otherwise on the Standard Details or Drawings. Reference attachments SS11860-A and SS11860-B.

SS11860.3 Installation

The trash receptacle shall be erected at each location as identified on the Drawings.

It shall be the responsibility of the Contractor to maintain, if necessary during the progression of the project.

Trash Receptacles shall be located as indicated on the Drawing.

SS11860.4 Measurement

Trash receptacles shall be measured per each.

SS11860.5 Payment

The work performed and the materials furnished as prescribed by this item shall be paid for per each only. The 'per each' price bid shall include full compensation for all work performed and all materials furnished in constructing, transporting, and maintaining the signs as specified on the Drawings and as directed by the Engineer or designated representative.

Payment will be made under the following:

Pay Item No. SS11860: Trash Receptacle Per Each.

END

(This page intentionally left blank)

Modern Litter Receptacle

Landscape Forms
Model: Plainwell Litter Receptacle

Landscape Forms, Inc.
431 Lawndale Ave.,
Kalamazoo, MI. 49048
800-430-6209
www.landscapeforms.com

Notes
Top opening

Installation Method
Surface mount on concrete pad
Reference PARD standard installation detail

Specifications:
Aluminum, color to be ~~'Grass'~~ 'STONE'

Approximate Equipment Cost:
$1,300 plus shipping

Installation Cost:
Estimate 30% +/- of equipment cost for shipping + installation
Does not include cost of concrete work

Associated Installation Requirements:
Accessibility approach
City of Austin General Permit
Earthwork and Revegetation

Recent Installations:

Other References:

MODERN LITTER RECEPTACLE

*All work on City of Austin parkland must be approved in writing by PARD Office of C.I.P.. @ 512-974-9467.
Confirm location, installation method, make, model and color of site furnishing item prior to purchase and installation.

Last Update: 10-25-10

AUSTIN PARKS & RECREATION

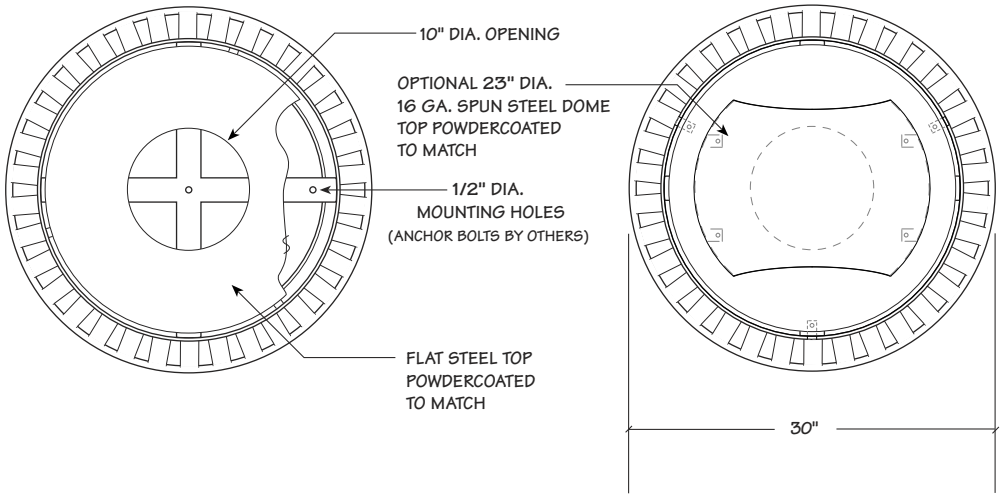

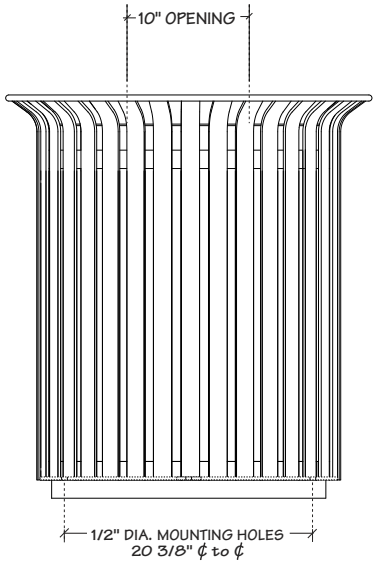

OPTIONAL FLAT TOP

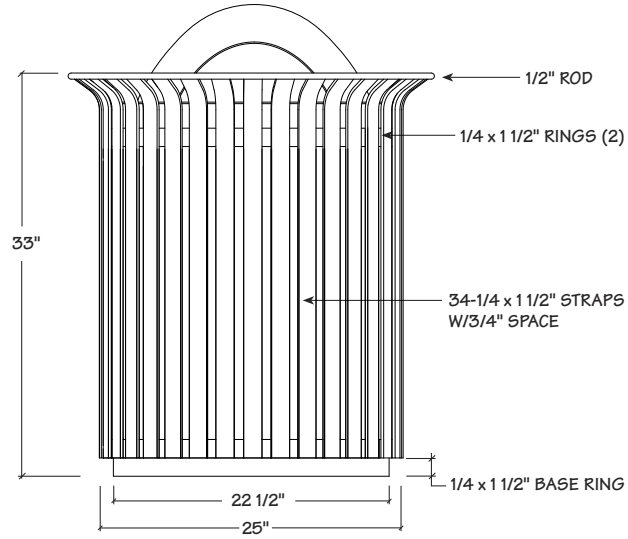

OPTIONAL DOME TOP

REV 10-04-05

SPECIFICATIONS

MATERIAL

The TR-12 trash receptacle shall be fabricated with 1/4 x 1 1/2" mild steel vertical slats welded to 1/4 x 1 1/2" hoops. Flared straps shall be welded to 1/2" rod. All steel shall conform to ASTM A36 hot rolled steel and shall be wheelabrated prior to fabrication.

Liner shall be standard 30 gallon galvanized metal can powder coated to match the receptacle.

Anchor bolts by others

WELDS

All welds between flat straps shall be smooth, continuous fillet welds ground smooth where necessary, to remove any burs or sharp edges. Where flared straps meet 1/2" rod, all welds are ground smooth for appearance.

PROTECTIVE COATINGS

Following fabrication the receptacles shall be cleaned and treated with a 5 stage iron phosphate process prior to the coating application. The protective coating shall be either polyester or polyester TGIC powder applied by the dry electrostatic method. The resultant coating shall be minimum of 4 mils thick on all surfaces.

OPTIONS

Tops: Open, Spun steel flat, Spun dome, Hinged dome, Hinged flat, Ash dome

Side opening door
35 gallon liner
Leveling legs

Note: Keyed lock available for hinged top and side opening versions only.

TR-12 Trash Receptacle

Addendum 3 - 2/8/2012

FairWeather Site Furnishings
360-895-2626 or Toll Free 800-323-1798
Port Orchard, Washington
©1999-2005 Leader International Corporation,
FairWeather Site Furnishings division

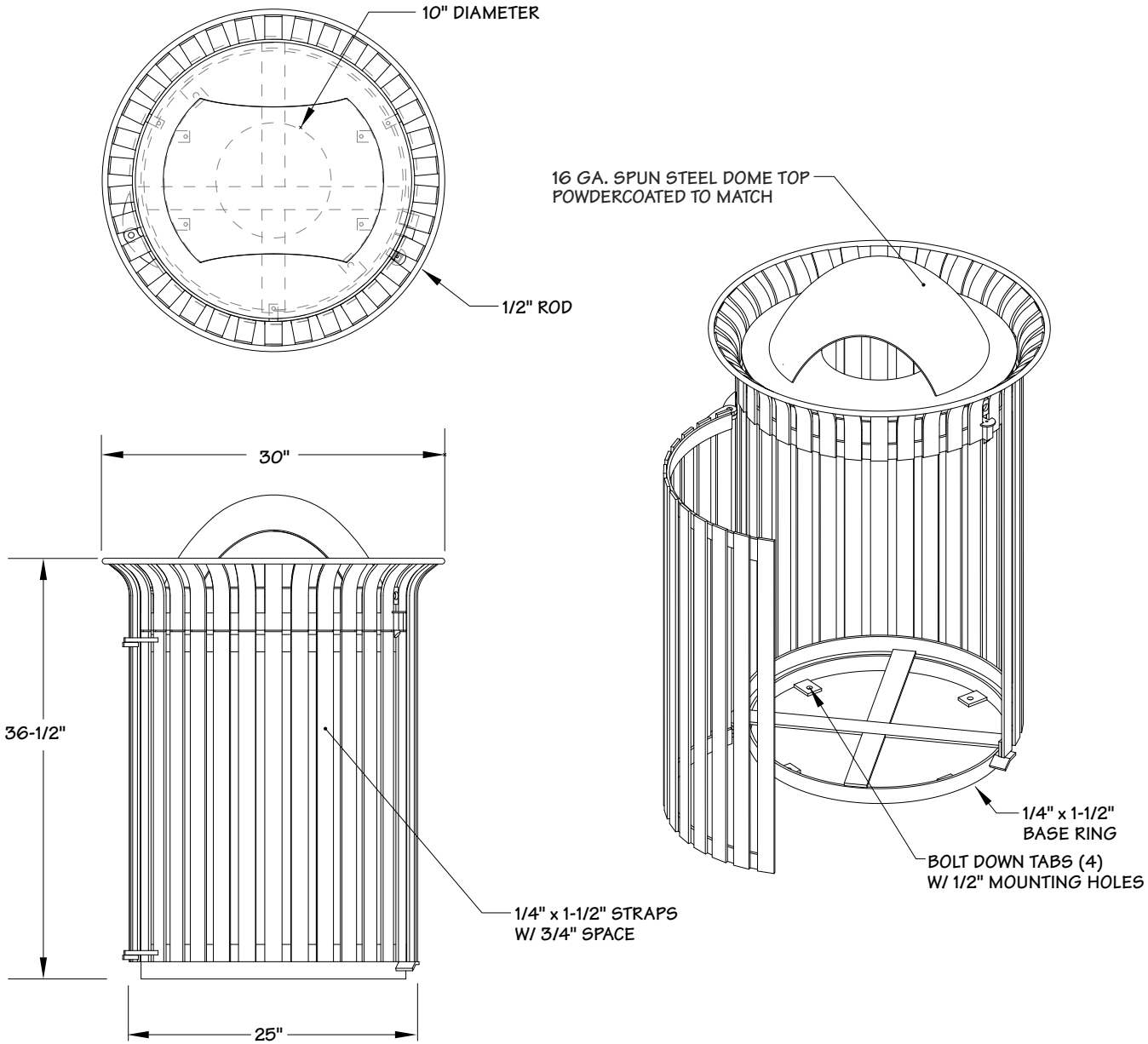

REV 03-01-11

SPECIFICATIONS

MATERIAL

The TR-12 trash receptacle shall be fabricated with 1/4 x 1-1/2" mild steel vertical slats welded to 1/4 x 1-1/2" hoops. Flared straps shall be welded to 1/2" rod. All steel shall conform to ASTM A36 hot rolled steel and shall be wheelabrated prior to fabrication.

Liner shall be standard 30 gallon galvanized metal can powder coated to match the receptacle.

Anchor bolts by others

WELDS

All welds between flat straps shall be smooth, continuous fillet welds ground smooth where necessary, to remove any burs or sharp edges. Where flared straps meet 1/2" rod, all welds are ground smooth for appearance.

PROTECTIVE COATINGS

Following fabrication the receptacles shall be cleaned and treated with a 5 stage iron phosphate process prior to the coating application. The protective coating shall be either polyester or polyester TGIC powder applied by the dry electrostatic method. The resultant coating shall be minimum of 4 mils thick on all surfaces.

OPTIONS

- Flat top
- Ash dome top
- Keyed lock
- Leveling feet
- Polyethylene liner

TR-12 Trash Receptacle, Dome Top with Side Opening and 30 gallon liner

Addendum 3 - 2/8/2012

FairWeather Site Furnishings
360-895-2626 or Toll Free 800-323-1798
Port Orchard, Washington
©1999-2011 Leader International Corporation,
FairWeather Site Furnishings division

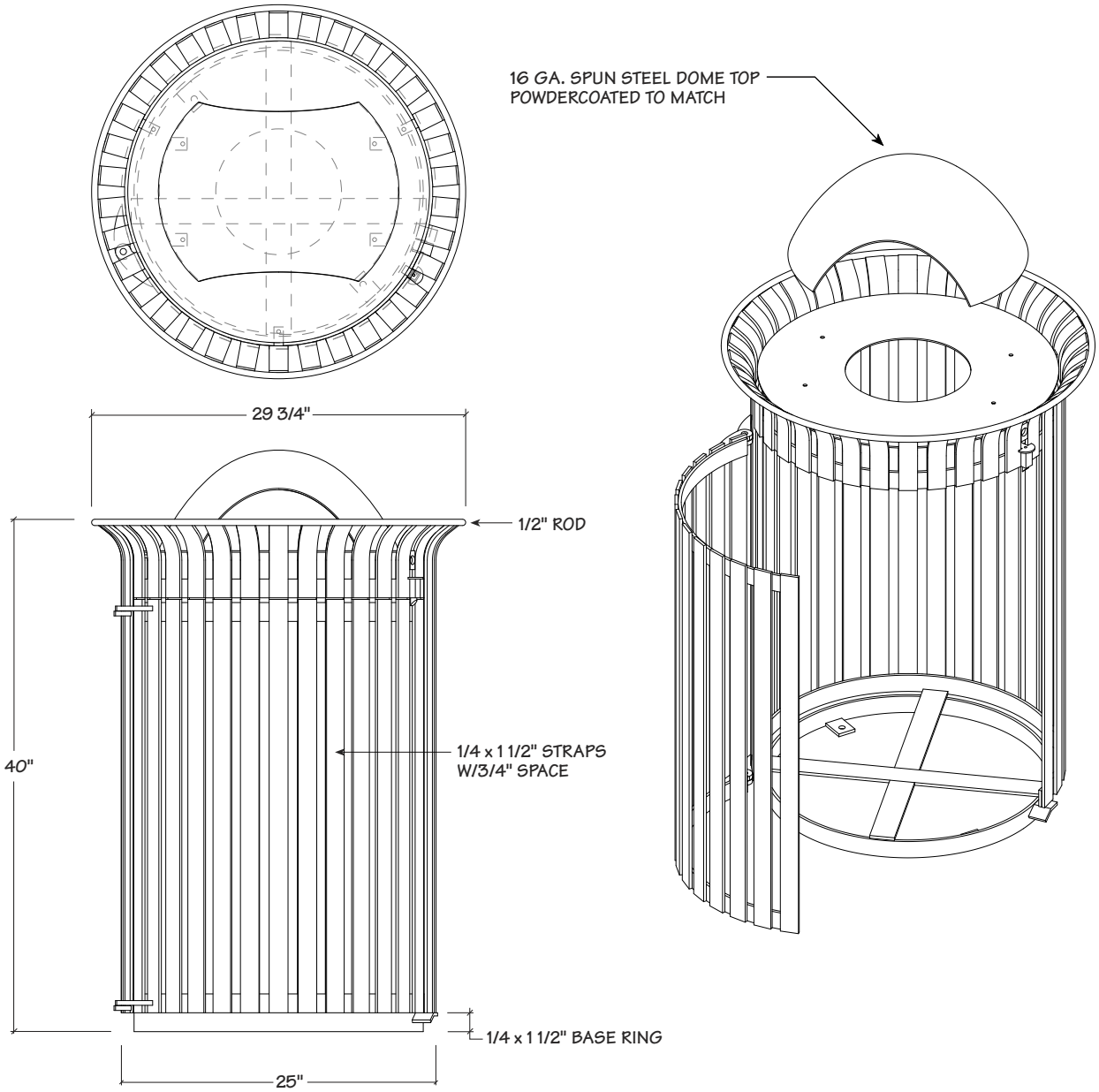

SPECIFICATIONS

MATERIAL

The TR-12 modified trash receptacle shall be fabricated with 1/4 x 1 1/2" mild steel vertical slats welded to 1/4 x 1 1/2" hoops. Flared straps shall be welded to 1/2" rod. All steel shall conform to ASTM A36 hot rolled steel and shall be wheelabrated prior to fabrication.

Liner shall be standard 35 gallon galvanized metal can powder coated to match the receptacle.

Anchor bolts by others

WELDS

All welds between flat straps shall be smooth, continuous fillet welds ground smooth where necessary, to remove any burs or sharp edges. Where flared straps meet 1/2" rod, all welds are ground smooth for appearance.

PROTECTIVE COATINGS

Following fabrication the receptacles shall be cleaned and treated with an iron phosphate process prior to the coating application. This process shall include a non-chromated alkaline cleaner and an iron phosphate treatment followed with an acidic sealer for maximum adhesion. The protective coating shall be polyester or polyester TGIC powder applied by the dry electrostatic method. The resultant coating shall be minimum of 4 mils thick on all surfaces.

OPTIONS

- lock
- flat top
- ash dome top
- Leveling feet

TR-12 Trash Receptacle with Side Opening and optional 35 gallon liner

Addendum 3 - 2/8/2012

FairWeather Site Furnishings
360-895-2626 or Toll Free 800-323-1798
Port Orchard, Washington
©1999-2002 Leader International Corporation,
FairWeather Site Furnishings division

Item No. SS11861
Doggy Duty Station

SS11861.1 Description

This item shall govern furnishing, fabricating, and erecting Doggy Duty Stations, where required per the Drawings. The Stations shall be constructed in accordance as indicated on the Drawings.

SS11861.2 Materials

A. Doggy Duty Stations

Sentry Pet Waste Station, DOGIPOT aluminum Pet Station, or approved equal as approved by the Engineer.

SS11861.3 Installation

The Doggy Duty Stations shall be erected at each location as identified on the Drawings. The attached installation specification labeled “Doggy Duty Station Installation Specification” shall be strictly followed.

They shall be the responsibility of the Contractor to maintain, if necessary during the progression of the project.

SS11861.4 Measurement

Doggy Duty Stations shall be measured per each.

SS11861.5 Payment

The work performed and the materials furnished as prescribed by this item shall be paid for per each only. The ‘per each’ price bid shall include full compensation for all work performed and all materials furnished in constructing, transporting, and maintaining the Stations as specified on the Drawings and as directed by the Engineer or designated representative.

Payment will be made under the following:

Pay Item No. SS11861: Doggy Duty Station Per Each.

END

Dog Duty Station Installation Spec Sheet

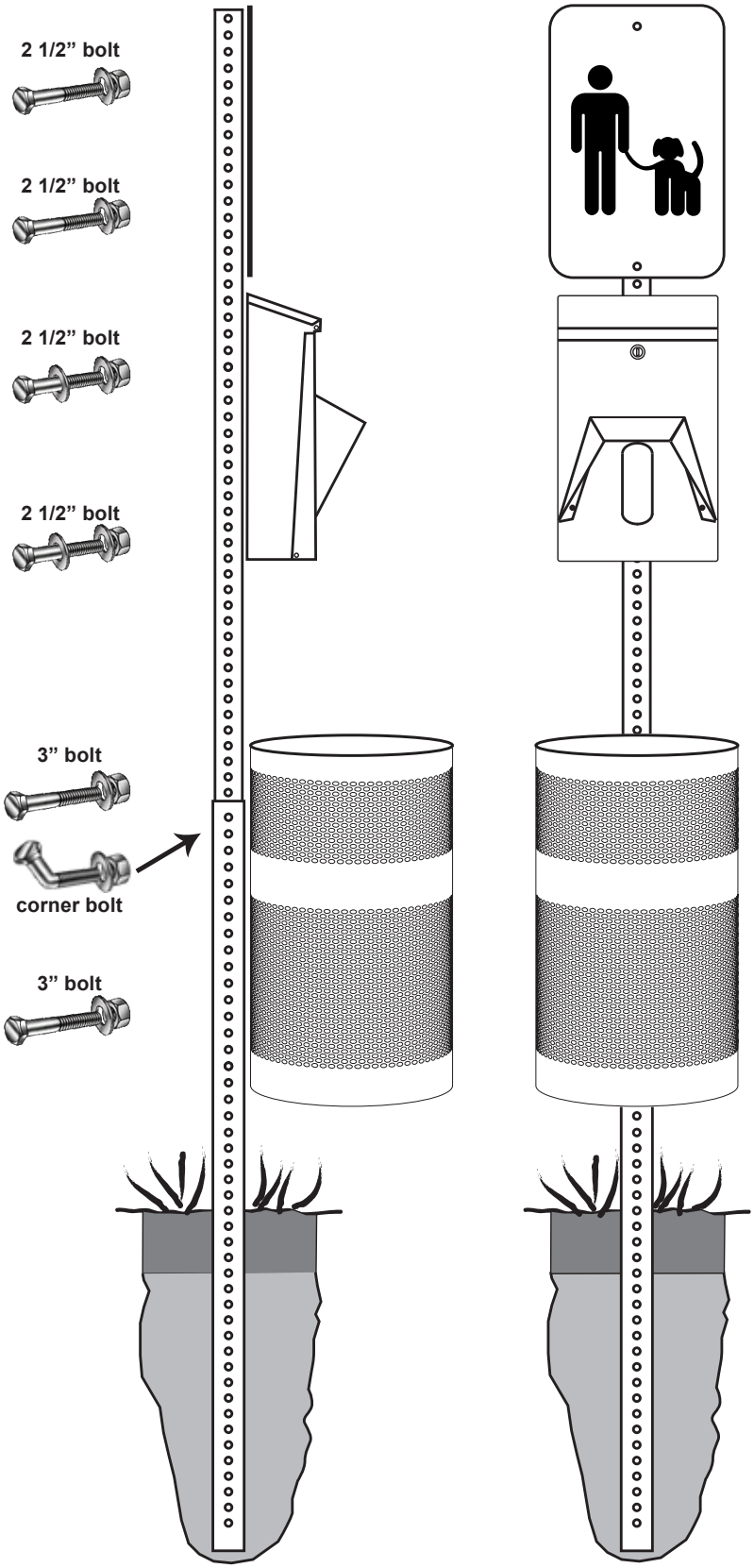

1 Setting the Post

Place 4’ post (2” square) in a hole 18” deep. Position and anchor post using temporary supports. Fill hole with concrete mix to a few inches below finish grade. Pour water and allow it to soak in. After concrete is cured, level hole with escavated material.

2 Completing the Post

Insert 5’ post (1.75” square) into 4’ post and align holes. Insert corner bolt in the second hole from top of 4’ post. The bolt should extend through the back of the post.

3 Adding Station Components

Attach sign starting in upper most hole of post. Attach the dispenser approximately 1 or 2 inches below sign. Attach waste receptacle approximately 6 inches from ground.

Hardware Summary

4 - 2 1/2” bolts (1/4”)
2 - 3” bolts (1/4”)
1 - 2” corner bolt (5/16”)
13 - flat washers
6 - nuts (1/4”)
1 - nut (5/16”)

LED PATRIOT WALL SCONCE (XPWS3)

Crossover® LED LIGHTING TECHNOLOGY

Crossover LED Lighting

lighting facts®
A Program of the U.S. DOE

Light Output (Lumens)	4020
Watts	53
Lumens per Watt (Efficacy)	76
Color Accuracy Color Rendering Index (CRI)	67
Light Color Correlated Color Temperature (CCT)	5320 (Daylight)

Warm White | Bright White | Daylight
2700K 3000K 4500K 6500K

All results are according to IESNA LM-79-2008: *Approved Method for the Electrical and Photometric Testing of Solid-State Lighting.* The U.S. Department of Energy (DOE) verifies product test data and results.

Visit www.lightingfacts.com for the *Label Reference Guide*.

Registration Number: KGGN-V1H7ZA
Model Number: XPWS3 FT LED 48 350 CW UE
Type: Outdoor wall pack

LIGHT OUTPUT - XPWS3

Milliamps	# of LEDs	Distribution/Lumens (Nominal)			
Cool White		**Type FT**	**Type WT**	**Type WW**	**Watts**
350 mA	28	2300	2280	2580	33
	48	4020	3940	4180	53
450 mA	28	2820	2740	3010	44
	48	4810	4680	4970	68
Neutral White					
350 mA	28	2260	2190	2430	32
	48	3740	3570	3760	52
450 mA	28	2660	2600	2850	41
	48	4420	4180	4450	67

C/F = Consult Factory

This product, or selected versions of this product, meet the standards listed below. Please consult factory for your specific requirements.

IP65

American Innovation — American Made

ARRA Funding Compliant

RoHS COMPLIANT

Intertek — Suitable for wet locations (downlight only)

US patents D562491 & 7828456 and US & Int'l. patents pending

SMARTTEC™ ENERGY SAVING FEATURES:

THERMAL CONTROL - Sensors in both optical unit and driver enclosure reduce drive current when ambient temperatures exceed 50ºC. Current is lowered in imperceptible 5% increments every 5 minutes until safe operating temperature is reached.

OCCUPANCY SENSING - Integral sensor (optional) detects movement and activates switching of luminaire to 30% power when no presence is detected. Smart dim slowly lowers light level over a 10-second period.

LEDs - Available with 28 or 48 select high-brightness LED's in Cool White (5300ºK nominal) or Neutral White (4200ºK nominal) color temperature, 70 CRI (nominal).

DRIVER CURRENT OPTIONS - Choose from two drive current levels; 350mA and 450mA (Drive currents are factory programmed).

OPTICS/DISTRIBUTIONS - Ultra-high efficiency reflectors provide three distributions. Choose from Wide Throw (WT), Forward Throw (FT) or Wall Wash (WW).

OPTICAL UNIT - Clear tempered optical-grade flat glass lens sealed to the die-cast aluminum optic housing creates an IP65 rated unit. Pressure stabilizing breather allows super-tight protection while preventing cycling from building up internal pressures and vacuums that can stress optical unit seals.

DRIVER - Components are fully encased in potting material for IP68 moisture resistance. Driver complies with IEC and FCC standards. Driver can be easily accessed and removed.

ELECTRICAL - Two-stage surge protection (including separate surge protection built into electronic driver) meets IEEE C62.41.2-2002, Scenario 1, Location Category C. Available with universal voltage power supply 120-277VAC (50/60Hz input), 347VAC and 480VAC.

OPTIONAL INTEGRAL MOTION SENSOR - Passive infrared motion sensor activates switching of luminaire light levels. High level light is activated when passersby enter target zone and increased to full bright in 1-2 seconds. Low light level (30% of maximum drive current) is activated when target zone is absent of motion activity for 5 minutes and is gradually ramped down (10 seconds) to low level. Sensor detection range 110º horizontal x 93º vertical x 10 meters maximum distance.

EMERGENCY OPTIONS - Integral emergency battery-back-up options are available. BB option operates in 0ºC to 60ºC ambient temperature and CWBB operates in -20ºC to 60ºC ambient temperature. When primary AC power failure occurs, both options operate 10 LEDs for a minimum of 90 minutes. EMR2 option for two external 12 volt circuits for use with 35 watt Halogen lamps (provided) is available.

HOUSING - One-piece die-cast aluminum housing is smoothly contoured rectangular shape. Mounting hardware is stainless steel or electro-zinc plated steel. Housing and optical unit are sealed with extruded silicone gasket; supply conductors with molded EPDM bushing.

OPERATING TEMPERATURE - -40ºC to +50ºC (-40ºF to +122ºF).

WALL MOUNTING - Galvanized-steel universal wall mounting plate easily mounts directly to 4" octagonal or square junction box. EPDM gasket is supplied to be installed between mounting plate and junction box, sealing junction box from entrance of water. Universal plate permits fixture to be mounted in uplighting (indoor only) or downlighting position.

POLE MOUNTING - XPMA option adds a clean look closure to the back of the housing and includes bracket to allow fixture to be pole-mounted.

FINISH - Fixtures are finished with LSI's DuraGrip® polyester powder coat finish process. The DuraGrip finish withstands extreme weather changes without cracking and peeling, and is guaranteed for five full years. See ordering guide for available standard colors.

SHIPPING WEIGHT (in carton) - 25 lbs. (11 kg)

EXPECTED LIFE - Minimum 60,000 hours to 100,000 hours depending upon the ambient temperature of the installation location. See LSI website for specific guidance.

WARRANTY - Limited 5-year warranty.

PHOTOMETRICS - Application layouts are available. Contact LSI Applications at lighting.apps@lsi-industries.com

LISTING - ETL listed to ANSI/UL1598, UL8750 and other U.S. and international safety standards. Suitable for wet locations in downlight position. Optional Class 1 Division 2 hazardous location rating is available. (Select HL option)

LSI Industries™ A Company with a Smart Vision

Project Name _____ Fixture Type _____

Catalog # _____

12/02/11

© 2012 LSI INDUSTRIES INC.

LED PATRIOT WALL SCONCE (XPWS3)

Crossover® LED LIGHTING TECHNOLOGY

LUMINAIRE ORDERING INFORMATION

TYPICAL ORDER EXAMPLE: **XPWS3 FT LED 48 450 CW UE WHT BB**

Prefix	Distribution	Light Source	# of LEDs	Drive Current	Color Temperature	Input Voltage	Finish	Options
XPWS3 - LED Patriot Wall Sconce	WT - Wide Throw FT - Forward Throw WW - Wall Wash	LED	28 48	350 - 350mA 450 - 450mA	CW - Cool White NW - Neutral White	UE - Universal Voltage (120-277) 347-480	BLK - Black BRZ - Bronze GPT - Graphite MSV - Metalic Silver PLP - Platinum Plus SVG - Satin Verde Green WHT - White	BB - Battery Back-up[1] CWBB - Cold Weather Battery Back-up[1] IMS - Integral Motion Sensor TP - Tamper Proof EMR2 - Two Emergency 12V Circuit Provisions with (2) 35 Watt Halogen Lamps[2,3] PCI 120 - Button Type Photocell PCI 208 - Button Type Photocell PCI 240 - Button Type Photocell PCI 277 - Button Type Photocell PCI 347 - Button Type Photocell HL - Class1, Division2, Hazardous Location Rating[3] XPMA - Pole Mounting Adaptor w/fixture backplate for use with square poles[4] XPMAR - Pole Mounting Adaptor w/fixture backplate for use with round poles[4]

ACCESSORY ORDERING INFORMATION (Accessories are field installed)

Description	Order Number
XPWS3 Polycarbonate Shield	244657
XPWS3 SW BLK - Surface Wiring Box (Available in black only)	356915BLK
SCDB - Tamper-proof Screwdriver Bit	420908

FOOTNOTES:

1- Available with UE voltage only.
2 - Utilizes GZ4 sockets. 12 volt separate circuits required.
3 - Not available with battery backup or photocell option.
4 - Not available with EMR2 option. Designed with 3" reduced drilling pattern. For S or D180 mounting configuration only.

DIMENSIONS

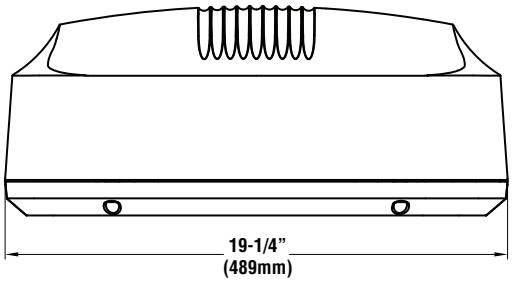

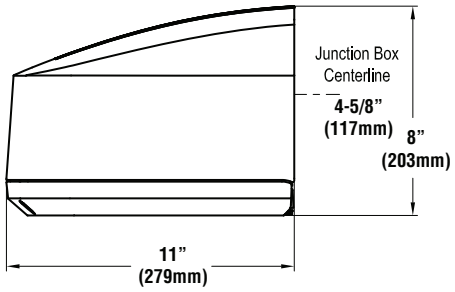

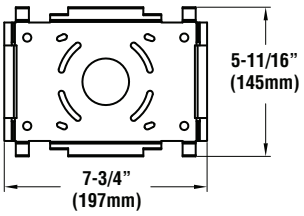

Universal Mounting Plate

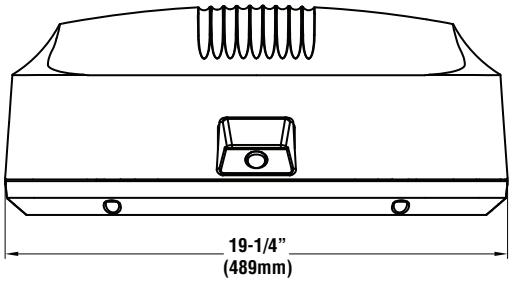

Shown with IMS Option

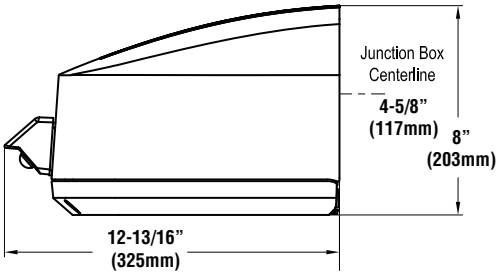

© 2012 LSI INDUSTRIES INC.

SS16540 ATTACHMENT C

CAN-EDG-3M-DM THE EDGE® LED Canopy Light – Type III Medium

Rev. Date: 9/22/11

BetaLED Catalog #: CAN - EDG - 3MB- DM - 08 - D - UL - BK - 350 - - XA-BRDSPK

Notes:

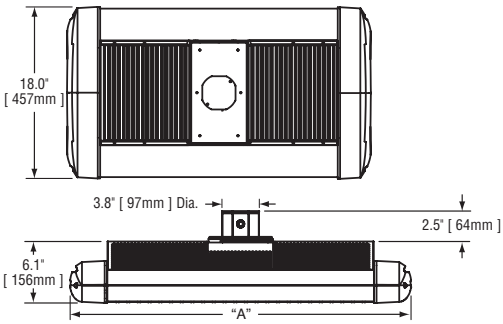

# of LEDs	Dim. "A"
40	16.06"
60	18.06"
80	16.06"
100	18.06"
120	20.06"
140	22.06"
160	24.06"
200	28.06"
240	32.06"

Product	Family	Optic	Mounting	# of LEDs (x 10)	LED Series	Voltage	Color Options	Drive Current (Not Field Adjustable)	Factory-Installed Options (Please type additional options in manually on the lines provided above.)
CAN	EDG	☐ 3M[1] ☑ 3MB[2]	DM[3]	☐ 04[4] ☐ 06[5] ☑ 08 ☐ 10 ☐ 12 ☐ 14 ☐ 16 ☐ 20 ☐ 24	D	☑ UL Universal 120–277V ☐ UH Universal 347–480V ☐ 12 120V ☐ 24 240V ☐ 27 277V ☐ 34 347V	☐ SV Silver ☑ BK Black ☐ BZ Bronze ☐ PB Platinum Bronze ☐ WH White	☑ 350 350mA ☐ 525[6] 525mA ☐ 700[7] 700mA	☐ 43K 4300K Color Temperature[8] ☐ DIM 0–10V Dimming[9,10] ☐ F Fuse[11,12,13] ☐ HL Hi/Low (175/350/525, dual circuit input)[14] ☐ P Photocell[13,14,15] ☐ ML Multi-Level (75/525)[14]

Footnotes

1. Type III Medium distribution
2. Type III Medium distributio with backlight control
3. Direct mount
4. Uses 80 LED size with two blanks in outside positions
5. Uses 100 LED size with two blanks in outside positions
6. Available on fixtures with 40–160 LEDs
7. Available on fixtures with 40–60 LEDs
8. Color temperature per luminaire; 6000K standard; minimum 70 CRI
9. Control by others
10. Refer to dimming spec sheet for availability and additional information
11. When code dictates fusing use time delay fuse
12. Not available when UH voltage is selected
13. Not available with all multi-level options. Refer to multi-level spec sheet for availability and additional information
14. Refer to multi-level spec sheet for availability and additional information
15. Must specify voltage other than UL or UH
16. 120 LED maximum when 34 voltage is selected

LED PERFORMANCE SPECS

# of LEDs	Initial Delivered Lumens – Type III Medium @ 6000K	B	U	G (Rating**)	Initial Delivered Lumens – Type III Medium w/ backlight control @ 6000K	B	U	G (Rating**)	Initial Delivered Lumens – Type III Medium @ 4300K	B	U	G (Rating**)	Initial Delivered Lumens – Type III Medium w/ backlight control @ 4300K	B	U	G (Rating**)	System Watts 120–480V	Total Current @ 120V	Total Current @ 240V	Total Current @ 277V	Total Current @ 347V	Total Current @ 480V	L_{70} Hours* @ 25° C (77° F)	50K Hours Lumen Maintenance Factor* @ 15° C (59° F)
350mA Fixture Operating at 25° C (77° F)																								
40	3,628 (04)	1	1	1	2,683 (04)	1	1	1	3,343 (04)	1	1	1	2,473 (04)	0	1	1	47	0.40	0.21	0.19	0.15	0.12	>150,000	93%
60	5,371 (06)	2	2	2	3,973 (06)	1	2	1	4,950 (06)	2	2	2	3,662 (06)	1	2	1	68	0.58	0.30	0.26	0.20	0.16	>150,000	
80	7,161 (08)	2	2	2	5,298 (08)	1	2	2	6,600 (08)	2	2	2	4,882 (08)	1	2	1	90	0.77	0.38	0.34	0.26	0.20	>150,000	
100	8,929 (10)	3	3	3	6,605 (10)	1	3	2	8,230 (10)	2	2	2	6,088 (10)	1	2	2	111	0.95	0.47	0.42	0.32	0.24	>150,000	
120	10,715 (12)	3	3	3	7,926 (12)	1	3	2	9,876 (12)	3	3	3	7,305 (12)	1	3	2	132	1.15	0.56	0.50	0.38	0.28	>150,000	
140	12,444 (14)	3	3	3	9,205 (14)	1	3	2	11,469 (14)	3	3	3	8,484 (14)	1	3	2	157	1.34	0.67	0.61	0.47	0.35	149,000	
160	14,222 (16)	3	3	3	10,520 (16)	1	3	2	13,108 (16)	3	3	3	9,696 (16)	1	3	2	179	1.54	0.76	0.68	0.53	0.39	149,000	
200	17,778 (20)	3	3	3	13,151 (20)	2	3	3	16,385 (20)	3	3	3	12,120 (20)	1	3	2	221	1.92	0.95	0.84	0.65	0.48	149,000	
240	21,333 (24)	3	3	3	15,781 (22)	2	3	3	19,662 (24)	3	3	3	14,544 (24)	2	3	3	264	2.30	1.12	1.00	0.77	0.56	149,000	
525mA Fixture Operating at 25° C (77° F)																								
40	5,079 (04)	2	2	2	3,757 (04)	1	2	1	4,681 (04)	2	2	2	3,462 (04)	1	2	1	70	0.57	0.29	0.26	0.21	0.16	136,000	92%
60	7,520 (06)	2	2	2	5,562 (06)	1	2	2	6,930 (06)	2	2	2	5,127 (06)	1	2	1	102	0.87	0.44	0.39	0.30	0.22	129,000	
80	10,026 (08)	3	3	3	7,417 (08)	1	3	2	9,240 (08)	3	3	3	6,835 (08)	1	3	2	133	1.14	0.56	0.49	0.39	0.29	129,000	
100	12,501 (10)	3	3	3	9,247 (10)	1	3	2	11,521 (10)	3	3	3	8,523 (10)	1	3	2	172	1.47	0.75	0.67	0.51	0.38	128,000	
120	15,001 (12)	3	3	3	11,097 (12)	1	3	2	13,826 (12)	3	3	3	10,227 (12)	1	3	2	204	1.76	0.88	0.78	0.60	0.44	128,000	
140	17,422 (14)	3	3	3	12,888 (14)	2	3	2	16,057 (14)	3	3	3	11,878 (14)	1	3	2	233	2.01	0.99	0.87	0.69	0.51	123,000	
160	19,911 (16)	3	3	3	14,729 (16)	2	3	2	18,351 (16)	3	3	3	13,575 (16)	2	3	3	265	2.29	1.11	0.98	0.78	0.57	123,000	
700mA Fixture Operating at 25° C (77° F)																								
40	6,203 (04)	2	2	2	4,562 (04)	1	2	1	5,717 (04)	2	2	2	4,204 (04)	1	2	1	93	0.79	0.40	0.35	0.27	0.20	111,000	90%
60	9,185 (06)	3	3	3	6,754 (06)	1	3	2	8,465 (06)	2	3	2	6,225 (06)	1	2	2	137	1.18	0.59	0.51	0.39	0.29	111,000	

* For recommended lumen maintenance factor data see TD-13.

** For more information on the IES BUG (Backlight-Uplight-Glare) Rating visit www.iesna.org/PDF/Erratas/TM-15-07BugRatingsAddendum.pdf

© 2011 Ruud Lighting Inc. – A Cree Company. All rights reserved. The information in this document is subject to change without notice.

9201 Washington Ave • Racine, WI 53406-3772 • 800-236-6800 • www.betaLED.com

Made in the U.S.A. of U.S. and imported parts.
Meets Buy American requirements within the ARRA.

Addendum 3 - 2/8/2012

CAN-EDG-3M-DM THE EDGE® LED Canopy Light – Type III Medium

Rev. Date: 9/22/11

General Description

Slim, low profile, easy mounting below deck design. Luminaire sides are rugged cast aluminum with integral, weather-tight LED driver compartments and high performance aluminum heatsinks specifically designed for LED lighting application, J-Box sized to fit through existing 4-inch (102mm) diameter mount holes and is designed for through wiring and wet location installations. Luminaire mounts directly to canopy with lag bolts (by others). When mounting to solid surfaces, Adaptor Plate Kit accessory is required. Mating surface is gasketed to prevent water leak through. Includes bug/bird guard. Five year limited warranty on fixture.

Electrical

Modular design accommodates varied lighting output from high power, white, 6000K (+/- 500K per full fixture), minimum 70 CRI, long life LED sources. Optional 4300K (+/- 300K per full fixture) also available. 120–277V 50/60 Hz, Class 1 LED drivers are standard. 347–480V 50/60 Hz driver is optional. LED drivers have power factor >90% and THD <20% at full load. Units provided with integral 10kV surge suppression protection standard. Surge protection tested in accordance with IEEE/ANSI C62.41.2.

Testing & Compliance

UL listed in the U.S. and Canada for wet locations and enclosure rating IP66 per IEC 60529. Consult factory for CE Certified products. Dark Sky Friendly. IDA Approved. RoHS compliant.

Finish

Exclusive Colorfast DeltaGuard® finish features an E-Coat epoxy primer with an ultra-durable silver powder topcoat, providing excellent resistance to corrosion, ultraviolet degradation and abrasion. Bronze, black, white and platinum bronze powder topcoats are also available. The finish is covered by our 10 year limited warranty.

Fixture and finish are endurance tested to withstand 5,000 hours of elevated ambient salt fog conditions as defined in ASTM Standard B 117.

Patents

U.S. and international patents granted and pending. BetaLED is a division of Ruud Lighting, Inc. For a listing of Ruud Lighting, Inc. patents, visit www.uspto.gov.

Field-Installed Accessories

Bird Spikes
☐ XA-BRDSPK

Adaptor Plate Kit
☐ XA-CLSB16
For use when mounting fixture to solid surfaces.

Photometrics

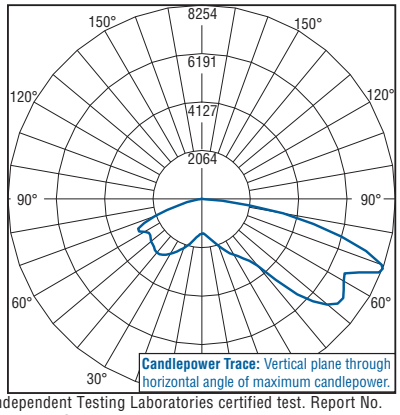

Independent Testing Laboratories certified test. Report No. ITL67871. Candlepower trace of 4300K, 160 LED Type III Medium area luminaire with 18,862 initial delivered lumens operating at 525mA. **All published luminaire photometric testing performed to IESNA LM-79-08 standards.**

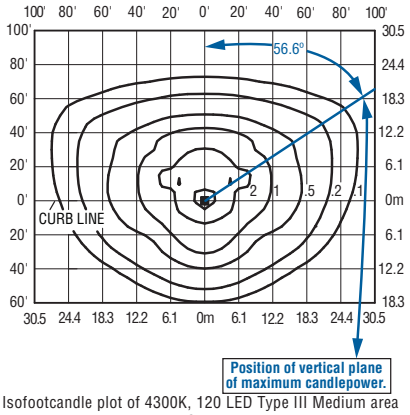

Isofootcandle plot of 4300K, 120 LED Type III Medium area luminaire at 25' (7.6m) A.F.G. Luminaire with 13,826 initial delivered lumens operating at 525mA. Initial FC at grade.

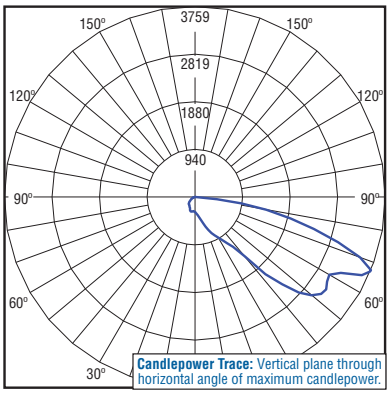

Independent Testing Laboratories certified test. Report No. ITL68539. Candlepower trace of 4300K, 40 LED Type III Medium w/ backlight control area luminaire with 5,084 initial delivered lumens operating at 525mA. **All published luminaire photometric testing performed to IESNA LM-79-08 standards.**

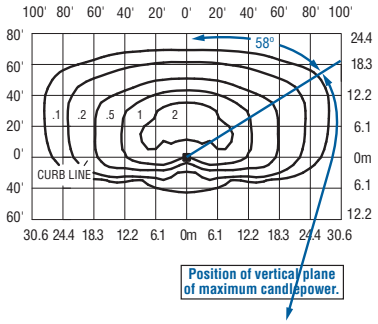

Isofootcandle plot of 4300K, 120 LED Type III Medium area luminaire at 25' (7.6m) A.F.G. Luminaire with 10,227 initial delivered lumens operating at 525mA. Initial FC at grade.

© 2011 Ruud Lighting Inc. – A Cree Company. All rights reserved. The information in this document is subject to change without notice.

9201 Washington Ave • Racine, WI 53406-3772 • 800-236-6800 • www.betaLED.com

Made in the U.S.A. of U.S. and imported parts.
Meets Buy American requirements within the ARRA.

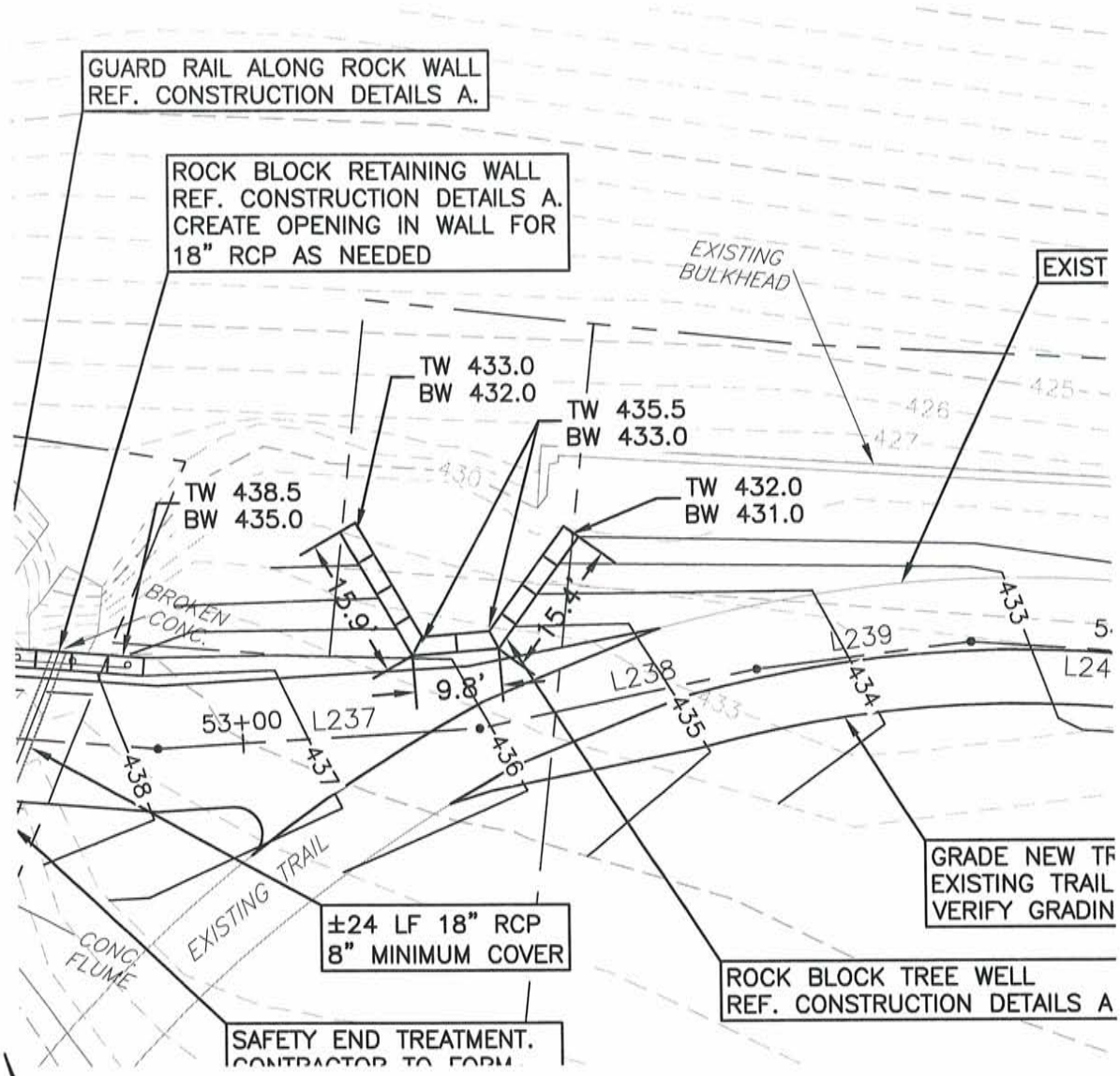

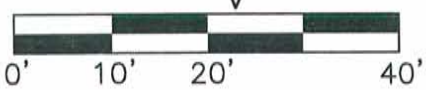

JACOBS®
TBPE Registration #F-2966
2705 Bee Cave Road, Suite 300
Austin, Texas 78746
(512) 314-3100 Fax (512) 314-3135

BOARDWALK TRAIL AT LADY BIRD LAKE

CITY OF AUSTIN

TREE WELL SPOT ELEVATIONS
ADDENDUM 3
C-034

PRINT DATE: 2/1/2012	SCALE: NO SCALE	LAST SAVED BY: Koranskyan	LAST SAVED: 2/1/2012	PROJECT No.: WGXG1402

L:\COA Boardwalk\95% – WGXG1402\CAD Files\ADDENDA\ADDENDUM 3\C-034 – wall spot elevations

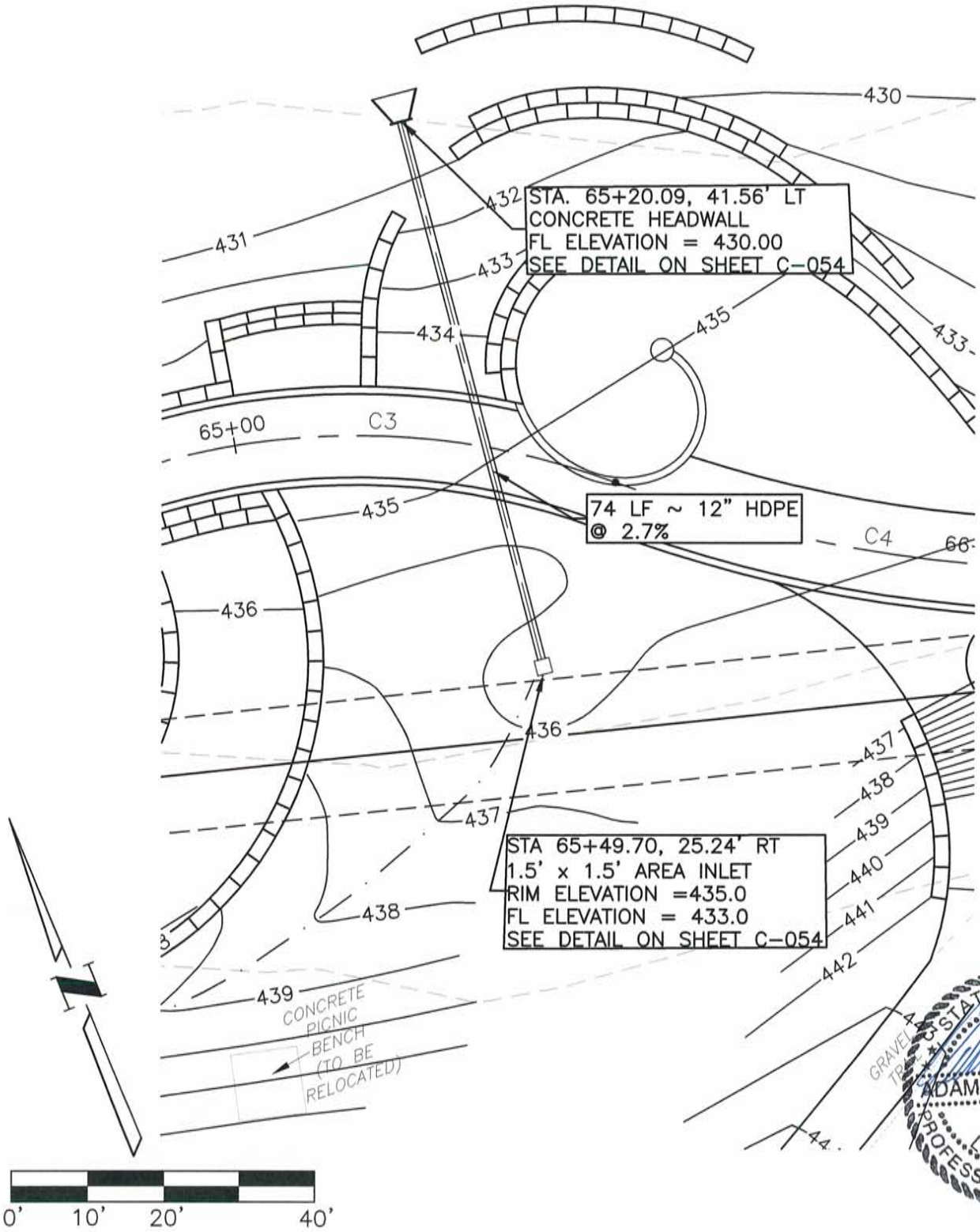

STATE OF TEXAS
ADAM N. KORANSKY
95988
LICENSED
PROFESSIONAL ENGINEER
1/27/12

JACOBS®

TBPE Registration #F-2966
2705 Bee Cave Road, Suite 300
Austin, Texas 78746
(512) 314-3100 Fax (512) 314-3135

BOARDWALK TRAIL AT LADY BIRD LAKE

CITY OF AUSTIN

STORM SEWER PLAN
ADDENDUM 3
SHEET C-037

PRINT DATE: 1/27/2012	SCALE: NO SCALE	LAST SAVED BY: Koranskyan	LAST SAVED: 1/27/2012	PROJECT No.: WGXG1402

L:\COA Boardwalk\95% - WGXG1402\CAD Files\ADDENDA\ADDENDUM 3\STORM SEWER PLAN

ALL CONCRETE SHALL HAVE A 28 DAY COMPRESSIVE STRENGTH OF 4500 psi.

REINFORCING STEEL SHALL COMPLY WITH ASTM A615 GRADE 60, A706 GRADE 60 OR A497 GRADE 70. BAR BENDING AND PLACEMENT SHALL COMPLY WITH THE LATEST ACI STANDARDS

STANDARD STRUCTURAL DESIGN IS BASED ON AASHTO HS 20 WHEEL LOADING

WATER TABLE IS AT 3'-0" BELOW GRADE FOR STANDARD STRUCTURAL DESIGN

THE STANDARD DESIGN IS BASED ON THE TOP AT GRADE AND THE BASE AT 8'-0" MAX. BELOW GRADE.

THE STRUCTURE SHALL BE PLACED ON A COMPACTED GRANULAR BASE TO INSURE UNIFORM DISTRIBUTION OF SOIL PRESSURES.

SPECIAL DESIGNS BASED ON OTHER LOADINGS OR DEEPER INSTALLATION DEPTHS ARE AVAILABLE ON REQUEST.

KNOCKOUTS OR PIPE OPENINGS OR CAN BE PROVIDED IN THE SIZE AND LOCATIONS REQUIRED.

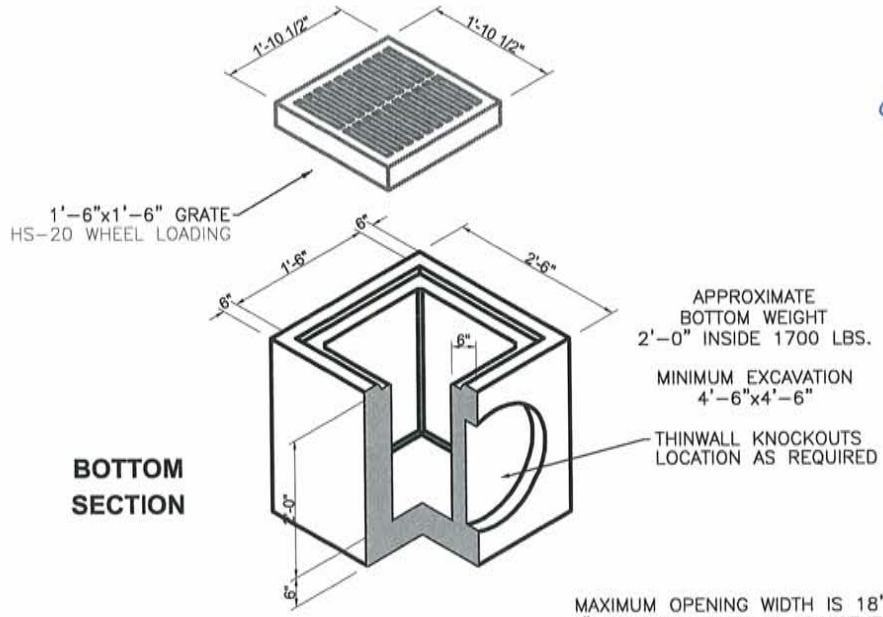

STATE OF TEXAS
ADAM N. KORANSKY
95988
LICENSED
PROFESSIONAL ENGINEER
1/27/12

Oldcastle Precast® 1900 Rilling Road San Antonio, TX 78214 Phone: (210) 923-4523 Fax: (210) 921-0473	GI1515 FILE NAME: 1515GI.dwg ISSUE DATE: March, 2005 www.oldcastlesanantonio.com	1'-6"x1'-6" GRATE INLET Copyright 2005 Oldcastle Precast All Rights Reserved

* OR ENGINEERS APPROVED EQUAL

JACOBS® TBPE Registration #F-2966 2705 Bee Cave Road, Suite 300 Austin, Texas 78746 (512) 314-3100 Fax (512) 314-3135	BOARDWALK TRAIL AT LADY BIRD LAKE CITY OF AUSTIN	AREA INLET DETAIL ADDENDUM 3

PRINT DATE: 1/27/2012	SCALE: NO SCALE	LAST SAVED BY: Koranskyan	LAST SAVED: 1/27/2012	PROJECT No.: WGXG1402

L:\COA Boardwalk\95% - WGXG1402\CAD Files\ADDENDA\Addendum 2\STORM STRUCTURES DETAILI

ALL CONCRETE SHALL HAVE A 28 DAY COMPRESSIVE STRENGTH OF 4500 psi.

REINFORCING STEEL SHALL COMPLY WITH ASTM A615 GRADE 60, A706 GRADE 60 OR A497 GRADE 70. BAR BENDING AND PLACEMENT SHALL COMPLY WITH THE LATEST ACI STANDARDS

WATER TABLE IS AT 3'-0" BELOW GRADE FOR STANDARD STRUCTURAL DESIGN

THE STRUCTURE SHALL BE PLACED ON A COMPACTED GRANULAR BASE TO INSURE UNIFORM DISTRIBUTION OF SOIL PRESSURES.

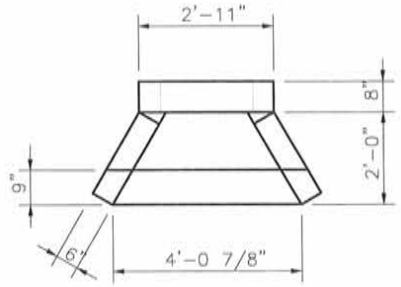

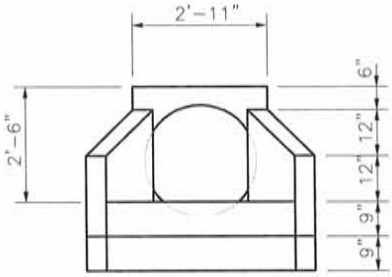

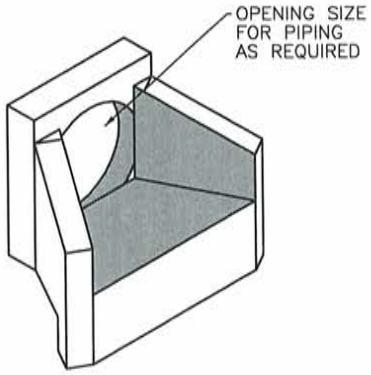

APPROXIMATE WEIGHT
2700 LBS.

STATE OF TEXAS
ADAM N. KORANSKY
95988
LICENSED
PROFESSIONAL ENGINEER
1/27/12

Oldcastle Precast® 1900 Rilling Road San Antonio, TX 78214 Phone: (210) 923-4523 Fax: (210) 921-0473	**WW12D WW15D WW18D** FILE NAME: HEADWAL1.dwg ISSUE DATE: March, 2005 www.oldcastlesanantonio.com	**HEADWALL FOR PIPE CULVERTS 12" 15" OR 18" PIPE SIZES** Copyright 2005 Oldcastle Precast All Rights Reserved

* OR ENGINEERS APPROVED EQUAL

JACOBS® TBPE Registration #F-2966 2705 Bee Cave Road, Suite 300 Austin, Texas 78746 (512) 314-3100 Fax (512) 314-3135	BOARDWALK TRAIL AT LADY BIRD LAKE CITY OF AUSTIN	HEADWALL DETAIL ADDENDUM 3

PRINT DATE: 1/27/2012	SCALE: NO SCALE	LAST SAVED BY: Koranskyan	LAST SAVED: 1/27/2012	PROJECT No.: WGXG1402

L:\COA Boardwalk\95% - WGXG1402\CAD Files\ADDENDA\Addendum 2\STORM STRUCTURES DETAILI

LINE TABLE						
LINE #	LENGTH (FT.)	BEARING	SEGMENT TYPE*	SEG. GRADE	PIER BEGIN	PIER END
L266	16.679	N17° 31' 36.94"E	–	–	–	–
L267	6.000	N12° 18' 03.76"E	–	–	–	A18
L268	25.000	N12° 18' 03.76"E	–	–	A18	A19
L269	11.126	N35° 18' 03.76"E	–	–	A19	A20
L270	42.000	N58° 18' 03.76"E	–	–	A20	A21
L271	11.126	N81° 18' 03.76"E	–	–	A21	A22
L272	70.000	S75° 41' 56.24"E	–	–	A22	A23
L273	9.316	S75° 41' 56.24"E	–	–	A23	–
L274	9.397	S82° 34' 56.40"E	–	–	–	A24
L275	64.000	N82° 30' 39.71"E	–	–	A24	A14
L276	8.227	N10° 42' 57.69"E	–	–	–	A25
L277	56.000	N10° 42' 57.69"E	–	–	A25	A13

* SEE STRUCTURAL SHEETS FOR SEGMENT DETAILS

NOTES:
ONLY CHANGE IS THAT A16 AND A17 HAVE BEEN REMOVED FROM L266 AND L267. THESE ABUTMENTS WERE PREVIOUSLY ELIMINATED BUT THE TABLE DID NOT REFLECT THAT.

STATE OF TEXAS
ADAM N. KORANSKY
95988
LICENSED
PROFESSIONAL ENGINEER
2/1/12

JACOBS®
TBPE Registration #F-2966
2705 Bee Cave Road, Suite 300
Austin, Texas 78746
(512) 314-3100 Fax (512) 314-3135

BOARDWALK TRAIL AT LADY BIRD LAKE

CITY OF AUSTIN

LINE TABLE
ADDENDUM 3
C-038

PRINT DATE: 2/1/2012 | SCALE: NO SCALE | LAST SAVED BY: Koranskyan | LAST SAVED: 2/1/2012 | PROJECT No.: WGXG1402

L:\COA Boardwalk\95% – WGXG1402\CAD Files\ADDENDA\ADDENDUM 3\line table sheet C-038

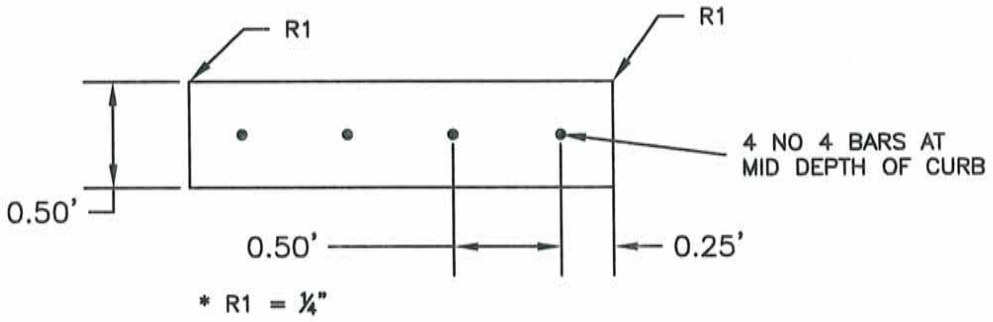

REINFORCED LAYDOWN CURB

SECTION NTS

STATE OF TEXAS
ADAM N. KORANSKY
95988
LICENSED
PROFESSIONAL ENGINEER
1/31/12

JACOBS®
TBPE Registration #F-2966
2705 Bee Cave Road, Suite 300
Austin, Texas 78746
(512) 314-3100 Fax (512) 314-3135

BOARDWALK TRAIL AT LADY BIRD LAKE

CITY OF AUSTIN

CURB DETAIL
ADDENDUM 3
SHEET C-053

PRINT DATE: 1/31/2012	SCALE: NO SCALE	LAST SAVED BY: Koranskyan	LAST SAVED: 1/31/2012	PROJECT No.: WGXG1402

L:\COA Boardwalk\95% – WGXG1402\CAD Files\ADDENDA\ADDENDUM 3\CURB DETAIL

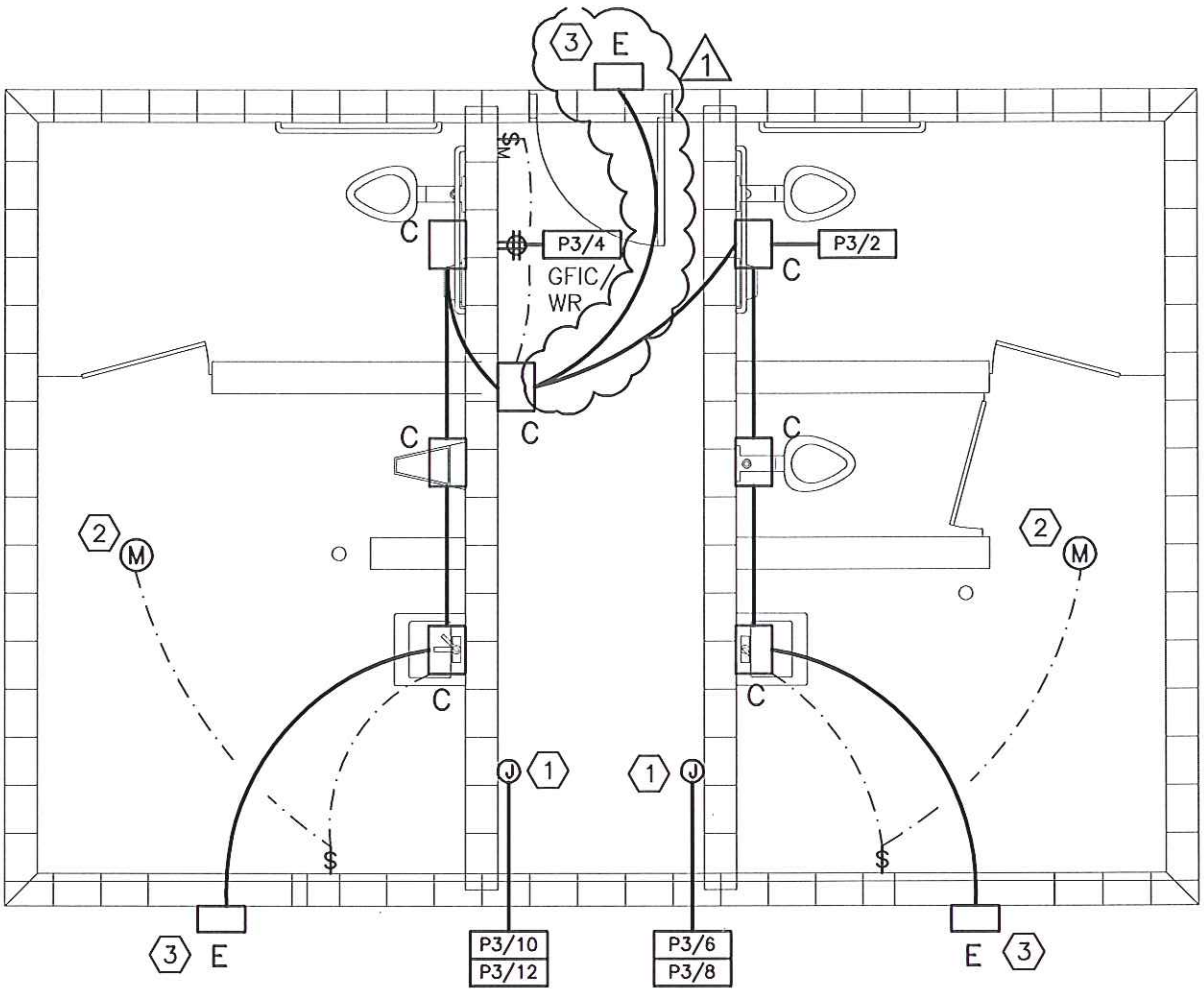

1 RESTROOM ELECTRICAL PLAN

SCALE: 1/4" = 1'-0"

ENCOTECH
ENGINEERING CONSULTANTS, INC.
T.B.P.E. Firm Registration Number: 1141
8500 Bluffstone Cove Suite B-103 Austin, TX 78759
Web Site: www.encotechengineering.com

STATE OF TEXAS
DAVID B. MITCHELL
87000
LICENSED
PROFESSIONAL ENGINEER
1/23/12

JACOBS®
TBPE Registration #F-2966
2705 Bee Cave Road, Suite 300
Austin, Texas 78746
(512) 314-3100 Fax (512) 314-3135

BOARDWALK TRAIL AT LADY BIRD LAKE

CITY OF AUSTIN

EXTERIOR LIGHTING
ADDENDUM 3 SHEET E-021

PRINT DATE: 1/23/2012	SCALE: NO SCALE	LAST SAVED BY: Stephan	LAST SAVED: 1/23/2012	PROJECT No.: WGXG1402

J:\ACTIVE PROJECTS\Jacobs Engineering\Lady Bird Lake Boardwalk\MEP\LBB – Addendum2–012312

LIGHTING FIXTURE SCHEDULE

NO.	MANUFACTURER	MODEL NUMBER	V	LAMP TYPE	MOUNTING	REMARKS
A	TIVOLI	ILT-1010-C-P-WW-04-12	240 1ø	LED 4" SPACING	RECESSED	RECTANGULAR LED LIGHT TUBE, 4" BULB SPACING, 12VDC, POWER SUPPLIES SPECIFIED BELOW IN SCHEDULE.
A2	TIVOLI	ILT-1010-C-P-WW-02-12	240 1ø	LED 2" SPACING	RECESSED	RECTANGULAR LED LIGHT TUBE, 2" BULB SPACING 12VDC, POWER SUPPLIES SPECIFIED BELOW IN SCHEDULE.
PS	TIVOLI	POWER SUPPLY: MT60-1-5-12-D "PS" DESIGNATION REPRESENTS TWO (2) POWER SUPPLIES	240 1ø	N/A	NEMA 6P BOX	(2) 60W POWER SUPPLIES SHALL BE WET LISTED, MOUNTED IN (1) NEMA 6P BOX, PRIMARY VOLTAGE INPUT RANGE 100 – 240VAC, 12VDC OUTPUT.
B	BRUCK	ORIOR AL-C 135305/F –	240 1ø	LED	SURFACE	AMBER LENS, LED NAVIGATION LIGHTING FIXTURE WITH INTEGRAL POWER SUPPLY.
C	LITHONIA	OLW14	120 1ø	(8) LED	SURFACE	SURFACE MOUNTED, WET RATED, LED FIXTURE WITH ALUMINUM HOUSING, POLYCARBONATE LENS, INTEGRAL DRIVER WITH SURGE PROTECTION.
E	LSI	XPWS3 FT LED 28 350 CW UE GPT CWBB	120 1ø	(28) LED	SURFACE	FULL CUTOFF WALL MOUNTED LED FIXTURE WITH EMERGENCY BATTERY BACKUP ON UNSWITCHED CIRCUIT.
PL	BETA	ARE-EDG-4MB-DA-12-D-UL-BK-350 POLE: PS3S20C-1-BK	240 1ø	LED – 8 BARS	POLE	FULL CUTOFF, LED TYPE POLE LIGHTING FIXTURE ON 20 FOOT POLE. MEDIUM DISTRIBUTION WITH SHARP CUTOFF ON HOUSE SIDE.
BL	BETA	CAN-EDG-3MB-DM-08-D-UL-BK-350-XA-BRDSPK	240 1ø	LED – 8 BARS	SURFACE	LED TYPE SURFACE MOUNTED LIGHTING FIXTURE, MEDIUM DISTRIBUTION, FULL CUTOFF WITH BIRD SPIKES OPTION.

NOTES:
1. PROVIDE ENERGY SAVING BALLASTS FOR ALL FIXTURES WHEREVER AVAILABLE.
2. ALL FIXTURES ORDERED WITH COLD WEATHER BALLAST.
3. COORDINATE WITH ARCHITECT FOR MOUNTING HEIGHT AND LOCATION OF LIGHT FIXTURES.
4. ALL LED LAMPS SHALL BE INCLUDED WITH FIXTURE AND BE FURNISHED WITH DRIVER.

STATE OF TEXAS
DAVID B. MITCHELL
87000
LICENSED
PROFESSIONAL ENGINEER
2/6/12

JACOBS®
TBPE Registration #F-2966
2705 Bee Cave Road, Suite 300
Austin, Texas 78746
(512) 314-3100 Fax (512) 314-3135

BOARDWALK TRAIL AT LADY BIRD LAKE

CITY OF AUSTIN

LIGHTING SCHEDULE
ADDENDUM 3 SHEET E-022

PRINT DATE: 2/6/2012 | SCALE: NO SCALE | LAST SAVED BY: Stephan | LAST SAVED: 2/6/2012 | PROJECT No.: WGXG1402

J:\ACTIVE PROJECTS\Jacobs Engineering\Lady Bird Lake Boardwalk\MEP\LBB – Addendum3-020212

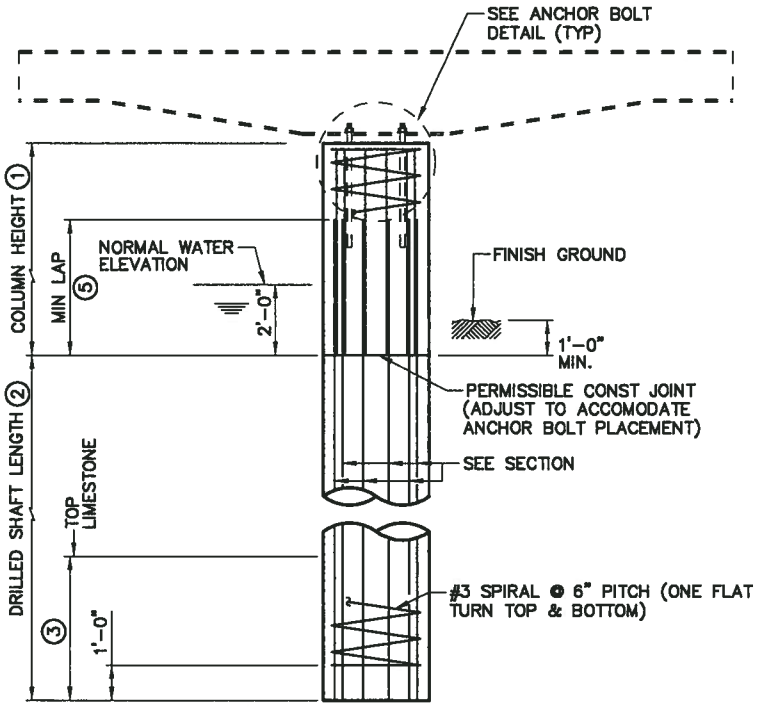

COLUMN & DRILLED SHAFTS

(INTERIOR PIER)
(N.T.S.)

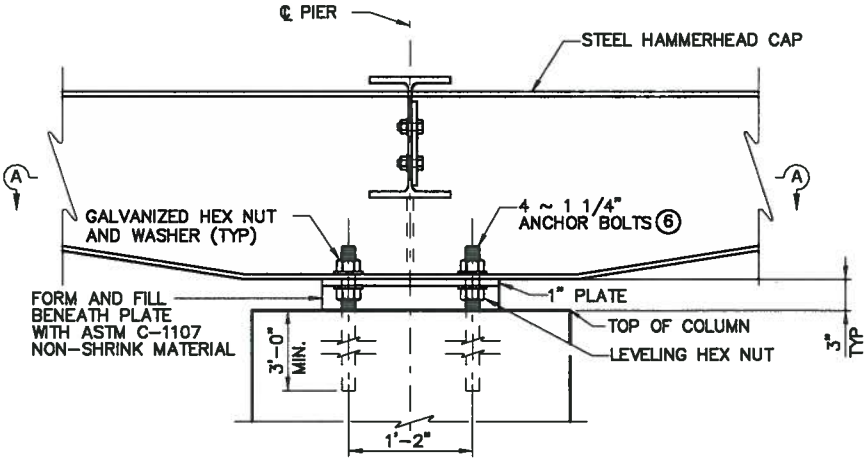

ANCHOR BOLT DETAIL

(N.T.S.)

NOTE:
ALL ANCHOR BOLTS, NUTS AND WASHERS ARE HOT DIP GALVANIZED IN ACCORDANCE WITH ITEM 720S.7

STATE OF TEXAS
SCOTT L. WALLACE
86585
LICENSED
PROFESSIONAL ENGINEER
1/27/12

JACOBS®
TBPE Registration #F-2966
2705 Bee Cave Road, Suite 300
Austin, Texas 78746
(512) 314-3100 Fax (512) 314-3135

BOARDWALK TRAIL AT LADY BIRD LAKE

CITY OF AUSTIN

COLUMN & DRILLED SHAFT DETAILS
ADDENDUM 3

SHEET S-014 SHEET 1 OF 2

PRINT DATE: 1/27/2012	SCALE: NO SCALE	LAST SAVED BY: CCS	LAST SAVED: 1/27/2012	PROJECT No.: WGXG1403

L:\!CAD\WGXG1400-LADY BIRD LAKE BOARDWALK\BDG\DGN\SHT\DTLS\1400_LBL_BRFRPL01_AD2.dgn

GENERAL NOTES:

DESIGNED ACCORDING TO IBC AND AASHTO LRFD SPECIFICATIONS.

CONCRETE STRENGTH F'C = 3600 PSI

COLUMN AND DRILLED SHAFT REINFORCING MAY BE GRADE 40.

ANCHOR BOLTS SHALL BE F1554 GR 55.

(1) COLUMN HEIGHT USED FOR DESCRIPTION ONLY. COLUMN AND DRILLED SHAFT MEASURED AND PAID AS DRILLED SHAFT. BOTTOM OF COLUMN IS DEFINED AS 2 FOOT BELOW THE NORMAL WATER ELEVATION OR 1 FOOT BELOW FINISHED GROUND. PROVIDE RUBBED FINISH FOR COLUMN.

(2) SEE PIER ELEVATIONS & QUANTITIES TABLE FOR DRILLED SHAFT LENGTH AND DIAMETER. PERMANENT CASING PERMITTED BELOW PERMISSABLE CONSTRUCTION JOINT LOCATION SHOWN ONLY. MAINTAIN SPIRAL COVER SHOWN TO OUTSIDE EDGE OF CONCRETE.

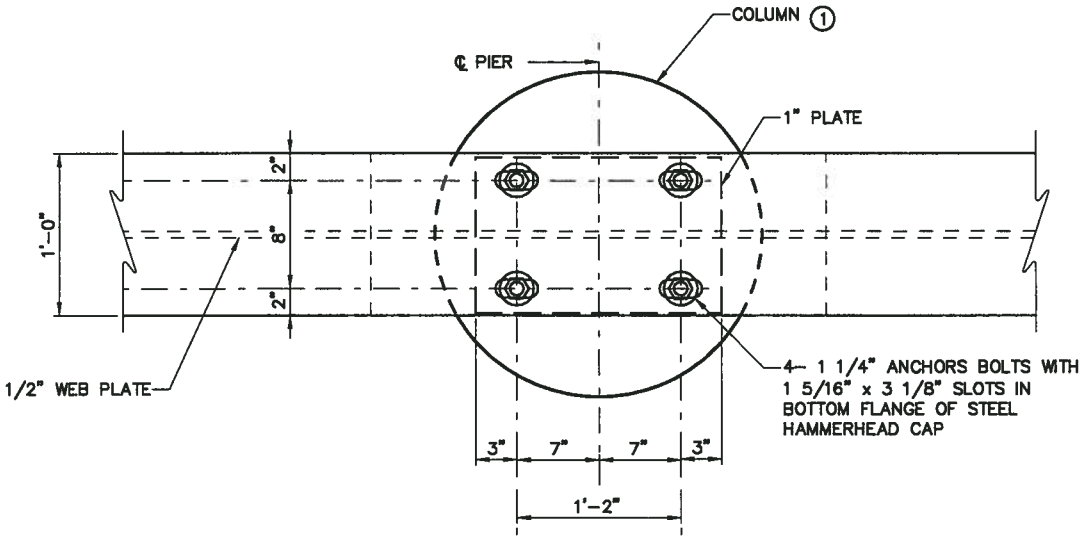

SECTION A-A
(N.T.S.)

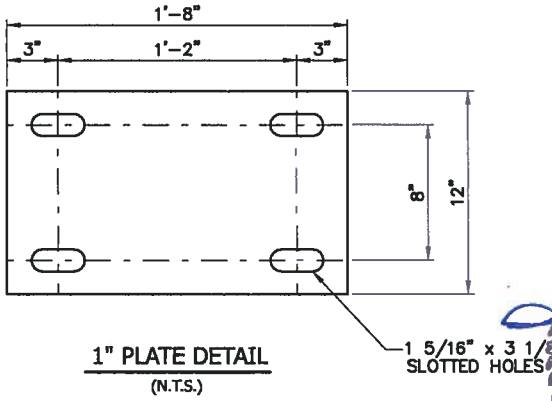

1" PLATE DETAIL
(N.T.S.)

STATE OF TEXAS
SCOTT L. WALLACE
86585
LICENSED
PROFESSIONAL ENGINEER
1/27/12

JACOBS®
TBPE Registration #F-2966
2705 Bee Cave Road, Suite 300
Austin, Texas 78746
(512) 314-3100 Fax (512) 314-3135

BOARDWALK TRAIL AT LADY BIRD LAKE

CITY OF AUSTIN

COLUMN & DRILLED SHAFT DETAILS
ADDENDUM 3

SHEET S-014 SHEET 2 OF 2

PRINT DATE: 1/27/2012	SCALE: NO SCALE	LAST SAVED BY: CCS	LAST SAVED: 1/27/2012	PROJECT No.: WGXG1403

L:\!CAD\WGXG1400-LADY BIRD LAKE BOARDWALK\BDG\DGN\SHT\DTLS\1400_LBL_BRFRPL01_AD2.dgn

PIER MARK	STATION	BEARING (ABUTMENT OR HAMMERHEAD CAP)	① OFFSET
P98	27+16.42	N26° 26' 45.68"E	—
P99	27+36.42	N26° 26' 45.68"E	—
P100	27+56.42	N26° 26' 45.68"E	—
P101	27+76.42	N26° 26' 45.68"E	—
P102	27+96.42	N26° 26' 45.68"E	—
P103	28+16.42	N31° 26' 45.68"E	—
P104	28+36.42	N36° 26' 45.68"E	—
P105	28+56.42	N31° 26' 45.68"E	—
P106	28+76.42	N26° 26' 45.68"E	—
P107	28+96.42	N26° 26' 45.68"E	—
P108	29+16.42	N26° 26' 45.68"E	—
P109	29+36.42	N26° 26' 45.68"E	—
P110	29+56.42	N29° 26' 45.68"E	—
P111	29+76.42	N32° 26' 45.68"E	—
P112	29+96.42	N22° 26' 45.68"E	1.87'RT
P113	30+16.42	N12° 26' 45.68"E	—
P114	30+36.42	N02° 26' 45.68"E	1.87'RT
P115	30+56.42	N07° 33' 14.32"W	—
P116	30+76.42	N02° 26' 45.68"E	1.87'LT
P117	30+96.42	N12° 26' 45.68"E	—
P118	31+16.42	N12° 26' 45.68"E	—
P119	31+36.42	N22° 26' 45.68"E	1.87'LT
P120	31+56.42	N32° 26' 45.68"E	—
P121	31+76.42	N32° 26' 45.68"E	—
P122	31+96.42	N42° 26' 45.68"E	1.87'LT
P123	32+16.42	N52° 26' 45.68"E	—
P124	32+36.42	N57° 26' 45.68"E	—
P125	32+56.42	N62° 26' 45.68"E	—
P126	32+76.42	N62° 26' 45.68"E	—
P127	32+96.42	N62° 26' 45.68"E	—
A6	33+16.42	N52°26'45.68"E	1.87'RT
A7	34+00.15	N31° 04' 57.34"E	—
A15	34+29.69	N18° 57' 50.74"E	56.53'RT
A8	35+30.15	N31° 04' 57.34"E	—
A9	37+55.33	N04° 02' 33.93"W	—
P128	37+75.33	N04° 02' 33.93"W	—
P129	37+95.33	N04° 02' 33.93"W	—
P130	38+15.33	N04° 02' 33.93"W	—
P131	38+35.33	N04° 02' 33.93"W	—
P132	38+55.33	N04° 02' 33.93"W	—
P133	38+75.33	N04° 02' 33.93"W	—
P134	38+95.33	N00° 57' 26.07"E	—
P135	39+15.33	N05° 57' 26.07"E	—
P136	39+35.33	N05° 57' 26.07"E	—
P137	39+55.33	N08° 57' 26.07"E	—
P138	39+75.33	N11° 57' 26.08"E	—
P139	39+95.33	N21° 57' 26.08"E	1.87'LT
P140	40+15.33	N31° 57' 26.08"E	—
P141	40+35.33	N41° 57' 26.08"E	1.87'LT
P142	40+55.33	N51° 57' 26.08"E	—
P143	40+75.33	N51° 57' 26.08"E	—
P144	40+95.33	N41° 57' 26.08"E	1.87'RT

STATE OF TEXAS
SCOTT L. WALLACE
86585
LICENSED
PROFESSIONAL ENGINEER
2/1/12

① DISTANCE FROM BOARDWALK ALIGNMENT.

JACOBS®
TBPE Registration #F-2966
2705 Bee Cave Road, Suite 300
Austin, Texas 78746
(512) 314-3100 Fax (512) 314-3135

BOARDWALK TRAIL AT LADY BIRD LAKE

CITY OF AUSTIN

PIER/ABUT LOCATION & ORIENTATION - SHEET 1 OF 2
ADDENDUM 3

SHEET S-042 SHEET 1 OF 1

PRINT DATE: 2/1/2012 | SCALE: NO SCALE | LAST SAVED BY: MGD | LAST SAVED: 2/1/2012 | PROJECT No.: WGXG1403

PIER ELEVATIONS & QUANTITIES TABLE

PIER MARK	PIER ELEV (AT DECK SURFACE) ①	BORE NO.	TOP OF DRILLED SHAFT ELEV	ESTIMATED TOP OF ROCK ELEV	ESTIMATED TIP ELEV	ESTIMATED DR SHAFT LENGTH	DR SHAFT DIAMETER ③	NUMBER OF DR SHAFTS	ESTIMATED TOTAL DR SHAFT LENGTH	HAMMERHEAD CAP			
										LENGTH	STRUCTURAL STEEL WEIGHT	MISCELANEOUS STEEL ② WEIGHT	TOTAL STEEL WEIGHT
			FT	FT	FT	FT	FT		FT	FT	LBS	LBS	LBS
A1	438.10	B1	432.704	401	396	37	1.5	2	74	SEE ABUTMENT DETAILS			
P1	437.60	B1	435.017	401	395	41	3	1	41	13'-8"	895	115	1010
P2	436.80	B1	434.217	401	395	40	3	1	40	13'-8"	895	115	1010
P3	436.00	B1	433.417	401	395	39	3	1	39	13'-8"	895	115	1010
P4	435.50	B1	432.917	401	395	38	3	1	38	13'-8"	895	115	1010
P5	435.00	B1	432.417	401	395	38	3	1	38	13'-8"	895	115	1010
P6	435.00	B1	432.417	401	395	38	3	1	38	17'-2"	1140	115	1255
P7	435.00	B1	432.417	401	395	38	3	1	38	13'-8"	895	115	1010
P8	435.00	B1	432.417	401	395	38	3	1	38	13'-8"	895	115	1010
P9	435.00	B1	432.417	401	395	38	3	1	38	13'-8"	895	115	1010
P10	435.00	B1	432.417	401	395	38	3	1	38	13'-8"	895	115	1010
P11	435.00	B1	432.417	401	395	38	3	1	38	17'-2"	1140	115	1255
P12	435.00	B1	432.417	401	395	38	3	1	38	13'-8"	895	115	1010
P13	435.00	B1	432.417	401	395	38	3	1	38	13'-8"	895	115	1010
P14	435.00	B1	432.417	401	395	38	3	1	38	13'-8"	895	115	1010
P15	435.00	B1	432.417	401	395	38	3	1	38	13'-8"	895	115	1010
P16	435.00	B1	432.417	401	395	38	3	1	38	13'-8"	895	115	1010
P17	435.00	B1	432.417	401	395	38	3	1	38	13'-8"	895	115	1010
P18	435.00	B1	432.417	401	395	38	3	1	38	13'-8"	895	115	1010
P19	435.50	B1	432.917	401	395	38	3	1	38	13'-8"	895	115	1010
P20	436.00	B1	433.417	401	395	39	3	1	39	13'-8"	895	115	1010
P21	436.00	B1	433.417	401	395	39	3	1	39	13'-8"	895	115	1010
P22	435.50	B1	432.917	401	395	38	3	1	38	13'-8"	895	115	1010
P23	435.00	B1	432.417	401	395	38	3	1	38	13'-8"	895	115	1010
P24	435.00	B2	432.417	401	395	38	3	1	38	13'-8"	895	115	1010
P25	435.00	B2	432.417	401	395	38	3	1	38	13'-8"	895	115	1010
P26	435.00	B2	432.417	401	395	38	3	1	38	13'-8"	895	115	1010
P27	435.00	B2	432.417	401	395	38	3	1	38	13'-8"	895	115	1010
P28	435.00	B2	432.417	401	395	38	3	1	38	13'-8"	895	115	1010
P29	435.00	B2	432.417	401	395	38	3	1	38	17'-2"	1140	115	1255
P30	435.00	B2	432.417	401	395	38	3	1	38	13'-8"	895	115	1010
P31	435.00	B2	432.417	401	395	38	3	1	38	17'-2"	1140	115	1255
P32	435.00	B2	432.417	401	395	38	3	1	38	13'-8"	895	115	1010
P33	435.00	B2	432.417	401	395	38	3	1	38	17'-2"	1140	115	1255
P34	435.00	B2	432.417	401	395	38	3	1	38	13'-8"	895	115	1010
P35	435.00	B2	432.417	401	395	38	3	1	38	17'-2"	1140	115	1255
P36	435.00	B2	432.417	401	395	38	3	1	38	13'-8"	895	115	1010
P37	435.00	B2	432.417	401	395	38	3	1	38	17'-2"	1140	115	1255
P38	435.00	B2	432.417	401	395	38	3	1	38	13'-8"	895	115	1010
P39	435.00	B2	432.417	401	395	38	3	1	38	17'-2"	1140	115	1255
P40	435.00	B2	432.417	401	395	38	3	1	38	13'-8"	895	115	1010
P41	435.00	B2	432.417	401	395	38	3	1	38	13'-8"	895	115	1010
P42	435.00	B2	432.417	401	395	38	3	1	38	13'-8"	895	115	1010
P43	435.00	B2	432.417	401	395	38	3	1	38	17'-2"	1140	115	1255
P44	435.00	B2	432.417	401	395	38	3	1	38	13'-8"	895	115	1010
P45	435.00	B2	432.417	401	395	38	3	1	38	17'-2"	1140	115	1255
P46	435.00	B2	432.417	401	395	38	3	1	38	13'-8"	895	115	1010
P47	435.00	B2	432.417	401	395	38	3	1	38	13'-8"	895	115	1010
P48	435.00	B2	432.417	401	395	38	3	1	38	13'-8"	895	115	1010
P49	435.00	B3	432.417	396	390	43	3	1	43	13'-8"	895	115	1010

① SURFACE ELEVATION AT INTERSECTION OF PIER ℄ AND ALIGNMENT.

② MISCELLANEOUS STRUCURAL STEEL INCLUDES CONNECTION PLATES, SHEAR PLATE, BEARING PLATE, BOLTS, NUTS AND WASHERS.

③ DRILLED SHAFT DIAMETERS GIVEN FOR ESTIMATING PURPOSES ONLY. ALL SHAFTS EXTENDING 30 FT OR MORE ABOVE ACTUAL TOP OF ROCK SHALL BE 36" IN DIAMETER.

STATE OF TEXAS
SCOTT L. WALLACE
86585
LICENSED
PROFESSIONAL ENGINEER
1/27/12

JACOBS®
TBPE Registration #F-2966
2705 Bee Cave Road, Suite 300
Austin, Texas 78746
(512) 314-3100 Fax (512) 314-3135

BOARDWALK TRAIL AT LADY BIRD LAKE

CITY OF AUSTIN

PIER/ABUT ELEVATIONS & QUANTITIES - SHEET 1 OF 5
ADDENDUM 3

SHEET S-044 SHEET 1 OF 1

PRINT DATE: 1/27/2012 | SCALE: NO SCALE | LAST SAVED BY: CCS | LAST SAVED: 1/27/2012 | PROJECT No.: WGXG1403

L:\ICAD\WGXG1400-LADY BIRD LAKE BOARDWALK\BDG\DGN\SHT\DTLS\1400_LBL_BR01SUM03_AD2.dgn

PIER ELEVATIONS & QUANTITIES TABLE

PIER MARK	PIER ELEV (AT DECK SURFACE) ①	BORE NO.	TOP OF DRILLED SHAFT ELEV	ESTIMATED TOP OF ROCK ELEV	ESTIMATED TIP ELEV	ESTIMATED DR SHAFT LENGTH	DR SHAFT DIAMETER ③	NUMBER OF DR SHAFTS	ESTIMATED TOTAL DR SHAFT LENGTH	HAMMERHEAD CAP			
										LENGTH	STRUCTURAL STEEL WEIGHT	MISCELANEOUS STEEL ② WEIGHT	TOTAL STEEL WEIGHT
			FT	FT	FT	FT	FT		FT	FT	LBS	LBS	LBS
P50	435.50	B3	432.917	396	390	43	3	1	43	13'-8"	895	115	1010
P51	436.00	B3	433.417	396	390	44	3	1	44	13'-8"	895	115	1010
P52	436.00	B3	433.417	396	390	44	3	1	44	13'-8"	895	115	1010
P53	436.00	B3	433.417	396	390	44	3	1	44	13'-8"	895	115	1010
P54	436.00	B3	433.417	396	390	44	3	1	44	13'-8"	895	115	1010
P55	436.00	B3	433.417	396	390	44	3	1	44	13'-8"	895	115	1010
P56	436.00	B3	433.417	396	390	44	3	1	44	13'-8"	895	115	1010
P57	436.00	B3	433.417	396	390	44	3	1	44	17'-2"	1140	115	1255
P58	436.00	B3	433.417	396	390	44	3	1	44	13'-8"	895	115	1010
P59	436.00	B3	433.417	396	390	44	3	1	44	13'-8"	895	115	1010
P60	436.00	B3	433.417	396	390	44	3	1	44	13'-8"	895	115	1010
P61	436.00	B3	433.417	396	390	44	3	1	44	17'-2"	1140	115	1255
P62	436.00	B3	433.417	396	390	44	3	1	44	13'-8"	895	115	1010
P63	436.00	B3	433.417	396	390	44	3	1	44	13'-8"	895	115	1010
P64	436.00	B3	433.417	396	390	44	3	1	44	13'-8"	895	115	1010
P65	436.00	B3	433.417	396	390	44	3	1	44	13'-8"	895	115	1010
P66	436.00	B3	433.417	396	390	44	3	1	44	13'-8"	895	115	1010
P67	436.00	B3	433.417	396	390	44	3	1	44	17'-2"	1140	115	1255
P68	436.00	B3	433.417	396	390	44	3	1	44	13'-8"	895	115	1010
P69	436.00	B3	433.417	396	390	44	3	1	44	13'-8"	895	115	1010
P70	436.00	B3	433.417	396	390	44	3	1	44	13'-8"	895	115	1010
P71	436.00	B3	433.417	396	390	44	3	1	44	13'-8"	895	115	1010
P72	436.50	B3	433.917	396	390	44	3	1	44	13'-8"	895	115	1010
P73	437.30	B3	434.717	396	390	45	3	1	45	13'-8"	895	115	1010
P74	438.10	B3	435.517	396	390	46	3	1	46	13'-8"	895	115	1010
P75	438.60	B3	436.017	396	390	47	3	1	47	13'-8"	895	115	1010
A2	438.60	B3	433.204	396	391	43	1.5	2	86	SEE ABUTMENT DETAILS			
A3	440.00	B3	435.854	396	391	45	1.5	2	90	SEE ABUTMENT DETAILS			
P75B	438.60	B3	436.017	396	390	47	3	1	47	13'-8"	895	115	1010
P76	440.00	B3	437.417	396	390	48	3	1	48	13'-8"	895	115	1010
P77	440.00	B3	437.417	396	390	48	3	1	48	17'-2"	1140	115	1255
P78	440.00	B3	437.417	396	390	48	3	1	48	13'-8"	895	115	1010
P79	440.00	B3	437.417	396	390	48	3	1	48	17'-2"	1140	115	1255
P80	440.00	B3	437.417	396	390	48	3	1	48	13'-8"	895	115	1010
P81	440.00	B3	437.417	396	390	48	3	1	48	17'-2"	1140	115	1255
P82	440.00	B3	437.417	396	390	48	3	1	48	13'-8"	895	115	1010
A4	440.00	B3	435.854	396	391	45	1.5	2	90	SEE ABUTMENT DETAILS			
A5	438.50	B4	434.354	414	409	26	1.5	2	52	SEE ABUTMENT DETAILS			
P83	438.50	B4	435.917	414	409	27	2.5	1	27	13'-8"	895	115	1010
P84	438.00	B4	435.417	414	409	27	2.5	1	27	13'-8"	895	115	1010
P85	437.50	B4	434.917	414	409	26	2.5	1	26	13'-8"	895	115	1010
P86	437.50	B4	434.917	414	409	26	2.5	1	26	17'-2"	1140	115	1255
P87	437.50	B4	434.917	414	409	26	2.5	1	26	13'-8"	895	115	1010
P88	437.50	B4	434.917	414	409	26	2.5	1	26	17'-2"	1140	115	1255
P89	437.50	B4	434.917	414	409	26	2.5	1	26	13'-8"	895	115	1010
P90	437.00	B4	434.417	414	409	26	2.5	1	26	13'-8"	895	115	1010
P91	436.50	B4	433.917	414	409	25	2.5	1	25	13'-8"	895	115	1010
P92	436.00	B4	433.417	414	409	25	2.5	1	25	13'-8"	895	115	1010
P93	435.50	B4	432.917	414	409	24	2.5	1	24	13'-8"	895	115	1010
P94	435.00	B4	432.417	414	409	24	2.5	1	24	13'-8"	895	115	1010
P95	434.50	B4	431.917	414	409	23	2.5	1	23	13'-8"	895	115	1010
P96	434.50	B4	431.917	414	409	23	2.5	1	23	13'-8"	895	115	1010
P97	434.50	B4	431.917	414	409	23	2.5	1	23	13'-8"	895	115	1010
P98	434.50	B4	431.917	414	409	23	2.5	1	23	13'-8"	895	115	1010
P99	434.50	B4	431.917	414	409	23	2.5	1	23	13'-8"	895	115	1010
P100	434.50	B4	431.917	414	409	23	2.5	1	23	13'-8"	895	115	1010

① SURFACE ELEVATION AT INTERSECTION OF PIER ℄ AND ALIGNMENT.

② MISCELLANEOUS STRUCURAL STEEL INCLUDES CONNECTION PLATES, SHEAR PLATE, BEARING PLATE, BOLTS, NUTS AND WASHERS.

③ DRILLED SHAFT DIAMETERS GIVEN FOR ESTIMATING PURPOSES ONLY. ALL SHAFTS EXTENDING 30 FT OR MORE ABOVE ACTUAL TOP OF ROCK SHALL BE 36" IN DIAMETER.

STATE OF TEXAS
SCOTT L. WALLACE
86585
LICENSED
PROFESSIONAL ENGINEER
1/27/12

JACOBS®
TBPE Registration #F-2966
2705 Bee Cave Road, Suite 300
Austin, Texas 78746
(512) 314-3100 Fax (512) 314-3135

BOARDWALK TRAIL AT LADY BIRD LAKE

CITY OF AUSTIN

PIER/ABUT ELEVATIONS & QUANTITIES - SHEET 2 OF 5
ADDENDUM 3

SHEET S-045 SHEET 1 OF 1

PRINT DATE: 1/27/2012 | SCALE: NO SCALE | LAST SAVED BY: CCS | LAST SAVED: 1/27/2012 | PROJECT No.: WGXG1403

L:\!CAD\WGXG1400-LADY BIRD LAKE BOARDWALK\BDG\DGN\SHT\DTLS\1400_LBL_BR01SUM04_AD2.dgn

PIER ELEVATIONS & QUANTITIES TABLE

PIER MARK	PIER ELEV (AT DECK SURFACE) ①	BORE NO.	TOP OF DRILLED SHAFT ELEV	ESTIMATED TOP OF ROCK ELEV	ESTIMATED TIP ELEV	ESTIMATED DR SHAFT LENGTH	DR SHAFT DIAMETER ③	NUMBER OF DR SHAFTS	ESTIMATED TOTAL DR SHAFT LENGTH	HAMMERHEAD CAP			
										LENGTH	STRUCTURAL STEEL	MISCELANEOUS STEEL ②	TOTAL STEEL
											WEIGHT	WEIGHT	WEIGHT
			FT	FT	FT	FT	FT		FT	FT	LBS	LBS	LBS
P101	434.50	B4	431.917	414	409	23	2.5	1	23	13'-8"	895	115	1010
P102	434.50	B4	431.917	414	409	23	2.5	1	23	13'-8"	895	115	1010
P103	434.50	B4	431.917	414	409	23	2.5	1	23	13'-8"	895	115	1010
P104	434.50	B4	431.917	414	409	23	2.5	1	23	13'-8"	895	115	1010
P105	434.50	B4	431.917	414	409	23	2.5	1	23	13'-8"	895	115	1010
P106	434.50	B4	431.917	414	409	23	2.5	1	23	13'-8"	895	115	1010
P107	434.50	B4	431.917	414	409	23	2.5	1	23	13'-8"	895	115	1010
P108	434.50	B4	431.917	414	409	23	2.5	1	23	13'-8"	895	115	1010
P109	434.50	B4	431.917	414	409	23	2.5	1	23	13'-8"	895	115	1010
P110	434.50	B4	431.917	414	409	23	2.5	1	23	13'-8"	895	115	1010
P111	434.50	B4	431.917	414	409	23	2.5	1	23	13'-8"	895	115	1010
P112	434.50	B4	431.917	414	409	23	2.5	1	23	17'-2"	1140	115	1255
P113	434.50	B4	431.917	414	409	23	2.5	1	23	13'-8"	895	115	1010
P114	434.50	B4	431.917	414	409	23	2.5	1	23	17'-2"	1140	115	1255
P115	434.50	B4	431.917	414	409	23	2.5	1	23	13'-8"	895	115	1010
P116	434.50	B4	431.917	414	409	23	2.5	1	23	17'-2"	1140	115	1255
P117	434.50	B4	431.917	414	409	23	2.5	1	23	13'-8"	895	115	1010
P118	435.00	B4	432.417	414	409	24	2.5	1	24	13'-8"	895	115	1010
P119	435.00	B4	432.417	414	409	24	2.5	1	24	17'-2"	1140	115	1255
P120	435.00	B4	432.417	414	409	24	2.5	1	24	13'-8"	895	115	1010
P121	435.50	B4	432.917	414	409	24	2.5	1	24	13'-8"	895	115	1010
P122	435.50	B4	432.917	414	409	24	2.5	1	24	17'-2"	1140	115	1255
P123	435.50	B4	432.917	414	409	24	2.5	1	24	13'-8"	895	115	1010
P124	435.50	B4	432.917	414	409	24	2.5	1	24	13'-8"	895	115	1010
P125	435.50	B4	432.917	414	409	24	2.5	1	24	13'-8"	895	115	1010
P126	436.00	B4	433.417	414	409	25	2.5	1	25	13'-8"	895	115	1010
P127	436.50	B4	433.917	414	409	25	2.5	1	25	13'-8"	895	115	1010
A6	436.50	B4	432.354	414	409	24	1.5	2	48	SEE ABUTMENT DETAILS			
A7	438.17	B4	434.024	414	409	25	1.5	2	50	SEE ABUTMENT DETAILS			
A15	440.36	B6	436.214	416	411	25	1.5	2	50	SEE ABUTMENT DETAILS			
A8	440.00	B5	432.604	414	409	24	1.5	2	48	SEE ABUTMENT DETAILS			
A9	435.25	B5	427.854	414	409	19	1.5	2	38	SEE ABUTMENT DETAILS			
P128	435.25	B5	432.667	414	409	24	2.5	1	24	13'-8"	895	115	1010
P129	435.25	B5	432.667	414	409	24	2.5	1	24	13'-8"	895	115	1010
P130	435.25	B5	432.667	414	409	24	2.5	1	24	13'-8"	895	115	1010
P131	434.75	B5	432.167	414	409	24	2.5	1	24	13'-8"	895	115	1010
P132	434.25	B5	431.667	414	409	23	2.5	1	23	13'-8"	895	115	1010
P133	434.25	B5	431.667	414	409	23	2.5	1	23	13'-8"	895	115	1010
P134	434.25	B5	431.667	414	409	23	2.5	1	23	13'-8"	895	115	1010
P135	434.25	B5	431.667	414	409	23	2.5	1	23	13'-8"	895	115	1010
P136	434.25	B5	431.667	414	409	23	2.5	1	23	13'-8"	895	115	1010
P137	434.25	B5	431.667	414	409	23	2.5	1	23	13'-8"	895	115	1010
P138	434.25	B5	431.667	414	409	23	2.5	1	23	13'-8"	895	115	1010
P139	434.25	B5	431.667	414	409	23	2.5	1	23	17'-2"	1140	115	1255
P140	434.25	B5	431.667	414	409	23	2.5	1	23	13'-8"	895	115	1010
P141	434.25	B5	431.667	414	409	23	2.5	1	23	17'-2"	1140	115	1255
P142	434.25	B5	431.667	414	409	23	2.5	1	23	13'-8"	895	115	1010
P143	434.25	B5	431.667	414	409	23	2.5	1	23	13'-8"	895	115	1010
P144	434.25	B5	431.667	414	409	23	2.5	1	23	17'-2"	1140	115	1255
P145	434.25	B6	431.667	415	410	22	2.5	1	22	13'-8"	895	115	1010
P146	434.25	B6	431.667	415	410	22	2.5	1	22	17'-2"	1140	115	1255
P147	434.25	B6	431.667	415	410	22	2.5	1	22	13'-8"	895	115	1010
P148	434.25	B6	431.667	415	410	22	2.5	1	22	17'-2"	1140	115	1255
P149	434.25	B6	431.667	415	410	22	2.5	1	22	13'-8"	895	115	1010
P150	434.75	B6	432.167	415	410	23	2.5	1	23	13'-8"	895	115	1010
P151	435.25	B6	432.667	415	410	23	2.5	1	23	13'-8"	895	115	1010
P152	435.75	B6	433.167	415	410	24	2.5	1	24	13'-8"	895	115	1010
P153	435.75	B6	433.167	415	410	24	2.5	1	24	17'-2"	1140	115	1255
P154	435.75	B6	433.167	415	410	24	2.5	1	24	13'-8"	895	115	1010
P155	435.25	B6	432.667	415	410	23	2.5	1	23	13'-8"	895	115	1010
P156	434.75	B6	432.167	415	410	23	2.5	1	23	13'-8"	895	115	1010
P157	434.25	B6	431.667	415	410	22	2.5	1	22	13'-8"	895	115	1010
P158	434.25	B6	431.667	415	410	22	2.5	1	22	13'-8"	895	115	1010

① SURFACE ELEVATION AT INTERSECTION OF PIER ℄ AND ALIGNMENT.

② MISCELLANEOUS STRUCURAL STEEL INCLUDES CONNECTION PLATES, SHEAR PLATE, BEARING PLATE, BOLTS, NUTS AND WASHERS.

③ DRILLED SHAFT DIAMETERS GIVEN FOR ESTIMATING PURPOSES ONLY. ALL SHAFTS EXTENDING 30 FT OR MORE ABOVE ACTUAL TOP OF ROCK SHALL BE 36" IN DIAMETER.

STATE OF TEXAS
SCOTT L. WALLACE
86585
LICENSED
PROFESSIONAL ENGINEER
1/12

JACOBS®
TBPE Registration #F-2966
2705 Bee Cave Road, Suite 300
Austin, Texas 78746
(512) 314-3100 Fax (512) 314-3135

BOARDWALK TRAIL AT LADY BIRD LAKE

CITY OF AUSTIN

PIER/ABUT ELEVATIONS & QUANTITIES - SHEET 3 OF 5
ADDENDUM 3

SHEET S-046 SHEET 1 OF 1

PRINT DATE: 2/1/2012	SCALE: NO SCALE	LAST SAVED BY: CCS	LAST SAVED: 2/1/2012	PROJECT No.: WGXG1403

L:\!CAD\WGXG1400-LADY BIRD LAKE BOARDWALK\BDG\DGN\SHT\DTLS\1400_LBL_BR01SUM05_AD2.dgn

PIER ELEVATIONS & QUANTITIES TABLE

PIER MARK	PIER ELEV (AT DECK SURFACE) ①	BORE NO.	TOP OF DRILLED SHAFT ELEV	ESTIMATED TOP OF ROCK ELEV	ESTIMATED TIP ELEV	ESTIMATED DR SHAFT LENGTH	DR SHAFT DIAMETER ③	NUMBER OF DR SHAFTS	ESTIMATED TOTAL DR SHAFT LENGTH	HAMMERHEAD CAP			
										LENGTH	STRUCTURAL STEEL	MISCELANEOUS STEEL ②	TOTAL STEEL
											WEIGHT	WEIGHT	WEIGHT
			FT	FT	FT	FT	FT		FT	FT	LBS	LBS	LBS
P159	434.25	B6	431.667	415	410	22	2.5	1	22	13'-8"	895	115	1010
P160	434.25	B6	431.667	415	410	22	2.5	1	22	13'-8"	895	115	1010
P161	434.25	B6	431.667	415	410	22	2.5	1	22	13'-8"	895	115	1010
P162	434.25	B6	431.667	415	410	22	2.5	1	22	13'-8"	895	115	1010
P163	434.25	B6	431.667	415	410	22	2.5	1	22	13'-8"	895	115	1010
P164	434.25	B6	431.667	415	410	22	2.5	1	22	13'-8"	895	115	1010
P165	434.25	B6	431.667	415	410	22	2.5	1	22	13'-8"	895	115	1010
P166	434.25	B6	431.667	415	410	22	2.5	1	22	13'-8"	895	115	1010
P167	434.25	B6	431.667	415	410	22	2.5	1	22	13'-8"	895	115	1010
P168	434.25	B6	431.667	415	410	22	2.5	1	22	17'-2"	1140	115	1255
P169	434.25	B6	431.667	415	410	22	2.5	1	22	13'-8"	895	115	1010
P170	434.25	B6	431.667	415	410	22	2.5	1	22	13'-8"	895	115	1010
P171	434.25	B6	431.667	415	410	22	2.5	1	22	13'-8"	895	115	1010
P172	434.25	B6	431.667	415	410	22	2.5	1	22	13'-8"	895	115	1010
P173	434.25	B6	431.667	415	410	22	2.5	1	22	17'-2"	1140	115	1255
P174	434.25	B6	431.667	415	410	22	2.5	1	22	13'-8"	895	115	1010
P175	434.25	B6	431.667	415	410	22	2.5	1	22	17'-2"	1140	115	1255
P176	434.25	B6	431.667	415	410	22	2.5	1	22	13'-8"	895	115	1010
P177	434.25	B6	431.667	415	410	22	2.5	1	22	17'-2"	1140	115	1255
P178	434.25	B6	431.667	415	410	22	2.5	1	22	13'-8"	895	115	1010
P179	434.25	B6	431.667	415	410	22	2.5	1	22	17'-2"	1140	115	1255
P180	434.25	B6	431.667	415	410	22	2.5	1	22	13'-8"	895	115	1010
P181	435.05	B6	432.467	415	410	23	2.5	1	23	13'-8"	895	115	1010
P182	435.85	B6	433.267	415	410	24	2.5	1	24	13'-8"	895	115	1010
P183	436.65	B6	434.067	415	410	25	2.5	1	25	13'-8"	895	115	1010
P184	437.45	B6	434.867	415	410	25	2.5	1	25	13'-8"	895	115	1010
P185	437.45	B6	434.867	415	410	25	2.5	1	25	13'-8"	895	115	1010
P186	437.45	B7	434.867	398	392	43	3	1	43	13'-8"	895	115	1010
P187	437.45	B7	434.867	398	392	43	3	1	43	17'-2"	1140	115	1255
P188	437.45	B7	434.867	398	392	43	3	1	43	13'-8"	895	115	1010
P189	437.45	B7	434.867	398	392	43	3	1	43	17'-2"	1140	115	1255
P190	437.45	B7	434.867	398	392	43	3	1	43	13'-8"	895	115	1010
P191	438.25	B7	435.667	398	392	44	3	1	44	13'-8"	895	115	1010
P192	439.05	B7	436.467	398	392	45	3	1	45	13'-8"	895	115	1010
P193	439.05	B7	436.467	398	392	45	3	1	45	13'-8"	895	115	1010
P194	439.05	B7	436.467	398	392	45	3	1	45	13'-8"	895	115	1010
A10	439.85	B7	432.454	398	393	40	1.5	2	80	SEE ABUTMENT DETAILS			
A11	434.25	B8	428.854	390	385	42	1.5	2	84	SEE ABUTMENT DETAILS			
P195	434.25	B8	431.667	390	384	48	3	1	48	13'-8"	895	115	1010
P196	434.25	B8	431.667	390	384	48	3	1	48	17'-2"	1140	115	1255
P197	434.25	B8	431.667	390	384	48	3	1	48	13'-8"	895	115	1010
P198	434.25	B8	431.667	390	384	48	3	1	48	17'-2"	1140	115	1255
P199	434.25	B8	431.667	390	384	48	3	1	48	13'-8"	895	115	1010
P200	434.25	B8	431.667	390	384	48	3	1	48	17'-2"	1140	115	1255
P201	434.25	B8	431.667	390	384	48	3	1	48	13'-8"	895	115	1010
P202	434.25	B8	431.667	390	384	48	3	1	48	17'-2"	1140	115	1255
P203	434.25	B8	431.667	390	384	48	3	1	48	13'-8"	895	115	1010
P204	434.25	B8	431.667	390	384	48	3	1	48	17'-2"	1140	115	1255
P205	434.25	B8	431.667	390	384	48	3	1	48	13'-8"	895	115	1010
P206	434.25	B8	431.667	390	384	48	3	1	48	17'-2"	1140	115	1255
P207	434.25	B8	431.667	390	384	48	3	1	48	13'-8"	895	115	1010
P208	434.25	B8	431.667	390	384	48	3	1	48	17'-2"	1140	115	1255
P209	434.25	B8	431.667	390	384	48	3	1	48	13'-8"	895	115	1010
P210	434.25	B8	431.667	390	384	48	3	1	48	17'-2"	1140	115	1255
P211	434.25	B8	431.667	390	384	48	3	1	48	13'-8"	895	115	1010
A12	434.25	B8	426.854	390	385	42	1.5	2	84	SEE ABUTMENT DETAILS			
P212	435.00	B1	432.417	401	395	38	3	1	38	17'-0"	1107	115	1222
P213	435.00	B1	432.417	401	395	38	3	1	38	17'-0"	1107	115	1222
P214	435.00	B1	432.417	401	395	38	3	1	38	11'-6"	755	115	870
P215	435.00	B1	432.417	401	395	38	3	1	38	11'-6"	755	115	870
P216	435.00	B1	432.417	401	395	38	3	1	38	10'-1"	708	115	823
P217	435.00	B2	432.417	401	395	38	3	1	38	17'-0"	1107	115	1222
P218	435.00	B2	432.417	401	395	38	3	1	38	17'-0"	1107	115	1222
P219	435.00	B2	432.417	401	395	38	3	1	38	11'-6"	755	115	870
P220	435.00	B2	432.417	401	395	38	3	1	38	11'-6"	755	115	870
P221	435.00	B2	432.417	401	395	38	3	1	38	10'-1"	708	115	823
P222	436.00	B3	433.417	396	390	44	3	1	44	17'-6"	1169	115	1284

① SURFACE ELEVATION AT INTERSECTION OF PIER ℄ AND ALIGNMENT.

② MISCELLANEOUS STRUCURAL STEEL INCLUDES CONNECTION PLATES, SHEAR PLATE, BEARING PLATE, BOLTS, NUTS AND WASHERS.

③ DRILLED SHAFT DIAMETERS GIVEN FOR ESTIMATING PURPOSES ONLY. ALL SHAFTS EXTENDING 30 FT OR MORE ABOVE ACTUAL TOP OF ROCK SHALL BE 36" IN DIAMETER.

STATE OF TEXAS
SCOTT L. WALLACE
86585
LICENSED
PROFESSIONAL ENGINEER
1/24/2012

JACOBS®
TBPE Registration #F-2966
2705 Bee Cave Road, Suite 300
Austin, Texas 78746
(512) 314-3100 Fax (512) 314-3135

BOARDWALK TRAIL AT LADY BIRD LAKE

CITY OF AUSTIN

PIER/ABUT ELEVATIONS & QUANTITIES - SHEET 4 OF 5
ADDENDUM 3

SHEET S-047 SHEET 1 OF 1

PRINT DATE: 1/27/2012 | SCALE: NO SCALE | LAST SAVED BY: CCS | LAST SAVED: 1/27/2012 | PROJECT No.: WGXG1403

L:\!CAD\WGXG1400-LADY BIRD LAKE BOARDWALK\BDG\DGN\SHT\DTLS\1400_LBL_BR01SUM06_AD2.dgn

PIER ELEVATIONS & QUANTITIES TABLE

PIER MARK	PIER ELEV (AT DECK SURFACE) ①	BORE NO.	TOP OF DRILLED SHAFT ELEV	ESTIMATED TOP OF ROCK ELEV	ESTIMATED TIP ELEV	ESTIMATED DR SHAFT LENGTH	DR SHAFT DIAMETER ③	NUMBER OF DR SHAFTS	ESTIMATED TOTAL DR SHAFT LENGTH	HAMMERHEAD CAP			
										LENGTH	STRUCTURAL STEEL	MISCELANEOUS STEEL ②	TOTAL STEEL
											WEIGHT	WEIGHT	WEIGHT
			FT	FT	FT	FT	FT		FT	FT	LBS	LBS	LBS
P223	436.00	B3	433.417	396	390	44	3	1	44	11'-9"	771	115	886
P224	436.00	B3	434.042	396	390	44	3	1	44	4-3"	325	115	440
P225	436.00	B3	433.417	396	390	44	3	1	44	11'-0"	722	115	837
P226	436.00	B3	433.417	396	390	44	3	1	44	13'-0"	914	115	1029
P227	436.00	B3	433.417	396	390	44	3	1	44	13'-0"	914	115	1029
P228	436.00	B3	433.417	396	390	44	3	1	44	11'-0"	722	115	837
P229	436.00	B3	433.417	396	390	44	3	1	44	11'-0"	722	115	837
P230	436.00	B3	433.417	396	390	44	3	1	44	11'-4"	802	115	917
P231	436.00	B3	433.417	396	390	44	3	1	44	11'-4"	802	115	917
P232	436.00	B3	433.417	396	390	44	3	1	44	11'-0"	722	115	837
P233	436.00	B3	433.417	396	390	44	3	1	44	11'-0"	722	115	837
P234	436.00	B3	433.417	396	390	44	3	1	44	11'-4"	802	115	917
P235	436.00	B3	433.417	396	390	44	3	1	44	11'-4"	802	115	917
P236	436.00	B3	433.417	396	390	44	3	1	44	11'-0"	722	115	837
P237	440.00	B3	437.417	396	390	48	3	1	48	17'-6"	1169	115	1284
P238	440.00	B3	437.417	396	390	48	3	1	48	11'-9"	771	115	886
P239	440.00	B3	438.042	396	390	48	3	1	48	4'-3"	325	115	440
P240	434.50	B4	431.917	414	409	23	2.5	1	23	11'-0"	722	115	837
P241	434.50	B4	431.917	414	409	23	2.5	1	23	11'-4"	802	115	917
P242	434.50	B4	431.917	414	409	23	2.5	1	23	11'-4"	802	115	917
P243	434.50	B4	431.917	414	409	23	2.5	1	23	11'-0"	722	115	837
P244	434.25	B5	431.667	414	409	23	2.5	1	23	11'-0"	722	115	837
P245	434.25	B5	431.667	414	409	23	2.5	1	23	11'-0"	722	115	837
P246	434.25	B5	431.667	414	409	23	2.5	1	23	12'-1"	792	115	907
P247	434.25	B5	431.667	414	409	23	2.5	1	23	6'-10"	454	115	569
P248	434.25	B5	431.667	414	409	23	2.5	1	23	11'-4"	802	115	917
P249	434.25	B5	431.667	414	409	23	2.5	1	23	17'-0"	1107	115	1309
P250	434.25	B5	431.667	414	409	23	2.5	1	23	11'-4"	744	115	859
P251	434.25	B5	431.667	414	409	23	2.5	1	23	11'-4"	744	115	859
P252	434.25	B5	431.667	414	409	23	2.5	1	23	11'-4"	802	115	917
P253	434.25	B5	431.667	414	409	23	2.5	1	23	11'-4"	802	115	917
P254	434.25	B5	431.667	414	409	23	2.5	1	23	17'-6"	1169	115	1284
P255	434.25	B5	431.667	414	409	23	2.5	1	23	11'-9"	771	115	886
P256	434.25	B5	432.292	414	409	24	2.5	1	24	4'-3"	325	115	440
P257	434.25	B6	431.667	415	410	22	2.5	1	22	11'-0"	722	115	837
P258	434.25	B6	431.667	415	410	22	2.5	1	22	11'-0"	722	115	837
P259	434.25	B6	431.667	415	410	22	2.5	1	22	11'-0"	722	115	895
P260	434.25	B6	431.667	415	410	22	2.5	1	22	11'-0"	780	115	895
P261	434.25	B6	431.667	415	410	22	2.5	1	22	11'-4"	780	115	895
P262	434.25	B6	431.667	415	410	22	2.5	1	22	11'-4"	744	115	859
P263	434.25	B6	431.667	415	410	22	2.5	1	22	11'-4"	744	115	859
P264	434.25	B6	431.667	415	410	22	2.5	1	22	11'-4"	802	115	917
P265	434.25	B6	431.667	415	410	22	2.5	1	22	11'-4"	802	115	917
P266	434.25	B6	431.667	415	410	22	2.5	1	22	17'-6"	1169	115	1284
P267	434.25	B6	431.667	415	410	22	2.5	1	22	11'-9"	771	115	886
P268	434.25	B6	432.292	415	410	23	2.5	1	23	4'-3"	325	115	440
P269	437.45	B7	434.867	398	392	43	3	1	43	11'-0"	722	115	837
P270	437.45	B7	434.867	398	392	43	3	1	43	11'-0"	722	115	837
P271	437.45	B7	434.867	398	392	43	3	1	43	12'-1"	792	115	907
P272	437.45	B7	434.867	398	392	43	3	1	43	6'-10"	454	115	569
P273	437.45	B7	434.867	398	392	43	3	1	43	11'-4"	744	115	859
P274	437.45	B7	434.867	398	392	43	3	1	43	17'-0"	1107	115	1222
P275	437.45	B7	434.867	398	392	43	3	1	43	11'-4"	744	115	859
P276	437.45	B7	434.867	398	392	43	3	1	43	11'-4"	744	115	859
P277	437.45	B7	434.867	398	392	43	3	1	43	11'-4"	744	115	859
P278	437.45	B7	434.867	398	392	43	3	1	43	11'-4"	744	115	859
P279	437.45	B7	434.867	398	392	43	3	1	43	17'-6"	1169	115	1284
P280	437.45	B7	434.867	398	392	43	3	1	43	11'-9"	771	115	886
P281	437.45	B7	435.492	398	392	44	3	1	44	4'-3"	304	115	419
SSP1	434.25	B5	434.417	414	408	27	3.5	1	27	N/A	N/A	N/A	N/A
SSP2	434.25	B5	434.417	414	408	27	3.5	1	27	N/A	N/A	N/A	N/A
SSP3	434.25	B6	434.417	415	409	26	3.5	1	26	N/A	N/A	N/A	N/A
SSP4	434.25	B6	434.417	415	409	26	3.5	1	26	N/A	N/A	N/A	N/A
SSP5	437.25	B7	437.417	398	392	46	3.5	1	46	N/A	N/A	N/A	N/A
SSP6	437.25	B7	437.417	398	392	46	3.5	1	46	N/A	N/A	N/A	N/A

① SURFACE ELEVATION AT INTERSECTION OF PIER ℄ AND ALIGNMENT.

② MISCELLANEOUS STRUCURAL STEEL INCLUDES CONNECTION PLATES, SHEAR PLATE, BEARING PLATE, BOLTS, NUTS AND WASHERS.

③ DRILLED SHAFT DIAMETERS GIVEN FOR ESTIMATING PURPOSES ONLY. ALL SHAFTS EXTENDING 30 FT OR MORE ABOVE ACTUAL TOP OF ROCK SHALL BE 36" IN DIAMETER.

STATE OF TEXAS
SCOTT L. WALLACE
86585
LICENSED
PROFESSIONAL ENGINEER
1/27/12

JACOBS®
TBPE Registration #F-2966
2705 Bee Cave Road, Suite 300
Austin, Texas 78746
(512) 314-3100 Fax (512) 314-3135

BOARDWALK TRAIL AT LADY BIRD LAKE

CITY OF AUSTIN

PIER/ABUT ELEVATIONS & QUANTITIES - SHEET 5 OF 5
ADDENDUM 3

SHEET S-048 SHEET 1 OF 1

PRINT DATE: 1/27/2012	SCALE: NO SCALE	LAST SAVED BY: CCS	LAST SAVED: 1/27/2012	PROJECT No.: WGXG1403

L:\!CAD\WGXG1400-LADY BIRD LAKE BOARDWALK\BDG\DGN\SHT\DTLS\1400_LBL_BR01SUM07_AD2.dgn

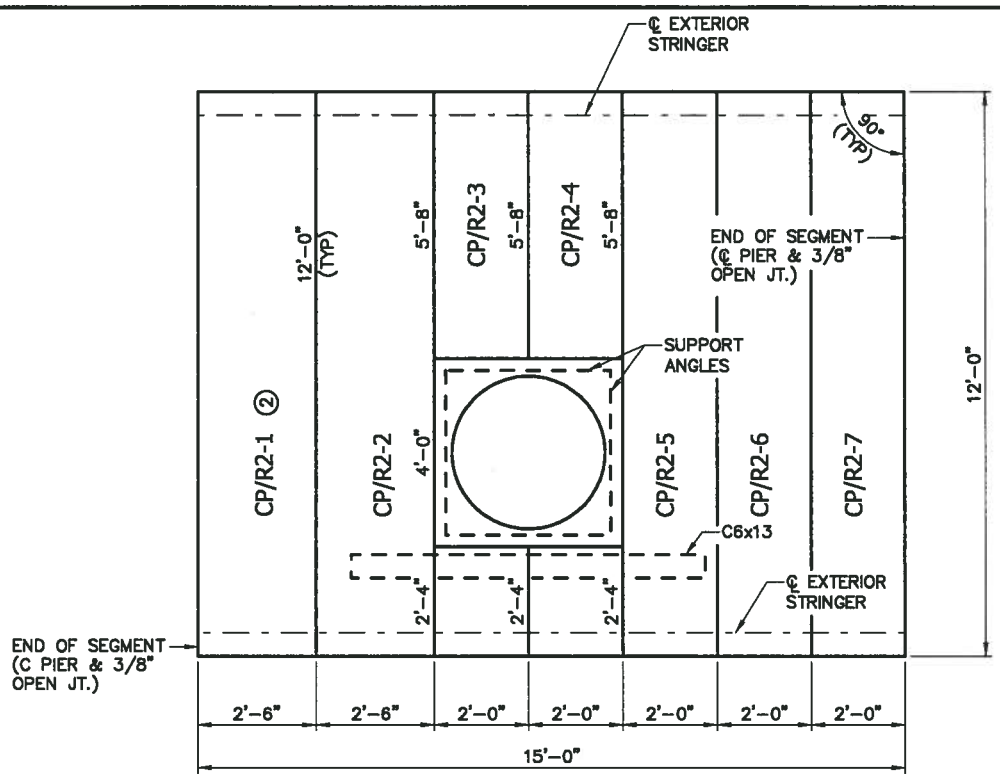

CONCRETE PLANK PLACEMENT

(SEGMENT TYPE R2)

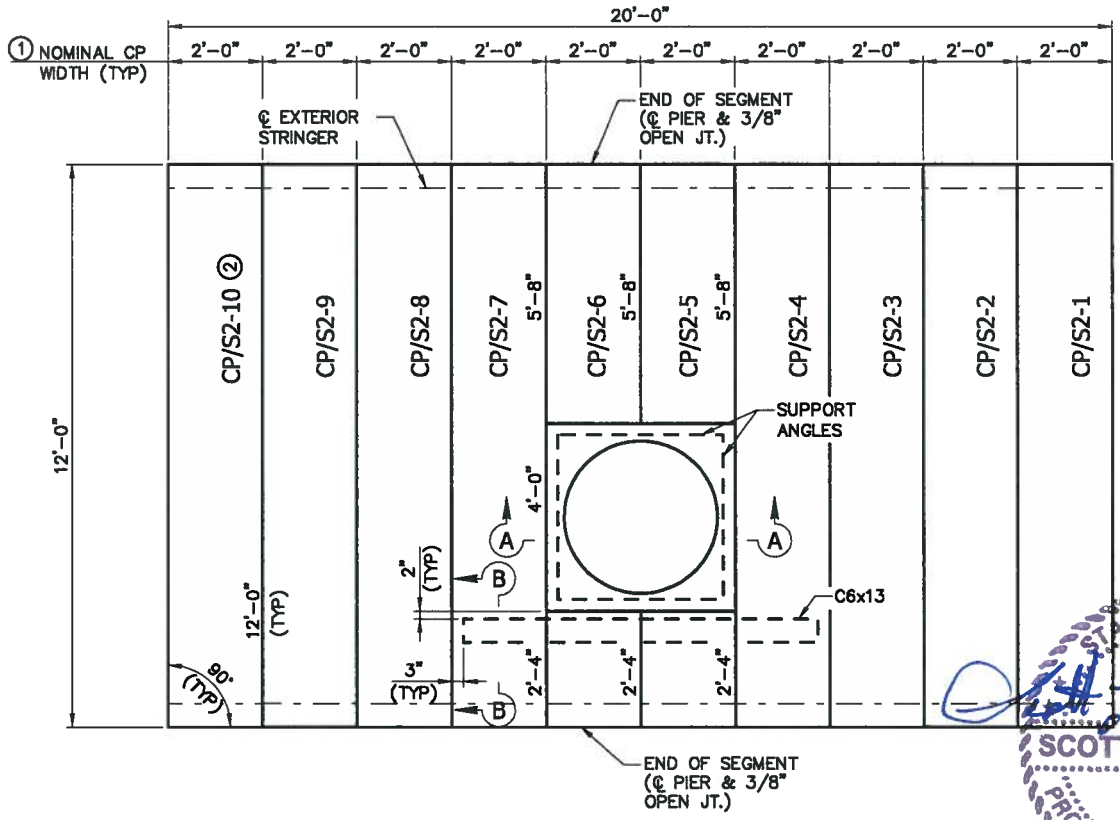

CONCRETE PLANK PLACEMENT

(SEGMENT TYPE S2)

STATE OF TEXAS
SCOTT L. WALLACE
86585
LICENSED
PROFESSIONAL ENGINEER
1/27/12

JACOBS® TBPE Registration #F-2966 2705 Bee Cave Road, Suite 300 Austin, Texas 78746 (512) 314-3100 Fax (512) 314-3135	BOARDWALK TRAIL AT LADY BIRD LAKE CITY OF AUSTIN	CONCRETE PLANK PLACEMENT SEG R2 & S2 ADDENDUM 3 SHEET S-060 SHEET 1 OF 2

PRINT DATE: 1/27/2012	SCALE: NO SCALE	LAST SAVED BY: CCS	LAST SAVED: 1/27/2012	PROJECT No.: WGXG1403

L:\!CAD\WGXG1400-LADY BIRD LAKE BOARDWALK\BDG\DGN\SHT\DTLS\1400_LBL_BRCPP12_AD2.dgn

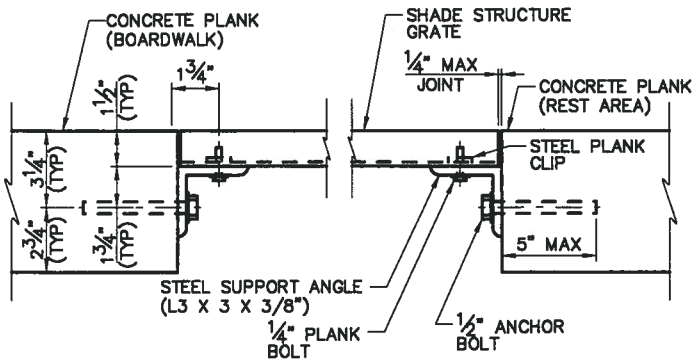

SECTION A–A

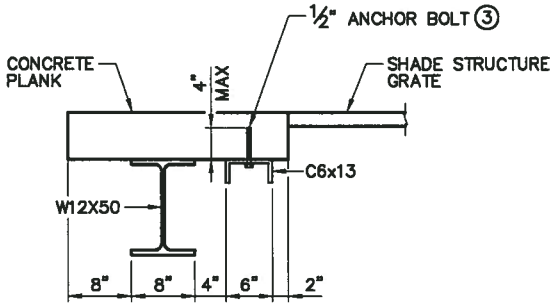

SECTION B–B

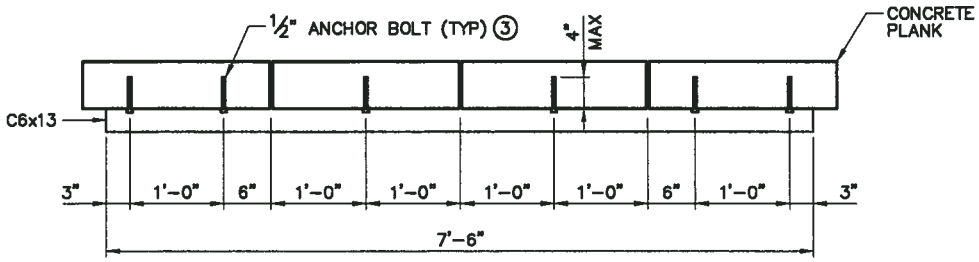

CHANNEL ELEVATION

① DIMENSIONS ALONG THE EDGE OF PLANK ARE NOMINAL DIMENSIONS AND ARE MEASURED TO THE CENTERLINE OF THE 3/8" OPEN JOINT.

② CONCRETE PLANKS SHALL BE MARKED WITH THE DESIGNATION SHOWN. MARK SHALL BE PLACED ON THE BOTTOM OF PLANK FOR PERMANENT IDENTIFICATION.

③ ALL BOLTS, HEX NUTS, AND WASHERS SHALL BE GALVANIZED. PROVIDE MECHANICAL OR ADHESIVE ANCHOR BOLTS ACCORDING TO MANUFACTURER'S SPECIFICATIONS. ANCHOR BOLTS MUST BE ABLE TO RESIST A PULLOUT FORCE OF 0.75K.

JACOBS®
TBPE Registration #F-2966
2705 Bee Cave Road, Suite 300
Austin, Texas 78746
(512) 314-3100 Fax (512) 314-3135

BOARDWALK TRAIL AT LADY BIRD LAKE

CITY OF AUSTIN

CONCRETE PLANK PLACEMENT
SEG R2 & S2
ADDENDUM 3

SHEET S–060 SHEET 2 OF 2

PRINT DATE: 1/27/2012	SCALE: NO SCALE	LAST SAVED BY: CCS	LAST SAVED: 1/27/2012	PROJECT No.: WGXG1403

L:\!CAD\WGXG1400–LADY BIRD LAKE BOARDWALK\BDG\DGN\SHT\DTLS\1400_LBL_BRCPP12_AD2.dgn

BRIDGE TABLE				
BRIDGE NAME	LENGTH "L"	WIDTH "W"	BEGIN BRIDGE ①	END BRIDGE ①
	FT	FT	STA	STA
HARPERS BRIDGE 1	130.00	14.00	34+00.15	35+30.15
HARPERS BRIDGE 2	96.00	8.00	1+84.00	2+80.00
HARPERS BRIDGE 3	25.00	8.00	2+98.41	3+23.41
HARPERS BRIDGE 4	37.00	8.00	3+41.81	3+78.81
BLUNN BRIDGE 1	25.00	8.00	1+22.68	1+47.68
BLUNN BRIDGE 2	42.00	8.00	1+58.81	2+00.81
BLUNN BRIDGE 3	70.00	8.00	2+11.93	2+81.93
BLUNN BRIDGE 4	64.00	8.00	3+00.64	3+64.64
BLUNN BRIDGE 5	56.00	8.00	1+08.23	1+64.23

① STATIONING FOR BEGIN AND END BRIDGE ARE AT FACE OF BACKWALL.

STATE OF TEXAS
SCOTT L. WALLACE
86585
LICENSED
PROFESSIONAL ENGINEER
2/1/12

JACOBS®
TBPE Registration #F-2966
2705 Bee Cave Road, Suite 300
Austin, Texas 78746
(512) 314-3100 Fax (512) 314-3135

BOARDWALK TRAIL AT LADY BIRD LAKE

CITY OF AUSTIN

PREFABRICATED BRIDGE DETAILS ADDENDUM 3

SHEET S-073 SHEET 1 OF 1

PRINT DATE: 2/1/2012 | SCALE: NO SCALE | LAST SAVED BY: | LAST SAVED: 2/1/2012 | PROJECT No.: WGXG1403

L:\!CAD\WGXG1400-LADY BIRD LAKE BOARDWALK\BDG\DGN\SHT\DTLS\1400_LBL_BRRD01_AD2.dgn

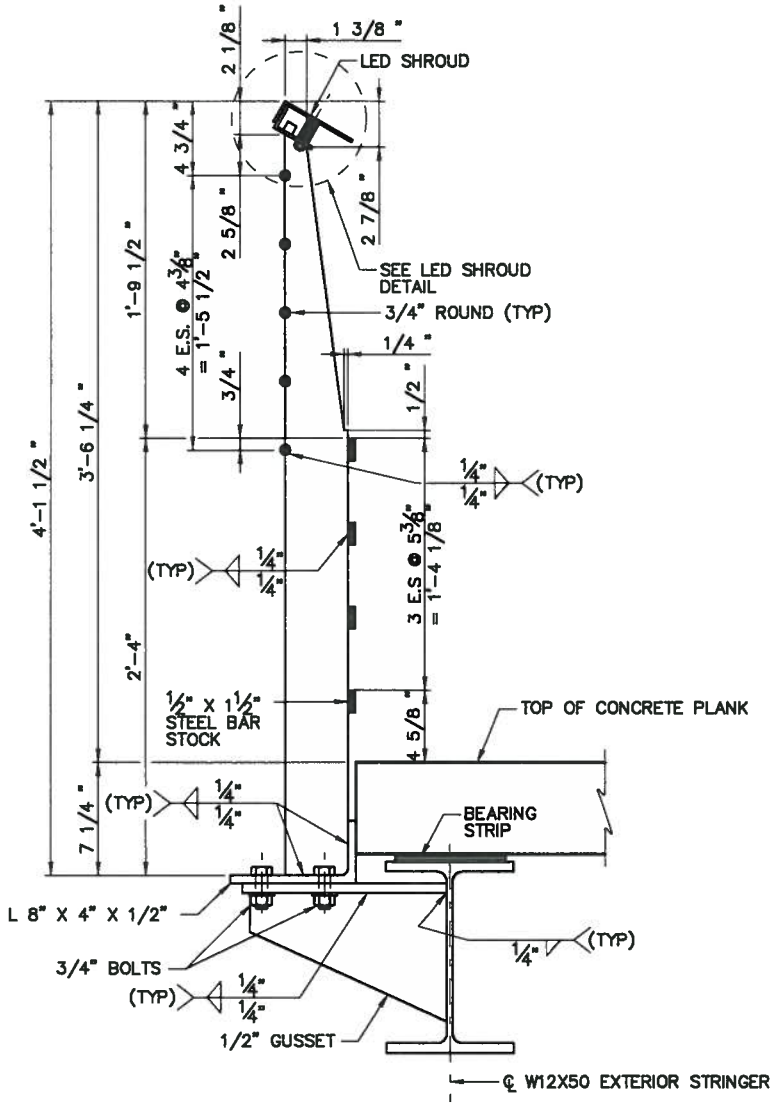

SECTION B-B

STATE OF TEXAS
SCOTT L. WALLACE
86585
LICENSED
PROFESSIONAL ENGINEER
1/27/12

JACOBS® TBPE Registration #F-2966 2705 Bee Cave Road, Suite 300 Austin, Texas 78746 (512) 314-3100 Fax (512) 314-3135	BOARDWALK TRAIL AT LADY BIRD LAKE CITY OF AUSTIN	GUARDRAIL DETAILS ADDENDUM 3 SHEET S-075 SHEET 1 OF 1	
PRINT DATE: 1/27/2012	SCALE: NO SCALE	LAST SAVED BY: CCS	LAST SAVED: 1/27/2012	PROJECT No.: WGXG1403

L:\!CAD\WGXG1400-LADY BIRD LAKE BOARDWALK\BDG\DGN\SHT\DTLS\1400_LBL_BRRD03_AD2.dgn

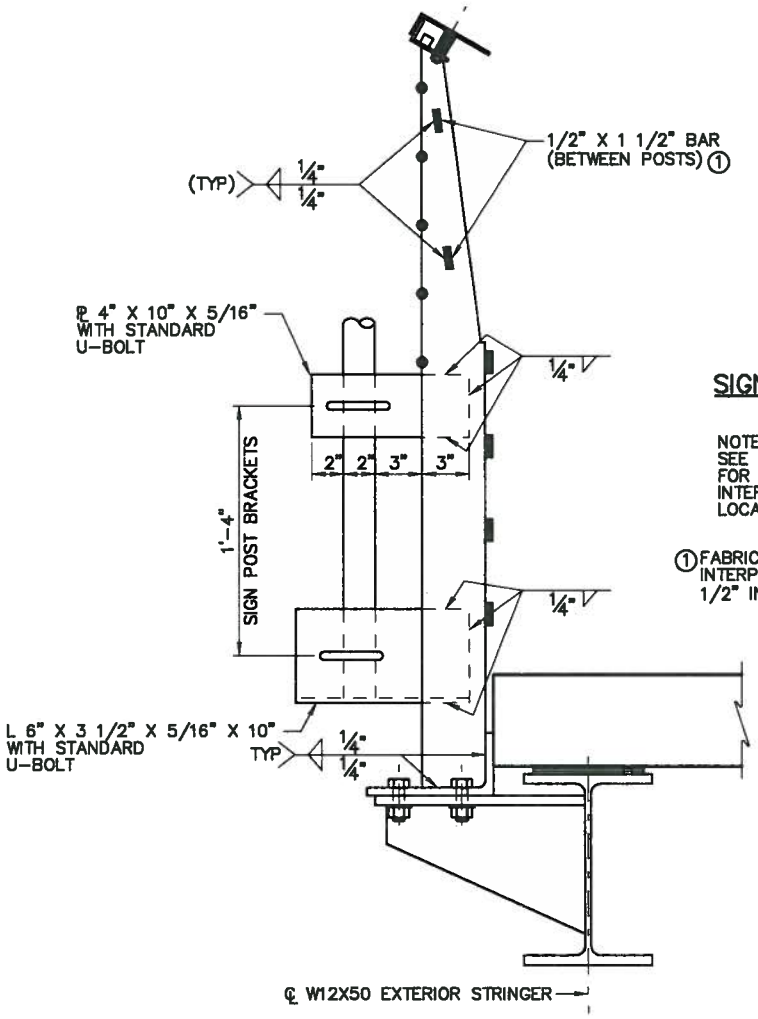

SIGN MOUNTING DETAIL

NOTE:
SEE LANDSCAPE SITE DETAILS FOR ADDITIONAL SIGN AND INTERPRETIVE GRAPHICS LOCATIONS AND INFORMATION.

① FABRICATE AND POSITION TO ACCOMODATE INTERPRETIVE GRAPHICS WITH FACE SET 1/2" INSIDE RAIL POSTS.

JACOBS® TBPE Registration #F-2966 2705 Bee Cave Road, Suite 300 Austin, Texas 78746 (512) 314-3100 Fax (512) 314-3135	BOARDWALK TRAIL AT LADY BIRD LAKE CITY OF AUSTIN	GUARDRAIL MISCELLANEOUS DETAILS - 1 ADDENDUM 3 SHEET S-076 SHEET 1 OF 1

PRINT DATE: 1/27/2012	SCALE: NO SCALE	LAST SAVED BY: CCS	LAST SAVED: 1/27/2012	PROJECT No.: WGXG1403

L:\!CAD\WGXG1400-LADY BIRD LAKE BOARDWALK\BDG\DGN\SHT\DTLS\1400_LBL_BRRD04_AD2.dgn

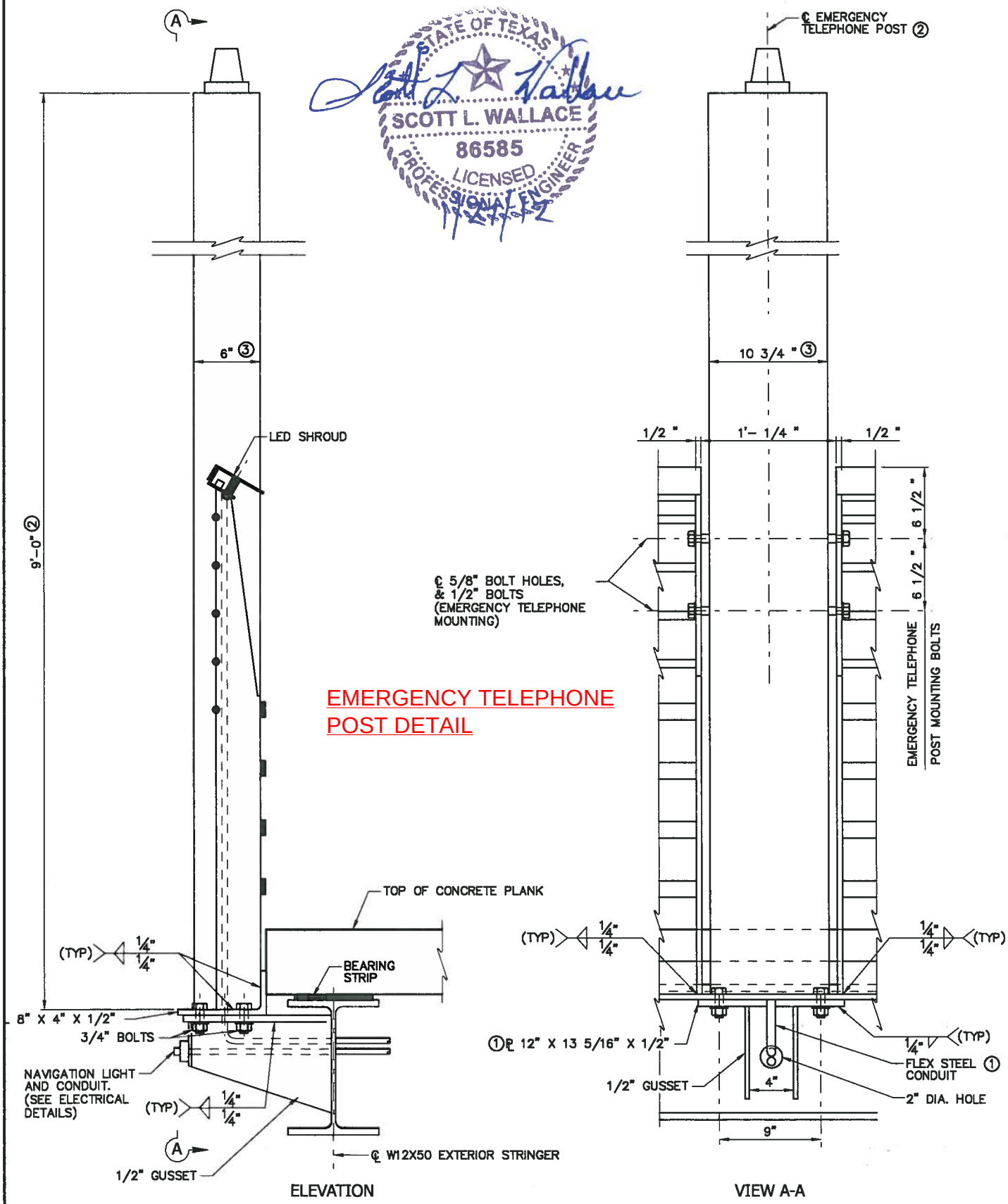

JACOBS®

TBPE Registration #F-2966
2705 Bee Cave Road, Suite 300
Austin, Texas 78746
(512) 314-3100 Fax (512) 314-3135

BOARDWALK TRAIL AT LADY BIRD LAKE

CITY OF AUSTIN

GUARDRAIL MISCELLANEOUS DETAILS - 2
ADDENDUM 3

SHEET S-077 SHEET 1 OF 2

PRINT DATE: 1/27/2012	SCALE: NO SCALE	LAST SAVED BY: CCS	LAST SAVED: 1/27/2012	PROJECT No.: WGXG1403

L:\!CAD\WGXG1400-LADY BIRD LAKE BOARDWALK\BDG\DGN\SHT\DTLS\1400_LBL_BRRD05_AD2.dgn

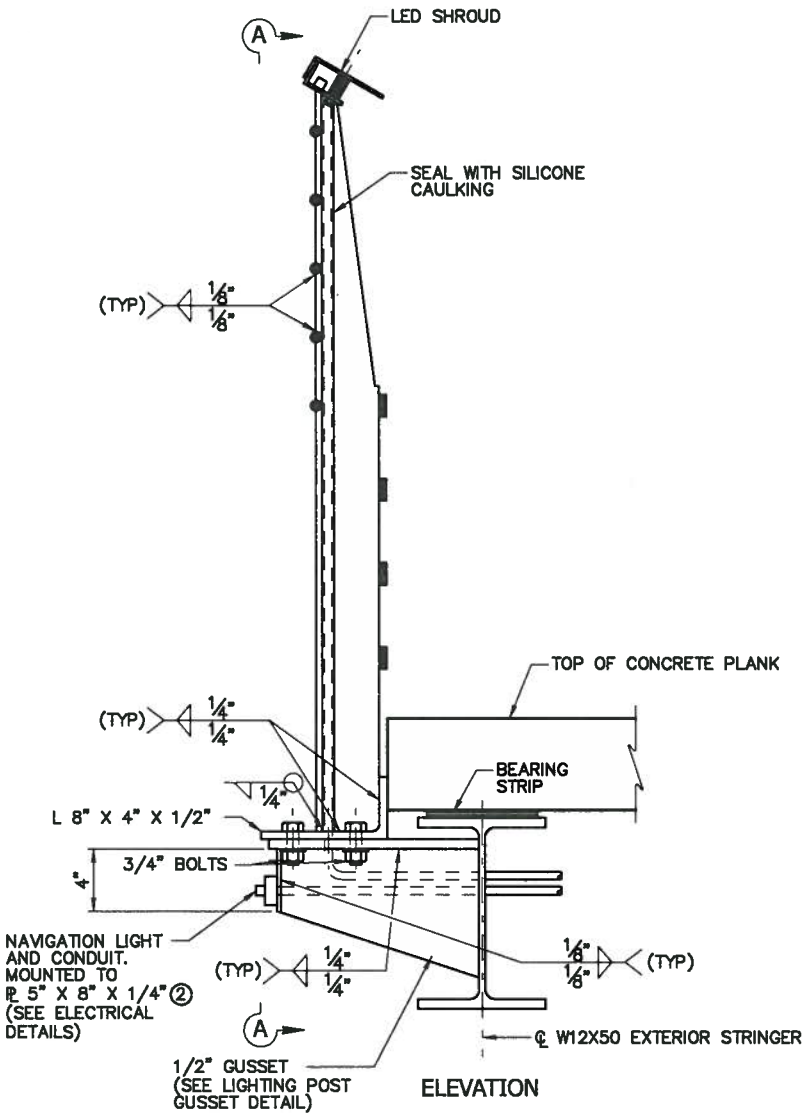

LIGHTING POSTS DETAIL

STATE OF TEXAS
SCOTT L. WALLACE
86585
LICENSED
PROFESSIONAL ENGINEER
1/27/12

JACOBS® TBPE Registration #F-2966 2705 Bee Cave Road, Suite 300 Austin, Texas 78746 (512) 314-3100 Fax (512) 314-3135	BOARDWALK TRAIL AT LADY BIRD LAKE CITY OF AUSTIN	GUARDRAIL MISCELLANEOUS DETAILS - 2 ADDENDUM 3 SHEET S-077 SHEET 2 OF 2

PRINT DATE: 1/27/2012	SCALE: NO SCALE	LAST SAVED BY: CCS	LAST SAVED: 1/27/2012	PROJECT No.: WGXG1403

L:\!CAD\WGXG1400-LADY BIRD LAKE BOARDWALK\BDG\DGN\SHT\DTLS\1400_LBL_BRRD05_AD2.dgn

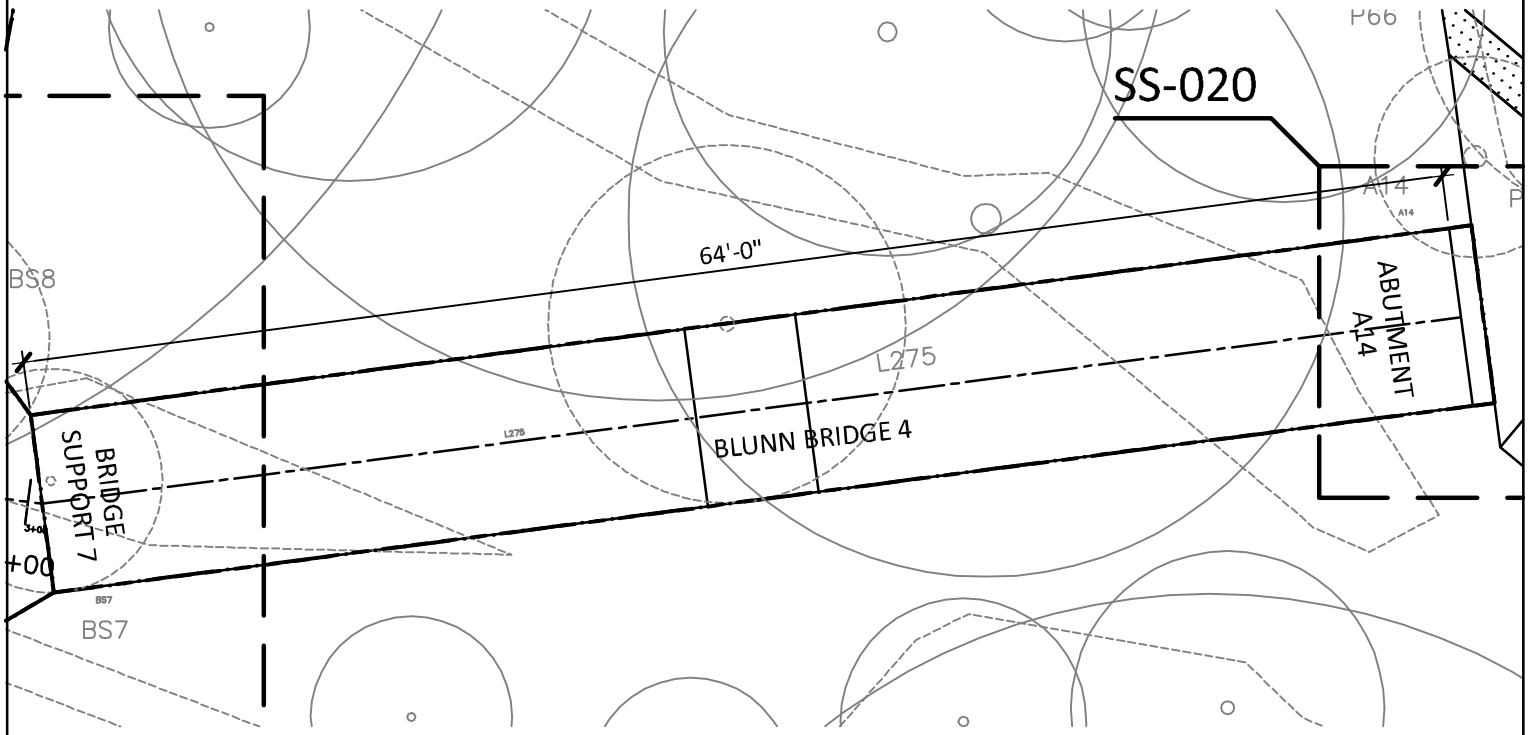

STATE OF TEXAS
GERARD GARCIA
67435
LICENSED
PROFESSIONAL ENGINEER
2.1.12

JACOBS®
TBPE Registration #F-2966
2705 Bee Cave Road, Suite 300
Austin, Texas 78746
(512) 314-3100 Fax (512) 314-3135

BOARDWALK TRAIL AT LADY BIRD LAKE

CITY OF AUSTIN

BLUNN CREEK BELVEDERES
ADDENDUM 3
SHEET SS-015

PRINT DATE: 2/1/12	SCALE: NO SCALE	LAST SAVED BY: NDR	LAST SAVED: 2/1/2012	PROJECT No.: WGXG1402

S:\Project List\2010\10.075b.Burgess.BlunnHarperBelvederes\ENGR\AUTOCAD\10.075b Blunn Creek Belvederes 2

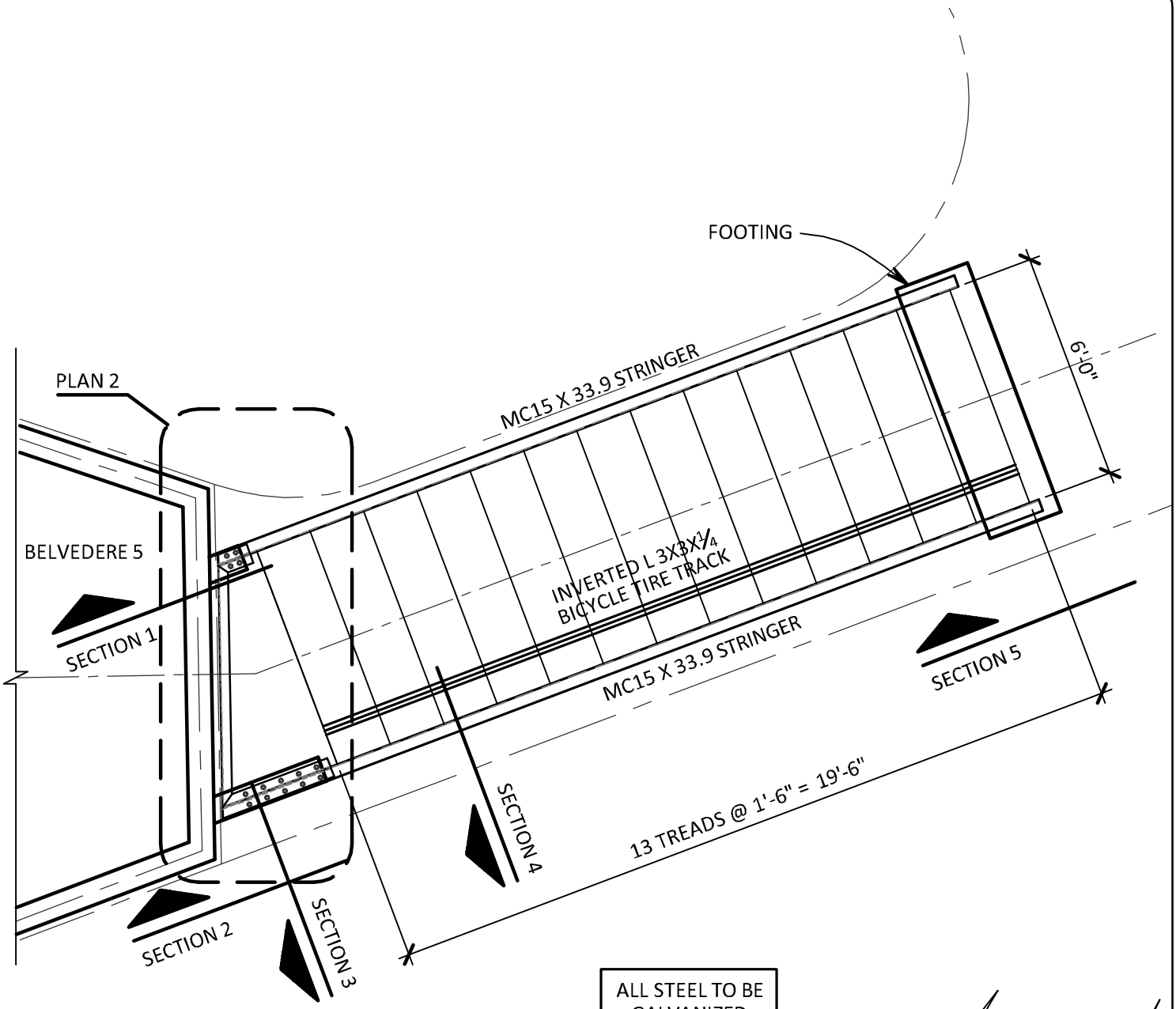

ALL STEEL TO BE GALVANIZED

STATE OF TEXAS
GERARD GARCIA
67435
LICENSED
PROFESSIONAL ENGINEER

2.7.12

JACOBS®
TBPE Registration #F-2966
2705 Bee Cave Road, Suite 300
Austin, Texas 78746
(512) 314-3100 Fax (512) 314-3135

BOARDWALK TRAIL AT LADY BIRD LAKE

CITY OF AUSTIN

ADDENDUM 3

HARPERS BRANCH STAIR
PLAN VIEW

PRINT DATE: 2/7/12	SCALE: NO SCALE	LAST SAVED BY: NDR	LAST SAVED: 2/7/2012	PROJECT No.: WGXG1402

S:\Project List\2010\10.075b.Burgess.BlunnHarperBelvedere\ENGR\AUTOCAD\10.075c Harper Branch Stair

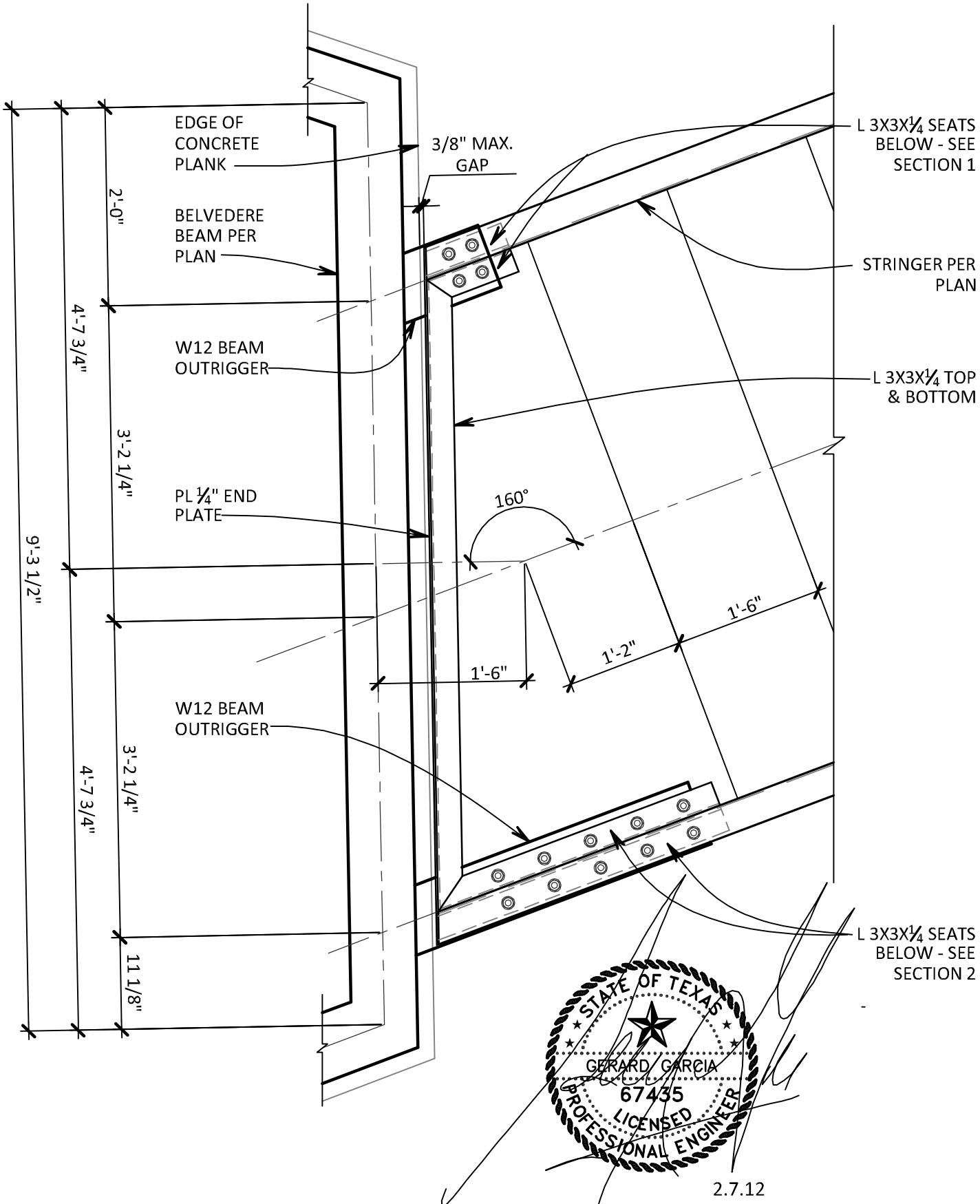

JACOBS®
TBPE Registration #F-2966
2705 Bee Cave Road, Suite 300
Austin, Texas 78746
(512) 314-3100 Fax (512) 314-3135

BOARDWALK TRAIL AT LADY BIRD LAKE

CITY OF AUSTIN

ADDENDUM 3

HARPERS BRANCH STAIR
PLAN 2

PRINT DATE: 2/7/12	SCALE: NO SCALE	LAST SAVED BY: NDR	LAST SAVED: 2/7/2012	PROJECT No.: WGXG1402

S:\Project List\2010\10.075b.Burgess.BlunnHarperBelvedere\ENGR\AUTOCAD\10.075c Harper Branch Stair

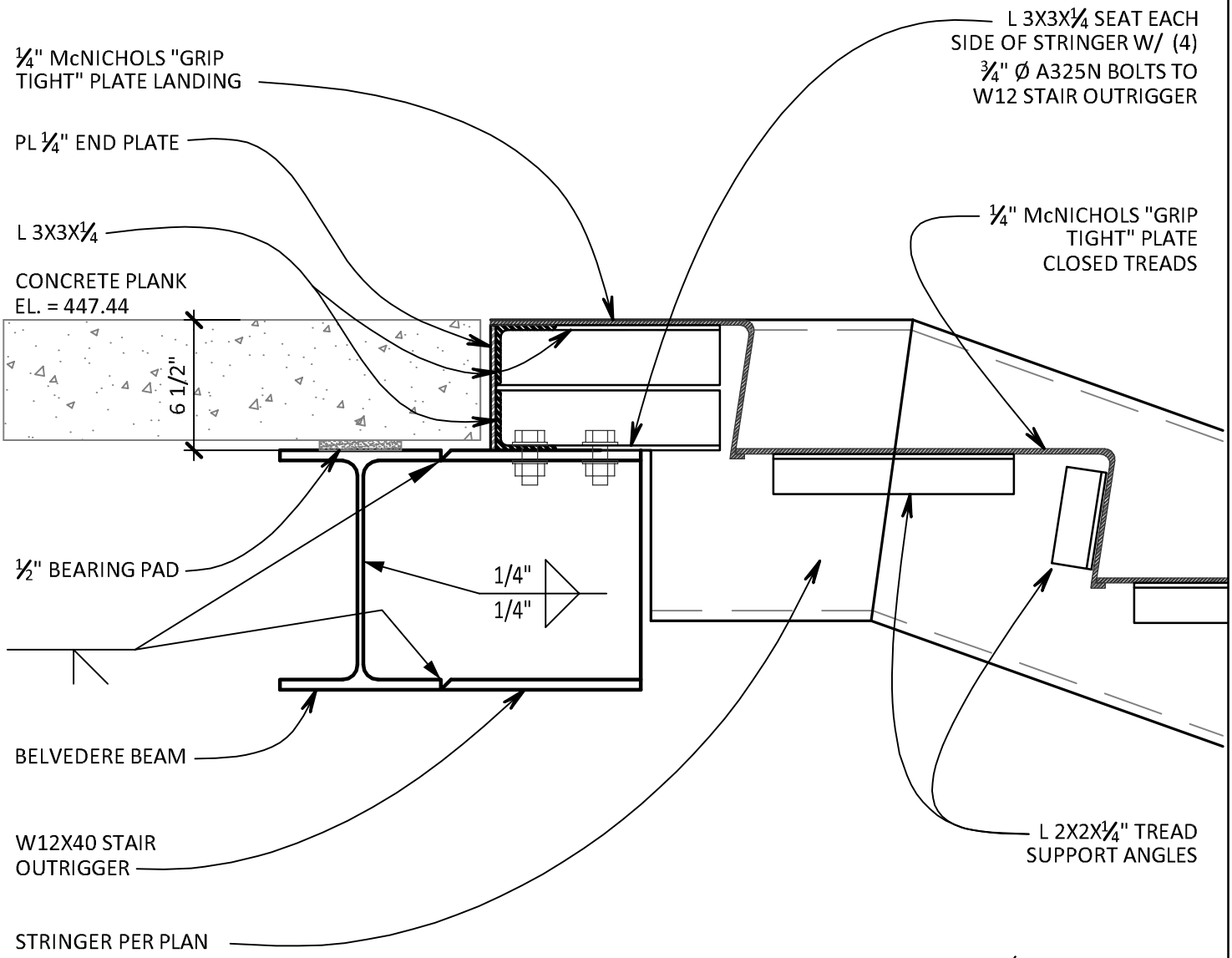

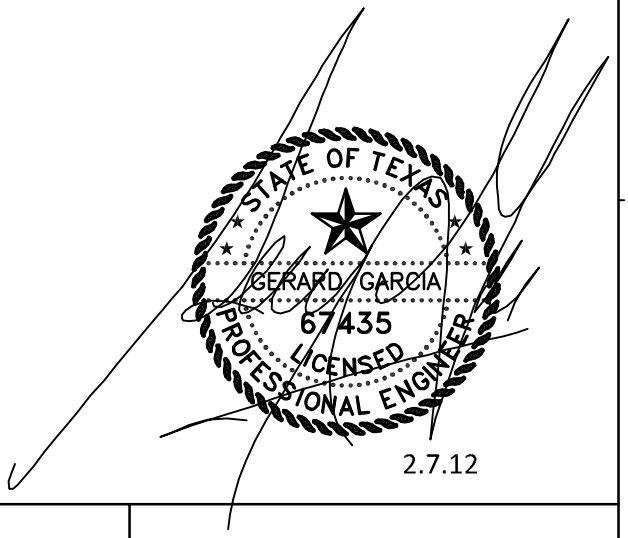

JACOBS®
TBPE Registration #F-2966
2705 Bee Cave Road, Suite 300
Austin, Texas 78746
(512) 314-3100 Fax (512) 314-3135

BOARDWALK TRAIL AT LADY BIRD LAKE

CITY OF AUSTIN

ADDENDUM 3

HARPERS BRANCH STAIR
SECTION 1

PRINT DATE: 2/7/12	SCALE: NO SCALE	LAST SAVED BY: NDR	LAST SAVED: 2/7/2012	PROJECT No.: WGXG1402

S:\Project List\2010\10.075b.Burgess.BlunnHarperBelvedere\ENGR\AUTOCAD\10.075c Harper Branch Stair

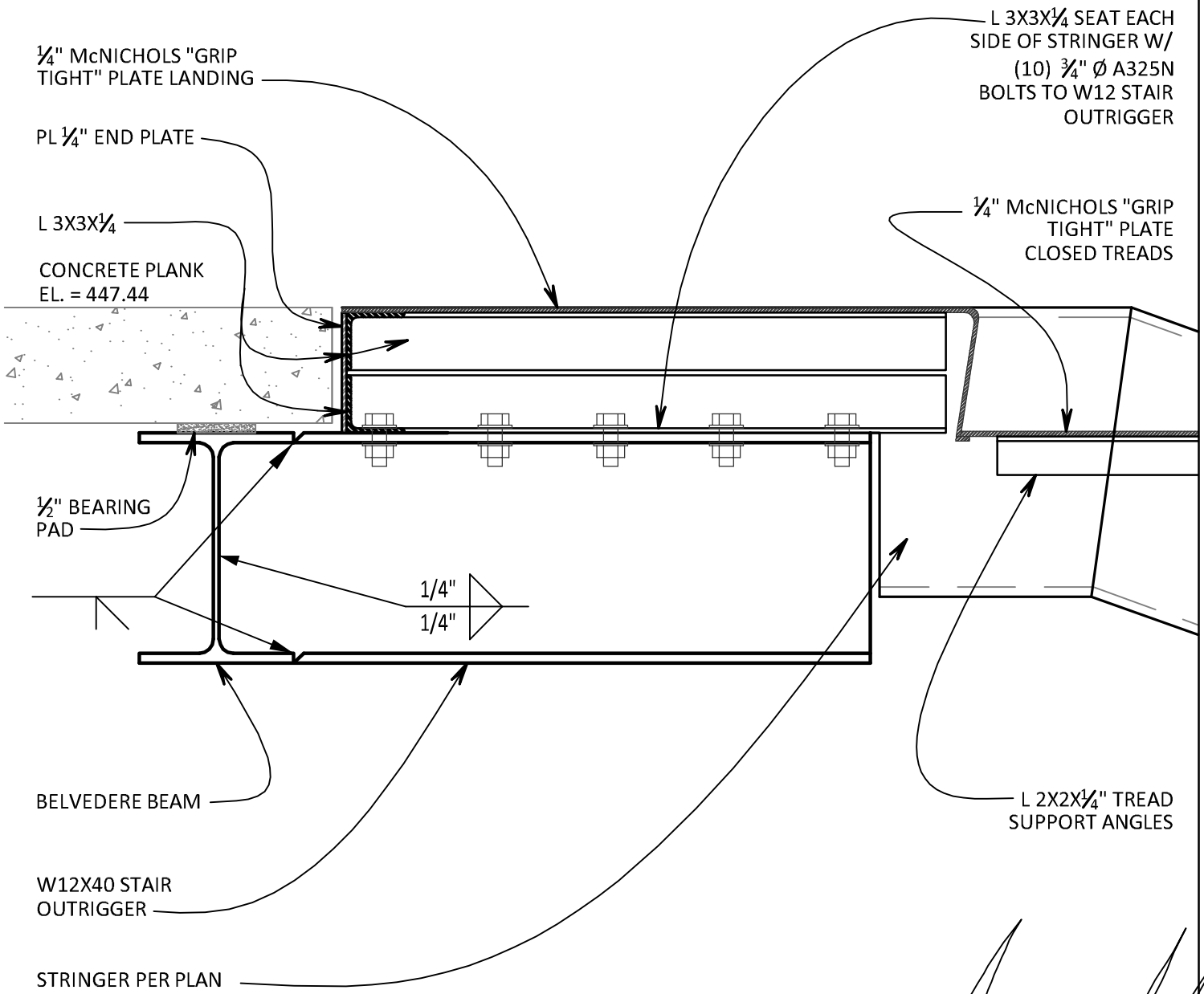

STATE OF TEXAS
GERARD GARCIA
67435
LICENSED
PROFESSIONAL ENGINEER
2.7.12

JACOBS®
TBPE Registration #F-2966
2705 Bee Cave Road, Suite 300
Austin, Texas 78746
(512) 314-3100 Fax (512) 314-3135

BOARDWALK TRAIL AT LADY BIRD LAKE

CITY OF AUSTIN

ADDENDUM 3

HARPERS BRANCH STAIR
SECTION 2

PRINT DATE: 2/7/12	SCALE: NO SCALE	LAST SAVED BY: NDR	LAST SAVED: 2/7/2012	PROJECT No.: WGXG1402

S:\Project List\2010\10.075b.Burgess.BlunnHarperBelvedere\ENGR\AUTOCAD\10.075c Harper Branch Stair

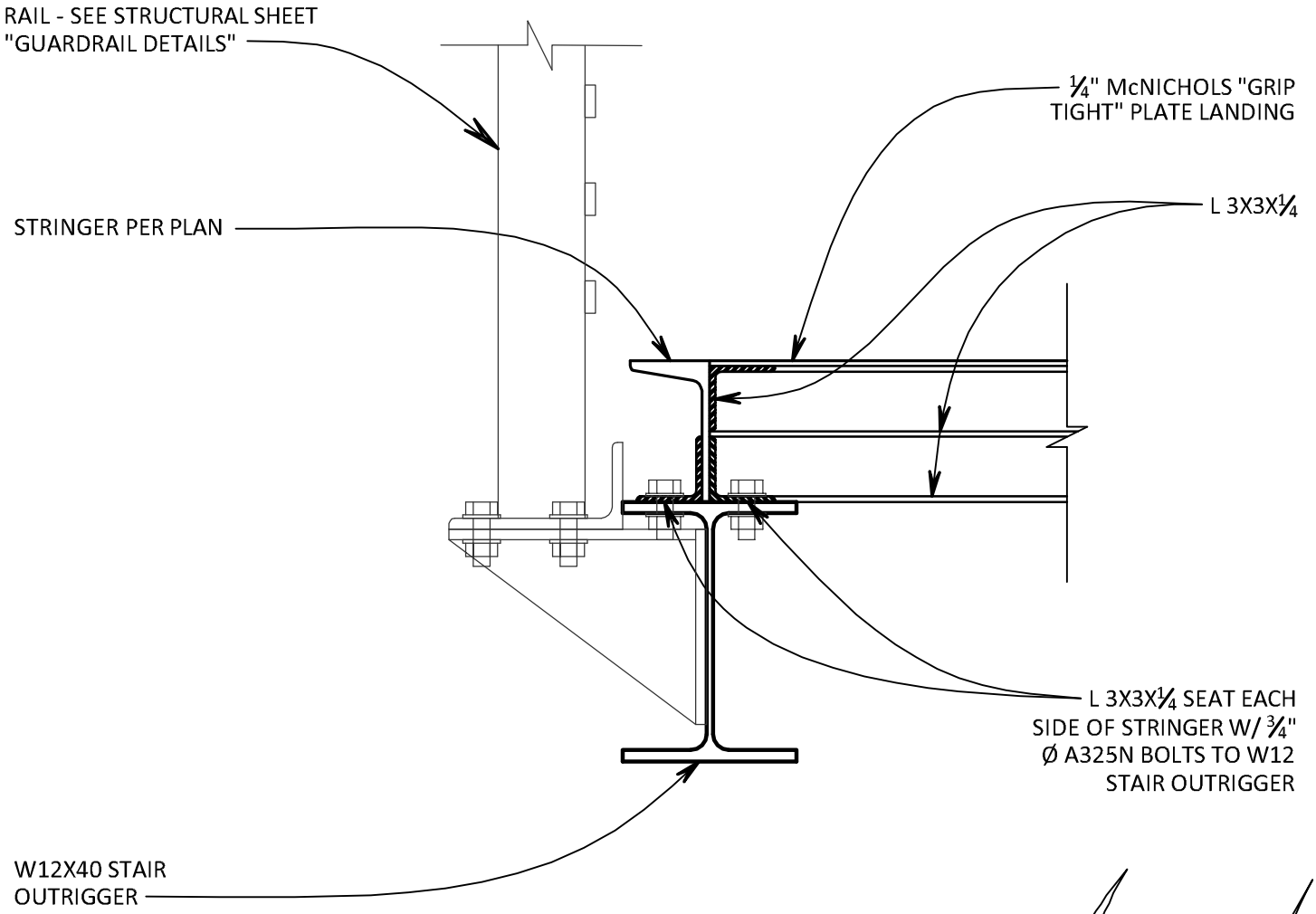

STATE OF TEXAS
GERARD GARCIA
67435
LICENSED
PROFESSIONAL ENGINEER
2.7.12

JACOBS®
TBPE Registration #F-2966
2705 Bee Cave Road, Suite 300
Austin, Texas 78746
(512) 314-3100 Fax (512) 314-3135

BOARDWALK TRAIL AT LADY BIRD LAKE

CITY OF AUSTIN

ADDENDUM 3

HARPERS BRANCH STAIR
SECTION 3

PRINT DATE: 2/7/12	SCALE: NO SCALE	LAST SAVED BY: NDR	LAST SAVED: 2/7/2012	PROJECT No.: WGXG1402

S:\Project List\2010\10.075b.Burgess.BlunnHarperBelvedere\ENGR\AUTOCAD\10.075c Harper Branch Stair

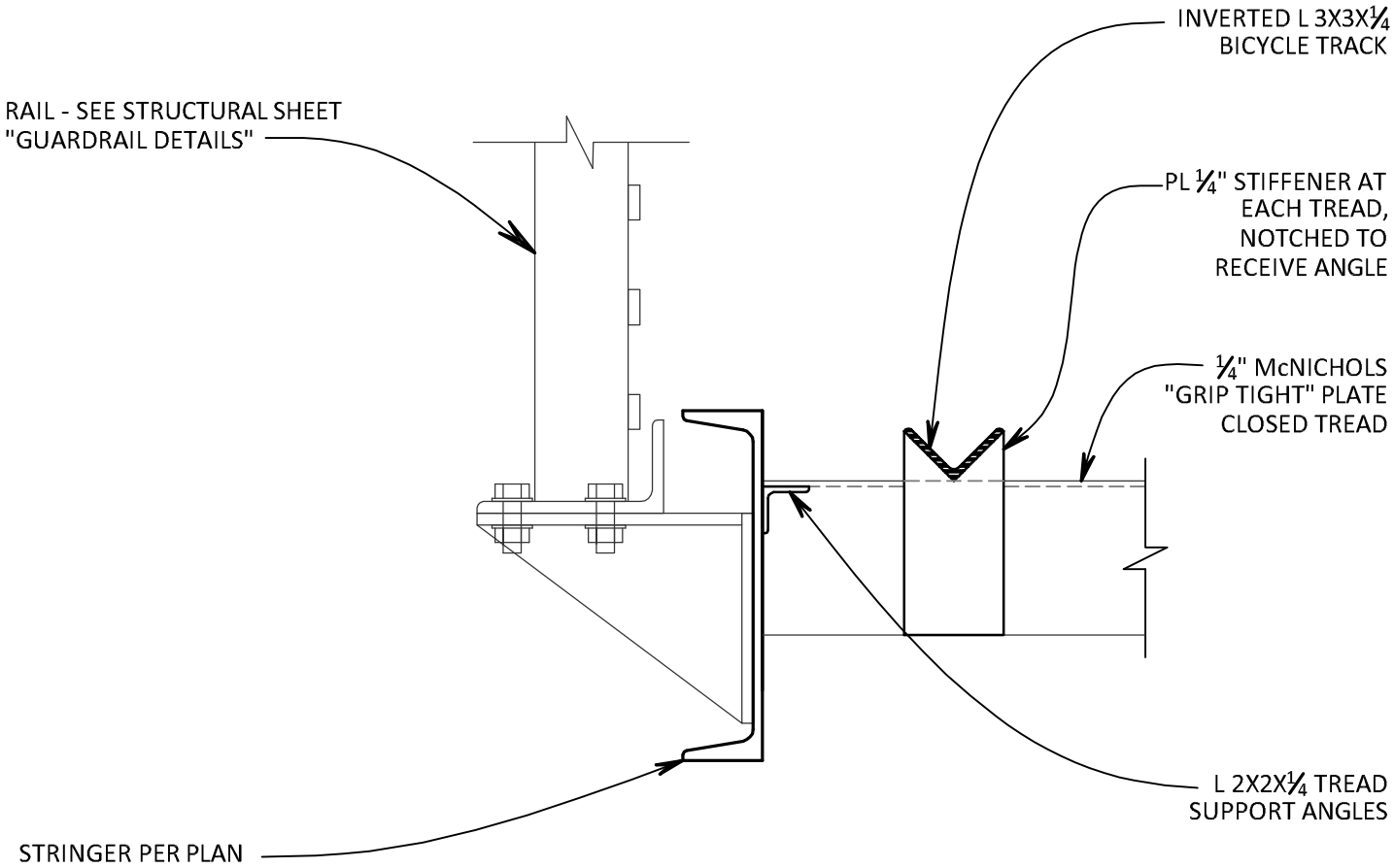

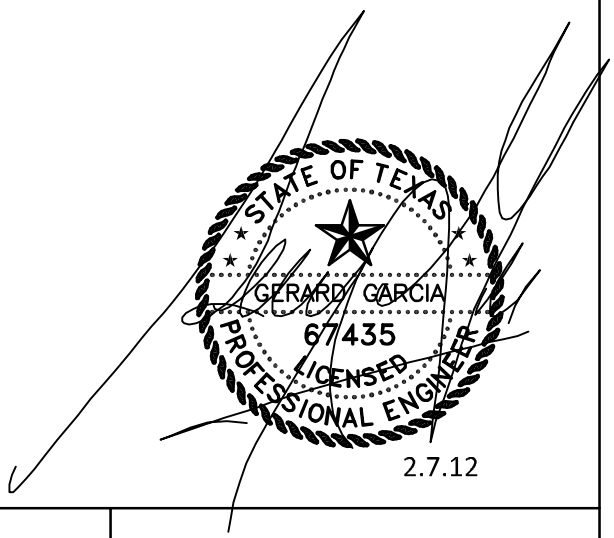

JACOBS®
TBPE Registration #F-2966
2705 Bee Cave Road, Suite 300
Austin, Texas 78746
(512) 314-3100 Fax (512) 314-3135

BOARDWALK TRAIL AT LADY BIRD LAKE

CITY OF AUSTIN

ADDENDUM 3

HARPERS BRANCH STAIR
SECTION 4

PRINT DATE: 2/7/12	SCALE: NO SCALE	LAST SAVED BY: NDR	LAST SAVED: 2/7/2012	PROJECT No.: WGXG1402

S:\Project List\2010\10.075b.Burgess.BlunnHarperBelvedere\ENGR\AUTOCAD\10.075c Harper Branch Stair

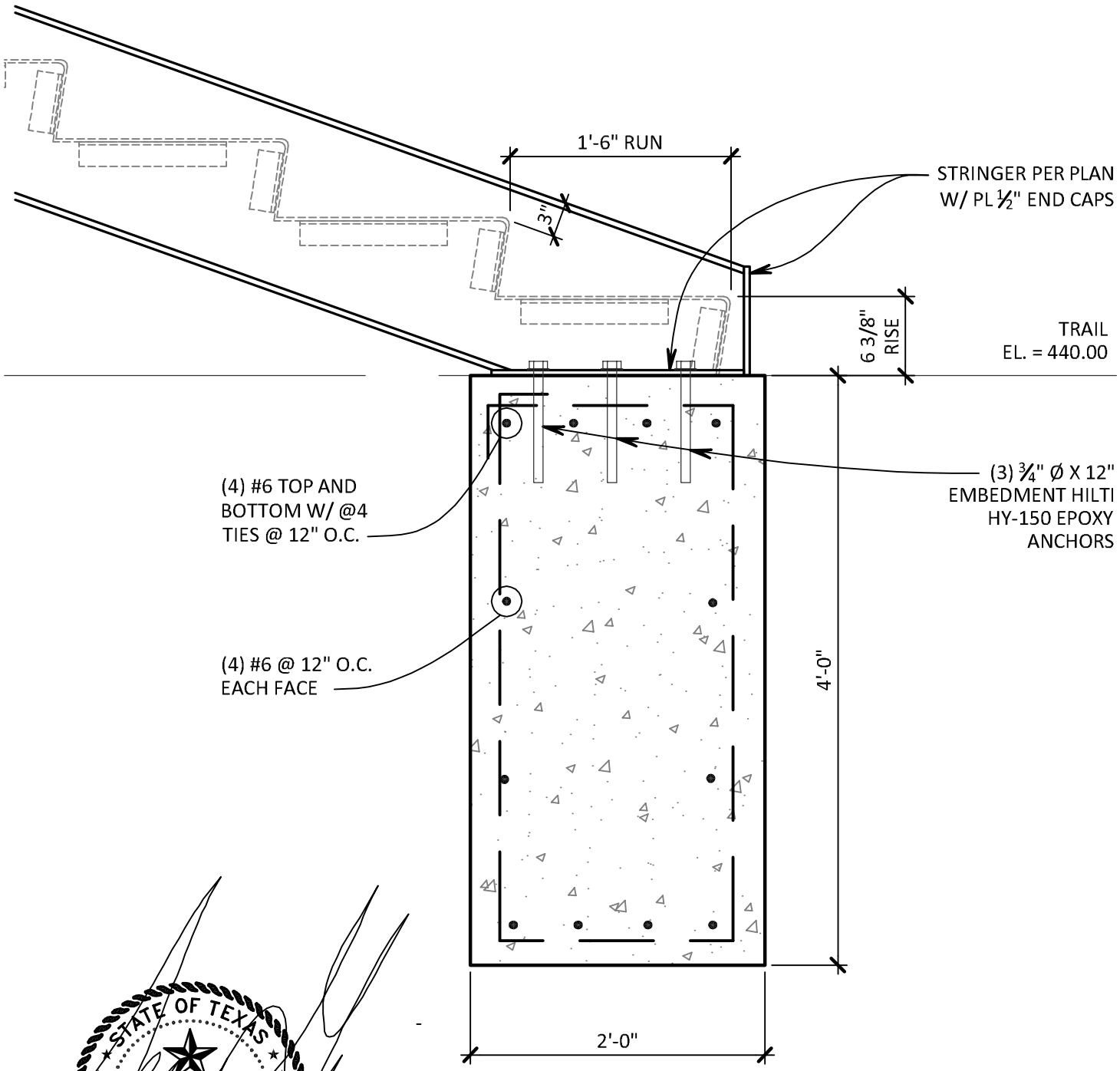

STATE OF TEXAS
GERARD GARCIA
67435
LICENSED
PROFESSIONAL ENGINEER

2.7.12

JACOBS®
TBPE Registration #F-2966
2705 Bee Cave Road, Suite 300
Austin, Texas 78746
(512) 314-3100 Fax (512) 314-3135

BOARDWALK TRAIL AT LADY BIRD LAKE

CITY OF AUSTIN

ADDENDUM 3

HARPERS BRANCH STAIR
SECTION 5

PRINT DATE: 2/7/12	SCALE: NO SCALE	LAST SAVED BY: NDR	LAST SAVED: 2/7/2012	PROJECT No.: WGXG1402

S:\Project List\2010\10.075b.Burgess.BlunnHarperBelvedere\ENGR\AUTOCAD\10.075c Harper Branch Stair

© All Rights Reserved, Jacobs, 2010

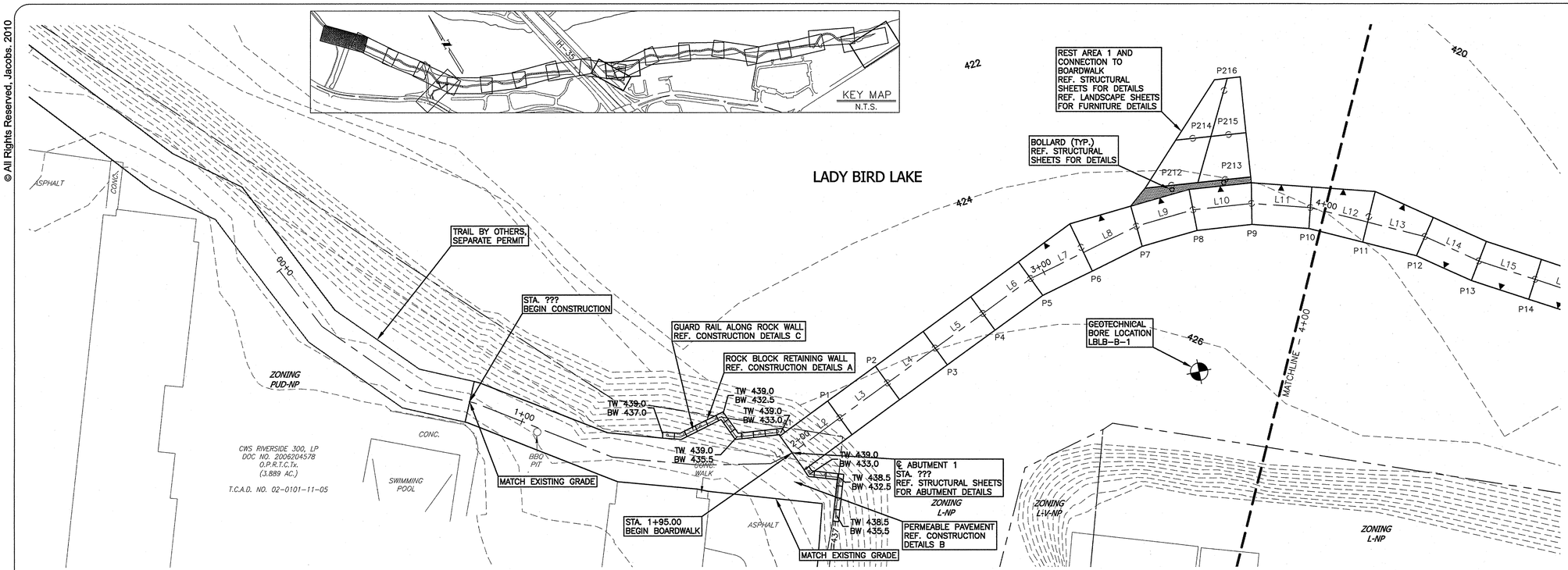

NOTES:

1. IF 100 YR FLOODPLAIN BOUNDARY IS NOT SHOWN, THE ENTIRE VIEW IS LOCATED WITHIN THE 100 YR FLOODPLAIN.
2. SEE LANDSCAPE SHEETS FOR TREE LOCATIONS
3. PROJECT ALIGNMENT MAY NOT GO THROUGH THE CENTER OF EACH PIER.
4. BATHYMETRY NOT AVAILABLE FOR PORTIONS OF THIS PROJECT.

LEGEND

- BOARDWALK ALIGNMENT
- PROPERTY BOUNDARY
- PROPOSED WALL
- PROPOSED GUARD RAIL
- 430 EXISTING CONTOUR
- 430 PROPOSED CONTOUR
- DESIGNATES LONG SIDE OF BRIDGE SEGMENT
- P8 PROPOSED PIER LOCATION AND LABEL
- REST AREA TO BOARDWALK CONNECTION
- FG FINISHED GRADE
- GND GROUND

STA. 0+00 TO 4+00

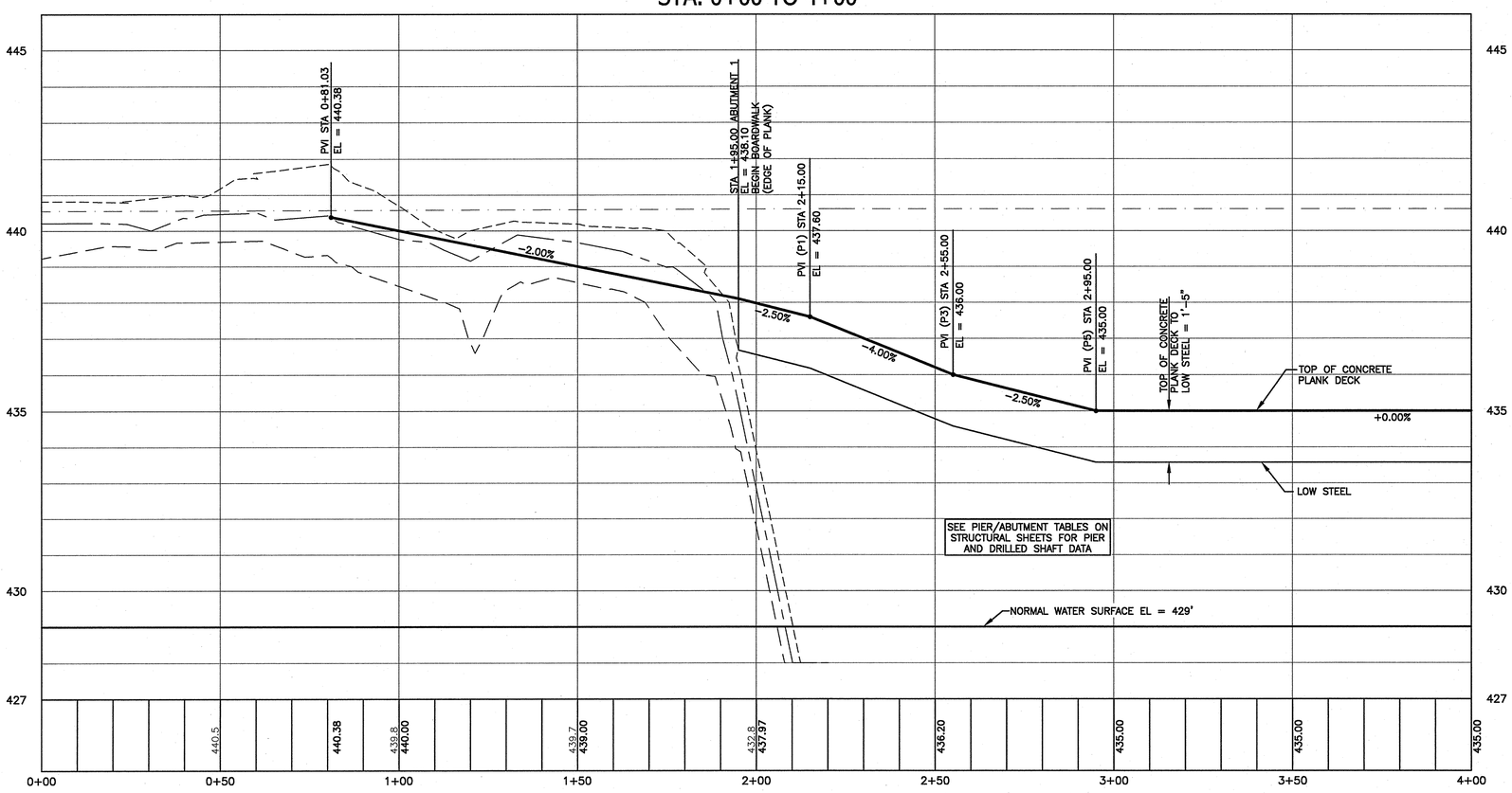

LINE TABLE						
LINE #	LENGTH (FT.)	BEARING	SEGMENT TYPE*	SEG. GRADE	PIER BEGIN	PIER END
L1	8.118	S68° 25' 23.90"E	–	–	–	A1
L2	20.000	S78° 11' 54.09"E	A	-2.50%	A1	P1
L3	20.000	S78° 11' 54.09"E	A	-4.00%	P1	P2
L4	20.000	S78° 11' 54.09"E	A	-4.00%	P2	P3
L5	20.000	S78° 11' 54.09"E	A	-2.50%	P3	P4
L6	20.000	S78° 11' 54.09"E	A	-2.50%	P4	P5
L7	20.000	S68° 11' 54.09"E	E2	0.00%	P5	P6
L8	20.000	S68° 11' 54.09"E	E1	0.00%	P6	P7
L9	20.000	S58° 11' 54.09"E	B2	0.00%	P7	P8
L10	20.000	S48° 11' 54.09"E	C	0.00%	P8	P9
L11	20.000	S38° 11' 54.09"E	B1	0.00%	P9	P10
L12	20.000	S28° 11' 54.09"E	E2	0.00%	P10	P11

* SEE STRUCTURAL SHEETS FOR SEGMENT DETAILS

PROFILE SCALE:
1"= 20' HORIZ.
1"= 2' VERT.

PROFILE LEGEND:
- PROP. FINISHED GRADE
- EXIST. CL. GND.
- EXIST. GND. 7' RIGHT
- EXIST. GND. 7' LEFT
- 100 YEAR FLOODPLAIN
- EXIST. GROUND AT ALIGNMENT 742.6 / 745.72 PROP. FG AT ALIGNMENT

SITE PLAN RELEASE Sheet ____ of ____

FILE NUMBER: ____ EXPIRATION DATE: ____
CASE MANAGER: ____ APPLICATION DATE: ____
APPROVED ADMINISTRATIVELY ON: ____
APPROVED BY PLANNING COMMISSION ON: ____
APPROVED BY CITY COUNCIL ON: ____
Under Section ____ on Chapter ____ of the Austin City Code.

Signing for Director, Watershed Protection and Development Review Department
DATE OF RELEASE: ____ of ____ Zoning: ____
Rev. 1 ____ Correction 1 ____
Rev. 2 ____ Correction 2 ____
Rev. 3 ____ Correction 3 ____

RELEASE OF THIS APPLICATION DOES NOT CONSTITUTE A VERIFICATION OF ALL DATA, INFORMATION AND CALCULATIONS SUPPLIED BY THE APPLICANT. THE ENGINEER OF RECORD IS SOLELY RESPONSIBLE FOR THE COMPLETENESS, ACCURACY AND ADEQUACY OF HIS/HER SUBMITTAL, WHETHER OR NOT THE APPLICATION IS REVIEWED FOR CODE COMPLIANCE BY CITY ENGINEERS.

NO	DATE	REVISION	BY

JACOBS®
TBPE REGISTRATION #F-2966
2705 BEE CAVE ROAD, SUITE 300,
AUSTIN, TX 78746 (512) 314-3135
(512) 314-3100, FAX (512) 314-3135

STATE OF TEXAS ADAM N. KORANSKI 95988 LICENSED PROFESSIONAL ENGINEER 10/12

BOARDWALK TRAIL AT LADY BIRD LAKE

PLAN AND PROFILE STA. 0+50 TO 4+00

BOARDWALK TRAIL AT LADY BIRD LAKE

AUSTIN, TRAVIS COUNTY, TEXAS

CLIENT: AUSTIN PARD
DRAWN BY:
DESIGNED BY:
REVIEWED BY:
JACOBS PROJECT #: W0XG1402

SP-2011-0327C

SHEET NUMBER:
C-021
021 OF 244

SP-2011-0327C

Drawing: L:\COA Boardwalk\95% – W0XG1402\CAD Files\ADDENDA\ADDENDUM 3\PLAN AND PROFILE STA. 0+50 TO 4+00.dwg
User: koranskyn
Last Modified: Feb. 01, 12 – 14:57
Plot Date/Time: Feb. 02, 12 – 11:00:59

Xrefs: L:\COA Boardwalk\95% – W0XG1402\CAD Files\ADDENDA\ADDENDUM 3\PLAN AND PROFILE STA. 0+50 TO 4+00.dwg

© All Rights Reserved, Jacobs, 2010

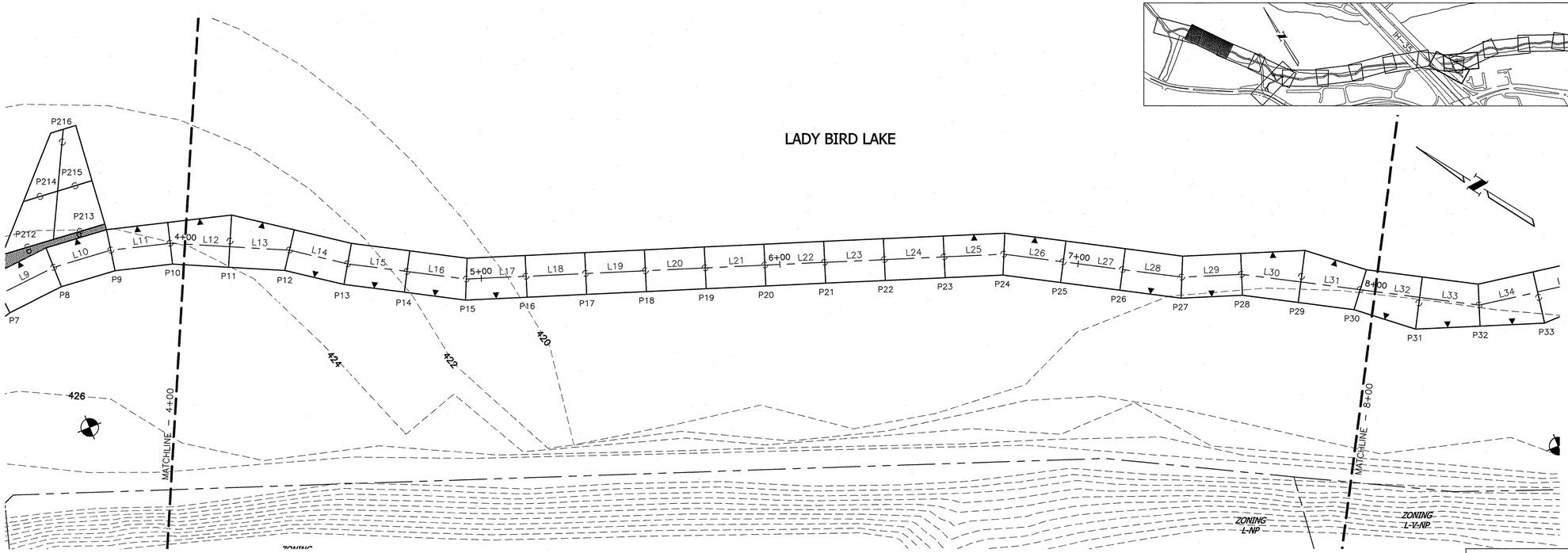

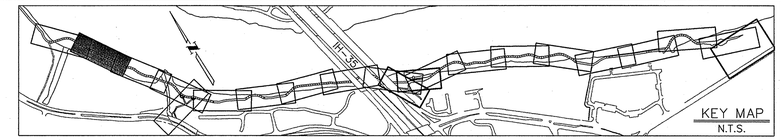

0' 10' 20' 40'

NOTES:

1. IF 100 YR FLOODPLAIN BOUNDARY IS NOT SHOWN, THE ENTIRE VIEW IS LOCATED WITHIN THE 100 YR FLOODPLAIN.
2. SEE LANDSCAPE SHEETS FOR TREE LOCATIONS
3. PROJECT ALIGNMENT MAY NOT GO THROUGH THE CENTER OF EACH PIER.
4. BATHYMETRY NOT AVAILABLE FOR PORTIONS OF THIS PROJECT.

LEGEND

- BOARDWALK ALIGNMENT
- PROPERTY BOUNDARY
- PROPOSED WALL
- PROPOSED GUARD RAIL
- 430 EXISTING CONTOUR
- 430 PROPOSED CONTOUR
- DESIGNATES LONG SIDE OF BRIDGE SEGMENT
- P8 PROPOSED PIER LOCATION AND LABEL
- REST AREA TO BOARDWALK CONNECTION
- FG FINISHED GRADE
- GND GROUND

STA. 4+00 TO 8+00

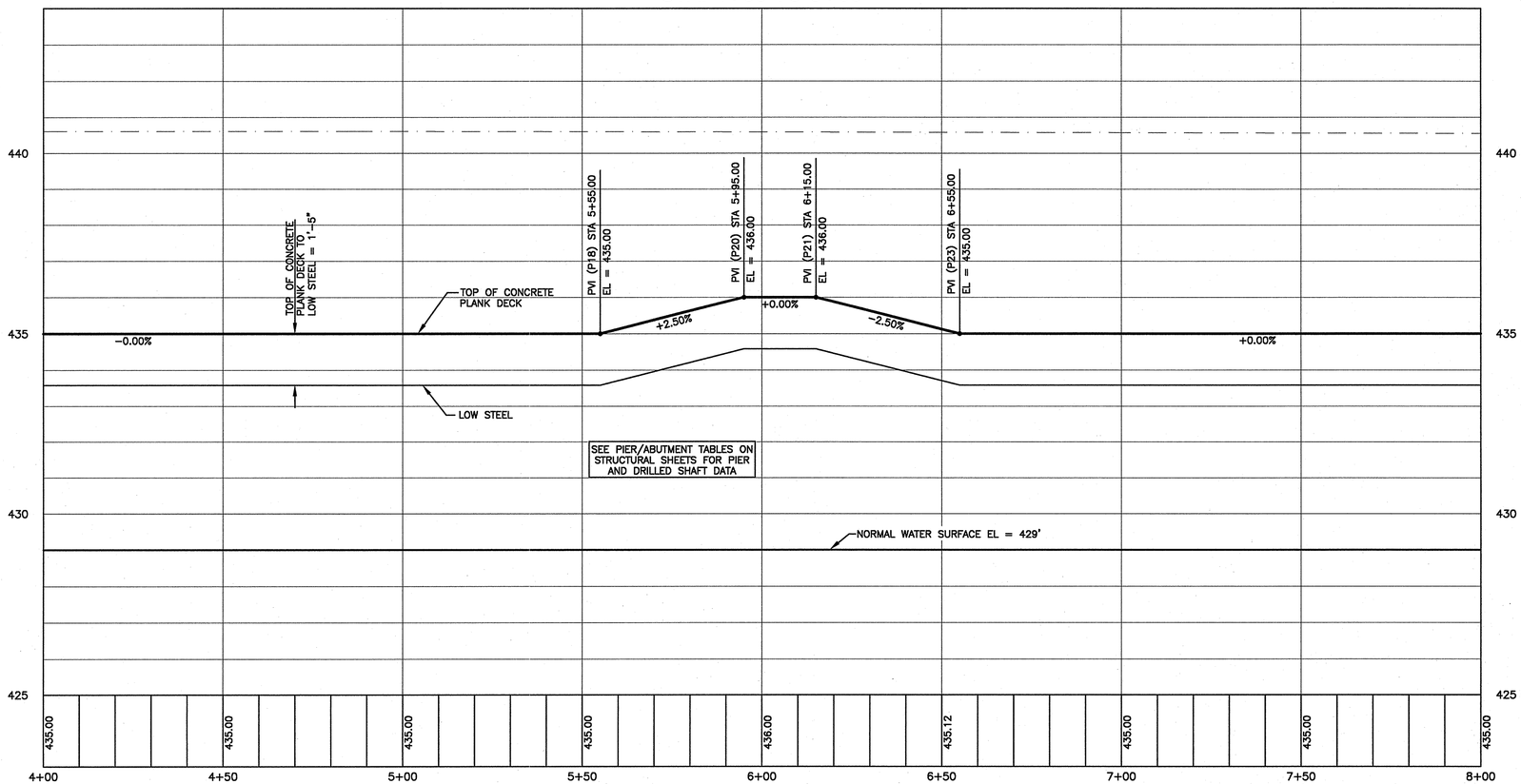

LINE TABLE

LINE #	LENGTH (FT.)	BEARING	SEGMENT TYPE*	SEG. GRADE	PIER BEGIN	PIER END
L12	20.000	S28° 11' 54.09"E	E2	0.00%	P10	P11
L13	20.000	S28° 11' 54.09"E	E1	0.00%	P11	P12
L14	20.000	N18° 11' 54.09"W	D1	0.00%	P12	P13
L15	20.000	S24° 11' 54.09"E	D2	0.00%	P13	P14
L16	20.000	S24° 11' 54.09"E	B1	0.00%	P14	P15
L17	20.000	S34° 11' 54.09"E	B2	0.00%	P15	P16
L18	20.000	S34° 11' 54.09"E	A	0.00%	P16	P17
L19	20.000	S34° 11' 54.09"E	A	0.00%	P17	P18
L20	20.000	S34° 11' 54.09"E	A	2.50%	P18	P19
L21	20.000	S34° 11' 54.09"E	A	2.50%	P19	P20
L22	20.000	S34° 11' 54.09"E	A	0.00%	P20	P21
L23	20.000	S34° 11' 54.09"E	A	−2.50%	P21	P22
L24	20.000	S34° 11' 54.09"E	A	−2.50%	P22	P23
L25	20.000	S34° 11' 54.09"E	B2	0.00%	P23	P24
L26	20.000	S24° 11' 54.09"E	B1	0.00%	P24	P25
L27	20.000	S24° 11' 54.09"E	A	0.00%	P25	P26
L28	20.000	S24° 11' 54.09"E	B1	0.00%	P26	P27
L29	20.000	S34° 11' 54.09"E	B2	0.00%	P27	P28
L30	20.000	S24° 11' 54.09"E	E2	0.00%	P28	P29
L31	20.000	S24° 11' 54.09"E	E1	0.00%	P29	P30
L32	20.000	S24° 11' 54.09"E	E1	0.00%	P30	P31

* SEE STRUCTURAL SHEETS FOR SEGMENT DETAILS

PROFILE SCALE:
1"= 20' HORIZ.
1"= 2' VERT.

PROFILE LEGEND:
- PROP. FINISHED GRADE
- EXIST. CL. GND.
- EXIST. GND. 7' RIGHT
- EXIST. GND. 7' LEFT
- 100 YEAR FLOODPLAIN

EXIST. GROUND AT ALIGNMENT 742.6 / 745.72 PROP. FG AT ALIGNMENT

SITE PLAN RELEASE Sheet ____ of ____

FILE NUMBER: ____ EXPIRATION DATE: ____
CASE MANAGER: ____ APPLICATION DATE: ____
APPROVED ADMINISTRATIVELY ON: ____
APPROVED BY PLANNING COMMISSION ON: ____
APPROVED BY CITY COUNCIL ON: ____
Under Section ____ on Chapter ____ of the Austin City Code.

Signing for Director, Watershed Protection and Development Review Department
DATE OF RELEASE: ____ of ____ Zoning: ____
Rev. 1 ____ Correction 1 ____
Rev. 2 ____ Correction 2 ____
Rev. 3 ____ Correction 3 ____

RELEASE OF THIS APPLICATION DOES NOT CONSTITUTE A VERIFICATION OF ALL DATA, INFORMATION AND CALCULATIONS SUPPLIED BY THE APPLICANT. THE ENGINEER OF RECORD IS SOLELY RESPONSIBLE FOR THE COMPLETENESS, ACCURACY AND ADEQUACY OF HIS/HER SUBMITTAL, WHETHER OR NOT THE APPLICATION IS REVIEWED FOR CODE COMPLIANCE BY CITY ENGINEERS.

NO.	DATE	REVISION	BY

JACOBS®
TBPE REGISTRATION #F-2966
2705 BEE CAVE ROAD, SUITE 300,
AUSTIN, TX 78746
(512) 314-3100, FAX (512) 314-3135

STATE OF TEXAS ADAM N. KORANSKI 95988 LICENSED PROFESSIONAL ENGINEER 2/1/12

BOARDWALK TRAIL AT LADY BIRD LAKE

PLAN AND PROFILE STA. 4+00 TO 8+00

BOARDWALK TRAIL AT LADY BIRD LAKE
AUSTIN, TRAVIS COUNTY, TEXAS

CLIENT: AUSTIN PARD
DRAWN BY: ☐
DESIGNED BY: ☐
REVIEWED BY: ☐
JACOBS PROJECT #: WGXG1402

SP-2011-0327C

SHEET NUMBER:
C-022
022 OF 244

SP-2011-0327C

Xrefs: L:\CDA Boardwalk\95% - WGXG1402\CAD Files\E-base.dwg
L:\CDA Boardwalk\95% - WGXG1402\CAD Files\E-utility.dwg
L:\CDA Boardwalk\95% - WGXG1402\CAD Files\H-base.dwg
L:\CDA Boardwalk\95% - WGXG1402\CAD Files\Title-A.dwg
L:\CDA Boardwalk\95% - WGXG1402\CAD Files\Work\E-topo-AK-2.dwg
L:\CDA Boardwalk\95% - WGXG1402\CAD Files\View Frames.dwg
L:\CDA Boardwalk\95% - WGXG1402\CAD Files\Legend - PMP.dwg
L:\CDA Boardwalk\95% - WGXG1402\CAD Files\Key Map.dwg
L:\CDA Boardwalk\95% - WGXG1402\CAD Files\Zoning.dwg

Drawing: L:\CDA Boardwalk\95% - WGXG1402\CAD Files\ADDENDUM 3\PLAN AND PROFILE STA. 4+00 TO 8+00.dwg
User: koranskyan
Last Modified: Feb. 01, 12 - 14:21
Plot Date/Time: Feb. 01, 12 - 14:22:22

L:\CDA Boardwalk\95% - WGXG1402\CAD Files\ADDENDUM 3\PLAN AND PROFILE STA. 4+00 TO 8+00.dwg

© All Rights Reserved, Jacobs, 2010

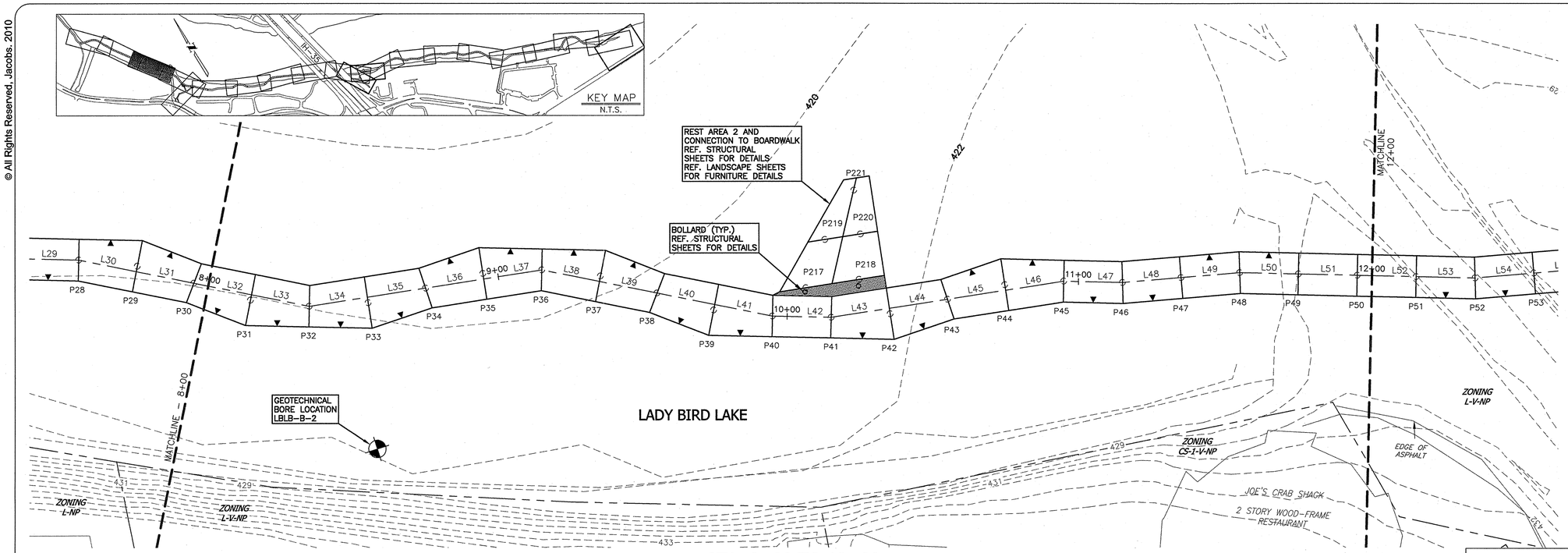

NOTES:

1. IF 100 YR FLOODPLAIN BOUNDARY IS NOT SHOWN, THE ENTIRE VIEW IS LOCATED WITHIN THE 100 YR FLOODPLAIN.
2. SEE LANDSCAPE SHEETS FOR TREE LOCATIONS
3. PROJECT ALIGNMENT MAY NOT GO THROUGH THE CENTER OF EACH PIER
4. BATHYMETRY NOT AVAILABLE FOR PORTIONS OF THIS PROJECT.

LEGEND

- BOARDWALK ALIGNMENT
- PROPERTY BOUNDARY
- PROPOSED WALL
- PROPOSED GUARD RAIL
- 430 EXISTING CONTOUR
- 430 PROPOSED CONTOUR
- DESIGNATES LONG SIDE OF BRIDGE SEGMENT
- P8 PROPOSED PIER LOCATION AND LABEL
- REST AREA TO BOARDWALK CONNECTION
- FG FINISHED GRADE
- GND GROUND

STA. 8+00 TO 12+00

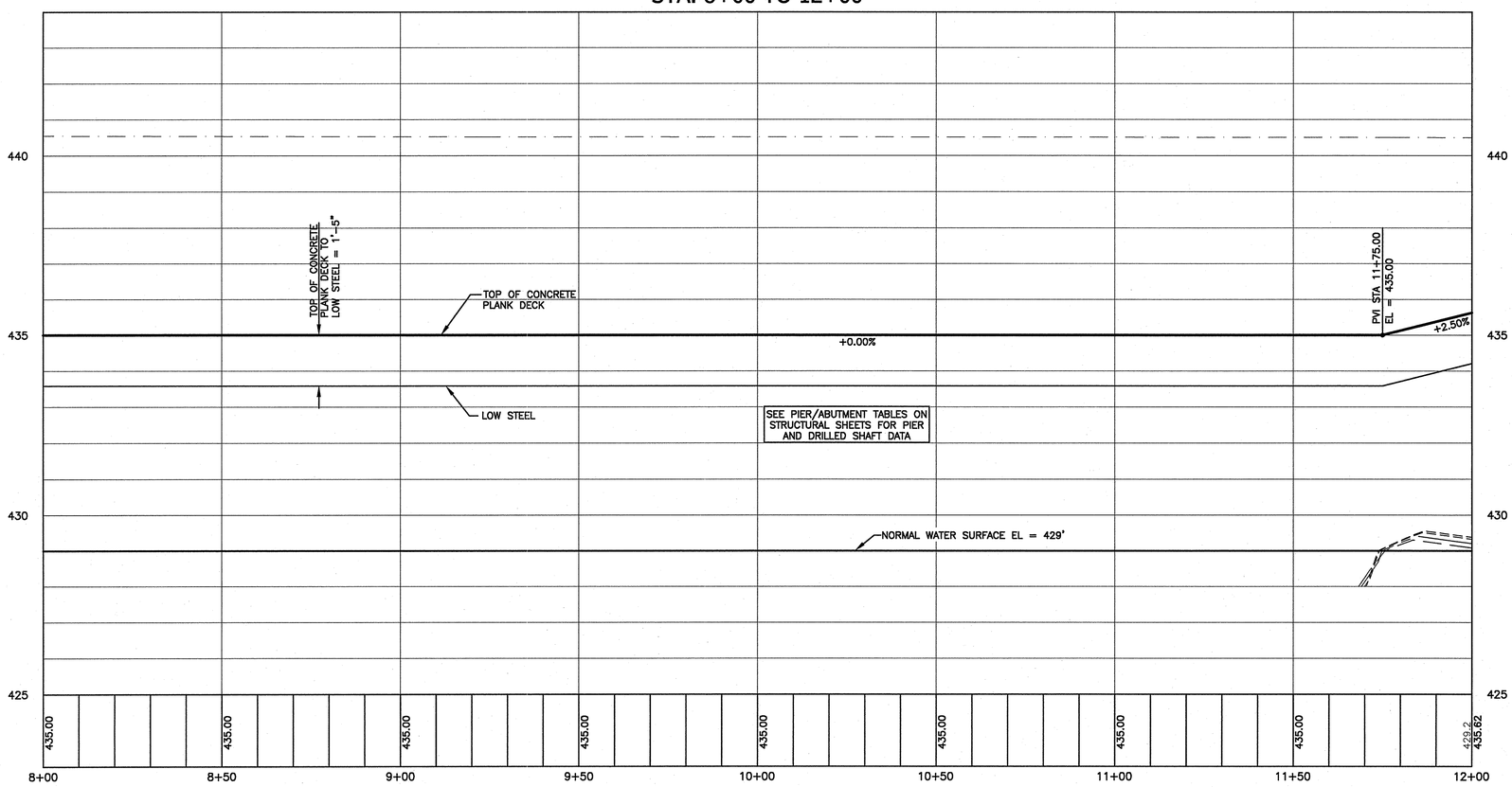

LINE TABLE						
LINE #	LENGTH (FT.)	BEARING	SEGMENT TYPE*	SEG. GRADE	PIER BEGIN	PIER END
L32	20.000	S24° 11' 54.09"E	E1	0.00%	P30	P31
L33	20.000	S24° 11' 54.09"E	E2	0.00%	P31	P32
L34	20.000	S44° 11' 54.09"E	E1	0.00%	P32	P33
L35	20.000	S44° 11' 54.09"E	E2	0.00%	P33	P34
L36	20.000	S44° 11' 54.09"E	E2	0.00%	P34	P35
L37	20.000	S44° 11' 54.09"E	E1	0.00%	P35	P36
L38	20.000	S24° 11' 54.09"E	E2	0.00%	P36	P37
L39	20.000	S24° 11' 54.09"E	E1	0.00%	P37	P38
L40	20.000	S24° 11' 54.09"E	E1	0.00%	P38	P39
L41	20.000	S24° 11' 54.09"E	E2	0.00%	P39	P40
L42	20.000	S34° 11' 54.09"E	A	0.00%	P40	P41
L43	20.000	S44° 11' 54.09"E	E1	0.00%	P41	P42
L44	20.000	S44° 11' 54.09"E	E2	0.00%	P42	P43
L45	20.000	S44° 11' 54.09"E	E2	0.00%	P43	P44
L46	20.000	S44° 11' 54.09"E	E1	0.00%	P44	P45
L47	20.000	S34° 11' 54.09"E	D1	0.00%	P45	P46
L48	20.000	S40° 11' 54.09"E	D2	0.00%	P46	P47
L49	20.000	S40° 11' 54.09"E	D2	0.00%	P47	P48
L50	20.000	S34° 11' 54.09"E	D1	0.00%	P48	P49
L51	20.000	S34° 11' 54.09"E	A	2.50%	P49	P50
L52	20.000	S34° 11' 54.09"E	A	2.50%	P50	P51

* SEE STRUCTURAL SHEETS FOR SEGMENT DETAILS

PROFILE SCALE:
1"= 20' HORIZ.
1"= 2' VERT.

PROFILE LEGEND:
- PROP. FINISHED GRADE
- EXIST. CL. GND.
- EXIST. GND. 7' RIGHT
- EXIST. GND. 7' LEFT
- 100 YEAR FLOODPLAIN
- EXIST. GROUND AT ALIGNMENT
- 742.6 / 745.72
- PROP. FG AT ALIGNMENT

SITE PLAN RELEASE Sheet ____ of ____

FILE NUMBER: ____ EXPIRATION DATE: ____
CASE MANAGER: ____ APPLICATION DATE: ____
APPROVED ADMINISTRATIVELY ON: ____
APPROVED BY PLANNING COMMISSION ON: ____
APPROVED BY CITY COUNCIL ON: ____
Under Section ____ on Chapter ____ of the Austin City Code.

Signing for Director, Watershed Protection and Development Review Department
DATE OF RELEASE: ____ of ____ Zoning: ____
Rev. 1 ____ Correction 1 ____
Rev. 2 ____ Correction 2 ____
Rev. 3 ____ Correction 3 ____

RELEASE OF THIS APPLICATION DOES NOT CONSTITUTE A VERIFICATION OF ALL DATA, INFORMATION AND CALCULATIONS SUPPLIED BY THE APPLICANT. THE ENGINEER OF RECORD IS SOLELY RESPONSIBLE FOR THE COMPLETENESS, ACCURACY AND ADEQUACY OF HIS/HER SUBMITTAL, WHETHER OR NOT THE APPLICATION IS REVIEWED FOR CODE COMPLIANCE BY CITY ENGINEERS.

NO.	DATE	REVISION	BY

JACOBS®
TBPE REGISTRATION #F-2966
2705 BEE CAVE ROAD, SUITE 300,
AUSTIN, TX 78746 (512) 314-3135
(512) 314-3100, FAX (512) 314-3135

STATE OF TEXAS
ADAM N. KORANSKY
95988
LICENSED
PROFESSIONAL ENGINEER

BOARDWALK TRAIL AT LADY BIRD LAKE

PLAN AND PROFILE STA. 8+00 TO 12+00

BOARDWALK TRAIL AT LADY BIRD LAKE

AUSTIN, TRAVIS COUNTY, TEXAS

CLIENT: AUSTIN PARD
DRAWN BY:
DESIGNED BY:
REVIEWED BY:
JACOBS PROJECT #: W2XG1402

SP-2011-0327C

SHEET NUMBER:
C-023
023 OF 244

SP-2011-0327C

Drawing: L:\CDA Boardwalk\SPE - W2XG1402\CAD Files\ADDENDUM 3\P-PLAN AND PROFILE STA. 8+00 TO 12+00.dwg
User: koranskyan
Last Modified: Feb. 01, 12 - 15:05
Plot Date/Time: Feb. 01, 12 - 15:10:49

Xrefs: L:\CDA Boardwalk\SPE - W2XG1402\CAD Files\E-base.dwg
L:\CDA Boardwalk\SPE - W2XG1402\CAD Files\E-utility.dwg
L:\CDA Boardwalk\SPE - W2XG1402\CAD Files\D-base.dwg
L:\CDA Boardwalk\SPE - W2XG1402\CAD Files\Title-C.dwg
L:\CDA Boardwalk\SPE - W2XG1402\CAD Files\Work\E-topo-AK.dwg
L:\CDA Boardwalk\SPE - W2XG1402\CAD Files\Title Frames.dwg
C:\prewetting\vol\vandalfs\ams19951\E-trees.dwg
L:\CDA Boardwalk\SPE - W2XG1402\CAD Files\Legend - P&P.dwg
L:\CDA Boardwalk\SPE - W2XG1402\CAD Files\Key Sheet.dwg
L:\CDA Boardwalk\SPE - W2XG1402\CAD Files\Profile.dwg
L:\CDA Boardwalk\SPE - W2XG1402\CAD Files\Zoning.dwg

L:\CDA Boardwalk\SPE - W2XG1402\CAD Files\ADDENDUM 3\P-PLAN AND PROFILE STA. 8+00 TO 12+00.dwg

© All Rights Reserved, Jacobs, 2010

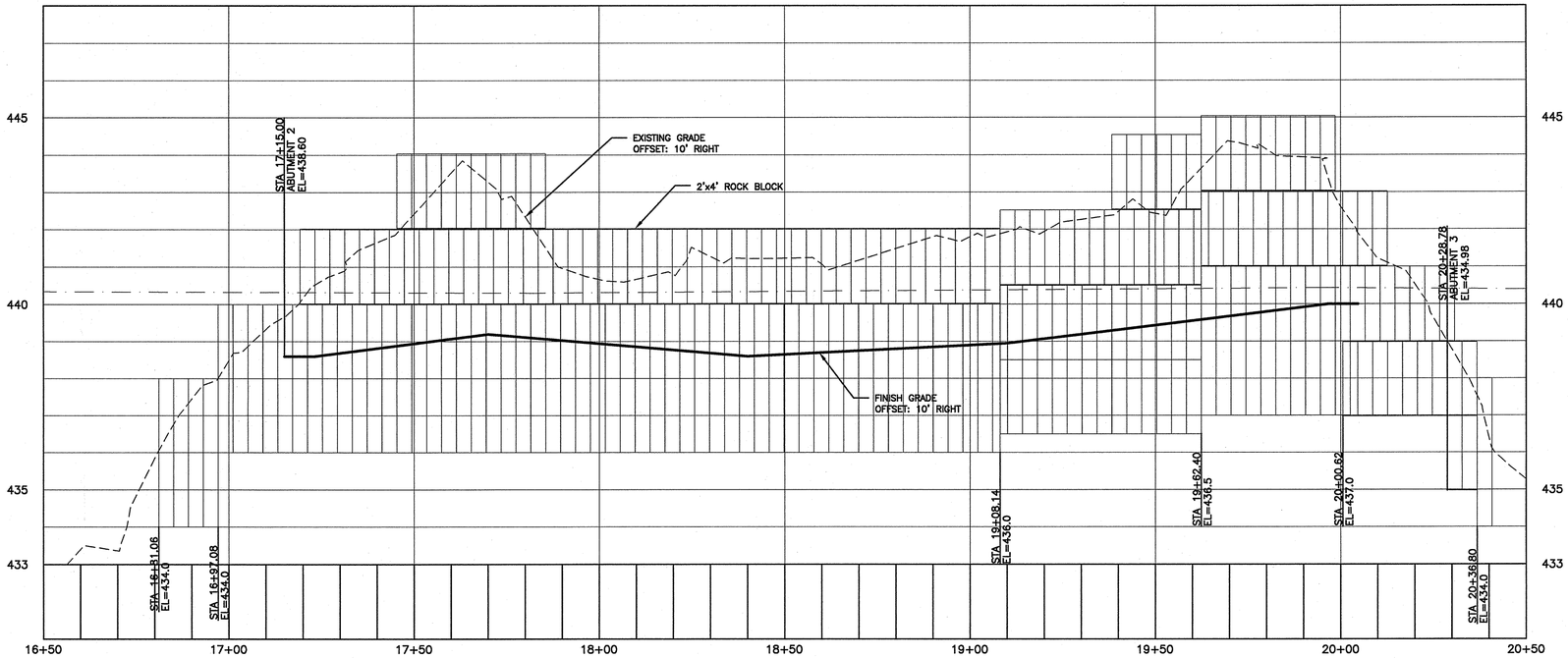

WALL PROFILE - STA. 17+00 TO 20+50 (RIGHT)

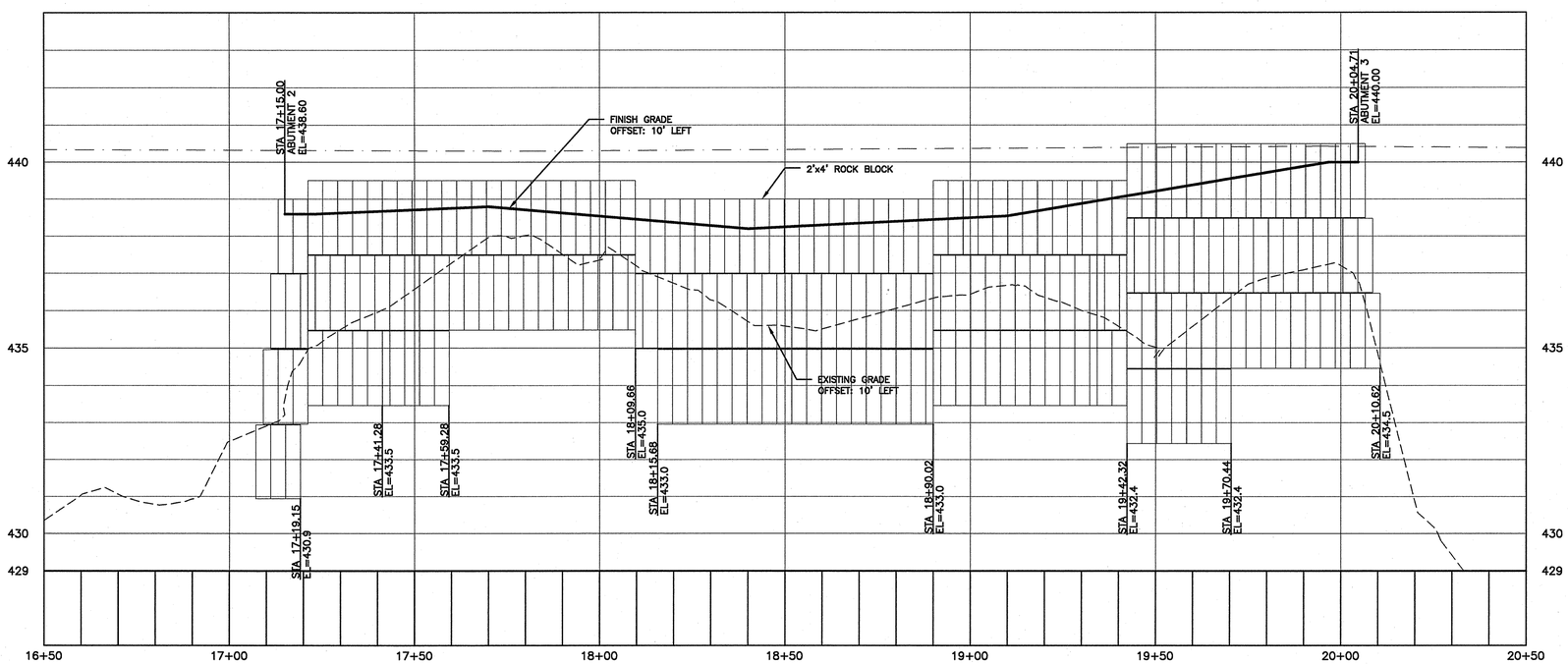

WALL PROFILE - STA. 17+00 TO 20+50 (LEFT)

STRUCTURAL DESIGN OF ALL RETAINING WALLS SHALL BE PROVIDED TO THE CITY FROM THE CONTRACTOR PRIOR TO CONSTRUCTION. ALL DESIGN SHALL CONFORM TO SECTION 11 OF THE CITY OF AUSTIN TRANSPORTATION CRITERIA MANUAL. DESIGNS SHALL BE SUBMITTED TO CHRIS NEWTON, QUALITY AND STANDARDS MANAGEMENT DIVISION, PUBLIC WORKS DEPARTMENT.

LEGEND

- EXISTING GRADE
- PROPOSED FINISH GRADE
- 100 YEAR FLOODPLAIN
- 2'x4' ROCK BLOCK

PROFILE SCALE:
1"= 20' HORIZ.
1"= 2' VERT.

SITE PLAN RELEASE Sheet ____ of ____

FILE NUMBER: ____ EXPIRATION DATE: ____
CASE MANAGER: ____ APPLICATION DATE: ____
APPROVED ADMINISTRATIVELY ON: ____
APPROVED BY PLANNING COMMISSION ON: ____
APPROVED BY CITY COUNCIL ON: ____
Under Section ____ on Chapter ____ of the Austin City Code.

Signing for Director, Watershed Protection and Development Review Department
DATE OF RELEASE: ____ of ____ Zoning: ____
Rev. 1 ____ Correction 1 ____
Rev. 2 ____ Correction 2 ____
Rev. 3 ____ Correction 3 ____

RELEASE OF THIS APPLICATION DOES NOT CONSTITUTE A VERIFICATION OF ALL DATA, INFORMATION AND CALCULATIONS SUPPLIED BY THE APPLICANT. THE ENGINEER OF RECORD IS SOLELY RESPONSIBLE FOR THE COMPLETENESS, ACCURACY AND ADEQUACY OF HIS/HER SUBMITTAL, WHETHER OR NOT THE APPLICATION IS REVIEWED FOR CODE COMPLIANCE BY CITY ENGINEERS.

NO.	DATE	REVISION	BY

JACOBS®
TBPE REGISTRATION #F-2966
2705 BEE CAVE ROAD, SUITE 300,
AUSTIN, TX 78746
(512) 314-3100, FAX (512) 314-3135

STATE OF TEXAS
ADAM N. KORANSKY
95988
LICENSED
PROFESSIONAL ENGINEER
3/1/12

BOARDWALK TRAIL AT LADY BIRD LAKE

WALL PROFILE STA. 17+00 TO 20+50

BOARDWALK TRAIL AT LADY BIRD LAKE
AUSTIN, TRAVIS COUNTY, TEXAS

CLIENT: AUSTIN PARD
DRAWN BY:
DESIGNED BY:
REVIEWED BY:
JACOBS PROJECT #: W0XG1402
SP-2011-0327C

SHEET NUMBER:
C-044
044 OF 244

SP-2011-0327C

Xrefs: L:\COA Boardwalk\SP25 - W0XG1402\CAD Files\VBLK.dwg
L:\COA Boardwalk\SP25 - W0XG1402\CAD Files\Wall Profile-mod-dr.dwg

Drawing: L:\COA Boardwalk\SP25 - W0XG1402\CAD Files\ADDENDA\ADDENDUM 3\WALL PROFILE STA. 17+00 TO 20+50.dwg
User Name: ANK
Last Modified: Feb. 03, 12 - 10:38
Plot Date/Time: Feb. 03, 12 - 11:12:27

L:\COA Boardwalk\SP25 - W0XG1402\CAD Files\ADDENDA\ADDENDUM 3\WALL PROFILE STA. 17+00 TO 20+50.dwg

© All Rights Reserved, Jacobs, 2010

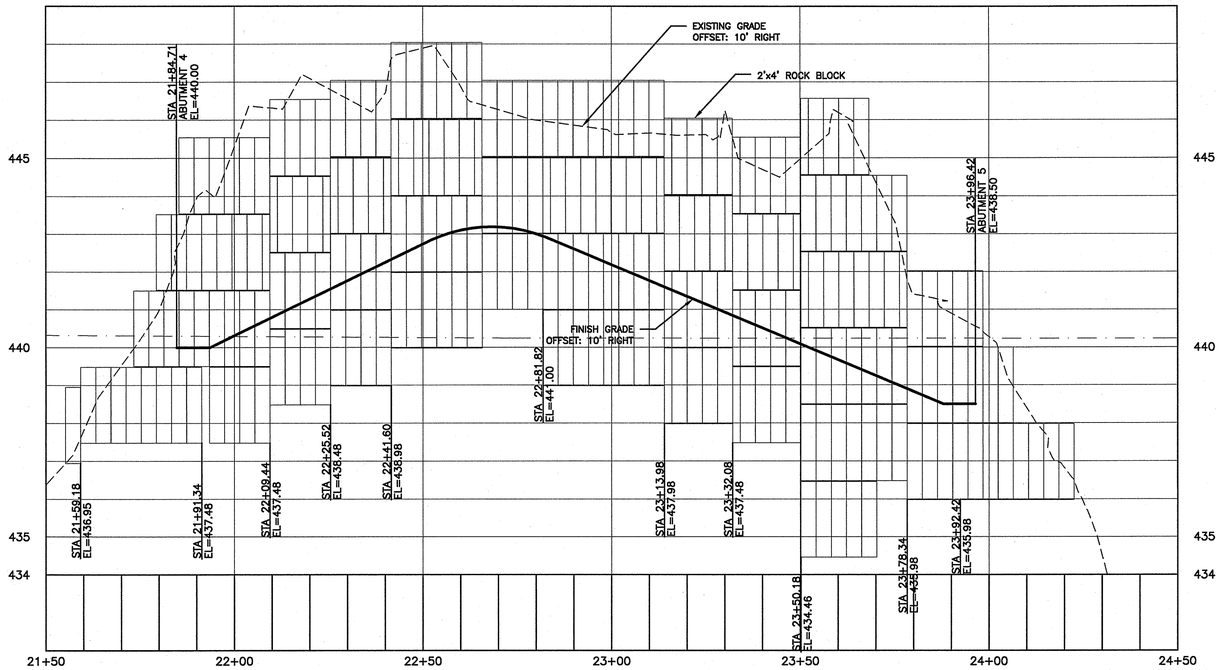

WALL PROFILE - STA. 21+50 TO 24+50 (RIGHT)

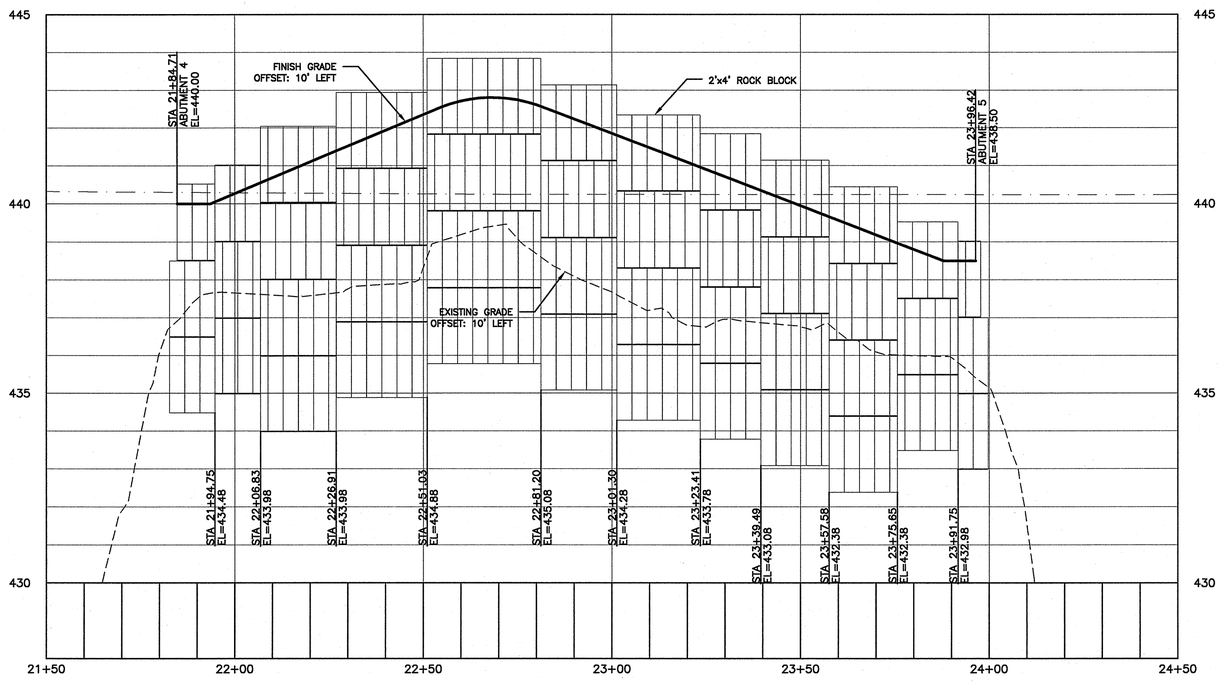

WALL PROFILE - STA. 21+50 TO 24+50 (LEFT)

STRUCTURAL DESIGN OF ALL RETAINING WALLS SHALL BE PROVIDED TO THE CITY FROM THE CONTRACTOR PRIOR TO CONSTRUCTION. ALL DESIGN SHALL CONFORM TO SECTION 11 OF THE CITY OF AUSTIN TRANSPORTATION CRITERIA MANUAL. DESIGNS SHALL BE SUBMITTED TO CHRIS NEWTON, QUALITY AND STANDARDS MANAGEMENT DIVISION, PUBLIC WORKS DEPARTMENT.

LEGEND

- EXISTING GRADE
- PROPOSED FINISH GRADE
- 100 YEAR FLOODPLAIN
- 2'x4' ROCK BLOCK

PROFILE SCALE:
1"= 20' HORIZ.
1"= 2' VERT.

SITE PLAN RELEASE Sheet ____ of ____

FILE NUMBER: ____ EXPIRATION DATE: ____
CASE MANAGER: ____ APPLICATION DATE: ____
APPROVED ADMINISTRATIVELY ON: ____
APPROVED BY PLANNING COMMISSION ON: ____
APPROVED BY CITY COUNCIL ON: ____
Under Section ____ on Chapter ____ of the Austin City Code.

Signing for Director, Watershed Protection and Development Review Department
DATE OF RELEASE: ____ of ____ Zoning: ____
Rev. 1 ____ Correction 1 ____
Rev. 2 ____ Correction 2 ____
Rev. 3 ____ Correction 3 ____

RELEASE OF THIS APPLICATION DOES NOT CONSTITUTE A VERIFICATION OF ALL DATA, INFORMATION AND CALCULATIONS SUPPLIED BY THE APPLICANT. THE ENGINEER OF RECORD IS SOLELY RESPONSIBLE FOR THE COMPLETENESS, ACCURACY AND ADEQUACY OF HIS/HER SUBMITTAL, WHETHER OR NOT THE APPLICATION IS REVIEWED FOR CODE COMPLIANCE BY CITY ENGINEERS.

NO.	DATE	REVISION	BY

JACOBS®
TBPE REGISTRATION #F-2966
2705 BEE CAVE ROAD, SUITE 300,
AUSTIN, TX 78746
(512) 314-3100, FAX (512) 314-3135

STATE OF TEXAS
ADAM N. KORANSKI
95988
LICENSED
PROFESSIONAL ENGINEER
2/6/12

BOARDWALK TRAIL AT LADY BIRD LAKE

WALL PROFILE STA. 21+50 TO 24+50

BOARDWALK TRAIL AT LADY BIRD LAKE

AUSTIN, TRAVIS COUNTY, TEXAS

CLIENT: AUSTIN PARD
DRAWN BY:
DESIGNED BY:
REVIEWED BY:
JACOBS PROJECT #: W0XG1402

SP-2011-0327C

SHEET NUMBER:
C-045
045 OF 244

Xrefs: L:\COA Boardwalk\9535 - W0XG1402\CAD Files\TBLK.dwg
L:\COA Boardwalk\9535 - W0XG1402\CAD Files\Work\Profile-minor-dc.dwg
Drawing: L:\COA Boardwalk\9535 - W0XG1402\CAD Files\ADDENDA\ADDENDUM 3\WALL PROFILE STA. 21+50 TO 24+50.dwg
User: Jacobs
Last Modified: Feb. 03, 12 - 10:41
Plot Date/Time: Feb. 03, 12 - 11:14:22

© All Rights Reserved, Jacobs, 2010

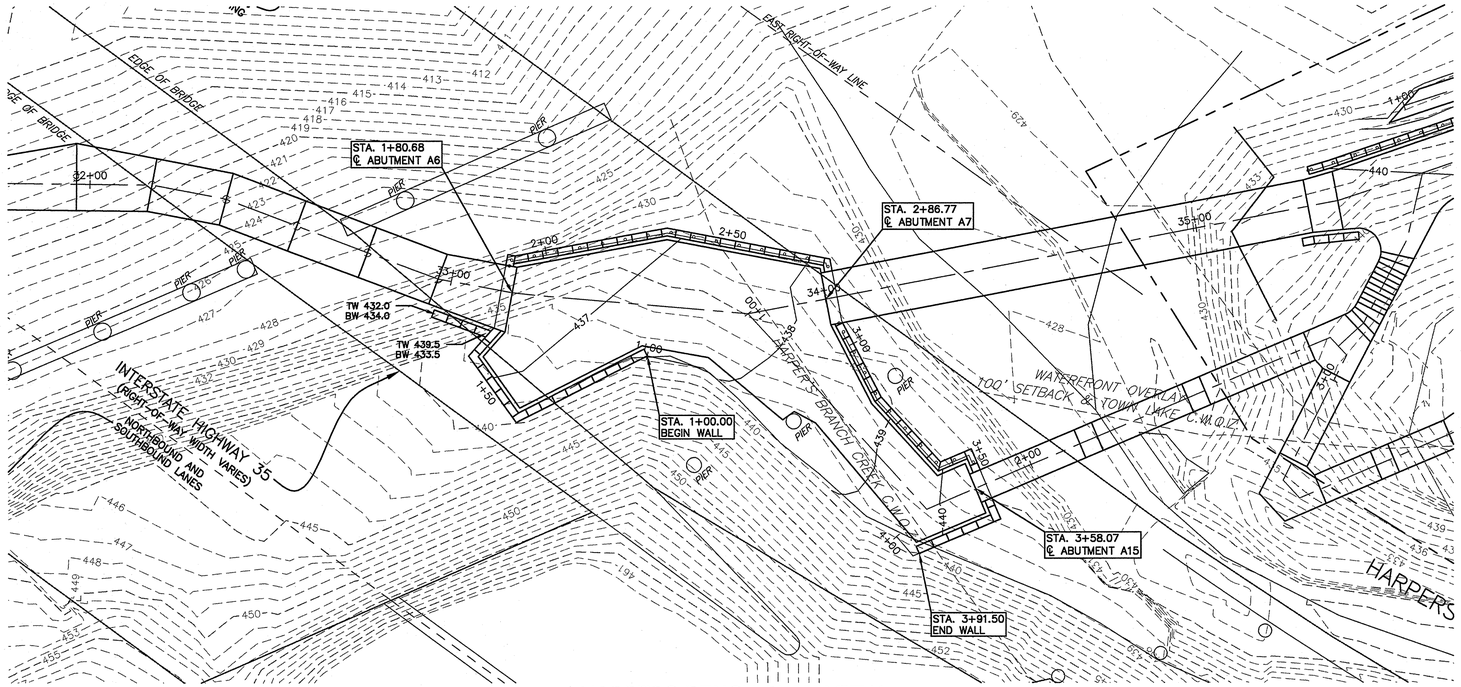

HARPERS BENCH PLAN VIEW

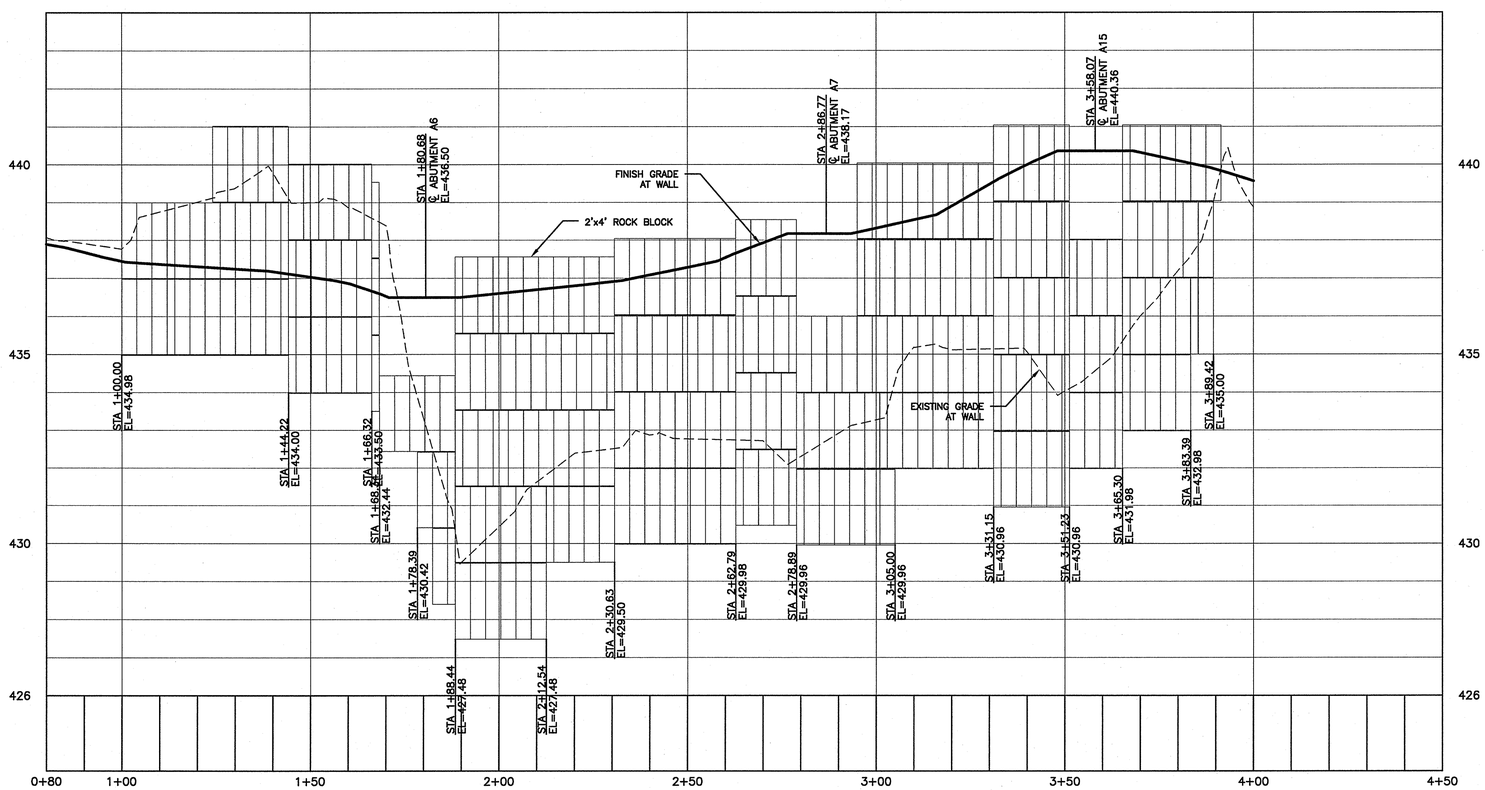

WALL PROFILE - STA. 1+00 TO 4+00

STRUCTURAL DESIGN OF ALL RETAINING WALLS SHALL BE PROVIDED TO THE CITY FROM THE CONTRACTOR PRIOR TO CONSTRUCTION. ALL DESIGN SHALL CONFORM TO SECTION 11 OF THE CITY OF AUSTIN TRANSPORTATION CRITERIA MANUAL. DESIGNS SHALL BE SUBMITTED TO CHRIS NEWTON, QUALITY AND STANDARDS MANAGEMENT DIVISION, PUBLIC WORKS DEPARTMENT.

LEGEND

- EXISTING GRADE
- PROPOSED FINISH GRADE
- 100 YEAR FLOODPLAIN
- 2'x4' ROCK BLOCK

PROFILE SCALE:
1"= 20' HORIZ.
1"= 2' VERT.

SITE PLAN RELEASE Sheet ____ of ____

FILE NUMBER: ____ EXPIRATION DATE: ____
CASE MANAGER: ____ APPLICATION DATE: ____
APPROVED ADMINISTRATIVELY ON: ____
APPROVED BY PLANNING COMMISSION ON: ____
APPROVED BY CITY COUNCIL ON: ____
Under Section ____ on Chapter ____ of the Austin City Code.

Signing for Director, Watershed Protection and Development Review Department
DATE OF RELEASE: ____ of ____ Zoning: ____
Rev. 1 ____ Correction 1 ____
Rev. 2 ____ Correction 2 ____
Rev. 3 ____ Correction 3 ____

RELEASE OF THIS APPLICATION DOES NOT CONSTITUTE A VERIFICATION OF ALL DATA, INFORMATION AND CALCULATIONS SUPPLIED BY THE APPLICANT. THE ENGINEER OF RECORD IS SOLELY RESPONSIBLE FOR THE COMPLETENESS, ACCURACY AND ADEQUACY OF HIS/HER SUBMITTAL, WHETHER OR NOT THE APPLICATION IS REVIEWED FOR CODE COMPLIANCE BY CITY ENGINEERS.

NO.	DATE	REVISION	BY

JACOBS®
TBPE REGISTRATION #F-2966
2705 BEE CAVE ROAD, SUITE 300,
AUSTIN, TX 78746
(512) 314-3100, FAX (512) 314-3135

STATE OF TEXAS
ADAM N. KORAKISKI
95988
LICENSED PROFESSIONAL ENGINEER

BOARDWALK TRAIL AT LADY BIRD LAKE

WALL PROFILE HARPERS BENCH

BOARDWALK TRAIL AT LADY BIRD LAKE

AUSTIN, TRAVIS COUNTY, TEXAS

CLIENT: AUSTIN PARD
DRAWN BY: ☐
DESIGNED BY: ☐
REVIEWED BY: ☐
JACOBS PROJECT #: WGX01402

SP-2011-0327C

SHEET NUMBER:
C-046
046 OF 244

SP-2011-0327C

Xrefs: L:\CIA Boardwalk\SDS = WGX01402\CAD Files\TBLK.dwg
L:\CIA Boardwalk\SDS = WGX01402\CAD Files\Ref-Tbl-minor-dn.dwg
L:\CIA Boardwalk\SDS = WGX01402\CAD Files\P-base.dwg
L:\CIA Boardwalk\SDS = WGX01402\CAD Files\E-base.dwg
L:\CIA Boardwalk\SDS = WGX01402\CAD Files\C-topo.dwg
C:\pwworks\ncs\ncdata\dms16051\E-tree.dwg
L:\CIA Boardwalk\SDS = WGX01402\CAD Files\P-topo.dwg

Drawing: L:\CIA Boardwalk\SDS = WGX01402\CAD Files\ADDENDA\ADDENDUM 3\WALL PROFILE HARPERS BENCH.dwg
User: nanthan
Last Modified: Dec. 21, 11 - 19:51
Plot Date/Time: Feb. 03, 12 - 10:46:04

L:\CIA Boardwalk\SDS = WGX01402\CAD Files\ADDENDA\ADDENDUM 3\WALL PROFILE HARPERS BENCH.dwg

© All Rights Reserved, Jacobs, 2010

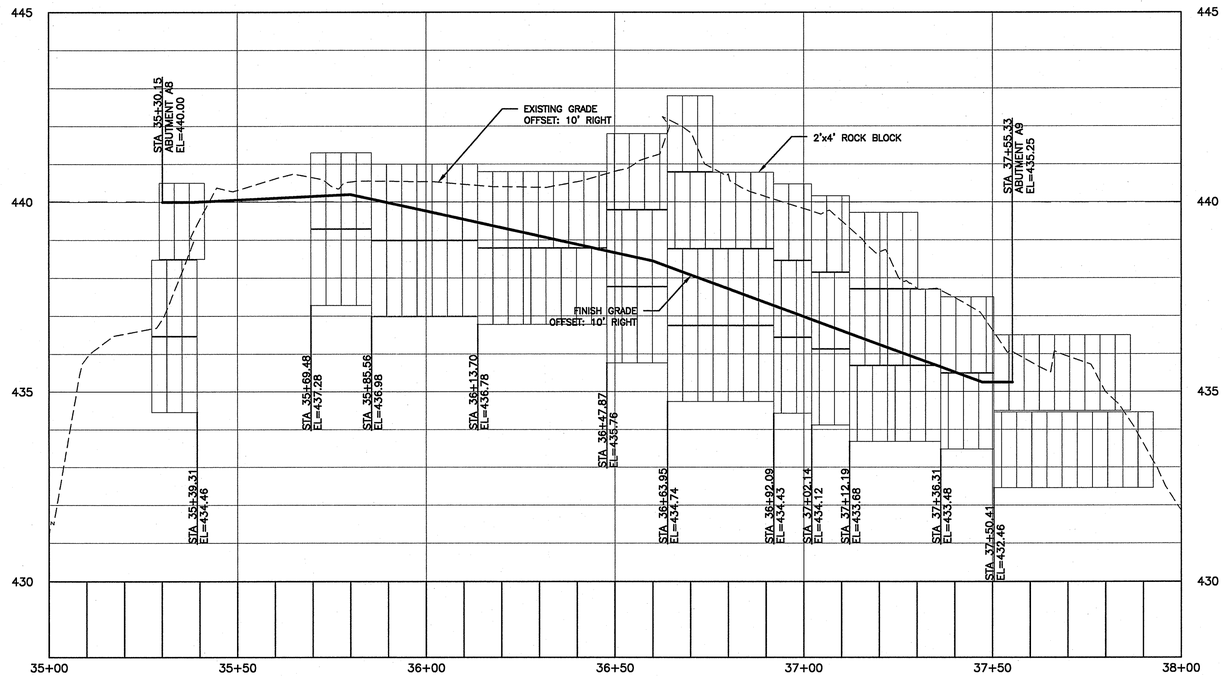

WALL PROFILE - STA. 35+50 TO 37+75 (RIGHT)

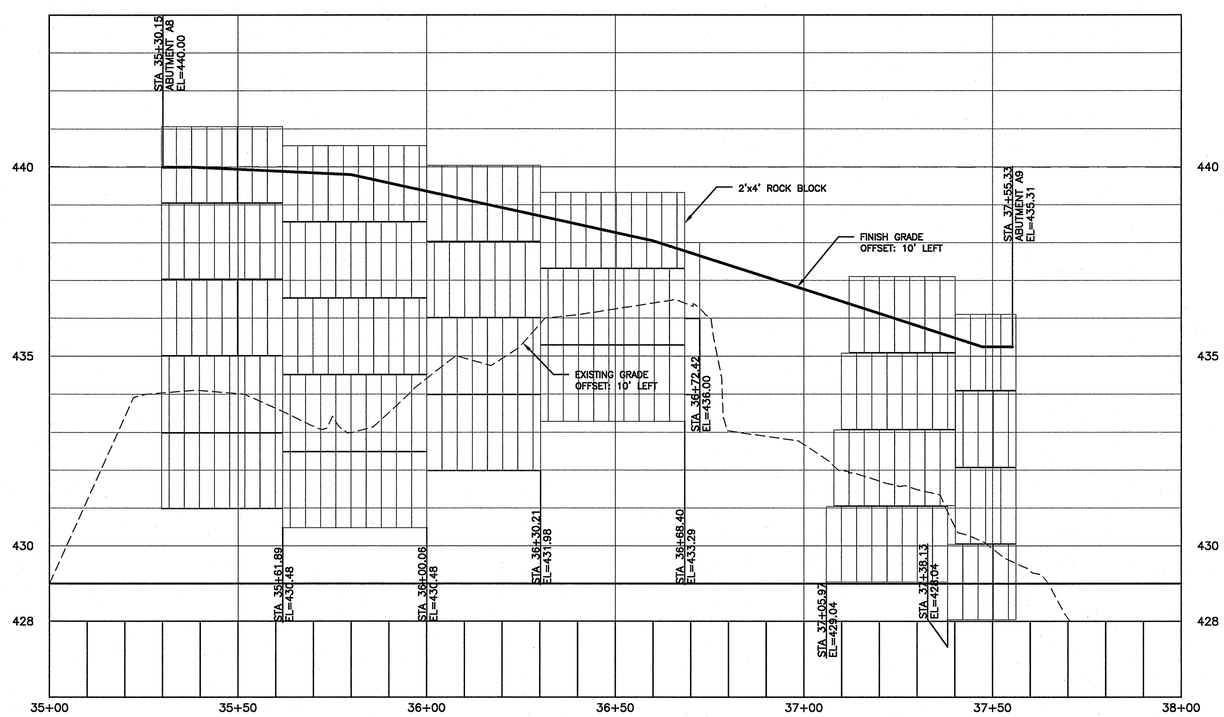

WALL PROFILE - STA. 35+50 TO 37+75 (LEFT)

STRUCTURAL DESIGN OF ALL RETAINING WALLS SHALL BE PROVIDED TO THE CITY FROM THE CONTRACTOR PRIOR TO CONSTRUCTION. ALL DESIGN SHALL CONFORM TO SECTION 11 OF THE CITY OF AUSTIN TRANSPORTATION CRITERIA MANUAL. DESIGNS SHALL BE SUBMITTED TO CHRIS NEWTON, QUALITY AND STANDARDS MANAGEMENT DIVISION, PUBLIC WORKS DEPARTMENT.

LEGEND

- EXISTING GRADE
- PROPOSED FINISH GRADE
- 100 YEAR FLOODPLAIN
- 2'x4' ROCK BLOCK

PROFILE SCALE:
1"= 20' HORIZ.
1"= 2' VERT.

SITE PLAN RELEASE Sheet ____ of ____

FILE NUMBER: ____ EXPIRATION DATE: ____
CASE MANAGER: ____ APPLICATION DATE: ____
APPROVED ADMINISTRATIVELY ON: ____
APPROVED BY PLANNING COMMISSION ON: ____
APPROVED BY CITY COUNCIL ON: ____
Under Section ____ on Chapter ____ of the Austin City Code.

Signing for Director, Watershed Protection and Development Review Department
DATE OF RELEASE: ____ of ____ Zoning: ____
Rev. 1 ____ Correction 1 ____
Rev. 2 ____ Correction 2 ____
Rev. 3 ____ Correction 3 ____

RELEASE OF THIS APPLICATION DOES NOT CONSTITUTE A VERIFICATION OF ALL DATA, INFORMATION AND CALCULATIONS SUPPLIED BY THE APPLICANT. THE ENGINEER OF RECORD IS SOLELY RESPONSIBLE FOR THE COMPLETENESS, ACCURACY AND ADEQUACY OF HIS/HER SUBMITTAL, WHETHER OR NOT THE APPLICATION IS REVIEWED FOR CODE COMPLIANCE BY CITY ENGINEERS.

NO.	DATE	REVISION	BY

JACOBS®
TBPE REGISTRATION #F-2966
2705 BEE CAVE ROAD, SUITE 300,
AUSTIN, TX 78746
(512) 314-3100, FAX (512) 314-3135

STATE OF TEXAS
ADAM N. KORANSKY
95988
LICENSED PROFESSIONAL ENGINEER
7/12/12

BOARDWALK TRAIL AT LADY BIRD LAKE

WALL PROFILE STA. 35+25 TO 37+75

BOARDWALK TRAIL AT LADY BIRD LAKE
AUSTIN, TRAVIS COUNTY, TEXAS

CLIENT: AUSTIN PARD
DRAWN BY:
DESIGNED BY:
REVIEWED BY:
JACOBS PROJECT #: WGXG1402
SP-2011-0327C

SHEET NUMBER:
C-047
047 OF 244

SP-2011-0327C

L:\CDA Boardwalk\935 - WGXG1402\CAD Files\ADDENDA\ADDENDUM 3\WALL PROFILE STA. 35+25 TO 37+75.dwg

Xrefs: L:\CDA Boardwalk\935 - WGXG1402\CAD Files\TBLK.dwg
L:\CDA Boardwalk\935 - WGXG1402\CAD Files\Work\Profile-mod-dc.dwg

Drawing: L:\CDA Boardwalk\935 - WGXG1402\CAD Files\ADDENDA\ADDENDUM 3\WALL PROFILE STA. 35+25 TO 37+75.dwg
User Name: adam.koransky
Last Modified: Dec. 21, 11 - 19:51
Plot Date/Time: Feb. 03, 12 - 10:55:12

© All Rights Reserved, Jacobs, 2010

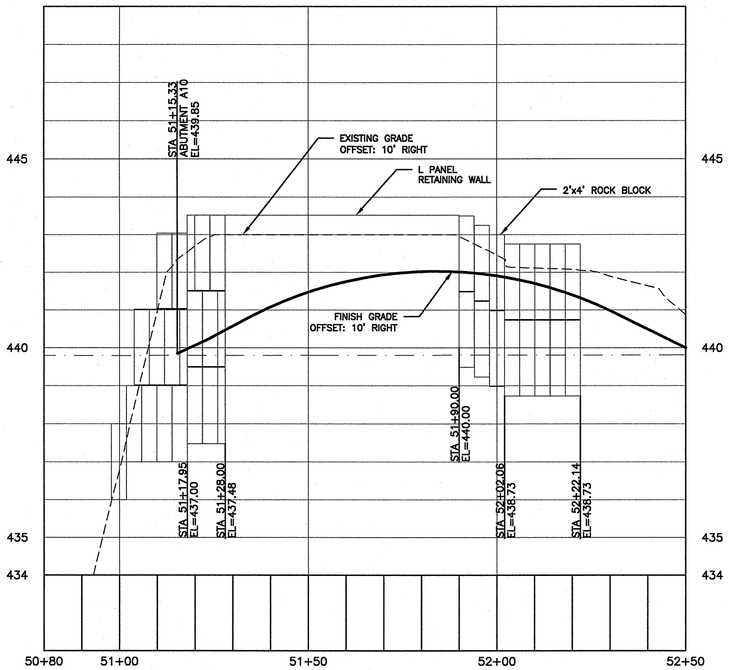

WALL PROFILE - STA. 51+00 TO 52+25 (RIGHT)

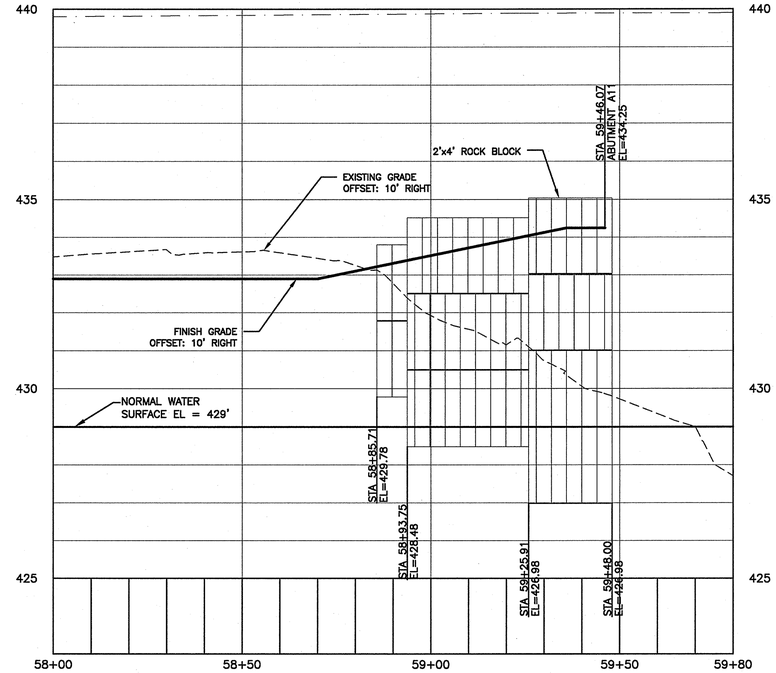

WALL PROFILE - STA. 58+50 TO 59+50 (RIGHT)

STRUCTURAL DESIGN OF ALL RETAINING WALLS SHALL BE PROVIDED TO THE CITY FROM THE CONTRACTOR PRIOR TO CONSTRUCTION. ALL DESIGN SHALL CONFORM TO SECTION 11 OF THE CITY OF AUSTIN TRANSPORTATION CRITERIA MANUAL. DESIGNS SHALL BE SUBMITTED TO CHRIS NEWTON, QUALITY AND STANDARDS MANAGEMENT DIVISION, PUBLIC WORKS DEPARTMENT.

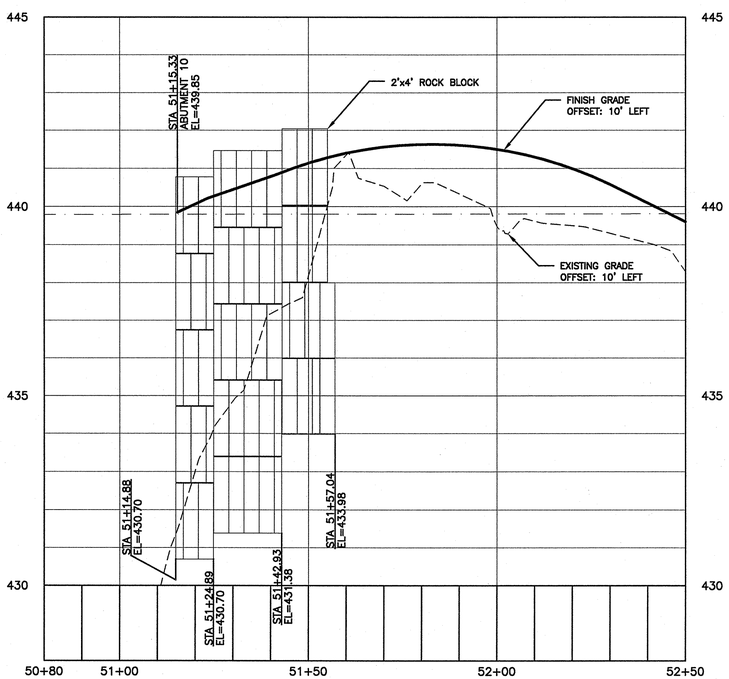

WALL PROFILE - STA. 51+00 TO 52+25 (LEFT)

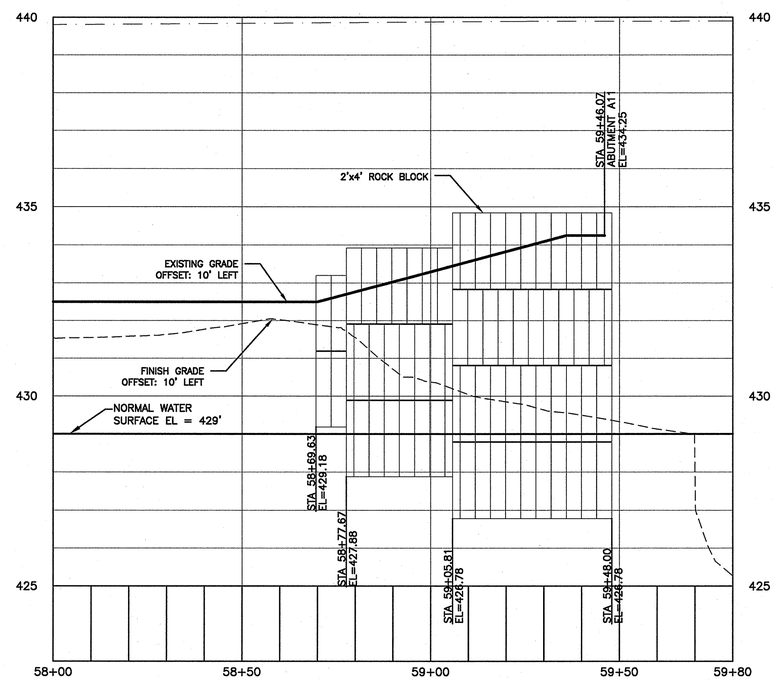

WALL PROFILE - STA. 58+50 TO 59+50 (LEFT)

LEGEND

- EXISTING GRADE
- PROPOSED FINISH GRADE
- 100 YEAR FLOODPLAIN
- 2'x4' ROCK BLOCK

PROFILE SCALE:
1"= 20' HORIZ.
1"= 2' VERT.

SITE PLAN RELEASE Sheet ____ of ____

FILE NUMBER: ____ EXPIRATION DATE: ____
CASE MANAGER: ____ APPLICATION DATE: ____
APPROVED ADMINISTRATIVELY ON: ____
APPROVED BY PLANNING COMMISSION ON: ____
APPROVED BY CITY COUNCIL ON: ____
Under Section ____ on Chapter ____ of the Austin City Code.

Signing for Director, Watershed Protection and Development Review Department
DATE OF RELEASE: ____ of ____ Zoning: ____
Rev. 1 ____ Correction 1 ____
Rev. 2 ____ Correction 2 ____
Rev. 3 ____ Correction 3 ____

RELEASE OF THIS APPLICATION DOES NOT CONSTITUTE A VERIFICATION OF ALL DATA, INFORMATION AND CALCULATIONS SUPPLIED BY THE APPLICANT. THE ENGINEER OF RECORD IS SOLELY RESPONSIBLE FOR THE COMPLETENESS, ACCURACY AND ADEQUACY OF HIS/HER SUBMITTAL, WHETHER OR NOT THE APPLICATION IS REVIEWED FOR CODE COMPLIANCE BY CITY ENGINEERS.

NO.	DATE	REVISION	BY

JACOBS®
TBPE REGISTRATION #F-2966
2705 BEE CAVE ROAD, SUITE 300,
AUSTIN, TX 78746
(512) 314-3100, FAX (512) 314-3135

STATE OF TEXAS
ADAM N. KORANSKY
95988
LICENSED
PROFESSIONAL ENGINEER
2/11/12

BOARDWALK TRAIL AT LADY BIRD LAKE

WALL PROFILE STA. 51+00 TO 52+25 AND STA. 58+50 TO 59+50

BOARDWALK TRAIL AT LADY BIRD LAKE
AUSTIN, TRAVIS COUNTY, TEXAS

CLIENT: AUSTIN PARD
DRAWN BY: ☐
DESIGNED BY: ☐
REVIEWED BY: ☐
JACOBS PROJECT #: W0XG1402
SP-2011-0327C

SHEET NUMBER:
C-048
048 OF 244

SP-2011-0327C

L:\CDA Boardwalk\935 - W0XG1402\CAD Files\ADDENDUM 3\WALL PROFILE STA. 51+00 TO 52+25 AND STA. 58+50 TO 59+50.dwg

Xrefs: L:\CDA Boardwalk\935 - W0XG1402\CAD Files\TBLK.dwg
L:\CDA Boardwalk\935 - W0XG1402\CAD Files\Work\Profile-mod-alt.dwg

Drawing: L:\CDA Boardwalk\935 - W0XG1402\CAD Files\ADDENDUM 3\WALL PROFILE STA. 51+00 TO 52+25 AND STA. 58+50 TO 59+50.dwg
User Name: ankoransky
Last Modified: Dec. 21, 11 - 19:51
Plot Date/Time: Feb. 03, 12 - 11:08:54

© All Rights Reserved. Jacobs. 2010

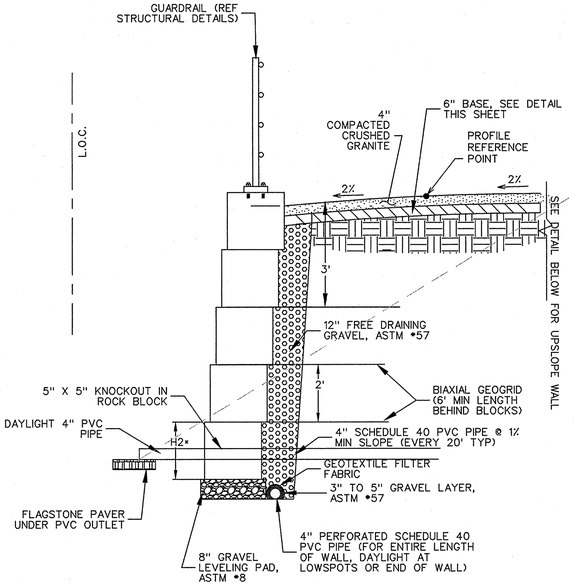

DECOMPOSED GRANITE TRAIL WITH REINFORCED DOWNSLOPE WALL

N.T.S.

* SEE WALL SECTION DETAILS TABLE FOR H2 DIMENSIONS

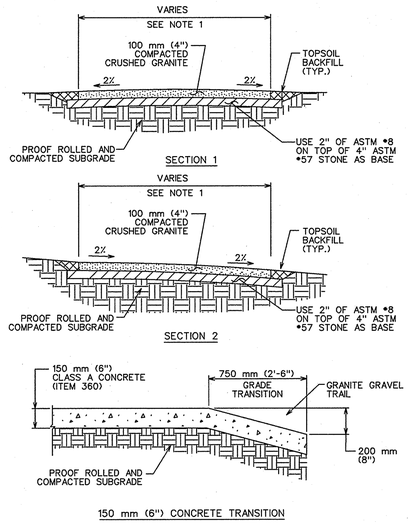

NOTES:

1. ALL WORK SHALL BE PERFORMED IN ACCORDANCE WITH ENGINEERING DRAWINGS.
2. EXISTING TREES, PROPERTY AND PUBLIC RIGHT-OF WAYS SHALL BE PROTECTED FROM DAMAGE BY TRUCKS AND/OR EQUIPMENT.
3. THE GRANITE GRAVEL WEARING COURSE SHALL BE 100 mm (4"), COMPACTED.
4. THE WEARING MATERIAL SHALL BE COMPRISED OF UNWASHED GRANITE AGGREGATE AND RED CLAY FINES THAT CONFORM TO STANDARD SPECIFICATION ITEM SECTION 1301S.3, "MATERIAL".
5. UPON COMPLETION OF TRAIL CONSTRUCTION, ALL GRANITE GRAVEL SHALL BE REMOVED FROM ADJOINING HARD SUFACES (I.E. RETAINING CURB/WALL, SIDEWALKS, RUBBER SAFETY SURFACES, PLAYSCAPE DECKS OR RAMPS).
6. ALL ADJACENT HARD SURFACES, SUCH AS CURBS OR WALKS, SHALL BE INSTALLED PRIOR TO INSTALLATION OF GRANITE GRAVEL.

DECOMPOSED GRANITE HIKE AND BIKE TRAILS

N.T.S.

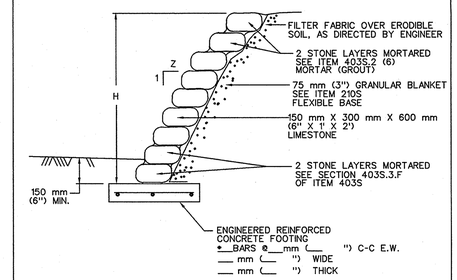

THIS STANDARD APPLIES ONLY UNDER THE FOLLOWING CONDITIONS:

A. H AND Z ARE SPECIFIED ON THE DRAWING.
B. GROUNDWATER IS NO HIGHER THAN THE BOTTOM OF THE FOOTING.
C. THE MATERIAL BELOW THE FOOTING IS FIRM AND STABLE.
D. THE MATERIAL BEHIND THE WALL HAS A LEVEL SURFACE.
E. THE MATERIAL IN FRONT OF THE WALL HAS A SLOPE NO STEEPER THAN 4 HORIZONTAL TO 1 VERTICAL.
F. THE FACE OF THE WALL IS NO STEEPER THAN 1 HORIZONTAL TO 2 VERTICAL.
G. SURCHARGE LOADS BEHIND THE WALL ARE NO CLOSER THAN DISTANCE H FROM THE TOP OF WALL.

NOTES:

1. DESIGN AND CONSTRUCTION OF ROCK WALL SHALL CONFORM TO THE REQUIREMENTS OF CITY CODE 16-7-2, PLACEMENT OF FENCES IN STREET CORNER AREAS, AND THE CITY OF AUSTIN TRANSPORTATION CRITERIA MANUAL FOR MINIMIM SIGHT DISTANCE.
2. CONCRETE SHALL CONFORM TO ITEM 403S, "CONCRETE FOR STRUCTURES".

CITY OF AUSTIN DEPARTMENT OF PUBLIC WORKS		DRY STACK ROCK WALL FOR SLOPE PROTECTION	
RECORD COPY SIGNED BY BILL GARDNER	03/13/06 ADOPTED	THE ARCHITECT/ENGINEER ASSUMES RESPONSIBILITY FOR APPROPRIATE USE OF THIS STANDARD.	STANDARD NO. 623S-1

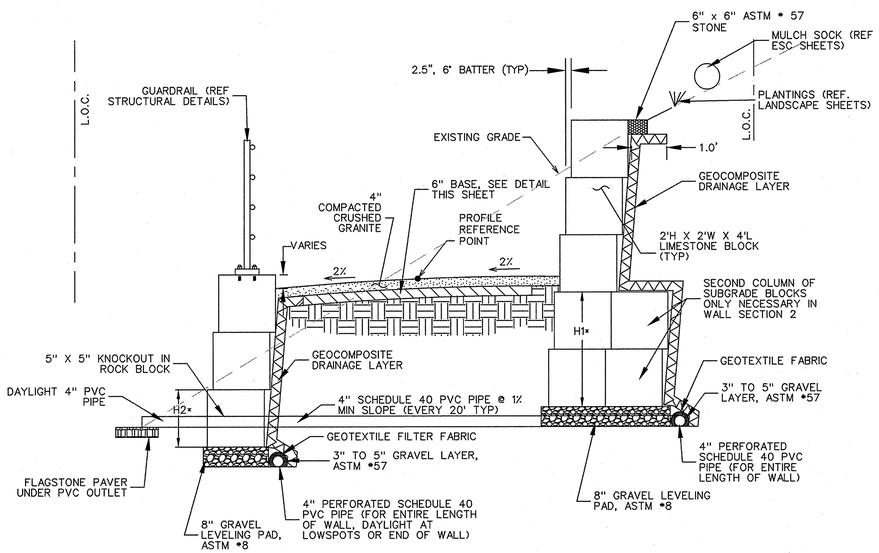

DECOMPOSED GRANITE TRAIL WITH UPSLOPE WALL AND UNREINFORCED DOWNSLOPE WALL

N.T.S.

* SEE WALL SECTION DETAILS TABLE FOR H1 AND H2 DIMENSIONS

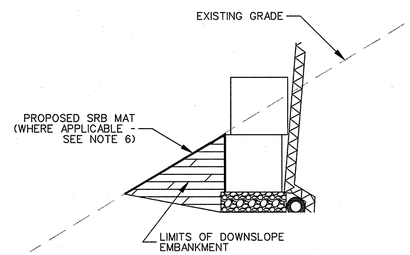

SRB PLACEMENT DETAIL

N.T.S.

WALL SECTION LOCATION TABLE

MAIN TRAIL		
Station Begin	Station End	Wall section
01+50	2+05	3
16+83	17+19	3
17+19	20+39	1
21+50	23+50	1
23+50	23+60	2
35+30	36+00	3
36+00	37+34	1
37+34	37+55	3
37+55	37+74	1
51+00	51+37	3
51+37	51+57	1
51+90	52+22	1
58+69	59+48	1

HARPERS BENCH		
Station Begin	Station End	Wall section
1+00	1+68	1
1+68	1+88	1
1+88	2+13	3
2+13	2+63	1
2+63	2+79	3
2+79	3+31	1
3+31	3+51	3
3+51	3+90	1

NOTES:

1. GEOGRID TO BE TENSAR BX1100 OR ENGINEERS APPROVED EQUAL.
2. GEOCOMPOSITE DRAINAGE LAYER TO BE AMERIDRAIN 650 OR ENGINEERS APPROVED EQUAL.
3. THE FOUNDATION SOIL FOR THE PROPOSED LIMESTONE SEGMENTAL RETAINING WALL SHOULD CONSIST OF AT LEAST MEDIUM DENSE TO DENSE SILTY SAND AND GRAVEL
4. THE WALL FOUNDATION SUBGRADE SOILS SHOULD BE INSPECTED BY THE ENGINEER. THE EXTENT OF ANY ADDITIONAL UNDERCUT AND REPALCEMENT WILL BE CONSIDERED PART OF SUBGRADE PREPARATION.
5. IF BEDROCK IS EXPOSED DURING EXCAVATION, ROCK EXCAVATION CAN TERMINATE 18" BELOW FINAL EXTERIOR DESIGN GRADE (CONSIDERING 12" BLOCK EMBEDMENT + 6" LEVELING PAD) ON ROCK.
6. SHOULD THE EXISTING GRADE DOWNSLOPE OF THE ROCK WALL BE STEEPER THAN 2:1 OR WITHIN 10' OF THE "WATER'S EDGE" OF THE LAKE, THEN A WIDTH OF SOIL RETENTION BLANKET (SRB) (NORTH AMERICAN GREEN C350 OR EQUAL) MUST BE USED. ONE EDGE OF THE BLANKET WILL BE PLACED AGAINST THE OUTER FACE OF THE FOUNDATION ROCK BLOCK, THE FINAL GRADE MATERIAL FILLED AGAINST THE BLOCK, AND THEN THE SRB WRAPPED OVER THE TOP OF THE FILL AND ANCHORED PER MANUFACTURER'S RECOMMENDATIONS (PIN LENGTH, PIN TYPE, AND PIN DENSITY). THIS EFFORT IS CONSIDERED SUBSIDIARY TO THE WALL CONSTRUCTION.
7. WALL CONTRACTOR SHALL DEMONSTRATE, IN THE SUBMITTALS, HIS CONSTRUCTION MEANS AND METHODS NOT TO HAVE ADVERSE IMPACTS TO THE STABILITY OF THE UP SLOPE, AND IF THEY DO, PROVIDE TEMPORARY SUPPORT DESIGN PLAN FOR THE ENGINEER'S REVIEW. THAT EFFORT IS CONSIDERED SUBSIDIARY TO THE WALL CONSTRUCTION. IT IS IMPERATIVE THAT WHATEVER TEMPORARY METHODS ARE USED DURING CONSTRUCTION THEY MUST BE MADE PERMEABLE AGAIN (EG, BREAK THE SURFACE, BUT NOT NECESSARILY REMOVED) SO AS TO NOT BUILD UP HYDROSTATIC PRESSURE BEHIND THE WALL.
8. FOR EXCAVATION AND CONSTRUCTION OF THE BASE BLOCK OF THE UPSLOPE WALL, EXCAVATION SHALL BE PERFORMED IN SECTIONS, AND NOT EXTENDING/EXCEEDING MORE THAN 15' LONG IN EACH SECTION ALONG THE WALL ALIGNMENT.

Grading Requirements for Coarse Aggregates

Size Number	Nominal Size (Sieves with Square Openings)	Amounts Finer than Each Laboratory Sieve (Square-Openings), Mass Percent													
		100 mm (4 in.)	90 mm (3 ½ in.)	75 mm (3 in.)	63 mm (2 ½ in.)	50 mm (2 in.)	37.5 mm (1 ½ in.)	25.0 mm (1 in.)	19.0 mm (¾ in.)	12.5 mm (½ in.)	9.5 mm (3/8 in.)	4.75 mm (No. 4)	2.36 mm (No. 8)	1.18 mm (No. 16)	300 µm (No. 50)
57	25.0 to 4.75 mm (1 in. to No. 4)	-	-	-	-	-	100	95 to 100	-	25 to 60	-	0 to 10	0 to 5	-	-
8	9.5 to 2.36 mm (3/8 in. to No. 8)	-	-	-	-	-	-	-	-	100	85 to 100	10 to 30	0 to 10	0 to 5	-

WALL SECTION DETAILS					
SECTION	MAXIMUM EXPOSED HEIGHT / CONFIGURATION		BURIED BLOCK REQUIREMENTS H1 (ft)	H2 (ft)	COMMENT
SECTION 1	UPSLOPE	5'	2	2	SINGLE-BLOCK, UNREINFORCED WALLS
	DOWNSLOPE	5'			SINGLE-BLOCK, UNREINFORCED WALLS
SECTION 2	UPSLOPE	7'	4	2	DOUBLE-BLOCK WALLS (SEE DETAIL)
	DOWNSLOPE	5'			SINGLE-BLOCK, UNREINFORCED WALLS
SECTION 3	UPSLOPE	5'	2	2	SINGLE-BLOCK, UNREINFORCED WALLS
	DOWNSLOPE	7'			SINGLE-BLOCK, REINFORCED WALLS (BIAXIAL GEOGRID)

NOTE

STRUCTURAL DESIGN OF ALL RETAINING WALLS SHALL BE PROVIDED TO THE CITY FROM THE CONTRACTOR PRIOR TO CONSTRUCTION. ALL DESIGN SHALL CONFORM TO SECTION 11 OF THE CITY OF AUSTIN TRANSPORTATION CRITERIA MANUAL. DESIGNS SHALL BE SUBMITTED TO CHRIS NEWTON (512-974-9119), QUALITY AND STANDARDS MANAGEMENT DIVISION, PUBLIC WORKS DEPARTMENT.

SITE PLAN RELEASE Sheet ____ of ____

FILE NUMBER: ____ EXPIRATION DATE: ____
CASE MANAGER: ____ APPLICATION DATE: ____
APPROVED ADMINISTRATIVELY ON: ____
APPROVED BY PLANNING COMMISSION ON: ____
APPROVED BY CITY COUNCIL ON: ____
Under Section ____ on Chapter ____ of the Austin City Code.

Signing for Director, Watershed Protection and Development Review Department
DATE OF RELEASE: ____ of ____ Zoning: ____
Rev. 1 ____ Correction 1 ____
Rev. 2 ____ Correction 2 ____
Rev. 3 ____ Correction 3 ____

RELEASE OF THIS APPLICATION DOES NOT CONSTITUTE A VERIFICATION OF ALL DATA, INFORMATION AND CALCULATIONS SUPPLIED BY THE APPLICANT. THE ENGINEER OF RECORD IS SOLELY RESPONSIBLE FOR THE COMPLETENESS, ACCURACY AND ADEQUACY OF HIS/HER SUBMITTAL, WHETHER OR NOT THE APPLICATION IS REVIEWED FOR CODE COMPLIANCE BY CITY ENGINEERS.

NO	DATE	REVISION	BY

JACOBS®
TBPE REGISTRATION #F-2966
2705 BEE CAVE ROAD, SUITE 300,
AUSTIN, TX 78746 (512) 314-3135
(512) 314-3100, FAX (512) 314-3135

STATE OF TEXAS ADAM K. KORANSKY 95988 LICENSED PROFESSIONAL ENGINEER 1/11/12

BOARDWALK TRAIL AT LADY BIRD LAKE

CONSTRUCTION DETAILS A

BOARDWALK TRAIL AT LADY BIRD LAKE
AUSTIN, TRAVIS COUNTY, TEXAS

CLIENT: AUSTIN PARD
DRAWN BY:
DESIGNED BY:
REVIEWED BY:
JACOBS PROJECT #: W0XG1402

SP-2011-0327C

SHEET NUMBER: C-052
052 OF 244

SP-2011-0327C

Drawing: L:\CQA Boardwalk\95% - W0XG1402\CAD Files\Exhibits\CONSTRUCTION DETAILS A.dwg
User: koranskyak
Last Modified: Feb. 06, 12 - 11:22
Plot Date/Time: Feb. 06, 12 - 11:28:02

Xref(s): L:\CQA Boardwalk\95% - W0XG1402\CAD Files\TBUK.dwg

L:\CQA Boardwalk\95% - W0XG1402\CAD Files\Exhibits\CONSTRUCTION DETAILS A.dwg

© All Rights Reserved, Jacobs, 2010

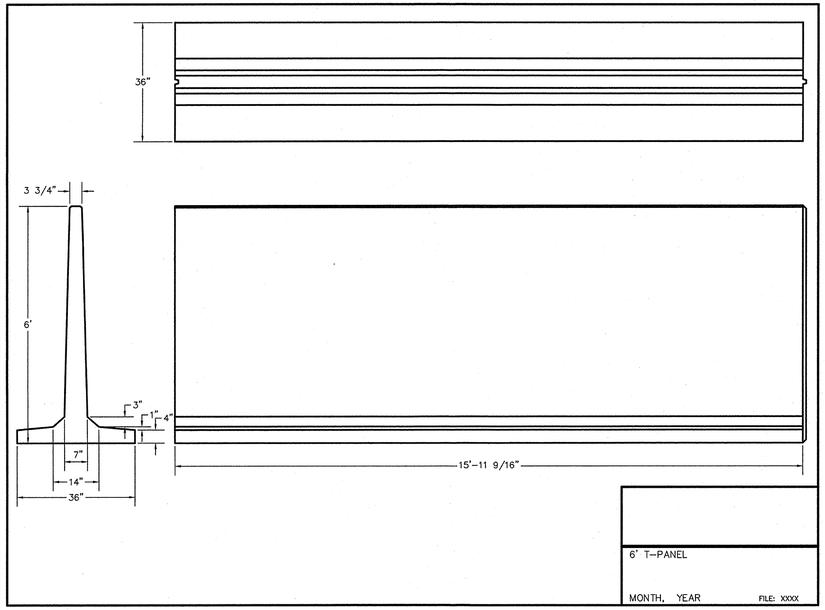

6' T-PANEL

MONTH, YEAR FILE: XXXX

16 FT LONG X 6 FT TALL PANELS

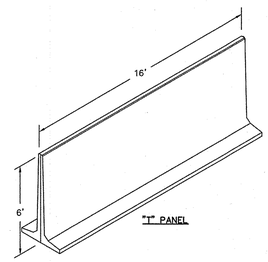

NOTES:
1. ALL CONCRETE USED FOR PRECAST WALL SECTIONS TO HAVE A MINIMUM STRENGTH OF 5000 PSI.

2. PRECAST WALL SECTION MAY BE SUBSTITUTED ENGINEERS APPROVED EQUAL.

3. REFERENCE SPECIFICATION 414S FOR PRECAST WALL SECTIONS.

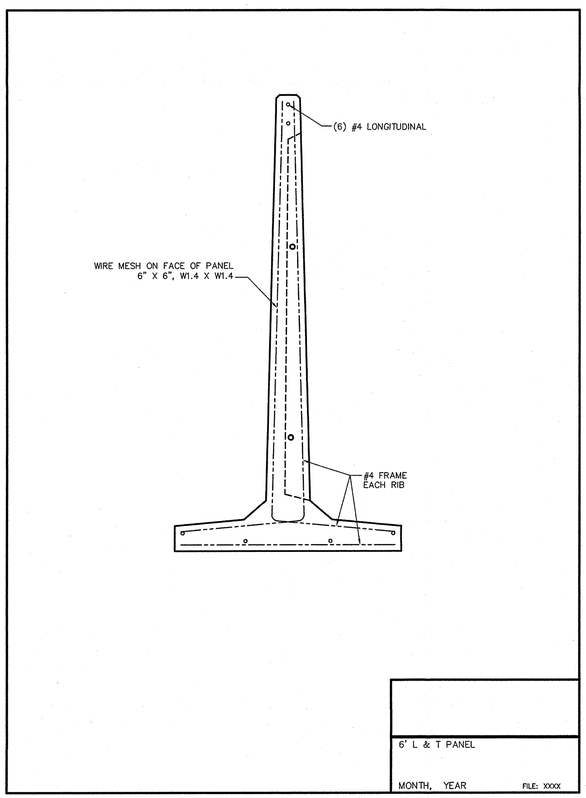

6' L & T PANEL

MONTH, YEAR FILE: XXXX

SCALE:NTS
DRAWN BY:SWT
DATE:
FILE:SAVED AS
REV NO.
DATE:
6FT TALL PANELS
SHEET NO.
0 OF 0

NO.	DATE	REVISION	BY

JACOBS®
TBPE REGISTRATION #F-2966
2705 BEE CAVE ROAD, SUITE 300,
AUSTIN, TX 78746
(512) 314-3100, FAX (512) 314-3135

STATE OF TEXAS
ADAM N. KORANSKI
95988
LICENSED
PROFESSIONAL ENGINEER
1/3/12

BOARDWALK TRAIL AT LADY BIRD LAKE

CONSTRUCTION DETAILS D

BOARDWALK TRAIL AT LADY BIRD LAKE

AUSTIN, TRAVIS COUNTY, TEXAS

SITE PLAN RELEASE Sheet ____ of ____

FILE NUMBER: _____ EXPIRATION DATE: _____
CASE MANAGER: _____ APPLICATION DATE: _____
APPROVED ADMINISTRATIVELY ON: _____
APPROVED BY PLANNING COMMISSION ON: _____
APPROVED BY CITY COUNCIL ON: _____
Under Section _____ on Chapter _____ of the Austin City Code.

Signing for Director, Watershed Protection and Development Review Department
DATE OF RELEASE: _____ of _____ Zoning: _____
Rev. 1 _____ Correction 1 _____
Rev. 2 _____ Correction 2 _____
Rev. 3 _____ Correction 3 _____

RELEASE OF THIS APPLICATION DOES NOT CONSTITUTE A VERIFICATION OF ALL DATA, INFORMATION AND CALCULATIONS SUPPLIED BY THE APPLICANT. THE ENGINEER OF RECORD IS SOLELY RESPONSIBLE FOR THE COMPLETENESS, ACCURACY AND ADEQUACY OF HIS/HER SUBMITTAL, WHETHER OR NOT THE APPLICATION IS REVIEWED FOR CODE COMPLIANCE BY CITY ENGINEERS.

CLIENT: AUSTIN PARD
DRAWN BY:
DESIGNED BY:
REVIEWED BY:
JACOBS PROJECT #: W0XG1402
SP-2011-0327C

SHEET NUMBER:
C-054.2
055 OF 244

SP-2011-0327C

Drawing: L:\COA Boardwalk\95% - W0XG1402\CAD Files\Sheets\CONSTRUCTION DETAILS D.dwg
User: koranskiyon
Last Modified: Jan. 27, 12 - 11:45
Plot Date/Time: Feb. 01, 12 - 14:25:59

Xrefs: ...\TBLK.dwg

L:\COA Boardwalk\95% - W0XG1402\CAD Files\Sheets\CONSTRUCTION DETAILS D.dwg

© All Rights Reserved, Jacobs, 2010

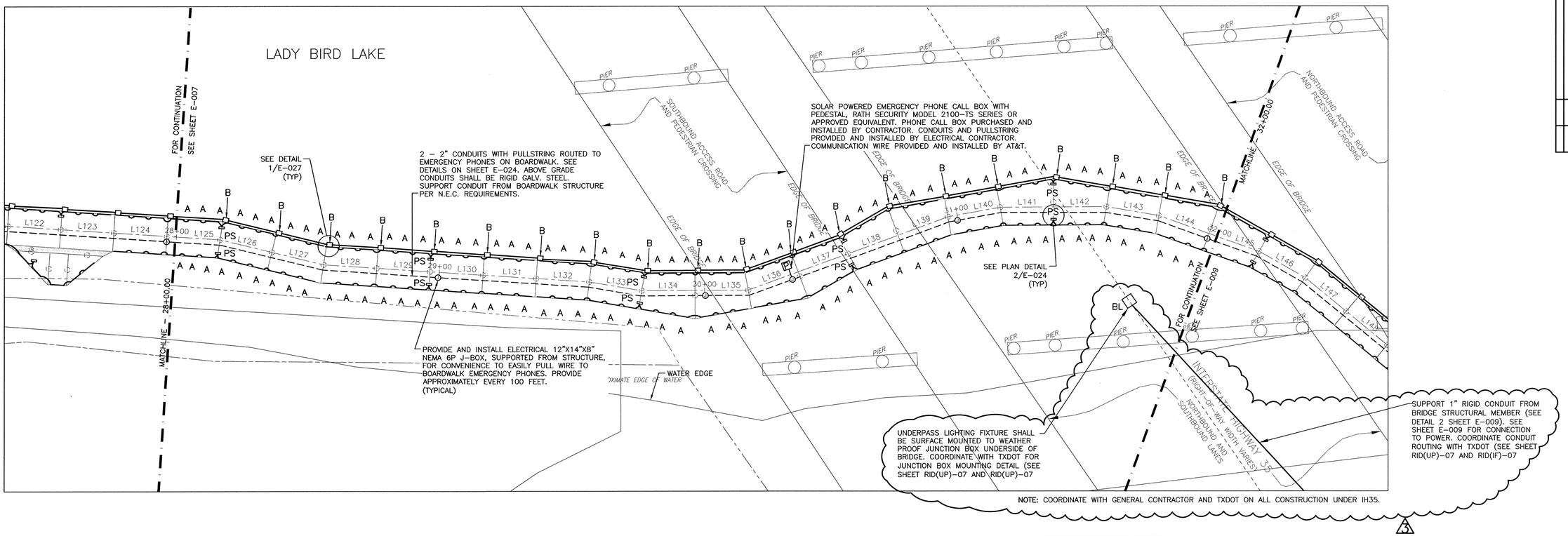

1 PARTIAL BOARDWALK SITE PLAN 28+00 – 32+00

SCALE: 1" = 20'

NOTE: SEE SHEET E–020 FOR ELECTRICAL CIRCUITING.

SYMBOL LEGEND

A	—	6' LONG LED LIGHT FIXTURE
A2	—	6' LONG LED LIGHT FIXTURE
B	□	3" ROUND LED NAVIGATION LIGHT FIXTURE
PS	▭	POWER SUPPLY FOR 'A' AND 'A2' FIXTURES

SEE LIGHTING FIXTURE SCHEDULE ON SHEET E–022 FOR MORE INFORMATION

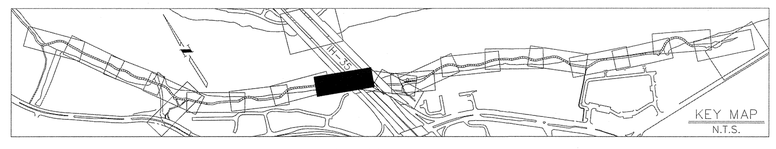

APPROVAL OF THIS SITE PLAN DOES NOT INCLUDE BUILDING AND FIRE CODE APPROVAL OR BUILDING PERMIT APPROVAL. ADDITIONAL COMMENTS MAY BE MADE AT BUILDING PLAN REVIEW.

ENCOTECH
ENGINEERING CONSULTANTS, INC.
T.B.P.E. Firm Registration Number: 1141
5000 Bluffstone Cove, Suite 3B-103 Austin, TX 78759
Web Site: www.encotechengineering.com

SITE PLAN RELEASE Sheet ____ of ____

FILE NUMBER: ____ EXPIRATION DATE: ____
CASE MANAGER: ____ APPLICATION DATE: ____
APPROVED ADMINISTRATIVELY ON: ____
APPROVED BY PLANNING COMMISSION ON: ____
APPROVED BY CITY COUNCIL ON: ____
Under Section ____ on Chapter ____ of the Austin City Code.

Signing for Director, Watershed Protection and Development Review Department
DATE OF RELEASE: ____ of ____ Zoning: ____
Rev. 1 ____ Correction 1 ____
Rev. 2 ____ Correction 2 ____
Rev. 3 ____ Correction 3 ____

RELEASE OF THIS APPLICATION DOES NOT CONSTITUTE A VERIFICATION OF ALL DATA, INFORMATION AND CALCULATIONS SUPPLIED BY THE APPLICANT. THE ENGINEER OF RECORD IS SOLELY RESPONSIBLE FOR THE COMPLETENESS, ACCURACY AND ADEQUACY OF HIS/HER SUBMITTAL, WHETHER OR NOT THE APPLICATION IS REVIEWED FOR CODE COMPLIANCE BY CITY ENGINEERS.

NO.	DATE	REVISION	BY
3	2/6/12	ADDENDUM 3	STH, DBM

JACOBS®
TBPE REGISTRATION #F-2966
2705 BEE CAVE ROAD, SUITE 300,
AUSTIN, TX 78746
(512) 314-3100, FAX (512) 314-3135

BOARDWALK TRAIL AT LADY BIRD LAKE

STATE OF TEXAS
DAVID B. MITCHELL
87000
LICENSED
PROFESSIONAL ENGINEER
2/6/12

BOARDWALK SITE PLAN STA. 28+00 - 32+00

BOARDWALK TRAIL AT LADY BIRD LAKE

AUSTIN, TRAVIS COUNTY, TEXAS

CLIENT: AUSTIN PARD
DRAWN BY:
DESIGNED BY:
REVIEWED BY:
JACOBS PROJECT #: WGXG1402
SP-2011-0327C

SHEET NUMBER:
E-008
217 OF 244

SP-2011-0327C

© All Rights Reserved, Jacobs, 2010

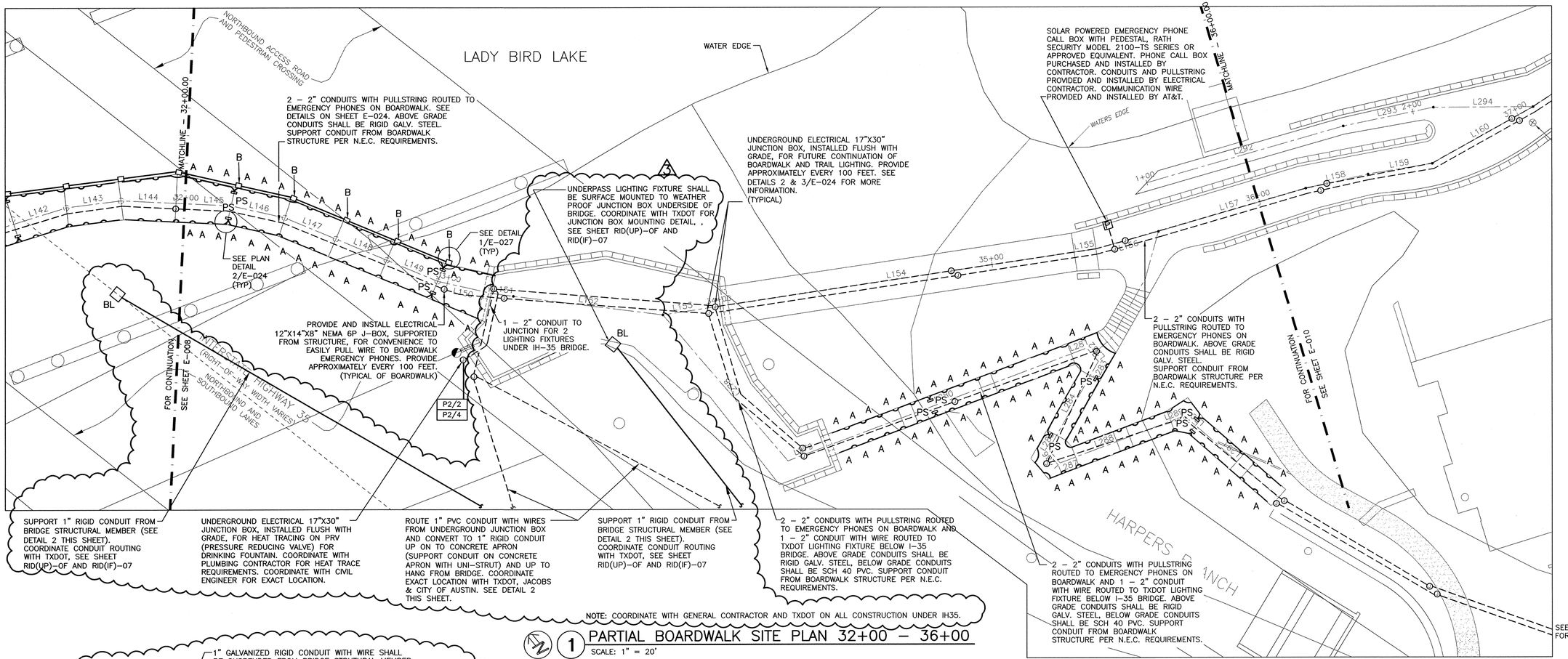

1 PARTIAL BOARDWALK SITE PLAN 32+00 – 36+00

SCALE: 1" = 20'

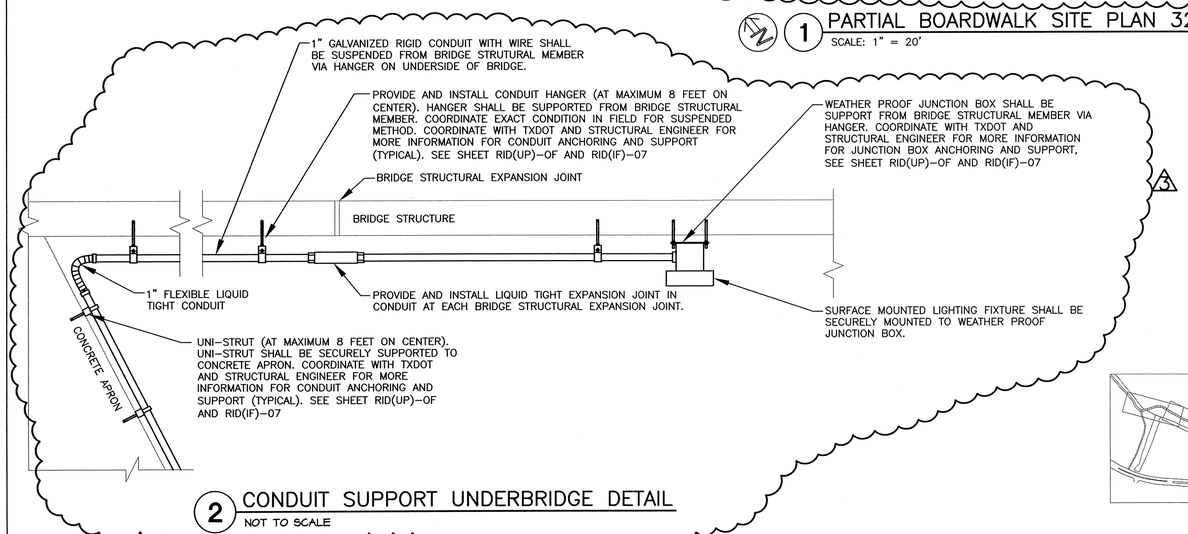

2 CONDUIT SUPPORT UNDERBRIDGE DETAIL

NOT TO SCALE

NOTE: SEE SHEET E-020 FOR ELECTRICAL CIRCUITING.

SYMBOL LEGEND

A	6' LONG LED LIGHT FIXTURE
A2	6' LONG LED LIGHT FIXTURE
B	3" ROUND LED NAVIGATION LIGHT FIXTURE
PS	POWER SUPPLY FOR 'A' AND 'A2' FIXTURES

SEE LIGHTING FIXTURE SCHEDULE ON SHEET E-022 FOR MORE INFORMATION

APPROVAL OF THIS SITE PLAN DOES NOT INCLUDE BUILDING AND FIRE CODE APPROVAL OR BUILDING PERMIT APPROVAL. ADDITIONAL COMMENTS MAY BE MADE AT BUILDING PLAN REVIEW.

ENCOTECH
ENGINEERING CONSULTANTS, INC.
T.B.P.E. Firm Registration Number: 1441
3500 Bill Hollow Cove Suite B-103 Austin, TX 78759
Web Site: www.encotechengineering.com

SITE PLAN RELEASE Sheet ____ of ____

FILE NUMBER: ____ EXPIRATION DATE: ____
CASE MANAGER: ____ APPLICATION DATE: ____
APPROVED ADMINISTRATIVELY ON: ____
APPROVED BY PLANNING COMMISSION ON: ____
APPROVED BY CITY COUNCIL ON: ____
Under Section ____ on Chapter ____ of the Austin City Code.

Signing for Director, Watershed Protection and Development Review Department
DATE OF RELEASE: ____ of ____ Zoning: ____
Rev. 1 ____ Correction 1 ____
Rev. 2 ____ Correction 2 ____
Rev. 3 ____ Correction 3 ____

RELEASE OF THIS APPLICATION DOES NOT CONSTITUTE A VERIFICATION OF ALL DATA, INFORMATION AND CALCULATIONS SUPPLIED BY THE APPLICANT. THE ENGINEER OF RECORD IS SOLELY RESPONSIBLE FOR THE COMPLETENESS, ACCURACY AND ADEQUACY OF HIS/HER SUBMITTAL, WHETHER OR NOT THE APPLICATION IS REVIEWED FOR CODE COMPLIANCE BY CITY ENGINEERS.

NO.	DATE	REVISION	BY
3	2/6/12	ADDENDUM 3	STN, DBM

JACOBS®
TBPE REGISTRATION #F-2966
2705 BEE CAVE ROAD, SUITE 300,
AUSTIN, TX 78746
(512) 314-3100, FAX (512) 314-3135

STATE OF TEXAS
DAVID B. MITCHELL
LICENSED
87000
PROFESSIONAL ENGINEER
2/6/12

BOARDWALK TRAIL AT LADY BIRD LAKE

BOARDWALK SITE PLAN STA. 32+00 - 36+00

BOARDWALK TRAIL AT LADY BIRD LAKE

AUSTIN, TRAVIS COUNTY, TEXAS

CLIENT: AUSTIN PARD
DRAWN BY:
DESIGNED BY:
REVIEWED BY:
JACOBS PROJECT #: W0XG1402
SP-2011-0327C

SHEET NUMBER:
E-009
218 OF 244

SP-2011-0327C

© All Rights Reserved, Jacobs, 2010

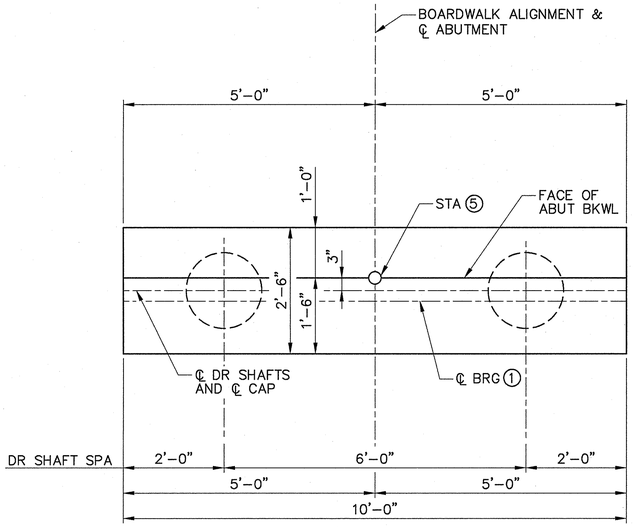

PLAN

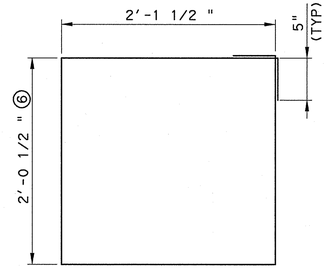

BARS S

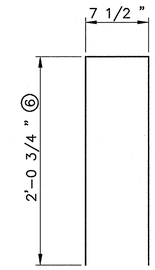

BARS V

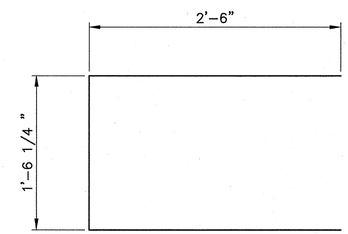

BARS U

TABLE OF ESTIMATED QUANTITIES

BAR	NO.	SIZE	LENGTH	WEIGHT
A	10	#11	15'-8"	520
H	6	#5	15'-8"	61
S	12	#4	9'-2"	74
U	4	#6	6'-6"	39
V	11	#5	4'-9"	54
REINFORCING STEEL			LB	748
CLASS "C" CONCRETE			CY	2.7

SEE ABUTMENT 1
FOR GENERAL NOTES.

MAX FOUNDATION LOADS ~
DRILLED SHAFT = 40 TONS/DR SHAFT
(DEPENDENT ON PREFABRICATED TRUSS)

① SEE "PREFABRICATED BRIDGE MISCELLANEOUS DETAILS" SHEET FOR ABUTMENT, BEARING AND ANCHOR BOLT LOCATIONS.

② SEE "MISCELLANEOUS ABUTMENT DETAILS" SHEET FOR BOLLARD REINFORCEMENT DETAILS.

③ BACKWALL SHALL BE CAST AFTER CONCRETE DECK HAS BEEN PLACED. MAINTAIN A 3/8" GAP BETWEEN THE FACE OF BACKWALL & EDGE OF CONCRETE DECK.

④ PLACE PVC SLEEVE AS NEEDED TO ACCOMMODATE CONDUIT. SEAL BOTH ENDS OF OPENING BETWEEN SLEEVE AND CONDUIT WITH CAULK. CAP IF UNUSED.

⑤ SEE PIER LOCATION AND ORIENTATION TABLE.

⑥ ADJUST TO ACCOMODATE PREFABRICATED TRUSS BRIDGE.

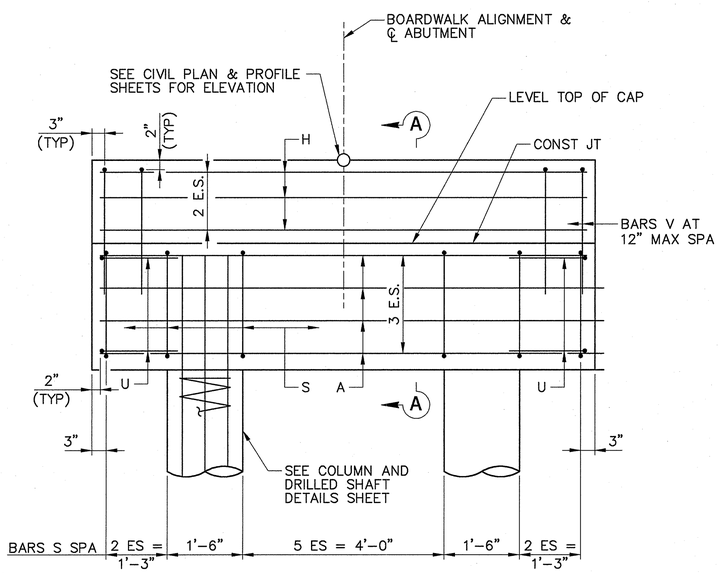

ELEVATION

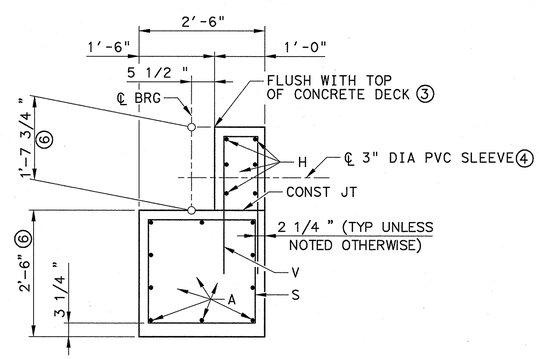

SECTION A-A

APPROVAL OF THIS SITE PLAN DOES NOT INCLUDE BUILDING AND FIRE CODE APPROVAL OR BUILDING PERMIT APPROVAL ADDITIONAL COMMENTS MAYBE MADE AT BUILDING PLAN REVIEW.

SITE PLAN RELEASE Sheet ____ of ____

FILE NUMBER: ____ EXPIRATION DATE: ____
CASE MANAGER: ____ APPLICATION DATE: ____
APPROVED ADMINISTRATIVELY ON: ____
APPROVED BY PLANNING COMMISSION ON: ____
APPROVED BY CITY COUNCIL ON: ____
Under Section ____ on Chapter ____ of the Austin City Code.

Signing for Director, Watershed Protection and Development Review Department
DATE OF RELEASE: ____ of ____ Zoning: ____
Rev. 1 ____ Correction 1 ____
Rev. 2 ____ Correction 2 ____
Rev. 3 ____ Correction 3 ____

RELEASE OF THIS APPLICATION DOES NOT CONSTITUTE A VERIFICATION OF ALL DATA, INFORMATION AND CALCULATIONS SUPPLIED BY THE APPLICANT. THE ENGINEER OF RECORD IS SOLELY RESPONSIBLE FOR THE COMPLETENESS, ACCURACY AND ADEQUACY OF HIS/HER SUBMITTAL, WHETHER OR NOT THE APPLICATION IS REVIEWED FOR CODE COMPLIANCE BY CITY ENGINEERS.

NO.	DATE	REVISION	BY

JACOBS®
TBPE REGISTRATION #F-2966
2705 BEE CAVE ROAD, SUITE 300,
AUSTIN, TX 78746
(512) 314-3100, FAX (512) 314-3135

BOARDWALK TRAIL AT LADY BIRD LAKE

STATE OF TEXAS
SCOTT L. WALLACE
86595
LICENSED PROFESSIONAL ENGINEER
2/7/12

ABUTMENT 15 (HARPERS BRIDGE 2)

BOARDWALK TRAIL AT LADY BIRD LAKE

AUSTIN, TRAVIS COUNTY, TEXAS

CLIENT: AUSTIN PARD
DRAWN BY: ☐ CCS
DESIGNED BY: ☐ MSM
REVIEWED BY: ☐ XXX
JACOBS PROJECT #: W0XG1400
SP-2011-0327C

SHEET NUMBER:
S-012A

L:\CAD\W0XG1400-LADY BIRD LAKE BOARDWALK\BDG\DGN\SHT\DTLS\1400_LBL_BRABT012A_A02.dgn
Drawing: L:\CAD\W0XG1400-LADY BIRD LAKE BOARDWALK\BDG\DGN\SHT\DTLS\1400_LBL_BRABT012A_A02.dgn
User: $(_USTN_USERPREF)
Last Modified: 2/7/2012
Plot Date/Time: 1/12/2012 AM
Xref's: $(xrefs,1)

© All Rights Reserved, Jacobs, 2010

TABLE OF ESTIMATED STEEL QUANTITIES @ BELVEDERES

LOCATION	MEMBER TYPE	MEMBER SIZE	TOTAL LENGTH FT	LB/FT	WEIGHT LB
BELVEDERE 1	FRAME	W12X40	84	40	3360
BELVEDERE 1	COLUMNS	6" Ø PIPE X .28"	100	19	1900
BELVEDERE 2	FRAME	W12X40	84	40	3360
BELVEDERE 2	COLUMNS	6" Ø PIPE X .28"	85	19	1615
BELVEDERE 3	FRAME	W12X40	114	40	4560
BELVEDERE 3	COLUMNS	6" Ø PIPE X .28"	96	19	1824
BELVEDERE 4	FRAME	W12X40	113	40	4520
BELVEDERE 4	COLUMNS	6" Ø PIPE X .28"	60	19	1140
BELVEDERE 5	FRAME	W12X40	102	40	4080
BELVEDERE 5	COLUMNS	6" Ø PIPE X .28"	48	19	912
BELVEDERE 6	FRAME	W12X40	102	40	4080
BELVEDERE 6	COLUMNS	6" Ø PIPE X .28"	126	19	2394
BELVEDERE 7	FRAME	W12X40	66	40	2640
BELVEDERE 7	COLUMNS	6" Ø PIPE X .28"	6	19	114
BRIDGE SUPPORT 2	BEAM	W12X65	8	65	520
BRIDGE SUPPORT 2	COLUMNS	8" Ø PIPE X .32"	16	28.6	453
BRIDGE SUPPORT 2	COLUMNS	6" Ø PIPE X .28"	27	19	513
BRIDGE SUPPORT 3	BEAM	W12X65	8	65	520
BRIDGE SUPPORT 3	COLUMNS	8" Ø PIPE X .32"	26	28.6	744
BRIDGE SUPPORT 3	COLUMNS	6" Ø PIPE X .28"	42	19	798
BRIDGE SUPPORT 4	BEAM	W12X65	8	65	520
BRIDGE SUPPORT 4	COLUMNS	8" Ø PIPE X .32"	18	28.6	515
BRIDGE SUPPORT 4	COLUMNS	6" Ø PIPE X .28"	27	19	513
BRIDGE SUPPORT 5	BEAM	W12X65	8	65	520
BRIDGE SUPPORT 5	COLUMNS	8" Ø PIPE X .32"	24	28.6	868
BRIDGE SUPPORT 5	COLUMNS	6" Ø PIPE X .28"	36	19	864
BRIDGE SUPPORT 6	BEAM	W12X65	8	65	520
BRIDGE SUPPORT 6	COLUMNS	8" Ø PIPE X .32"	18	28.6	515
BRIDGE SUPPORT 6	COLUMNS	6" Ø PIPE X .28"	27	19	513
BRIDGE SUPPORT 7	BEAM	W12X65	8	65	520
BRIDGE SUPPORT 7	COLUMNS	8" Ø PIPE X .32"	18	28.6	515
BRIDGE SUPPORT 7	COLUMNS	6" Ø PIPE X .28"	27	19	513
BRIDGE SUPPORT 8	BEAM	W12X65	8	65	520
BRIDGE SUPPORT 8	COLUMNS	8" Ø PIPE X .32"	18	28.6	515
BRIDGE SUPPORT 8	COLUMNS	6" Ø PIPE X .28"	27	19	513
BRIDGE SUPPORT 9	BEAM	W12X65	8	65	520
BRIDGE SUPPORT 9	COLUMNS	8" Ø PIPE X .32"	18	28.6	515
BRIDGE SUPPORT 9	COLUMNS	6" Ø PIPE X .28"	27	19	513
BRIDGE SUPPORT 10	BEAM	W12X65	8	65	520
BRIDGE SUPPORT 10	COLUMNS	8" Ø PIPE X .32"	16	28.6	458
BRIDGE SUPPORT 10	COLUMNS	6" Ø PIPE X .28"	24	19	456
BRIDGE SUPPORT 11	BEAM	W12X65	8	65	520
BRIDGE SUPPORT 11	COLUMNS	8" Ø PIPE X .32"	22	28.6	629
BRIDGE SUPPORT 11	COLUMNS	6" Ø PIPE X .28"	33	19	627
BRIDGE SUPPORT 12	BEAM	W12X65	8	65	520
BRIDGE SUPPORT 12	COLUMNS	8" Ø PIPE X .32"	22	28.6	629
BRIDGE SUPPORT 12	COLUMNS	6" Ø PIPE X .28"	33	19	627
BRIDGE SUPPORT 13	BEAM	W12X65	8	65	520
BRIDGE SUPPORT 13	COLUMNS	8" Ø PIPE X .32"	12	28.6	343
BRIDGE SUPPORT 13	COLUMNS	6" Ø PIPE X .28"	18	19	342
				TOTAL WT.	55060

TABLE OF ESTIMATED CONCRETE PLANK QUANTITIES @ BELVEDERES

LOCATION	AREA SF	VOLUME CY	REINFORCING LB	BEARING PADS
BELVEDERE 1	123	20.5	756	40
BELVEDERE 2	123	20.5	756	40
BELVEDERE 3	267	44.5	1602	80
BELVEDERE 4	252	42	1512	110
BELVEDERE 5	187	31.2	1122	60
BELVEDERE 6	187	31.2	1122	60
BELVEDERE 7	103	17.2	618	50
TOTALS	1242	207	7452	440

TABLE OF ESTIMATED PIER LENGTHS & QUANTITIES @ BELVEDERES

LOCATION	DIAMETER IN	LENGTH FT	QTY	CLASS "C" CONCRETE CY	BARS V #9		BARS Z #3 SPIRAL	
					LN	WT	LN	WT
BELVEDERE 1	30	26	4	18.9	832	2829	1360	512
BELVEDERE 2	30	26	4	18.9	832	2829	1360	512
BELVEDERE 3	30	26	8	37.8	1664	5658	2720	1024
BELVEDERE 5	30	26	4	18.9	832	2829	1360	512
BELVEDERE 6	30	26	4	18.9	832	2829	1360	512
BELVEDERE 7	30	26	3	14.2	624	2122	1020	384
BRIDGE SUPPORT 2	30	26	2	9.5	416	1413	680	256
	42	26	1	9.3	260	884	510	192
BRIDGE SUPPORT 3	30	26	2	9.5	416	1413	680	256
	42	26	1	9.3	260	884	510	192
BRIDGE SUPPORT 4	30	26	2	9.5	416	1413	680	256
	42	26	1	9.3	260	884	510	192
BRIDGE SUPPORT 5	30	26	2	9.5	416	1413	680	256
	42	26	1	9.3	260	884	510	192
BRIDGE SUPPORT 6	30	26	2	9.5	416	1413	680	256
	42	26	1	9.3	260	884	510	192
BRIDGE SUPPORT 7	30	26	2	9.5	416	1413	680	256
	42	26	1	9.3	260	884	510	192
BRIDGE SUPPORT 8	30	26	2	9.5	416	1413	680	256
	42	26	1	9.3	260	884	510	192
BRIDGE SUPPORT 9	30	26	2	9.5	416	1413	680	256
	42	26	1	9.3	260	884	510	192
BRIDGE SUPPORT 10	30	26	2	9.5	416	1413	680	256
	42	26	1	9.3	260	884	510	192
BRIDGE SUPPORT 11	30	26	2	9.5	416	1413	680	256
	42	26	1	9.3	260	884	510	192
BRIDGE SUPPORT 12	30	26	2	9.5	416	1413	680	256
	42	26	1	9.3	260	884	510	192
BRIDGE SUPPORT 13	30	26	2	9.5	416	1413	680	256
	42	26	1	9.3	260	884	510	192
ABUTMENT 13	18	26	2	3.4	312	468	330	124
ABUTMENT 14	18	26	2	3.4	312	468	330	124
ABUTMENT 18	18	26	2	3.4	312	468	330	124
			TOTALS	363.4		48064		9204

TABLE OF ESTIMATED STEEL QUANTITIES @ SHADE STRUCTURES

LOCATION	MEMBER TYPE	MEMBER SIZE	QTY	LENGTH FT	LB/FT	WEIGHT LB
REST AREA 7	COLUMN	TAPERED PER PLAN	2	14	170	4760
	PIPE BEAM	5" Ø PIPE X .258"	4	19	14.6	1110
	PURLIN "B"	3" Ø PIPE X .6"	4	40	18.6	2976
	PURLIN "A"	1.5" Ø PIPE X .2"	14	24	3.6	1210
	BRANCH	3" Ø PIPE X .6"	12	10	18.6	2232
	BRANCH STRUT	1.5" Ø PIPE X .2"	8	5	3.6	144
	SHADE	PL ⅛" X 4'-0"	35	5	20.4	3570
REST AREA 7	COLUMN	TAPERED PER PLAN	2	14	170	4760
	PIPE BEAM	5" Ø PIPE X .258"	4	19	14.6	1110
	PURLIN "B"	3" Ø PIPE X .6"	4	40	18.6	2976
	PURLIN "A"	1.5" Ø PIPE X .2"	14	24	3.6	1210
	BRANCH	3" Ø PIPE X .6"	12	10	18.6	2232
	BRANCH STRUT	1.5" Ø PIPE X .2"	8	5	3.6	144
	SHADE	PL ⅛" X 4'-0"	35	5	20.4	3570
REST AREA 7	COLUMN	TAPERED PER PLAN	2	14	170	4760
	PIPE BEAM	5" Ø PIPE X .258"	4	19	14.6	1110
	PURLIN "B"	3" Ø PIPE X .6"	4	40	18.6	2976
	PURLIN "A"	1.5" Ø PIPE X .2"	14	24	3.6	1210
	BRANCH	3" Ø PIPE X .6"	12	10	18.6	2232
	BRANCH STRUT	1.5" Ø PIPE X .2"	8	5	3.6	144
	SHADE	PL ⅛" X 4'-0"	35	5	20.4	3570
					TOTAL WT.	48006

TABLE OF ESTIMATED FOOTING / PIER CAP QUANTITIES @ BELVEDERES

LOCATION	WIDTH FT	LENGTH FT	DEPTH FT	QTY	CLASS "C" CONCRETE CY	BARS H #6		TIES #3	
						LN	WT	LN	WT
BELVEDERE 4 FTG	2.5	10	3	1	2.8	80	120	110	42
BELVEDERE 4 FTG	2.5	9	3	1	2.5	72	109	99	37
ABUTMENT 13	3	8	3	1	2.7	64	96	72	27
ABUTMENT 14	3	8	3	1	2.7	64	96	72	27
ABUTMENT 18	3	8	3	1	2.7	64	96	72	27
				TOTALS	13.4		410		160

NOTES:

1. ESTIMATED QUANTITIES SHOWN ARE FOR CONTRACTORS INFORMATION ONLY. TOTAL QUANTITIES, LENGTHS, VOLUMES AND WEIGHTS ARE APPROXIMATE AND SHOULD BE VERIFIED.
2. QUANTITIES DO NOT INCLUDE MISCELLANEOUS CONNECTIONS, PLATES, LAPS OR BOLTING MATERIAL.
3. BELVEDERE 4 FOOTINGS ARE INCLUDED IN PAY ITEM 403S-CY-A.

SITE PLAN RELEASE Sheet ____ of ____

FILE NUMBER: ____ EXPIRATION DATE: ____
CASE MANAGER: ____ APPLICATION DATE: ____
APPROVED ADMINISTRATIVELY ON: ____
APPROVED BY PLANNING COMMISSION ON: ____
APPROVED BY CITY COUNCIL ON: ____
Under Section ____ on Chapter ____ of the Austin City Code.

Signing for Director, Watershed Protection and Development Review Department
DATE OF RELEASE: ____ of ____ Zoning: ____
Rev. 1 ____ Correction 1 ____
Rev. 2 ____ Correction 2 ____
Rev. 3 ____ Correction 3 ____

RELEASE OF THIS APPLICATION DOES NOT CONSTITUTE A VERIFICATION OF ALL DATA, INFORMATION AND CALCULATIONS SUPPLIED BY THE APPLICANT. THE ENGINEER OF RECORD IS SOLELY RESPONSIBLE FOR THE COMPLETENESS, ACCURACY AND ADEQUACY OF HIS/HER SUBMITTAL, WHETHER OR NOT THE APPLICATION IS REVIEWED FOR CODE COMPLIANCE BY CITY ENGINEERS.

JACOBS
TBPE REGISTRATION #F-2966
2705 BEE CAVE ROAD, SUITE 300,
AUSTIN, TX 78746
(512) 314-3100, FAX (512) 314-3135

1018 W. 11TH STREET
AUSTIN, TX 78703
PHONE: 512.499.0919
WWW.STRUCTURESTX.COM
FIRM NO.: F-3323

STATE OF TEXAS
GERARDO CARDIAL
67435
LICENSED PROFESSIONAL ENGINEER
12.22.11

SPECIAL STRUCTURES - STRUCTURAL QUANTITIES

BOARDWALK TRAIL AT LADY BIRD LAKE

AUSTIN, TRAVIS COUNTY, TEXAS

BOARDWALK TRAIL AT LADY BIRD LAKE

CLIENT: AUSTIN PARD
DRAWN BY: NDR
DESIGNED BY: NDR
REVIEWED BY: JG
JACOBS PROJECT #: WGXG1402
SP-2011-0327C

SHEET NUMBER:
SS-001
178 OF 244