ADDENDUM No. 4

Date: April 22, 2013

City of Austin

Project Name: Todd Lane Improvements from Ben White to Saint Elmo

C.I.P. No. 6755.002

This Addendum forms a part of Contract and clarifies, corrects or modifies original Bid Documents, dated February 25, 2013. Acknowledge receipt of this addendum in space provided on bid form. Failure to do so may subject bidder to disqualification.

A. Project Manual Revisions:

VOLUME 1 OF 2: REMOVE IN ITS ENTIRETY TABLE OF CONTENTS IN ADDENDUM NO. 3 AND REPLACE WITH THE ATTACHED TABLE OF CONTENTS;

VOLUME 1 OF 2: REMOVE IN ITS ENTIRETY SECTION 00020 INVITATION FOR BIDS AND REPLACE WITH THE ATTACHED SECTION 00020 INVITATION FOR BIDS;

VOLUME 1 OF 2: REMOVE IN ITS ENTIRETY SECTION 00300U UNIT PRICE BID FORM AND REPLACE WITH THE ATTACHED SECTION 00300U UNIT PRICE BID FORM;

VOLUME 1 OF 2: REMOVE IN ITS ENTIRETY STANDARD SPECIFICATION 623S DRYSTACK ROCK WALL;

VOLUME 1 OF 2: ADD IN ITS ENTIRETY STANDARD SPECIFICATION 640S MORTARED ROCK WALL (VERSION 02-14-10);

VOLUME 1 OF 2: REMOVE IN ITS ENTIRETY SPECIAL PROVISION SP414S CONCRETE RETAINING WALL (VERSION 03/18/13) AND REPLACE WITH THE ATTACHED SP414S (VERSION 04/22/13).

B. Drawing Revisions:

REPLACE: Sheet 91 in its entirety with the attached sheet 91;

REPLACE: Sheet 92 in its entirety with the attached sheet 92;

REPLACE: Sheet 93 in its entirety with the attached sheet 93;

REPLACE: Sheet 102 in its entirety with the attached sheet 102;

REPLACE: Sheet 103 in its entirety with the attached sheet 103.

AH

This addendum consists of 33 page(s)/ 5 sheet(s).

Approved by OWNER

Xiaoqin Zhang, P.E.

Approved by ENGINEER/ARCHITECT

STATE OF TEXAS
XIAOQIN ZHANG
96436
LICENSED
PROFESSIONAL ENGINEER
04-22-13

END

CH

Following is a summary of information for this Project. Bidder is cautioned to refer to other sections of the Project Manual, Drawings and Addenda (Bid Documents) for further details.

The City of Austin, hereafter called OWNER, is requesting sealed written Bids for furnishing all labor, materials, equipment, supervision, and incidentals, and for performing all Work required for the following Project: **Todd Lane Improvements from Ben White Boulevard to Saint Elmo Road.**

Located at: Todd Lane from Ben White to St. Elmo

CIP ID# 6755.002 **IFB# 6100 CLMC423**

The Work consists of street reconstruction with HMAC and concrete, installing underground water, wastewater, storm sewer, landscaping and irrigation.

Bid Documents may be obtained at **7th floor file room Suite 760, One Texas Center, 505 Barton Springs Road, Austin, Texas 78704** upon a deposit of **$200.00** for each set of Bid Documents. Deposit check shall be made payable to City of Austin. Deposit will be refunded upon return of Bid Documents in good condition within two weeks of the time set for opening of Bids.

Sealed Bids will be received at the Contract Management Department, 105 W. Riverside Dr., Suite 210, Austin, Texas 78704 and then publicly opened and read aloud in the **SUITE 210 Conference Room.**

ALL BIDS ARE DUE PRIOR TO (Austin time) 10:30 am, May 2, 2013.

ALL COMPLIANCE PLANS ARE DUE PRIOR TO (Austin time) 2:30 pm, May 2, 2013.

BIDS WILL BE OPENED AT (Austin time) 2:30 pm, May 2, 2013.

ALL BIDS AND COMPLIANCE PLANS NOT RECEIVED PRIOR TO THE DATE AND TIME SET FORTH ABOVE WILL NOT BE ACCEPTED FOR CONSIDERATION. The time stamp clock in **SUITE 210** is the time of record and is verified daily with the local time service (512-476-7744).

All CONTRACTORS must be registered to do business with OWNER prior to submission of a Bid. All Subcontractors must be registered with the OWNER prior to execution of a contract. Prime Contractors are responsible for ensuring that their Subcontractors are registered as vendors with the City of Austin. Registration can be done through the OWNER's on-line Vendor Registration system. Log onto https://www.ci.austin.tx.us/vss/Advantage and follow the directions.

All City procurements are subject to the City's Minority-Owned and Women-Owned Business Enterprise Procurement Program found at Chapter 2-9-A of the City Code, as amended. The Program provides Minority-Owned and Women-Owned Business Enterprises (MBEs/WBEs) or Disadvantaged Business Enterprises (DBEs) full opportunity to participate in all City contracts. Goals for MBE/WBE or DBE participation are stated for each solicitation. Information on achieving the goals or documenting good faith efforts to achieve the goals are contained in the MBE/WBE Procurement Program Package or DBE Procurement Program Package attached to the solicitation. When goals are established, Bidders are required to complete and return the MBE/WBE or DBE Compliance Plan with their Bid. If a Compliance Plan is not submitted prior to the date and time set forth in the solicitation, the Bid will not be accepted for consideration. (See Section 00820 for MBE/WBE requirements on "no goal" solicitations.)

All Bids shall be accompanied by an acceptable Bid guaranty in an amount of not less than five percent (5%) of the total Bid, as specified in Section 00100, Instructions To Bidders.

Performance and payment bonds when required shall be executed on forms furnished by OWNER. Each bond shall be issued in an amount of one hundred percent (100%) of the Contract Amount by

CH

a solvent corporate surety company authorized to do business in the State of Texas, and shall meet any other requirements established by law or by OWNER pursuant to applicable law.

Minimum insurance requirements are specified in Section 00810, Supplemental General Conditions.

Minimum wage rates have been established and are specified in Section 00830, Wage Rates and Payroll Reporting.

Contract Time is of the essence and all Work shall **be substantially completed within Five Hundred Forty (540) Calendar Days** after date specified in the Notice to Proceed, in accordance with the Bid Form, Section 00300. **Final completion** shall be achieved within three hundred sixty five **(365) Calendar Days after substantial completion**. Liquidated damages are **One thousand Seven hundred fifty dollars ($1,750.00) per Calendar Day** for failure to **substantially complete** the work **and two hundred ten dollars ($210.00) per Calendar Day** for failure to achieve **final completion** within **three hundred sixty five (365) Calendar Days after substantial completion**, in accordance with the Bid Form, Section 00300.

The Final Completion duration has been set to encompass the required Landscape Maintenance period (Refer to Special Specification 611).

OWNER reserves the right to reject any or all Bids and to waive any minor informality in any Bid or solicitation procedure (a minor informality is one that does not affect the competitiveness of the Bid).

A **Mandatory** Pre-Bid Conference will be held on March 13, 2013 (date) at 1:00 pm (time)

(Austin time) at One Texas Center 8th Floor Conference Room, 505 Barton Springs Road, Austin, Texas, 78704 (location)

Austin, Texas. Attendance is mandatory unless otherwise stated. Bidders must attend any mandatory Pre-Bid Conference and are encouraged to attend any non-mandatory Pre-Bid Conference to ensure their understanding of Owner's bidding and contracting requirements, particularly MBE/WBE Procurement Program requirements. If the Pre-Bid Conference is mandatory the Bidder must arrive and sign-in within fifteen (15) minutes of the scheduled start time of the meeting, otherwise the Bidder will not be allowed to submit a Bid for the project.

The persons listed below may be contacted for information regarding the Invitation for Bid. If the Bidder contacts any other City employee, including Council Members and members of Boards and Commissions, the Bidder may be found in violation of Ordinance No. 20111110-052, dated November 10, 2011, regarding Anti-Lobbying and Procurement. The text of that Ordinance may be viewed at http://www.cityofaustin.org/edims/document.cfm?id=161145.

AUTHORIZED CONTACT PERSONS

PROJECT MANAGER: Clay Harris telephone (512) 974-7895 email Clay.Harris@austintexas.gov

CONTRACT COMPLIANCE REP.: Kitty Tunnell telephone (512) 974-7055 email kitty.tunnell@austintexas.gov

END

CH

Document Number	Title

VOLUME 1

INTRODUCTORY INFORMATION

05/06/11	Title Page
01/11/13	Table of Contents

BIDDING REQUIREMENTS, CONTRACT FORMS, & CONDITIONS OF THE CONTRACT

Pre-Bid Information

00020	03/12/12	Invitation for Bids

Instructions to Bidders

00100	08/09/12	Instructions to Bidders

Information Available to Bidders

00220	05/06/11	Geotechnical Data

Bid Forms

00300U	03/12/12	Bid Form (Unit Price)

Supplements to Bid Forms

00400	08/09/12	Statement of Bidder's Experience
00405	09/25/05	Certificate of Non-Suspension or Debarment
00410	05/06/11	Statement of Bidder's Safety Experience
00440	05/06/11	Affidavit - Prohibited Activities
00475	05/06/11	Nonresident Bidder Provisions

Agreement Form

00500	03/12/12	Agreement

Bonds and Certificates

00610	02/23/10	Performance Bond
00620	02/23/10	Payment Bond
00630	08/09/12	Nondiscrimination Certificate
00631	03/12/12	Title VI Assurances Appendix A
00650	07/30/12	Certificate of Insurance
00670	08/09/12	Sales Tax Exemption Certificate
00680	06/05/06	Non-Use of Asbestos Affidavit (Prior to Construction)
00681	06/05/06	Non-Use of Asbestos Affidavit (After Construction)

General Conditions

00700	03/12/12	General Conditions

Supplementary Conditions

00810	08/09/12	Supplemental General Conditions
00820	03/12/12	Modifications to Bidding Requirements and Contract Forms
00830	03/12/12	Wage Rates and Payroll Reporting
00830BC	01/04/13	Wage Rates Building Construction Trades
00830HH	01/11/13	Wage Rates Highway Heavy

Addenda

CH

Document Number		Title
00900	02/23/10	Addendum

SPECIFICATIONS

Division 1 - General Requirements

01010	08/09/12	Summary of Work
01050	09/13/10	Grades Lines & Levels
01095	07/21/03	Reference Standards and Definitions
01096	05/06/11	Stormwater Pollution Prevention Plan (SWPPP)
01200	08/09/12	Project Meetings
01300	05/06/11	Submittals
01352	02/23/10	Sustainable Construction Requirements
01353	08/09/12	Construction Equipment Emissions Reduction Plan
01380	08/09/12	Construction Photography & Videos
01500	08/09/12	Temporary Facilities
01505	09/13/10	Construction and Demolition Waste Management
01550	08/09/12	Public Safety and Convenience
01900	03/12/12	Prohibition of Asbestos Containing Materials
01900a	06/05/06	Statement of Non-Inclusion of Asbestos Containing Material (E/A Prior to Design)
01900b	06/05/06	Statement of Non-Inclusion of Asbestos Containing Material (E/A After Design)

City Standard Technical Specifications

Series 100 -- Earthwork

101S	Preparing Right of Way	01/04/11
102S	Clearing and Grubbing	08/20/07
104S	Removing Portland Cement Concrete	08/20/07
110S	Street Excavation	11/18/04
111S	Excavation	11/18/04
120S	Channel Excavation	11/18/04
130S	Borrow	03/24/09
132S	Embankment	08/20/07

Series 200 -- Subgrade and Base Construction

201S	Subgrade Preparation	08/20/07
202S	Hydrated Lime and Lime Slurry	08/18/00
203S	Lime Treatment for Materials in Place	11/21/05
204S	Portland Cement Treatment for Materials in Place	08/18/00
210S	Flexible Base	02/24/10
220S	Sprinkling for Dust Control	02/24/10
230S	Rolling (Flat Wheel)	08/20/07
232S	Rolling (Pneumatic Tire)	08/20/07
234S	Rolling (Tamping)	08/20/07
236S	Rolling (Proof)	08/20/07

ck

Document Number	Title	
Series 300 -- Street Surface Courses		
301S	Asphalts, Oils and Emulsions	08/20/07
306S	Prime Coat	02/24/10
307S	Tack Coat	02/24/10
312S	Seal Coat	02/21/01
313S	Cleaning and/or Sealing Joints and Cracks (Asphaltic Concrete)	02/24/10
315S	Milling Asphaltic Concrete Pavement and Non-Portland Cement Concrete Bases	02/24/10
340S	Hot Mix Asphaltic Concrete Pavement	04/04/12
341S	Paving Fabric	02/21/01
360S	Concrete Pavement	02/24/10
Series 400 -- Concrete and Structures		
401S	Structural Excavation and Backfill	11/13/07
402S	Controlled Low Strength Material	11/13/07
403S	Concrete for Structures	01/04/11
405S	Concrete Admixtures	11/13/07
406S	Reinforcing Steel	11/13/07
407S	Fibrous Concrete	07/01/09
408S	Concrete Joint Materials	11/13/07
409S	Membrane Curing	11/13/07
410S	Concrete Structures	11/13/07
411S	Surface Finishes for Concrete	11/13/07
413S	Cleaning and/or Sealing Joints and Cracks (PCC)	11/13/07
414S	Concrete Retaining Walls	11/13/07
416S	Waterstops	11/13/07
425S	Prestressed Concrete Structures	11/13/07
430S	P.C. Concrete Curb and Gutter	12/09/08
431S	Machine Laid PCC Curb and Gutter	04/03/09
432S	P.C. Concrete Sidewalks	01/04/10
433S	P.C. Concrete Driveways	12/09/08
434S	P.C. Concrete Medians and Islands	11/13/07
436S	P.C. Concrete Valley Gutters	11/13/07
470S	Curb Cuts for Sidewalk Ramps and Driveways	03/26/08
480S	Concrete Paving Units	04/04/12
485S	Concrete Paving Units for Sidewalk Ramps	11/13/07
Series 500 -- Pipe and Appurtenances		
501S	Jacking or Boring Pipe	09/26/12
503S	Frames, Grates, Rings and Covers	02/17/00
504S	Adjusting Structures	02/24/10
505S	Concrete Encasement and Encasement Pipe	02/24/10
506	Manholes	03/15/11
507S	Bulkheads	03/26/08
508S	Miscellaneous Structures and Appurtenances	02/24/10
509S	Excavation Safety Systems	02/24/10
510	Pipe	02/24/10

PH

Document Number	Title	
511S	Water Valves	02/24/10
551S	Pipe Underdrains	11/18/04
559S	Portland Cement Concrete Box Culverts	03/26/08
591S	Riprap for Slope Protection	09/01/11
593S	P.C. Concrete Retards	02/24/10
594S	Gabions and Revet Mattresses	04/05/99
Series 600 -- Environmental Enhancement		
601S	Salvaging and Placing Topsoil	09/01/11
602S	Sodding for Erosion Control	06/16/08
604S	Seeding for Erosion Control	08/18/10
605S	Soil Retention Blanket	06/21/07
606S	Fertilizer	06/21/07
607S	Slope Stabilization Applications for Erosion Control	05/23/00
608S	Planting	06/16/08
609S	Native Grasslands Seeding and Planting for Erosion Control	08/18/10
610S	Preservation of Trees and Other Vegetation	01/04/11
620S	Filter Fabric	05/23/00
628S	Sediment Containment Dike	10/30/09
639S	Rock Berm	08/18/10
640S	Mortared Rock Wall	02/14/10
641S	Stabilized Construction Entrance	06/21/07
642S	Silt Fence	09/01/11
Series 700 -- Incidental Construction		
700S	Mobilization	09/26/12
701S	Fencing	06/16/08
702S	Removal and Relocation of Existing Fences	05/20/02
Series 800 -- Urban Transportation		
801S	Constructing a Detour	06/21/07
802S	Project Signs	02/24/10
803S	Barricades, Signs and Traffic Handling	06/21/07
824S	Traffic Signs	02/24/10
827S	Designated Bicycle Lane Signing	05/23/00
829S	Designated Bicycle Lane Markings	08/20/03
860S	Pavement Marking Paint	05/23/00
862S	Temporary Removable Pavement Markings	05/05/03
863S	Reflectorized Pavement Markers	02/24/10
864S	Abbreviated Pavement Markings	06/21/07
867S	Epoxy Adhesive	06/21/07
870S	Work Zone Pavement Markings	11/21/05
871S	Reflectorized Pavement Markings	06/21/07

Document Number	Title	
873S	Raised Pavement Markings	02/24/10
874S	Eliminating Existing Pavement Markings and Markers	04/03/09
875S	Pavement Surface Preparation for Markings	11/21/05

Special Provisions to City Standard Technical Specifications

SP236S	Proof Rolling	01/29/13
SP402S	Controlled Low Strength Material	01/22/13
SP411S	Surface Finishes for Concrete	04/16/13
SP414S	Concrete Retaining Walls	04/22/13
SP430S	P.C. Concrete Curb and Gutter	04/16/13
SP506S	Manholes	01/11/13
SP508S	Miscellaneous Structures and Appurtenances	01/11/13
SP510	Pipe	01/24/13
SP511S	Water Valves	01/11/13
SP559S	Portland Cement Concrete Box Culverts	04/12/12
SP602S	Sodding for Erosion Control	01/24/13
SP604S	Seeding for Erosion Control	01/24/13
SP608S	Planting	01/11/13
SP609S	Native Grassland Seeding and Planting	10/29/12
SP802S	Business Access Signs	10/29/12
SP870S	Work Zone Pavement Markings	02/27/13
SP874S	Eliminating Existing Pavement Markings and Markers	02/27/13

Special Specifications

SS277	Lime-Cement Treatment (Road-Mixed)	09/01/11
SS508BM	Biofiltration Media	10/24/12
SS603	Irrigation System	01/24/13
SS611	Extended Landscape Maintenance	12/03/12
SS612	Topsoil Mix	02/02/13
SS730	Special Work Zone Construction	01/22/13
SS826	Portable Changeable Message Signs	01/25/13
SS1699	Water Quality Biofiltration Ponds	03/11/13

VOL. 2 02/2011 MBE/WBE Procurement Program Package

END

The undersigned, in compliance with the Invitation for Bids for construction of the following Project: **Todd Lane Improvements From Ben White to St. Elmo**

(CIP ID# 6755.002) (IFB6100 CLMC423) for the City of Austin, Texas, having examined the Project Manual, Drawings and Addenda, the site of the proposed Work and being familiar with all of the conditions surrounding construction of the proposed Project, having conducted all inquiries, tests and investigations deemed necessary and proper; hereby proposes to furnish all labor, permits, material, machinery, tools, supplies and equipment, and incidentals, and to perform all Work required for construction of the Project in accordance with the Project Manual, Drawings and Addenda within the time indicated for the following prices of:

Note: The Bidder will enter the line item subtotal in the "Amount" column below, which is the product of the estimated "Quantity" multiplied by the "Unit Price". Any mathematical errors will be corrected for the purpose of determining the correct Amount to be entered in the Bid Form. The Amounts, including any corrected Amounts, will then be totaled to determine the actual amount of the Bid.

STREET **8071-6207-9053**

Bid Item	Quantity	Unit	Item Description	Unit Price	Amount
101S-B	43	STA	PREPARING RIGHT-OF-WAY, PER 100 FOOT STA.	$_____	$_____
110S-B	105	CY	STREET EXCAVATION, PLAN QUANTITY	$_____	$_____
130S-A	2,000	CY	CLASS A (SELECT BORROW), PLAN QUANTITY	$_____	$_____
132S-A	1,630	CY	EMBANKMENT	$_____	$_____
204S-A	250	SY	PORTLAND CEMENT TREATMENT OF MATERIALS IN PLACE 6 INCH THICKNESS	$_____	$_____
204S-B	11	BARREL	PORTLAND CEMENT	$_____	$_____
210S-A	40	CY	FLEXIBLE BASE	$_____	$_____
SS277-A	92	TON	LIME FOR LIME-CEMENT TREATMENT	$_____	$_____
SS277-B	70	TON	CEMENT FOR LIME-CEMENT TREATMENT	$_____	$_____

CH

Bid Item	Quantity	Unit	Item Description	Unit Price	Amount
SS277-C	21,938	SY	LIME-CEMENT TREATMENT, (24 IN. THICK)	$_____	$_____
315S-A	4,500	SY	SURFACE MILLING	$_____	$_____
340S-B-D2	250	SY	HOT MIX ASPHALTIC CONCRETE PAVEMENT, 2 INCHES, TYPE D	$_____	$_____
340S-B-D1.5	21,938	SY	HOT MIX ASPHALTIC CONCRETE PAVEMENT, 1.5 INCHES, TYPE D	$_____	$_____
340S-B-C3	21,938	SY	HOT MIX ASPHALTIC PAVEMENT, 3.0 INCHES, TYPE C	$_____	$_____
340S-B-A1.5	2,475	SY	HOT MIX ASPHALTIC PAVEMENT, 1.5 INCHES, TYPE A	$_____	$_____
340S-B-A5	21,938	SY	HOT MIX ASPHALTIC CONCRETE PAVEMENT, 5 INCHES, TYPE A	$_____	$_____
340S-B-B12	1,150	SY	HOT MIX ASPHALTIC CONCRETE PAVEMENT, 12 INCHES, TYPE B	$_____	$_____
340S-B6	3,500	SY	HOT MIX ASPHALTIC CONCRETE PAVEMENT, 6.0 INCHES, TYPE B (TEMP. PAVEMENT, BUS PAVING AND TEMP. DRIVES)	$_____	$_____
360S-A	470	SY	10 INCH CONCRETE PAVEMENT W/STEEL REINF. PER COA STANDARD DETAIL 1000S-7 (FOR BUS PAVING SECTION)	$_____	$_____
SP402S-B	2,100	CY	FAST SET CLSM (SPECIAL WORK ZONE)	$_____	$_____
403S-CY	270	CY	CLASS A CONCRETE FILL	$_____	$_____
SP411S-A	343	SY	STAMPED CONCRETE (STAINED GREEN IN COLOR)	$_____	$_____

CH

Bid Item	Quantity	Unit	Item Description	Unit Price	Amount
430S-A	12,080	LF	P.C. CONCRETE CURB AND GUTTER (EXCAVATION)	$_____	$_____
SP430S-A12	520	LF	P.C. CONCRETE CURB AND GUTTER (12-INCH TOP OF CURB)	$_____	$_____
432S-4	45,350	SF	NEW P.C. CONCRETE SIDEWALKS, 4 INCH THICKNESS	$_____	$_____
433S-C	25,500	SF	TYPE II P.C. CONCRETE DRIVEWAYS	$_____	$_____
480S-RP-1	51	EA	CURB RAMP WITH PAVERS (TYPE 1)	$_____	$_____
510-AW5 IRR	1,070	LF	PIPE, 5 IN. DIA. SDR-CLASS 200 (ALL DEPTHS), INCLUDING EXCAVATION AND BACKFILL	$_____	$_____
510-AW4 IRR	140	LF	PIPE, 4 IN. DIA. SCHEDULE 40 PVC (ALL DEPTHS), INCLUDING EXCAVATION AND BACKFILL	$_____	$_____
510-AW3 IRR	300	LF	PIPE, 3 IN. DIA. SCHEDULE 40 PVC (ALL DEPTHS), INCLUDING EXCAVATION AND BACKFILL	$_____	$_____
510-AW2 SCH 40 IRR	60	LF	PIPE, 2 IN. DIA. SCHEDULE 40 PVC (ALL DEPTHS), INCLUDING EXCAVATION AND BACKFILL	$_____	$_____
510-AW2.5 IRR	180	LF	PIPE, 2.5 IN. DIA. SCHEDULE 40 PVC (ALL DEPTHS), INCLUDING EXCAVATION AND BACKFILL	$_____	$_____
510-AW1.5 IRR	780	LF	PIPE, 1.5 IN. DIA. SCHEDULE 40 PVC (ALL DEPTHS), INCLUDING EXCAVATION AND BACKFILL	$_____	$_____
602S-C	2,594	SY	BERMUDA MULCH SODDING	$_____	$_____

Bid Item	Quantity	Unit	Item Description	Unit Price	Amount
SP602S-B	1,837	SY	EMERALD ZOYSIA BLOCK SODDING, 100% COVERAGE, PLAN QUANTITY	$_____	$_____
610S-R	21	EA	REMOVAL OF EXISTING TREES	$_____	$_____
610S-A	1,650	LF	PROTECTIVE FENCING TYPE A CHAIN LINK FENCE (TYPICAL APPLICATION - HIGH DAMAGE POTENTIAL)	$_____	$_____
610S-B	150	LF	PROTECTIVE FENCING TYPE B WOOD FENCE (TYPICAL APPLICATION - HIGH DAMAGE POTENTIAL) (PLANKING)	$_____	$_____
640S	2,138	SF	MORTARED ROCK WALL	$_____	$_____
701S-H	120	LF	SECURITY FENCE, 8 FOOT HIGH, TYPE CHAIN LINK	$_____	$_____
701S-CD	2	EA	CHAIN LINK VEHICULAR DOUBLE SWING GATE, 8 FOOT X 12 FOOT	$_____	$_____
702S-A	92	LF	REMOVE AND RELOCATE EXISTING 6 FOOT, CHAIN LINK FENCE	$_____	$_____
SS730	32	STA	SPECIAL WORK ZONE CONSTRUCTION	$_____	$_____
829S-A6BW	2,150	LF	TYPE I BICYCLE LANE MARKINGS, 6 INCHES IN WIDTH, BROKEN WHITE IN COLOR	$_____	$_____
829S-A6SW	8,300	LF	TYPE I BICYCLE LANE MARKINGS, 6 INCHES IN WIDTH, SOLID WHITE IN COLOR	$_____	$_____

CH

Bid Item	Quantity	Unit	Item Description	Unit Price	Amount
829S-B	28	EA	TYPE I BICYCLE LANE PREFERENTIAL (DIRECTIONAL ARROW) SYMBOLS, WHITE IN COLOR	$_____	$_____
829S-C	12	EA	TYPE I BICYCLE LANE PREFERENTIAL (BIKE RIDER) SYMBOL, WHITE IN COLOR	$_____	$_____
863S-4	17	EA	REFLECTORIZED PAVEMENT MARKER (TYPE II-B-B)	$_____	$_____
863S-5	140	EA	REFLECTORIZED PAVEMENT MARKERS (TYPE II-C-R)	$_____	$_____
871S-A4SW	140	LF	REFLECTORIZED TYPE I THERMOPLASTIC PAVEMENT MARKINGS 4 INCHES IN WIDTH, 90 MILS IN THICKNESS, SOLID WHITE IN COLOR	$_____	$_____
871S-A4SY	10,800	LF	REFLECTORIZED TYPE I THERMOPLASTIC PAVEMENT MARKINGS 4 INCHES IN WIDTH, 90 MILS IN THICKNESS, SOLID YELLOW IN COLOR	$_____	$_____
871S-A4BW	150	LF	REFLECTORIZED TYPE I THERMOPLASTIC PAVEMENT MARKINGS 4 INCHES IN WIDTH, 90 MILS IN THICKNESS, BROKEN WHITE IN COLOR	$_____	$_____
871S-A12W	50	LF	REFLECTORIZED TYPE I THERMOPLASTIC PAVEMENT MARKINGS 12 INCHES IN WIDTH, 90 MILS IN THICKNESS, WHITE IN COLOR	$_____	$_____

CH

STREET **8071-6207-9053**

Bid Item	Quantity	Unit	Item Description	Unit Price	Amount
871S-A24W	200	LF	REFLECTORIZED TYPE I THERMOPLASTIC PAVEMENT MARKINGS 24 INCHES IN WIDTH, 90 MILS IN THICKNESS, WHITE IN COLOR	$_____	$_____
871S-A60	75	LF	REFLECTORIZED TYPE I THERMOPLASTIC PAVEMENT MARKINGS 60 INCHES IN WIDTH, 90 MILS IN THICKNESS, GREEN IN COLOR	$_____	$_____
871S-A72	40	LF	REFLECTORIZED TYPE I THERMOPLASTIC PAVEMENT MARKINGS 72 INCHES IN WIDTH, 90 MILS IN THICKNESS, GREEN IN COLOR	$_____	$_____
871S-B	6	EA	REFLECTORIZED TYPE I THERMOPLASTIC PAVEMENT MARKINGS, 4 INCHES IN WIDTH, 90 MILS IN THICKNESS, WHITE IN COLOR	$_____	$_____

SUBTOTAL STREET..... $_____

CH

Bid Item	Quantity	Unit	Item Description	Unit Price	Amount
403S-EA	1	EA	SPLITTER BOX COMPLETE IN PLACE	$_____	$_____
SP414S-C-SF6	3,610	SF	CAST-IN-PLACE PORTLAND CEMENT CONCRETE RETAINING WALL, (6 IN THICK) INCLUDING REINFORCEMENT	$_____	$_____
SP414S-C-SF10	6,963	SF	CAST-IN-PLACE PORTLAND CEMENT CONCRETE RETAINING WALL, (10 IN THICK) INCLUDING REINFORCEMENT	$_____	$_____
SP414S-C-SF12	1,815	SF	CAST-IN-PLACE PORTLAND CEMENT CONCRETE RETAINING WALL, (12 IN THICK) FOR BIOFILTRATION POND#1 ONLY, INCLUDING REINFORCEMENT	$_____	$_____
432S-PRC-4	12,600	LF	PEDESTRIAN ADA RAILING OPTION 3 (STANDARD 707S-4)	$_____	$_____
501S-36	93	LF	JACKING OR BORING 36 IN. PIPE, CLASS STEEL (PER ASTM A134, W/MIN. THICKNESS OF 9/16" INCLUDING SPACERS)	$_____	$_____
506S-J6X4	2	EA	JUNCTION BOX (6 FT. X 4FT.)	$_____	$_____
506S-J6X5	1	EA	JUNCTION BOX (6 FT. X 5FT.)	$_____	$_____
506S-J7X6	1	EA	JUNCTION BOX (7 FT. X 6 FT.)	$_____	$_____
506S-J7X4	1	EA	JUNCTION BOX (7 FT. X 4 FT.)	$_____	$_____
506S-J7X4X7	1	EA	JUNCTION BOX (7 FT. X 4 FT. X 7 FT.)	$_____	$_____

CH

Bid Item	Quantity	Unit	Item Description	Unit Price	Amount
506S-J10X5X5	1	EA	JUNCTION BOX (10 FT. X 5 FT. X 5 FT.)	$_____	$_____
SP506S-J1.5X1.5	9	EA	SCREW COVER IRRIGATION BOX (ALL DEPTHS)	$_____	$_____
506S-J3X.33	12	LF	JUNCTION BOX (3 FT. X .33 FT)	$_____	$_____
506S-J3X0.5	12	LF	JUNCTION BOX (3 FT. X 0.5 FT)	$_____	$_____
506S-J4X.33	22	LF	JUNCTION BOX (4 FT. X .33 FT)	$_____	$_____
506S-J6X.35	12	LF	JUNCTION BOX (6 FT. X .35 FT)	$_____	$_____
506S-J1X.33	8	LF	JUNCTION BOX (1FT. X .33 FT.)	$_____	$_____
506S-M4	9	EA	STANDARD PRE-CAST MANHOLE W/ PRE-CAST BASE, 4 FT DIA.	$_____	$_____
506S-D4	3	EA	DROP MANHOLE W/ PRE-CAST BASE, 4 FT DIA.	$_____	$_____
508S-IG5X1.5	3	EA	INLET GRATED (5 FT. X 1.5 FT.)	$_____	$_____
508S-IG10X2	1	EA	INLET GRATED (10 FT. X 2 FT.)	$_____	$_____
SP508S-IG5X4	1	EA	GRATE INLET (5 FT. X 4 FT.)	$_____	$_____
508S-I10S	6	EA	INLET, STANDARD	$_____	$_____
SP508S-I10R	5	EA	MODIFIED CURB INLET, RECESSED	$_____	$_____

CH

Bid Item	Quantity	Unit	Item Description	Unit Price	Amount
SP508S-HP	1	EA	12 IN FLAT THICKNESS CONCRETE HEADWALL WITH PEDESRIAN HAND RAIL	$_____	$_____
SS508BM	370	CY	BIOFILTRATION MEDIUM	$_____	$_____
509S-1	2,227	LF	TRENCH EXCAVATION SAFETY PROTECTIVE SYSTEMS (ALL DEPTHS)	$_____	$_____
510-ASD18C3	591	LF	PIPE, 18 IN. DIA, CLASS III RCP (ALL DEPTHS) INCLUDING EXCAVATION AND BACKFILL	$_____	$_____
510-ASD18C4	800	LF	PIPE, 18 IN. DIA. CLASS IV RCP (ALL DEPTHS) INCLUDING EXCAVATION AND BACKFILL	$_____	$_____
510-ASD24	694	LF	PIPE, 24 IN. DIA, CLASS IV RCP (ALL DEPTHS) INCLUDING EXCAVATION AND BACKFILL	$_____	$_____
510-ASD36C3	25	LF	PIPE, 36 IN. DIA., CLASS III RCP (ALL DEPTHS) INCLUDING EXCAVATION AND BACKFILL	$_____	$_____
510-ASD36C4	53	LF	PIPE, 36 IN. DIA., CLASS IV RCP (ALL DEPTHS) INCLUDING EXCAVATION AND BACKFILL	$_____	$_____
510-ASD6	500	LF	PIPE, 6 IN. DIA., PVC (ALL DEPTHS) INCLUDING EXCAVATION AND BACKFILL	$_____	$_____
SP510-ASD 6	3,000	LF	6 IN, SCH 40 PERFORATED PVC PIPE	$_____	$_____
SP510 VIDEO	2,227	LF	VIDEO INSPECTION OF NEWLY INSTALLED BOX CULVERTS AND STORM DRAIN PIPE	$_____	$_____
559S-6X1.5	12	LF	PRECAST CONCRETE BOX CULVERTS (6 FT. X 1.5 FT.)	$_____	$_____

CH

Bid Item	Quantity	Unit	Item Description	Unit Price	Amount
559S-4X3	379	LF	PRECAST CONCRETE BOX CULVERTS (4 FT. X 3 FT.)	$_____	$_____
559S-5X3	565	LF	PRECAST CONCRETE BOX CULVERTS (5 FT. X 3 FT.)	$_____	$_____
559S-6X3	60	LF	PRECAST CONCRETE BOX CULVERTS (6 FT. X 3 FT.)	$_____	$_____
559S-7X3	535	LF	PRECAST CONCRETE BOX CULVERTS (7 FT. X 3 FT.)	$_____	$_____
591S-D	150	SY	MORTARED ROCK RIPRAP (3" – 6", ROCK SIZE)	$_____	$_____
SS603-A	1	LS	IRRIGATION SYSTEM	$_____	$_____
604S-C	7,559	SY	NATIVE SEEDING FOR EROSION CONTROL METHOD	$_____	$_____
608S-1RB	21	EA	PLANTING TYPE REDBUD SIZE IN 2 CAL IN.	$_____	$_____
608S-1CM	8	EA	PLANTING TYPE CHILEAN MESQUITE, SIZE IN 3 CAL IN.	$_____	$_____
608S-1DM	9	EA	PLANTING TYPE 'BUBBA' DESERT WILLOW, SIZE IN 2 CAL IN.	$_____	$_____
608S-1LO	7	EA	PLANTING TYPE LACEY OAK, SIZE IN 3 CAL IN.	$_____	$_____
608S-1MB	11	EA	PLANTING TYPE MEXICAN BUCKEYE, SIZE IN 2 CAL IN.	$_____	$_____
608S-1MP	10	EA	PLANTING TYPE MEXICAN PLUM, SIZE IN 2 CAL IN.	$_____	$_____

CH

Bid Item	Quantity	Unit	Item Description	Unit Price	Amount
608S-1PH	11	EA	PLANTING TYPE POSSUMHAW HOLLY, SIZE IN 2 CAL IN.	$_____	$_____
608S-1TA	10	EA	PLANTING TYPE TEXAS ASH, SIZE IN 3 CAL IN.	$_____	$_____
608S-1ML	15	EA	PLANTING TYPE TEXAS MOUNTAIN LAUREL, SIZE IN 2 CAL. IN.	$_____	$_____
608S-1YH	26	EA	PLANTING TYPE PRIDE OF HOUSTON YAUPON HOLLY, SIZE IN 2 CAL IN.	$_____	$_____
SP608S-1LP	976	EA	PLANTING, 1 GALLON CONTAINERS, PER PLANS	$_____	$_____
SP608S-5LP	264	EA	PLANTING, 5 GALLON CONTAINERS, PER PLANS	$_____	$_____
SP608S-15LP	9	EA	PLANTING, 15 GAL. CONTAINERS, PER PLANS	$_____	$_____
SP608S-2A	33	CY	HARDWOOD MULCH, 3 IN THICK, PROPOSED TREES	$_____	$_____
SP608S-2B	59	CY	HARDWOOD MUCH, 3 IN THICKNESS, EXISTING TREES PER PLANS	$_____	$_____
SP608S-2C	13	CY	HARDWOOD MULCH, 3 IN THICKNESS, IN R.O.W. PER PLANS	$_____	$_____
SP608S-2D	38	CY	HARDWOOD OR ROCK MULCH, 3 IN THICK, PLANTING BEDS IN RAIN GARDENS AND BIOFILTRATION PONDS	$_____	$_____
SP608S-2E	128	EA	TREE STAKING SYSTEM	$_____	$_____
SP608S-T1	2	EA	TRANSPLANTING, TREE, 8 IN DIAMETER	$_____	$_____
SP608S-SG1	5	EA	TREE & ROOT PROTECTION SIGNAGE	$_____	$_____

STORM **8071-6207-9053**

Bid Item	Quantity	Unit	Item Description	Unit Price	Amount
SP608S-1A	12	MO	PLANT ESTABLISHMENT PERIOD	$_____	$_____
SP609S-M	12	MO	MANAGEMENT PRACTICE	$_____	$_____
SS611-A	12	MO	EXTENDED LANDSCAPE MAINTENANCE	$_____	$_____
SS612-A	1,150	CY	TOPSOIL MIX	$_____	$_____
SS1699 WQBP1	1	EA	WATER QUALITY BIOFILTRATION POND #1	$_____	$_____
SS1699 WQBP2	1	EA	WATER QUALITY BIOFILTRATION POND #2	$_____	$_____

SUBTOTAL STORM ..... $_____

CH

Bid Item	Quantity	Unit	Item Description	Unit Price	Amount
501S-16	96	LF	JACKING OR BORING 16 IN. PIPE, CLASS STEEL (PER ASTM A134 W/MIN. THICKNESS OF 3/8" INCLUDING SPACERS)	$_____	$_____
504S-1RM	15	EA	REPOSITIONING & ADJUSTING WATER METERS	$_____	$_____
504S-3W	8	EA	ADJUSTING WATER VALVE BOXES TO GRADE	$_____	$_____
509S-1W	3,955	LF	TRENCH EXCAVATION SAFETY PROTECTIVE SYSTEMS (ALL DEPTHS)	$_____	$_____
510-AW8PVC	3,180	LF	PIPE, 8 IN. DIA. PVC C-900, (ALL DEPTHS), INCLUDING EXCAVATION AND BACKFILL	$_____	$_____
510-AW8DI	145	LF	PIPE, 8 IN. DIA. DI CL 350, (ALL DEPTHS), INCLUDING EXCAVATION AND BACKFILL	$_____	$_____
510-AW6DI	590	LF	PIPE, 6 IN. DIA. DI CL 350, (ALL DEPTHS), INCLUDING EXCAVATION AND BACKFILL	$_____	$_____
510-AW6PVC	40	LF	PIPE, 6 IN. DIA. PVC C-900, (ALL DEPTHS), INCLUDING EXCAVATION AND BACKFILL	$_____	$_____
510-AW2K	40	LF	PIPE, 2 IN. DIA. COPPER TYPE K, (ALL DEPTHS), INCLUDING EXCAVATION AND BACKFILL	$_____	$_____
510-BW 8x1.5	17	EA	INSTALLING OR RECONNECTING LATERAL SERVICE TO EXISTING OR REPLACED PIPE (SINGLE 1 ½ IN. WATER SERVICE CONNECTION)	$_____	$_____

Bid Item	Quantity	Unit	Item Description	Unit Price	Amount
510-IR 24X8 DIA.	1	EA	PRESSURE TAPS, 24 IN. DIA. X 8 IN. DIA. (STEEL FULL-BODY TAPPING SLEEVE AND VALVE, TYPE 2)	$_____	$_____
510-JW8X8	3	EA	WET CONNECTION 8 IN. DIA X 8 IN. DIA.	$_____	$_____
510-KW	1.5	TON	DUCTILE IRON FITTINGS	$_____	$_____
511S-A2	1	EA	VALVES, GATE TYPE, 2 IN. DIAMETER	$_____	$_____
511S-A6	21	EA	VALVES, GATE TYPE, 6 IN. DIAMETER	$_____	$_____
511S-A8	14	EA	VALVES, GATE TYPE, 8 IN. DIAMETER	$_____	$_____
511S-C	1	EA	BACKFLOW PREVENTOR, 2 INCH DIA.	$_____	$_____
511S-B	19	EA	FIRE HYDRANTS (SEE STANDARD NO. 511S-17)	$_____	$_____
511S-F	1	EA	AUTOMATIC COMBINATION AIR/VACUUM RELEASE VALVE ASSEMBLY, 2" DIAMETER	$_____	$_____
SP511S-J8	2	EA	PERMANENT INSERTION VALVE, 8 IN DIAMETER, COMPLETE IN PLACE	$_____	$_____

SUBTOTAL WATER..... $_____

CH

WASTEWATER **4570-2307-8376**

Bid Item	Quantity	Unit	Item Description	Unit Price	Amount
506S 4WW	9	EA	MINOR MANHOLE HEIGHT ADJUSTMENT, 48" DIA.	$_____	$_____
510-BWW 6X8	10	EA	INSTALLING OR RECONNECTING LATERAL SERVICE TO EXISTING OR REPLACED PIP (6" DIA. SDR-26 PVC WASTEWATER SERVICE *CONNECTION* – SINGLE, INCLUDING NEW CLEANOUT)	$_____	$_____

SUBTOTAL WASTE WATER..... $_____

GENERAL **8071-6207-9053**

Bid Item	Quantity	Unit	Item Description	Unit Price	Amount
628S-C	32	EA	FILTER CURB INLET PROTECTION (NEW INLET)	$_____	$_____
628S-D	10	EA	FILTER CURB INLET PROTECTION (EXISTING INLET)	$_____	$_____
639S	625	LF	ROCK BERM	$_____	$_____
641S	1	EA	STABILIZED CONSTRUCTION ENTRANCE	$_____	$_____
642S	7,830	LF	SILT FENCE FOR EROSION CONTROL	$_____	$_____
700S-TM	1	LS	TOTAL MOBILIZATION PAYMENT	$_____	$_____
801S	1	LS	CONSTRUCTING A DETOUR	$_____	$_____
802S-B C.I.P	4	EA	C.I.P. PROJECT SIGNS	$_____	$_____

CH

GENERAL **8071-6207-9053**

Bid Item	Quantity	Unit	Item Description	Unit Price	Amount
SP 802S-BAS	30	EA	BUSINESS ACCESS SIGNS	$_____	$_____
803S-CD	540	CD	BARRICADES, SIGNS, AND TRAFFIC HANDLING	$_____	$_____
SS826	280	CD	PORTABLE CHANGEABLE MESSAGE SIGNS	$_____	$_____

SUBTOTAL GENERAL..... $_____

Subtotal Street.....$_____

Subtotal Storm.....$_____

Subtotal Water.....$_____

Subtotal Waste Water.....$_____

Subtotal General.....$_____

TOTAL BID: .....$_____

In the event of a mathematical error, the correct product, determined by using the "Unit Price" and "Quantity", and the correct sum, determined by totaling the correct line item Amounts, will prevail over the amount entered by the Bidder. The unit prices shown above will be the unit prices used to tabulate the Bid and used in the Contract, if awarded by the City.

Optional Information on Bid Prices Submitted by Computer Printout

In lieu of handwritten unit prices in figures in ink on the Bid forms above, Bidders, at their option, may submit an original computer printout sheet bearing certification by, and signature for, the Bidding firm. The unit prices shown on acceptable printouts will be the unit prices used to tabulate the Bid and used in the Contract if awarded by the City. As a minimum, computer printouts must contain all information and in the format shown on the attached page: "Example of Bid Prices Submitted by Computer Printout" form.

If a computer printout is used, the Bidder must still execute that portion of the unit price Bid form which acknowledges the Bid Guaranty, Time of Completion, Liquidated Damages, and all addenda that may have been issued.

Bids with unit prices by computer printout may be rejected, if:

1. The computer printout does not include the required certification, set forth in the attached "Example".
2. The computer printout is not signed in the name of the firm to whom the Project Manual was issued.
3. The computer printout is non-responsive or otherwise omits required Bid items or includes items not shown on the Bid forms in the Project Manual.

CK

4. The other required Bid documents issued by the City are not fully executed as provided above.

5. The signed Section 00300U is not returned with the signed computer printout.

If the Bid submitted by the Bidder contains both the form furnished by the City, completed according the instructions, and also a computer printout, completed according to the instructions, unit prices of only one will be considered. In this situation, the unit Bid prices shown on the computer printout will be used to determine the Bid.

BID GUARANTY: A Bid guaranty must be enclosed with this Bid, as required in Section 00020 or Section 00020S, in the amount of not less than five percent (5%) of the total Bid. Following the Bid opening, submitted Bids may not be withdrawn for a period of Ninety (90) Calendar Days. Award of Contract will occur within this period, unless mutually agreed between the parties. The Bid guaranty may become the property of the OWNER, or the OWNER may pursue any other action allowed by law, if:

- Bidder withdraws a submitted Bid within the period stated above;
- Bidder fails to submit the required post Bid information within the period specified in Section 00020S or 00100, or any mutually agreed extension of that period;
- or Bidder fails to execute the Contract and furnish the prescribed documentation (bonds, insurance, etc.) needed to complete execution of the Contract within five (5) calendar days after notice of award, or any mutually agreed extension of that period.

GEOTECHNICAL BASELINE ACKNOWLEDGEMENT: The undersigned bidder certifies that he/she has read and understands the Geotechnical Baseline Report (GBR), the Geotechnical Data Report, the Reflection Survey Report, and all other geological and geotechnical information and data as provided in the Contract Documents, including all Addenda. ***The Bidder acknowledges and agrees that the GBR represents the contractual statement of the subsurface conditions reasonably anticipated to be encountered during construction. The GBR will be used to evaluate whether subsurface conditions differ materially from those indicated in the GBR.***

TIME OF COMPLETION: The undersigned Bidder agrees to commence work on the date specified in the written "Notice to Proceed" to be issued by the OWNER and to **substantially** complete construction of the improvements, as required by the Project Manual, Drawings and Addenda for the Work within **Five Hundred Forty(540) Calendar** Days. **If a Substantial Completion date has been specified, the Bidder further agrees to reach Final Completion within Three Hundred Sixty Five (365) Calendar Days after substantial completion as required by the Project Manual, Drawings and Addenda for the work.** The Bidder further agrees that should the Bidder fail to (**substantially complete the Work or to finally** complete the Work within the number of days indicated in the Bid or as subsequently adjusted, Bidder shall pay the liquidated damages for each consecutive day thereafter as provided below; unless the OWNER elects to pursue any other action allowed by law.

The Final Completion duration has been set to encompass the required Landscape Maintenance period (Refer to Special Specification SS611).

WAIVER OF ATTORNEY FEES: In submitting its bid, in consideration for the waiver of its right to attorney's fees by the OWNER, the Bidder knowingly and intentionally agrees to and shall waive the right to attorney's fees under Section 271.153 of the Texas Local Government Code in any administrative proceeding, alternative dispute resolution proceeding, or litigation arising out of or connected to any Contract awarded pursuant to this solicitation process.

MH

LIQUIDATED DAMAGES: The Bidder understands and agrees that the timely completion of the described Work is of the essence. The Bidder and OWNER further agree that the OWNER's actual damages for delay caused by failure to timely complete the Project are difficult, if not impossible to measure. However, with respect to the additional administrative and consultant costs to be incurred by OWNER, the reasonable estimate of such damages has been calculated and agreed to by OWNER and Bidder. Therefore, the Bidder and the OWNER agree that for each and every **Calendar Day** the Work or any portion thereof, remains incomplete after the **Substantial Completion** date as established by the above paragraph, "Time of Completion", payment will be due to the Owner in the amount of **One Thousand Seven Hundred Fifty dollars ($1,750.00) per Calendar Day** as liquidated damages, not as a penalty, but for delay damages to the OWNER. If both Substantial and Final Completion dates have been specified, the Bidder and the OWNER further agree that for each and every **Calendar Day** the Work or any portion thereof, remains incomplete after the Final date as established by the above paragraph, "Time of Completion", payment will be due to the OWNER in the amount of **Two Hundred Ten dollars ($210.00) per Calendar Day** as liquidated damages, not as a penalty, but for delay damages to the OWNER. Such amount shall be deducted by the OWNER from any Contract payment due. In the event of a default or breach by the CONTRACTOR and demand is made upon the surety to complete the project, in accordance with the Contract Documents, the surety shall be liable for liquidated damages pursuant to the Contract Documents in the same manner as the CONTRACTOR would have been.

OWNER reserves the right to reject any or all Bids and to waive any minor informality in any Bid or solicitation procedure (a minor informality is one that does not affect the competitiveness of the Bids).

The undersigned acknowledges receipt of the following addenda:

Addendum No. 1 dated _____ Received _____

Addendum No. 2 dated _____ Received _____

Addendum No. 3 dated _____ Received _____

Addendum No. 4 dated _____ Received _____

Addendum No. 5 dated _____ Received _____

_____
Secretary, *if Bidder is a Corporation

_____
Bidder

(Seal)

_____
Authorized Signature

_____
Title

_____
Date

_____

_____
Address

CH

Telephone Number / FAX Number

Email Address for Person Signing Bid

Email Address for Bidder's Primary Contact Person

* Copy of Corporate Resolution and minutes with certificate of officer of Bidder as to authority of signatory to bind Bidder is to be signed and dated no earlier than one week before Bid date, and attached to this document.

EXAMPLE: BID PRICES SUBMITTED BY COMPUTER PRINTOUT

Project Name:
CIP ID #:
IFB #:

Bid Item #	***Bid Item Description***	***Unit***	***Qty***	***Unit Bid Price***	***Total Amount***
				Total Bid:	

(YOUR FIRM'S NAME) certifies that the unit prices shown on this completed computer printout for all of the bid items and the alternates contained in this proposal are the unit prices intended and that its Bid will be tabulated using these unit prices and no other information from this printout. (YOUR FIRM'S NAME) acknowledges and agrees that the total bid amount shown will be read as its total bid. *In the event of a mathematical error*, the correct product, determined by using the "Unit Price" and "Quantity", and the correct sum, determined by totaling the correct line item Amounts, will prevail over the amount entered by the Bidder.

Signed: _____

Title: _____

Date: _____

End

CH

SPECIAL PROVISION TO
Standard Specification Item No. 414S Concrete Retaining Wall (Version 11/13/07)

For this project Item No. 414S Concrete Retaining Walls, dated 11/13/2007, of the City of Austin Standard Technical Specifications is hereby amended with respect to the clauses cited below. No other clauses or requirements of this Section of the City of Austin Standard Specifications are waived or changed.

414S.5 Measurement

Delete this section in its entirety and replace it with the following:

"Accepted cast-in-place, Precast Portland cement and limestone retaining walls as prescribed by this item will be measured by the square foot of the outside, vertical surface of the wall. The vertical measurement shall be from the top of the wall to the top of the footing." No measurement will be made for concrete footing and shall be included in the unit price bid for the retaining wall construction.

414.6 Payment

Delete the first sentence of this section and replace with the following sentence:

> "The cast-in-place or Precast Portland cement concrete work performed as prescribed by this item will be paid for at the unit bid price per square foot of exposed outside vertical surface."

Add the following pay items:

Pay Item No. SP414S-C-SF6	CAST-IN-PLACE PORTLAND CEMENT CONCRETE RETAINING WALL (6-IN THICK) INCLUDING REINFORCEMENT.	Per Square Foot
Pay Item No. SP414S-C-SF10	CAST-IN-PLACE PORTLAND CEMENT CONCRETE RETAINING WALL (10-IN THICK) INCLUDING REINFORCEMENT.	Per Square Foot
Pay Item No. SP414S-C-SF12	CAST-IN-PLACE PORTLAND CEMENT CONCRETE RETAINING WALL (12-IN THICK) FOR BIOFILTRATION POND #1 ONLY, INCLUDING REINFORCEMENT.	Per Square Foot

End

Item No. 640S
Mortared Rock Wall

640S.1 Description

This item shall govern the construction of mortared rock walls, as herein specified, on a prepared subgrade, including furnishing the stone, mortar and other related materials to construct walls, the excavation and backfilling the wall, removal of any old structure or portions thereof encountered, disposal of surplus excavated material and the completion Mortared Rock Walls as indicated on the Drawings or as directed by the Engineer or designated representative.

This specification is applicable for projects or work involving either inch-pound or SI units. Within the text, the inch-pound units are given preference followed by SI units shown within parentheses.

640S.2 Submittals

The submittal requirements for this specification item shall include:

A. Details concerning the p.c. concrete footing including dimensions of the footing, the p.c. concrete mix design, steel reinforcement, etc.
B. Source, type and gradation of rock
C. Mortar mix design.

640S.3 Materials

A. Rock:
All types used shall be native limestone suitable for horizontal course type construction. The size of rock to be used for construction shall be as indicated on the Drawings, but may vary as approved by the Engineer or designated representative.
B. Portland Cement: ASTM C 150, Type I
C. Masonry Cement: ASTM C 91
D. Sand: ASTM C 144, Natural
E. Water: Free from matter that could impair suitability for use in mortar
F. Hydrated Lime: ASTM C 207, Type S
G. Mortar:

Mortar shall be composed of 1 part Portland Cement, 1 part hydrated lime and 6 parts sand (by volume) and water. Mortar shall have a consistency that insures that it can be easily spread by a trowel. An alternate mix composed of 1 part masonry cement and 3 parts sand may be used. The sand shall be measured damp and loose.

640S.4 Construction Methods

Stone shall be laid plumb, level or true to a line. All stone shall be laid in a full bed of mortar with head joints and edge joints completely filled. The face shall be aligned or exposed as indicated on the Drawings. Exterior joints that will remain exposed shall be finished in a manner approved by the Engineer or designated representative.

In hot weather, stone work shall be kept moist until the mortar has set. No mortar work will be done when the temperature is below 40 °F (4 °C) in the shade and all work may be suspended during freezing or undesirable weather. The mortar materials shall be mixed mechanically for not less than 5 minutes after all ingredients are in the mixer. Mortar that has begun to set or that has been mixed for more than 2 hours shall not be used.

Spalls may be used in partially filling the large voids, provided they are keyed in properly and are well coated with mortar. All finished rockwork shall be protected from damage. Chipped rockwork, that will remain exposed, shall be satisfactorily repaired or replaced.

Mortared rock walls shall consist of courses or layers of rock with the spaces between them filled with mortar and shall be constructed at such places as indicated on the Drawings or as directed by the Engineer or designated representative, in accordance with these specifications and in conformity with the lines, grades, height, depth and other details shown on the pertinent typical sections.

Excavation and concrete footings for mortared rock walls shall not be paid for directly, but shall be included in the unit price bid for mortared rock wall construction.

Prior to placing any material, the footings shall have been placed by the Contractor as part of this contract to the approved line and grade and allowed at least 36 hours curing time. The rock shall then be thoroughly wet and bedded in 1 inch (25 mm) of mortar placed on the footings, one against the other, with the resulting voids being completely filled with mortar. The finished surface shall be even and level.

640S.5 Measurement

Mortared rock wall will be measured by the square foot (square meter: 1 square meter equals 10.76 square feet) of the outside, vertical face of wall. No measurement will be made for concrete footing and shall be included in the unit price bid for the rock wall construction.

640S.6 Payment

Mortared rock wall acceptably completed will be paid for at the contract unit bid price per square foot. The unit bid price shall include full compensation for furnishing all materials, for excavation, and backfill, for all forming, transporting, placing, finishing and for all equipment, tools, labor and incidentals necessary to place mortared rock wall on concrete footing as specified and indicated on the Drawings.

Payment will be made under:

Pay Item No. 640S:	Mortared Rock Wall	Per Square Foot.

End

SPECIFIC CROSS REFERENCE MATERIALS
Specification 640S, "Mortared Rock Wall"

American Society for Testing and Materials, ASTM

Designation	Description
C 91	Specification for Masonry Cement
C 144	Specification for Aggregate for Masonry
C 150	Specification for Portland Cement
C 207	Specification for Hydrated Lime for Masonry

RELATED CROSS REFERENCE MATERIALS
Specification 640S, "Mortared Rock Wall"

City of Austin Standard Specifications

Designation	Description
Item No. 101S	Preparing Right of Way
Item No. 102S	Clearing and Grubbing
Item No. 111S	Excavation
Item No. 401	Structural Excavation and Backfill
Item No. 403S	Concrete for Structures
Item No. 405	Concrete Admixtures
Item No. 406	Reinforcing Steel
Item No. 606S	Fertilizer
Item No. 608S	Planting
Item No. 610S	Preservation of Trees and Other Vegetation
Item No. 620S	Filter Fabric

Texas Department of Transportation: Standard Specifications for Construction and Maintenance of Highways, Streets, and Bridges

Designation	Description
Item No. 100	Preparing Right of Way
Item No. 110	Excavation
Item No. 132	Embankment
Item No. 158	Specialized Excavation Work

CH

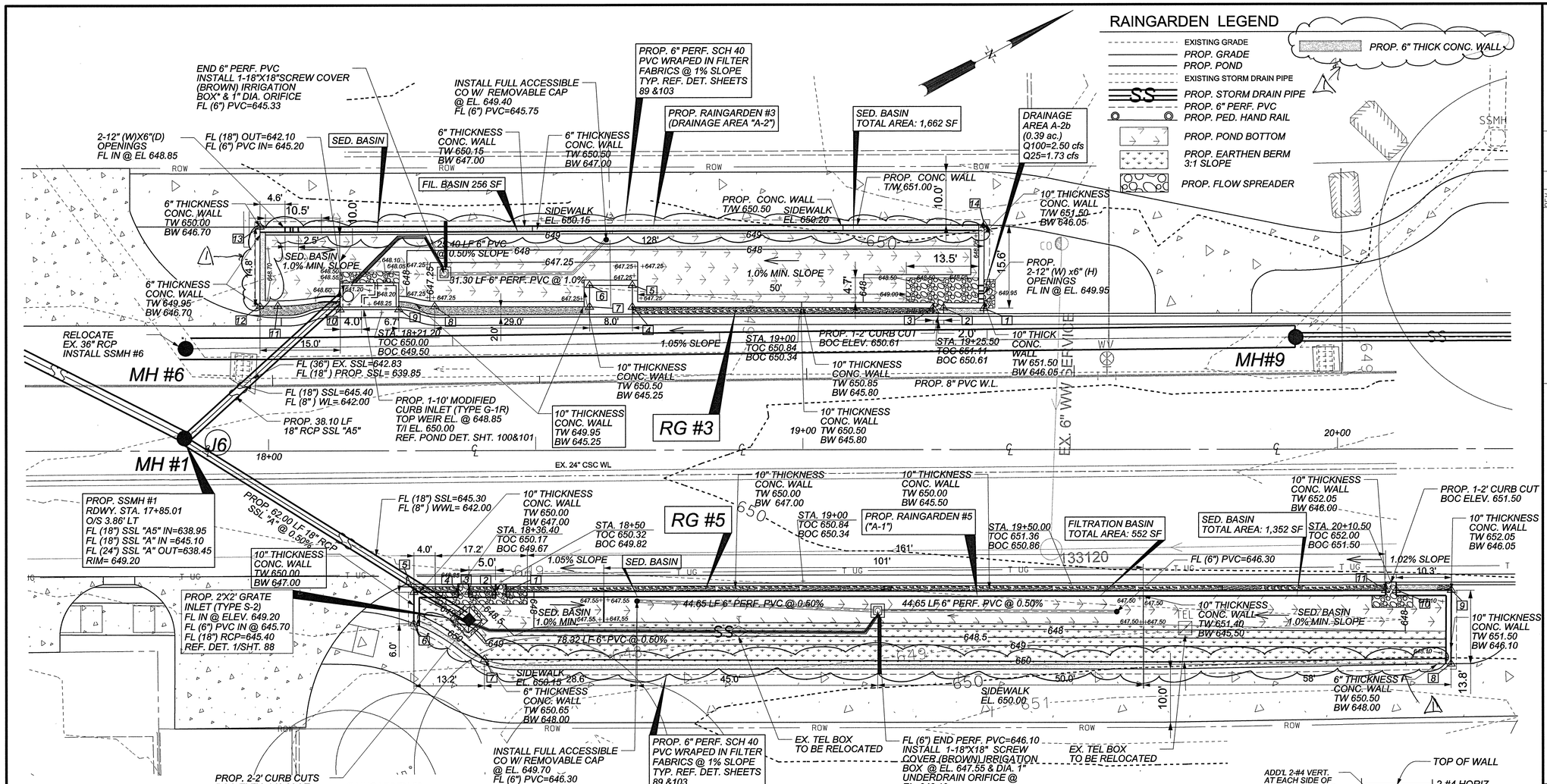

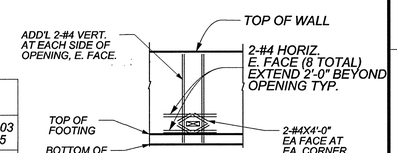

ADD'L REBAR AT 12"X6" OPENING
N.T.S.

RAINGARDEN #3

APPENDIX R-11
RAIN GARDEN CALCULATIONS
FOR DEVELOPMENT PERMITS

Raingarden # 3 (Drainage Area "A-2", W. Station 18+00 to Sta. 22+90, Williamson Watershed)

DRAINAGE AREA DATA	Required		Provided
Drainage Area to Control (DA≤1.0 acre)	0.82	ac.	
Drainage Area Impervious Cover	14.84	%	
Capture Depth (CD)	0.45	in.	
Water Quality Volume (CD*DA*3630)	1,335	cf.	**1,725** cf
WATER QUALITY CONTROL CALCULATIONS			
The Water quality control is to be **RAIN GARDEN**			
25 year Peak Flow Rate to Control (Q25)	**4.91**	cfs	
100 year Peak Flow Rate to Control (Q100)	6.89	cfs	
Filtration Pond Area (A_f=WQV/7)	191	sf.	**256** s.f.
Depth of Filtration Media (L≥1.5)	1.5	ft.	
Effective Porosity Water Quality Volume (WQV_{ae}=0.24*A_f/L)			**92** cf.
Ponded Water quity Volume (WQV_{ponded} = $WQV-WQV_{ae}$)			1,243 cf.
Sedimentation Pond Area (A_{sed}=(1.0*($WQV-WQV_{ae}$))-A_f)	1,052	s.f.	1,662 s.f.
(Note: Maximum of Ponding Depth of 1.0 ft is assumed)	(≥20% of WQ Pond Area)		
Rain Garden Pond Drawdown Time	≥48	hr.	48 hr.
Underdrain Orifice Size (diameter)			1.0 in.
Underdrain Orifice Size (area)			0.785 sq.in.
Water Quality Elevation (WQE)			648.85 ft. msl
Elevation of Splitter/Overflow Weir	>WQE	ft.msl.	648.85 ft. msl
Length of Splitter Weir			11.50 ft.
Required Head to Pass Q25			**0.27** ft.
Required Head to Pass Q_{100}	≤0.5 ft.	ft.	0.34 ft.
Pond Freeboard Provided to Pass Q_{100}	≥0.25 ft		0.76 ft.
Top Berm/Wall	649.95		

RAINGARDEN #3
SEDIMENTATION BASIN

Stage (ft msl)	Area (sf)	Storage (cf)
647.25	0	0
648.00	611	229
648.05	740	263
648.85	**1,662**	**1,224**
649.00	1,662	1,473
650.00	1,662	3,135

FILTRATION BASIN

Stage (ft msl)	Area (sf)	Storage (cf)
647.25	256	0
648.00	256	192
648.05	256	205
648.85	**256**	**410**
649.00	256	448
650.00	256	704

RAINGARDEN #5
SEDIMENTATION BASIN

Stage (ft msl)	Area (sf)	Storage (cf)
647.55	0	0
648.00	546	123
648.50	889	482
649.20	**1,352**	**1,266**
649.50	1,539	1,700
650.00	1,850	2,547

RAINGARDEN #5

APPENDIX R-11
RAIN GARDEN CALCULATIONS
FOR DEVELOPMENT PERMITS

RG #5 (Drainage Area "A-1", W. Station 18+30 to Sta. 22+90, Williamson Watershed)

DRAINAGE AREA DATA	Required		Provided
Drainage Area to Control (DA≤1.0 acre)	0.54	ac.	
Drainage Area Impervious Cover	53.08	%	
Capture Depth (CD)	0.83	in.	
Water Quality Volume (CD*DA*3630)	1,629	cf.	**2,375** cf
WATER QUALITY CONTROL CALCULATIONS			
The Water quality control is to be **RAIN GARDEN**			
25 year Peak Flow Rate to Control (Q25)	**3.97**	cfs	
100 year Peak Flow Rate to Control (Q100)	5.49	cfs	
Filtration Pond Area (A_f=WQV/7)	233	sf.	**552** s.f.
Depth of Filtration Media (L≥1.5)	1.5	ft.	
Effective Porosity Water Quality Volume (WQV_{ae}=0.24*A_f/L)			**199** cf.
Ponded Water quity Volume (WQV_{ponded} = $WQV-WQV_{ae}$)			1,430 cf.
Sedimentation Pond Area (A_{sed}=(1.0*($WQV-WQV_{ae}$))-A_f)	1,197	s.f.	1,352 s.f.
(Note: Maximum of Ponding Depth of 1.0 ft is assumed)	(≥20% of WQ Pond Area)		
Rain Garden Pond Drawdown Time	≥48	hr.	48 hr.
Underdrain Orifice Size (diameter)			1.0 in.
Underdrain Orifice Size (area)			0.785 sq.in.
Water Quality Elevation (WQE)			649.20 ft. msl
Elevation of Splitter/Overflow Weir	>WQE	ft.msl.	649.20 ft. msl
Length of Splitter Weir			8 ft.
Required Head to Pass Q_{100}			**0.30** ft.
Required Head to Pass Q_{100}	≤0.5 ft.	ft.	0.37 ft.
Pond Freeboard Provided to Pass Q_{100}	≥0.25 ft		0.43 ft.
Top of Wall	650.00		

NOTES:

1. REFER TO SHT. LS #6 (SHT. 157) FOR RG #3 AND SHT. LS #7 (SHT. 158) FOR RG #5 LANDSCAPE PLANS.

2. FILL AREAS MUST BE COMPACTED TO 95% OF THE MAXIMUM DRY DENSITY IN ACCORDANCE WITH TxDOT TEST METHOD TEX-113-E PRIOR TO RAIN GARDEN/WATER QUALITY POND CONSTRUCTION.

3. CONTRACTOR SHALL PROVIDE WATERPROOF AND SEAL THE SCREW COVER IRRIGATION BOX.

RAINGARDEN #3 COORDINATES

PT No.	N./E.	PT No.	N./E.
1	N 10,050,221.48 E 3,116,469.13	8	N 10,050,131.03 E 3,116,420.45
2	N 10,050,214.87 E 3,116,465.57	9	N 10,050,124.83 E 3,116,417.78
3	N 10,050,213.11 E 3,116,464.62	10	N 10,050,115.12 E 3,116,412.61
4	N 10,050,163.60 E 3,116,437.98	11	N 10,050,105.12 E 3,116,406.52
5	N 10,050,165.49 E 3,116,434.42	12	N 10,050,102.17 E 3,116,405.00
6	N 10,050,158.44 E 3,116,430.63	13	N 10,050,109.19 E 3,116,391.86
7	N 10,050,156.55 E 3,116,434.19	14	N 10,050,228.87 E 3,116,455.40

RAINGARDEN #5 FILTRATION BASIN

Stage (ft msl)	Area (sf)	Storage (cf)
647.55	552	0
648.00	552	248
648.50	552	524
649.20	**552**	**911**
649.50	552	1,076
650.00	552	1,352

NOTE:
PLEASE REFER TO SHT.95/96 & 98 FOR TYP. RAINGARDEN CROSS SECTION

RAINGARDEN #5 COORDINATES

PT No.	N./E.	PT No.	N./E.
1	N 10,050,117.64 E 3,116,473.97	7	N 10,050,108.11 E 3,116,483.20
2	N 10,050,115.85 E 3,116,473.07	8	N 10,050,267.23 E 3,116,569.13
3	N 10,050,111.44 E 3,116,470.68	9	N 10,050,273.77 E 3,116,556.96
4	N 10,050,109.68 E 3,116,469.75	10	N 10,050,264.66 E 3,116,552.12
5	N 10,050,102.40 E 3,116,465.87	11	N 10,050,262.89 E 3,116,551.18
6	N 10,050,099.60 E 3,116,470.08		

REV. NO.	BY	DATE	REVISION DESCRIPTION
R1	EZ	04/22/13	REVISED 6" THICK CONC. WALL - ADDENDUM #4

STATE OF TEXAS
XIAOQIN ZHANG, P.E.
96436
LICENSED PROFESSIONAL ENGINEER
4/22/13

THE SEAL APPEARING ON THIS DOCUMENT WAS AUTHORIZED BY XIAOQIN ZHANG, P.E., LIC.# 96436

CITY OF AUSTIN, TEXAS
DEPARTMENT OF PUBLIC WORKS
ENGINEERING SERVICES DIVISION

TODD LANE IMPROVEMENTS
(FROM BEN WHITE TO ST. ELMO)

WATER QUALITY POND
PROPOSED RAINGARDENS #3 AND #5

CITY OF AUSTIN ENGINEERING DESIGN FOUNDED 1839

NOTES	NAME	DATE
SURVEY BY	BPI	2007
DRAWN BY	EZ/JG/MA	2012
CHECKED BY	CG/EZ	2012
DESIGNED BY	EZ	2012
REVIEWED BY	CG/AO	2012

0 10 20
HORIZONTAL SCALE IN FEET

PERMIT NUMBER
SP-2012-0155D

SHEET NUMBER 91 OF 175

N:\Team4\FWD_Todd_Lane_Roundabout_Redesign\DGN\TODD_DR_WQP04.dgn

22-APR-2013

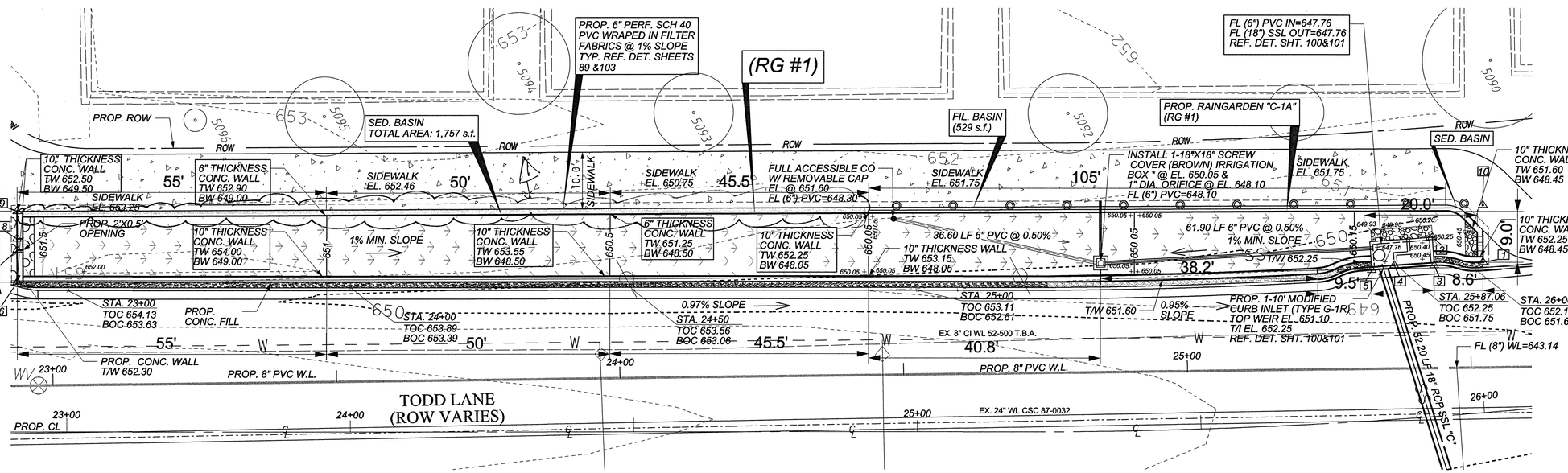

NOTE: REFER TO SHT. 44 TODD LANE PLAN AND PROFILE STA. 22+50 - 26+50 FOR BUSINESS CENTER DRIVE WEST OF RAINGARDEN #1.

COORDINATES

PT No.	N./E.	PT No.	N./E.
1	N 10,050,791.85 E 3,116,814.54	6	N 10,050,562.08 E 3,116,696.32
2	N 10,050,786.02 E 3,116,806.46	7	N 10,050,564.71 E 3,116,691.33
3	N 10,050,783.97 E 3,116,811.01	8	N 10,050,565.64 E 3,116,689.56
4	N 10,050,777.76 E 3,116,807.68	9	N 10,050,567.92 E 3,116,685.23
5	N 10,050,773.92 E 3,116,806.53	10	N 10,050,796.56 E 3,116,805.59

NOTES:

1. PLEASE REFER TO SHT. LS #8 (SHT. 159) FOR RG #1 LANDSCAPE PLAN AND REFER TO SHT. 96, 97 & 99 FOR RAINGARDEN CROSS SECTION

2. FILL AREAS MUST BE COMPACTED TO 95% OF THE MAXIMUM DRY DENSITY IN ACCORDANCE WITH TxDOT TEST METHOD TEX-113-E PRIOR TO RAIN GARDEN/WATER QUALITY POND CONSTRUCTION

3. CONTRACTOR SHALL PROVIDE WATERPROOF AND SEAL THE SCREW COVER IRRIGATION BOX.

RAINGARDEN #1

APPENDIX R-11
RAIN GARDEN CALCULATIONS
FOR DEVELOPMENT PERMITS

Rain Garden #1 (Drainage Area "C-1A", W. Station 23+00 to Sta. 28+00, Country Club West Watershed)

DRAINAGE AREA DATA	Required	Provided
Drainage Area to Control (DA≤1.0 acre)	0.58 ac.	
Drainage Area Impervious Cover	30.25 %	
Capture Depth (CD)	0.60 in.	
Water Quality Volume (CD*DA*3630)	1,270 cf.	**1,758** cf.
WATER QUALITY CONTROL CALCULATIONS		
The Water quality control is to be **RAIN GARDEN**		
25 year Peak Flow Rate to Control (Q25)	**3.84** cfs	
100 year Peak Flow Rate to Control (Q100)	5.35 cfs	
Filtration Pond Area (Af=WQV/7)	181 sf.	**529** s.f.
Depth of Filtration Media (L≥1.5)	1.5 ft.	
Effective Porosity Water Quality Volume (WQV_{ae}=0.24*Af*L)		**190** cf.
Ponded Water quilty Volume (WQV_{ponded} = $WQV-WQV_{ae}$)		1,080 cf.
Sedimentation Pond Area (A_{sed}=(1.0*(WQV-WQV_{ae}))÷Ad)	899 sf.	1,693 s.f.
(Note: Maximum of Ponding Depth of 1.0 ft is assumed)	(≥20% of WQ Pond Area)	
Rain Garden Pond Drawdown Time	>48 hr.	48 hr.
Underdrain Orifice Size (diameter)		1.0 in.
Underdrain Orifice Size (area)		0.785 sq in.
Water Quality Elevation (WQE)		651.10 ft. msl.
Elevation of Splitter/Overflow Weir	≥WQE ft.msl.	651.10 ft. msl.
Length of Splitter Weir		11.50 ft.
Required Head to Pass Q25		**0.23** ft.
Required Head to Pass Q_{100}	≤0.5 ft. ft.	0.29 ft.
Pond Freeboard Provided to Pass Q_{100}	≥0.25 ft	0.91 ft.
	652.30	

SEDIMENTATION BASIN

Stage (ft msl)	Area (sf)	Storage (cf)
650.05	0	0
650.50	904	203
651.00	1,650	842
651.10	**1,757**	**1,012**
651.50	1,757	1,715
652.00	1,757	2,594

FILTRATION BASIN

Stage (ft msl)	Area (sf)	Storage (cf)
650.05	529	**0**
650.50	529	238
651.00	529	503
651.10	**529**	**555**
651.50	529	767
652.00	529	1,032

RAINGARDEN LEGEND

- EXISTING GRADE
- PROP. GRADE
- PROP. POND
- EXISTING STORM DRAIN PIPE
- PROP. STORM DRAIN PIPE
- PROP. 6" PERF. PVC
- PROP. PED. HAND RAIL
- PROP. POND BOTTOM
- PROP. EARTHEN BERM 3:1 SLOPE
- PROP. FLOW SPREADER
- PROP. 6" THICK CONC. WALL

REV. NO.	BY	DATE	REVISION DESCRIPTION
1	EZ	04-22-13	ADDED 6" CONC. WALL SHADING - ADDED D.I. IN #4.

STATE OF TEXAS
XIAOQIN ZHANG, P.E.
96436
LICENSED PROFESSIONAL ENGINEER
04-22-13

THE SEAL APPEARING ON THIS DOCUMENT WAS AUTHORIZED BY XIAOQIN ZHANG, P.E. LIC.# 96436

CITY OF AUSTIN, TEXAS
DEPARTMENT OF PUBLIC WORKS
ENGINEERING SERVICES DIVISION

TODD LANE IMPROVEMENTS
(FROM BEN WHITE TO ST. ELMO)

WATER QUALITY POND
PROPOSED RAINGARDEN #1

ENGINEERING CITY OF AUSTIN FOUNDED 1839 DESIGN

NOTES	NAME	DATE
SURVEY BY	BPI	2007
DRAWN BY	EZ/JG/MA	2012
CHECKED BY	CG/EZ	2012
DESIGNED BY	EZ	2012
REVIEWED BY	CG/AO	2012

0 10 20
HORIZONTAL SCALE IN FEET

PERMIT NUMBER
SP-2012-0155D

SHEET NUMBER 92 OF 175

N:\Team4\PWD_Todd_Lane_Roundabout_Redesign\DGN\TODD_DR_WQP05.dgn

22-APR-2013

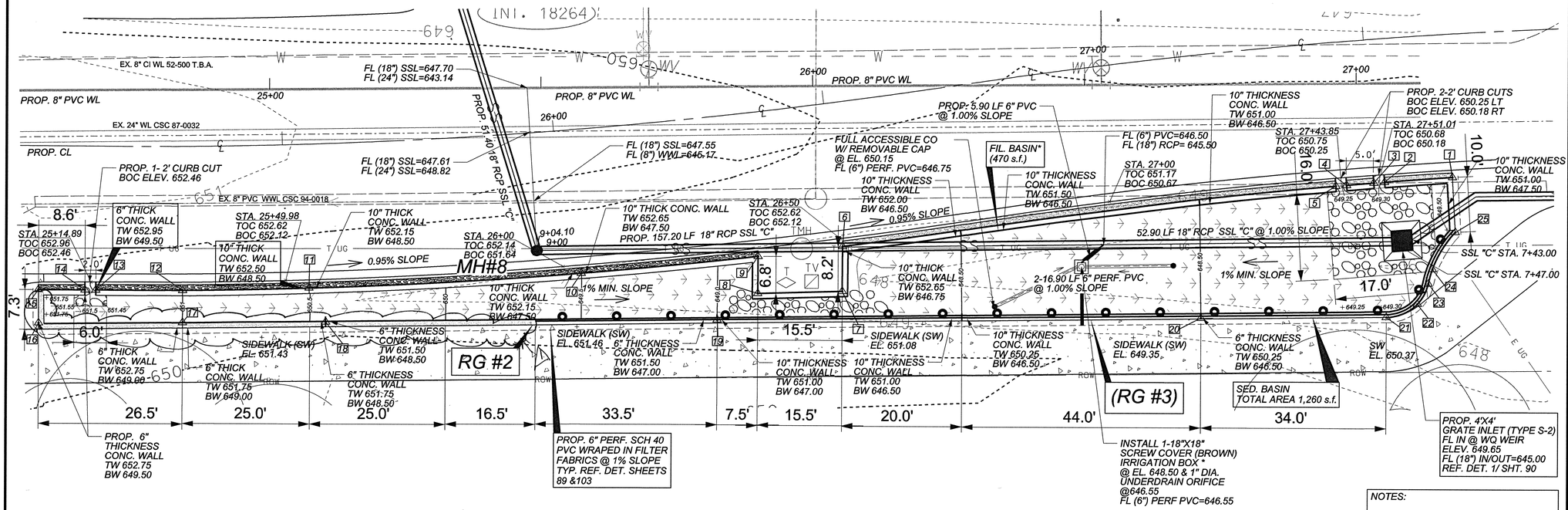

COORDINATES

PT No.	N./E.	PT No.	N./E.	PT No.	N./E.	PT No.	N./E.	PT No.	N./E.
1	N 10,050,947.96 E 3,116,888.82	6	N 10,050,849.92 E 3,116,832.84	11	N 10,050,766.12 E 3,116,780.96	16	N 10,050,722.12 E 3,116,756.75	21	N 10,050,922.93 E 3,116,902.40
2	N 10,050,937.36 E 3,116,882.16	7	N 10,050,844.96 E 3,116,839.47	12	N 10,050,747.08 E 3,116,767.55	17	N 10,050,743.57 E 3,116,772.31	22	N 10,050,928.99 E 3,116,903.84
3	N 10,050,935.66 E 3,116,881.10	8	N 10,050,832.20 E 3,116,830.61	13	N 10,050,734.21 E 3,116,758.09	18	N 10,050,764.91 E 3,116,787.79	23	N 10,050,932.78 E 3,116,902.01
4	N 10,050,931.40 E 3,116,878.48	9	N 10,050,836.28 E 3,116,825.15	14	N 10,050,732.61 E 3,116,756.90	19	N 10,050,823.29 E 3,116,830.13	24	N 10,050,935.00 E 3,116,900.30
5	N 10,050,929.70 E 3,116,877.45	10	N 10,050,808.20 E 3,116,808.41	15	N 10,050,725.73 E 3,116,751.79	20	N 10,050,895.33 E 3,116,882.38	25	N 10,050,942.42 E 3,116,897.28

RAINGARDEN #2

APPENDIXR-11
RAIN GARDEN CALCULATIONS
FOR DEVELOPMENT PERMITS

Rain Garden #2 (Drainage Area "C-2A", E. Station 22+90 to Sta. 28+15, Country Club West Watershed)

DRAINAGE AREA DATA	Required	Provided
Drainage Area to Control (DA≤1.0 acre)	0.64 ac.	
Drainage Area Impervious Cover	44.89 %	
Capture Depth (CD)	0.75 in.	
Water Quality Volume (CD*DA*3630)	1,740 cf.	2,106 cf
WATER QUALITY CONTROL CALCULATIONS		
The Water quality control is to be **RAIN GARDEN**		
25 year Peak Flow Rate to Control (Q25)	4.45 cfs	
100 year Peak Flow Rate to Control (Q100)	6.18 cfs	
Filtration Pond Area (A_F=WQV/7)	249 sf.	755 s.f.
Depth of Filtration Media (L≥1.5)	1.5 ft.	
Effective Porosity Water Quality Volume (WQV_{ae}=0.24*A/L)		89 cf.
Ponded Water quity Volume (WQV_{ponded} = $WQV-WQV_{ae}$)		1,650 cf.
Sedimentation Pond Area (A_{sed}=(1.0*($WQV-WQV_{ae}$))-A_f)	1,402 sf.	1,454 s.f.
(Note: Maximum of Ponding Depth of 1.0 ft is assumed)	(≥20% of WQ Pond Area)	
Rain Garden Pond Drawdown Time	≥48 hr.	48 hr.
Underdrain Orifice Size (diameter)		1.0 in.
Underdrain Orifice Size (area)		0.785 sq in.
Water Quality Elevation (WQE)		649.65 ft. msl
Elevation of Splitter/Overflow Weir	≥WQE ft.msl.	649.65 ft. msl
Length of Splitter Weir		16 ft.
Required Head to Pass Q25		0.20 ft.
Required Head to Pass Q_{100}	≤0.5 ft. ft.	0.25 ft.
Pond Freeboard Provided to Pass Q_{100}	≥0.25 ft	0.25 ft.
	650.15	

SEDIMENTATION BASIN

Stage (ft msl)	Area (sf)	Storage (cf)
647.00	0	0
648.00	353	177
648.90	1,260	902
649.00	1260	1,028
649.65	**1,260**	**1,847**
650.00	1,260	2,288

FILTRATION BASIN

Stage (ft msl)	Area (sf)	Storage (cf)
647.30	470	0
648.00	470	329
648.90	470	752
649.00	470	799
649.65	**470**	**1,105**
650.00	470	1,269

NOTES:

1. REFER TO SHT. LS #9 (SHT. 160) FOR RG #3 LANDSCAPE PLAN
2. FILL AREAS MUST BE COMPACTED TO 95% OF THE MAXIMUM DRY DENSITY IN ACCORDANCE WITH TxDOT TEST METHOD TEX-113-E PRIOR TO RAIN GARDEN/WATER QUALITY POND CONSTRUCTION
3. REFER TO SHT. 96/97 & 99 FOR TYPICAL RAINGARDEN CROSS SECTIONS
4. CONTRACTOR SHALL PROVIDE WATERPROOF AND SEAL THE SCREW COVER IRRIGATION BOX.

RAINGARDEN LEGEND

- EXISTING GRADE
- PROP. GRADE
- PROP. POND
- EXISTING STORM DRAIN PIPE
- PROP. STORM DRAIN PIPE
- PROP. 6" PERF. PVC
- PROP. PED. HAND RAIL
- PROP. POND BOTTOM
- PROP. EARTHEN BERM 3:1 SLOPE
- PROP. FLOW SPREADER
- PROP. 6" THICK CONC. WALL

REV. NO.	BY	DATE	REVISION DESCRIPTION
1	EZ	04-22-13	ADDED 6" CONC. WALL SHADING - ADDENDUM #4

STATE OF TEXAS
XIAOQIN ZHANG, P.E.
96436
LICENSED PROFESSIONAL ENGINEER
04-22-13

THE SEAL APPEARING ON THIS DOCUMENT WAS AUTHORIZED BY XIAOQIN ZHANG,P.E., LIC.# 96436

CITY OF AUSTIN, TEXAS
DEPARTMENT OF PUBLIC WORKS
ENGINEERING SERVICES DIVISION

TODD LANE IMPROVEMENTS
(FROM BEN WHITE TO ST. ELMO)

WATER QUALITY POND
PROPOSED RAINGARDEN #2

ENGINEERING DESIGN CITY OF AUSTIN FOUNDED 1839

NOTES	NAME	DATE
SURVEY BY	BPI	2007
DRAWN BY	EZ/JG/MA	2012
CHECKED BY	CG/EZ	2012
DESIGNED BY	EZ	2012
REVIEWED BY	CG/AO	2012

0 10 20
HORIZONTAL SCALE IN FEET

PERMIT NUMBER
SP-2012-0155D

SHEET NUMBER 93 OF 175

N:\Team4\PWD_Todd_Lane_Roundabout_Redesign\DGN\TODD_DR_WQP06.dgn
22-APR-2013

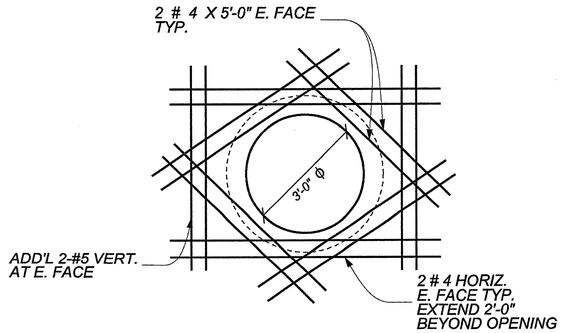

OPENING REINFORCEMENT AT PIPE OPENING
N.T.S.

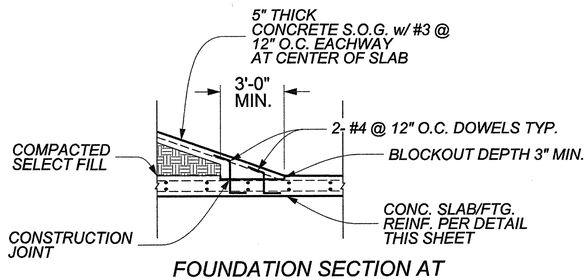

FOUNDATION SECTION AT ACCESS RAMP
N.T.S.

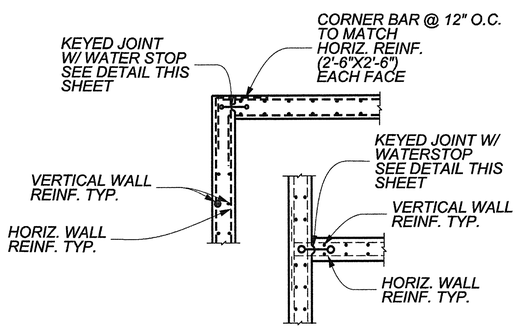

CORNER DETAILS
N.T.S.

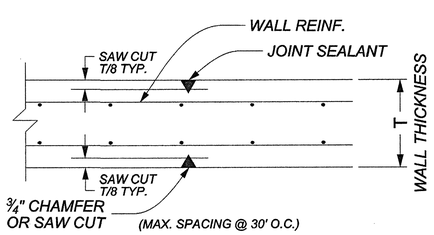

CONTRACTION JOINT
N.T.S.

STRUCTURAL NOTES:

1. Provide normal weight concrete having the following minimum 28 day compresive strengths and general characteristics:

Usage	Min. 28 day compressive strength
All	4,000 PSI - COA Class S concrete

2. Minimum concrete 28 day compressive strength shall be based on historical performance data from the selected transit mix concrete supplier and approved by the engineer.
3. It shall be the responsibility of the concrete supplier to select the proper type of portland cement (including quantities), aggregates (including quantities) and water cement ratio to produce the required minimum 28 day compressive strengths.
4. Reinforcing steel shall be new deformed billet steel conforming to A.S.T. M. A-615, Grade 60.
5. Reinforcing bars shall be detailed in accordance with the A.C.I. Detailing Manual. Provide bar supports and spacers as required.
6. The following minium concrete cover shall be provided for reinforcement:
   A. concrete footing ..... 3" Clear
   B. wall ..... 2" Clear

RETAINING WALL DESIGN PARAMETERS:

DESIGN METHOD: EQUIVALENT FLUID PRESSURE (EFP) METHOD
DESIGN CODE: AASHTO
ACTIVE SOIL PRESSURE: 60 PSF/FT
PASSIVE SOIL PRESSURE: 285 PSF/FT
SOIL DENSITY: 130 PCF
SURCHARGE OVER HEEL: 250 PSF
WIND ON STEM: 20 PSF
AXIAL DEAD LOAD ON STEM=50 LBS/FT
ALLOWABLE BEARING PRESSURE: 2,200 PSF

FACTORS OF SAFETY

AGAINST OVERTURNING 3.68>MIN. 2.0
AGAINST SLIDING 1.54> MIN. 1.5
MAXIMUM BEARING PRESSURE = 1,477 PSF <2,200 PSF

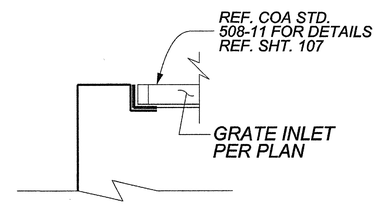

GRATE INLET DETAIL
N.T.S.

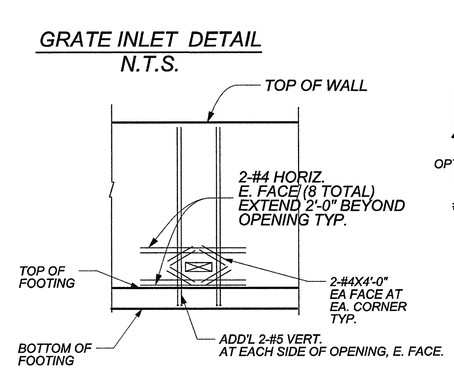

ADD'L REBAR AT 2'X2' OPENING
N.T.S.

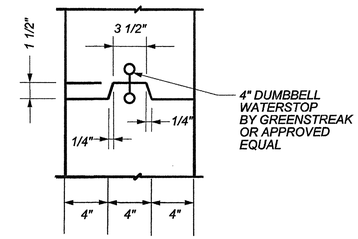

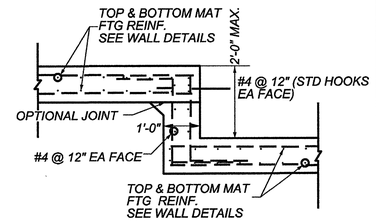

FOOTING STEP TYP. DETAIL
N.T.S.

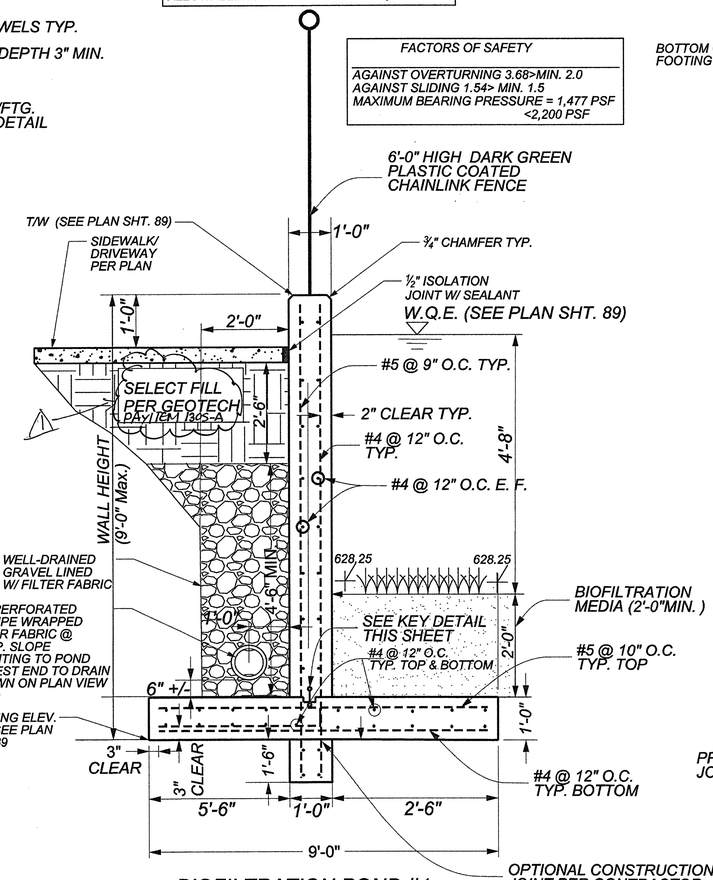

BIOFILTRATION POND #1 RETAINING WALL DETAIL
N.T.S.

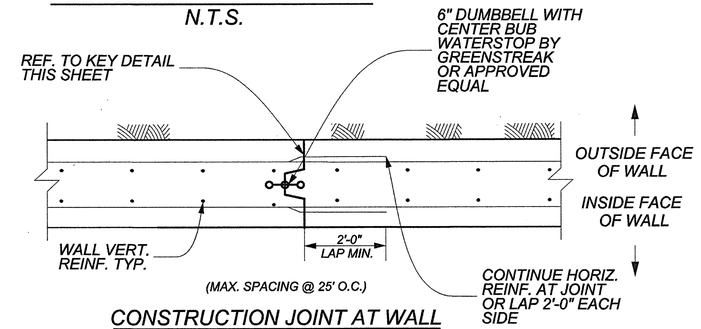

CONSTRUCTION JOINT AT WALL
N.T.S.

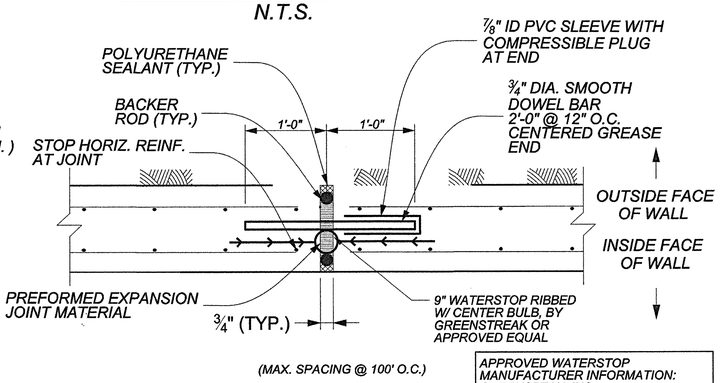

EXPANSION JOINT AT WALL
N.T.S.

City of Austin
Reviewed for General Compliance
MAR 29 2013

APPROVED WATERSTOP MANUFACTURER INFORMATION:
GREENSTEAK, INC.
3400 TREE COURT INDUTRIAL BLVD.
ST. LOUIS, MO 63122
www.greenstreak.com
TEL. 636-225-9400
800-325-9504
FAX: TOLL FREE: 800-551-5145
FAX: 636-225-2049

REV NO.	REV BY	DATE	REVISION DESCRIPTION
1	EZ	04/22/13	REVISED NOTE ADDED W/ #4

STATE OF TEXAS
BIMAL B. ADHIKARY P.E.
100385
LICENSED
PROFESSIONAL ENGINEER
THE SEAL APPEARING ON THIS DOCUMENT WAS AUTHORIZED BY BIMAL B. ADHIKARY, P.E., LIC.# 100385

CITY OF AUSTIN, TEXAS
DEPARTMENT OF PUBLIC WORKS
ENGINEERING SERVICES DIVISION

TODD LANE IMPROVEMENTS
(FROM BEN WHITE TO ST. ELMO)

BIOFILTATION POND #1
RETAINING WALL NOTES & DETAILS

CITY OF AUSTIN ENGINEERING DESIGN FOUNDED 1839

NOTES	NAME	DATE
SURVEY BY	BPI	2007
DRAWN BY	EZ/JG/MA	2012
CHECKED BY	CG/EZ	2012
DESIGNED BY	EZ	2012
REVIEWED BY	CG/AO	2012

N.T.S.

PERMIT NUMBER
SP-2012-0155D

SHEET NUMBER 102 OF 175

N:\Team4\PWD_Todd_Lane_Roundabout_Redesign\DGN\TODD_DR_WQP_RETWALL_DETAILS.dgn
18-JAN-2013

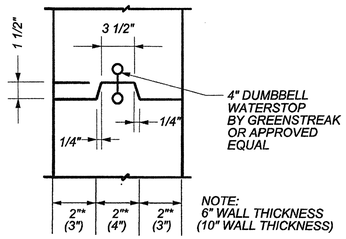

KEY DETAIL
N.T.S.

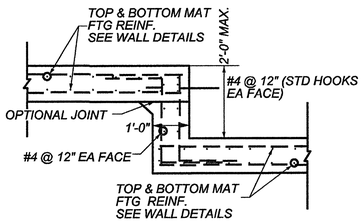

FOOTING STEP TYP. DETAIL
N.T.S.

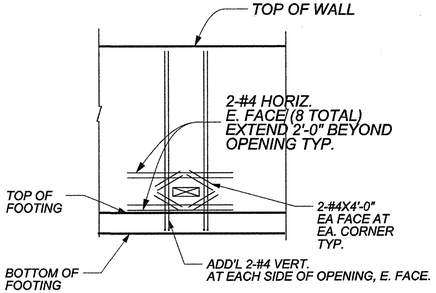

ADD'L REBAR AT 2'X2' OPENING
N.T.S.

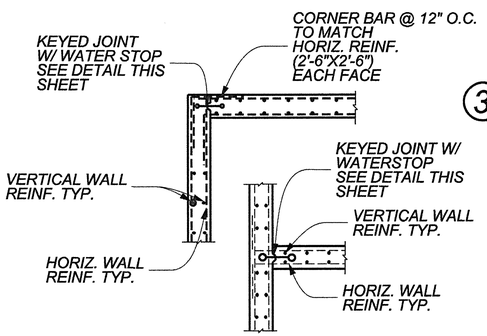

CORNER DETAILS
N.T.S.

STRUCTURAL NOTES:

1. Provide normal weight concrete having the following minimum 28 day compresive strengths and general characteristics:

Usage	Min. 28 day compressive strength
All	4,000 PSI - COA Class S concrete

2. Minimum concrete 28 day compressive strength shall be based on historical performance data from the selected transit mix concrete supplier and approved by the engineer.
3. It shall be the responsibility of the concrete supplier to select the proper type of portland cement (including quantities), aggregates (including quantities) and water cement ratio to produce the required minimum 28 day compressive strengths.
4. Reinforcing steel shall be new deformed billet steel conforming to A.S.T. M. A-615, Grade 60.
5. Reinforcing bars shall be detailed in accordance with the A.C.I. Detailing Manual. Provide bar supports and spacers as required.
6. The following minium concrete cover shall be provided for reinforcement:
   A. concrete footing ..... 3" Clear
   B. wall ..... 2" Clear

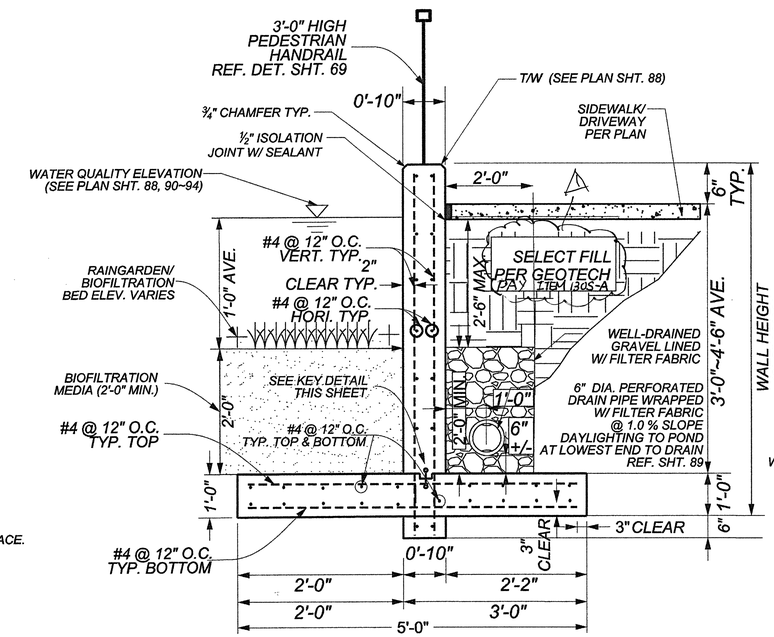

3 RETAINING WALL DETAIL (HEIGHT 4'-0" to 6'-0") (WITH /WITHOUT PEDESTRIAN HANDRAIL) N.T.S.

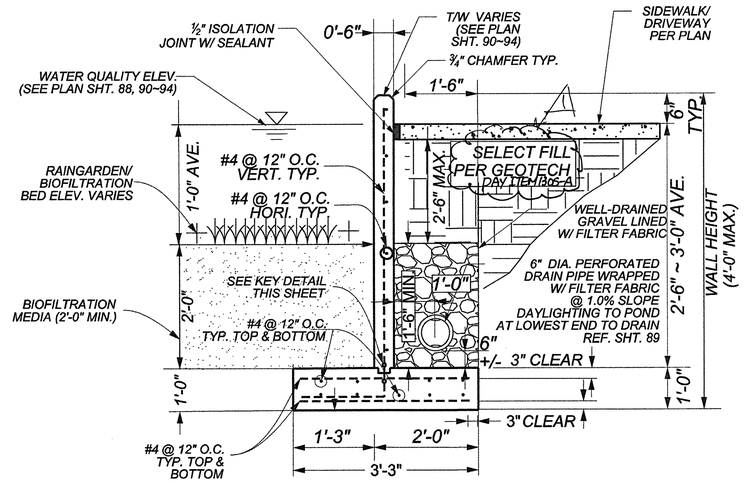

1 RETAINING WALL DETAIL (HEIGHT<=4'-0") (WITHOUT PEDESTRIAN HANDRAIL) N.T.S.

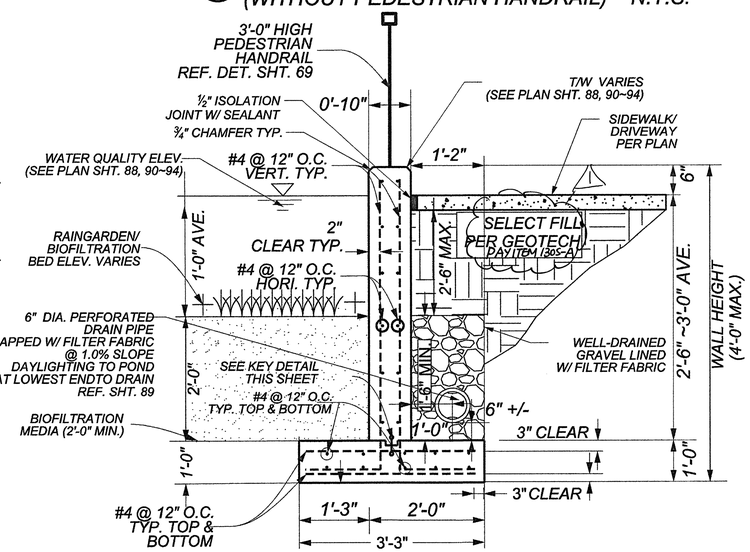

2 RETAINING WALL DETAIL (HEIGHT<=4'-0") (WITH PEDESTRIAN HANDRAIL) N.T.S.

3 RETAINING WALL (HEIGHT 4'-0" TO 6'-0") (WITH/WITHOUT PEDESTRIAN HANDRAIL)

RETAINING WALL DESIGN PARAMETERS:

DESIGN METHOD: EQUIVALENT FLUID PRESSURE (EFP) METHOD
DESIGN CODE: AASHTO
ACTIVE SOIL PRESSURE: 60 PSF/FT
PASSIVE SOIL PRESSURE: 285 PSF/FT
SOIL DENSITY: 130 PCF
SURCHARGE OVER HEEL: 250 PSF
WIND ON STEM: 20 PSF
AXIAL DEAD LOAD ON STEM=50 LBS/FT
ALLOWABLE BEARING PRESSURE: 2,200 PSF

FACTORS OF SAFETY

AGAINST OVERTURNING 2.21>MIN. 2.0
AGAINST SLIDING 1.52> MIN. 1.5
MAXIMUM BEARING PRESSURE = 1,426 PSF <2,200 PSF

2 RETAINING WALL (HEIGHT <= 4'-0") (WITH PEDESTRIAN HANDRAIL)

RETAINING WALL DESIGN PARAMETERS:

DESIGN METHOD: EQUIVALENT FLUID PRESSURE (EFP) METHOD
DESIGN CODE: AASHTO
ACTIVE SOIL PRESSURE: 60 PSF/FT
PASSIVE SOIL PRESSURE: 285 PSF/FT
SOIL DENSITY: 130 PCF
SURCHARGE OVER HEEL: 250 PSF
WIND ON STEM: 20 PSF
AXIAL DEAD LOAD ON STEM=50 LBS/FT
ALLOWABLE BEARING PRESSURE: 2,200 PSF

FACTORS OF SAFETY

AGAINST OVERTURNING 2.37>MIN. 2.0
AGAINST SLIDING 2.46> MIN. 1.5
MAXIMUM BEARING PRESSURE = 1,109 PSF <2,200 PSF

1 RETAINING WALL (HEIGHT <= 4'-0") (WITHOUT PEDESTRIAN HANDRAIL)

RETAINING WALL DESIGN PARAMETERS:

DESIGN METHOD: EQUIVALENT FLUID PRESSURE (EFP) METHOD
DESIGN CODE: AASHTO
ACTIVE SOIL PRESSURE: 60 PSF/FT
PASSIVE SOIL PRESSURE: 285 PSF/FT
SOIL DENSITY: 130 PCF
SURCHARGE OVER HEEL: 250 PSF
WIND ON STEM: 20 PSF
AXIAL DEAD LOAD ON STEM=0 LBS/FT
ALLOWABLE BEARING PRESSURE: 2,200 PSF

FACTORS OF SAFETY

AGAINST OVERTURNING 2.23>MIN. 2.0
AGAINST SLIDING 2.43> MIN. 1.5
MAXIMUM BEARING PRESSURE = 1,101 PSF <2,200 PSF

City of Austin
Reviewed for General Compliance
MAR 29 2013

APPROVED WATERSTOP MANUFACTURER INFORMATION:
GREENSTEAK, INC.
3400 TREE COURT INDUTRIAL BLVD.
ST. LOUIS, MO 63122
www.greenstreak.com
TEL. 636-225-9400
800-325-9504
FAX: TOLL FREE: 800-551-5145
FAX: 636-225-2049

REV. NO.	BY	DATE	REVISION DESCRIPTION
1	EZ	04/27/13	REVISED NOTES - ADDENDUM #1

THE SEAL APPEARING ON THIS DOCUMENT WAS AUTHORIZED BY BIMAL B. ADHIKARY, P.E., LIC.# 100385

CITY OF AUSTIN, TEXAS
DEPARTMENT OF PUBLIC WORKS
ENGINEERING SERVICES DIVISION

TODD LANE IMPROVEMENTS
(FROM BEN WHITE TO ST. ELMO)

RAIN GARDEN/BIOFILTRATION POND (#2)
RETAINING WALL NOTES & DETAILS

NOTES	NAME	DATE
SURVEY BY	BPI	2007
DRAWN BY	EZ/JG/MA	2012
CHECKED BY	CG/EZ	2012
DESIGNED BY	EZ	2012
REVIEWED BY	CG/AO	2012

N.T.S.

PERMIT NUMBER
SP-2012-0155D

SHEET NUMBER 103 OF 175

N:\Team4\PWD_Todd_Lane_Roundabout_Redesign\DGN\TODD_DR_WQP_RETWALL_DETAILS_B.dgn
18-JAN-2013