MAYOR
STEVE ADLER

COUNCIL MEMBER ORA HOUSTON	COUNCIL MEMBER DELIA GARZA
COUNCIL MEMBER SABINO RENTERIA	COUNCIL MEMBER GREGORIO CASAR
COUNCIL MEMBER ANN KITCHEN	COUNCIL MEMBER DON ZIMMERMAN
COUNCIL MEMBER LESLIE POOL	COUNCIL MEMBER ELLEN TROXCLAIR
COUNCIL MEMBER KATHIE TOVO	COUNCIL MEMBER SHERI GALLO

CITY OF AUSTIN, TEXAS
AUSTIN WATER UTILITY

SOUTH AUSTIN REGIONAL WWTP
THICKENER IMPROVEMENTS PROJECT

BID SET

IFB NO: 6100 CLMC558
CIP ID NO: 3333.016

JULY 2016

NOTES:

1. CONTRACTOR SHALL NOTIFY THE PUBLIC WORKS DEPARTMENT 24 HOURS PRIOR TO STARTING CONSTRUCTION OR CLEARING OPERATIONS.
2. CONTRACTOR SHALL CALL "ONE CALL" AT 811 FOR UTILITY LOCATIONS AT LEAST 48 HOURS PRIOR TO ANY WORK IN CITY EASEMENTS OR STREET RIGHT OF WAYS.
3. THIS PROJECT IS LOCATED WITHIN THE ONION CREEK AND COLORADO WATERSHEDS AND SHALL BE DEVELOPED, CONSTRUCTED AND MAINTAINED IN ACCORDANCE WITH CHAPTER 25 OF THE CODE OF THE CITY OF AUSTIN.
4. NO PORTION OF THIS SITE IS LOCATED WITHIN PARKLAND OR LAND USED FOR PARK PURPOSES. (IF SUCH LAND IS INCLUDED, DOCUMENTATION OF PARKS AND RECREATION DEPT APPROVAL IS REQUIRED AT THE TIME OF SUBMITTAL FOR GENERAL PERMIT PROGRAM APPROVAL.)
5. NO PORTION OF THIS SITE IS LOCATED WITHIN THE 100-YEAR FLOODPLAIN AS SHOWN ON FLOOD MAP NO 48453C0630J, DATED AUGUST 18, 2014.
6. THIS PROJECT IS NOT WITHIN THE EDWARDS AQUIFER RECHARGE ZONE AS DEFINED BY THE CITY OF AUSTIN. THIS PROJECT IS NOT WITHIN THE EDWARDS AQUIFER RECHARGE ZONE AS REGULATED BY THE TEXAS COMMISSION ON ENVIRONMENTAL QUALITY (TCEQ).
7. THERE ARE NO CRITICAL ENVIRONMENTAL FEATURES WITHIN 150' OF ANY PORTION OF THIS PROJECT. A FIELD INVESTIGATION HAS NOT BEEN PERFORMED AND IS NOT REQUIRED AS A PART OF THIS PROJECT. (A FIELD INVESTIGATION HAS NOT BEEN PERFORMED AS A PART OF THIS PROJECT AND IS NOT REQUIRED.)
8. THE STANDARD SHEETS INCLUDED IN THIS PLAN SET WERE PROVIDED BY THE GENERAL PERMIT PROGRAM OFFICE FOR USE ON GENERAL PERMIT PROJECTS ONLY. IF ANY MODIFICATIONS TO THE SHEETS WERE MADE, THEY ARE CLEARLY INDICATED ON THE SHEET ITSELF AND IN THE COVER SHEET INDEX.
9. PROJECT SCHEDULE MUST BE APPROVED BY THE GENERAL PERMIT PROGRAM (GPP) COORDINATOR. INSTALLATION AND REMOVAL OF TEMPORARY AND PERMANENT EROSION/SEDIMENTATION CONTROLS MUST BE REFLECTED IN THE SCHEDULE, BY STATION NUMBER. GPP INSPECTOR MUST BE NOTIFIED A MINIMUM OF 48 HOURS IN ADVANCE OF TRANSITION BETWEEN PHASES.
10. CONTRACTOR SHALL STAKE ALL PROPOSED SERVICE CONNECTIONS LOCATED WITHIN THE CRITICAL ROOT ZONE OF TREES 8" IN CALIPER AND LARGER AT LEAST 21 CALENDAR DAYS PRIOR TO CONSTRUCTION OF SUCH SERVICES. STAKING SHALL CONSIST OF A LATH WITH NAIL AND PAINT MARKINGS. IN CASES WHERE A STAKE CANNOT BE PLACED WITHOUT DAMAGING PROPERTY, CONTRACTOR MAY USE PAINT ONLY. ONCE STAKING IS COMPLETED, IT IS THE CONTRACTOR'S RESPONSIBILITY TO INFORM THE CITY OF AUSTIN'S CONSTRUCTION INSPECTOR WITHIN TWENTY-FOUR HOURS. THE CITY OF AUSTIN'S CONSTRUCTION INSPECTOR WILL THEN COORDINATE A FIELD REVIEW OF THE SERVICE LOCATIONS WITH THE GENERAL PERMIT PROGRAM COORDINATOR AND PROPERTY OWNERS. SERVICE LINE LOCATIONS MAY BE ADJUSTED BASED ON THE REVIEW AND WILL BE RESTAKED BY THE CONTRACTOR AT NO ADDITIONAL COST TO THE CONTRACT. ALL SERVICE LINE STAKING SHALL BE MAINTAINED UNTIL THE SERVICE IS INSTALLED.

GENERAL PERMIT PROGRAM CORRECTIONS RECORD

FOR USE BY GENERAL PERMIT OFFICE ONLY

NO	DESCRIPTION	BY	CORRECT (C) ADD (D) VOID (V) SHEET NO.'s	TOTAL # SHEETS IN CORRECTION PLAN SET	GENERAL PERMIT PROGRAM APPROVAL	APPROVAL DATE
1	TEST	IV	R	1000	AAAA	AAAA

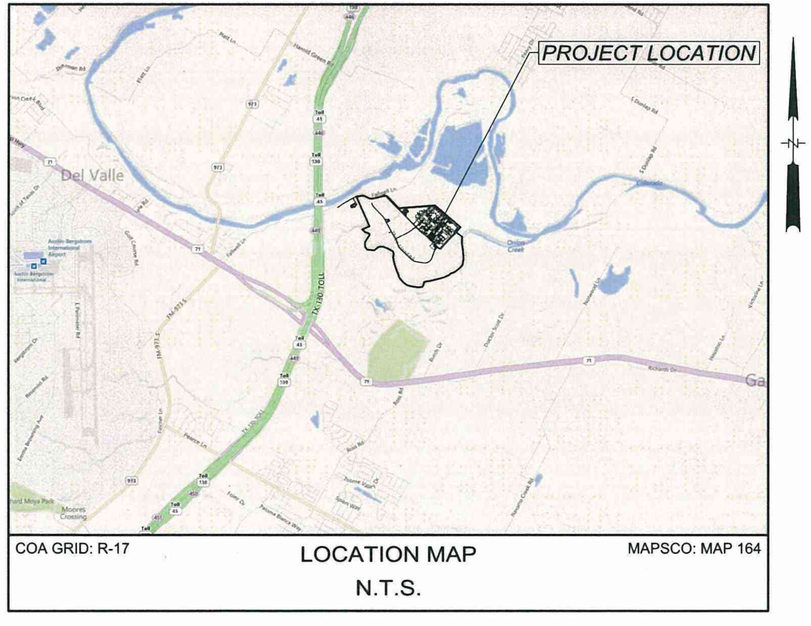

COA GRID: R-17 — LOCATION MAP — MAPSCO: MAP 164

N.T.S.

PROJECT INFORMATION:

STREET ADDRESS:
1017 FALLWELL LANE
DEL VALLE, TEXAS 78617

OWNER:
AUSTIN WATER UTILITY
WALLER CREEK CENTER
625 EAST 10TH STREET
AUSTIN, TEXAS 78701

CONTACT:
JOHN WEPRYK, P.E.
CITY OF AUSTIN
PUBLIC WORKS DEPARTMENT
505 BARTON SPRINGS RD, 9TH FLR
AUSTIN, TEXAS 78704
(512) 974-7010

SUBMITTAL PREPARED BY:

CDM Smith
Riata Corporate Park, 12357-A Riata Trace Parkway, Suite 210
Austin, TX 78727
Tel: (512) 346-1100
Texas Registration Number F-3043

CONTACT:
MR. DANNY M. HURTADO, P.E.
CDM Smith
12357-A Riata Trace Parkway, Suite 210
Austin, Texas 78727
Phone: (512) 346-1100

STATE OF TEXAS — DANNY M. HURTADO — 104266 — REGISTERED PROFESSIONAL ENGINEER

SUBMITTED FOR APPROVAL BY:

DANNY M. HURTADO, P.E. — DATE 05/04/2016

GP2016-000.AWU
ANNUAL GENERAL PERMIT NUMBER

REVIEWED BY:

AUSTIN WATER UTILITY — DATE 5/4/16

PUBLIC WORKS DEPARTMENT — DATE

GENERAL PERMIT PROGRAM COORDINATOR — DATE
PLANNING AND DEVELOPMENT REVIEW DEPARTMENT

DEVELOPMENT PERMIT NUMBER — DATE

SUBMITTAL DATE

NOTES:
GENERAL PERMIT PROGRAM APPROVAL DOES NOT CONSTITUTE UTILITY ALIGNMENT/ASSIGNMENT APPROVAL.

RELEASE OF THIS APPLICATION DOES NOT CONSTITUTE A VERIFICATION OF ALL DATA, INFORMATION AND CALCULATIONS SUPPLIED BY THE APPLICANT. THE ENGINEER OF RECORD IS SOLELY RESPONSIBLE FOR THE COMPLETENESS, ACCURACY, AND ADEQUACY OF HIS/HER SUBMITTAL, WHETHER OR NOT THE APPLICATION IS REVIEWED FOR CODE COMPLIANCE BY CITY ENGINEERS.

GENERAL PERMIT PROGRAM
SOUTH AUSTIN REGIONAL WWTP
THICKENER IMPROVEMENTS PROJECT

SANDEFUR/DW

S:\ACAD\1\04217_SARIG-COVR_SAR.DWG, DWG TO PDF 22X34, CDMS FULL SIZE (MONO).CTB

5/3/2016 2:27 PM

S:\Acad\104217_SAR\G-1-SHEET INDEX.dwg, G-1, 5/4/2016 12:13:12 PM, sandefurdw, DWG To PDF.pc3

GENERAL

	COVER
G-1	SHEET INDEX
G-2	GENERAL NOTES
G-3	LEGEND AND ABBREVIATIONS
G-4	PROCESS FLOW DIAGRAM
G-5	SCHEDULES

CIVIL

C-1	OVERALL SITE AND SURVEY CONTROL PLAN
C-2	EXISTING SITE AND DEMOLITION PLAN
C-3	SITE PLAN
C-4	EROSION AND SEDIMENTATION CONTROL PLAN
C-5	EROSION/SEDIMENTATION CONTROL - CITY OF AUSTIN STANDARD NOTES AND DETAILS
C-6	TREE PROTECTION AND CONTRACTOR STORAGE AREA PLAN
C-7	TREE PROTECTION AND ENVIRONMENTAL NOTES - CITY OF AUSTIN STANDARD NOTES AND DETAILS
C-8	OVERALL YARD PIPING PLAN
C-9	PARTIAL YARD PIPING PLAN AND DETAILS I
C-10	PARTIAL YARD PIPING PLAN AND DETAILS II
C-11	OVERALL YARD PIPING AND ELECTRICAL DUCT BANK PLAN
C-12	4" TSC PROFILES I
C-13	4" TSC PROFILES II
C-14	STANDARD CIVIL DETAILS I
C-15	STANDARD CIVIL DETAILS II

STRUCTURAL

S-1	STRUCTURAL DRAWINGS - STRUCTURAL GENERAL NOTES
S-2	STRUCTURAL DRAWINGS - TYPICAL DETAILS
S-2A	STRUCTURAL DRAWINGS - TYPICAL DETAILS
S-3	STRUCTURAL DRAWINGS - LOCATION PLAN
S-4	STRUCTURAL DRAWINGS - ELECTRICAL ROOM SLUDGE TRANSFER BUILDING PARTIAL PLAN
S-5	STRUCTURAL DRAWINGS - GRAVITY THICKENER SECTIONS AND DETAILS
S-6	STRUCTURAL DRAWINGS - ODOR CONTROL SYSTEM PUMP PADS PLANS & DETAILS
S-7	STRUCTURAL DRAWINGS - SBT PLANS & SECTIONS
S-8	STRUCTURAL DRAWINGS - GRAVITY THICKENER DEMO PLAN

HVAC

H-1	HVAC ABBREVIATIONS & SYMBOLS
H-2	HVAC DEMO PLAN
H-3	HVAC PLAN
H-4	HVAC SCHEDULES AND DETAILS

MECHANICAL

M-1	MECHANICAL LEGEND
M-2	SLUDGE TRANSFER PUMP ROOM DEMOLITION PLAN
M-3	GRAVITY THICKENERS DEMOLITION PHOTOS
M-4	ODOR CONTROL UNITS DEMOLITION PHOTOS
M-5	SLUDGE TRANSFER BUILDING MODIFICATIONS PLAN
M-6	SLUDGE TRANSFER PLAN AND SECTION
M-7	THICKENED SLUDGE PUMP MODIFICATIONS - UPPER PLAN
M-8	THICKENED SLUDGE PUMP MODIFICATIONS - LOWER PLAN
M-9	THICKENED SLUDGE PUMP MODIFICATIONS - SECTIONS
M-10	GRAVITY THICKENER 1A, 2A, AND 1B MODIFICATION PLAN
M-11	GRAVITY THICKENER 2B MODIFICATION PLAN
M-12	GRAVITY THICKENERS TYPICAL ILLUSTRATIVE SECTION AND DETAILS
M-13	GRAVITY THICKENER UPPER PLAN AND THICKENER MECHANISM INSTALLATION PLAN
M-14	GRAVITY THICKENER DOMES TYPICAL ILLUSTRATIVE SECTION
M-15	GRAVITY THICKENER 1A SCUM PUMP WET WELL AND THICKENER SUPERNATANT BOX PLANS
M-16	GRAVITY THICKENER 2A SCUM PUMP WET WELL AND THICKENER SUPERNATANT BOX PLANS
M-17	GRAVITY THICKENER 1B SCUM PUMP WET WELL AND THICKENER SUPERNATANT BOX PLANS
M-18	GRAVITY THICKENER 2B SCUM PUMP WET WELL AND THICKENER SUPERNATANT BOX PLANS
M-19	GRAVITY THICKENER 1A, 2A, AND 1B SCUM PUMP WET WELL AND THICKENER SUPERNATANT BOX SECTIONS
M-20	GRAVITY THICKENER 2B SCUM PUMP WET WELL AND THICKENER SUPERNATANT BOX SECTIONS
M-21	ODOR CONTROL SYSTEM NO. 1 PLAN
M-22	ODOR CONTROL SYSTEM NO. 2 PLAN
M-23	ODOR CONTROL UNIT TYPICAL SECTIONS AND DETAILS I
M-24	ODOR CONTROL UNIT TYPICAL SECTIONS AND DETAILS II
M-25	STANDARD MECHANICAL DETAILS I
M-26	STANDARD MECHANICAL DETAILS II
M-27	STANDARD MECHANICAL DETAILS III
M-28	STANDARD MECHANICAL DETAILS IV
M-29	STANDARD MECHANICAL DETAILS V
M-30	STANDARD MECHANICAL DETAILS VI

ELECTRICAL

G-E-1	ELECTRICAL SYMBOLS LEGEND (SHEET 1 OF 3)
G-E-2	ELECTRICAL SYMBOLS LEGEND (SHEET 2 OF 3)
G-E-3	ELECTRICAL SYMBOLS LEGEND (SHEET 3 OF 3)
G-E-4	ELECTRICAL GENERAL NOTES
G-E-5	ELECTRICAL DETAILS (SHEET 1 OF 9)
G-E-6	ELECTRICAL DETAILS (SHEET 2 OF 9)
G-E-7	ELECTRICAL DETAILS (SHEET 3 OF 9)
G-E-8	ELECTRICAL DETAILS (SHEET 4 OF 9)
G-E-9	ELECTRICAL DETAILS (SHEET 5 OF 9)
G-E-10	ELECTRICAL DETAILS (SHEET 6 OF 9)
G-E-11	ELECTRICAL DETAILS (SHEET 7 OF 9)
G-E-12	ELECTRICAL DETAILS (SHEET 8 OF 9)
G-E-13	ELECTRICAL DETAILS (SHEET 9 OF 9)
E-01	OVERALL ONE-LINE DIAGRAM DEMOLITION
E-02	DETAILED ONE-LINE DIAGRAM - DEMOLITION (SHEET 1 OF 2)
E-03	DETAILED ONE-LINE DIAGRAM - DEMOLITION (SHEET 2 OF 2)
E-04	DISTRIBUTION EQUIPMENT FRONT ELEVATIONS - DEMOLITION
E-05	OVERALL ONE-LINE DIAGRAM RENOVATION
E-06	DETAILED ONE-LINE DIAGRAM RENOVATION (SHEET 1 OF 3)
E-07	DETAILED ONE-LINE DIAGRAM RENOVATION (SHEET 2 OF 3)
E-08	DETAILED ONE-LINE DIAGRAM RENOVATION (SHEET 3 OF 3)
E-09	DISTRIBUTION EQUIPMENT FRONT ELEVATIONS - RENOVATION & PROPOSED
E-10	SLUDGE TRANSFER PUMP BUILDING PANELBOARD SCHEDULES - RENOVATION
E-11	SLUDGE TRANSFER PUMP BUILDING PANELBOARD SCHEDULES - PROPOSED
E-12	GRAVITY THICKENERS VICINITY PANELBOARD SCHEDULE - PROPOSED
E-13	GRAVITY THICKENER AREA ENLARGED SITE PLAN
E-14	OVERALL SITE PLAN
E-15	GRAVITY THICKENER AREA SITE PARTIAL PLANS
E-16	GRAVITY THICKENER AREA SITE GROUNDING PLAN
E-17	ELECTRICAL BUILDING B - ENLARGED PLAN
E-18	SITE DUCT BANK SECTIONS - DEMOLITION AND RENOVATION
E-19	DUCT BANK SECTIONS - PROPOSED
E-20	GRAVITY THICKENERS 1A AND 2A AND ODOR CONTROL SYSTEM PLAN - DEMOLITION
E-21	GRAVITY THICKENERS 1B AND 2B AND ODOR CONTROL SYSTEM PLAN - DEMOLITION
E-22	GRAVITY THICKENERS 1A, 2A, 1B AND 2B PLANS - DEMOLITION
E-23	GRAVITY THICKENER AND SCUM PUMP TYPICAL POWER AND I&C PLAN
E-24	GRAVITY THICKENERS AREA SITE LIGHTING AND AUX. POWER PLAN - RENOVATION
E-25	ODOR CONTROL SYSTEM - TYPICAL POWER AND I&C PLAN
E-26	SLUDGE TRANSFER PUMP BUILDING ELECTRICAL MODIFICATION FLOOR PLAN - DEMOLITION
E-27	SLUDGE TRANSFER PUMP BUILDING FLOOR PLAN - DEMOLITION
E-28	SLUDGE TRANSFER PUMP BUILDING LIGHTING PLAN - DEMOLITION
E-29	SLUDGE TRANSFER PUMP BUILDING EQUIPMENT ARRANGEMENT PLAN
E-30	SLUDGE TRANSFER PUMP BUILDING POWER & I&C PLAN
E-31	SLUDGE TRANSFER PUMP BUILDING CONDUIT CORRIDOR PLAN
E-32	SLUDGE TRANSFER PUMP BUILDING CONDUIT CORRIDOR SECTION
E-33	SLUDGE TRANSFER PUMP BUILDING CONDUIT CORRIDOR SECTIONS CONTENTS TABLE
E-34	SLUDGE TRANSFER PUMP BUILDING LIGHTING FLOOR PLAN - RENOVATION
E-35	LIGHT FIXTURE SCHEDULE
E-36	CONTROL WIRING SCHMATIC DEMOLITION (SHEET 1 OF 8)
E-37	CONTROL WIRING SCHMATIC DEMOLITION (SHEET 2 OF 8)
E-38	CONTROL WIRING SCHMATIC DEMOLITION (SHEET 3 OF 8)
E-39	CONTROL WIRING SCHMATIC DEMOLITION (SHEET 4 OF 8)
E-40	CONTROL WIRING SCHMATIC DEMOLITION (SHEET 5 OF 8)
E-41	CONTROL WIRING SCHMATIC DEMOLITION (SHEET 6 OF 8)
E-42	CONTROL WIRING SCHMATIC DEMOLITION (SHEET 7 OF 8)
E-43	CONTROL WIRING SCHMATIC DEMOLITION (SHEET 8 OF 8)
E-44	CONTROL WIRING DIAGRAM RENOVATION (SHEET 1 OF 7)
E-45	CONTROL WIRING DIAGRAM RENOVATION (SHEET 2OF 7)
E-46	CONTROL WIRING DIAGRAM RENOVATION (SHEET 3OF 7)
E-47	CONTROL WIRING DIAGRAM RENOVATION (SHEET 4 OF 7)
E-48	CONTROL WIRING DIAGRAM RENOVATION (SHEET 5 OF 7)
E-49	CONTROL WIRING DIAGRAM RENOVATION (SHEET 6 OF 7)
E-50	CONTROL WIRING DIAGRAM RENOVATION (SHEET 7 OF 7)
E-51	FIELD INTERFACE WIRING DIAGRAM ODOR CONTROL SYSTEM
E-52	FIELD INTERFACE WIRING DIAGRAM SLUDGE THICKENER CONTROL PANEL
E-53	FIELD INTERFACE WIRING DIAGRAM THICKENER SCUM PUMP CONTROL PANEL
E-54	GRAVITY THICKENERS 1A AND 2A AND ODOR CONTROL SYSTEM PLAN - REFERENCE DRAWING
E-55	ONE-LINE DIAGRAM - REFERENCE DRAWING
E-56	SLUDGE TRANSFER PUMP BUILDING FLOOR PLAN REFERENCE DRAWING
E-57	SLUDGE TRANSFER PUMP BUILDING LIGHTING PLAN REFERENCE DRAWING
E-58	CONTROL WIRING SCHEMATIC REFERENCE DRAWING (SHEET 1 OF 8)
E-59	CONTROL WIRING SCHEMATIC REFERENCE DRAWING (SHEET 2 OF 8)
E-60	CONTROL WIRING SCHEMATIC REFERENCE DRAWING (SHEET 3 OF 8)
E-61	CONTROL WIRING SCHEMATIC REFERENCE DRAWING (SHEET 4 OF 8)
E-62	CONTROL WIRING SCHEMATIC REFERENCE DRAWING (SHEET 5 OF 8)
E-63	CONTROL WIRING SCHEMATIC REFERENCE DRAWING (SHEET 6 OF 8)
E-64	CONTROL WIRING SCHEMATIC REFERENCE DRAWING (SHEET 7 OF 8)
E-65	CONTROL WIRING SCHEMATIC REFERENCE DRAWING (SHEET 8 OF 8)
E-66	INSTRUMENT WIRING SCHEMATIC REFERENCE DRAWING (SHEET 1 OF 1)
E-67	SLUDGE TRANSFER BUILDING CONTROL PANELS "PB01-CCP-01" & "PB01-CCP-02" REFERENCE DRAWIN
E-68	GRAVITY THICKENERS 1B AND 2B AND ODOR CONTROL SYSTEM PLAN REFERENCE DRAWING
E-69	SLUDGE TRANSFER PUMP BUILDING ELECTRICAL MODIFICATION FLOOR PLAN REFERENCE DRAWING
E-70	GRAVITY THICKENERS 1A, 2A, 1B AND 2B PLAN REFERENCE DRAWING
E-71	BID ALTERNATE DUCTBANK DEMOLITION (SHEET 1 OF 4)
E-72	BID ALTERNATE DUCTBANK DEMOLITION (SHEET 2 OF 4)
E-73	BID ALTERNATE DUCTBANK DEMOLITION (SHEET 3 OF 4)
E-74	BID ALTERNATE DUCTBANK DEMOLITION (SHEET 4 OF 4)

INSTRUMENTATION

G-I-1	INSTRUMENTATION SYMBOLS LEGEND (SHEET 1 OF 3)
G-I-2	INSTRUMENTATION SYMBOLS LEGEND (SHEET 2 OF 3)
G-I-3	INSTRUMENTATION SYMBOLS LEGEND (SHEET 3 OF 3)
G-I-4	INSTRUMENTATION AND CONTROLS DETAILS (SHEET 1 OF 2)
G-I-5	INSTRUMENTATION AND CONTROLS DETAILS (SHEET 2 OF 2)
I-01	P&ID - GRAVITY THICKENER No 1A AND 2A
I-02	P&ID - GRAVITY THICKENER No 1B AND 2B
I-03	P&ID - THICKENED SLUDGE PUMPS
I-04	P&ID - SLUDGE HOLDING TANK AND SLUDGE TRANSFER PUMPS
I-05	P&ID - ODOR CONTROL SYSTEM No 1
I-06	P&ID - ODOR CONTROL SYSTEM No 2
I-07	P&ID - POWER MONITORING
I-08	INSTRUMENT WIRING SCHEMATIC DEMOLITION (SHEET 1 OF 1)
I-09	SLUDGE TRANSFER BUILDING PROPOSED INSTRUMENT WIRING SCHEMATICS (SHEET 1 OF 1)
I-10	TYPICAL TYPE 1 PLC I/O POINT WIRING SCHEMATICS
I-11	TYPICAL TYPE 2 PLC I/O POINT WIRING SCHEMATICS
I-12	SLUDGE TRANSFER BUILDING "RIO-2A" INTERIOR BACKPLANE - DEMOLITION
I-13	CONTROL CABINET "PB01-CCP-01" FRONT ELEVATION AND SCHEDULES - DEMOLITION
I-14	CONTROL CABINET "PB01-CCP-01" INTERIOR BACKPLANE ELEVATION - DEMOLITION
I-15	CONTROL PANEL "PB01-CCP-01" INTERIOR BACKPLANE ELEVATION SCHEDULES - DEMOLITION
I-16	CONTROL CABINET "PB01-CCP-03" FRONT ELEVATION AND SCHEDULES - DEMOLITION
I-17	CONTROL CABINET "PB01-CCP-03" INTERIOR BACKPLANE ELEVATION - DEMOLITION
I-18	SLUDGE TRANSFER BUILDING "RIO-2A" INTERIOR BACKPLANE - RENOVATION
I-19	SLUDGE TRANSFER BUILDING "RIO-2A" AND "STPB-CP-001" EQUIPMENT/NAMEPLATE SCHEDULES
I-20	ELECTRICAL BUILDING "EBB1-DCP-01" INTERIOR BACKPLANE ELEVATION - RENOVATION
I-21	SLUDGE TRANSFER BUILDING "STPB-CP-001" INTERIOR BACKPLANE ELEVATION - PROPOSED
I-22	CONTROL CABINET "PB01-CCP-01" FRONT ELEVATION AND SCHEDULES - RENOVATION
I-23	CONTROL CABINET "PB01-CCP-01" INTERIOR BACKPLANE ELEVATION - RENOVATION
I-24	CONTROL PANEL "PB01-CCP-01" INTERIOR BACKPLANE ELEVATION SCHEDULES - RENOVATION
I-25	CONTROL CABINET "PB01-CCP-03" FRONT ELEVATION AND SCHEDULES - RENOVATION
I-26	CONTROL CABINET "PB01-CCP-03" INTERIOR BACKPLANE ELEVATION - RENOVATION
I-27	SLUDGE PUMP FIELD CONTROL STATION ELEVATION - RENOVATION
I-28	SLUDGE TRANSFER BUILDING OVERALL PLC SYSTEM ARCHITECTURE - EXISTING
I-29	OVERALL PLANT PARTIAL CONTROL SYSTEM ARCHITECTURE - DEMOLITION
I-30	OVERALL PLANT PARTIAL CONTROL SYSTEM ARCHITECTURE - RENOVATIONS
I-31	SLUDGE TRANSFER BUILDING PLC SYSTEM ARCHITECTURE - RENOVATION
I-32	TRAIN C CONTROL SYSTEM NETWORK DUCT BANK ROUTING REFERENCE DRAWING

STATE OF TEXAS
DANNY M. HURTADO
104266
REGISTERED
PROFESSIONAL ENGINEER
May 2, 2016

REV No	DATE	DRWN	CHKD	REMARKS

DESIGNED BY: WOO
DRAWN BY: SANDEFUR
SHEET CHK'D BY: HURTADO
CROSS CHK'D BY:
APPROVED BY:
DATE: MAY 2016

CDM Smith
Riata Corporate Park, 12357-A Riata Trace Parkway, Suite 210
Austin, TX 78727
Tel: (512) 346-1100
Texas Registration Number F-3043

CITY OF AUSTIN, TEXAS - AUSTIN WATER UTILITY
CIP 3333.016

SOUTH AUSTIN REGIONAL WWTP
THICKENER IMPROVEMENTS PROJECT

SHEET INDEX

PROJECT No 590-104217
FILE NAME:G-1-SHEET INDEX

SHEET No
G-1

BID SET

S:\ACAD\104217_SAR\G-1-SHEET INDEX By: sandefurdw Saved: 5/4/2016 9:53:18 AM Plotted: 5/4/2016 12:13:16 PM

Plotted: 5/4/2016 12:13:16 PM

S:\Acad\104217_SAR\G-2-NOTES.dwg, G-2, 5/4/2016 12:13:35 PM, sandefurdw, DWG To PDF.pc3

COORDINATION

1 THE CONTRACTOR SHALL GIVE THE CITY A MINIMUM OF 72 HOURS NOTICE BEFORE BEGINNING CONSTRUCTION.

2 UPON COMPLETION OF THE PROPOSED IMPROVEMENTS AND PRIOR TO ACCEPTANCE BY THE OWNER, THE ENGINEER SHALL DOCUMENT IN WRITING THAT THE PROPOSED IMPROVEMENTS WERE CONSTRUCTED IN CONFORMANCE WITH THE APPROVED PLANS.

3 PRIOR TO BEGINNING ANY CONSTRUCTION, THE CONTRACTOR SHALL VERIFY HORIZONTAL AND VERTICAL LOCATIONS OF ALL KNOWN EXISTING UTILITIES & STRUCTURES WHICH WILL EITHER BE CONNECTED TO, ADJACENT, OR CROSSED. IF THERE ARE ANY CONFLICTS BETWEEN PROPOSED AND EXISTING UTILITIES, OR IF THE EXISTING UTILITIES & STRUCTURES ARE IN ANY WAY DIFFERENT FROM WHAT IS SHOWN ON THE DRAWINGS, IT SHALL BE THE CONTRACTOR'S RESPONSIBILITY TO NOTIFY THE CITY BEFORE PROCEEDING WITH ANY CONSTRUCTION. THE CONTRACTOR SHALL PROVIDE TO THE CITY, FOR THE CITY'S APPROVAL, A SOLUTION FOR RESOLVING SUCH CONFLICTS. THE CONTRACTOR SHALL BE RESPONSIBLE FOR PROVIDING ALL FITTINGS, ADAPTERS, ETC, AND RESOLVING ALL CONFLICTS AT CONTRACTOR'S EXPENSE.

4 NO WORK SHALL BE PERFORMED ON SATURDAYS, SUNDAYS, OR CITY HOLIDAYS WITHOUT WRITTEN PERMISSION BY OWNER. THE SPECIFIED CONTRACT TIMES WERE ESTABLISHED ASSUMING NO WEEKEND OR HOLIDAY WORK WERE COUNTED IN DETERMINING THE NUMBER OF CONSECUTIVE WORKING DAYS USED TO COMPLETE PROJECT. WORKING HOURS ARE LIMITED TO 7:00 AM TO 6:00 PM MONDAY THROUGH FRIDAY.

5 CONTRACTOR SHALL PROVIDE "AS-BUILT" DRAWINGS TO THE ENGINEER SO THAT THE REPRODUCIBLES OF THE ENGINEERING DRAWINGS MAY BE CORRECTED TO REFLECT "RECORD DRAWINGS" CONDITIONS.

6 IN CASE OF CONFLICT BETWEEN DRAWINGS AND/OR SPECIFICATIONS AND CITY OF AUSTIN OR TCEQ REGULATIONS, THE REGULATIONS SHALL PREVAIL, UNLESS A VARIANCE HAS BEEN APPROVED.

7 IT IS THE INTENT OF THE DRAWINGS AND SPECIFICATIONS THAT THE SCOPE OF WORK INCLUDES CLEARING, EROSION CONTROLS, AND TREE PROTECTION REQUIRED FOR CONSTRUCTION. THE CONTRACTOR SHALL REMOVE ONLY TREES SO INDICATED ON THE DRAWINGS, PLUS TREES SMALLER THAN 8" AS REQUIRED TO ENABLE CONSTRUCTION. REVEGETATION AND ENVIRONMENTAL RESTORATION IS INCLUDED IN THE SCOPE OF WORK.

8 CONTRACTOR SHALL MAINTAIN ACCESS TO EXISTING DRIVEWAYS AT ALL TIMES.

9 PROJECT INFORMATION:

OWNER: CITY OF AUSTIN, JOHN WEPRYK, P.E. PHONE: (512) 974-7010

ADDRESS: AUSTIN, TEXAS

OWNER'S REPRESENTATIVE:

DANNY HURTADO, P.E., CDM Smith PHONE: (512) 346-1100

PERSON OR FIRM RESPONSIBLE FOR EROSION/SEDIMENTATION CONTROL MAINTENANCE:

CONTRACTOR PHONE: _____

PERSON OR FIRM RESPONSIBLE FOR TREE/NATURAL AREA PROTECTION MAINTENANCE:

CONTRACTOR PHONE: _____

11 THE CONTRACTOR SHALL OBTAIN ALL REQUIRED CONSTRUCTION PERMITS PRIOR TO COMMENCING WORK. THE ADMINISTRATION-MAINTENANCE BUILDING WILL REQUIRE A BUILDING PERMIT AND AN ELECTRICAL PERMIT. FEES WILL BE WAIVED BY THE CITY.

12 CONTRACTOR AREAS FOR PARKING, LAYDOWN, AND TEMPORARY SPOIL STORAGE SHALL BE AS SHOWN IN THE DRAWINGS. CONTRACTOR TO RESTRICT THEIR OPERATIONS TO THESE AREAS.

13 CONTRACTOR MAY USE CITY WATER WITHOUT CHARGE ONCE THE WATER MAIN IS INSTALLED AT THE PLANT SITE UNDER THE OFFSITE UTILITIES CONTRACT. CONTRACTOR SHALL INSTALL A WATER METER AND BACKFLOW PREVENTER IN ACCORDANCE WITH CITY STANDARDS AND DETAILS SHOWN HEREIN.

14 THE CONTRACTOR SHALL COORDINATE ALL MATERIALS TESTS, TO BE CONDUCTED BY AN INDEPENDENT LABORATORY AT THE FREQUENCY AND LOCATIONS SPECIFIED. A COPY OF ALL TEST RESULTS SHALL BE FURNISHED TO THE OWNER'S REPRESENTATIVE, ENGINEER, AND THE CONTRACTOR. CONTACT THE OWNER 48 HOURS PRIOR TO DENSITY TESTING. FAILED TESTS SHALL BE REPEATED AT THE CONTRACTOR'S SOLE EXPENSE.

15 PRIOR TO BEGINNING CONSTRUCTION, THE OWNER OR THEIR AUTHORIZED REPRESENTATIVE WILL CONVENE A PRE-CONSTRUCTION CONFERENCE BETWEEN THE OWNER, ENGINEER, CONTRACTOR(S), AND ANY OTHER AFFECTED PARTIES.

ENVIRONMENTAL

1 ALL SITE WORK MUST COMPLY WITH ENVIRONMENTAL REQUIREMENTS AS SHOWN AND SPECIFIED IN THE EROSION AND SEDIMENTATION CONTROL DRAWINGS AND DETAILS, TREE PROTECTION NOTES AND DETAILS, AND SPECIFICATIONS.

2 ALL SITE WORK MUST COMPLY WITH THE CITY OF AUSTIN ENVIRONMENTAL CRITERIA MANUAL (ECM) WHICH IS AVAILABLE AT https://library.municode.com/index.aspx?clientid=15306.

3 ALL DISTURBED AREAS SHALL BE RESTORED AND CONTRACTOR SHALL REVEGETATE ALL EXPOSED CUT & FILL AREAS UPON COMPLETION OF CONSTRUCTION. THE SEEDING SHALL BE APPLIED AT THE SPECIFIED RATE OVER ALL AREAS DISTURBED BY THE CONTRACTOR. SOIL STABILIZATION OF DISTURBED AREAS SHALL PROVIDE PERMANENT SURFACE COVERAGE THAT MINIMIZES EROSION AND SEDIMENT TRANSPORT AWAY FROM THE SITE AND THAT MEETS THE APPROVAL OF THE ENGINEER.

4 NO TREES SHALL BE REMOVED WITHOUT THE ENGINEER'S APPROVAL. AS APPROPRIATE, THE ENGINEER MAY ELECT TO ALTER SITE IMPROVEMENTS SLIGHTLY TO AVOID DAMAGING EXISTING TREES.

5 ALL CONSTRUCTION ACTIVITIES MUST COMPLY WITH THE REQUIREMENTS SPECIFIED UNDER THE TEXAS COMMISSION ON ENVIRONMENTAL QUALITY (TCEQ) TEXAS POLLUTANT DISCHARGE ELIMINATION SYSTEM (TPDES) CONSTRUCTION GENERAL PERMIT TXR150000, AS APPLIED TO SMALL CONSTRUCTION SITES FOR PROJECTS THAT DISTURB MORE THAN ONE (1) ACRES AND LESS THAN FIVE (5) ACRES.

6 A STORMWATER POLLUTION PREVENTION PLAN (SWP3) SHALL BE DEVELOPED BY THE CONTRACTOR PRIOR TO COMMENCEMENT OF CONSTRUCTION THAT IDENTIFIES THE EROSION & SEDIMENTATION CONTROLS THAT ARE SELECTED, INSTALLED, AND MAINTAINED IN ACCORDANCE WITH THE MANUFACTURER'S SPECIFICATIONS AND GOOD ENGINEERING PRACTICES. CONTROLS SPECIFIED IN THE PROJECT SWP3 ARE REQUIRED DURING CONSTRUCTION. THESE CONTROLS MUST REMAIN IN PLACE UNTIL DISTURBED AREAS ARE REVEGETATED AND THE SITE HAS BECOME PERMANENTLY STABILIZED.

7 CONTRACTOR SHALL POST THE TCEQ TPDES CONSTRUCTON ACTIVITY PERMIT NOTICE FOR SMALL CONSTRUCTION SITES NEAR ENTRANCE OF SITE AND MAINTAIN THE SWP3 DOCUMENT ONSITE FOR THE DURATION OF THE PROJECT.

8 CONTRACTOR SHALL BE RESPONSIBLE FOR INSPECTION AND MAINTENANCE OF EROSION/ SEDIMENTATION CONTROLS THROUGHOUT CONSTRUCTION PERIOD.

ENVIRONMENTAL (CONTINUED)

9 EROSION CONTROL CONSTRUCTION SEQUENCE:
a) CONTRACTOR SHALL INSTALL STABILIZED CONSTRUCTION ENTRANCE AND INSTALL EROSION/SEDIMENTATION CONTROLS, AND TREE PROTECTION FENCING PRIOR TO BEGINNING OF ANY CLEARING OR EXCAVATION ACTIVITIES.
b) HOLD CONFERENCE ONSITE WITH OWNER'S REPRESENTATIVE TO REVIEW THE SITE-SPECIFIC SWP3 FOLLOWING INSTALLATION OF EROSION/SEDIMENTATION CONTROLS, TREE PROTECTION CONTROLS AND PRIOR TO ANY SOIL DISTURBANCE ACTIVITIES.
c) AFTER SWP3 REVIEW, BEGIN CLEARING FOLLOWED BY CONSTRUCTION ACTIVITIES. PERFORM ALL CLEARING AT START OF PROJECT. INSPECT AND RESTORE EROSION CONTROL DEVICES AND TREE PROTECTION CONTROLS THROUGHOUT CONSTRUCTION PROJECT ACTIVITY.
d) ALL TOPSOIL EXCAVATED SHALL BE STOCKPILED SEPARATELY IN A DESIGNATED AREA. UPON COMPLETION OF BACKFILL, TOPSOIL SHALL BE REPLACED OVER DISTURBED AREAS.
e) AFTER ACCEPTANCE OF REVEGETATION BY OWNER'S REPRESENTATIVE, CONTRACTOR SHALL REMOVE TEMPORARY EROSION/SEDIMENTATION CONTROLS.

10 INSTALL SILT FENCE, WHERE APPLICABLE, OUTSIDE OF CANOPY OF TREES TO BE RETAINED AND ADJACENT TO TREE PROTECTION FENCE.

11 WHERE SILT FENCING CROSSES UTILITY TRENCH EXCAVATIONS, EROSION CONTROLS SHALL BE TEMPORARILY REMOVED DURING TRENCHING AND PIPE INSTALLATION AND REPLACED IMMEDIATELY UPON COMPLETION OF TRENCH BACKFILLING.

12 CONTRACTOR SHALL FILE A NOTICE OF TERMINATION (NOT) TO THE TCEQ WHEN FINAL SOIL STABILIZATION HAS BEEN ACHIEVED AND ACCEPTED BY THE ENGINEER FOR ALL PORTIONS OF THE SITE THAT ARE THE RESPONSIBILITY OF THE OWNER.

CONTROL OF WORK

1 THE CONTRACTOR SHALL FIELD VERIFY ALL EXISTING FACILITIES (SIGNS, UTILITIES, STRUCTURES, ETC). CONTRACTOR SHALL BE RESPONSIBLE TO PROTECT EXISTING FACILITIES. ITEMS TO BE DISTURBED BY NEW WORK SHALL BE PROTECTED OR REPLACED AS ACCEPTABLE TO THE ENGINEER.

2 NO BLASTING WILL BE ALLOWED.

3 NO BURNING OF TREES, BRUSH, RUBBISH, VEGETATION, OR OTHER OBJECTIONABLE MATTER WILL BE ALLOWED.

4 THE CONTRACTOR SHALL MAINTAIN ALL WORK AREAS FREE FROM DUST. SPRINKLING OR SIMILAR METHODS WILL BE PERMITTED TO CONTROL DUST. USE OF PETROLEUM PRODUCTS OR CHLORIDES IS PROHIBITED. SPRINKLING MUST BE REPEATED AS NEEDED TO KEEP THE DISTURBED AREA DAMP. DUST CONTROL SHALL BE PERFORMED AS THE WORK PROCEEDS WHENEVER A POTENTIAL FOR DUST NUISANCE OR HAZARD OCCURS.

5 ANY DAMAGE TO EXISTING UTILITIES & STRUCTURES (IE, FENCES, WALLS, R.O.W. MONUMENTS, SIGNS, CULVERTS, AND CONCRETE APRONS, ETC) DURING CONSTRUCTION SHALL BE REPAIRED OR REPLACED AT CONTRACTOR'S EXPENSE. REPLACEMENT MATERIALS SHALL MATCH EXISTING. ALL REPAIRS MUST BE APPROVED BY OWNER OR OWNER REPRESENTATIVE.

6 TRACK EQUIPMENT WILL NOT BE ALLOWED ON PAVED ROADWAYS WITHOUT SUITABLE PROTECTION UNDER TRACKS.

7 ANY EXISTING PAVEMENT DAMAGED OR REMOVED DURING CONSTRUCTION SHALL BE REPLACED OR REPAIRED. DAMAGED PAVEMENT SHALL BE REPLACED TO MATCH EXISTING CONDITIONS PRIOR TO CONSTRUCTION.

8 ALL FLEX BASE PLACED FOR REPAIR OF GRAVEL ROADS, DRIVEWAYS, ETC, SHALL BE COMPACTED TO 4" THICKNESS PER LIFT AT 95% MODIFIED PROCTOR DENSITY. FINISHED SURFACE SHALL MATCH EXISTING SURFACE.

9 THE CONTRACTOR SHALL LOCATE, PROTECT, AND MAINTAIN BENCHMARKS, MONUMENTS, AND CONTROL POINTS. REESTABLISH ANY DISTURBED ITEMS BY A TEXAS REGISTERED PUBLIC LAND SURVEYOR, AT NO ADDED COST TO OWNER.

SAFETY

1 ALL CONSTRUCTION OPERATIONS SHALL BE ACCOMPLISHED IN ACCORDANCE WITH APPLICABLE REGULATIONS OF THE U.S. OCCUPATIONAL SAFETY AND HEALTH ADMINISTRATION (OSHA). CONTRACTOR IS RESPONSIBLE FOR ALL SITE SAFETY WITHIN LIMITS OF CONSTRUCTION.

2 ELECTRICAL LINES ARE LOCATED CLOSE TO THE PROJECT. THE ATTENTION OF THE CONTRACTOR IS DIRECTED TO THE STATE LAW (VERNON'S ANNOTATED TEXAS STATUTES, ARTICLE 1436(c)) CONCERNING OPERATIONS IN THE VICINITY OF ELECTRICAL LINES & THE NEED FOR EFFECTIVE PRECAUTIONARY MEASURES. IT IS A VIOLATION OF OCCUPATIONAL SAFETY AND HEALTH ADMINISTRATION (OSHA) REGULATIONS TO OPERATE EQUIPMENT IN SUCH A MANNER THAT PERSONS OR EQUIPMENT COME WITHIN TEN FEET OF AN ENERGIZED ELECTRIC LINE. SUCH REGULATIONS ARE ENFORCED BY OSHA, FEDERAL LAWS. TEXAS CODE ANNOTATED 1990, HEALTH AND SAFETY CODES, SUBSECTION 752.001 ET.SEQ. V.A.T.S. WAS ENACTED FOR THE PURPOSE OF ENSURING THE SAFETY OF PERSONS ENGAGED IN ACTIVITIES WITHIN PROXIMITY OF OVERHEAD LINES. THE LAW PROHIBITS ANY FUNCTION OR ACTIVITY WHERE IT IS POSSIBLE FOR THE PERSON PERFORMING SUCH ACTIVITY TO COME WITHIN SIX FEET OF AN OVERHEAD POWER LINE. THE LAW ALSO FORBIDS ANY PART OF ANY TOOL, EQUIPMENT, MACHINERY OR MATERIAL USED BY SUCH PERSON TO BE BROUGHT WITHIN SIX FEET OF ANY OVERHEAD LINE DURING THE PERFORMANCE OF SUCH ACTIVITY. IN ADDITION, THE LAW PROHIBITS OPERATION OF EQUIPMENT OR MACHINES WITHIN TEN FEET OF ANY OVERHEAD POWER LINE UNLESS CONTACT WITH SUCH LINE HAS BEEN EFFECTIVELY GUARDED AGAINST PURSUANT TO THE PROVISIONS OF THE LAW. VIOLATORS OF THE LAW ARE SUBJECT TO A FINE OR INCARCERATION OR BOTH, IN ADDITION TO CIVIL LIABILITY.

3 WHEN WORKING IN OR ADJACENT TO PUBLIC RIGHT-OF-WAY, CONTRACTOR WILL BE RESPONSIBLE FOR ERECTING AND MAINTAINING ALL BARRICADES, FLAGGERS, SIGNS AND OTHER DEVICES NECESSARY TO PROTECT THE PUBLIC AND MAINTAIN TRAFFIC FLOW. IT IS THE CONTRACTORS' RESPONSIBILITY TO FURNISH AND MAINTAIN ALL NECESSARY WARNING AND SAFETY DEVICES (FLASHING LIGHTS, FLAG MEN, BARRICADES, SIGNS, ETC), AS REQUIRED TO ENSURE TRAFFIC SAFETY AND TO PROTECT THE PUBLIC SAFETY AND HEALTH. NO LANE CLOSURES WILL BE PERMITTED AND CONTRACTOR SHALL MAINTAIN TRAFFIC FLOW AT ALL TIMES IN EXISTING ROADWAYS.

4 TRENCH SAFETY SYSTEMS ARE INCLUDED PER SECTION 509S & PER OSHA STANDARD 29 CFR PART 1926 SUBPART P. IT IS THE CONTRACTOR'S RESPONSIBILITY TO FURNISH ENGINEERING DESIGN & INSTALL & MAINTAIN THE SAFETY SYSTEMS IN ACCORDANCE WITH THE SAFETY ENGINEER'S DRAWINGS & SPECIFICATIONS. CONTRACTOR SHALL SUBMIT FOR REVIEW A PROJECT SPECIFIC TRENCH SAFETY SYSTEM DESIGNED BY A STATE OF TEXAS REGISTERED PROFESSIONAL ENGINEER. THE DESIGN SHALL BE SUBMITTED TO THE OWNER PRIOR TO CONSTRUCTION FOR RECORDS OF OWNER'S FIELD REPRESENTATIVE.

5 THE WALLS AND FACES OF ALL EXCAVATIONS IN WHICH EMPLOYEES ARE EXPOSED TO DANGER FROM MOVING GROUND SHALL BE GUARDED BY A SHORING SYSTEM AS SPECIFIED PER SECTION 509S.

6 IN EXCAVATIONS WHICH CONTRACTOR'S EMPLOYEES MAY BE REQUIRED TO ENTER, EXCAVATED MATERIAL SHALL BE EFFECTIVELY STORED AND RETAINED PER SECTION 509S.

7 DIVERSION DIKES, DITCHES, OR OTHER SUITABLE MEANS SHALL BE USED TO PREVENT SURFACE WATER FROM ENTERING AN EXCAVATION AND TO PROVIDE ADEQUATE DRAINAGE OF THE AREA ADJACENT TO THE EXCAVATION. WATER SHALL NOT BE ALLOWED TO ACCUMULATE IN AN EXCAVATION. CONTRACTOR SHALL FOLLOW OSHA REQUIREMENTS FOR TRENCH SAFETY, INCLUDING DEWATERING AS NEEDED. THE CONTRACTOR SHALL FURNISH, INSTALL, OPERATE, AND MAINTAIN EFFECTIVE DEWATERING MEASURES. DEWATERING SHALL BE ACCOMPLISHED AT NO ADDED PAY.

GENERAL CONSTRUCTION NOTES

1 IT SHALL BE THE RESPONSIBILITY OF THE CONTRACTOR TO VERIFY THE EXACT LOCATION OF ALL EXISTING UTILITIES. FURTHERMORE, THE CONTRACTOR SHALL CONTACT ALL UTILITY COMPANY REPRESENTATIVES A MINIMUM OF 48 HOURS IN ADVANCE OF ANY EXCAVATION.

CONTACT SAR FACILITY ENGINEER AT THE CITY OF AUSTIN FIELD OPERATIONS WATER & WASTEWATER (512) 972-0653.

2. ALL CONSTRUCTION SHALL BE IN ACCORDANCE WITH THE SPECIFICATIONS ISSUED IN THIS BID PACKAGE. THE STANDARD SPECIFICATIONS AND DETAILS ARE AVAILABLE AT https://library.municode.com/index.aspx?clientid=15308 AND https://library.municode.com/index.aspx?clientid=15309. THE CONTRACTOR SHALL KEEP A SET OF THE CURRENT SPECIFICATIONS AND DETAILS ON SITE AT ALL TIMES. ALL WORK SHALL BE INSPECTED BY THE STAFF OF THE CITY ENGINEER OF AUSTIN. ALL WORK SHALL BE COORDINATED WITH THE CITY OF AUSTIN CITY ENGINEER.

3. IN LIEU OF USING THE CONSTRUCTION MATERIALS INDICATED IN THESE DOCUMENTS, THE CONTRACTOR SHALL OBTAIN WRITTEN APPROVAL FROM THE ENGINEER FOR ANY SUBSTITUTION PRIOR TO CONSTRUCTION. THE CONTRACTOR SHALL BE FINANCIALLY RESPONSIBLE FOR THE ENGINEER'S TIME SPENT REVIEWING CHANGES AND REQUESTS. REQUESTS FOR CHANGES SHOULD INCLUDE PRODUCT INFORMATION AND A PROFESSIONAL ENGINEER'S SEAL.

4. TRENCHING AND BACKFILLING: ALL TRENCHING AND BACKFILLING SHALL CONFORM TO THE SPECIFICATIONS SET OUT HEREIN. TESTING SHALL BE PROVIDED BY A CERTIFIED LABORATORY, AT THE OWNER'S EXPENSE, TO VERIFY THESE STANDARDS. ANY RETESTING DUE TO SUBSTANDARD WORK SHALL BE AT THE EXPENSE OF THE CONTRACTOR. STRUCTURAL AREAS AS SHOWN ON THE DETAILS OF THIS DRAWING SET SHALL INCLUDE ALL SIDEWALKS AND SHALL EXTEND 5' BEYOND THE CURB LINES OF ALL STREETS, ALLEYS AND PARKING AREAS.

5. IT IS THE RESPONSIBILITY OF THE CONTRACTOR TO COMPLY WITH ALL STATE AND FEDERAL REGULATIONS REGARDING CONSTRUCTION ACTIVITIES NEAR ENERGIZED OVERHEAD POWER LINES. ADDITIONALLY, THE CONTRACTOR SHALL COORDINATE ALL PROPOSED WORK AND PROCEDURES WITH THE AEP AND WHERE APPLICABLE, AT THE CONTRACTORS EXPENSE.

6. ALL MATERIALS & LABOR NOT IDENTIFIED AS A LUMP SUM CONTRACT SHALL BE CONSIDERED SUBSIDIARY TO THE ITEM IN WHICH IT IS USED. ALL MATERIALS AND EQUIPMENT SHALL BE BOTH FURNISHED AND INSTALLED BY THE CONTRACTOR UNLESS OTHERWISE NOTED.

7. A TEMPORARY BENCHMARK WILL BE PROVIDED TO THE CONTRACTOR PRIOR TO ISSUANCE OF THE NOTICE TO PROCEED.

8. ALL SOIL EXPOSED BY CONSTRUCTION SHALL RECEIVE HYDROMULCH SEEDING EXCEPT WHERE THE LANDSCAPE PLAN SPECIFIES OTHERWISE.

9. CONSTRUCTION TRENCHES MAY BE ALLOWED TO REMAIN OVER NIGHT SINCE THIS IS A PLANT PROJECT. OPEN TRENCHES SHOULD BE PROPERLY MARKED TO PREVENT ACCIDENTS.

10. ADJUSTMENT OF WATER METERS, VALVES, MANHOLES, IRRIGATION SYSTEMS, AND ANY OTHER PUBLIC OR PRIVATE UTILITY, ETC. ARE NOT SEPARATE PAY ITEMS. THE PRICE OF THE ADJUSTMENT SHALL BE SUBSIDIARY TO THE CONSTRUCTION OF VARIOUS LUMP SUM CONTRACT ITEMS.

11. THE CONTRACTOR SHALL COORDINATE WITH THE AUSTIN WATER AND THE CITY OF AUSTIN ENGINEERING DEPARTMENT TO ADJUST THE LOCATION OF EXISTING FACILITIES.

12. SPOIL AREAS ARE AVAILABLE ON THIS SITE. THE CONTRACTOR SHALL GAIN APPROVAL OF ALL SPOIL AREAS PRIOR TO CLEARING.

13. REPAIR OF SURFACE SHALL BE EQUAL TO OR BETTER THAN ORIGINAL CONDITIONS.

14. WHERE STORM DRAIN IS PLACED UNDER PAVEMENT, PROFILE GASKET PIPE SHALL BE REQUIRED FOR THE FULL LENGTH OF THE PIPE FROM JUNCTION TO JUNCTION.

15. ALL EXPOSED SLOPES TO BE HYDROMULCHED.

DEMOLITION

1. THE DEMOLITION, MODIFICATION OR ALTERATION OF EXISTING BUILDINGS, EQUIPMENT, PIPING AND STRUCTURES SHALL BE PERFORMED IN ACCORDANCE WITH ALL APPLICABLE LOCAL REGULATIONS AND CODES. REFER TO SPECIFICATIONS FOR FURTHER DETAILS. DEMOLITION, REPLACEMENT, AND/OR RELOCATION MAY BE SHOWN ON INDIVIDUAL DRAWINGS NOT INCLUDED IN THE DEMOLITION DRAWINGS.

2. DEMOLITION AND SALVAGE OF EXISTING EQUIPMENT AND PIPING IS DEFINED ON THE DEMOLITION DRAWINGS AND IN SPECIFICATION SECTION 01505.

3. THE CONTRACTOR IS RESPONSIBLE FOR LOCATING AND PROTECTING THE EXISTING UTILITIES, STRUCTURE, PIPING, VALVES, AND OTHER ITEMS NOT DESIGNATED TO BE DEMOLISHED.

4. ALL HOLES CUT FOR NEW PIPING OR EQUIPMENT THROUGH EXISTING CONCRETE OR MASONRY WALLS, SLABS OR ARCHES SHALL BE CORE DRILLED UNLESS OTHERWISE SHOWN. NO STRUCTURAL MEMBER SHALL BE CUT WITHOUT APPROVAL FROM ENGINEER. REFER TO SPECIFICATIONS FOR FURTHER DETAILS.

5. ALL PIPE, VALVES, AND APPURTENANCES (INCLUDING SUPPORTS) ARE TO BE REMOVED TO A POINT WHERE CONNECTION IS MADE TO PIPING THAT IS TO REMAIN IN PLACE. PROPERLY CAP OR PLUG ALL PIPING (INCLUDING PROVIDING RESTRAINTS) AND WALL OPENINGS WHERE PIPING OR OTHER ITEMS ARE REMOVED.

6. FOR EQUIPMENT TO BE REMOVED, REMOVE ALL ELECTRICAL CONDUITS AND SEPARATELY MOUNTED STARTERS AND DISCONNECTS SERVING THAT EQUIPMENT TAKING THE ITEMS BACK TO A POINT WHERE CONDUIT IS EMBEDDED IN THE STRUCTURE OR WHERE CONNECTION IS MADE TO ELECTRICAL EQUIPMENT TO REMAIN IN PLACE. CAP OR PLUG ALL CONDUIT WALL OPENINGS AND ELECTRICAL BOXES WHERE CONDUIT IS REMOVED. ALSO PROVIDE REMOVABLE COVERS WHERE REMOVAL OF OTHER ITEMS LEAVES A VISIBLE OPENING.

7. COORDINATE DEMOLITION FOR NEW WORK TO BE CONNECTED TO EXISTING PIPING. LIMIT OF NEW WORK AND DEMOLITION SHOWN ON PLAN IS APPROXIMATE. IT SHALL BE THE RESPONSIBILITY OF THE CONTRACTOR TO ESTABLISH THE EXACT LIMITS OF DEMOLITION (AS APPROVED BY THE ENGINEER) TO MAKE THE APPROPRIATE CONNECTIONS OF NEW TO EXISTING, USING EXISTING FLANGED ENDS OF PIPE, COUPLINGS OR FLANGE ADAPTORS AS APPROVED BY THE ENGINEER.

STATE OF TEXAS
DANNY M. HURTADO
104266
REGISTERED
PROFESSIONAL ENGINEER
May 2, 2016

REV No	DATE	DRWN	CHKD	REMARKS

DESIGNED BY: WOO
DRAWN BY: SANDEFUR
SHEET CHK'D BY: HURTADO
CROSS CHK'D BY: _____
APPROVED BY: _____
DATE: MAY 2016

CDM Smith
Riata Corporate Park, 12357-A Riata Trace Parkway, Suite 210
Austin, TX 78727
Tel: (512) 346-1100
Texas Registration Number F-3043

CITY OF AUSTIN, TEXAS - AUSTIN WATER UTILITY
CIP 3333.016
SOUTH AUSTIN REGIONAL WWTP
THICKENER IMPROVEMENTS PROJECT

GENERAL NOTES

PROJECT No 590-104217
FILE NAME: G-2-NOTES

SHEET No
G-2

BID SET

S:\ACAD\104217_SAR\G-2-NOTES By: sandefurdw Saved: 12/7/2015 4:32:55 PM Plotted: 5/4/2016 12:13:38 PM
Plotted: 5/4/2016 12:13:38 PM

S:\Acad\104217_SAR\G-3-LEG.dwg, G-3, 5/4/2016 12:14:02 PM, sandefurdw, DWG To PDF.pc3

LANDSCAPE & DRAINAGE SYMBOLS

SYMBOL	FEATURE
	BUILDING OR STRUCTURE FOOTPRINT
4" OAK	TREE, SIZE & TYPE
	TREE PROTECTION
	EDGE OF WOODS OR BRUSH
	DIRECTION OF FLOW FOR STORMWATER
SF SF	SILT FENCE
MS MS	MULCH SOCK
	WROUGHT IRON FENCE
CH CH CH	CHAIN LINK FENCE
SRB	SEVERE ROCK BERM
	EROSION CONTROL BLANKET
	STABILIZED CONSTRUCTION ENTRANCE

SURFACE ELEVATION SYMBOLS

SYMBOL	FEATURE
84	DEPRESSION CONTOUR
84	EXISTING INTERMEDIATE CONTOUR LINE & ELEVATION DESIGNATION
85	EXISTING INDEX CONTOUR LINE & ELEVATION DESIGNATION
84	PROPOSED INTERMEDIATE CONTOUR LINE & ELEVATION DESIGNATION
85	PROPOSED INDEX CONTOUR LINE & ELEVATION DESIGNATION
×365.7	SPOT ELEVATION
	EXISTING EMBANKMENT (REVERSE SYMBOLS FOR CHANNEL)
	PROPOSED EMBANKMENT (REVERSE SYMBOLS FOR CHANNEL)

UNDERGROUND/OVERHEAD UTILITY SYMBOLS

SYMBOL	FEATURE
MH-14 WEST INVT 27.35 EAST INVT 32.50 8" WW	WASTE WATER & MANHOLE
MH-22 EAST INVT 32.75 WEST INVT 32.50 8" SD	STORM DRAIN & MANHOLE
W FH	WATER LINE W/FIRE HYDRANT ASSEMBLY (INCLUDES VALVE)
ELEC	ELECTRICAL CABLE/DUCT
OE	OVERHEAD ELECTRIC
TEL	TELEPHONE
OT	OVERHEAD TELEPHONE
G	GAS LINE
LP	LIGHT POLE
PP GW	POWER POLE W/GUY WIRE

ITEMS TO BE REMOVED

ITEMS TO BE DEMOLISHED

EXISTING OR FUTURE CONDITION DESIGNATION

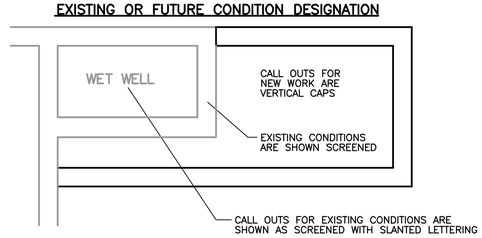

× M-3 — ARROW REPRESENTS CAMERA VIEW OF PHOTOGRAPH.

SECTION CUT SYMBOLS

1 / 12 — SECTION NUMBER

SHEET WHERE SECTION IS LOCATED. IF THE SECTION IS SHOWN ON THE SAME SHEET IT IS CUT, THE SHEET NUMBER IS REPLACED WITH A DASH.

DETAIL CALL OUT SYMBOLS

DETAIL LETTER — E / 15 — A / 12 — LEADER LINE — SHEET WHERE DETAIL IS LOCATED

IF MULTIPLE DETAILS REFER TO THE SAME AREA OF THE DRAWING, THE BUBBLES ARE STACKED SIDE BY SIDE.

DRAWING, SECTION & DETAIL TITLES

SUBTITLE OR DESCRIPTION (AS REQ'D)

PLAN
1/4" = 1'-0"

SUBTITLE OR DESCRIPTION (AS REQ'D)

ELEVATION
1/4" = 1'-0"

SECTION 1 / 6
3/4" = 1'-0"
1 — SECTION NUMBER
6 — SHEET WHERE SECTION CUT IS TAKEN *

DETAIL A / 3
3/4" = 1'-0"
A — DETAIL LETTER
3 — SHEET WHERE DETAIL IS TAKEN *

* IF SECTION, DETAIL, SCHEMATIC OR DIAGRAM IS DRAWN ON THE SAME SHEET THAT IT IS TAKEN FROM, THE SHEET NUMBER IS REPLACED WITH A HYPHEN. IF THE SECTION IS REFERENCED ON MULTIPLE SHEETS, THE SHEET NUMBER SHOWN INDICATES THE FIRST SHEET THE SECTION IS TAKEN FROM.

PIPING SYMBOLS

DOUBLE LINE SYMBOL	SINGLE LINE SYMBOL	FEATURE
SEE NOTE 2		FLANGED JOINT SIMPLIFIED REPRESENTATION.
		FLANGED JOINT COMPLEX REPRESENTATION.
		MECHANICAL JOINT COMPLEX REPRESENTATION.
		PLAIN END x PLAIN END PIPE COUPLING
		PLAIN END x PLAIN END PIPE COUPLING RESTRAINED
		FLANGE x PLAIN END PIPE COUPLING

PIPE AND FITTING SYMBOL NOTES

1 SIMPLIFIED JOINT SYMBOL IS USED FOR ALL SINGLE LINE PIPING SHOWN ON THE INTERIOR AND EXTERIOR PIPING DRAWINGS.

2 UNLESS MODIFIED BY THE GENERAL PROJECT NOTES OR DETAILED ON THE LAYOUT AND SCHEMATIC DRAWINGS PIPE AND FITTING JOINT REQUIREMENTS FOR THE VARIOUS PIPE MATERIALS ARE DEFINED IN THE SPECIFICATIONS.

ABBREVIATIONS

#, No	NUMBER	GPM	GALLONS PER MINUTE
&	AND	GV	GATE VALVE
@	AT		
ADDL	ADDITIONAL	HB	HOSE BIBB
ASTM	AMERICAN SOCIETY FOR TESTING MATERIALS	HOR	HORIZONTAL
		ID	INSIDE DIAMETER
BCV	BALL CHECK VALVE	INSTR	INSTRUMENT (TATION)
BFV	BUTTERFLY VALVE	JB	JUNCTION BOX
BM	BENCHMARK		
BTWN	BETWEEN	LPA	LOW PRESSURE AIR
BV	BALL VALVE	MATL	MATERIAL
		MAX	MAXIMUM
CA	COMPRESSED AIR	MFD	MANUFACTURED
CFM	CUBIC FEET PER MINUTE	MFR	MANUFACTURER
CJ	CONSTRUCTION JOINT	MIN	MINIMUM
CL or à	CENTERLINE		
CLJ	CONTROL JOINT	N	NORTH
CND	CONDUIT	NTS	NOT TO SCALE
CONC	CONCRETE		
CONST	CONSTRUCTION	PI	PRESSURE INDICATOR
CV	CHECK VALVE	PIT	PRESSURE INDICATOR TRANSMITTER
DEMO	DEMOLITION	PL OR ß	PROPERTY LINE
DET	DETAIL	PS	PRESSURE SWITCH
DIM	DIMENSION	PW	POTABLE WATER
DR	DRAIN		
		RAD	RADIUS
E	EAST	REQD	REQUIRED
ED	EQUIPMENT DRAIN		
EF	EACH FACE	S	SOUTH
EL	ELEVATION	SCH	SCHEDULE
ELEC	ELECTRIC(AL)	SF	SQUARE FEET
ENGR	ENGINEER	SHT	SHEET
EP	ELECTRICAL PANEL	SLG	SLIDE GATE
EQ	EQUAL (LY)	SPEC	SPECIFICATION, SPECIFIED
ES	EACH SIDE		
EXP	EXPANSION	TOW	TOP OF WALL
EXP JT	EXPANSION JOINT	TYP	TYPICAL
EXIST	EXISTING	VERT	VERTICAL
FD	FLOOR DRAIN	W	WEST
FL	FLOOR	W/	WITH
FLEX	FLEXIBLE	W/O	WITHOUT
		WS	WATER SURFACE

PIPE JOINT LEGEND

DESIGNATION	PIPE JOINT
F	FLANGED
MJ	MECHANICAL JOINT
T	THREADED
V	SOLVENT CEMENTED

PIPE MATERIAL

CS	CARBON STEEL
DI	DUCTILE IRON
FRP	FIBERGLASS
GS	GALVANIZED STEEL
PVC	POLYVINYL CHLORIDE
SS	STAINLESS STEEL
SCCP	STEEL CYLINDER CONCRETE PIPE
STL	STEEL

PROCESS FLUID LEGEND

CS	CHLORINE SOLUTION	SL	SLUDGE
FESL	FLOW EQUALIZATION SLUDGE	ST	SLUDGE TRANSFER
GTI	GRAVITY THICKENER INFLUENT	TS	THICKENER SUPERNATANT
HPA	HIGH PRESSURE AIR	TSC	THICKENED SCUM
NPW	NON-POTABLE WATER	TSL	THICKENED SLUDGE
OA	ODOROUS AIR	WAS	WASTE ACTIVATED SLUDGE
PD	PROCESS DRAIN		
PSC	PRIMARY SCUM		
PSL	PRIMARY SLUDGE		
PW	POTABLE WATER		
RW	RECIRCULATION WATER		
SSC	SECONDARY SCUM		

TEXAS COMMISSION ON ENVIRONMENTAL QUALITY WATER POLLUTION ABATEMENT PLAN (WPAP) GENERAL CONSTRUCTION NOTES

1. WRITTEN CONSTRUCTION NOTIFICATION MUST BE GIVEN TO THE APPROPRIATE TCEQ REGIONAL OFFICE NO LATER THAN 48 HOURS PRIOR TO COMMENCEMENT OF THE REGULATED ACTIVITY. INFORMATION MUST INCLUDE THE DATE ON WHICH THE REGULATED ACTIVITY WILL COMMENCE, THE NAME OF THE APPROVED PLAN FOR THE REGULATED ACTIVITY, AND THE NAME OF THE PRIME CONTRACTOR AND THE NAME AND TELEPHONE NUMBER OF THE CONTACT PERSON.

2. ALL CONTRACTORS CONDUCTING REGULATED ACTIVITIES ASSOCIATED WITH THIS PROJECT MUST BE PROVIDED WITH COMPLETE COPIES OF THE APPROVED WPAP AND TCEQ LETTER INDICATING THE SPECIFIC CONDITIONS OF ITS APPROVAL. DURING THE COURSE OF THESE REGULATED ACTIVITIES, THE CONTRACTORS ARE REQUIRED TO KEEP ON-SITE COPIES OF THE APPROVED PLAN AND APPROVAL LETTER.

3. IF ANY SENSITIVE FEATURE IS DISCOVERED DURING CONSTRUCTION, ALL REGULATED ACTIVITIES NEAR THE SENSITIVE FEATURE MUST BE SUSPENDED IMMEDIATELY AND THE APPROPRIATE TCEQ REGIONAL OFFICE MUST BE IMMEDIATELY NOTIFIED. THE REGULATED ACTIVITIES NEAR THE SENSITIVE FEATURE MAY NOT PROCEED UNTIL THE TCEQ HAS REVIEWED AND APPROVED THE METHODS PROPOSED TO PROTECT THE SENSITIVE FEATURE FROM ANY POTENTIALLY ADVERSE WATER QUALITY IMPACTS.

4. NO TEMPORARY ABOVEGROUND HYDROCARBON AND HAZARDOUS SUBSTANCE STORAGE TANK SYSTEM IS INSTALLED WITHIN 150 FEET OF A DOMESTIC, INDUSTRIAL, IRRIGATION, OR PUBLIC WATER SUPPLY WELL, OR OTHER SENSITIVE FEATURE.

5. ALL TEMPORARY EROSION AND SEDIMENTATION (E&S) CONTROL MEASURES MUST BE PROPERLY SELECTED, INSTALLED, AND MAINTAINED IN ACCORDANCE WITH THE MANUFACTURERS SPECIFICATIONS AND GOOD ENGINEERING PRACTICES. CONTROLS SPECIFIED IN THE TEMPORARY STORM WATER SECTION OF THE APPROVED EDWARDS AQUIFER PROTECTION PLAN ARE REQUIRED DURING CONSTRUCTION. IF INSPECTIONS INDICATE A CONTROL HAS BEEN USED INAPPROPRIATELY, OR INCORRECTLY, THE APPLICANT MUST REPLACE OR MODIFY THE CONTROL FOR SITE SITUATIONS. THE CONTROLS MUST REMAIN IN PLACE UNTIL DISTURBED AREAS ARE REVEGETATED AND THE AREAS HAVE BECOME PERMANENTLY STABILIZED.

6. IF SEDIMENT ESCAPES THE CONSTRUCTION SITE, OFF-SITE ACCUMULATIONS OF SEDIMENT MUST BE REMOVED AT A FREQUENCY SUFFICIENT TO MINIMIZE OFFSITE IMPACTS TO WATER QUALITY (E.G., FUGITIVE SEDIMENT IN STREET BEING WASHED INTO SURFACE STREAMS OR SENSITIVE FEATURES BY THE NEXT RAIN).

7. SEDIMENT MUST BE REMOVED FROM SEDIMENT TRAPS OR SEDIMENTATION PONDS NOT LATER THAN WHEN DESIGN CAPACITY HAS BEEN REDUCED BY 50%. A PERMANENT STAKE MUST BE PROVIDED THAT CAN INDICATE WHEN THE SEDIMENT OCCUPIES 50% OF THE BASIN VOLUME.

8. LITTER, CONSTRUCTION DEBRIS, AND CONSTRUCTION CHEMICALS EXPOSED TO STORMWATER SHALL BE PREVENTED FROM BECOMING A POLLUTANT SOURCE FOR STORMWATER DISCHARGES (E.G., SCREENING OUTFALLS, PICKED UP DAILY).

9. ALL SPOILS (EXCAVATED MATERIAL) GENERATED FROM THE PROJECT SITE MUST BE STORED ON-SITE WITH PROPER E&S CONTROLS. FOR STORAGE OR DISPOSAL OF SPOILS AT ANOTHER SITE ON THE EDWARDS AQUIFER RECHARGE ZONE, THE SITE'S OWNER MUST RECEIVE WPAP APPROVAL FOR THE PLACEMENT OF FILL MATERIAL OR MASS GRADING PRIOR TO THE PLACEMENT OF SPOILS AT THE OTHER SITE.

10. STABILIZATION MEASURES SHALL BE INITIATED AS SOON AS PRACTICABLE IN PORTIONS OF THE SITE WHERE CONSTRUCTION ACTIVITIES HAVE TEMPORARILY OR PERMANENTLY CEASED, BUT IN NO CASE MORE THAN 14 DAYS AFTER THE CONSTRUCTION ACTIVITY IN THAT PORTION OF THE SITE HAS TEMPORARILY OR PERMANENTLY CEASED. WHERE THE INITIATION OF STABILIZATION MEASURES BY THE 14TH DAY AFTER CONSTRUCTION ACTIVITY TEMPORARY OR PERMANENTLY CEASE IS PRECLUDED BY WEATHER CONDITIONS, STABILIZATION MEASURES SHALL BE INITIATED AS SOON AS PRACTICABLE. WHERE CONSTRUCTION ACTIVITY ON A PORTION OF THE SITE IS TEMPORARILY CEASED, AND EARTH DISTURBING ACTIVITIES WILL BE RESUMED WITHIN 21 DAYS, TEMPORARY STABILIZATION MEASURES DO NOT HAVE TO BE INITIATED ON THAT PORTION OF SITE. IN AREAS EXPERIENCING DROUGHTS WHERE THE INITIATION OF STABILIZATION MEASURES BY THE 14TH DAY AFTER CONSTRUCTION ACTIVITY HAS TEMPORARILY OR PERMANENTLY CEASED IS PRECLUDED BY SEASONAL ARID CONDITIONS, STABILIZATION MEASURES SHALL INITIATE AS SOON AS PRACTICABLE.

11. THE FOLLOWING RECORDS SHALL BE MAINTAINED AND MADE AVAILABLE TO THE TCEQ UPON REQUEST: DATES WHEN MAJOR GRADING ACTIVITIES OCCUR; DATES WHEN CONSTRUCTION ACTIVITIES TEMPORARILY OR PERMANENTLY CEASE ON A PORTION OF THE SITE; AND DATES WHEN STABILIZATION MEASURES ARE INITIATED.

12. THE HOLDER OF ANY APPROVED EDWARDS AQUIFER PROTECTION PLAN MUST NOTIFY THE APPROPRIATE (AUSTIN) REGIONAL OFFICE IN WRITING AND OBTAIN APPROVAL FROM THE EXECUTIVE DIRECTOR PRIOR TO INITIATING ANY OF THE FOLLOWING:

A. ANY PHYSICAL OR OPERATIONAL MODIFICATION OF ANY WATER POLLUTION ABATEMENT STRUCTURE(S), INCLUDING BUT NOT LIMITED TO PONDS, DAMS, BERMS, SEWAGE TREATMENT PLANTS, AND DIVERSIONARY STRUCTURES;

B. ANY CHANGE IN THE NATURE OR CHARACTER OF THE REGULATED ACTIVITY FROM THAT WHICH WAS ORIGINALLY APPROVED OR A CHANGE WHICH WOULD SIGNIFICANTLY IMPACT THE PLAN'S ABILITY TO PREVENT POLLUTION OF THE EDWARDS AQUIFER;

C. ANY DEVELOPMENT OF LAND PREVIOUSLY IDENTIFIED AS UNDEVELOPED IN THE ORIGINAL WATER POLLUTION ABATEMENT PLAN.

TCEQ – AUSTIN REGIONAL OFFICE
1921 CEDAR BEND, SUITE 150
AUSTIN, TEXAS 78757 – 5336
PHONE: (512) 339-2929
FAX: (512) 339-3795

TCEQ TITLE 30 TAC CHAPTER 290 – PUBLIC DRINKING WATER

(e) LOCATION OF WATERLINES. TCEQ TITLE 30 TAC CHAPTER 290 – PUBLIC DRINKING WATER [RULE §290.44(e)] RULES SHALL APPLY TO INSTALLATIONS OF WATERLINES, WASTEWATER MAINS OR LATERALS, AND OTHER CONVEYANCES/APPURTENANCES IDENTIFIED AS POTENTIAL SOURCES OF CONTAMINATION. FURTHERMORE, ALL RATINGS SPECIFIED SHALL BE DEFINED BY ASTM OR AWWA STANDARDS UNLESS STATED OTHERWISE. NEW MAINS, SERVICE LINES, OR LATERALS ARE THOSE THAT ARE INSTALLED WHERE NO MAIN, SERVICE LINE, OR LATERAL PREVIOUSLY EXISTED, OR WHERE EXISTING MAINS, SERVICE LINES, OR LATERALS ARE REPLACED WITH PIPES OF DIFFERENT SIZE OR MATERIAL.

STATE OF TEXAS
DANNY M. HURTADO
104266
REGISTERED PROFESSIONAL ENGINEER
May 2, 2016

REV No	DATE	DRWN	CHKD	REMARKS

DESIGNED BY: WOO
DRAWN BY: SANDEFUR
SHEET CHK'D BY: HURTADO
CROSS CHK'D BY:
APPROVED BY:
DATE: MAY 2016

CDM Smith
Riata Corporate Park, 12357-A Riata Trace Parkway, Suite 210
Austin, TX 78727
Tel: (512) 346-1100
Texas Registration Number F-3043

CITY OF AUSTIN, TEXAS - AUSTIN WATER UTILITY
CIP 3333.016

SOUTH AUSTIN REGIONAL WWTP
THICKENER IMPROVEMENTS PROJECT

LEGEND AND ABBREVIATIONS

PROJECT No 590-104217
FILE NAME: G-3-LEG

SHEET No
G-3

BID SET

S:\ACAD\104217_SAR\G-3-LEG By: sandefurdw Saved: 12/11/2015 7:16:27 AM Plotted: 5/4/2016 12:14:03 PM

S:\Acad\104217_SAR\G-4_PFD.dwg, G-4_PDF, 5/4/2016 12:14:24 PM, sandefurdw, DWG To PDF.pc3

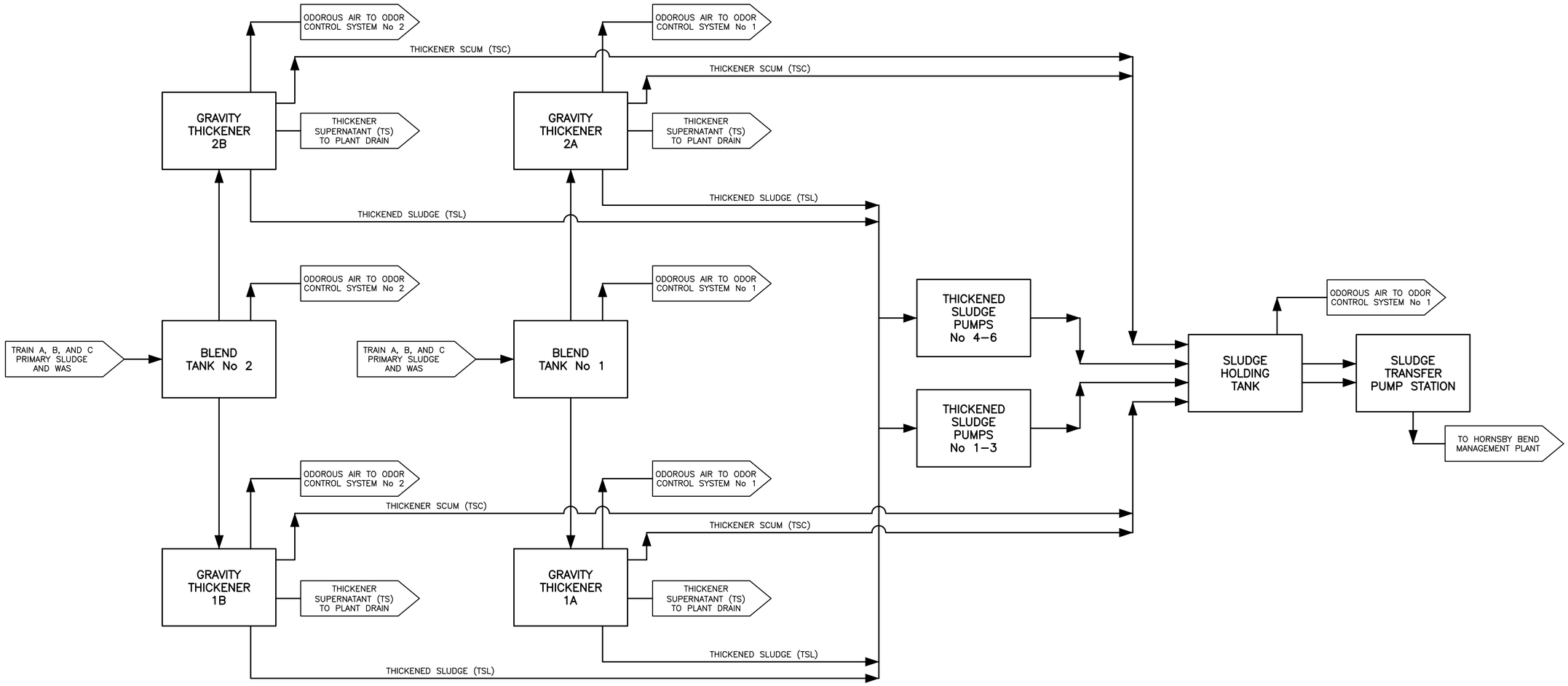

STATE OF TEXAS
DANNY M. HURTADO
104266
REGISTERED PROFESSIONAL ENGINEER
May 2, 2016

REV No	DATE	DRWN	CHKD	REMARKS

DESIGNED BY: WOO
DRAWN BY: SANDEFUR
SHEET CHK'D BY: HURTADO
CROSS CHK'D BY:
APPROVED BY:
DATE: MAY 2016

CDM Smith
Riata Corporate Park, 12357-A Riata Trace Parkway, Suite 210
Austin, TX 78727
Tel: (512) 346-1100
Texas Registration Number F-3043

CITY OF AUSTIN, TEXAS - AUSTIN WATER UTILITY
CIP 3333.016

SOUTH AUSTIN REGIONAL WWTP
THICKENER IMPROVEMENTS PROJECT

PROCESS FLOW DIAGRAM

PROJECT No 590–104217
FILE NAME: G–4_PFD

SHEET No
G-4

BID SET

S:\ACAD\104217_SAR\G-4_PFD By: sandefurdw Saved: 2/17/2015 2:41:56 PM Plotted: 5/4/2016 12:14:24 PM

S:\Acad\104217_SAR\G-5_SCHEDULES.dwg, G-5, 5/4/2016 12:14:45 PM, sandefurdw, DWG To PDF.pc3

VALVE SCHEDULE

PROCESS TAG ID	LOCATION	SERVICE	TYPE	SIZE (IN)	OPERATOR	REMARKS
SA-SHF-GV-001-A	GRAVITY THICKENER NO. 1 (1A)	NPW	GATE	4	H	GRAVITY THICKENER NO. 1 (1A) SERVICE WATER ISOLATION VALVE
SA-SHF-GV-002-A	GRAVITY THICKENER NO. 2 (2A)	NPW	GATE	4	H	GRAVITY THICKENER NO. 2 (2A) SERVICE WATER ISOLATIONVALVE
SA-SHF-GV-003-A	GRAVITY THICKENER NO. 3 (1B)	NPW	GATE	4	H	GRAVITY THICKENER NO. 3 (1B) SERVICE WATER ISOLATION VALVE
SA-SHF-GV-004-A	GRAVITY THICKENER NO. 4 (2B)	NPW	GATE	4	H	GRAVITY THICKENER NO. 4 (2B) SERVICE WATER ISOLATION VALVE
SA-SHF-GV-005-A	ODOR CONTROL SYSTEM NO. 1	NPW	GATE	4	H	ODOR CONTROL SYSTEM NO. 1 SERVICE WATER ISOLATION VALVE
SA-SHF-GV-006-A	ODOR CONTROL SYSTEM NO. 2	NPW	GATE	4	H	ODOR CONTROL SYSTEM NO. 2 SERVICE WATER ISOLATION VALVE
SA-SHF-BV-001-A	ODOR CONTROL SYSTEM NO. 1	DR	BALL	4	H	ODOR CONTROL SYSTEM NO. 1 DRAIN ISOLATION VALVE
SA-SHF-BV-002-A	ODOR CONTROL SYSTEM NO. 2	DR	BALL	4	H	ODOR CONTROL SYSTEM NO. 2 DRAIN ISOLATION VALVE
SA-SHF-CV-001-A	THICKENER SCUM PUMP NO. 1	TSC	CHECK	4	H	THICKENER SCUM PUMP NO. 1 DISCHARGE CHECK VALVE
SA-SHF-CV-002-A	THICKENER SCUM PUMP NO. 2	TSC	CHECK	4	H	THICKENER SCUM PUMP NO. 2 DISCHARGE CHECK VALVE
SA-SHF-CV-003-A	THICKENER SCUM PUMP NO. 3	TSC	CHECK	4	H	THICKENER SCUM PUMP NO. 3 DISCHARGE CHECK VALVE
SA-SHF-CV-004-A	THICKENER SCUM PUMP NO. 4	TSC	CHECK	4	H	THICKENER SCUM PUMP NO. 4 DISCHARGE CHECK VALVE
SA-SHF-CV-005-A	THICKENED SLUDGE PUMP NO. 1	SL	CHECK	6	H	THICKENED SLUDGE PUMP NO. 1 DISCHARGE CHECK VALVE
SA-SHF-CV-006-A	THICKENED SLUDGE PUMP NO. 2	SL	CHECK	6	H	THICKENED SLUDGE PUMP NO. 1 DISCHARGE CHECK VALVE
SA-SHF-CV-007-A	THICKENED SLUDGE PUMP NO. 3	SL	CHECK	6	H	THICKENED SLUDGE PUMP NO. 1 DISCHARGE CHECK VALVE
SA-SHF-CV-008-A	THICKENED SLUDGE PUMP NO. 4	SL	CHECK	6	H	THICKENED SLUDGE PUMP NO. 1 DISCHARGE CHECK VALVE
SA-SHF-CV-009-A	THICKENED SLUDGE PUMP NO. 5	SL	CHECK	6	H	THICKENED SLUDGE PUMP NO. 1 DISCHARGE CHECK VALVE
SA-SHF-CV-010-A	THICKENED SLUDGE PUMP NO. 6	SL	CHECK	6	H	THICKENED SLUDGE PUMP NO. 1 DISCHARGE CHECK VALVE
SA-SHF-PV-001-A	THICKENER SCUM PUMP NO. 1	TSC	PLUG	4	H	THICKENER SCUM PUMP NO. 1 DISCHARGE ISOLATION VALVE
SA-SHF-PV-002-A	THICKENER SCUM PUMP NO. 2	TSC	PLUG	4	H	THICKENER SCUM PUMP NO. 2 DISCHARGE ISOLATION VALVE
SA-SHF-PV-003-A	THICKENER SCUM PUMP NO. 3	TSC	PLUG	4	H	THICKENER SCUM PUMP NO. 3 DISCHARGE ISOLATION VALVE
SA-SHF-PV-004-A	THICKENER SCUM PUMP NO. 4	TSC	PLUG	4	H	THICKENER SCUM PUMP NO. 4 DISCHARGE ISOLATION VALVE
SA-SHF-PV-005-A	THICKENER SCUM YARD PIPING	TSC	PLUG	4	H	THICKENER SCUM YARD PIPING VALVE AT SLUDGE TRANSFER BUILDING
SA-SHF-PV-006-A	THICKENER SCUM YARD PIPING	TSC	PLUG	4	H	THICKENER SCUM YARD PIPING VALVE AT SLUDGE TRANSFER BUILDING
SA-SHF-PV-007-A	THICKENER SCUM YARD PIPING	TSC	PLUG	4	H	THICKENER SCUM YARD PIPING VALVE AT SLUDGE TRANSFER BUILDING
SA-SHF-PV-008-A	THICKENER SCUM YARD PIPING	TSC	PLUG	4	H	THICKENER SCUM YARD PIPING VALVE AT SLUDGE TRANSFER BUILDING
SA-SHF-PV-009-A	THICKENED SLUDGE PUMP NO. 1	SL	PLUG	6	H	THICKENED SLUDGE PUMP NO. 1 SUCTION ISOLATION VALVE
SA-SHF-PV-010-A	THICKENED SLUDGE PUMP NO. 1	SL	PLUG	6	H	THICKENED SLUDGE PUMP NO. 1 DISCHARGE ISOLATION VALVE
SA-SHF-PV-011-A	THICKENED SLUDGE PUMP NO. 2	SL	PLUG	6	H	THICKENED SLUDGE PUMP NO. 2 SUCTION ISOLATION VALVE
SA-SHF-PV-012-A	THICKENED SLUDGE PUMP NO. 2	SL	PLUG	6	H	THICKENED SLUDGE PUMP NO. 2 DISCHARGE ISOLATION VALVE
SA-SHF-PV-013-A	THICKENED SLUDGE PUMP NO. 3	SL	PLUG	6	H	THICKENED SLUDGE PUMP NO. 3 SUCTION ISOLATION VALVE
SA-SHF-PV-014-A	THICKENED SLUDGE PUMP NO. 3	SL	PLUG	6	H	THICKENED SLUDGE PUMP NO. 3 DISCHARGE ISOLATION VALVE
SA-SHF-PV-015-A	THICKENED SLUDGE PUMP NO. 4	SL	PLUG	6	H	THICKENED SLUDGE PUMP NO. 4 SUCTION ISOLATION VALVE
SA-SHF-PV-016-A	THICKENED SLUDGE PUMP NO. 4	SL	PLUG	6	H	THICKENED SLUDGE PUMP NO. 4 DISCHARGE ISOLATION VALVE
SA-SHF-PV-017-A	THICKENED SLUDGE PUMP NO. 5	SL	PLUG	6	H	THICKENED SLUDGE PUMP NO. 5 SUCTION ISOLATION VALVE
SA-SHF-PV-018-A	THICKENED SLUDGE PUMP NO. 5	SL	PLUG	6	H	THICKENED SLUDGE PUMP NO. 5 DISCHARGE ISOLATION VALVE
SA-SHF-PV-019-A	THICKENED SLUDGE PUMP NO. 6	SL	PLUG	6	H	THICKENED SLUDGE PUMP NO. 6 SUCTION ISOLATION VALVE
SA-SHF-PV-020-A	THICKENED SLUDGE PUMP NO. 6	SL	PLUG	6	H	THICKENED SLUDGE PUMP NO. 6 DISCHARGE ISOLATION VALVE
SA-SHF-PV-021-A	THICKENED SLUDGE PUMP HEADER	SL	PLUG	8	H	THICKENED SLUDGE PUMPS SUCTION HEADER ISOLATION VALVE
SA-SHF-PV-022-A	THICKENED SLUDGE PUMP HEADER	SL	PLUG	8	H	THICKENED SLUDGE PUMPS SUCTION HEADER ISOLATION VALVE
SA-SHF-PV-023-A	THICKENED SLUDGE PUMP HEADER	SL	PLUG	8	H	THICKENED SLUDGE PUMPS SUCTION HEADER ISOLATION VALVE
SA-SHF-PV-024-A	THICKENED SLUDGE PUMP HEADER	SL	PLUG	8	H	THICKENED SLUDGE PUMPS SUCTION HEADER ISOLATION VALVE
SA-SHF-PV-025-A	THICKENED SLUDGE PUMP HEADER	SL	PLUG	8	H	THICKENED SLUDGE PUMPS SUCTION HEADER ISOLATION VALVE
SA-SHF-PV-026-A	THICKENED SLUDGE PUMP HEADER	SL	PLUG	8	H	THICKENED SLUDGE PUMPS SUCTION HEADER ISOLATION VALVE
SA-SHF-PV-027-A	THICKENED SLUDGE PUMP HEADER	SL	PLUG	8	H	THICKENED SLUDGE PUMPS SUCTION HEADER ISOLATION VALVE
SA-SHF-PV-028-A	THICKENED SLUDGE PUMP DISCHARGE LINE	SL	PLUG	8	H	THICKENED SLUDGE PUMPS DISCHARGE LINE ISOLATION VALVE
SA-SHF-PV-029-A	THICKENED SLUDGE PUMP DISCHARGE LINE	SL	PLUG	8	H	THICKENED SLUDGE PUMPS DISCHARGE LINE ISOLATION VALVE FOR MAG METER NO. 1
SA-SHF-PV-030-A	THICKENED SLUDGE PUMP DISCHARGE LINE	SL	PLUG	8	H	THICKENED SLUDGE PUMPS DISCHARGE LINE ISOLATION VALVE FOR MAG METER NO. 1
SA-SHF-PV-031-A	THICKENED SLUDGE PUMP DISCHARGE LINE	SL	PLUG	8	H	THICKENED SLUDGE PUMPS DISCHARGE LINE ISOLATION VALVE FOR MAG METER NO. 2
SA-SHF-PV-032-A	THICKENED SLUDGE PUMP DISCHARGE LINE	SL	PLUG	8	H	THICKENED SLUDGE PUMPS DISCHARGE LINE ISOLATION VALVE FOR MAG METER NO. 2
SA-SHF-PV-033-A	TRANSFER SLUDGE PUMP NO. 1	SL	PLUG	6	H	TRANSFER SLUDGE PUMP NO. 1 SUCTION ISOLATION VALVE FOR QUICK CONNECT
SA-SHF-RV-001-A	THICKENER SCUM PUMP NO. 1	TSC	RECIRCULATION	4	E	THICKENER SCUM PUMP NO. 1 RECIRCULATION VALVE
SA-SHF-RV-002-A	THICKENER SCUM PUMP NO. 2	TSC	RECIRCULATION	4	E	THICKENER SCUM PUMP NO. 2 RECIRCULATION VALVE
SA-SHF-RV-003-A	THICKENER SCUM PUMP NO. 3	TSC	RECIRCULATION	4	E	THICKENER SCUM PUMP NO. 3 RECIRCULATION VALVE
SA-SHF-RV-004-A	THICKENER SCUM PUMP NO. 4	TSC	RECIRCULATION	4	E	THICKENER SCUM PUMP NO. 4 RECIRCULATION VALVE

EQUIPMENT SCHEDULE

NAME	PROCESS TAG ID	ELECTRICAL TAG	LOCATION	SERVICE	CAPACITY	DRIVE SIZE	SPEC NO.	REMARKS
THICKENER DRIVE MECHANISM NO. 1	SA-SHF-DMC-001-A	GT-DMC-1	GRAVITY THICKENER NO. 1 (1A)	SL	50' DIAMETER	0.75 HP	11364	
THICKENER DRIVE MECHANISM NO. 2	SA-SHF-DMC-002-A	GT-DMC-2	GRAVITY THICKENER NO. 2 (2A)	SL	50' DIAMETER	0.75 HP	11364	
THICKENER DRIVE MECHANISM NO. 3	SA-SHF-DMC-003-A	GT-DMC-3	GRAVITY THICKENER NO. 3 (1B)	SL	50' DIAMETER	0.75 HP	11364	
THICKENER DRIVE MECHANISM NO. 4	SA-SHF-DMC-004-A	GT-DMC-4	GRAVITY THICKENER NO. 4 (2B)	SL	50' DIAMETER	0.75 HP	11364	
THICKENER SCUM PUMP NO. 1	SA-SHF-SCP-001-P	GT-TSCP-1	GRAVITY THICKENER NO. 1 (1A)	TSC	200 GPM	5 HP	11318	
THICKENER SCUM PUMP NO. 2	SA-SHF-SCP-002-P	GT-TSCP-2	GRAVITY THICKENER NO. 2 (2A)	TSC	200 GPM	5 HP	11318	
THICKENER SCUM PUMP NO. 3	SA-SHF-SCP-003-P	GT-TSCP-3	GRAVITY THICKENER NO. 3 (1B)	TSC	200 GPM	5 HP	11318	
THICKENER SCUM PUMP NO. 4	SA-SHF-SCP-004-P	GT-TSCP-4	GRAVITY THICKENER NO. 4 (2B)	TSC	200 GPM	5 HP	11318	
THICKENED SLUDGE PUMP NO. 1	SA-SHF-SLP-001-P	STPB-TSLP-1	SLUDGE TRANSFER BULDING	SL	150 GPM	5 HP	-	EXISTING PUMP RETAGGED AND RENAMED - ELECTRICAL CAPACITY IS 7.5 HP
THICKENED SLUDGE PUMP NO. 2	SA-SHF-SLP-002-P	STPB-TSLP-2	SLUDGE TRANSFER BULDING	SL	150 GPM	5 HP	-	EXISTING PUMP RETAGGED AND RENAMED - ELECTRICAL CAPACITY IS 7.5 HP
THICKENED SLUDGE PUMP NO. 3	SA-SHF-SLP-003-P	STPB-TSLP-3	SLUDGE TRANSFER BULDING	SL	150 GPM	5 HP	-	EXISTING PUMP RETAGGED AND RENAMED - ELECTRICAL CAPACITY IS 7.5 HP
THICKENED SLUDGE PUMP NO. 4	SA-SHF-SLP-004-P	STPB-TSLP-4	SLUDGE TRANSFER BULDING	SL	150 GPM	5 HP	-	EXISTING PUMP RETAGGED AND RENAMED - ELECTRICAL CAPACITY IS 7.5 HP
THICKENED SLUDGE PUMP NO. 5	SA-SHF-SLP-005-P	STPB-TSLP-5	SLUDGE TRANSFER BULDING	SL	150 GPM	5 HP	-	EXISTING PUMP RETAGGED AND RENAMED - ELECTRICAL CAPACITY IS 7.5 HP
THICKENED SLUDGE PUMP NO. 6	SA-SHF-SLP-006-P	STPB-TSLP-6	SLUDGE TRANSFER BULDING	SL	150 GPM	5 HP	-	EXISTING PUMP RETAGGED AND RENAMED - ELECTRICAL CAPACITY IS 7.5 HP
TRANSFER SLUDGE PUMP NO. 1	SA-SHF-SLP-007-P	STPB-TSP-1	SLUDGE TRANSFER BULDING	SL	1,100 GPM	40 HP	-	EXISTING PUMP RETAGGED AND RENAMED
TRANSFER SLUDGE PUMP NO. 2	SA-SHF-SLP-008-P	STPB-TSP-2	SLUDGE TRANSFER BULDING	SL	1,100 GPM	40 HP	-	EXISTING PUMP RETAGGED AND RENAMED
ODOR CONTROL AIR FAN NO. 1	SA-SHF-VF-001-A	GT-FAN-1	ODOR CONTROL SYSTEM NO. 1	OA	13,000 SCFM	20 HP	11258	FLOW RATE ADJUSTED TO 11,000 SCFM FOR CURRENT PHASE
ODOR CONTROL AIR FAN NO. 2	SA-SHF-VF-002-A	GT-FAN-2	ODOR CONTROL SYSTEM NO. 2	OA	9,000 SCFM	20 HP	11258	
SCRUBBER RECYCLE PUMP NO. 1	SA-SHF-SRP-01	GT-SRP-1	ODOR CONTROL SYSTEM NO. 1	NPW	TBD	7.5 HP	11258	INSTALLATION OF PUMP DEPENDS ON MANUFACTURER
SCRUBBER RECYCLE PUMP NO. 2	SA-SHF-SRP-01	GT-SRP-2	ODOR CONTROL SYSTEM NO. 2	NPW	TBD	7.5 HP	11258	INSTALLATION OF PUMP DEPENDS ON MANUFACTURER
BIOSCRUBBER NO. 1	SA-SHF-OCE-001-A	GT-SCR-1	ODOR CONTROL SYSTEM NO. 1	OA	6,500 SCFM	-	11258	
BIOSCRUBBER NO. 2	SA-SHF-OCE-002-A	GT-SCR-2	ODOR CONTROL SYSTEM NO. 1	OA	6,500 SCFM	-	11258	
BIOSCRUBBER NO. 3	SA-SHF-OCE-003-A	GT-SCR-3	ODOR CONTROL SYSTEM NO. 2	OA	4,500 SCFM	-	11258	
BIOSCRUBBER NO. 4	SA-SHF-OCE-004-A	GT-SCR-4	ODOR CONTROL SYSTEM NO. 2	OA	4,500 SCFM	-	11258	
THICKENED SLUDGE MAG METER NO. 1	SA-SHF-FIT-001-I	STPB-FIT-9201	THICKENED SLUDGE PUMP DISCHARGE LINE	SL	8"	-	17380	
THICKENED SLUDGE MAG METER NO. 2	SA-SHF-FIT-002-I	STPB-FIT-9202	THICKENED SLUDGE PUMP DISCHARGE LINE	SL	8"	-	17380	
SLUDGE TRANSFER MAG METER	SA-SHF-FIT-003-I	STPB-FIT-9302	TRANSFER SLUDGE PUMP DISCHARGE LINE	ST	6"	-	17380	
LEVEL PRESSURE TRANSDUCER NO. 1	SA-SHF-LIT-001-I	GT-LE-9111	THICKENER SCUM PUMP NO. 1	TSC	-	-	17380	
LEVEL PRESSURE TRANSDUCER NO. 2	SA-SHF-LIT-002-I	GT-LE-9121	THICKENER SCUM PUMP NO. 2	TSC	-	-	17380	
LEVEL PRESSURE TRANSDUCER NO. 3	SA-SHF-LIT-003-I	GT-LE-9131	THICKENER SCUM PUMP NO. 3	TSC	-	-	17380	
LEVEL PRESSURE TRANSDUCER NO. 4	SA-SHF-LIT-004-I	GT-LE-9141	THICKENER SCUM PUMP NO. 4	TSC	-	-	17380	

STATE OF TEXAS
DANNY M. HURTADO
104266
REGISTERED
PROFESSIONAL ENGINEER
May 2, 2016

REV No	DATE	DRWN	CHKD	REMARKS

DESIGNED BY: WOO
DRAWN BY: SANDEFUR
SHEET CHK'D BY: HURTADO
CROSS CHK'D BY:
APPROVED BY:
DATE: MAY 2016

CDM Smith
Riata Corporate Park, 12357-A Riata Trace Parkway, Suite 210
Austin, TX 78727
Tel: (512) 346-1100
Texas Registration Number F-3043

CITY OF AUSTIN, TEXAS - AUSTIN WATER UTILITY
CIP 3333.016

SOUTH AUSTIN REGIONAL WWTP
THICKENER IMPROVEMENTS PROJECT

SCHEDULES

PROJECT No 590-104217
FILE NAME: G-5_SCHEDULES

SHEET No
G-5

BID SET

S:\ACAD\104217_SAR\G-5_SCHEDULES By: sandefurdw Saved: 4/21/2016 10:49:34 AM Plotted: 5/4/2016 12:14:45 PM
Plotted: 5/4/2016 12:14:45 PM

SURVEY CONTROL POINTS:

SOURCE:
SOUTH AUSTIN REGIONAL WWTP MAPPING PROJECT
MACIAS & ASSICIATES, L.P. FOR HARUTUNIAN ENGINEERING INC.
DATE: APRIL 2014

TEXAS STATE PLANE COORDINATES
(NAD83)(NAVD88)(GRID-FEET)

PNT No.	NORTHING	EASTING	ELEV	DESCRIPTION
99183-01	10050263.16	3157824.61	427.84	COTTON SPINDLE FOUN
99183-02	10049658.82	3158525.88	426.09	1/2» IRON ROD FOUND
99183-03	10049662.77	3157895.60	429.18	CUT TRIANGLE IN CONCRETE FOUND
99183-04	10049043.86	3158462.08	428.67	CUT TRIANGLE IN CONCRETE FOUND
105	10049005.71	3158465.81	428.54	BRASS DISK
106	10050127.16	3158991.82	425.79	800 NAIL
107	10050231.71	3159105.20	426.60	MAG NAIL
108	10050098.20	3159251.36	426.60	COTTON SPINDLE

BENCHMARK DESCRIPTIONS:
#1 -SOUTH AUSTIN REGIONAL WASTEWATER TREATMENT PLANT BENCHMARK TBM 97060-04 WHICH IS A FOUND TRIANGLE CUT IN CONCRETE WITH PK-NAIL AT EDGE OF SLAB ON SOUTH SIDE OF UFT STATION No.2
NAVD1988 ELEVATION=428.67

#2 -TBM NO. 97060-03 WHICH IS A FOUND TRIANGLE CUT IN CONCRETE AT EDGE OF SLAB ON SOUTH SIDE OF UFT STATION NO. 1
NAVD 1988 ELEVATION=429.18.

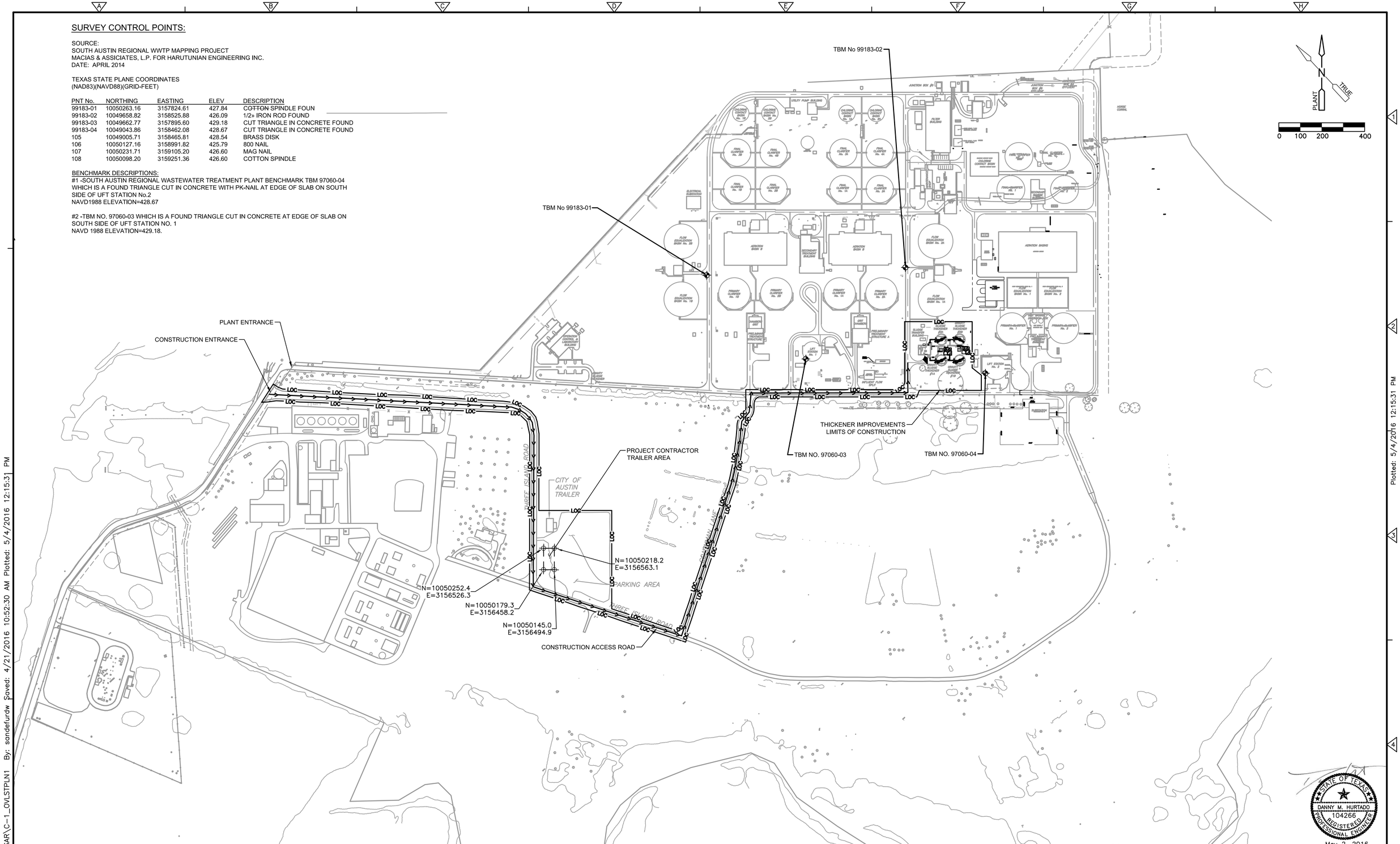

STATE OF TEXAS
DANNY M. HURTADO
104266
REGISTERED PROFESSIONAL ENGINEER
May 2, 2016

REV No	DATE	DRWN	CHKD	REMARKS

DESIGNED BY: WOO
DRAWN BY: SANDEFUR
SHEET CHK'D BY: HURTADO
CROSS CHK'D BY:
APPROVED BY:
DATE: MAY 2016

CDM Smith
Riata Corporate Park, 12357-A Riata Trace Parkway, Suite 210
Austin, TX 78727
Tel: (512) 346-1100
Texas Registration Number F-3043

CITY OF AUSTIN, TEXAS - AUSTIN WATER UTILITY
CIP 3333.016

SOUTH AUSTIN REGIONAL WWTP
THICKENER IMPROVEMENTS PROJECT

OVERALL SITE AND
SURVEY CONTROL PLAN

PROJECT No 590-104217
FILE NAME: C-1_OVLSTPLN1

SHEET No
C-1

BID SET

S:\Acad\104217_SAR\C-1_OVLSTPLN1.dwg, C-1, 5/4/2016 12:15:25 PM, sandefurdw, DWG To PDF.pc3
S:\ACAD\104217_SAR\C-1_OVLSTPLN1 By: sandefurdw Saved: 4/21/2016 10:52:30 AM Plotted: 5/4/2016 12:15:31 PM
Plotted: 5/4/2016 12:15:31 PM

S:\Acad\104217_SAR\C-2_ExSTPLN.dwg, C-2, 5/4/2016 12:16:02 PM, sandefurdw, DWG To PDF.pc3

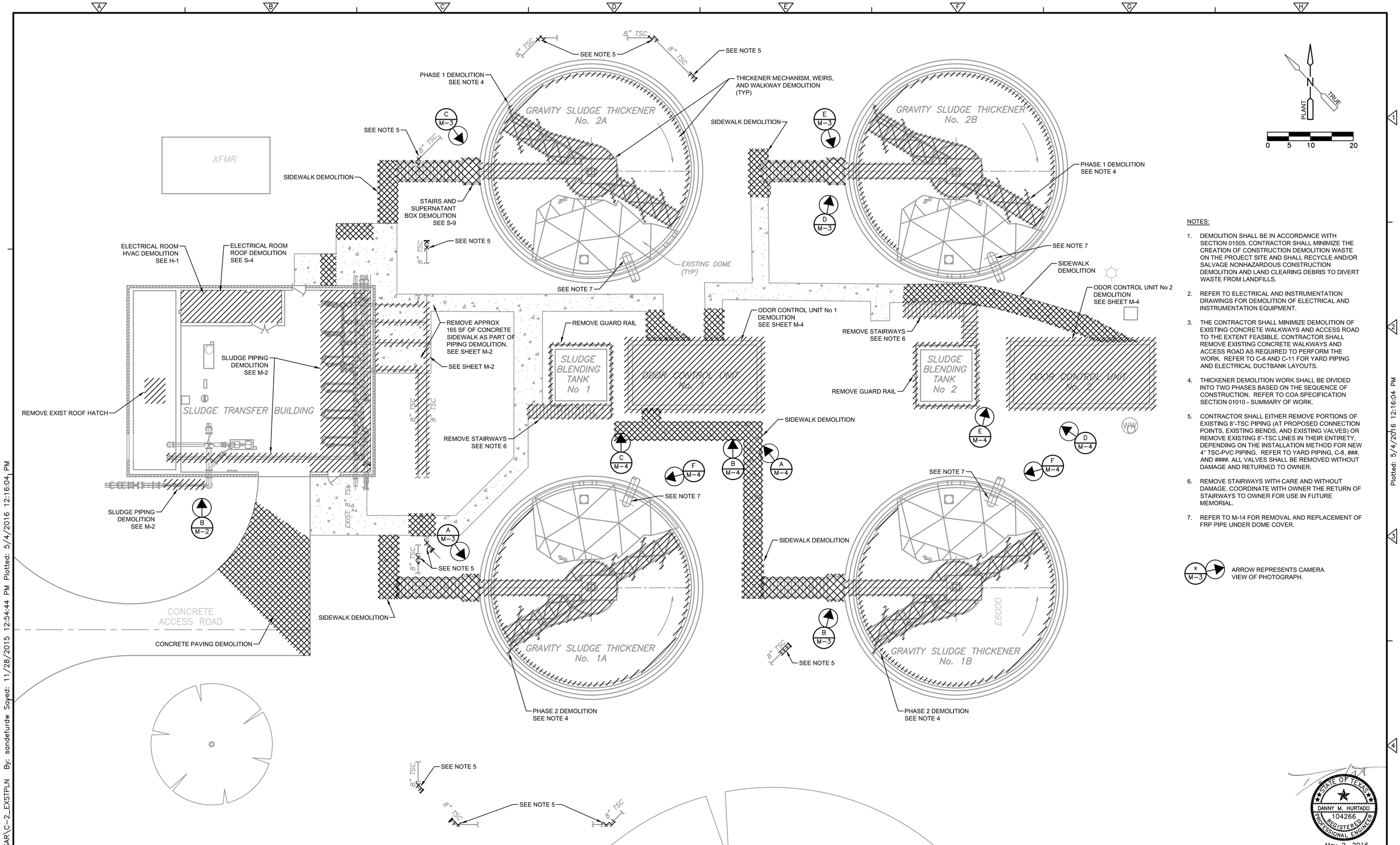

NOTES:

1. DEMOLITION SHALL BE IN ACCORDANCE WITH SECTION 01505. CONTRACTOR SHALL MINIMIZE THE CREATION OF CONSTRUCTION DEMOLITION WASTE ON THE PROJECT SITE AND SHALL RECYCLE AND/OR SALVAGE NONHAZARDOUS CONSTRUCTION DEMOLITION AND LAND CLEARING DEBRIS TO DIVERT WASTE FROM LANDFILLS.
2. REFER TO ELECTRICAL AND INSTRUMENTATION DRAWINGS FOR DEMOLITION OF ELECTRICAL AND INSTRUMENTATION EQUIPMENT.
3. THE CONTRACTOR SHALL MINIMIZE DEMOLITION OF EXISTING CONCRETE WALKWAYS AND ACCESS ROAD TO THE EXTENT FEASIBLE. CONTRACTOR SHALL REMOVE EXISTING CONCRETE WALKWAYS AND ACCESS ROAD AS REQUIRED TO PERFORM THE WORK. REFER TO C-8 AND C-11 FOR YARD PIPING AND ELECTRICAL DUCTBANK LAYOUTS.
4. THICKENER DEMOLITION WORK SHALL BE DIVIDED INTO TWO PHASES BASED ON THE SEQUENCE OF CONSTRUCTION. REFER TO COA SPECIFICATION SECTION 01010 - SUMMARY OF WORK.
5. CONTRACTOR SHALL EITHER REMOVE PORTIONS OF EXISTING 8"-TSC PIPING (AT PROPOSED CONNECTION POINTS, EXISTING BENDS, AND EXISTING VALVES) OR REMOVE EXISTING 8"-TSC LINES IN THEIR ENTIRETY, DEPENDING ON THE INSTALLATION METHOD FOR NEW 4" TSC-PVC PIPING. REFER TO YARD PIPING, C-8, ###, AND ####. ALL VALVES SHALL BE REMOVED WITHOUT DAMAGE AND RETURNED TO OWNER.
6. REMOVE STAIRWAYS WITH CARE AND WITHOUT DAMAGE. COORDINATE WITH OWNER THE RETURN OF STAIRWAYS TO OWNER FOR USE IN FUTURE MEMORIAL.
7. REFER TO M-14 FOR REMOVAL AND REPLACEMENT OF FRP PIPE UNDER DOME COVER.

X / M-3 — ARROW REPRESENTS CAMERA VIEW OF PHOTOGRAPH.

STATE OF TEXAS
DANNY M. HURTADO
104266
REGISTERED PROFESSIONAL ENGINEER
May 2, 2016

REV No	DATE	DRWN	CHKD	REMARKS

DESIGNED BY: WOO
DRAWN BY: SANDEFUR
SHEET CHK'D BY: HURTADO
CROSS CHK'D BY:
APPROVED BY:
DATE: MAY 2016

CDM Smith
Riata Corporate Park, 12357-A Riata Trace Parkway, Suite 210
Austin, TX 78727
Tel: (512) 346-1100
Texas Registration Number F-3043

CITY OF AUSTIN, TEXAS - AUSTIN WATER UTILITY
CIP 3333.016
SOUTH AUSTIN REGIONAL WWTP
THICKENER IMPROVEMENTS PROJECT

EXISTING SITE AND DEMOLITION PLAN

PROJECT No 590-104217
FILE NAME: C-2_EXSTPLN

SHEET No
C-2

BID SET

S:\ACAD\104217_SAR\C-2_EXSTPLN By: sandefurdw Saved: 11/28/2015 12:54:44 PM Plotted: 5/4/2016 12:16:04 PM

S:\Acad\104217_SAR\C-3_PrSTPLN.dwg, C-3, 5/4/2016 12:16:52 PM, sandefurdw, DWG To PDF.pc3

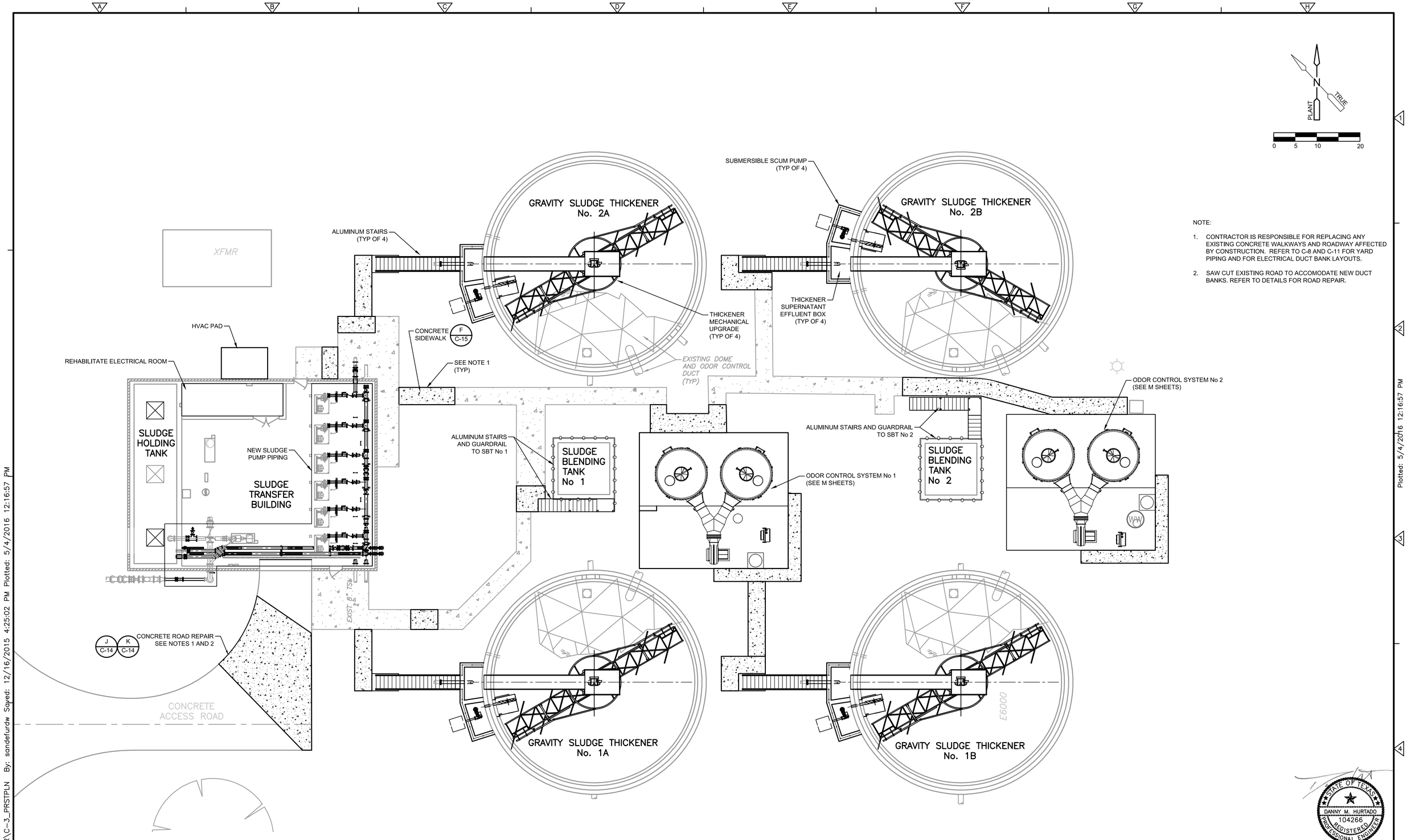

NOTE:

1. CONTRACTOR IS RESPONSIBLE FOR REPLACING ANY EXISTING CONCRETE WALKWAYS AND ROADWAY AFFECTED BY CONSTRUCTION. REFER TO C-8 AND C-11 FOR YARD PIPING AND FOR ELECTRICAL DUCT BANK LAYOUTS.
2. SAW CUT EXISTING ROAD TO ACCOMODATE NEW DUCT BANKS. REFER TO DETAILS FOR ROAD REPAIR.

STATE OF TEXAS
DANNY M. HURTADO
104266
REGISTERED PROFESSIONAL ENGINEER
May 2, 2016

REV No	DATE	DRWN	CHKD	REMARKS

DESIGNED BY: WOO
DRAWN BY: SANDEFUR
SHEET CHK'D BY: HURTADO
CROSS CHK'D BY:
APPROVED BY:
DATE: MAY 2016

CDM Smith
Riata Corporate Park, 12357-A Riata Trace Parkway, Suite 210
Austin, TX 78727
Tel: (512) 346-1100
Texas Registration Number F-3043

CITY OF AUSTIN, TEXAS - AUSTIN WATER UTILITY
CIP 3333.016
SOUTH AUSTIN REGIONAL WWTP
THICKENER IMPROVEMENTS PROJECT

SITE PLAN

PROJECT No 590-104217
FILE NAME: C-3_PRSTPLN
SHEET No
C-3

BID SET

S:\ACAD\104217_SAR\C-3_PRSTPLN By: sandefurdw Sayed: 12/16/2015 4:25:02 PM Plotted: 5/4/2016 12:16:57 PM

S:\Acad\104217_SAR\C-4_PLE&S_TP.dwg, EROSION-SED-CONTROL-PLAN, 5/4/2016 12:17:47 PM, sandefurdw, DWG To PDF.pc3

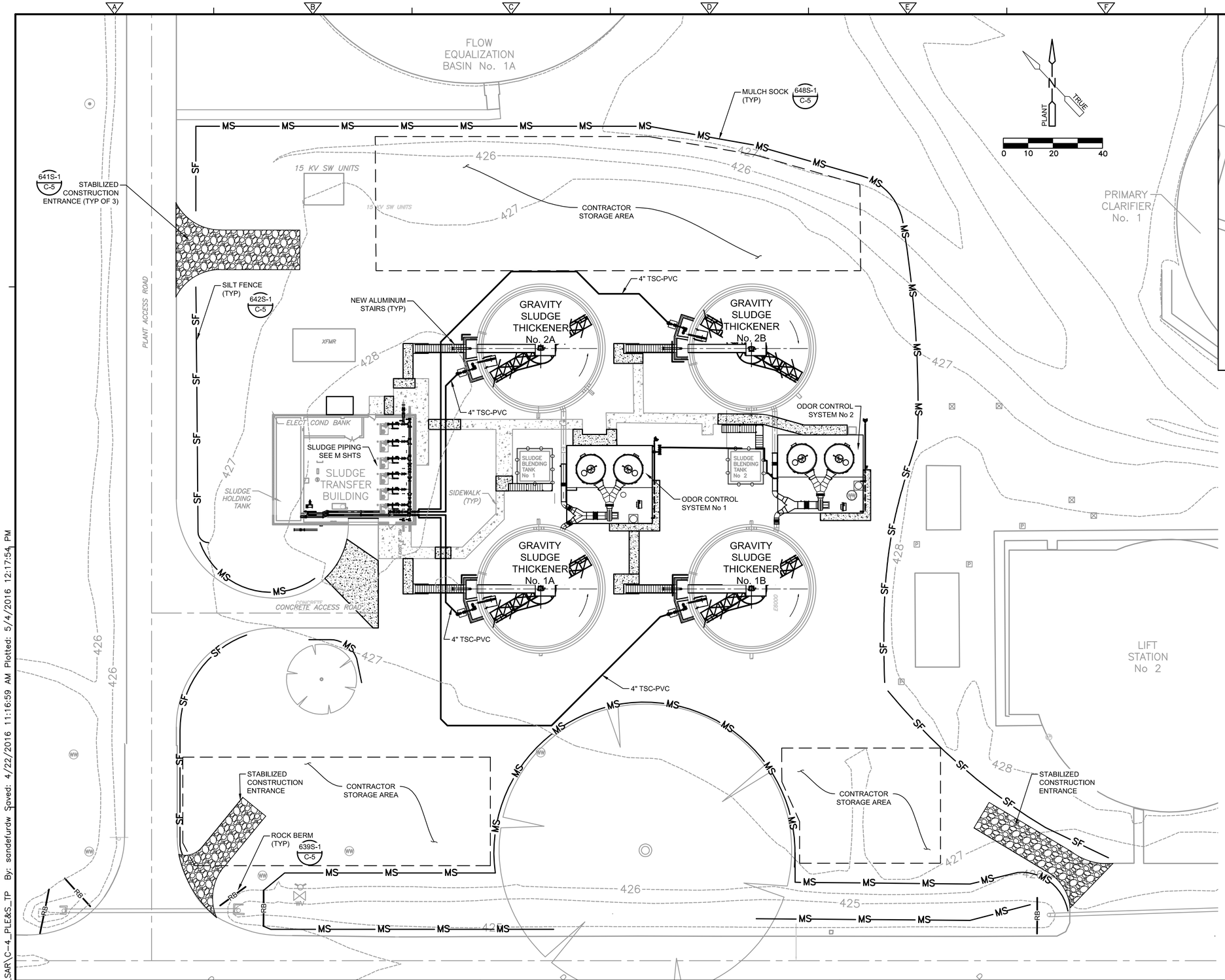

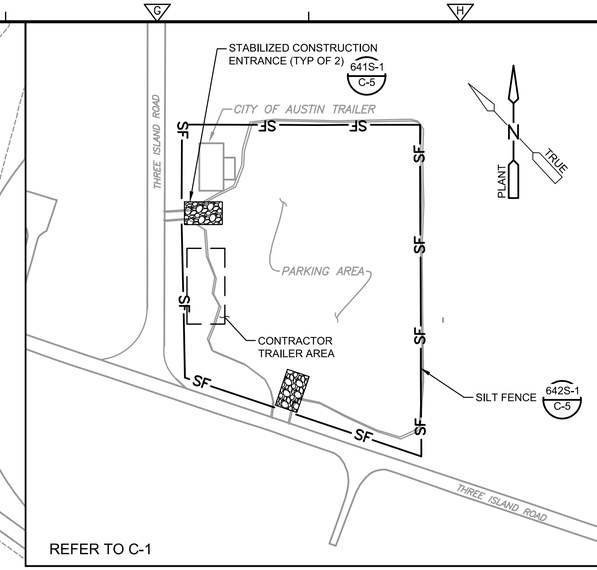

TRAILER SITE

PLAN

0 50 100 200

NOTES:

1. CONTRACTOR SHALL MINIMIZE AREAS OF DISTURBANCE TO THE EXTENT FEASIBLE. CONTRACTOR SHALL UTILIZE MULCH SOCKS, SILT FENCES, AND OTHER CONTROLS AS REQUIRED TO PROVIDE SUFFICIENT EROSION AND SEDIMENTATION CONTROL ON CONSTRUCTION SITE AND AT DISTURBED AREAS.
2. ENVIRONMENTAL INSPECTOR SHALL HAVE THE AUTHORITY TO MODIFY AND/OR ADD EROSION AND SEDIMENTATION CONTROLS SO THAT PROJECT MEETS ALL CITY OF AUSTIN ENVIRONMENTAL CRITERIA MANUAL (ECM) REQUIREMENTS.
3. CONTRACTOR SHALL UTILIZE DUST CONTROL MEASURES, SUCH AS MULCHING OR IRRIGATING THE DUST SOURCE, AS NECESSARY TO CONTROL DUST OR AS DIRECTED BY THE ENVIRONMENTAL INSPECTOR.
4. IF DISTURBED AREA IS TO REMAIN DORMANT MORE THAT 14 DAYS, THE DISTURBED AREA SHALL BE STABILIZED WITH ROCK RIP RAP, FIBER MATRIX, TURF MAT, OR OTHER APPROVED METHOD PER ECM 1.44(B)(3)(S).
5. AT CONCLUSION OF PROJECT CONSTRUCTION, DISTURBED AREAS SHALL BE REVEGETATED WITH NATIVE GRASSLAND SEEDING PER COA STANDARD SPECIFICATION 604S, INCLUDING TOP SOIL AND SEEDING
6. REFER TO SECTION 00810 FOR STORM WATER POLLUTION PREVENTION PLANS (SWP3) REQUIREMENTS.
7. OWNER MAY HAVE OTHER CONSTRUCTION CONTRACTS BEING PERFORMED SIMULTANEOUSLY NEAR AND/OR WITHIN THE LIMITS OF CONSTRUCTION. ALLOW OTHER CONTRACTORS REASONABLE OPPORTUNITY FOR INTRODUCTION AND STORAGE OF THEIR MATERIALS AND EXECUTION OF THEIR WORK. COORDINATE WITH OTHER CONTRACTORS AS REQUIRED.

STATE OF TEXAS
DANNY M. HURTADO
104266
REGISTERED PROFESSIONAL ENGINEER
May 2, 2016

REV No	DATE	DRWN	CHKD	REMARKS

DESIGNED BY: WOO
DRAWN BY: SANDEFUR
SHEET CHK'D BY: HURTADO
CROSS CHK'D BY:
APPROVED BY:
DATE: MAY 2016

CDM Smith
Riata Corporate Park, 12357-A Riata Trace Parkway, Suite 210
Austin, TX 78727
Tel: (512) 346-1100
Texas Registration Number F-3043

CITY OF AUSTIN, TEXAS - AUSTIN WATER UTILITY
CIP 3333.016

SOUTH AUSTIN REGIONAL WWTP
THICKENER IMPROVEMENTS PROJECT

EROSION AND SEDIMENTATION CONTROL PLAN

PROJECT No 590-104217
FILE NAME: C-4_PLE&S_TP

SHEET No
C-4

BID SET

S:\ACAD\104217_SAR\C-4_PLE&S_TP By: sandefurdw Saved: 4/22/2016 11:16:59 AM Plotted: 5/4/2016 12:17:54 PM

S:\Acad\104217_SAR\C-5-7_GPP_STDDTL.dwg, C-5, 5/4/2016 12:18:08 PM, sandefurdw, DWG To PDF.pc3

CITY OF AUSTIN – STANDARD NOTES EROSION AND SEDIMENTATION CONTROL (MODIFIED FOR USE ON GENERAL PERMIT PROJECTS)

1. THE CONTRACTOR SHALL INSTALL EROSION/SEDIMENTATION CONTROLS AND TREE/NATURAL AREA PROTECTIVE FENCING PRIOR TO ANY SITE PREPARATION WORK (CLEARING, GRUBBING, OR EXCAVATION).

2. THE PLACEMENT OF EROSION/SEDIMENTATION CONTROLS SHALL BE IN ACCORDANCE WITH THE ENVIRONMENTAL CRITERIA MANUAL AND THE APPROVED EROSION AND SEDIMENTATION CONTROL PLAN.

3. THE PLACEMENT OF TREE/NATURAL AREA PROTECTIVE FENCING SHALL BE IN ACCORDANCE WITH THE CITY OF AUSTIN STANDARD NOTES FOR TREE AND NATURAL AREA PROTECTION AND THE APPROVED GRADING/TREE AND NATURAL AREA PLAN.

4. A PRE–CONSTRUCTION CONFERENCE SHALL BE HELD ON–SITE WITH THE CONTRACTOR, DESIGN ENGINEER, PERMIT APPLICANT, AND GENERAL PERMIT PROGRAM REPRESENTATIVE AFTER INSTALLATION OF THE EROSION/SEDIMENTATION CONTROLS AND THE TREE/NATURAL AREA PROTECTION MEASURES AND PRIOR TO BEGINNING ANY SITE PREPARATION WORK. THE CONTRACTOR SHALL NOTIFY THE GENERAL PERMIT PROGRAM OFFICE AT 512/974–6330, AT LEAST 3 DAYS PRIOR TO THE MEETING DATE.

5. ANY SIGNIFICANT VARIATION IN MATERIALS OR LOCATIONS OF CONTROLS OR FENCES FROM THOSE SHOWN ON THE APPROVED PLANS MUST BE APPROVED BY THE REVIEWING ENGINEER AND THE GENERAL PERMIT PROGRAM REPRESENTATIVE.

6. THE CONTRACTOR IS REQUIRED TO INSPECT THE CONTROLS AND FENCES AT DAILY INTERVALS AND AFTER SIGNIFICANT RAINFALL EVENTS TO INSURE THAT THEY ARE FUNCTIONING PROPERLY. THE PERSON(S) RESPONSIBLE FOR MAINTENANCE OF CONTROLS AND FENCES SHALL IMMEDIATELY MAKE ANY NECESSARY REPAIRS TO DAMAGED AREAS. SILT ACCUMULATION AT CONTROLS MUST BE REMOVED WHEN THE DEPTH REACHES SIX (6) INCHES. SILT ACCUMULATION AT INLET DEVICES SHOULD BE REMOVED WHEN THE DEPTH REACHES TWO (2) INCHES.

7. PRIOR TO FINAL ACCEPTANCE BY THE CITY, HAUL ROADS AND WATERWAY CROSSINGS CONSTRUCTED FOR TEMPORARY CONTRACTOR ACCESS MUST BE REMOVED, ACCUMULATED SEDIMENT REMOVED FROM THE WATERWAY AND THE AREA RESTORED TO THE ORIGINAL GRADE AND REVEGETATED. ALL LAND CLEARING DEBRIS SHALL BE DISPOSED OF IN APPROVED SPOIL DISPOSAL SITES.

8. ALL WORK MUST STOP IF A VOID IN THE ROCK SUBSTRATE IS DISCOVERED WHICH IS ONE SQUARE FOOT OR LARGER IN TOTAL AREA, BLOWS AIR FROM WITHIN THE SUBSTRATE, AND/OR CONSISTENTLY RECEIVES WATER DURING ANY RAIN EVENT. AT THIS TIME, IT IS THE RESPONSIBILITY OF THE PROJECT MANAGER TO IMMEDIATELY CONTACT THE GENERAL PERMIT PROGRAM REPRESENTATIVE FOR FURTHER INVESTIGATION.

9. FIELD REVISIONS TO THE EROSION/SEDIMENTATION CONTROL PLAN MAY BE REQUIRED BY THE GENERAL PERMIT PROGRAM REPRESENTATIVE DURING THE COURSE OF CONSTRUCTION TO CORRECT CONTROL INADEQUACIES. ANY REVISIONS TO THE PERMITTED PLAN MUST BE APPROVED BY THE GENERAL PERMIT PROGRAM OFFICE OF THE PLANNING AND DEVELOPMENT REVIEW DEPARTMENT.

10. PERMANENT EROSION/SEDIMENTATION CONTROL: ALL DISTURBED AREAS SHALL BE RESTORED IN ACCORDANCE WITH THE CONTRACT DOCUMENTS. WHERE THE CRITERIA MANUAL AND CONTRACT DOCUMENTS DIFFER THE MOST ENVIRONMENTALLY BENEFICIAL MATERIALS/METHOD SHALL BE REQUIRED UNLESS OTHERWISE APPROVED BY THE GENERAL PERMIT PROGRAM REPRESENTATIVE.

11. DEVELOPER INFORMATION:

OWNER:
COMPANY: CITY OF AUSTIN
CONTACT: JOHN WEPRYK, P.E.
ADDRESS: 505 BARTON SPRINGS RD. 9TH FLR
AUSTIN, TX 78704
PHONE: (512) 974–7010
E–MAIL: JOHN.WEPRYK@AUSTINTEXAS.GOV

OWNER'S REPRESENTATIVE RESPONSIBLE FOR PLAN ALTERATIONS:
COMPANY: CITY OF AUSTIN
CONTACT: BRENT BASSETT, P.E.
ADDRESS: 1017 FALLWELL LANE
DEL VALLE, TEXAS 78617
PHONE: 512–972–0653
E–MAIL: BRENT.BASSETT@AUSTINTEXAS.GOV

PARTY RESPONSIBLE FOR EROSION/SEDIMENTATION CONTROL MAINTENANCE:
COMPANY: CONTRACTOR

PARTY RESPONSIBLE FOR TREE/NATURAL AREA PROTECTION MAINTENANCE:
COMPANY: CONTRACTOR

12. THE CONTRACTOR SHALL NOT DISPOSE OF SURPLUS EXCAVATED MATERIAL FROM THE SITE WITHOUT NOTIFYING THE GENERAL PERMIT PROGRAM REPRESENTATIVE, AT 974–6330, AT LEAST 48 HOURS PRIOR TO THE SPOILS REMOVAL. THIS NOTIFICATION SHALL INCLUDE THE DISPOSAL LOCATION AND A COPY OF THE PERMIT ISSUED TO RECEIVE THE MATERIAL.

13. INLET PROTECTION SHALL BE INSTALLED IMMEDIATELY PRIOR TO STREET WORK, AND WILL BE REMOVED AS SOON AS THE GENERAL PERMIT PROGRAM REPRESENTATIVE AGREES THAT THERE IS NO POTENTIAL FOR SEDIMENTATION.

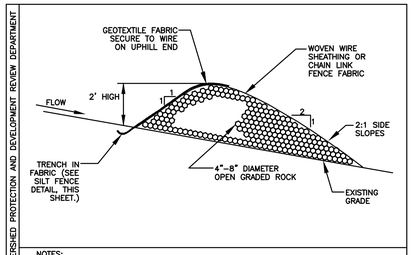

NOTES:
1. USE ONLY OPEN GRADED ROCK, 4–8 INCH DIAMETER, FOR STREAM FLOW CONDITION. USE OPEN GRADED ROCK, 3–5 INCH DIAMETER, FOR OTHER CONDITIONS.
2. ROCK BERM SHALL BE SECURED WITH A WOVEN WIRE SHEATHING HAVING MAXIMUM 1 INCH OPENING AND MINIMUM WIRE DIAMETER OF 20 GAUGE.
3. ROCK BERM SHALL BE INSPECTED WEEKLY OR AFTER EACH RAIN, AND THE STONE AND/OR FABRIC CORE–WOVEN WIRE SHEATHING SHALL BE REPLACED WHEN THE STRUCTURE CEASES TO FUNCTION AS INTENDED, DUE TO SILT ACCUMULATION AMONG THE ROCKS, WASHOUT, CONSTRUCTION TRAFFIC DAMAGE, ETC.
4. WHEN SILT REACHES A DEPTH EQUAL TO ONE–THIRD THE HEIGHT OF THE BERM OR ONE FOOT, WHICHEVER IS LESS, THE SILT SHALL BE REMOVED AND DISPOSED OF IN AN APPROVED SITE AND IN A MANNER AS TO NOT CREATE A SILTATION PROBLEM.
5. DAILY INSPECTION SHALL BE MADE ON SEVERE SERVICE ROCK BERMS; SILT SHALL BE REMOVED WHEN ACCUMULATION REACHES 6 INCHES.
6. WHEN SITE IS COMPLETELY STABILIZED, THE BERM AND ACCUMULATED SILT SHALL BE REMOVED AND DISPOSED OF IN AN APPROVED MANNER.

REV.	DATE:	DESCRIPTION:	APPROVED BY WATERSHED PROTECTION AND DEVELOPMENT REVIEW DEPARTMENT

FABRIC COVERED (SEVERE SERVICE) ROCK BERM

CITY OF AUSTIN		
GENERAL PERMIT PROGRAM	ADOPTED: SCALE: N.T.S. INITIAL:	STANDARD NO. N/A
APPROVED		

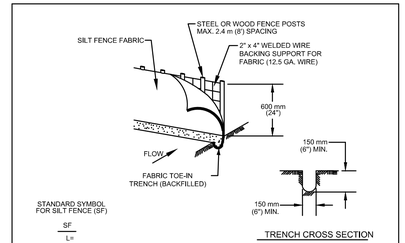

1. STEEL OR WOOD POSTS WHICH SUPPORT THE SILT FENCE SHALL BE INSTALLED ON A SLIGHT ANGLE TOWARD THE ANTICIPATED RUNOFF SOURCE. POST MUST BE EMBEDDED A MINIMUM OF 300 mm (12 INCHES). IF WOOD POSTS CANNOT ACHIEVE 300 mm (12 inches) DEPTH, USE STEEL POSTS.

2. THE TOE OF THE SILT FENCE SHALL BE TRENCHED IN WITH A SPADE OR MECHANICAL TRENCHER, SO THAT THE DOWNSLOPE FACE OF THE TRENCH IS FLAT AND PERPENDICULAR TO THE LINE OF FLOW.

3. THE TRENCH MUST BE A MINIMUM OF 150 mm (6 inches) DEEP AND 150 mm (6 inches) WIDE TO ALLOW FOR THE SILT FENCE FABRIC TO BE LAID IN THE GROUND AND BACKFILLED WITH COMPACTED MATERIAL.

4. SILT FENCE FABRIC SHOULD BE SECURELY FASTENED TO EACH STEEL OR WOOD SUPPORT POST OR TO WOVEN WIRE , WHICH IS IN TURN ATTACHED TO THE STEEL OR WOOD FENCE POST.

5. INSPECTION SHALL BE MADE WEEKLY OR AFTER EACH RAINFALL EVENT AND REPAIR OR REPLACEMENT SHALL BE MADE PROMPTY AS NEEDED.

6. SILT FENCE SHALL BE REMOVED WHEN THE SITE IS COMPLETELY STABILIZED SO AS NOT TO BLOCK OR IMPEDE STORM FLOW OR DRAINAGE.

7. ACCUMULATED SILT SHALL BE REMOVED WHEN IT REACHES A DEPTH OF 150 mm (6 inches). THE SILT SHALL BE DISPOSED OF ON AN APPROVED SITE AND IN SUCH A MANNER THAT WILL NOT CONTRIBUTE TO ADDITIONAL SILTATION.

CITY OF AUSTIN WATERSHED PROTECTION DEPARTMENT		SILT FENCE	
RECORD COPY SIGNED BY MORGAN BYARS	09/01/2011 ADOPTED	THE ARCHITECT/ENGINEER ASSUMES RESPONSIBILITY FOR APPROPRIATE USE OF THIS STANDARD.	STANDARD NO. 642S-1

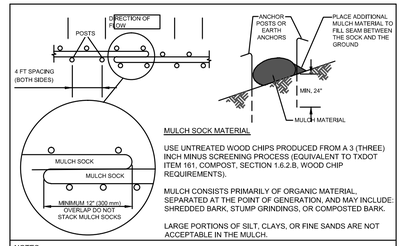

MULCH SOCK MATERIAL

USE UNTREATED WOOD CHIPS PRODUCED FROM A 3 (THREE) INCH MINUS SCREENING PROCESS (EQUIVALENT TO TXDOT ITEM 161, COMPOST, SECTION 1.6.2.B, WOOD CHIP REQUIREMENTS).

MULCH CONSISTS PRIMARILY OF ORGANIC MATERIAL, SEPARATED AT THE POINT OF GENERATION, AND MAY INCLUDE: SHREDDED BARK, STUMP GRINDINGS, OR COMPOSTED BARK.

LARGE PORTIONS OF SILT, CLAYS, OR FINE SANDS ARE NOT ACCEPTABLE IN THE MULCH.

NOTES:

1. STEEL OR WOOD POSTS WHICH SUPPORT THE MULCH SOCK SHALL BE INSTALLED ON A SLIGHT ANGLE TOWARD THE ANTICIPATED RUNOFF SOURCE. POST MUST BE EMBEDDED A MINIMUM OF 600mm (24 inches). IF WOOD POSTS CANNOT ACHIEVE 600mm (24 inches) DEPTH, USE STEEL POSTS. EARTH ANCHORS ARE ALSO ACCEPTABLE.

2. THE TOE OF THE MULCH SOCK SHALL BE PLACED SO THAT THE MULCH SOCK IS FLAT AND PERPENDICULAR TO THE LINE OF FLOW. IN ORDER TO PREVENT WATER FROM FLOWING BETWEEN THE JOINTS OF ADJACENT ENDS OFMULCH SOCKS, LAP THE ENDS OF ADJACENT MULCH SOCKS A MINIMUM OF 300mm (12 inches).

3. MULCH MATERIAL MUST BE FREE OF REFUSE, PHYSICAL CONTAMINANTS, AND MATERIAL TOXIC TO PLANT GROWTH; IT IS NOT ACCEPTABLE FOR THE MULCH MATERIAL TO CONTAIN GROUND CONSTRUCTION DEBRIS, BIOSOLIDS, OR MANURE.

4. SOCK MATERIAL WILL BE 100% BIODEGRADABLE, PHOTODEGRADABLE, OR RECYCLABLE SUCH AS BURLAP, TWINE, UV PHOTOBIODEGRADABLE PLASTIC, POLYESTER, OR ANY OTHER ACCEPTABLE MATERIAL.

5. MULCH SOCKS SHOULD BE USED AT THE BASE OF SLOPES NO STEEPER THAN 2:1 AND SHOULD NOT EXCEED THE MAXIMUM SPACING CRITERIA PROVIDED IN CITY OF AUSTIN ENVIRONMENTAL CRITERIA MANUAL TABLE 1.4.5.F.1 FOR A GIVEN SLOPE CATEGORY.

6. ACCUMULATED SILT SHALL BE REMOVED WHEN IT REACHES A DEPTH OF 150mm (6 inches). THE SILT SHALL BE DISPOSED OF ON AN APPROVED SITE AND IN SUCH A MANNER THAT WILL NOT CONTRIBUTE TO ADDITIONAL SILTATION.

CITY OF AUSTIN WATERSHED PROTECTION DEPARTMENT		MULCH SOCK	
RECORD COPY SIGNED BY MORGAN BYARS	08/24/2010 ADOPTED	THE ARCHITECT/ENGINEER ASSUMES RESPONSIBILITY FOR APPROPRIATE USE OF THIS STANDARD.	STANDARD NO. 648S-1

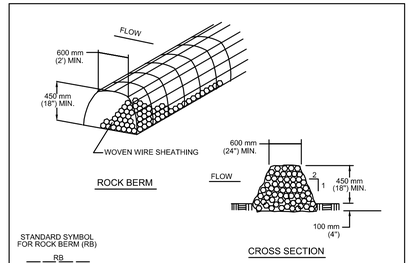

NOTES:
1. USE ONLY OPEN GRADED ROCK 75 to 125 mm (3 to 5") DIAMETER FOR ALL CONDITIONS.
2. THE ROCK BERM SHALL BE SECURED WITH A WOVEN WIRE SHEATHING HAVING MAXIMUM 25 mm (1") OPENING AND MINIMUM WIRE DIAMETER OF 12.9 mm (20 GAUGE).
3. THE ROCK BERM SHALL BE INSPECTED DAILY OR AFTER EACH RAIN, AND THE STONE AND/OR FABRIC CORE-WOVEN SHEATHING SHALL BE REPLACED WHEN THE STRUCTURE CEASES TO FUNCTION AS INTENDED, DUE TO SEDIMENT ACCUMULATION AMONG THE ROCKS, WASHOUT, CONSTRUCTION TRAFFIC DAMAGE, ETC.
4. IF SEDIMENT REACHES A DEPTH EQUAL TO ONE-THIRD THE HEIGHT OF THE BERM OR 150 mm (6"), WHICHEVER IS LESS, THE SEDIMENT SHALL BE REMOVED AND DISPOSED OF ON AN APPROVED SITE AND IN A MANNER THAT WILL NOT CREATE A SEDIMENTION PROBLEM.
5. WHEN THE SITE IS COMPLETELY STABILIZED,THE BERM AND ACCUMULATED SEDIMENT SHALL BE REMOVED AND DISPOSED OF IN AN APPROVED MANNER.

CITY OF AUSTIN WATERSHED PROTECTION DEPARTMENT		ROCK BERM	
RECORD COPY SIGNED BY MORGAN BYARS	8/24/2010 ADOPTED	THE ARCHITECT/ENGINEER ASSUMES RESPONSIBILITY FOR APPROPRIATE USE OF THIS STANDARD.	STANDARD NO. 639S-1

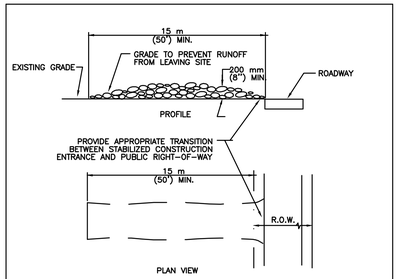

NOTES:
1. STONE SIZE: 75–125 mm (3–5") OPEN GRADED ROCK.
2. LENGTH: AS EFFECTIVE BUT NOT LESS THAN 15 m (50').
3. THICKNESS: NOT LESS THAN 200 mm (8").
4. WIDTH: NOT LESS THAN FULL WIDTH OF ALL POINTS OF INGRESS/EGRESS.
5. WASHING: WHEN NECESSARY, VEHICLE WHEELS SHALL BE CLEANED TO REMOVE SEDIMENT PRIOR TO ENTRANCE ONTO PUBLIC ROADWAY. WHEN WASHING IS REQUIRED, IT SHALL BE DONE ON AN AREA STABILIZED WITH CRUSHED STONE AND DRAINS INTO AN APPROVED TRAP OR SEDIMENT BASIN. ALL SEDIMENT SHALL BE PREVENTED FROM ENTERING ANY STORM DRAIN, DITCH OR WATERCOURSE USING APPROVED METHODS.
6. MAINTENANCE: THE ENTRANCE SHALL BE MAINTAINED IN A CONDITION THAT WILL PREVENT TRACKING OR FLOWING OF SEDIMENT ONTO PUBLIC ROADWAY. THIS MAY REQUIRE PERIODIC TOP DRESSING WITH ADDITIONAL STONE AS CONDITIONS DEMAND, AS WELL AS REPAIR AND CLEAN OUT OF ANY MEASURE DEVICES USED TO TRAP SEDIMENT. ALL SEDIMENTS THAT IS SPILLED, DROPPED, WASHED OR TRACKED ONTO PUBLIC ROADWAY MUST BE REMOVED IMMEDIATELY.
7. DRAINAGE: ENTRANCE MUST BE PROPERLY GRADED OR INCORPORATE A DRAINAGE SWALE TO PREVENT RUNOFF FROM LEAVING THE CONSTRUCTION SITE.

CITY OF AUSTIN WATERSHED PROTECTION DEPARTMENT		STABILIZED CONSTRUCTION ENTRANCE	
RECORD COPY SIGNED BY J. PATRICK MURPHY	5/23/00 ADOPTED	THE ARCHITECT/ENGINEER ASSUMES RESPONSIBILITY FOR APPROPRIATE USE OF THIS STANDARD.	STANDARD NO. 641S-1

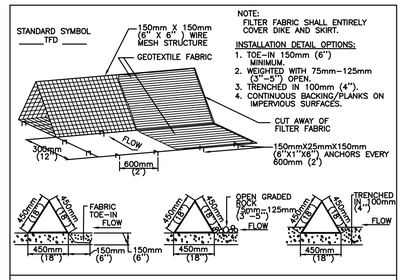

NOTE:
FILTER FABRIC SHALL ENTIRELY COVER DIKE AND SKIRT.

INSTALLATION DETAIL OPTIONS:
1. TOE–IN 150mm (6") MINIMUM.
2. WEIGHTED WITH 75mm–125mm (3"–5") OPEN.
3. TRENCHED IN 100mm (4").
4. CONTINUOUS BACKING/PLANKS ON IMPERVIOUS SURFACES.

GENERAL NOTES
1. DIKES SHALL BE PLACED IN A ROW WITH ENDS TIGHTLY ABUTTING THE ADJACENT DIKE.
2. THE FABRIC COVER AND SKIRT SHALL BE A CONTINUOUS WRAPPING OF GEOTEXTILE. THE SKIRT SHALL BE A CONTINUOUS EXTENSION OF THE FABRIC ON THE UPSTREAM FACE.
3. THE SKIRT SHALL BE WEIGHTED WITH A CONTINUOUS LAYER OF 75–125mm (3–5") OPEN GRADED ROCK OR TOED–IN 150mm (6") WITH MECHANICALLY COMPACTED MATERIAL. OTHERWISE, THE ENTIRE STRUCTURE SHALL BE TRENCHED IN 100mm (4").
4. DIKES AND SKIRT SHALL BE SECURELY ANCHORED IN PLACE USING 150mm (6") WIRE STAPLES ON 600mm (2') CENTERS ON BOTH EDGES AND SKIRT, OR STAKE USING 10M (3/8 ") DIAMETER RE–BAR WITH TEE ENDS.
5. FILTER MATERIAL SHALL BE LAPPED OVER ENDS 150mm (6") TO COVER DIKE TO DIKE JOINTS. JOINTS SHALL BE FASTENED WITH GALVANIZED SHOAT RINGS.
6. THE DIKE STRUCTURE SHALL BE MW40–150mmX150mm (6 GA. 6"X6") WIRE MESH, 450mm (18") ON A SIDE.
7. INSPECTION SHALL BE MADE WEEKLY OR AFTER EACH RAINFALL EVENT AND REPAIR OR REPLACEMENT SHALL BE MADE PROMPTLY AS NEEDED BY THE CONTRACTOR.
8. ACCUMULATED SILT SHALL BE REMOVED WHEN IT REACHES A DEPTH OF 150mm (6") AND DISPOSED OF IN A MANNER WHICH WILL NOT CAUSE ADDITIONAL SILTATION.
9. AFTER THE DEVELOPMENT SITE IS COMPLETLY STABILIZED, THE DIKES AND ANY REMAINING SILT SHALL BE REMOVED. SILT SHALL BE DISPOSED OF AS INDICATED IN GENERAL NOTE 8 ABOVE.

CITY OF AUSTIN WATERSHED PROTECTION DEPARTMENT		TRIANGULAR SEDIMENT FILTER DIKE	
RECORD COPY SIGNED BY J. PATRICK MURPHY	3/27/00 ADOPTED	THE ARCHITECT/ENGINEER ASSUMES RESPONSIBILITY FOR APPROPRIATE USE OF THIS STANDARD.	STANDARD NO. 628S

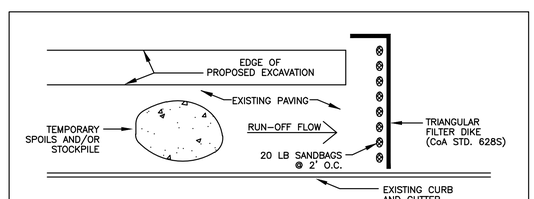

NOTES:

1. THE TEMPORARY SPOILS/STOCKPILE STORAGE AREA AND STAGING AREA MAY BE LOCATED DIRECTLY ADJACENT TO THE EXCAVATION AND ON THE PAVEMENT.

2. ANY SPOIL NOT INTENDED TO BE REUSED WILL BE HAULED TO AN APPROVED OR PERMITTED DISPOSAL SITE DAILY.

3. INSTALL TRIANGULAR SEDIMENT FILTER DIKE (DETAIL 628S) ACROSS FULL WIDTH OF TRAFFIC CLOSURE AND DOWNSTREAM OF CONSTRUCTION AREA, PERPENDICULAR TO CURB AND PLACED TO EFFECTIVELY CATCH AND CONTAIN SEDIMENT LADEN RUNOFF FROM THE EXCAVATED AREA. FILTER DIKE TO FOLLOW ACTIVE CONSTRUCTION. REMOVING AND RE–SETTING FILTER DIKE IS CONSIDERED SUBSIDIARY TO BARRICADES AND TRAFFIC HANDLING.

ADDITIONAL EROSION/SEDIMENTATION CONTROL FOR WORK IN PAVED AREAS FOR GENERAL PERMIT PROGRAM PROJECTS

CITY OF AUSTIN 1839

GENERAL PERMIT OFFICE
EROSION/SEDIMENTATION CONTROL
CITY OF AUSTIN STANDARD NOTES AND DETAILS

NO.	BY	DATE	REVISIONS REMARKS

SHEET INFORMATION
DATE APRIL 25, 2011
SHEET C-5 OF
CAD REF. NO. E-SDWG

GENERAL PERMIT PROGRAM

S:\ACAD\104217_SAR\C-5-7_GPP_STDDTL By: sandefurdw Saved: 4/30/2016 3:12:24 PM Plotted: 5/4/2016 12:18:10 PM

Plotted: 5/4/2016 12:18:10 PM

S:\Acad\104217_SAR\C-4_PLE&S_TP By: sandefurdw Saved: 4/22/2016 11:16:59 AM Plotted: 5/4/2016 12:18:58 PM
S:\Acad\104217_SAR\C-4_PLE&S_TP.dwg, TREE PROTECTION, 5/4/2016 12:18:54 PM, sandefurdw, DWG To PDF.pc3
Plotted: 5/4/2016 12:18:58 PM

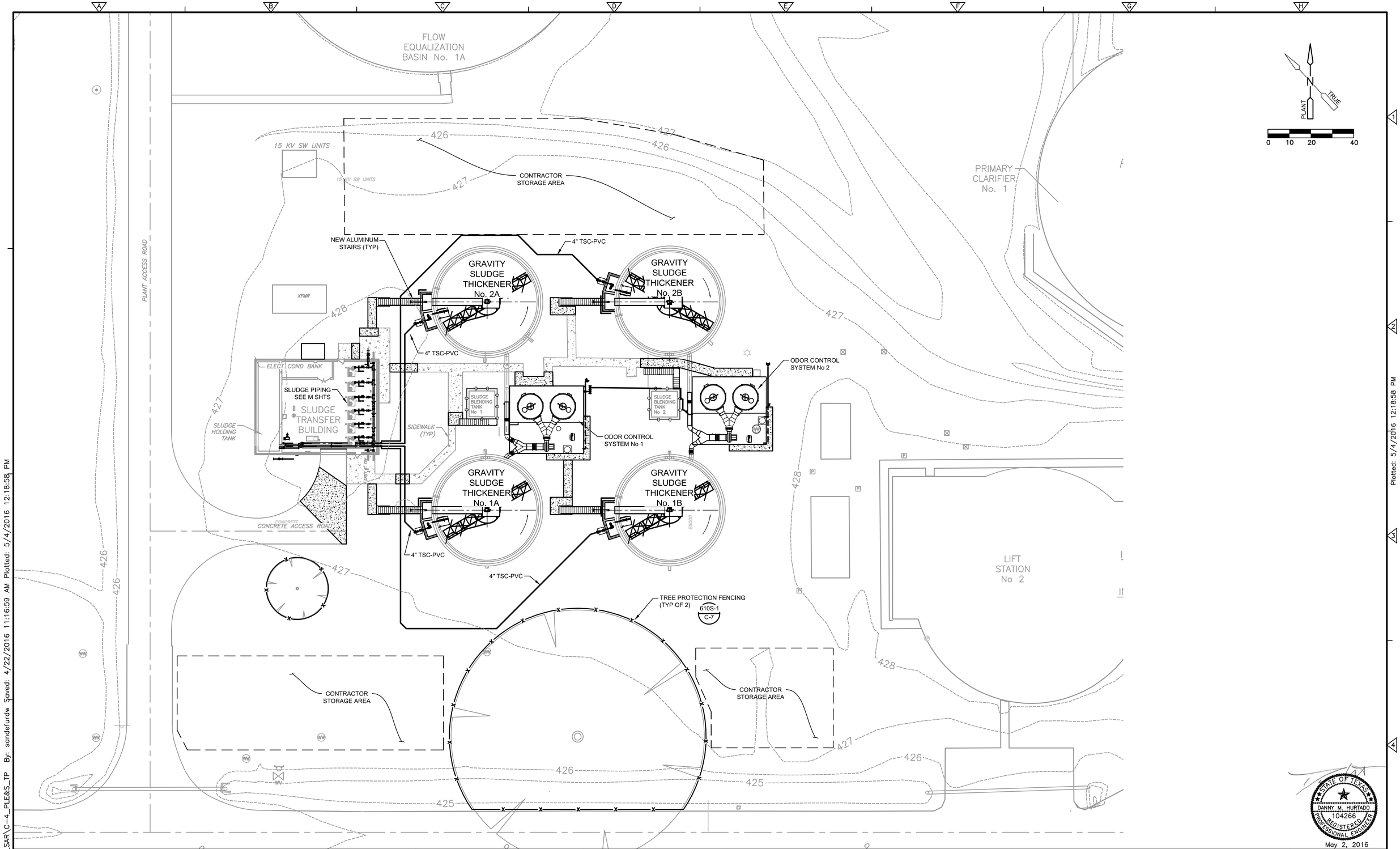

STATE OF TEXAS
DANNY M. HURTADO
104266
REGISTERED PROFESSIONAL ENGINEER
May 2, 2016

REV No	DATE	DRWN	CHKD	REMARKS

DESIGNED BY: WOO
DRAWN BY: SANDEFUR
SHEET CHK'D BY: HURTADO
CROSS CHK'D BY:
APPROVED BY:
DATE: MAY 2016

CDM Smith
Riata Corporate Park, 12357-A Riata Trace Parkway, Suite 210
Austin, TX 78727
Tel: (512) 346-1100
Texas Registration Number F-3043

CITY OF AUSTIN, TEXAS - AUSTIN WATER UTILITY
CIP 3333.016

SOUTH AUSTIN REGIONAL WWTP
THICKENER IMPROVEMENTS PROJECT

TREE PROTECTION AND CONTRACTOR STORAGE AREA PLAN

PROJECT No 590-104217
FILE NAME: C-4_PLE&S_TP

SHEET No
C-6

BID SET

S:\Acad\104217_SAR\C-5-7_GPP_STDDTL.dwg, C-7, 5/4/2016 12:19:12 PM, sandefurdw, DWG To PDF.pc3

S:\ACAD\104217_SAR\C-5-7_GPP_STDDTL By: sandefurdw Saved: 4/30/2016 3:12:24 PM Plotted: 5/4/2016 12:19:13 PM

GENERAL PERMIT PROGRAM (GPP) STANDARD ENVIRONMENTAL NOTES:

ADDITIONAL AREAS:

1. ANY ADDITIONAL AREAS REQUIRED FOR CONSTRUCTION OF THIS PROJECT SHALL BE THE SOLE RESPONSIBILITY OF THE CONTRACTOR. CONTRACTOR MUST SECURE CITY OF AUSTIN APPROVAL OF PROPOSED ADDITIONAL AREAS PRIOR TO USE. APPROVAL OF "CORRECTION REQUEST" MUST BE SECURED FROM THE GENERAL PERMIT PROGRAM OFFICE OF THE PLANNING AND DEVELOPMENT REVIEW DEPARTMENT.

2. ALL ASSOCIATED PERMITS AND FEES SHALL BE THE SOLE RESPONSIBILITY OF THE CONTRACTOR.

3. IN ORDER TO SECURE APPROVAL FOR USE OF ADDITIONAL AREAS, CONTRACTOR MUST PROVIDE COMPLETE "CORRECTION REQUEST" SUBMITTAL TO GENERAL PERMIT PROGRAM OFFICE AND ALLOW A ONE WEEK COMMENT PERIOD FOR EACH REVIEW. CONTRACTOR SHOULD REQUEST INFORMATION ON THE ELEMENTS REQUIRED TO BE INCLUDED IN THE SUBMITTAL FROM THE OWNER'S REPRESENTATIVE OR THE GENERAL PERMIT PROGRAM OFFICE.

4. CONTRACTOR MUST INSTALL AND MAINTAIN EROSION/SEDIMENTATION CONTROLS AND TREE PROTECTION FOR ALL SUCH AREAS IN ACCORDANCE WITH THE CITY OF AUSTIN ENVIRONMENTAL CRITERIA MANUAL AND AS INCLUDED IN THE APPROVED SUBMITTAL OR DIRECTED IN THE FIELD BY THE GENERAL PERMIT PROGRAM REPRESENTATIVE.

5. A SIGNED COPY OF THE PLANS PERMITTED THROUGH THE GENERAL PERMIT PROGRAM MUST BE KEPT ON SITE AND ACCESSIBLE AT ALL TIMES DURING PROJECT CONSTRUCTION.

DEWATERING:

CONTRACTOR IS RESPONSIBLE FOR DEWATERING OF WORK AREA. CONTRACTOR MUST SECURE CITY OF AUSTIN APPROVAL OF PROPOSED DEWATERING PROCEDURES PRIOR TO INSTALLATION OR USE. APPROVAL MUST BE SECURED FROM THE GENERAL PERMIT PROGRAM (GPP) OFFICE OF THE PLANNING AND DEVELOPMENT REVIEW DEPARTMENT. CONTRACTOR MUST PROVIDE COMPLETE SUBMITTAL TO GPP OFFICE AND ALLOW AN ONE WEEK (MIN.) COMMENT PERIOD FOR EACH REVIEW. CONTACT THE GPP OFFICE FOR SUBMITTAL REQUIREMENTS.

FUEL STORAGE:

FUEL STORAGE IS PROHIBITED ON THIS PROJECT. ADDITIONALLY, THE CONTRACTOR IS REQUIRED TO NOTIFY THE GENERAL PERMIT PROGRAM OFFICE IMMEDIATELY FOLLOWING ANY SPILL OF FUEL OR OTHER TOXIC MATERIAL. CONTRACTOR IS REQUIRED TO FOLLOW-UP WITH WRITTEN DOCUMENTATION, INCLUDING A COMPLETE DESCRIPTION OF THE INCIDENT, MATERIAL SPILLED, AND ACTIONS TAKEN TO CONTAIN AND CLEAN-UP MATERIAL.

FUGITIVE DUST CONTROL:

ALL PROJECTS APPROVED THROUGH THE GENERAL PERMIT PROGRAM (GPP) MUST COMPLY WITH THE CODE OF THE CITY OF AUSTIN AND THE ENVIRONMENTAL CRITERIA MANUAL REQUIREMENTS TO CONTROL AIRBORNE DUST. COMPLIANCE IS REQUIRED FOR ENTIRE PROJECT SITE AS WELL AS ASSOCIATED OPERATIONS. CONTACT THE GPP OFFICE FOR RECOMMENDED CONTROL METHODS.

SPOILS STORAGE:

NO SPOILS STORAGE IS ALLOWED WITHIN A CRITICAL WATER QUALITY ZONE, A 100-YEAR FLOODPLAIN, OR ON A SLOPE WITH A GRADIENT OF MORE THAN 15 PERCENT.

SOD INSTALLATION:

REVEGETATION WITHIN MANAGED TURF AREAS MUST BE ACCOMPLISHED THROUGH THE INSTALLATION OF SOLID BLOCK GRASS SOD. SOD TYPE MUST MATCH ADJACENT GRASS TYPE. QUESTIONS REGARDING SOD TYPE WILL BE RESOLVED BY THE GENERAL PROGRAM PERMIT REPRESENTATIVE. REFER TO CITY OF AUSTIN STANDARD SPECIFICATION ITEM NO. 602S: SODDING FOR EROSION CONTROL, UNLESS OTHERWISE NOTED ON THE APPROVED PLANS.

PROJECT SEQUENCE:
(REFER TO FULL PLAN SET FOR PROJECT-SPECIFIC ADDITIONS, IF APPLICABLE.)

PRIOR TO CONSTRUCTION:

1. SECURE APPLICABLE COA PERMITS, INCLUDING APPROVAL UNDER GENERAL PERMIT PROGRAM AND RIGHT-OF-WAY EXCAVATION PERMIT.

2. NOTIFY GENERAL PERMIT PROGRAM REPRESENTATIVE PRIOR TO PLACEMENT OF E/S CONTROLS AND TREE PROTECTION FENCING. ALL PROPOSED PHASING OF CONTROLS MUST BE SUBMITTED TO AND APPROVED BY THE GENERAL PERMIT PROGRAM REPRESENTATIVE PRIOR TO THE FIELD PRE-CONSTRUCTION CONFERENCE.

3. NOTIFY COA TEMPORARY TRAFFIC CONTROL REPRESENTATIVE PRIOR TO PLACEMENT OF TEMPORARY TRAFFIC CONTROLS. ALL PROPOSED PHASING OF CONTROLS MUST BE INDICATED ON APPROVED TEMPORARY TRAFFIC CONTROL PLAN AND SEALED BY PROFESSIONAL ENGINEER.

4. PLACE TEMPORARY E/S CONTROLS AND TREE PROTECTION FENCING PRIOR TO BEGINNING ANY EXCAVATION. INSTALL C.I.P. SIGN, IF APPLICABLE.

5. HOLD ENVIRONMENTAL PRE-CONSTRUCTION CONFERENCE ON SITE WITH THE CONTRACTOR, OWNER'S REPRESENTATIVE, AND GENERAL PERMIT PROGRAM REPRESENTATIVE AFTER INSTALLATION OF E/S CONTROLS AND TREE PROTECTION FENCING AND PRIOR TO ANY TRENCHING OPERATIONS.

6. PLACE TEMPORARY TRAFFIC CONTROL DEVICES.

PROJECT CONSTRUCTION:

1. BEGIN CONSTRUCTION. NOTIFY GENERAL PERMIT PROGRAM REPRESENTATIVE A MINIMUM OF 48 HOURS IN ADVANCE OF TRANSITION BETWEEN PHASES.

2. CONTACT GENERAL PERMIT OFFICE TO SCHEDULE FIELD INSPECTION PRIOR TO BEGINNING INSTALLATION OF PERMANENT E/S CONTROLS.

3. COMPLETE RESTORATION OF ALL AREAS DISTURBED BY CONSTRUCTION ACTIVITIES FOR THIS PROJECT. (PERMANENT E/S CONTROLS)

4. REMOVE TEMPORARY TRAFFIC CONTROL DEVICES RELATED TO WORK AREAS OUTSIDE OF THE STREET.

5. HOLD ENVIRONMENTAL POST-CONSTRUCTION CONFERENCE ON SITE WITH THE CONTRACTOR, OWNER'S REPRESENTATIVE, AND GENERAL PERMIT PROGRAM REPRESENTATIVE. ALL PERMANENT E/S CONTROLS MUST BE ACCEPTED BY THE GENERAL PERMIT PROGRAM REPRESENTATIVE. PERMANENT CONTROLS SHALL CONSIST OF REVEGETATION PER SECTIONS 602, 604S, AND 609S AS INDICATED ON APPROVED PLANS.

6. FOLLOWING FINAL ACCEPTANCE OF PERMANENT E/S CONTROLS BY THE GENERAL PERMIT PROGRAM REPRESENTATIVE, REMOVE TEMPORARY E/S CONTROLS. CLEAN EXISTING STORM DRAINAGE SYSTEMS AS NECESSARY DUE TO CONSTRUCTION OPERATIONS.

7. DRESS-UP AND RESTORE ANY AREAS DISTURBED BY REMOVAL OF TEMPORARY E/S CONTROLS DESCRIBED ABOVE.

REQUIRED SUBMITTALS:

SUBMITTALS REQUIRED TO BE APPROVED BY GENERAL PERMIT PROGRAM REPRESENTATIVE INCLUDE: SUBMITTALS TRIGGERED BY CITY OF AUSTIN SERIES 600 SPECIFICATIONS AND RELATED SPECIAL PROVISIONS/SPECIFICATIONS, CONSTRUCTION SCHEDULE, TREE PROTECTION, P-6 AND OTHER ROOT ZONE PROTECTION/MITIGATION MEASURES, DEWATERING PLAN, WATERING SCHEDULE FOR REVEGETATION AREAS, AND ANY VEGETATIVE REPLACEMENT PROPOSALS, IF NOT ALREADY PART OF THE PERMITTED PLAN SET.

CITY OF AUSTIN – STANDARD NOTES TREE AND NATURAL AREA PROTECTION (MODIFIED FOR USE ON GENERAL PERMIT PROJECTS)

1. ALL TREES AND NATURAL AREAS SHOWN ON PLAN TO BE PRESERVED SHALL BE PROTECTED DURING CONSTRUCTION WITH TEMPORARY MEASURES.

2. PROTECTIVE MEASURES SHALL BE INSTALLED ACCORDING TO CITY OF AUSTIN STANDARDS FOR TREE PROTECTION.

3. PROTECTIVE MEASURES SHALL BE INSTALLED PRIOR TO THE START OF ANY SITE PREPARATION WORK (CLEARING, GRUBBING OR GRADING), AND SHALL BE MAINTAINED THROUGHOUT ALL PHASES OF THE PROJECT.

4. EROSION AND SEDIMENTATION CONTROL MEASURES SHALL BE INSTALLED OR MAINTAINED IN A MANNER WHICH DOES NOT RESULT IN SOIL BUILD-UP, COMPACTION OR CUTTING OF CRITICAL ROOT ZONE WITHIN TREE DRIP LINES.

5. TREE PROTECTION SHALL COMPLETELY SURROUND THE TREES OR GROUP OF TREES AND WILL BE LOCATED AT THE OUTERMOST LIMIT OF BRANCHES (DRIP LINE). FOR NATURAL AREAS, PROTECTIVE MEASURES SHALL FOLLOW THE LIMIT OF CONSTRUCTION LINE, IN ORDER TO PREVENT THE FOLLOWING:

   A. SOIL COMPACTION IN THE ROOT ZONE AREA RESULTING FROM VEHICULAR TRAFFIC OR STORAGE OF EQUIPMENT OR MATERIALS;

   B. ROOT ZONE DISTURBANCES DUE TO GRADE CHANGES (GREATER THAN 6 INCHES CUT OR FILL) OR TRENCHING NOT REVIEWED AND AUTHORIZED BY THE GENERAL PERMIT PROGRAM OFFICE OF THE PLANNING AND DEVELOPMENT REVIEW DEPARTMENT;

   C. WOUNDS TO EXPOSED ROOTS, TRUNK OR LIMBS BY MECHANICAL EQUIPMENT;

   D. OTHER ACTIVITIES DETRIMENTAL TO TREES SUCH AS CHEMICAL STORAGE, CEMENT TRUCK CLEANING, AND FIRES.

6. EXCEPTIONS TO INSTALLING PROTECTIVE FENCES AT CRITICAL ROOT ZONES MAY BE PERMITTED IN THE FOLLOWING CASES:

   A. WHERE THERE IS TO BE AN APPROVED GRADE CHANGE, IMPERMEABLE PAVING SURFACE, TREE WELL, OR OTHER SUCH SITE DEVELOPMENT, ERECT THE FENCE APPROXIMATELY 2 FEET BEYOND THE AREA DISTURBED;

   B. WHERE PERMEABLE PAVING IS TO BE INSTALLED, ERECT THE FENCE AT THE OUTER LIMITS OF THE PERMEABLE PAVING AREA

   C. WHERE TREES ARE CLOSE TO PROPOSED BUILDINGS, ERECT THE FENCE NO CLOSER THAN 6 FEET TO THE BUILDING

   D. WHERE THERE ARE SEVERE SPACE CONSTRAINTS DUE TO TRACT SIZE, OR OTHER SPECIAL REQUIREMENTS, CONTACT THE GENERAL PERMIT PROGRAM OFFICE AT 974-6330 TO DISCUSS ALTERNATIVES.

SPECIAL NOTE: FOR THE PROTECTION OF NATURAL AREAS, NO EXCEPTIONS TO INSTALLING FENCES AT THE LIMIT OF CONSTRUCTION LINE WILL BE PERMITTED.

WHERE ANY OF THE ABOVE EXCEPTIONS RESULT IN A FENCE 5 FEET OR CLOSER TO A TREE TRUNK, PROTECT THE TRUNK WITH STRAPPED-ON PLANKING TO A HEIGHT OF 8 FEET (OR TO THE LIMITS OF LOWER BRANCHING) IN ADDITION TO THE REDUCED FENCING.

7. WHERE ANY OF THE ABOVE EXCEPTIONS RESULT IN AREAS OF UNPROTECTED ROOT ZONES, THOSE AREAS SHOULD BE COVERED WITH 12 INCHES OF ORGANIC MULCH TO MINIMIZE SOIL COMPACTION DURING CONSTRUCTION. FILTER FABRIC UNDERLAYMENT MAY BE REQUIRED AT DIRECTION OF GENERAL PERMIT PROGRAM REPRESENTATIVE BASED ON SITE CONDITIONS AND CONSTRUCTION ACTIVITIES. MAXIMUM FOUR (4) INCHES DEPTH MAY BE LEFT IN PLACE AFTER CONSTRUCTION WITH APPROVAL FROM THE GENERAL PERMIT PROGRAM REPRESENTATIVE.

8. ALL GRADING WITHIN PROTECTED ROOT ZONE AREAS SHALL BE DONE BY HAND OR WITH SMALL EQUIPMENT TO MINIMIZE ROOT DAMAGE. PRIOR TO GRADING, RELOCATE PROTECTIVE FENCES TO 2 FEET BEHIND THE GRADE CHANGE AREA.

9. ANY ROOTS EXPOSED BY CONSTRUCTION ACTIVITY SHALL BE PRUNED FLUSH WITH THE SOIL. BACKFILL ROOT AREAS WITH GOOD QUALITY TOP SOIL AS SOON AS POSSIBLE. IF EXPOSED ROOT AREAS ARE NOT BACKFILLED WITHIN 2 DAYS, COVER THEM WITH ORGANIC MATERIAL IN A MANNER WHICH REDUCES SOIL TEMPERATURE AND MINIMIZES WATER LOSS DUE TO EVAPORATION.

10. PRIOR TO EXCAVATION OR GRADE CUTTING WITHIN TREE DRIPLINES, MAKE A CLEAN CUT BETWEEN THE DISTURBED AND UNDISTURBED ROOT ZONES WITH A ROCK SAW OR SIMILAR EQUIPMENT TO MINIMIZE DAMAGE TO REMAINING ROOTS.

11. TREES MOST HEAVILY IMPACTED BY CONSTRUCTION ACTIVITIES SHOULD BE WATERED DEEPLY ONCE A WEEK DURING PERIODS OF HOT, DRY WEATHER. TREE CROWNS SHOULD BE SPRAYED WITH WATER PERIODICALLY TO REDUCE DUST ACCUMULATION ON THE LEAVES.

12. ANY TRENCHING REQUIRED FOR THE INSTALLATION OF LANDSCAPE IRRIGATION SHALL BE PLACED AS FAR FROM EXISTING TREE TRUNKS AS POSSIBLE.

13. NO LANDSCAPE TOPSOIL DRESSING GREATER THAN 4 INCHES SHALL BE PERMITTED WITHIN THE DRIPLINE OF TREES. NO SOIL IS PERMITTED ON THE ROOT FLARE OF ANY TREE.

14. PRUNING TO PROVIDE CLEARANCE FOR STRUCTURES, VEHICULAR TRAFFIC AND EQUIPMENT SHALL TAKE PLACE BEFORE CONSTRUCTION BEGINS. SEE NOTE THREE (3) OF SUPPLEMENTAL TREE PROTECTION NOTES FOR ADDITIONAL REQUIREMENTS.

15. ALL FINISHED PRUNING MUST BE DONE ACCORDING TO RECOGNIZED, APPROVED STANDARDS OF THE INDUSTRY (REFERENCE THE NATIONAL ARBORIST ASSOCIATION PRUNING STANDARDS FOR SHADE TREES AVAILABLE ON REQUEST FROM THE GENERAL PERMIT PROGRAM OFFICE).

16. DEVIATIONS FROM THE ABOVE NOTES MAY BE CONSIDERED ORDINANCE VIOLATIONS IF THERE IS SUBSTANTIAL NONCOMPLIANCE OR IF A TREE SUSTAINS DAMAGE AS A RESULT.

17. TREES APPROVED FOR REMOVAL SHALL BE REMOVED IN A MANNER WHICH DOES NOT IMPACT TREES TO BE PRESERVED.

SUPPLEMENTAL TREE PROTECTION NOTES

1. ALL TREE PROTECTION MUST COMPLY WITH CITY OF AUSTIN REQUIREMENTS AS OUTLINED IN THE ENVIRONMENTAL CRITERIA MANUAL AND AS INDICATED BY STANDARD COA NOTES AND DETAILS INCLUDED WITHIN THIS DOCUMENT SET. CONTRACTOR SHALL INSTALL PROTECTION PRIOR TO PRE-CONSTRUCTION CONFERENCE, MAKE ADJUSTMENTS TO PROTECTION AS DIRECTED BY THE GPP REPRESENTATIVE, AND MAINTAIN PROTECTION UNTIL PROJECT IS COMPLETE.

2. TYPE AND LOCATION OF ALL TREE PROTECTION MUST BE APPROVED IN THE FIELD BY THE GENERAL PERMIT PROGRAM (GPP) REPRESENTATIVE PRIOR TO CONSTRUCTION.

3. WALK-THROUGH: CONTRACTOR SHALL CONDUCT WALK-THROUGH MEETING WITH GENERAL PERMIT PROGRAM REPRESENTATIVE PRIOR TO PERFORMING ANY PRUNING ACTIVITIES ON TREES IN PROJECT AREA. PURPOSE OF WALK-THROUGH WILL BE TWOFOLD. ONE PURPOSE WILL BE TO DETERMINE THE MINIMUM AMOUNT OF PRUNING NECESSARY TO ALLOW CONSTRUCTION WORK TO BE COMPLETED. SECOND PURPOSE WILL BE TO DETERMINE AREAS OF PROJECT IN WHICH EXHAUST DIVERTERS WILL BE REQUIRED ON CONSTRUCTION EQUIPMENT TO PREVENT SCORCHING OF EXISTING TREES.

4. ALL PRUNING MUST BE PERFORMED IN ACCORDANCE WITH ANSI A300 (PART 1) – 2001 AMERICAN NATIONAL STANDARD FOR TREE CARE OPERATIONS (PRUNING), OR LATEST APPROVED VERSION. THIS DOCUMENT MAY BE OBTAINED ONLINE FOR A FEE AT WWW.ANSI.ORG.

5. PRUNING SHALL BE DONE WITH CLEAN, SHARP TOOLS. TO PREVENT BARK TEARS, THE WEIGHT OF THE BRANCH SHALL BE REMOVED BEFORE MAKING FINAL PRUNING CUT.

6. ALL PRUNING SHALL PRESERVE THE NATURAL CHARACTER OF THE TREE.

7. ONLY COLLAR CUTS ARE ACCEPTABLE. NO FLUSH CUTS OR STUB CUTS WILL BE ALLOWED.

8. ALL BRANCHES THAT ARE BROKEN OR DAMAGED DURING CONSTRUCTION SHALL BE REMOVED.

9. PRUNING CUTS OR DAMAGED AREAS ON AN OAK TREE SHALL BE PAINTED WITHIN FIVE MINUTES WITH A STANDARD TREE WOUND DRESSING. TREE WOUND DRESSING SHALL BE EITHER TREEKOTE AEROSOL OR TANGLEFOOT PRUNING SEALER (OR APPROVED EQUAL). THIS ALSO APPLIES TO WOUNDS CREATED BY CONSTRUCTION VEHICLES OR EQUIPMENT. ALL PRUNING MUST BE IN ACCORDANCE WITH COA OAK WILT PREVENTION POLICY.

10. ANY TREE ROOTS THAT ARE EXPOSED, CUT, OR TORN DURING CONSTRUCTION ACTIVITY SHALL BE PRUNED FLUSH WITH THE SURROUNDING SOIL. (REFER ALSO TO NUMBER 9 OF THE TREE AND NATURAL AREA PROTECTION NOTES INCLUDED IN THIS PLAN SET.)

11. ALL TRENCHING WITHIN THE CRITICAL ROOT ZONE OF A TREE TO BE PRESERVED WILL BE SAW CUT OR EXCAVATED BY HAND, AS APPROVED BY THE GENERAL PERMIT PROGRAM ARBORIST.

12. REFER TO ENVIRONMENTAL CRITERIA MANUAL APPENDIX P-6 FOR FURTHER REMEDIAL TREE CARE REQUIREMENTS. P-6 REMEDIAL TREE CARE WILL BE COORDINATED WITH AND APPROVED BY THE GENERAL PERMIT PROGRAM ARBORIST FOR PROJECTS PERMITTED THROUGH THE GENERAL PERMIT PROGRAM.

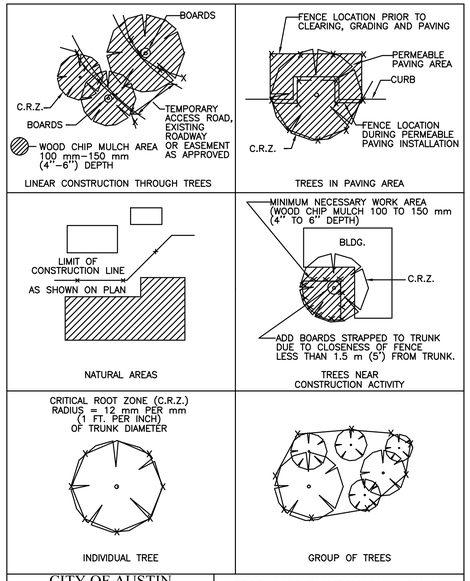

CITY OF AUSTIN WATERSHED PROTECTION DEPARTMENT		TREE PROTECTION FENCE LOCATIONS	
RECORD COPY SIGNED BY J. PATRICK MURPHY	11/15/99 ADOPTED	THE ARCHITECT/ENGINEER ASSUMES RESPONSIBILITY FOR APPROPRIATE USE OF THIS STANDARD.	STANDARD NO. 610S-1

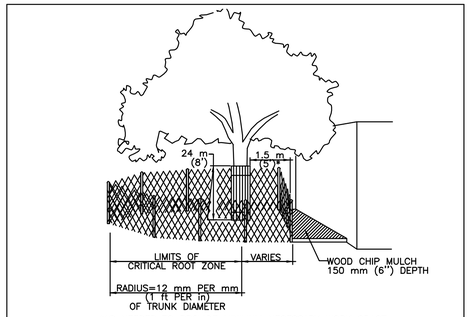

CITY OF AUSTIN WATERSHED PROTECTION DEPARTMENT		TREE PROTECTION FENCE MODIFIED TYPE A - CHAIN LINK	
RECORD COPY SIGNED BY J. PATRICK MURPHY	11/15/99 ADOPTED	THE ARCHITECT/ENGINEER ASSUMES RESPONSIBILITY FOR APPROPRIATE USE OF THIS STANDARD.	STANDARD NO. 610S-4

GENERAL PERMIT OFFICE
TREE PROTECTION
AND ENVIRONMENTAL NOTES
CITY OF AUSTIN STANDARD NOTES AND DETAILS

GENERAL PERMIT PROGRAM

NO.	BY	DATE	REVISIONS REMARKS

SHEET INFORMATION
DATE APRIL 25, 2011
SHEET C-7 OF
CAD REF. NO. TP-ENVRO.DWG

Plotted: 5/4/2016 12:19:13 PM

S:\Acad\104217_SAR\C-8_PrYDPLN.dwg, C-8, 5/4/2016 12:20:04 PM, sandefurdw, DWG To PDF.pc3

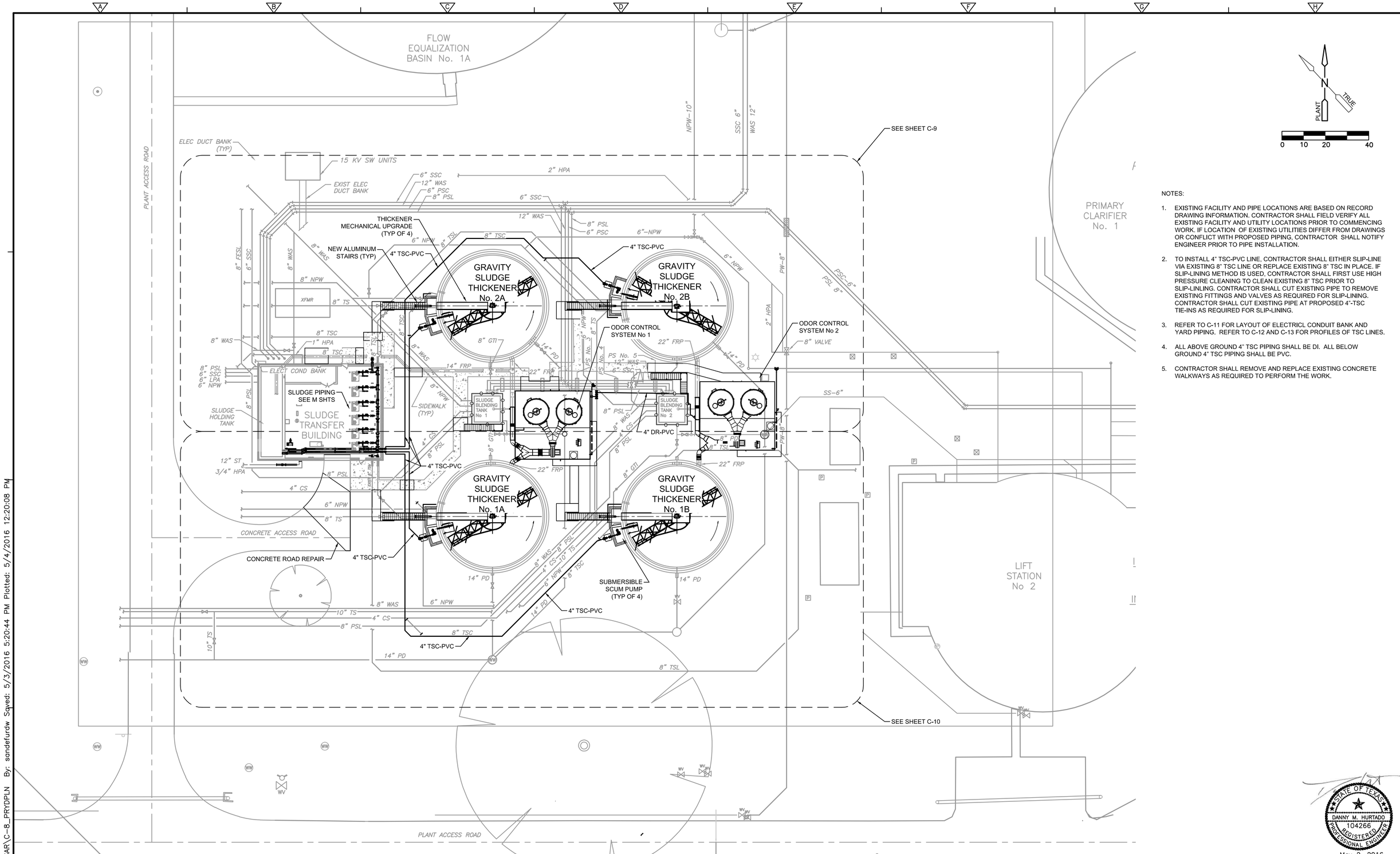

NOTES:

1. EXISTING FACILITY AND PIPE LOCATIONS ARE BASED ON RECORD DRAWING INFORMATION. CONTRACTOR SHALL FIELD VERIFY ALL EXISTING FACILITY AND UTILITY LOCATIONS PRIOR TO COMMENCING WORK. IF LOCATION OF EXISTING UTILITIES DIFFER FROM DRAWINGS OR CONFLICT WITH PROPOSED PIPING, CONTRACTOR SHALL NOTIFY ENGINEER PRIOR TO PIPE INSTALLATION.
2. TO INSTALL 4" TSC-PVC LINE, CONTRACTOR SHALL EITHER SLIP-LINE VIA EXISTING 8" TSC LINE OR REPLACE EXISTING 8" TSC IN PLACE. IF SLIP-LINING METHOD IS USED, CONTRACTOR SHALL FIRST USE HIGH PRESSURE CLEANING TO CLEAN EXISTING 8" TSC PRIOR TO SLIP-LINLING. CONTRACTOR SHALL CUT EXISTING PIPE TO REMOVE EXISTING FITTINGS AND VALVES AS REQUIRED FOR SLIP-LINING. CONTRACTOR SHALL CUT EXISTING PIPE AT PROPOSED 4"-TSC TIE-INS AS REQUIRED FOR SLIP-LINING.
3. REFER TO C-11 FOR LAYOUT OF ELECTRICL CONDUIT BANK AND YARD PIPING. REFER TO C-12 AND C-13 FOR PROFILES OF TSC LINES.
4. ALL ABOVE GROUND 4" TSC PIPING SHALL BE DI. ALL BELOW GROUND 4" TSC PIPING SHALL BE PVC.
5. CONTRACTOR SHALL REMOVE AND REPLACE EXISTING CONCRETE WALKWAYS AS REQUIRED TO PERFORM THE WORK.

STATE OF TEXAS
DANNY M. HURTADO
104266
REGISTERED PROFESSIONAL ENGINEER
May 2, 2016

REV No	DATE	DRWN	CHKD	REMARKS

DESIGNED BY: WOO
DRAWN BY: SANDEFUR
SHEET CHK'D BY: HURTADO
CROSS CHK'D BY:
APPROVED BY:
DATE: MAY 2016

CDM Smith
Riata Corporate Park, 12357-A Riata Trace Parkway, Suite 210
Austin, TX 78727
Tel: (512) 346-1100
Texas Registration Number F-3043

CITY OF AUSTIN, TEXAS - AUSTIN WATER UTILITY
CIP 3333.016
SOUTH AUSTIN REGIONAL WWTP
THICKENER IMPROVEMENTS PROJECT

OVERALL YARD PIPING PLAN

PROJECT No 590-104217
FILE NAME: C-8_PRYDPLN

SHEET No
C-8

BID SET

S:\ACAD\104217_SAR\C-8_PRYDPLN By: sandefurdw Saved: 5/3/2016 5:20:44 PM Plotted: 5/4/2016 12:20:08 PM

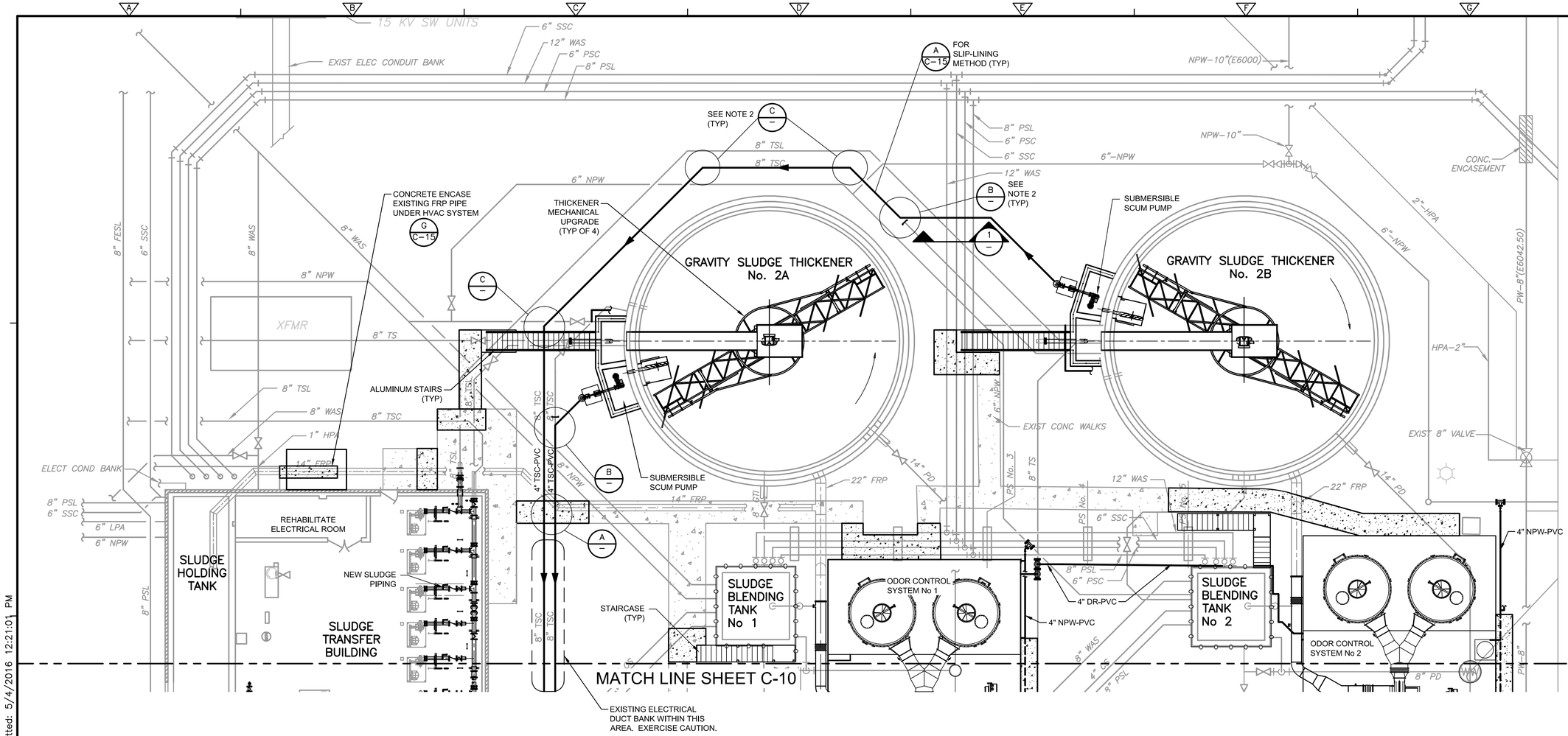

NOTES:

1. EXISTING FACILITY AND PIPE LOCATIONS ARE BASED ON RECORD DRAWING INFORMATION. CONTRACTOR SHALL FIELD VERIFY ALL EXISTING FACILITY AND UTILITY LOCATIONS PRIOR TO COMMENCING WORK. IF LOCATION OF EXISTING UTILITIES DIFFER FROM DRAWINGS OR CONFLICT WITH PROPOSED PIPING, CONTRACTOR SHALL NOTIFY ENGINEER PRIOR TO PIPE INSTALLATION.
2. TO INSTALL 4" TSC-PVC LINE, CONTRACTOR SHALL EITHER SLIP-LINE VIA EXISTING 8" TSC LINE OR REPLACE EXISTING 8" TSC (WITH 4" TSC) IN PLACE. IF SLIP-LINING METHOD IS USED, CONTRACTOR SHALL FIRST USE HIGH PRESSURE CLEANING TO CLEAN EXISTING 8" TSC PRIOR TO SLIP-LINING. CONTRACTOR SHALL CUT EXISTING PIPE TO REMOVE EXISTING FITTINGS AND VALVES AS REQUIRED FOR SLIP-LINING. CONTRACTOR SHALL CUT EXISTING PIPE AT PROPOSED 4"-TSC TIE-INS AS REQUIRED FOR SLIP-LINING.
3. REFER TO C-11 FOR LAYOUT OF ELECTRICAL DUCT BANK AND YARD PIPING. REFER TO C-12 AND C-13 FOR PROFILES OF TSC LINES.
4. ALL ABOVE GROUND 4" TSC PIPING SHALL BE DI. ALL BELOW GROUND 4" TSC PIPING SHALL BE PVC.
5. TEMPORARILY SUPPORT ALL EXISTING PIPING AND DUCT BANK AS REQUIRED TO INSTALL 4" TSC LINE.
6. REFER TO DETAIL C/C-15 FOR TYPICAL TRENCH DETAIL.
7. CONTRACTOR SHALL REMOVE AND REPLACE EXISTING CONCRETE WALKWAYS AS REQUIRED TO PERFORM THE WORK.
8. FOR DETAILS, EXISTING 8" TSC FOR SLIP-LINING METHOD SHOWN FOR CLARITY. DISREGARD IF ALTERNATE METHOD (REPLACE 8" TSC IN PLACE) IS SELECTED. SEE NOTE 2 ABOVE.

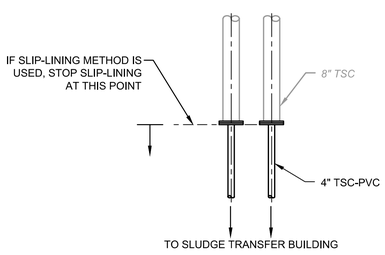

DETAIL A
N.T.S.

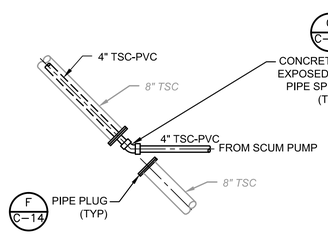

DETAIL B
N.T.S.

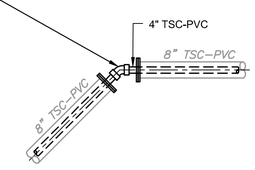

DETAIL C
N.T.S.

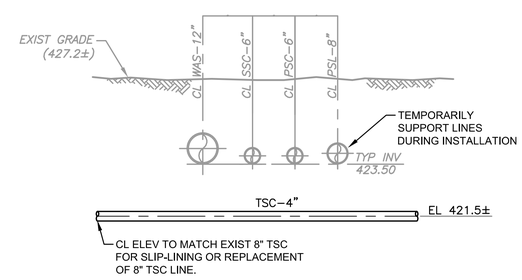

SECTION 1
NTS

STATE OF TEXAS
DANNY M. HURTADO
104266
REGISTERED PROFESSIONAL ENGINEER
May 2, 2016

REV No	DATE	DRWN	CHKD	REMARKS

DESIGNED BY: WOO
DRAWN BY: SANDEFUR
SHEET CHK'D BY: HURTADO
CROSS CHK'D BY:
APPROVED BY:
DATE: MAY 2016

CDM Smith
Riata Corporate Park, 12357-A Riata Trace Parkway, Suite 210
Austin, TX 78727
Tel: (512) 346-1100
Texas Registration Number F-3043

CITY OF AUSTIN, TEXAS - AUSTIN WATER UTILITY
CIP 3333.016
SOUTH AUSTIN REGIONAL WWTP
THICKENER IMPROVEMENTS PROJECT

PARTIAL YARD PIPING
PLAN AND DETAILS I

PROJECT No 590-104217
FILE NAME: C-9-10_PRYDPLN

SHEET No
C-9

BID SET

S:\ACAD\104217_SAR\C-9-10_PRYDPLN By: sandefurdw Saved: 5/3/2016 5:20:54 PM Plotted: 5/4/2016 12:21:01 PM
S:\Acad\104217_SAR\C-9-10_PrYDPLN.dwg, C-9, 5/4/2016 12:20:57 PM, sandefurdw, DWG To PDF.pc3
Plotted: 5/4/2016 12:21:01 PM

S:\Acad\104217_SAR\C-9-10_PrYDPLN.dwg, C-10, 5/4/2016 12:21:12 PM, sandefurdw, DWG To PDF.pc3

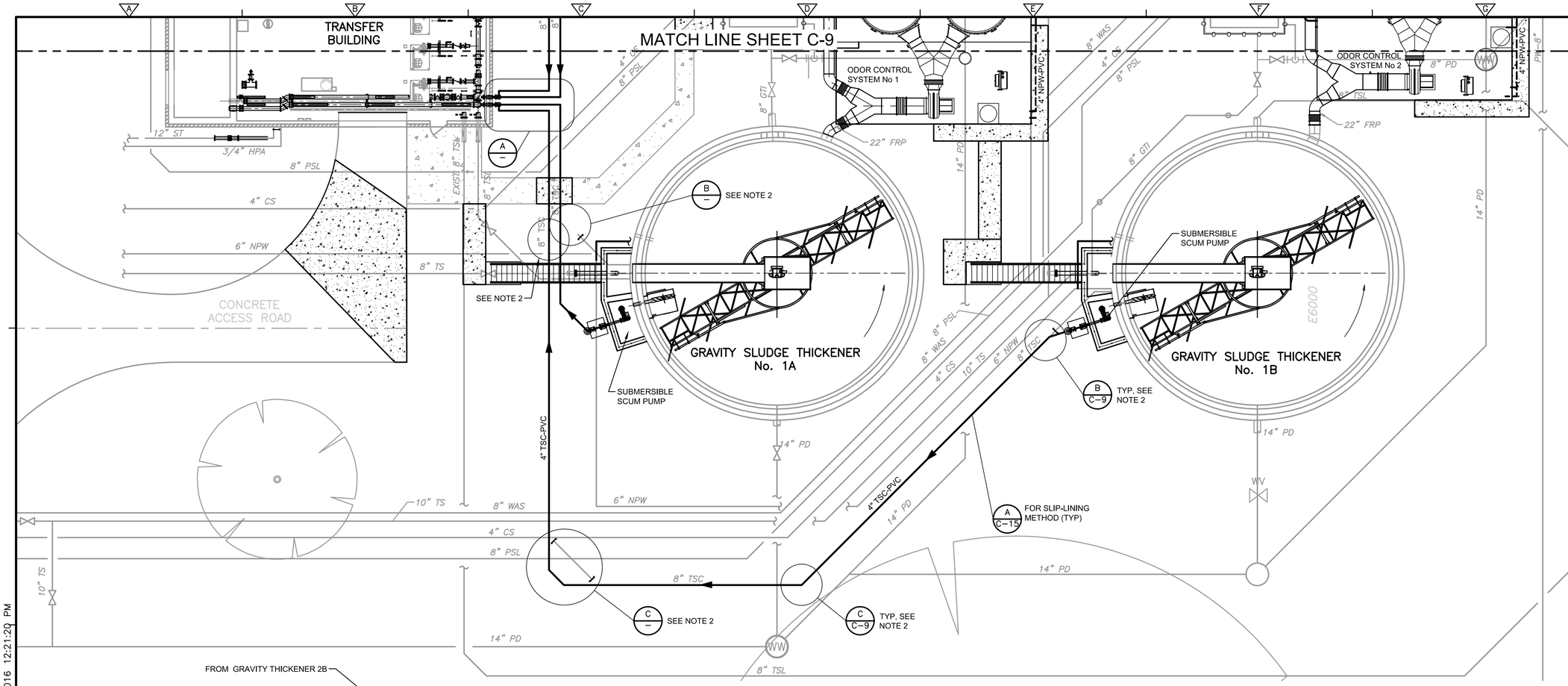

NOTES:

1. EXISTING FACILITY AND PIPE LOCATIONS ARE BASED ON RECORD DRAWING INFORMATION. CONTRACTOR SHALL FIELD VERIFY ALL EXISTING FACILITY AND UTILITY LOCATIONS PRIOR TO COMMENCING WORK. IF LOCATION OF EXISTING UTILITIES DIFFER FROM DRAWINGS OR CONFLICT WITH PROPOSED PIPING, CONTRACTOR SHALL NOTIFY ENGINEER PRIOR TO PIPE INSTALLATION.
2. TO INSTALL 4" TSC-PVC LINE, CONTRACTOR SHALL EITHER SLIP-LINE VIA EXISTING 8" TSC LINE OR REPLACE EXISTING 8" TSC (WITH 4" TSC) IN PLACE. IF SLIP-LINING METHOD IS USED, CONTRACTOR SHALL FIRST USE HIGH PRESSURE CLEANING TO CLEAN EXISTING 8" TSC PRIOR TO SLIP-LINING. CONTRACTOR SHALL CUT EXISTING PIPE TO REMOVE EXISTING FITTINGS AND VALVES AS REQUIRED FOR SLIP-LINING. CONTRACTOR SHALL CUT EXISTING PIPE AT PROPOSED 4"-TSC TIE-INS AS REQUIRED FOR SLIP-LINING.
3. REFER TO C-11 FOR LAYOUT OF ELECTRICAL CONDUIT BANK AND YARD PIPING. REFER TO C-12 AND C-13 FOR PROFILES OF TSC LINES.
4. ALL ABOVE GROUND 4" TSC PIPING SHALL BE DI. ALL BELOW GROUND 4" TSC PIPING SHALL BE PVC.
5. TEMPORARILY SUPPORT ALL EXISTING PIPING AND CONDUIT BANK AS REQUIRED TO INSTALL 4" TSC LINE.
6. REFER TO DETAIL C/C-15 FOR TYPICAL TRENCH DETAIL.
7. CONTRACTOR SHALL REMOVE AND REPLACE EXISTING CONCRETE WALKWAYS AS REQUIRED TO PERFORM THE WORK.
8. FOR DETAILS, EXISTING 8" TSC FOR SLIP-LINING METHOD SHOWN FOR CLARITY. DISREGARD IF ALTERNATE METHOD (REPLACE 8" TSC IN PLACE) IS SELECTED. SEE NOTE 2 ABOVE.

DETAIL A
N.T.S.

SECTION 1
N.T.S.

DETAIL B
N.T.S.

DETAIL C
N.T.S.

STATE OF TEXAS
DANNY M. HURTADO
104266
REGISTERED PROFESSIONAL ENGINEER
May 2, 2016

REV No	DATE	DRWN	CHKD	REMARKS

DESIGNED BY: WOO
DRAWN BY: SANDEFUR
SHEET CHK'D BY: HURTADO
CROSS CHK'D BY:
APPROVED BY:
DATE: MAY 2016

CDM Smith
Riata Corporate Park, 12357-A Riata Trace Parkway, Suite 210
Austin, TX 78727
Tel: (512) 346-1100
Texas Registration Number F-3043

CITY OF AUSTIN, TEXAS - AUSTIN WATER UTILITY
CIP 3333.016
SOUTH AUSTIN REGIONAL WWTP
THICKENER IMPROVEMENTS PROJECT

PARTIAL YARD PIPING
PLAN AND DETAILS II

PROJECT No 590-104217
FILE NAME: C-9-10_PRYDPLN

SHEET No
C-10

BID SET

S:\ACAD\104217_SAR\C-9-10_PRYDPLN By: sandefurdw Saved: 5/3/2016 5:20:54 PM Plotted: 5/4/2016 12:21:20 PM

S:\Acad\104217_SAR\C-11_PrYDPLN.dwg, C-11, 5/4/2016 12:22:12 PM, sandefurdw, DWG To PDF.pc3

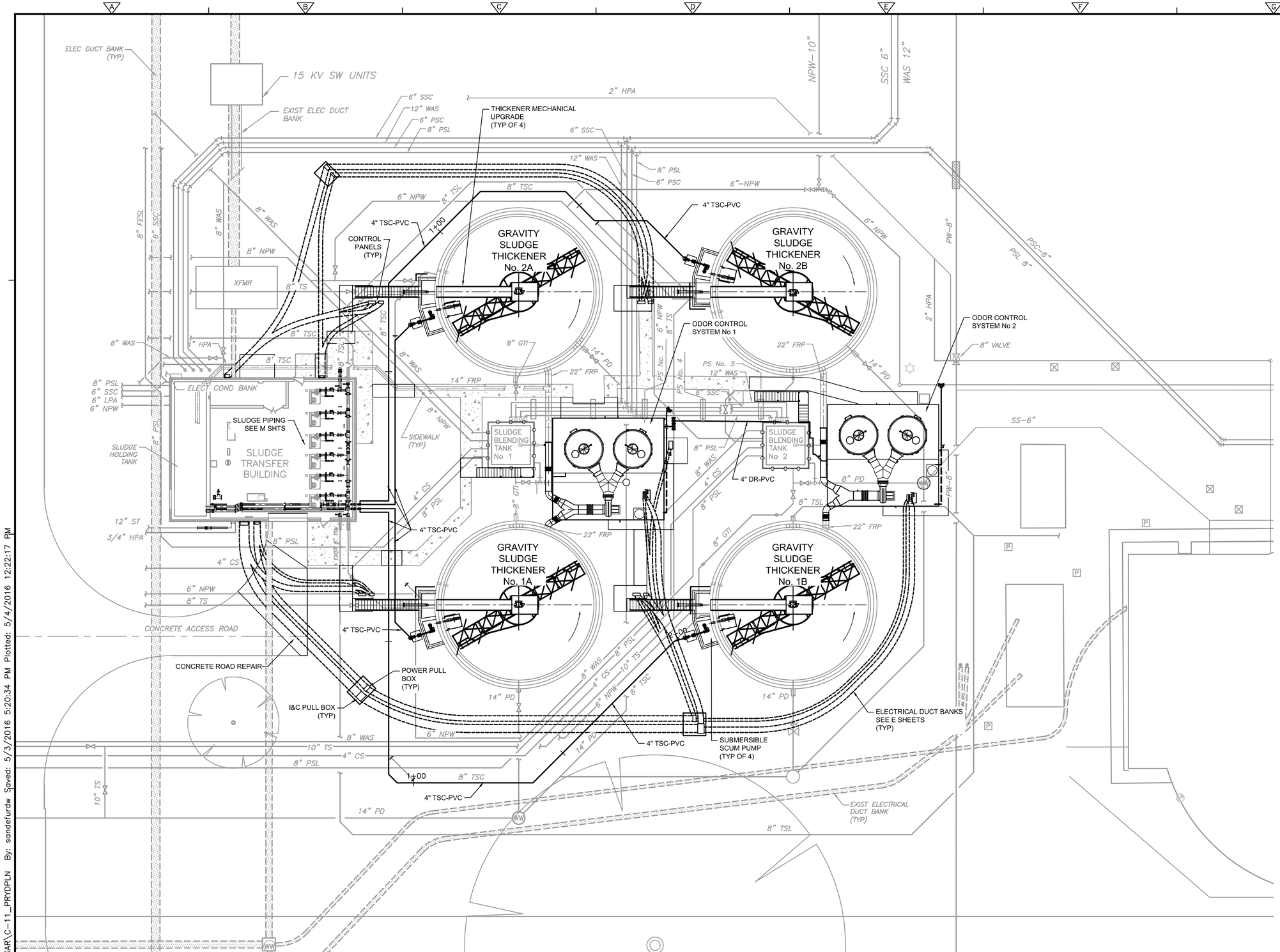

NOTE:

1. EXISTING FACILITY AND PIPE LOCATIONS ARE BASED ON RECORD DRAWING INFORMATION. CONTRACTOR SHALL FIELD VERIFY ALL EXISTING FACILITY AND UTILITY LOCATIONS PRIOR TO COMMENCING WORK. IF LOCATION OF EXISTING UTILITIES DIFFER FROM DRAWINGS OR CONFLICT WITH PROPOSED PIPING, CONTRACTOR SHALL NOTIFY ENGINEER PRIOR TO PIPE INSTALLATION.

STATE OF TEXAS
DANNY M. HURTADO
104266
REGISTERED PROFESSIONAL ENGINEER
May 2, 2016

REV No	DATE	DRWN	CHKD	REMARKS

DESIGNED BY: WOO
DRAWN BY: SANDEFUR
SHEET CHK'D BY: HURTADO
CROSS CHK'D BY:
APPROVED BY:
DATE: MAY 2016

CDM Smith
Riata Corporate Park, 12357-A Riata Trace Parkway, Suite 210
Austin, TX 78727
Tel: (512) 346-1100
Texas Registration Number F-3043

CITY OF AUSTIN, TEXAS - AUSTIN WATER UTILITY
CIP 3333.016
SOUTH AUSTIN REGIONAL WWTP
THICKENER IMPROVEMENTS PROJECT

OVERALL YARD PIPING AND ELECTRICAL DUCT BANK PLAN

PROJECT No 590-104217
FILE NAME: C-11_PRYDPLN
SHEET No
C-11

BID SET

S:\ACAD\104217_SAR\C-11_PRYDPLN By: sandefurdw Saved: 5/3/2016 5:20:34 PM Plotted: 5/4/2016 12:22:17 PM

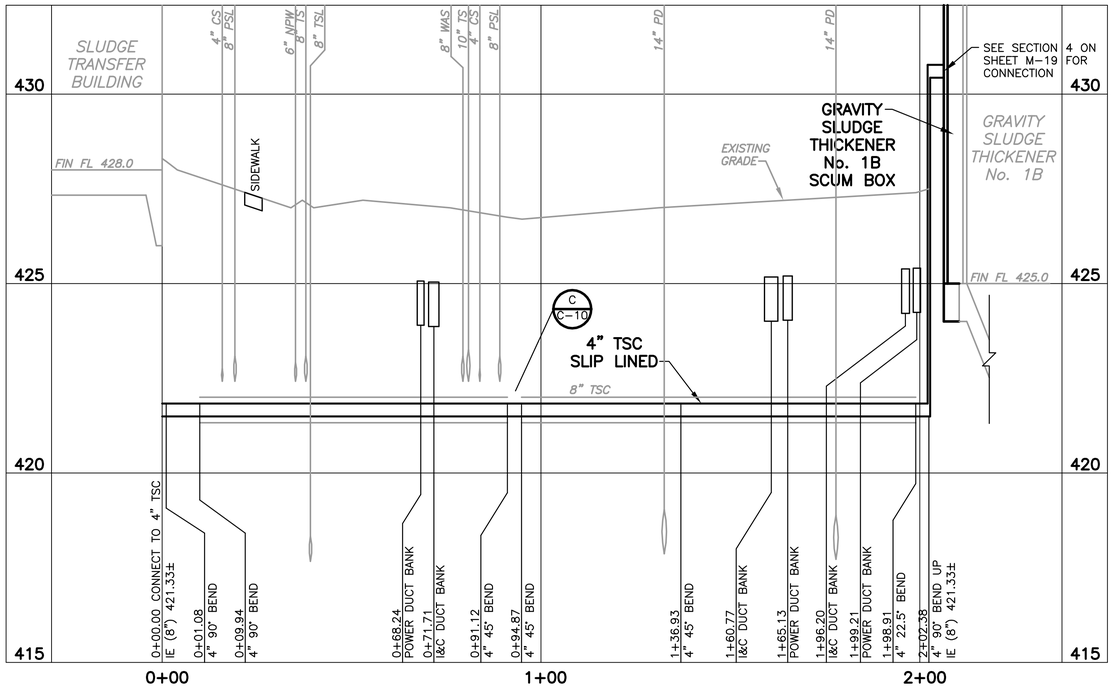

4" TSC (GRAVITY SLUDGE THICKENER No. 1B)

PROFILE

1" = 20' H
1" = 2' V

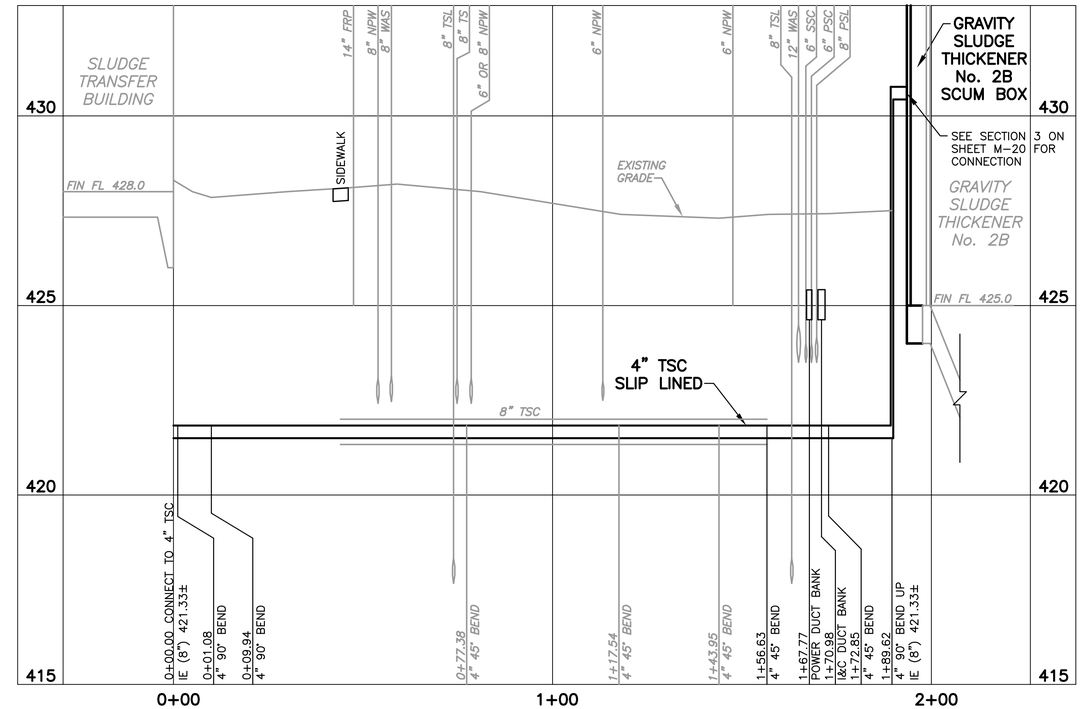

4" TSC (GRAVITY SLUDGE THICKENER No. 2B)

PROFILE

1" = 20' H
1" = 2' V

NOTE

1 EXISTING FACILITY & PIPING LOCATIONS ARE BASED ON RECORD DRAWING INFORMATION. CONTRACTOR SHALL FIELD VERIFY ALL EXISTING FACILITY & PIPING LOCATIONS & DIMENSIONS NECESSARY TO PERFORM THE WORK.

STATE OF TEXAS
DANNY M. HURTADO
104266
REGISTERED PROFESSIONAL ENGINEER

May 2, 2016

REV No	DATE	DRWN	CHKD	REMARKS

DESIGNED BY: WOO
DRAWN BY: TG
SHEET CHK'D BY: WOO
CROSS CHK'D BY: HURTADO
APPROVED BY: HURTADO
DATE: MAY 2016

CDM Smith
Riata Corporate Park, 12357-A Riata Trace Parkway, Suite 210
Austin, TX 78727
Tel: (512) 346-1100
Texas Registration Number F-3043

CITY OF AUSTIN, TEXAS - AUSTIN WATER UTILITY
CIP 3333.016

SOUTH AUSTIN REGIONAL WWTP
THICKENER IMPROVEMENTS PROJECT

4" TSC
PROFILES I

PROJECT No 590-104217
FILE NAME: C-8TSC-PRF

SHEET No
C-12

S:\ACAD\SAR\C-8TSC-PRF By: gieseke, todd Saved: 3/18/2015 7:50:01 AM Plotted: 12/8/2015 7:26:27 AM

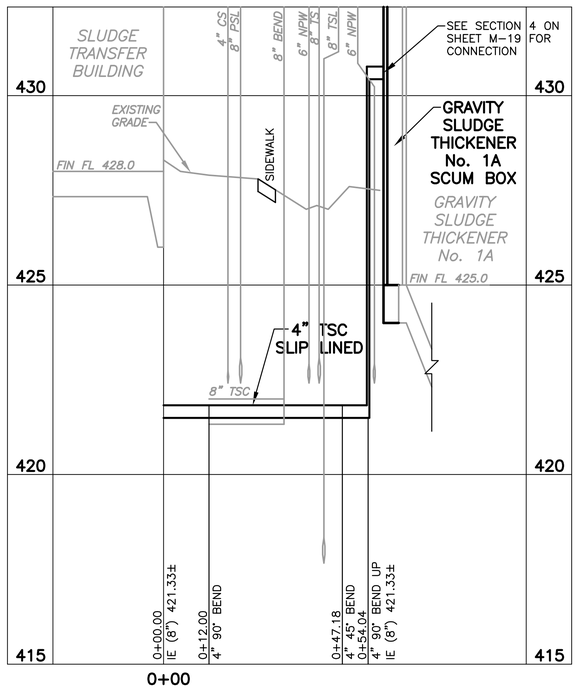

4" TSC (GRAVITY SLUDGE THICKENER No. 1A)

PROFILE

1" = 20' H
1" = 2' V

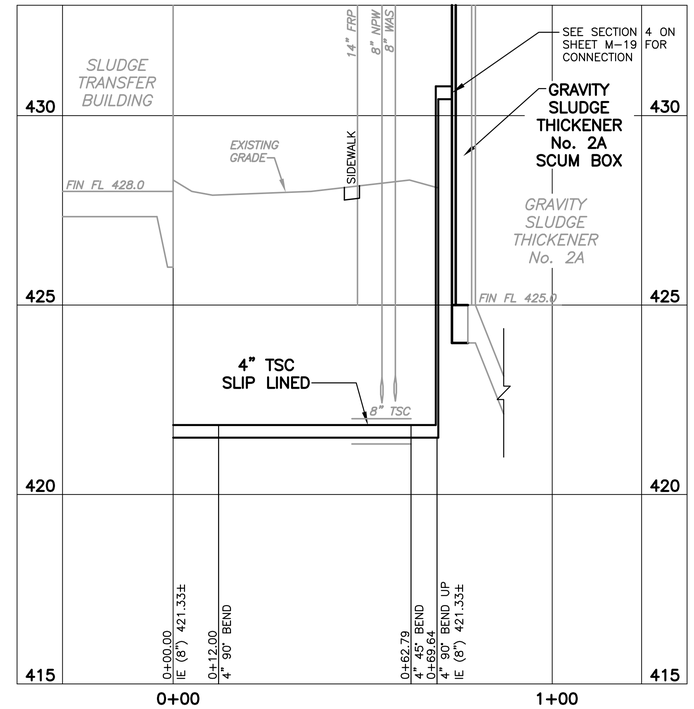

4" TSC (GRAVITY SLUDGE THICKENER No. 2A)

PROFILE

1" = 20' H
1" = 2' V

NOTE

1 EXISTING FACILITY & PIPING LOCATIONS ARE BASED ON RECORD DRAWING INFORMATION. CONTRACTOR SHALL FIELD VERIFY ALL EXISTING FACILITY & PIPING LOCATIONS & DIMENSIONS NECESSARY TO PERFORM THE WORK.

STATE OF TEXAS
DANNY M. HURTADO
104266
REGISTERED PROFESSIONAL ENGINEER

May 2, 2016

REV No	DATE	DRWN	CHKD	REMARKS

DESIGNED BY: WOO
DRAWN BY: TG
SHEET CHK'D BY: WOO
CROSS CHK'D BY: HURTADO
APPROVED BY: HURTADO
DATE: MAY 2016

CDM Smith
Riata Corporate Park, 12357-A Riata Trace Parkway, Suite 210
Austin, TX 78727
Tel: (512) 346-1100
Texas Registration Number F-3043

CITY OF AUSTIN, TEXAS - AUSTIN WATER UTILITY
CIP 3333.016

SOUTH AUSTIN REGIONAL WWTP
THICKENER IMPROVEMENTS PROJECT

4" TSC
PROFILES II

PROJECT No 590-104217
FILE NAME: C-8TSC-PRF2

SHEET No
C-13

S:\ACAD\SAR\C-8TSC-PRF2 By: gieseke, todd Saved: 3/18/2015 7:10:12 AM Plotted: 12/8/2015 7:27:31 AM

S:\Acad\104217_SAR\C-DETAILS.dwg, C-14, 5/4/2016 12:22:56 PM, sandefurdw, DWG To PDF.pc3

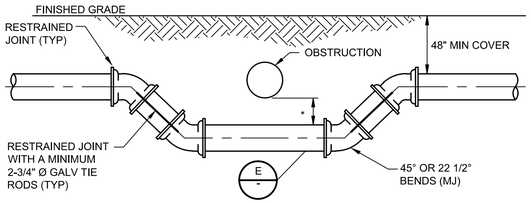

SPECIAL UTILITY CROSSING - FITTING TYPE

* 24" MIN CLEARANCE REQUIRED FOR WATER AND SEWER MAIN CROSSINGS. 12" MIN CLEARANCE REQUIRED FOR OTHER TYPE UTILITIES CROSSING. SEE WATER AND SEWER SEPARATION STATEMENT ON THIS SHEET.

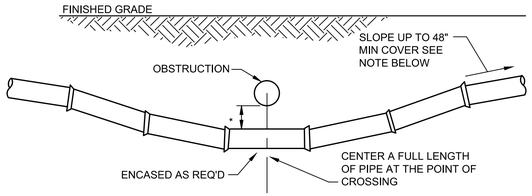

STANDARD UTILITY CROSSING - DEFLECTION TYPE

NOTES

1 THE DEFLECTION TYPE CROSSING SHALL BE USED WHERE POSSIBLE. ONLY UNDER SPECIFIC ORDERS BY THE ENGINEER WILL THE FITTING TYPE CROSSING BE ALLOWED.

2 CONSTRUCT STANDARD CROSSING USING A MAXIMUM OF 75% OF THE MANUFACTURER'S RECOMMENDED MAXIMUM JOINT DEFLECTION.

3 TIE RODS MAY BE OMITTED WHEN OTHER APPROVED METHODS OF RESTRAINING ARE UTILIZED.

4 IF TIE RODS USED, COAT TIE RODS WITH A COAL TAR ENAMEL AFTER ASSEMBLY (2 COATS MIN).

STANDARD WATER AND SEWER SEPARATION STATEMENT

1 STORM AND SANITARY SEWERS CROSSING UNDER WATER MAINS SHALL BE LAID TO PROVIDE A MINIMUM VERTICAL DISTANCE OF TWENTY-FOUR (24) INCHES BETWEEN THE INVERT OF THE UPPER PIPE AND THE CROWN OF THE LOWER PIPE. WHERE THIS MINIMUM SEPARATION CANNOT BE MAINTAINED, THE CROSSING SHALL BE ARRANGED SO THAT THE SEWER PIPE JOINTS AND WATER MAIN JOINTS ARE EQUIDISTANT FROM THE POINT OF CROSSING WITH NO LESS THAN TEN (10) FEET BETWEEN ANY TWO JOINTS AND BOTH PIPES SHALL BE DI. WHERE THERE IS NO ALTERNATIVE TO SEWER PIPES CROSSING OVER A WATER MAIN, THE CRITERIA FOR MINIMUM SEPARATION BETWEEN LINES AND JOINTS IN THE ABOVE SHALL BE REQUIRED AND BOTH PIPES SHALL BE DI IRRESPECTIVE OF SEPARATION. DI IS NOT REQUIRED FOR STORM SEWERS.

2 MAINTAIN A MINIMUM TEN (10) FEET HORIZONTAL DISTANCE BETWEEN POTABLE WATER MAIN AND STORM OR SANITARY SEWER MAIN.

3 FORCE MAIN CROSSING POTABLE WATER MAIN SHALL BE LAID TO PROVIDE A MINIMUM VERTICAL DISTANCE OF TWENTY-FOUR (24) INCHES BETWEEN THE OUTSIDE OF THE FORCE MAIN AND OUTSIDE OF THE WATER MAIN WITH WATER CROSSING OVER THE FORCE MAIN.

UTILITY CROSSING

DETAIL A
NTS

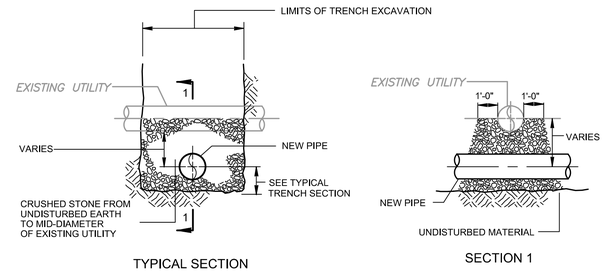

TYPICAL SECTION

SECTION 1

UTILITIES CROSSING: FOR CROSSINGS SEPARATED BY LESS THAN 12"

DETAIL B
NTS

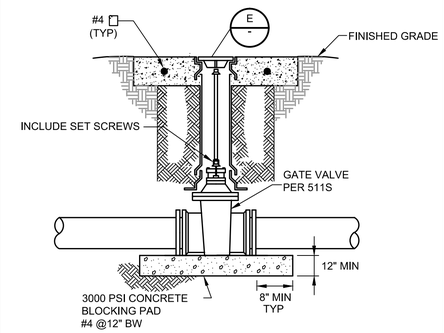

VERTICAL GATE VALVE

DETAIL C
NTS

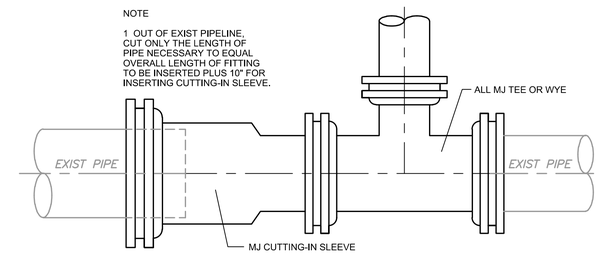

CUTTING–IN SLEEVE

DETAIL D
NTS

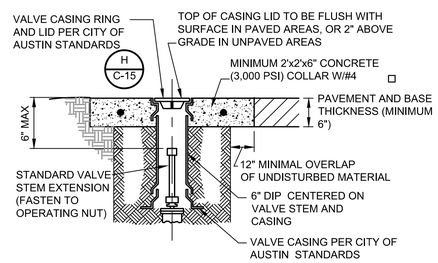

UNPAVED AREA

PAVED AREA

VALVE CASING

DETAIL E
NTS

NOTE

1 VALVE CASING, RING, LID, ETC., SHALL BE DESIGNED FOR HS-20 LOADING WHERE INSTALLED IN PAVED AREAS.

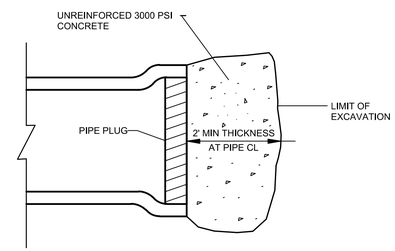

PIPE PLUG

DETAIL F
NTS

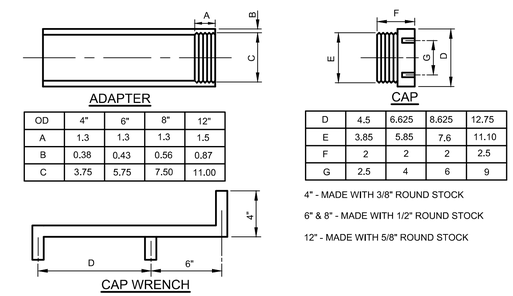

OD	4"	6"	8"	12"
A	1.3	1.3	1.3	1.5
B	0.38	0.43	0.56	0.87
C	3.75	5.75	7.50	11.00

D	4.5	6.625	8.625	12.75
E	3.85	5.85	7.6	11.10
F	2	2	2	2.5
G	2.5	4	6	9

4" - MADE WITH 3/8" ROUND STOCK

6" & 8" - MADE WITH 1/2" ROUND STOCK

12" - MADE WITH 5/8" ROUND STOCK

CLEANOUT CAP

DETAIL G
NTS

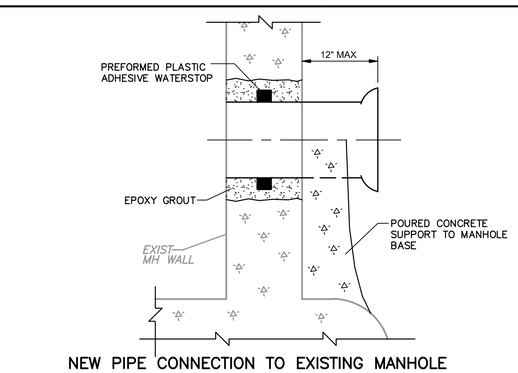

NEW PIPE CONNECTION TO EXISTING MANHOLE

DETAIL H
NTS

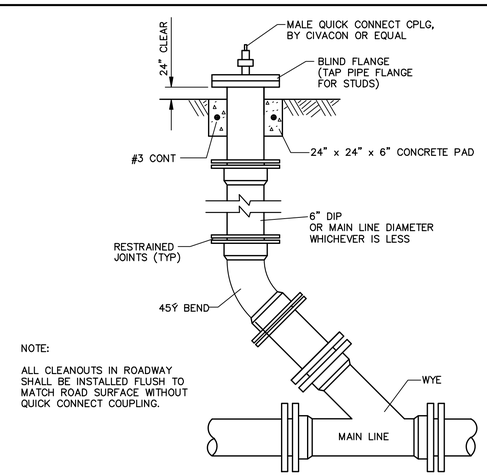

NOTE:

ALL CLEANOUTS IN ROADWAY SHALL BE INSTALLED FLUSH TO MATCH ROAD SURFACE WITHOUT QUICK CONNECT COUPLING.

CLEANOUT

DETAIL I
NTS

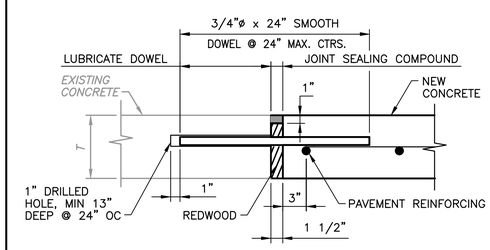

CONNECT EXISTING PAVEMENT TO NEW PAVEMENT

EXPANSION JOINT

DETAIL J
NTS

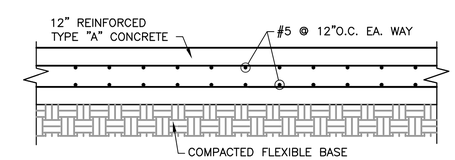

CONCRETE PAVEMENT

DETAIL K
NTS

STATE OF TEXAS
DANNY M. HURTADO
104266
REGISTERED PROFESSIONAL ENGINEER
May 2, 2016

REV No	DATE	DRWN	CHKD	REMARKS

DESIGNED BY: WOO
DRAWN BY: SANDEFUR
SHEET CHK'D BY: HURTADO
CROSS CHK'D BY:
APPROVED BY:
DATE: MAY 2016

CDM Smith
Riata Corporate Park, 12357-A Riata Trace Parkway, Suite 210
Austin, TX 78727
Tel: (512) 346-1100
Texas Registration Number F-3043

CITY OF AUSTIN, TEXAS - AUSTIN WATER UTILITY
CIP 3333.016

SOUTH AUSTIN REGIONAL WWTP
THICKENER IMPROVEMENTS PROJECT

STANDARD CIVIL DETAILS I

PROJECT No 590–104217
FILE NAME: C–DETAILS

SHEET No
C-14

BID SET

S:\ACAD\104217_SAR\C–DETAILS By: sandefurdw Saved: 4/22/2016 11:16:53 AM Plotted: 5/4/2016 12:22:58 PM

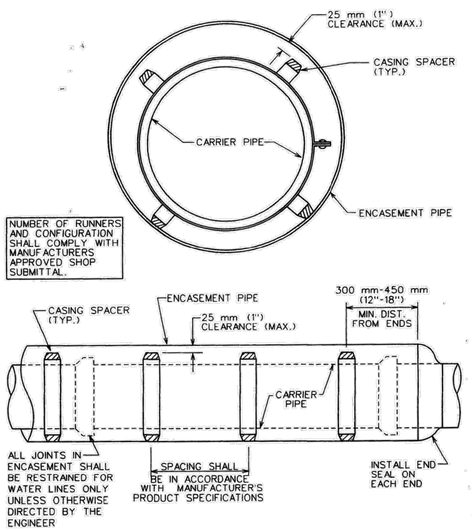

APPLICABLE REFERENCES

STANDARD SPECIFICATION: ITEM 510S.3 (19) W/WW STANDARD PRODUCTS LIST: SPLWW-575 FOR CASING SPACER AND SPLWW-575A FOR END SEAL.

CITY OF AUSTIN AUSTIN WATER UTILITY	ENCASEMENT DETAIL W/ CASING SPACERS	
Kathi L Payne 2/12/08 ADOPTED	THE ARCHITECT/ENGINEER ASSUMES RESPONSIBILITY FOR APPROPRIATE USE OF THIS STANDARD.	STANDARD NO. 501S-1

DETAIL A
NTS

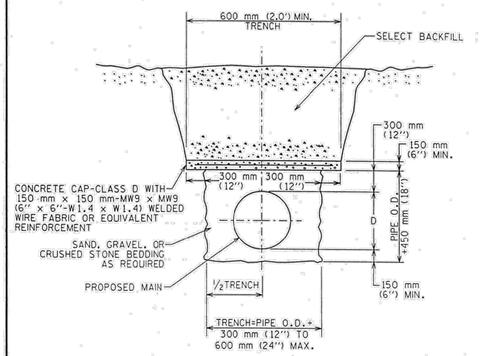

CITY OF AUSTIN WATER AND WASTEWATER UTILITY	CONCRETE TRENCH CAP	
Kathi L Payne 2-17-00 ADOPTED	THE ARCHITECT/ENGINEER ASSUMES RESPONSIBILITY FOR APPROPRIATE USE OF THIS STANDARD.	STANDARD NO. 510S-1

DETAIL B
NTS

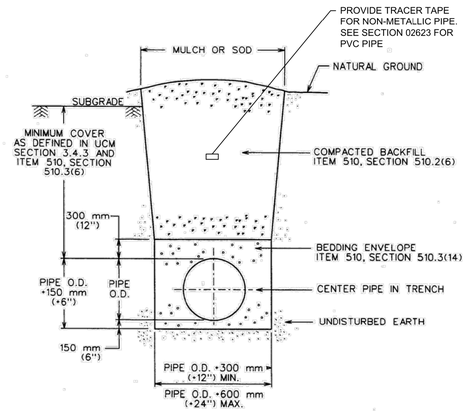

REFERENCES:

1. UTILITY CRITERIA MANUAL SECTION 3.4.3, "FINAL DESIGN"
2. STANDARD SPECIFICATION MANUAL ITEM 510, SECTION 510.2(6), "SELECT BACKFILL OR BORROW"; SECTION 510.3(6), "TRENCH DEPTH AND DEPTH OF COVER"; SECTION 510.3(14), "PIPE BEDDING ENVELOPE"

CITY OF AUSTIN DEPARTMENT OF PUBLIC WORKS	TYPICAL TRENCH DETAIL WITH UNFINISHED SURFACE	
Bill Gardner 3/13/06 ADOPTED	THE ARCHITECT/ENGINEER ASSUMES RESPONSIBILITY FOR APPROPRIATE USE OF THIS STANDARD.	STANDARD NO. 510S-5

DETAIL C
NTS

TRENCH REPAIR IN ASPHALTIC SURFACE OVER FLEXIBLE BASE (UCM SECTION 5.8.0)

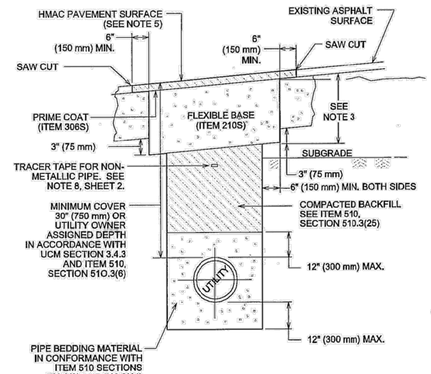

CITY OF AUSTIN DEPARTMENT OF PUBLIC WORKS	FLEXIBLE BASE WITH ASPHALT SURFACE TRENCH REPAIR-EXISTING PAVEMENT	
Kui Burchard-Evans 1/4/11 ADOPTED	THE ARCHITECT/ENGINEER ASSUMES RESPONSIBILITY FOR APPROPRIATE USE OF THIS STANDARD.	STANDARD NO. 1100S-2 1 OF 2

DETAIL D
NTS

NOTES:

1. THE EXISTING PAVING SURFACE SHALL BE SAW CUT IN A STRAIGHT LINE, A MINIMUM OF 12" (300 mm) WIDER THAN UNDISTURBED SIDES OF THE TRENCH AND SYMMETRICAL ABOUT THE CENTER LINE OF THE EXCAVATION.
2. IF EXCAVATION AREA IS OPEN FOR TEMPORARY PUBLIC USE, THE SURFACE SHALL BE MAINTAINED LEVEL WITH ADJACENT RIDING SURFACE WITH COLD MIX AC OR TEMPORARY HMAC. TEMPORARY MIX SHALL BE PLACED OVER FLEXIBLE BASE.
3. ROAD BASE SHALL BE REPLACED IN KIND WITH BASE THICKNESS EQUAL TO EXISTING BASE THICKNESS PLUS 3" (75 mm), BUT IN NO CASE LESS THAN 12" (300 mm).
4. DAMAGED PAVEMENT OUTSIDE THE TRENCH CUT SHALL BE REMOVED AND REPLACED WITH A BASE THICKNESS OF 10" (250 mm) OR A THICKNESS MATCHING EXISTING, WHICHEVER IS GREATER.
5. REPLACEMENT AC SURFACE LAYER SHALL BE OF THE TYPE AND THICKNESS BASED ON FUNCTIONAL CLASSIFICATION.
   a) MIN. 2" (50 mm) HMAC TYPE "D" FOR TRENCH REPAIR IN LOCAL/RESIDENTIAL STREETS.
   b) MIN. 3" (75 mm) HMAC TYPE "C" FOR TRENCH REPAIR IN COLLECTOR/ARTERIAL STREETS.
   SEE ITEM 340S, SECTION 340S.4.
6. CLASS "J" PC CONCRETE (ITEM 403S) OR CONTROLLED LOW STRENGTH MATERIAL (CLSM) MAY BE SUBSTITUTED IN THESE REPAIRS FOR THE FLEXIBLE BASE AND COMPACTED BACKFILL. PC CONCRETE GREATER THAN A 2 SACK MIX WILL NOT BE ALLOWED.
7. TACK COAT ALL EXPOSED EDGES AND SURFACES (SPEC ITEM 307S).
8. AS PER CITY OF AUSTIN STANDARD SPECIFICATION 510, SECTION 510.2(8)(K)5, FOR ALL NON-METALLIC PIPE, DIRECTLY ABOVE THE CENTERLINE OF THE PIPE AND A MINIMUM OF 12" (300 mm) BELOW THE SUBGRADE, OR A MINIMUM OF 18" (450 mm) BELOW FINISHED GRADE ON AREAS OUTSIDE THE LIMITS OF PAVEMENT, SHALL BE PLACED INDUCTIVE TRACER TAPE IN ACCORDANCE WITH THE MANUFACTURER'S REQUIREMENTS. THE TAPE SHALL BE ENCASED IN A PROTECTIVE, INERT, PLASTIC JACKET AND COLOR CODED IN ACCORDANCE WITH APWA UNIFORM COLOR CODE.

CITY OF AUSTIN DEPARTMENT OF PUBLIC WORKS	FLEXIBLE BASE WITH ASPHALT SURFACE TRENCH REPAIR-EXISTING PAVEMENT	
Kui Burchard-Evans 1/4/11 ADOPTED	THE ARCHITECT/ENGINEER ASSUMES RESPONSIBILITY FOR APPROPRIATE USE OF THIS STANDARD.	STANDARD NO. 1100S-2 2 OF 2

DETAIL E
NTS

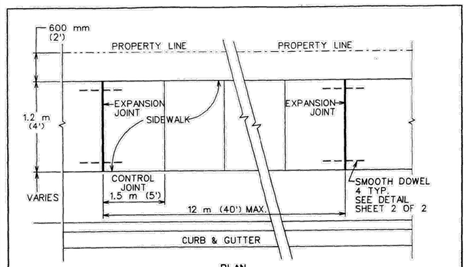

PLAN

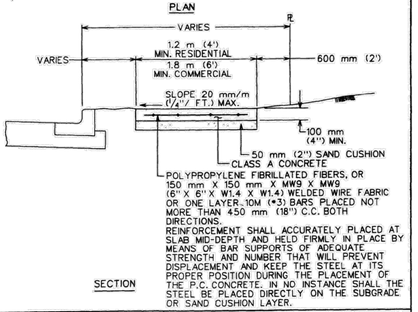

SECTION

CITY OF AUSTIN DEPARTMENT OF PUBLIC WORKS	SIDEWALK	
Bill Gardner 3/26/08 ADOPTED	THE ARCHITECT/ENGINEER ASSUMES RESPONSIBILITY FOR APPROPRIATE USE OF THIS STANDARD.	STANDARD NO. 432S-1 1 OF 3

DETAIL F
NTS

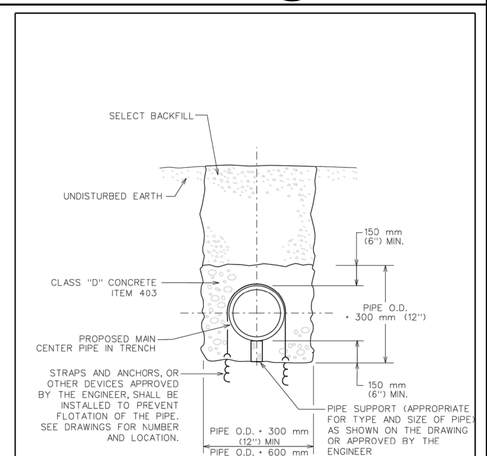

CITY OF AUSTIN WATER AND WASTEWATER UTILITY	CONCRETE ENCASEMENT	
RECORD COPY SIGNED BY LEON BARBA 8/18/00 ADOPTED	THE ARCHITECT/ENGINEER ASSUMES RESPONSIBILITY FOR APPROPRIATE USE OF THIS STANDARD.	STANDARD NO. 505S-1

DETAIL G
N.T.S.

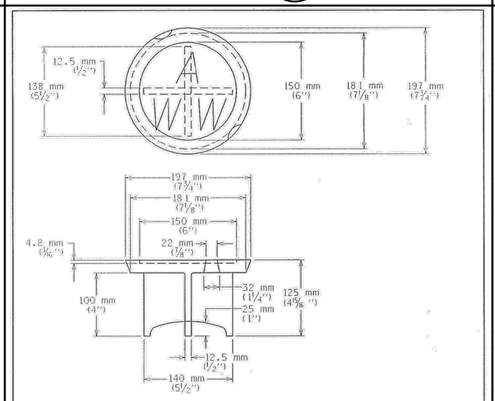

NOTES:

1. MATERIAL SHALL BE GRAY CAST IRON, ASTM A48, GRADE 30B.
2. TYPICAL FILLET IS 4.8 mm (3/16") RADIUS
3. LETTERING SHALL BE 38 mm (1 1/2") HEIGHT AND LOCATED AS SHOWN.
4. THIS LID REQUIRES TWO (2) PICK SLOTS.
5. THE MANUFACTURER'S IDENTIFICATION AND CASTING NUMBER, AND THE COUNTRY WHERE CAST, SHALL BE DISTINCTLY CAST ONTO EACH LID.
6. DRAFT AND SHRINKAGE ALLOWANCE SHALL BE IN ACCORD WITH NORMAL FOUNDRY PRACTICE.
7. FINISH BY REMOVING FINS AND FLASHING; PAINT WITH BLACK ASPHALT COATING.
8. WEIGHT: APPROXIMATELY 6 kg (13 lbs).

CITY OF AUSTIN WATER AND WASTEWATER UTILITY	VALVE BOX CASTING C-7 LID	
Kathi L Payne 4-5-95 ADOPTED	THE ARCHITECT/ENGINEER ASSUMES RESPONSIBILITY FOR APPROPRIATE USE OF THIS STANDARD.	STANDARD NO. 511S-12

DETAIL H
N.T.S.

NOTES:

1. WELD SOCKET 64 mm X 51 mm (2 1/2" X 2") DEEP TO 25 mm (1") SCH. 40 ROUND STEM EXTENSION, FITTED ON OPERATING NUT, SCH. 80 FOR LENGTHS OVER 3 m (10').
2. CITY OF AUSTIN STANDARD VALVE CASTING RING C-6 & LID C-7 OR C-5A LID IN UNPAVED AREAS. SEE VALVE CASTING DETAIL.
3. NUT AT TOP OF VALVE EXTENSION ROD SHALL BE SQUARE 51 mm (2") LONG WELDED TO TOP OF ROD.

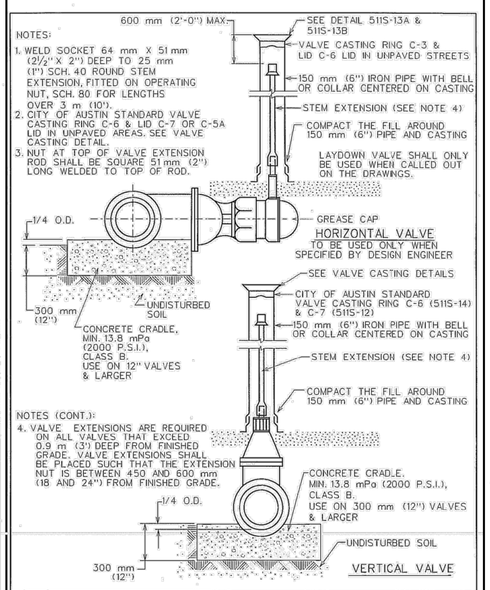

NOTES (CONT.):

4. VALVE EXTENSIONS ARE REQUIRED ON ALL VALVES THAT EXCEED 0.9 m (3') DEEP FROM FINISHED GRADE. VALVE EXTENSIONS SHALL BE PLACED SUCH THAT THE EXTENSION NUT IS BETWEEN 450 AND 600 mm (18 AND 24") FROM FINISHED GRADE.

CITY OF AUSTIN AUSTIN WATER UTILITY	TYPICAL GATE VALVE 100 mm-600 mm (4"-24")	
Kathi L Payne 3-5-04 ADOPTED	THE ARCHITECT/ENGINEER ASSUMES RESPONSIBILITY FOR APPROPRIATE USE OF THIS STANDARD.	STANDARD NO. 511S-7

DETAIL I
N.T.S.

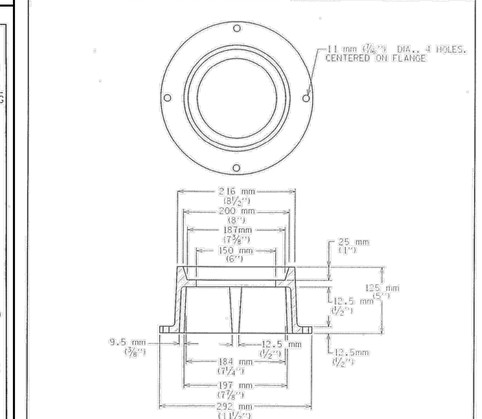

NOTES:

1. MATERIALS SHALL BE GRAY CAST IRON, ASTM A48, GRADE 30B.
2. THE MANUFACTURER'S IDENTIFICATION & CASTING NUMBER & THE COUNTRY WHERE CAST, SHALL BE DISTINCTLY CAST ONTO EACH RING.
3. DRAFT & SHRINKAGE ALLOWANCE SHALL BE IN ACCORD WITH NORMAL FOUNDRY PRACTICE.
4. FINISH BY REMOVING FINS & FLASHING; PAINT WITH BLACK ASPHALT COATING.
5. WEIGHT: APPROXIMATELY 10.5 kg (23 lbs).

CITY OF AUSTIN WATER AND WASTEWATER UTILITY	VALVE BOX CASTING C-6 PAVING RING	
Kathi L Payne 4-5-95 ADOPTED	THE ARCHITECT/ENGINEER RESPONSIBILITY FOR OF THIS STANDARD.	

DETAIL J
N.T.S.

STATE OF TEXAS
DANNY M. HURTADO
104266
REGISTERED PROFESSIONAL ENGINEER
May 2, 2016

REV No	DATE	DRWN	CHKD	REMARKS

DESIGNED BY: WOO
DRAWN BY: SANDEFUR
SHEET CHK'D BY: HURTADO
CROSS CHK'D BY:
APPROVED BY:
DATE: MAY 2016

CDM Smith
Riata Corporate Park, 12357-A Riata Trace Parkway, Suite 210
Austin, TX 78727
Tel: (512) 346-1100
Texas Registration Number F-3043

CITY OF AUSTIN, TEXAS - AUSTIN WATER UTILITY
CIP 3333.016

SOUTH AUSTIN REGIONAL WWTP
THICKENER IMPROVEMENTS PROJECT

STANDARD CIVIL DETAILS II

PROJECT No 590-104217
FILE NAME: C-DETAILS

SHEET No
C-15

BID SET

S:\Acad\104217_SAR\C-DETAILS.dwg, C-15, 5/4/2016 12:23:06 PM, sandefurdw, DWG To PDF.pc3
S:\ACAD\104217_SAR\C-DETAILS By: sandefurdw Saved: 4/22/2016 11:16:53 AM Plotted: 5/4/2016 12:23:10 PM
Plotted: 5/4/2016 12:23:10 PM

STRUCTURAL GENERAL NOTES

GENERAL NOTES

1. THESE GENERAL NOTES SHALL APPLY UNLESS OTHERWISE SPECIFICALLY NOTED ON PLANS AND DETAILS.

2. CONSTRUCTION WORKMANSHIP, AND MATERIALS SHALL COMPLY WITH THE 2012 INTERNATIONAL BUILDING CODE (IBC).

3. THE CONTRACTOR SHALL VERIFY ALL DIMENSIONS AND SHALL COORDINATE ALL STRUCTURAL PLANS AND DETAILS WITH ARCHITECTURAL, MECHANICAL, ELECTRICAL AND CIVIL DRAWINGS BEFORE STARTING WORK. IN CASE OF DISCREPANCY, THE CONTRACTOR SHALL NOTIFY THE ENGINEER OF SAME IN A TIMELY MANNER.

4. COMPLETE SHOP DRAWINGS FOR THE STRUCTURAL WORK SHALL BE SUBMITTED FOR REVIEW PRIOR TO COMMENCEMENT OF CONSTRUCTION IN ACCORDANCE WITH THE SPECIFICATIONS. REVIEW OF SHOP DRAWINGS BY THE ARCHITECT/ENGINEER DOES NOT RELIEVE THE CONTRACTOR OF FULL RESPONSIBILITY FOR CORRECT FABRICATION AND CONSTRUCTION OF THE WORK.

5. THE STRUCTURAL DRAWINGS SHALL NOT BE SCALED FOR DETERMINATION OF QUANTITIES, LENGTHS, OR FIT OF MATERIALS.

6. PRINCIPAL OPENINGS ARE SHOWN ON THE STRUCTURAL DRAWINGS, THE CONTRACTOR SHALL REFER TO ARCHITECTURAL, MECHANICAL, ELECTRICAL, HVAC AND PLUMBING DRAWINGS FOR SLEEVES, CURBS, INSERTS AND SIMILAR DETAILS NOT SHOWN. SIZE AND LOCATION OF ALL OPENINGS SHALL BE VERIFIED BY THE CONTRACTOR. ANY DEVIATION FROM OPENINGS SHOWN ON THE STRUCTURAL DRAWINGS SHALL BE BROUGHT TO THE ENGINEER'S ATTENTION PRIOR TO CONSTRUCTION.

7. THE STRUCTURAL DRAWINGS AND SPECIFICATIONS REPRESENT THE FINISHED STRUCTURE. THEY DO NOT INDICATE THE METHODS OF CONSTRUCTION UNLESS SO STATED OR NOTED. THE CONTRACTOR SHALL PROVIDE ALL MEASURES NECESSARY TO PROTECT THE WORKERS AND ALL OTHER PERSONS DURING CONSTRUCTION.

8. THE CONTRACTOR SHALL PROVIDE TEMPORARY ERECTION BRACING AND SHORING OF ALL STRUCTURAL WORK AS REQUIRED FOR STABILITY OF THE STRUCTURE DURING ALL PHASES OF CONSTRUCTION. THE CONTRACTOR SHALL IMMEDIATELY NOTIFY THE CONSTRUCTION MANAGER OF ANY CONDITION WHICH, IN HIS OPINION, MIGHT ENDANGER THE STABILITY OF THE STRUCTURE OR CAUSE DISTRESS IN THE STRUCTURE.

9. CONSTRUCTION MATERIALS SHALL NOT BE STORED ON FLOORS OR ROOFS IN EXCESS OF THE DESIGN LIVE LOADS. IMPACT SHALL BE AVOIDED WHEN PLACING MATERIALS ON FLOORS OR ROOFS.

DESIGN CRITERIA

1. LOADS:

STRUCTURE SELF-WEIGHT INCLUDED AS DEAD LOAD FOR ALL LOCATIONS.
LIVE LOADS:
STAIRS: ..... 100 PSF
HATCHES: ..... 300 PSF

CONCRETE NOTES

1. ALL CONCRETE WORK SHALL CONFORM TO THE AMERICAN CONCRETE INSTITUTE (ACI) SPECIFICATION, ACI #301 & BUILDING CODE REQUIREMENTS, ACI #318, LATEST EDITION, FOR BUILDING STRUCTURES & BUILDING CODE REQUIREMENTS, ACI #350-06, FOR ENVIRONMENTAL STRUCTURES.

2. ALL DETAILING, FABRICATION AND ERECTION OF REINFORCING BARS, UNLESS OTHERWISE NOTED, MUST FOLLOW THE ACI "MANUAL OF STANDARD PRACTICE FOR DETAILING REINFORCED CONCRETE", ACI #315, LATEST EDITION.

3. UNLESS SHOWN OTHERWISE IN THE SPECIFICATIONS, CONCRETE SHALL BE CLASS 'S' CONCRETE WITH 4000 PSI MINIMUM COMPRESSIVE STRENGTH AT 28 DAYS. ALSO REFER TO SPECIFICATIONS FOR ADDITIONAL CONCRETE MIX DESIGN REQUIREMENTS.

4. ALL ACCESSORIES SHALL BE IN ACCORDANCE WITH THE ACI "MANUAL OF STANDARD PRACTICE FOR DETAILING REINFORCED CONCRETE", ACI #315, LATEST EDITION. ACCESSORIES FOR INTERIOR CONCRETE SURFACES EXPOSED TO VIEW SHALL HAVE PLASTIC COATED FEET. ACCESSORIES FOR CONCRETE SURFACES EXPOSED TO EARTH, WEATHER, WATER, OR HIGH HUMIDITY SHALL BE FABRICATED OF STAINLESS STEEL OR PLASTIC. PROVIDE BOLSTERS AT SUSPENDED SLABS, WALLS AND WIDE BEAMS. PROVIDE STANDEES AT ALL SLABS WITH TWO LAYERS OF REINFORCING. FOR SLAB-ON-GRADE REINFORCING, PROVIDE CHAIRS MANUFACTURED FROM HOT-DIPPED GALVANIZED STEEL, STAINLESS STEEL, PLASTIC, OR PRECAST CONCRETE BLOCKS OF EQUAL OR GREATER COMPRESSIVE STRENGTH AS THE CONCRETE BEING POURED.

5. CONCRETE PLACED BY PUMPING SHALL MEET THE FOLLOWING REQUIREMENTS:

a. COARSE AGGREGATE (AGG) SHALL BE GRADED FROM A MAXIMUM OF 1 1/2".

b. MAXIMUM ALLOWABLE INCREASE IN CEMENT FACTOR SHALL BE 1/2 SACK PER CUBIC YARD OVER NORMAL MIX DESIGN.

c. MAXIMUM WATER CEMENT RATIO WILL CONFORM TO REQUIREMENTS STATED IN THE PROJECT SPECIFICATIONS. IF MORE WORKABILITY IS REQUIRED, AN ADMIXTURE MAY BE USED.

d. MAXIMUM WEIGHT RATIO OF FINE AGGREGATES TO COARSE AGGREGATES (AGG) SHALL NOT EXCEED 2/3.

e. REFER TO ACI 301, LATEST EDITION, SECTION 800, FOR OTHER PUMPING REQUIREMENTS.

f. IN NO CASE SHALL CONCRETE BE PUMPED THROUGH AN ALUMINUM TUBE.

6. SELF-EXPANDING STRIP WATERSTOPS SHALL BE MANUFACTURED RECTANGULAR OR TRAPEZOIDAL STRIP, NON-BENTONITE, HYDROPHYLIC MATERIAL FOR ADHESIVE BONDING TO CONCRETE. THESE WATERSTOPS SHALL BE MANUFACTURED FROM HYDRO-EXPANSIVE RUBBER WITH A MINIMUM EXPANSION CAPABILITY OF 200% OF ITS ORIGINAL VOLUME AFTER IMMERSION IN WATER. INSTALL IN CONSTRUCTION JOINTS AND AT OTHER LOCATIONS INDICATED, ACCORDING TO MANUFACTURER'S WRITTEN INSTRUCTIONS, BONDING OR MECHANICALLY FASTENING AND FIRMLY PRESSING INTO PLACE. INSTALL IN LONGEST LENGTHS PRACTICAL. SUBJECT TO SPECIFICATION REQUIREMENTS, PROVIDE ONE OF THE FOLLOWING:

a) SWELLSEAL JOINT; DE NEEF CONSTRUCTION CHEMICALS (U.S) INC.
b) HYDROTITE; GREENSTREAK
c) ADEKA ULTRA SEAL; MITSUBISHI INTERNATIONAL CORPORATION
d) APPROVED EQUAL

MASONRY

HOLLOW CONCRETE MASONRY UNITS SHALL CONFORM TO ASTM C90, GRADE N, TYPE 1, F'm = 1,500 PSI. RUNNING BOND. MORTAR TYPE S, 1,800 PSI. GROUT 2,000 PSI. MECHANICALLY VIBRATE GROUT IN VERTICAL SPACES IMMEDIATELY AFTER POURING AND AGAIN ABOUT 5 MINUTES LATER. PROVIDE CLEANOUTS IF GROUT LIFT EXCEEDS 4'-0" IN BLOCK WALLS. MAXIMUM GROUT LIFT SHALL BE 8'-0". LAP SPLICES SHALL BE AS FOLLOWS:

BAR SIZE	#3	#4	#5	#6	#7	#8	#9
BAR LAPS (INCHES)	27	36	45	54	63	72	81

STRUCTURAL STEEL NOTES

1. ALL W, S, I HOT-ROLLED STRUCTURAL SHAPES SHALL CONFORM TO ASTM A992. ALL OTHER STRUCTURAL STEEL SHALL CONFORM TO THE ASTM SPECIFICATION A-36 UNLESS OTHERWISE SHOWN OR NOTED.

2. ALL STRUCTURAL STEEL TUBING SHALL CONFORM TO ASTM SPECIFICATION A-500, GRADE B.

3. ALL STAINLESS STEEL SHAPES SHALL CONFORM TO ASTM SPECIFICATION A-276, AND/OR A-479 TYPE 316L, UNLESS OTHERWISE SHOWN OR NOTED. ALL STAINLESS STEEL PLATE, SHEET, OR STRIP SHALL CONFORM TO ASTM A-666 OR A-240.

4. ALL STRUCTURAL STEEL SHALL BE DESIGNED, FABRICATED AND ERECTED IN ACCORDANCE WITH THE LATEST SPECIFICATIONS OF THE AMERICAN INSTITUTE OF STEEL CONSTRUCTION AND THE STEEL JOIST INSTITUTE.

5. ALL STRUCTURAL BOLTS SHALL CONFORM TO ASTM A-325N UNLESS OTHERWISE SHOWN OR NOTED. FURNISH HARDENED WASHERS AT ALL BOLTED CONNECTIONS, INCLUDING ANCHOR BOLTS.

6. ALL STAINLESS STEEL BOLTS AND EXPANSION ANCHORS SHALL CONFORM TO ASTM F-593, TYPE 316 AND ALL NUTS SHALL CONFORM TO ASTM F-594, TYPE 316.

7. REFER TO ARCHITECTURAL, MECHANICAL, HAVC AND ELECTRICAL PLANS FOR VERIFICATION OF ALL BOLTS, BLOCKING ANCHORS, ETC, FOR THE ANCHORAGE OF THEIR RESPECTIVE ITEMS.

8. ALL BEAMS AND COLUMNS SHALL BE FULL LENGTH WITHOUT SPLICES UNLESS OTHERWISE INDICATED ON PLANS.

9. ALL SHOP AND FIELD WELDS SHALL BE MADE BY WELDERS WHO HAVE BEEN QUALIFIED AND CERTIFIED TO MAKE THE REQUIRED WELDS WITHIN THE PREVIOUS SIX MONTHS IN ACCORDANCE WITH THE LATEST AMERICAN WELDING SOCIETY SPECIFICATIONS A.W.S. D1.1.

10. ERECTION CONNECTORS SHALL BE PROVIDED IN ORDER TO PROPERLY ALIGN MEMBERS AND BE TRUE AND PLUMB WHEN WELDS ARE MADE.

11. SHOP DRAWINGS SHALL BE PREPARED FOR ALL STRUCTURAL STEEL AND SUBMITTED FOR REVIEW BY ENGINEER. ENGINEERING DRAWINGS SHALL NOT BE REPRODUCED AND USED AS SHOP DRAWINGS.

FOUNDATION NOTES

1. MAT FOUNDATIONS ARE DESIGNED FOR AN ALLOWABLE NET BEARING PRESSURE OF 1500 PSF.

2. PRIMARY EXCAVATION:

a. EXCAVATION OPERATIONS WILL LIKELY PENETRATE VERY STIFF TO HARD, CLAYEY FILL/RESIDUAL SOIL, COMPLETELY WEATHERED LIMESTONE AND POTENTIALLY EXTEND INTO HIGHLY TO MODERATELY WEATHERED LIMESTONE. WITHIN THE FOOTPRINT OF THE STRUCTURE AND FOR A DISTANCE OF 5 FEET OUTSIDE THE FOOTPRINT, REMOVE AND DISPOSE OF ALL EXISTING FILL MATERIAL, SURFACE FAT CLAY, ORGANICS, OTHER DELETERIOUS MATERIALS OR TO A MINIMUM DEPTH BELOW FINISHED SUBGRADE OF 4'-0", WHICHEVER IS DEEPER.

b. EXCAVATION WITH SLOPES STEEPER THAN 1.5H:1V OR BELOW GROUNDWATER TABLE MAY NEED TO BE BENCHED OR SHORED TO PROVIDE FOR SAFE WORKING AREAS. EXCAVATION SPOIL OR HEAVY EQUIPMENT SHOULD NOT BE PERMITTED WITHIN A LATERAL DISTANCE EQUIVALENT TO THE DEPTH OF THE EXCAVATION UNLESS SPECIFICALLY CONSIDERED BY THE CONTRACTOR DURING DEVELOPMENT OF EXCAVATION.

c. IT IS THE CONTRACTOR'S RESPONSIBILITY TO DESIGN AND CONSTRUCT STABLE, TEMPORARY EXCAVATIONS AND TO ASSURE THE PROPER SHORING, SLOPING OR BENCHING UTILIZED FOR THE SIDES OF THE EXCAVATION. AT A MINIMUM, ALL EXCAVATIONS AT THE SITE MUST BE PERFORMED IN ACCORDANCE WITH FEDERAL OSHA REGULATIONS, AS DESCRIBED UNDER THE HEADING "CONSTRUCTION STANDARD FOR EXCAVATION, 29 CFR, PART 1926, SUBPART P" IN VOLUME 59, NO 209 OF THE FEDERAL REGISTER.

3. PAD PREPARATION AND FILL PLACEMENT:

a. AFTER EXCAVATION TO A DEPTH OF EMBEDMENT (AS INDICATED IN ITEM 2a ABOVE), THE CONTRACTOR SHALL BE RESPONSIBLE FOR PROOF ROLL TESTING OF THE EXCAVATED AREA PRIOR TO PLACEMENT OF THE CONCRETE FOUNDATION. PROOF ROLLING SHALL BE PERFORMED AS DEFINED IN PROJECT MANUAL ITEM NO. 236S.

b. AS NEEDED TO STABILIZE THE SOIL, SOIL THAT IS OBSERVED TO RUT OR DEFLECT EXCESSIVELY UNDER THE MOVING LOAD SHALL BE REMOVED OR BE SCARIFIED AND RE-COMPACTED TO AT LEAST 95% OF THE MAXIMUM DRY DENSITY DETERMINED BY THE TEST METHOD TEX-113/114-E.

c. THE SOIL SUBGRADE SHOULD NOT BE ALLOWED TO DRY OUT OR BECOME SATURATED PRIOR TO PLACEMENT OF FOUNDATION STRUCTURE.

d. AFTER EXCAVATION, SELECT FILL SHALL BE PLACED IN ACCORDANCE WITH THE PROJECT MANUAL UP TO BOTTOM OF PROPOSED PAD AND FOOTING ELEVATIONS.

POST-INSTALLED REBAR AND ANCHORS

THE BELOW PRODUCTS ARE THE DESIGN BASIS FOR THIS PROJECT. PRODUCT DIAMETER AND EMBEDMENT SHALL BE SHOWN IN THE DETAILS. INSTALL PRODUCTS IN ACCORDANCE WITH MANUFACTURER'S PRINTED INSTALLATION INSTRUCTIONS (MPII). CONTRACTOR SHALL CONTACT MANUFACTURER'S REPRESENTATIVE FOR PRODUCT INSTALLATION TRAINING AND SHALL SUBMIT LETTER TO THE ENGINEER-OF-RECORD (EOR) INDICATING TRAINING HAS TAKEN PLACE. REFER TO THE PROJECT BUILDING CODE AND/OR EVALUATION REPORT FOR SPECIAL INSTECTOINS AND PROOF LOAD REQUIREMENTS. SUBSTITUTION REQUESTS FOR PRODUCTS OTHER THAN THOSE LISTED BELOW MAY BE SUBMITTED BY THE CONTRACTOR TO THE EOR FOR REVIEW. SUBSTITUTIONS WILL ONLY BE CONSIDERED FOR PRODUCTS HAVING A RESEARCH REPORT RECOGNIZING THE PRODUCT FOR THE APPROPRIATE APPLICATION UNDER THE PROJECT BUILDING CODE. SUBSTITUTION REQUESTS SHALL INCLUDE CALCULATIONS THAT DEMONSTRATE THE SUBSTITUTED PRODUCT IS CAPABLE OF ACHIEVING THE EQUIVALENT PREFORMANCE VALUES OF THE DESIGN BASIS PRODUCT.

UNLESS OTHERWISE NOTED ON THE PLANS, ANCHORS SHALL BE:

1. FOR ANCHORING INTO CONCRETE:

A. MECHANICAL ANCHORS SHALL HAVE BEEN TESTED IN ACCORDANCE WITH ACI 355.2 AND ICC-ES AC193 FOR CRACKED CONCRETE. PRE-APPROVED PRODUCTS INCLUDE:

I. SIMPSON STRONG-TIE "STRONG-BOLT 2" (ICC-ES ESR-2713)
II. SIMPSON STRONG-TIE "TITAN-HD" (ICC-ES ESR-3037)
III. HILTI "KWIK BOLT 3" (ICC-ES ESR-2302)

B. ADHESIVE FOR REBAR AND ANCHORS SHALL HAVE BEEN TESTED IN ACCORDANCE WITH ACI 355.4 AND ICC-ES AC308 FOR CRACKED CONCRETE APPLICATIONS. DESIGN ADHESIVE BOND STRENGTH HAS BEEN BASED ON ACI 355.4 TEMPERTURE CATEGORY B WITH INSTALLATIONS INTO DRY HOLES DRILLED USING CARBIDE DRILL BIT INTO CRACKED CONCRETE THAT HAS CURED FOR AT LEAST 21 DAYS. ADHESIVE ANCHORS REQUIRING CERTIFIED INSTALLATIONS SHALL BE INSTALLED BY A CERTIFIED ADHESIVE ANCHOR INSTALLER PER ACI 318-11 D.9.2.2. INSTALLATIONS REQUIRING CERTIFIED INSTALLERS SHALL BE INSPECTED PER ACI 318-11 D.9.2.4. PRE-APPROVED PRODUCTS INCLUDE:

I. SIMPSON STRONG-TIE AT-XP (IAPMO UES ER-263)
II. SIMPSON STRONG-TIE SET-XP (ICC ES ESR-2508)
III. HILTI "HIT-HY 200 (ICC ES ESR-3187)
IV. HILTI "HIT-RE 500-SD" (ICC ES ESR-2322)

2. FOR ANCHORING INTO MASONRY:

A. SOLID-GROUTED CONCRETE MASONRY

I. MECHANICAL ANCHORS SHALL HAVE BEEN TESTED IN ACCORDANCE WITH ICC-ES AC01 OR ICC-ES AC106. PRE-APPROVED PRODUCTS INCLUDE:

(1) SIMPSON STRONG-TIE "TITAN-HD" (ICC-ES ESR-1056)
(2) SIMPSON STRONG-TIE "STRONG-BOLT 2" (IAPMO-UES ER-240)
(3) HILTI "KWIK BOLT 3" (ICC-ES ESR-1385)

II. ADHESIVE FOR REBAR AND ANCHORS SHALL HAVE BEEN TESTED IN ACCORDANCE WITH ICC-ES AC58. PRE-APPROVED PRODUCTS INCLUDE:

(1) SIMPSON STRONG-TIE "AT-XP" (IAPMO-UES ER-281)
(2) SIMPSON STRONG-TIE "SET-XP" (IAPMO-UES ER-265)

STATEMENT OF SPECIAL INSPECTION PER IBC 2012, CHAPTER 17

PER SECTION 1705 OF THE 2012 INTERNATIONAL BUILDING CODE, THE FOLLOWING IS A LIST OF THE REQUIRED SPECIAL INSPECTIONS APPLICABLE FOR THIS PROJECT :

2012 IBC SECTION	INSPECTION / ASSURANCE	TYPE OF SPECIAL INSPECTIONS AND EXTENT	APPLICABLE	NON APPLICABLE	NON STRUCTURAL
1705.2	AISC 360	STEEL CONSTRUCTION	■	□	□
1705.2.2	IBC TABLE 1705.2.2	STEEL CONSTRUCTION OTHER THAN STRUCTURAL STEEL	■	□	□
1705.2.2.1.1	AWS D1.3	COLD-FORMED WELDING INSPECTION	□	■	□
1705.2.2.1.2	AWS D1.4 AND ACI 318	REINFORCING STEEL WELDING INSPECTION	□	■	□
1705.2.2.2	INDICATED IN SECTION	COLD-FORMED STEEL TRUSSES SPANNING 60 FEET OR GREATER	□	■	□
1705.3	IBC TABLE 1705.3	CONCRETE CONSTRUCTION	■	□	□
1705.4	INSPECTION: TMS 420/ACI 530/ASCE 5 ASSURANCE: TMS 620/ACI 530.1/ASCE 6	MASONRY CONSTRUCTION	■	□	□
1705.5	INDICATED IN SECTION	WOOD CONSTRUCTION	□	■	□
1705.6	INDICATED IN SECTION	SOILS	■	□	□
1705.7	INDICATED IN SECTION	DRIVEN DEEP FOUNDATIONS	□	■	□
1705.8	INDICATED IN SECTION	CAST-IN-PLACE DEEP FOUNDATIONS (PIERS)	□	■	□
1705.9	INDICATED IN SECTION	HELICAL PILE FOUNDATIONS	□	■	□
1705.10	INDICATED IN SECTION	SPECIAL INSPECTION FOR WIND RESISTANCE	□	■	□
1705.11	INDICATED IN SECTION	SPECIAL INSPECTION FOR SEISMIC RESISTANCE	□	■	□
1705.12	INDICATED IN SECTION	TESTING AND QUALIFICATION FOR SEISMIC RESISTANCE	□	■	□
1705.13	INDICATED IN SECTION	SPRAYED FIRE-RESISTANCE MATERIALS	□	□	■
1705.14	AWCI 12-B	MASTIC AND INTUMESCENT FIRE-RESISTANT COATINGS	□	□	■
1705.15	INDICATED IN SECTION & ASTM E2570	EXTERIOR INSULATION AND FINISH SYSTEMS/ WATER-RESISTIVE BARRIER COATING	□	□	■
1705.16	INDICATED IN SECTION	FIRE-RESISTANCE PENETRATIONS AND JOINTS	□	□	■
1705.17	INDICATED IN SECTION	SPECIAL INSPECTION FOR SMOKE CONTROL	□	□	■

PER CHAPTER 17 OF THE 2012 INTERNATIONAL BUILDING CODE, THE FOLLOWING IS A LIST OF ADDITIONAL SPECIAL INSPECTIONS APPLICABLE TO THIS PROJECT * :

2012 IBC SECTION	TYPE OF SPECIAL INSPECTIONS AND EXTENT	APPLICABLE	NON APPLICABLE	DETAILS
1706	DESIGN STRENGTH OF MATERIALS	□	■	
1707	ALTERNATIVE TEST PROCEDURES	□	■	
1708	TEST SAFE LOAD	□	■	
1709	IN-SITU LOAD TESTS	□	■	
1710	PRECONSTRUCTION LOAD TESTS	□	■	
1711	MATERIAL AND TEST STANDARDS	□	■	

* ADDITIONAL SPECIAL INSPECTIONS PER 2012 IBC SHALL ALSO BE REQUIRED FOR PROPOSED WORK THAT IS, IN THE OPINION OF THE BUILDING OFFICIAL, UNUSUAL IN NATURE.

ABBREVIATIONS

AB	ANCHOR BOLT	LONG	LONGITUDINAL	EE	EACH END	REF.	REFERENCE
ADDL	ADDITIONAL	LLH	LONG LEG HORIZONTAL	EF	EACH FACE	STD	STANDARD
AL	ALUMINUM	LLV	LONG LEG VERTICAL	EL, ELEV	ELEVATION	STIFF	STIFFENER
ALT	ALTERNATE	MFGR	MANUFACTURER	EQ	EQUALLY SPACED	STL	STEEL
ANC	ANCHOR	MAX	MAXIMUM	ES	EACH SIDE	SYM	SYMMETRICAL
APVD	APPROVED	MEP	MECHANICAL, ELECTRICAL, AND PLUMBING	EW, EA. WAY	EACH WAY	T&B	TOP & BOTTOM
ARCH'L	ARCHITECTURAL	MECH'L	MECHANICAL	EXP	EXPANSION	T.O. SLAB	TOP OF SLAB
BOT	BOTTOM	MIN	MINIMUM	EXIST	EXISTING	TC	TOP CHORD
BM	BEAM	NTS	NOT TO SCALE	FD	FLOOR DRAIN	THK	THICK
BRG	BEARING	OC, O/C	ON CENTER	FDN	FOUNDATION	TO.	TOP OF
BTWN	BETWEEN	OD	OUTSIDE DIAMETER	FIN	FINISH	TOC	TOP OF CONCRETE
CC	CENTER TO CENTER	OF	OUTSIDE FACE	FLR	FLOOR	TOF	TOP OF FOOTING
CIP	CAST IN PLACE	O/O	OUT TO OUT	FS	FINISHED SUBGRADE	TOG	TOP OF GRATING
CJ	CONSTRUCTION JOINT	OPNG	OPENING	FTG	FOOTING	TOS	TOP OF STEEL
CL, ℄	CENTERLINE	OPP	OPPOSITE	GA	GAUGE, GAGE	TOW	TOP OF WALL
CLR	CLEARANCE	PL, ℙ	PLATE	GALV	GALVANIZED	TRANS	TRANSVERSE
CMU	CONCRETE MASONRY UNIT	PROJ	PROJECTION	HORIZ	HORIZONTAL	TYP	TYPICAL
COL	COLUMN	PVC	POLYVINYL CHLORIDE	H.S.	HEADED STUD	UNO	UNLESS NOTED OTHERWISE
CONC	CONCRETE	REINF	REINFORCE, REINFORCING	IF	INSIDE FACE	VERT	VERTICAL
CONN	CONNECTION	REQD	REQUIRED	IN	INCHES	W/	WITH
CONT	CONTINUOUS	SHT	SHEET	JT	JOINT	WWF	WELDED WIRE FABRIC
CTR	CENTER	SIM	SIMILAR	SP	SPECIAL PROVISION		
DIA	DIAMETER	SPCG	SPACING				
DWG	DRAWING	SPECS	SPECIFICATIONS				
DWL'S	DOWELS	SQ	SQUARE				
EA	EACH	SS	STAINLESS STEEL				

STATE OF TEXAS
BENJAMIN MATTHEW BETZOLD
121236
LICENSED
PROFESSIONAL ENGINEER
DATE 4-22-16

REV No	DATE	DRWN	CHKD	REMARKS

DESIGNED BY: BB
DRAWN BY: FS
SHEET CHK'D BY: BB
CROSS CHK'D BY: BB
APPROVED BY:
DATE: APRIL 22, 2016

CDM Smith
Riata Corporate Park, 12357-A Riata Trace Parkway, Suite 210
Austin, TX 78727
Tel: (512) 346-1100
Texas Registration Number F-3043

Jose I. Guerra, Inc.
Consulting Engineers
2401 South IH-35 Suite 210
Austin, Texas 78741
(512) 445-2090
Structural ◆ Civil ◆ Mechanical ◆ Electrical
TBPE FIRM F-3

CITY OF AUSTIN, TEXAS - AUSTIN WATER UTILITY

SOUTH AUSTIN REGIONAL WWTP
THICKENER IMPROVEMENTS PROJECT

STRUCTURAL DRAWINGS
STRUCTURAL
GENERAL NOTES

PROJECT No 590-104217
FILE NAME: S-1

SHEET No
S-1

100% DESIGN - CONSTRUCTION DOCUMENTS

F:\14043_SARWWTP_GRAVIT_THICKENER_IMPROVEMENTS\DRAWINGS\CAD\S-1 By: ben betzold Saved: 4/22/2016 8:07 PM Plotted: 4/22/2016 8:02:50 PM

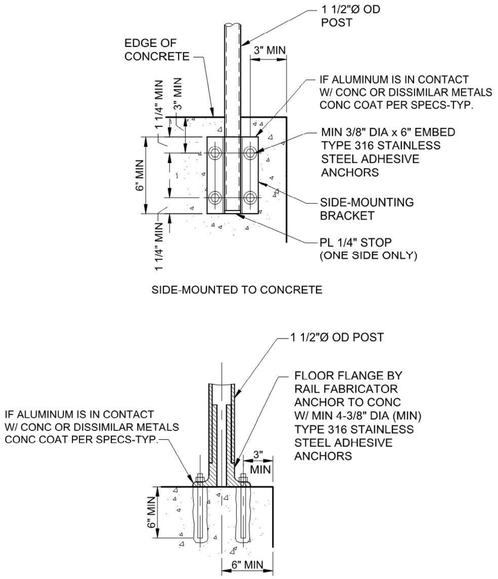

TYPICAL RAILING POST MOUNTING DETAILS (1)

SCALE: NTS

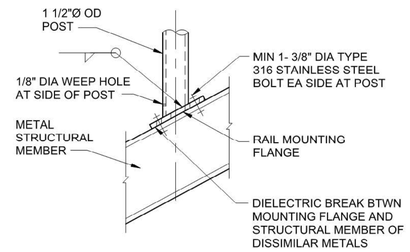

NOTES:

1. ALL HD GALV STEEL CONSTRUCTION UNLESS OTHERWISE NOTED.
2. DIP POSTS IN EPOXY PAINT AND CURE PAINT PRIOR TO POST INSTALLATION. COAT POSTS TO MIN 1" ABOVE WEEP HOLE.
3. PROVIDE SIDE-MOUNTED RAILINGS TO CONCRETE UNLESS OTHERWISE SHOWN ON THE DRAWINGS OR SPECIFIED.

TYPICAL RAILING POST MOUNTING DETAILS (2)

SCALE: NTS

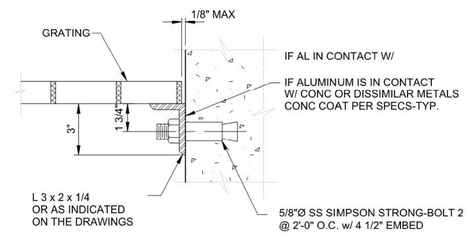

GRATING SEAT

NOTES:

1. SUPPORT ANGLE MATERIAL SHALL MATCH GRATING MATERIAL (I.E. USE SST ANGLE TO SUPPORT GRATING CALLED OUT AS SST GRATING, ETC.).

GRATING SEAT (3)

SCALE: NTS

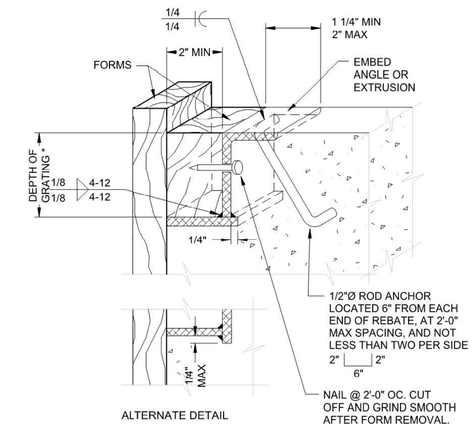

GRATING REBATE

NOTES:

1. REBATE ANGLE AND PLATE MATERIAL SHALL MATCH GRATING MATERIAL (I.E. USE SST ANGLE, PLATE AND ROD ANCHORS TO SUPPORT GRATING CALLED OUT AS SST GRATING, ETC.)
2. REBATE ANGLE TO BE CONTINUOUS AROUND ENTIRE OPENING.
3. ANGLE AND BEARING PLATE SHALL BE 1/4" MIN THICK.
4. REBATE MAY BE EXTRUDED, SUBJECT TO ENGINEER'S ACCEPTANCE.
5. COAT ALL ALUMINUM IN CONTACT WITH CONCRETE PER SPECIFICATIONS.
6. * = DIMENSION AS REQUIRED BY GRATING MANUFACTURER.

GRATING REBATE AND SEAT (4)

SCALE: NTS

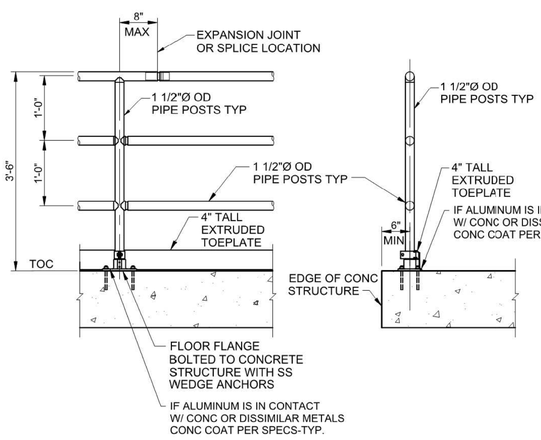

TYPICAL CONCRETE FLOOR MOUNTING DETAILS (5)

SCALE: NTS

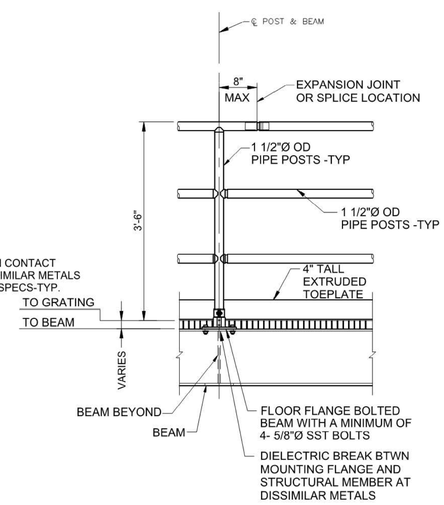

TYPICAL BEAM MOUNTING DETAILS (6)

SCALE: NTS

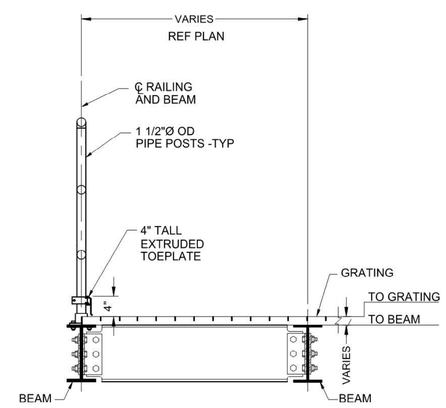

TYPICAL BEAM MOUNTING DETAILS (7)

SCALE: NTS

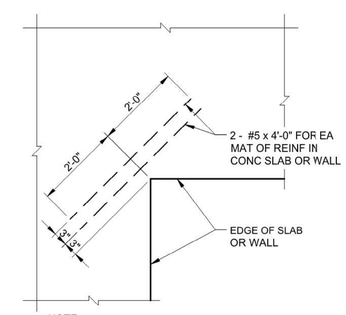

NOTE:

PROVIDE ADDL REINF BARS AT ALL SLAB AND WALL CONDITIONS WITH RE-ENTRANT CORNERS.

TYPICAL CONCRETE RE-ENTRANT CORNER REINFORCEMENT DETAIL (8)

SCALE: NTS

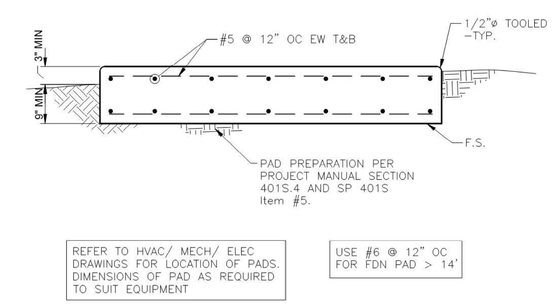

TYPICAL HVAC UNIT, ELECTRICAL AND MECH FDN PAD DETAIL (9)

SCALE: NTS

STATE OF TEXAS — BENJAMIN MATTHEW BETZOLD — 121236 — LICENSED PROFESSIONAL ENGINEER — DATE: 4-22-16

REV No	DATE	DRWN	CHKD	REMARKS

DESIGNED BY: KH
DRAWN BY: FS
SHEET CHK'D BY: JL
CROSS CHK'D BY: JL
APPROVED BY:
DATE: APRIL 22, 2016

CDM Smith
Riata Corporate Park, 12357-A Riata Trace Parkway, Suite 210
Austin, TX 78727
Tel: (512) 346-1100
Texas Registration Number F-3043

Jose I. Guerra, Inc.
Consulting Engineers
2401 South IH-35 Suite 210
Austin, Texas 78741
(512) 445-2090
Structural ◆ Civil ◆ Mechanical ◆ Electrical
TBPE FIRM F-3

CITY OF AUSTIN, TEXAS - AUSTIN WATER UTILITY

SOUTH AUSTIN REGIONAL WWTP
THICKENER IMPROVEMENTS PROJECT

STRUCTURAL DRAWINGS

TYPICAL DETAILS

PROJECT No 590-104217
FILE NAME: S-2

SHEET No
S-2

100% DESIGN - CONSTRUCTION DOCUMENTS

F:\14043_SARWWTP_GRAVIT_THICKENER_IMPROVEMENTS\DRAWINGS\CAD\S-2 By: ben betzold Saved: 4/22/2016 7:35:14 PM Plotted: 4/22/2016 8:04:23 PM

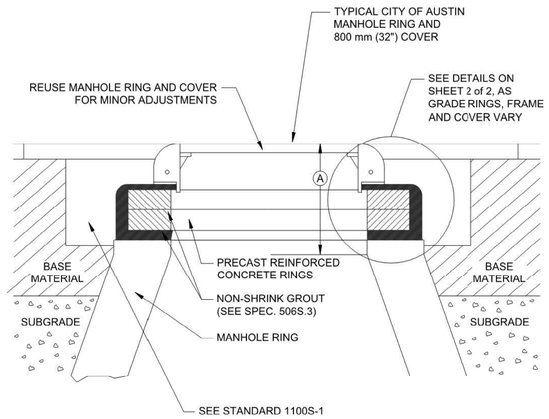

Ⓐ VERTICAL FACE = ALLOWABLE THROAT OR CHIMNEY HEIGHT
= NEW CONSTRUCTION = 525mm = (21") Max.
= EXISTING CONSTRUCTION = 675mm (27") Max.

NOTES:
1. NON-SHRINK GROUT SHALL NOT EXCEED 25 mm (1") IN ANY DIMENSION.
2. SUB-GRADE AND BASE MATERIALS SHALL BE COMPACTED ACCORDING TO ITEMS 201S AND 210S, RESPECTIVELY, OF THE CITY OF AUSTIN STANDARD SPECIFICATIONS.
3. REFER TO STANDARD 1100S-1 FOR REPAIRS AROUND MANHOLES.
4. SEE STANDARD 506S-4A FOR HDPE RING INSTALLATION (FOR USE IN PAVED AREAS ONLY).

CITY OF AUSTIN AUSTIN WATER UTILITY	MINOR MANHOLE ADJUSTMENT & NEW MANHOLE CONSTRUCTION	
RECORD COPY SIGNED BY KATHI L FLOWERS 08/31/2011	THE ARCHITECT/ENGINEER ASSUMES RESPONSIBILITY FOR APPROPRIATE USE OF THIS STANDARD.	STANDARD NO. 506S-4 1 OF 2

INSIDE PAVEMENT DETAIL

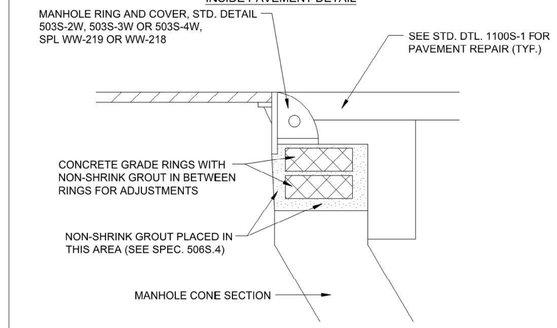

OUTSIDE PAVEMENT DETAIL

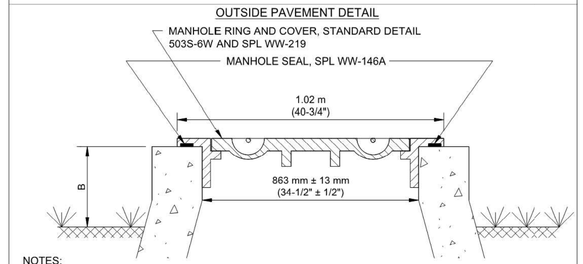

NOTES:
1. FOR USE IN UNPAVED AREAS ONLY
2. WHEN USED WITHIN 100-YEAR FLOODPLAIN, SEE DTL. 506S-6 FOR ADDITIONAL M.H. REQUIREMENTS.
3. DIMENSION B=150-300 mm (6"-12") FOR M.H. LOCATED IN 100-YR FLOOD PLAN.
=50-300 mm (2"-12") FOR M.H. OUTSIDE 100-YR FLOOD PLAN.

CITY OF AUSTIN AUSTIN WATER UTILITY	MINOR MANHOLE ADJUSTMENT & NEW MANHOLE CONSTRUCTION	
RECORD COPY SIGNED BY KATHI L FLOWERS 08/31/2011	THE ARCHITECT/ENGINEER ASSUMES RESPONSIBILITY FOR APPROPRIATE USE OF THIS STANDARD.	STANDARD NO. 506S-4 2 OF 2

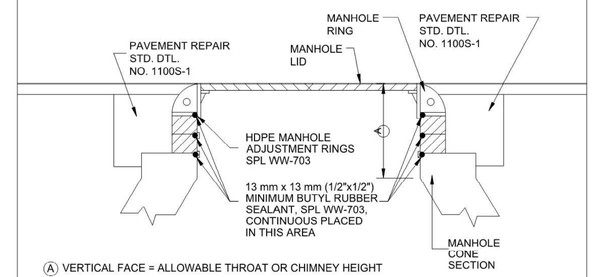

Ⓐ VERTICAL FACE = ALLOWABLE THROAT OR CHIMNEY HEIGHT
NEW CONSTRUCTION = 525mm (21") Max.
EXISTING CONSTRUCTION = 675mm (27") Max.

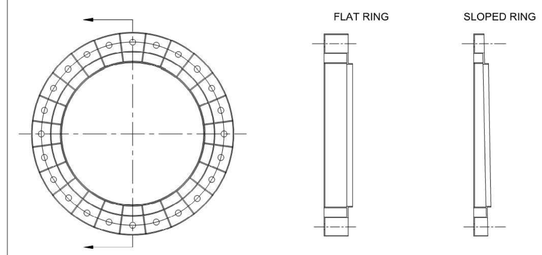

NOTE:
1. HDPE RINGS ONLY IN PAVED AREAS

CITY OF AUSTIN AUSTIN WATER UTILITY	MINOR MANHOLE HEIGHT ADJUSTMENT (HDPE RINGS)	
RECORD COPY SIGNED BY KATHI L FLOWERS 08/31/2011	THE ARCHITECT/ENGINEER ASSUMES RESPONSIBILITY FOR APPROPRIATE USE OF THIS STANDARD.	STANDARD NO. 506S-4A 1 OF 3

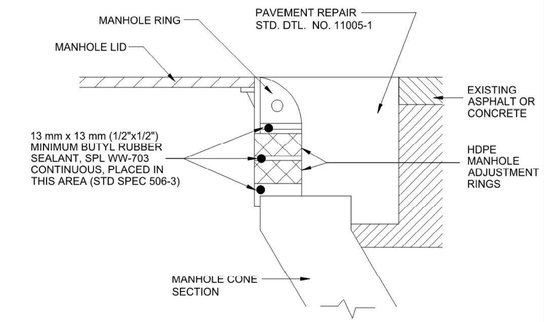

CITY OF AUSTIN AUSTIN WATER UTILITY	MINOR MANHOLE HEIGHT ADJUSTMENT (HDPE RINGS)	
RECORD COPY SIGNED BY KATHI L FLOWERS 08/31/2011	THE ARCHITECT/ENGINEER ASSUMES RESPONSIBILITY FOR APPROPRIATE USE OF THIS STANDARD.	STANDARD NO. 506S-4A 2 OF 3

INSTALLATION INSTRUCTIONS
HDPE MANHOLE ADJUSTMENT RINGS
(FOR NEW CONSTRUCTION AND REHABILITATION)

1. REMOVE EXISTING CASTING AND RINGS OR COVER PLATE TO EXPOSE CONCRETE. MANHOLE SURFACE MUST BE CLEAN AND LEVEL ±6 mm (1/4"). NOTE: IF TOP OF CONCRETE STRUCTURE IS IN VERY POOR CONDITION OR IRREGULAR, THE FIRST RING CAN BE PRESSED FULLY INTO A HEAVY BED OF MORTAR ALLOWING IT AND SUBSEQUENT RINGS TO BE POSITIONED WITHOUT WOBBLE OR POINT-LOADING.
2. POSITION STRAIGHT AND LEVEL TO DETERMINE HEIGHT ADJUSTMENT REQUIRED. CONFIRM BEFORE PLACING RINGS.
3. COMBINE VARIOUS RING HEIGHTS, IN BOTH FLAT AND SLOPE, TO REACH DESIRED ADJUSTMENT. PLACE RINGS WITH INNER POCKET OPENING UP (OUTER POCKET OPENING WITH HOLES DOWN). THE INTERLOCKING LIP (MALE TONGUE) EXTENDS DOWN INTO THE STRUCTURE OF LOWER RING. MULTIPLE SLOPE RINGS CAN BE ADDED AND ROTATED TO ACHIEVE DESIRED GRADE MATCH WITHIN 6 mm (1/4"). NOTE: SLOPE RINGS ARE TAPERED TO PROVIDE 2% GRADE COMPENSATION. IF REQUIRED, HDPE SHIMS (MAX. 6 mm (1/2") PER RING MAY BE USED TO MATCH GRADE EXACTLY.
4. DRY STACK RINGS WITHOUT SEALANT TO ACHIEVE DESIRED VERTICAL AND SLOPE ADJUSTMENT. IF SLOPE RINGS ARE USED, MARK INNER FACE OF STOCK WITH PAINT OR MARKER TO MAINTAIN ALIGNMENT WHEN RE-STACKING.
5. REMOVE THE RINGS AND PLACE NEARBY IN UPSIDE-DOWN ORDER (THIS ALLOWS FOR EASY RE-ASSEMBLY IN THE CORRECT ORDER). APPLY A CONTINUOUS BEAD OF APPROVED RUBBER BUTYL SEALANT (SPL WW-703) TO THE FLAT SURFACE OF THE FIRST RING ON THE SIDE OF THE MALE TONGUE THAT WILL REST AGAINST THE CONE OPENING (MALE TONGUE DOWN). APPLY SEALANT TO AFFECT A SEAL BETWEEN THE INTERLOCKING LIP AND THE CONCRETE SURFACE IT RESTS ON.
6. APPLY 13 mm (1/2") CONTINUOUS BEAD OF APPROVED BUTYL RUBBER SEALANT (SPL WW-703) TO THE NEXT RING. THE SEALANT MUST BE APPLIED DIRECTLY INTO THE INTERLOCKING LIP (MALE TONGUE) AND THE BOTTOM OF THE RING, FAVORING THE SIDE OF THE LIP TO ASSURE A SEAL. PLACE THIS RING WITH THE INTERLOCKING LIP (MALE TONGUE) FACING DOWN ON TOP OF THE LOWER RING PREVIOUSLY INSTALLED. PRESS THE RING IN PLACE TO SET AND DISPERSE SEALANT. REMEMBER TO RE-ASSEMBLE THE RINGS USING ALIGNMENT MARKS TO POSITION SLOPE RING(S) CORRECTLY.
7. REPEAT #6 ON ALL PRE-ASSEMBLED RINGS TO REACH DESIRED HEIGHT AND SLOPE ADJUSTMENT.
8. APPLY 13 mm (1/2") CONTINUOUS BEAD OF APPROVED BUTYL RUBBER SEALANT (SPL WW-703), TO THE TOP OF THE UPPER RING.
9. POSITION CASTING ON RING(S). PRESS THE CASTING FRAME IN PLACE TO SET AND DISPERSE SEALANT.
10. BACKFILL TO RESTORE TO STD. DETAIL 1100S-1.
11. RING MANUFACTURER MUST BE LISTED ON SPL WW-703.
12. FOR USE IN PAVED AREAS ONLY.

CITY OF AUSTIN AUSTIN WATER UTILITY	MINOR MANHOLE HEIGHT ADJUSTMENT (HDPE RINGS)	
RECORD COPY SIGNED BY KATHI L FLOWERS 08/31/2011	THE ARCHITECT/ENGINEER ASSUMES RESPONSIBILITY FOR APPROPRIATE USE OF THIS STANDARD.	STANDARD NO. 506S-4A 3 OF 3

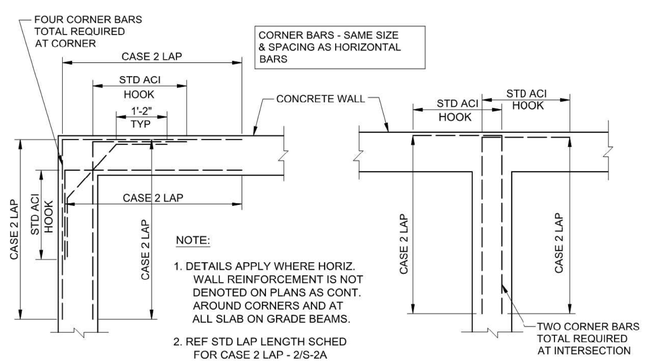

NOTE:
1. DETAILS APPLY WHERE HORIZ. WALL REINFORCEMENT IS NOT DENOTED ON PLANS AS CONT. AROUND CORNERS AND AT ALL SLAB ON GRADE BEAMS.
2. REF STD LAP LENGTH SCHED FOR CASE 2 LAP - 2/S-2A
3. REF. WALL SECTIONS FOR WALL REINF.

PLAN - SECTION AT CORNER

PLAN - SECTION AT "T" SECTION

TYPICAL CORNER BAR REINFORCING DETAILS (1 / -)
SCALE: NTS

STANDARD LAP LENGTHS

BAR SIZE	BAR POSITION	
	CASE 1	CASE 2
#3	22"	28"
#4	29"	37"
#5	36"	47"
#6	43"	56"
#7	63"	81"
#8	72"	93"
#9	81"	105"
#10	91"	118"
#11	101"	131"

CASE 1: HORIZONTAL BARS WITH LESS THAN 12" OF CONC BELOW BARS, AND ALL VERTICAL BARS.

CASE 2: HORIZONTAL BARS W/ 12" OR MORE CONC BELOW BARS.

STANDARD LAP LENGTHS (2 / -)
SCALE: NTS

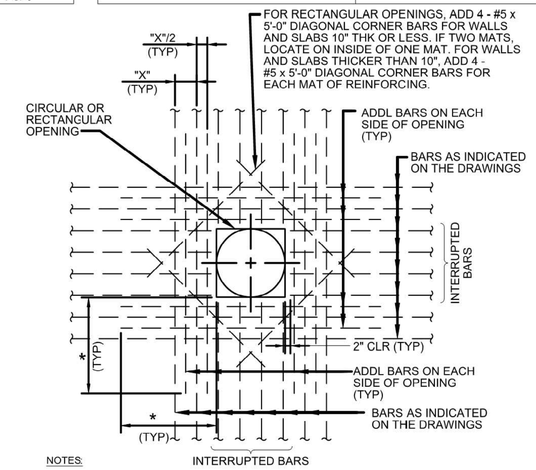

NOTES:
1. AREA OF ADDNL BARS AT EACH EDGE OF OPENING IN EACH DIRECTION SHALL MATCH 1/2 THE CROSS SECTIONAL AREA OF THE INTERRUPTED BARS.
2. PROVIDE STANDARD ACI HOOKS ON BARS IF STRAIGHT EXTENSION. PAST THE OPENING CANNOT BE ACHIEVED.
3. PLACE ADDNL BARS IN SAME PLANES AS INTERRUPTED REINFORCING.
4. PLACE #5 DIAGONAL BARS UNDER INTERRUPTED REINFORCING.
5. * - DIMENSION EQUALS OPENING DIMENSION MEASURED PERPENDICULAR TO ADD BARS PLUS TENSION LAP LENGTH.

ADD'L REINF @ OPENINGS IN SLABS & WALLS (3 / -)
SCALE: NTS

STATE OF TEXAS
BENJAMIN MATTHEW BETZOLD
121236
LICENSED
PROFESSIONAL ENGINEER
DATE 4-22-16

REV No	DATE	DRWN	CHKD	REMARKS

DESIGNED BY: KH
DRAWN BY: FS
SHEET CHK'D BY: JL
CROSS CHK'D BY: JL
APPROVED BY:
DATE: APRIL 22, 2016

CDM Smith
Riata Corporate Park, 12357-A Riata Trace Parkway, Suite 210
Austin, TX 78727
Tel: (512) 346-1100
Texas Registration Number F-3043

Jose I. Guerra, Inc.
Consulting Engineers
2401 South IH-35 Suite 210
Austin, Texas 78741
(512) 445-2090
Structural ◆ Civil ◆ Mechanical ◆ Electrical
TBPE FIRM F-3

CITY OF AUSTIN, TEXAS - AUSTIN WATER UTILITY

SOUTH AUSTIN REGIONAL WWTP
THICKENER IMPROVEMENTS PROJECT

STRUCTURAL DRAWINGS

TYPICAL DETAILS

PROJECT No 590-104217
FILE NAME: S-2A

SHEET No
S-2A

100% DESIGN - CONSTRUCTION DOCUMENTS

F:\14043_SARWWTP_GRAVIT_THICKENER_IMPROVEMENTS\DRAWINGS\CAD\S-2A By: ben betzold Saved: 4/22/2016 7:46:15 PM Plotted: 4/22/2016 8:04:48 PM

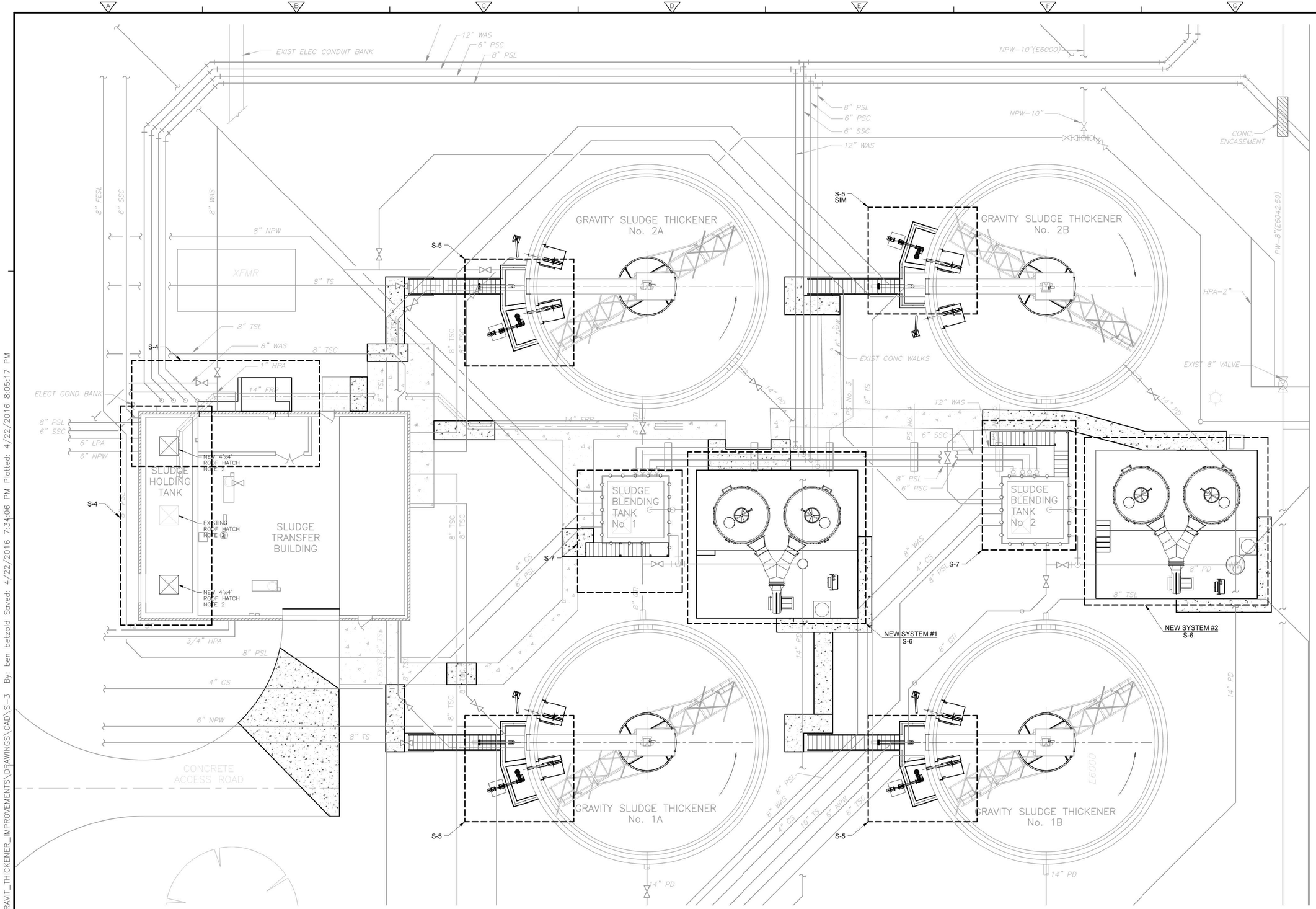

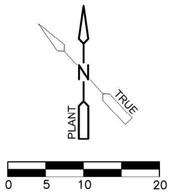

SHEET NOTES

1. RE-USE EXISTING SCUM PIPE WALL PENETRATION.
2. REMOVE AND PROPERLY DISPOSE OF EXISTING ROOF HATCHES. INSTALL NEW AULUMINUM ROOF HATCHES AT EACH OPENING. BILCO ALUMINUM TYPE F 48"x48" OR APPROVED EQUAL.

STATE OF TEXAS
BENJAMIN MATTHEW BETZOLD
121236
LICENSED
PROFESSIONAL ENGINEER
4-22-16

REV No	DATE	DRWN	CHKD	REMARKS

DESIGNED BY: WOO
DRAWN BY: SANDEFUR
SHEET CHK'D BY: HURTADO
CROSS CHK'D BY:
APPROVED BY:
DATE: APRIL 22, 2016

CDM Smith
Riata Corporate Park, 12357-A Riata Trace Parkway, Suite 210
Austin, TX 78727
Tel: (512) 346-1100
Texas Registration Number F-3043

Jose I. Guerra, Inc.
Consulting Engineers
2401 South IH-35 Suite 210
Austin, Texas 78741
(512) 445-2090
Structural ◆ Civil ◆ Mechanical ◆ Electrical
TBPE FIRM F-3

CITY OF AUSTIN, TEXAS - AUSTIN WATER UTILITY

SOUTH AUSTIN REGIONAL WWTP
THICKENER IMPROVEMENTS PROJECT

STRUCTURAL DRAWINGS
LOCATION PLAN

PROJECT No 590-104217
FILE NAME: S-3

SHEET No
S-3

100% DESIGN - CONSTRUCTION DOCUMENTS

F:\14043_SARWWTP_GRAVIT_THICKENER_IMPROVEMENTS\DRAWINGS\CAD\S-3 By: ben betzold Saved: 4/22/2016 7:34:06 PM Plotted: 4/22/2016 8:05:17 PM

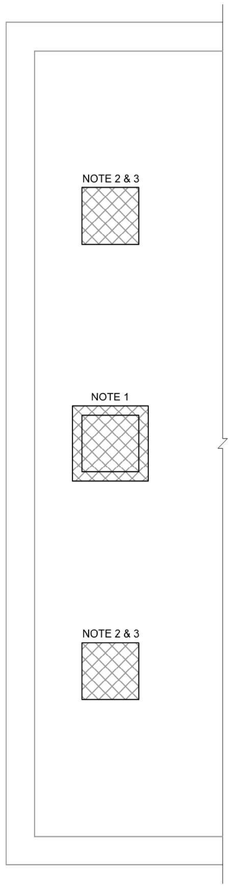

EXISTING SLUDGE TRANSFER BUILDING ROOF PARTIAL DEMOLITION PLAN

SCALE : 1/4" = 1'-0"

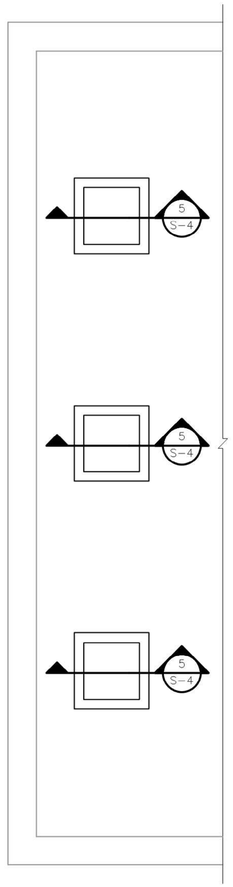

EXISTING SLUDGE TRANSFER BUILDING ROOF PARTIAL PLAN

SCALE : 1/4" = 1'-0"

PLANT TRUE

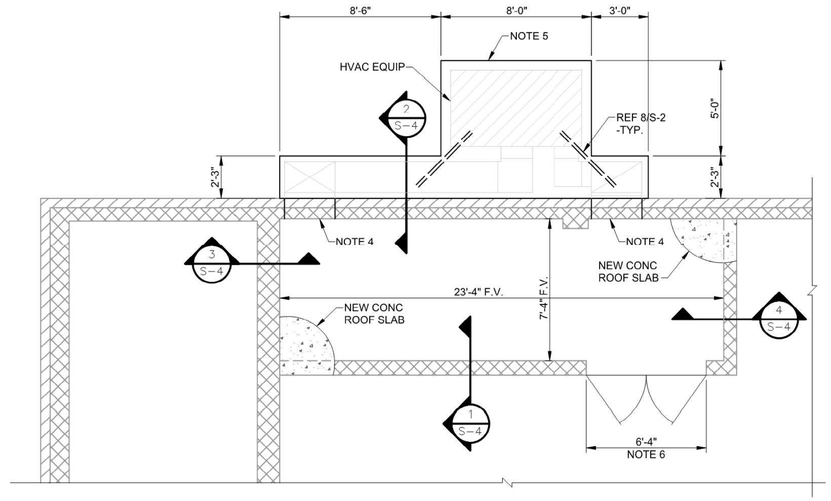

EXISTING ELECTRICAL ROOM SLUDGE TRANSFER BUILDING PARTIAL CEILING PLAN

SCALE : 1/4" = 1'-0"

PLANT TRUE

SHEET NOTES:

1. INFILL ONE CMU BLOCK OPENING BEHIND EXTERNAL LOUVER.
2. SEE MASONRY NOTES AND PROJECT MANUAL SECTION 403S FOR NEW GROUT REQUIREMENTS.

SHEET NOTES:

1. REMOVE EXISTING PLATE HATCH AND CONCRETE CURB.
2. EXPOSE ROOF SLAB. CUT OPENING IN ROOF SLAB FOR NEW HATCH. COORDINATE WITH CHOSEN MFR FOR OPENING SIZE.
3. AT SURFACE OF SAWCUT CONCRETE DEMOLITION, CUT BACK ALL EXPOSED REINFORCING TO A DEPTH OF 1 1/2" MIN. DRESS THE REBAR HOLES TO HAVE A NEAT EDGE THAT WILL PROVIDE PROPER ADHESION OF REPAIR MATERIAL. PREPARE IN ACCORDANCE WITH MANUFACTURER'S DOCUMENTATION AND REPAIR WITH SIKACRETE 211 SCC PLUS AND APPLY SIKA ARMATEC 110 EPOCEM TO ALL EXPOSED REBARS, OR APPROVED EQUAL.
4. NEW HVAC OPENINGS IN EXTERIOR WALL. COORDINATE w/ HVAC: REF. DETAIL 4- THIS SHEET.
5. NEW HVAC CONCRETE EQUIPMENT PAD REFER TO 9/S-2 COORDINATE w/ HVAC.
6. CONTRACTOR SHALL CAREFULLY REMOVE AND PROPERLY DISPOSE OF EXISTING DOORS. INSTALL NEW FIBERGLASS REINFORCED DOORS AND FRAMES PER SPECIFICATION 08220 AND MANUFACTURER'S INSTRUCTIONS. PROVIDE 30 MINUTE FIRE-RATED DOORS.
7. CONTRACTOR TO SOLID GROUT HOLLOW CELLS - AS NEEDED FOR ANCHOR INSTALLATION. CAST-IN-PLACE ANCHORS MAY BE USED IN NEWLY GROUTED CELLS. NEWLY GROUTED CELLS SHALL BE GROUTED FROM MIN. 8" ABOVE ANCHOR LOCATION TO BOTTOM OF EXISTING MASONRY WALL.
8. INSTALL DOWELS INTO SOLID GROUTED CELLS w/ EPOXY w/ 16" EMBEDMENT.
9. DOWELS TO EXISTING MASONRY SHALL BE INSTALLED IN REINFORCED, SOLID GROUTED CELLS (FIELD VERIFY). WHERE SOLID GROUTED, REINFORCED MASONRY CELLS DO NOT OCCUR DOWN TO FOUNDATION, CONTRACTOR TO INSTALL CONTINUOUS #5 VERT. REINF. BARS FROM 1 1/2" BELOW TOP OF MASONRY TO FOUNDATION. EMBED REINF. MIN. 5" IN FOOTING WITH EPOXY AND SOLID GROUT CELLS.

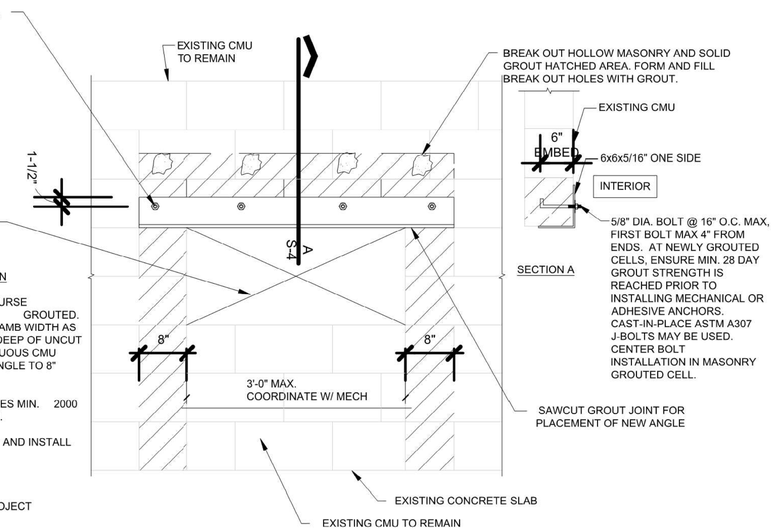

RECOMMENDED SEQUENCE OF CONSTRUCTION

1. ENSURE JAMBS AND COURSE ABOVE OPENING ARE SOLID GROUTED. MINIMUM SOLID GROUTED JAMB WIDTH AS INDICATED AND MINIMUM 8" DEEP OF UNCUT SOLID GROUTED CONTINUOUS CMU COURSE ABOVE ANGLE TO 8" BEYOND EACH JAMB.
2. WAIT 'TIL GROUT REACHES MIN. 2000 PSI COMPRESSIVE STRENGTH.
3. SAWCUT MORTAR JOINT AND INSTALL ANGLE.
4. CUT OUT OPENING
5. COAT SURFACE PER PROJECT MANUAL.

STEEL LINTEL @ EXISTING CMU WALL

SCALE: NTS

6 / –

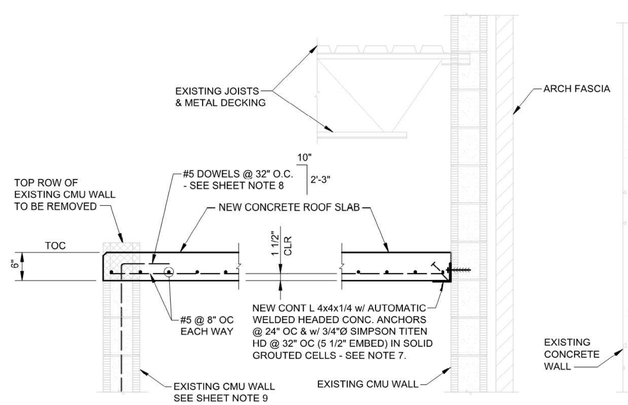

SECTION 1 / –
SCALE: 3/4"=1'-0"

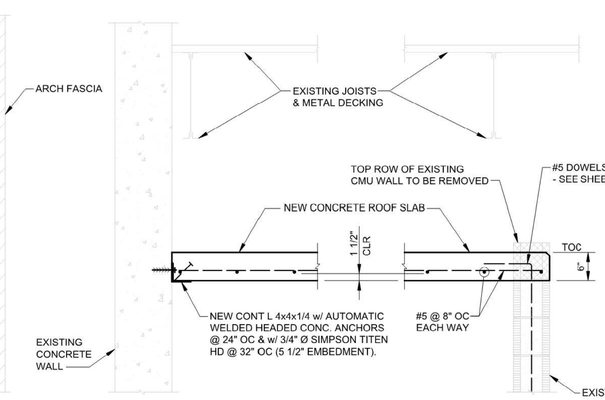

SECTION 2 / –
SCALE: 3/4"=1'-0"

SECTION 3 / –
SCALE: 3/4"=1'-0"

SECTION 4 / –
SCALE: 3/4"=1'-0"

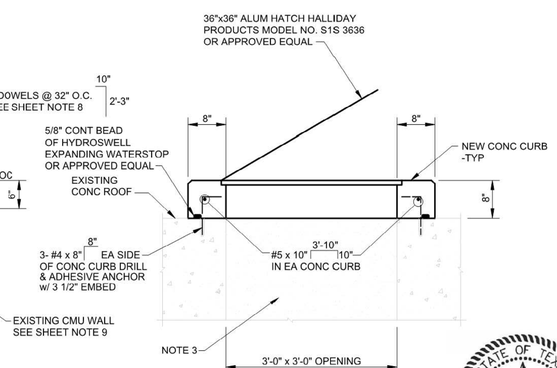

SECTION 5 / –
SCALE: 3/4"=1'-0"

STATE OF TEXAS
BENJAMIN MATHEW BETZOLD
121236
LICENSED
PROFESSIONAL ENGINEER
DATE 4-22-16

REV No.	DATE	DRWN	CHKD	REMARKS

DESIGNED BY: KH
DRAWN BY: FS
SHEET CHK'D BY: JL
CROSS CHK'D BY: JL
APPROVED BY:
DATE: APRIL 22, 2016

CDM Smith
Riata Corporate Park, 12357-A Riata Trace Parkway, Suite 210
Austin, TX 78727
Tel: (512) 346-1100
Texas Registration Number F-3043

Jose I. Guerra, Inc.
Consulting Engineers
2401 South IH-35 Suite 210
Austin, Texas 78741
(512) 445-2090
Structural ◆ Civil ◆ Mechanical ◆ Electrical
TBPE FIRM F-3

CITY OF AUSTIN, TEXAS - AUSTIN WATER UTILITY

SOUTH AUSTIN REGIONAL WWTP
THICKENER IMPROVEMENTS PROJECT

STRUCTURAL DRAWINGS
ELECTRICAL ROOM
SLUDGE TRANSFER BUILDING
PARTIAL PLAN

PROJECT No 590-104217
FILE NAME: S-4

SHEET No
S-4

100% DESIGN - CONSTRUCTION DOCUMENTS

F:\14043_SARWWTP_GRAVIT_THICKENER_IMPROVEMENTS\DRAWINGS\CAD\S-4 By: ben betzold Saved: 4/22/2016 8:08:15 PM Plotted: 4/22/2016 8:08:28 PM

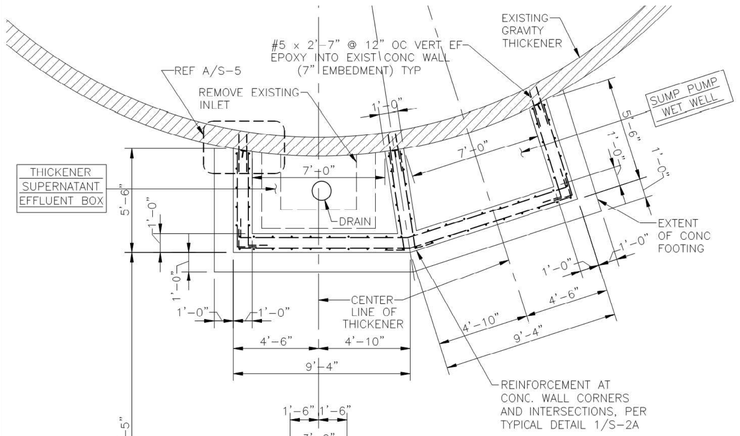

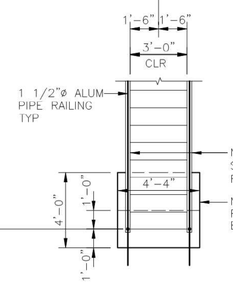

NOTES :
1. THIS LAYOUT IS TYPICAL FOR THICKENERS 1A, 1B & 2A.
2. THE LAYOUT FOR THICKENERS 2B WILL BE A MIRROR IMAGE OF THIS LAYOUT.
3. COAT ALL INTERIOR CONCRETE SURFACES WITH PROTECTIVE COATING. REFER TO SPECIFICATION 09850.

LOWER INLET PLAN
SCALE : 1/4" = 1'-0"

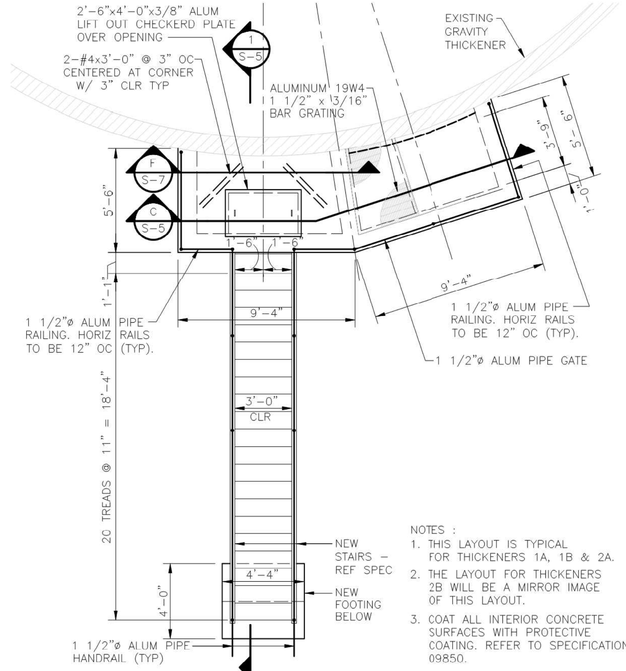

NOTES :
1. THIS LAYOUT IS TYPICAL FOR THICKENERS 1A, 1B & 2A.
2. THE LAYOUT FOR THICKENERS 2B WILL BE A MIRROR IMAGE OF THIS LAYOUT.
3. COAT ALL INTERIOR CONCRETE SURFACES WITH PROTECTIVE COATING. REFER TO SPECIFICATION 09850.

UPPER INLET PLAN
SCALE : 1/4" = 1'-0"

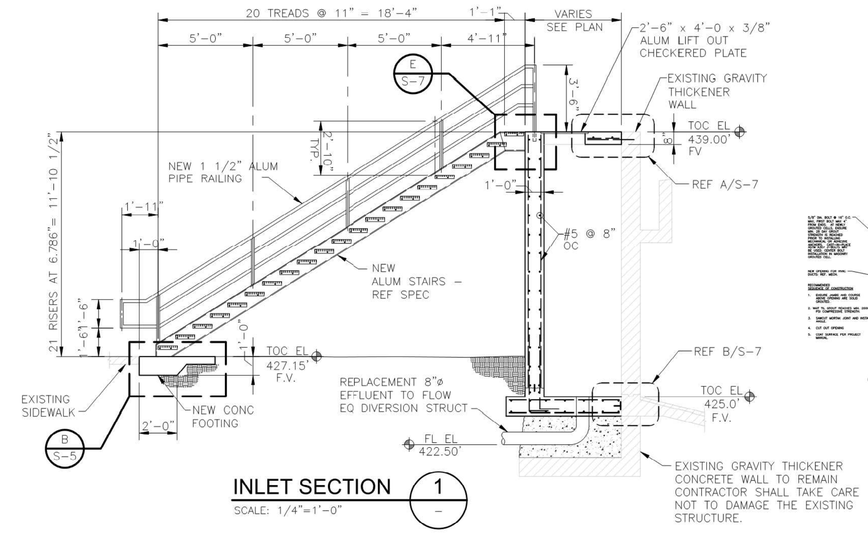

INLET SECTION 1
SCALE: 1/4"=1'-0"

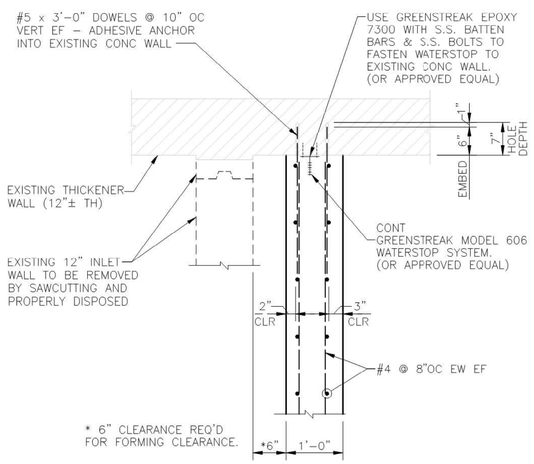

TYPICAL NEW WALL-TO-EXIST WALL CONNECTION DETAIL A
SCALE: 3/4"=1'-0"

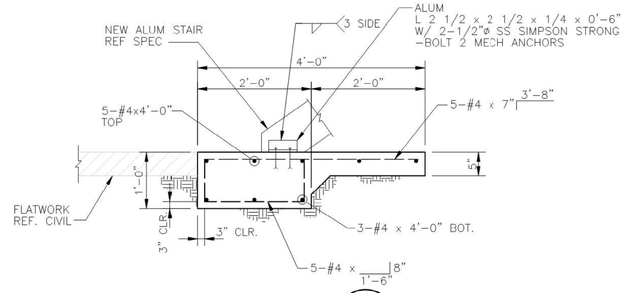

SECTION B
SCALE: 3/4"=1'-0"

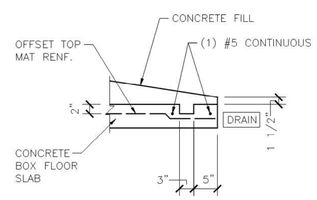

SECTION CA
SCALE: 3/4"=1'-0"

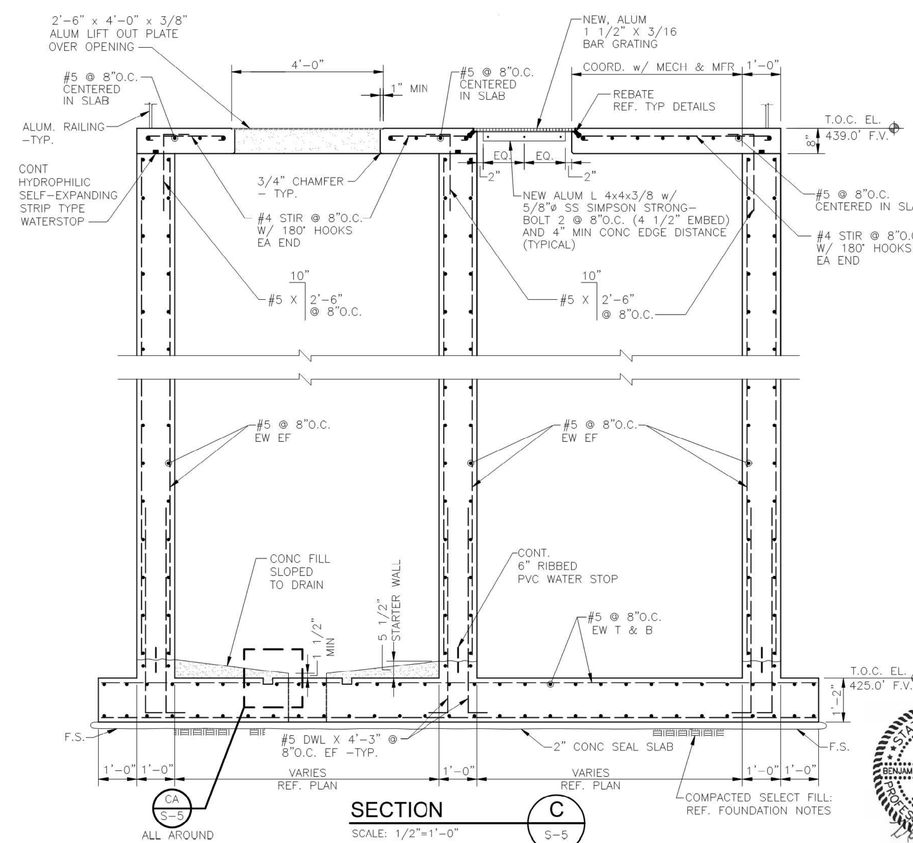

SECTION C
SCALE: 1/2"=1'-0"

STATE OF TEXAS
BENJAMIN MATTHEW BETZOLD
121236
LICENSED
PROFESSIONAL ENGINEER
4-22-16

REV No	DATE	DRWN	CHKD	REMARKS

DESIGNED BY: KH
DRAWN BY: FS
SHEET CHK'D BY: JL
CROSS CHK'D BY: JL
APPROVED BY:
DATE: APRIL 22, 2016

CDM Smith
Riata Corporate Park, 12357-A Riata Trace Parkway, Suite 210
Austin, TX 78727
Tel: (512) 346-1100
Texas Registration Number F-3043

Jose I. Guerra, Inc.
Consulting Engineers
2401 South IH-35 Suite 210
Austin, Texas 78741
(512) 445-2090
Structural ◆ Civil ◆ Mechanical ◆ Electrical
TBPE FIRM F-3

CITY OF AUSTIN, TEXAS - AUSTIN WATER UTILITY

SOUTH AUSTIN REGIONAL WWTP
THICKENER IMPROVEMENTS PROJECT

STRUCTURAL DRAWINGS
GRAVITY THICKENER
SECTIONS AND DETAILS

PROJECT No 590-104217
FILE NAME: S-5

SHEET No
S-5

100% DESIGN - CONSTRUCTION DOCUMENTS

F:\14043_SARWWTP_GRAVIT_THICKENER_IMPROVEMENTS\DRAWINGS\CAD\S-5 By: ben betzold Saved: 4/22/2016 7:35:05 PM Plotted: 4/22/2016 8:06:23 PM

SHEET NOTES
1. REMOVE TOP PORTION OF EXISTSING MANHOLE. EXTEND COLLAR TO AN ELEVATION TO PROPERLY CONNECT TO A NEW INSTALLED MANHOLE COVER CAST INTO NEW CONCRETE SLAB. REFER TO SHEET S-2A.

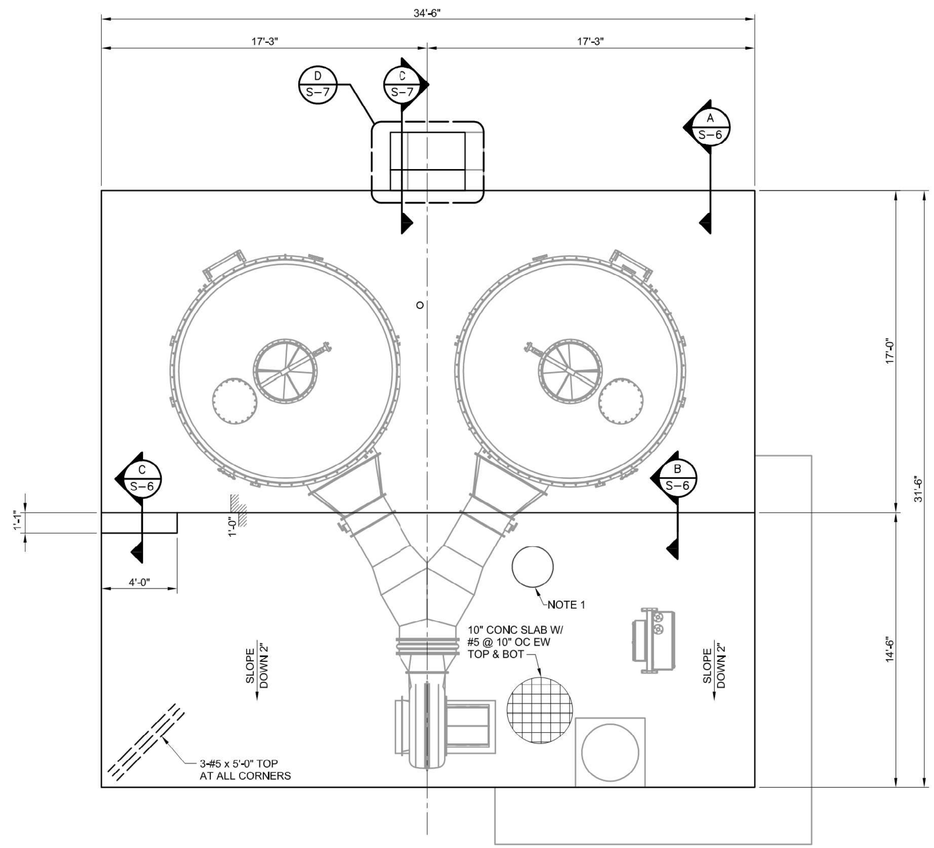

NEW SYSTEM #1 PLAN
SCALE : 1/4" = 1'-0"

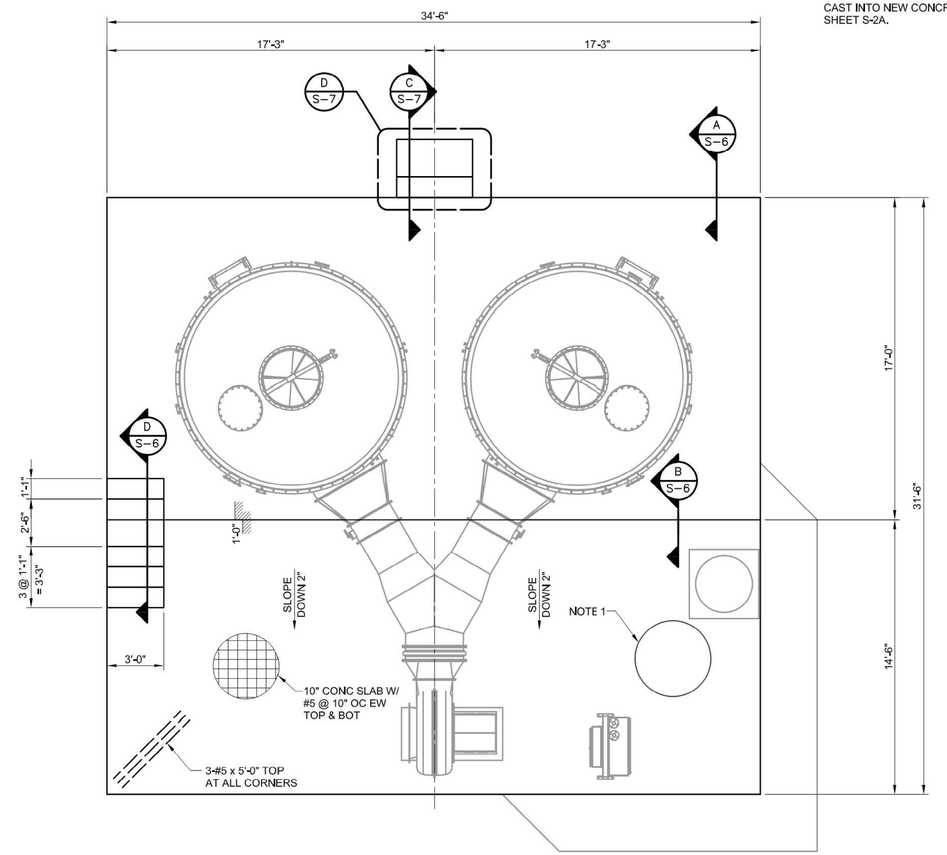

NEW SYSTEM #2 PLAN
SCALE : 1/4" = 1'-0"

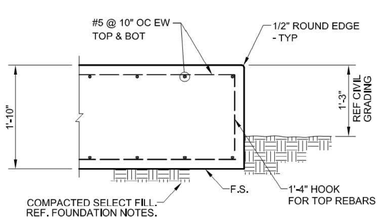

DETAIL A S-6
SCALE: 3/4"=1'-0"

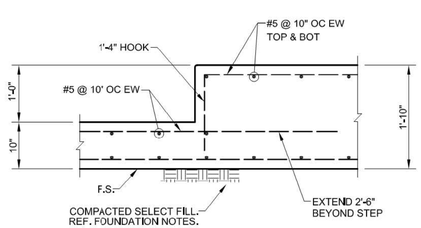

DETAIL B S-6
SCALE: 3/4"=1'-0"

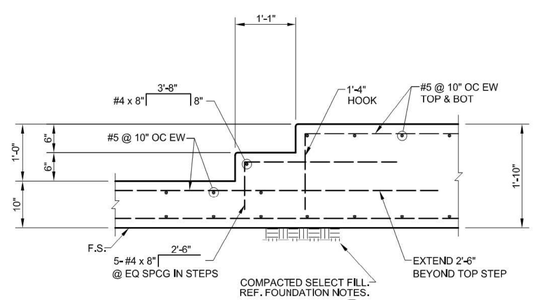

DETAIL C S-6
SCALE: 3/4"=1'-0"

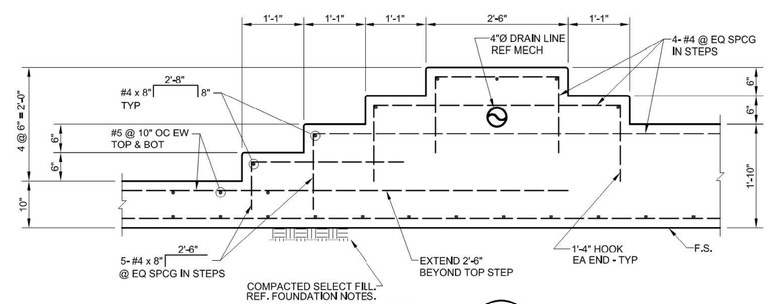

DETAIL D S-6
SCALE: 3/4"=1'-0"

STATE OF TEXAS
BENJAMIN MATTHEW BETZOLD
121236
LICENSED
PROFESSIONAL ENGINEER
4-22-16

REV No	DATE	DRWN	CHKD	REMARKS

DESIGNED BY: KH
DRAWN BY: FS
SHEET CHK'D BY: JL
CROSS CHK'D BY: JL
APPROVED BY:
DATE: APRIL 22, 2016

CDM Smith
Rlata Corporate Park, 12357-A Rlata Trace Parkway, Suite 210
Austin, TX 78727
Tel: (512) 346-1100
Texas Registration Number F-3043

Jose I. Guerra, Inc.
Consulting Engineers
2401 South IH-35 Suite 210
Austin, Texas 78741
(512) 445-2090
Structural ◆ Civil ◆ Mechanical ◆ Electrical
TBPE FIRM F-3

CITY OF AUSTIN, TEXAS - AUSTIN WATER UTILITY

SOUTH AUSTIN REGIONAL WWTP
THICKENER IMPROVEMENTS PROJECT

STRUCTURAL DRAWINGS
ODOR CONTROL SYSTEM
PUMP PADS PLANS & DETAILS

PROJECT No 590-104217
FILE NAME: S-6

SHEET No
S-6

100% DESIGN - CONSTRUCTION DOCUMENTS

F:\14043_SARWWTP_GRAVIT_THICKENER_IMPROVEMENTS\DRAWINGS\CAD\S-6 By: ben betzold Saved: 4/22/2016 7:35:01 PM Plotted: 4/22/2016 8:06:50 PM

SHEET NOTES

1. FIELD VERIFY ALL DIMENSIONS AND ELEVATIONS.
2. REMOVE AND PROPERLY DISPOSE OF ALL EXISTING WOODEN GUARDRAILING AND STAIR STRUCTURE.
3. REF. CIVIL FOR NEW REPLACED SIDEWALKS

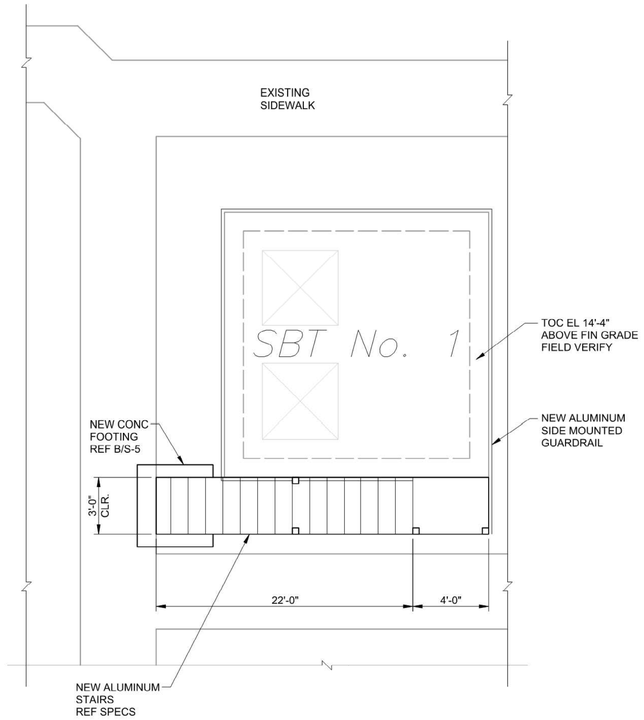

SBT No. 1 PLAN

SCALE : 1/4" = 1'-0"

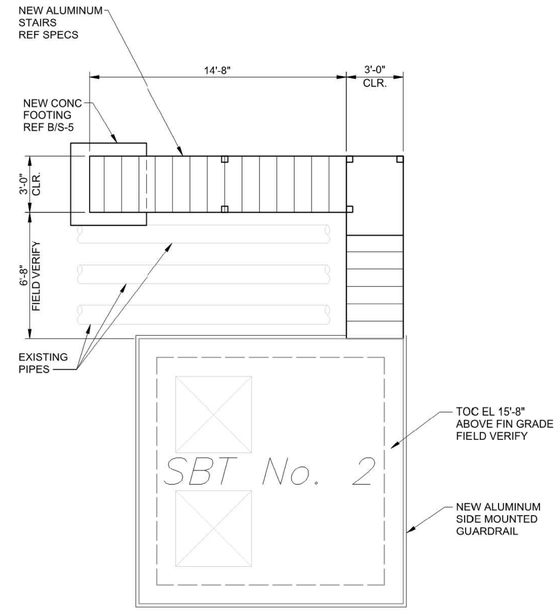

SBT No. 2 PLAN

SCALE : 1/4" = 1'-0"

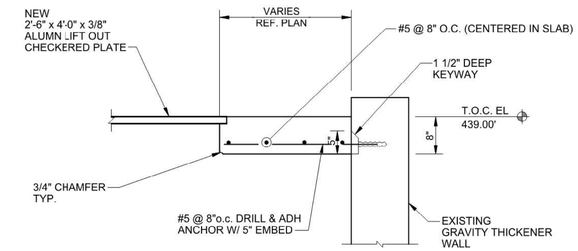

SECTION A

SCALE: 3/4"=1'-0" S-7

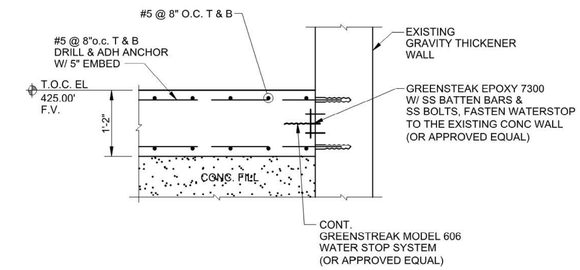

SECTION B

SCALE: 3/4"=1'-0" S-7

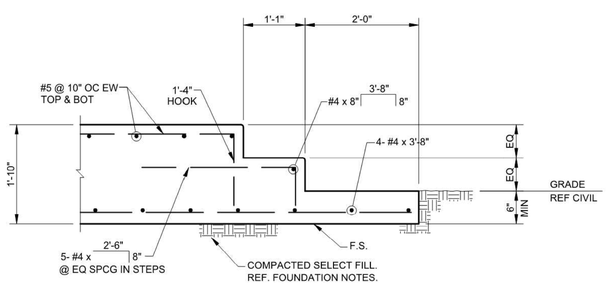

DETAIL C

SCALE: 3/4"=1'-0" S-7

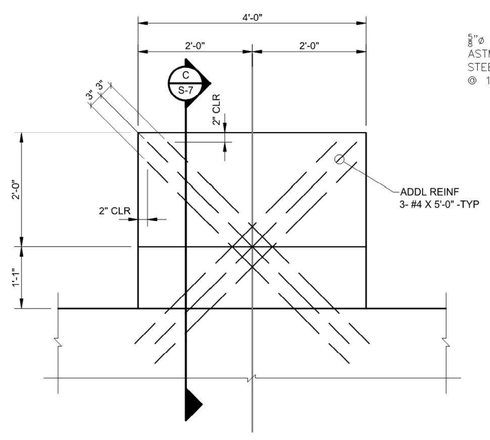

DETAIL D

SCALE: 3/4"=1'-0" S-7

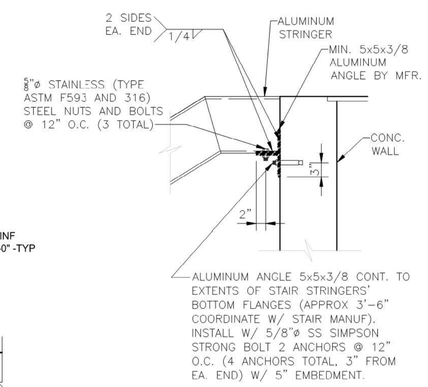

NOTES:

1. WALL REINFORCEMENT AND OTHER COMPONENTS NOT SHOWN FOR CLARITY.
2. WHERE ALUMINUM IS IN CONTACT WITH CONCRETE OR DISSIMILAR METAL, COAT PER SPECS.
3. PROVIDE CLEAR ANODIZED FINISH ON ALUMINUM COMPONENTS PER SPECS.

SECTION E

SCALE: 3/4"=1'-0" S-5

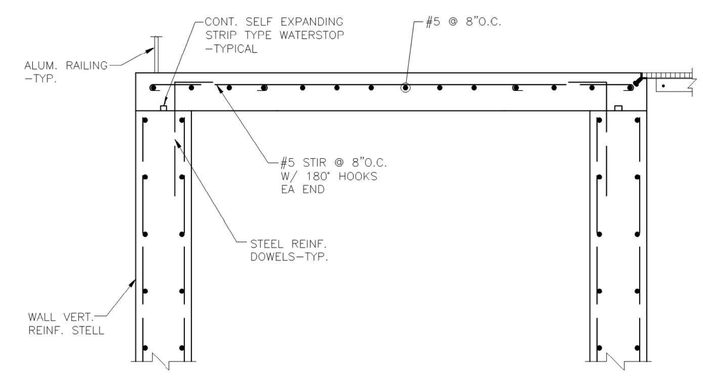

SECTION F

SCALE: 3/4"=1'-0" S-5

STATE OF TEXAS
BENJAMIN MATTHEW BETZOLD
121236
LICENSED
PROFESSIONAL ENGINEER
4-22-16
DATE

REV No	DATE	DRWN	CHKD	REMARKS

DESIGNED BY: KH
DRAWN BY: FS
SHEET CHK'D BY: JL
CROSS CHK'D BY: JL
APPROVED BY:
DATE: APRIL 22, 2016

CDM Smith
Riata Corporate Park, 12357-A Riata Trace Parkway, Suite 210
Austin, TX 78727
Tel: (512) 346-1100
Texas Registration Number F-3043

Jose I. Guerra, Inc.
Consulting Engineers
2401 South IH-35 Suite 210
Austin, Texas 78741
(512) 445-2090
Structural ◆ Civil ◆ Mechanical ◆ Electrical
TBPE FIRM F-3

CITY OF AUSTIN, TEXAS - AUSTIN WATER UTILITY

SOUTH AUSTIN REGIONAL WWTP
THICKENER IMPROVEMENTS PROJECT

STRUCTURAL DRAWINGS

SBT PLANS & SECTIONS

PROJECT No 590-104217
FILE NAME: S-7

SHEET No
S-7

100% DESIGN - CONSTRUCTION DOCUMENTS

F:\14043_SARWWTP_GRAVIT_THICKENER_IMPROVEMENTS\DRAWINGS\CAD\S-7 By: ben betzold Saved: 4/22/2016 7:34:39 PM Plotted: 4/22/2016 8:09:02 PM

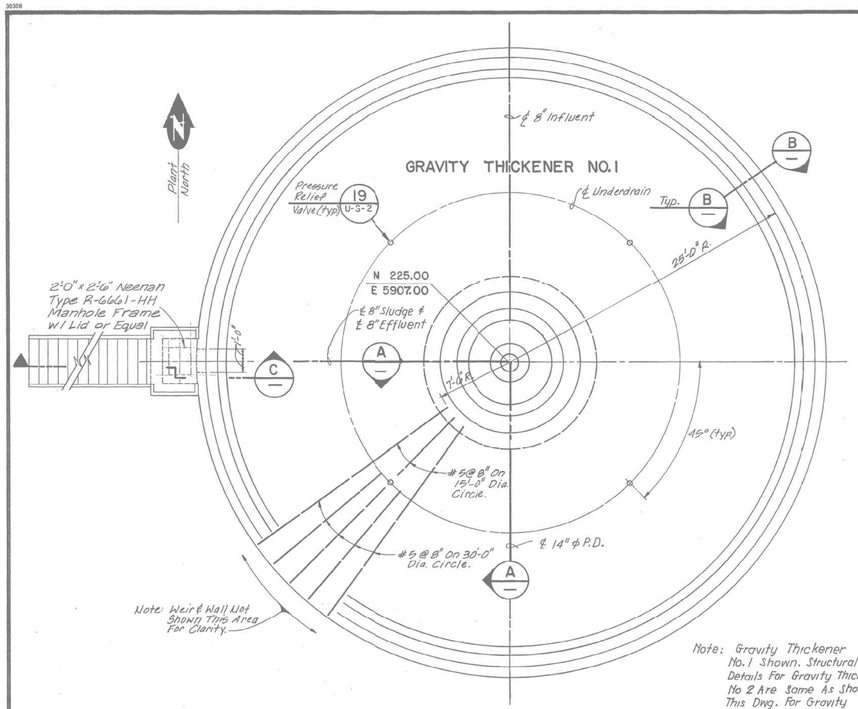

PLAN
SCALE: 3/16"=1'-0"

Note: Gravity Thickener No. 1 Shown. Structural Details For Gravity Thickener No. 2 Are Same As Shown This Dwg. For Gravity Thickener No. 1. See Dwg P-M-1 For Orientation Of Gravity Thickener Piping.

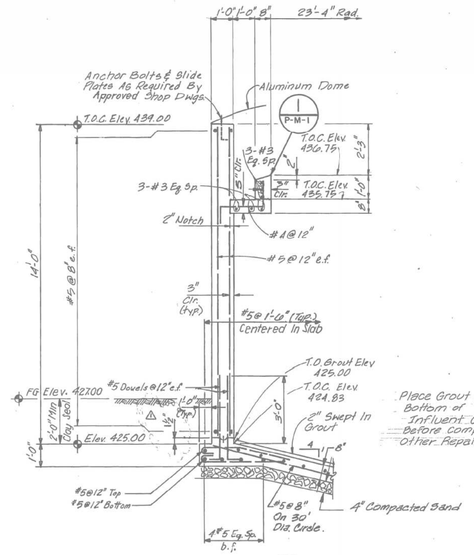

SECTION B
SCALE: 3/8"=1'-0"

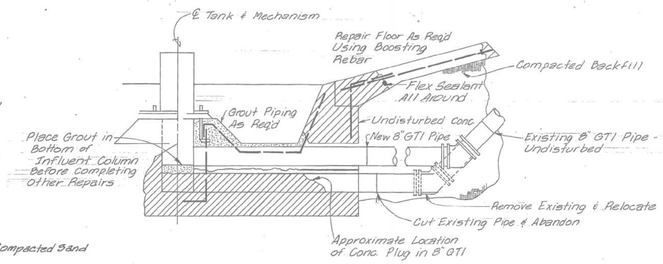

G.T.I. PIPE REPAIR - GRAVITY THICKENER NO. 1
SCALE: 1"=1'-0"

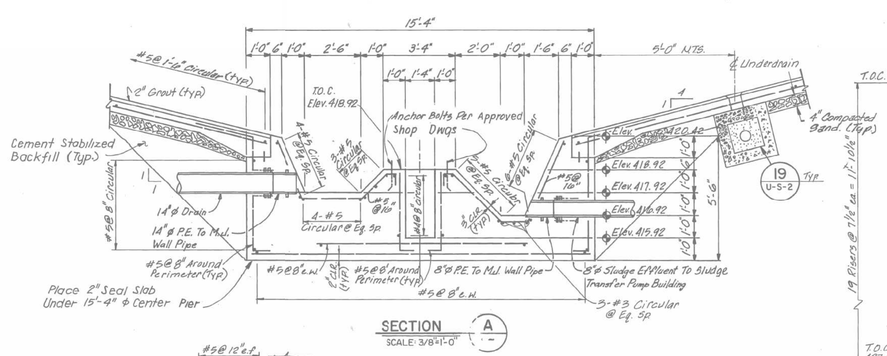

SECTION A
SCALE: 3/8"=1'-0"

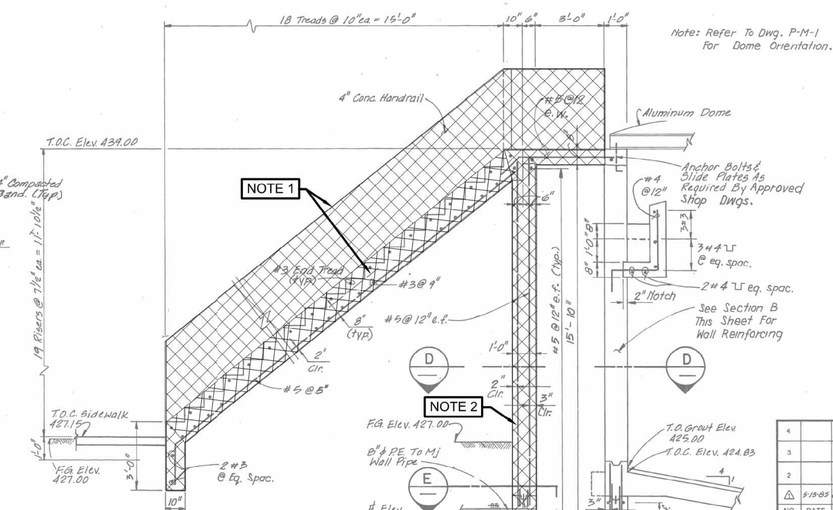

SECTION C
SCALE: 3/8"=1'-0"

Note: Refer To Dwg. P-M-1 For Dome Orientation.

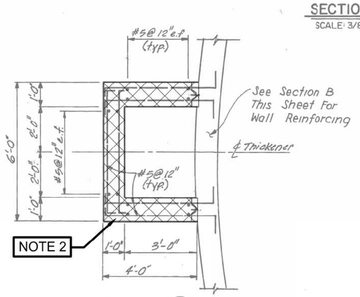

SECTION D
SCALE: 3/8"=1'-0"

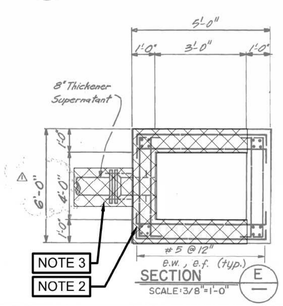

SECTION E
SCALE: 3/8"=1'-0"

DEMOLITION NOTES:

1. THE CONTRACTOR SHALL REMOVE CONCRETE STAIRS IN THEIR ENTIRETY. CONTRACTOR SHALL PROPERLY DISPOSE OF DEBRIS.
2. THE CONTRACTOR SHALL REMOVE EXISTING SCUM BOX CONCRETE. THE CONTRACTOR SHALL TAKE CARE TO NOT DAMAGE THE EXISTING THICKENER TANK WALL. THE CONTRACTOR SHALL NOT UNDERMINE THE TANK WALL FOUNDATION. CONTRACTOR SHALL PROPERLY DISPOSE OF DEBRIS.
3. REFER TO MECH FOR DEMOLITION OF EXISTING PIPE.

SCANNED NOTES

ALL SCREENED SCANNED DRAWING SHEETS ARE FOR LOCATION AND INFORMATION PURPOSES ONLY. THE ACCURACY TO THE CURRENT CONDITIONS IS NOT GUARANTEED. THE CONTRACTOR SHALL INFORM THE ENGINEER OF ANY INSTANCES WHERE DIFFERENCES OF SCANNED DRAWING WILL NEGATIVELY AFFECT ANY ELEMENT TO BE WORKED ON PRIOR TO IT BEING STARTED.

I HEREBY CERTIFY THIS "RECORD DRAWINGS" TO CORRECT AND WAS PREPARED UNDER MY SUPERVISION.
11/7/86

NO.	DATE	REVISION	APPROV.
4			
3			
2			
1	6-18-85	Change 5'-0" To 6'-0", 3'-0" To 4'-0", 3/8" To 1/2"	

CITY OF AUSTIN, TEXAS
ONION CREEK WASTEWATER TREATMENT FACILITIES
GRAVITY THICKENER
STRUCTURAL PLAN & SECTIONS

Turner Collie & Braden Inc.
CONSULTING ENGINEERS
TEXAS AUSTIN/DALLAS/EL PASO/HOUSTON/PORT ARTHUR
COLORADO DENVER/GRAND JUNCTION

Unit NAIL	Scale: Horz. AS SHOWN Vert.	Date APRIL, 1984	
Designed RD	Checked STW	Job No. 7109-025	Contract 2
Drawn RY	Approved PCN	Sheet 26 of 300	

Reg. nr P-S-1

STATE OF TEXAS
BENJAMIN MATTHEW BETZOLD
121236
LICENSED
PROFESSIONAL ENGINEER
4-22-16

REV No	DATE	DRWN	CHKD	REMARKS

DESIGNED BY: KH
DRAWN BY: FS
SHEET CHK'D BY: JL
CROSS CHK'D BY: JL
APPROVED BY:
DATE: APRIL 22, 2016

CDM Smith
Riata Corporate Park, 12357-A Riata Trace Parkway, Suite 210
Austin, TX 78727
Tel: (512) 346-1100
Texas Registration Number F-3043

Jose I. Guerra, Inc.
Consulting Engineers
2401 South IH-35 Suite 210
Austin, Texas 78741
(512) 445-2090
Structural ◆ Civil ◆ Mechanical ◆ Electrical
TBPE FIRM F-3

CITY OF AUSTIN, TEXAS - AUSTIN WATER UTILITY

SOUTH AUSTIN REGIONAL WWTP
THICKENER IMPROVEMENTS PROJECT

STRUCTURAL DRAWINGS
GRAVITY THICKENER
DEMO PLAN

PROJECT No 590-104217
FILE NAME: S-8

SHEET No
S-8

100% DESIGN - CONSTRUCTION DOCUMENTS

F:\14043_SARWWTP_GRAVIT_THICKENER_IMPROVEMENTS\DRAWINGS\CAD\S-8 By: ben betzold Saved: 4/22/2016 7:34:56 PM Plotted: 4/22/2016 8:09:33 PM

ABBREVIATIONS

A, AMP	AMPERE
AFF	ABOVE FINISHED FLOOR
ADD	ADDENDUM
ADJ	ADJUSTABLE
A/C	AIR CONDITIONING
AH, AHU	AIR HANDLER UNIT
APPROX	APPROXIMATE
ARCH	ARCHITECT, ARCHITECTURAL
BDD	BACKDRAFT DAMPER
BLDG	BUILDING
BTU	BRITISH THERMAL UNIT
BTU	BRITISH THERMAL UNITS PER HOUR
BS	BAR SINK
BOJ	BOTTOM OF JOIST
C	CONDUIT
CFH	CUBIC FOOT PER HOUR
CHWS	CHILLED WATER SUPPLY
CHWR	CHILLED WATER RETURN
CI	CAST IRON
CIR	CIRCLE
CMU	CONCRETE MASONRY UNIT
CO	CLEAN OUT CARBON MONOXIDE
CO2	CARBON DIOXIDE
CONC	CONCRETE
COND	CONDENSATE DRAIN
CONST	CONSTRUCTION
CORR	CORRIDOR
CTR	CENTER
CU	CONDENSING UNIT
CW	COLD WATER
DB	DRY BULB
DEMO	DEMOLISH, DEMOLITION
DEPT	DEPARTMENT
DEL, DTL	DETAIL
DegF	DEGREE FAHRENHEIT
DIA, Ø	DIAMETER
DIM	DIMENSION
DISC	DISCONNECT
DIV	DIVISION
DR	DOOR
DBL	DOUBLE
DWG	DRAWING
DS	DUCTLESS SYSTEM
E	EAST
EA	EXHAUST AIR, EACH
EF	EXHAUST FAN
EFF	EFFICIENCY
EER	ENERGY EFFICIENCY RATIO
ELEC	ELECTRIC, ELECTRICAL
EWC	ELECTRIC WATER COOLER
EL	ELEVATION
ELEV	ELEVATOR
ENGR	ENGINEER
EQ	EQUAL
EQPT	EQUIPMENT
ETC	ETCETERA
ESP	EXTERNAL STATIC PRESSURE
EXIST	EXISTING
EXP	EXPOSED
EXT	EXTERIOR
EIFS	EXTERIOR INSULATION FINISH SYSTEM
FA	FIRE ALARM
FCO	FLOOR CLEAN OUT
FD	FLOOR DRAIN
FDC	FIRE DEPARTMENT CONNECTION
FE	FIRE EXTINGUISHER
FFL	FINISH FLOOR
FIN	FINISH(ED)
FIXT	FIXTURE
FLEX	FLEXIBLE
FL	FLOOR
FP	FIRE PROOF(ING)
FR	FIRE RATED
FT	FOOT, FEET
FU	FIXTURE UNIT
FV	FLUSH VALVE
G	GROUND
GA	GAGE
GALV	GALVANIZED
GC	GENERAL CONTRACTOR
GH	GAS HEATER
GND	GROUND
GPM	GALLONS PER MINUTE
GYP BD	GYPSUM BOARD
HTR	HEATER
HVAC	HEATING, VENTILATION & AIR CONDITIONING
HB	HOSE BIBB
HP	HEAT PUMP UNIT, HORSEPOWER
HSPF	HEAT SEASONAL PERFORMANCE FACTOR
HW	HOT WATER
HWR	HOT WATER RETURN
IN	INLET
INFO	INFORMATION
INT	INTERIOR
INSUL	INSULATION
JAN	JANITOR
JB, J-BOX	JUNCTION BOX
K/O	KNOCK OUT
KW	KILOWATTS
LAV	LAVATORY
L	LOUVER
LBS	POUNDS
LRE	LONG RADIUS ELBOW
MAX	MAXIMUM
MBH	THOUSAND BTU PER HOUR
MCA	MINIMUM CURRENT AMPACITY
MECH	MECHANICAL
MEZZ	MEZZANINE
MFR	MANUFACTURER
MH	MAN HOLE
MIN	MINIMUM
MISC	MISCELLANEOUS
MOCP	MAXIMUM OVERCURRENT PROTECTION
MS	MOP SINK
MUA	MAKE UP AIR
MTL	METAL
MULT	MULTIPLE
N/A, NA	NOT APPLICABLE
NAT	NATURAL
NOM	NOMINAL
N	NORTH
NIC	NOT IN CONTRACT
NTS	NOT TO SCALE
NO, #	NUMBER
OA	OUTSIDE AIR
OBD	OPPOSED BLADE DAMPER
OUT	OUTLET
PH, ϕ	PHASE
PNL	PANEL
PSI	POUNDS PER SQUARE INCH
PVC	POLYVINYL CHLORIDE
QTY	QUANTITY
R, RAD	RADIUS
RA	RETURN AIR
RD	ROOF DRAIN
REBAR	REINFORCING BAR
REINF	REINFORCE, REINFORCING
REC	RECESSED
RECEP	RECEPTACLE
REQ(D)	REQUIRE(D)
RGS	RIGID GALVANIZED STEEL
RIS	RUBBER IN SHEAR
RTU	ROOF TOP UNIT
RM	ROOM
RIS	RUBBER-IN-SHEER
S	SOUTH
SA	SUPPLY AIR
SCH	SCHEDULE
SD	SMOKE DETECTOR
SEER	SEASONAL ENERGY EFFICIENCY RATIO
SECT	SECTION
SENS	SENSIBLE
SF	SQUARE FEET
SPRINK	SPRINKLER
SHWR	SHOWER
SPEC	SPECIFICATION(S)
SQ	SQUARE
SS	SANITARY SEWER
SST	STAINLESS STEEL
STL	STEEL
SW	SWITCH
TAB	TEST-ADJUST-BALANCE
TD	TROUGH DRAIN
TEL	TELEPHONE
TEMP	TEMPORARY
THRU	THROUGH
TOS	TOP OF STEEL
TOT	TOTAL
TX	TEXAS
TV	TELEVISION
TYP	TYPICAL
UG	UNDERGROUND
UL	UNDERWRITER LABORATORIES INC.
UH	UNIT HEATER
UR	URINAL
UTIL	UTILITY
V	VOLTAGE
VOL	VOLUME
VTR	VENT THROUGH ROOF
W	WEST
WC	WATER CLOSET
W/	WITH
WB	WET BULB
WH	WATER HEATER
W/O	WITHOUT
WT	WEIGHT
WW	WASTE WATER

NOTE: NOT ALL SYMBOLS ON THIS LIST ARE APPLICABLE TO THIS PROJECT.

MECHANICAL SYMBOL LIST

- SUPPLY AIR GRILLE
- RETURN AIR GRILLE
- EXHAUST AIR GRILLE
- CO_2 — CARBON DIOXIDE SENSOR
- CO — CARBON MONOXIDE SENSOR
- T — TEMPERATURE SENSOR
- H — HUMIDITY SENSOR
- T — THERMOSTAT
- H — HUMIDISTAT
- DS — DUCT SMOKE DETECTOR
- F/SD — COMBINATION FIRE/SMOKE DAMPER
- FD — FIRE DAMPER
- FLEXIBLE DUCT WORK
- MANUAL DAMPER
- TAKEOFF WITH DAMPER
- TAKEOFF WITHOUT DAMPER
- SIDEWALL GRILLE, SUPPLY AIR
- SIDEWALL GRILLE, RETURN / EXHAUST AIR
- MECHANICAL EQUIPMENT, SEE SCHEDULES
- TRANSITION RECTANGULAR TO ROUND DUCT
- TURNINGVANE, 90 DEGREE ELBOW
- RADIUS ELBOW
- CONNECT TO EXISTING
- XX/### — DIFFUSER TYPE / CFM
- ##/## — SIZE OF RECTANGULAR DUCT WHERE FIRST NUMBER INDICATES WIDTH AND SECOND NUMBER INDICATES VERTICAL DIMENSION
- ##Ø — DIAMETER OF ROUND DUCT
- SD — DUCT SMOKE DETECTOR, PROVIDED BY FIRE ALARM CONTRACTOR
- S — COMBINED HUMIDSTAT/THERMOSTAT
- # — KEYNOTE

NOTE: NOT ALL SYMBOLS ON THIS LIST ARE APPLICABLE TO THIS PROJECT.

MECHANICAL GENERAL NOTES

1. ALL DUCT SIZES SHOWN ARE INSIDE CLEAR DIMENSIONS.
2. DRAWINGS ARE DIAGRAMMATIC ONLY. DO NOT SCALE DRAWINGS FOR EXACT LOCATION OF ITEMS SHOWN. COORDINATE WITH STRUCTURE AND OTHER TRADES IN THE FIELD.
3. UNLESS OTHERWISE NOTED OR SHOWN ON THE FLOOR PLAN, THE SUPPLY, EXHAUST, OUTSIDE AIR, AND RETURN AIR DUCTWORK SHALL BE RECTANGULAR GALVANIZED SHEET METAL DUCT.
4. MECHANICAL CONTRACTOR SHALL COORDINATE EXACT LOCATION OF ALL CEILING MOUNTED DIFFUSERS AND GRILLES WITH ARCHITECTURAL REFLECTED CEILING PLAN.
5. MECHANICAL CONTRACTOR SHALL COORDINATE ANY WALL PENETRATION WITH GENERAL CONTRACTOR AND ARCHITECT. ALL WALL PENETRATIONS SHALL BE REVIEWED AND APPROVED BY ARCHITECT.
6. MOUNT THERMOSTAT 48" A.F.F. AND WHERE APPLICABLE, NEXT TO THE LIGHT SWITCH. CONFIRM EXACT LOCATION WITH OWNER BEFORE ROUGH-IN.
7. COORDINATE FINAL LOCATION OF DUCTWORK WITH STRUCTURAL MEMBERS.
8. PROVIDE MANUAL BALANCING DAMPER IN EACH BRANCH DUCT TAKE-OFF. REFER TO THE BRANCH DUCT DETAILS ON THE DETAIL SHEET.
9. COORDINATE CONDENSATE DRAIN ROUTING WITH PLUMBING CONTRACTOR.
10. MAINTAIN ACCESS TO ALL DAMPERS AND DUCT MOUNTED DEVICES. COORDINATE WITH GENERAL CONTRACTOR AND ARCHITECT TO PROVIDE ACCESS PANEL WHERE REQUIRED.
11. COORDINATE WITH THE OWNER ON DISPOSAL OF THE DEMOLISHED EQUIPMENT.

TEST AND BALANCE NOTES

UPON COMPLETION OF INSTALLATION OF THE HVAC DUCTWORK AND PRIOR TO TENANT OCCUPANCY, ALL AIR SYSTEMS SHALL BE ADJUSTED AND BALANCED TO WITHIN 10% OF INDICATED DESIGN AIR QUANTITIES AND IN ACCORDANCE WITH ALL NEBB OR AABC RECOMMENDATIONS AND PROCEDURES. THE HVAC TEST-ADJUST-BALANCE CONTRACTOR SHALL HAVE CURRENT NEBB OR AABC CERTIFICATION. FURTHERMORE, THE HVAC TEST-ADJUST-BALANCE CONTRACTOR SHALL BE A THIRD PARTY REPRESENTATIVE HIRED BY THE GENERAL CONTRACTOR. INSTRUMENTS USED DURING THE TAB PROCESS SHALL BE PROPERLY CALIBRATED. TABULATE ALL TEST DATA ON NEBB OR AABC FORMS. IF PROBLEMS ARE ENCOUNTERED DURING BALANCING, THE HVAC TEST-ADJUST-BALANCE CONTRACTOR SHALL NOTIFY THE GENERAL CONTRACTOR AND, IF NECESSARY, THE ARCHITECT/ENGINEER FOR INSTRUCTIONS BEFORE COMPLETION OF TESTING AND BALANCING.

SHEET INDEX

H-1	HVAC ABBREVIATIONS, NOTES AND SYMBOLS
H-2	HVAC DEMOLITION PLAN
H-3	HVAC PLAN
H-4	HVAC SCHEDULES AND DETAILS

STATE OF TEXAS
LYNN C. BROWN
55248
LICENSED PROFESSIONAL ENGINEER
04/22/2016

REV No	DATE	DRWN	CHKD	REMARKS

DESIGNED BY: JM
DRAWN BY: JM
SHEET CHK'D BY: LB
CROSS CHK'D BY: LB
APPROVED BY: LB
DATE: APRIL 2016

CDM Smith
Riata Corporate Park, 12357-A Riata Trace Parkway, Suite 210
Austin, TX 78727
Tel: (512) 346-1100
Texas Registration Number F-3043

ENCOTECH ENGINEERING CONSULTANTS
TBPE Firm 1141
8500 Bluffstone Cove, Suite B-103
Austin, Texas 78759 | 512.338.1101
Project No.: CO0072

CITY OF AUSTIN, TEXAS - AUSTIN WATER UTILITY
CIP 3333.016

SOUTH AUSTIN REGIONAL WWTP
THICKENER IMPROVEMENTS PROJECT

HVAC ABBREVIATIONS & SYMBOLS

PROJECT No 590-104217
H-1 HVAC ABBREV AND SYMBOLS

SHEET No
H-1

\\DATA\ENGINEERING\ACTIVE PROJECTS\CDM\COA SAR WWTP GRAVITY THICKNER\MEP\F - CAD FILES (WORK IN PROGRESS)\H-1 HVAC ABBREV AND SYMBOLS By: wesley lau Saved: 12/9/2015 5:25:43 PM Plotted: 4/21/2016 2:59:37 PM
Plotted: 4/21/2016 2:59:37 PM

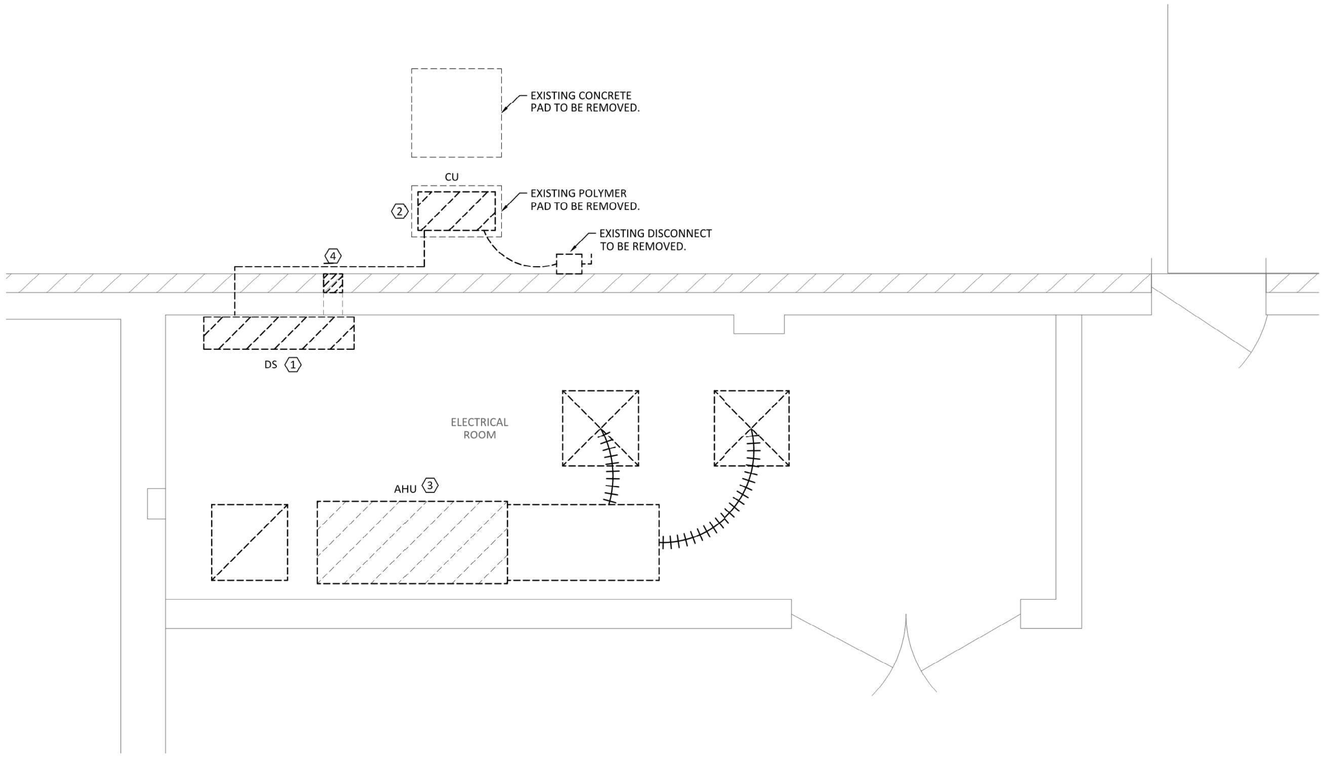

1 HVAC DEMO PLAN
SCALE: 1/2" = 1'-0"

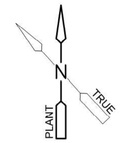

KEYED NOTES

1. REMOVE EXISTING DUCTLESS SPLIT SYSTEM AIR HANDLER UNIT. PROPERLY REMOVE AND DISPOSE OF REFRIGERANT PRIOR TO DEMOLITION. COORDINATE WITH OWNER FOR DISPOSAL. COORDINATE WITH GENERAL CONTRACTOR TO PATCH CONCRETE MASONRY UNIT WALL.
2. REMOVE EXISTING DUCTLESS SPLIT SYSTEM CONDENSING UNIT AND THE ASSOCIATED REFRIGERANT PIPING. COORDINATE WITH OWNER FOR DISPOSAL. COORDINATE WITH ELECTRICAL CONTRACTOR TO REMOVE ASSOCIATED ELECTRICAL COMPONENTS. COORDINATE WITH GENERAL CONTRACTOR TO REMOVE EXISTING EQUIPMENT PAD FOR CONDENSING UNIT. All DISPOSAL SHOULD BE COMPLETED BY THE CONTRACTOR.
3. REMOVE EXISTING ABANDONED SPLIT SYSTEM AIR HANDLER UNIT SUSPENDED ABOVE ELECTRICAL ROOM CEILING FROM ROOF JOISTS, ASSOCIATED DUCTWORK, SUPPORTS, CONTROLS, AIR DEVICES, AND OTHER APPURTENANCES. PROPERLY REMOVE AND DISPOSE OF REFRIGERANT PRIOR TO DEMOLITION. COORDINATE WITH OWNER FOR DISPOSAL. ALL DISPOSAL SHOULD BE COMPLETED BY THE CONTRACTOR.
4. REMOVE EXISTING 6/6 LOUVER IN EXTERIOR WALL. COORDINATE WITH GENERAL CONTRACTOR TO PATCH MASONRY. MATCH EXISTING CONSTRUCTION.

04/22/2016

REV No	DATE	DRWN	CHKD	REMARKS

DESIGNED BY: JM
DRAWN BY: JM
SHEET CHK'D BY: LB
CROSS CHK'D BY: LB
APPROVED BY: LB
DATE: APRIL 2016

CDM Smith
Riata Corporate Park, 12357-A Riata Trace Parkway, Suite 210
Austin, TX 78727
Tel: (512) 346-1100
Texas Registration Number F-3043

ENCOTECH ENGINEERING CONSULTANTS
TBPE Firm 1141
8500 Bluffstone Cove, Suite B-103
Austin, Texas 78759 | 512.338.1101
Project No.: CO0072

CITY OF AUSTIN, TEXAS - AUSTIN WATER UTILITY
CIP 3333.016
SOUTH AUSTIN REGIONAL WWTP
THICKENER IMPROVEMENTS PROJECT

HVAC DEMO PLAN

PROJECT No 590-104217
H-2 HVAC DEMO PLAN

SHEET No
H-2

\\DATA\ENGINEERING\ACTIVE PROJECTS\CDM\COA SAR WWTP GRAVITY THICKNER\MEP\F - CAD FILES (WORK IN PROGRESS)\H-2 HVAC DEMO PLAN By: wesley lau Saved: 12/9/2015 5:25:48 PM Plotted: 4/21/2016 2:59:41 PM
Plotted: 4/21/2016 2:59:41 PM

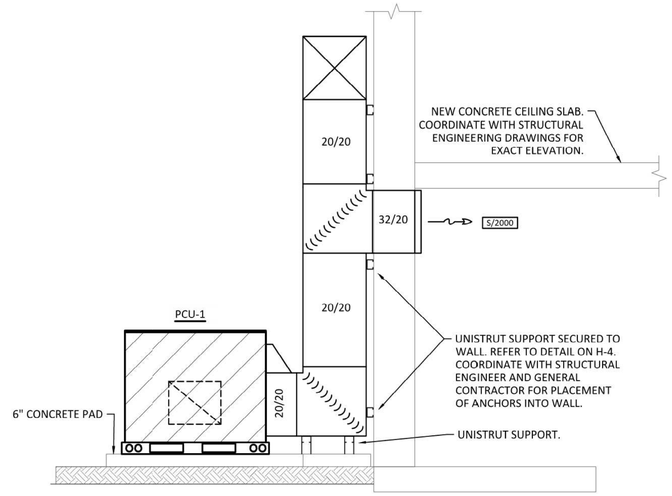

3 MECHANICAL SECTION
SCALE: 1/2" = 1'-0"

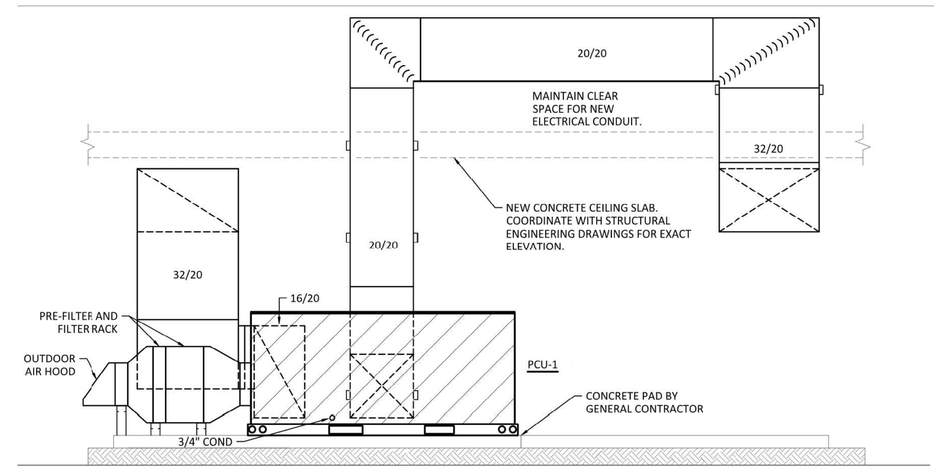

2 MECHANICAL SECTION
SCALE: 1/2" = 1'-0"

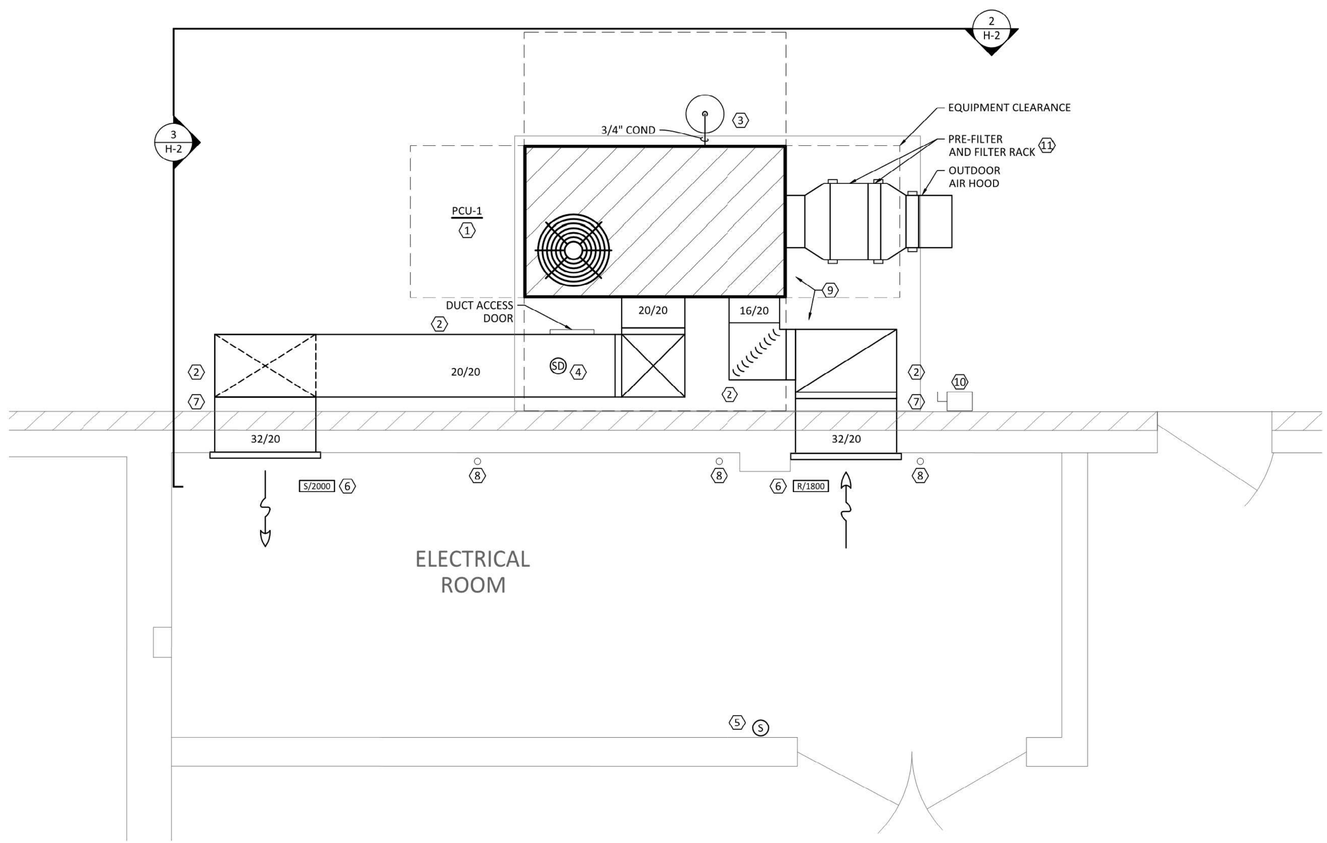

1 HVAC PLAN
SCALE: 1/2" = 1'-0"

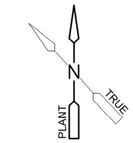

KEYED NOTES

1. PACKAGED COOLING UNIT SHALL BE MOUNTED WITH RIS VIBRATION ISOLATORS ON CONCRETE EQUIPMENT PAD BY GENERAL CONTRACTOR . COORDINATE WITH GENERAL CONTRACTOR FOR CONCRETE EQUIPMENT PAD.
2. PROVIDE AND INSTALL DOUBLE WALLED, INSULATED, GALVANIZED DUCT SUPPORTED FROM CONCRETE SLAB ON GALVANIZED STEEL UNISTRUT RACK WITH A MAXIMUM SPACING OF 4'-0" ON CENTER. VERTICAL DUCT SHALL BE ANCHORED TO EXTERIOR WALL. REFER TO DETAIL 1 ON SHEET H-4 FOR MORE INFORMATION. DUCT SHALL BE PAINTED WITH TWO COATS OF PAINT. COORDINATE WITH GENERAL CONTRACTOR FOR PAINTING. COORDINATE PAINT COLOR WITH ARCHITECT AND OWNER.
3. ROUTE 3/4" INSULATED CONDENSATE DRAIN WITH ALUMINUM JACKET TO DRY WELL AT EXTERIOR OF BUILDING . REFER TO DETAILS 2 AND 3 ON SHEET H-4.
4. PROVIDE AND INSTALL EXTERIOR RATED DUCT SMOKE DETECTOR ON SUPPLY AIR DUCT. CONNECT TO UNIT FOR POWER TO SMOKE DETECTOR. SMOKE DETECTOR SHALL SHUT DOWN UNIT UPON DETECTION OF PRODUCTS OF COMBUSTION. COORDINATE WITH FIRE ALARM AND ELECTRICAL CONTRACTOR.
5. PROVIDE AND INSTALL COMBINED, INTERNET CONNECTED HUMIDISTAT AND THERMOSTAT, HONEYWELL T7350H1009 OR APPROVED EQUAL WITH THE WEBSTAT W7350A1000 OR APPROVED EQUAL TO CONTROL PACKAGED COOLING UNIT. PACKAGED COOING UNIT SYSTEM FANS SHALL OPERATE AT ALL TIMES OR CYCLE ON AND OFF. COOLING COIL AND HOT GAS REHEAT COIL SHALL OPERATE TO PROVIDE AIR AT 75°F AND 50% RELATIVE HUMIDITY ADJUSTABLE (COOLING). HUMIDISTAT SHALL OVERRIDE THERMOSTAT TO MAINTAIN HUMIDITY SET POINT.
6. MOUNT SUPPLY AND RETURN AIR GRILLES ON WALL DIRECTLY BELOW CEILING. COORDINATE WALL PENETRATION, FLASHING, AND SEAL WITH STRUCTURAL ENGINEER AND ARCHITECT.
7. SEAL AIR TIGHT AND FLASH AROUND DUCT AT WALL PENETRATIONS. INSULATION AND VAPOR SEAL SHALL EXTEND THROUGH WALL TO GRILLE. COORDINATE WITH STRUCTURAL ENGINEER FOR WALL PENETRATION. COORDINATE WITH GENERAL CONTRACTOR FOR FLASHING.
8. APPROXIMATE LOCATION OF EXISTING ELECTRICAL CONDUIT. COORDINATE EXACT LOCATIONS IN THE FIELD.
9. COORDINATE WITH GENERAL CONTRACTOR TO PROVIDE CONCRETE PAD UNDER PACKAGED COOLING UNIT AND DUCTWORK. COORDINATE SIZE AND DIMENSIONS WITH STRUCTURAL ENGINEER.
10. COORDINATE ELECTRICAL SERVICE TO PACKAGED COOLING UNIT WITH ELECTRICAL CONTRACTOR.
11. PROVIDE AND INSTALL FILTER RACKS FOR 2" DEEP MERV 8 PRE-FILTER AND 12" DEEP GAS PHASE CARBON FILTER BETWEEN OUTSIDE AIR INLET OF PCU-1 AND MANUFACTURER PROVIDED OUTSIDE AIR HOOD.

STATE OF TEXAS
LYNN C. BROWN
55248
LICENSED PROFESSIONAL ENGINEER
04/22/2016

REV No	DATE	DRWN	CHKD	REMARKS

DESIGNED BY: JM
DRAWN BY: JM
SHEET CHK'D BY: LB
CROSS CHK'D BY: LB
APPROVED BY: LB
DATE: APRIL 2016

CDM Smith
Riata Corporate Park, 12357-A Riata Trace Parkway, Suite 210
Austin, TX 78727
Tel: (512) 346-1100
Texas Registration Number F-3043

ENCOTECH ENGINEERING CONSULTANTS
TBPE Firm 1141
8500 Bluffstone Cove, Suite B-103
Austin, Texas 78759 | 512.338.1101
Project No.: CO0072

CITY OF AUSTIN, TEXAS - AUSTIN WATER UTILITY
CIP 3333.016

SOUTH AUSTIN REGIONAL WWTP
THICKENER IMPROVEMENTS PROJECT

HVAC PLAN

PROJECT No 590-104217
H-3 HVAC PLAN

SHEET No
H-3

\\DATA\ENGINEERING\ACTIVE PROJECTS\CDM\COA SAR WWTP GRAVITY THICKNER\MEP\F - CAD FILES (WORK IN PROGRESS)\H-3 HVAC PLAN By: wesley lau Saved: 3/8/2016 2:32:48 PM Plotted: 4/21/2016 2:59:46 PM

PACKAGED COOLING UNIT SCHEDULE

MARK	AIR DATA					COOLING DATA										ELECTRICAL DATA			UNIT DATA		
	TOT. CFM	O/A CFM	E.S.P.	HP	CONFIGURATION	AMBIENT D.B.	AMBIENT W.B.	ENTERING D.B.	ENTERING W.B.	LEAVING D.B.	LEAVING W.B.	SCHEDULE SENS.	SCHEDULE TOT.	STAGE	EER/ SEER	MCA	MOCP	VOLT/PH	MAKE	MODEL	LBS.
PCU-1	2000	200	1.00	1	HORIZONTAL	105	78	80	67	58	56	45.1	60.9	2	12.7/ 17.0	15.0	20	460V/3PH	LENNOX	LCH060H4E	927

NOTES:
1. PROVIDE OUTSIDE AIR AUTOMATIC FRESH AIR INTAKE DAMPERS, WHICH SHALL CLOSE WHEN UNIT IS IN OFF MODE.
3. MANUFACTURER SHALL PROVIDE AND INSTALL A FACTORY MOUNTED CONVENIENCE OUTLET . COORDINATE WITH ELECTRICAL CONTRACTOR FOR INDEPENDENT CIRCUIT.
4. PROVIDE AND INSTALL A CIRCUIT BREAKER DISCONNECT. COORDINATE WITH ELECTRICAL CONTRACTOR.
7. MANUFACTURER SHALL PROVIDE HAIL GUARD.
5. PROVIDE AND INSTALL PROGRAMMABLE COMBINATION THERMOSTAT/HUMIDISTAT WITH INTERNET COMMUNICATION CAPABILITY.
6. MANUFACTURER SHALL PROVIDE HERESITE COATING ON REFRIGERANT PIPING, COILS, AND METAL FITTINGS.
7. PROVIDE GALVANIZED STEEL SUPPORT HARDWARE.
8. CONTRACTOR SHALL PROVIDE FILTER BANKS FOR 2" MERV 8 PRE-FILTERS AND 12" DEEP ACTIVATED CARBON FILTERS.
9. PROVIDE AND INSTALL MERV 8 PRE-FILTERS AT BEGINNING OF CONSTRUCTION AND NEW MERV 8 PRE-FILTERS AND NEW 12" DEEP ACTIVATED CARBON FILTERS AT PROJECT CLOSE-OUT.

DIFFUSER AND GRILLE SCHEDULE

MARK	NOM. SIZE	MOUNTING	DESCRIPTION	MAKE	MODEL
S	32" x 20"	WALL	SIDE WALL SUPPLY GRILLE	PRICE	32" x 20"/620DAL/ F/S/A/B12
R	32" x 20"	WALL	SIDE WALL RETURN GRILLE	PRICE	32" x 20"/620/ F/S/A/B12

NOTES:
1. AIRFLOW QUANTITIES AS NOTED ON MECHANICAL DRAWINGS.

Package Cooling Unit Control Sequence of Operation – PCU-1

Monitoring Devices

The following is a list of the devices that are to be used for monitoring purposes.

- Space Temperature
- Space Humidity

Fan Motor - On/Off Control:

The fan will be running continuous.

Occupied Mode

Fan Motor Control

Upon activation of the fan it shall run continuously until commanded to cycle off.

Cooling Mode Control

The unit cooling mode will be activated when the space temperature rises above the set point (Adjustable). The unit will remain in the cooling mode for a minimum of 10 minutes, even if the room temperature drops below the set point within the 10 minute time frame.

Dehumidification Mode Control

The unit dehumidification mode will be activated the space humidity rises above the set point (Adjustable) and when the space temperature is below the cooling set point. The unit will remain in dehumidification mode for a minimum of 10 minutes. If the room temperature rises above the set point within the 10 minute time frame, unit will enter cooling mode.

Outdoor Air Damper Control

The Outdoor air damper will be open to the preset open position when the unit is energized.

Unit Safeties

Smoke Detectors

Upon sensing products of combustion in the supply air duct the PCU fan will deactivate through a hardwired interlock.

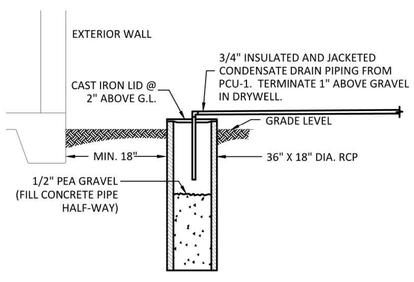

3 DRYWELL DETAIL
NOT TO SCALE

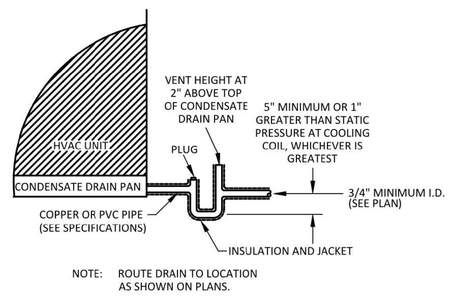

2 CONDENSATE DRAIN DETAIL
NOT TO SCALE

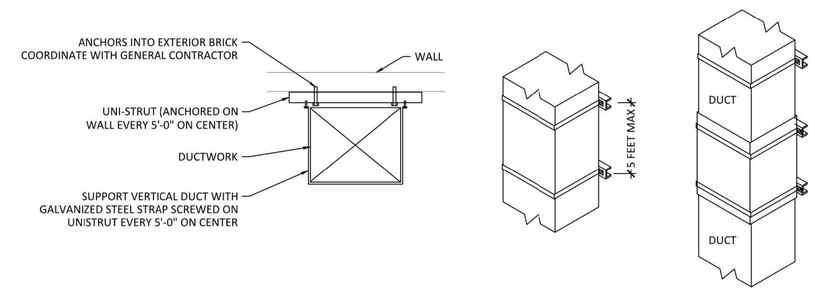

1 WALL MOUNTED DUCT DETAIL
NOT TO SCALE

STATE OF TEXAS
LYNN C. BROWN
55248
LICENSED PROFESSIONAL ENGINEER
04/22/2016

REV No	DATE	DRWN	CHKD	REMARKS

DESIGNED BY: JM
DRAWN BY: JM
SHEET CHK'D BY: LB
CROSS CHK'D BY: LB
APPROVED BY: LB
DATE: APRIL 2016

CDM Smith
Riata Corporate Park, 12357-A Riata Trace Parkway, Suite 210
Austin, TX 78727
Tel: (512) 346-1100
Texas Registration Number F-3043

ENCOTECH ENGINEERING CONSULTANTS
TBPE Firm 1141
8500 Bluffstone Cove, Suite B-103
Austin, Texas 78759 | 512.338.1101
Project No.: CO0072

CITY OF AUSTIN, TEXAS - AUSTIN WATER UTILITY
CIP 3333.016
SOUTH AUSTIN REGIONAL WWTP
THICKENER IMPROVEMENTS PROJECT

HVAC SCHEDULES AND DETAILS

H–

PROJECT No 590–104217
HVAC NOTES AND SCHEDULES

SHEET No
H-4

\\DATA\ENGINEERING\ACTIVE PROJECTS\CDM\COA SAR WWTP GRAVITY THICKNER\MEP\F – CAD FILES (WORK IN PROGRESS)\H-4 HVAC NOTES AND SCHEDULES By: wesley lau Saved: 9/17/2015 10:57:41 AM Plotted: 4/21/2016 2:59:51 PM
Plotted: 4/21/2016 2:59:51 PM

S:\Acad\104217_SAR\M-1_LEG.dwg, M-1, 5/4/2016 12:23:29 PM, sandefurdw, DWG To PDF.pc3

PIPING SYMBOLS

DOUBLE LINE SYMBOL	SINGLE LINE SYMBOL	FEATURE
		WELDED JOINT
		BLIND FLANGE
SEE NOTE 2		FLANGED JOINT COMPLEX REPRESENTATION.
		MECHANICAL JOINT COMPLEX REPRESENTATION.
		PUSH ON JOINT OR CAULKED BELL & SPIGOT JOINT SIMPLIFIED REPRESENTATION
		PUSH ON JOINT OR CAULKED BELL & SPIGOT JOINT COMPLEX REPRESENTATION
		PUSH ON JOINT OR CAULKED BELL & SPIGOT JOINT RESTRAINED
		BALL JOINT
		DIRECTION OF FLOW
		PLAIN END x PLAIN END PIPE COUPLING
		PLAIN END x PLAIN END PIPE COUPLING RESTRAINED
		FLANGE x PLAIN END PIPE COUPLING
A B TYPE IDENTIFICATION REFER TO SPECS	A B	FLEXIBLE COUPLING OR EXPANSION JOINT (SLEEVE TYPE)
		FLEXIBLE COUPLING OR EXPANSION JOINT (BELLOWS TYPE)
F OR R		COUPLING FOR GROOVED END JOINTS: F FLEXIBLE R RIGID
		FLANGE GUARD
		FLANGE FILLER
		UNION
		QUICK CONNECT COUPLING
		HOSE COUPLING

PIPE AND FITTING SYMBOL NOTES

1 SIMPLIFIED JOINT SYMBOL IS USED FOR ALL SINGLE LINE PIPING SHOWN ON THE INTERIOR & EXTERIOR PIPING DRAWINGS.

2 UNLESS MODIFIED BY THE GENERAL PROJECT NOTES OR DETAILED ON THE LAYOUT AND SCHEMATIC DRAWINGS PIPE & FITTING JOINT REQUIREMENTS FOR THE VARIOUS PIPE MATERIALS ARE DEFINED IN THE SPECIFICATIONS.

EQUIPMENT / VALVE TAG

NOTE: ONLY NEW VALVES 6" OR LARGER WILL BE TAGGED.

SHFP–01
- EQUIPMENT CODE
- NUMERICAL INDICATOR UNIQUE NUMBER ASSIGNED TO EACH PIECE OF EQUIPMENT

16"–GV–01
- NUMERICAL INDICATOR UNIQUE NUMBER ASSIGNED TO EACH VALVE
- ABBREVIATION INDICATING TYPE OF VALVE, i.e. GATE
- VALVE SIZE

PIPE TAG

(3) 2" PTW–PVC/F

- NUMERICAL INDICATOR FOR MULTIPLE IDENTICAL FLOWSTREAMS
- NOMINAL PIPE SIZE
- JOINT DESIGNATION SEE PIPE JOINT LEGEND
- PIPE MATERIAL SEE ABBREVIATIONS
- PROCESS FLUID ABBREVIATION SEE ABBREVIATIONS

DEPICTED ARE: THREE, 2" DIAMETER POLYVINYL CHLORIDE PIPES WITH FLANGED JOINTS SCHEDULED TO TRANSPORT PROTECTED WATER.

VALVE SYMBOLS

SYMBOL	FEATURE
	CAP OR PLUG
	UNCLASSIFIED, TYPE AS SHOWN ON THE DRAWINGS ADJACENT TO SYMBOL
	FLOW METER
V	TELESCOPING VALVE
	VALVE WITH HOSE END (FLUSHING CONNECTION)
	GATE VALVE
K	KNIFE GATE VALVE
	GLOBE VALVE
	BALL VALVE
	3–WAY BALL VALVE
	4–WAY BALL VALVE
	CONE VALVE
	NEEDLE VALVE
	PINCH VALVE
	DIAPHRAGM VALVE
	BUTTERFLY VALVE
BFD	BUTTERFLY VALVE DAMPER (AIR PIPING)
	PLUG VALVE
	CHECK VALVE, GENERAL SYMBOL
	BALL CHECK VALVE
	DOUBLE DOOR CHECK VALVE
	ANGLE VALVE
S	SOLENOID VALVE
S	THREE WAY SOLENOID VALVE
M	MOTOR OPERATED VALVE
	FLAP VALVE
	SHEAR GATE
	MUD VALVE
FD	FLOOR DRAIN
ED	EQUIPMENT DRAIN
	ECCENTRIC REDUCER OR REDUCING BUSHING
	CONCENTRIC REDUCER OR REDUCING BUSHING
	Y–STRAINER
	YARD HOSE STATION
	CALIBRATION CYLINDER
	AIR RELEASE VALVE
CO	CLEAN OUT
	DOWN
	UP
	DROP OR RISE
	PRESSURE RELIEF VALVE
	BALL VALVE – CHLORINE SERVICE
	VACUUM REGULATOR
	SELF–CONTAINED REGULATING VALVE
	BACK PRESSURE VALVE
	VACUUM RELIEF VALVE

VALVE SYMBOLS (CONTINUED)

SYMBOL	FEATURE
	SPRING RETURN BALL VALVE
	DIAPHRAGM SEAL STANDARD
	DIAPHRAGM SEAL SPECIAL SERVICE
	DIAPHRAGM CHECK VALVE
S	DIFFERENTIAL PRESSURE–REGULATING VALVE (SOLENOID OPERATED)

GATE SYMBOLS

PLAN	FEATURE
	SLUICE GATE (SG)
	SLIDE GATE (SLG)
	WEIR SLIDE GATE (WSLG)
	STOP PLATE (SP)

SECTION (OPERATOR ONLY)	FEATURE
	SLUICE GATE (SG)
	SLIDE GATE (SLG)
	WEIR SLIDE GATE (WSLG)

PIPE JOINT LEGEND

DESIGNATION	PIPE JOINT
BSM	BELL & SPIGOT–MORTAR JOINT
BSO	BELL & SPIGOT–RUBBER O RING
C	COMPRESSION (TUBE FITTINGS)
F	FLANGED
G	GROOVED
MJ	MECHANICAL JOINT
P	PUSH ON JOINT (BELL & SPIGOT, RUBBER GASKET)
S	SOLDERED
SW	SOCKET WELDED
T	THREADED
V	SOLVENT CEMENTED
W	BUTT WELDED
WC	CONTINUOUS WELDED

PIPE MATERIAL

CI	CAST IRON
CIS	CAST IRON – SOIL
CM	CORRUGATED METAL
CPVC	CHLORINATED POLYVINYL CHLORIDE
CS	CARBON STEEL
CU	COPPER
DI	DUCTILE IRON
EPDM	ETHYLENE PROPYLENE RUBBER
FRP	FIBER REINFORCED PLASTIC
GLDI	GLASS LINED DUCTILE IRON
GS	GALVANIZED STEEL
PCCP	PRESTRESSED CYLINDER
POLYE	POLYETHLENE
POLYP	POLYPROPYLENE
PVC	POLYVINYL CHLORIDE
RCP	REINFORCED CONCRETE
RCC	REINFORCED CONCRETE CYLINDER
SST	STAINLESS STEEL
STL	STEEL

NOTES

1 PIPE HANGERS SHALL BE PROVIDED IN ACCORDANCE WITH SECTION 15140 AND AS SHOWN ON DRAWINGS.

2 ALL PIPING INSTALLED BELOW A PROCESS STRUCTURE SHALL BE ENCASED IN ACCORDANCE WITH DETAIL BK ON SHEET SZ–2 UNLESS NOTED OTHERWISE.

PROCESS FLUID ABBREVIATIONS

ABE	AERATION BASIN EFFLUENT
ABI	AERATION BASIN INFLUENT
BWW	BACKWASH WATER
BYP	BYPASS
CA	COMPRESSED AIR
CAD	COMPRESSED AIR, DRIED
CE	CLARIFIER EFFLUENT
CGR	CHILLED WATER/GLYCOL RETURN
CGS	CHILLED WATER/GLYCOL SYSTEM
CI	CLARIFIER INFLUENT
CS	CHLORINE SOLUTION
CN	CONDENSATE
CWR	COOLING WATER RETURN
CWS	COOLING WATER SUPPLY
DCW	DOMESTIC COLD WATER
DHW	DOMESTIC HOT WATER
DR	DRAIN
DS	DEWATERED SLUDGE
DW	DISTILLED WATER
EFF	EFFLUENT
EXG	EXHAUST GAS
FESL	FLOW EQUALIZATION SLUDGE
FINW	FINISHED WATER
FIW	FIRE WATER SYSTEM
FLT	FILTRATE WATER
FLW	FILTERED WATER
FW	FEED WATER
GTI	GRAVITY THICKENER INFLUENT
GRD	GRID
GR	GRIT
HPA	HIGH PRESSURE AIR
HSM	HIGH SERVICE MAIN
HWE	HEADWORKS EFFLUENT
HWGR	HOT WATER/GLYCOL RETURN
HWGS	HOT WATER/GLYCOL SUPPLY
HWR	HOT WATER RETURN
HWS	HOT WATER SUPPLY
INF	INFLUENT
LPA	LOW PRESSURE AIR
NG	NATURAL GAS
NPW	NON–POTABLE WATER
OA	ODOROUS AIR
OG	OIL AND GREASE
PD	PROCESS DRAIN
POL	POLYMER
PSC	PRIMARY SCUM
PSL	PRIMARY SLUDGE
PTW	PROTECTED WATER
PW	POTABLE WATER
RAS	RETURN ACTIVATED SLUDGE
RCW	RECYCLE WATER
RG	REFRIGERANT – HOT GAS
RGL	REFRIGERANT LIQUID
RGS	REFRIGERANT SUPPLY
RW	RECIRCULATION WATER
SC	SCUM
SHC	SODIUM HYPOCHLORITE (CONCENTRATED)
SHR	SODIUM HYPOCHLORITE RECIRCULATION
SL	SLUDGE
SPL	SAMPLE LINE
SSC	SECONDARY SCUM
ST	STEAM
STS	STORM SEWER
TS	THICKENER SUPERNATANT
TSC	THICKENER SCUM
TSL	THICKENED SLUDGE
VT	VENT
WAS	WASTE ACTIVATED SLUDGE
WBW	WASTE BACKWASH WATER
WW	WASTE WATER

EQUIPMENT IDENTIFICATION SYSTEM

EQUIPMENT CODES

AC	AIR COMPRESSOR
ACCU	AIR CONDITIONING CONDENSING UNIT
AD	AIR DRYER
AF	AIR FILTER
AFM	AIR FLOW METER
AHU	AIR HANDLING UNIT
AR	AIR RECEIVER
ARV	AIR RELIEF VALVE
ARVV	AIR RELIEF/VACUUM VALVE
BC	BELT CONVEYOR
BCV	BALL CHECK VALVE
BFD	BUTTERFLY VALVE DAMPER
BFP	BELT FILTER PRESS
BFPV	BACK FLOW PREVENTER
BFV	BUTTERFLY VALVE
BFVM	BUTTERFLY VALVE MOTOR OPERATED
BLR	BLOWER
BLRH	BLOWER HEAT EXCHANGER
BRC	BRIDGE CRANE
BV	BALL VALVE
BWP	BACK WASH PUMP
CBD	COARSE BUBBLE DIFFUSERS
CFG	CENTRIFUGE
CFP	CENTRIFUGE PUMPS
CHP	CHILLED WATER PUMP
CHU	CHILLING UNIT
CLLD	CHLORINE LEAK DETECTOR
CLR	CLARIFIER
CPP	POLYMER PUMPS
CS	CARBON SCRUBBER
CUV	ULTRA VIOLET LIGHT
CV	CHECK VALVE
CWP	COOLING WATER PUMP
DDP	DOUBLE DISK PUMP
DI	DEIONIZED WATER SYSTEM
DIFF	DIFFUSER
DPS	DRY POLYMER STATION
DRP	DRAIN PUMP
DS	DRUM SCALE
DV	DIAPHRAGM VALVE
DWP	DEWATERING PUMP
EP	EMERGENCY PUMP
ES	EQUIPMENT SPARE
EXF	EXHAUST FAN
FBDG	FINE BUBBLE DIFFUSERS GRID
FCV	FLOW CONTROL VALVE
FH	FIRE HYDRANT
FM	FLOWMETER
GLV	GLOBE VALVE
GR	GRINDER
GRP	GRIT PUMP
GV	GATE VALVE
H	HOIST
HB	HOIST BRIDGE
HE	HEAT EXCHANGER
HSP	HIGH SERVICE PUMP
HT	HOIST TROLLEY
HVAC	HEATING VENTILATION & A/C
HWB	HOT WATER BOILER
HWP	HEATING WATER PUMP
INFP	INFLUENT PUMP
KGV	KNIFE GATE VALVE
LO	LOUVERS
MBS	MANUAL BAR SCREEN
MCBS	MECHANICAL CLIMBER BAR SCREEN
MGE	MIST/GREASE ELIMINATOR
NPWP	NON POTABLE WATER PUMP
OCF	ODOR CONTROL FAN
OD	OVER HEAD DOOR
OR	OIL RESERVOIR
OSG	OIL AND GREASE SEPARATOR
PAB	PROCESS AIR BLOWER
PCP	PROGRESSIVE CAVITY PUMP
PCV	PUMP CONTROL VALVE
PF	PRE–FILTER
PF	PARSHALL FLUME
PMR	PRIMARY MEMBRANE RACK
PH	PORTABLE HYDRAULIC HOIST
PHP	PH PROBE
PIV	PINCH VALVE
PTP	POTABLE PUMP
PRLV	PRESSURE RELIEF VALVE
PV	PLUG VALVE
PVO	PORTABLE VALVE OPERATOR
RA	RADIO
RCP	RECYCLE PUMP
RLP	RAW LIFT PUMP
RM	ROTAMETER
RU	REFRIGERATION UNIT
RP	RECIRCULATION PUMP
RS	ROTATING SCREEN
RSP	RETURN ACTIVATED SLUDGE PUMPS
RV	REGULATING VALVE
RWP	RECLAIMED WATER PUMP
SB	SEDIMENTATION BASIN
SBLR	SLUDGE BLOWER
SC	SLUDGE COLLECTOR
SCC	SCREW CONVEYOR/COMPACTOR
SCP	SCUM PUMP
SE	SCRAPER EQUIPMENT
SFP	SURFACE WASH PUMP
SLG	SLIDE GATE
SG	SLUICE GATE
SHDT	SODIUM HYPOCHLORITE DAY TANK
SHFP	SODIUM HYPOCHLORITE FEED PUMP
SHST	SODIUM HYPOCHLORITE STORAGE TANK
SMP	SAMPLE PUMP
SP	SUMP PUMP
SSC	SCREW CONVEYOR
STR	STRAINER
SUP	SUBMERSIBLE PUMP
TSH	THICKENED SLUDGE HOLDING TANK
UVM	ULTRAVIOLET DISINFECTION MODULE
VGC	VORTEX GRIT COLLECTOR
WCV	WAFER TYPE CHECK VALVE
WSP	WASTE ACTIVATED SLUDGE PUMP

EQUIPMENT SYMBOLS FOR PROCESS MECHANICAL DIAGRAMS

SYMBOL	TYPE	SYMBOL	TYPE
	CENTRIFUGAL PUMP		PROGRESSING CAVITY PUMP
	BLOWER OR FAN	FE	VENTURI TYPE FLOWMETER
	RUPTURE DISK		FLOW METER – PROPELLER
	ROTARY COMPRESSOR	RM	ROTAMETER
	PULSATION DAMPENER ASSEMBLY	AE DO	DISSOLVED OXYGEN PROBE
			GATE (REFER TO DESIGNATION FOR TYPE)
	BALL SIGHT FLOW INDICATOR	M	MIXER
		F	FILTER
	PRE–FILTER	DPI	DIFFERENTIAL PRESSURE GAUGE
	FLEXIBLE HOSE	PIT	PRESSURE INDICATING TRANSMITTER
PS	PRESSURE SWITCH	LE	LEVEL ELEMENT
PI	PRESSURE GAUGE	LIT	LEVEL INDICATING TRANSMITTER
		LS	LEVEL SWITCH
VI	VACUUM GAUGE	WT	WEIGHT TRANSMITTER
FS	FLOW SWITCH/FLOW SENSOR	LSH	LEVEL SWITCH HIGH

STATE OF TEXAS
DANNY M. HURTADO
104266
REGISTERED PROFESSIONAL ENGINEER
May 2, 2016

REV No	DATE	DRWN	CHKD	REMARKS

DESIGNED BY: WOO
DRAWN BY: SANDEFUR
SHEET CHK'D BY: HURTADO
CROSS CHK'D BY:
APPROVED BY:
DATE: MAY 2016

CDM Smith
Riata Corporate Park, 12357-A Riata Trace Parkway, Suite 210
Austin, TX 78727
Tel: (512) 346-1100
Texas Registration Number F-3043

CITY OF AUSTIN, TEXAS - AUSTIN WATER UTILITY
CIP 3333.016

SOUTH AUSTIN REGIONAL WWTP
THICKENER IMPROVEMENTS PROJECT

MECHANICAL LEGEND

PROJECT No 590–104217
FILE NAME: M–1_LEG

SHEET No
M-1

BID SET

S:\ACAD\104217_SAR\M-1_LEG By: sandefurdw Saved: 2/17/2015 3:01:44 PM Plotted: 5/4/2016 12:23:30 PM

Plotted: 5/4/2016 12:23:30 PM

S:\Acad\104217_SAR\M-2-5_PL-SLGRM.dwg, M-2, 5/4/2016 12:24:16 PM, sandefurdw, DWG To PDF.pc3

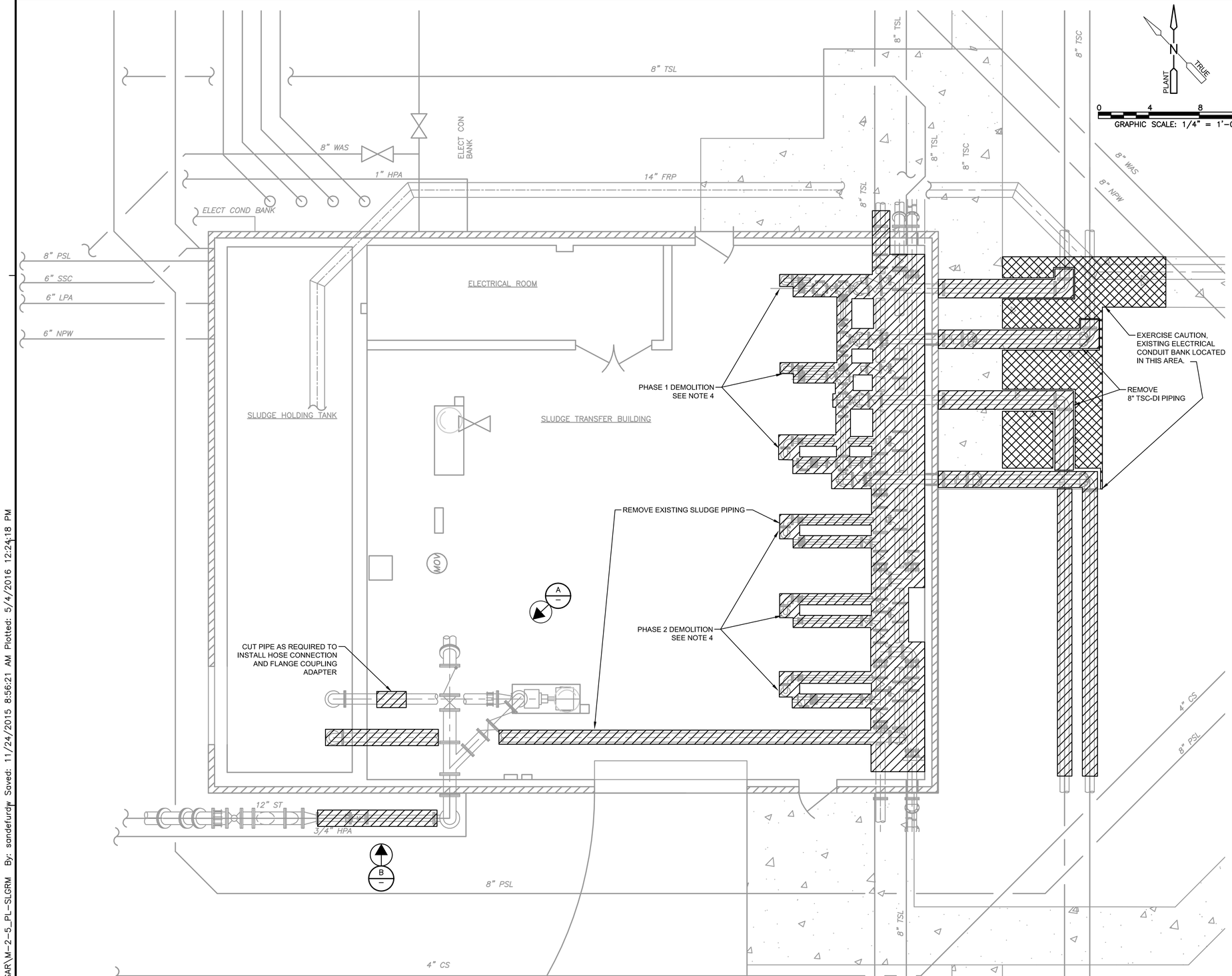

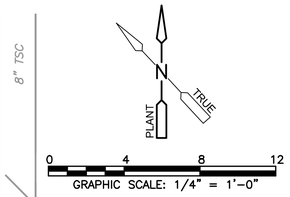

NOTES:

1. THE CONTRACTOR SHALL NOTE THAT EXISTING BACKGROUND INFORMATION IS PROVIDED FOR INFORMATIONAL PURPOSES ONLY AND MAY NOT REFLECT EXISTING FIELD CONDITIONS. CONTRACTOR SHALL VERIFY ALL FIELD CONDITIONS.
2. DEMOLITION SHALL BE IN ACCORDANCE WITH SECTION 01505. CONTRACTOR SHALL MINIMIZE THE CREATION OF CONSTRUCTION DEMOLITION WASTE ON THE PROJECT SITE AND SHALL RECYCLE AND/OR SALVAGE NON-HAZARDOUS CONSTRUCTION DEMOLITION TO DIVERT WASTE FROM LANDFILLS.
3. CONTRACTOR SHALL FIELD VERIFY ALL EXISTING PUMP AND PIPE LOCATIONS AND DIMENSIONS.
4. THICKENED SLUDGE PUMP PIPING DEMOLITION WORK SHALL BE DIVIDED INTO TWO PHASES BASED ON THE SEQUENCE OF CONSTRUCTION. REFER TO COA SPECIFICATIONS SECTION 01010 - SUMMARY OF WORK.

PHOTO A
NTS

PHOTO B
NTS

STATE OF TEXAS
DANNY M. HURTADO
104266
REGISTERED
PROFESSIONAL ENGINEER
May 2, 2016

REV No	DATE	DRWN	CHKD	REMARKS

DESIGNED BY: WOO
DRAWN BY: SANDEFUR
SHEET CHK'D BY: HURTADO
CROSS CHK'D BY:
APPROVED BY:
DATE: MAY 2016

CDM Smith
Riata Corporate Park, 12357-A Riata Trace Parkway, Suite 210
Austin, TX 78727
Tel: (512) 346-1100
Texas Registration Number F-3043

CITY OF AUSTIN, TEXAS - AUSTIN WATER UTILITY
CIP 3333.016
SOUTH AUSTIN REGIONAL WWTP
THICKENER IMPROVEMENTS PROJECT

SLUDGE TRANSFER PUMP ROOM
DEMOLITION PLAN

PROJECT No 590-104217
FILE NAME:M-2-5_PL-SLGRM

SHEET No
M-2

BID SET

S:\ACAD\104217_SAR\M-2-5_PL-SLGRM By: sandefurdw Saved: 11/24/2015 8:56:21 AM Plotted: 5/4/2016 12:24:18 PM

GRAVITY THICKENER 1A

PHOTO A / C-2

NTS

GRAVITY THICKENER 1B

PHOTO B / C-2

NTS

GRAVITY THICKENER 2A

PHOTO C / C-2

NTS

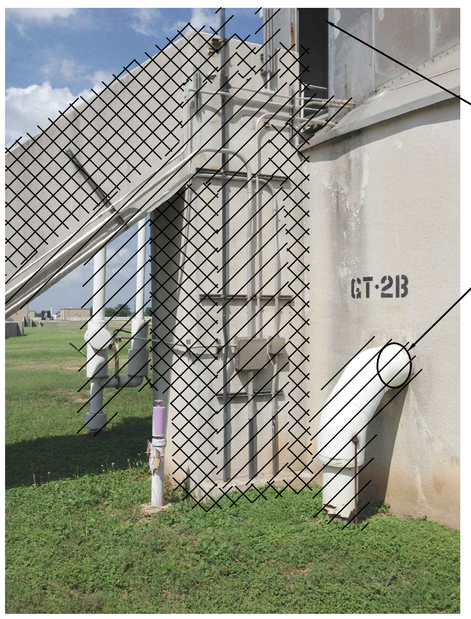

GRAVITY THICKENER 2B

PHOTO D / C-2

NTS

GRAVITY THICKENER 2B

PHOTO E / C-2

NTS

NOTE:

1. THE CONTRACTOR SHALL NOTE THAT EXISTING BACKGROUND INFORMATION IS PROVIDED FOR INFORMATIONAL PURPOSES ONLY AND MAY NOT REFLECT EXISTING FIELD CONDITIONS. CONTRACTOR SHALL VERIFY ALL FIELD CONDITIONS.

2. DEMOLITION SHALL BE IN ACCORDANCE WITH SECTION 01505. CONTRACTOR SHALL MINIMIZE THE CREATION OF CONSTRUCTION DEMOLITION WASTE ON THE PROJECT SITE AND SHALL RECYCLE AND/OR SALVAGE NON-HAZARDOUS CONSTRUCTION, DEMOLITION, AND LAND CLEARING DEBRIS TO DIVERT WASTE FROM LANDFILLS.

3. DEMOLITION PHOTOS ARE SHOWN TO CONVEY THE INTENT OF DEMOLITION WORK. REFER TO ELECTRICAL DRAWINGS FOR REMOVAL OF EXISTING CONDUIT LINES. REFER TO S-9 FOR STRUCTURAL DEMOLITION OF STAIRS AND THICKENER SUPERNATANT BOX AND EXTENT OF DEMOLITION BELOW GRADE.

4. REMOVE ABOVE GRADE PIPING AND VALVES, AND ALL VALVES SHALL BE REMOVED WITHOUT DAMAGE AND RETURNED TO OWNER. REMOVE BELOW GRADE PIPING AS REQUIRED TO CONNECT PROPOSED PIPING TO EXISTING LINES. REFER TO M-15 TO M-20.

STATE OF TEXAS
DANNY M. HURTADO
104266
REGISTERED PROFESSIONAL ENGINEER

May 2, 2016

REV No	DATE	DRWN	CHKD	REMARKS

DESIGNED BY: WOO
DRAWN BY: SANDEFUR
SHEET CHK'D BY: HURTADO
CROSS CHK'D BY:
APPROVED BY:
DATE: MAY 2016

CDM Smith
Riata Corporate Park, 12357-A Riata Trace Parkway, Suite 210
Austin, TX 78727
Tel: (512) 346-1100
Texas Registration Number F-3043

CITY OF AUSTIN, TEXAS - AUSTIN WATER UTILITY
CIP 3333.016

SOUTH AUSTIN REGIONAL WWTP
THICKENER IMPROVEMENTS PROJECT

GRAVITY THICKENERS
DEMOLITION PHOTOS

PROJECT No 590-104217
FILE NAME: M-3_GRAV_DEMO

SHEET No
M-3

BID SET

S:\Acad\104217_SAR\M-3_GRAV_DEMO By: sandefurdw, Saved: 12/29/2014 8:51:25 AM Plotted: 5/4/2016 12:24:39 PM

S:\Acad\104217_SAR\M-3_GRAV_DEMO.dwg, M-3, 5/4/2016 12:24:39 PM, sandefurdw, DWG To PDF.pc3

Plotted: 5/4/2016 12:24:39 PM

S:\Acad\104217_SAR\M-4_ODU_DEMO.dwg, M-4, 5/4/2016 12:24:59 PM, sandefurdw, DWG To PDF.pc3

ODOR CONTROL UNIT No 1
PHOTO A C-2
NTS

ODOR CONTROL UNIT No 1
PHOTO B C-2
NTS

ODOR CONTROL UNIT No 1
PHOTO C C-2
NTS

ODOR CONTROL UNIT No 2
PHOTO D C-2
NTS

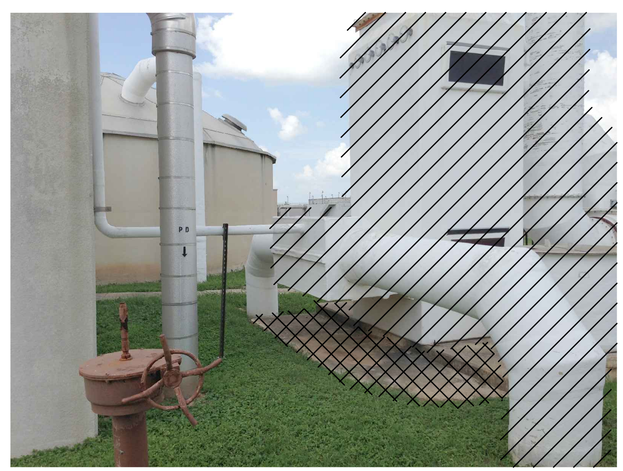

ODOR CONTROL UNIT No 2
PHOTO E C-2
NTS

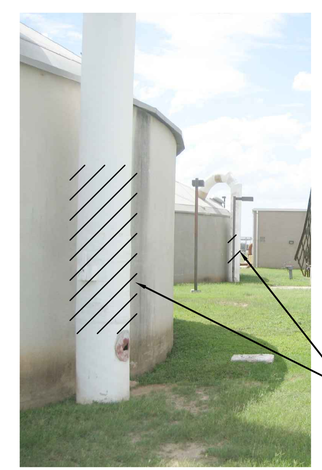

ODOR CONTROL UNIT No 2
PHOTO F C-2
NTS

NOTE:

1. THE CONTRACTOR SHALL NOTE THAT EXISTING BACKGROUND INFORMATION IS PROVIDED FOR INFORMATIONAL PURPOSES ONLY AND MAY NOT REFLECT EXISTING FIELD CONDITIONS. CONTRACTOR SHALL VERIFY ALL FIELD CONDITIONS.
2. DEMOLITION SHALL BE IN ACCORDANCE WITH SECTION 01505. CONTRACTOR SHALL MINIMIZE THE CREATION OF CONSTRUCTION DEMOLITION WASTE ON THE PROJECT SITE AND SHALL RECYCLE AND/OR SALVAGE NON-HAZARDOUS CONSTRUCTION, DEMOLITION, AND LAND CLEARING DEBRIS TO DIVERT WASTE FROM LANDFILLS.
3. CAP ALL PIPELINES AND DUCTWORK TO BE ABANDONED IN THE LIMITS OF DEMOLITION 2-FEET BELOW GRADE PER DETAIL F/C-14.
4. REFER TO ELECTRICAL DRAWINGS FOR DEMOLITION OF EXISTING CONDUIT LINES.
5. FOR GRAVITY THICKENER 1A AND 1B, REMOVE DUCT AS REQUIRED TO INSTALL NEW DUCT CONNECTIONS. SALVAGE EXISTING DAMPER FOR INSTALLATION ABOVE NEW DUCT CONNECTION. (SEE SHEETS M-21 AND M-22).

STATE OF TEXAS
DANNY M. HURTADO
104266
REGISTERED PROFESSIONAL ENGINEER
May 2, 2016

REV No	DATE	DRWN	CHKD	REMARKS

DESIGNED BY: WOO
DRAWN BY: SANDEFUR
SHEET CHK'D BY: HURTADO
CROSS CHK'D BY:
APPROVED BY:
DATE: MAY 2016

CDM Smith
Riata Corporate Park, 12357-A Riata Trace Parkway, Suite 210
Austin, TX 78727
Tel: (512) 346-1100
Texas Registration Number F-3043

CITY OF AUSTIN, TEXAS - AUSTIN WATER UTILITY
CIP 3333.016
SOUTH AUSTIN REGIONAL WWTP
THICKENER IMPROVEMENTS PROJECT

ODOR CONTROL UNITS
DEMOLITION PHOTOS

PROJECT No 590-104217
FILE NAME: M-4_ODU_DEMO

SHEET No
M-4

BID SET

S:\ACAD\104217_SAR\M-4_ODU_DEMO By: sandefurdw Saved: 3/24/2015 9:00:49 AM Plotted: 5/4/2016 12:25:00 PM
Plotted: 5/4/2016 12:25:00 PM

S:\Acad\104217_SAR\M-2-5_PL-SLGRM.dwg, M-5, 5/4/2016 12:25:45 PM, sandefurdw, DWG To PDF.pc3

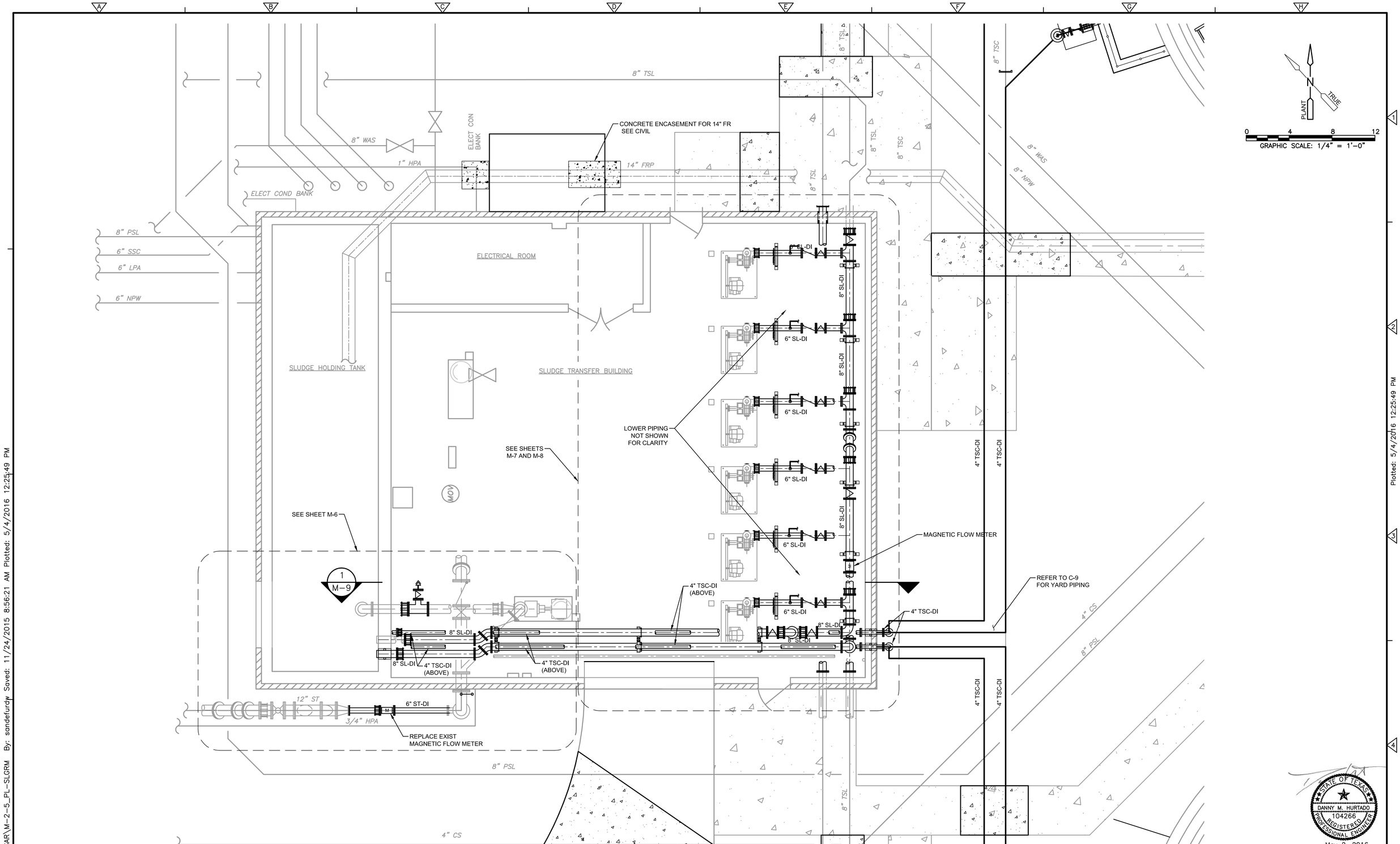

REV No	DATE	DRWN	CHKD	REMARKS

DESIGNED BY: WOO
DRAWN BY: SANDEFUR
SHEET CHK'D BY: HURTADO
CROSS CHK'D BY:
APPROVED BY:
DATE: MAY 2016

CDM Smith
Riata Corporate Park, 12357-A Riata Trace Parkway, Suite 210
Austin, TX 78727
Tel: (512) 346-1100
Texas Registration Number F-3043

CITY OF AUSTIN, TEXAS - AUSTIN WATER UTILITY
CIP 3333.016

SOUTH AUSTIN REGIONAL WWTP
THICKENER IMPROVEMENTS PROJECT

SLUDGE TRANSFER
BUILDING MODIFICATIONS
PLAN

PROJECT No 590-104217
FILE NAME:M-2-5_PL-SLGRM

SHEET No
M-5

BID SET

S:\ACAD\104217_SAR\M-2-5_PL-SLGRM By: sandefurdw Saved: 11/24/2015 8:56:21 AM Plotted: 5/4/2016 12:25:49 PM

S:\Acad\104217_SAR\M-6_PL-SLGTRAN.dwg, M-6, 5/4/2016 12:26:23 PM, sandefurdw, DWG To PDF.pc3

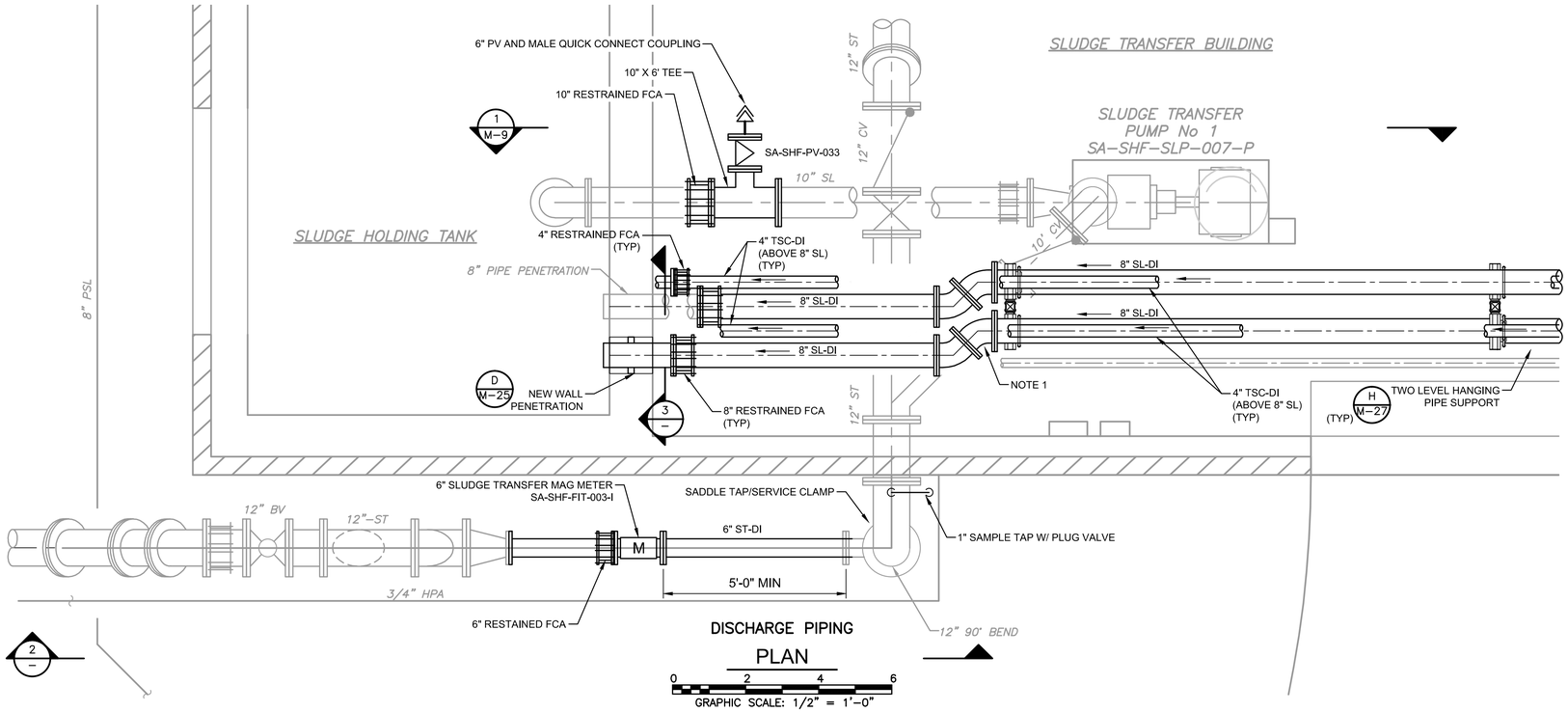

DISCHARGE PIPING

PLAN

NOTES:

1. PROVIDE TWO 8-INCH 45° BENDS TO AVOID EXIST VALVE HAND WHEEL ON EXIST 12-INCH LINE AND TO REUSE EXISTING WALL PENETRATION (TYP).
2. MOVE OVERHEAD LIGHT AS REQUIRED TO INSTALL HANGING PIPE SUPPORT.

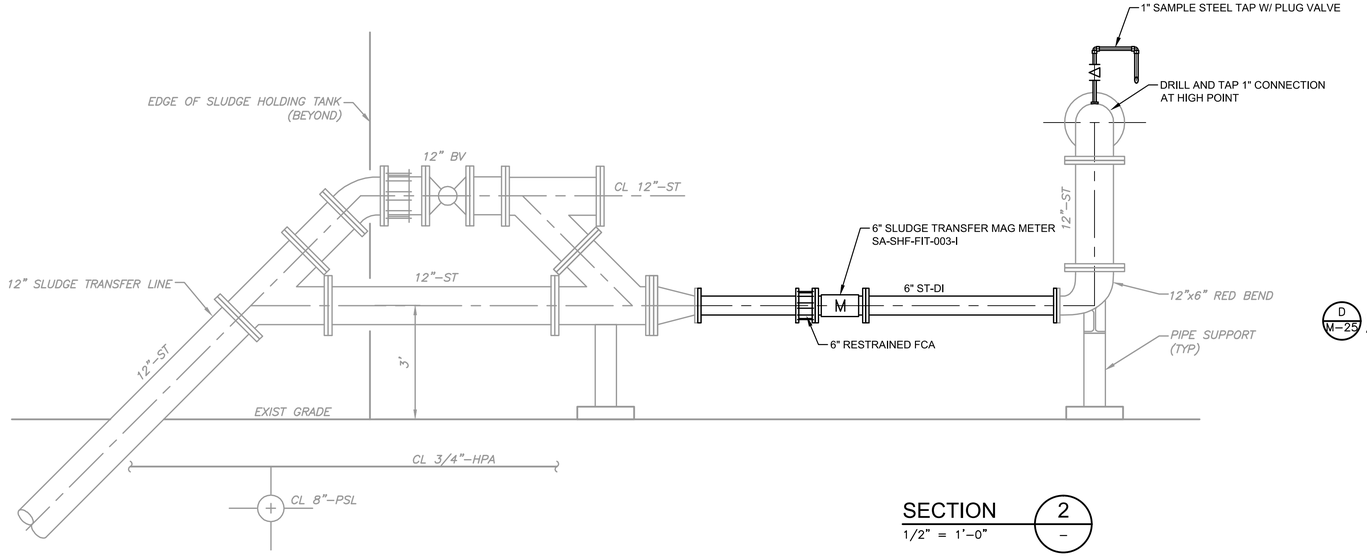

SECTION 2 / –

1/2" = 1'-0"

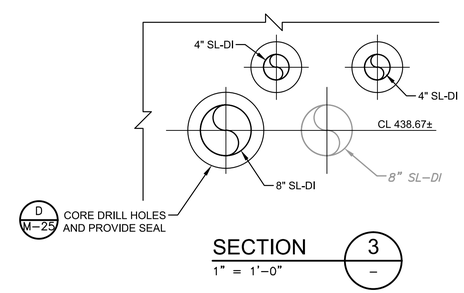

SECTION 3 / –

1" = 1'-0"

STATE OF TEXAS
DANNY M. HURTADO
104266
REGISTERED
PROFESSIONAL ENGINEER

May 2, 2016

REV No	DATE	DRWN	CHKD	REMARKS

DESIGNED BY: WOO
DRAWN BY: SANDEFUR
SHEET CHK'D BY: HURTADO
CROSS CHK'D BY:
APPROVED BY:
DATE: MAY 2016

CDM Smith
Riata Corporate Park, 12357-A Riata Trace Parkway, Suite 210
Austin, TX 78727
Tel: (512) 346-1100
Texas Registration Number F-3043

CITY OF AUSTIN, TEXAS - AUSTIN WATER UTILITY
CIP 3333.016

SOUTH AUSTIN REGIONAL WWTP
THICKENER IMPROVEMENTS PROJECT

SLUDGE TRANSFER
PLAN AND SECTION

PROJECT No 590-104217
FILE NAME: M-6_PL-SLGTRAN

SHEET No
M-6

BID SET

S:\ACAD\104217_SAR\M-6_PL-SLGTRAN By: sandefurdw Saved: 12/11/2015 7:57:51 AM Plotted: 5/4/2016 12:26:26 PM

Plotted: 5/4/2016 12:26:26 PM

S:\Acad\104217_SAR\M-7-8_PL-SLG.dwg, M-7, 5/4/2016 12:27:01 PM, sandefurdw, DWG To PDF.pc3

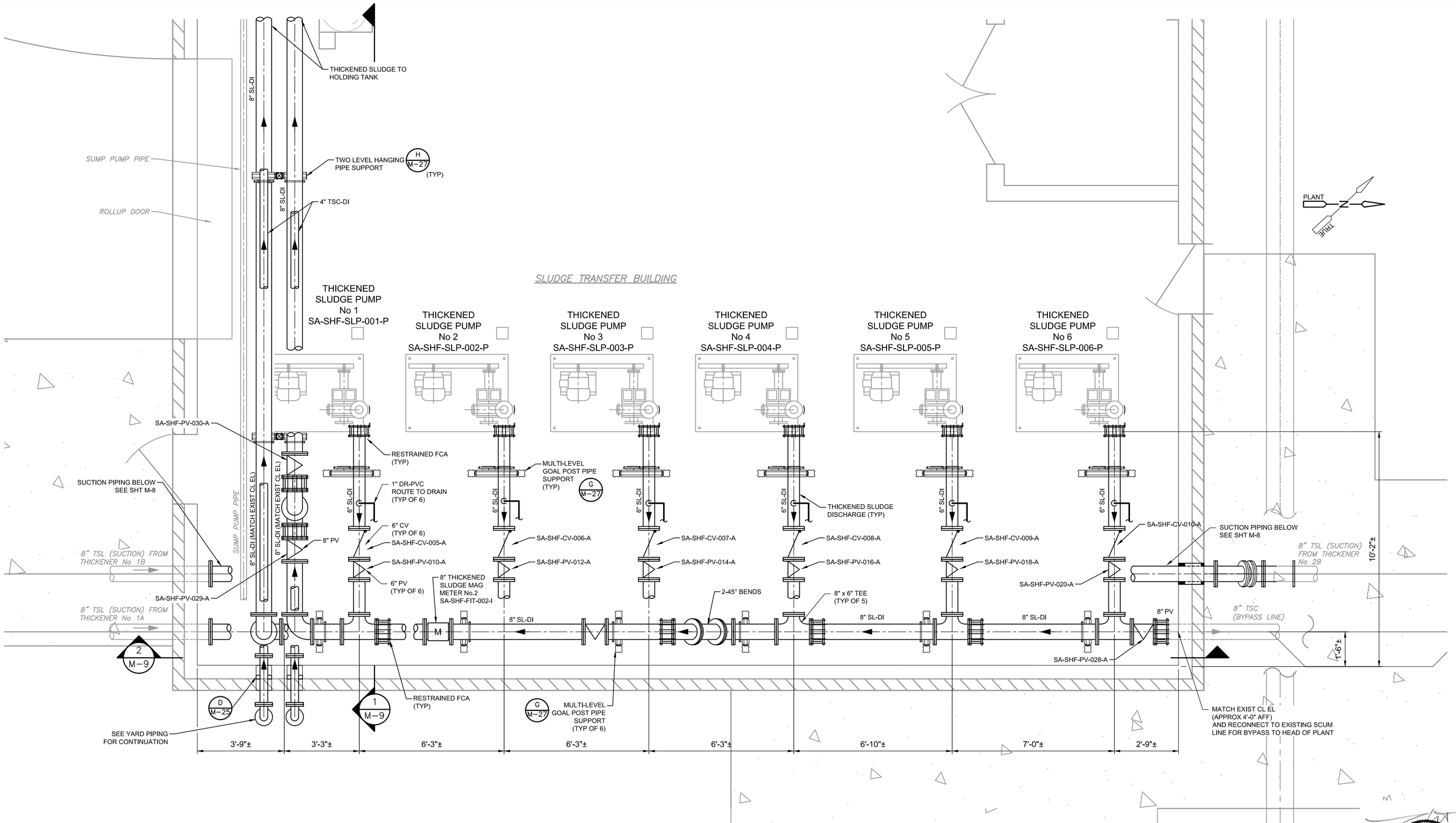

DISCHARGE PIPING

PLAN

0 2 4 6

GRAPHIC SCALE: 1/2" = 1'-0"

NOTE:

1. CONTRACTOR TO FIELD VERIFY ALL EXISTING PIPE LOCATIONS AND DIMENSIONS.
2. REFER TO SECTION 15140 FOR ADDITIONAL PIPE SUPPORT REQUIREMENTS.

STATE OF TEXAS
DANNY M. HURTADO
104266
REGISTERED PROFESSIONAL ENGINEER
May 2, 2016

REV No	DATE	DRWN	CHKD	REMARKS

DESIGNED BY: WOO
DRAWN BY: SANDEFUR
SHEET CHK'D BY: HURTADO
CROSS CHK'D BY:
APPROVED BY:
DATE: MAY 2016

CDM Smith
Riata Corporate Park, 12357-A Riata Trace Parkway, Suite 210
Austin, TX 78727
Tel: (512) 346-1100
Texas Registration Number F-3043

CITY OF AUSTIN, TEXAS - AUSTIN WATER UTILITY
CIP 3333.016

SOUTH AUSTIN REGIONAL WWTP
THICKENER IMPROVEMENTS PROJECT

THICKENED SLUDGE PUMP MODIFICATIONS
UPPER PLAN

PROJECT No 590-104217
FILE NAME: M-7-8_PL-SLG

SHEET No
M-7

BID SET

S:\ACAD\104217_SAR\M-7-8_PL-SLG By: sandefurdw Saved: 12/11/2015 10:17:37 AM Plotted: 5/4/2016 12:27:07 PM

S:\Acad\104217_SAR\M-7-8_PL-SLG.dwg, M-8, 5/4/2016 12:27:17 PM, sandefurdw, DWG To PDF.pc3

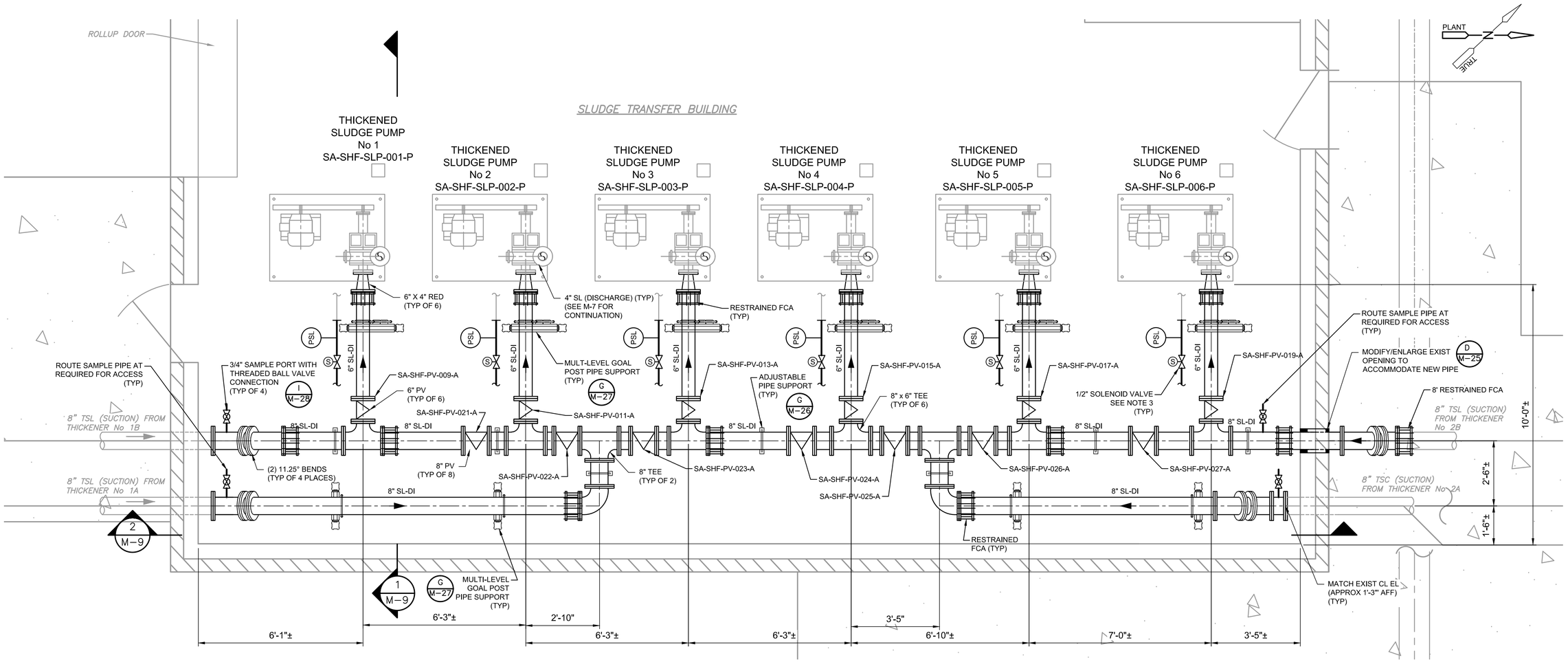

SUCTION PIPING

PLAN

0 2 4 6

GRAPHIC SCALE: 1/2" = 1'-0"

NOTE:

1. CONTRACTOR TO FIELD VERIFY ALL EXISTING PIPE LOCATIONS AND DIMENSIONS.
2. REFER TO SECTION 15140 FOR ADDITIONAL PIPE SUPPORT REQUIREMENTS.
3. REPLACE PUMP PRESSURE SWITCH AND 1/2" SOLENOID VALVE. REPLACE 1/2" NPW-PVC SEAL WATER PIPING AS REQUIRED.

STATE OF TEXAS
DANNY M. HURTADO
104266
REGISTERED PROFESSIONAL ENGINEER

May 2, 2016

REV No	DATE	DRWN	CHKD	REMARKS

DESIGNED BY: WOO
DRAWN BY: SANDEFUR
SHEET CHK'D BY: HURTADO
CROSS CHK'D BY:
APPROVED BY:
DATE: MAY 2016

CDM Smith
Riata Corporate Park, 12357-A Riata Trace Parkway, Suite 210
Austin, TX 78727
Tel: (512) 346-1100
Texas Registration Number F-3043

CITY OF AUSTIN, TEXAS - AUSTIN WATER UTILITY
CIP 3333.016

SOUTH AUSTIN REGIONAL WWTP
THICKENER IMPROVEMENTS PROJECT

THICKENED SLUDGE PUMP MODIFICATIONS
LOWER PLAN

PROJECT No 590-104217
FILE NAME: M-7-8_PL-SLG

SHEET No
M-8

BID SET

S:\ACAD\104217_SAR\M-7-8_PL-SLG By: sandefurdw Saved: 12/11/2015 10:17:37 AM Plotted: 5/4/2016 12:27:20 PM

S:\Acad\104217_SAR\M-9_PL-SLG.dwg, M-9, 5/4/2016 12:27:50 PM, sandefurdw, DWG To PDF.pc3

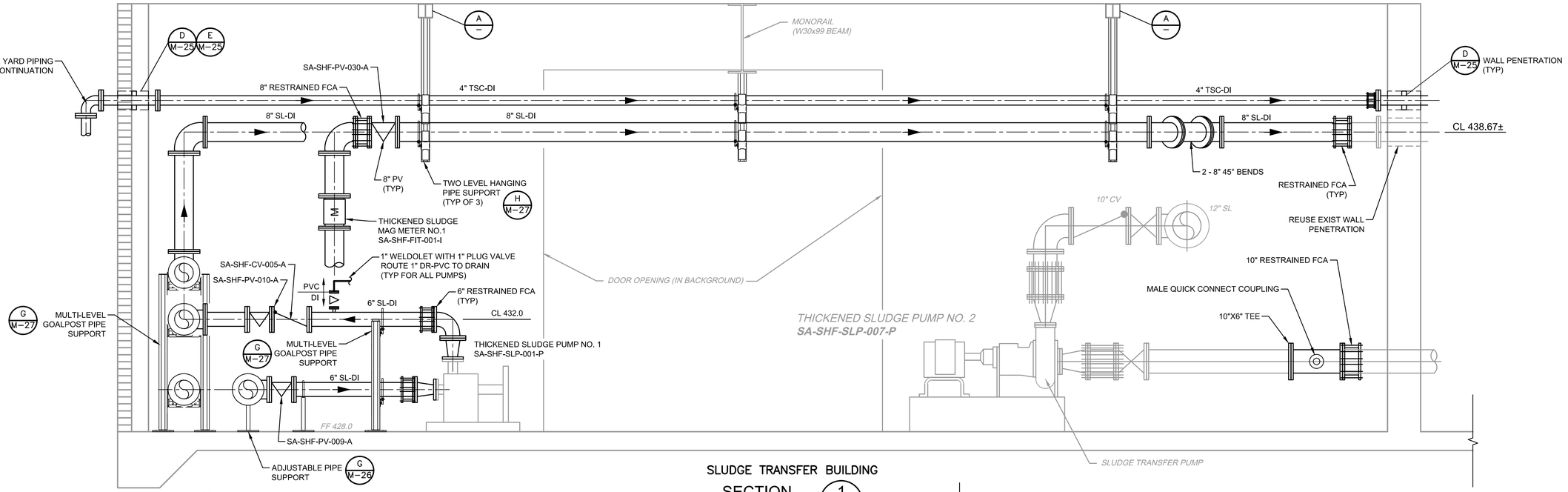

SLUDGE TRANSFER BUILDING

SECTION 1 (M-6, M-7, M-8)

1/2" = 1'-0"

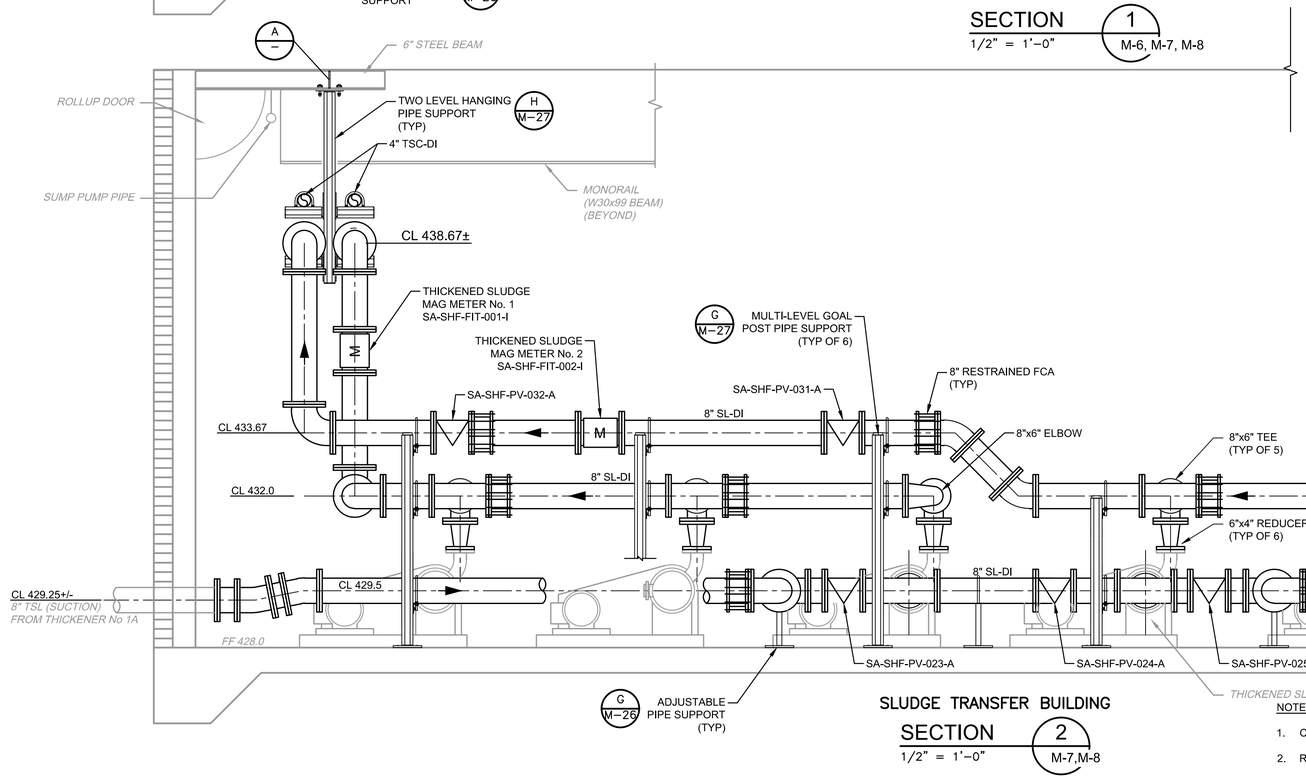

SLUDGE TRANSFER BUILDING

SECTION 2 (M-7,M-8)

1/2" = 1'-0"

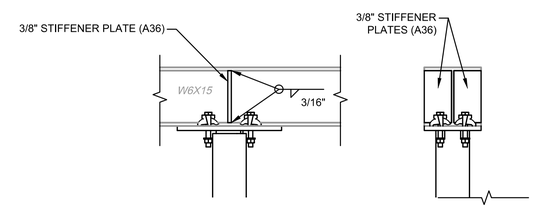

NOTE:

1. PRIOR TO WELDING, SOLVENT CLEAN AND POWER TOOL CLEAN FOR SURFACE PREPARATION PER SECTION 09902.

DETAIL A

1/4" = 1'-0"

NOTES:

1. CONTRACTOR TO FIELD VERIFY ALL EXISTING PIPE LOCATIONS AND DIMENSIONS.
2. REFER TO SECTION 15140 FOR ADDITIONAL PIPE SUPPORT REQUIREMENT.

STATE OF TEXAS
DANNY M. HURTADO
104266
REGISTERED PROFESSIONAL ENGINEER

May 2, 2016

REV No	DATE	DRWN	CHKD	REMARKS

DESIGNED BY: WOO
DRAWN BY: SANDEFUR
SHEET CHK'D BY: HURTADO
CROSS CHK'D BY:
APPROVED BY:
DATE: MAY 2016

CDM Smith
Riata Corporate Park, 12357-A Riata Trace Parkway, Suite 210
Austin, TX 78727
Tel: (512) 346-1100
Texas Registration Number F-3043

CITY OF AUSTIN, TEXAS - AUSTIN WATER UTILITY
CIP 3333.016

SOUTH AUSTIN REGIONAL WWTP
THICKENER IMPROVEMENTS PROJECT

THICKENED SLUDGE PUMP MODIFICATIONS
SECTIONS

PROJECT No 590-104217
FILE NAME: M-9_PL-SLG

SHEET No
M-9

BID SET

S:\ACAD\104217_SAR\M-9_PL-SLG By: sandefurdw Saved: 12/11/2015 10:18:14 AM Plotted: 5/4/2016 12:27:55 PM

S:\Acad\104217_SAR\M-10-11_PL-GRAV.dwg, M-10, 5/4/2016 12:28:33 PM, sandefurdw, DWG To PDF.pc3
Plotted: 5/4/2016 12:28:38 PM
S:\ACAD\104217_SAR\M-10-11_PL-GRAV By: sandefurdw Saved: 12/11/2015 10:43:46 AM Plotted: 5/4/2016 12:28:38 PM

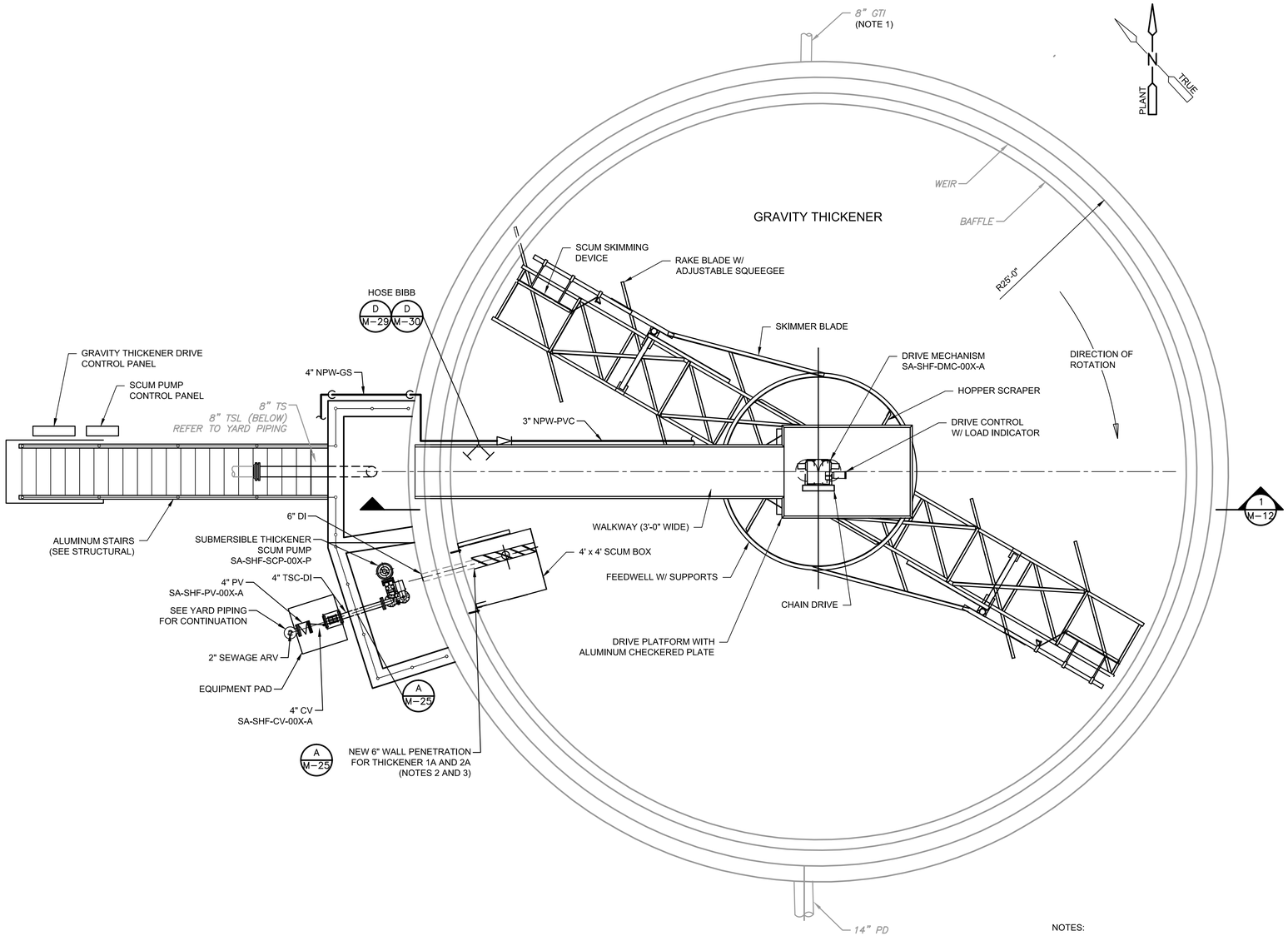

PLAN

0 4 8 12

GRAPHIC SCALE: 1/4" = 1'-0"

NOTES:

1. REFER TO YARD PIPING FOR PIPING LAYOUT OF EACH THICKENER.
2. FOR GRAVITY THICKENER 1A AND 2A, PROVIDE NEW 6" WALL PENETRATION FOR SCUM ENTRY INTO SCUM PUMP WET WELL PER DETAIL A/M-25.
3. FOR GRAVITY THICKENER 1B, REUSE EXISTING WALL PENETRATION FROM EXISTING 8" SCUM LINE.

STATE OF TEXAS
DANNY M. HURTADO
104266
REGISTERED PROFESSIONAL ENGINEER
May 2, 2016

REV No	DATE	DRWN	CHKD	REMARKS

DESIGNED BY: WOO
DRAWN BY: SANDEFUR
SHEET CHK'D BY: HURTADO
CROSS CHK'D BY:
APPROVED BY:
DATE: MAY 2016

CDM Smith
Riata Corporate Park, 12357-A Riata Trace Parkway, Suite 210
Austin, TX 78727
Tel: (512) 346-1100
Texas Registration Number F-3043

CITY OF AUSTIN, TEXAS - AUSTIN WATER UTILITY
CIP 3333.016
SOUTH AUSTIN REGIONAL WWTP
THICKENER IMPROVEMENTS PROJECT

GRAVITY THICKENER 1A, 2A, AND 1B
MODIFICATION PLAN

PROJECT No 590-104217
FILE NAME M-10-11_PL-GRAV
SHEET No
M-10

BID SET

S:\Acad\104217_SAR\M-10-11_PL-GRAV.dwg, M-11, 5/4/2016 12:28:47 PM, sandefurdw, DWG To PDF.pc3

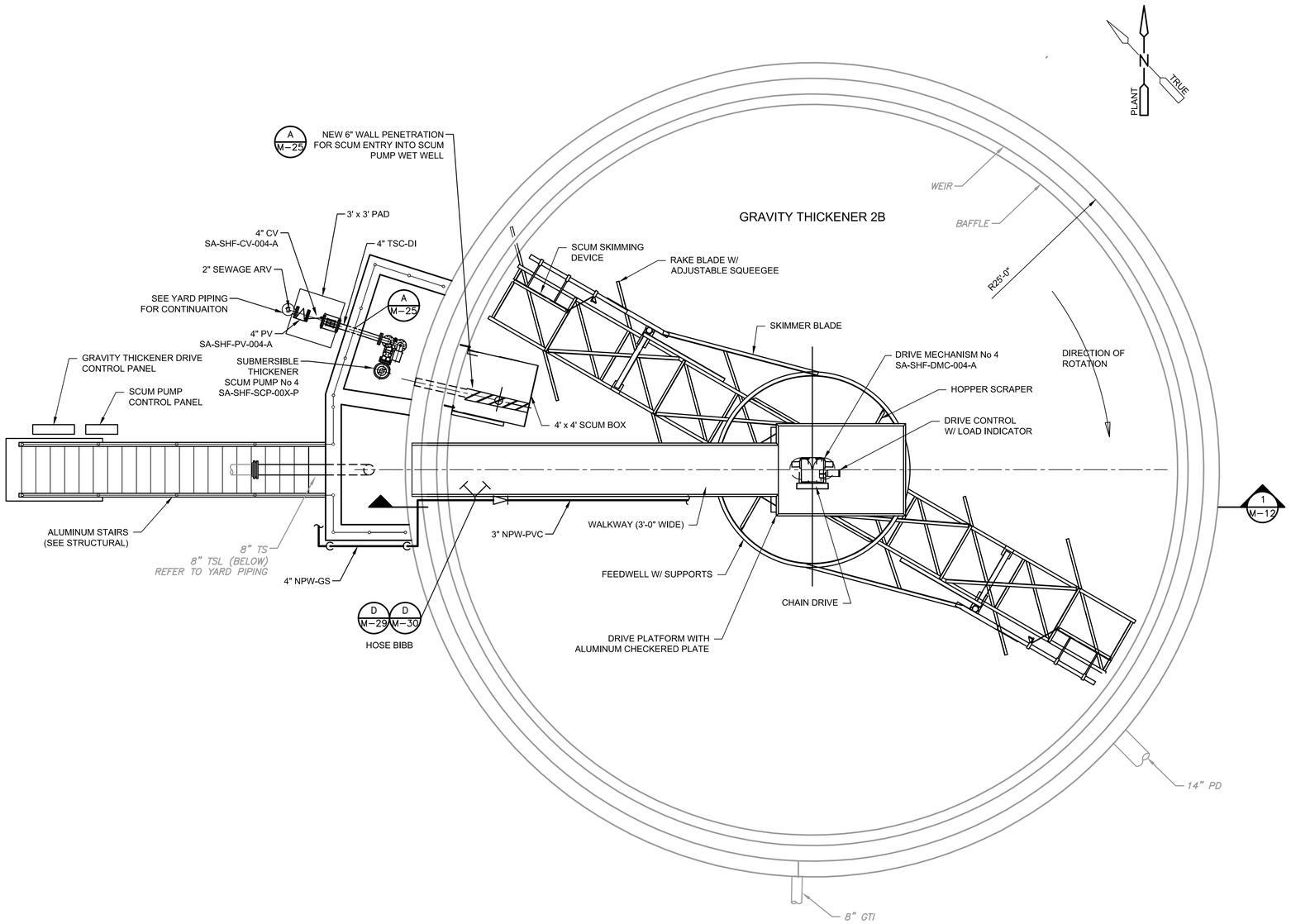

PLAN

0 4 8 12

GRAPHIC SCALE: 1/4" = 1'-0"

STATE OF TEXAS
DANNY M. HURTADO
104266
REGISTERED PROFESSIONAL ENGINEER

May 2, 2016

REV No	DATE	DRWN	CHKD	REMARKS

DESIGNED BY: WOO
DRAWN BY: SANDEFUR
SHEET CHK'D BY: HURTADO
CROSS CHK'D BY:
APPROVED BY:
DATE: MAY 2016

CDM Smith
Riata Corporate Park, 12357-A Riata Trace Parkway, Suite 210
Austin, TX 78727
Tel: (512) 346-1100
Texas Registration Number F-3043

CITY OF AUSTIN, TEXAS - AUSTIN WATER UTILITY
CIP 3333.016

SOUTH AUSTIN REGIONAL WWTP
THICKENER IMPROVEMENTS PROJECT

GRAVITY THICKENER 2B
MODIFICATION PLAN

PROJECT No 590-104217
FILE NAME M-10-11_PL-GRAV

SHEET No
M-11

BID SET

S:\ACAD\104217_SAR\M-10-11_PL-GRAV By: sandefurdw Saved: 12/11/2015 10:43:46 AM Plotted: 5/4/2016 12:28:51 PM

S:\Acad\104217_SAR\M-12_SC-GRAV.dwg, M-12, 5/4/2016 12:29:24 PM, sandefurdw, DWG To PDF.pc3

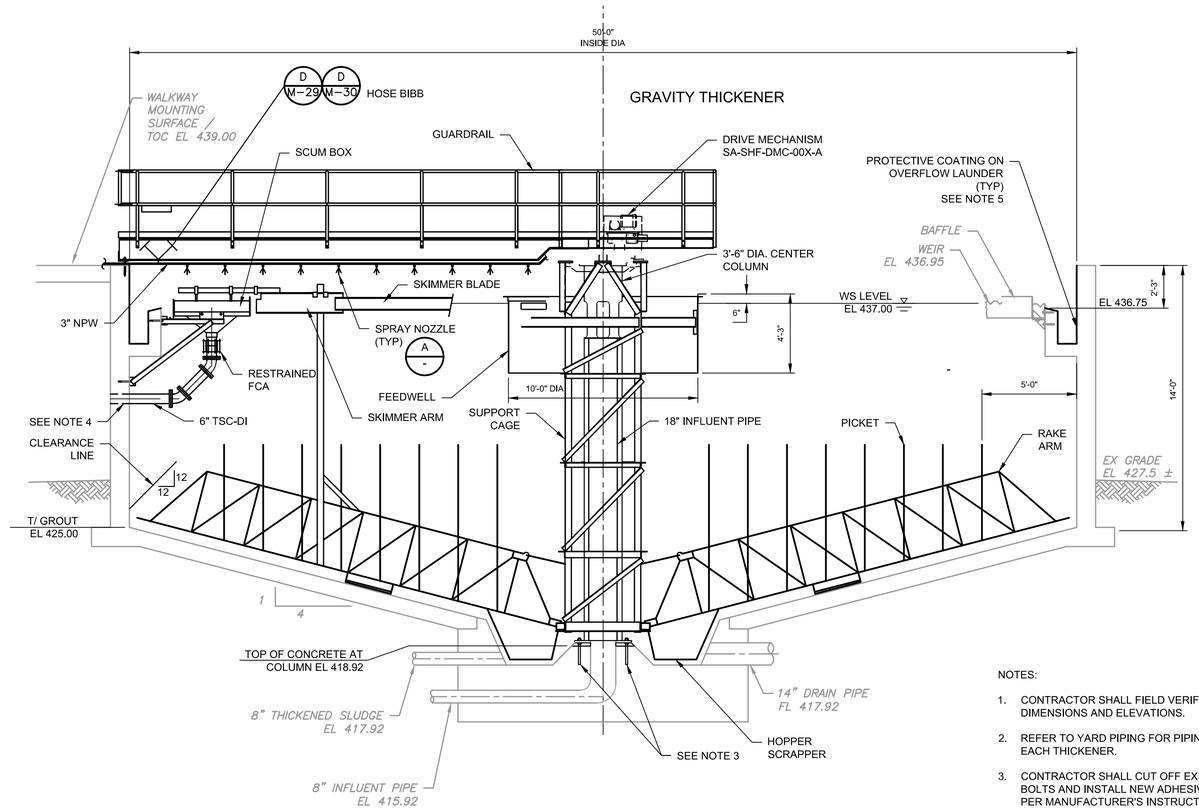

ILLUSTRATIVE SECTION

SECTION 1 (M-10, M-11)

1/4" = 1'-0"

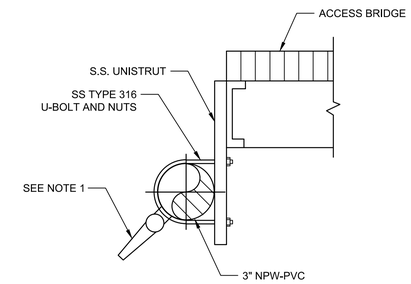

NOTE:

1. PROVIDE SADDLES FOR CONNECTING SPRAY NOZZLES TO THE 3" NPW EVERY 2'-0" OC. PROVIDE HIGH IMPACT SPRAY NOZZLES, F SERIES BY BEX SPRAY NOZZLES OR EQUAL. EACH NOZZLE SHALL PROVIDE 2.0 GPM AT 60 PSI WITH A SPRAY ANGLE OF 45°. NOZZLES SHALL BE NPT THREADED CONSTRUCTED OF TYPE 316 SST EXTENSION PIPES SHALL BE USED TO PLACE NOZZLES A DISTANCE FROM THE WATER SURFACE RECOMMENDED BY NOZZLE MANUFACTURER.

SPRAY SYSTEM

DETAIL A (-)

NTS

NOTES:

1. CONTRACTOR SHALL FIELD VERIFY ALL EXISTING DIMENSIONS AND ELEVATIONS.
2. REFER TO YARD PIPING FOR PIPING LAYOUT OF EACH THICKENER.
3. CONTRACTOR SHALL CUT OFF EXISTING ANCHOR BOLTS AND INSTALL NEW ADHESIVE ANCHORS PER MANUFACTURER'S INSTRUCTIONS.
4. FOR THICKENER 1B RE-USE EXISTING PIPE PENETRATION AND PROVIDE 6" X 8" REDUCER.
5. PROVIDE PROTECTIVE COATING ON LAUNDER INTERIOR SURFACE PER SPECIFICATION 09850.

STATE OF TEXAS
DANNY M. HURTADO
104266
REGISTERED PROFESSIONAL ENGINEER

May 2, 2016

REV No	DATE	DRWN	CHKD	REMARKS

DESIGNED BY: WOO
DRAWN BY: SANDEFUR
SHEET CHK'D BY: HURTADO
CROSS CHK'D BY:
APPROVED BY:
DATE: MAY 2016

CDM Smith
Riata Corporate Park, 12357-A Riata Trace Parkway, Suite 210
Austin, TX 78727
Tel: (512) 346-1100
Texas Registration Number F-3043

CITY OF AUSTIN, TEXAS - AUSTIN WATER UTILITY
CIP 3333.016

SOUTH AUSTIN REGIONAL WWTP
THICKENER IMPROVEMENTS PROJECT

GRAVITY THICKENERS
TYPICAL ILLUSTRATIVE
SECTION AND DETAILS

PROJECT No 590-104217
FILE NAME: M-12_SC-GRAV

SHEET No
M-12

BID SET

S:\ACAD\104217_SAR\M-12_SC-GRAV By: sandefurdw Saved: 12/8/2015 8:37:58 PM Plotted: 5/4/2016 12:29:26 PM

S:\Acad\104217_SAR\M-13_PL-DOME-GRAV.dwg, M-13, 5/4/2016 12:30:01 PM, sandefurdw, DWG To PDF.pc3

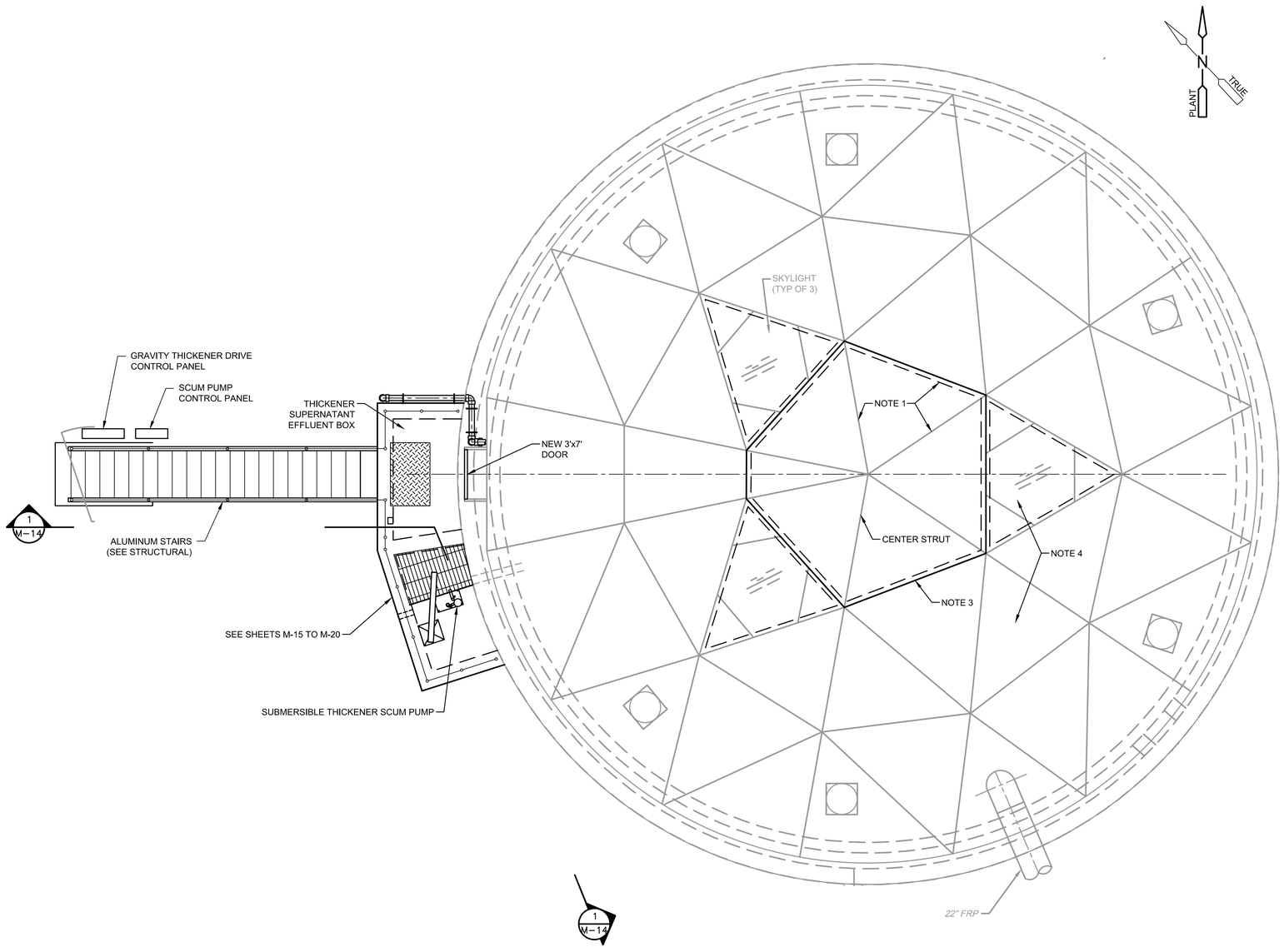

PLAN

0 4 8 12

GRAPHIC SCALE: 1/4" = 1'-0"

NOTES:

1. THICKENER MECHANISMS SHALL BE INSTALLED WITHOUT REMOVING DOME COVERS. MECHANISM EQUIPMENT SHALL BE BROUGHT IN THROUGH THE DOORWAY AND THROUGH TOP OF STRUCTURE BY REMOVING THE SIX CENTER STRUTS AND SIX CENTER PANELS.
2. CONTRACTOR SHALL COORDINATE WITH THICKENER MANUFACTURERS DURING BIDDING TO DETERMINE SIZE AND WEIGHT OF LARGEST COMPONENTS.
3. CENTER HEXAGONAL RING SHALL NOT BE REMOVED WITHOUT EXCEPTION.
4. SKYLIGHT PANELS OR OTHER ADDITIONAL PANELS MAY BE REMOVED IF NEEDED.
5. EXISTING DOME WAS MANUFACTURED BY TEMCOR WHICH IS NOW PART OF CST INDUSTRIES.

STATE OF TEXAS
DANNY M. HURTADO
104266
REGISTERED PROFESSIONAL ENGINEER

May 2, 2016

REV No	DATE	DRWN	CHKD	REMARKS

DESIGNED BY: WOO
DRAWN BY: SANDEFUR
SHEET CHK'D BY: HURTADO
CROSS CHK'D BY:
APPROVED BY:
DATE: MAY 2016

CDM Smith
Riata Corporate Park, 12357-A Riata Trace Parkway, Suite 210
Austin, TX 78727
Tel: (512) 346-1100
Texas Registration Number F-3043

CITY OF AUSTIN, TEXAS - AUSTIN WATER UTILITY
CIP 3333.016

SOUTH AUSTIN REGIONAL WWTP
THICKENER IMPROVEMENTS PROJECT

GRAVITY THICKENER UPPER PLAN AND THICKENER MECHANISM INSTALLATION PLAN

PROJECT No 590-104217
FILE NAME M-13_PL-DOME-GRAV

SHEET No
M-13

BID SET

S:\ACAD\104217_SAR\M-13_PL-DOME-GRAV By: sandefurdw Saved: 12/8/2015 8:37:51 PM Plotted: 5/4/2016 12:30:03 PM

Plotted: 5/4/2016 12:30:03 PM

S:\Acad\104217_SAR\M-13_PL-DOME-GRAV.dwg, M-14, 5/4/2016 12:30:11 PM, sandefurdw, DWG To PDF.pc3

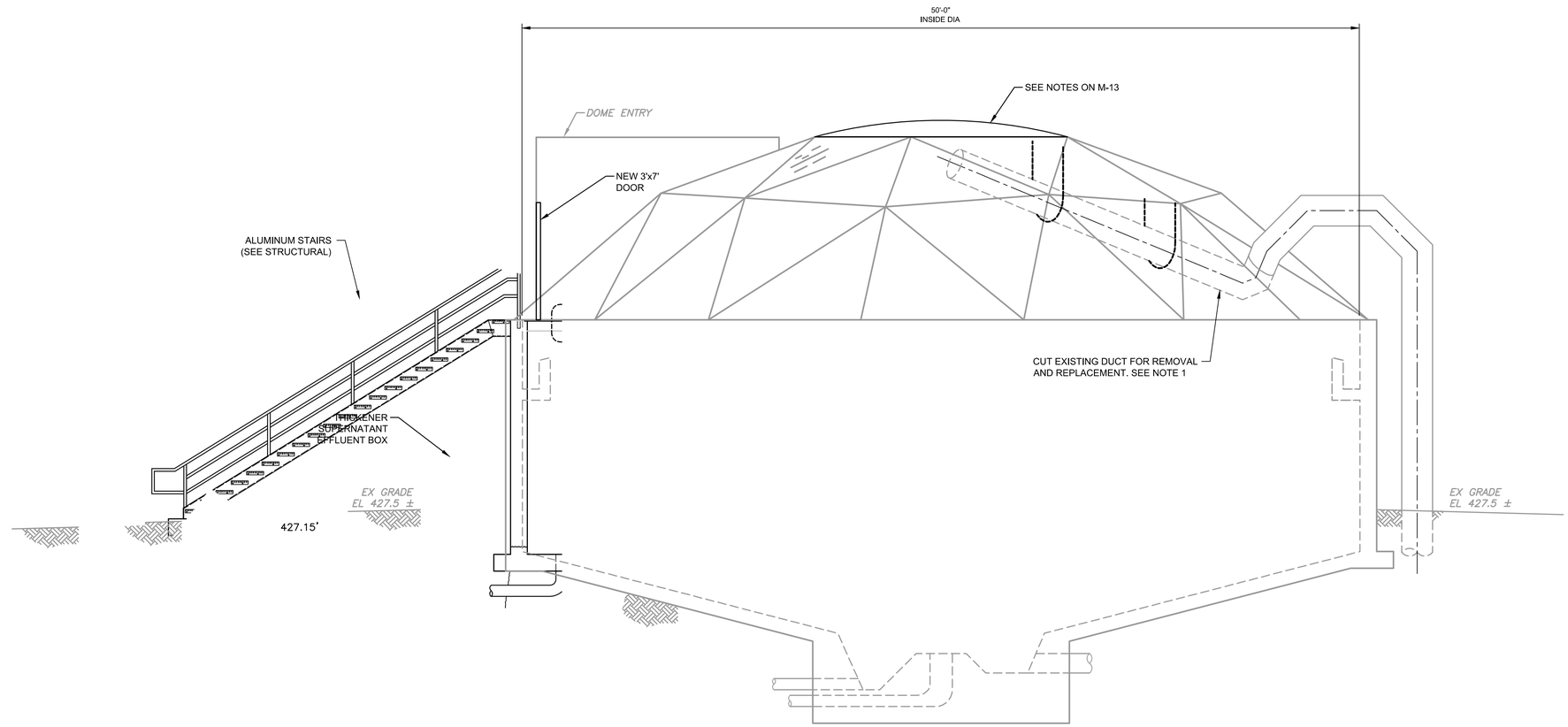

ILLUSTRATIVE SECTION

SECTION 1 / M-13

1/4" = 1'-0"

NOTE:

1. CONTRACTOR SHALL REMOVE OA DUCT AS REQUIRED FOR INSTALLATION OF NEW THICKENER MECHANISM. DUCT SEGMENT SHALL BE REATTACHED AND REPAIRED PER MANUFACTURER RECOMMENDATIONS. PROVIDE TWO TYPE 316 STAINLESS STEEL SUPPORT STRAPS PER THICKENER IN ACCORDANCE WITH 15891. MATCH STYLE OF EXISTING SUPPORTS.

STATE OF TEXAS
DANNY M. HURTADO
104266
REGISTERED PROFESSIONAL ENGINEER

May 2, 2016

REV No	DATE	DRWN	CHKD	REMARKS

DESIGNED BY: WOO
DRAWN BY: SANDEFUR
SHEET CHK'D BY: HURTADO
CROSS CHK'D BY:
APPROVED BY:
DATE: MAY 2016

CDM Smith
Riata Corporate Park, 12357-A Riata Trace Parkway, Suite 210
Austin, TX 78727
Tel: (512) 346-1100
Texas Registration Number F-3043

CITY OF AUSTIN, TEXAS - AUSTIN WATER UTILITY
CIP 3333.016

SOUTH AUSTIN REGIONAL WWTP
THICKENER IMPROVEMENTS PROJECT

GRAVITY THICKENER DOMES
TYPICAL ILLUSTRATIVE SECTION

PROJECT No 590-104217
FILE NAME M-13_PL-DOME-GRAV

SHEET No
M-14

BID SET

S:\ACAD\104217_SAR\M-13_PL-DOME-GRAV By: sandefurdw Saved: 12/8/2015 8:37:51 PM Plotted: 5/4/2016 12:30:14 PM

Plotted: 5/4/2016 12:30:14 PM

S:\Acad\104217_SAR\M-15-18_PL-PUMP.dwg, M-15 (1A), 5/4/2016 12:30:46 PM, sandefurdw, DWG To PDF.pc3

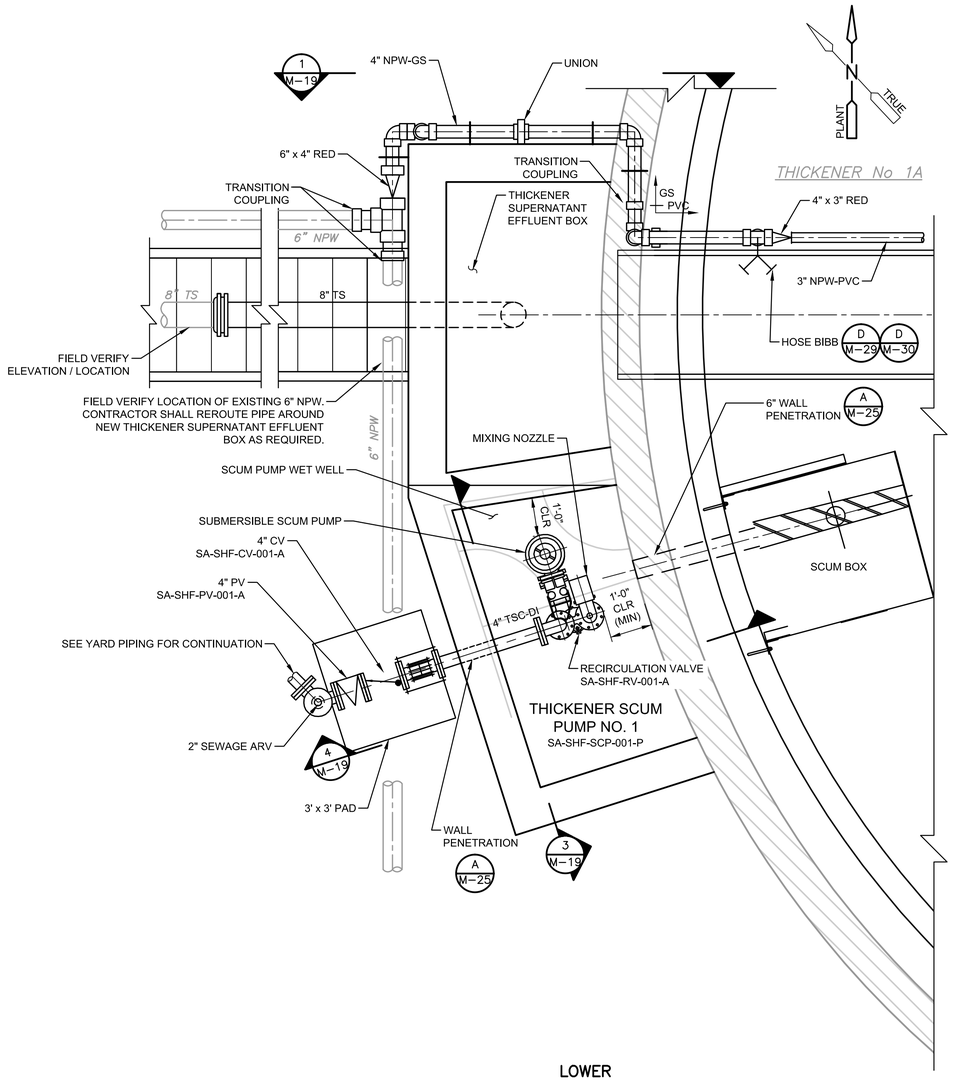

LOWER

PLAN

1/2" = 1'- 0"

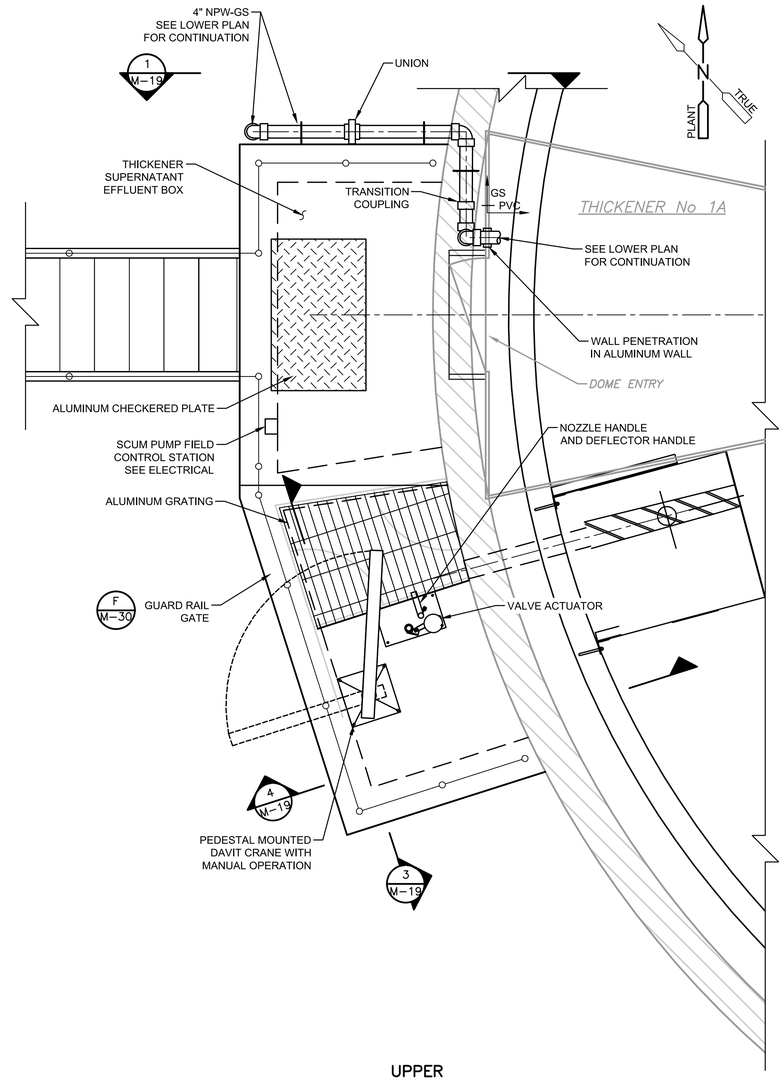

UPPER

PLAN

1/2" = 1'- 0"

NOTE:

1. INSULATE ALL EXPOSED NPW PIPING PER SECTION 15250.
2. TEMPORARILY CAP NPW PIPE AS NEEDED TO PERFORM WORK.

STATE OF TEXAS
DANNY M. HURTADO
104266
REGISTERED PROFESSIONAL ENGINEER

May 2, 2016

REV No	DATE	DRWN	CHKD	REMARKS

DESIGNED BY: WOO
DRAWN BY: SANDEFUR
SHEET CHK'D BY: HURTADO
CROSS CHK'D BY:
APPROVED BY:
DATE: MAY 2016

CDM Smith
Riata Corporate Park, 12357-A Riata Trace Parkway, Suite 210
Austin, TX 78727
Tel: (512) 346-1100
Texas Registration Number F-3043

CITY OF AUSTIN, TEXAS - AUSTIN WATER UTILITY
CIP 3333.016

SOUTH AUSTIN REGIONAL WWTP
THICKENER IMPROVEMENTS PROJECT

GRAVITY THICKENER 1A
SCUM PUMP WET WELL AND
THICKENER SUPERNATANT BOX
PLANS

PROJECT No 590-104217
FILE NAME M-15-18_PL-PUMP

SHEET No

M-15

BID SET

S:\ACAD\104217_SAR\M-15-18_PL-PUMP By: sandefurdw Saved: 4/22/2016 10:29:37 AM Plotted: 5/4/2016 12:30:53 PM

Plotted: 5/4/2016 12:30:53 PM

S:\Acad\104217_SAR\M-15-18_PL-PUMP.dwg, M-16 (2A), 5/4/2016 12:31:02 PM, sandefurdw, DWG To PDF.pc3

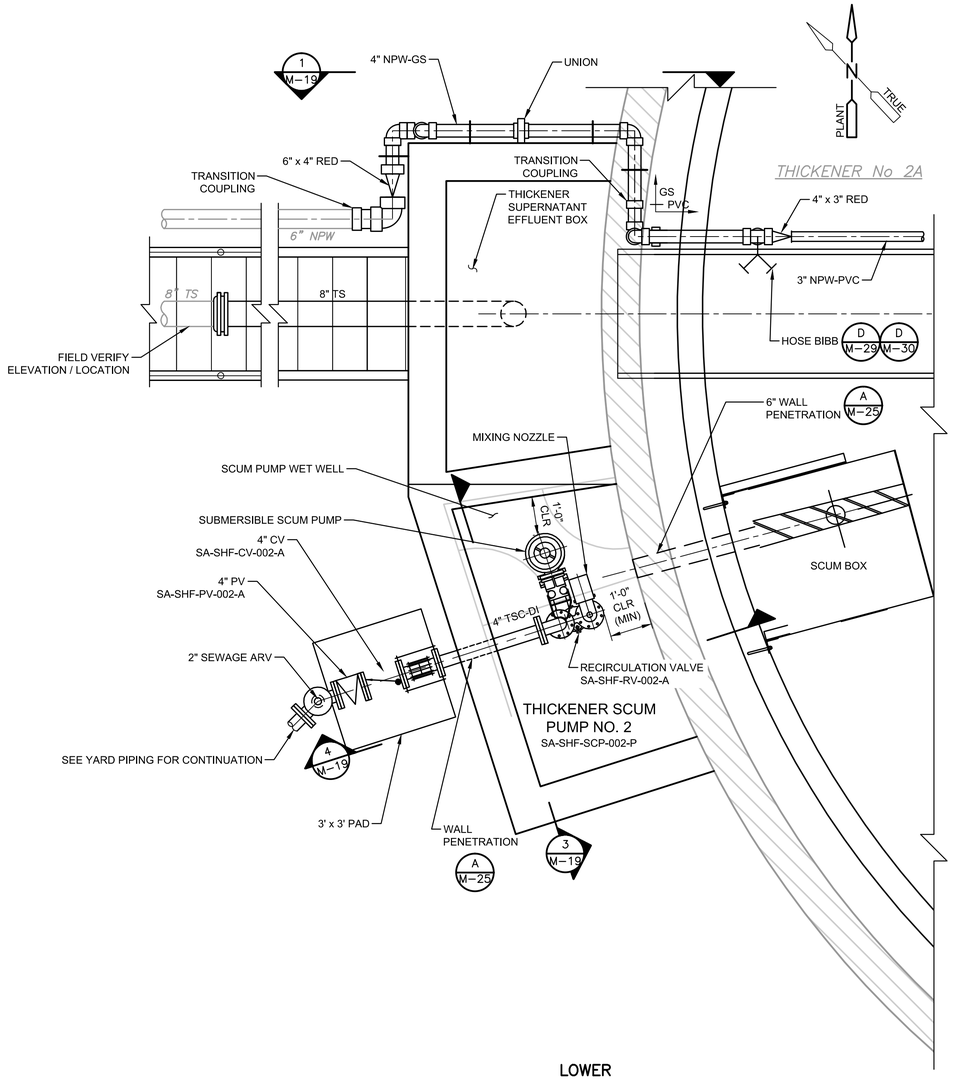

LOWER

PLAN

1/2" = 1'- 0"

1 0 1 2

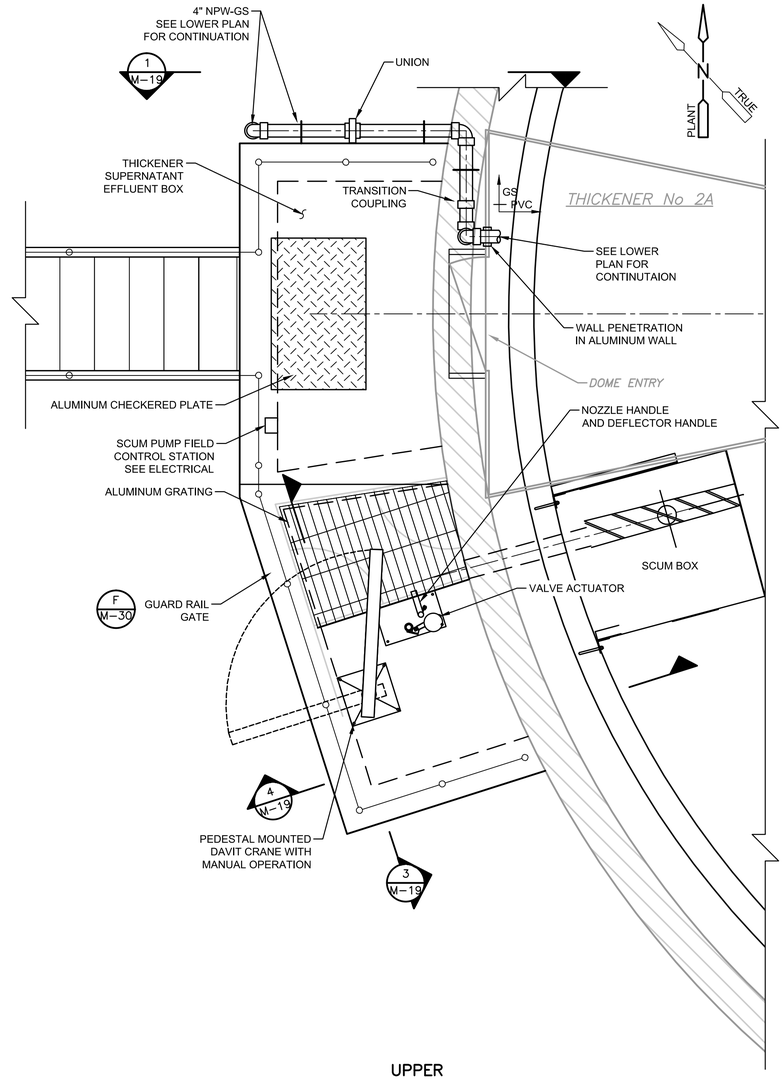

UPPER

PLAN

1/2" = 1'- 0"

1 0 1 2

NOTE:

1. INSULATE ALL EXPOSED NPW PIPING PER SECTION 15250.
2. TEMPORARILY CAP NPW PIPE AS NEEDED TO PERFORM WORK.

STATE OF TEXAS
DANNY M. HURTADO
104266
REGISTERED
PROFESSIONAL ENGINEER

May 2, 2016

REV No	DATE	DRWN	CHKD	REMARKS

DESIGNED BY: WOO
DRAWN BY: SANDEFUR
SHEET CHK'D BY: HURTADO
CROSS CHK'D BY:
APPROVED BY:
DATE: MAY 2016

CDM Smith
Riata Corporate Park, 12357-A Riata Trace Parkway, Suite 210
Austin, TX 78727
Tel: (512) 346-1100
Texas Registration Number F-3043

CITY OF AUSTIN, TEXAS - AUSTIN WATER UTILITY
CIP 3333.016

SOUTH AUSTIN REGIONAL WWTP
THICKENER IMPROVEMENTS PROJECT

GRAVITY THICKENER 2A
SCUM PUMP WET WELL AND
THICKENER SUPERNATANT BOX
PLANS

PROJECT No 590-104217
FILE NAME M-15-18_PL-PUMP

SHEET No

M-16

BID SET

S:\ACAD\104217_SAR\M-15-18_PL-PUMP By: sandefurdw Saved: 4/22/2016 10:29:37 AM Plotted: 5/4/2016 12:31:09 PM

Plotted: 5/4/2016 12:31:09 PM

S:\Acad\104217_SAR\M-15-18_PL-PUMP.dwg, M-17 (1B), 5/4/2016 12:31:17 PM, sandefurdw, DWG To PDF.pc3

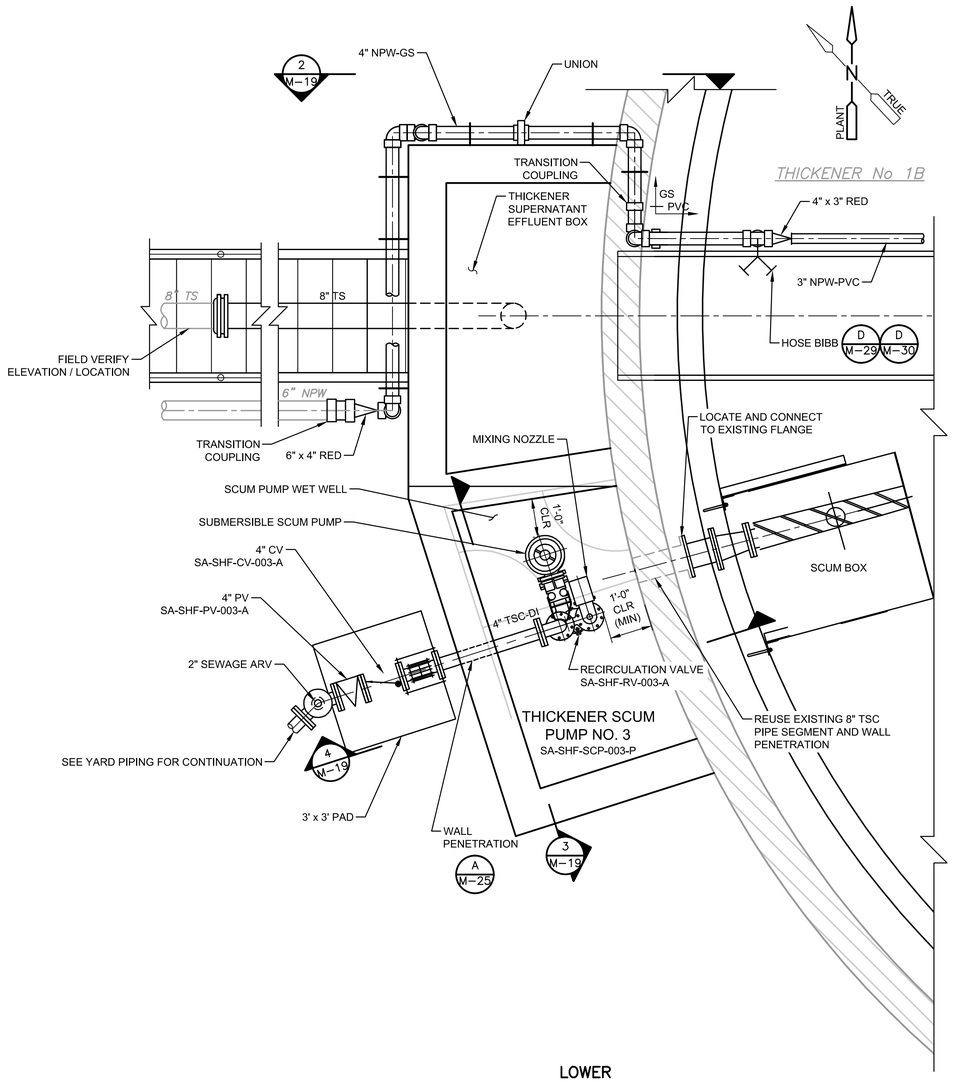

LOWER

PLAN

1/2" = 1'- 0"

1 0 1 2

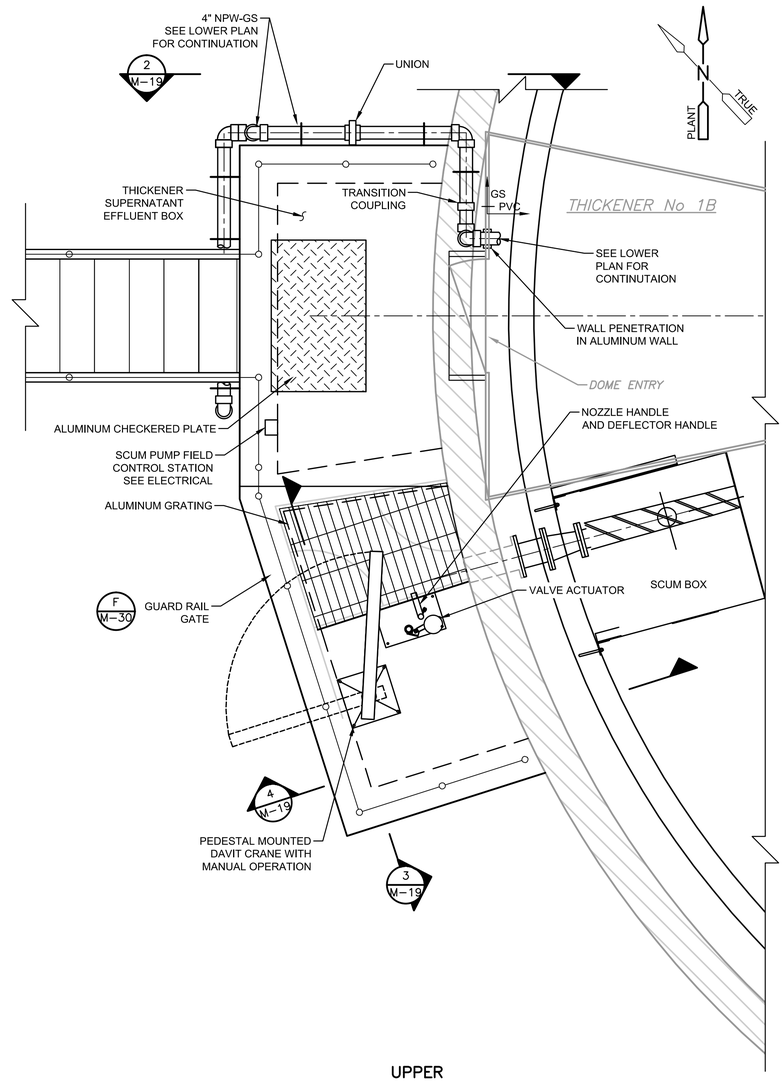

UPPER

PLAN

1/2" = 1'- 0"

1 0 1 2

NOTE:

1. INSULATE ALL EXPOSED NPW PIPING PER SECTION 15250.
2. TEMPORARILY CAP NPW PIPE AS NEEDED TO PERFORM WORK.

STATE OF TEXAS
DANNY M. HURTADO
104266
REGISTERED PROFESSIONAL ENGINEER

May 2, 2016

REV No	DATE	DRWN	CHKD	REMARKS

DESIGNED BY: WOO
DRAWN BY: SANDEFUR
SHEET CHK'D BY: HURTADO
CROSS CHK'D BY:
APPROVED BY:
DATE: MAY 2016

CDM Smith
Riata Corporate Park, 12357-A Riata Trace Parkway, Suite 210
Austin, TX 78727
Tel: (512) 346-1100
Texas Registration Number F-3043

CITY OF AUSTIN, TEXAS - AUSTIN WATER UTILITY
CIP 3333.016

SOUTH AUSTIN REGIONAL WWTP
THICKENER IMPROVEMENTS PROJECT

GRAVITY THICKENER 1B
SCUM PUMP WET WELL AND
THICKENER SUPERNATANT BOX
PLANS

PROJECT No 590-104217
FILE NAME M-15-18_PL-PUMP

SHEET No

M-17

BID SET

S:\ACAD\104217_SAR\M-15-18_PL-PUMP By: sandefurdw Saved: 4/22/2016 10:29:37 AM Plotted: 5/4/2016 12:31:24 PM
Plotted: 5/4/2016 12:31:24 PM

S:\Acad\104217_SAR\M-15-18_PL-PUMP.dwg, M-18 (2B), 5/4/2016 12:31:32 PM, sandefurdw, DWG To PDF.pc3

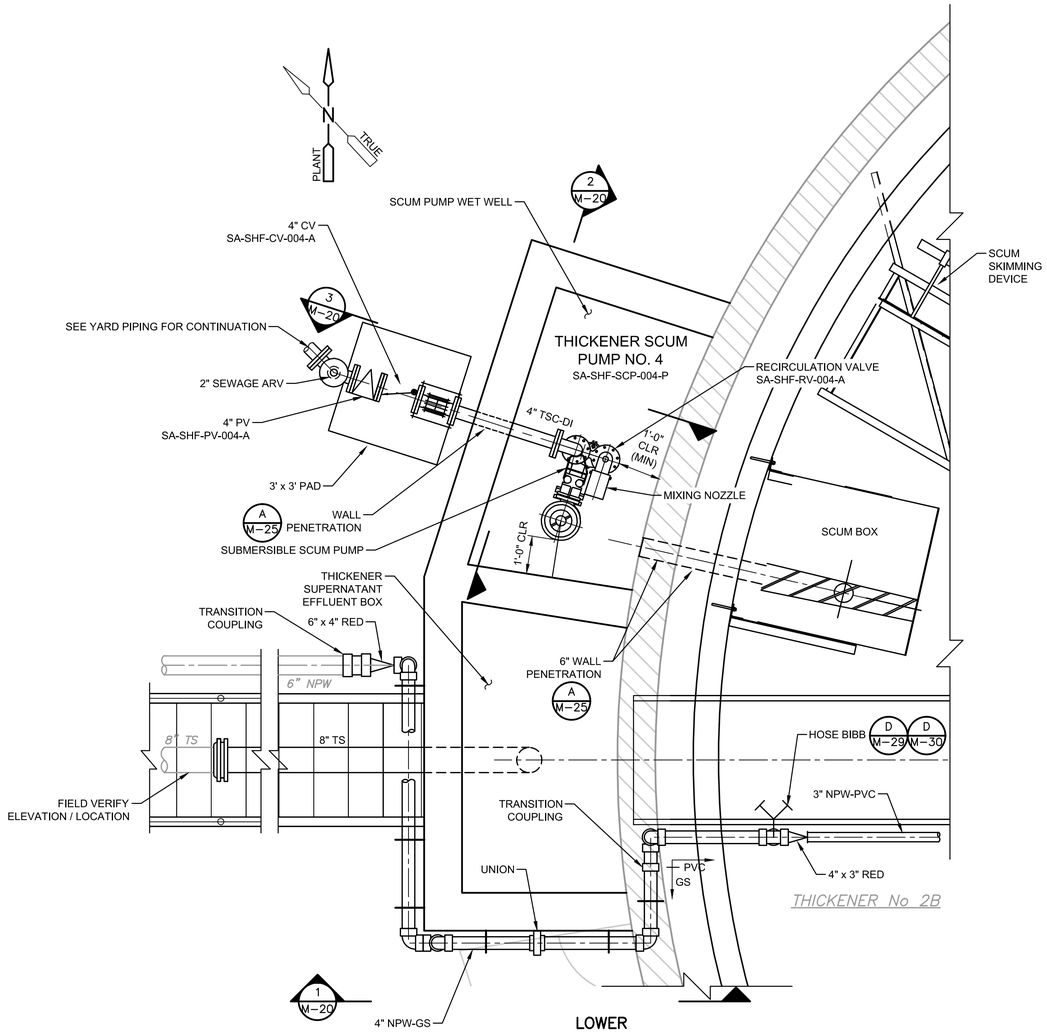

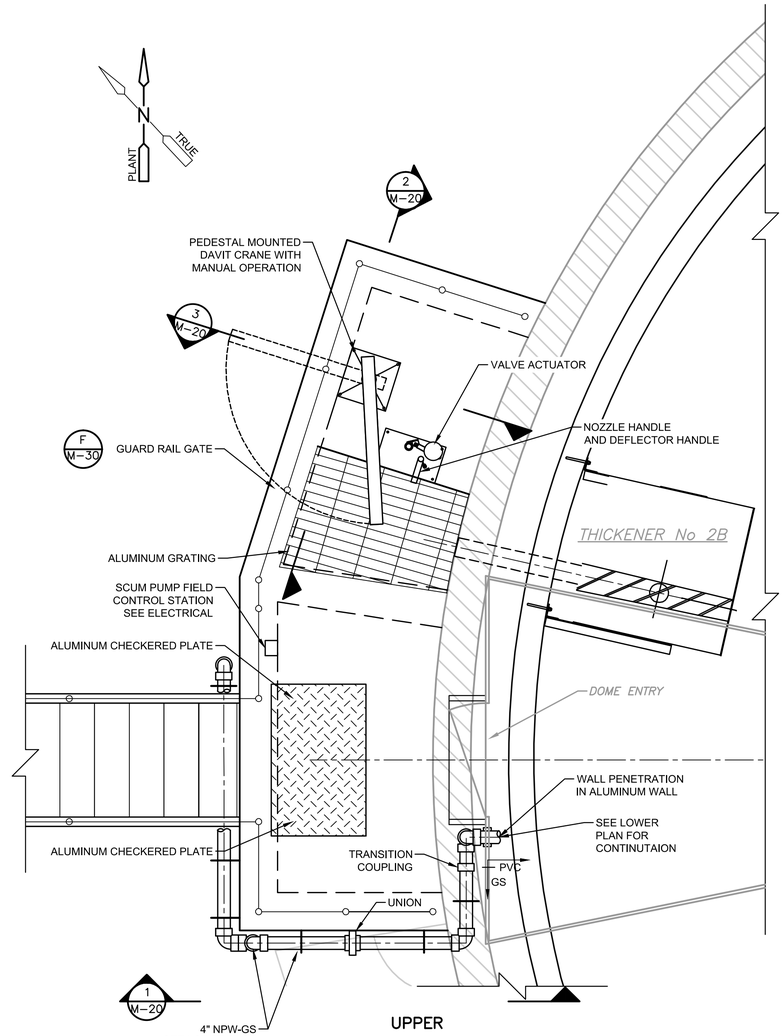

NOTE:

1. INSULATE ALL EXPOSED NPW PIPING PER SECTION 15250.
2. TEMPORARILY CAP NPW PIPE AS NEEDED TO PERFORM WORK.

STATE OF TEXAS
DANNY M. HURTADO
104266
REGISTERED PROFESSIONAL ENGINEER
May 2, 2016

REV No	DATE	DRWN	CHKD	REMARKS

DESIGNED BY: WOO
DRAWN BY: SANDEFUR
SHEET CHK'D BY: HURTADO
CROSS CHK'D BY:
APPROVED BY:
DATE: MAY 2016

CDM Smith
Riata Corporate Park, 12357-A Riata Trace Parkway, Suite 210
Austin, TX 78727
Tel: (512) 346-1100
Texas Registration Number F-3043

CITY OF AUSTIN, TEXAS - AUSTIN WATER UTILITY
CIP 3333.016

SOUTH AUSTIN REGIONAL WWTP
THICKENER IMPROVEMENTS PROJECT

GRAVITY THICKENER 2B
SCUM PUMP WET WELL AND
THICKENER SUPERNATANT BOX
PLANS

PROJECT No 590-104217
FILE NAME M-15-18_PL-PUMP

SHEET No
M-18

BID SET

S:\ACAD\104217_SAR\M-15-18_PL-PUMP By: sandefurdw Saved: 4/22/2016 10:29:37 AM Plotted: 5/4/2016 12:31:39 PM

S:\Acad\104217_SAR\M-19-20_SC-PUMP.dwg, M-19 (1A 2A 1B), 5/4/2016 12:32:13 PM, sandefurdw, DWG To PDF.pc3

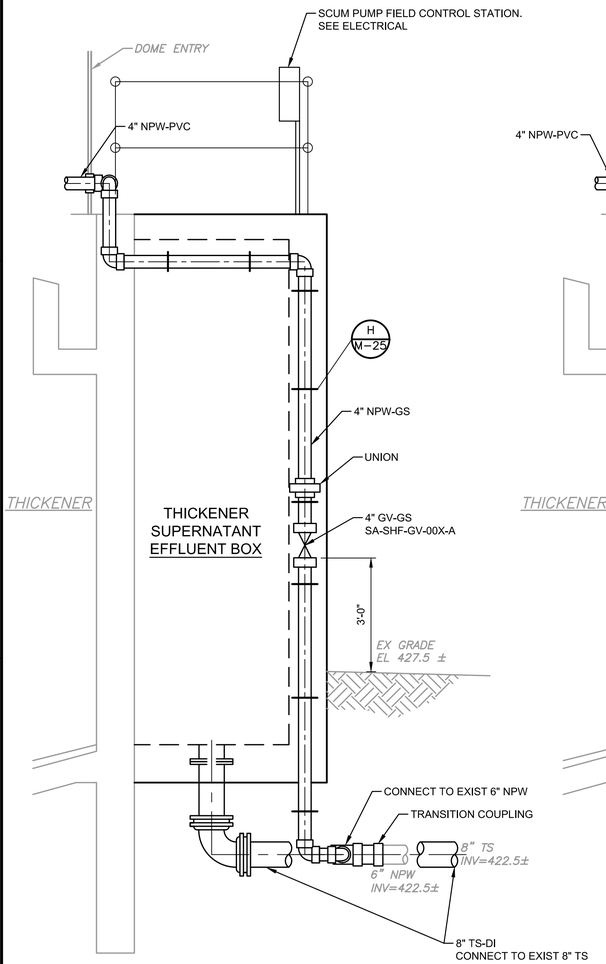

THICKENER 1A AND 2A

SECTION 1 (M-15, M-16)

1/2" = 1'- 0"

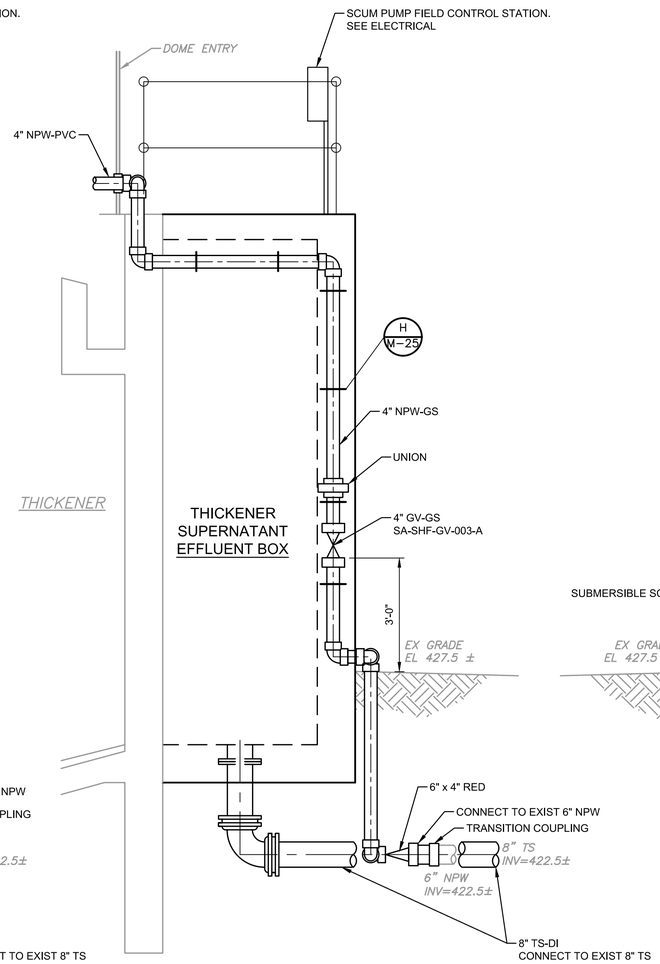

THICKENER 1B

SECTION 2 (M-17)

1/2" = 1'- 0"

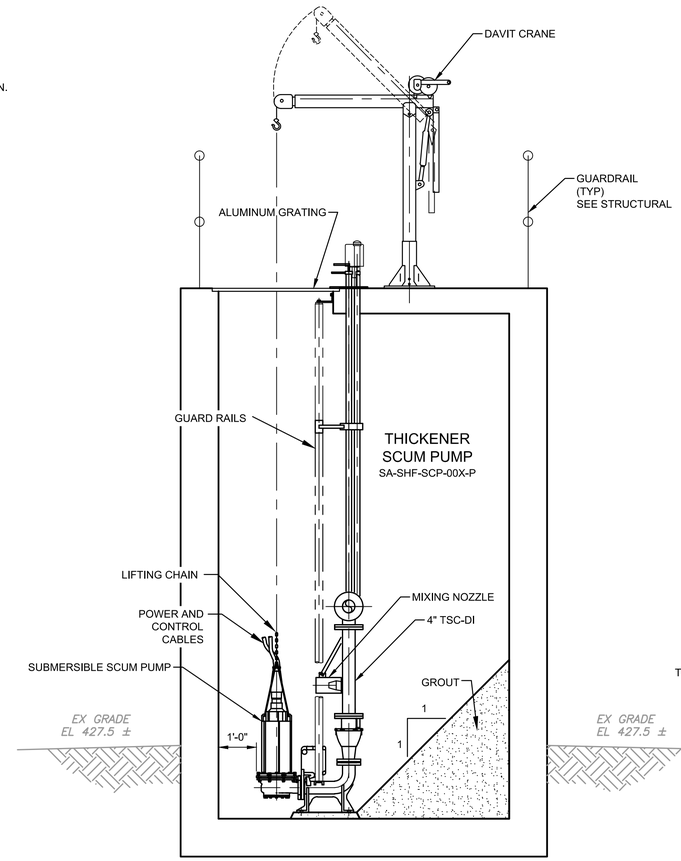

SECTION 3 (M-15, M-16, M-17)

1/2" = 1'- 0"

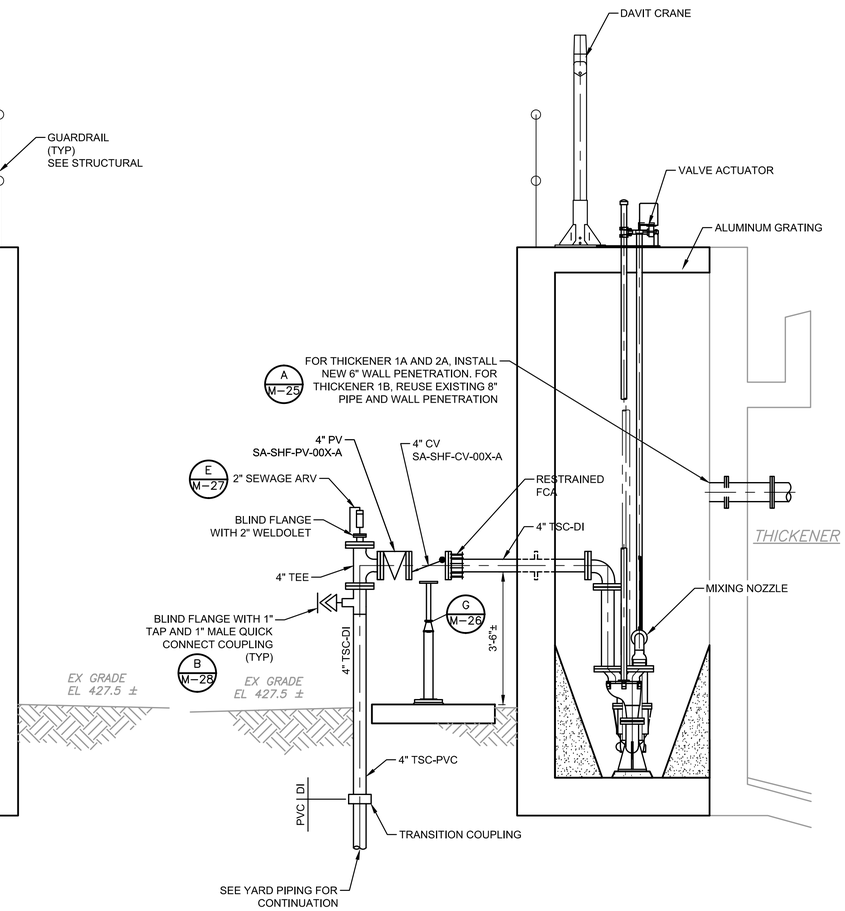

SECTION 4 (M-15, M-16, M-17)

1/2" = 1'- 0"

NOTE:

1. EXISTING FACILITY AND PIPING LOCATIONS ARE BASED ON RECORD DRAWING INFORMATION. CONTRACTOR SHALL FIELD VERIFY ALL PIPING LOCATIONS, PIPE MATERIALS, AND DIMENSIONS NECESSARY TO PERFORM THE WORK.
2. INSULATE ALL EXPOSED NPW PIPING PER SECTION 15250.
3. TEMPORARILY CAP NPW PIPE AS NEEDED TO PERFORM WORK.
4. PIPE SUPPORTS ARE SHOWN ONLY TO CONVEY THE INTENT OF DESIGN. REFER TO SECTION 15410 FOR PIPE SUPPORT REQUIREMENTS.

STATE OF TEXAS
DANNY M. HURTADO
104266
REGISTERED
PROFESSIONAL ENGINEER
May 2, 2016

REV No	DATE	DRWN	CHKD	REMARKS

DESIGNED BY: WOO
DRAWN BY: SANDEFUR
SHEET CHK'D BY: HURTADO
CROSS CHK'D BY:
APPROVED BY:
DATE: MAY 2016

CDM Smith
Riata Corporate Park, 12357-A Riata Trace Parkway, Suite 210
Austin, TX 78727
Tel: (512) 346-1100
Texas Registration Number F-3043

CITY OF AUSTIN, TEXAS - AUSTIN WATER UTILITY
CIP 3333.016
SOUTH AUSTIN REGIONAL WWTP
THICKENER IMPROVEMENTS PROJECT

GRAVITY THICKENER 1A, 2A, AND, 1B
SCUM PUMP WET WELL AND
THICKENER SUPERNATANT BOX
SECTIONS

PROJECT No 590-104217
FILE NAME M-19-20_SC-PUMP

SHEET No
M-19

BID SET

S:\ACAD\104217_SAR\M-19-20_SC-PUMP By: sandefurdw Saved: 4/22/2016 11:17:07 AM Plotted: 5/4/2016 12:32:14 PM
Plotted: 5/4/2016 12:32:14 PM

S:\Acad\104217_SAR\M-19-20_SC-PUMP.dwg, M-20 (2A-2B), 5/4/2016 12:32:23 PM, sandefurdw, DWG To PDF.pc3

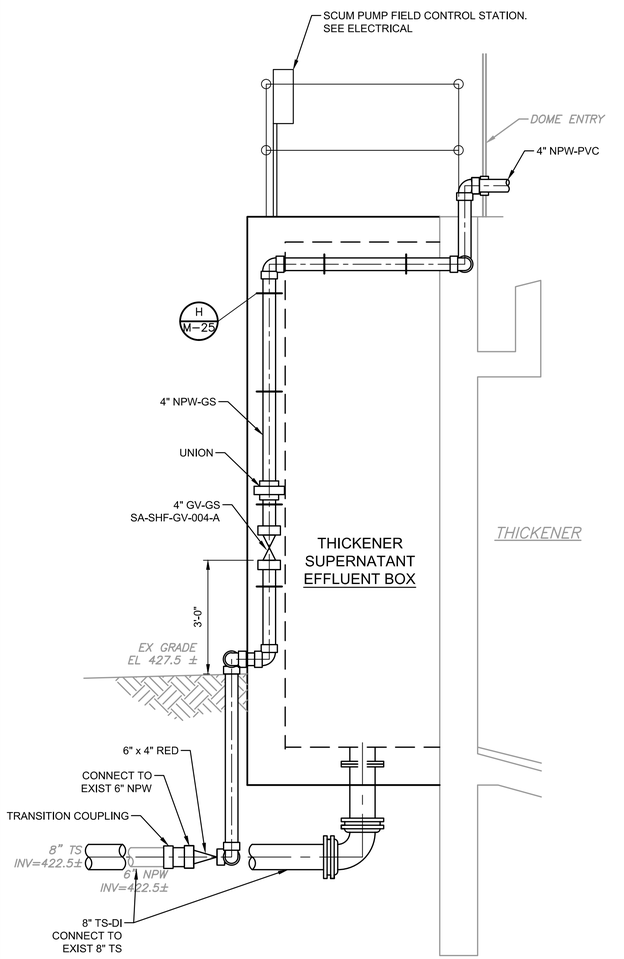

SECTION 1
1/2" = 1'- 0"
M-18

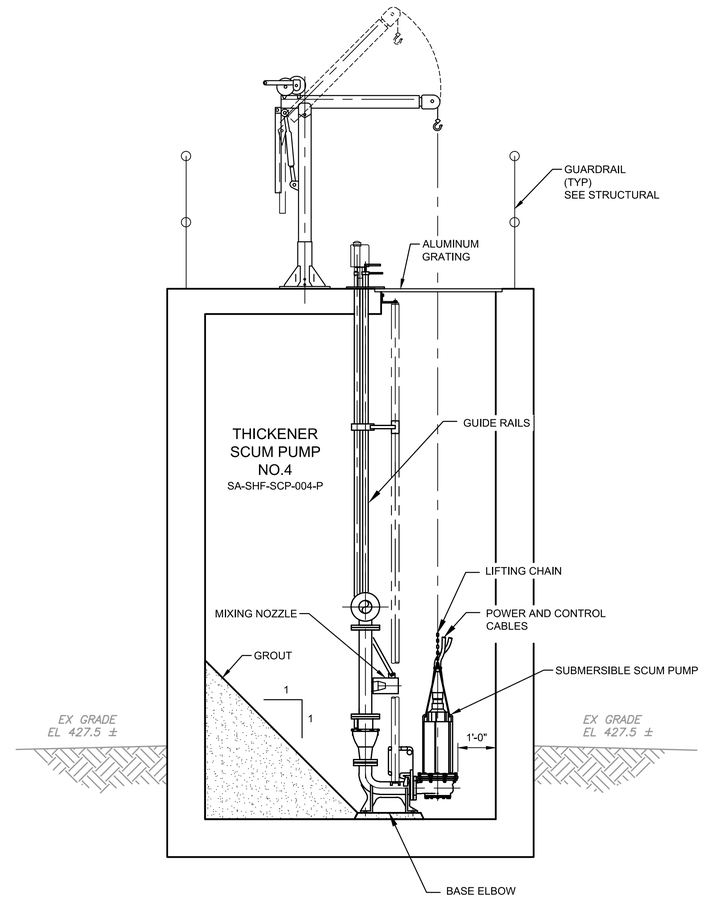

SECTION 2
1/2" = 1'- 0"
M-18

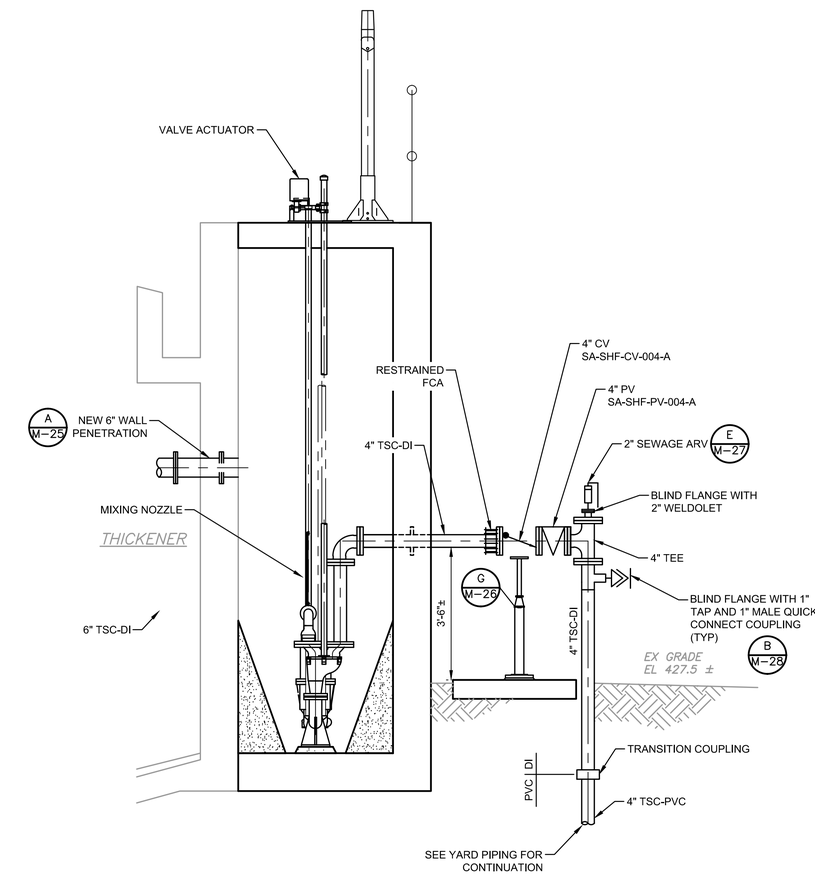

SECTION 3
1/2" = 1'- 0"
M-18

NOTE:

1. EXISTING FACILITY AND PIPING LOCATIONS ARE BASED ON RECORD DRAWING INFORMATION. CONTRACTOR SHALL FIELD VERIFY ALL PIPING LOCATIONS, PIPE MATERIALS, AND DIMENSIONS NECESSARY TO PERFORM THE WORK.
2. INSULATE ALL EXPOSED NPW PIPING PER SECTION 15250.
3. TEMPORARILY CAP NPW PIPE AS NEEDED TO PERFORM WORK.
4. PIPE SUPPORTS ARE SHOWN ONLY TO CONVEY THE INTENT OF DESIGN. REFER TO SECTION 15410 FOR PIPE SUPPORT REQUIREMENTS.

STATE OF TEXAS
DANNY M. HURTADO
104266
REGISTERED
PROFESSIONAL ENGINEER
May 2, 2016

REV No	DATE	DRWN	CHKD	REMARKS

DESIGNED BY: WOO
DRAWN BY: SANDEFUR
SHEET CHK'D BY: HURTADO
CROSS CHK'D BY:
APPROVED BY:
DATE: MAY 2016

CDM Smith
Riata Corporate Park, 12357-A Riata Trace Parkway, Suite 210
Austin, TX 78727
Tel: (512) 346-1100
Texas Registration Number F-3043

CITY OF AUSTIN, TEXAS - AUSTIN WATER UTILITY
CIP 3333.016
SOUTH AUSTIN REGIONAL WWTP
THICKENER IMPROVEMENTS PROJECT

GRAVITY THICKENER 2B SCUM PUMP WET WELL AND THICKENER SUPERNATANT BOX SECTIONS

PROJECT No 590-104217
FILE NAME M-19-20_SC-PUMP
SHEET No
M-20

BID SET

S:\ACAD\104217_SAR\M-19-20_SC-PUMP By: sandefurdw Saved: 4/22/2016 11:17:07 AM Plotted: 5/4/2016 12:32:24 PM

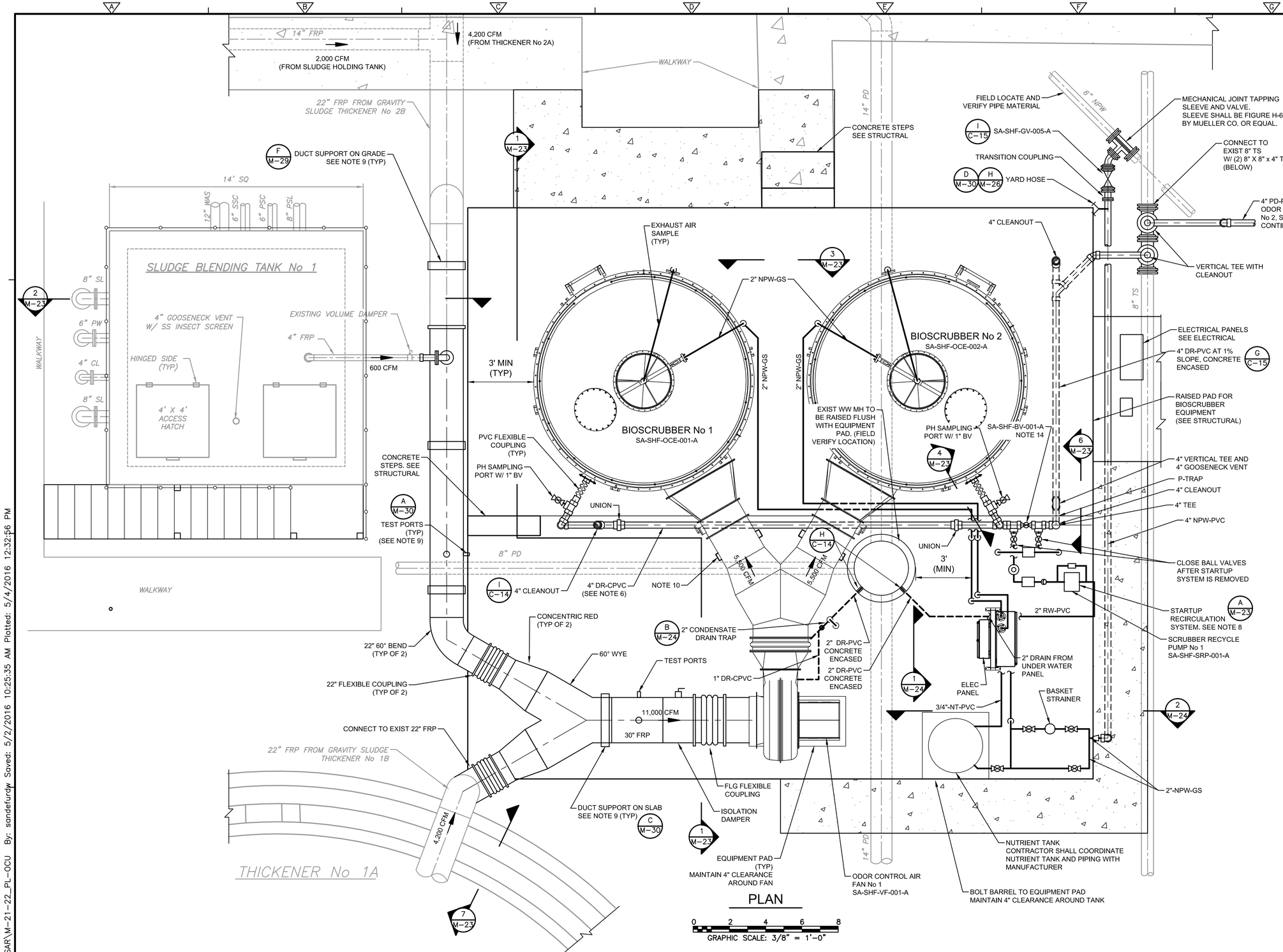

PLAN

NOTES:

1. BIOSCRUBBER SYSTEM DESIGN HAS BEEN BASED ON BIOAIR EF124. SELECTION OF A DIFFERENT MANUFACTURER MAY REQUIRE A REVISED LAYOUT AND ADDITIONAL EQUIPMENT. CONTRACTOR IS RESPONSIBLE FOR COORDINATING ODOR CONTROL SYSTEM INSTALLATION WITH SELECTED BIOSCRUBBER MANUFACTURER. ANY REDESIGN IN SYSTEM LAYOUT SHALL BE APPROVED BY THE ENGINEER PRIOR TO ORDERING MATERIALS AND COMMENCING INSTALLATION AT NO ADDITIONAL EXPENSE TO THE OWNER AND ENGINEER.
2. CONTRACTOR SHALL FIELD VERIFY ALL EXISTING PIPING AND DUCTWORK LOCATIONS AND ELEVATIONS.
3. CONTRACTOR SHALL COORDINATE LOCATIONS OF THE NPW, DRAIN, SAMPLE PIPELINE, NUTRIENT, AND DUCTWORK CONNECTIONS WITH BIOSCRUBBER MANUFACTURER.
4. CONTRACTOR SHALL COORDINATE FAN AND BIOSCRUBBER DIMENSIONS AND ELEVATIONS WITH BIOSCRUBBER MANUFACTURER.
5. LOCATE THE LOWEST POINTS ON THE FAN HOUSING AND/OR DUCTWORK ON THE DISCHARGE SIDE. PROVIDE DRAIN CONNECTIONS TO NEARBY CONDENSATE DRAIN TRAP.
6. CONTRACTOR SHALL SLOPE 4" DRAIN LINE AT MINIMUM 1% SLOPE TO DRAIN SYSTEM CONNECTION.
7. CONTRACTOR SHALL COORDINATE THE SELECTED BASKET STRAINER WITH THE BIOSCRUBBER MANUFACTURER IN REGARDS TO PRESSURE DROP ACROSS THE STRAINER TO CONFIRM THAT THERE IS ADEQUATE WATER PRESSURE FOR THE BIOSCRUBBER SYSTEM.
8. STARTUP RECIRCULATION SYSTEM IS BASED ON BIOAIR BIOSCRUBBER SYSTEM. STARTUP SYSTEM IS TEMPORARY AND CONTRACTOR SHALL COORDINATE WITH MANUFACTURER TO PROVIDE FULLY FUNCTIONING DRAIN SYSTEM. OTHER MANUFACTURERS MAY REQUIRE PERMANENT RECIRCULATION SYSTEM IN LIEU OF STARTUP RECIRCULATION SYSTEM. SEE 11258.
9. FRP MANUFACTURER SHALL BE RESPONSIBLE FOR THE DESIGN, LOCATION, AND FURNISHING OF DUCT SUPPORTS UPSTREAM OF THE FAN, AND THE CONTRACTOR SHALL BE RESPONSIBLE FOR THE INSTALLATION OF SUCH DUCT SUPPORTS. THESE SUPPORTS SHALL BE IN ACCORDANCE WITH SECTION 15891 AND SHALL MEET LOADING REQUIREMENTS, INCLUDING WIND LOADING.
10. BIOSCRUBBER MANUFACTURER SHALL BE RESPONSIBLE FOR THE DESIGN, LOCATION, FURNISHING AND INSTALLATION OF DUCT SUPPORTS BETWEEN THE FAN AND THE BIOSCRUBBER VESSELS. THESE SUPPORTS SHALL BE IN ACCORDANCE WITH SECTION 15891.
11. TEST PORT LOCATIONS ARE SHOWN AS A MINIMUM. ADDITIONAL TEST PORTS SHALL BE PROVIDED PER THE MANUFACTURER'S RECOMMENDATION AT NO ADDITIONAL COST TO THE OWNER.
12. CONTRACTOR SHALL INSTALL ALUMINUM JACKETED INSULATION AND HEAT TRACING FOR ALL EXPOSED NPW, RW, AND NT PIPING PER SECTION 15250. HEAT TRACE POWER SOURCE SHALL BE PROVIDED IN THE BIOSCRUBBER CONTROL PANEL.
13. CONTRACTOR SHALL SUBMIT PROPOSED LAYOUT (PLAN AND SECTION) OF THE ODOR CONTROL SYSTEM TO THE ENGINEER FOR REVIEW AND APPROVAL.
14. PROVIDE LOCKING BALL VALVE THAT SHALL BE LOCKED IN OPEN POSITION AFTER STARTUP. PROVIDE STAINLESS STEEL TAG THAT SAYS "BALL VALVE NORMALLY OPEN".

STATE OF TEXAS
DANNY M. HURTADO
104266
REGISTERED PROFESSIONAL ENGINEER
May 2, 2016

REV No	DATE	DRWN	CHKD	REMARKS

DESIGNED BY: WOO
DRAWN BY: SANDEFUR
SHEET CHK'D BY: HURTADO
CROSS CHK'D BY:
APPROVED BY:
DATE: MAY 2016

CDM Smith
Riata Corporate Park, 12357-A Riata Trace Parkway, Suite 210
Austin, TX 78727
Tel: (512) 346-1100
Texas Registration Number F-3043

CITY OF AUSTIN, TEXAS - AUSTIN WATER UTILITY
CIP 3333.016
SOUTH AUSTIN REGIONAL WWTP
THICKENER IMPROVEMENTS PROJECT

ODOR CONTROL SYSTEM No 1
PLAN

PROJECT No 590-104217
FILE NAME M-21-22_PL-OCU

SHEET No
M-21

BID SET

S:\ACAD\104217_SAR\M-21-22_PL-OCU By: sandefurdw Saved: 5/2/2016 10:25:35 AM Plotted: 5/4/2016 12:32:56 PM

S:\Acad\104217_SAR\M-21-22_PL-OCU.dwg, M-21, 5/4/2016 12:32:54 PM, sandefurdw, DWG To PDF.pc3

Plotted: 5/4/2016 12:32:56 PM

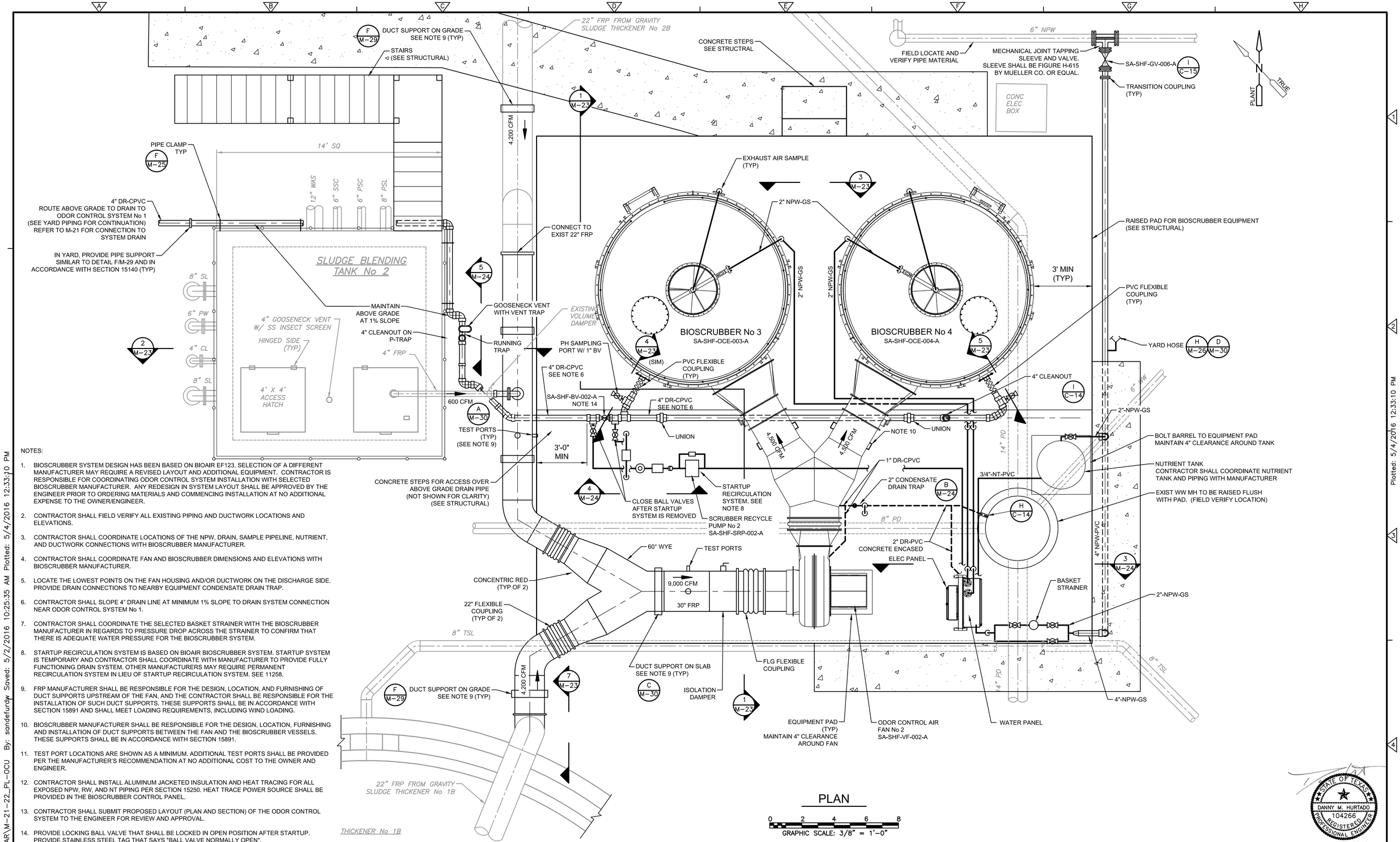

PLAN

GRAPHIC SCALE: 3/8" = 1'-0"

NOTES:

1. BIOSCRUBBER SYSTEM DESIGN HAS BEEN BASED ON BIOAIR EF123. SELECTION OF A DIFFERENT MANUFACTURER MAY REQUIRE A REVISED LAYOUT AND ADDITIONAL EQUIPMENT. CONTRACTOR IS RESPONSIBLE FOR COORDINATING ODOR CONTROL SYSTEM INSTALLATION WITH SELECTED BIOSCRUBBER MANUFACTURER. ANY REDESIGN IN SYSTEM LAYOUT SHALL BE APPROVED BY THE ENGINEER PRIOR TO ORDERING MATERIALS AND COMMENCING INSTALLATION AT NO ADDITIONAL EXPENSE TO THE OWNER/ENGINEER.
2. CONTRACTOR SHALL FIELD VERIFY ALL EXISTING PIPING AND DUCTWORK LOCATIONS AND ELEVATIONS.
3. CONTRACTOR SHALL COORDINATE LOCATIONS OF THE NPW, DRAIN, SAMPLE PIPELINE, NUTRIENT, AND DUCTWORK CONNECTIONS WITH BIOSCRUBBER MANUFACTURER.
4. CONTRACTOR SHALL COORDINATE FAN AND BIOSCRUBBER DIMENSIONS AND ELEVATIONS WITH BIOSCRUBBER MANUFACTURER.
5. LOCATE THE LOWEST POINTS ON THE FAN HOUSING AND/OR DUCTWORK ON THE DISCHARGE SIDE. PROVIDE DRAIN CONNECTIONS TO NEARBY EQUIPMENT CONDENSATE DRAIN TRAP.
6. CONTRACTOR SHALL SLOPE 4" DRAIN LINE AT MINIMUM 1% SLOPE TO DRAIN SYSTEM CONNECTION NEAR ODOR CONTROL SYSTEM No 1.
7. CONTRACTOR SHALL COORDINATE THE SELECTED BASKET STRAINER WITH THE BIOSCRUBBER MANUFACTURER IN REGARDS TO PRESSURE DROP ACROSS THE STRAINER TO CONFIRM THAT THERE IS ADEQUATE WATER PRESSURE FOR THE BIOSCRUBBER SYSTEM.
8. STARTUP RECIRCULATION SYSTEM IS BASED ON BIOAIR BIOSCRUBBER SYSTEM. STARTUP SYSTEM IS TEMPORARY AND CONTRACTOR SHALL COORDINATE WITH MANUFACTURER TO PROVIDE FULLY FUNCTIONING DRAIN SYSTEM. OTHER MANUFACTURERS MAY REQUIRE PERMANENT RECIRCULATION SYSTEM IN LIEU OF STARTUP RECIRCULATION SYSTEM. SEE 11258.
9. FRP MANUFACTURER SHALL BE RESPONSIBLE FOR THE DESIGN, LOCATION, AND FURNISHING OF DUCT SUPPORTS UPSTREAM OF THE FAN, AND THE CONTRACTOR SHALL BE RESPONSIBLE FOR THE INSTALLATION OF SUCH DUCT SUPPORTS. THESE SUPPORTS SHALL BE IN ACCORDANCE WITH SECTION 15891 AND SHALL MEET LOADING REQUIREMENTS, INCLUDING WIND LOADING.
10. BIOSCRUBBER MANUFACTURER SHALL BE RESPONSIBLE FOR THE DESIGN, LOCATION, FURNISHING AND INSTALLATION OF DUCT SUPPORTS BETWEEN THE FAN AND THE BIOSCRUBBER VESSELS. THESE SUPPORTS SHALL BE IN ACCORDANCE WITH SECTION 15891.
11. TEST PORT LOCATIONS ARE SHOWN AS A MINIMUM. ADDITIONAL TEST PORTS SHALL BE PROVIDED PER THE MANUFACTURER'S RECOMMENDATION AT NO ADDITIONAL COST TO THE OWNER AND ENGINEER.
12. CONTRACTOR SHALL INSTALL ALUMINUM JACKETED INSULATION AND HEAT TRACING FOR ALL EXPOSED NPW, RW, AND NT PIPING PER SECTION 15250. HEAT TRACE POWER SOURCE SHALL BE PROVIDED IN THE BIOSCRUBBER CONTROL PANEL.
13. CONTRACTOR SHALL SUBMIT PROPOSED LAYOUT (PLAN AND SECTION) OF THE ODOR CONTROL SYSTEM TO THE ENGINEER FOR REVIEW AND APPROVAL.
14. PROVIDE LOCKING BALL VALVE THAT SHALL BE LOCKED IN OPEN POSITION AFTER STARTUP. PROVIDE STAINLESS STEEL TAG THAT SAYS "BALL VALVE NORMALLY OPEN".

STATE OF TEXAS
DANNY M. HURTADO
104266
REGISTERED PROFESSIONAL ENGINEER
May 2, 2016

REV No	DATE	DRWN	CHKD	REMARKS

DESIGNED BY: WOO
DRAWN BY: SANDEFUR
SHEET CHK'D BY: HURTADO
CROSS CHK'D BY:
APPROVED BY:
DATE: MAY 2016

CDM Smith
Riata Corporate Park, 12357-A Riata Trace Parkway, Suite 210
Austin, TX 78727
Tel: (512) 346-1100
Texas Registration Number F-3043

CITY OF AUSTIN, TEXAS - AUSTIN WATER UTILITY
CIP 3333.016
SOUTH AUSTIN REGIONAL WWTP
THICKENER IMPROVEMENTS PROJECT

ODOR CONTROL SYSTEM No 2
PLAN

PROJECT No 590-104217
FILE NAME M-21-22_PL-OCU

SHEET No
M-22

BID SET

S:\Acad\104217_SAR\M-21-22_PL-OCU By: sandefurdw Saved: 5/2/2016 10:25:35 AM Plotted: 5/4/2016 12:33:10 PM

S:\Acad\104217_SAR\M-21-22_PL-OCU.dwg, M-22, 5/4/2016 12:33:07 PM, sandefurdw, DWG To PDF.pc3

Plotted: 5/4/2016 12:33:10 PM

S:\Acad\104217_SAR\M-23_SC-OCU.dwg, M-23, 5/4/2016 12:33:32 PM, sandefurdw, DWG To PDF.pc3

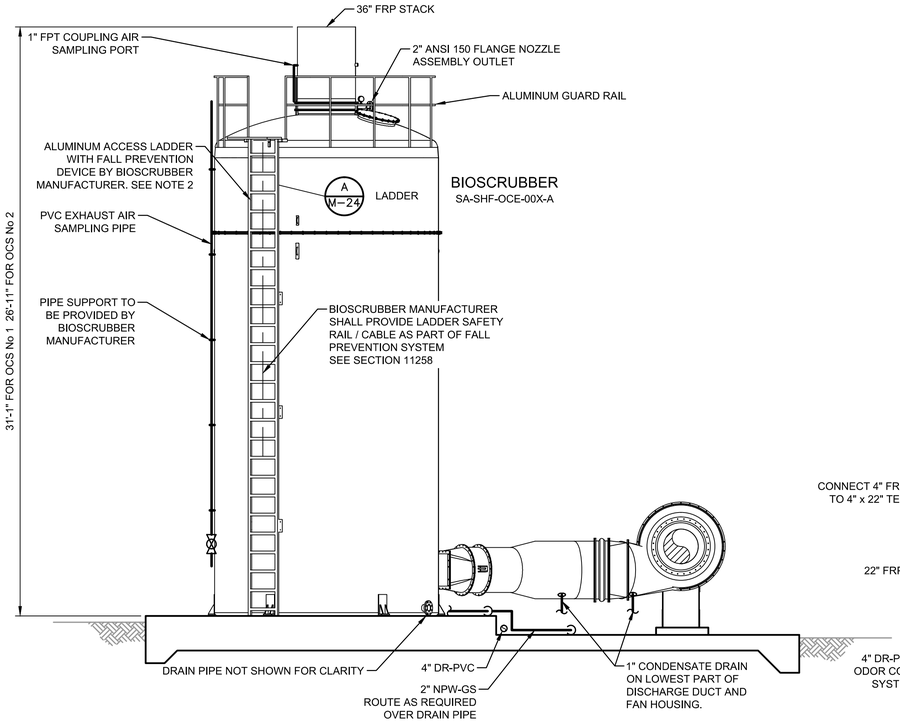

TYPICAL BIOSCRUBBER SECTION

SECTION 1 (M-21, M-22)
1/4" = 1'-0"

NOTES:

1. CONTRACTOR SHALL COORDINATE DRAIN AND NPW PIPING AND ELEVATIONS WITH BIOSCRUBBER MANUFACTURER. ANY CHANGE IN DESIGN SHALL COME AT NO ADDITIONAL COST TO THE OWNER.
2. LADDER RUNGS SHALL MEET OSHA REQUIREMENTS AND BE DESIGNED TO MINIMIZE SLIPPING.
3. PIPE SUPPORTS ARE SHOWN ONLY TO CONVEY THE INTENT OF DESIGN. REFER TO SECTION 15140 FOR PIPE SUPPORT REQUIREMENTS.

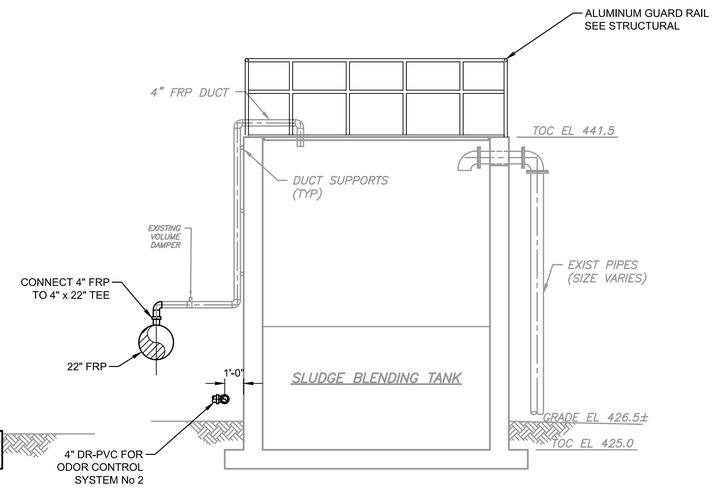

TYPICAL SLUDGE BLENDING TANK SECTION

SECTION 2 (M-21, M-22)
1/4" = 1'-0"

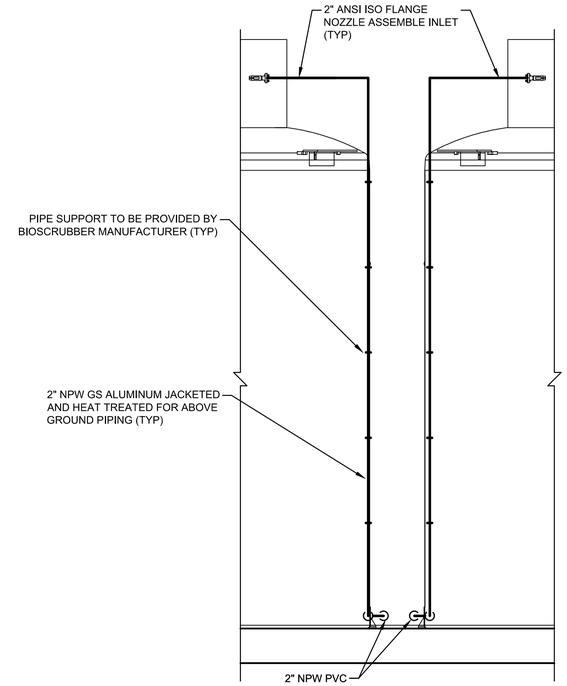

SECTION 3 (M-21, M-22)
1/4" = 1'-0"

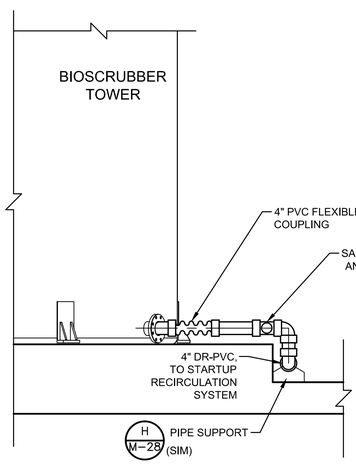

4" DRAIN LINE

SECTION 4 (M-21)
1/2" = 1'-0"

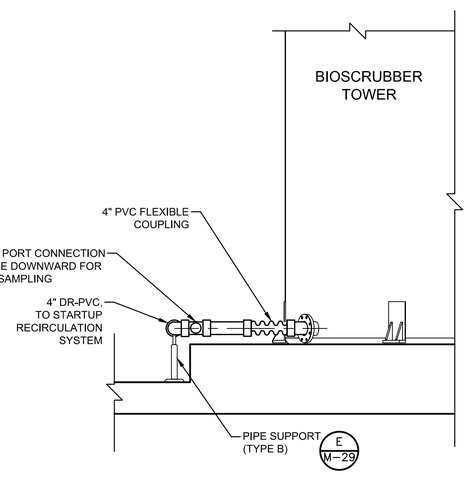

4" DRAIN LINE

SECTION 5 (M-22)
1/2" = 1'-0"

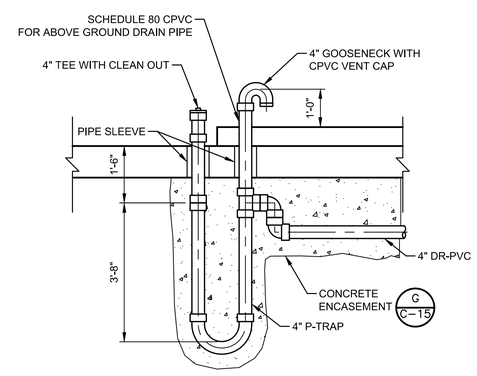

SECTION 6 (M-21)
1/2" = 1'-0"

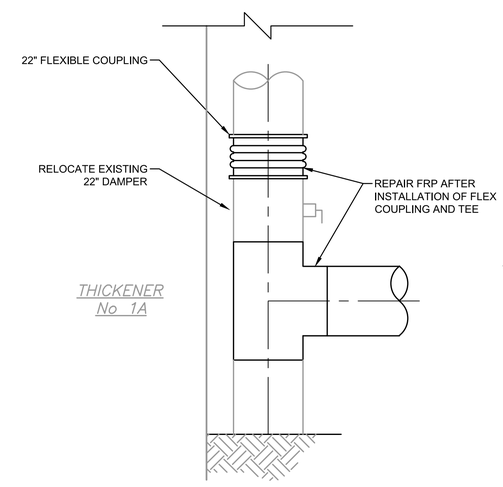

22" FLEXIBLE COUPLING

SECTION 7 (M-21, M-22)
1/2" = 1'-0"

SCRUBBER RECYCLE PUMP
SA-SHF-SRP-00X-A

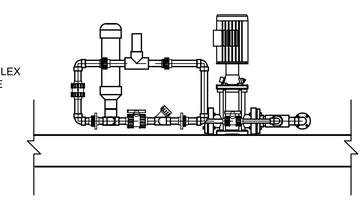

TYPICAL STARUP RECIRCULATION SYSTEM

DETAIL A (M-21)
1/2" = 1'-0"

NOTE:

1. PIPE SUPPORTS ARE SHOWN ONLY TO CONVEY THE INTENT OF DESIGN REFER TO SECTION 15140 FOR PIPE SUPPORT REQUIREMENTS.

STATE OF TEXAS
DANNY M. HURTADO
104266
REGISTERED PROFESSIONAL ENGINEER
May 2, 2016

REV No	DATE	DRWN	CHKD	REMARKS

DESIGNED BY: WOO
DRAWN BY: SANDEFUR
SHEET CHK'D BY: HURTADO
CROSS CHK'D BY:
APPROVED BY:
DATE: MAY 2016

CDM Smith
Riata Corporate Park, 12357-A Riata Trace Parkway, Suite 210
Austin, TX 78727
Tel: (512) 346-1100
Texas Registration Number F-3043

CITY OF AUSTIN, TEXAS - AUSTIN WATER UTILITY
CIP 3333.016
SOUTH AUSTIN REGIONAL WWTP
THICKENER IMPROVEMENTS PROJECT

ODOR CONTROL UNIT TYPICAL SECTIONS AND DETAILS I

PROJECT No 590-104217
FILE NAME: M-23_SC-OCU

SHEET No
M-23

BID SET

S:\ACAD\104217_SAR\M-23_SC-OCU By: sandefurdw Spved: 5/4/2016 12:09:05 PM Plotted: 5/4/2016 12:33:35 PM

S:\Acad\104217_SAR\M-23_SC-OCU.dwg, M-24, 5/4/2016 12:33:42 PM, sandefurdw, DWG To PDF.pc3

NOTE:

1. PIPE SUPPORTS ARE SHOWN ONLY TO CONVEY THE INTENT OF DESIGN. REFER TO SECTION 15140 FOR PIPE SUPPORT REQUIREMENTS.

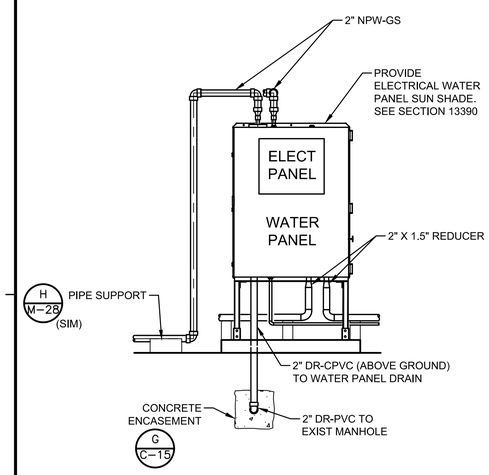

SECTION 1 / M-21
1/2" = 1'-0"

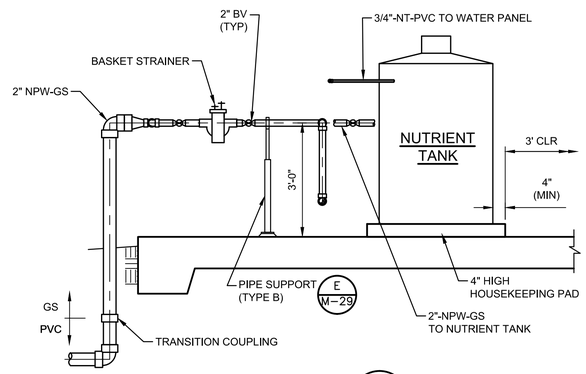

SECTION 2 / M-21
1/2" = 1'-0"

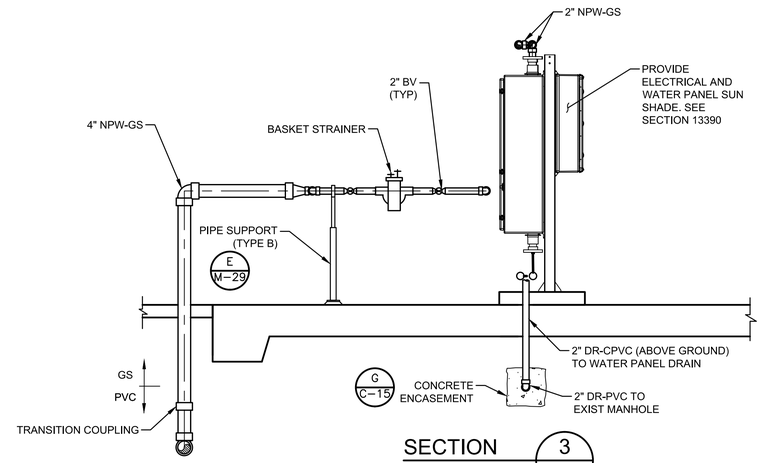

SECTION 3 / M-22
1/2" = 1'-0"

SCRUBBER RECYCLE PUMP No 2
SA-SHF-SRP-002-A

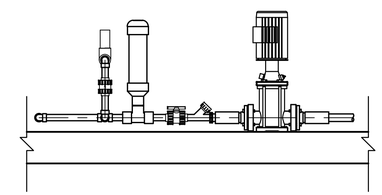

STARTUP RECIRCULATION SYSTEM

SECTION 4 / M-22
1/2" = 1'-0"

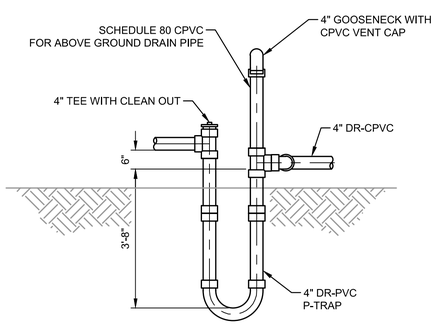

SECTION 5 / M-22
1/2" = 1'-0"

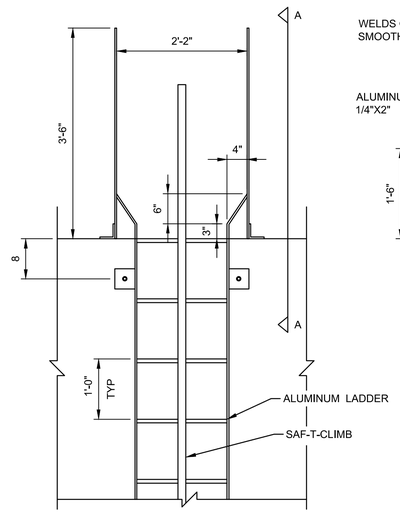

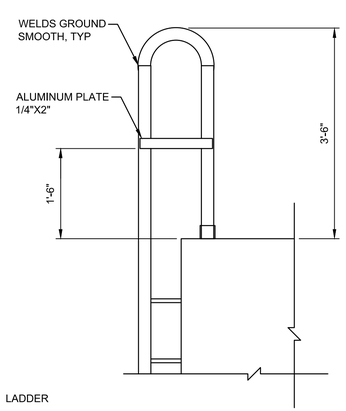

SECTION A–A

LADDER
DETAIL A / M-23
N.T.S.

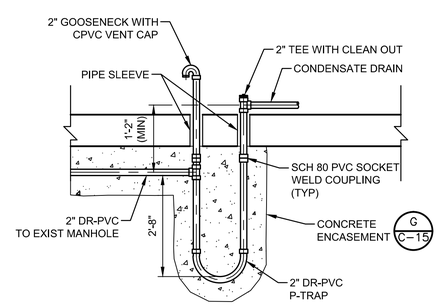

NOTES:

1. ALL PIPE AND FITTING CONNECTIONS SHALL BE SOLVENT WELDED IN ACCORDANCE WITH DIVISION 15.
2. ABOVE GROUND DRAIN PIPE SHALL BE SCHEDULE 80 CPVC.

CONDENSATE DRAIN TRAP
DETAIL B / M-21
N.T.S.

STATE OF TEXAS
DANNY M. HURTADO
104266
REGISTERED PROFESSIONAL ENGINEER
May 2, 2016

REV No	DATE	DRWN	CHKD	REMARKS

DESIGNED BY: WOO
DRAWN BY: SANDEFUR
SHEET CHK'D BY: HURTADO
CROSS CHK'D BY:
APPROVED BY:
DATE: MAY 2016

CDM Smith
Riata Corporate Park, 12357-A Riata Trace Parkway, Suite 210
Austin, TX 78727
Tel: (512) 346-1100
Texas Registration Number F-3043

CITY OF AUSTIN, TEXAS - AUSTIN WATER UTILITY
CIP 3333.016
SOUTH AUSTIN REGIONAL WWTP
THICKENER IMPROVEMENTS PROJECT

ODOR CONTROL UNIT TYPICAL SECTIONS AND DETAILS II

PROJECT No 590–104217
FILE NAME: M–23_SC–OCU

SHEET No
M-24

BID SET

S:\ACAD\104217_SAR\M-23_SC-OCU By: sandefurdw Spved: 5/4/2016 12:09:05 PM Plotted: 5/4/2016 12:33:44 PM
Plotted: 5/4/2016 12:33:44 PM

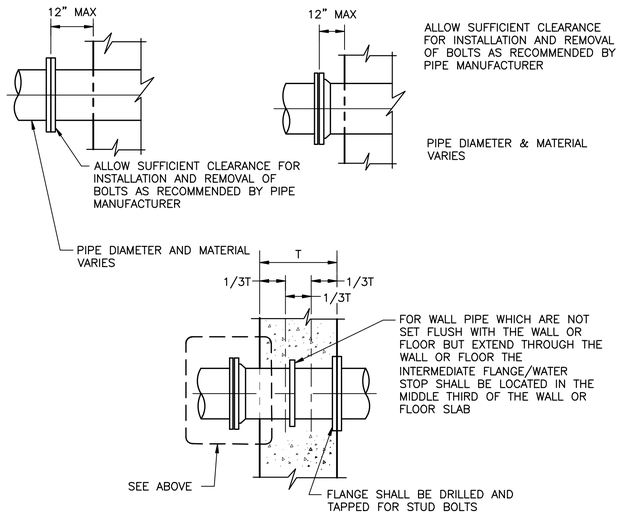

NOTE

1 FOR MJ CONNECTIONS BURIED OUTSIDE OF STRUCTURES USE DOUBLE JOINTS.

CASTING WITH NON-FLUSH JOINTS

DETAIL A
NTS

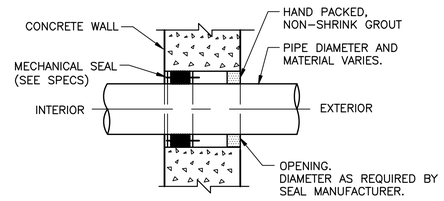

NOTE

1 INSULATED PIPING: INTERRUPT INSULATION AT BOTH SIDES OF WALL. INSTALL INSULATION FLUSH WITH WALL AFTER WATER TIGHT INSTALLATION OF MECHANICAL SEAL.

CORE DRILLED OPENING AND MECHANICAL SEAL PENETRATION THROUGH CONCRETE

DETAIL B
NTS

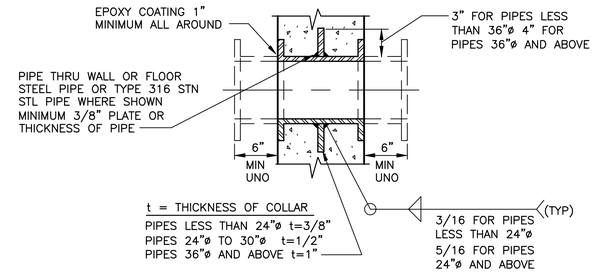

STEEL OR STAINLESS STEEL WALL PIPE

DETAIL C
NTS

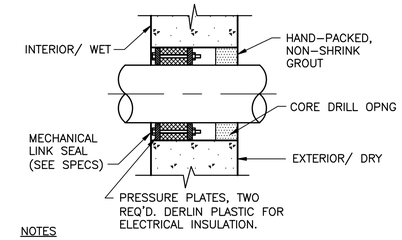

NOTES

1 INSIDE DIA OF EACH WALL OPENING SHALL BE OF THE SIZE RECOMMENDED BY MANUFACTURER TO FIT THE PIPE OR CONDUIT AND THE WALL SEAL ASSEMBLY TO ENSURE A WATER-TIGHT JOINT.

2 PROVIDE ALUMINUM ESCUTCHEONS IN FINISHED SPACES.

PIPE PENETRATION IN EXISTING WALL

DETAIL D
NTS

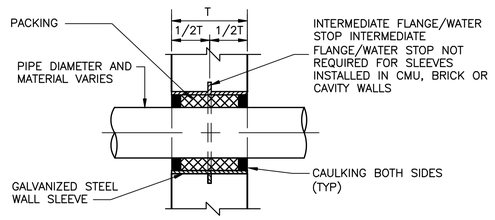

NOTE

1 WALL SLEEVES INSTALLED IN BRICK, CMU OR CAVITY WALLS SHALL BE GROUTED IN PLACE WITH NON-SHRINK GROUT. APPLY BONDING AGENT TO CLEAN DRY SURFACES BEFORE PLACING GROUT.

CAULKED WALL SLEEVE FOR CONCRETE, CMU, BRICK OR CAVITY WALLS

DETAIL E
NTS

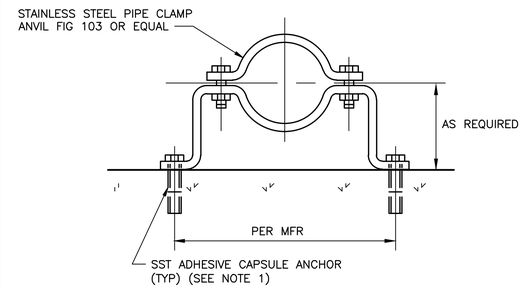

NOTES

1 PIPE CLAMP, WASHER & SHIELD SHALL BE TYPE 316 SST.

2 WHEN USED WITH PVC OR FIBERGLASS PIPE, PROVIDE STAINLESS STEEL SHIELD AROUND PIPE AT CLAMP, WITH LOOSE FIT. WRAP COPPER TUBES WITH 2" STRIP OF RUBBER FABRIC.

OFFSET PIPE CLAMP FOR INDIVIDUAL PIPES

DETAIL F
NTS

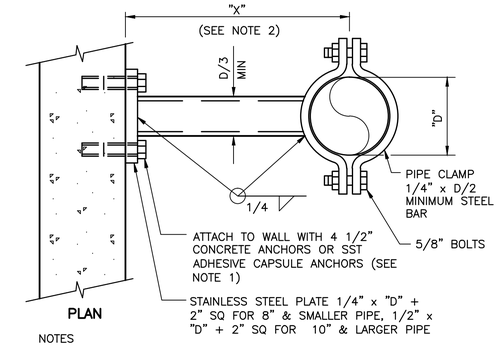

PLAN

NOTES

1 SWAY BRACE SHALL NOT SUPPORT VERTICAL LOADS.

2 FOR USE WHEN "X" IS GREATER THAN 12". FOR "X" 12" OR LESS, USE DETAIL D OR AS OTHERWISE NOTED.

3 PIPE SWAY BRACE ASSEMBLY SHALL BE TYPE 316L STAINLESS STEEL.

VERTICAL PIPE SWAY BRACE

DETAIL G
NTS

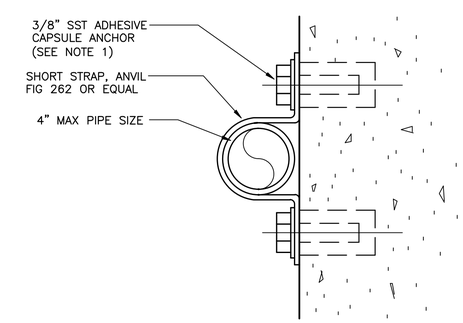

NOTES

1 PIPE CLAMP, WASHER AND SHIELD SHALL BE TYPE 316 STAINLESS STEEL.

2 WHEN USED WITH PVC OR FIBERGLASS PIPE, PROVIDE STAINLESS STEEL SHIELD AROUND PIPE AT CLAMP WITH LOOSE FIT. WRAP COPPER TUBES WITH 2" WIDE STRIP OF RUBBER FABRIC.

PIPE CLAMP FOR INDIVIDUAL PIPES

DETAIL H
NTS

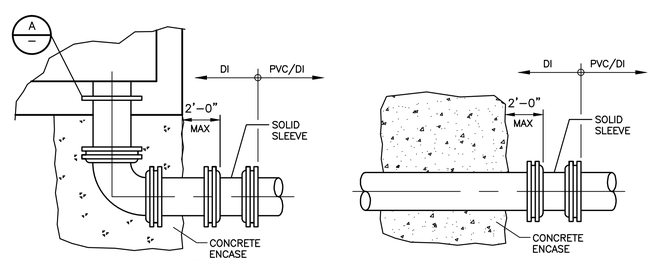

PIPE CONNECTION AFTER ENCASED ELBOW

PIPE CONNECTION AFTER ENCASEMENT

PIPE CONNECTION AFTER ENCASEMENT

DETAIL I
NTS

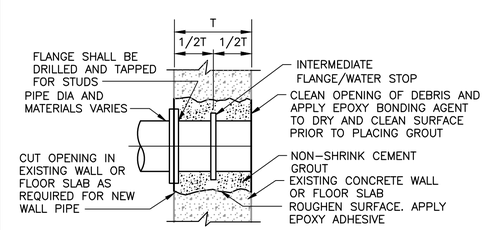

WALL PIPE IN EXISTING WALL/FLOOR

DETAIL J
NTS

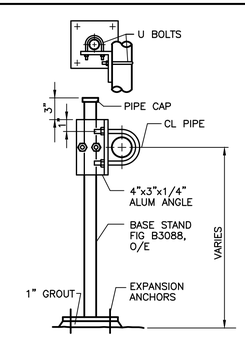

PIPE CLAMP BRACKET

DETAIL K
NTS

STATE OF TEXAS
DANNY M. HURTADO
104266
REGISTERED PROFESSIONAL ENGINEER
May 2, 2016

REV No	DATE	DRWN	CHKD	REMARKS

DESIGNED BY: WOO
DRAWN BY: SANDEFUR
SHEET CHK'D BY: HURTADO
CROSS CHK'D BY:
APPROVED BY:
DATE: MAY 2016

CDM Smith
Riata Corporate Park, 12357-A Riata Trace Parkway, Suite 210
Austin, TX 78727
Tel: (512) 346-1100
Texas Registration Number F-3043

CITY OF AUSTIN, TEXAS - AUSTIN WATER UTILITY
CIP 3333.016

SOUTH AUSTIN REGIONAL WWTP
THICKENER IMPROVEMENTS PROJECT

STANDARD MECHANICAL DETAILS I

PROJECT No 590-104217
FILE NAME: MZ-1

SHEET No
M-25

BID SET

S:\Acad\104217_SAR\MZ-1.dwg, M-25, 5/4/2016 12:34:07 PM, sandefurdw, DWG To PDF.pc3
S:\ACAD\104217_SAR\MZ-1 By: sandefurdw Saved: 5/4/2016 12:08:49 PM Plotted: 5/4/2016 12:34:07 PM
Plotted: 5/4/2016 12:34:07 PM

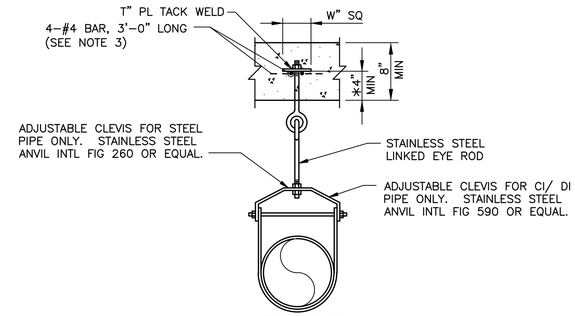

NEW CEILING

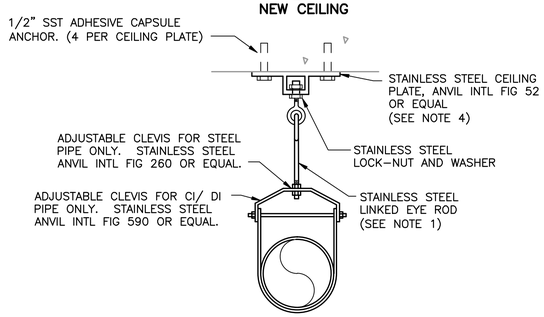

EXISTING CEILING

NOTES

1 HANGER ROD DIAMETER AND MAXIMUM SUPPORT SPACING SHALL BE PER THE MANUFACTURER'S RECOMMENDATIONS. SEE SECTION 15140.

2 FOR CONNECTION OF PIPE HANGER TO STRUCTURAL STEEL MEMBER, USE BEAM CLAMP. SEE DETAIL C AND D.

3 UNIVERSAL CONCRETE INSERT, ANVIL FIG 282 OR EQUAL MAY BE USED IN LIEU OF EMBEDDED BAR AND PLATE.

4 CEILING PLATE MAY BE USED FOR NEW CEILINGS WITH ENGINEER'S APPROVAL.

5 "*" USE 6" MIN IF EMBEDDED IN BEAM.

HANGER ROD TABLE		
DIAMETER	T	W
1/2"	1/2"	4"
5/8"	1/2"	5"
3/4"	1/2"	5"
7/8"	5/8"	6"
1"	5/8"	6"
1 1/8"	7/8"	7"

PIPE HANGER

DETAIL A

NTS

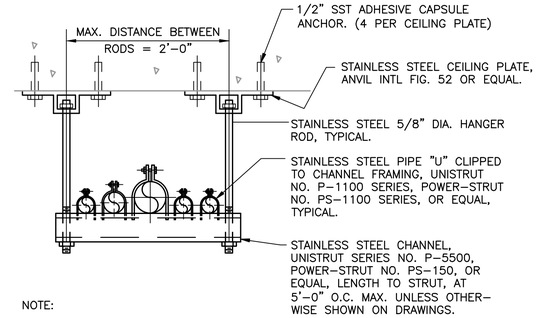

NOTE:

WHEN USED WITH PVC OR FIBERGLASS PIPE, PROVIDE STAINLESS STEEL SHIELD AROUND PIPE AT CLIP WITH LOOSE FIT. WRAP COPPER TUBES WITH 2" WIDE STRIP OF RUBBER FABRIC.

EXISTING CEILING

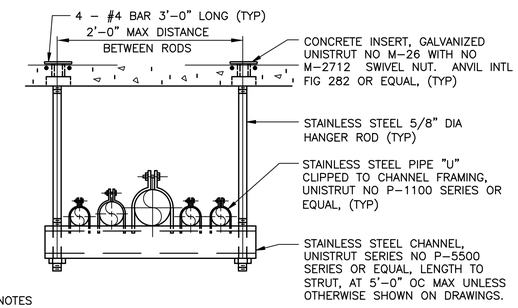

NOTES

1 WHEN USED WITH PVC OR FIBERGLASS PIPE, PROVIDE STAINLESS STEEL SHIELD AROUND PIPE AT CLIP WITH LOOSE FIT. WRAP COPPER TUBES WITH 2" WIDE STRIP OF RUBBER FABRIC.

2 FOR CONNECTION OF PIPE HANGER TO STRUCTURAL STEEL MEMBER, USE BEAM CLAMP. SEE DETAIL C AND D.

NEW CEILING

TRAPEZE PIPE HANGER

DETAIL B

NTS

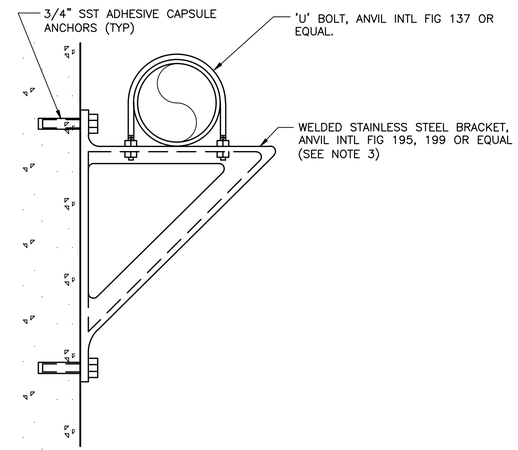

NOTES

1 STEEL SHIELDS, BRACKETS, 'U' BOLTS, AND BOLTS ARE TO BE TYPE TYPE 316 SST.

2 WHEN USED WITH PVC OR FIBERGLASS PIPE, PROVIDE STAINLESS STEEL SHIELD AROUND PIPE AT 'U' BOLT WITH LOOSE FIT. WRAP COPPER TUBES WITH 2" WIDE STRIP OF RUBBER FABRIC.

3 WHERE BRACKET IS ATTACHED TO A PRECAST CONCRETE WALL PANEL, PROVIDE EMBED PLATES IN THE WALL PANEL AND WELD THE BRACKET TO THE EMBED PLATES. PIPING CONTRACTOR SHALL COORDINATE LOADS AND LOCATIONS WITH THE PRECAST CONCRETE MANUFACTURER.

PIPE ANGLE BRACKET

DETAIL C

NTS

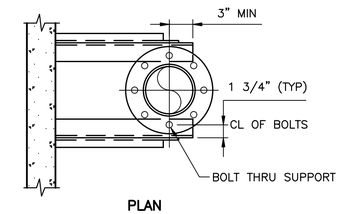

PLAN

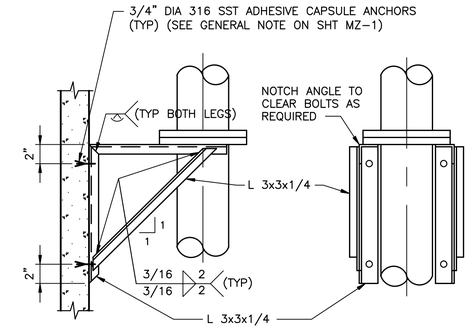

SECTION ELEVATION

NOTES

1 FOR 4" AND LARGER PIPE.

2 SUPPORT SHALL BE 316 SST.

3 MAXIMUM VERTICAL LOAD EQUALS 900 POUNDS.

4 FOR PIPE WITH JOINT TYPE OTHER THAN FLANGED, WELD SINGLE SLIP-ON TYPE FLANGE TO PIPE AT LOCATION OF EACH SUPPORT.

5 PIPE BRACKET ASSEMBLY & BOLTS SHALL BE TYPE 316 SST WHEN USED FOR SUPPORT OF SST PIPING.

PIPE SUPPORT

DETAIL D

NTS

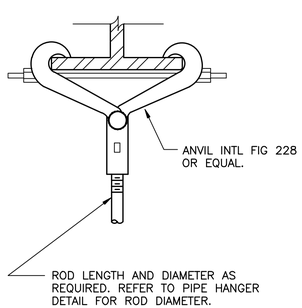

BEAM CLAMP

DETAIL E

NTS

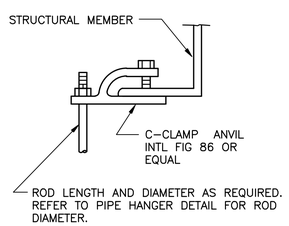

BEAM CLAMP

DETAIL F

NTS

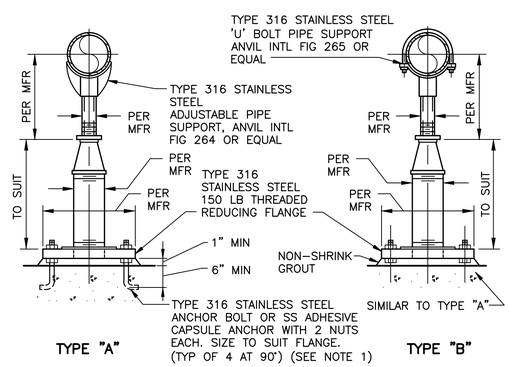

TYPE "A" TYPE "B"

ADJUSTABLE PIPE SADDLE SUPPORT

DETAIL G

NTS

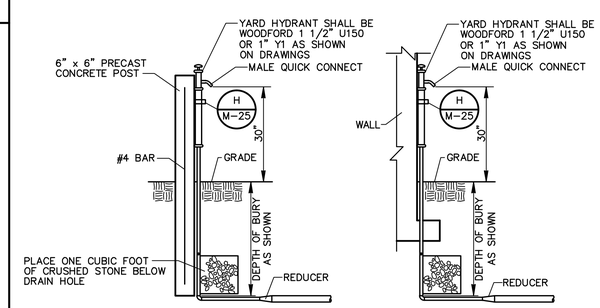

NOTE

1 FOR GUARDRAIL INSTALLATION REFER TO DETAIL HB/MZ-8.

NON-FREEZE YARD HYDRANT

DETAIL H

NTS

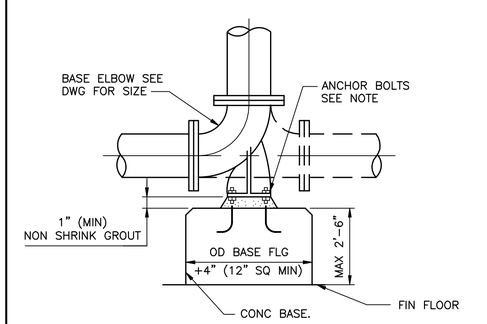

NOTE
4 GALVANIZED 'E' DIA ANCHOR BOLTS WITH 2 HEX NUTS AND WASHERS FOR LEVELING AFTER INSTALLATION. SEE PIPE ELBOW SUPPORT DETAIL CD FOR 'E' DIA.

FLOOR SUPPORT

DETAIL I

NTS

STATE OF TEXAS
DANNY M. HURTADO
104266
REGISTERED PROFESSIONAL ENGINEER
May 2, 2016

REV No	DATE	DRWN	CHKD	REMARKS

DESIGNED BY: WOO
DRAWN BY: SANDEFUR
SHEET CHK'D BY: HURTADO
CROSS CHK'D BY:
APPROVED BY:
DATE: MAY 2016

CDM Smith
Riata Corporate Park, 12357-A Riata Trace Parkway, Suite 210
Austin, TX 78727
Tel: (512) 346-1100
Texas Registration Number F-3043

CITY OF AUSTIN, TEXAS - AUSTIN WATER UTILITY
CIP 3333.016

SOUTH AUSTIN REGIONAL WWTP
THICKENER IMPROVEMENTS PROJECT

STANDARD MECHANICAL DETAILS II

PROJECT No 590-104217
FILE NAME: MZ-2

SHEET No
M-26

BID SET

S:\Acad\104217_SAR\MZ-2.dwg, M-26, 5/4/2016 12:34:31 PM, sandefurdw, DWG To PDF.pc3
S:\ACAD\104217_SAR\MZ-2 By: sandefurdw Saved: 5/4/2016 10:23:52 AM Plotted: 5/4/2016 12:34:32 PM
Plotted: 5/4/2016 12:34:32 PM

S:\Acad\104217_SAR\MZ-3.dwg, M-27, 5/4/2016 12:34:56 PM, sandefurdw, DWG To PDF.pc3

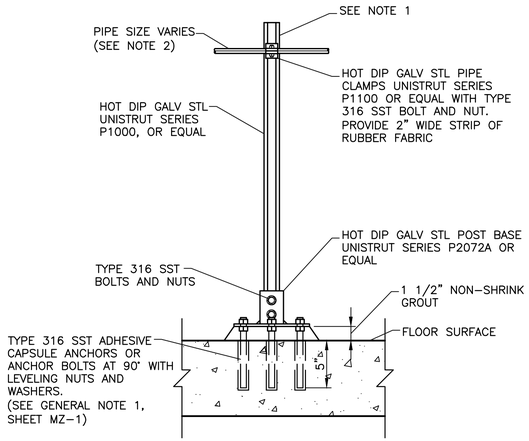

NOTES:

1. EXTEND UNISTRUT AT PRESSURE GUAGE AND SUPPORT PRESSURE GAUGE ASSEMBLY USING PIPE CLAMP.

2. UNISTRUT PIPE SUPPORT MAY HAVE TO BE INCREASED DEPENDING ON PIPE SIZE PER SECTION 15140.

3. REFER TO GENERAL NOTES ON SHEET MZ-1 AND SECTION 15140 FOR SPECIAL PIPE SUPPORT REQUIREMENTS.

PIPE CLAMP FOR INDIVIDUAL PIPES

DETAIL A
NTS

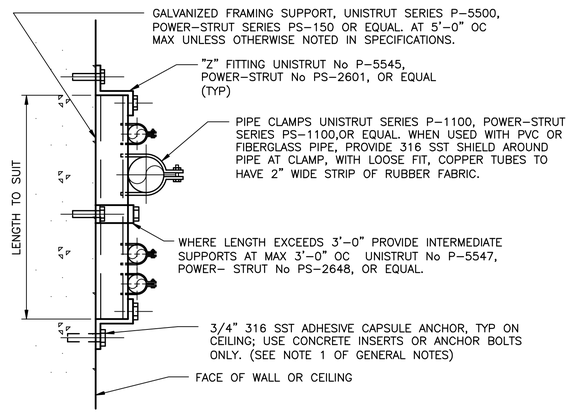

FLUSH MOUNTED PIPE SUPPORT

DETAIL B
NTS

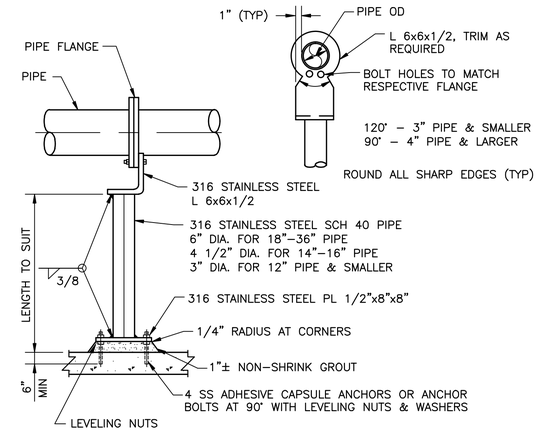

PIPE FLANGE SUPPORT

DETAIL C
NTS

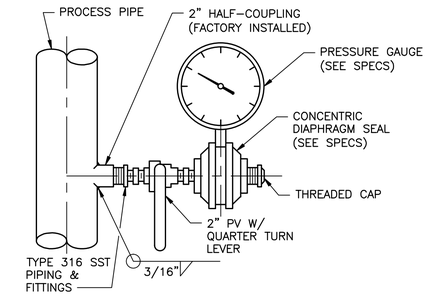

NOTES

1 FOR HORIZONTAL PROCESS PIPING, INSTALL 2" PIPING WITH 90° BEND SUCH THAT THE GAUGE CONNECTION IS PERPENDICULAR TO THE PIPE.

2 FOR SMALLER DIAMETER PIPING (UP TO 8 INCH DIAMETER) INSTALL CONCENTRIC DIAPHRAGM SEAL IN LINE WITH PIPING AS SHOWN ON THE MECHANICAL DRAWINGS.

PRESSURE GAUGE AND SEAL SLUDGE AND RAW SEWAGE SERVICE ASSEMBLY – LARGE DIAMETER METAL PROCESS PIPING

DETAIL D
NTS

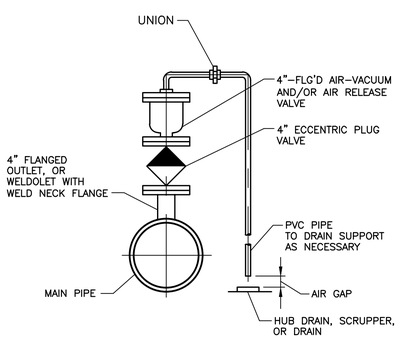

AIR RELEASE VALVE

DETAIL E
NTS

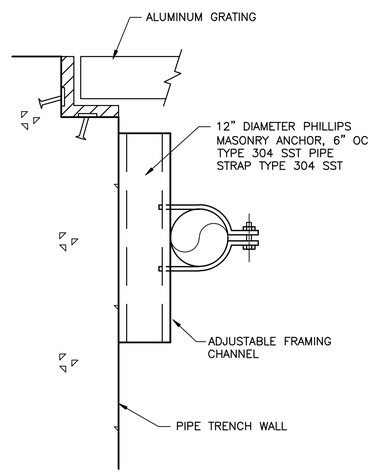

FRAMING CHANNEL OR WALL PIPE SUPPORT

DETAIL F
NTS

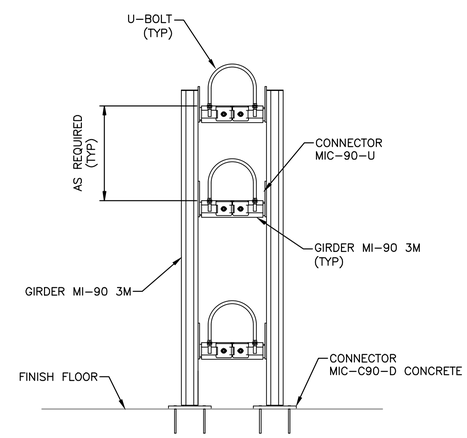

NOTE:

1. PIPE SUPPORT MEMBERS SHALL BE HILTI MI SERIES AS SHOWN, OR APPROVED EQUAL

MULTI-LEVEL GOAL POST PIPE SUPPORT

DETAIL G
NTS

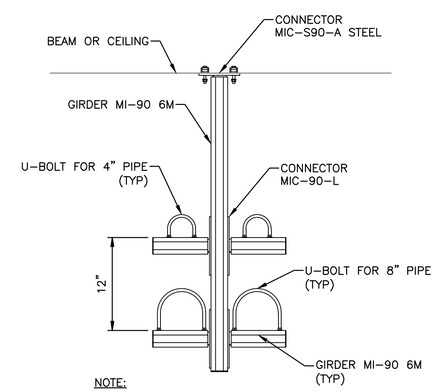

NOTE:

1. PIPE SUPPORT MEMBERS SHALL BE HILTI MI SERIES AS SHOWN, OR APPROVED EQUAL

TWO-LEVEL HANGING SUPPORT

DETAIL H
NTS

GENERAL NOTES
(TYP FOR ALL STANDARD MECHANICAL DETAIL SHEETS)

1. STAINLESS STEEL ADHESIVE CAPSULE ANCHORS SHALL BE A TWO-PART STUD AND CAPSULE RESIN ANCHORING SYSTEM. CAPSULES SHALL BE SELF-CONTAINED, SEALED GLASS UNITS CONTAINING PREMEASURED AMOUNTS OF RESIN, AGGREGATES, AND HARDENER. STUD ASSEMBLIES SHALL BE ALL-THREAD ANCHOR ROD WITH NUT AND WASHER. INSTALL ANCHOR IN FULL COMPLIANCE WITH THE MANUFACTURER'S RECOMMENDATIONS. ANCHORS SHALL BE HILTI "RE-500-SD ADHESIVE ANCHOR", MOLLY "PARABOUND CAPSULE ANCHOR", OR EQUAL. PROVIDE MINIMUM EMBEDMENT OF 10 BOLT DIAMETERS IN CONCRETE.

STATE OF TEXAS
DANNY M. HURTADO
104266
REGISTERED PROFESSIONAL ENGINEER
May 2, 2016

REV No	DATE	DRWN	CHKD	REMARKS

DESIGNED BY: WOO
DRAWN BY: SANDEFUR
SHEET CHK'D BY: HURTADO
CROSS CHK'D BY:
APPROVED BY:
DATE: MAY 2016

CDM Smith
Riata Corporate Park, 12357-A Riata Trace Parkway, Suite 210
Austin, TX 78727
Tel: (512) 346-1100
Texas Registration Number F-3043

CITY OF AUSTIN, TEXAS - AUSTIN WATER UTILITY
CIP 3333.016
SOUTH AUSTIN REGIONAL WWTP
THICKENER IMPROVEMENTS PROJECT

STANDARD MECHANICAL DETAILS III

PROJECT No 590-104217
FILE NAME: MZ-3

SHEET No
M-27

BID SET

S:\ACAD\104217_SAR\MZ-3 By: sandefurdw Saved: 5/4/2016 10:25:06 AM Plotted: 5/4/2016 12:34:56 PM

Plotted: 5/4/2016 12:34:56 PM

S:\Acad\104217_SAR\MZ-4.dwg, M-28, 5/4/2016 12:35:15 PM, sandefurdw, DWG To PDF.pc3

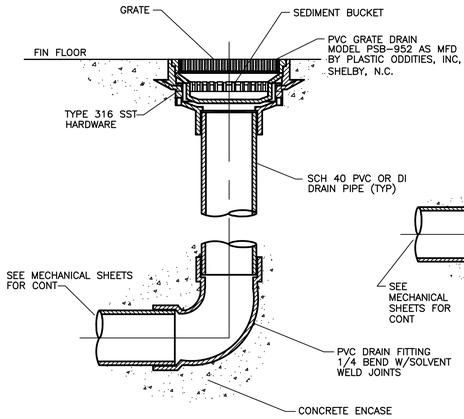

FLOOR DRAIN WITHOUT P-TRAP

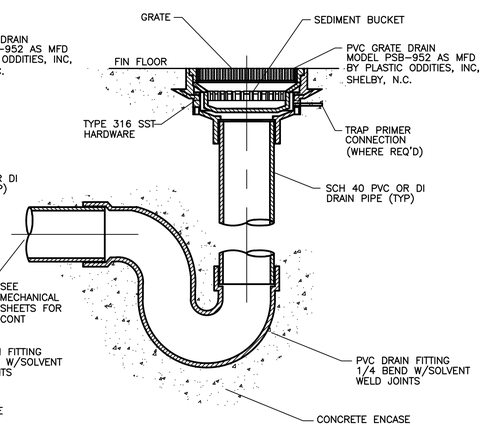

FLOOR DRAIN WITH P-TRAP

NOTES

1 PROVIDE FLOOR DRAIN W/P-TRAP ONLY WHERE REQUIRED ON DRAWINGS.

2 ALL PIPE AND FITTING CONNECTIONS SHALL BE SOLVENT WELDED IN ACCORDANCE WITH SECTION 15064.

3 DRAIN SIZE SHALL BE SAME AS PIPE SIZE OR AS NOTED ON DRAWINGS.

DETAIL A
NTS

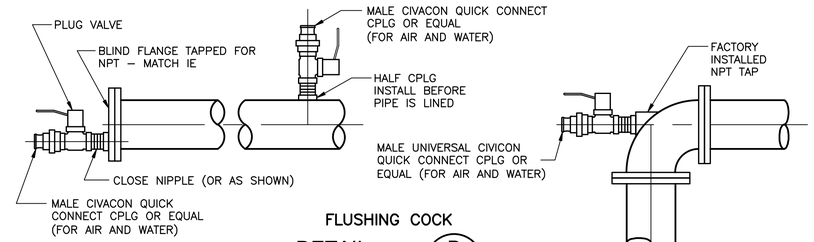

NOTE

1 SIZE OF CONNECTION & VALVE AS SHOWN ON DRAWINGS.

FLUSHING COCK

DETAIL B
NTS

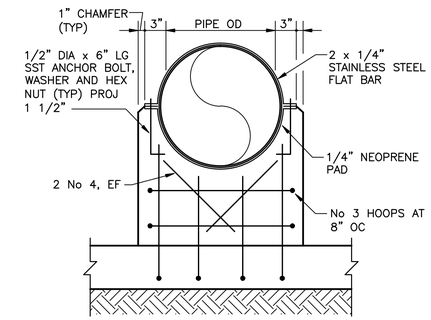

REACTION TYPE PIPE SUPPORTS

DETAIL C
NTS

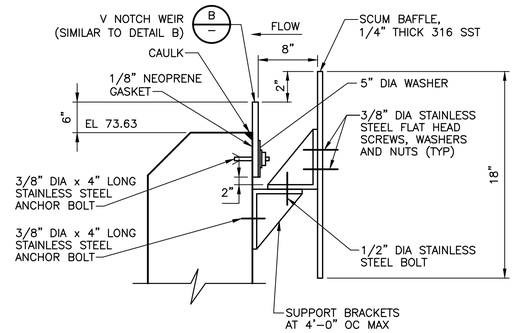

V NOTCH WEIR WITH BAFFLE

DETAIL D
NTS

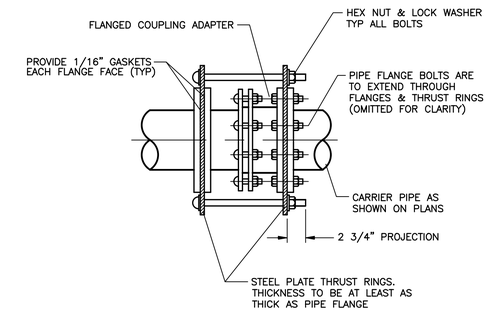

NOTES

1 FOR PIPE 6" DIA AND SMALLER, USE (2) 3/4" DIA TIE RODS MIN.

2 FOR PIPE 8" DIA AND LARGER, USE (4) 1" DIA TIE RODS MIN.

THRUST HARNESS FOR FLANGED COUPLING ADAPTER

DETAIL E
NTS

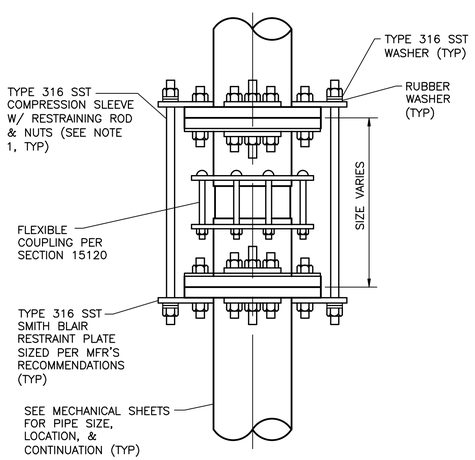

NOTES:

1. REFER TO SPECIFICATION SECTION 15120 FOR ADDITIONAL REQUIREMENTS.
2. PROVIDE THRUST HARNESS FOR ALL FLEXIBLE COUPLINGS, FLANGE COUPLING ADAPTORS, ETC., EXCEPT AS NOTED IN NOTE 3 BELOW.
3. FLEXIBLE COUPLINGS SHOWN TO BE INSTALLED ON YARD PIPING AT 4'± FROM STRUCTURES TO ACCOMMODATE DIFFERENTIAL SETTLING DO NOT REQUIRE HARNESSES.

THRUST HARNESS FOR FLEXIBLE COUPLING

DETAIL F
NTS

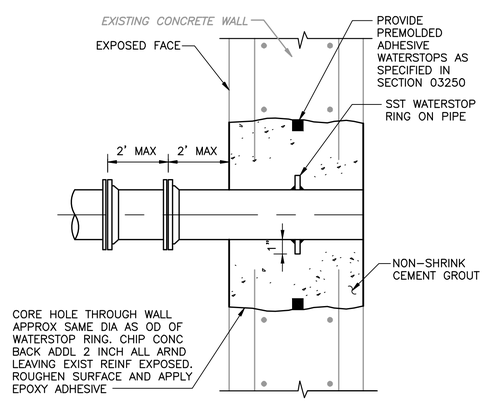

NOTE

1 FOR MJ CONNECTIONS BURIED OUTSIDE OF STRUCTURES USE DOUBLE JOINTS.

PIPE WALL PENETRATION

DETAIL G
NTS

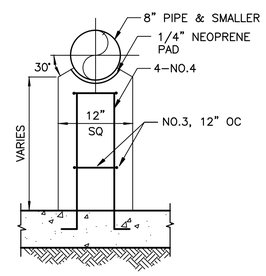

CONCRETE PIPE CRADLE

DETAIL H
NTS

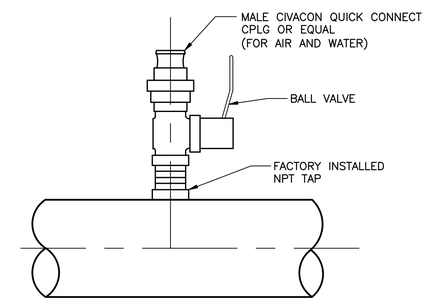

SAMPLE PORT

DETAIL I
NTS

STATE OF TEXAS
DANNY M. HURTADO
104266
REGISTERED PROFESSIONAL ENGINEER
May 2, 2016

REV No	DATE	DRWN	CHKD	REMARKS

DESIGNED BY: WOO
DRAWN BY: SANDEFUR
SHEET CHK'D BY: HURTADO
CROSS CHK'D BY:
APPROVED BY:
DATE: MAY 2016

CDM Smith
Riata Corporate Park, 12357-A Riata Trace Parkway, Suite 210
Austin, TX 78727
Tel: (512) 346-1100
Texas Registration Number F-3043

CITY OF AUSTIN, TEXAS - AUSTIN WATER UTILITY
CIP 3333.016

SOUTH AUSTIN REGIONAL WWTP
THICKENER IMPROVEMENTS PROJECT

STANDARD MECHANICAL DETAILS IV

PROJECT No 590-104217
FILE NAME: MZ-4

SHEET No
M-28

BID SET

S:\ACAD\104217_SAR\MZ-4 By: sandefurdw Saved: 5/4/2016 10:25:39 AM Plotted: 5/4/2016 12:35:16 PM

Plotted: 5/4/2016 12:35:16 PM

S:\Acad\104217_SAR\MZ-5.dwg, M-29, 5/4/2016 12:35:37 PM, sandefurdw, DWG To PDF.pc3

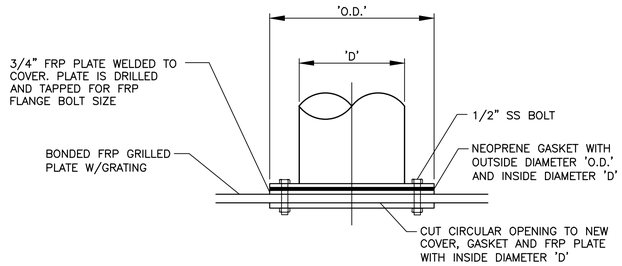

NOTES:

1. FLANGE O.D. SHALL MATCH TYPICAL DIMENSIONS FOR A DUCTILE IRON FLANGE BASED ON FRP DIAMETER 'D'.
2. ADJUST OPENING AS REQUIRED SUCH THAT MOUNTING BOLTS WILL BE OUTSIDE OF THE FIRST UNCUT BEARING BAR.
3. ORIENT GOOSENECK PARALLEL TO THE BEARING BAR.

PLATE CONNECTION FOR GOOSENECKS

DETAIL A
NTS –

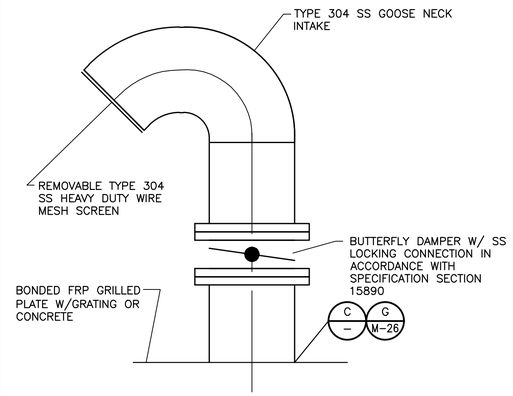

GOOSENECK INTAKE

DETAIL B
NTS –

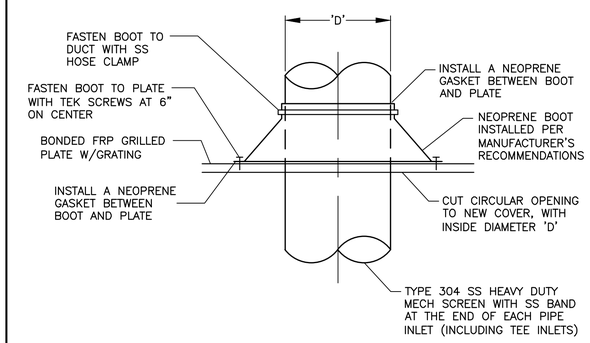

PLATE PENETRATION

DETAIL C
NTS –

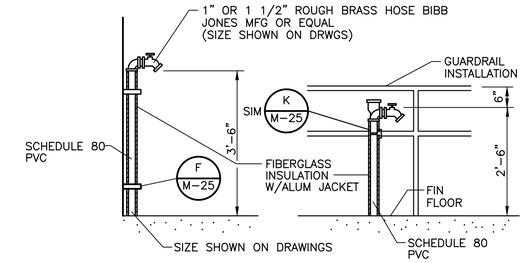

HOSE BIBB

DETAIL D
NTS –

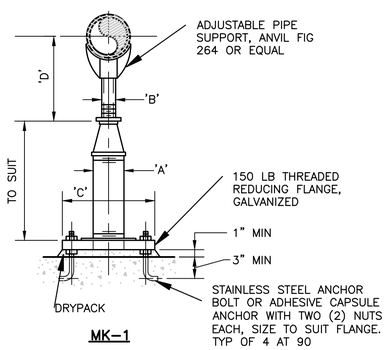

MK-1

ADJUSTABLE PIPE SUPPORT APPROX DIMENSIONS IN INCHES					
PIPE SIZE	A	B	C	D MIN	D MAX
2	2	1	9	8	11
3	2	1	9	8	11
3	2	1	9	8	12
4	3	2	9	10	14
6	3	2	9	11	15
8	3	2	9	13	16
10	3	2	9	14	18
12	3	2	9	15	19
14	4	3	11	18	20
16	4	3	11	19	22
18	6	3	13	21	24
20	6	3	13	23	25
24	6	4	13	26	28
30	6	4	13	29	31
32	6	4	13	30	32
36	6	4	13	32	34

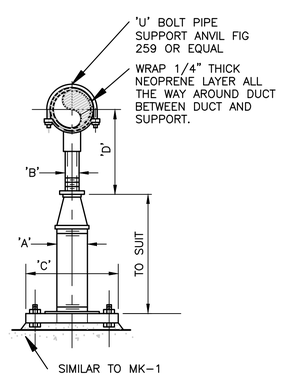

MK-2

NOTES:

1. UNDER VALVES, METERS OR OTHER SPECIAL APPURTENANCES A FABRICATED SUPPORT PIECE MAY BE UTILIZED AS ACCEPTABALE TO ENGINEER

ADJUSTABLE DUCT SUPPORT

DETAIL E
NTS –

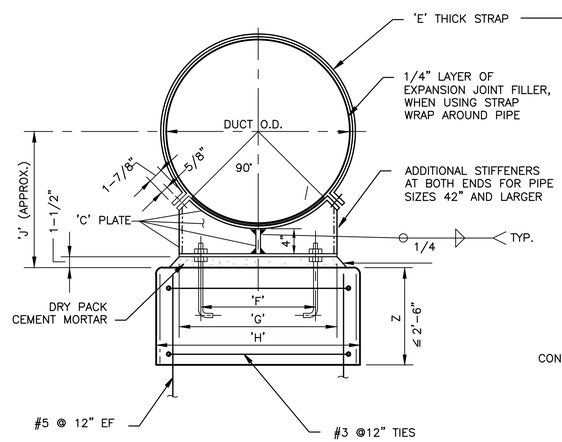

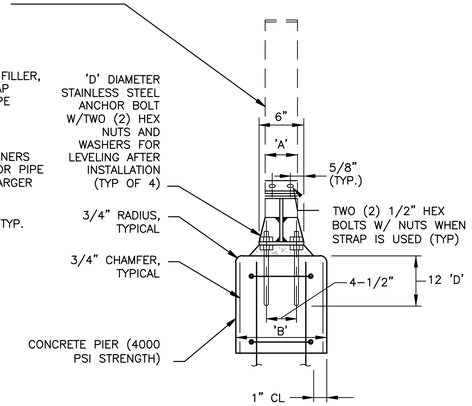

DIMENSIONS IN INCHES									
NOMINAL DUCT SIZE						SUPPORTING DUCT			
	'A'	'B'	'C'	'D'	'E'	'F'	'G'	'H'	'J'
4 OR 6	4	12	3/8	5/8	1/4	4	8	14	10
8	4	12	3/8	5/8	1/4	5	9	14	11
10	4	12	3/8	5/8	1/4	6	11	16	12
12	4	12	3/8	5/8	1/4	7	13	18	13
14	4	12	3/8	5/8	1/4	8	13	18	14
16	4	12	3/8	5/8	1/4	9	15	21	15
18	4	12	3/8	5/8	1/4	10	16	22	16
20	5	12	3/8	5/8	3/8	10	18	24	17
22	5	12	3/8	5/8	3/8	12	19	24	18
24	5	12	3/8	5/8	3/8	13	21	26	19
26	5	12	3/8	3/4	3/8	14	22	28	20
30	5	12	3/8	3/4	3/8	16	25	30	22
34	5	15	3/8	3/4	3/8	18	28	33	24
36	6	15	3/8	3/4	3/8	19	29	34	25
42	6	18	1/2	1	3/8	21	33	39	28
48	6	18	1/2	1	3/8	24	38	44	31
54	6	18	1/2	1	3/8	28	42	48	34
60	6	18	1/2	1	3/8	28	42	54	37

NOTES:

1. WHERE UTILIZED UNDER BENDS, OR OTHERWISE SKEWED, DIMENSIONS TO BE INCREASED & SADDLE FABRICATED AS ACCEPTABLE TO ENGINEER.
2. IF (Z) IS 6" OR LESS, OMIT REINF. STEEL. ANCHOR BOLTS TO PROJECT MIN. 6" INTO FLOOR.

SADDLE DUCT SUPPORT WITH OR WITHOUT STRAP

DETAIL F
NTS –

STATE OF TEXAS
DANNY M. HURTADO
104266
REGISTERED PROFESSIONAL ENGINEER
May 2, 2016

REV No	DATE	DRWN	CHKD	REMARKS

DESIGNED BY: WOO
DRAWN BY: SANDEFUR
SHEET CHK'D BY: HURTADO
CROSS CHK'D BY:
APPROVED BY:
DATE: MAY 2016

CDM Smith
Riata Corporate Park, 12357-A Riata Trace Parkway, Suite 210
Austin, TX 78727
Tel: (512) 346-1100
Texas Registration Number F-3043

CITY OF AUSTIN, TEXAS - AUSTIN WATER UTILITY
CIP 3333.016

SOUTH AUSTIN REGIONAL WWTP
THICKENER IMPROVEMENTS PROJECT

STANDARD MECHANICAL DETAILS V

PROJECT No 590-104217
FILE NAME: MZ-5

SHEET No
M-29

BID SET

S:\ACAD\104217_SAR\MZ-5 By: sandefurdw Saved: 5/4/2016 10:26:10 AM Plotted: 5/4/2016 12:35:38 PM

S:\Acad\104217_SAR\MZ-5.dwg, M-30, 5/4/2016 12:35:47 PM, sandefurdw, DWG To PDF.pc3

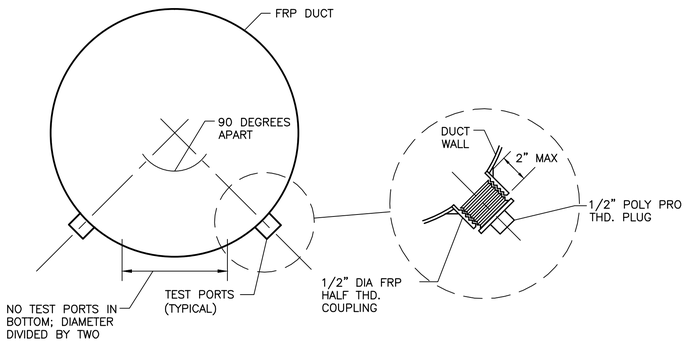

TEST PORT

DETAIL A / –

NTS

NOTES:

1. FOR DUCTS OVER 48" DIA. PROVIDE 4 PORTS, 90 DEGREES APART.
2. LOCATE AND POSITION TEST PORTS IN ACCESSIBLE LOCATIONS FOR A PERSON WITH A PITOT TUBE. IN SOME CASES THE TEST PORTS MAY NEED TO BE ON THE TOP OR THE SIDE.
3. LOCATION OF TEST PORTS SHALL BE IN ACCORDANCE WITH RECOMMENDATIONS OF AABC & NEBB.

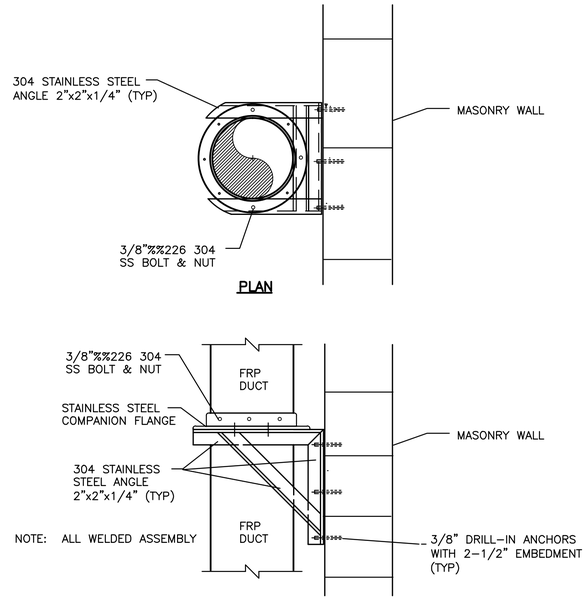

NOTE: ALL WELDED ASSEMBLY

FRP DUCT SUPPORT

DETAIL B / –

NTS

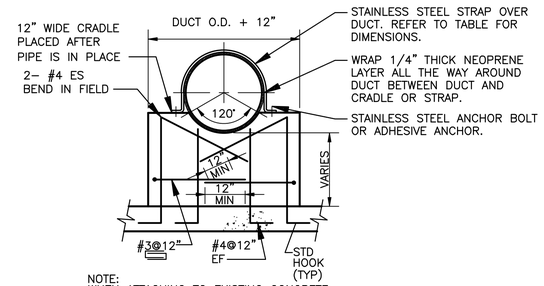

NOTE:
WHEN ATTACHING TO EXISTING CONCRETE, PROVIDE EQUIVALENT SIZE THREADED ANCHORS.

NOMINAL DUCT SIZE	DUCT STRAP DIMENSIONS (IN)	
	WIDTH	THICKNESS
6	4	1/4
8	4	1/4
10	4	1/4
12	4	1/4
14	4	1/4
16	4	1/4
18	4	1/4
20	5	3/8
22	5	3/8
24	5	3/8
26	5	3/8
30	5	3/8
34	5	3/8
36	6	3/8
42	6	3/8
48	6	3/8
54	6	3/8
60	6	3/8

DUCT CRADLE

DETAIL C / –

NTS

NOTES

1 FURNISH AND INSTALL THE ABOVE SIGN ON ALL NPW LINE HOSE STATIONS. ATTACH THE SIGN TO THE STRUCTURE, GUARDRAIL, OR POST WITH STAINLESS STEEL HARDWARE AND MOUNTING BRACKET.

2 FURNISH ONE SIGN AND RECEIVE APPROVAL FROM OWNER PRIOR TO ORDERING REMAINDER OF SIGNS.

3 SIGN SHALL BE ALUMINUM BACKED AND SHALL BE AS MANUFACTURED BY EMED CO, INC OR EQUAL.

NON POTABLE WATER SIGN

DETAIL D / –

NTS

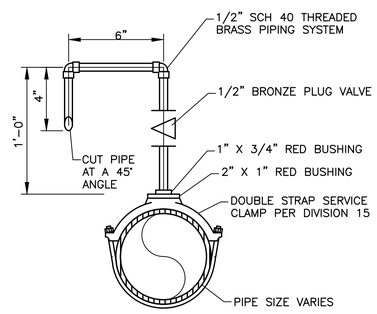

NOTE:

1 PROVIDE FIELD PAINTING IN ACCORDANCE WITH SECTION 09902.

SAMPLE TAP

DETAIL E / –

NTS

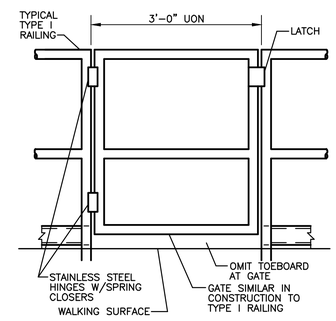

GUARDRAIL GATE

DETAIL F / –

NTS

SEE ARCHITECT FOR TYPE II STEEL RAILINGS

TYPE I GUARDRAIL-HORZONTAL RAILS

ALL ALUMINUM CONSTRUCTION UNLESS OTHERWISE NOTED

STATE OF TEXAS
DANNY M. HURTADO
104266
REGISTERED PROFESSIONAL ENGINEER

May 2, 2016

REV No	DATE	DRWN	CHKD	REMARKS

DESIGNED BY: WOO
DRAWN BY: SANDEFUR
SHEET CHK'D BY: HURTADO
CROSS CHK'D BY:
APPROVED BY:
DATE: MAY 2016

CDM Smith
Riata Corporate Park, 12357-A Riata Trace Parkway, Suite 210
Austin, TX 78727
Tel: (512) 346-1100
Texas Registration Number F-3043

CITY OF AUSTIN, TEXAS - AUSTIN WATER UTILITY
CIP 3333.016

SOUTH AUSTIN REGIONAL WWTP
THICKENER IMPROVEMENTS PROJECT

STANDARD MECHANICAL DETAILS VI

PROJECT No 590-104217
FILE NAME: MZ-5

SHEET No

M-30

BID SET

S:\ACAD\104217_SAR\MZ-5 By: sandefurdw Saved: 5/4/2016 10:26:10 AM Plotted: 5/4/2016 12:35:47 PM

Plotted: 5/4/2016 12:35:47 PM

ELECTRICAL ONE-LINE DRAWING SYMBOLS

1.5MVA 3ø △4160V Y↓480V — POWER TRANSFORMER, 1.5MVA OA, 3ø, 4160V DELTA:480V WYE GROUNDED TURN RATIO

"CT-SWBD1A" 2500/5 3 — WINDOW TYPE SINGLE-RATIO PHASE CURRENT TRANSFORMER (CT), RATIO AS INDICATED. NUMBER AT LOWER RIGHT INDICATES QUANTITY REQUIRED (2500:5 TURN RATIO, QUANTITY 3, TAGGED "CT-SWBD1A" SHOWN)

"CT-M1" 600/5 3 X1-X5/MR — WINDOW TYPE MULTI-RATIO PHASE CURRENT TRANSFORMER (CT) WITH AVAILABLE TAPS AS INDICATED, NUMBER AT LOWER RIGHT INDICATES QUANTITY REQUIRED (X1-X5 600:5 TURN RATIO, QUANTITY 3, TAGGED "CT-M1" SHOWN)

"CT-SWBD1A-G" 50/5 1 — WINDOW TYPE GROUND CURRENT TRANSFORMER, RATIO AS INDICATED. NUMBER AT LOWER RIGHT INDICATES QUANTITY. (50:5 TURN RATIO, QUANTITY 1, TAGGED "CT-SWBD1A-G" SHOWN)

"PT-SWBD1A" 480V 120V 2 — POTENTIAL TRANSFORMER (PT) NUMBER INDICATES QUANTITY. (480V:120V TURN RATIO, QUANTITY 2, TAGGED "PT-SWBD1A" SHOWN)

PROPOSED SHIELDED ULTRA ISOLATION TRANSFORMER "FB1-XFMR-CPP1" 30kVA 3ø △480V Y↓208/120V — SHIELDED ULTRA-ISOLATION TRANSFORMER. (30KVA, 3ø, 480V DELTA:120/208V WYE GROUNDED TURN RATIO, TAGGED "FB1-XFMR-CPP1" AS SHOWN)

4 — FUSE, NUMBER AT LOWER RIGHT INDICATES QUANTITY REQUIRED (4 SHOWN)

« » — DRAW OUT DISCONNECTS

FB1-SWBD1A-F1 — ELECTRICAL CONDUIT TAG. REFER TO FLOOR PLANS, AND CONDUIT/WIRE SCHEDULE (TAGGED "FB1-SWBD1A-F1")

10 KVA — ELECTRICAL LOAD (10KVA SHOWN)

FCS — FIELD CONTROL STATION

MICROPROCESSOR BASED PROTECTIVE RELAY FUNCTION. SEE PROTECTIVE RELAY ABBREVIATIONS

CB 3P-30A "BKR-SPD1A" — THERMAL/MAGNETIC MOLDED CASE CIRCUIT BREAKER (3 POLE, 30A, TAGGED BKR-SPD1A" SHOWN)

MCP 3P-50A "BKR-CAPSLP1" — MAGNETIC CIRCUIT PROTECTOR, (3 POLE, 50A MOTOR CIRCUIT PROTECTOR, TAGGED "BKR-CAPSLP1" SHOWN)

FUSE (DRAWOUT)

PMU — POWER MONITORING UNIT

LV — MOTOR LOW VOLTAGE TERMINATION CABINET

SH — SPACE HEATER TERMINATION CABINET

V.O. — VALVE OPERATOR TERMINATION BOX

M/C — FIBER OPTIC/ETHERNET MEDIA CONVERTER

PP — COPPER ETHERNET PATCH PANEL

LUGS — FEEDER CABLE TERMINATION LUGS

SPD "SPD-SWBD1A" — SURGE PROTECTIVE DEVICE (SPD) (TAGGED "SPD-SWBD1A" SHOWN)

"STB-SWBD1A" STB — TAP CHANGING/SHORTING TERMINAL BLOCK (TAGGED "STB-SWBD1A")

CONNECTION TO EQUIPMENT GROUND BUS (EARTH GROUND)

"CAP-SLP1" 25 KVAR 3 — POWER FACTOR CORRECTION CAPACITOR (TAGGED "CAP-SLP1", 3 PHASE)

"LA-SWBD1A" L.A. — LIGHTNING ARRESTOR (TAGGED "LA-SWBD1A")

49 CAPSLP1 — OVERLOAD RELAY (TAGGED 49/CAPSLP1)

CONDUIT CAP

60 — MOTOR HORSEPOWER AS INDICATED (60HP SHOWN)

PB OR PB — PULLBOX

ELECTRICAL ONE-LINE DRAWING SYMBOLS

5A — TYPICAL CONNECTION TO SWITCHBOARD, MOTOR CONTROL CENTER, OR POWER DISTRIBUTION PANELBOARD BUS. "5A" DENOTES EQUIPMENT SECTION NUMBER. REFER TO APPLICABLE DISTRIBUTION EQUIPMENT FRONT ELEVATION DRAWING.

AUTOMATIC TRANSFER SWITCH "FB1-ATS-001" 480V, 3ø, 3W, 3P 400A, 42,000 WCR (N, E) — AUTOMATIC TRANSFER SWITCH. (3ø, 3-WIRE, 3-POLE, 400 AMPERE, 480 VOLT, 42,000A WITHSTAND RATING, TAGGED "FB1-ATS-001" AS SHOWN)

MCP 3P-15A "BRK-GP6" 1 M GP6 49 GP6 — INDICATES NEMA SIZE (SIZE 1 SHOWN)

480V 3-POLE COMBINATION STARTER WITH MAGNETIC CIRCUIT PROTECTOR (TAGGED "BRK-GP6", RATED 3P-15A), FULL VOLTAGE NON-REVERSING (FVNR), NEMA SIZE 1 STARTER (TAGGED M/GP6) AND THERMAL OVERLOAD RELAY (TAGGED 49/GP6).

30kVA 3ø △480V Y↓208/120V — MINI POWER CENTER "GT-MPC-001" 208/120V, 3ø, 4W 100A BUS 100A MCB 24 POLE 10,000 A.I.C. — MINI POWER CENTER ASSEMBLY WITH TRANSFORMER AND PANELBOARD SECTIONS.

CB 3P-20A — ENCLOSED CIRCUIT BREAKER

CL SWBD1A [E-06] — MULTI-FUNCTION CONTROL LOGIC SYSTEM INTERLOCK FOR EQUIPMENT (TAGGED "SWBD1A"). REFER TO THE CONTROL LOGIC WIRING SCHEMATICS REFERENCED (DRAWING NO. [E-06] SHOWN) FOR ADDITIONAL INFORMATION CONCERNING CONTROL RELAYS, TIMING RELAYS, PILOT LIGHTS, PUSHBUTTONS, ETC., AND THEIR ASSOCIATED INTERLOCK WIRING REQUIRED FOR THIS PROJECT BUT NOT SHOWN ON THE ONE-LINE DIAGRAMS.

INDICATES MULTI-FUNCTION CONTROL SYSTEM INTERLOCK

"FB1-CPP-001" 208/120V 3ø, 4W 225A BUS 100A MCB 42-POLE 10 KAIC — LIGHTING PANEL. (TAGGED "FB1-CPP-001", RATED 208/120 VOLT, 3 PHASE, 4 WIRE, 225A AMPERE, 10,000A INTERRUPT RATING, WITH 42 POLES AND 100 AMPERE MAIN CIRCUIT PROTECTOR)

"FB1-DS-ACU1" 3P-60A — NON-FUSED DISCONNECT SWITCH. (TAGGED "FB1-DS-ACU1", RATED 3 PHASE, 60A AMPERE)

K1-SWBD1A — KEY INTERLOCK TAG. TAG IS UNIQUE PER KEY INTERLOCK.

K2-SWBD1A — KEY INTERLOCK. KEY REQUIRED TO UNLOCK INTERLOCK. KEY CAN BE REMOVED FROM INTERLOCK ONLY AFTER INTERLOCK IS LOCKED.

K3-SWBD1B — DENOTES OTHER KEY INTERLOCKS WHICH ARE INTERLOCKED WITH THIS KEY INTERLOCK. (KEY INTERLOCK TAGGED "K2-SWBD1A" IS INTERLOCKED WITH KEY INTERLOCKS TAGGED "K1-SWBD1A" AND "K3-SWBD1B")

REUSE OF DOCUMENTS
This document, and the designs incorporated herein, is an instrument of professional service that has been developed, designed and prepared by Harutunian Engineering, Inc., and is not to be used, in whole or part, for any other project without giving written notice to Harutunian Engineering, Inc.

REV No	DATE	DRWN	CHKD	REMARKS
△	–	–	–	–

DESIGNED BY: HEI
DRAWN BY: HEI
SHEET CHK'D BY: HEI
CROSS CHK'D BY: HEI
APPROVED BY: HEI
DATE: APRIL 2016

CDM Smith
Riata Corporate Park, 12357-A Riata Trace Parkway, Suite 210
Austin, TX 78727
Tel: (512) 346-1100
Texas Registration Number F-3043

HEI
HARUTUNIAN ENGINEERING, INC.
305 E Huntland Dr, Ste 500; Austin, TX 78752
TBPE Firm Registration No. F-2408

CITY OF AUSTIN, TEXAS - AUSTIN WATER UTILITY
CIP 3333.016
SOUTH AUSTIN REGIONAL WWTP
THICKENER IMPROVEMENTS PROJECT

ELECTRICAL SYMBOLS LEGEND
(SHEET 1 OF 3)

STATE OF TEXAS — K. A. HARUTUNIAN 59181 — REGISTERED PROFESSIONAL ENGINEER — 4/22/2016

PROJECT No 590-104217
FILE NAME: G-E-1

SHEET No
G-E-1

Plotted: 4/22/2016 8:53:00 AM

WIRING SCHEMATIC SYMBOLS

- TS-1 / BFV15 — TORQUE SWITCH (N.C.) (TAGGED "TS-1/BFV15")
- TS-3 / BFV15 — TORQUE SWITCH (N.O.) (TAGGED "TS-3/BFV15")
- ZS / PVZX — POSITION SWITCH (N.C.) (TAGGED "ZS/PVZX")
- ZS / PVZX — POSITION SWITCH (N.O.) (TAGGED "ZS/PVZX")
- GLS-10 / BFV15 — GEAR LIMIT SWITCH (N.C.) (TAGGED "GLS-10/BFV15")
- GLS-9 / BFV15 — GEAR LIMIT SWITCH (N.O.) (TAGGED "GLS-9/BFV15")
- LS / Z1 — FLOAT LEVEL SWITCH (N.O., CLOSES ON HIGH LEVEL, TAGGED "LS/Z1")
- LSH / 003 — FLOAT LEVEL SWITCH (N.C., OPENS ON HIGH LEVEL, TAGGED "LSH/003")
- PSL / TSLP3 (1) — PRESSURE SWITCH (N.O., CLOSES ON LOW PRESSURE, TAGGED "PSL/TSLP3")
- PSL / TSLP3 (1) — PRESSURE SWITCH (N.C., OPENS ON LOW PRESSURE, TAGGED "PSL/TSLP3")
- FS / NTPX (1) — FLOW SWITCH (N.O., CLOSES ON HIGH FLOW, TAGGED "FS/NTPX")
- FS / NTPX (1) — FLOW SWITCH (N.C., OPENS ON HIGH FLOW, TAGGED "FS/NTPX")
- MCR / DSP4 (1) — CONTROL RELAY NORMALLY OPEN CONTACTS NUMBER IN PARENTHESIS INDICATES DEVICE CONTACT NUMBER IN ORDER OF APPEARANCE ("MCR/DSP4", FIRST CONTACT SHOWN)
- STX / DSP4 (2) — CONTROL RELAY NORMALLY CLOSED CONTACTS NUMBER IN PARENTHESIS INDICATES DEVICE CONTACT NUMBER IN ORDER OF APPEARANCE ("STX/DSP4", SECOND CONTACT SHOWN)
- TDX / SP1 — TIMING RELAY CONTACT, ON-DELAY. (NORMALLY OPEN)
- TDX / SP1 — TIMING RELAY CONTACT, ON-DELAY. (NORMALLY CLOSED)
- FST / SP1 — TIMING RELAY CONTACT, OFF-DELAY. (NORMALLY OPEN)
- FST / SP1 — TIMING RELAY CONTACT, OFF-DELAY. (NORMALLY CLOSED)
- ATSH / DSP4 — TEMPERATURE SWITCH (N.C., OPENS ON ABNORMAL TEMPERATURE, TAGGED "ATSH/DSP4")

WIRING SCHEMATICS SYMBOLS

- MOMENTARY PUSH-BUTTON NORMALLY OPEN CONTACTS
- MOMENTARY PUSH-BUTTON NORMALLY CLOSED CONTACTS
- MUSHROOM HEAD PUSH TO OPEN, PULL TO CLOSE MAINTAINED ACTION SWITCH
- 49 / BFV15 — OVERLOAD RELAY (TAGGED "49/BFV15")
- 49 / BFV15 — OVERLOAD RELAY CONTACTS
- MOTOR SPACE HEATER — MOTOR SPACE HEATER
- 3-POLE CIRCUIT BREAKER OR MOTOR CIRCUIT PROTECTOR AS APPLICABLE
- 3-POLE DISCONNECT SWITCH
- CB — THERMAL/MAGNETIC CIRCUIT BREAKER 1-POLE
- MCP — MAGNETIC CIRCUIT PROTECTOR (MOTOR CIRCUIT PROTECTOR) 1-POLE
- 480V / 120V — CONTROL POWER TRANSFORMER (CPT) 1-PHASE (VOLTAGE TURNS RATIO 480V:120V AS SHOWN)
- CT-DSP4-A — PHASE CURRENT INSTRUMENT TRANSFORMER (CT) (TAGGED "CT-DSP4-A")
- CT-DSP4-G — GROUND CURRENT INSTRUMENT TRANSFORMER (CT) (TAGGED "CT-DSP4-G")
- POTENTIAL INSTRUMENT TRANSFORMER (PT)
- CT SHORTING TERMINAL BLOCK
- POWER FACTOR CORRECTION CAPACITOR (PFCC) 3-PHASE (DELTA CONNECTED AS SHOWN)
- LUGS

WIRING SCHEMATIC SYMBOLS

- MOTOR — ELECTRIC MOTOR
- SM / BKR1A — ELECTRIC MOTOR (TAGGED "SM BKR1A")
- 3 — FUSE
- DRAW OUT DISCONNECTS
- CONNECTION TO EQUIPMENT GROUND BUS (EARTH GROUND)
- R / "ON" — PILOT LIGHT R=RED, G=GREEN, W=WHITE, A=AMBER, Y=YELLOW, O=ORANGE (RED SHOWN) (NAMEPLATE TAGGED "ON" AS SHOWN)
- RB — ROTATING BEACON
- AUDIBLE ALARM HORN
- PC — PHOTOCELL
- TYPICAL CONTROL LOGIC WIRE JUMPER USED FOR JUMPERS LOCATED ENTIRELY INSIDE OF THE MOTOR CONTROL CENTER. USE ONLY IN THE MOTOR CONTROL CENTER WHERE SPECIFICALLY SHOWN ON THE CONTROL SCHEMATIC CONTRACT DRAWINGS. ALL OTHER WIRING SHALL BE TERMINATED TO TERMINAL BLOCKS. ALSO REFER TO THE CONTRACT DRAWINGS/SPECIFICATIONS FOR ADDITIONAL INFORMATION. THIS SYMBOL ONLY APPEARS ON A PORTION OF THE CONTROL SCHEMATIC CONTRACT DRAWINGS, AND ON NO OTHER CONTRACT DRAWING.
  - INDICATES WIRE JUMPER
- "CS-DSP4" — OFF / HAND / AUTO; X00 / 0X0 / 00X — THREE POSITION, MAINTAINED ACTION, "HAND-OFF-AUTO" SELECTOR SWITCH WITH MULTIPLE CONTACTS (THREE SHOWN) MECHANICALLY LINKED TO A SINGLE OPERATOR MECHANISM. A CONTACT DEVELOPMENT LEGEND FOR EACH CONTACT IS SHOWN IMMEDIATELY ADJACENT TO THE CONTACT. EACH CHARACTER IN THE CONTACT DEVELOPMENT LEGEND REPRESENTS THE STATUS OF ITS ASSOCIATED CONTACT FOR THE CORRESPONDING POSITION OF THE SELECTOR SWITCH. IN THE EXAMPLE SHOWN, THE LEFTMOST CHARACTER IN THE CONTACT DEVELOPMENT CORRESPONDS TO THE "HAND" POSITION, THE CENTER CHARACTER CORRESPONDS TO THE "OFF" POSITION, AND THE RIGHTMOST CHARACTER CORRESPONDS TO THE "AUTO" POSITION. AN "X" INDICATES THAT THE CONTACT IS CLOSED AND A "0" INDICATES THAT THE CONTACT IS OPEN WHEN THE SELECTOR SWITCH IS IN THE CORRESPONDING POSITION. (TAGGED "CS-DSP4")
  - INDICATES CONTACT IS CLOSED WHEN SELECTOR SWITCH IS IN THE "AUTO" POSITION
  - INDICATES CONTACT IS OPEN WHEN SELECTOR SWITCH IS IN THE "OFF" POSITION
  - INDICATES CONTACT IS OPEN WHEN SELECTOR SWITCH IS IN THE "HAND" POSITION

WIRING SCHEMATIC SYMBOLS

- "CLOSE" COMMAND FROM PLC — PLC DISCRETE (RELAY CONTACT) OUTPUT (NORMALLY CLOSED) (SHOWN WITH "CLOSE" I/O POINT TAG)
- "OPEN" COMMAND FROM PLC — PLC DISCRETE (RELAY CONTACT) OUTPUT (NORMALLY OPEN) (SHOWN WITH "OPEN" I/O POINT TAG)
- MX / DSP4 — "MOTOR RUNNING" STATUS TO PLC "FB1-PLC-001". REFER TO PLC I/O SCHEDULE. — DISCRETE INPUT (DI) TO PLC (SHOWN WITH N.O. CONTACT FROM CONTROL RELAY TAGGED "MX/DSP4" WIRED TO DISCRETE INPUT ON PLC TAGGED "FB1-PLC-001". REFER TO PLC I/O SCHEDULE FOR CARD AND POINT NUMBER.)
- TYPICAL BLADE TERMINAL BLOCK JUMPER CONFIGURATION FOR A TERMINAL ON A TERMINAL STRIP. THIS PARTICULAR BLADE JUMPER TERMINAL IS LOCATED IN THE MAIN CONTROL PANEL "SUB1-MCP-001". THIS CONFIGURATION APPLIES FOR ALL TERMINAL SYMBOLS.
  - SYMBOL VARIES WITH TERMINAL BLOCK LOCATION
- M — STARTER/CONTACTOR RELAY (ENERGIZE TO CLOSE CONTACTOR)
- T.O.D. / FST / SF1 / 0-300 SEC. — TIMING RELAY, OFF-DELAY. CONTACTS CHANGE POSITION IMMEDIATELY ON ENERGIZATION, AND AFTER ADJUSTABLE TIME DELAY WILL SWITCH BACK TO NORMAL POSITION. (TIME DELAY RANGE OF 0-300 SECONDS, TAGGED "FST/SF1" AS SHOWN)
- T.O.E. / TDX / SP1 / 0-300 SEC. — TIMING RELAY, ON-DELAY. CONTACTS CHANGE POSITION AFTER ADJUSTABLE TIME DELAY. (TIME DELAY RANGE OF 0-300 SECONDS, TAGGED "TDX/SP1" AS SHOWN)
- MCR / DSP4 — CONTROL RELAY COIL ("MCR/DSP4" SHOWN)
- SOLENOID VALVE

REUSE OF DOCUMENTS

This document, and the designs incorporated herein, is an instrument of professional service that has been developed, designed and prepared by Harutunian Engineering, Inc., and is not to be used, in whole or part, for any other project without giving written notice to Harutunian Engineering, Inc.

REV No	DATE	DRWN	CHKD	REMARKS
△	–	–	–	–

DESIGNED BY: HEI
DRAWN BY: HEI
SHEET CHK'D BY: HEI
CROSS CHK'D BY: HEI
APPROVED BY: HEI
DATE: APRIL 2016

CDM Smith
Riata Corporate Park, 12357-A Riata Trace Parkway, Suite 210
Austin, TX 78727
Tel: (512) 346-1100
Texas Registration Number F-3043

HARUTUNIAN ENGINEERING, INC.
305 E Huntland Dr, Ste 500; Austin, TX 78752
TBPE Firm Registration No. F-2408

CITY OF AUSTIN, TEXAS - AUSTIN WATER UTILITY
CIP 3333.016

SOUTH AUSTIN REGIONAL WWTP
THICKENER IMPROVEMENTS PROJECT

ELECTRICAL SYMBOLS LEGEND (SHEET 2 OF 3)

STATE OF TEXAS — K. A. HARUTUNIAN — 59181 — REGISTERED PROFESSIONAL ENGINEER — 4/22/2016

PROJECT No 590-104217
FILE NAME: G-E-2

SHEET No
G-E-2

Plotted: 4/22/2016 8:53:20 AM

ELECTRICAL PLAN DRAWING SYMBOLS

LP–1,3 — HOMERUN TO PANEL. CIRCUIT NUMBERS INDICATED.

STPB–PDP1–F — HOMERUN TO POWER/CONTROL/INSTRUMENTATION EQUIPMENT. CONDUIT TAG AS INDICATED. REFER TO FLOOR PLANS, ONE–LINES, AND CONDUIT/WIRE SCHEDULE.

3/4"–3#10(P), 1#10(G) — CONDUIT AND WIRE DESIGNATION. E.G. 3/4" CONDUIT, 3#10 POWER WIRES, 1#10 GROUND WIRE.
(P) POWER (N) NEUTRAL
(G) GROUND (SH) SPACE HEATER
(C) CONTROL (IG) ISOLATED GROUND
(I) INSTRUMENTATION
(SP) SPARE

GROUND ROD (3/4" DIA. X 10'–0" LG.)

GROUND WIRE

CONDUIT RUN OR ITEM DEMOLISHED

CONDUIT RUN CONCEALED IN CEILING, WALLS, SLAB, UNDERGROUND OR UNDER SLAB (WHEN CONDUIT IS LARGER THAN 1/3 OF SLAB THICKNESS OR CANNOT BE PLACED IN CENTER OF SLAB).

CONDUIT RUN EXPOSED

CONDUIT TURNING DOWN

CONDUIT TURNING UP

STUB UP, VERTICAL CONDUIT RUN

FLEXIBLE CONDUIT

CONDUIT SEALING FITTING

CONDUIT CAPPED FOR FUTURE USE
CONDUIT SEAL

SYMBOL FOR UNOCCUPIED CONDUIT

TYPICAL DUCT BANK SECTIONAL VIEW.
FILLED CIRCLE REPRESENTS AN OCCUPIED CONDUIT.
HOLLOW CIRCLE REPRESENTS AN EMPTY CONDUIT.
DO NOT INFER EXACT WIRE COUNT FROM THE SYMBOL SHOWN FOR OCCUPIED CONDUIT. REFER TO APPROPRIATE CONDUIT/WIRE SCHEDULE.

SYMBOL FOR OCCUPIED CONDUIT

ELECTRICAL PLAN DRAWING SYMBOLS

7 / +36 / GFI, WP — DUPLEX CONVENIENCE RECEPTACLE
"7" INDICATES CIRCUIT NUMBER,
MOUNTING HEIGHT AS INDICATED
(36" SHOWN), GFI AND WEATHER–PROOF
AS SHOWN

WELDING RECEPTACLE

SINGLE POLE SWITCH

3 — 3–WAY SWITCH

PHOTOCELL

A / 1 — POLE WITH DEDICATED FOUNDATION/BASE MOUNTED
LIGHTING FIXTURE. "A" INDICATES TYPE,
"1" INDICATES CIRCUIT NUMBER.
MOUNTING HEIGHT AS INDICATED

B / 7 — POLE MOUNTED LIGHTING FIXTURE.
"B" INDICATES TYPE, "7"
INDICATES CIRCUIT NUMBER.
MOUNTING HEIGHT AS INDICATED

B / 10'–0" / 6 — CEILING OR SUSPENDED MOUNTED LIGHTING
FIXTURE. "B" INDICATES TYPE, "6"
INDICATES CIRCUIT NUMBER.
MOUNTING HEIGHT AS INDICATED
(10'–0" SHOWN)

B / 10'–0" / 6 — WALL OR BRACKET MOUNTED LIGHTING
FIXTURE. "B" INDICATES TYPE, "6"
INDICATES CIRCUIT NUMBER.
MOUNTING HEIGHT AS INDICATED
(10'–0" SHOWN)

2 b A — FLUORESCENT LIGHTING FIXTURE.
"A" INDICATES TYPE, "b" INDICATES
WHICH SWITCH CONTROLS,
"2" INDICATES CIRCUIT NUMBER.

LIGHTING/AUXILIARY POWER
PANEL–SURFACE MOUNTED

DISTRIBUTION POWER
PANEL–SURFACE MOUNTED

J OR (J) — JUNCTION BOX

PB OR (PB) — PULL BOX

3/4 — MOTOR
HORSEPOWER WHERE INDICATED
(3/4 HP SHOWN)

DISCONNECT SWITCH OR ENCLOSED CIRCUIT BREAKER

S — SOLENOID VALVE

PIT — INSTRUMENT
PRESSURE INDICATING TRANSMITTER SHOWN
(REFER TO INSTRUMENTATION
SYMBOLS LEGEND FOR ABBREVIATIONS)

T — THERMOSTAT

V.O. — ELECTRICAL VALVE OPERATOR

PROTECTIVE RELAY ABBREVIATIONS

A	CURRENT DISPLAY	50	INSTANTANEOUS OVERCURRENT
PF	POWER FACTOR DISPLAY	51	TIMED OVERCURRENT
RS	PROTECTIVE RELAY STATUS DISPLAY	50/46	INSTANTANEOUS NEGATIVE SEQUENCE OVERCURRENT
VAR	REACTIVE POWER DISPLAY	50/51	INSTANTANEOUS PHASED OVERCURRENT UNIT
V	VOLTAGE DISPLAY	50N/51N	INSTANTANEOUS NEUTRAL OVERCURRENT UNIT
W	REAL POWER DISPLAY	51/46	TIMED NEGATIVE SEQUENCE OVERCURRENT UNIT
WH	WATT–HOUR DISPLAY	50G	INSTANTANEOUS GROUND OVERCURRENT UNIT
27	UNDER VOLTAGE UNIT	51G	TIMED GROUND OVERCURRENT UNIT
37	UNDERCURRENT UNIT	59	OVERVOLTAGE UNIT
38	BEARING PROTECTIVE DEVICE (TEMPERATURE)	74	ALARM RELAY OUTPUT
46	NEGATIVE SEQUENCE OVER CURRENT UNIT	86	LOCKOUT UNIT
48	INCOMPLETE SEQUENCE UNIT	87	DIFFERENTIAL OVERCURRENT UNIT

REUSE OF DOCUMENTS
This document, and the designs incorporated herein, is an instrument of professional service that has been developed, designed and prepared by Harutunian Engineering, Inc., and is not to be used, in whole or part, for any other project without giving written notice to Harutunian Engineering, Inc.

REV No	DATE	DRWN	CHKD	REMARKS
1	–	–	–	–

DESIGNED BY: HEI
DRAWN BY: HEI
SHEET CHK'D BY: HEI
CROSS CHK'D BY: HEI
APPROVED BY: HEI
DATE: APRIL 2016

CDM Smith
Riata Corporate Park, 12357-A Riata Trace Parkway, Suite 210
Austin, TX 78727
Tel: (512) 346-1100
Texas Registration Number F-3043

HARUTUNIAN ENGINEERING, INC.
305 E Huntland Dr, Ste 500; Austin, TX 78752
TBPE Firm Registration No. F-2408

CITY OF AUSTIN, TEXAS - AUSTIN WATER UTILITY
CIP 3333.016
SOUTH AUSTIN REGIONAL WWTP
THICKENER IMPROVEMENTS PROJECT

ELECTRICAL SYMBOLS LEGEND
(SHEET 3 OF 3)

STATE OF TEXAS
K. A. HARUTUNIAN
59181
REGISTERED PROFESSIONAL ENGINEER
4/22/2016

PROJECT No 590–104217
FILE NAME: G–E–3

SHEET No
G-E-3

Plotted: 4/22/2016 8:53:24 AM

GENERAL NOTES:

1. ALL EQUIPMENT SHOWN ON THE DEMOLITION DRAWINGS ARE EXISTING.

2. CROSS–HATCHED LINEWORK SHOWN ON THE DEMOLITION DRAWINGS DENOTES EQUIPMENT TO BE DEMOLISHED UNLESS OTHERWISE NOTED. ALL DEMOLITION ACTIVITIES SHALL ALSO BE FULLY COORDINATED WITH MECHANICAL/STRUCTURAL/CIVIL/ETC.. DEMOLITION ACTIVITIES AND SHALL SUPPORT THE OPERATIONAL REQUIREMENTS OF THE WASTEWATER TREATMENT PLANT DURING ALL PHASES OF CONSTRUCTION. ALL DEMOLISHED ITEMS SHALL REMAIN THE PROPERTY OF THE OWNER. RELOCATE ALL DEMOLISHED ITEMS TO LOCATION(S) SPECIFIED BY OWNER AT NO ADDITIONAL COST TO THE OWNER.

3. EQUIPMENT/CONDUIT TAGS/NAMES HAVE BEEN ARBITRARILY ASSIGNED TO AID IN THE DRAWINGS. SOME EXISTING TAGS/NAMES HAVE BEEN USED WHERE POSSIBLE. CONTRACTOR SHALL MAKE EXTENSIVE VERIFICATION OF EXISTING EQUIPMENT PRIOR TO COMMENCING FULL SCALE DEMOLITION/RENOVATION ACTIVITIES.

4. SHOULD A POWER OUTAGE TO A FACILITY BE REQUIRED, THE CONTRACTOR SHALL REQUEST SUCH AN OUTAGE IN WRITING NO LESS THAN NINETY–SIX (96) HOURS IN ADVANCE. CONTRACTOR'S WRITTEN REQUEST SHALL IDENTIFY THE DESIRED DATE, TIME, DURATION, AND PURPOSE OF THE REQUESTED DAY UNLESS HE/SHE OBTAINS A WRITTEN APPROVAL FROM THE OWNER AUTHORIZING THE OUTAGE. THE OWNER RESERVES THE RIGHT TO MODIFY OR REJECT ANY REQUEST SUCH AN OUTAGE. MODIFICATION OR REJECTION OF THE CONTRACTORS REQUEST BE THE OWNER SHALL NOT BE CONSIDERED REASON FOR DELAYS IN THE CONSTRUCTION SCHEDULE. UNLESS OTHERWISE NOTED, THE DURATION OF THE OUTAGE SHALL BE LIMITED TO FOUR (4) HOURS OR LESS. THE OWNER RESERVES THE RIGHT TO LIMIT THE DURATION OF THE OUTAGE TO LESS THAN 4 HOURS. MODIFICATION OF THE OUTAGE DURATION BY THE OWNER SHALL NOT BE CONSIDERED REASON FOR DELAYS IN THE CONSTRUCTION SCHEDULE.

5. VERIFY LOCATION OF EXISTING FACILITIES PRIOR TO CONSTRUCTION OF FACILITIES PROPOSED IN THIS CONTRACT. TAKE CARE TO AVOID DAMAGE TO EXISTING FACILITIES. REPAIR ANY FACILITY DAMAGED IN THE COURSE OF CONSTRUCTION OF ANY PART OF THIS CONTRACT TO ITS ORIGINAL OPERATING CONDITION IMMEDIATELY, WITH REPAIR CREWS WORKING 24 HOURS PER DAY UNTIL THE DAMAGE IS REPAIRED. (NO SEPARATE PAY).

6. THE CONTRACTOR SHALL BE AWARE THAT WHEN ANY EXISTING EQUIPMENT IS DISCONNECTED, REMOVED, RELOCATED OR OTHERWISE MODIFIED, THE POSSIBILITY MAY EXIST FOR SUCH ACTION TO LEAD TO INTERRUPTION OF OPERATION OF THE TREATMENT PLANT IF EXTREME CARE, VERIFICATION, AND VALIDATION IS NOT CAREFULLY EXERCISED PRIOR TO COMMENCEMENT OF SUCH ACTIVITY. THE CONTRACTOR SHALL KNOW THAT ANY INTERRUPTION TO THE CONTINUITY OF TREATMENT PLANT OPERATION AT ITS RATED CAPACITY IS UNACCEPTABLE DURING THE CONSTRUCTION COURSE OF THIS PROJECT. HOWEVER, SHOULD ANY INTERRUPTION TO THE TREATMENT PLANT OPERATION OCCUR FOR ANY UNFORESEEN REASON, WHETHER TOTALLY ACCIDENTAL OR DUE TO IMPROPER FIELD INVESTIGATION AND IMPROPER PLANNING PRIOR TO COMMENCEMENT OF THE ELECTRICAL/INSTRUMENTATION DEMOLITION EFFORT, THE RESPONSIBLE CONTRACTOR SHALL DETERMINE THE PROBLEM, CORRECT IT, AND START UP THE INTERRUPTED EQUIPMENT WITHIN A CERTAIN TIME PERIOD AS DETERMINED BY THE OWNER AT NO ADDITIONAL COST TO THE OWNER. THE CONTRACTOR SHALL PROVIDE CONTINUOUS, 24–HOUR, LABOR, EQUIPMENT, MATERIAL, AND ACCESSORIES UNTIL SUCH TIME THAT ANY EFFECTED EQUIPMENT OPERATES AS PREVIOUSLY OPERATED, AT NO ADDITIONAL COST TO THE OWNER AND TO THE OWNER'S SATISFACTION.

7. THE CONTRACTOR IS RESPONSIBLE FOR VERIFYING THE APPLICABLE CONDUIT/WIRING TO EXISTING EQUIPMENT WHETHER SHOWN HERE OR NOT. THE CONTRACTOR SHALL EXERCISE EVERY PRECAUTION TO ELIMINATE HAZARDS IN DISCONNECTING ANY DEVICE FROM AN ELECTRICAL CIRCUIT. THE CONTRACTOR MUST TAKE GREAT CARE FOR THERE ARE NO AVAILABLE AS BUILT RECORDS ACCURATELY AND COMPLETELY IDENTIFYING THE EXISTING ROUTING OF ALL DUCTBANK/CONDUIT BETWEEN THE VARIOUS EXISTING EQUIPMENT AND THEIR COORDINATION WITH THE EXISTING ELECTRICAL SYSTEM. THEREFORE THE CONTRACTOR IS TO EXERCISE EXTREME CARE, VERIFY THE ROUTING OF EXISTING DUCTBANK/CONDUIT PRIOR TO FULL SCALE DEMOLITION OR RENOVATION ACTIVITIES. FOLLOWING THE DISCOVERY VERIFICATION OF THE EXISTING FIELD CONDITIONS, SHOULD ADJUSTMENTS BECOME A NECESSITY TO THE EXISTING OR PROPOSED SYSTEM (AS APPLICABLE), THE EXISTING DISCOVERED FIELD CONDITIONS MUST BE BROUGHT TO THE OWNERS ATTENTION FOR EXECUTION OF THE NECESSARY ADJUSTMENTS/MODIFICATIONS.

8. THE INTENT IS TO KEEP THE EXISTING FACILITIES OPERATIONAL AT ALL TIMES. COORDINATE WITH THE OWNER FOR SCHEDULING OF EQUIPMENT/POWER/INSTRUMENTATION AND CONTROL/PROCESS/ETC. OUTAGES REQUIRED PRIOR TO COMMENCING DEMOLITION/MODIFICATION ACTIVITIES.

9. SHOULD PROBLEMS OCCUR UPON THE ACTIVATION OF POWER, CORRECTION SHALL BE MADE PROMPTLY AT NO EXPENSE TO THE OWNER.

10. ALL ELECTRICAL SWITCHING, DE–ENERGIZATION OF LOADS, ENERGIZATION OF LOADS, ETC., SHALL BE PERFORMED IN THE PRESENCE OF, AND WITH THE CONSENT OF, THE OWNER.

11. NOT ALL REQUIREMENTS ASSOCIATED WITH THE INSTALLATION OF THE PROPOSED ELECTRICAL SYSTEM ARE SHOWN ON THE DEMOLITION DRAWINGS. REFER TO OTHER PROPOSED CONTRACT DOCUMENTS FOR ADDITIONAL REQUIREMENTS.

12. THE OWNER'S EXISTING EQUIPMENT IS IN PERFECT WORKING CONDITION. SHOULD THE EXISTING EQUIPMENT, ITS ASSOCIATED INTERCONNECT CONDUIT/WIRE, ETC., AS APPLICABLE, BE DAMAGED OR BECOME OTHERWISE UNUSABLE DURING THE CONSTRUCTION COURSE OF THIS PROJECT, THE RESPONSIBLE CONTRACTOR SHALL DETERMINE THE PROBLEM, CORRECT IT, AND FURNISH AND INSTALL ALL NECESSARY WIRING/HARDWARE/ETC., TO MATCH EXISTING AND MAKE ALL FINAL CONNECTIONS SUCH THAT ALL AFFECTED EQUIPMENT OPERATES AS PREVIOUSLY OPERATED TO THE OWNERS SATISFACTION AT NO ADDITIONAL COST TO THE OWNER.

13. REFER TO THE CONSTRUCTION SEQUENCING REQUIREMENTS ELSEWHERE IN THE CONTRACT DOCUMENTS FOR ADDITIONAL REQUIREMENTS.

GENERAL NOTES (CONTINUED):

14. PROPOSED ITEMS SHOWN ON THE PROPOSED/RENOVATION/MODIFICATION DRAWINGS ARE SHOWN IN DARK LINEWORK. EXISTING AND FUTURE ITEMS ARE SHOWN IN LIGHT LINEWORK, UNLESS NOTED OTHERWISE.

15. THE ACTUAL REQUIRED SIZE OF CONDUIT ENTRANCE AREAS TO BE DETERMINED BY THE MANUFACTURER. THE LOCATION AND SIZE OF THE CONDUIT ENTRANCE AREAS FOR THE SWITCHGEAR, MOTOR CONTROL CENTER, SWITCHBOARD, TRANSFORMER, VARIABLE FREQUENCY DRIVE, ETC., AS APPLICABLE, SHALL BE COORDINATED WITH THE APPLICABLE STRUCTURE PLANS. REFER TO THE APPLICABLE CIVIL/STRUCTURAL/ MECHANICAL/ELECTRICAL, ETC. DRAWINGS.

16. LOCATIONS AND SIZES OF ELECTRICAL EQUIPMENT ARE APPROXIMATE. CONTRACTOR SHALL FIELD VERIFY ACTUAL CONDITIONS AND ALL POINTS OF CONNECTION PRIOR TO INSTALLATION OF PROPOSED COMPONENTS.

17. NOT ALL ELECTRICAL/MECHANICAL/STRUCTURAL/CIVIL/ETC. COMPONENTS ARE SHOWN ON EACH DRAWING. REFER TO THE CIVIL/MECHANICAL/STRUCTURAL DRAWINGS FOR MANY OF THE GENERAL LOCATIONS, QUANTITY, AND TYPES OF PROPOSED EQUIPMENT, INSTRUMENTS, ETC., TO BE INSTALLED. IN ADDITION, REFER TO THE APPLICABLE ELECTRICAL DRAWINGS AND MAKE ALL FINAL CONNECTIONS.

18. CONTRACTOR SHALL COORDINATE ROUTE OF PROPOSED CONDUIT/WIRE WITH PROPOSED CIVIL/MECHANICAL/ STRUCTURAL/ELECTRICAL SYSTEMS/COMPONENTS/ EQUIPMENT/UTILITIES, ETC.

19. CONTRACTOR SHALL SIZE ALL PULL/JUNCTION BOXES PER, AND IN ACCORDANCE WITH, THE REQUIREMENTS OF THE NATIONAL ELECTRICAL CODE (N.E.C.).

20. EXACT LOCATIONS OF MECHANICAL/STRUCTURAL/CIVIL COMPONENTS ARE NOT SHOWN ON THE ELECTRICAL, INSTRUMENTATION, OR CONTROL SYSTEM DRAWINGS. REFER TO MECHANICAL/STRUCTURAL/CIVIL DRAWINGS FOR EXACT LOCATIONS OF MECHANICAL/STRUCTURAL/CIVIL ITEMS.

21. EXTREME CARE MUST BE TAKEN FOR THE INSTALLATION OF THE ELECTRICAL DUCT BANKS SINCE THERE ARE NO AVAILABLE AS BUILT RECORDS OF PROFILES IDENTIFYING THE LOCATION AND INVERT ELEVATIONS OF EXISTING UNDERGROUND ELECTRICAL SYSTEM (CONDUITS, DUCT BANK, GROUNDING NETWORK, ETC.) AND UNDERGROUND MECHANICAL PIPING. ROUTING OF NEW DUCT BANK SHOWN IS BASED ON SCHEMATIC KNOWLEDGE OF THE SIZE OF MECHANICAL PIPING AND THEIR APPROXIMATE SIZE AND/OR LOCATION. NO DATA IS AVAILABLE PERTAINING TO EXISTING UNDERGROUND ELECTRICAL DUCT BANK SYSTEM AND ITS COORDINATION WITH THE UNDERGROUND MECHANICAL SYSTEM. THEREFORE THE CONTRACTOR IS TO EXERCISE EXTREME CARE, VERIFY LOCATION/ROUTING/ELEVATION OF EXISTING UNDERGROUND UTILITIES PRIOR TO COMMENCING FULL SCALE INSTALLATION PROCESS OF THE PROPOSED DUCT BANK SYSTEM. FOLLOWING THE DISCOVERY VERIFICATION OF EXISTING UNDERGROUND UTILITIES, SHOULD ADJUSTMENT/MODIFICATIONS BECOME A NECESSITY TO EITHER THE EXISTING OR PROPOSED SYSTEM (AS APPLICABLE), THE EXISTING DISCOVERED FIELD CONDITIONS MUST BE BROUGHT TO THE OWNER'S ATTENTION FOR EXECUTION OF THE NECESSARY ADJUSTMENTS/MODIFICATIONS.

22. CONDUIT SYSTEM CORRIDORS SHOWN REPRESENT MINIMUM SPACE REQUIRED FOR THE CONDUIT/WIRE SHOWN ON THE APPLICABLE CONDUIT/WIRE SCHEDULES AND PANELBOARD SCHEDULES. SHOULD ADDITIONAL CONDUIT/WIRE NOT SHOWN ON THE CONDUIT/WIRE SCHEDULES AND/OR PANELBOARD SCHEDULES BE ROUTED IN THE CONDUIT SYSTEM CORRIDORS (I.E., CONDUIT/WIRE DEDICATED FOR INTERCONNECTION OF HVAC, SECURITY, GAATN/TELEPHONE, FIRE ALARM, AS APPLICABLE, CONDUIT/WIRE DEDICATED FOR INTERCONNECTION BETWEEN INDIVIDUAL HVAC, SECURITY, GAATN/TELEPHONE, FIRE ALARM, ETC.), THE CONTRACTOR SHALL DETERMINE AND MAKE ANY NECESSARY ADJUSTMENTS TO THE CONDUIT CORRIDOR SIZE/ROUTING REQUIRED, ANY ASSOCIATED PULLBOX SIZE ADJUSTMENTS REQUIRED, ANY ASSOCIATED CONDUIT SUPPORT/RACKING ADJUSTMENTS REQUIRED, FURNISH AND INSTALL ALL OF THE NECESSARY MATERIALS/PULLBOXES/HARDWARE/ETC., TO FACILITATE ANY SUCH ADJUSTMENTS, AND FULLY COORDINATE ANY SUCH ADJUSTMENTS WITH ALL MECHANICAL/HVAC/ STRUCTURAL/ETC., UTILITIES/EQUIPMENT/WALL PENETRATIONS/CEILING PENETRATIONS/ETC., AS APPLICABLE, AND MAKE ALL FINAL CONNECTIONS, TO THE SATISFACTION OF THE OWNER AT NO ADDITIONAL COST TO THE OWNER.

23. THE MAJORITY OF THE CONDUIT/WIRE ROUTES SHOWN ON THE DRAWINGS ARE SHOWN PARTIALLY (WITH "HOMERUNS"). ADDITIONALLY, CERTAIN SPECIFIC CONDUIT/WIRE/PULLBOX/ETC., LOCATION/ROUTING REQUIREMENTS ARE SHOWN ON THE DRAWINGS. THE CONTRACTOR SHALL DETERMINE THE EXACT LOCATION/ROUTING FOR, FURNISH, AND INSTALL THE ENTIRE LENGTH OF THE PROPOSED CONDUIT/WIRE, REQUIRED INTERMEDIATE PULLBOXES, RELATED FITTINGS, AND ALL REQUIRED MOUNTING HARDWARE AND MAKE ALL FINAL CONNECTIONS. THE CONTRACTOR SHALL SIZE ALL NECESSARY REQUIRED PULLBOXES TO FACILITATE THE PROPOSED CONDUIT/WIRE INSTALLATION. ALSO REFER TO THE APPLICABLE CONDUIT/WIRE SCHEDULE, ONE–LINE DIAGRAMS, FLOOR PLAN DRAWINGS, ETC., TO AIDE IN THE LOCATION/ROUTING OF THE PROPOSED CONDUIT/WIRE/PULLBOXES/MOUNTING HARDWARE/ETC. THE CONTRACTOR SHALL COORDINATE THE INSTALLATION OF THE PROPOSED ELECTRICAL EQUIPMENT WITH THE INSTALLATION OF THE PROPOSED CIVIL/MECHANICAL/STRUCTURAL/ETC. UTILITIES, AND THE EXISTING CIVIL/MECHANICAL/STRUCTURAL/ETC. UTILITIES.

24. REFER TO THE APPLICABLE EQUIPMENT LOCATION PLAN FOR TAGGING OF MAJOR ELECTRICAL, INSTRUMENTATION, AND CONTROL EQUIPMENT ASSOCIATED WITH EACH PROCESS AREA.

GENERAL NOTES (CONTINUED):

25. THE EQUIPMENT ARRANGEMENT PLAN DRAWINGS ARE INTENDED, IN PART, TO PROVIDE THE APPROXIMATE LOCATION AND CORRESPONDING EQUIPMENT TAGGING FOR MAJOR PIECES OF ELECTRICAL, INSTRUMENTATION, AND CONTROL EQUIPMENT INSIDE OF THE ASSOCIATED BUILDING. REFER TO THE PLANS FOR SPECIFIC ADDITIONAL WORK ACTIVITIES RELATED TO THE EQUIPMENT SHOWN AND FOR ADDITIONAL REQUIREMENTS.

26. CONTRACTOR SHALL SIZE, FURNISH, AND INSTALL ALL CONDUIT/WIRE, PULLBOXES, AND ALL NECESSARY RELATED HARDWARE TO INTERCONNECT ALL PROPOSED VENDOR EQUIPMENT PACKAGED SYSTEM SUB–COMPONENTS WITH THEIR RESPECTIVE PROPOSED CONTROL PANEL/MOTOR CONTROL CENTER/ETC., AS APPLICABLE. FURNISH AND INSTALL SUITABLE SUPPORT CHANNELS/CONCRETE EQUIPMENT PAD AS REQUIRED TO SUPPORT THE CONTROL PANEL/MOTOR CONTROL CENTER/ETC., AS APPLICABLE, INSTALL THE CONTROL PANEL/MOTOR CONTROL CENTER/ ETC., AND MAKE ALL FINAL CONNECTIONS PER THE RECOMMENDATIONS AND WIRING DIAGRAMS PROVIDED BY THE EQUIPMENT MANUFACTURER. ALSO ADHERE TO THE REQUIREMENTS OF THE NATIONAL ELECTRICAL CODE (N.E.C) AND THE SPECIFICATIONS. SHOULD ADDITIONAL FIELD INTERCONNECT WIRING BE REQUIRED TO FACILITATE THE FUNCTIONAL OPERATION OF THE PACKAGED CONTROL SYSTEM, THE CONTRACTOR SHALL SIZE, FURNISH, AND INSTALL THE ADDITIONAL CONDUIT/WIRE, FIELD ROUTE THE PROPOSED CONDUIT/WIRE PER THE SPECIFICATIONS, ADD ALL NECESSARY TERMINAL BLOCKS, PLC I/O MODULES, ETC., COMPLETE WITH ALL NECESSARY WIRING TO FACILITATE A COMPLETE AND FUNCTIONAL INSTALLATION, AND MAKE ALL FINAL CONNECTIONS PER THE MANUFACTURER'S RECOMMENDATIONS, THE MANUFACTURER'S WIRING DIAGRAMS, AND PERFORM ALL ASPECTS OF THE WORK TO THE SATISFACTION OF THE OWNER AT NO ADDITIONAL COST TO THE OWNER.

27. CERTAIN SECTIONS OF THE DIVISION 16 SPECIFICATIONS CONTAIN ATTACHMENTS. THESE ATTACHMENTS INCLUDE, BUT ARE NOT LIMITED TO THE FOLLOWING:
    A. LIGHTING FIXTURE SCHEDULE

    THE CONTRACTOR IS REMINDED THAT ALTHOUGH THESE ATTACHMENTS ARE PRESENTED IN THE CONTRACT SPECIFICATIONS, THEY SHALL BE CONTINUALLY MAINTAINED, I.E. "BLUE–LINED" AS DESCRIBED IN SECTION 1300, BY THE CONTRACTOR ALONG WITH THE OTHER CONTRACT DOCUMENTS AS RECORD DRAWINGS THROUGHOUT THE ENTIRE PROJECT DURATION AND SUBMITTED AS PART OF THE "AS–BUILT" DRAWINGS. ALSO REFER TO THE SPECIFICATIONS.

28. REFER TO AND COMPLY WITH THE GENERAL NOTES SHOWN ON THE INSTRUMENTATION GENERAL NOTES DRAWING NO. [G–I–2].

ALL GENERAL NOTES LISTED HERE ARE APPLICABLE FOR ALL ELECTRICAL, INSTRUMENTATION, AND CONTROL SYSTEM DRAWINGS IN ADDITION TO ANY GENERAL NOTES SHOWN ON EACH INDIVIDUAL DRAWING.

REUSE OF DOCUMENTS

This document, and the designs incorporated herein, is an instrument of professional service that has been developed, designed and prepared by Harutunian Engineering, Inc., and is not to be used, in whole or part, for any other project without giving written notice to Harutunian Engineering, Inc.

REV No	DATE	DRWN	CHKD	REMARKS
△	–	–	–	–

DESIGNED BY: HEI
DRAWN BY: HEI
SHEET CHK'D BY: HEI
CROSS CHK'D BY: HEI
APPROVED BY: HEI
DATE: APRIL 2016

CDM Smith
Riata Corporate Park, 12357-A Riata Trace Parkway, Suite 210
Austin, TX 78727
Tel: (512) 346-1100
Texas Registration Number F-3043

HARUTUNIAN ENGINEERING, INC.
305 E Huntland Dr, Ste 500; Austin, TX 78752
TBPE Firm Registration No. F-2408

CITY OF AUSTIN, TEXAS - AUSTIN WATER UTILITY
CIP 3333.016

SOUTH AUSTIN REGIONAL WWTP
THICKENER IMPROVEMENTS PROJECT

ELECTRICAL
GENERAL NOTES

STATE OF TEXAS
K. A. HARUTUNIAN
59181
REGISTERED PROFESSIONAL ENGINEER
4/22/2016

PROJECT No 590–104217
FILE NAME: G–E–4

SHEET No
G-E-4

Plotted: 4/22/2016 8:53:28 AM

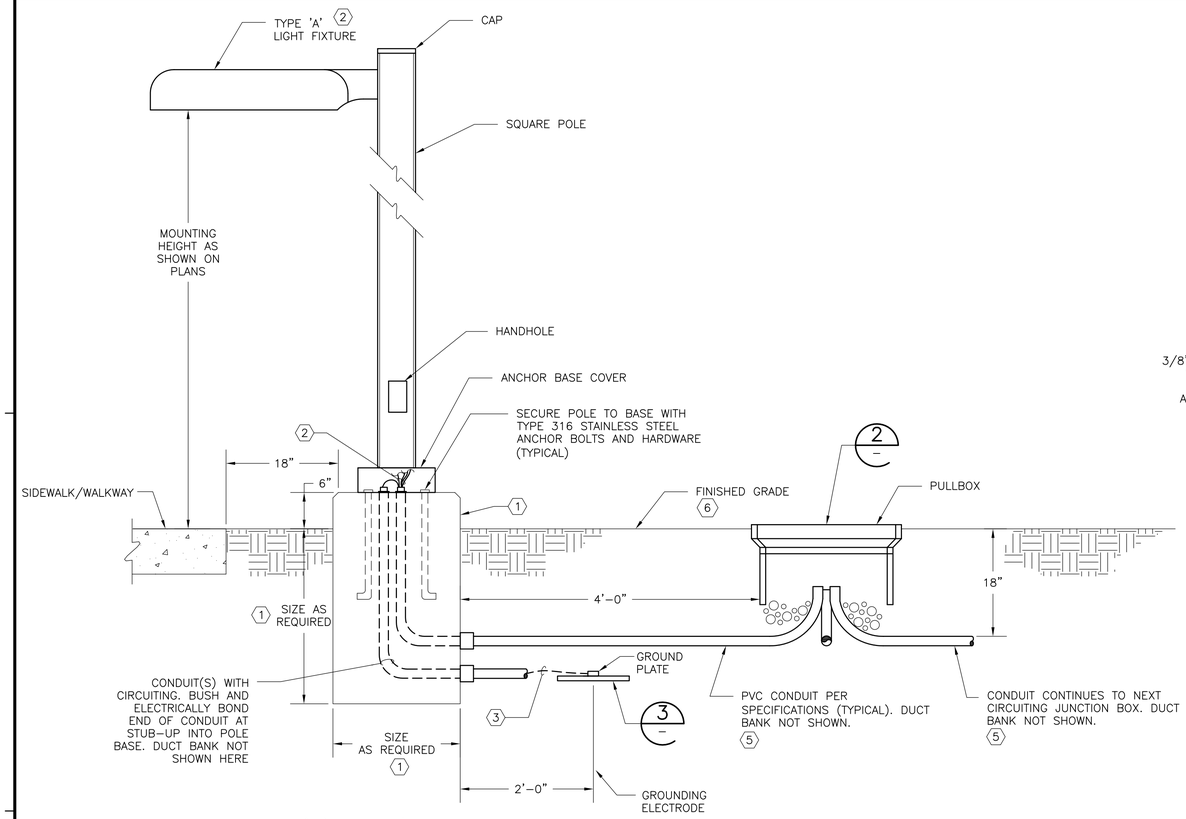

TYPE 'A' POLE/BASE LIGHT FIXTURE TYPICAL MOUNTING DETAIL (1)

N.T.S.

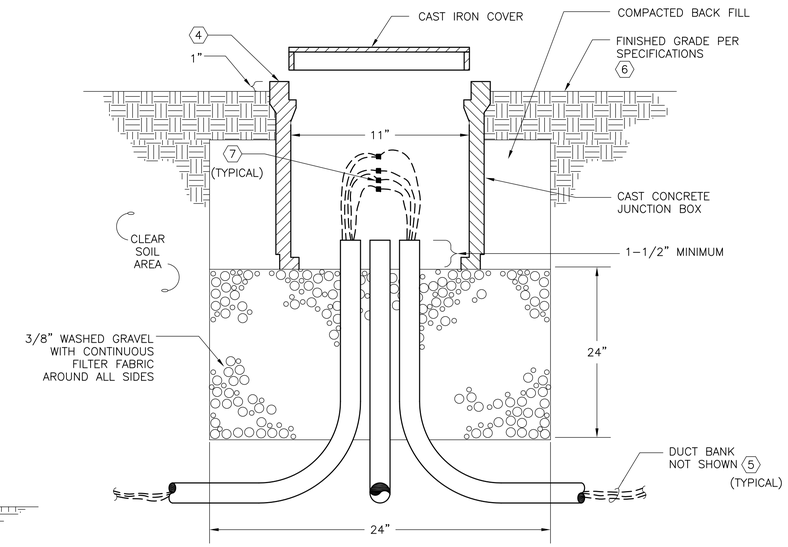

WALKWAY/SITE LIGHT FIXTURE CIRCUITING JUNCTION BOX INSTALLATION DETAIL (2)

N.T.S.

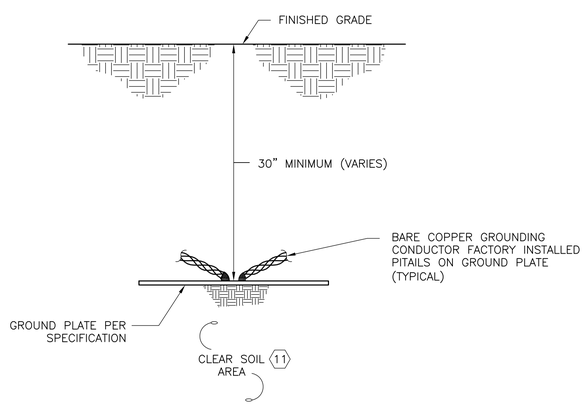

GROUND PLATE INSTALLATION DETAIL (3)

N.T.S.

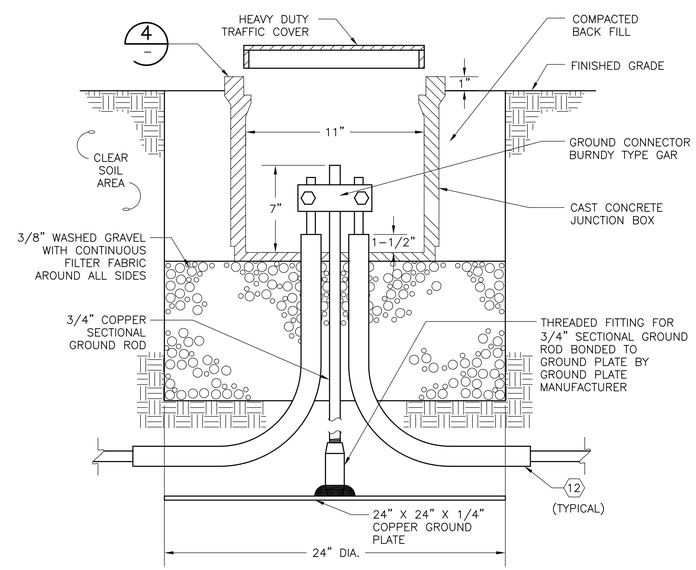

TYPICAL GROUND TEST WELL INSTALLATION DETAIL (4)

N.T.S.

KEY NOTES:

(1) FURNISH AND INSTALL DEDICATED FOUNDATION FOR EACH POLE. REFER TO CIVIL/STRUCTURAL DRAWINGS FOR FOUNDATION REQUIREMENTS.

(2) (WITHOUT SPLICES) CIRCUITING EXTENDS CONTINUOUSLY INSIDE POLE BETWEEN LIGHT FIXTURE AND EXTERNAL LIGHT FIXTURE CIRCUITING JUNCTION BOX.

(3) 1" CONDUIT WITH 1-#1 STRANDED COPPER GROUND CONDUCTOR WITH GREEN INSULATION. STUB-UP IN FIXTURE BASE AND TERMINATE AT POLE GROUND TERMINAL. GROUND CONDUCTOR TO EXTEND A MINIMUM OF 30" INTO POLE FOR FUTURE USE.

(4) FURNISH AND INSTALL PRECAST CONCRETE PULLBOX COMPLETE WITH LID. BOX SHALL HAVE MINIMUM INTERIOR DIMENSIONS OF 11" WIDE X 14 1/4" DEEP AND 11" TALL. SUBMIT SHOP DRAWINGS AND O&M MANUALS PER SECTION 16550 OF THE CONTRACT SPECIFICATIONS. BOX SHALL BE AS MANUFACTURED BY OLD CASTLE OR APPROVED EQUAL. OLDCASTLE PRODUCTS PART NUMBERS ARE:

A. NUMBER 36T CAST IRON COVER-#01701430.

B. REINFORCED CONCRETE BODY #9700086

C. PULL BOX SIZE; INSIDE DIMENSIONS 10-1/2"X17"X12" (MINIMUM)

(5) LIGHT FIXTURE CIRCUITING CONDUIT/WIRE CONTINUES TO NEAREST LIGHT FIXTURE/JUNCTION BOX. ALTHOUGH NOT SHOWN HERE, SPACE AND ENCASE IN REINFORCED CONCRETE PER THE DETAILS ON DRAWING NO. [G-E-13].

(6) COORDINATE LOCATION OF FINISHED GRADE (PARKING LOT/SIDEWALK/NATURAL GRADE/ETC.) WITH SITE/CIVIL DRAWINGS. SLOPE FINISHED GRADE AWAY FROM TEST WELL LID TO PREVENT WATER ACCUMULATION IN VICINITY OF WELL LID.

(7) TERMINATE WIRING INSIDE OF LIGHT FIXTURE CIRCUITING JUNCTION BOX WITH SUBMERSIBLE ROADWAY LIGHTING CONNECTOR BLOCKS PER SPECIFICATIONS.

(8) 250 KCMIL STRANDED COPPER GROUNDING CONDUCTOR IN 1-1/2" PVC CONDUIT, DIRECT BURIED A MINIMUM OF 30 INCHES BELOW FINISHED GRADE (NOT CONCRETE ENCASED). EACH PVC CONDUIT SHALL EXTEND A MINIMUM OF 12 INCHES HORIZONTALLY FROM THE OUTSIDE EDGE OF THE TEST WELL CONCRETE CAST JUNCTION BOX.

(9) CONTRACTOR SHALL COORDINATE THE INSTALLATION OF, AND PROTECTION OF, THE ENTIRE GROUNDING NETWORK (GROUND ELECTRODES AND ASSOCIATED GROUNDING CONDUCTORS IN AND AROUND THE STRUCTURE) WITH CIVIL/STRUCTURAL/MECHANICAL DRAWINGS/CONTRACTORS DURING ALL PHASES OF CONSTRUCTION.

(10) COORDINATE THE LOCATION/INSTALLATION OF EACH GROUND ELECTRODE WITH CIVIL/STRUCTURAL/MECHANICAL/ELECTRICAL DRAWINGS/CONTRACTORS TO AVOID CONFLICTS. SLIGHT RELOCATION OF GROUND ELECTRODES AND/OR GROUNDING CONDUCTORS FROM THAT SHOWN ON GROUNDING PLAN MAY BE NECESSARY TO AVOID CONFLICTS. ARRANGE/INSTALL GROUND ELECTRODES IN ORDER TO MAINTAIN A MINIMUM DISTANCE OF 10'-0" FROM ANY OTHER GROUND ELECTRODE.

(11) GROUNDING PLATE SHALL BE LOCATED ONLY IN AREAS OF NATURAL CLEAN SOIL OR AREAS OF SPECIFICATION COMPLIANT, COMPACTED BASED MATERIAL. GROUNDING PLATE SHALL NOT BE LOCATED IN AREAS OF SAND OR LOOSE ROCK.

(12) #250 MCM STRANDED COPPER GROUNDING CONDUCTOR IN 1-1/2" PVC CONDUIT, DIRECT BURIED A MINIMUM OF 30" BELOW FINISHED GRADE (NOT CONCRETE ENCASED). EACH PVC CONDUIT SHALL EXTEND A MINIMUM OF 12" HORIZONTALLY FROM THE OUTSIDE EDGE OF THE TEST WELL CONCRETE CAST JUNCTION BOX.

REUSE OF DOCUMENTS

This document, and the designs incorporated herein, is an instrument of professional service that has been developed, designed and prepared by Harutunian Engineering, Inc., and is not to be used, in whole or part, for any other project without giving written notice to Harutunian Engineering, Inc.

REV No	DATE	DRWN	CHKD	REMARKS
1	–	–	–	–

DESIGNED BY: HEI
DRAWN BY: HEI
SHEET CHK'D BY: HEI
CROSS CHK'D BY: HEI
APPROVED BY: HEI
DATE: APRIL 2016

CDM Smith
Riata Corporate Park, 12357-A Riata Trace Parkway, Suite 210
Austin, TX 78727
Tel: (512) 346-1100
Texas Registration Number F-3043

HARUTUNIAN ENGINEERING, INC.
305 E Huntland Dr, Ste 500; Austin, TX 78752
TBPE Firm Registration No. F-2408

CITY OF AUSTIN, TEXAS - AUSTIN WATER UTILITY
CIP 3333.016

SOUTH AUSTIN REGIONAL WWTP
THICKENER IMPROVEMENTS PROJECT

ELECTRICAL DETAILS
(SHEET 1 OF 9)

STATE OF TEXAS
K. A. HARUTUNIAN
59181
REGISTERED PROFESSIONAL ENGINEER
4/22/2016

PROJECT No 590-104217
FILE NAME: G-E-5

SHEET No
G-E-5

Plotted: 4/22/2016 9:29:51 AM

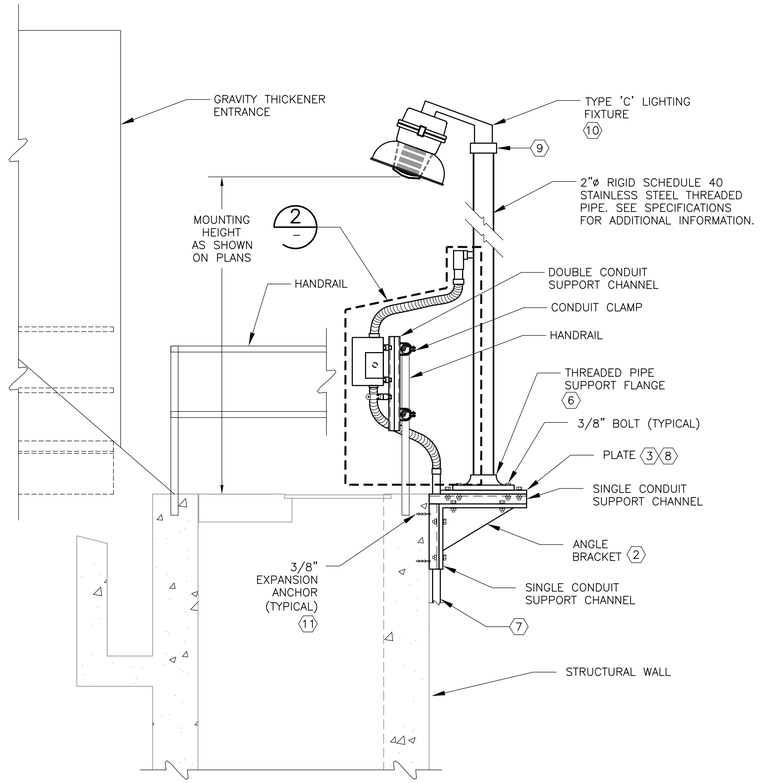

TYPE 'C' LIGHTING FIXTURE 1
TYPICAL MOUNTING DETAIL 1
N.T.S.

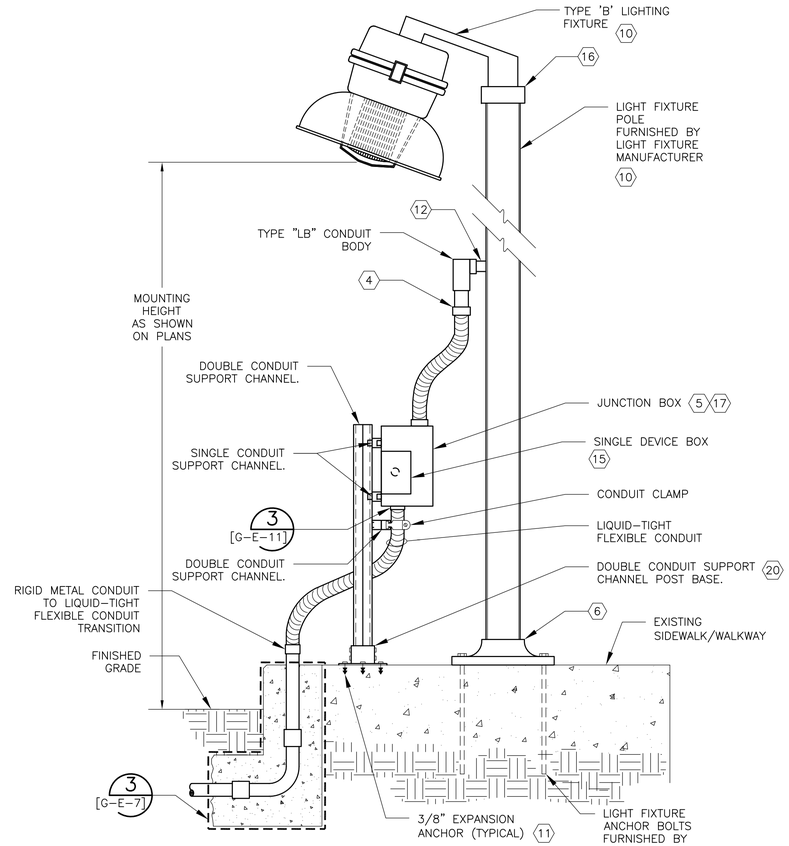

TYPE 'B' LIGHTING FIXTURE 1
TYPICAL MOUNTING DETAIL 2
N.T.S.

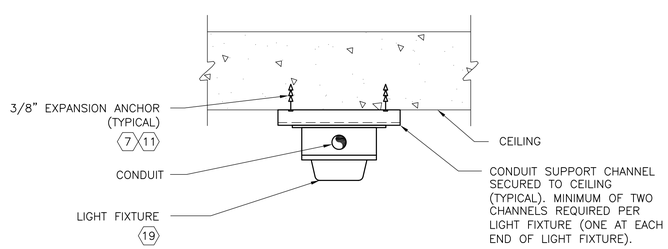

TYPE 'E' LIGHTING FIXTURE 1
TYPICAL MOUNTING DETAIL 3
N.T.S.

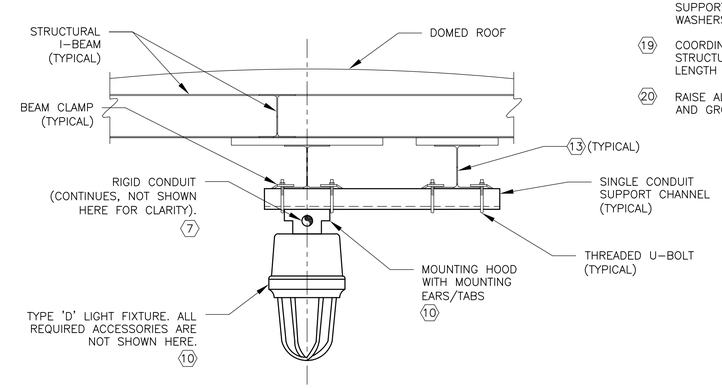

TYPE 'D' LIGHTING FIXTURE 1 18
CEILING TYPICAL MOUNTING DETAIL 4
N.T.S.

KEY NOTES:

1. ALL MOUNTING HARDWARE, FITTINGS, BRACKETS, BOLTS, NUTS, WASHERS, PIPING, BOXES, LIGHT HOUSING, TO BE CORROSION RESISTANT. REFER TO SPECIFICATIONS FOR ADDITIONAL INFORMATION.
2. STAINLESS STEEL BRACKET.
3. 1/8" THICK, #316 STAINLESS STEEL PLATE SECURED TO CHANNEL.
4. LIQUID-TIGHT FITTING. REFER TO SPECIFICATIONS FOR ADDITIONAL INFORMATION.
5. SIZE JUNCTION BOX PER SPECIFICATIONS
6. STAINLESS STEEL #316 THREADED PIPE FLANGE. USE DOUBLE LUG NUTS FOR LIGHT POLE LEVELING.
7. FURNISH AND INSTALL PROPOSED CONDUIT/WIRE/MOUNTING HARDWARE/SYSTEM ASSEMBLY AND NECESSARY MOUNTING CHANNEL AND RELATED HARDWARE TO SECURE CONDUIT/CHANNEL TO STRUCTURAL WALL/CEILING.
8. COORDINATE LIGHT FIXTURE MOUNTING PLATE REQUIREMENTS AND LIGHT FIXTURE MOUNTING PLATE LOCATIONS ALONG STRUCTURAL WALL WITH OWNER.
9. ADAPTER HUB TO FACILITATE 1-1/2" STANCHION MOUNT TO 2" DIAMETER POLE.
10. PROVIDED BY LIGHT FIXTURE MANUFACTURER. REFER TO LIGHTING PLAN AND FIXTURE SCHEDULE FOR ADDITIONAL INFORMATION ON LIGHT, LIGHT POLE/FIXTURE.
11. THE STRUCTURE TYPE TO WHICH EQUIPMENT AND/OR SUPPORT SYSTEMS SHALL BE MOUNTED MAY VARY. THE EQUIPMENT ANCHOR TYPE SHALL CORRESPOND TO THE TYPE OF STRUCTURE TO WHICH THE EQUIPMENT AND/OR SUPPORT SYSTEMS ARE ATTACHED. THE DRAWING REFLECTS A SPECIFIC STRUCTURE TYPE WITH CORRESPONDING ANCHOR TYPE AND IS TYPICAL FOR THE STRUCTURE TYPE SHOWN. TO ATTACH EQUIPMENT/SUPPORT SYSTEMS TO PRE-CAST/CAST-IN-PLACE CONCRETE WALL/FLOOR SLAB STRUCTURE TYPES, FURNISH AND INSTALL BOLT WITH EPOXY INSERT ANCHOR. TO ATTACH EQUIPMENT/SUPPORT SYSTEMS TO A CONCRETE MASONRY UNIT (CMU)/BRICK WALL STRUCTURE TYPE, FURNISH AND INSTALL BOLT WITH EXPANSION ANCHOR. TO ATTACH EQUIPMENT/SUPPORT SYSTEMS TO STEEL STRUCTURE TYPE, FURNISH AND INSTALL BOLTING ASSEMBLY. COORDINATE ATTACHMENT REQUIREMENTS WITH STRUCTURAL AND SPECIFICATIONS.
12. THREADED NIPPLE. REFER TO SPECIFICATIONS FOR ADDITIONAL INFORMATION.
13. THE GRAVITY THICKENER ROOF MANUFACTURER SHALL PROVIDE SUPPLEMENTAL STRUCTURAL FRAMING TO SUPPORT LIGHT FIXTURE. COORDINATE ALL REQUIREMENTS WITH GRAVITY THICKENER ROOF MANUFACTURER.
14. COORDINATE LIGHT FIXTURE BASE MOUNTING WITH THE LIGHT FIXTURE MANUFACTURER.
15. DEVICE BOX WITH LIGHT SWITCH (WIRED TO PROVIDE LOCAL CONTROL OF LIGHT FIXTURE). FURNISH AND INSTALL PER THE DETAIL DRAWINGS.
16. FURNISH AND INSTALL ADAPTER AS REQUIRED TO CONNECT LIGHT FIXTURE TO LIGHT POLE AND MAKE ALL FINAL CONNECTIONS.
17. FOR OUTDOOR ENCLOSURES, REFER TO DETAIL 3 ON DRAWING NO. [G-E-11] FOR GROUNDING INFORMATION.
18. FURNISH AND INSTALL LIGHT FIXTURE, CONDUIT HUB, AND MOUNTING HARDWARE FOR A SAFE AND SOUND INSTALLATION. COORDINATE WITH OWNER AND ROOF MANUFACTURER FOR ADDITIONAL INFORMATION. ALL SUPPORTS SUSPENDED FROM CEILING TO USE LOCKNUTS AND SQUARE WASHERS FOR ASSEMBLY.
19. COORDINATE WITH LIGHT FIXTURE MANUFACTURER, OWNER AND STRUCTURAL TO DETERMINE MOUNTING HEIGHT OF LIGHT FIXTURE AND LENGTH OF CONDUIT. REFER TO PLANS FOR ADDITIONAL INFORMATION.
20. RAISE ALL STRUT SUPPORT FEET 1/2-INCHES OFF FINSIHED FLOOR AND GROUT UNDERNEATH.

REUSE OF DOCUMENTS
This document, and the designs incorporated herein, is an instrument of professional service that has been developed, designed and prepared by Harutunian Engineering, Inc., and is not to be used, in whole or part, for any other project without giving written notice to Harutunian Engineering, Inc.

REV No	DATE	DRWN	CHKD	REMARKS
1	–	–	–	–

DESIGNED BY: HEI
DRAWN BY: HEI
SHEET CHK'D BY: HEI
CROSS CHK'D BY: HEI
APPROVED BY: HEI
DATE: APRIL 2016

CDM Smith
Riata Corporate Park, 12357-A Riata Trace Parkway, Suite 210
Austin, TX 78727
Tel: (512) 346-1100
Texas Registration Number F-3043

HARUTUNIAN ENGINEERING, INC.
305 E Huntland Dr, Ste 500; Austin, TX 78752
TBPE Firm Registration No. F-2408

CITY OF AUSTIN, TEXAS - AUSTIN WATER UTILITY
CIP 3333.016

SOUTH AUSTIN REGIONAL WWTP
THICKENER IMPROVEMENTS PROJECT

ELECTRICAL DETAILS
(SHEET 2 OF 9)

STATE OF TEXAS
K. A. HARUTUNIAN
59181
REGISTERED PROFESSIONAL ENGINEER
4/22/2016

PROJECT No 590-104217
FILE NAME: G-E-6

SHEET No
G-E-6

Plotted: 4/22/2016 8:53:37 AM

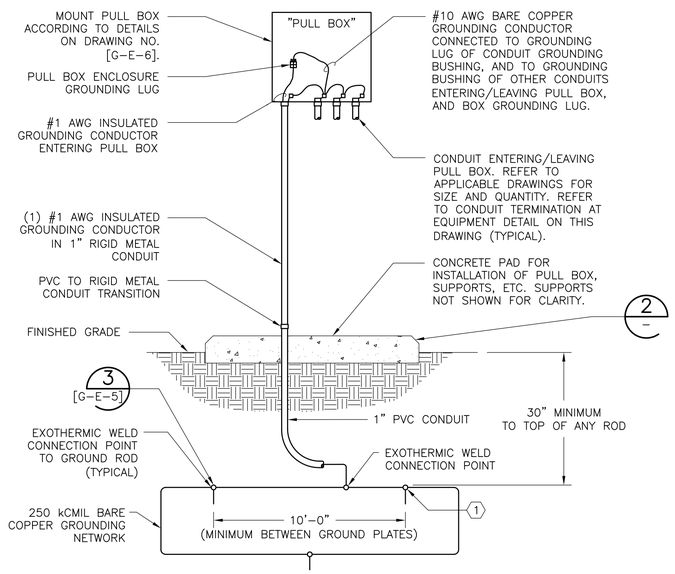

PULLBOX GROUNDING DETAIL 1
N.T.S.

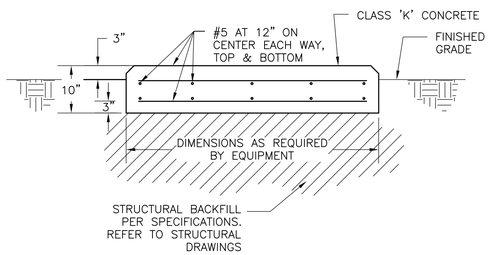

OUTDOOR ELECTRICAL EQUIPMENT PAD CONCRETE SLAB DETAIL 2
N.T.S.

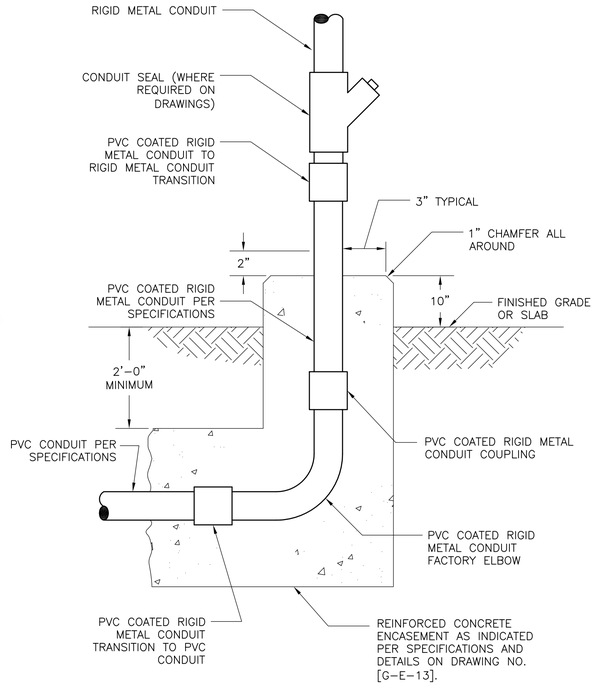

FINISHED OUTDOOR CONDUIT STUB-UP DETAIL 3
N.T.S.

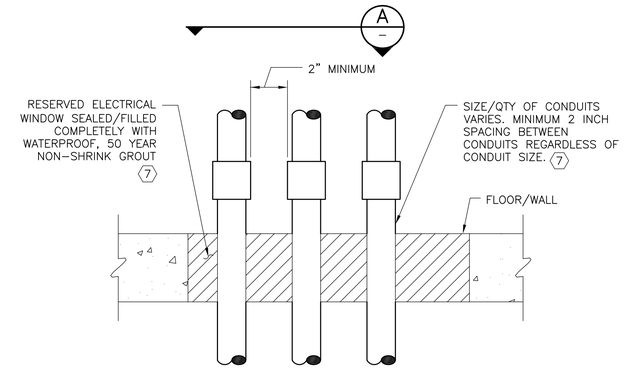

TYPICAL CONDUIT BLOCKOUT PENETRATION OF CONCRETE FLOOR/WALL DETAIL 6
N.T.S.

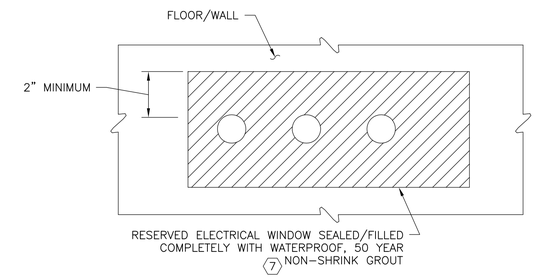

SECTION A
N.T.S.

KEY NOTES:

1. 3/4" X 10'-0" COPPER ROD. MINIMUM OF (3) RODS ARE REQUIRED. REFER TO TYPICAL GROUND PLATE INSTALLATION DETAIL NO. 3 ON DRAWING NO. [G-E-5]. FURNISH AND INSTALL THREE POINT GROUNDING NETWORK UNDER PULL BOX.
2. FURNISHED AND INSTALLED BY SLUDGE THICKENER MANUFACTURER.
3. FURNISH AND INSTALL PROPOSED CONDUIT/WIRE/ MOUNTING HARDWARE ASSEMBLY AND NECESSARY MOUNTING CHANNEL AND RELATED HARDWARE TO SECURE CONDUIT/CHANNEL TO BRIDGE STRUCTURE.
4. ROUTE INSULATED GROUNDING CONDUCTOR IN CONDUIT ALONG AND UNDERNEATH WALKWAY STRUCTURE WITH OTHER PROPOSED CONDUITS (NOT SHOWN). BOND TO HAND RAILS AND PLATFORM STRUCTURE. DAISY-CHAIN CONDUCTOR AND BOND ALL HAND RAIL SECTIONS AND WALKWAY STRUCTURE AS REQUIRED TO ENSURE CONTINUITY OF ENTIRE WALKWAY/HANDRAIL STRUCTURE.
5. PROPOSED CONDUIT (NOT SHOWN) WITH INSULATED GROUNDING CONDUCTOR CONTINUES TO/FROM PERIMETER GROUNDING SYSTEM.
6. PROPOSED CONDUIT WITH INSULATED GROUNDING CONDUCTOR(S). CONDUIT/WIRE ROUTES ALONG ENTIRE LENGTH OF BRIDGE. GROUND WIRING IS DAISY-CHAINED BETWEEN ALL ADJACENT STRUCTURAL FRAME MEMBERS AND HAND RAIL SECTIONS TO ENSURE CONTINUITY OF ENTIRE BRIDGE WALKWAY/HANDRAIL STRUCTURE. FURNISH AND INSTALL BUSHINGS AT ENDS OF EACH CONDUIT WHERE GROUND WIRE ENTERS/EXITS AND SEAL WATER TIGHT.
7. MAINTAIN A MINIMUM OF 2 INCHES CLEARANCE IN ALL DIRECTIONS FROM THE OUTSIDE OF EACH CONDUIT TO ANY OTHER SURFACE. AFTER INSTALLATION OF FINAL CONDUIT THROUGH RESERVED ELECTRICAL WINDOW IN SLAB, SEAL/FILL REMAINING SPACE COMPLETELY AROUND CONDUITS WITH WATERPROOF, 50 YEAR NON-SHRINK GROUT. PIPE TAPE FOR CONDUIT IS NOT SHOWN FOR CLARITY.
8. DESIGNED, FURNISHED, AND INSTALLED BY TANK MANUFACTURER. DISTANCE BETWEEN ADJACENT CONDUIT SUPPORT MOUNTING PLATES SHALL NOT EXCEED SIX FEET. MINIMUM PLATE LENGTH SHALL BE 24 INCHES. COORDINATE CONDUIT SUPPORT MOUNTING PLATE REQUIREMENTS AND LOCATIONS ALONG TANK WITH TANK MANUFACTURER. COORDINATE CONDUIT ROUTING ALONG TANK WITH LOCATIONS OF THE SUPPORT MOUNTING PLATES.
9. FURNISH AND INSTALL CONDUIT SUPPORT CHANNELS AND ATTACH TO MOUNTING PLATES FURNISHED AND INSTALLED BY TANK EQUIPMENT MANUFACTURER. FURNISH AND INSTALL ALL NECESSARY MOUNTING HARDWARE FOR A SECURE INSTALLATION. ADJUSTMENTS TO THE TYPE/ QUANTITY OF CONDUIT SUPPORT CHANNELS SHOWN HERE MAY BE REQUIRED TO COORDINATE WITH CONDUIT SUPPORT MOUNTING PLATE DESIGNED BY TANK MANUFACTURER. THE CONTRACTOR SHALL FURNISH AND INSTALL THESE ADJUSTMENTS AT NO ADDITIONAL COST TO THE OWNER.
10. ATTACH CONDUIT SUPPORT CHANNEL TO TANK MOUNTING PLATE PER RECOMMENDATIONS OF THE TANK MANUFACTURER AND MAKE ALL FINAL CONNECTIONS.

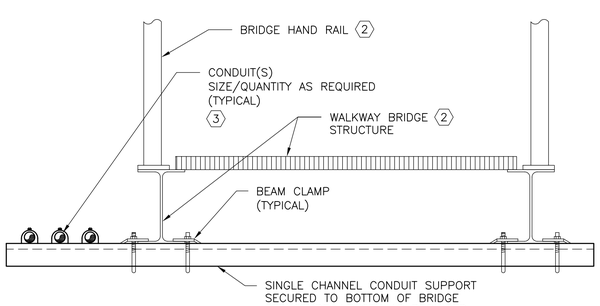

GRAVITY THICKENER BRIDGE CONDUIT MOUNTING DETAIL 4
N.T.S.

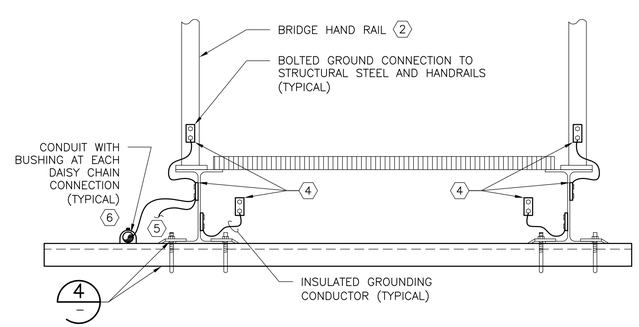

GRAVITY THICKENER BRIDGE GROUNDING DETAIL 5
N.T.S.

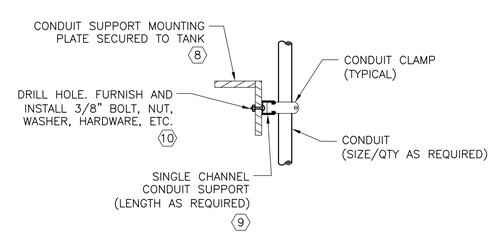

END VIEW OF TANK CONDUIT SUPPORT DETAIL 7
N.T.S.

REUSE OF DOCUMENTS
This document, and the designs incorporated herein, is an instrument of professional service that has been developed, designed and prepared by Harutunian Engineering, Inc., and is not to be used, in whole or part, for any other project without giving written notice to Harutunian Engineering, Inc.

REV No	DATE	DRWN	CHKD	REMARKS
1	–	–	–	–

DESIGNED BY: HEI
DRAWN BY: HEI
SHEET CHK'D BY: HEI
CROSS CHK'D BY: HEI
APPROVED BY: HEI
DATE: APRIL 2016

CDM Smith
Riata Corporate Park, 12357-A Riata Trace Parkway, Suite 210
Austin, TX 78727
Tel: (512) 346-1100
Texas Registration Number F-3043

HARUTUNIAN ENGINEERING, INC.
305 E Huntland Dr, Ste 500; Austin, TX 78752
TBPE Firm Registration No. F-2408

CITY OF AUSTIN, TEXAS - AUSTIN WATER UTILITY
CIP 3333.016

SOUTH AUSTIN REGIONAL WWTP
THICKENER IMPROVEMENTS PROJECT

ELECTRICAL DETAILS
(SHEET 3 OF 9)

STATE OF TEXAS
K. A. HARUTUNIAN
59181
REGISTERED PROFESSIONAL ENGINEER
4/22/2016

PROJECT No 590-104217
FILE NAME: G-E-7

SHEET No
G-E-7

Plotted: 4/22/2016 8:53:41 AM

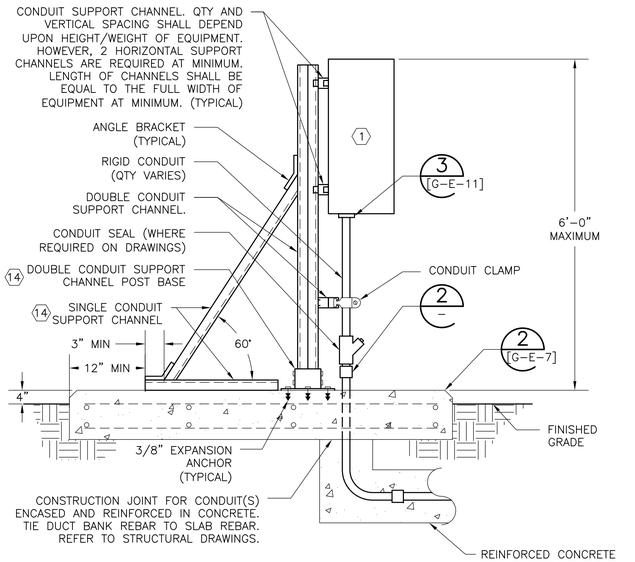

OUTDOOR ENCLOSURE SUPPORT RACK DETAIL 1 –
N.T.S.

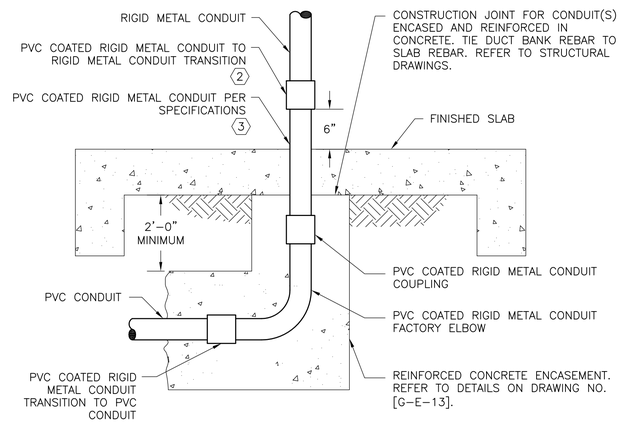

FINISHED INDOOR CONDUIT STUB-UP DETAIL 2 –
N.T.S.

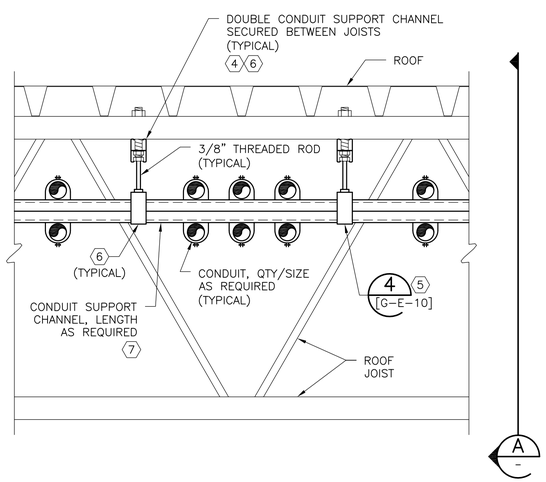

CONDUIT SUPPORT WITHIN CEILING JOIST SPACE DETAIL 3 –
N.T.S.

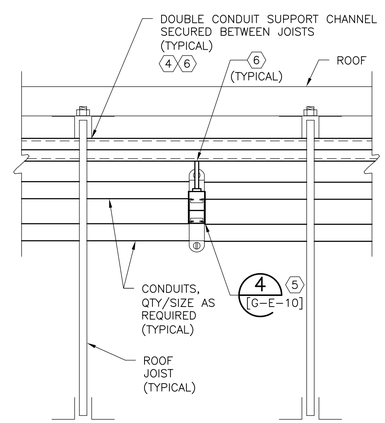

SECTION A –
N.T.S.

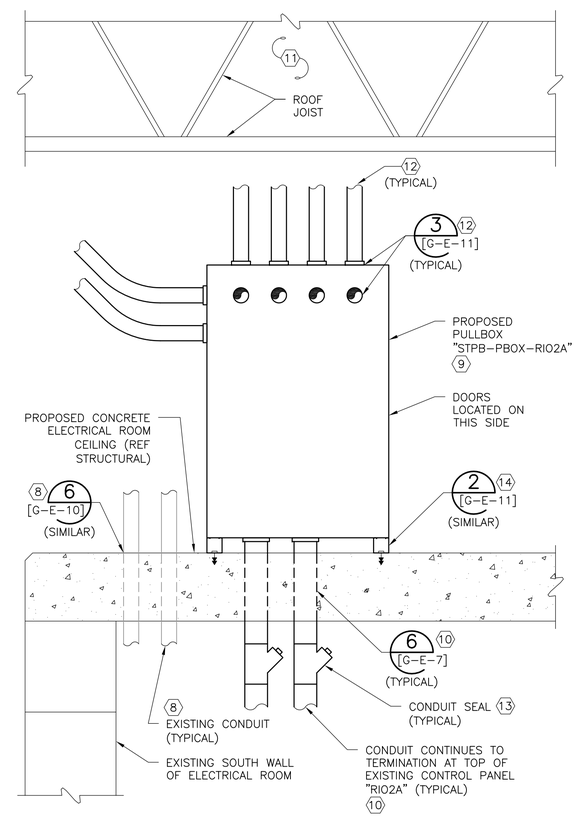

ELECTRICAL ROOM PULLBOX MOUNTING DETAIL 4 –
N.T.S.

KEY NOTES:

11. CONDUIT BANKS (NOT SHOWN) IN VICINITY OF ELECTRICAL ROOM ARE LOCATED IN CEILING SPACE OF BUILDING ABOVE PROPOSED ELECTRICAL ROOM CONCRETE CEILING. CONDUITS ABOVE ELECTRICAL ROOM SHALL BE ROUTED AT AN ELEVATION AS HIGH AS POSSIBLE TO FACILITATE CONNECTIONS TO PROPOSED PULLBOX, ACCESS TO PULLBOX, AND TO AVOID CONFLICTS WITH EXISTING CONDUITS.
12. PROPOSED CONDUITS TURNING DOWN FROM CEILING SPACE CONDUIT CORRIDOR SHALL TERMINATE ON TOP OF PULLBOX WHERE POSSIBLE. AT CONTRACTOR DISCRETION TO AVOID CONFLICTS, CONDUITS MAY TERMINATE ON BACK AND SIDES OF PULLBOX AS REQUIRED. MAKE ALL ADJUSTMENTS TO SIZE AND POSITIONING OF PULLBOX AS REQUIRED AT NO ADDITIONAL COST TO THE OWNER. LOCATE PROPOSED CONDUITS TO FACILITATE CLEARANCE AND ACCESS TO PULLBOX.
13. FURNISH AND INSTALL CONDUIT SEALING FITTINGS ON ALL PROPOSED CONDUITS ROUTING BETWEEN PULLBOX AND EXISTING CONTROL PANEL "RIO2A". LOCATE SEALING FITTINGS IN ELECTRICAL ROOM. LOCATION SHOWN IS APPROXIMATE. NO PULL POINTS SHALL EXIST BETWEEN SEAL AND CONDUIT TERMINATION AT "RIO2A".
14. RAISE ALL STRUT SUPPORT FEET 1/2-INCHES OFF FINSIHED FLOOR AND GROUT UNDERNEATH.

KEY NOTES:

1. FOR OUTDOOR ENCLOSURES, REFER TO DETAIL 1 ON DRAWING NO. [G-E-7] FOR GROUNDING REQUIREMENTS.
2. FURNISH AND INSTALL ALUMINUM COUPLING AT THIS LOCATION TO INTERCONNECT FEMALE PVC COATED RIGID METAL CONDUIT TO RIGID METAL CONDUIT SYSTEM. THOROUGHLY COAT THREADS PRIOR TO ASSEMBLY PER SPECIFICATIONS.
3. ALTHOUGH SHOWN EXPOSED AND REQUIRED OTHERWISE BY THE SPECIFICATIONS, FURNISH AND INSTALL PER THE REQUIREMENTS OF THE "UNDERGROUND CONDUIT IN DUCT BANK SYSTEM" SUBSECTION OF SECTION 16150 OF THE CONTRACT SPECIFICATIONS.
4. FURNISH AND INSTALL DOUBLE CONDUIT SUPPORT CHANNEL AND FASTEN UNDER TOP CHORD OF EXISTING ROOF JOISTS. FURNISH AND INSTALL ALL HARDWARE REQUIRED FOR A SAFE AND SECURE INSTALLATION. LENGTH OF CHANNELS SHALL BE AS REQUIRED. SUPPORT CHANNEL SHALL EXTEND BETWEEN TWO JOISTS AT MINIMUM. FIELD VERIFY EXISTING CONDITIONS. ALL SUPPORTS SUSPENDED FROM CEILING TO USE LOCKNUTS ANS SQUARE WASHERS FOR ASSEMBLY.
5. HANG CONDUIT BANK ON 3/8" THREADED ROD SIMILAR TO DETAIL 4 ON DRAWING NO. [G-E-10]. FURNISH AND INSTALL CONDUIT SUPPORT CHANNELS AND THREADED ROD, LENGTHS/QTY AS REQUIRED, AND ALL ASSOCIATED HARDWARE, CLAMPS, ETC. AS REQUIRED TO SUPPORT PROPOSED CONDUITS AT AN ELEVATION WITHIN EXISTING ROOF JOISTS. FIELD VERIFY EXISTING CONDITIONS.
6. COORDINATE/CALCULATE TOTAL WEIGHT LOAD OF CONDUIT/WIRE/CABLES/ETC. AT EACH LOCATION OF SUPPORT. FURNISH AND INSTALL ADDITIONAL SUPPORT AS NECESSARY AT EACH LOCATION, IN ORDER TO MAINTAIN A MAXIMUM OF 50 PERCENT OF MANUFACTURER'S STATED WEIGHT SUPPORTING CAPACITY.
7. LENGTH OF CONDUIT SUPPORT CHANNEL AS REQUIRED. REFER TO CONDUIT CORRIDOR PLANS. FIELD VERIFY EXISTING CONDITIONS.
8. EXISTING CONDUITS REMAINING FROM DEMOLITION. LOCATION/QTY OF CONDUITS SHOWN FOR REPRESENTATION ONLY. FIELD VERIFY SIZES AND LOCATIONS. CONDUITS ARE LOCATED ALONG WALL AND ROUTE BETWEEN CEILING SPACE AND EXISTING CONTROL PANEL "RIO2A". EXISTING CONDUITS SHALL PENETRATE PROPOSED CONCRETE ELECTRICAL ROOM CEILING SLAB SIMILAR TO DETAIL 6 ON DRAWING NO. [G-E-10]. ALTHOUGH REQUIRED OTHERWISE, EXISTING CONDUITS PENETRATING PROPOSED CEILING SHALL NOT BE SLEEVED. WRAP EXISTING CONDUIT WITH TAPE AND APPLY BITUMASTIC COATING AS INDICATED. COORDINATE WITH STRUCTURAL.
9. LOCATION AND SIZE OF PULLBOX AS SHOWN IS APPROXIMATE. ADJUST SIZE AND POSITIONING TO AVOID CONFLICTS WITH EXISTING CONDUITS. FIELD VERIFY LOCATION OF EXISTING CONDUITS PRIOR TO FINAL SIZING AND POSITIONING OF PROPOSED PULLBOX. MAKE ALL ADJUSTMENTS TO INSTALLATION AS REQUIRED AT NO ADDITIONAL COST TO THE OWNER.
10. CONDUITS/WIRE COMBINE IN PULLBOX. PROPOSED CONDUITS EXIT BOTTOM OF PULLBOX, PENETRATE PROPOSED ELECTRICAL ROOM CEILING, AND TERMINATE AT TOP OF EXISTING CONTROL PANEL "RIO2A". LOCATION OF CONDUITS SHOWN FOR REPRESENTATION ONLY. FIELD VERIFY LOCATIONS OF EXISTING CONDUITS AND ALL OTHER OBSTRUCTIONS AND CONFLICTS THAT MAY EXIST AND ADJUST INSTALLATION AS REQUIRED AT NO ADDITIONAL COST TO THE OWNER. REFER TO FLOOR PLANS AND CONDUIT CORRIDOR PLANS. COORDINATE WITH STRUCTURAL.

REUSE OF DOCUMENTS
This document, and the designs incorporated herein, is an instrument of professional service that has been developed, designed and prepared by Harutunian Engineering, Inc., and is not to be used, in whole or part, for any other project without giving written notice to Harutunian Engineering, Inc.

REV No	DATE	DRWN	CHKD	REMARKS
1	–	–	–	–

DESIGNED BY: HEI
DRAWN BY: HEI
SHEET CHK'D BY: HEI
CROSS CHK'D BY: HEI
APPROVED BY: HEI
DATE: APRIL 2016

CDM Smith
Riata Corporate Park, 12357-A Riata Trace Parkway, Suite 210
Austin, TX 78727
Tel: (512) 346-1100
Texas Registration Number F-3043

HARUTUNIAN ENGINEERING, INC.
305 E Huntland Dr, Ste 500; Austin, TX 78752
TBPE Firm Registration No. F-2408

CITY OF AUSTIN, TEXAS - AUSTIN WATER UTILITY
CIP 3333.016
SOUTH AUSTIN REGIONAL WWTP
THICKENER IMPROVEMENTS PROJECT

ELECTRICAL DETAILS
(SHEET 4 OF 9)

K. A. Harutunian
STATE OF TEXAS
K. A. HARUTUNIAN
59181
REGISTERED
PROFESSIONAL ENGINEER
4/22/2016

PROJECT No 590-104217
FILE NAME: G-E-8

SHEET No
G-E-8

Plotted: 4/22/2016 8:53:45 AM

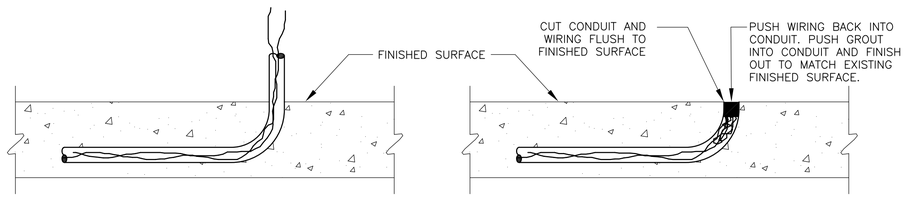

EXISTING MODIFIED

MODIFICATION TO EXISTING CONDUIT STUB–UPS (1)

N.T.S.

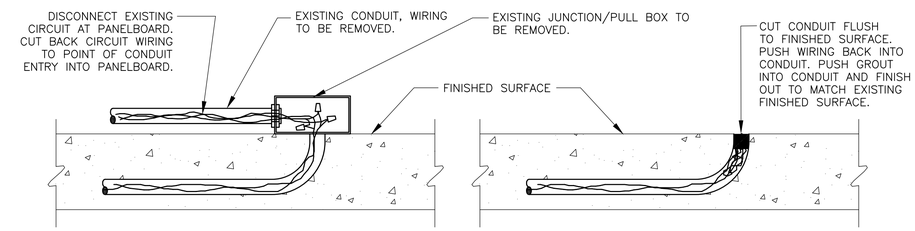

EXISTING MODIFIED

MODIFICATION TO EXISTING CONDUIT STUB–UP TO SURFACE MOUNTED BOX (2)

N.T.S.

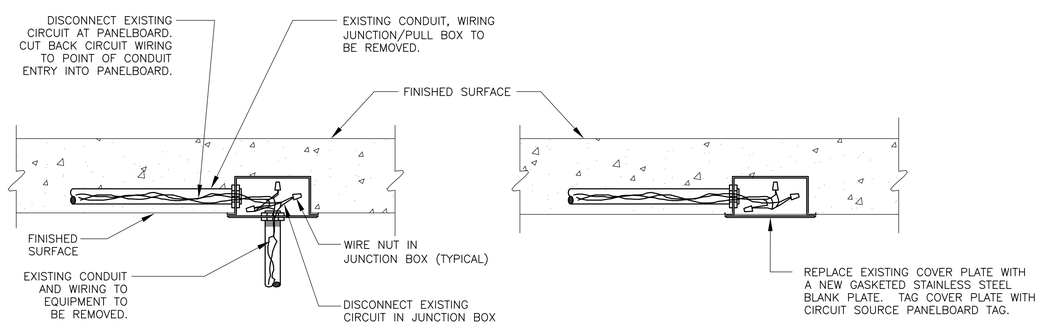

EXISTING MODIFIED

MODIFICATION TO RECESSED ELECTRICAL JUNCTION/PULL BOX (3)

N.T.S.

REUSE OF DOCUMENTS

This document, and the designs incorporated herein, is an instrument of professional service that has been developed, designed and prepared by Harutunian Engineering, Inc., and is not to be used, in whole or part, for any other project without giving written notice to Harutunian Engineering, Inc.

REV No	DATE	DRWN	CHKD	REMARKS
△	–	–	–	–

DESIGNED BY: HEI
DRAWN BY: HEI
SHEET CHK'D BY: HEI
CROSS CHK'D BY: HEI
APPROVED BY: HEI
DATE: APRIL 2016

CDM Smith
Riata Corporate Park, 12357-A Riata Trace Parkway, Suite 210
Austin, TX 78727
Tel: (512) 346-1100
Texas Registration Number F-3043

HARUTUNIAN ENGINEERING, INC.
305 E Huntland Dr, Ste 500; Austin, TX 78752
TBPE Firm Registration No. F-2408

CITY OF AUSTIN, TEXAS - AUSTIN WATER UTILITY
CIP 3333.016

SOUTH AUSTIN REGIONAL WWTP
THICKENER IMPROVEMENTS PROJECT

ELECTRICAL DETAILS
(SHEET 5 OF 9)

STATE OF TEXAS
K. A. HARUTUNIAN
59181
REGISTERED PROFESSIONAL ENGINEER
4/22/2016

PROJECT No 590–104217
FILE NAME: G–E–9

SHEET No
G-E-9

Plotted: 4/22/2016 8:53:50 AM

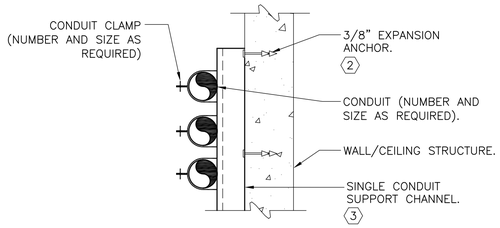

WALL/CEILING CONDUIT SUPPORT DETAIL 1
N.T.S.

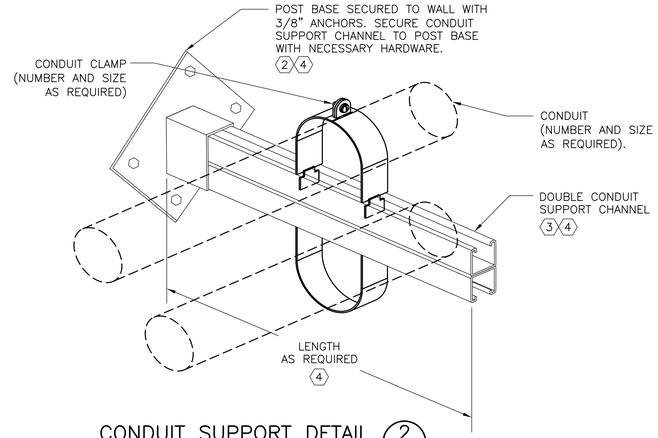

CONDUIT SUPPORT DETAIL 2
N.T.S.

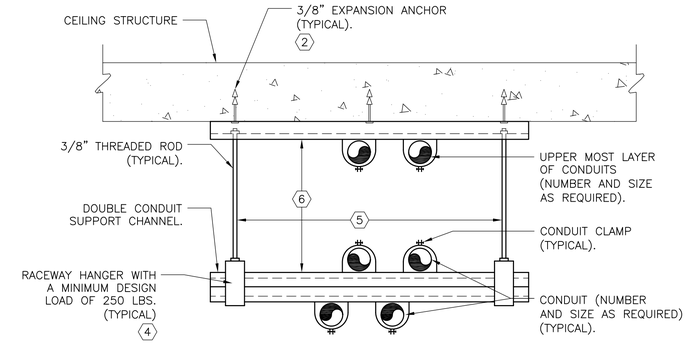

CONDUIT SUPPORT CEILING DETAIL 3
N.T.S.

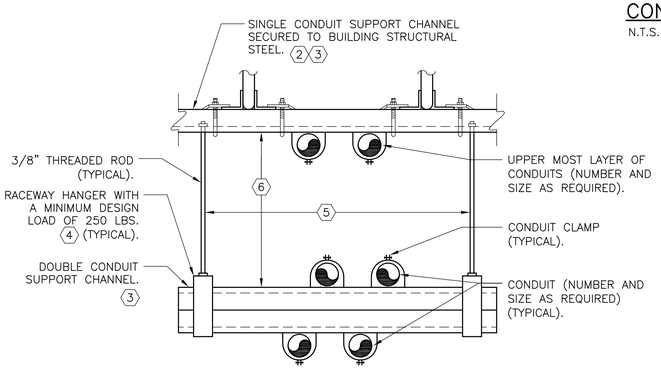

CONDUIT SUPPORT CEILING DETAIL 4
N.T.S.

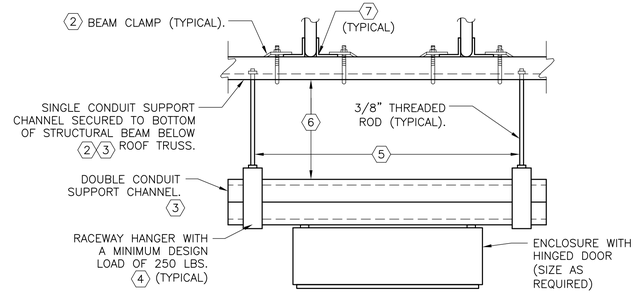

CEILING ENCLOSURE SUPPORT DETAIL 5
N.T.S.

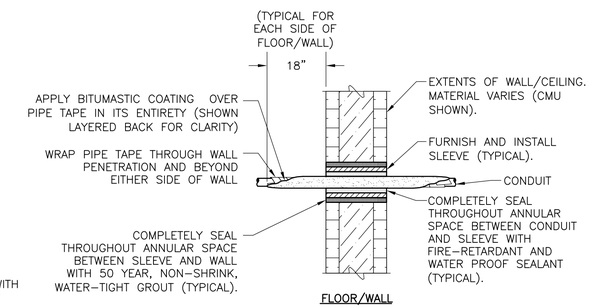

CONDUIT PENETRATION DETAIL 6
N.T.S.

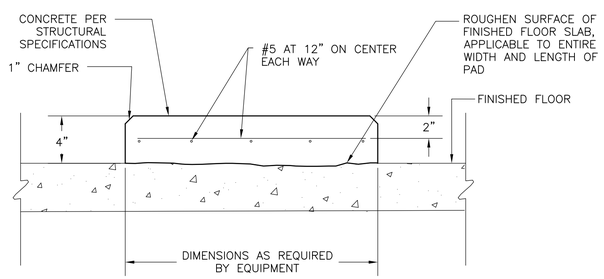

TYPICAL INDOOR ELECTRICAL EQUIPMENT PAD CONCRETE SLAB DETAIL 7
N.T.S.

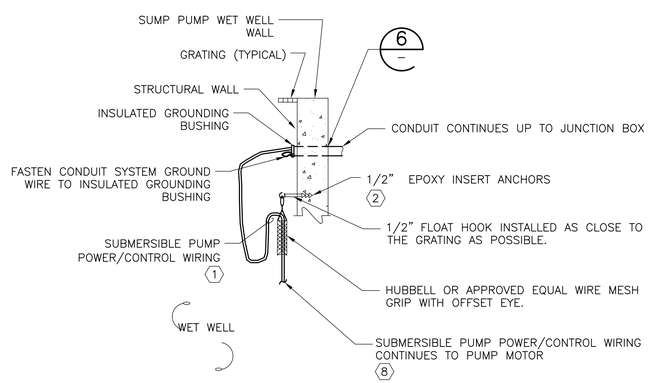

SUBMERSIBLE PUMP POWER/CONTROL WIRING INSTALLATION DETAIL 8
N.T.S.

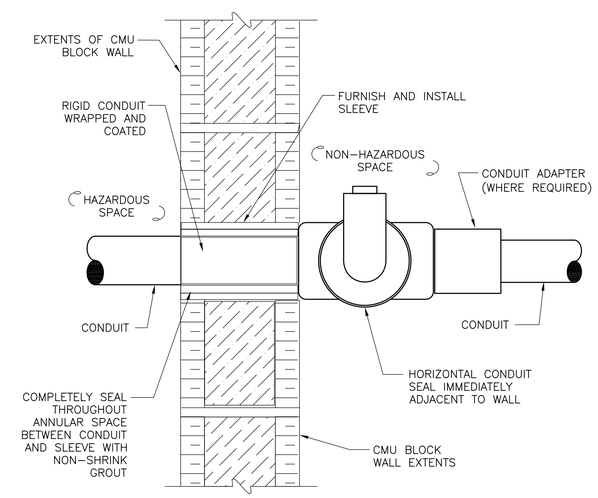

CONDUIT ENTRY INTO HAZARDOUS RATED SPACE 9
N.T.S.

KEY NOTES:

1. ALLOW 36" (MINIMUM) OF EXTRA CABLE AT THIS LOCATION. COORDINATE LENGTH OF POWER/CONTROL CABLE WITH EQUIPMENT MANUFACTURER AS TO ENSURE ADEQUATE LENGTH OF PROPOSED CABLE/CABLES.
2. THE STRUCTURE TYPE TO WHICH EQUIPMENT AND/OR SUPPORT SYSTEMS SHALL BE MOUNTED MAY VARY. THE EQUIPMENT ANCHOR TYPE SHALL CORRESPOND TO THE TYPE OF STRUCTURE TO WHICH EQUIPMENT AND/OR SUPPORT SYSTEMS ARE ATTACHED. THE DRAWING REFLECTS A SPECIFIC STRUCTURE TYPE WITH CORRESPONDING ANCHOR TYPE AND IS TYPICAL FOR STRUCTURE TYPE SHOWN. TO ATTACH EQUIPMENT/SUPPORT SYSTEMS TO PRE-CAST/CAST-IN-PLACE CONCRETE WALL/FLOOR SLAB STRUCTURE TYPES, FURNISH AND INSTALL BOLT WITH EPOXY INSERT ANCHOR. TO ATTACH EQUIPMENT/SUPPORT SYSTEMS TO CONCRETE MASONRY UNIT (CMU)/BRICK WALL STRUCTURE TYPE, FURNISH AND INSTALL BOLT WITH EXPANSION ANCHOR. TO ATTACH EQUIPMENT/SUPPORT SYSTEMS TO STEEL STRUCTURE TYPE, FURNISH AND INSTALL BOLTING ASSEMBLY. COORDINATE ATTACHMENT REQUIREMENTS WITH STRUCTURAL/ARCHITECTURAL/METAL BUILDING SYSTEM MANUFACTURER AS APPLICABLE AND SPECIFICATION SECTION 05120.
3. THE LENGTH OF CHANNEL SHALL BE AS REQUIRED.
4. COORDINATE/CALCULATE TOTAL WEIGHT LOAD OF CONDUIT/WIRE/CABLES/ETC. AT EACH LOCATION OF SUPPORT. FURNISH AND INSTALL ADDITIONAL SUPPORT AS NECESSARY AT EACH LOCATION, IN ORDER TO MAINTAIN A MAXIMUM OF 50 PERCENT OF MANUFACTURER'S STATED WEIGHT SUPPORT CAPACITY. ALL SUPPORTS SUSPENDED FORM CEILING TO USE LOCKNUTS AND SQUARE WASHERS FOR ASSEMBLY.
5. MAINTAIN MAXIMUM DISTANCE BETWEEN ADJACENT THREADED SUPPORT RODS OF 4'-0".
6. COORDINATE SUPPORT ROD LENGTH (AND CORRESPONDING CONDUIT/WIRE SUPPORT/RACK ELEVATION) WITH PLANS. SUPPORT ROD LENGTH MAY VARY.
7. SECURE/ATTACH CONDUIT SUPPORT CHANNEL TO BOTTOM CHORD OF CEILING JOIST.
8. LOCATE WIRES/CABLES AS TO ENSURE THAT THEY DO NOT TANGLE WITH EACH OTHER OR WITH THE SUBMERSIBLE PUMP LIFTING HOIST/CABLE/MEANS.

REUSE OF DOCUMENTS
This document, and the designs incorporated herein, is an instrument of professional service that has been developed, designed and prepared by Harutunian Engineering, Inc., and is not to be used, in whole or part, for any other project without giving written notice to Harutunian Engineering, Inc.

REV No	DATE	DRWN	CHKD	REMARKS
1	–	–	–	–

DESIGNED BY: HEI
DRAWN BY: HEI
SHEET CHK'D BY: HEI
CROSS CHK'D BY: HEI
APPROVED BY: HEI
DATE: APRIL 2016

CDM Smith
Rlata Corporate Park, 12357-A Rlata Trace Parkway, Suite 210
Austin, TX 78727
Tel: (512) 346-1100
Texas Registration Number F-3043

HARUTUNIAN ENGINEERING, INC.
305 E Huntland Dr, Ste 500; Austin, TX 78752
TBPE Firm Registration No. F-2408

CITY OF AUSTIN, TEXAS - AUSTIN WATER UTILITY
CIP 3333.016

SOUTH AUSTIN REGIONAL WWTP
THICKENER IMPROVEMENTS PROJECT

ELECTRICAL DETAILS
(SHEET 6 OF 9)

STATE OF TEXAS
K. A. HARUTUNIAN
59181
REGISTERED PROFESSIONAL ENGINEER
4/22/2016

PROJECT No 590-104217
FILE NAME: G-E-10

SHEET No
G-E-10

Plotted: 4/22/2016 8:53:04 AM

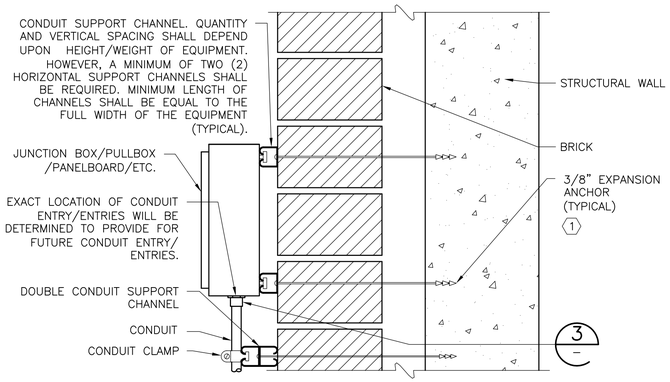

BRICK MOUNTED ELECTRICAL EQUIPMENT INSTALLATION DETAIL 1
N.T.S.

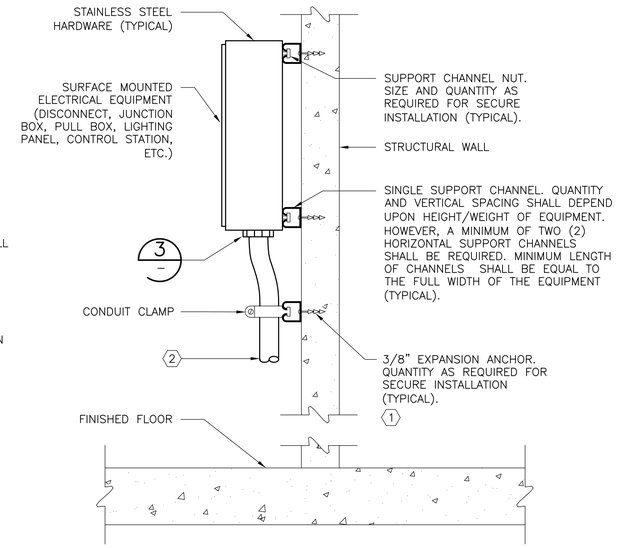

SIDE ELEVATION SURFACE/WALL MOUNTED ELECTRICAL EQUIPMENT INSTALLATION DETAIL 2
N.T.S.

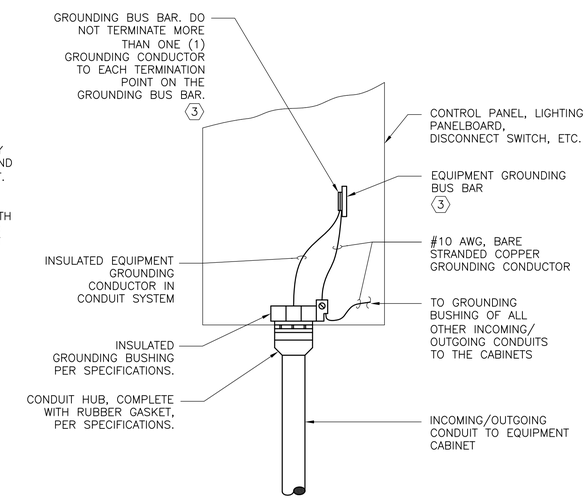

CONDUIT/WIRE TERMINATION TO WALL/RACK MOUNTED EQUIPMENT 3
N.T.S.

KEY NOTES:

1. THE STRUCTURE TYPE TO WHICH EQUIPMENT AND/OR SUPPORT SYSTEMS SHALL BE MOUNTED MAY VARY. THE EQUIPMENT ANCHOR TYPE SHALL CORRESPOND TO THE TYPE OF STRUCTURE TO WHICH EQUIPMENT AND/OR SUPPORT SYSTEMS ARE ATTACHED. THE DRAWING REFLECTS A SPECIFIC STRUCTURE TYPE WITH CORRESPONDING ANCHOR TYPE AND IS TYPICAL FOR STRUCTURE TYPE SHOWN. TO ATTACH EQUIPMENT/SUPPORT SYSTEMS TO PRE-CAST/CAST-IN-PLACE CONCRETE WALL/FLOOR SLAB STRUCTURE TYPES, FURNISH AND INSTALL BOLT WITH EPOXY INSERT ANCHOR. TO ATTACH EQUIPMENT/ SUPPORT SYSTEMS TO CONCRETE MASONRY UNIT (CMU)/BRICK WALL STRUCTURE TYPE, FURNISH AND INSTALL BOLT WITH EXPANSION ANCHOR.
2. CONDUIT/WIRE CONTINUES AS SHOWN ON PLAN DRAWINGS. FURNISH AND INSTALL CONDUIT SEAL WHERE REQUIRED ON DRAWINGS.
3. GROUND BUS BAR NOT NECESSARILY IN EXACT LOCATION SHOWN ON THIS DRAWING. GROUND BUS BAR DEPICTED IN THIS MANNER FOR PURPOSES OF CLARITY. CONTRACTOR SHALL FURNISH AND INSTALL SUFFICIENT LENGTH OF ALL GROUNDING CONDUCTORS TO ROUTE THROUGH DESIGNATED WIRING AREAS OF EQUIPMENT TO/FROM ACTUAL LOCATION OF EQUIPMENT GROUND BUS BAR.
4. REFER TO THE DETAILS ON DRAWING NO. [G-E-12] FOR SUPPORT CHANNEL AND CABLE CLAMP GROUNDING METHODS.
5. FOR GROUNDING CONDUCTORS, FASTEN WITH PORCELAIN CABLE CLAMP WITH DIMENSION "B" SUITABLE FOR (3) BARE #250 kCMIL GROUNDING CONDUCTORS AND (4) BARE #6 AWG GROUNDING CONDUCTORS.
6. SUPPORT CHANNEL BRACKET IS OF 12GA CONSTRUCTION FOR A MINIMUM UNIFORM DESIGN LOAD OF 300 LBS.
7. RAISE ALL STRUT SUPPORT FEET 1/2-INCHES OFF FINSIHED FLOOR AND GROUT UNDERNEATH.

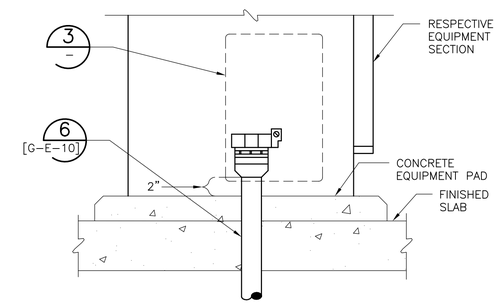

CONDUIT ENTRANCE TO PAD MOUNTED EQUIPMENT DETAIL 4
N.T.S.

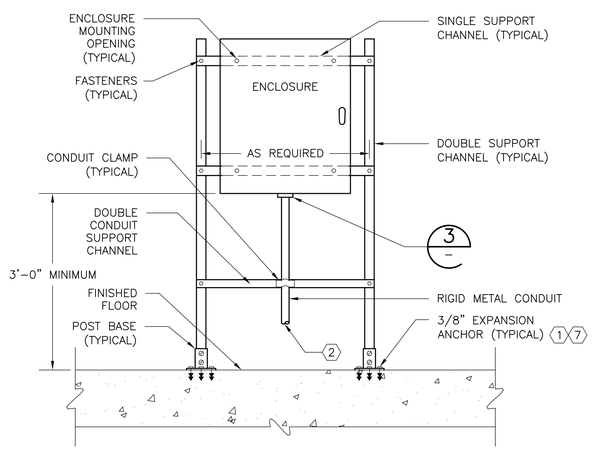

TYPICAL FRONT ELEVATION ENCLOSURE RACK DETAIL 5
N.T.S.

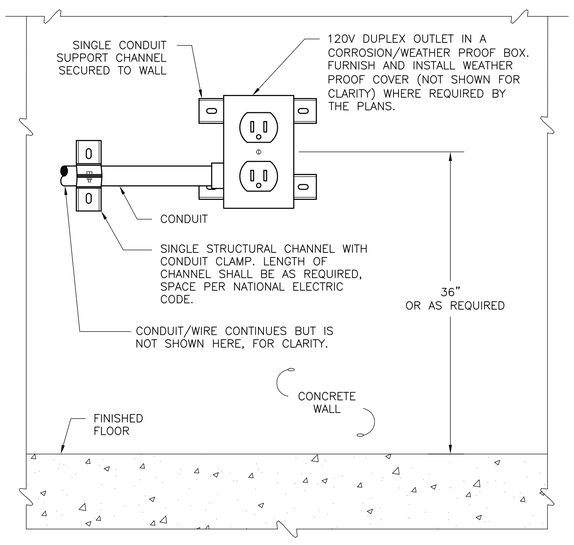

SURFACE/WALL MOUNTED CONVENIENCE RECEPTACLE DETAIL 6
N.T.S.

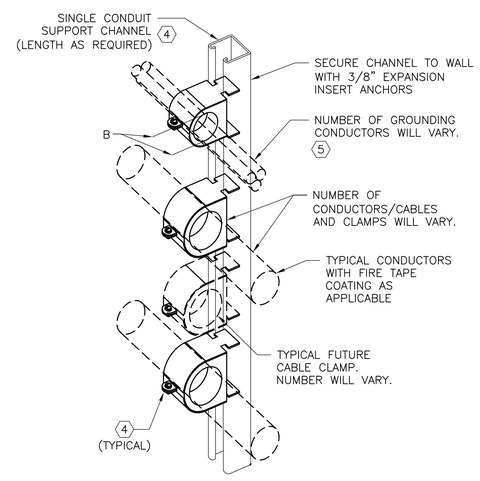

WALL MOUNTED MANHOLE/ HANDHOLE CABLE RACK DETAIL 7
N.T.S.

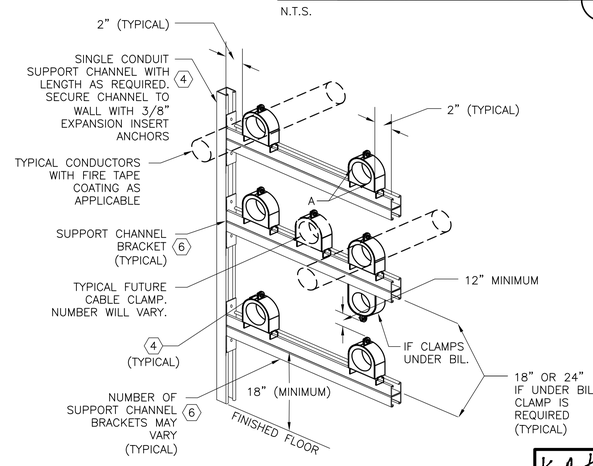

WALL MOUNTED MANHOLE/ HANDHOLE CABLE RACK DETAIL 8
N.T.S.

REUSE OF DOCUMENTS
This document, and the designs incorporated herein, is an instrument of professional service that has been developed, designed and prepared by Harutunian Engineering, Inc., and is not to be used, in whole or part, for any other project without giving written notice to Harutunian Engineering, Inc.

REV No	DATE	DRWN	CHKD	REMARKS
1	–	–	–	–

DESIGNED BY: HEI
DRAWN BY: HEI
SHEET CHK'D BY: HEI
CROSS CHK'D BY: HEI
APPROVED BY: HEI
DATE: APRIL 2016

CDM Smith
Riata Corporate Park, 12357-A Riata Trace Parkway, Suite 210
Austin, TX 78727
Tel: (512) 346-1100
Texas Registration Number F-3043

HARUTUNIAN ENGINEERING, INC.
305 E Huntland Dr, Ste 500; Austin, TX 78752
TBPE Firm Registration No. F-2408

CITY OF AUSTIN, TEXAS - AUSTIN WATER UTILITY
CIP 3333.016
SOUTH AUSTIN REGIONAL WWTP
THICKENER IMPROVEMENTS PROJECT

ELECTRICAL DETAILS
(SHEET 7 OF 9)

STATE OF TEXAS
K. A. HARUTUNIAN
59181
REGISTERED PROFESSIONAL ENGINEER
4/22/2016

PROJECT No 590-104217
FILE NAME: G-E-11

SHEET No
G-E-11

Plotted: 4/22/2016 8:53:08 AM

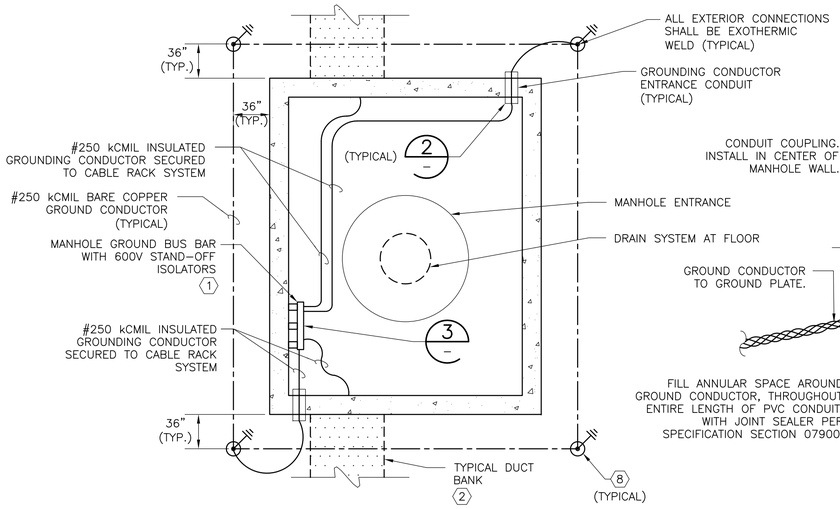

MANHOLE/HANDHOLE GROUNDING SYSTEM 1

N.T.S.

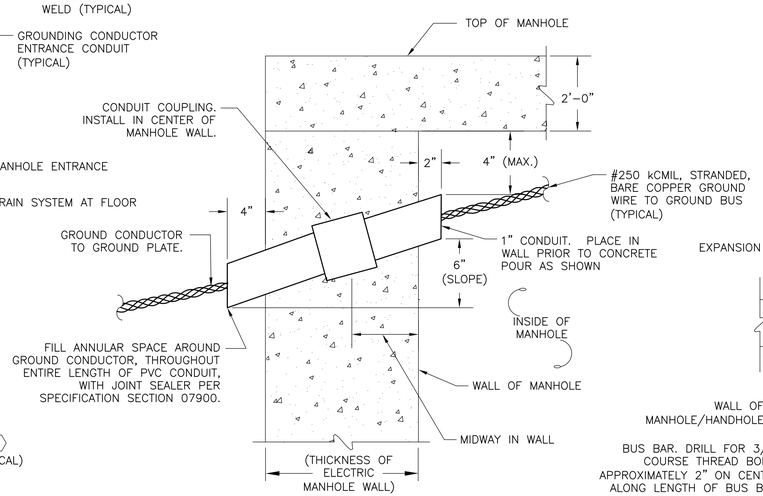

MANHOLE/HANDHOLE GROUNDING CONDUCTOR ENTRANCE DETAIL 2

N.T.S.

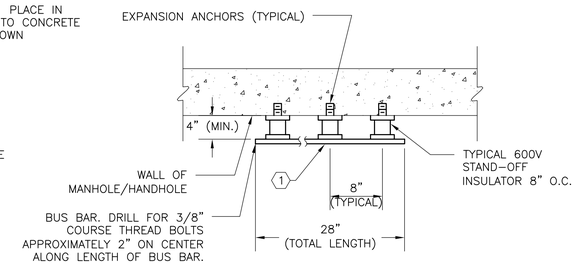

MANHOLE/HANDHOLE GROUND BUS ASSEMBLY DETAIL 3

N.T.S.

KEY NOTES:

1. LOCATE GROUNDING BUS BAR WITHIN 18" OF CEILING. CLOSELY AND CAREFULLY COORDINATE LOCATION OF GROUNDING BUS BAR WITH CORRESPONDING MANHOLE PLAN/ELEVATION DRAWING, AS APPLICABLE.
2. LOCATION AND SIZES OF DUCT BANK PENETRATIONS WILL VARY.
3. THE STRUCTURE TYPE TO WHICH EQUIPMENT AND/OR SUPPORT SYSTEMS SHALL BE MOUNTED MAY VARY. THE EQUIPMENT ANCHOR TYPE SHALL CORRESPOND TO THE TYPE OF STRUCTURE TO WHICH EQUIPMENT AND/OR SUPPORT SYSTEMS ARE ATTACHED. THE DRAWING REFLECTS A SPECIFIC STRUCTURE TYPE WITH CORRESPONDING ANCHOR TYPE AND IS TYPICAL FOR STRUCTURE TYPE SHOWN. TO ATTACH EQUIPMENT/SUPPORT SYSTEMS TO PRE-CAST/CAST-IN-PLACE CONCRETE WALL/FLOOR SLAB STRUCTURE TYPES, FURNISH AND INSTALL BOLT WITH EPOXY INSERT ANCHOR. TO ATTACH EQUIPMENT/SUPPORT SYSTEMS TO CONCRETE MASONRY UNIT (CMU)/BRICK WALL STRUCTURE TYPE, FURNISH AND INSTALL BOLT WITH EXPANSION ANCHOR. TO ATTACH EQUIPMENT/SUPPORT SYSTEMS TO STEEL STRUCTURE TYPE, FURNISH AND INSTALL BOLTING ASSEMBLY. COORDINATE ATTACHMENT REQUIREMENTS WITH STRUCTURAL/ARCHITECTURAL/METAL BUILDING SYSTEM MANUFACTURER AS APPLICABLE AND SPECIFICATION SECTION 05120.
4. #250 kCMIL GROUNDING CONDUCTOR (QTY OF CONDUCTORS VARIES) CONTINUES AROUND PERIMETER OF MANHOLE/HANDHOLE TO/FROM GROUNDING BUS BAR ASSEMBLY.
5. 1-#6 AWG GROUNDING CONDUCTOR, WITH DAISY CHAIN TERMINATION CONFIGURATION, CONTINUES TO/FROM NEXT CABLE INSULATOR/CLAMP ASSEMBLY AND/OR MANHOLE/HANDHOLE GROUNDING BUS BAR ASSEMBLY. REFER TO APPROPRIATE DETAIL ON THIS SHEET FOR SPECIFIC TERMINATION/ATTACHMENT INFORMATION AT EACH LOCATION IN MANHOLE/HANDHOLE. EACH CABLE/CIRCUIT TO HAVE A SEPARATE AND DEDICATED GROUNDING CONDUCTOR TERMINATED AT GROUNDING BUS.
6. CABLE SUPPORT CHANNEL GROUNDING CONDUCTOR CONTINUES TO/FROM EACH SEPARATE CABLE SUPPORT CHANNEL WITHIN CONFINES OF MANHOLE/HANDHOLE, THEN TO/FROM GROUNDING BUS BAR.
7. NUMBER OF GROUNDING CONDUCTORS AND COMPRESSION TERMINALS ATTACHED TO CABLE CLAMP WILL VARY.
8. FURNISH AND INSTALL GROUND ELECTRODE. BURY MINIMUM 30" BELOW GRADE. COORDINATE LOCATION WITH EXISTING STRUCTURES, PIPES, ELECTRICAL, ETC. ADJUST LOCATION AS REQUIRED TO AVOID CONFLICTS.
9. #1 AWG GROUNDING CONDUCTOR IS DAISY-CHAINED BETWEEN ADJACENT STRUCTURAL FRAME MEMBERS LOCATED PERPENDICULAR TO MAIN CANOPY STRUCTURAL BEAMS.
10. PROVIDE A TWO BOLT MECHANICAL GROUNDING CONNECTION WITHIN THE JUNCTION BOX PER SPECIFICATIONS. GROUNDING CONDUCTORS SHALL BE CONNECTED TO GROUNDING BOLTS INSIDE THE JUNCTION BOX. REFER TO SPECIFICATIONS FOR ADDITIONAL INFORMATION.

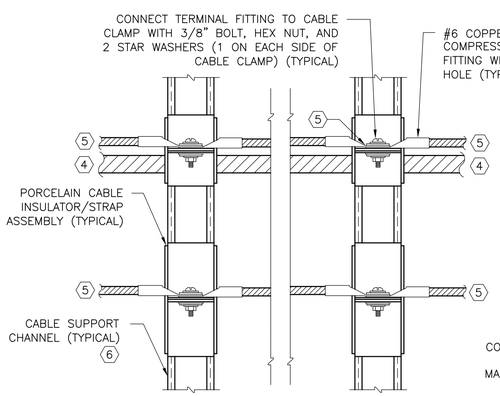

MANHOLE/HANDHOLE CABLE RACK GROUNDING DETAIL 4

N.T.S.

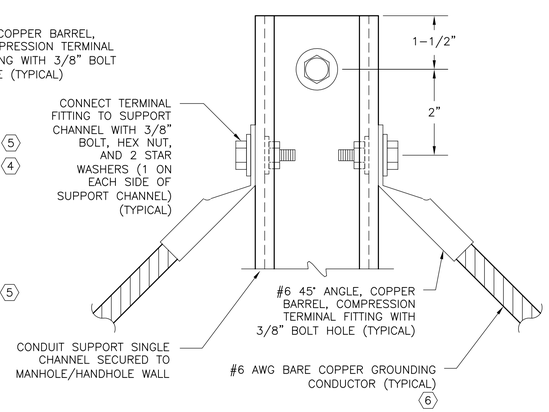

CABLE SUPPORT CHANNEL GROUNDING DETAIL 5

N.T.S.

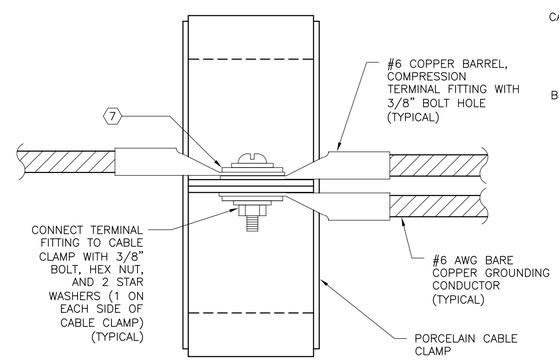

CABLE CLAMP GROUNDING DETAIL 6

N.T.S.

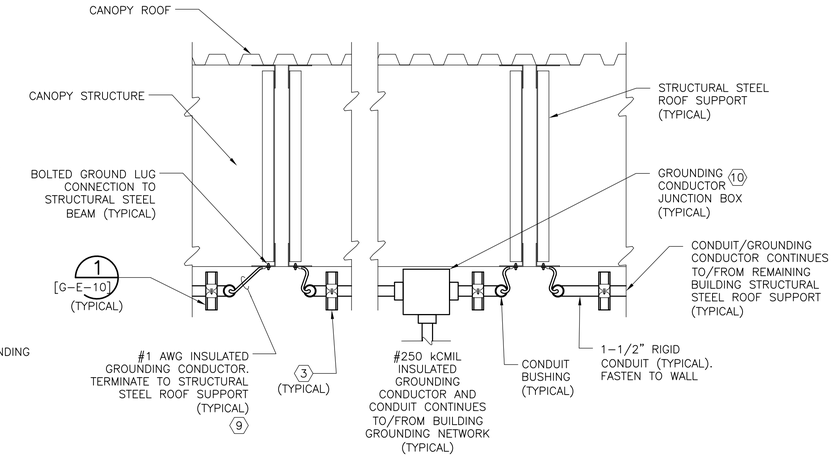

CANOPY STRUCTURE GROUNDING INSTALLATION DETAIL 7

N.T.S.

REUSE OF DOCUMENTS

This document, and the designs incorporated herein, is an instrument of professional service that has been developed, designed and prepared by Harutunian Engineering, Inc., and is not to be used, in whole or part, for any other project without giving written notice to Harutunian Engineering, Inc.

REV No	DATE	DRWN	CHKD	REMARKS
△	–	–	–	–

DESIGNED BY: HEI
DRAWN BY: HEI
SHEET CHK'D BY: HEI
CROSS CHK'D BY: HEI
APPROVED BY: HEI
DATE: APRIL 2016

CDM Smith
Riata Corporate Park, 12357-A Riata Trace Parkway, Suite 210
Austin, TX 78727
Tel: (512) 346-1100
Texas Registration Number F-3043

HARUTUNIAN ENGINEERING, INC.
305 E Huntland Dr, Ste 500; Austin, TX 78752
TBPE Firm Registration No. F-2408

CITY OF AUSTIN, TEXAS - AUSTIN WATER UTILITY
CIP 3333.016

SOUTH AUSTIN REGIONAL WWTP
THICKENER IMPROVEMENTS PROJECT

ELECTRICAL DETAILS
(SHEET 8 OF 9)

K. A. Harutunian
STATE OF TEXAS
K. A. HARUTUNIAN
59181
REGISTERED PROFESSIONAL ENGINEER
4/22/2016

PROJECT No 590-104217
FILE NAME: G-E-12

SHEET No
G-E-12

Plotted: 4/22/2016 8:53:12 AM

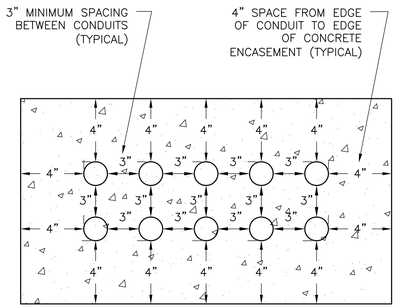

MULTI–LAYER DUCT/CONDUIT BANK–SPACING DETAIL FOR REINFORCED AND CONCRETE ENCASED DUCT/CONDUIT BANKS (1)

N.T.S.

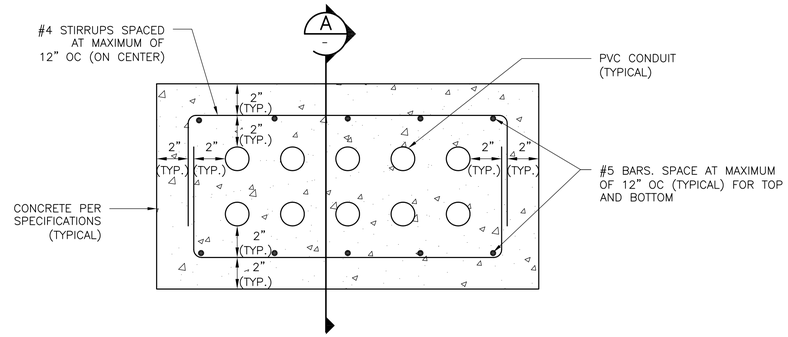

MULTI–LAYER DUCT/CONDUIT BANK REINFORCEMENT AND CONCRETE BANK ENCASEMENT DETAIL (2)

N.T.S.

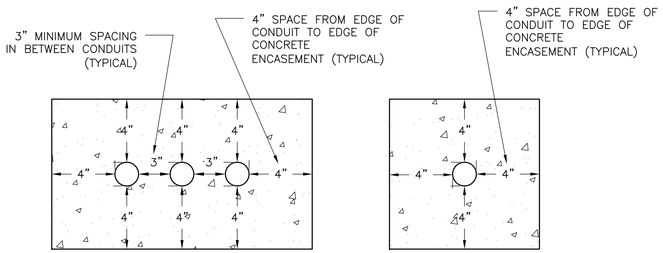

MULTIPLE CONDUITS

SINGLE CONDUIT

SINGLE–LAYER DUCT/CONDUIT BANK–SPACING DETAIL FOR REINFORCED AND CONCRETE ENCASED DUCT/CONDUIT BANKS (3)

N.T.S.

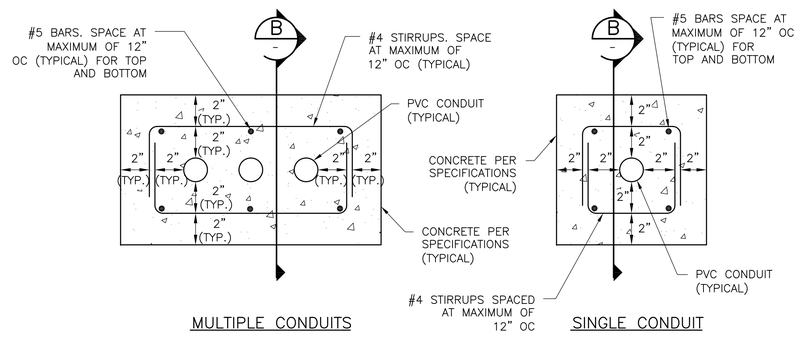

MULTIPLE CONDUITS

SINGLE CONDUIT

TYPICAL SINGLE–LAYER DUCT/CONDUIT BANK REINFORCEMENT AND CONCRETE BANK ENCASEMENT DETAIL (4)

N.T.S.

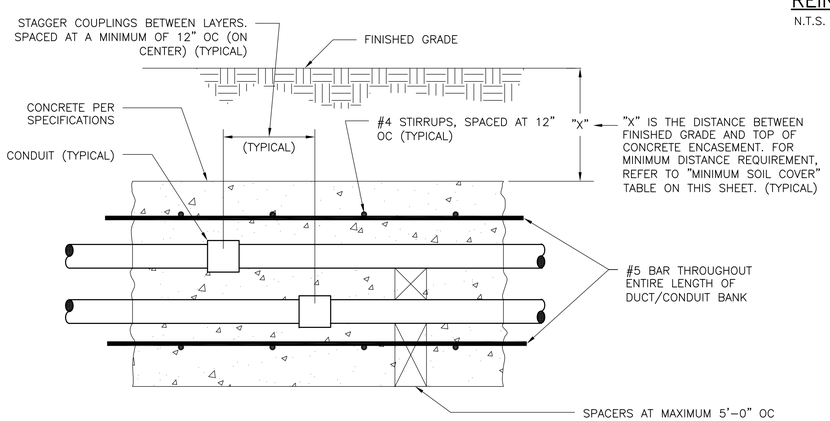

MULTIPLE LAYER DUCT/CONDUIT BANK

REINFORCEMENT AND CONCRETE ENCASEMENT LONGITUDINAL SECTION – "A" (A)

N.T.S.

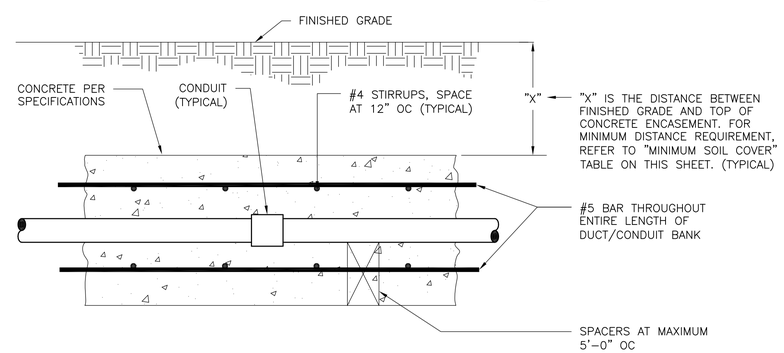

REINFORCEMENT AND CONCRETE ENCASEMENT LONGITUDINAL SECTION – "B" (B)

N.T.S.

MINIMUM SOIL COVER (1)

CONDUIT/DUCT BANK CONTENTS	"X"
600V (EXCEPT FOR OUTDOOR POLE MOUNTED WALKWAY LIGHTING FIXTURES)	24"
5kV AND 15kV	36"
15kV AND FIBER OPTIC IN COMBINED DUCT BANK	36"
STAND ALONE FIBER OPTIC AND/OR I&C DUCT BANK	24"
OUTDOOR POLE MOUNTED WALKWAY LIGHTING FIXTURES	18" (2)
ALL OTHERS	24"

KEY NOTES:

(1) MINIMUM COVER IS SHOWN. INCREASE AS NEEDED PER THE REQUIREMENTS OF THE SITE PLANS/DUCT BANK PLAN/PROFILE DRAWINGS AND THE NATIONAL ELECTRICAL CODE.

(2) MINIMUM COVER FOR ALL DUCT BANKS BENEATH ROADWAYS IS 24".

GENERAL NOTES:

1. #4 STIRRUPS SHALL BE PLACED AT A MAXIMUM OF TWELVE INCHES (12") ON CENTER (O.C.). HOWEVER, THE MAXIMUM SPACING REQUIREMENT FOR THE STIRRUPS SHALL BE REDUCED WHEN THE UNDERGROUND DUCT/CONDUIT BANK IS A CERTAIN DISTANCE, AS DENOTED ON THE STRUCTURAL DRAWINGS, FROM THE WALL OF A MANHOLE/STRUCTURE/BUILDING/ETC. (I.E. THE CONTRACTOR SHALL INSTALL MORE STIRRUPS WHEN THE UNDERGROUND DUCT/CONDUIT BANK IS WITHIN A CERTAIN DISTANCE, AS DENOTED ON THE STRUCTURAL DRAWINGS, FROM A WALL OF A MANHOLE/BUILDING/STRUCTURE/ETC.).

REUSE OF DOCUMENTS

This document, and the designs incorporated herein, is an instrument of professional service that has been developed, designed and prepared by Harutunian Engineering, Inc., and is not to be used, in whole or part, for any other project without giving written notice to Harutunian Engineering, Inc.

REV No	DATE	DRWN	CHKD	REMARKS
1	–	–	–	–

DESIGNED BY: HEI
DRAWN BY: HEI
SHEET CHK'D BY: HEI
CROSS CHK'D BY: HEI
APPROVED BY: HEI
DATE: APRIL 2016

CDM Smith
Riata Corporate Park, 12357-A Riata Trace Parkway, Suite 210
Austin, TX 78727
Tel: (512) 346-1100
Texas Registration Number F-3043

HARUTUNIAN ENGINEERING, INC.
305 E Huntland Dr, Ste 500; Austin, TX 78752
TBPE Firm Registration No. F-2408

CITY OF AUSTIN, TEXAS - AUSTIN WATER UTILITY
CIP 3333.016

SOUTH AUSTIN REGIONAL WWTP
THICKENER IMPROVEMENTS PROJECT

ELECTRICAL DETAILS
(SHEET 9 OF 9)

K. A. HARUTUNIAN
STATE OF TEXAS
K. A. HARUTUNIAN
59181
REGISTERED
PROFESSIONAL ENGINEER
4/22/2016

PROJECT No 590–104217
FILE NAME: G–E–13

SHEET No
G-E-13

Plotted: 4/22/2016 8:53:16 AM

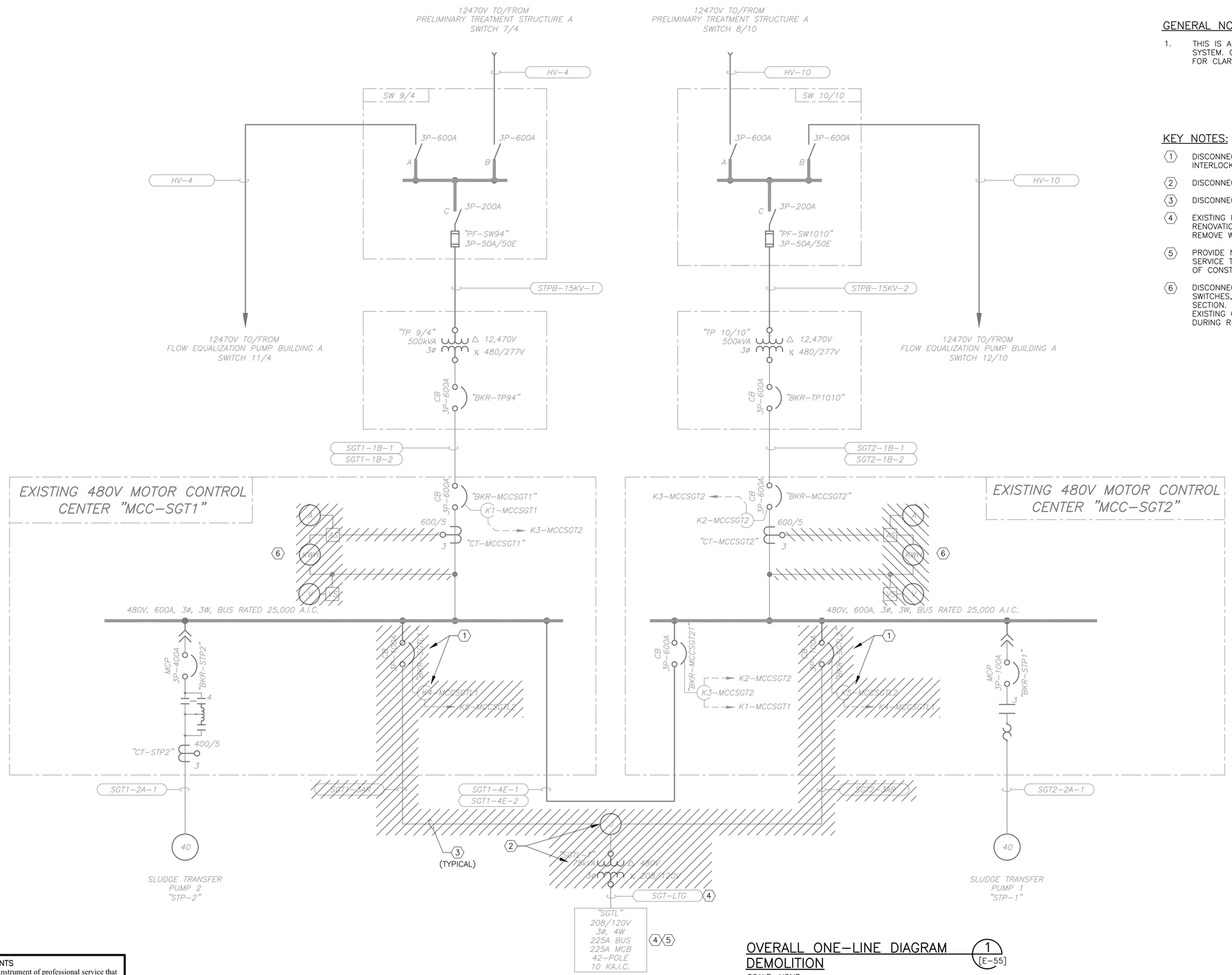

GENERAL NOTES:

1. THIS IS AN OVERVIEW OF THE PROPOSED POWER DISTRIBUTION SYSTEM. ONLY MAJOR ELECTRICAL EQUIPMENT HAS BEEN SHOWN FOR CLARITY.

KEY NOTES:

1. DISCONNECT AND REMOVE CIRCUIT BREAKER AND ASSOCIATED KEY INTERLOCK SYSTEM.
2. DISCONNECT AND REMOVE TRANSFORMER AND JUNCTION BOX.
3. DISCONNECT AND REMOVE CONDUIT AND WIRING.
4. EXISTING PANELBOARD SHALL REMAIN AND BE REUSED DURING RENOVATION ACTIVITIES. DISCONNECT CONDUIT FROM TRANSFORMER. REMOVE WIRING FEEDING THE PANELBOARD.
5. PROVIDE NECESSARY MEANS TO MAINTAIN CONTINUOUS ELECTRICAL SERVICE TO THE EXISTING PANELBOARD LOADS DURING ALL PHASES OF CONSTRUCTION.
6. DISCONNECT AND REMOVE METERS, VOLTAGE AND CURRENT SWITCHES, AND DOOR OF MOTOR CONTROL CENTER MAIN BREAKER SECTION. DISCONNECT AND REMOVE ALL ASSOCIATE WIRING. EXISTING CURRENT TRANSFORMERS SHALL REMAIN AND BE REUSED DURING RENOVATION.

OVERALL ONE-LINE DIAGRAM DEMOLITION

1 [E-55]

SCALE: NONE

REUSE OF DOCUMENTS

This document, and the designs incorporated herein, is an instrument of professional service that has been developed, designed and prepared by Harutunian Engineering, Inc., and is not to be used, in whole or part, for any other project without giving written notice to Harutunian Engineering, Inc.

REV No	DATE	DRWN	CHKD	REMARKS
△	–	–	–	–

DESIGNED BY: HEI
DRAWN BY: HEI
SHEET CHK'D BY: HEI
CROSS CHK'D BY: HEI
APPROVED BY: HEI
DATE: APRIL 2016

CDM Smith
Riata Corporate Park, 12357-A Riata Trace Parkway, Suite 210
Austin, TX 78727
Tel: (512) 346-1100
Texas Registration Number F-3043

HARUTUNIAN ENGINEERING, INC.
305 E Huntland Dr, Ste 500; Austin, TX 78752
TBPE Firm Registration No. F-2408

CITY OF AUSTIN, TEXAS - AUSTIN WATER UTILITY
CIP 3333.016

SOUTH AUSTIN REGIONAL WWTP
THICKENER IMPROVEMENTS PROJECT

OVERALL ONE-LINE DIAGRAM
DEMOLITION

STATE OF TEXAS
K. A. HARUTUNIAN
59181
REGISTERED
PROFESSIONAL ENGINEER
4/22/2016

PROJECT No 590-104217
FILE NAME: E-01

SHEET No
E-01

Plotted: 4/22/2016 8:46:54 AM

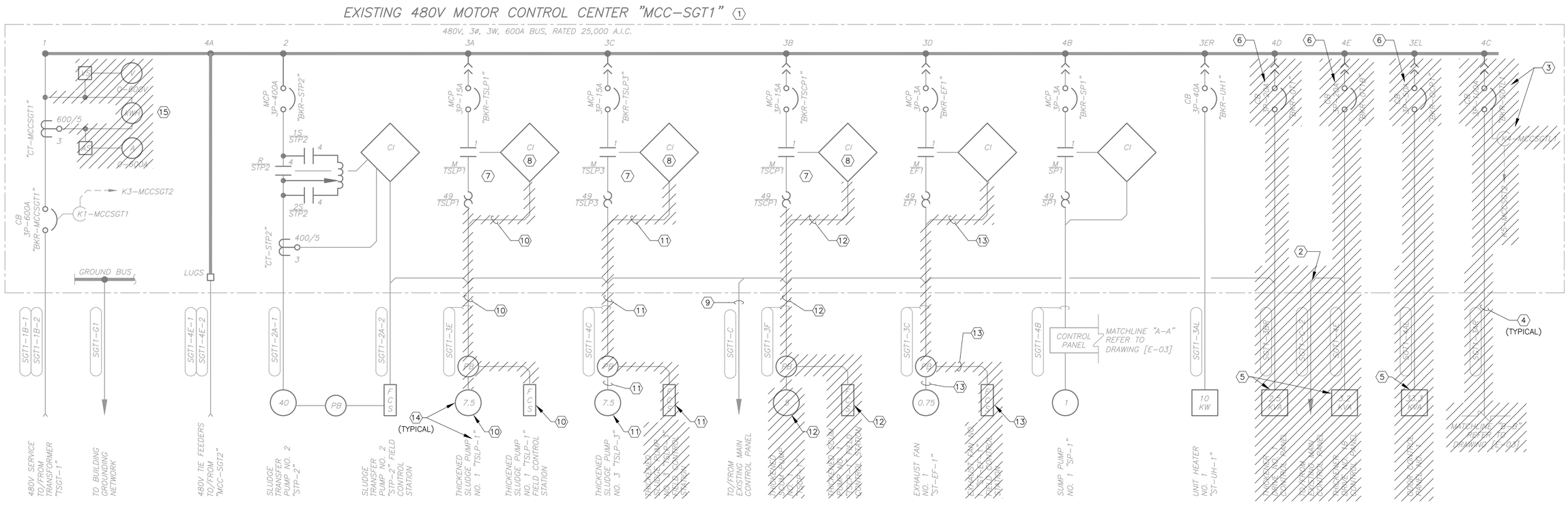

DETAILED ONE–LINE DIAGRAM DEMOLITION (1) [E–55]

SCALE: NONE

KEY NOTES:

(14) ALL THICKENED SLUDGE/SCUM PUMPS SHALL BE RETAGGED DURING RENOVATION ACTIVITIES.

(15) DISCONNECT AND REMOVE METERS, VOLTAGE AND CURRENT SWITCHES, AND DOOR OF MOTOR CONTROL CENTER MAIN BREAKER SECTION. DISCONNECT AND REMOVE ALL ASSOCIATE WIRING. EXISTING CURRENT TRANSFORMERS SHALL REMAIN AND BE REUSED DURING RENOVATION.

KEY NOTES:

(10) EXISTING MOTOR SHALL REMAIN AND BE RECONNECTED TO MOTOR CONTROL CENTER "MCC–SGT2" DURING RENOVATION. FIELD CONTROL STATION SHALL REMAIN. DISCONNECT AND REMOVE ALL OTHER PUMP FIELD CONTROLS DEVICES. DISCONNECT AND REMOVE ALL POWER, SPACE HEATER, AND CONTROLS CONDUIT/WIRING BETWEEN MOTOR CONTROL CENTER AND MOTOR/FIELD CONTROLS DEVICES. EXISTING CONTROL WIRING BETWEEN MOTOR CONTROL CENTER AND EXISTING CONTROL PANEL "PB01–CCP–01" SHALL REMAIN. REFER TO CONTROL SCHEMATICS DEMOLITION ON DRAWING NOS. [E–36] AND [E–38].

(11) EXISTING MOTOR SHALL REMAIN. DISCONNECT AND REMOVE FIELD CONTROL STATION AND ALL FIELD CONTROLS DEVICES. DISCONNECT AND REMOVE ALL CONTROL WIRING BETWEEN MOTOR CONTROL CENTER AND PUMP FIELD CONTROLS DEVICES. A PORTION OF THE CONTROL WIRING APPEARS TO BE ROUTED IN SAME CONDUIT WITH POWER WIRING. POWER AND SPACE HEATER WIRING SHALL REMAIN. DISCONNECT AND REMOVE CONTROL WIRING BETWEEN MOTOR CONTROL CENTER AND EXISTING CONTROL PANEL "PB01–CCP–01". REFER TO CONTROL SCHEMATICS DEMOLITION ON DRAWING NOS. [E–36] AND [E–38].

(12) DISCONNECT AND REMOVE MOTOR AND ALL PUMP FIELD CONTROLS DEVICES. DISCONNECT AND REMOVE ALL POWER, SPACE HEATER, AND CONTROLS CONDUIT/WIRING BETWEEN MOTOR CONTROL CENTER AND MOTOR/FIELD DEVICES. DISCONNECT AND REMOVE CONTROL WIRING BETWEEN MOTOR CONTROL CENTER AND EXISTING CONTROL PANEL "PB01–CCP–01". REFER TO CONTROL SCHEMATICS DEMOLITION ON DRAWING NOS. [E–36] AND [E–38].

(13) DISCONNECT AND REMOVE FIELD CONTROL STATION. DISCONNECT ASSOCIATED THERMOSTAT (NOT SHOWN). THERMOSTAT SHALL BE REUSED AND RELOCATED DURING RENOVATION. DISCONNECT AND REMOVE CONTROL CONDUIT/WIRING BETWEEN MOTOR CONTROL CENTER AND FIELD CONTROL STATION AND THERMOSTAT. POWER CONDUIT/WIRING SHALL REMAIN AND BE REUSED DURING RENOVATION. REFER TO DRAWING NO. [E–38].

KEY NOTES:

(1) EXISTING 480V MOTOR CONTROL CENTER MANUFACTURED BY "SQUARE D" MODEL 4, CLASS 8998, FACTORY ORDER NO. 45–96172–9. COORDINATE WITH MANUFACTURER OF EXISTING MOTOR CONTROL CENTER (MCC) PRIOR TO DEMOLITION/RENOVATION ACTIVITIES.

(2) EXISTING CONTROL WIRING APPEARS TO BE TERMINATED TO TERMINAL BLOCKS (NOT SHOWN) IN SECTION 4F OF EXISTING MOTOR CONTROL CENTER. WIRING ASSOCIATED WITH UNMODIFIED EQUIPMENT SHALL REMAIN UNCHANGED.

(3) DISCONNECT AND REMOVE CIRCUIT BREAKER AND ASSOCIATED KEY INTERLOCK SYSTEM.

(4) DISCONNECT AND REMOVE CONDUIT AND WIRING FROM SOURCE TO DESTINATION. TYPICAL UNLESS NOTED OTHERWISE.

(5) DISCONNECT AND REMOVE EQUIPMENT AND ALL ASSOCIATED CONTROL PANELS AND FIELD CONDUIT/WIRE IN THEIR ENTIRETY.

(6) DISCONNECT AND REMOVE CIRCUIT BREAKER AND ALL ASSOCIATED FIELD CONDUIT AND WIRING.

(7) EXISTING STARTER AND CONTROLS SHALL REMAIN AND BE REUSED DURING RENOVATION. REFER TO DEMOLITION AND RENOVATION CONTROL LOGIC DRAWINGS.

(8) PORTIONS OF THE EXISTING CONTROLS/WIRING SHALL REMAIN AND BE REUSED DURING RENOVATION ACTIVITIES. FIELD VERIFY AND DOCUMENT ALL EXISTING TERMINATION POINTS TO FACILITATE RECONNECTION DURING RENOVATION. DISCONNECT AND REMOVE CONTROLS/WIRING PER CONTROL SCHEMATICS DEMOLITION DRAWINGS.

(9) ALL WIRING ASSOCIATED WITH UNMODIFIED EQUIPMENT SHALL REMAIN IN CONDUIT(S).

K. A. HARUTUNIAN
STATE OF TEXAS
K. A. HARUTUNIAN
59181
REGISTERED
PROFESSIONAL ENGINEER
4/22/2016

REUSE OF DOCUMENTS
This document, and the designs incorporated herein, is an instrument of professional service that has been developed, designed and prepared by Harutunian Engineering, Inc., and is not to be used, in whole or part, for any other project without giving written notice to Harutunian Engineering, Inc.

REV No	DATE	DRWN	CHKD	REMARKS
△	–	–	–	–

DESIGNED BY: HEI
DRAWN BY: HEI
SHEET CHK'D BY: HEI
CROSS CHK'D BY: HEI
APPROVED BY: HEI
DATE: APRIL 2016

CDM Smith
Riata Corporate Park, 12357-A Riata Trace Parkway, Suite 210
Austin, TX 78727
Tel: (512) 346-1100
Texas Registration Number F-3043

HEI
HARUTUNIAN ENGINEERING, INC.
305 E Huntland Dr, Ste 500; Austin, TX 78752
TBPE Firm Registration No. F-2408

CITY OF AUSTIN, TEXAS - AUSTIN WATER UTILITY
CIP 3333.016

SOUTH AUSTIN REGIONAL WWTP
THICKENER IMPROVEMENTS PROJECT

DETAILED ONE-LINE DIAGRAM
DEMOLITIONS
(SHEET 1 OF 2)

PROJECT No 590–104217
FILE NAME: E–02

SHEET No
E-02

Plotted: 4/22/2016 8:46:58 AM

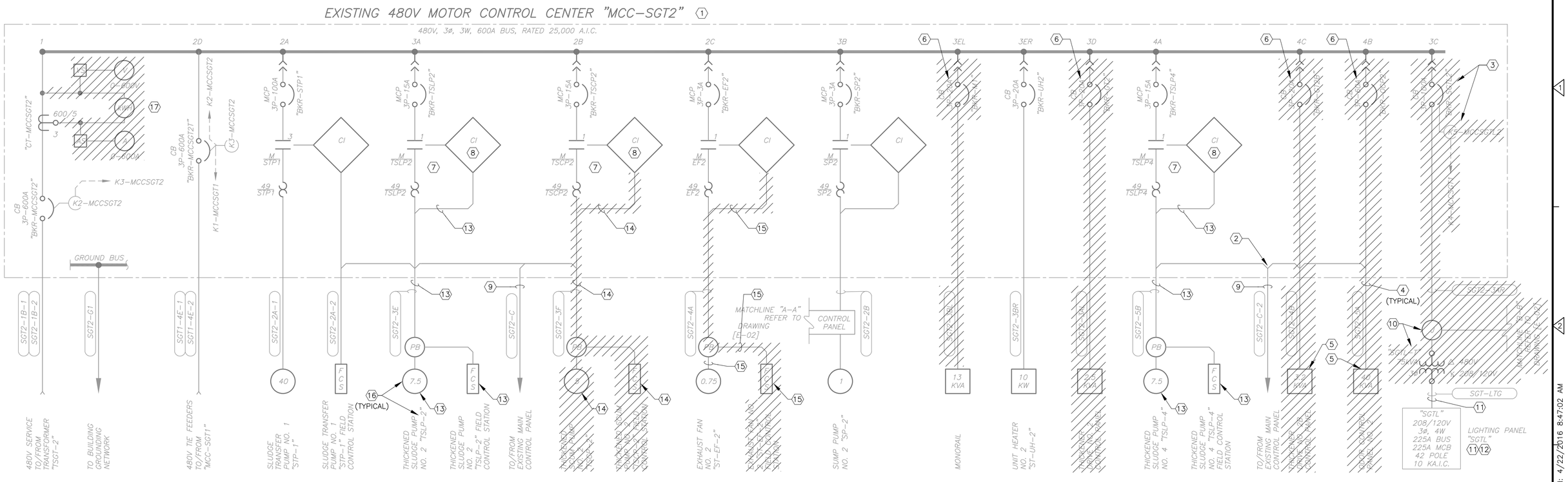

DETAILED ONE-LINE DIAGRAM DEMOLITION

1 [E-55]

SCALE: NONE

KEY NOTES:

(12) PROVIDE NECESSARY MEANS TO MAINTAIN CONTINUOUS ELECTRICAL SERVICE TO THE EXISTING PANELBOARD LOADS DURING ALL PHASES OF CONSTRUCTION.

(13) EXISTING MOTOR AND FIELD CONTROL STATION SHALL REMAIN. DISCONNECT AND REMOVE ALL OTHER PUMP FIELD CONTROLS DEVICES. DISCONNECT AND REMOVE ALL CONTROL WIRING BETWEEN LOW PRESSURE SWITCH AND CHECK VALVE LIMIT SWITCH AND MOTOR CONTROL CENTER AND CONTROL PANEL "PB01-CCP-01" OR "PB01-CPP-03" AS APPLICABLE. CONTROL WIRING BETWEEN MOTOR CONTROL CENTER AND FIELD CONTROL STATION AND SOLENOID VALVE SHALL REMAIN. A PORTION OF THE CONTROL WIRING APPEARS TO BE ROUTED IN SAME CONDUIT WITH POWER WIRING. POWER AND SPACE HEATER WIRING SHALL REMAIN. REFER TO CONTROL SCHEMATICS DEMOLITION ON DRAWING NOS. [E-36] AND [E-38].

(14) DISCONNECT AND REMOVE MOTOR AND ALL PUMP FIELD CONTROLS DEVICES. DISCONNECT AND REMOVE ALL POWER, SPACE HEATER, AND CONTROLS CONDUIT/WIRING BETWEEN MOTOR CONTROL CENTER AND MOTOR/FIELD DEVICES. DISCONNECT AND REMOVE CONTROL WIRING BETWEEN MOTOR CONTROL CENTER AND EXISTING CONTROL PANEL "PB01-CCP-01". REFER TO CONTROL SCHEMATICS DEMOLITION ON DRAWING NOS. [E-36] AND [E-38].

(15) DISCONNECT AND REMOVE FIELD CONTROL STATION. DISCONNECT ASSOCIATED THERMOSTAT (NOT SHOWN). THERMOSTAT SHALL BE REUSED AND RELOCATED DURING RENOVATION. DISCONNECT AND REMOVE CONTROL CONDUIT/WIRING BETWEEN MOTOR CONTROL CENTER AND FIELD CONTROL STATION AND THERMOSTAT. POWER CONDUIT/WIRING SHALL REMAIN AND BE REUSED DURING RENOVATION. REFER TO DRAWING NO. [E-38].

(16) ALL THICKENED SLUDGE/SCUM PUMPS SHALL BE RETAGGED DURING RENOVATION ACTIVITIES.

(17) DISCONNECT AND REMOVE METERS, VOLTAGE AND CURRENT SWITCHES, AND DOOR OF MOTOR CONTROL CENTER MAIN BREAKER SECTION. DISCONNECT AND REMOVE ALL ASSOCIATE WIRING. EXISTING CURRENT TRANSFORMERS SHALL REMAIN AND BE REUSED DURING RENOVATION.

KEY NOTES:

(1) EXISTING 480V MOTOR CONTROL CENTER MANUFACTURED BY "SQUARE D" MODEL 4, CLASS 8998, FACTORY ORDER NO. 45-96172-10 AND 12-77848-1. COORDINATE WITH MANUFACTURER OF EXISTING MOTOR CONTROL CENTER (MCC) PRIOR TO DEMOLITION/RENOVATION ACTIVITIES.

(2) EXISTING CONTROL WIRING APPEARS TO BE TERMINATED TO TERMINAL BLOCKS (NOT SHOWN) IN SECTION 4D OF EXISTING MOTOR CONTROL CENTER. WIRING ASSOCIATED WITH UNMODIFIED EQUIPMENT SHALL REMAIN UNCHANGED.

(3) DISCONNECT AND REMOVE CIRCUIT BREAKER AND ASSOCIATED KEY INTERLOCK SYSTEM.

(4) DISCONNECT AND REMOVE CONDUIT AND WIRING FROM SOURCE TO DESTINATION. TYPICAL UNLESS NOTED OTHERWISE.

(5) DISCONNECT AND REMOVE EQUIPMENT AND ALL ASSOCIATED CONTROL PANELS AND FIELD CONDUIT/WIRE IN THEIR ENTIRETY.

(6) DISCONNECT AND REMOVE CIRCUIT BREAKER AND ALL ASSOCIATED FIELD CONDUIT AND WIRING.

(7) EXISTING STARTER AND CONTROLS SHALL REMAIN AND BE REUSED DURING RENOVATION. REFER TO DEMOLITION AND RENOVATION CONTROL LOGIC DRAWINGS.

(8) PORTIONS OF THE EXISTING CONTROLS/WIRING SHALL REMAIN AND BE REUSED DURING RENOVATION ACTIVITIES. FIELD VERIFY AND DOCUMENT ALL EXISTING TERMINATION POINTS TO FACILITATE RECONNECTION DURING RENOVATION. DISCONNECT AND REMOVE CONTROLS/WIRING PER CONTROL SCHEMATICS DEMOLITION DRAWINGS.

(9) ALL WIRING ASSOCIATED WITH UNMODIFIED EQUIPMENT SHALL REMAIN IN CONDUIT(S).

(10) DISCONNECT AND REMOVE TRANSFORMER AND JUNCTION BOX.

(11) EXISTING PANELBOARD SHALL REMAIN AND BE REUSED DURING RENOVATION ACTIVITIES. DISCONNECT SECONDARY CONDUIT FROM TRANSFORMER. REMOVE WIRING FEEDING THE PANELBOARD.

REUSE OF DOCUMENTS

This document, and the designs incorporated herein, is an instrument of professional service that has been developed, designed and prepared by Harutunian Engineering, Inc., and is not to be used, in whole or part, for any other project without giving written notice to Harutunian Engineering, Inc.

REV No	DATE	DRWN	CHKD	REMARKS
△	–	–	–	–

DESIGNED BY: HEI
DRAWN BY: HEI
SHEET CHK'D BY: HEI
CROSS CHK'D BY: HEI
APPROVED BY: HEI
DATE: APRIL 2016

CDM Smith
Riata Corporate Park, 12357-A Riata Trace Parkway, Suite 210
Austin, TX 78727
Tel: (512) 346-1100
Texas Registration Number F-3043

HEI
HARUTUNIAN ENGINEERING, INC.
305 E Huntland Dr, Ste 500; Austin, TX 78752
TBPE Firm Registration No. F-2408

CITY OF AUSTIN, TEXAS - AUSTIN WATER UTILITY
CIP 3333.016

SOUTH AUSTIN REGIONAL WWTP
THICKENER IMPROVEMENTS PROJECT

DETAILED ONE-LINE DIAGRAM
DEMOLITIONS
(SHEET 2 OF 2)

STATE OF TEXAS
K. A. HARUTUNIAN
59181
REGISTERED
PROFESSIONAL ENGINEER
4/22/2016

PROJECT No 590-104217
FILE NAME: E-03

SHEET No
E-03

Plotted: 4/22/2016 8:47:02 AM

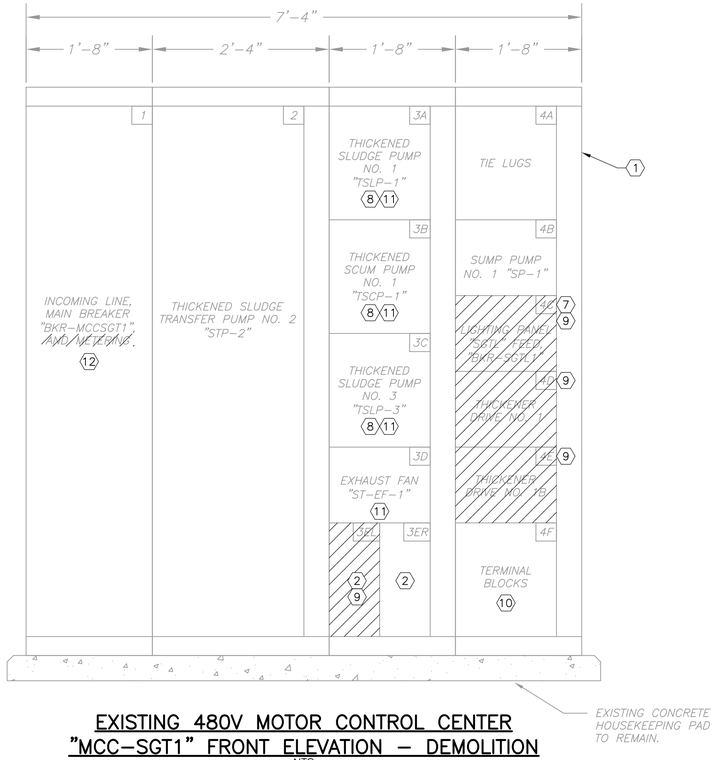

EXISTING 480V MOTOR CONTROL CENTER "MCC-SGT1" FRONT ELEVATION – DEMOLITION

NTS

MOTOR CONTROL CENTER ELEVATION "MCC-SGT1" (3)	
SECTION	DESCRIPTION
3EL	~~DOOR CONTROL PANEL NO. 1~~ (9)
3ER	UNIT HEATER "ST-UH-1"

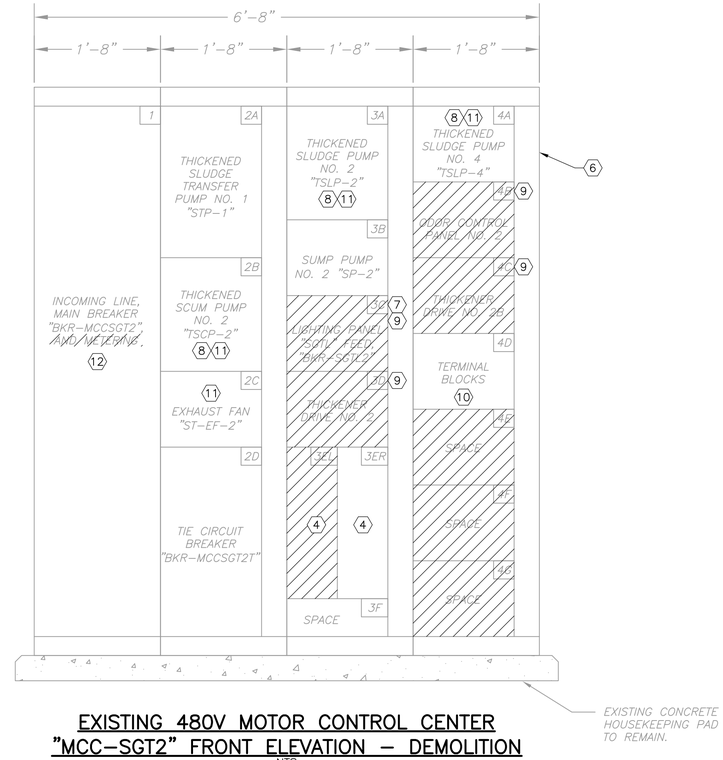

EXISTING 480V MOTOR CONTROL CENTER "MCC-SGT2" FRONT ELEVATION – DEMOLITION

NTS

MOTOR CONTROL CENTER ELEVATION "MCC-SGT2" (5)	
SECTION	DESCRIPTION
3EL	~~NO MODIFICATION~~ (9)
3ER	UNIT HEATER "ST-UH-2"

KEY NOTES:

1. EXISTING 480V MOTOR CONTROL CENTER MANUFACTURED BY "SQUARE D" MODEL 4, CLASS 8998, FACTORY ORDER NO. 45-96172-9. COORDINATE WITH MANUFACTURER OF EXISTING MOTOR CONTROL CENTER (MCC) PRIOR TO DEMOLITION/RENOVATION ACTIVITIES.
2. REFER TO EXISTING 480V MOTOR CONTROL CENTER ELEVATION "MCC-SGT1" TABLE ON THIS DRAWING FOR ENUMERATION OF THE CONTENTS IN THIS SECTION.
3. REFER TO EXISTING 480V MOTOR CONTROL CENTER "MCC-SGT1" FRONT ELEVATION ON THIS DRAWING FOR LOCATION OF THE SECTIONS ENUMERATED IN THIS TABLE.
4. REFER TO EXISTING 480V MOTOR CONTROL CENTER ELEVATION "MCC-SGT2" TABLE ON THIS DRAWING FOR ENUMERATION OF THE CONTENTS IN THIS SECTION.
5. REFER TO EXISTING 480V MOTOR CONTROL CENTER "MCC-SGT2" FRONT ELEVATION ON THIS DRAWING FOR LOCATION OF THE SECTIONS ENUMERATED IN THIS TABLE.
6. EXISTING 480V MOTOR CONTROL CENTER MANUFACTURED BY "SQUARE D" MODEL 4, CLASS 8998, FACTORY ORDER NO. 45-96172-10 AND 12-77848-1. COORDINATE WITH MANUFACTURER OF EXISTING MOTOR CONTROL CENTER (MCC) PRIOR TO DEMOLITION/RENOVATION ACTIVITIES.
7. DISCONNECT AND REMOVE CIRCUIT BREAKER AND ASSOCIATED KEY INTERLOCK SYSTEM.
8. EXISTING STARTER AND CONTROLS SHALL REMAIN AND BE REUSED DURING RENOVATION. STARTER BUCKET AND INTERNAL COMPONENTS SHALL BE RETAGGED DURING RENOVATION.
9. DISCONNECT AND REMOVE CIRCUIT BREAKER AND ALL ASSOCIATED FIELD CONDUIT AND WIRING.
10. EXISTING CONTROL WIRING APPEARS TO BE TERMINATED TO TERMINAL BLOCKS IN THIS SECTION OF EXISTING MOTOR CONTROL CENTER. WIRING ASSOCIATED WITH UNMODIFIED EQUIPMENT SHALL REMAIN UNCHANGED.
11. PORTIONS OF THE EXISTING CONTROLS/WIRING SHALL REMAIN AND BE REUSED DURING RENOVATION ACTIVITIES. FIELD VERIFY AND DOCUMENT ALL EXISTING TERMINATION POINTS TO FACILITATE RECONNECTION DURING RENOVATION. DISCONNECT AND REMOVE CONTROLS/WIRING PER CONTROL SCHEMATICS DEMOLITION DRAWINGS.
12. DISCONNECT AND REMOVE METERS, VOLTAGE AND CURRENT SWITCHES, AND DOOR OF MOTOR CONTROL CENTER MAIN BREAKER SECTION. DISCONNECT AND REMOVE ALL ASSOCIATE WIRING. EXISTING CURRENT TRANSFORMERS IN THIS SECTION SHALL REMAIN AND BE REUSED DURING RENOVATION.

Plotted: 4/22/2016 8:47:05 AM

REUSE OF DOCUMENTS
This document, and the designs incorporated herein, is an instrument of professional service that has been developed, designed and prepared by Harutunian Engineering, Inc., and is not to be used, in whole or part, for any other project without giving written notice to Harutunian Engineering, Inc.

REV No	DATE	DRWN	CHKD	REMARKS
1	–	–	–	–

DESIGNED BY: HEI
DRAWN BY: HEI
SHEET CHK'D BY: HEI
CROSS CHK'D BY: HEI
APPROVED BY: HEI
DATE: APRIL 2016

CDM Smith
Riata Corporate Park, 12357-A Riata Trace Parkway, Suite 210
Austin, TX 78727
Tel: (512) 346-1100
Texas Registration Number F-3043

HARUTUNIAN ENGINEERING, INC.
305 E Huntland Dr, Ste 500; Austin, TX 78752
TBPE Firm Registration No. F-2408

CITY OF AUSTIN, TEXAS - AUSTIN WATER UTILITY
CIP 3333.016

SOUTH AUSTIN REGIONAL WWTP
THICKENER IMPROVEMENTS PROJECT

DISTRIBUTION EQUIPMENT
FRONT ELEVATIONS
DEMOLITION

STATE OF TEXAS
K. A. HARUTUNIAN
59181
REGISTERED PROFESSIONAL ENGINEER
4/22/2016

PROJECT No 590-104217
FILE NAME: E-04

SHEET No
E-04

GENERAL NOTES:

1. THIS IS AN OVERVIEW OF THE PROPOSED RENOVATIONS TO THE POWER DISTRIBUTION SYSTEM. ONLY MAJOR ELECTRICAL EQUIPMENT HAS BEEN SHOWN FOR CLARITY.

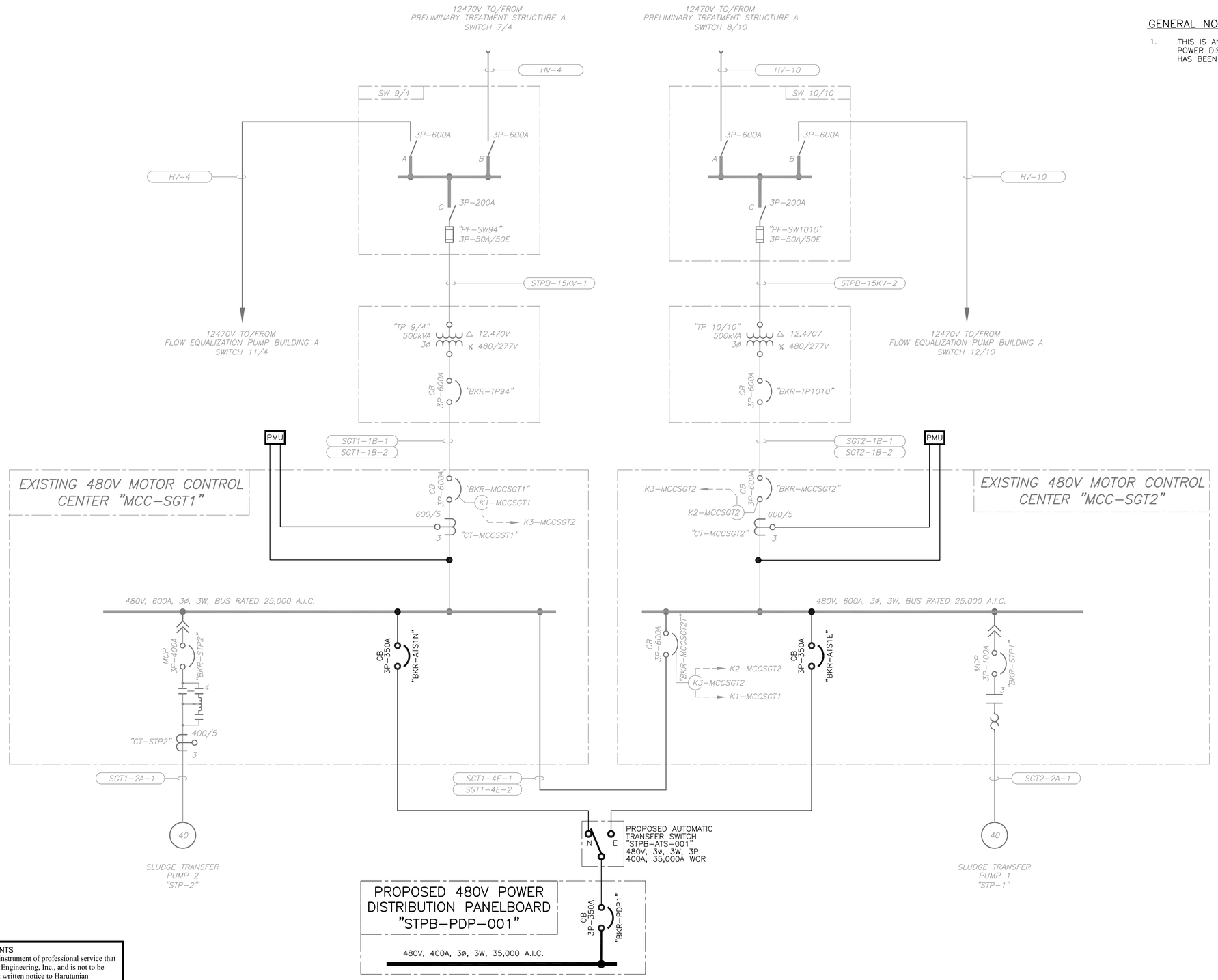

REUSE OF DOCUMENTS

This document, and the designs incorporated herein, is an instrument of professional service that has been developed, designed and prepared by Harutunian Engineering, Inc., and is not to be used, in whole or part, for any other project without giving written notice to Harutunian Engineering, Inc.

REV No	DATE	DRWN	CHKD	REMARKS
A	–	–	–	–

DESIGNED BY: HEI
DRAWN BY: HEI
SHEET CHK'D BY: HEI
CROSS CHK'D BY: HEI
APPROVED BY: HEI
DATE: APRIL 2016

CDM Smith
Riata Corporate Park, 12357-A Riata Trace Parkway, Suite 210
Austin, TX 78727
Tel: (512) 346-1100
Texas Registration Number F-3043

HARUTUNIAN ENGINEERING, INC.
305 E Huntland Dr, Ste 500; Austin, TX 78752
TBPE Firm Registration No. F-2408

CITY OF AUSTIN, TEXAS - AUSTIN WATER UTILITY
CIP 3333.016

SOUTH AUSTIN REGIONAL WWTP
THICKENER IMPROVEMENTS PROJECT

OVERALL ONE-LINE DIAGRAM
RENOVATION

K. A. HARUTUNIAN
STATE OF TEXAS
K. A. HARUTUNIAN
59181
REGISTERED
PROFESSIONAL ENGINEER
4/22/2016

PROJECT No 590-104217
FILE NAME: E-05

SHEET No
E-05

Plotted: 4/22/2016 8:47:09 AM

GENERAL NOTES:

1. COORDINATE ALL PROPOSED CHANGES WITH MOTOR CONTROL CENTER MANUFACTURER. SIZE CONTROL POWER TRANSFORMER AND FUSES PER MANUFACTURERS' RECOMMENDATIONS. FIELD VERIFY EXISTING CONDITIONS AND MODIFY INSTALLATION AS REQUIRED AT NO ADDITIONAL COST TO THE OWNER.
2. REFER TO DRAWING NO. [E-49] FOR ADDITIONAL REQUIREMENTS FOR PROPOSED POWER MONITORING.

KEY NOTES:

(10) FURNISH AND INSTALL CONTROL PANEL ENCLOSURE ABOVE EXISTING MOTOR CONTROL CENTER. MOUNT PROPOSED POWER MONITORING UNIT/METER, CURRENT TRANSFORMER SHORTING TERMINAL BLOCK, CONTROL POWER TRANSFORMER SECONDARY FUSE, DISCRETE OUTPUT MODULE, AND ETHERNET PATCH PANEL TO BACKPLANE OF ENCLOSURE. REFER TO CONTROL LOGIC ON DRAWING NO. [E-49] FOR ADDITIONAL REQUIREMENTS.

(11) FURNISH AND INSTALL CONTROL POWER TRANSFORMER AND FUSES INSIDE MOTOR CONTROL CENTER AS INDICATED.

(12) CONNECT PROPOSED WIRING TO EXISTING CURRENT TRANSFORMERS.

(13) CONNECT PROPOSED WIRING TO LINE SIDE OF MAIN BREAKER.

(14) FURNISH AND INSTALL CONDUIT/WIRE BETWEEN MOTOR CONTROL CENTER AND PROPOSED ENCLOSURE AND MAKE ALL FINAL TERMINATIONS.

(15) PROPOSED WIRING CONTINUES TO POWER MONITORING DISPLAY. FURNISH AND INSTALL NEW DOOR ON MAIN BREAKER SECTION. MOUNT DISPLAY TO FACE OF DOOR.

(16) FURNISH AND INSTALL A POWER MONITORING UNIT (PMU) CONSISTING OF ONE (1) GE MULTILIN EPM 9450 (TRANSDUCER MODULE) COMPLETE WITH THREE LINE LED COMBINATION DISPLAY AND KEYPAD MODEL PL900040N. FURNISH NAD INSTALL ALL REQUIRED CABLING TO POWER THE PUNITS AND TO INTERCONNECT THE DISPLAY WITH THE EPM 9450 UNIT. ADDITIONALLY FURNISH ONE SPARE PMU CONSISTING OF ONE (1) GE MULTILIN EPM 9450 (TRANSDUCER MODULE) COMPLETE WITH THREE LINE LED COMBINATION DISPLAY AND KEYPAD MODEL PL900040N.

KEY NOTES:

(1) EXISTING 480V MOTOR CONTROL CENTER MANUFACTURED BY "SQUARE D" MODEL 4, CLASS 8998, FACTORY ORDER NO. 45-96172-9. COORDINATE WITH MANUFACTURER OF EXISTING MOTOR CONTROL CENTER (MCC) PRIOR TO DEMOLITION/RENOVATION ACTIVITIES.

(2) EXISTING STARTER SHALL BE REUSED TO SERVE THE PROPOSED SLUDGE PUMP. FURNISH AND INSTALL REPLACEMENT LABELS/NAMEPLATES ON INTERIOR AND EXTERIOR AS APPLICABLE TO REFLECT THE NEW LOAD SERVED BY STARTER IN THIS SECTION.

(3) EXISTING STARTER SHALL BE REUSED TO SERVE THE EXISTING RETAGGED SLUDGE PUMP. FURNISH AND INSTALL REPLACEMENT LABELS/NAMEPLATES ON INTERIOR AND EXTERIOR AS APPLICABLE TO REFLECT THE NEW LOAD SERVED BY STARTER IN THIS SECTION.

(4) FURNISH AND INSTALL PROPOSED BREAKER IN THE EXISTING MOTOR CONTROL CENTER.

(5) FURNISH AND INSTALL PROPOSED CONDUIT/WIRE BETWEEN EQUIPMENT AND MAKE ALL FINAL CONNECTIONS.

(6) FURNISH AND INSTALL REPLACEMENT OVERLOAD HEATER BASED ON CHARACTERISTICS OF PROPOSED LOAD.

(7) REFER TO CONTROL SCHEMATICS RENOVATION DRAWINGS FOR REQUIRED MODIFICATIONS TO EXISTING CONTROLS AND WIRING.

(8) PROPOSED FIELD CONTROL STATION AND PUMP FIELD CONTROLS DEVICES NOT SHOWN HERE. REFER TO FLOOR PLANS AND CONTROL SCHEMATIC RENOVATION DRAWINGS.

(9) FURNISH AND INSTALL NEW EQUIPMENT TAGS AT THE MOTOR AND FIELD CONTROL STATION.

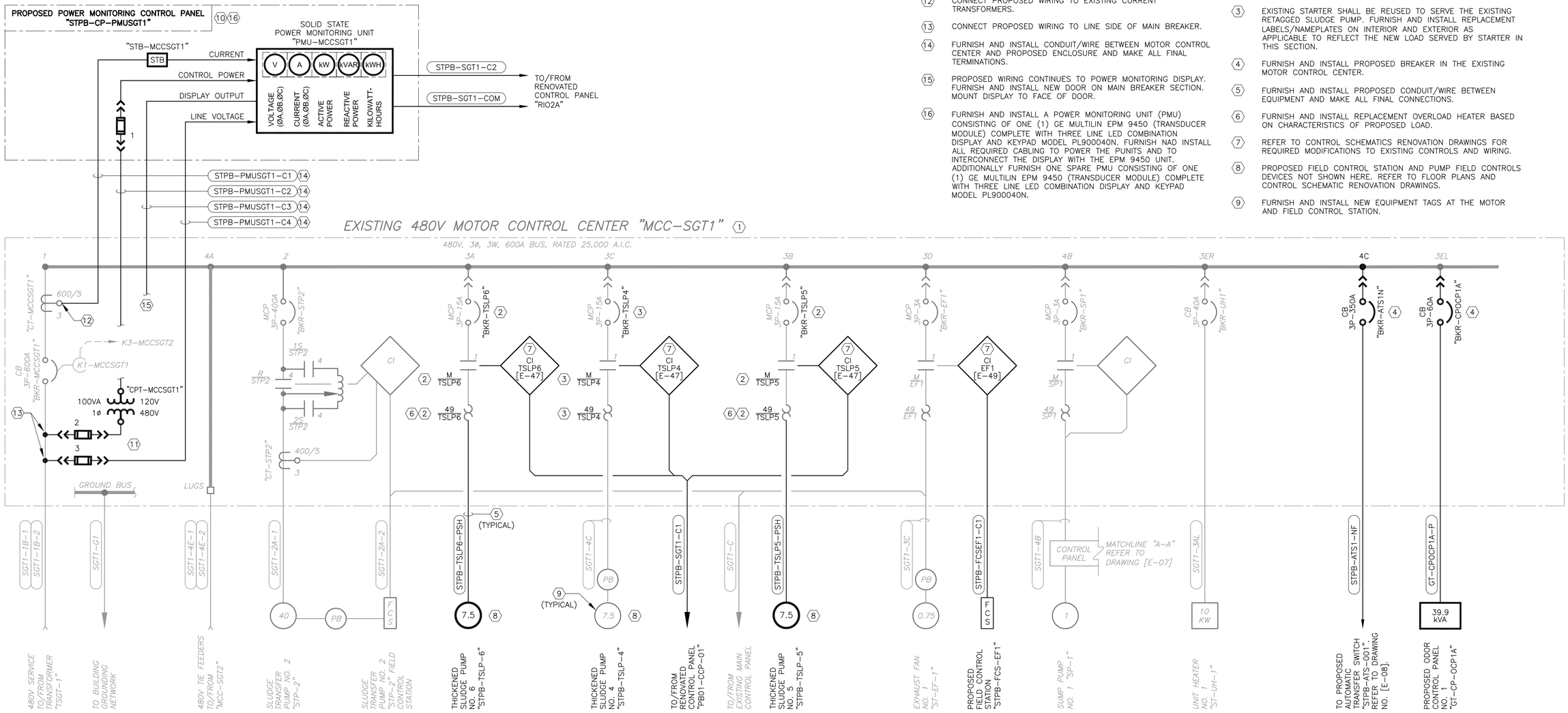

REUSE OF DOCUMENTS
This document, and the designs incorporated herein, is an instrument of professional service that has been developed, designed and prepared by Harutunian Engineering, Inc., and is not to be used, in whole or part, for any other project without giving written notice to Harutunian Engineering, Inc.

REV No	DATE	DRWN	CHKD	REMARKS
△	–	–	–	–

DESIGNED BY: HEI
DRAWN BY: HEI
SHEET CHK'D BY: HEI
CROSS CHK'D BY: HEI
APPROVED BY: HEI
DATE: APRIL 2016

CDM Smith
Riata Corporate Park, 12357-A Riata Trace Parkway, Suite 210
Austin, TX 78727
Tel: (512) 346-1100
Texas Registration Number F-3043

HARUTUNIAN ENGINEERING, INC.
305 E Huntland Dr, Ste 500; Austin, TX 78752
TBPE Firm Registration No. F-2408

CITY OF AUSTIN, TEXAS - AUSTIN WATER UTILITY
CIP 3333.016

SOUTH AUSTIN REGIONAL WWTP
THICKENER IMPROVEMENTS PROJECT

DETAILED ONE-LINE DIAGRAM RENOVATION (SHEET 1 OF 3)

STATE OF TEXAS
K. A. HARUTUNIAN
59181
REGISTERED PROFESSIONAL ENGINEER
4/22/2016

PROJECT No 590-104217
FILE NAME: E-06

SHEET No
E-06

Plotted: 4/22/2016 8:47:13 AM

GENERAL NOTES:

1. COORDINATE ALL PROPOSED CHANGES WITH MOTOR CONTROL CENTER MANUFACTURER. SIZE CONTROL POWER TRANSFORMER AND FUSES PER MANUFACTURERS' RECOMMENDATIONS. FIELD VERIFY EXISTING CONDITIONS AND MODIFY INSTALLATION AS REQUIRED AT NO ADDITIONAL COST TO THE OWNER.
2. REFER TO DRAWING NO. [E-49] FOR ADDITIONAL REQUIREMENTS FOR PROPOSED POWER MONITORING.

KEY NOTES:

(9) FURNISH AND INSTALL CONTROL PANEL ENCLOSURE ABOVE EXISTING MOTOR CONTROL CENTER. MOUNT PROPOSED POWER MONITORING UNIT/METER, CURRENT TRANSFORMER SHORTING TERMINAL BLOCK, CONTROL POWER TRANSFORMER SECONDARY FUSE, DISCRETE OUTPUT MODULE, AND ETHERNET PATCH PANEL TO BACKPLANE OF ENCLOSURE. REFER TO CONTROL LOGIC ON DRAWING NO. [E-49] FOR ADDITIONAL REQUIREMENTS.

(10) FURNISH AND INSTALL CONTROL POWER TRANSFORMER AND FUSES INSIDE MOTOR CONTROL CENTER AS INDICATED.

(11) CONNECT PROPOSED WIRING TO EXISTING CURRENT TRANSFORMERS.

(12) CONNECT PROPOSED WIRING TO LINE SIDE OF MAIN BREAKER.

(13) FURNISH AND INSTALL CONDUIT/WIRE BETWEEN MOTOR CONTROL CENTER AND PROPOSED ENCLOSURE AND MAKE ALL FINAL TERMINATIONS.

(14) PROPOSED WIRING CONTINUES TO POWER MONITORING DISPLAY. FURNISH AND INSTALL NEW DOOR ON MAIN BREAKER SECTION. MOUNT DISPLAY TO FACE OF DOOR.

(15) EXISTING FIELD CONTROL STATION SHALL REMAIN AND BE REUSED. CONTRACTOR SHALL RETAG EXISTING FIELD CONTROL STATION BY PROVIDING A NEW PHENOLIC NAMEPLATE PER SPECIFICATIONS WITH THE INSCRIPTIONS MATCHING THE TAGGING SHOWN ON THIS DRAWING AND SECURING TO EXISTING EQUIPMENT.

(16) FURNISH AND INSTALL A POWER MONITORING UNIT (PMU) CONSISTING OF ONE (1) GE MULTILIN EPM 9450 (TRANSDUCER MODULE) COMPLETE WITH THREE LINE LED COMBINATION DISPLAY AND KEYPAD MODEL PL900040N. FURNISH NAD INSTALL ALL REQUIRED CABLING TO POWER THE PUNITS AND TO INTERCONNEC THE DISPLAY WITH THE EPM 9450 UNIT.

KEY NOTES:

(1) EXISTING 480V MOTOR CONTROL CENTER MANUFACTURED BY "SQUARE D" MODEL 4, CLASS 8998, FACTORY ORDER NO. 45-96172-10 AND 12-77848-1. COORDINATE WITH MANUFACTURER OF EXISTING MOTOR CONTROL CENTER (MCC) PRIOR TO DEMOLITION/RENOVATION ACTIVITIES.

(2) EXISTING STARTER SHALL BE REUSED TO SERVE THE EXISTING RETAGGED SLUDGE PUMP. FURNISH AND INSTALL REPLACEMENT LABELS/NAMEPLATES ON INTERIOR AND EXTERIOR AS APPLICABLE TO REFLECT THE NEW LOAD SERVED BY STARTER IN THIS SECTION.

(3) FURNISH AND INSTALL PROPOSED BREAKER IN THE EXISTING MOTOR CONTROL CENTER.

(4) FURNISH AND INSTALL PROPOSED CONDUIT/WIRE BETWEEN EQUIPMENT AND MAKE ALL FINAL CONNECTIONS.

(5) FURNISH AND INSTALL REPLACEMENT OVERLOAD HEATER BASED ON CHARACTERISTICS OF PROPOSED LOAD.

(6) REFER TO CONTROL SCHEMATICS RENOVATION DRAWINGS FOR REQUIRED MODIFICATIONS TO EXISTING CONTROLS AND WIRING.

(7) PROPOSED PUMP FIELD CONTROLS DEVICES AND PROPOSED FIELD CONTROL STATIONS AS APPLICABLE ARE NOT SHOWN HERE. REFER TO FLOOR PLANS AND CONTROL SCHEMATIC RENOVATION DRAWINGS.

(8) FURNISH AND INSTALL NEW EQUIPMENT TAGS AT THE MOTOR AND FIELD CONTROL STATION.

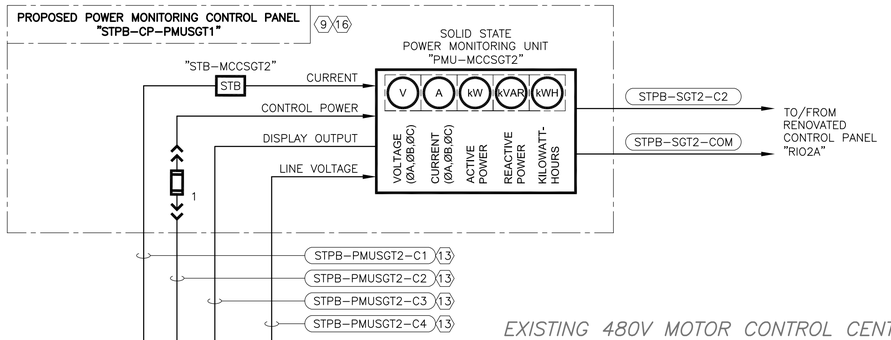

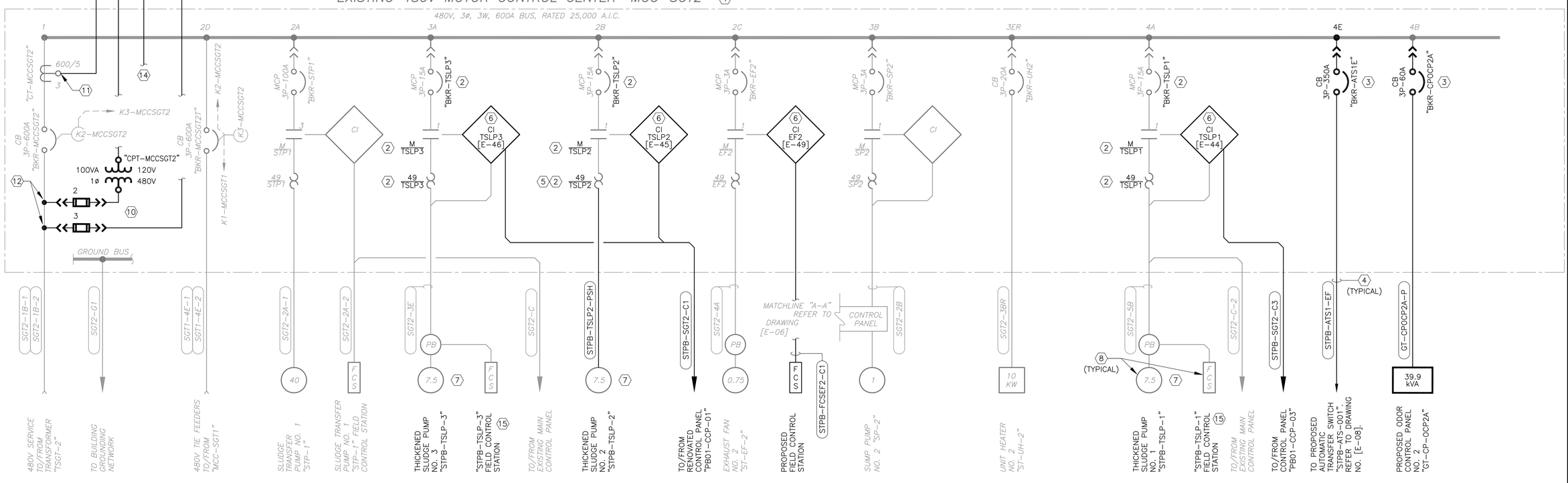

REUSE OF DOCUMENTS

This document, and the designs incorporated herein, is an instrument of professional service that has been developed, designed and prepared by Harutunian Engineering, Inc., and is not to be used, in whole or part, for any other project without giving written notice to Harutunian Engineering, Inc.

REV No	DATE	DRWN	CHKD	REMARKS
1	–	–	–	–

DESIGNED BY: HEI
DRAWN BY: HEI
SHEET CHK'D BY: HEI
CROSS CHK'D BY: HEI
APPROVED BY: HEI
DATE: APRIL 2016

CDM Smith
Riata Corporate Park, 12357-A Riata Trace Parkway, Suite 210
Austin, TX 78727
Tel: (512) 346-1100
Texas Registration Number F-3043

HEI
HARUTUNIAN ENGINEERING, INC.
305 E Huntland Dr, Ste 500; Austin, TX 78752
TBPE Firm Registration No. F-2408

CITY OF AUSTIN, TEXAS - AUSTIN WATER UTILITY
CIP 3333.016

SOUTH AUSTIN REGIONAL WWTP
THICKENER IMPROVEMENTS PROJECT

DETAILED ONE-LINE DIAGRAM RENOVATION (SHEET 2 OF 3)

STATE OF TEXAS
K. A. HARUTUNIAN
59181
REGISTERED PROFESSIONAL ENGINEER
4/22/2016

PROJECT No 590-104217
FILE NAME: E-07

SHEET No
E-07

Plotted: 4/22/2016 8:47:17 AM

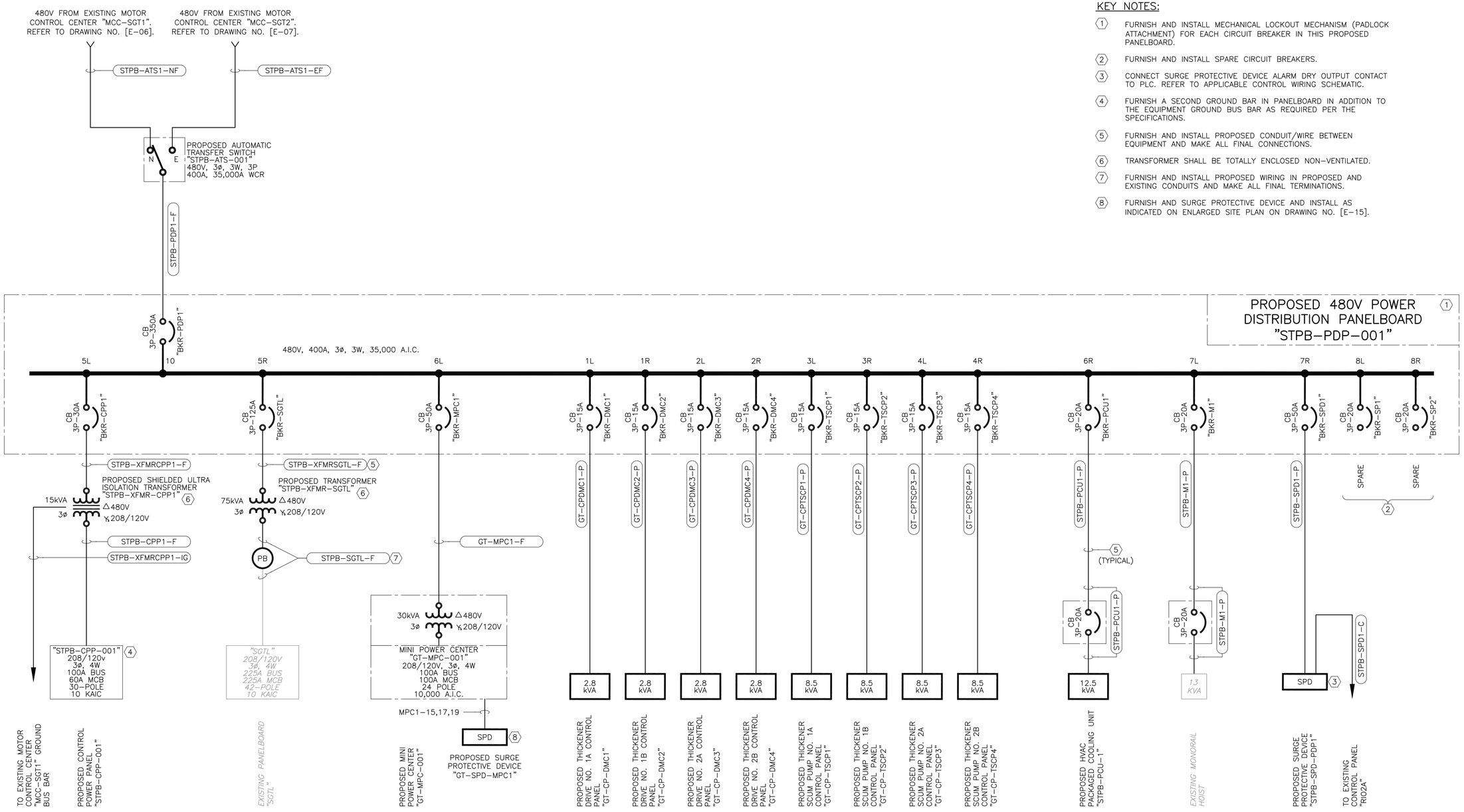

KEY NOTES:

1. FURNISH AND INSTALL MECHANICAL LOCKOUT MECHANISM (PADLOCK ATTACHMENT) FOR EACH CIRCUIT BREAKER IN THIS PROPOSED PANELBOARD.
2. FURNISH AND INSTALL SPARE CIRCUIT BREAKERS.
3. CONNECT SURGE PROTECTIVE DEVICE ALARM DRY OUTPUT CONTACT TO PLC. REFER TO APPLICABLE CONTROL WIRING SCHEMATIC.
4. FURNISH A SECOND GROUND BAR IN PANELBOARD IN ADDITION TO THE EQUIPMENT GROUND BUS BAR AS REQUIRED PER THE SPECIFICATIONS.
5. FURNISH AND INSTALL PROPOSED CONDUIT/WIRE BETWEEN EQUIPMENT AND MAKE ALL FINAL CONNECTIONS.
6. TRANSFORMER SHALL BE TOTALLY ENCLOSED NON-VENTILATED.
7. FURNISH AND INSTALL PROPOSED WIRING IN PROPOSED AND EXISTING CONDUITS AND MAKE ALL FINAL TERMINATIONS.
8. FURNISH AND SURGE PROTECTIVE DEVICE AND INSTALL AS INDICATED ON ENLARGED SITE PLAN ON DRAWING NO. [E-15].

REUSE OF DOCUMENTS

This document, and the designs incorporated herein, is an instrument of professional service that has been developed, designed and prepared by Harutunian Engineering, Inc., and is not to be used, in whole or part, for any other project without giving written notice to Harutunian Engineering, Inc.

REV No	DATE	DRWN	CHKD	REMARKS
△	–	–	–	–

DESIGNED BY: HEI
DRAWN BY: HEI
SHEET CHK'D BY: HEI
CROSS CHK'D BY: HEI
APPROVED BY: HEI
DATE: APRIL 2016

CDM Smith
Riata Corporate Park, 12357-A Riata Trace Parkway, Suite 210
Austin, TX 78727
Tel: (512) 346-1100
Texas Registration Number F-3043

HARUTUNIAN ENGINEERING, INC.
305 E Huntland Dr, Ste 500; Austin, TX 78752
TBPE Firm Registration No. F-2408

CITY OF AUSTIN, TEXAS - AUSTIN WATER UTILITY
CIP 3333.016

SOUTH AUSTIN REGIONAL WWTP
THICKENER IMPROVEMENTS PROJECT

DETAILED ONE-LINE DIAGRAM RENOVATION (SHEET 3 OF 3)

STATE OF TEXAS
K. A. HARUTUNIAN
59181
REGISTERED PROFESSIONAL ENGINEER
4/22/2016

PROJECT No 590-104217
FILE NAME: E-08

SHEET No
E-08

Plotted: 4/22/2016 8:47:20 AM

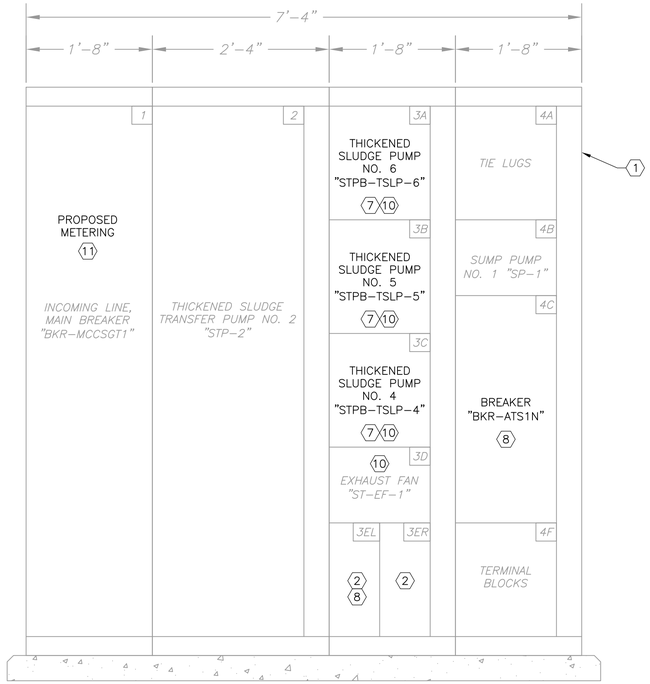

EXISTING 480V MOTOR CONTROL CENTER "MCC-SGT1" FRONT ELEVATION – RENOVATION

NTS

MOTOR CONTROL CENTER ELEVATION "MCC-SGT1" 3	
SECTION	DESCRIPTION
3EL	ODOR CONTROL PANEL NO. 1 "CP-OCP1A" 8
3ER	UNIT HEATER "ST-UH-1"

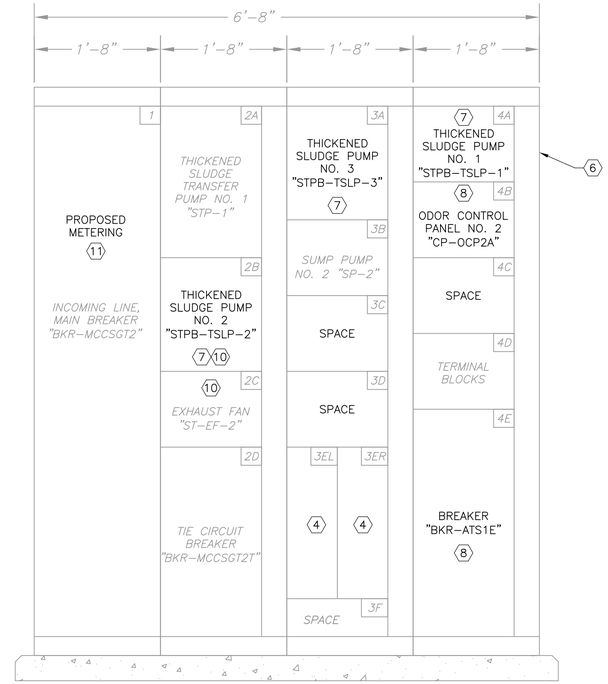

EXISTING 480V MOTOR CONTROL CENTER "MCC-SGT2" FRONT ELEVATION – RENOVATION

NTS

MOTOR CONTROL CENTER ELEVATION "MCC-SGT2" 5	
SECTION	DESCRIPTION
3EL	SPACE
3ER	UNIT HEATER "ST-UH-2"

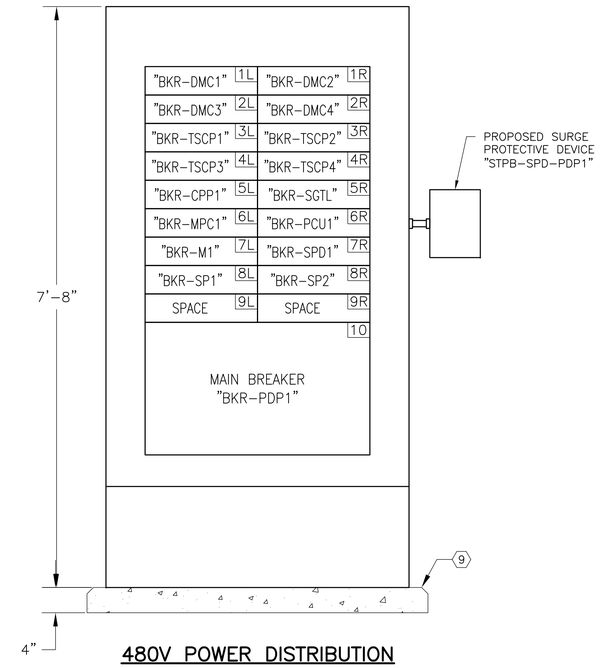

480V POWER DISTRIBUTION PANELBOARD "STPB-PDP-001" – PROPOSED

NTS

KEY NOTES:

11. FURNISH AND INSTALL REPLACEMENT DOOR FOR MAIN BREAKER SECTION. FURNISH AND INSTALL POWER MONITORING DISPLAY TO FACE OF DOOR. COORDINATE WITH MOTOR CONTROL CENTER AND POWER MONITORING UNIT MANUFACTURERS. REFER TO ONE-LINE DIAGRAMS ON DRAWING NOS. [E-06] AND [E-07] AND TO CONTROL SCHEMATIC ON DRAWING NO. [E-49] FOR ADDITIONAL REQUIREMENTS NOT SHOWN HERE.

KEY NOTES:

1. EXISTING 480V MOTOR CONTROL CENTER MANUFACTURED BY "SQUARE D" MODEL 4, CLASS 8998, FACTORY ORDER NO. 45-96172-9. COORDINATE WITH MANUFACTURER OF EXISTING MOTOR CONTROL CENTER (MCC) PRIOR TO DEMOLITION/RENOVATION ACTIVITIES.
2. REFER TO EXISTING 480V MOTOR CONTROL CENTER ELEVATION "MCC-SGT1" TABLE ON THIS DRAWING FOR ENUMERATION OF THE CONTENTS IN THIS SECTION.
3. REFER TO EXISTING 480V MOTOR CONTROL CENTER "MCC-SGT1" FRONT ELEVATION ON THIS DRAWING FOR LOCATION OF THE SECTIONS ENUMERATED IN THIS TABLE.
4. REFER TO EXISTING 480V MOTOR CONTROL CENTER ELEVATION "MCC-SGT2" TABLE ON THIS DRAWING FOR ENUMERATION OF THE CONTENTS IN THIS SECTION.
5. REFER TO EXISTING 480V MOTOR CONTROL CENTER "MCC-SGT2" FRONT ELEVATION ON THIS DRAWING FOR LOCATION OF THE SECTIONS ENUMERATED IN THIS TABLE.
6. EXISTING 480V MOTOR CONTROL CENTER MANUFACTURED BY "SQUARE D" MODEL 4, CLASS 8998, FACTORY ORDER NO. 45-96172-10 AND 12-77848-1. COORDINATE WITH MANUFACTURER OF EXISTING MOTOR CONTROL CENTER (MCC) PRIOR TO DEMOLITION/RENOVATION ACTIVITIES.
7. EXISTING STARTER SHALL BE REUSED TO SERVE THE EXISTING OR PROPOSED SLUDGE PUMP AS APPLICABLE. FURNISH AND INSTALL REPLACEMENT LABELS/NAMEPLATES ON INTERIOR AND EXTERIOR TO REFLECT THE LOAD SERVED BY STARTER IN THIS SECTION.
8. FURNISH AND INSTALL PROPOSED BRANCH CIRCUIT BREAKER AND REPLACEMENT NAMEPLATE IN THIS SECTION.
9. FURNISH AND INSTALL CONCRETE HOUSEKEEPING PAD PER DETAIL 7 ON DRAWING NO. [G-E-10].
10. REFER TO CONTROL LOGIC DRAWINGS FOR REQUIRED MODIFICATIONS TO STARTER CONTROLS.

STATE OF TEXAS
K. A. HARUTUNIAN
59181
REGISTERED PROFESSIONAL ENGINEER
4/22/2016

REUSE OF DOCUMENTS
This document, and the designs incorporated herein, is an instrument of professional service that has been developed, designed and prepared by Harutunian Engineering, Inc., and is not to be used, in whole or part, for any other project without giving written notice to Harutunian Engineering, Inc.

REV No	DATE	DRWN	CHKD	REMARKS
1	–	–	–	–

DESIGNED BY: HEI
DRAWN BY: HEI
SHEET CHK'D BY: HEI
CROSS CHK'D BY: HEI
APPROVED BY: HEI
DATE: APRIL 2016

CDM Smith
Riata Corporate Park, 12357-A Riata Trace Parkway, Suite 210
Austin, TX 78727
Tel: (512) 346-1100
Texas Registration Number F-3043

HEI
HARUTUNIAN ENGINEERING, INC.
305 E Huntland Dr, Ste 500; Austin, TX 78752
TBPE Firm Registration No. F-2408

CITY OF AUSTIN, TEXAS - AUSTIN WATER UTILITY
CIP 3333.016

SOUTH AUSTIN REGIONAL WWTP
THICKENER IMPROVEMENTS PROJECT

DISTRIBUTION EQUIPMENT
FRONT ELEVATIONS
RENOVATION AND PROPOSED

PROJECT No 590-104217
FILE NAME: E-09

SHEET No
E-09

Plotted: 4/22/2016 8:47:24 AM

CIRCUIT BREAKER PANEL SCHEDULE – "SGTL" (5)(6)

VOLTS: 208/120, AMPS: 225A BUS, MAIN: 225A, PHASE/WIRE: 3ø, 4W

	CONDUIT/WIRE DESCRIPTION	CIRCUIT BREAKER SIZE	CKT. NO.	LOAD DESCRIPTIONS	PHASE A (VA)	PHASE B (VA)	PHASE C (VA)	LOAD DESCRIPTIONS	CKT. NO.	CIRCUIT BREAKER SIZE	CONDUIT/WIRE DESCRIPTION
(1)(2)	(4)	20 1P	1	ELECTRICAL & PUMP ROOMS LIGHTING	800 / 700			RECEPTACLES WEST WALL & ELECTRICAL ROOM	2	20 1P	(4)
(1)(2)	(4)	20 1P	3	ELECTRICAL & PUMP ROOMS LIGHTING		800 / 1500		RECEPTACLES NORTH WALL & ELECTRICAL ROOM	4	20 1P	(4)
	(4)	20 1P	5	PUMP ROOM LIGHTING			800 / 1200	RECEPTACLES NORTH & SOUTH WALK	6	20 1P	(4)
	(4)	20 1P	7	EMERGENCY LIGHTS	1176 / 300			OVERHEAD DOOR	8	20 1P	(4)
	(4)	20 1P	9	COMMUNICATION SYSTEM		1200 / 1200		SUMP PUMP	10	20 1P	(4)
	(4)	50 2P	11	WELDING RECEPTACLE			200 / 4160	"STP–2" MOTOR SPACE HEATER	12	20 1P	(4)
			13		100 / 4160			FLOW TRANSMITTER	14	20 1P	(4)
(2)	3/4" – 2#10(P), 1#10(G)	20 1P	15	"RIO2A" AUXILIARY POWER RECEPTACLE		--- / 180		SPARE	16	20 2P	
	(4)	30 3P	17	OUTSIDE LIGHTS THRU CONTACTOR			--- / 1800		18		
			19		--- / 1800			SPARE	20	20 2P	
			21			--- / 1800			22		
	(4)	20 1P	23	SUMP PUMP			100 / 1200	REMOTE CABINET	24	20 1P	(4)
	(4)	20 1P	25	"PB–LIT–01A1" LEVEL DETECTOR	1200 / 100			SWITCHGEAR HEATER	26	20 1P	(4)
(2)	3/4" – 2#10(P), 1#10(G)	20 1P	27	"STPB–CP–001" AUXILIARY POWER		100 / 180		"STA1–LIT–01A1" LEVEL DETECTOR	28	20 1P	(4)
		20 1P	29	SPARE			--- / ---		30		
(3)	(4)	20 1P	31	THICKENED SLUDGE PUMP NO. 1	1200 / 1200			ANNUNCIATOR CABINET CONTROL PANEL	32	20 1P	(4)
		20 1P	33	SPARE		100 / ---		"STB1–LIT–01A1" LEVEL DETECTOR	34	20 1P	(4)
	(4)	20 1P	35	MSA GAS PANEL (INSIDE)			100 / 100	GAS DETECTION PANEL (OUTSIDE)	36	20 1P	(4)
		20 2P	37	SPARE	--- / ---				38		
			39			--- / ---			40		
			41				--- / ---		42		
	TOTAL CONNECTED VOLT AMPS (VA)				12736	7060	9660				

KEY NOTES:

(1) CONNECT PROPOSED ELECTRICAL ROOM LIGHT FIXTURES TO EXISTING CIRCUITS. FIELD VERIFY EXISTING ELECTRICAL ROOM LIGHTING CIRCUIT NUMBERS AND SWITCHING. REFER TO DRAWING NO. [E–34].

(2) FURNISH AND INSTALL CONDUIT/WIRE TO CONNECT LOAD TO EXISTING PANELBOARD AND MAKE ALL FINAL CONNECTIONS.

(3) MODIFY LOAD DESCRIPTION TO MATCH NEW PUMP TAGS.

(4) CONTRACTOR SHALL FIELD VERIFY SIZE AND QUANTITY OF EXISTING FIELD WIRING AND SIZE OF FIELD CONDUIT ASSOCIATED WITH THIS BRANCH CIRCUIT. UPDATE THE RENOVATED PANELBOARD SCHEDULE ON THIS SHEET TO REFLECT AS BUILT CONDITIONS.

(5) NUMEROUS BRANCH CIRCUIT LOAD DESCRIPTIONS AS INDICATED IN THE RECORD DRAWING PANEL SCHEDULE DO NOT MATCH FIELD OBSERVATIONS. AN ATTEMPT HAS BEEN MADE TO UPDATE RENOVATED PANEL SCHEDULE TO REFLECT EXISTING CONDITIONS. CONTRACTOR SHALL FIELD VERIFY ALL BRANCH CIRCUIT LOADS AND UPDATE THE RENOVATED PANEL SCHEDULE ON THIS SHEET TO REFLECT AS BUILT CONDITIONS.

(6) FURNISH AND INSTALL TYPED PANEL SCHEDULE.

RENOVATIONS TO EXISTING PANELBOARD "SGTL" (1) [E–57]

SCALE: NONE

REUSE OF DOCUMENTS
This document, and the designs incorporated herein, is an instrument of professional service that has been developed, designed and prepared by Harutunian Engineering, Inc., and is not to be used, in whole or part, for any other project without giving written notice to Harutunian Engineering, Inc.

REV No	DATE	DRWN	CHKD	REMARKS
1	–	–	–	–

DESIGNED BY: HEI
DRAWN BY: HEI
SHEET CHK'D BY: HEI
CROSS CHK'D BY: HEI
APPROVED BY: HEI
DATE: APRIL 2016

CDM Smith
Riata Corporate Park, 12357-A Riata Trace Parkway, Suite 210
Austin, TX 78727
Tel: (512) 346-1100
Texas Registration Number F-3043

HARUTUNIAN ENGINEERING, INC.
305 E Huntland Dr, Ste 500; Austin, TX 78752
TBPE Firm Registration No. F-2408

CITY OF AUSTIN, TEXAS - AUSTIN WATER UTILITY
CIP 3333.016
SOUTH AUSTIN REGIONAL WWTP
THICKENER IMPROVEMENTS PROJECT

SLUDGE TRANSFER PUMP BUILDING
PANELBOARD SCHEDULES - RENOVATION

K. A. HARUTUNIAN
STATE OF TEXAS
K. A. HARUTUNIAN
59181
REGISTERED PROFESSIONAL ENGINEER
4/22/2016

PROJECT No 590–104217
FILE NAME: E–10

SHEET No
E-10

Plotted: 4/22/2016 8:47:27 AM

KEY NOTES:

(1) FURNISH A SECOND GROUND BAR IN PANELBOARD FOR ISOLATED GROUND IN ADDITION TO THE EQUIPMENT GROUND BUS BAR AS REQUIRED PER THE SPECIFICATIONS.

CIRCUIT BREAKER PANEL SCHEDULE – "STPB–CPP–001" (1)

VOLTS: 208/120, AMPS: 100A BUS, MAIN: 60A, PHASE/WIRE: 3ø, 4W

CONDUIT/WIRE DESCRIPTION	CIRCUIT BREAKER SIZE	CKT. NO.	LOAD DESCRIPTIONS	PHASE A (VA)	PHASE B (VA)	PHASE C (VA)	LOAD DESCRIPTIONS	CKT. NO.	CIRCUIT BREAKER SIZE	CONDUIT/WIRE DESCRIPTION
1" – 6#10(P), 3#10(G)	20 1P	1	"RIO2A" UNINTERRUPTIBLE POWER SUPPLY	––– / –––			SPARE	2	20 1P	
INCLUDED IN CONDUIT WITH CIRCUIT NO.1	20 1P	3	"RIO2A" 24VDC POWER SUPPLY		––– / –––		SPARE	4	20 1P	
INCLUDED IN CONDUIT WITH CIRCUIT NO.1	20 1P	5	"RIO2A" SPARE CIRCUIT			––– / –––	SPARE	6	20 1P	
	20 1P	7	SPARE	––– / –––			SPARE	8	20 1P	
	20 1P	9	SPARE		––– / –––		SPARE	10	20 1P	
	20 1P	11	SPARE			––– / –––	SPARE	12	20 1P	
	20 1P	13	SPARE	––– / –––			SPARE	14	20 1P	
	20 1P	15	SPARE		––– / –––		SPARE	16	20 1P	
	20 1P	17	SPARE			––– / –––	SPARE	18	20 1P	
	20 1P	19	SPARE	––– / –––			SPARE	20	20 1P	
	20 1P	21	SPARE		––– / –––		SPARE	22	20 1P	
	20 1P	23	SPARE			––– / –––	SPARE	24	20 1P	
	20 1P	25	SPARE	––– / –––			SPARE	26	20 1P	
	20 1P	27	SPARE		––– / –––		SPARE	28	20 1P	
	20 1P	29	SPARE			––– / –––	SPARE	30	20 1P	
	TOTAL CONNECTED VOLT AMPS (VA)			–––	–––	–––				

PROPOSED PANELBOARD (1)
"STPB–CPP–001"
SCALE: NONE

REUSE OF DOCUMENTS
This document, and the designs incorporated herein, is an instrument of professional service that has been developed, designed and prepared by Harutunian Engineering, Inc., and is not to be used, in whole or part, for any other project without giving written notice to Harutunian Engineering, Inc.

REV No	DATE	DRWN	CHKD	REMARKS
1	–	–	–	–

DESIGNED BY: HEI
DRAWN BY: HEI
SHEET CHK'D BY: HEI
CROSS CHK'D BY: HEI
APPROVED BY: HEI
DATE: APRIL 2016

CDM Smith
Riata Corporate Park, 12357-A Riata Trace Parkway, Suite 210
Austin, TX 78727
Tel: (512) 346-1100
Texas Registration Number F-3043

HARUTUNIAN ENGINEERING, INC.
305 E Huntland Dr, Ste 500; Austin, TX 78752
TBPE Firm Registration No. F-2408

CITY OF AUSTIN, TEXAS - AUSTIN WATER UTILITY
CIP 3333.016

SOUTH AUSTIN REGIONAL WWTP
THICKENER IMPROVEMENTS PROJECT

SLUDGE TRANSFER PUMP BUILDING
PANELBOARD SCHEDULES - PROPOSED

STATE OF TEXAS
K. A. HARUTUNIAN
59181
REGISTERED PROFESSIONAL ENGINEER
4/22/2016

PROJECT No 590–104217
FILE NAME: E–11

SHEET No
E-11

Plotted: 4/22/2016 8:47:31 AM

CIRCUIT BREAKER PANEL SCHEDULE – "GT–MPC–001"

VOLTS: 208/120, AMPS: 100A BUS, MAIN: 60A, PHASE/WIRE: 3ø, 4W

CONDUIT/WIRE DESCRIPTION	CIRCUIT BREAKER SIZE	CKT. NO.	LOAD DESCRIPTIONS	PHASE A (VA)	PHASE B (VA)	PHASE C (VA)	LOAD DESCRIPTIONS	CKT. NO.	CIRCUIT BREAKER SIZE	CONDUIT/WIRE DESCRIPTION
1" – 2#10(P), 1#10(G)	20 2P	1	GRAVITY THICKENER SITE LIGHTING THRU CONTACTOR	360 / 477			GRAVITY THICKENER NO. 1A RECEPTACLES	2	20 1P	1" – 2#8(P), 1#10(G)
		3			360 / 477		GRAVITY THICKENER NO. 2A RECEPTACLES	4	20 1P	1" – 2#8(P), 1#10(G)
1" – 2#8(P), 1#10(G)	20 1P	5	WEST ODOR CONTROL & BLENDING TANK TASK LIGHTING			360 / 1462	GRAVITY THICKENER NO. 1B RECEPTACLES	6	20 1P	1" – 2#8(P), 1#10(G)
1" – 2#8(P), 1#10(G)	20 1P	7	EAST ODOR CONTROL & BLENDING TANK TASK LIGHTING	360 / 1170			GRAVITY THICKENER NO. 2B RECEPTACLES	8	20 1P	1" – 2#8(P), 1#10(G)
1" – 2#10(P), 1#10(G)	20 1P	9	GRAVITY THICKENERS 1A & 2A INTERIOR LIGHTS		360 / 432		ODOR CONTROL NO. 1 RECEPTACLES	10	20 1P	1" – 2#8(P), 1#10(G)
1" – 2#10(P), 1#10(G)	20 1P	11	GRAVITY THICKENERS 1B & 2B INTERIOR LIGHTS			360 / 432	ODOR CONTROL NO. 2 RECEPTACLES	12	20 1P	1" – 2#8(P), 1#10(G)
3/4" – 2#10(P), 1#10(G)	20 1P	13	LIGHTING CONTACTOR "GT–LC–001" CONTROL POWER	4160 / 100			GRAVITY THICKENER WELDING RECEPTACLES	14	50 2P	1" – 2#4(P), 1#8(G)
3/4" – 3#10(P), 1#10(G)	30 3P	15	SURGE PROTECTIVE DEVICE "GT–SPD–MPC1"		4160 / ---			16		
		17				--- / ---	SPARE	18	20 1P	
		19		--- / ---			SPARE	20	20 1P	
	20 1P	21	SPARE		--- / ---		SPARE	22	20 1P	
	20 1P	23	SPARE			--- / ---	SPARE	24	20 1P	
	TOTAL CONNECTED VOLT AMPS (VA)			6627	5789	2614				

PROPOSED MINI POWER CENTER PANELBOARD "GT–MPC–001" (1 / –)

SCALE: NONE

REUSE OF DOCUMENTS

This document, and the designs incorporated herein, is an instrument of professional service that has been developed, designed and prepared by Harutunian Engineering, Inc., and is not to be used, in whole or part, for any other project without giving written notice to Harutunian Engineering, Inc.

REV No	DATE	DRWN	CHKD	REMARKS
1	–	–	–	–

DESIGNED BY: HEI
DRAWN BY: HEI
SHEET CHK'D BY: HEI
CROSS CHK'D BY: HEI
APPROVED BY: HEI
DATE: APRIL 2016

CDM Smith
Riata Corporate Park, 12357-A Riata Trace Parkway, Suite 210
Austin, TX 78727
Tel: (512) 346-1100
Texas Registration Number F-3043

HEI
HARUTUNIAN ENGINEERING, INC.
305 E Huntland Dr, Ste 500; Austin, TX 78752
TBPE Firm Registration No. F-2408

CITY OF AUSTIN, TEXAS - AUSTIN WATER UTILITY
CIP 3333.016

SOUTH AUSTIN REGIONAL WWTP
THICKENER IMPROVEMENTS PROJECT

GRAVITY THICKENERS VICINITY
PANELBOARD SCHEDULE - PROPOSED

STATE OF TEXAS
K. A. HARUTUNIAN
59181
REGISTERED PROFESSIONAL ENGINEER
4/22/2016

PROJECT No 590–104217
FILE NAME: E–12

SHEET No
E-12

Plotted: 4/22/2016 8:47:34 AM

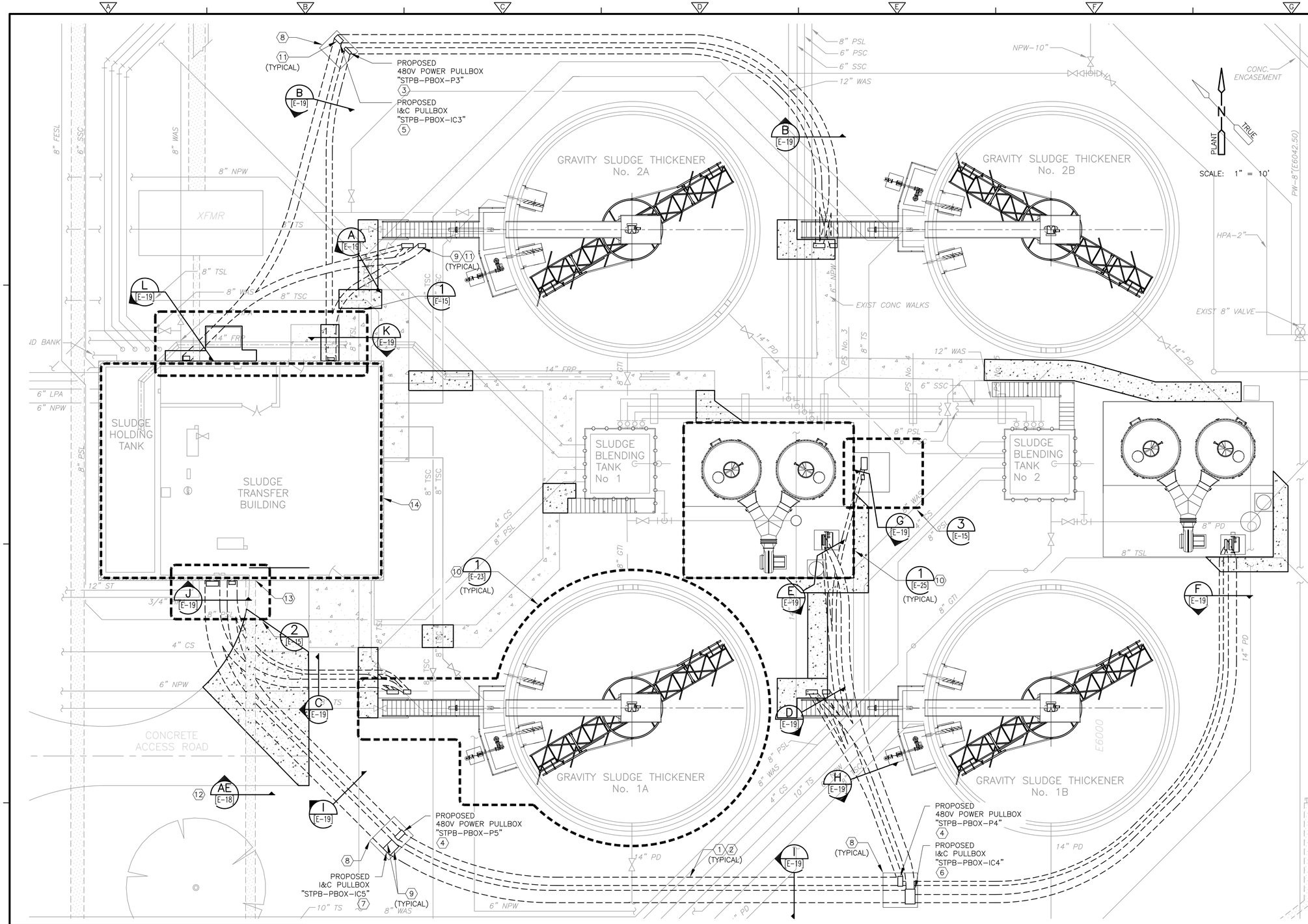

GRAVITY THICKENER VICINITY ENLARGED SITE PLAN (1 [E-14])

SCALE: 1" = 10'

KEY NOTES:

1. SPACE AND ENCASE CONDUITS IN UNDERGROUND REINFORCED CONCRETE ENCASED DUCT BANK PER DETAILS ON DRAWING NO. [G-E-13]. CUT EXISTING ROAD/CURB/SIDEWALKS AS REQUIRED TO FACILITATE RENOVATION ACTIVITIES. REPAIR ROAD/CURB/SIDEWALKS TO MATCH EXISTING TO THE SATISFACTION OF THE OWNER AT NO ADDITIONAL COST.
2. CONFIGURATION AND ELEVATION OF PROPOSED DUCT BANKS WILL VARY TO AVOID CONFLICTS WITH EXISTING AND PROPOSED UNDERGROUND ELECTRICAL AND MECHANICAL SYSTEMS. FIELD VERIFY ACTUAL CONDITIONS AND MODIFY DUCT BANK ROUTING AS REQUIRED. COORDINATE WITH CIVIL, STRUCTURAL AND MECHANICAL.
3. FURNISH AND INSTALL PULLBOX DEDICATED TO 480V POWER CABLES, SIZED 20"H X 20"W X 6"D AT MINIMUM.
4. FURNISH AND INSTALL PULLBOX DEDICATED TO 480V POWER CABLES, SIZED 20"H X 24"W X 12"D AT MINIMUM.
5. FURNISH AND INSTALL PULLBOX DEDICATED TO INSTRUMENTATION AND CONTROLS CABLES, SIZED 20"H X 20"W X 12"D AT MINIMUM.
6. FURNISH AND INSTALL PULLBOX DEDICATED TO INSTRUMENTATION, CONTROLS, AND FIBER OPTIC COMMUNICATION CABLES, SIZED 36"H X 36"W X 24"D AT MINIMUM.
7. FURNISH AND INSTALL PULLBOX DEDICATED TO INSTRUMENTATION, CONTROLS, AND FIBER OPTIC COMMUNICATION CABLES, SIZED 36"H X 30"W X 24"D AT MINIMUM.
8. FURNISH AND INSTALL OUTDOOR CONCRETE EQUIPMENT PAD PER DETAIL 2 ON DRAWING NO. [G-E-7]. MOUNT PULLBOXES TO PAD PER DETAIL 1 ON DRAWING NO. [G-E-8].
9. PROPOSED DUCT BANKS TURN UP BENEATH PULLBOXES/CONTROL PANELS. TERMINATE CONDUITS TO BOTTOM OF ENCLOSURES PER DETAIL 1 ON DRAWING NO. [G-E-8].
10. ENLARGED PLAN REFERENCED IS TYPICAL FOR MULTIPLE SYSTEMS LOCATED IN DIFFERENT LOCATIONS IN THE SITE. ADJUST INSTALLATION TO MATCH FIELD CONDITIONS AT EACH LOCATION.
11. PROPOSED DUCT BANK CONDUIT CONFIGURATION VARIES IN VICINITY OF PULLBOXES AND CONTROL PANELS TO FACILITATE CONNECTION TO EQUIPMENT.
12. REFER TO DEMOLITION AND RENOVATION DUCT BANK SECTION VIEWS ON DRAWING NO. [E-18] FOR REQUIRED DEMOLITION AND RENOVATION TO THIS EXISTING DUCT BANK.
13. EXISTING DUCT BANK CONTINUES TO STUB UP AT EXISTING CONTROL PANEL "PB01-CCP-01" LOCATED IN ELECTRICAL ROOM OF SLUDGE TRANSFER PUMP BUILDING. INSTALL REENTERABLE SEALANT IN CONDUITS STUBBING UP THROUGH FLOOR. REFER TO DRAWING NO. [E-29].
14. REFER TO SLUDGE TRANSFER BUILDING FLOOR PLANS ON DRAWING NOS. [E-29], [E-30], E-42], AND [E-34].

GENERAL NOTES:

1. EXTREME CARE MUST BE TAKEN FOR INSTALLATION OF ELECTRICAL AND I&C DUCT BANKS SINCE THERE ARE NO AVAILABLE AS BUILT RECORDS OF PROFILES IDENTIFYING LOCATION AND INVERT ELEVATIONS OF EXISTING UNDERGROUND MECHANICAL PIPING. ROUTING OF PROPOSED DUCT BANKS IS BASED ON SCHEMATIC KNOWLEDGE OF SIZE AND APPROXIMATE AND/OR ASSUMED LOCATIONS OF MECHANICAL PIPES. REFER TO CIVIL/MECHANICAL PIPING DRAWINGS. NO DATA IS AVAILABLE PERTAINING TO EXISTING UNDERGROUND ELECTRICAL AND I&C DUCT BANK SYSTEM AND ITS COORDINATION WITH UNDERGROUND MECHANICAL SYSTEM. THE CONTRACTOR SHALL EXERCISE EXTREME CARE, VERIFYING LOCATION/ROUTING/ELEVATION OF EXISTING UNDERGROUND UTILITIES, PRIOR TO COMMENCING FULL SCALE INSTALLATION OF PROPOSED DUCT BANK SYSTEM. FOLLOWING DISCOVERY OF EXISTING UNDERGROUND UTILITIES, SHOULD ADJUSTMENT/MODIFICATIONS TO EXISTING OR PROPOSED SYSTEM (AS APPLICABLE) BECOME NECESSARY, THE EXISTING DISCOVERED FIELD CONDITIONS MUST BE BROUGHT TO THE ENGINEER'S ATTENTION FOR EXECUTION OF THE NECESSARY ADJUSTMENTS/MODIFICATIONS.

REUSE OF DOCUMENTS

This document, and the designs incorporated herein, is an instrument of professional service that has been developed, designed and prepared by Harutunian Engineering, Inc., and is not to be used, in whole or part, for any other project without giving written notice to Harutunian Engineering, Inc.

REV No	DATE	DRWN	CHKD	REMARKS
△	–	–	–	–

DESIGNED BY: HEI
DRAWN BY: HEI
SHEET CHK'D BY: HEI
CROSS CHK'D BY: HEI
APPROVED BY: HEI
DATE: APRIL 2016

CDM Smith
Riata Corporate Park, 12357-A Riata Trace Parkway, Suite 210
Austin, TX 78727
Tel: (512) 346-1100
Texas Registration Number F-3043

HARUTUNIAN ENGINEERING, INC.
305 E Huntland Dr, Ste 500; Austin, TX 78752
TBPE Firm Registration No. F-2408

CITY OF AUSTIN, TEXAS - AUSTIN WATER UTILITY
CIP 3333.016

SOUTH AUSTIN REGIONAL WWTP
THICKENER IMPROVEMENTS PROJECT

GRAVITY THICKENER AREA
ENLARGED SITE PLAN

STATE OF TEXAS
K. A. HARUTUNIAN
59181
REGISTERED PROFESSIONAL ENGINEER
4/22/2016

PROJECT No 590-104217
FILE NAME: E-13

SHEET No
E-13

Plotted: 4/22/2016 8:47:45 AM

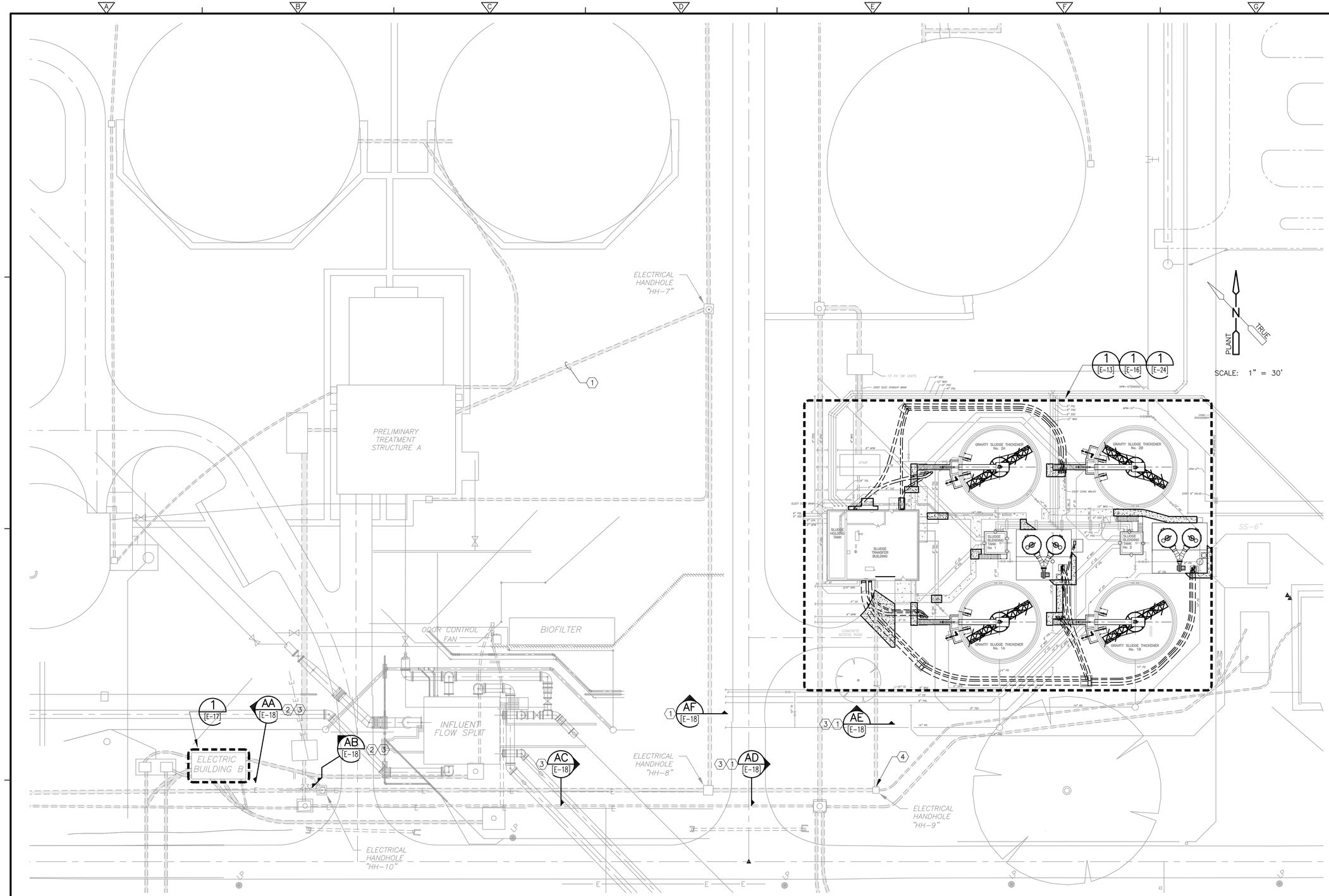

KEY NOTES:

1. EXISTING DUCT BANK APPEARS TO CONTAIN MULTI-MODE FIBER OPTIC CABLES BETWEEN SLUDGE TRANSFER BUILDING CONTROL PANEL "RIO2A" AND PRELIMINARY TREATMENT STRUCTURE "A" CONTROL PANEL "DCS2A". FIELD VERIFY. DISCONNECT AND REMOVE THESE FIBER OPTIC CABLES IN THEIR ENTIRETY. ALL OTHER CABLES THAT MAY EXIST IN THESE CONDUITS AND DUCT BANKS SHALL REMAIN. REFER TO CONTROL SYSTEM ARCHITECTURE DRAWING NO. [I-29] FOR ADDITIONAL REQUIREMENTS.
2. DUCT BANK CONTAINS EXISTING FIBER OPTIC CABLES THAT SHALL REMAIN. INSTALL PROPOSED FIBER OPTIC CABLES IN THIS DUCT BANK ALONGSIDE EXISTING CABLES.
3. FURNISH AND INSTALL 2 LOOSE TUBE SINGLE-MODE FIBER OPTIC CABLES BETWEEN PROPOSED CONTROL PANEL "STPB-CP-001" AT SLUDGE TRANSFER BUILDING AND EXISTING CONTROL PANEL "EBB1-DCP-01" AT ELECTRICAL BUILDING B. MAKE ALL FINAL TERMINATIONS. REFER TO CONTROL SYSTEM ARCHITECTURE DRAWING NO. [I-30] FOR ADDITIONAL REQUIREMENTS. PROPOSED FIBER OPTIC CABLES SHALL BE INSTALLED IN EXISTING DUCT BANKS WITH OTHER EXISTING CABLES AS APPLICABLE. A-SYSTEM AND B-SYSTEM CABLES SHALL BE ROUTED IN SEPARATE CONDUITS TO THE EXTENT POSSIBLE. REFER TO DUCT BANK SECTIONS ON DRAWING NO. [E-18].
4. AFTER INSTALLATION OF PROPOSED FIBER OPTIC CABLES, FURNISH AND INSTALL REENTERABLE SEALING COMPOUND IN EXISTING CONDUITS ON NORTH WALL OF HANDHOLE. REFER TO CONDUIT SEALING FITTINGS SPECIFICATIONS.

GENERAL NOTES:

1. ALL DUCT BANKS SHOWN WITH LIGHT LINEWORK ON THIS DRAWING ARE EXISTING. PROPOSED CABLES SHALL BE INSTALLED IN EXISTING DUCT BANK SYSTEM FROM SOURCE TO DESTINATION. MAKE ALL FINAL CONNECTIONS. REFER TO DEMOLITION AND RENOVATION DUCT BANK SECTION VIEWS ON DRAWING NO. [E-18]. NOT ALL DUCT BANKS AND EQUIPMENT HAVE BEEN SHOWN FOR CLARITY.
2. REFER TO CONTROL SYSTEM ARCHITECTURE DEMOLITION AND RENOVATION ON DRAWING NOS. [I-29] AND [I-30] FOR ADDITIONAL INFORMATION AND REQUIREMENTS.
3. REFER TO ENLARGED GRAVITY THICKENER VICINITY SITE PLAN FOR PROPOSED DUCT BANKS.

REUSE OF DOCUMENTS
This document, and the designs incorporated herein, is an instrument of professional service that has been developed, designed and prepared by Harutunian Engineering, Inc., and is not to be used, in whole or part, for any other project without giving written notice to Harutunian Engineering, Inc.

REV No	DATE	DRWN	CHKD	REMARKS
△	–	–	–	–

DESIGNED BY: HEI
DRAWN BY: HEI
SHEET CHK'D BY: HEI
CROSS CHK'D BY: HEI
APPROVED BY: HEI
DATE: APRIL 2016

CDM Smith
Riata Corporate Park, 12357-A Riata Trace Parkway, Suite 210
Austin, TX 78727
Tel: (512) 346-1100
Texas Registration Number F-3043

HARUTUNIAN ENGINEERING, INC.
305 E Huntland Dr, Ste 500; Austin, TX 78752
TBPE Firm Registration No. F-2408

CITY OF AUSTIN, TEXAS - AUSTIN WATER UTILITY
CIP 3333.016

SOUTH AUSTIN REGIONAL WWTP
THICKENER IMPROVEMENTS PROJECT

OVERALL SITE PLAN

K. A. Harutunian
STATE OF TEXAS
K. A. HARUTUNIAN
59181
REGISTERED PROFESSIONAL ENGINEER
4/22/2016

PROJECT No 590-104217
FILE NAME: E-14

SHEET No
E-14

Plotted: 4/22/2016 8:47:54 AM

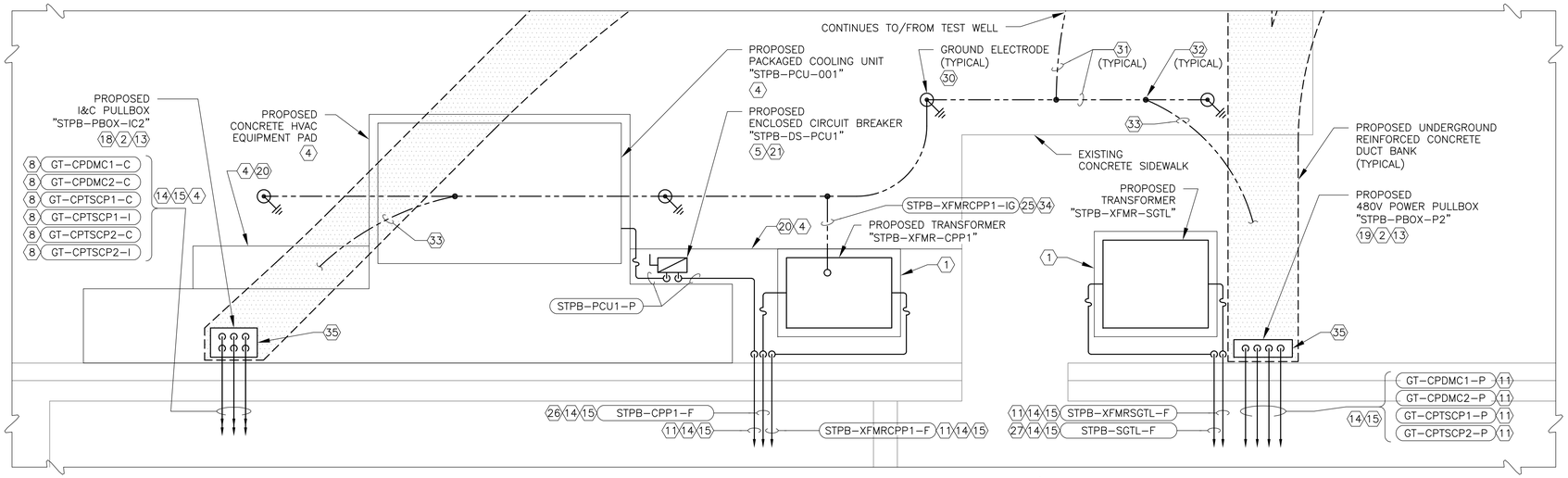

PUMP BUILDING NORTH EXTERIOR ENLARGED POWER AND I&C PLAN

SCALE: 1/2" = 1'-0"

1 [E-13],[E-16]

N TRUE PLANT

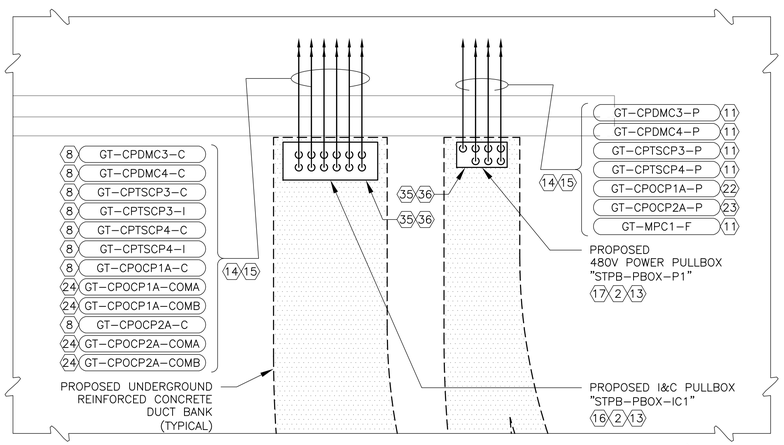

PUMP BUILDING SOUTH EXTERIOR ENLARGED POWER AND I&C PLAN

SCALE: 1/2" = 1'-0"

2 [E-13],[E-16]

N TRUE PLANT

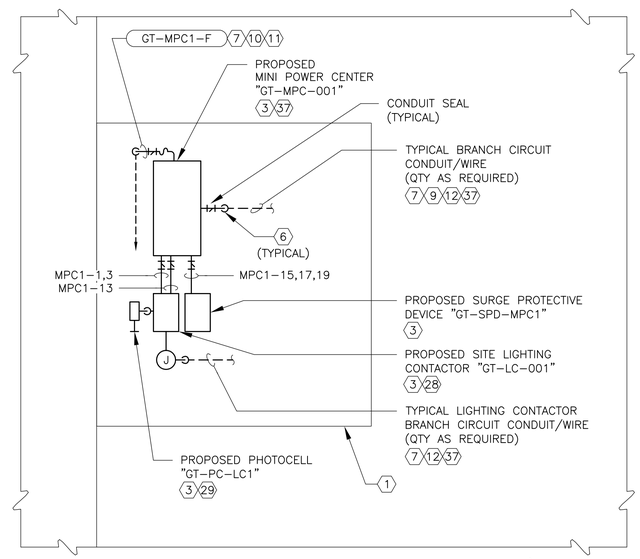

SITE MINI POWER CENTER ENLARGED POWER PLAN

SCALE: 1/2" = 1'-0"

3 [E-13]

N TRUE PLANT

KEY NOTES:

(22) CONDUIT/WIRE CONTINUES TO EXISTING MOTOR CONTROL CENTER "MCC-SGT1".

(23) CONDUIT/WIRE CONTINUES TO EXISTING MOTOR CONTROL CENTER "MCC-SGT2".

(24) CONDUIT/WIRE CONTINUES TO PROPOSED CONTROL PANEL "STPB-CP-001".

(25) ISOLATED GROUND CONDUIT/WIRE CONTINUES TO WELD AT BARE GROUNDING CONDUCTOR.

(26) CONDUIT/WIRE CONTINUES TO PROPOSED PANELBOARD "STPB-CPP-001".

(27) CONDUIT/WIRE CONTINUES TO EXISTING PANELBOARD "SGTL".

(28) DEDICATED TO SWITCHING OF SITE WALKWAY LIGHTS AND GRAVITY THICKENER STAIRWAY LIGHTS. REFER TO DRAWING NO. [E-24]. REFER TO CONTROL SCHEMATIC ON DRAWING [E-50].

(29) FURNISH AND INSTALL PHOTOCELL IN NEMA 4X WEATHERPROOF OUTLET BOX WITH GASKETED COVERPLATE. MOUNT TO ENCLOSURE SUPPORT RACK. ORIENT AND MAKE ALL FINAL CONNECTIONS PER MANUFACTURER'S INSTRUCTIONS. CONNECT PHOTOCELL WIRING TO LIGHTING CONTACTOR SUCH THAT PHOTOCELL CONTROLS OPERATION OF LIGHTS WHEN "HAND-OFF-AUTO" SWITCH ON FACE OF LIGHTING CONTACTOR IS IN "AUTO" POSITION.

(30) FURNISH AND INSTALL GROUND ELECTRODE PER DETAILS ON DRAWING NO. [G-E-5]. LOCATION AND SPACING OF ELECTRODES IS FOR REPRESENTATION ONLY. CONTRACTOR SHALL COORDINATE FINAL LAYOUT OF GROUNDING SYSTEM ELECTRODES AND CONDUCTORS WITH EXISTING CONDITIONS AND WITH OTHER TRADES AND MAKE ADJUSTMENTS TO INSTALLATION AS REQUIRED. MAINTAIN A MINIMUM SPACING OF 10'-0" BETWEEN ALL ELECTRODES. ELECTRODES SHALL BE BURIED 30" BELOW GRADE AT MINIMUM. INSTALL ELECTRODES AT INCREASED DEPTH AS REQUIRED TO AVOID CONFLICTS.

(31) 1 – 250kCMIL BARE GROUNDING CONDUCTOR DIRECT BURIED AT MINIMAL DEPTH OF 30 INCHES BELOW FINISHED GRADE. TYPICAL BETWEEN ALL GROUNDING ELECTRODES AND TEST WELLS.

(32) MAKE ALL CONNECTIONS TO GROUNDING ELECTRODES AND GROUNDING GRID CONDUCTORS BY MEANS OF EXOTHERMIC WELD EXCEPT WHERE SHOWN OTHERWISE.

(33) 1 – 250kCMIL INSULATED GROUNDING CONDUCTOR IN 1-1/2" CONDUIT. GROUNDING CONDUIT/WIRE SHALL BE INSTALLED IN CONCRETE ENCASED DUCT BANK. GROUNDING CONDUIT/WIRE BREAKS OUT OF DUCT BANK, TRANSITIONS TO DIRECT BURIED CONDUIT WITHOUT CONCRETE ENCASEMENT, AND CONTINUES TO WELD AT BARE GROUNDING CONDUCTOR.

(34) ALTHOUGH REQUIRED OTHERWISE BY THE SPECIFICATIONS, DIRECT BURY CONDUIT, 30" BELOW FINISHED GRADE/SLAB AT MINIMUM, WITHOUT CONCRETE ENCASEMENT. DIRECT BURIED PVC CONDUIT SHALL EXTEND HORIZONTALLY 12" FROM COUPLING AT 90 DEGREE BEND AND/OR 12" BEYOND EDGE OF CONCRETE SLAB AS APPLICABLE. INSULATED GROUND CONDUCTOR CONTINUES DIRECT BURIED TO WELD AT GROUND GRID.

(35) GROUNDING CONDUIT/WIRE IN DUCT BANK STUBS UP BELOW PULLBOX. CONNECT 250kCMIL INSULATED CONDUCTOR TO PULLBOX GROUNDING LUG SIMILAR TO DETAIL 1 ON DRAWING NO. [G-E-7].

(36) GROUNDING CONDUIT/WIRE IN DUCT BANK NOT EXPLICITLY SHOWN HERE. REFER TO GROUNDING SITE PLAN ON DRAWING NO. [E-16] FOR LOCATION OF GROUNDING CONDUIT/WIRE CONNECTION TO DUCT BANK.

(37) FURNISH, SIZE AND INSTALL QUANTITY OF JUNCTION BOXES BELOW OR ADJACENT TO MINI POWER CENTER AND LIGHTING CONTACTOR AS NEEDED TO FACILITATE SPLICING OF BRANCH CIRCUITING TO LIGHTING AND RECEPTACLES.

KEY NOTES:

(1) FURNISH AND INSTALL OUTDOOR REINFORCED CONCRETE EQUIPMENT PAD PER DETAIL 2 ON DRAWING NO. [G-E-7] WITH DIMENSIONS SHOWN.

(2) MOUNT EQUIPMENT TO WALL PER DETAILS ON DRAWING NO. [G-E-11].

(3) FURNISH AND INSTALL ON OUTDOOR EQUIPMENT SUPPORT RACK PER DETAIL 1 ON DRAWING NO. [G-E-8].

(4) REFER TO HVAC DRAWINGS. COORDINATE WITH HVAC CONTRACTOR.

(5) FURNISH AND INSTALL ENCLOSED CIRCUIT BREAKER. COORDINATE LOCATION WITH PACKAGED COOLING UNIT.

(6) CONDUIT/WIRE CONNECTIONS SHOWN APART AND SCHEMATICALLY FOR CLARITY. CONDUITS/WIRE SHALL TURN UP UNDER OR IMMEDIATELY ADJACENT TO ALL EQUIPMENT AS APPLICABLE.

(7) ROUTE CONDUIT/WIRE BELOW SLAB/GRADE IN REINFORCED CONCRETE DUCT BANK PER DETAILS ON DRAWING NO. [G-E-13].

(8) CONDUIT/WIRE CONTINUES TO PROPOSED PULLBOX "STPB-PBOX-RIO2A" LOCATED IN PUMP ROOM CEILING SPACE ABOVE ELECTRICAL ROOM. REFER TO DRAWING NO. [E-30].

(9) FURNISH AND INSTALL CONDUIT SEALS ON ALL CONDUITS ENTERING/EXITING EQUIPMENT. NOT ALL SEALS SHOWN FOR CLARITY.

(10) REFER TO SITE PLAN ON DRAWING NO. [E-13] FOR DUCT BANK CONTINUATION.

(11) CONDUIT/WIRE CONTINUES TO TERMINATION AT PROPOSED POWER DISTRIBUTION PANELBOARD "STPB-PDP-001" LOCATED INSIDE SLUDGE TRANSFER PUMP BUILDING.

(12) TYPICAL BRANCH CONDUIT/WIRE SHOWN FOR ILLUSTRATIVE PURPOSES ONLY. CONDUIT/WIRE CONTINUES TO DESTINATION LOAD. REFER TO ONE-LINES, PANEL SCHEDULES, SITE PLANS, AND LIGHTING AND AUXILIARY POWER PLANS.

(13) PROPOSED UNDERGROUND CONCRETE ENCASED DUCT BANK TURNS UP BENEATH PULLBOX. TERMINATE CONDUITS TO BOTTOM OF PULLBOX, SIMILAR TO DETAIL 1 ON DRAWING NO. [G-E-8].

(14) PROPOSED CONDUITS ROUTED ALONG EXTERIOR WALL. MOUNT CONDUITS TO WALL PER DETAIL 1 ON DRAWING NO. [G-E-10].

(15) CONDUITS PENETRATE WALL INTO INTERIOR OF BUILDING AT AN ELEVATION BELOW PERIMETER STRUCTURAL ROOF BEAM. CONDUITS CHANGE CONFIGURATION AND ELEVATION INSIDE BUILDING. LOCATION SHOWN IS APPROXIMATE. COORDINATE PENETRATION WITH LOCATION OF ROOF JOISTS AND ADJUST FINAL POSITIONING AS REQUIRED. PERFORM PENETRATION PER DETAIL 6 ON DRAWING NO. [G-E-7] OR DETAIL 6 ON DRAWING NO. [G-E-10] AS APPLICABLE. COORDINATE WITH STRUCTURAL. REFER TO CONDUIT CORRIDORS ON DRAWING NO. [E-31] FOR CONTINUATION.

(16) FURNISH AND INSTALL PULLBOX DEDICATED TO INSTRUMENTATION, CONTROLS, AND FIBER OPTIC COMMUNICATION CABLES, SIZED 30"H X 30"W X 12"D AT MINIMUM.

(17) FURNISH AND INSTALL PULLBOX DEDICATED TO 480V POWER CABLES, SIZED 20"H X 20"W X 8"D AT MINIMUM.

(18) FURNISH AND INSTALL PULLBOX DEDICATED TO INSTRUMENTATION AND CONTROL CABLES, SIZED 16"H X 16"W X 10"D AT MINIMUM.

(19) FURNISH AND INSTALL PULLBOX DEDICATED TO 480V POWER CABLES, SIZED 20"H X 20"W X 6"D AT MINIMUM.

(20) EXTEND HVAC CONCRETE EQUIPMENT PAD IN FRONT OF DISCONNECT/TRANSFORMER/PULLBOX AS SHOWN.

(21) MOUNT ENCLOSED CIRCUIT BREAKER TO CONCRETE PAD PER DETAIL 5 ON DRAWING NO. [G-E-11].

Plotted: 4/22/2016 8:48:02 AM

K. A. Harutunian
STATE OF TEXAS
K. A. HARUTUNIAN
59181
REGISTERED PROFESSIONAL ENGINEER
4/22/2016

REUSE OF DOCUMENTS
This document, and the designs incorporated herein, is an instrument of professional service that has been developed, designed and prepared by Harutunian Engineering, Inc., and is not to be used, in whole or part, for any other project without giving written notice to Harutunian Engineering, Inc.

REV No	DATE	DRWN	CHKD	REMARKS
1	–	–	–	–

DESIGNED BY: HEI
DRAWN BY: HEI
SHEET CHK'D BY: HEI
CROSS CHK'D BY: HEI
APPROVED BY: HEI
DATE: APRIL 2016

CDM Smith
Riata Corporate Park, 12357-A Riata Trace Parkway, Suite 210
Austin, TX 78727
Tel: (512) 346-1100
Texas Registration Number F-3043

HEI
HARUTUNIAN ENGINEERING, INC.
305 E Huntland Dr, Ste 500; Austin, TX 78752
TBPE Firm Registration No. F-2408

CITY OF AUSTIN, TEXAS - AUSTIN WATER UTILITY
CIP 3333.016

SOUTH AUSTIN REGIONAL WWTP
THICKENER IMPROVEMENTS PROJECT

GRAVITY THICKENER AREA
SITE PARTIAL PLANS

PROJECT No 590-104217
FILE NAME: E-15

SHEET No
E-15

GENERAL NOTES:

1. THE LOCATION AND SPACING OF GROUND ELECTRODES SHOWN IS APPROXIMATE. CONTRACTOR SHALL COORDINATE FINAL GROUND ELECTRODE LAYOUT WITH CIVIL/STRUCTURAL/ MECHANICAL TO AVOID CONFLICTS. MINOR RELOCATIONS OF GROUNDING SYSTEM COMPONENTS SHOWN HERE MAY BE NECESSARY TO AVOID CONFLICTS. ARRANGE/INSTALL GROUND ELECTRODES AND CONDUCTORS AND MAINTAIN THE MINIMUM AND MAXIMUM SPACING BETWEEN ALL ELECTRODES AS NOTED. ELECTRODES SHALL BE INSTALLED 30" BELOW FINISHED SLAB/GRADE TO TOP OF ELECTRODE AT MINIMUM. INSTALL ELECTRODES AT INCREASED DEPTH AS REQUIRED TO AVOID CONFLICTS. TRANSITION TO THESE LOWER ELEVATIONS SHALL BE COORDINATED, FURNISHED, AND INSTALLED, AS REQUIRED, BY CONTRACTOR AT NO ADDITIONAL COST TO THE OWNER. CONTRACTOR SHALL INSURE THAT THE GROUND ELECTRODE IS PLACED INTO UNDISTURBED/CLEAR SOIL REGARDLESS OF DEPTH FROM FINISHED SLAB.

2. CONTRACTOR SHALL COORDINATE THE INSTALLATION OF, AND PROTECTION OF, THE ENTIRE GROUNDING NETWORK (GROUND RODS AND ASSOCIATED GROUND CONDUCTORS IN AND AROUND THE STRUCTURE) WITH CIVIL/STRUCTURAL/MECHANICAL DURING ALL PHASES OF CONSTRUCTION.

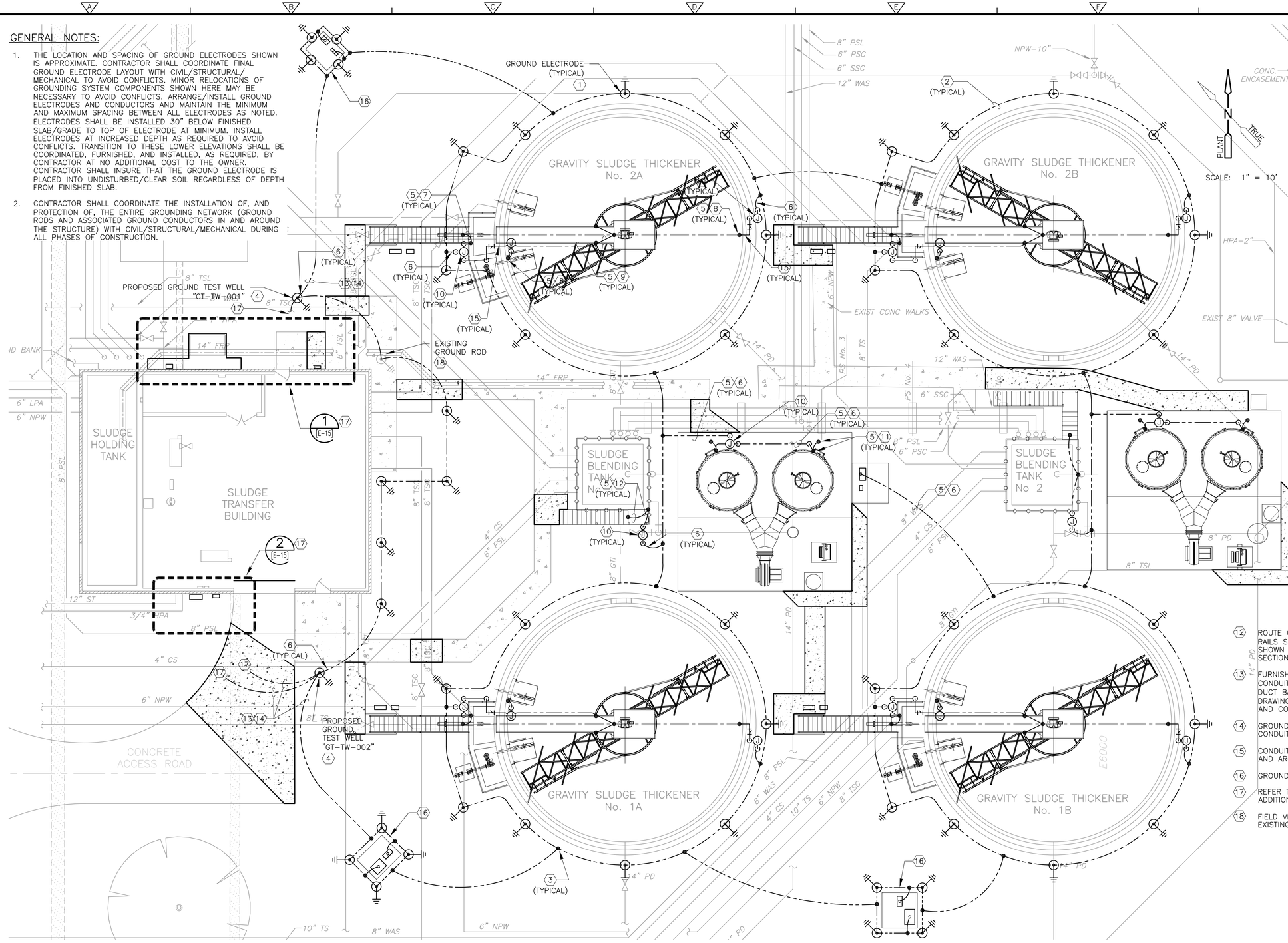

GRAVITY THICKENER VICINITY
ENLARGED SITE GROUNDING PLAN (1 / E-14)
SCALE: 1" = 10'

KEY NOTES:

1. FURNISH AND INSTALL GROUND ELECTRODE PER DETAILS ON DRAWING NO. [G-E-5]. LOCATION AND SPACING OF ELECTRODES IS FOR REPRESENTATION ONLY. CONTRACTOR SHALL COORDINATE FINAL LAYOUT OF GROUNDING SYSTEM ELECTRODES AND CONDUCTORS WITH EXISTING CONDITIONS AND WITH OTHER TRADES AND MAKE ADJUSTMENTS TO INSTALLATION AS REQUIRED. MAINTAIN A MINIMUM SPACING OF 10'-0" BETWEEN ALL ELECTRODES. ELECTRODES SHALL BE BURIED 30" BELOW GRADE AT MINIMUM. INSTALL ELECTRODES AT INCREASED DEPTH AS REQUIRED TO AVOID CONFLICTS.
2. 1 – 250kCMIL BARE GROUNDING CONDUCTOR DIRECT BURIED AT MINIMAL DEPTH OF 30 INCHES BELOW FINISHED GRADE. TYPICAL BETWEEN ALL PERIMETER GROUNDING ELECTRODES AND TEST WELLS.
3. MAKE ALL CONNECTIONS TO GROUNDING ELECTRODES AND GROUNDING GRID CONDUCTORS BY MEANS OF EXOTHERMIC WELD EXCEPT WHERE SHOWN OTHERWISE.
4. FURNISH AND INSTALL TEST WELL PER DETAILS ON DRAWING NO. [G-E-5]. COORDINATE LOCATION WITH EXISTING SITE CONDITIONS AND ADJUST INSTALLATION AS REQUIRED. GROUND CONDUCTORS ENTERING TEST WELL SHALL BE ATTACHED BY MECHANICAL REMOVABLE MEANS TO FACILITATE ISOLATION OF INDIVIDUAL GROUNDING SYSTEMS.
5. FURNISH AND INSTALL 1 #1 INSULATED GROUNDING CONDUCTOR IN 3/4" CONDUIT. TYPICAL FOR ALL GROUNDING WIRES IN ROUTE TO/FROM EQUIPMENT/STRUCTURE BONDS.
6. ALTHOUGH REQUIRED OTHERWISE BY THE SPECIFICATIONS, DIRECT BURY CONDUIT, 30" BELOW FINISHED GRADE/SLAB AT MINIMUM, WITHOUT CONCRETE ENCASEMENT. DIRECT BURIED PVC CONDUIT SHALL EXTEND HORIZONTALLY 12" FROM COUPLING AT 90 DEGREE BEND AND/OR 12" BEYOND EDGE OF CONCRETE SLAB AS APPLICABLE. INSULATED GROUND CONDUCTOR CONTINUES DIRECT BURIED TO WELD AT GROUND GRID.
7. ROUTE GROUNDING CONDUIT/WIRE ALONG WALL AND BOND TO HAND RAIL AND STAIR STRUCTURE. NOT ALL REQUIRED BONDING SHOWN HERE. DAISY-CHAIN CONDUCTOR AND BOND BETWEEN HAND RAIL AND STAIR STRUCTURE SECTIONS AS REQUIRED TO ENSURE CONTINUITY, SIMILAR TO DETAIL 5 ON DRAWING NO. [G-E-7].
8. ROUTE GROUNDING CONDUIT/WIRE ALONG WALL AND BOND TO GRAVITY THICKENER ROOF STRUCTURE. NOT ALL REQUIRED BONDING SHOWN HERE. DAISY-CHAIN CONDUCTOR AND BOND BETWEEN ADJACENT ROOF SECTIONS AS REQUIRED TO ENSURE CONTINUITY OF ENTIRE ROOF STRUCTURE.
9. ROUTE GROUNDING CONDUIT/WIRE ALONG AND UNDERNEATH WALKWAY STRUCTURE WITH OTHER PROPOSED CONDUITS (NOT SHOWN). BOND TO HAND RAILS AND PLATFORM STRUCTURE. NOT ALL REQUIRED BONDING SHOWN HERE. DAISY-CHAIN CONDUCTOR AND BOND BETWEEN HAND RAIL SECTIONS, WALKWAY STRUCTURE, AND ROOF AS REQUIRED TO ENSURE CONTINUITY OF ENTIRE WALKWAY/HANDRAIL AND ROOF STRUCTURE, PER DETAIL 5 ON DRAWING NO. [G-E-7].
10. FURNISH GROUNDING JUNCTION BOX SIZED 12"H X 12"W X 6"D AT MINIMUM AND INSTALL PER DETAIL 5 ON DRAWING NO. [G-E-11]. GROUND CONDUCTORS SHALL BE CONNECTED BY EXOTHERMIC WELD INSIDE BOX. TAG BOX "GROUNDING". ADJUST LOCATION OF JUNCTION BOX AND CONDUIT/WIRE STUB UPS AS REQUIRED.
11. ROUTE GROUNDING CONDUIT/WIRE UP TANK. MOUNT CONDUIT/WIRE TO SUPPORTS FURNISHED AND INSTALLED BY TANK MANUFACTURER. COORDINATE SUPPORTS WITH MANUFACTURER AND ADJUST INSTALLATION AS REQUIRED. BOND TO LADDER AND HAND RAILS AT TOP OF TANK SIMILAR TO DETAIL 5 ON DRAWING NO. [G-E-7]. NOT ALL REQUIRED BONDING SHOWN HERE. DAISY-CHAIN CONDUCTOR AND BOND BETWEEN LADDER AND HAND RAIL SECTIONS AS REQUIRED TO ENSURE CONTINUITY.
12. ROUTE GROUNDING CONDUIT/WIRE UP WALL OF TANK. BOND STAIRS AND ALL HAND RAILS SIMILAR TO DETAIL 5 ON DRAWING NO. [G-E-7]. NOT ALL REQUIRED BONDING SHOWN HERE. DAISY-CHAIN CONDUCTOR AND BOND BETWEEN STAIRS AND HAND RAIL SECTIONS AS REQUIRED TO ENSURE CONTINUITY.
13. FURNISH AND INSTALL 1 250kCMIL INSULATED GROUNDING CONDUCTOR IN 1-1/2" CONDUIT. GROUNDING CONDUIT/WIRE SHALL BE INSTALLED IN CONCRETE ENCASED DUCT BANK (NOT SHOWN). REFER TO GRAVITY THICKENER VICINITY SITE PLAN ON DRAWING NO. [E-13] FOR CONTINUATION OF GROUNDING CONDUIT/WIRE, LOCATION AND CONTENTS OF PROPOSED DUCT BANKS.
14. GROUND CONDUIT/WIRE BREAKS OUT OF DUCT BANK AND TURNS UP INTO TEST WELL. CONDUIT SHALL NOT BE CONCRETE ENCASED AT TURN UP INTO TEST WELL.
15. CONDUIT/WIRE PENETRATES THICKENER DOME. SEAL IN ACCORDANCE WITH ELECTRICAL AND ARCHITECTURAL DETAILS AND SPECIFICATIONS.
16. GROUND EACH PULLBOX PER DETAIL 1 ON DRAWING NO. [G-E-7].
17. REFER TO ENLARGED PLANS FOR CONTINUATION OF GROUNDING CONDUCTOR AND ADDITIONAL GROUNDING REQUIREMENTS.
18. FIELD VERIFY LOCATION OF EXISTING GROUNDING ROD/CONDUCTORS. CONNECT TO EXISTING BARE GROUND WIRES BY EXOTHERMIC WELD.

REUSE OF DOCUMENTS
This document, and the designs incorporated herein, is an instrument of professional service that has been developed, designed and prepared by Harutunian Engineering, Inc., and is not to be used, in whole or part, for any other project without giving written notice to Harutunian Engineering, Inc.

K. A. HARUTUNIAN STATE OF TEXAS 59181 REGISTERED PROFESSIONAL ENGINEER 4/22/2016

REV No	DATE	DRWN	CHKD	REMARKS
△	–	–	–	–

DESIGNED BY: HEI
DRAWN BY: HEI
SHEET CHK'D BY: HEI
CROSS CHK'D BY: HEI
APPROVED BY: HEI
DATE: APRIL 2016

CDM Smith
Riata Corporate Park, 12357-A Riata Trace Parkway, Suite 210
Austin, TX 78727
Tel: (512) 346-1100
Texas Registration Number F-3043

HARUTUNIAN ENGINEERING, INC.
305 E Huntland Dr, Ste 500; Austin, TX 78752
TBPE Firm Registration No. F-2408

CITY OF AUSTIN, TEXAS - AUSTIN WATER UTILITY
CIP 3333.016
SOUTH AUSTIN REGIONAL WWTP
THICKENER IMPROVEMENTS PROJECT

GRAVITY THICKENER AREA
SITE GROUNDING PLAN

PROJECT No 590-104217
FILE NAME: E-16

SHEET No
E-16

Plotted: 4/22/2016 8:48:11 AM

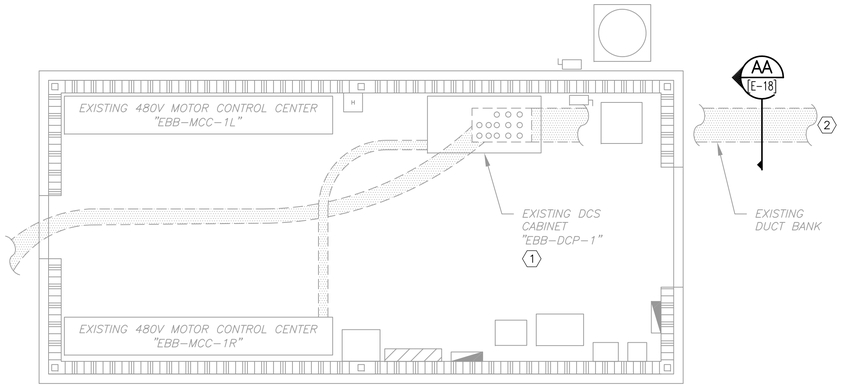

ELECTRICAL BUILDING B ENLARGED I&C PLAN

SCALE: 1/4" = 1'-0"

1 [E-14]

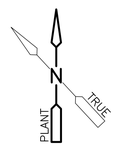

KEY NOTES:

1. EXISTING DUCT BANK ENTERS ELECTRICAL BUILDING "B" AND STUBS UP INTO EXISTING CONTROL PANEL "EBB1-DCP-01". PROPOSED FIBER OPTIC CABLES INSTALLED IN EXISTING DUCT BANK SYSTEM SHALL TURN UP INTO CONTROL PANEL. TERMINATE CABLES TO PROPOSED PATCH PANELS AND MAKE ALL FINAL CONNECTIONS. REFER TO CONTROL SYSTEM ARCHITECTURE DRAWING NO. [I-30] FOR ADDITIONAL INFORMATION ON ROUTING AND TERMINATION OF FIBER OPTIC DATA CABLES.

2. REFER TO SITE PLAN ON DRAWING NO. [E-14] FOR CONTINUATION OF EXISTING DUCT BANK.

GENERAL NOTES:

1. ALL DUCT BANKS SHOWN ON THIS DRAWING ARE EXISTING. PROPOSED CABLES SHALL BE INSTALLED IN EXISTING DUCT BANK SYSTEM FROM SOURCE TO DESTINATION. MAKE ALL FINAL CONNECTIONS. REFER TO DEMOLITION AND RENOVATION DUCT BANK SECTION VIEWS ON DRAWING NO. [E-18]. NOT ALL DUCT BANKS AND EQUIPMENT HAVE BEEN SHOWN FOR CLARITY.

2. REFER TO CONTROL SYSTEM ARCHITECTURE DEMOLITION AND RENOVATION ON DRAWING NOS. [I-29] AND [I-30] FOR ADDITIONAL INFORMATION AND REQUIREMENTS.

REUSE OF DOCUMENTS

This document, and the designs incorporated herein, is an instrument of professional service that has been developed, designed and prepared by Harutunian Engineering, Inc., and is not to be used, in whole or part, for any other project without giving written notice to Harutunian Engineering, Inc.

K. A. Harutunian

STATE OF TEXAS
K. A. HARUTUNIAN
59181
REGISTERED PROFESSIONAL ENGINEER
4/22/2016

REV No	DATE	DRWN	CHKD	REMARKS
△	–	–	–	–

DESIGNED BY: HEI
DRAWN BY: HEI
SHEET CHK'D BY: HEI
CROSS CHK'D BY: HEI
APPROVED BY: HEI
DATE: APRIL 2016

CDM Smith
Riata Corporate Park, 12357-A Riata Trace Parkway, Suite 210
Austin, TX 78727
Tel: (512) 346-1100
Texas Registration Number F-3043

HEI
HARUTUNIAN ENGINEERING, INC.
305 E Huntland Dr, Ste 500; Austin, TX 78752
TBPE Firm Registration No. F-2408

CITY OF AUSTIN, TEXAS - AUSTIN WATER UTILITY
CIP 3333.016

SOUTH AUSTIN REGIONAL WWTP
THICKENER IMPROVEMENTS PROJECT

ELECTRICAL BUILDING B
ENLARGED PLAN

PROJECT No 590-104217
FILE NAME: E-17

SHEET No
E-17

Plotted: 4/22/2016 8:48:16 AM

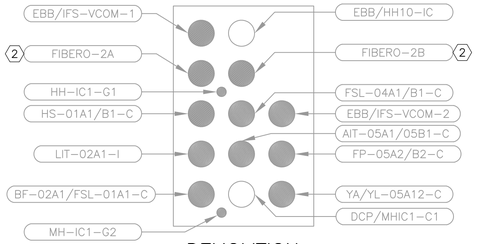

DEMOLITION
I&C DUCT BANK

DUCT BANK SECTION AA [E-14]
SCALE: NTS

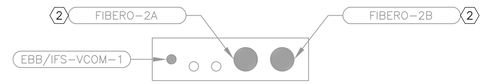

DEMOLITION
I&C DUCT BANK

DUCT BANK SECTION AB [E-14]

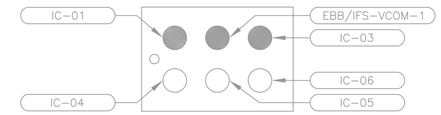

DEMOLITION
I&C DUCT BANK

DUCT BANK SECTION AC [E-14]

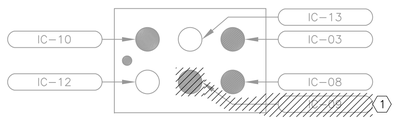

DEMOLITION
I&C DUCT BANK

DUCT BANK SECTION AD [E-14]

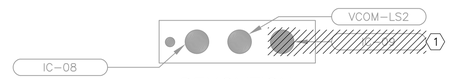

DEMOLITION
I&C DUCT BANK

DUCT BANK SECTION AE [E-14]
SCALE: NTS

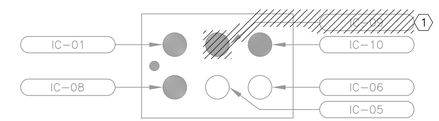

DEMOLITION
I&C DUCT BANK

DUCT BANK SECTION AF [E-14]
SCALE: NTS

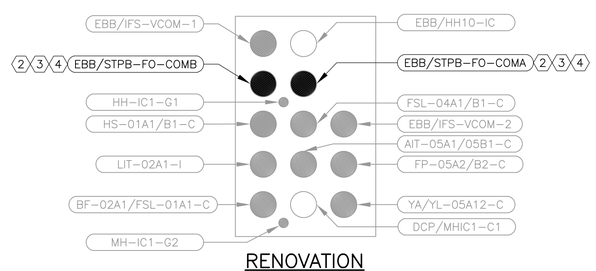

RENOVATION
I&C DUCT BANK

DUCT BANK SECTION AA [E-14]
SCALE: NTS

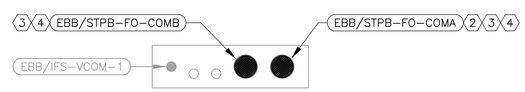

RENOVATION
I&C DUCT BANK

DUCT BANK SECTION AB [E-14]

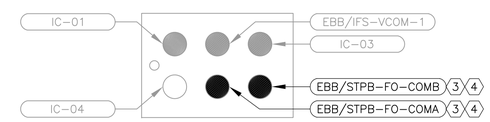

RENOVATION
I&C DUCT BANK

DUCT BANK SECTION AC [E-14]

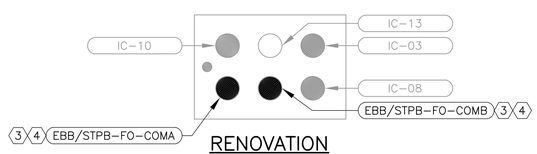

RENOVATION
I&C DUCT BANK

DUCT BANK SECTION AD [E-14]

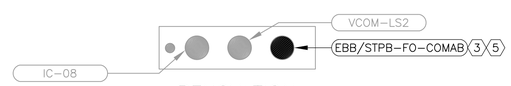

RENOVATION
I&C DUCT BANK

DUCT BANK SECTION AE [E-14]
SCALE: NTS

KEY NOTES:

1. CONDUIT APPEARS TO CONTAIN MULTI-MODE FIBER OPTIC CABLES BETWEEN SLUDGE TRANSFER BUILDING CONTROL PANEL "RIO2A" AND PRELIMINARY TREATMENT STRUCTURE "A" CONTROL PANEL "DCS2A". FIELD VERIFY. DISCONNECT AND REMOVE THESE FIBER OPTIC CABLES IN THEIR ENTIRETY. ALL OTHER CABLES THAT MAY EXIST IN THESE CONDUITS SHALL REMAIN. REFER TO CONTROL SYSTEM ARCHITECTURE DRAWING NO. [I-29] FOR ADDITIONAL REQUIREMENTS.
2. CONDUIT CONTAINS EXISTING FIBER OPTIC CABLES THAT SHALL REMAIN. INSTALL PROPOSED FIBER OPTIC CABLES IN THIS CONDUIT ALONGSIDE EXISTING CABLES.
3. FURNISH AND INSTALL 2 LOOSE TUBE SINGLE-MODE FIBER OPTIC CABLES BETWEEN PROPOSED CONTROL PANEL "STPB-CP-001" AT SLUDGE TRANSFER BUILDING AND EXISTING CONTROL PANEL "EBB1-DCP-01" AT ELECTRICAL BUILDING B. MAKE ALL FINAL TERMINATIONS. EACH OF THE 2 CABLES IS DEDICATED TO SEPARATE A AND B SYSTEMS. REFER TO CONTROL SYSTEM ARCHITECTURE DRAWING NO. [I-30] FOR ADDITIONAL REQUIREMENTS. PROPOSED FIBER OPTIC CABLES SHALL BE INSTALLED IN EXISTING CONDUITS WITH OTHER EXISTING CABLES AS APPLICABLE. A-SYSTEM CABLE AND B-SYSTEM CABLE SHALL BE ROUTED IN SEPARATE CONDUITS TO THE EXTENT POSSIBLE.
4. CONDUIT CONTAINS 1 OF THE 2 PROPOSED SINGLE-MODE FIBER OPTIC CABLE(S).
5. CONDUIT CONTAINS BOTH PROPOSED SINGLE-MODE FIBER OPTIC CABLE(S).

GENERAL NOTES:

1. ALL DUCT BANKS SHOWN ON THIS DRAWING ARE EXISTING. PROPOSED CABLES SHALL BE INSTALLED IN EXISTING DUCT BANK SYSTEM FROM SOURCE TO DESTINATION. MAKE ALL FINAL CONNECTIONS. REFER TO DEMOLITION AND RENOVATION DUCT BANK SECTION VIEWS ON THIS SHEET. NOT ALL DUCT BANKS AND EQUIPMENT HAVE BEEN SHOWN FOR CLARITY.
2. REFER TO CONTROL SYSTEM ARCHITECTURE DEMOLITION AND RENOVATION ON DRAWING NOS. [I-29] AND [I-30] FOR ADDITIONAL INFORMATION AND REQUIREMENTS.
3. EXISTING CABLES MAY EXIST IN CONDUITS WITH PROPOSED WIRING. FIELD VERIFY. ENTIRE ROUTES HAVE NOT BEEN FIELD VERIFIED. THE CONTRACTOR SHALL MAKE EXTENSIVE SURVEY AND FIELD VERIFICATION EFFORTS PRIOR TO COMMENCING RENOVATION ACTIVITIES. MAKE ALL NECESSARY ADJUSTMENTS TO ACCOMMODATE THE PROPOSED CABLES IN EXISTING CONDUITS.
4. DARKENED SOLID CIRCLES INDICATE EXISTING CONDUITS WITH INSTALLED CONDUCTORS OR CABLES. UNDARKENED CIRCLES INDICATE EMPTY CONDUITS.

REUSE OF DOCUMENTS
This document, and the designs incorporated herein, is an instrument of professional service that has been developed, designed and prepared by Harutunian Engineering, Inc., and is not to be used, in whole or part, for any other project without giving written notice to Harutunian Engineering, Inc.

REV No	DATE	DRWN	CHKD	REMARKS
△	–	–	–	–

DESIGNED BY: HEI
DRAWN BY: HEI
SHEET CHK'D BY: HEI
CROSS CHK'D BY: HEI
APPROVED BY: HEI
DATE: APRIL 2016

CDM Smith
Riata Corporate Park, 12357-A Riata Trace Parkway, Suite 210
Austin, TX 78727
Tel: (512) 346-1100
Texas Registration Number F-3043

HARUTUNIAN ENGINEERING, INC.
305 E Huntland Dr, Ste 500; Austin, TX 78752
TBPE Firm Registration No. F-2408

CITY OF AUSTIN, TEXAS - AUSTIN WATER UTILITY
CIP 3333.016

SOUTH AUSTIN REGIONAL WWTP
THICKENER IMPROVEMENTS PROJECT

DUCT BANK SECTIONS
DEMOLITION AND RENOVATION

PROJECT No 590-104217
FILE NAME: E-18

SHEET No
E-18

Plotted: 4/22/2016 8:48:20 AM

PROPOSED POWER DUCT BANK

PROPOSED I&C DUCT BANK

DUCT BANK SECTION A [E-13]
SCALE: NTS

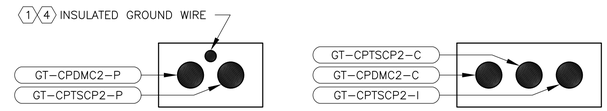

PROPOSED POWER DUCT BANK

PROPOSED I&C DUCT BANK

DUCT BANK SECTION B [E-13]
SCALE: NTS

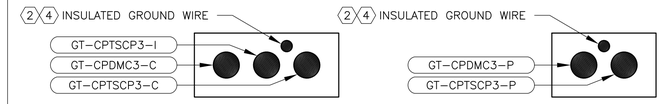

PROPOSED I&C DUCT BANK

PROPOSED POWER DUCT BANK

DUCT BANK SECTION C [E-13]
SCALE: NTS

PROPOSED I&C DUCT BANK

PROPOSED POWER DUCT BANK

DUCT BANK SECTION D [E-13]
SCALE: NTS

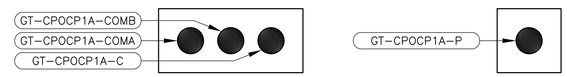

PROPOSED I&C DUCT BANK

PROPOSED POWER DUCT BANK

DUCT BANK SECTION E [E-13]
SCALE: NTS

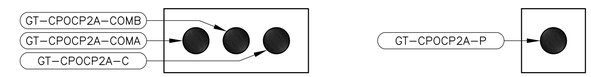

PROPOSED I&C DUCT BANK

PROPOSED POWER DUCT BANK

DUCT BANK SECTION F [E-13]
SCALE: NTS

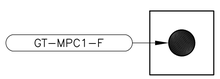

PROPOSED POWER DUCT BANK

DUCT BANK SECTION G [E-13]
SCALE: NTS

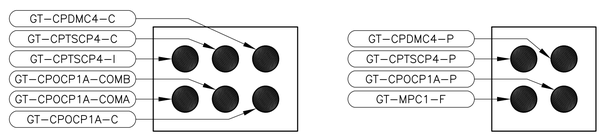

PROPOSED I&C DUCT BANK

PROPOSED POWER DUCT BANK

DUCT BANK SECTION H [E-13]
SCALE: NTS

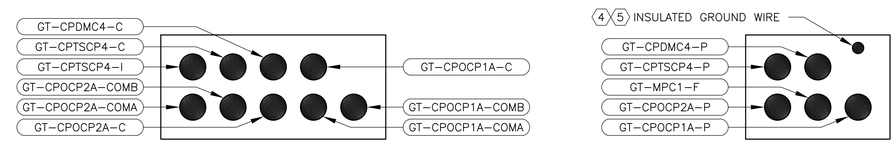

PROPOSED I&C DUCT BANK

PROPOSED POWER DUCT BANK

DUCT BANK SECTION I [E-13]
SCALE: NTS

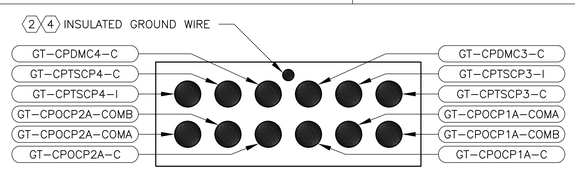

PROPOSED I&C DUCT BANK

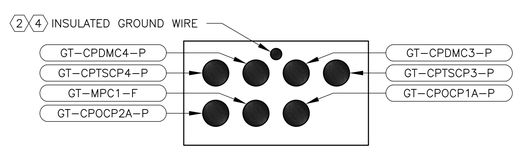

PROPOSED POWER DUCT BANK

DUCT BANK SECTION J [E-13]
SCALE: NTS

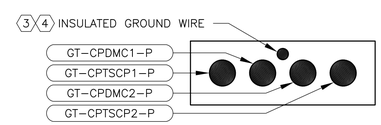

PROPOSED POWER DUCT BANK

DUCT BANK SECTION K [E-13]
SCALE: NTS

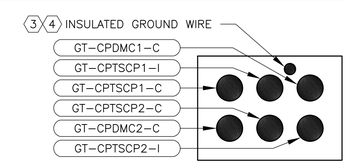

PROPOSED I&C DUCT BANK

DUCT BANK SECTION L [E-13]
SCALE: NTS

KEY NOTES:

1. FURNISH AND INSTALL 1 250kCMIL INSULATED GROUNDING CONDUCTOR IN 1-1/2" CONDUIT. GROUNDING CONDUIT/WIRE SHALL BE INSTALLED IN CONCRETE ENCASED DUCT BANK. GROUNDING CONDUIT/WIRE ROUTES BETWEEN PULLBOX GROUNDING SYSTEM AND GROUND TEST WELL "GT-TW-001".
2. FURNISH AND INSTALL 1 250kCMIL INSULATED GROUNDING CONDUCTOR IN 1-1/2" CONDUIT. GROUNDING CONDUIT/WIRE SHALL BE INSTALLED IN CONCRETE ENCASED DUCT BANK. GROUNDING CONDUIT/WIRE ROUTES BETWEEN GROUND TEST WELL "GT-TW-002" AND TERMINATION AT PULLBOXES ON SOUTH SIDE OF SLUDGE TRANSFER PUMP BUILDING.
3. FURNISH AND INSTALL 1 250kCMIL INSULATED GROUNDING CONDUCTOR IN 1-1/2" CONDUIT. GROUNDING CONDUIT/WIRE SHALL BE INSTALLED IN CONCRETE ENCASED DUCT BANK. GROUNDING CONDUIT/WIRE ROUTES BETWEEN BUILDING PERIMETER GROUNDING SYSTEM AND TERMINATION AT PULLBOXES ON NORTH SIDE OF SLUDGE TRANSFER PUMP BUILDING.
4. REFER TO DRAWING NOS. [E-13], [E-15], AND [E-16] FOR ADDITIONAL GROUNDING REQUIREMENTS.
5. FURNISH AND INSTALL 1 250kCMIL INSULATED GROUNDING CONDUCTOR IN 1-1/2" CONDUIT. GROUNDING CONDUIT/WIRE SHALL BE INSTALLED IN CONCRETE ENCASED DUCT BANK. GROUNDING CONDUIT/WIRE ROUTES BETWEEN PULLBOX GROUNDING SYSTEM AND GROUND TEST WELL "GT-TW-002". GROUND CONDUIT/WIRE ONLY REQUIRED IN PORTION OF DUCT BANK AS SHOWN ON DRAWING NO. [E-16].

GENERAL NOTES:

1. ALL DUCT BANKS SHOWN ON THIS DRAWING ARE PROPOSED. FURNISH AND INSTALL CABLES IN PROPOSED DUCT BANK SYSTEM AND PROPOSED EXPOSED CONDUIT SYSTEM FROM SOURCE TO DESTINATION. MAKE ALL FINAL CONNECTIONS.
2. DARKENED SOLID CIRCLES INDICATE PROPOSED CONDUITS WITH INSTALLED CONDUCTORS OR CABLES. UNDARKENED CIRCLES INDICATE EMPTY CONDUITS.

Plotted: 4/22/2016 8:48:24 AM

REUSE OF DOCUMENTS
This document, and the designs incorporated herein, is an instrument of professional service that has been developed, designed and prepared by Harutunian Engineering, Inc., and is not to be used, in whole or part, for any other project without giving written notice to Harutunian Engineering, Inc.

REV No	DATE	DRWN	CHKD	REMARKS
△	–	–	–	–

DESIGNED BY: HEI
DRAWN BY: HEI
SHEET CHK'D BY: HEI
CROSS CHK'D BY: HEI
APPROVED BY: HEI
DATE: APRIL 2016

CDM Smith
Riata Corporate Park, 12357-A Riata Trace Parkway, Suite 210
Austin, TX 78727
Tel: (512) 346-1100
Texas Registration Number F-3043

HARUTUNIAN ENGINEERING, INC.
305 E Huntland Dr, Ste 500; Austin, TX 78752
TBPE Firm Registration No. F-2408

CITY OF AUSTIN, TEXAS - AUSTIN WATER UTILITY
CIP 3333.016

SOUTH AUSTIN REGIONAL WWTP
THICKENER IMPROVEMENTS PROJECT

DUCT BANK SECTIONS
PROPOSED

PROJECT No 590-104217
FILE NAME: E-19

SHEET No
E-19

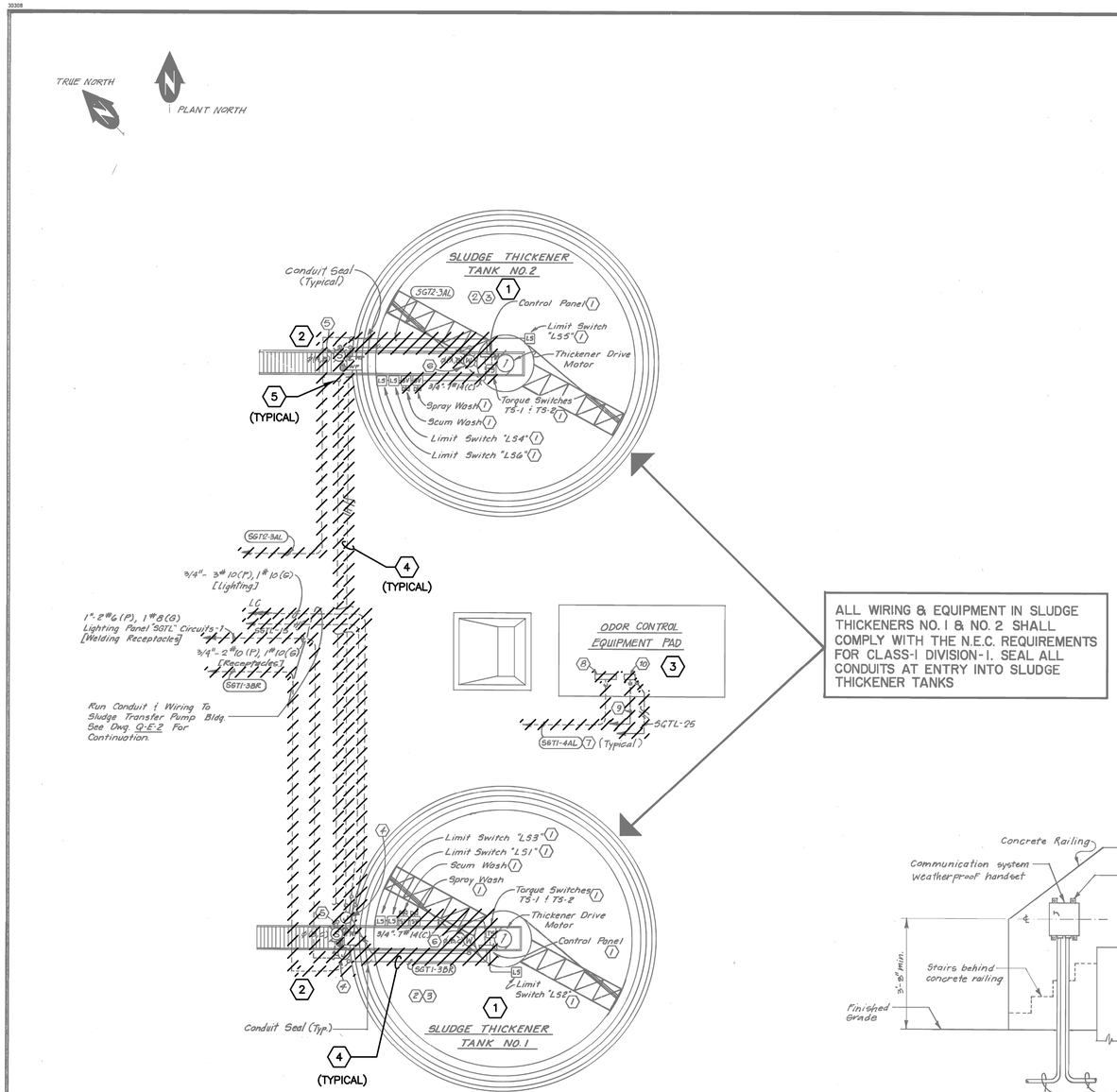

ALL WIRING & EQUIPMENT IN SLUDGE THICKENERS NO. 1 & NO. 2 SHALL COMPLY WITH THE N.E.C. REQUIREMENTS FOR CLASS-I DIVISION-I. SEAL ALL CONDUITS AT ENTRY INTO SLUDGE THICKENER TANKS

SLUDGE THICKENER TANKS NO. 1 & NO. 2
POWER & LIGHTING
SCALE : 1" = 10'-0"

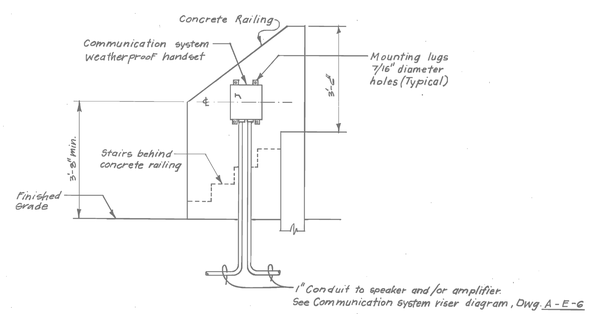

TYPICAL TREATMENT TANK COMMUNICATION SYSTEM HANDSET MOUNTING DETAIL
NOT TO SCALE

KEY NOTES

1. LIMIT SWITCHES, TORQUE SWITCHES, SOLENOID VALVES AND CONTROL PANEL ARE FURNISHED WITH THE CLARIFIERS.
2. RUN CONDUITS UNDER ACCESS WALKWAY. SUPPORT FROM WALKWAY STRUCTURAL MEMBERS.
3. ALL EXPOSED CONDUITS AT SLUDGE THICKENER TANKS ARE TO BE P.V.C. COATED RIGID STEEL.
4. MOUNT JUNCTION BOX ON OUTSIDE WALL OF SLUDGE THICKENER TANKS @ 3'-0" ABOVE FINISHED GRADE.
5. SEE DRAWING NO. U-E-1 FOR FIXTURE TYPE "S" AND RECEPTACLE MOUNTING DETAIL.
6. FIXTURE TYPE "W" TO BE APPLETON CAT. #CLS-15150-208V, 150 WATT, HPS LAMP WITH #CHR-4ST REFLECTOR AND #CGU2 WIRE GUARD (OR APPROVED EQUAL). FIXTURE SUITABLE FOR EXPLOSION-PROOF CLASS-I DIVISION-I. MOUNT FIXTURE SIMILAR TO DETAIL ON DRAWING U-E-1.
7. REFER TO ELECTRICAL ONE LINE DIAGRAM DRAWING Q-E-1.
8. ODOR CONTROL UNIT CONTROL PANEL. VERIFY EXACT LOCATION OF CONTROL PANEL WITH ODOR CONTROL EQUIPMENT SUPPLIER AND MAKE ALL FINAL CONNECTIONS TO MANUFACTURER'S RECOMMENDATION.
9. 3/4" 2 #14 (A) TO ANNUNCIATOR PANEL POINT #20.
10. HYDROGEN SULFIDE MONITOR PANEL MOUNTED ON ODOR CONTROL UNIT. VERIFY EXACT LOCATION OF PANEL WITH ODOR CONTROL UNIT SUPPLIER AND MAKE ALL FINAL CONNECTIONS TO MANUFACTURER'S RECOMMENDATION.

KEY NOTES:

1. INSIDE EACH GRAVITY SLUDGE THICKENER DISCONNECT AND REMOVE EXISTING RAKE DRIVE CONDUIT/WIRE, TORQUE SWITCHES, SPRAY WASH SOLENOID VALVES, AND LIGHT FIXTURE IN THEIR ENTIRETY. DISCONNECT AND REMOVE ALL ASSOCIATED EXPOSED CONDUIT/WIRE AND RACEWAY SUPPORTS FROM SOURCE TO DESTINATION IN THEIR ENTIRETY. DISCONNECT AND REMOVE ALL ASSOCIATED WIRING FROM SOURCE TO DESTINATION. PORTIONS OF THE EXISTING COMPONENTS SHOWN ON THIS DRAWING WERE DEMOLISHED UNDER ANOTHER PROJECT.
2. OUTSIDE EACH GRAVITY SLUDGE THICKENER DISCONNECT AND REMOVE POLE-MOUNTED LIGHT FIXTURE, LIGHT SWITCH, GENERAL RECEPTACLE, AND WELDING RECEPTACLE IN THEIR ENTIRETY. DISCONNECT AND REMOVE ALL ASSOCIATED EXPOSED CONDUIT/WIRE AND RACEWAY SUPPORTS FROM SOURCE TO DESTINATION IN THEIR ENTIRETY. DISCONNECT AND REMOVE ALL ASSOCIATED WIRING FROM SOURCE TO DESTINATION.
3. DISCONNECT AND REMOVE ALL EXISTING ODOR CONTROL SYSTEM CONTROL PANELS, INSTRUMENTS, ETC. IN THEIR ENTIRETY. DISCONNECT AND REMOVE ALL ASSOCIATED EXPOSED CONDUIT/WIRE AND RACEWAY SUPPORTS FROM SOURCE TO DESTINATION IN THEIR ENTIRETY. DISCONNECT AND REMOVE ALL ASSOCIATED WIRING FROM SOURCE TO DESTINATION.
4. DISCONNECT AND REMOVE ALL WIRING FROM EXISTING EXPOSED CONDUITS AND UNDERGROUND DUCT BANKS AS INDICATED FROM SOURCE TO DESTINATION IN THEIR ENTIRETY. UNDERGROUND DUCT BANKS AND CONDUITS SHALL BE ABANDONED IN PLACE.
5. WHERE EXPOSED CONDUITS TRANSITION TO UNDERGROUND, DEMOLISH CONDUITS BACK TO LAST EXPOSED COUPLING ABOVE GRADE AND CAP. EXISTING UNDERGROUND DUCT BANKS AND CONDUITS SHALL BE ABANDONED IN PLACE.

GENERAL NOTES:

1. REFER TO DEMOLITION ON DRAWING NOS. [E-21] AND [E-22] FOR ADDITIONAL REQUIREMENTS NOT SHOWN HERE.
2. DISCONNECT AND REMOVE WIRING FROM CONDUITS AS INDICATED FROM SOURCE TO DESTINATION IN THEIR ENTIRETY. WHERE CONDUITS ARE TO BE DEMOLISHED, DISCONNECT AND REMOVE EXPOSED CONDUITS AND ALL RACEWAY SUPPORTS IN THEIR ENTIRETY AS APPLICABLE. WHERE SUCH CONDUITS ARE EMBEDDED IN SLAB/WALLS, CONDUITS SHALL BE ABANDONED IN PLACE. CUT CONDUIT FLUSH TO SLAB/WALL AND GROUT PER DETAILS ON DRAWING NO. [G-E-9]. WHERE EXPOSED CONDUITS TRANSITION TO UNDERGROUND, DEMOLISH CONDUITS BACK TO LAST EXPOSED COUPLING ABOVE GRADE AND CAP. EXISTING UNDERGROUND DUCT BANKS AND CONDUITS SHALL BE ABANDONED IN PLACE. SHOULD ABANDONED CONDUITS INTERFERE WITH PROPOSED RENOVATIONS, PERFORM FURTHER DEMOLITION OF EXISTING CONDUITS AS REQUIRED.

I HEREBY CERTIFY THIS "RECORD DRAWINGS" IS CORRECT AND WAS PREPARED UNDER MY SUPERVISION.
11/7/86
11/7/09

STATE OF TEXAS — JAMES R. SCHILTZ 27165 — REGISTERED PROFESSIONAL ENGINEER

TRIAD ENGINEERING
CONSULTING ENGINEERS
AUSTIN, TEXAS

NO	DATE	REVISION	APPROV.
4			
3			
2			
1			

CITY OF AUSTIN, TEXAS
ONION CREEK WASTEWATER TREATMENT FACILITIES
GRAVITY THICKENER - ELECTRICAL

Turner Collie & Braden Inc.
CONSULTING ENGINEERS
TEXAS AUSTIN/DALLAS/EL PASO/HOUSTON/PORT ARTHUR
COLORADO DENVER/GRAND JUNCTION

Unit NAIL	Scale Horz AS NOTED Vert	Date APRIL 1984	
Designed JRS/KAH	Checked JRS/KAH	Job No. 7109-025	Contract 2
Drawn GDG/JP	Approved JRS	Sheet 248 of 300	

Dwg. No. P-E-1

GRAVITY THICKENERS 1A AND 2A AND ODOR CONTROL SYSTEM PLAN DEMOLITION (1) [E-54]
SCALE: NONE

K. A. HARUTUNIAN — STATE OF TEXAS — K. A. HARUTUNIAN 59181 — REGISTERED PROFESSIONAL ENGINEER
4/22/2016

REUSE OF DOCUMENTS
This document, and the designs incorporated herein, is an instrument of professional service that has been developed, designed and prepared by Harutunian Engineering, Inc., and is not to be used, in whole or part, for any other project without giving written notice to Harutunian Engineering, Inc.

REV No	DATE	DRWN	CHKD	REMARKS
△	–	–	–	–

DESIGNED BY: HEI
DRAWN BY: HEI
SHEET CHK'D BY: HEI
CROSS CHK'D BY: HEI
APPROVED BY: HEI
DATE: APRIL 2016

CDM Smith
Riata Corporate Park, 12357-A Riata Trace Parkway, Suite 210
Austin, TX 78727
Tel: (512) 346-1100
Texas Registration Number F-3043

HARUTUNIAN ENGINEERING, INC.
305 E Huntland Dr, Ste 500; Austin, TX 78752
TBPE Firm Registration No. F-2408

CITY OF AUSTIN, TEXAS - AUSTIN WATER UTILITY
CIP 3333.016
SOUTH AUSTIN REGIONAL WWTP
THICKENER IMPROVEMENTS PROJECT

GRAVITY THICKENERS 1A AND 2A AND ODOR CONTROL SYSTEM PLAN DEMOLITION

PROJECT No 590-104217
FILE NAME: E-20
SHEET No
E-20

Plotted: 6/30/2016 11:43:53 AM

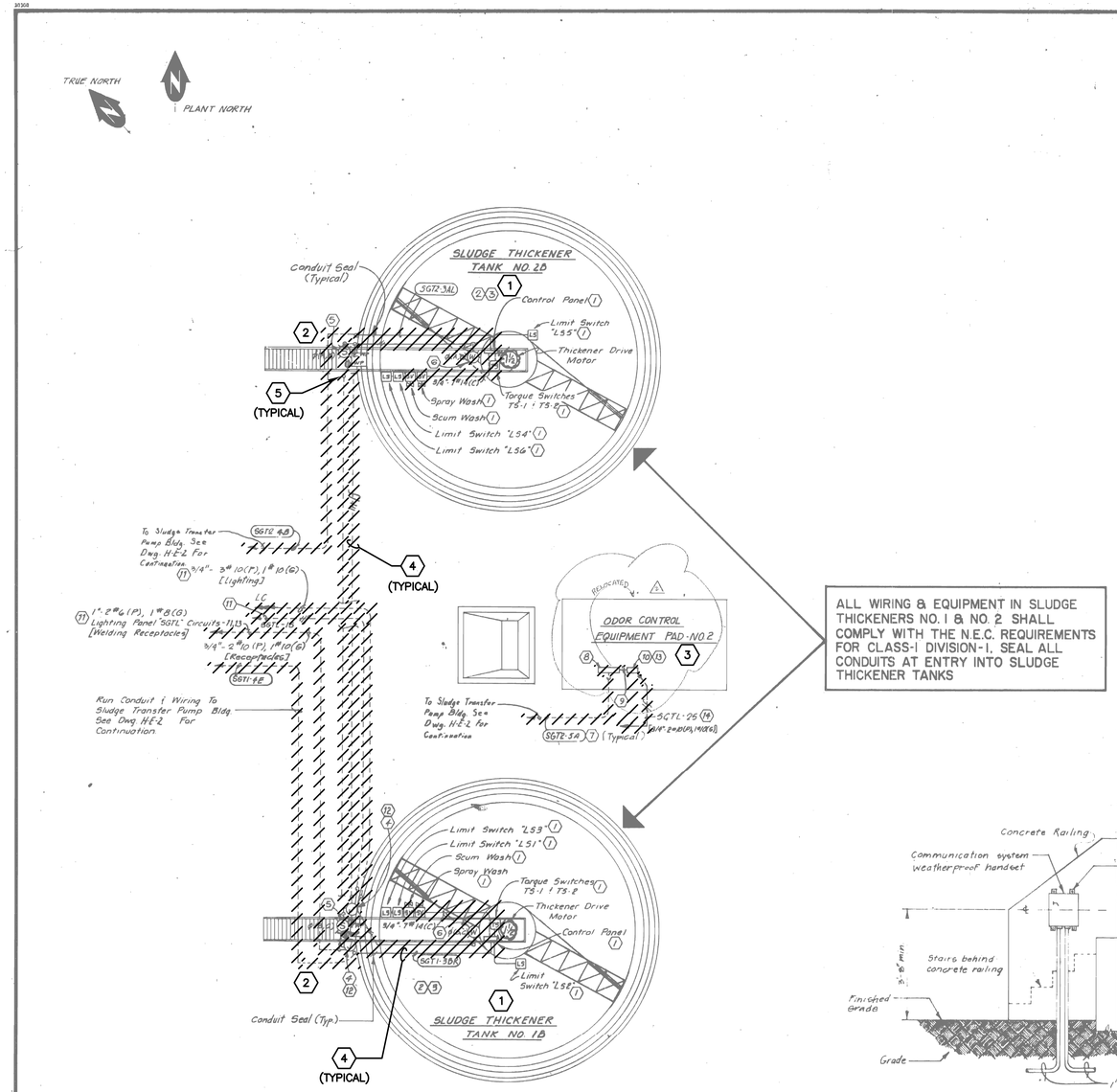

ALL WIRING & EQUIPMENT IN SLUDGE THICKENERS NO. 1 & NO. 2 SHALL COMPLY WITH THE N.E.C. REQUIREMENTS FOR CLASS-I DIVISION-I, SEAL ALL CONDUITS AT ENTRY INTO SLUDGE THICKENER TANKS

SLUDGE THICKENER TANKS NO. 1 & NO. 2
POWER & LIGHTING
SCALE: 1" = 10'-0"

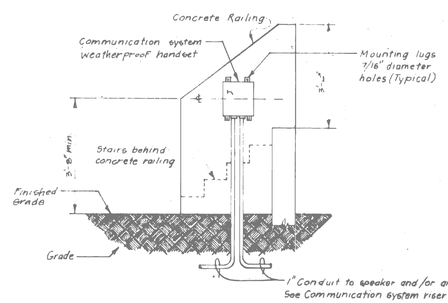

TYPICAL TREATMENT TANK COMMUNICATION SYSTEM HANDSET MOUNTING DETAIL
NOT TO SCALE

KEY NOTES

1. LIMIT SWITCHES, TORQUE SWITCHES, SOLENOID VALVES AND CONTROL PANEL ARE FURNISHED WITH THE SLUDGE THICKENERS.
2. RUN CONDUITS UNDER ACCESS WALKWAY. SUPPORT FROM WALKWAY STRUCTURAL MEMBERS.
3. ALL EXPOSED CONDUITS AT SLUDGE THICKENER TANKS ARE TO BE P.V.C. COATED RIGID STEEL.
4. MOUNT JUNCTION BOX ON OUTSIDE OF SLUDGE THICKENER TANKS @ 3'-0" ABOVE FINISHED GRADE.
5. SEE DRAWING NO. O-E-11 FOR FIXTURE TYPE "S" AND RECEPTACLE MOUNTING DETAIL.
6. FIXTURE TYPE "M" TO BE APPLETON CAT. #CLS-15150-208V, 150 WATT; HPS LAMP WITH #CMR-4ST REFLECTOR AND #CGU2 WIRE GUARD (OR APPROVED EQUAL). FIXTURE SUITABLE FOR EXPLOSION-PROOF CLASS-I DIVISION-1. MOUNT FIXTURE SIMILAR TO DETAIL ON DRAWING
7. REFER TO ELECTRICAL ONE LINE DIAGRAM DRAWING FOR CONDUIT AND WIRE SIZES.
8. ODOR CONTROL UNIT CONTROL PANEL. VERIFY EXACT LOCATION OF CONTROL PANEL WITH ODOR CONTROL EQUIPMENT SUPPLIER AND MAKE ALL FINAL CONNECTIONS TO MANUFACTURER'S RECOMMENDATION.
9. 3/4" 2 #14 (A) [ODOR CONTROL SYSTEM TROUBLE ALARM].
10. HYDROGEN SULFIDE MONITOR PANEL MOUNTED ON ODOR CONTROL UNIT. VERIFY EXACT LOCATION OF PANEL WITH ODOR CONTROL UNIT SUPPLIER AND MAKE ALL FINAL CONNECTIONS TO MANUFACTURER'S RECOMMENDATION.
11. RUN CONDUIT AND WIRING TO EXISTING JUNCTION BOX AT GRAVITY THICKENER NO. 1. SEE KEY NOTE NO. 12. SPLICE TO EXISTING CIRCUITS "SGTL-11,13,15" AND LIGHTING CONTACTOR CIRCUITS IN EXISTING JUNCTION BOXES. REFER TO DRAWING A-E-11 FOR EXACT LOCATION OF SLUDGE THICKENER NO. 1.
12. PRESENTLY THERE IS A SIMILAR JUNCTION BOX AT EXISTING SLUDGE THICKENER NO. 1 FOR WELDING RECEPTACLE, 120V CONVENIENCE OUTLETS AND/OR LIGHTING CIRCUITING OF EXISTING SLUDGE THICKENERS NO. 1 & NO. 2. REFER TO DRAWING A-E-11FOR EXACT LOCATION OF SLUDGE THICKENERS NO. 1 & NO. 2.
13. PRESENTLY THERE IS A SIMILAR HYDROGEN SULFIDE MONITORING PANEL MOUNTED ON EXISTING ODOR CONTROL UNIT NO. 1 (BETWEEN SLUDGE THICKENERS NO. 1 & NO. 2). REFER TO DRAWING A-E-11 FOR EXACT LOCATION OF EXISTING ODOR CONTROL UNIT NO. 1.
14. RUN CONDUIT AND WIRING TO HYDROGEN SULFIDE MONITORING PANEL (AT EXISTING ODOR CONTROL UNIT NO. 1. SEE KEY NOTE NO. 13.) AND SPLICE TO EXISTING LIGHTING CIRCUIT "SGTL-25".

KEY NOTES:

1. INSIDE EACH GRAVITY SLUDGE THICKENER DISCONNECT AND REMOVE EXISTING RAKE DRIVE CONDUIT/WIRE, TORQUE SWITCHES, SPRAY WASH SOLENOID VALVES, AND LIGHT FIXTURE IN THEIR ENTIRETY. DISCONNECT AND REMOVE ALL ASSOCIATED EXPOSED CONDUIT/WIRE AND RACEWAY SUPPORTS FROM SOURCE TO DESTINATION IN THEIR ENTIRETY. DISCONNECT AND REMOVE ALL ASSOCIATED WIRING FROM SOURCE TO DESTINATION. PORTIONS OF THE EXISTING COMPONENTS SHOWN ON THIS DRAWING WERE DEMOLISHED UNDER ANOTHER PROJECT.
2. OUTSIDE EACH GRAVITY SLUDGE THICKENER DISCONNECT AND REMOVE POLE-MOUNTED LIGHT FIXTURE, LIGHT SWITCH, GENERAL RECEPTACLE, AND WELDING RECEPTACLE IN THEIR ENTIRETY. DISCONNECT AND REMOVE ALL ASSOCIATED EXPOSED CONDUIT/WIRE AND RACEWAY SUPPORTS FROM SOURCE TO DESTINATION IN THEIR ENTIRETY. DISCONNECT AND REMOVE ALL ASSOCIATED WIRING FROM SOURCE TO DESTINATION.
3. DISCONNECT AND REMOVE ALL EXISTING ODOR CONTROL SYSTEM CONTROL PANELS, INSTRUMENTS, ETC. IN THEIR ENTIRETY. DISCONNECT AND REMOVE ALL ASSOCIATED EXPOSED CONDUIT/WIRE AND RACEWAY SUPPORTS FROM SOURCE TO DESTINATION IN THEIR ENTIRETY. DISCONNECT AND REMOVE ALL ASSOCIATED WIRING FROM SOURCE TO DESTINATION.
4. DISCONNECT AND REMOVE ALL WIRING FROM EXISTING EXPOSED CONDUITS AND UNDERGROUND DUCT BANKS AS INDICATED FROM SOURCE TO DESTINATION IN THEIR ENTIRETY. UNDERGROUND DUCT BANKS AND CONDUITS SHALL BE ABANDONED IN PLACE.
5. WHERE EXPOSED CONDUITS TRANSITION TO UNDERGROUND, DEMOLISH CONDUITS BACK TO LAST EXPOSED COUPLING ABOVE GRADE AND CAP. EXISTING UNDERGROUND DUCT BANKS AND CONDUITS SHALL BE ABANDONED IN PLACE.

GENERAL NOTES:

1. REFER TO DEMOLITION ON DRAWING NOS. [E-20] AND [E-22] FOR ADDITIONAL REQUIREMENTS NOT SHOWN HERE.
2. DISCONNECT AND REMOVE WIRING FROM CONDUITS AS INDICATED FROM SOURCE TO DESTINATION IN THEIR ENTIRETY. WHERE CONDUITS ARE TO BE DEMOLISHED, DISCONNECT AND REMOVE EXPOSED CONDUITS AND ALL RACEWAY SUPPORTS IN THEIR ENTIRETY AS APPLICABLE. WHERE SUCH CONDUITS ARE EMBEDDED IN SLAB/WALLS, CONDUITS SHALL BE ABANDONED IN PLACE. CUT CONDUIT FLUSH TO SLAB/WALL AND GROUT PER DETAILS ON DRAWING NO. [G-E-9]. WHERE EXPOSED CONDUITS TRANSITION TO UNDERGROUND, DEMOLISH CONDUITS BACK TO LAST EXPOSED COUPLING ABOVE GRADE AND CAP. EXISTING UNDERGROUND DUCT BANKS AND CONDUITS SHALL BE ABANDONED IN PLACE. SHOULD ABANDONED CONDUITS INTERFERE WITH PROPOSED RENOVATIONS, PERFORM FURTHER DEMOLITION OF EXISTING CONDUITS AS REQUIRED.

TRIAD ENGINEERING
CONSULTING ENGINEERS
AUSTIN, TEXAS

NO	DATE	REVISION	APPROV
4			
3			
2	10/16/87	AS-BUILT BY EPC	DSD/ABC
1	5-20-86	ADDENDUM NO. 1	JRS

CITY OF AUSTIN, TEXAS
SOUTH AUSTIN REGIONAL WASTEWATER TREATMENT PLANT
GRAVITY THICKENER - ELECTRICAL

AS BUILT

RECORD DRAWING
PREPARED BY
DATE

STATE OF TEXAS
JAMES R. SCHULTZ
27165
REGISTERED PROFESSIONAL ENGINEER

Turner Collie & Braden Inc.
CONSULTING ENGINEERS
TEXAS AUSTIN/DALLAS/ FT. WORTH/HOUSTON/PORT ARTHUR
COLORADO DENVER/GRAND JUNCTION

Unit BURKE	Scale "Horz AS NOTED Vert.	Date FEBRUARY 1986
Designed JRS/KAH	Checked JRS/KAH	Job No. 4107109-102 Contract 2
Drawn GDG/JP	Approved JRS	Sheet 94 of 132

Dwg. No. G-E-1

ADDENDUM No. 1 Sht. 119 of 146

GRAVITY THICKENERS 1B AND 2B AND ODOR CONTROL SYSTEM PLAN DEMOLITION (1) [E-68]
SCALE: NONE

REUSE OF DOCUMENTS
This document, and the designs incorporated herein, is an instrument of professional service that has been developed, designed and prepared by Harutunian Engineering, Inc., and is not to be used, in whole or part, for any other project without giving written notice to Harutunian Engineering, Inc.

REV No	DATE	DRWN	CHKD	REMARKS
△	–	–	–	–

DESIGNED BY: HEI
DRAWN BY: HEI
SHEET CHK'D BY: HEI
CROSS CHK'D BY: HEI
APPROVED BY: HEI
DATE: APRIL 2016

CDM Smith
Rlata Corporate Park, 12357-A Rlata Trace Parkway, Suite 210
Austin, TX 78727
Tel: (512) 346-1100
Texas Registration Number F-3043

HARUTUNIAN ENGINEERING, INC.
305 E Huntland Dr, Ste 500; Austin, TX 78752
TBPE Firm Registration No. F-2408

CITY OF AUSTIN, TEXAS - AUSTIN WATER UTILITY
CIP 3333.016
SOUTH AUSTIN REGIONAL WWTP
THICKENER IMPROVEMENTS PROJECT

GRAVITY THICKENERS 1B AND 2B AND ODOR CONTROL SYSTEM PLAN DEMOLITION

STATE OF TEXAS
K. A. HARUTUNIAN
59181
REGISTERED PROFESSIONAL ENGINEER
7/22/2016

PROJECT No 590-104217
FILE NAME: E-21

SHEET No
E-21

Plotted: 6/30/2016 11:44:00 AM

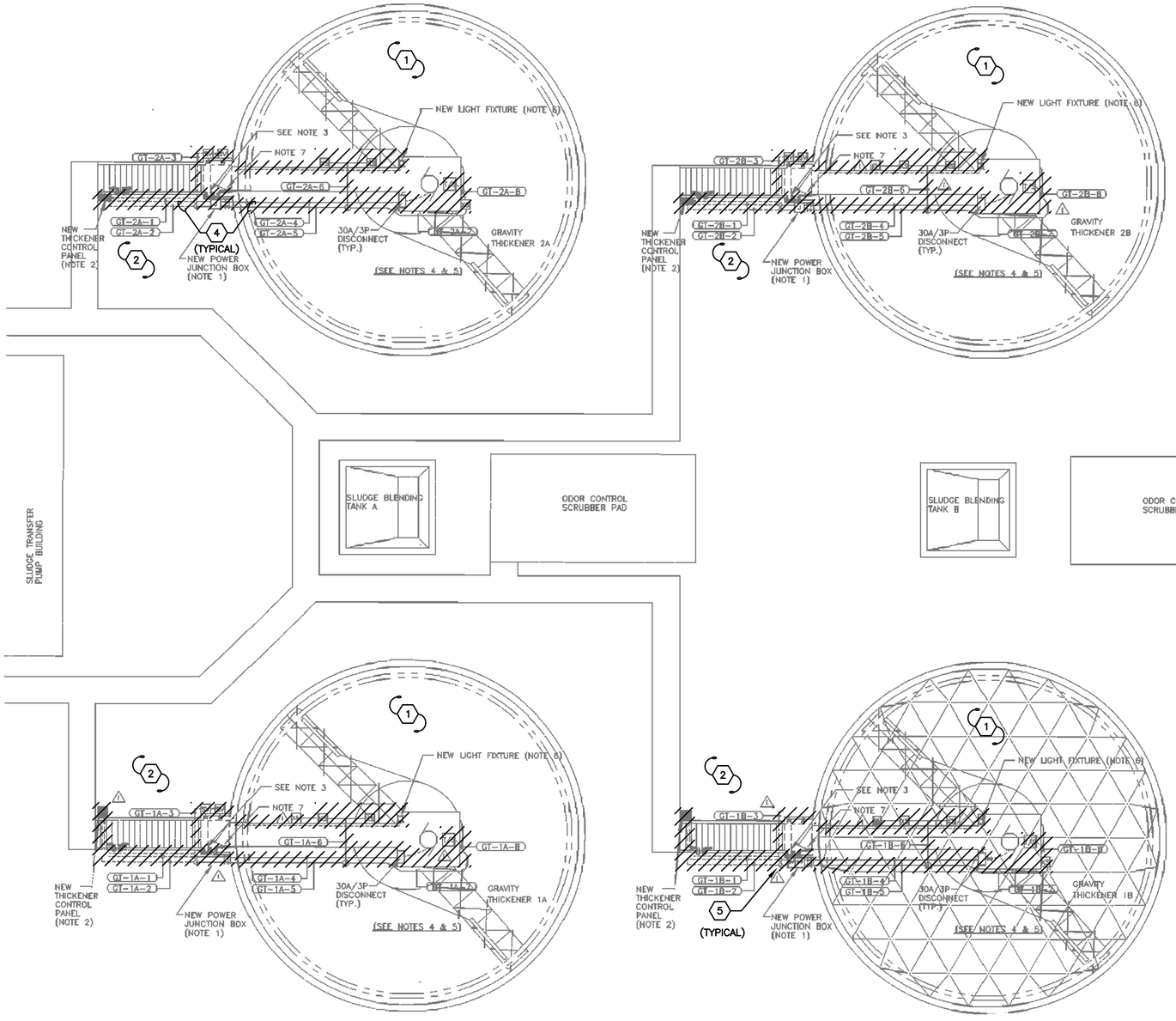

NOTES:

1. INSTALL NEW POWER JUNCTION BOX. LOCATE JUNCTION BOX TO SUIT FIELD CONDITION. SEE DETAIL 2/E-46 FOR TYPICAL INSTALLATION.
2. FIELD LOCATE THICKENER CONTROL PANEL TO SUIT EXISTING FIELD CONDITIONS.
3. REMOVE EXISTING 120 VAC AND 250 VAC RECEPTACLES AT TOP OF STAIRS. CONVERT DEVICE BOX INTO JUNCTION BOX. EXTEND EXISTING CIRCUITS TO NEW/PROPOSED RECEPTACLES NEAR THICKENER CONTROL PANEL.
4. ALL MATERIALS AND INSTALLATION OF MATERIALS, IN THE THICKENER DOME AREA, TO CONFORM WITH HAZARD AREA CLASSIFICATION CLASS 1, DIV. 1 GROUP D. AS DEFINED IN THE 1993 REVISION OF NFPA-70 (NATIONAL ELECTRICAL CODE).
5. ALL EXPOSED CONDUIT PROVIDED TO BE RIGID ALUMINUM. ALL CONDUIT SUPPORTS TO BE ALUMINUM.
6. REFER TO DETAIL 3/E-46 FOR LIGHT FIXTURE DETAIL.
7. PROVIDE NEW LIGHT SWITCH ON EXTERIOR OF DOME. LIGHT SWITCH TO BE CROUSE-HINDS "EDS" OR EQUAL. CONNECT TO EXISTING POWER CIRCUIT.

KEY NOTES:

1. INSIDE EACH GRAVITY SLUDGE THICKENER DISCONNECT AND REMOVE EXISTING RAKE DRIVE CONDUIT/WIRE, TORQUE SWITCHES, POSITION SWITCHES, AND LIGHT FIXTURE IN THEIR ENTIRETY. DISCONNECT AND REMOVE ALL ASSOCIATED EXPOSED CONDUIT/WIRE AND RACEWAY SUPPORTS FROM SOURCE TO DESTINATION IN THEIR ENTIRETY. DISCONNECT AND REMOVE ALL ASSOCIATED WIRING FROM SOURCE TO DESTINATION.
2. OUTSIDE EACH GRAVITY SLUDGE THICKENER DISCONNECT AND REMOVE EXISTING CONTROL PANEL, BOTH SOLENOID VALVES, GENERAL RECEPTACLE, WELDING RECEPTACLE, AND LIGHT SWITCH IN THEIR ENTIRETY. DISCONNECT AND REMOVE ALL ASSOCIATED EXPOSED CONDUIT/WIRE AND RACEWAY SUPPORTS FROM SOURCE TO DESTINATION IN THEIR ENTIRETY. DISCONNECT AND REMOVE ALL ASSOCIATED WIRING FROM SOURCE TO DESTINATION.
3. DISCONNECT AND REMOVE ALL WIRING FROM EXISTING EXPOSED CONDUITS AND UNDERGROUND DUCT BANKS AS INDICATED FROM SOURCE TO DESTINATION IN THEIR ENTIRETY. UNDERGROUND DUCT BANKS AND CONDUITS SHALL BE ABANDONED IN PLACE. REFER TO DRAWING NO. [E-20] FOR ADDITIONAL DEMOLITION REQUIREMENTS.
4. WHERE EXPOSED CONDUITS TRANSITION TO UNDERGROUND, DEMOLISH CONDUITS BACK TO LAST EXPOSED COUPLING ABOVE GRADE AND CAP. EXISTING UNDERGROUND DUCT BANKS AND CONDUITS SHALL BE ABANDONED IN PLACE.

GENERAL NOTES:

1. REFER TO DEMOLITION ON DRAWING NOS. [E-20] AND [E-21] FOR ADDITIONAL REQUIREMENTS NOT SHOWN HERE.
2. DISCONNECT AND REMOVE WIRING FROM CONDUITS AS INDICATED FROM SOURCE TO DESTINATION IN THEIR ENTIRETY. WHERE CONDUITS ARE TO BE DEMOLISHED, DISCONNECT AND REMOVE EXPOSED CONDUITS AND ALL RACEWAY SUPPORTS IN THEIR ENTIRETY AS APPLICABLE. WHERE SUCH CONDUITS ARE EMBEDDED IN SLAB/WALLS, CONDUITS SHALL BE ABANDONED IN PLACE. CUT CONDUIT FLUSH TO SLAB/WALL AND GROUT PER DETAILS ON DRAWING NO. [G-E-9]. WHERE EXPOSED CONDUITS TRANSITION TO UNDERGROUND, DEMOLISH CONDUITS BACK TO LAST EXPOSED COUPLING ABOVE GRADE AND CAP. EXISTING UNDERGROUND DUCT BANKS AND CONDUITS SHALL BE ABANDONED IN PLACE. SHOULD ABANDONED CONDUITS INTERFERE WITH PROPOSED RENOVATIONS, PERFORM FURTHER DEMOLITION OF EXISTING CONDUITS AS REQUIRED.

RECORD DRAWING
PREPARED BY KLB
DATE 1/13/98

NO.	DATE	REVISION	APPROV.
4			
3			
2			
1	12/97	RECORD DRAWING	

WARNING
0 1/2 1
IF THIS BAR DOES NOT MEASURE 1" THEN DRAWING IS NOT TO SCALE

STATE OF TEXAS
C. J. TROUTT
41075
REGISTERED
PROFESSIONAL ENGINEER
12/01/95

CITY OF AUSTIN, TEXAS
SOUTH AUSTIN REGIONAL WASTEWATER TREATMENT PLANT
MISCELLANEOUS IMPROVEMENTS PROJECT
GRAVITY THICKENERS
ELECTRICAL PLAN

Turner Collie & Braden Inc.
ENGINEERS • PLANNERS • PROJECT MANAGERS

Unit	Public Works	Scale	1/8"=1'-0"	Date	NOV. 1995
Designed	CT	Checked	SGE	Job No.	72-07109-206 Contract 1
Drawn	DW	Approved	HCA	Sheet	92 of 97

Dwg. No. E-43

GRAVITY THICKENERS 1A, 2A, 1B AND 2B PLANS – DEMOLITION (1 [E-70])
SCALE: NONE

STATE OF TEXAS
K. A. HARUTUNIAN
59181
REGISTERED
PROFESSIONAL ENGINEER
7/22/2016

REUSE OF DOCUMENTS
This document, and the designs incorporated herein, is an instrument of professional service that has been developed, designed and prepared by Harutunian Engineering, Inc., and is not to be used, in whole or part, for any other project without giving written notice to Harutunian Engineering, Inc.

REV No	DATE	DRWN	CHKD	REMARKS
1	–	–	–	–

DESIGNED BY: HEI
DRAWN BY: HEI
SHEET CHK'D BY: HEI
CROSS CHK'D BY: HEI
APPROVED BY: HEI
DATE: APRIL 2016

CDM Smith
Riata Corporate Park, 12357-A Riata Trace Parkway, Suite 210
Austin, TX 78727
Tel: (512) 346-1100
Texas Registration Number F-3043

HEI
HARUTUNIAN ENGINEERING, INC.
305 E Huntland Dr, Ste 500; Austin, TX 78752
TBPE Firm Registration No. F-2408

CITY OF AUSTIN, TEXAS - AUSTIN WATER UTILITY
CIP 3333.016
SOUTH AUSTIN REGIONAL WWTP
THICKENER IMPROVEMENTS PROJECT

GRAVITY THICKENERS 1A, 2A, 1B AND 2B
PLANS
DEMOLITION

PROJECT No 590-104217
FILE NAME: E-22

SHEET No
E-22

Plotted: 6/30/2016 11:44:04 AM

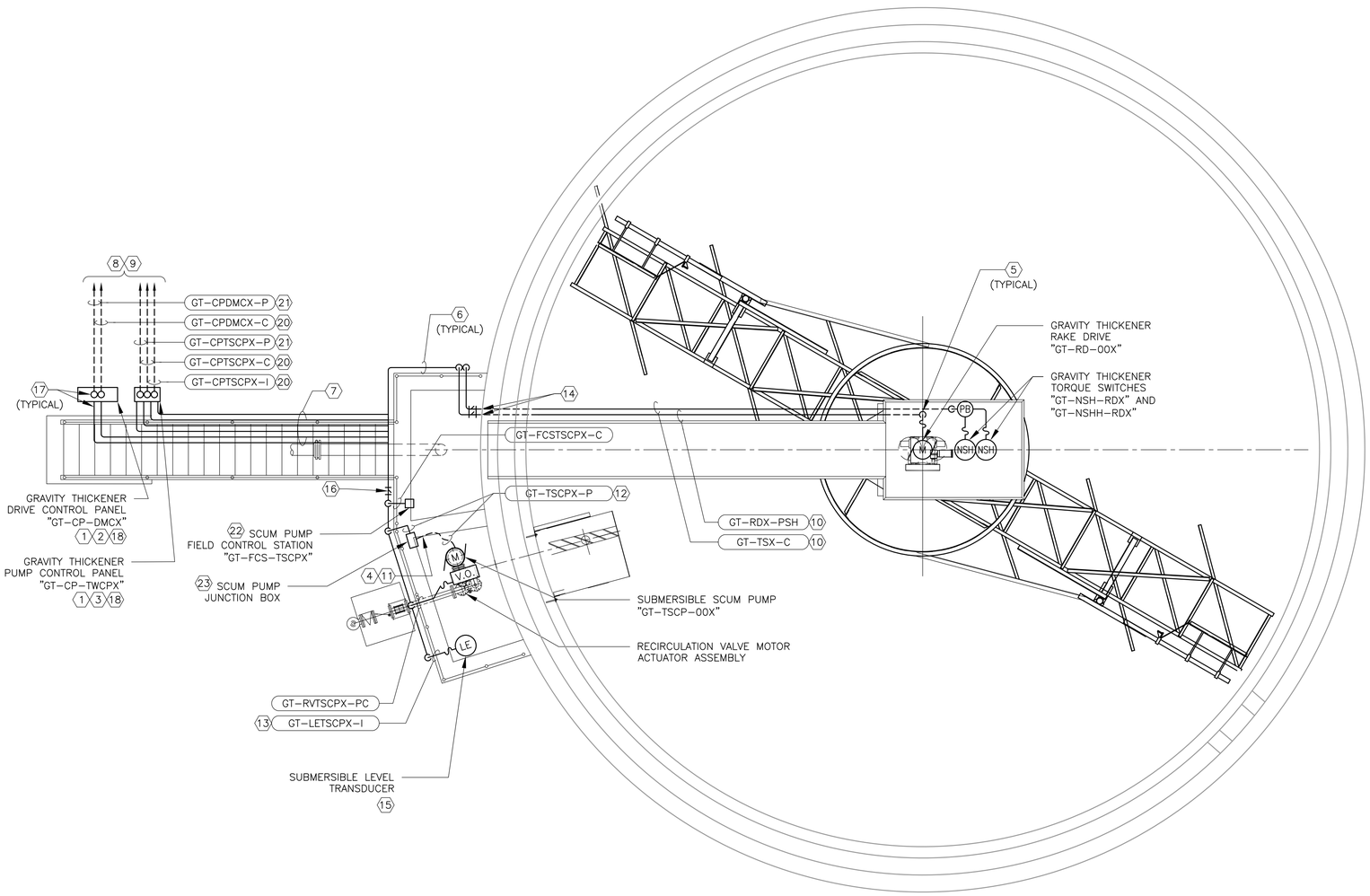

19 TYPICAL GRAVITY THICKENER POWER AND I&C PLAN

SCALE: 1/4" = 1'-0"

1 E-13

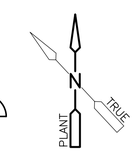

KEY NOTES:

12. CABLES BETWEEN PUMP MOTOR AND CONTROL PANEL IS FURNISHED BY SUBMERSIBLE PUMP MANUFACTURER. CABLE CONTAINS POWER AND CONTROL CONDUCTORS IN THE SAME JACKET. COORDINATE REQUIRED LENGTH WITH MANUFACTURER, INSTALL CABLE, AND MAKE ALL FINAL CONNECTIONS. OUTSIDE OF WET WELL, CABLE IS INSTALLED IN CONDUIT TO CONNECT TO CONTROL PANEL. INSIDE WET WELL BELOW GRATING, CABLE IS EXPOSED IN ROUTE TO/FROM MOTOR. INSTALL 316 STAINLESS STEEL MESH CABLE GRIP AT JUNCTION BOX TO RELIEVE STRAIN OF CABLES ON TERMINALS.

13. TRANSDUCER CABLE FURNISHED BY LEVEL INSTRUMENT MANUFACTURER. CONDUIT/WIRE TERMINATES ON BLIND FLANGE OF STAND PIPE. REFER TO DETAILS ON DRAWING NO. [G-I-5] FOR ADDITIONAL REQUIREMENTS.

14. CONDUIT/WIRE PENETRATES THICKENER DOME. FURNISH AND INSTALL CONDUIT SEAL ON NON-HAZARDOUS SIDE PER DETAIL 9 ON DRAWING NO. [G-E-10] AND PER NEC REQUIREMENTS. SEAL DOME PENETRATION STRUCTURE IN ACCORDANCE WITH ELECTRICAL AND ARCHITECTURAL DETAILS AND SPECIFICATIONS.

15. MOUNT INSTRUMENT PER DETAILS ON DRAWING NO. [G-I-5] AND PER MANUFACTURER INSTRUCTIONS. COORDINATE PIPE SIZE AND LOCATION WITH MECHANICAL. MODIFY GRATING AS REQUIRED. PERFORM MODIFICATIONS TO GRATING SUCH THAT INSTRUMENT ASSEMBLY AND ASSOCIATED CONDUITS AND SUPPORTS DO NOT OBSTRUCT REMOVAL OF GRATING. COORDINATE WITH STRUCTURAL AND MECHANICAL.

16. FURNISH AND INSTALL CONDUIT SEALS ON ALL CONDUITS ALONG WALL. NOT ALL SEALS/ CONDUITS HAVE BEEN SHOWN FOR CLARITY.

17. FURNISH AND INSTALL CONDUIT SEALS ON ALL CONDUITS ENTERING/EXITING CONTROL PANELS. SEALS NOT SHOWN FOR CLARITY.

18. FURNISH AND INSTALL ENCLOSURE SUPPORT RACK PER DETAIL 5 ON DRAWING NO. [G-E-11]. MOUNT CONTROL PANELS AND CONDUITS TO RACK. FURNISH AND INSTALL SUN SHIELD OVER CONTROL PANELS.

19. THIS ENLARGED PLAN DRAWING IS TYPICAL FOR MULTIPLE SYSTEMS LOCATED IN DIFFERENT LOCATIONS IN THE SITE. ADJUST INSTALLATION TO MATCH FIELD CONDITIONS AT EACH LOCATION.

20. CONDUIT/WIRE CONTINUES TO TERMINATION AT RENOVATED CONTROL PANEL "RIO2A" IN ELECTRICAL ROOM AT SLUDGE TRANSFER PUMP BUILDING.

21. CONDUIT/WIRE CONTINUES TO TERMINATION AT PROPOSED POWER DISTRIBUTION PANELBOARD "STPB-PDP-001" LOCATED ON EXTERIOR OF SLUDGE TRANSFER PUMP BUILDING.

22. MOUNT SCUM PUMP FIELD CONTROL STATION TO HANDRAIL.

23. JUNCTION BOX FOR TERMINATION OF SCUM PUMP WIRING. SIZE PER SPECIFICATIONS. PROVIDE WITH BACKPANEL AND TERMINAL BLOCKS.

KEY NOTES:

1. THE PROPOSED CONTROL PANEL IS FURNISHED BY THE EQUIPMENT MANUFACTURER. SIZE, FURNISH, AND INSTALL ALL CONDUIT/WIRE AND ALL NECESSARY RELATED HARDWARE TO INTERCONNECT ALL EQUIPMENT PACKAGED SYSTEM SUB-COMPONENTS WITH THE PROPOSED CONTROL PANEL, FURNISH AND INSTALL SUITABLE SUPPORT CHANNELS/CONCRETE EQUIPMENT PAD AS REQUIRED TO SUPPORT THE CONTROL PANEL, INSTALL THE CONTROL PANEL, AND MAKE ALL FINAL CONNECTIONS PER THE RECOMMENDATIONS AND WIRING DIAGRAMS PROVIDED BY THE EQUIPMENT MANUFACTURER.

2. REFER TO SLUDGE THICKENER CONTROL PANEL FIELD INTERCONNECT WIRING SCHEMATIC ON DRAWING NO. [E-52] FOR ADDITIONAL REQUIREMENTS.

3. REFER TO THICKENER SCUM PUMP CONTROL PANEL FIELD INTERCONNECT WIRING SCHEMATIC ON DRAWING NO. [E-53] FOR ADDITIONAL REQUIREMENTS.

4. CONDUIT ENDS/BEGINS AT THIS LOCATION AND TRANSITIONS TO/FROM EXPOSED CABLE SUSPENDED FROM MESH GRIP. REFER TO DETAIL 8 ON DRAWING NO. [G-E-10] FOR ADDITIONAL REQUIREMENTS.

5. CONDUIT/WIRE CONNECTIONS SHOWN APART AND SCHEMATICALLY FOR CLARITY. CONDUITS/WIRE SHALL TURN UP UNDER OR IMMEDIATELY ADJACENT TO ALL EQUIPMENT AS APPLICABLE.

6. CONDUITS/WIRE ARE VERTICALLY ALIGNED AROUND WET WELL AND EFFLUENT BOX. MOUNT CONDUITS/WIRE TO WALLS PER DETAIL 1 ON DRAWING NO. [G-E-10].

7. MOUNT CONDUITS/WIRE TO BOTTOM OF STAIR STRUCTURE SIMILAR TO DETAIL 4 ON DRAWING NO. [G-E-7].

8. ROUTE CONDUIT/WIRE BELOW GRADE IN REINFORCED CONCRETE DUCT BANK PER DETAILS ON DRAWING NO. [G-E-13].

9. REFER TO SITE PLAN ON DRAWING NO. [E-13] FOR DUCT BANK CONTINUATION.

10. MOUNT CONDUITS TO UNDERSIDE OF THICKENER WALKWAY PER DETAIL 4 ON DRAWING NO. [G-E-7] AND PER THICKENER MANUFACTURER INSTRUCTIONS.

11. PROPOSED CONDUIT/WIRE PENETRATES GRATING. MODIFY GRATING AS REQUIRED. PERFORM MODIFICATIONS TO GRATING SUCH THAT CONDUITS DO NOT OBSTRUCT REMOVAL OF GRATING. COORDINATE WITH STRUCTURAL AND MECHANICAL.

GENERAL NOTES:

1. THIS DRAWING IS TYPICAL FOR MULTIPLE EQUIPMENT/CONDUITS. THE ACTUAL TAGS FOR EACH SPECIFIC GRAVITY THICKENER SYSTEM AND ASSOCIATED SCUM PUMP SYSTEM WILL DIFFER FROM THAT SHOWN HERE. REFER TO THE TAG REPLACEMENT SCHEDULE ON THIS SHEET TO DERIVE THE CORRESPONDING TAGS FOR EACH PROPOSED EQUIPMENT/CONDUIT.

2. ALL CONDUITS/WIRING AND EQUIPMENT INSIDE GRAVITY THICKENERS SHALL COMPLY WITH NEC REQUIREMENTS FOR CLASS 1 DIVISION 1 AREAS. FURNISH AND INSTALL CONDUIT SEALS AS REQUIRED, WHETHER SHOWN HERE OR NOT.

3. ALL CONDUITS/WIRING AND EQUIPMENT INSIDE OF AND WITHIN A 10' ENVELOPE AROUND SCUM WET WELL SHALL COMPLY WITH NEC REQUIREMENTS FOR CLASS 1 DIVISION 2 AREAS. FURNISH AND INSTALL CONDUIT SEALS AS REQUIRED, WHETHER SHOWN HERE OR NOT.

GRAVITY THICKENER AND SCUM PUMP TAG REPLACEMENT TABLE

GRAVITY SLUDGE THICKENER	DMCX	RD-00X	RDX	TSX	TSCP-00X	TSCPX
THICKENER BASIN NO. 1A	DMC1	RD-001	RD1	TS1	TSCP-001	TSCP1
THICKENER BASIN NO. 1B	DMC2	RD-002	RD2	TS2	TSCP-002	TSCP2
THICKENER BASIN NO. 2A	DMC3	RD-003	RD3	TS3	TSCP-003	TSCP3
THICKENER BASIN NO. 2B	DMC4	RD-004	RD4	TS4	TSCP-004	TSCP4

REUSE OF DOCUMENTS

This document, and the designs incorporated herein, is an instrument of professional service that has been developed, designed and prepared by Harutunian Engineering, Inc., and is not to be used, in whole or part, for any other project without giving written notice to Harutunian Engineering, Inc.

STATE OF TEXAS
K. A. HARUTUNIAN
59181
REGISTERED PROFESSIONAL ENGINEER
4/22/2016

REV No	DATE	DRWN	CHKD	REMARKS
A	–	–	–	–

DESIGNED BY: HEI
DRAWN BY: HEI
SHEET CHK'D BY: HEI
CROSS CHK'D BY: HEI
APPROVED BY: HEI
DATE: APRIL 2016

CDM Smith
Riata Corporate Park, 12357-A Riata Trace Parkway, Suite 210
Austin, TX 78727
Tel: (512) 346-1100
Texas Registration Number F-3043

HARUTUNIAN ENGINEERING, INC.
305 E Huntland Dr, Ste 500; Austin, TX 78752
TBPE Firm Registration No. F-2408

CITY OF AUSTIN, TEXAS - AUSTIN WATER UTILITY
CIP 3333.016

SOUTH AUSTIN REGIONAL WWTP
THICKENER IMPROVEMENTS PROJECT

GRAVITY THICKENER AND SCUM PUMP
TYPICAL POWER AND I&C PLAN

PROJECT No 590-104217
FILE NAME: E-23

SHEET No
E-23

Plotted: 4/22/2016 8:48:44 AM

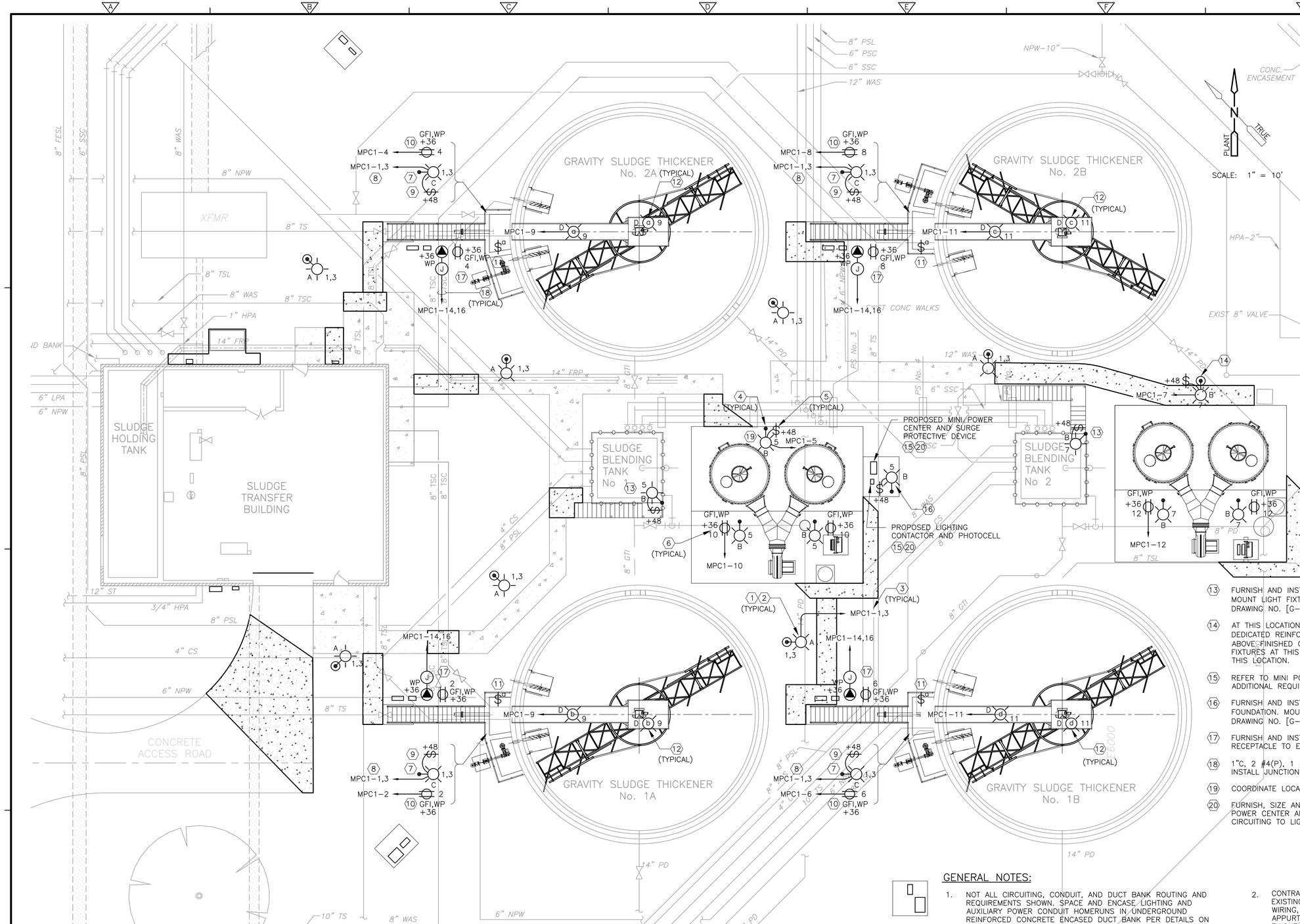

KEY NOTES:

1. FURNISH AND INSTALL POLE MOUNTED LIGHT FIXTURE ON DEDICATED REINFORCED CONCRETE LIGHT POLE BASE. MOUNT LIGHT FIXTURE AT +14'-0" ABOVE FINISHED GRADE PER DETAIL 1 ON DRAWING NO. [G-E-5]. TYPICAL FOR ALL TYPE "A" SITE/WALKWAY FIXTURES.
2. FURNISH AND INSTALL UNDERGROUND WALKWAY/SITE LIGHT FIXTURE CIRCUITING JUNCTION BOX (NOT SHOWN HERE) PER DETAILS 1 AND 2 ON DRAWING NO. [G-E-5]. TYPICAL FOR ALL TYPE "A" SITE/WALKWAY FIXTURES.
3. ALL TYPE "A" POLE MOUNTED SITE/WALKWAY FIXTURES ARE ON THE SAME CIRCUIT AND SERVED FROM LIGHTING CONTACTOR "GT-LC-001". REFER TO LIGHTING CONTACTOR CONTROL WIRING SCHEMATIC ON DRAWING NO. [E-50], AND TO MINI POWER CENTER PANELBOARD SCHEDULE FOR ADDITIONAL INFORMATION.
4. FURNISH AND INSTALL POLE MOUNTED LIGHT FIXTURE ATTACHED TO CONCRETE PAD FOUNDATION. MOUNT LIGHT FIXTURE AT +10'-0" ABOVE FINISHED GRADE PER DETAIL 2 ON DRAWING NO. [G-E-6]. TYPICAL FOR ALL TYPE "B" TASK LIGHTING FIXTURES AT BOTH ODOR CONTROL SYSTEMS UNLESS NOTED OTHERWISE.
5. FURNISH AND INSTALL LIGHT SWITCH ATTACHED TO FIXTURE POLE. CIRCUIT SWITCH TO CONTROL ALL THREE TASK LIGHT FIXTURES AT ODOR CONTROL PAD. LABEL SWITCH "TASK LIGHTING CONTROL". TYPICAL FOR LIGHTING AT BOTH ODOR CONTROL SYSTEMS.
6. FURNISH AND INSTALL RECEPTACLE ON SUPPORT CHANNEL ADJACENT TO CIRCUITING JUNCTION BOX PER DETAIL 2 ON DRAWING NO. [G-E-6]. TYPICAL FOR ALL RECEPTACLES AT BOTH ODOR CONTROL SYSTEMS.
7. FURNISH AND INSTALL POLE MOUNTED LIGHT FIXTURE AT EXISTING GRAVITY THICKENER STAIRWELL LANDING. MOUNT LIGHT FIXTURE AT +10'-0" ABOVE FINISHED WALKWAY/LANDING PER DETAIL 1 ON DRAWING NO. [G-E-6].
8. ALL TYPE "C" POLE MOUNTED FIXTURES AT GRAVITY THICKENER STAIRWAY LANDINGS ARE ON THE SAME CIRCUIT AND ARE SERVED FROM LIGHTING CONTACTOR "GT-LC-001". REFER TO LIGHTING CONTACTOR CONTROL WIRING SCHEMATIC ON DRAWING NO. [E-50], AND TO MINI POWER CENTER PANELBOARD SCHEDULE FOR ADDITIONAL INFORMATION.
9. FURNISH AND INSTALL LIGHT SWITCH ADJACENT TO FIXTURE. CIRCUIT TO STAIRWAY LANDING FIXTURE TO ALLOW LIGHT FIXTURE TO BE TURNED OFF AT NIGHT FOR ENERGY MANAGEMENT PURPOSES. MOUNT TO SUPPORT CHANNEL/HANDRAIL PER DETAIL 1 ON DRAWING NO. [G-E-6].
10. FURNISH AND INSTALL RECEPTACLE ADJACENT TO LIGHT FIXTURE. MOUNT TO SUPPORT CHANNELS/HANDRAIL PER DETAIL 1 ON DRAWING NO. [G-E-6].
11. FURNISH AND INSTALL SWITCH. MOUNT TO SUPPORT CHANNELS/ HANDRAIL PER DETAIL 1 ON DRAWING NO. [G-E-6]. SWITCH CONTROLS GRAVITY THICKENER INTERIOR LIGHTING.
12. FURNISH AND INSTALL CEILING MOUNTED LIGHT FIXTURE. ATTACH TO BOTTOM OF CLARIFIER STRUCTURAL FRAME PER DETAIL 4 ON DRAWING NO. [G-E-6].
13. FURNISH AND INSTALL POLE MOUNTED LIGHT FIXTURE AT TOP OF EXISTING BLENDING TANK. MOUNT LIGHT FIXTURE AT +10'-0" ABOVE FINISHED WALKWAY/LANDING PER DETAIL 1 ON DRAWING NO. [G-E-6]. FURNISH SWITCH AND INSTALL TO POLE TO CONTROL LIGHT FIXTURE.
14. AT THIS LOCATION ONLY, FURNISH AND INSTALL POLE MOUNTED LIGHT FIXTURE ON DEDICATED REINFORCED CONCRETE LIGHT POLE BASE. MOUNT LIGHT FIXTURE AT +10'-0" ABOVE FINISHED GRADE PER DETAIL 1 ON DRAWING NO. [G-E-5]. CIRCUIT WITH OTHER FIXTURES AT THIS ODOR CONTROL SYSTEM. UNDERGROUND JUNCTION BOX NOT REQUIRED AT THIS LOCATION.
15. REFER TO MINI POWER CENTER ENLARGED PLAN, DETAIL 3 ON DRAWING NO. [E-15] FOR ADDITIONAL REQUIREMENTS.
16. FURNISH AND INSTALL POLE MOUNTED LIGHT FIXTURE ATTACHED TO CONCRETE PAD FOUNDATION. MOUNT LIGHT FIXTURE AT +10'-0" ABOVE FINISHED GRADE PER DETAIL 2 ON DRAWING NO. [G-E-6]. FURNISH SWITCH AND INSTALL TO POLE TO CONTROL LIGHT FIXTURE.
17. FURNISH AND INSTALL WELDING RECEPTACLE, JUNCTION BOX, AND DUPLEX CONVENIENCE RECEPTACLE TO ENCLOSURE SUPPORT RACK ADJACENT TO CONTROL PANELS.
18. 1"C, 2 #4(P), 1 #8(G). TYPICAL FOR ALL WELDING RECEPTACLE HOME RUNS. FURNISH AND INSTALL JUNCTION BOX AT MINI POWER CENTER RACK TO FACILITATE CIRCUIT SPLICING.
19. COORDINATE LOCATION WITH EXISTING OVERHEAD PIPES AND WITH THE OWNER.
20. FURNISH, SIZE AND INSTALL QUANTITY OF JUNCTION BOXES BELOW OR ADJACENT TO MINI POWER CENTER AND LIGHTING CONTACTOR AS NEEDED TO FACILITATE SPLICING OF BRANCH CIRCUITING TO LIGHTING AND RECEPTACLES.

GENERAL NOTES:

1. NOT ALL CIRCUITING, CONDUIT, AND DUCT BANK ROUTING AND REQUIREMENTS SHOWN. SPACE AND ENCASE LIGHTING AND AUXILIARY POWER CONDUIT HOMERUNS IN UNDERGROUND REINFORCED CONCRETE ENCASED DUCT BANK PER DETAILS ON DRAWING NO. [G-E-13] AND PER KEY NOTES 1 AND 2 ON DRAWING NO. [E-13]. FIELD ROUTE CONDUITS AND DUCT BANKS AS REQUIRED. ROUTE WITH OTHER POWER DUCT BANKS WHERE POSSIBLE. REFER TO SITE PLAN ON DRAWING NO. [E-13] FOR ADDITIONAL INFORMATION.
2. CONTRACTOR SHALL DEMOLISH AND REMOVE ALL EXISTING LIGHTING FIXTURES, STANTIONS, POLES WIRING, CONDUIT, FOUNDATIONS AND LIGHTING APPURTENANCES THAT ARE IN THE GRAVITY THICKENER AREA AND ARE NOT REQUIRED FOR THE INSTALLATION OF THE PROPOSED LIGHTING SYSTEMS.

GRAVITY THICKENER VICINITY ENLARGED SITE PLAN

SCALE: 1" = 10'

1 [E-14]

REUSE OF DOCUMENTS

This document, and the designs incorporated herein, is an instrument of professional service that has been developed, designed and prepared by Harutunian Engineering, Inc., and is not to be used, in whole or part, for any other project without giving written notice to Harutunian Engineering, Inc.

REV No	DATE	DRWN	CHKD	REMARKS
△	–	–	–	–

DESIGNED BY: HEI
DRAWN BY: HEI
SHEET CHK'D BY: HEI
CROSS CHK'D BY: HEI
APPROVED BY: HEI
DATE: APRIL 2016

CDM Smith
Riata Corporate Park, 12357-A Riata Trace Parkway, Suite 210
Austin, TX 78727
Tel: (512) 346-1100
Texas Registration Number F-3043

HARUTUNIAN ENGINEERING, INC.
305 E Huntland Dr, Ste 500; Austin, TX 78752
TBPE Firm Registration No. F-2408

CITY OF AUSTIN, TEXAS - AUSTIN WATER UTILITY
CIP 3333.016

SOUTH AUSTIN REGIONAL WWTP
THICKENER IMPROVEMENTS PROJECT

GRAVITY THICKENERS AREA
SITE LIGHTING AND AUX. POWER PLAN
RENOVATION

STATE OF TEXAS
K. A. HARUTUNIAN
59181
REGISTERED PROFESSIONAL ENGINEER
4/22/2016

PROJECT No 590-104217
FILE NAME: E-24

SHEET No
E-24

Plotted: 4/22/2016 8:48:54 AM

KEY NOTES:

(12) CONDUIT/WIRE CONTINUES TO TERMINATION AT RENOVATED CONTROL PANEL "RIO2A" IN ELECTRICAL ROOM AT SLUDGE TRANSFER PUMP BUILDING.

(13) CONDUIT/WIRE CONTINUES TO TERMINATION AT PATCH PANEL IN PROPOSED CONTROL PANEL "STPB-CP-001" LOCATED IN SLUDGE TRANSFER PUMP BUILDING.

(14) CONDUIT/WIRE CONTINUES TO TERMINATION AT EXISTING MOTOR CONTROL CENTER "MCC-SGT1" OR "MCC-SGT2" AS APPLICABLE.

KEY NOTES:

(1) THE PROPOSED CONTROL PANEL IS FURNISHED BY THE EQUIPMENT MANUFACTURER. SIZE, FURNISH, AND INSTALL ALL CONDUIT/WIRE AND ALL NECESSARY RELATED HARDWARE TO INTERCONNECT ALL EQUIPMENT PACKAGED SYSTEM SUB-COMPONENTS WITH THE PROPOSED CONTROL PANEL, FURNISH AND INSTALL SUITABLE SUPPORT CHANNELS/CONCRETE EQUIPMENT PAD AS REQUIRED TO SUPPORT THE CONTROL PANEL, INSTALL THE CONTROL PANEL, AND MAKE ALL FINAL CONNECTIONS PER THE RECOMMENDATIONS AND WIRING DIAGRAMS PROVIDED BY THE EQUIPMENT MANUFACTURER.

(2) REFER TO ODOR CONTROL SYSTEM FIELD INTERCONNECT WIRING SCHEMATIC ON DRAWING NO. [E-51] FOR ADDITIONAL REQUIREMENTS.

(3) CONDUIT/WIRE CONNECTIONS SHOWN APART AND SCHEMATICALLY FOR CLARITY. CONDUITS/WIRE SHALL TURN UP UNDER OR IMMEDIATELY ADJACENT TO ALL EQUIPMENT AS APPLICABLE.

(4) NOT ALL PIPING AND EQUIPMENT SHOWN ON THIS DRAWING. REFER TO CIVIL AND MECHANICAL PLANS.

(5) REFER TO SITE PLAN ON DRAWING NO. [E-13] FOR DUCT BANK CONTINUATION.

(6) ROUTE CONDUIT/WIRE BELOW ODOR CONTROL SYSTEM SLAB AND/OR BELOW GRADE IN REINFORCED CONCRETE DUCT BANK PER DETAILS ON DRAWING NO. [G-E-13].

(7) FURNISH AND INSTALL CONDUIT SEALS ON ALL CONDUITS ENTERING/EXITING CONTROL PANEL. SEALS NOT SHOWN FOR CLARITY.

(8) HEAT TRACE CONDUIT/WIRE CONTINUES BELOW SLAB. STUB UP CONDUIT THROUGH SLAB AT A POINT CENTRAL TO REQUIRED HEAT TRACE LOCATIONS. FURNISH AND INSTALL ALL REQUIRED CONDUIT/WIRE, JUNCTION BOXES, CONDUIT SUPPORTS, ETC. AS REQUIRED TO INTERCONNECT ALL REQUIRED HEAT TRACING. COORDINATE WITH PACKAGED ODOR CONTROL SYSTEM MANUFACTURER AND MECHANICAL FOR REQUIREMENTS. MAKE ALL FINAL CONNECTIONS.

(9) CONDUIT/WIRE CONTINUES EXPOSED TO TEMPORARY STARTUP SYSTEM RECIRCULATION PUMP. MOUNT CONDUIT TO SLAB. COORDINATE LOCATION AND OTHER REQUIREMENTS WITH PACKAGED ODOR CONTROL SYSTEM MANUFACTURER.

(10) FURNISH AND INSTALL ENCLOSURE SUPPORT RACK PER DETAIL 5 ON DRAWING NO. [G-E-11] IF NOT PROVIDED WITH PACKAGED SYSTEM. MOUNT CONTROL PANELS AND CONDUITS TO RACK. FURNISH AND INSTALL SUN SHIELD OVER CONTROL PANEL.

(11) THIS ENLARGED PLAN DRAWING IS TYPICAL FOR MULTIPLE SYSTEMS LOCATED IN DIFFERENT LOCATIONS IN THE SITE. ADJUST INSTALLATION TO MATCH FIELD CONDITIONS AT EACH LOCATION.

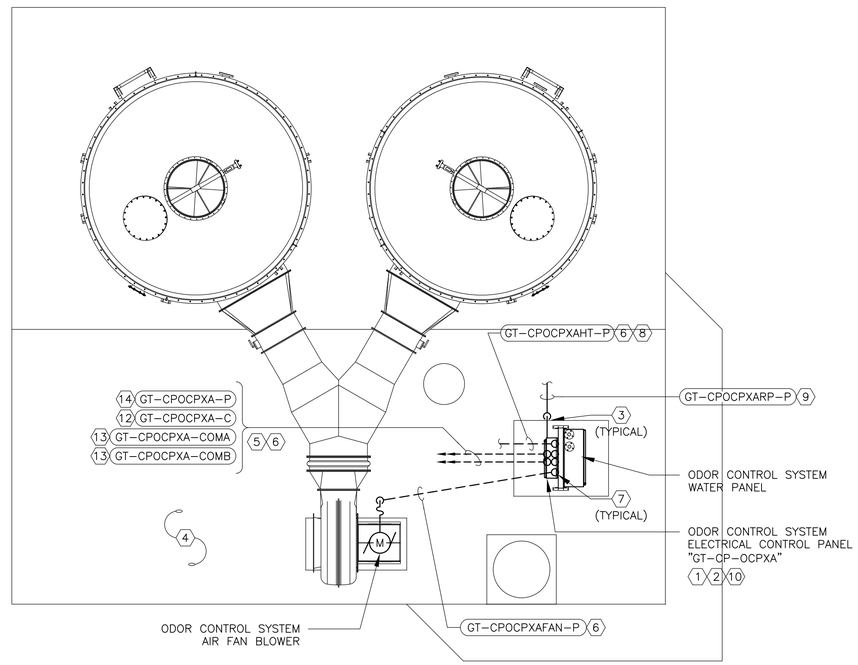

(11) TYPICAL ODOR CONTROL SYSTEM POWER AND I&C PLAN

SCALE: 1/4" = 1'-0"

1 [E-13]

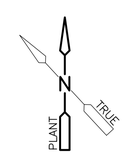

GENERAL NOTES:

1. THIS DRAWING IS TYPICAL FOR MULTIPLE EQUIPMENT/CONDUITS. THE ACTUAL TAGS FOR EACH SPECIFIC ODOR CONTROL SYSTEM WILL DIFFER FROM THAT SHOWN HERE. REFER TO THE TAG REPLACEMENT SCHEDULE ON THIS SHEET TO DERIVE THE CORRESPONDING TAGS FOR EACH PROPOSED EQUIPMENT/CONDUIT.

2. ALL CONDUITS/WIRING AND ALL OTHER RACEWAY SYSTEM COMPONENTS WITHIN THE ODOR CONTROL SYSTEM SHOWN HERE SHALL COMPLY WITH NEC REQUIREMENTS FOR CLASS 1 DIVISION 2 AREAS. FURNISH AND INSTALL CONDUIT SEALS AS REQUIRED, WHETHER SHOWN HERE OR NOT.

ODOR CONTROL SYSTEM TAG REPLACEMENT TABLE

ODOR CONTROL SYSTEM NO. X	OCPX
ODOR CONTROL SYSTEM NO. 1	OCP1
ODOR CONTROL SYSTEM NO. 2	OCP2

STATE OF TEXAS
K. A. HARUTUNIAN
59181
REGISTERED PROFESSIONAL ENGINEER
4/22/2016

REUSE OF DOCUMENTS

This document, and the designs incorporated herein, is an instrument of professional service that has been developed, designed and prepared by Harutunian Engineering, Inc., and is not to be used, in whole or part, for any other project without giving written notice to Harutunian Engineering, Inc.

REV No	DATE	DRWN	CHKD	REMARKS
△	–	–	–	–

DESIGNED BY: HEI
DRAWN BY: HEI
SHEET CHK'D BY: HEI
CROSS CHK'D BY: HEI
APPROVED BY: HEI
DATE: APRIL 2016

CDM Smith
Riata Corporate Park, 12357-A Riata Trace Parkway, Suite 210
Austin, TX 78727
Tel: (512) 346-1100
Texas Registration Number F-3043

HARUTUNIAN ENGINEERING, INC.
305 E Huntland Dr, Ste 500; Austin, TX 78752
TBPE Firm Registration No. F-2408

CITY OF AUSTIN, TEXAS - AUSTIN WATER UTILITY
CIP 3333.016

SOUTH AUSTIN REGIONAL WWTP
THICKENER IMPROVEMENTS PROJECT

ODOR CONTROL SYSTEM
TYPICAL POWER AND I&C PLAN

PROJECT No 590-104217
FILE NAME: E-25

SHEET No
E-25

Plotted: 4/22/2016 8:48:58 AM

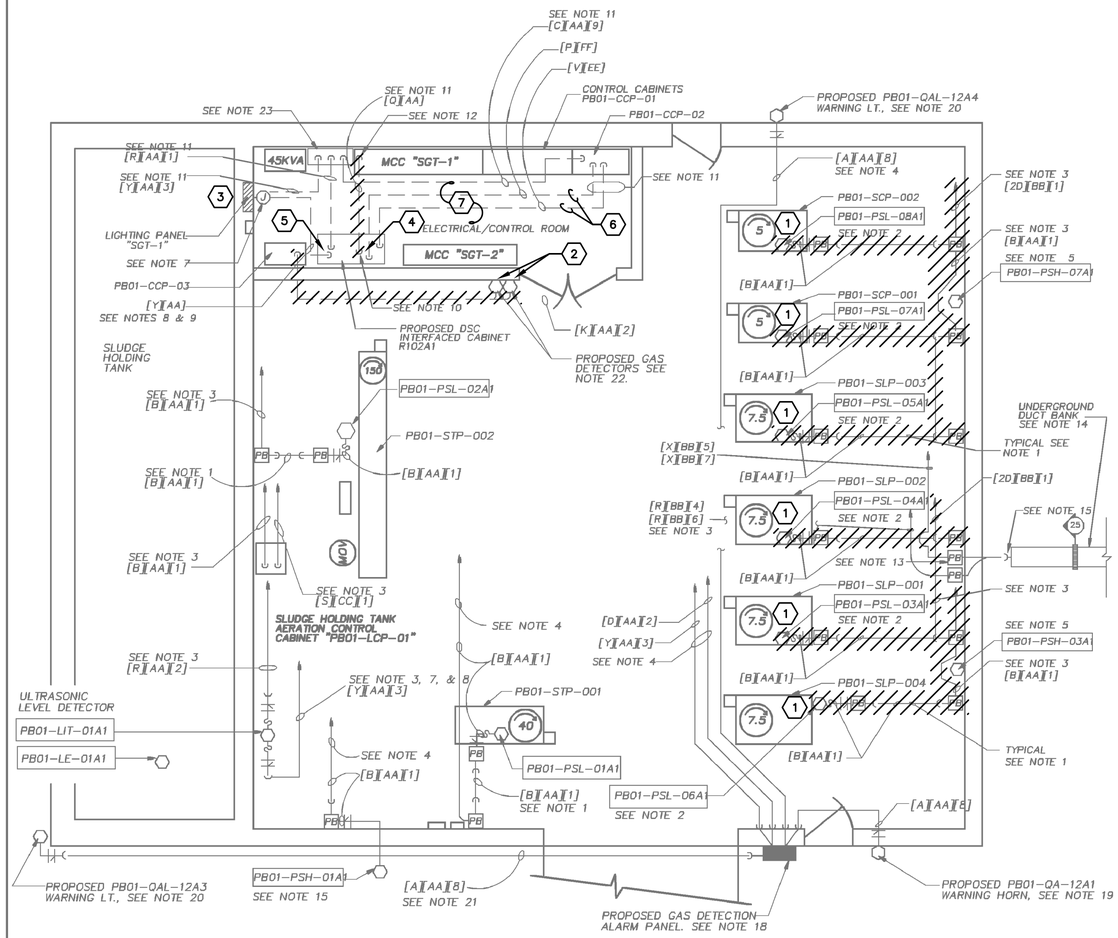

SLUDGE TRANSFER PUMP BLDG. PLAN

SCALE: 1/4"=1'-0"

LEGEND NOTES

1) THE CIRCUIT DESIGNATIONS WILL APPEAR AS FOR EXAMPLE IN THE FORM [A][AA][6] WHERE THE LETTERS IN BRACKETS ARE RACEWAY DESIGNATORS, THE FOLLOWING NUMBER IN BRACKETS IS THE DESIGNATION OF THE CIRCUIT.

[A] 3 #14
[B] 4 #14
[C] 2 #14
[D] 8 #14
[F] 12 #12
[K] TWO (2) #20 AWG THREE CONDUCTOR, SPIRAL SHIELDED CABLES (ONE CABLE PER GAS DETECTOR)
[P] 88 #14 PER CONDUIT
[Q] 1 #6 GROUND INSULATED CONDUCTOR
[R] 1 PAIR OF #16 AWG TWISTED SHEILDED CABLES
[S] 3 PAIRS OF #16 AWG TWISTED SHIELDED CABLES PER CONDUIT
[S] 8 PAIRS OF #16 AWG TWISTED SHIELDED CABLES
[X] 2 #8, 1#10G FOR POWER
[Y] 2 #10, 1 #10 FOR POWER
[AA] .75 ALUMINUM CONDUIT
[BB] 1.00" ALUMINUM CONDUIT
[CC] 1.25" ALUMINUM CONDUIT
[EE] 2.00" ALUMINUM CONDUIT
[FF] TWO (2) 2.50" ALUMINUM CONDUIT

[1] TO PROPOSED DCS INTERFACE CABINET R102A1
[2] TO EXISTING CONTROL CABINET PB01 –CCP–02. SEE NOTE 11.
[3] TO EXISTING LIGHTING PANEL "STG–1." SEE NOTES 7,8, AND 9.
[4] FROM PROPOSED ULTRASONIC LEVEL DETECTOR (STB1–LIT–01A1 AT SLUDGE BLEND TANK 'B') TO SLUDGE HANDLING CO CABINET PB01–CCP–02 IN ELECTICAL/CONTROL ROOM IN SLUDGE TRANSFER PUMP BUILDING.
[5] FROM PROPOSED ULTRASONIC LEVEL DETECTOR (STB1–LIT–01A1/STB1–LE–01A1 AT SLUDGE BLEND TANK 'B') TO PROPO "SGT–1" IN ELECTRICAL/ CONTROL ROOM IN SLUDGE TRANSFER PUMP BUILDING. SEE NOTES 8 & 9.
[6] FROM PROPOSED ULTRASONIC LEVEL DETECTOR (STA1–LIT–01A1/STA1–LE–01A1 AT SLUDGE BLEND TANK 'A')TO SLUDGE CONTROL CABINET PB01–CCP–02 IN ELECTRICAL/CONTROL ROOM IN SLUDGE TRANSFER PUMP BUILDING.
[7] FROM PROPOSED ULTRASONIC LEVEL DETECTOR (STA1–LIT–01A1/STA1–LE–01A1 AT SLUDGE BLEND TANK 'A') TO PROPO "SGT–1" IN ELECTRICAL/CONTROL ROOM IN SLUDGE TRANSFER PUMP BUILDING. SEE NOTES 8 & 9.
[8] TO PROPOSED GAS DETECTION ALARM PANEL.
[9] TO CONTROL CABINET PB01–CCP–02 ANNUNCIATOR.

NOTES:

1. FOR THE ENTIRE LENGTH OF THE CONDUIT RUNS, RUN CONDUIT BENEATH THE DISCHARGE/SUCTION PIPING OF THE PROCESS MECHANICAL EQUIPMENT (PUMPS, ETC.). INSTALL CONDUITS ON A SEPARATE CONDUIT RACK SIMILAR TO TYPICAL DETAILS SHOWN ON DRAWING No. ED–GEN–01. PROPOSED CONDUIT RACK IS TO BE COMPLETELY SERARATE AND MECHANICALLY ISO FROM THE EXISTING SUCTION/DISCHARGEPIPING SUPPORTS OF THE PROCESS EQUIPMENT. CONDUIT ROUTING AND LOCATION SHOWN ON THE PLAN VIEW ARE APPROXIMATE AND CONCEPTUAL. THE CONTRACTOR IS TO FIELD VERIFY EXACT ROUTING, L ETC. OF THE EXISTING MECHANICAL PIPING FOR DETERMINING THE EXACT ROUTING OF THE PROPOSED CONDUIT SYSTEM. THIS NOTE AT IT'S ENTIRETY APPLIES TO THE FOLLOWING ROUTES SHOWN ON THIS PLAN DRAWING.
   A. CONDUIT ROUTE BETWEEN PULLBOXES LOCATED AT DIFFERENT PROCESS MECHANICAL EQUIPMENT PADS.
   B. CONDUIT ROUTE BETWEEN PULLBOXES LOCATED NEARBY AND/OR AT PROCESS MECHANICAL EQUIPMENT PAD AND BUILDI WALL.
   C. CONDUIT ROUTE BETWEEN PULLBOXES LOCATED NEARBY PROCESS MECHANICAL EQUIPMENT PAD.
2. PROPOSED REPLACEMENT OF SEAL WATER PRESSURE SWITCH. REMOVE EXISTING CONDUIT/WIRING FROM EXISTING SEAL WATE WATER PRESSURE SWITCH PER DETAIL SHOWN ON DRAWING No. ED–GEN–01.
3. RUN CONDUIT AGAINST WALL AS CLOSE AS POSSIBLE TO BOTTOM OF ROOF STRUCTURE. REFER TO DETAIL ON DRAWING NO. No. ED–GEN–07.
4. RUN CONDUIT DIRECTLY BELOW ROOF JOIST TO FINAL DESTINATION. REFER TO APPLICABLE DETAIL ON DRAWING NO. ED–GEN
5. PROPOSED REPLACEMENT OF HIGH DISCHARGE PRESSURE SWITCH, DISCONNECT CONDUIT AND WIRING FROM EXISTING PRESSU SWITCH AND RECONNECT TO PROPOSED SWITCH.
6. PROPOSED REPLACEMENT OF HIGH DISCHARGE PRESSURE SWITCH. DISCONNECT EXISTING CONDUIT AND WIRING.
7. EXISTING UNTAGGED, SINGLE JUNCTION BOX ABOVE CEILING OF ELECTRICAL/CONTROL ROOM. ROUTE PROPOSED 120V CIRCUI THROUGH JUNCTION BOX TO EXISTING LIGHTING PANEL SGT–1.
8. ROUTE CONDUIT CONCEALED ABOVE CEILING OF ELECTRICAL/CONTROL ROOM TO EXISTING JUNCTION BOX ABOVE CEILING AND EXISTING PANEL "SGT–1".
9. INSTALL 20A–1P CIRCUIT BREAKER IN EXISTING SPACE IN PANEL "SGT–1" AND CONNECT PROPOSED CIRCUIT. NOTE CIRCUIT IN PANEL DIRECTORY.
10. GROUND PROCESSOR INPUT/OUTPUT CPU RACKS, ETC IN DCS INTERFACED CABINET R102A1.
11. ROUTE CONDUIT CONCEALED ABOVE CEILING OF ELECTRICAL/CONTROL ROOM.
12. CONNECT TO EXISTING GROUND BUS IN MOTOR CONTROL CENTER.
13. REFER TO "INSTRUMENT AND CONTROL CONDUIT ENTRY/PULLBOX DETAIL– TYPE A"ON DRAWING NO. ED–GEN–03.
14. FOR CONSTRUCTION REFER TO DRAWING NO. ED–GEN–02. FOR ROUTING OF DUCT BANK REFER TO OVERALL SITE PLAN, DRA NO. E–YE01–01 AND DRAWING NO. ED–UB01–01 FOR DUCT BANK CROSS SECTIONAL DETAILS.
15. CONDUITS WILL TURN UP FROM DUCT BANK AND TRANSITION AT 6" ABOVE FINISHED GRADE TO ALUMINUM CONDUITS.
16. SEE DRAWING GD–YE01–01 FOR SILT FENCE REQUIREMENTS AND DETAILS
17. COMPONENTS NO. A010 & A019 NOUNTED IN MSA MODEL #5300 WALL MOUNTED CABINET.
18. REFER TO DRAWING E–YE01–06.
19. REFERENCE COMPONENT CODE M030. MOUNT 12'–0" ABOVE FINISHED BUILDING FLOOR SLAB.
20. REFERENCE COMPONENT CODE M031. MOUNT FIXTURE AT 12'–0" ABOVE FINISHED BUILDING FLOOR SLAB.
21. ROUTE CONDUIT HIGH NEAR ROOF.
22. PROPOSED HYDROGEN SULFIDE AND COMBUSTILBE GAS DETECTORS ARE "PB01–AE–12A1 & PB01–AE–14A1"
23. PROPOSED MSA GAS DETECTORS MONITOR (NEMA 12) – SEE NOTE 17.

GENERAL NOTES:

1. THE INSTRUMENT, JUNCTION BOX, PULLBOX, ETC., LOCATIONS SHOWN ARE APPROXIMATE ONLY.

RECORD DOCUMEN

KEY NOTES:

1. DISCONNECT AND REMOVE PRESSURE SWITCH AND ASSOCIATED CONDUIT/WIRE IN ITS ENTIRETY.
2. DISCONNECT EXISTING H2S GAS AND COMBUSTIBLE GAS INSTRUMENTS "PB01–AE–14A1" AND "PB01–AE–12A1". INSTRUMENTS SHALL BE RELOCATED AND REUSED DURING RENOVATION. DISCONNECT ASSOCIATED CONDUIT/WIRE. FIELD VERIFY ALL DOCUMENT ALL EXISTING TERMINATION POINTS TO FACILITATE RECONNECTION DURING RENOVATION.
3. FURNISH AND INSTALL NEW TYPED CIRCUIT DIRECTORY FOR EXISTING LIGHTING PANELBOARD AFTER DEMOLITION OF APPLICABLE DEVICES AND ASSOCIATED CONDUIT/WIRING FED FROM BREAKERS IN THIS PANELBOARD, CLEAN INTERIOR OF PANELBOARD AND REMOVE ALL HAND MARKINGS AND TOUCH UP PAINT AS REQUIRED.
4. DISCONNECT AND REMOVE GROUND CONDUIT/WIRE. CONTROL POWER AND ISOLATED GROUND SHALL BE FED FROM PROPOSED CONTROL POWER PANELBOARD DURING RENOVATION.
5. DISCONNECT WIRING FROM CIRCUIT "SGTL–24" WHICH CURRENTLY SERVES CONTROL PANEL "RIO2A". FIELD VERIFY CIRCUIT NUMBER. CIRCUIT AND WIRING SHALL BE REUSED DURING RENOVATION TO SERVE LIGHT AND FAN IN RENOVATED CABINET. CONTROL POWER SHALL BE FED FROM PROPOSED CONTROL POWER PANELBOARD.
6. SOME OF THE EXISTING CONTROL WIRING BETWEEN CONTROL PANELS "PB01–CCP–01" AND "RIO2A" THAT ARE ASSOCIATED WITH THICKENED SLUDGE PUMPS, SCUM PUMPS, AND GRAVITY THICKENERS SHALL BE DISCONNECTED AND REMOVED. FIELD VERIFY AND DOCUMENT ALL EXISTING TERMINATION POINTS TO FACILITATE RECONNECTION DURING RENOVATION AS APPLICABLE. ALL WIRING ASSOCIATED WITH UNMODIFIED EQUIPMENT SHALL REMAIN. REFER TO DEMOLITION ON DRAWING NOS. [E–36] THROUGH [E–40] FOR ADDITIONAL REQUIREMENTS.
7. TO FACILITATE INSTALLATION OF PROPOSED CONDUITS ABOVE AND TO/FROM ELECTRICAL ROOM, AND TO FACILITATE INSTALLATION OF PROPOSED CONCRETE CEILING, DISCONNECT AND REMOVE ALL EMPTY AND ABANDONED CONDUITS ABOVE ELECTRICAL ROOM IN THEIR ENTIRETY. FIELD VERIFY.

GENERAL NOTES:

1. REFER TO DEMOLITION ON DRAWING NO. [E–27] FOR ADDITIONAL REQUIREMENTS NOT SHOWN HERE.
2. DISCONNECT AND REMOVE WIRING FROM CONDUITS AS INDICATED FROM SOURCE TO DESTINATION IN THEIR ENTIRETY. WHERE CONDUITS ARE TO BE DEMOLISHED, DISCONNECT AND REMOVE EXPOSED CONDUITS AND ALL RACEWAY SUPPORTS IN THEIR ENTIRETY AS APPLICABLE. WHERE SUCH CONDUITS ARE EMBEDDED IN SLAB/WALLS, CONDUITS SHALL BE ABANDONED IN PLACE. CUT CONDUIT FLUSH TO SLAB/WALL AND GROUT PER DETAILS ON DRAWING NO. [G–E–9]. WHERE EXPOSED CONDUITS TRANSITION TO UNDERGROUND, DEMOLISH CONDUITS BACK TO LAST EXPOSED COUPLING ABOVE GRADE AND CAP. EXISTING UNDERGROUND DUCT BANKS AND CONDUITS SHALL BE ABANDONED IN PLACE. SHOULD ABANDONED CONDUITS INTERFERE WITH PROPOSED RENOVATIONS, PERFORM FURTHER DEMOLITION OF EXISTING CONDUITS AS REQUIRED.

Plotted: 6/30/2016 11:44:08 AM

CROUCH ELECTRIC, INC.
1108 SMITH RD. SUITE 100 / AUSTIN, TEXAS 78721
P.O. BOX 140855 / AUSTIN, TEXAS 78714-0855
PHONE 512/386-6000
FAX 512/386-6010

SOUTH AUSTIN REGIONAL WASTEWATER TREATMENT PLANT
CITY OF AUSTIN, TEXAS

CH2M HILL

DSGN T. TURMAN L. TRIPP
DR HOLLINGSHEAD J.A.SAAVEDRA
CHK T. VEGA
APVD K. HARUTUNIAN

NO.	DATE	REVISION	BY	APVD
2	3/2/95	ADDENDUM 2	TV	RCE
1	1/3/95	REBID	RRM	RCE

REUSE OF DOCUMENTS
THIS DOCUMENT, AND THE IDEAS AND DESIGNS INCORPORATED HEREIN, AS AN INSTRUMENT OF PROFESSIONAL SERVICE, IS THE PROPERTY OF CH2M HILL AND IS NOT TO BE USED, IN WHOLE OR IN PART, FOR ANY OTHER PROJECT WITHOUT THE WRITTEN AUTHORIZATION OF CH2M HILL.
©CH2M HILL

BAR IS ONE INCH ON ORIGINAL DRAWING
0 1"
IF NOT ONE INCH ON THIS SHEET, ADJUST SCALES ACCORDINGLY.

HARUTUNIAN ENGINEERING, INC.
ENGINEERING & ENVIRONMENTAL CONSULTANTS
AUSTIN, TEXAS

MARTINEZ & WRIGHT ENGINEERS, INC.

SITE PLANS
SLUDGE TRANSFER PUMP BUILDING PLAN
ELECTRICAL MODIFICATION

SHEET
DWG NO. SP–PB01
DATE JULY 19
PROJ NO. TEX3093

SLUDGE TRANSFER PUMP BUILDING FLOOR PLAN DEMOLITION

(1) [E–69]

SCALE: NONE

REUSE OF DOCUMENTS
This document, and the designs incorporated herein, is an instrument of professional service that has been developed, designed and prepared by Harutunian Engineering, Inc., and is not to be used, in whole or part, for any other project without giving written notice to Harutunian Engineering, Inc.

REV No	DATE	DRWN	CHKD	REMARKS
△	–	–	–	–

DESIGNED BY: HEI
DRAWN BY: HEI
SHEET CHK'D BY: HEI
CROSS CHK'D BY: HEI
APPROVED BY: HEI
DATE: APRIL 2016

CDM Smith
Riata Corporate Park, 12357-A Riata Trace Parkway, Suite 210
Austin, TX 78727
Tel: (512) 346-1100
Texas Registration Number F-3043

HEI
HARUTUNIAN ENGINEERING, INC.
305 E Huntland Dr, Ste 500: Austin, TX 78752
TBPE Firm Registration No. F-2408

CITY OF AUSTIN, TEXAS - AUSTIN WATER UTILITY
CIP 3333.016
SOUTH AUSTIN REGIONAL WWTP
THICKENER IMPROVEMENTS PROJECT

SLUDGE TRANSFER PUMP BUILDING
ELECTRICAL MODIFICATION FLOOR PLAN
DEMOLITION

PROJECT No 590–104217
FILE NAME: E–26

SHEET No
E-26

STATE OF TEXAS
K. A. HARUTUNIAN
59181
REGISTERED PROFESSIONAL ENGINEER
7/22/2016

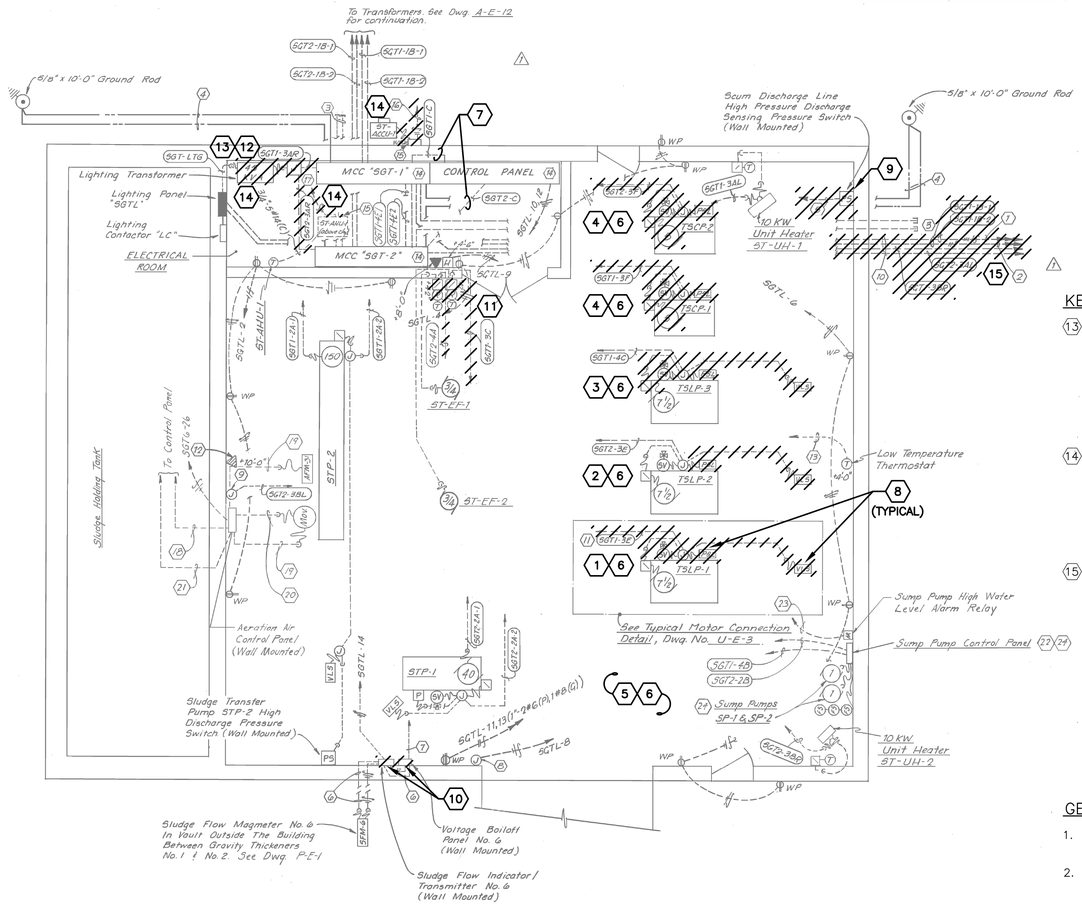

SLUDGE TRANSFER PUMP BLDG. - POWER

SCALE: 1/4" = 1'-0"

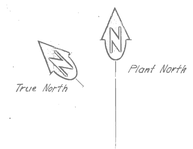

KEY NOTES:

13. EXISTING PANELBOARD "SGTL" SHALL REMAIN AND BE REUSED DURING RENOVATION ACTIVITIES. DISCONNECT SECONDARY CONDUIT FROM TRANSFORMER. REMOVE WIRING FEEDING THE PANELBOARD. PANELBOARD SHALL BE REFED FROM NEW TRANSFORMER DURING RENOVATION. PROVIDE NECESSARY MEANS TO MAINTAIN CONTINUOUS ELECTRICAL SERVICE TO THE EXISTING PANELBOARD LOADS DURING ALL PHASES OF CONSTRUCTION.

14. DISCONNECT AND REMOVE ALL CONDUIT/WIRE, RACEWAY SUPPORTS, AND DISCONNECT SWITCHES IN THEIR ENTIRETY ASSOCIATED WITH AIR HANDLER ABOVE ELECTRICAL ROOM, CONDENSING UNIT OUTSIDE, AND DUCTLESS SYSTEM AIR HANDLER (NOT SHOWN HERE). DUCTLESS SPLIT SYSTEM AIR HANDLER ADDED UNDER ANOTHER PROJECT AND IS LOCATED ABOVE EXISTING LIGHTING TRANSFORMER.

15. DISCONNECT AND REMOVE WIRING FROM THESE UNDERGROUND CONDUITS IN THEIR ENTIRETY AS REQUIRED. REFER TO DEMOLITION ON DRAWING NOS. [E-20], [E-22], [E-02] AND [E-03] FOR ADDITIONAL INFORMATION.

GENERAL NOTES:

1. REFER TO DEMOLITION ON DRAWING NO. [E-26] FOR ADDITIONAL REQUIREMENTS NOT SHOWN HERE.

2. DISCONNECT AND REMOVE WIRING FROM CONDUITS AS INDICATED FROM SOURCE TO DESTINATION IN THEIR ENTIRETY. WHERE CONDUITS ARE TO BE DEMOLISHED, DISCONNECT AND REMOVE EXPOSED CONDUITS AND ALL RACEWAY SUPPORTS IN THEIR ENTIRETY AS APPLICABLE. WHERE SUCH CONDUITS ARE EMBEDDED IN SLAB/WALLS, CONDUITS SHALL BE ABANDONED IN PLACE. CUT CONDUIT FLUSH TO SLAB/WALL AND GROUT PER DETAILS ON DRAWING NO. [G-E-9]. WHERE EXPOSED CONDUITS TRANSITION TO UNDERGROUND, DEMOLISH CONDUITS BACK TO LAST EXPOSED COUPLING ABOVE GRADE AND CAP. EXISTING UNDERGROUND DUCT BANKS AND CONDUITS SHALL BE ABANDONED IN PLACE. SHOULD ABANDONED CONDUITS INTERFERE WITH PROPOSED RENOVATIONS, PERFORM FURTHER DEMOLITION OF EXISTING CONDUITS AS REQUIRED.

KEY NOTES

1. 1" - 4#10(P), 1#10(G) TO GRAVITY THICKENERS NO. 1 & NO. 2 (LIGHTS AND 120 VOLT RECEPTACLES). SEE DRAWING P-E-1 FOR CONTINUATION OF CIRCUITING.
2. 1" - 2#6(P), 1#8(G) TO GRAVITY THICKENERS NO. 1 & NO. 2 (208 V WELDING RECEPTACLES). SEE DRAWING P-E-1 FOR CONTINUATION OF CIRCUITING.
3. STUB OUT AND CAP FOUR 1 1/2" E.C. FOR FUTURE USE. SEE DETAIL, DRAWING U-E-2.
4. #4/0 BARE COPPER GROUND WIRE. CONNECT TO GROUND ROD USING CADWELD, OR EQUAL PROCESS.
5. 3/4" - 2#14(C) TO CONTROL PANEL/SCUM PUMPS RESET CONTROL CIRCUITRY AND HIGH DISCHARGE PRESSURE ALARM CIRCUITRY.
6. 1" - FIVE (5) CONDUCTOR CABLE. CABLE TO BE FURNISHED BY OTHERS AND INSTALLED BY CONTRACTOR.
7. 3/4" - 1#18 AWG (TWISTED PAIR) SHIELDED CONDUCTORS FROM SLUDGE FLOW TRANSMITTER NO. 6 TO RECORDER/CONTROLLER IN BUILDING CONTROL PANEL.
8. INSTALL JUNCTION BOX FOR MOTOR OPERATED ROLL-UP DOOR AT DOOR HEIGHT AND LOCATION RECOMMENDED BY MANUFACTURER. MOTOR STARTERS, KEY AND PUSHBUTTON CONTROL STATION OPERATORS BY OTHERS. MAKE ALL FINAL CONNECTIONS TO MOTOR STARTER AND CONTROL STATIONS AS PER MANUFACTURER'S RECOMMENDATION. USE SEALTITE WEATHERPROOF FLEXIBLE CONDUIT, OR EQUAL.
9. INSTALL JUNCTION BOX ON WALL AT HEIGHT OF MONORAIL. CONNECT TO MONORAIL PER MONORAIL MANUFACTURER'S RECOMMENDATION. USE SEALTITE WEATHERPROOF FLEXIBLE CONDUIT, OR EQUAL. SEE DETAIL DRAWING U-E-3.
10. RUN CONDUITS AND WIRING TO GRAVITY THICKENERS. SEE DRAWING P-E-1 FOR CONTINUATION OF CIRCUITING.
11. SEE ONE LINE DIAGRAM, DRAWING Q-E-1 FOR WIRING AND CONDUIT SIZES NOT SHOWN ON THE DRAWINGS (TYPICAL).
12. FOR WIRING OF HANDSET & SPEAKERS, SEE COMMUNICATIONS SYSTEM RISER DIAGRAM, DRAWING A-E-6.
13. 3/4" - 2 #14(A) TO CONTROL PANEL ANNUNCIATOR POINT #18.
14. INSTALL CONTROL PANEL, MOTOR CONTROL CENTERS ON 6" HIGH HOUSEKEEPING PADS. SEE DETAIL 18, DRAWING U-S-2.
15. PROVIDE DISCONNECT AS REQUIRED BY NATIONAL ELECTRICAL CODE.
16. 3/4" - 2 #10(P), 1 #10(G). CIRCUIT SGTL - 20, 22.
17. 3/4" - 2 #12(P), 1 #12(G). CIRCUIT SGTL - 16 18.
18. 3/4" - 2#16 (TWISTED PAIR) SHIELDED CONDUCTORS
19. 3/4" - 1#16 (TWISTED PAIR) SHIELDED CONDUCTORS
20. 3/4" - 2#12(P), 1#12(G). CIRCUIT SGTL-26
21. 3/4" - 2#12(A) TO ANNUNCIATOR POINT NO. 17.
22. REFER TO SUMP PUMP CONTROL PANEL DETAIL DRAWING F-E-3.
23. 3/4" - 2#12(P), 1#12(G), 2#14(A) TO CONTROL PANEL ANNUNCIATOR POINT #19.
24. SUMP PUMPS, CONTROL PANEL, FLOAT SWITCHES ETC. ARE SHOWN AT THIS LOCATION FOR CLARITY REASONS ONLY. SUMP PUMP ARE TO BE LOCATED IN SOUTH EAST CORNER OF BUILDING (BELOW UNIT HEATER ST-UH-2).

KEY NOTES:

1. EXISTING MOTOR SHALL REMAIN AND BE RECONNECTED TO MOTOR CONTROL CENTER "MCC-SGT2" DURING RENOVATION. FIELD CONTROL STATION SHALL REMAIN. DISCONNECT AND REMOVE ALL OTHER PUMP FIELD CONTROLS DEVICES. DISCONNECT AND REMOVE ALL POWER, SPACE HEATER, AND CONTROLS CONDUIT/WIRING BETWEEN MOTOR CONTROL CENTER AND MOTOR/FIELD CONTROLS DEVICES.

2. EXISTING MOTOR AND FIELD CONTROL STATION SHALL REMAIN. DISCONNECT AND REMOVE ALL OTHER PUMP FIELD CONTROLS DEVICES. DISCONNECT AND REMOVE ALL CONTROL WIRING BETWEEN LOW PRESSURE SWITCH AND CHECK VALVE LIMIT SWITCH AND MOTOR CONTROL CENTER AND CONTROL PANEL "PB01-CCP-01" OR "PB01-CPP-03" AS APPLICABLE. CONTROL WIRING BETWEEN MOTOR CONTROL CENTER AND FIELD CONTROL STATION AND SOLENOID VALVE SHALL REMAIN. A PORTION OF THE CONTROL WIRING APPEARS TO BE ROUTED IN SAME CONDUIT WITH POWER WIRING. POWER AND SPACE HEATER WIRING SHALL REMAIN.

3. EXISTING MOTOR SHALL REMAIN. DISCONNECT AND REMOVE FIELD CONTROL STATION AND ALL FIELD CONTROLS DEVICES. DISCONNECT AND REMOVE ALL CONTROL WIRING BETWEEN MOTOR CONTROL CENTER AND PUMP FIELD CONTROLS DEVICES. A PORTION OF THE CONTROL WIRING APPEARS TO BE ROUTED IN SAME CONDUIT WITH POWER WIRING. POWER AND SPACE HEATER WIRING SHALL REMAIN. DISCONNECT AND REMOVE CONTROL WIRING BETWEEN MOTOR CONTROL CENTER AND EXISTING CONTROL PANEL "PB01-CCP-01".

4. DISCONNECT AND REMOVE MOTOR AND ALL PUMP FIELD CONTROLS DEVICES. DISCONNECT AND REMOVE ALL POWER, SPACE HEATER, AND CONTROLS CONDUIT/WIRING BETWEEN MOTOR CONTROL CENTER AND MOTOR/FIELD DEVICES. DISCONNECT AND REMOVE CONTROL WIRING BETWEEN MOTOR CONTROL CENTER AND EXISTING CONTROL PANEL "PB01-CCP-01".

5. EXISTING THICKENED SLUDGE PUMPING UNIT "TSLP-4" WAS ADDED UNDER A DIFFERENT PROJECT AND IS NOT SHOWN ON THIS DRAWING. EXISTING MOTOR AND FIELD CONTROL STATION SHALL REMAIN. DISCONNECT AND REMOVE ALL OTHER PUMP FIELD CONTROLS DEVICES. DISCONNECT AND REMOVE ALL CONTROL WIRING BETWEEN LOW PRESSURE SWITCH AND CHECK VALVE LIMIT SWITCH AND MOTOR CONTROL CENTER AND CONTROL PANEL "PB01-CCP-01" OR "PB01-CPP-03" AS APPLICABLE. CONTROL WIRING BETWEEN MOTOR CONTROL CENTER AND FIELD CONTROL STATION AND SOLENOID VALVE SHALL REMAIN. A PORTION OF THE CONTROL WIRING APPEARS TO BE ROUTED IN SAME CONDUIT WITH POWER WIRING. POWER AND SPACE HEATER WIRING SHALL REMAIN. POWER, SPACE HEATER, AND CONTROLS FIELD CONDUIT/WIRE APPEAR TO BE ROUTED EXPOSED TO ELECTRICAL ROOM ALONG PERIMETER WALLS.

6. REFER TO CONTROL SCHEMATICS DEMOLITION ON DRAWING NOS. [E-36] AND [E-38] AND TO ONE-LINE DEMOLITION ON DRAWING NOS. [E-02] AND [E-03] FOR ADDITIONAL INFORMATION.

7. SOME OF THE EXISTING CONTROL WIRING BETWEEN MOTOR CONTROL CENTERS AND CONTROL PANEL THAT ARE ASSOCIATED WITH THICKENED SLUDGE PUMPS AND SCUM PUMPS SHALL BE DISCONNECTED AND REMOVED. FIELD VERIFY AND DOCUMENT ALL EXISTING TERMINATION POINTS TO FACILITATE RECONNECTION DURING RENOVATION AS APPLICABLE. ALL WIRING ASSOCIATED WITH UNMODIFIED EQUIPMENT SHALL REMAIN. REFER TO DEMOLITION ON DRAWING NOS. [E-36] AND [E-38] FOR ADDITIONAL REQUIREMENTS.

8. CONDUIT/WIRING FOR EXISTING PRESSURE SWITCHES AND CHECK VALVE LIMIT SWITCHES HAS BEEN REPLACED UNDER ANOTHER PROJECT. CONDUIT/WIRE APPEARS TO BE ROUTED EXPOSED TO ELECTRICAL ROOM AROUND PERIMETER WALLS. REFER TO DRAWING NO. [E-26].

9. DISCONNECT AND REMOVE DEVICE, ASSOCIATED CONDUIT/WIRE, AND RACEWAY SUPPORTS FROM SOURCE TO DESTINATION IN ITS ENTIRETY.

10. PORTIONS OF EQUIPMENT SHOWN WERE REMOVED UNDER A PREVIOUS PROJECT. PULLBOX AND EXPOSED CONDUITS WERE INSTALLED IN THIS VICINITY. RELOCATE EXISTING PULLBOX AND CONDUITS AS REQUIRED TO FACILITATE INSTALLATION OF PROPOSED FLOW TRANSMITTERS ON THIS WALL.

11. DISCONNECT AND REMOVE FIELD CONTROL STATION. DISCONNECT ASSOCIATED THERMOSTAT. THERMOSTAT SHALL BE REUSED AND RELOCATED DURING RENOVATION. DISCONNECT AND REMOVE CONTROL CONDUIT/WIRING BETWEEN MOTOR CONTROL CENTER AND FIELD CONTROL STATION AND THERMOSTAT. POWER CONDUIT/WIRING SHALL REMAIN AND BE REUSED DURING RENOVATION. REFER TO DEMOLITION ON DRAWING NOS. [E-38], [E-02] AND [E-03].

12. DISCONNECT AND REMOVE TRANSFORMER, JUNCTION BOX, EXPOSED PRIMARY-SIDE CONDUIT, AND ALL WIRING BACK TO MOTOR CONTROL CENTERS.

TRIAD ENGINEERING
CONSULTING ENGINEERS
AUSTIN, TEXAS

NO.	DATE	REVISION	APPROV.
4			
3			
2			
1	6/9/2015	Revised Location of conduit stub-out to transformers & Sludge Thickeners	

CITY OF AUSTIN, TEXAS
ONION CREEK WASTEWATER TREATMENT FACILITIES

SLUDGE TRANSFER PUMP BUILDING
ELECTRICAL POWER PLAN

Turner Collie & Braden Inc.
CONSULTING ENGINEERS
TEXAS AUSTIN DALLAS EL PASO HOUSTON PORT ARTHUR
COLORADO DENVER GRAND JUNCTION

Unit NAIL	Scale Horz. AS SHOWN Vert.	Date APRIL, 1984	
Designed KAH	Checked KAH/JRS	Job No. 7109-025	Contract 2
Drawn JP	Approved JRS	Sheet 257 of 300	

STATE OF TEXAS — JAMES R. SCHULTZ — 27115 — REGISTERED PROFESSIONAL ENGINEER

Dwg. No. Q-E-2

I HEREBY CERTIFY THIS "RECORD DRAWINGS" IS CORRECT AND WAS PREPARED UNDER MY SUPERVISION.

4/22/2016

SLUDGE TRANSFER PUMP BUILDING FLOOR PLAN DEMOLITION (1 / E-56)

SCALE: NONE

REUSE OF DOCUMENTS

This document, and the designs incorporated herein, is an instrument of professional service that has been developed, designed and prepared by Harutunian Engineering, Inc., and is not to be used, in whole or part, for any other project without giving written notice to Harutunian Engineering, Inc.

REV No	DATE	DRWN	CHKD	REMARKS
1	–	–	–	–

DESIGNED BY: HEI
DRAWN BY: HEI
SHEET CHK'D BY: HEI
CROSS CHK'D BY: HEI
APPROVED BY: HEI
DATE: APRIL 2016

CDM Smith
Riata Corporate Park, 12357-A Riata Trace Parkway, Suite 210
Austin, TX 78727
Tel: (512) 346-1100
Texas Registration Number F-3043

HARUTUNIAN ENGINEERING, INC.
305 E Huntland Dr, Ste 500; Austin, TX 78752
TBPE Firm Registration No. F-2408

CITY OF AUSTIN, TEXAS - AUSTIN WATER UTILITY
CIP 3333.016

SOUTH AUSTIN REGIONAL WWTP
THICKENER IMPROVEMENTS PROJECT

SLUDGE TRANSFER PUMP BUILDING
FLOOR PLAN
DEMOLITION

STATE OF TEXAS — K. A. HARUTUNIAN — 59181 — REGISTERED PROFESSIONAL ENGINEER — 4/22/2016

PROJECT No 590-104217
FILE NAME: E-27

SHEET No
E-27

Plotted: 6/30/2016 11:44:14 AM

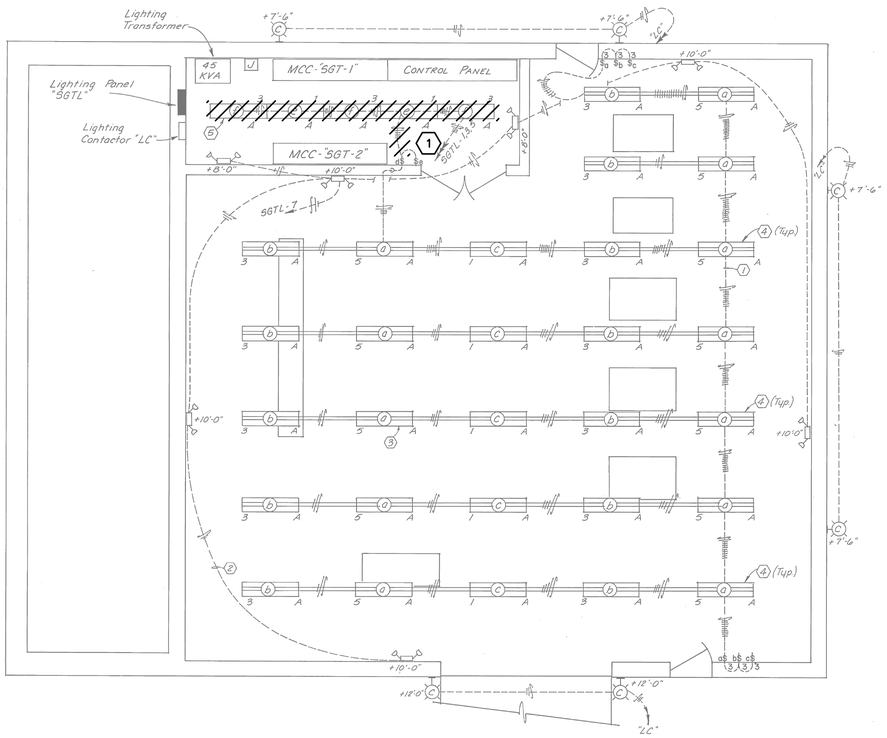

SLUDGE TRANSFER PUMP BUILDING - LIGHTING

SCALE: 1/4" = 1'-0"

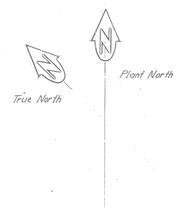

KEY NOTES

1. RUN CONDUITS, WHICH CONNECT FIXTURE ROWS, CONCEALED IN ROOF SLAB (TYPICAL).
2. RUN CONDUIT CONNECTING EMERGENCY FIXTURES CONCEALED IN ROOF SLAB (TYPICAL).
3. FOR MOUNTING OF "A" TYPE FIXTURE. SEE DRAWING U-E-1 (TYPICAL).
4. MOUNT FIXTURES @ 12' - 0" A.F.F. (TYPICAL FOR ALL PUMP ROOM FIXTURES).
5. MOUNT ELECTRICAL ROOM FIXTURES @ 8' - 0" A.F.F.

VOLT: 120/208V AMPS: 225A MAIN: 225A PHASE/WIRE: 3Ø,4W

CIRCUIT BREAKER PANEL SCHEDULE -"SGTL"

CIRCUIT-BREAKER SIZE	CKT NO.	LOAD DESCRIPTION	PHASE A	PHASE B	PHASE C	LOAD DESCRIPTION	CKT NO.	CIRCUIT BREAKER SIZE
20A/1P	1	ELECTRICAL & PUMP RM'S. LIGHTING	800 / 700			WEST WALL - BLDG. RECEPTACLES	2	20A/1P
20A/1P	3	ELECTRICAL & PUMP RM'S. LIGHTING		800 / 1500		BLDG. NORTH WALL & ELECT. ROOM RECEPTACLES	4	20A/1P
20A/1P	5	PUMP ROOM LIGHTING			800 / 1200	BLDG. WEST & SOUTH WALLS RECEPTACLES	6	20A/1P
20A/1P	7	EMERGENCY LIGHTS	1176 / 300			MOTOR OPERATED ROLL UP DOOR	8	20A/1P
20A/1P	9	COMMUNICATION SYSTEM		1200 / 1200		CONTROL PANEL POWER	10	20A/1P
50A/2P	11	WELDING			1200 / 4160	CONTROL PANEL POWER	12	20A/1P
	13	RECEPTACLE	600 / 4160			VOLTAGE BOILOFF & FLOW TRANSMITTER NO. 6	14	20A/1P
20A/1P	15	[illegible] RECEPTACLE		600 / 1440		AIR HANDLING UNIT	16	2P/20
	17				600 / 1800		18	
3P/30	19	OUTSIDE LIGHTS THRU CONTACTOR	600 / 1800			AIR HANDLING UNIT	20	2P/20
	21			600 / 1800			22	
1P/20	23	CONTACTOR COIL			1200 / 1200	RECEPTACLES AND THICKENER	24	1P/20
1P/20	25	HYDROGEN SULFIDE MONITOR (ODOR CONTROL UNIT)	1200 / 1200			AERATION AIR CONTROL CABINET	26	1P/20
	27	SPACE		1200		SPARE	28	1P/20
	29	SPACE			1200	SPARE	30	1P/20
	31	SPACE	1200			SPARE	32	1P/20
	33	SPACE				SPACE	34	
	35	SPACE				SPACE	36	
	37	SPACE				SPACE	38	
	39	SPACE				SPACE	40	
	41	SPACE				SPACE	42	

KEY NOTES:

1. EXISTING ELECTRICAL ROOM LIGHTING FIXTURES DIFFER FROM THOSE SHOWN HERE. FIXTURES ARE 2'X4' TROFFER TYPE LOCATED IN SUSPENDED CEILING. DISCONNECT AND REMOVE. DISCONNECT AND REMOVE ALL ASSOCIATED CONDUIT/WIRE AND RACEWAY SUPPORTS BACK TO LIGHT SWITCHES. PROPOSED LIGHT FIXTURES SHALL BE CONNECTED TO EXISTING CIRCUITS AND SWITCHES DURING RENOVATION.
2. DISCONNECT AND REMOVE WIRING TO CIRCUIT BREAKER(S) AND PANEL. DISCONNECT AND REMOVE ALL ASSOCIATED EXPOSED CONDUIT FROM SOURCE TO DESTINATION.
3. PARTIAL DEMOLITION OF WELDING RECEPTACLES ASSOCIATED WITH THIS CIRCUIT IS REQUIRED. WELDING RECEPTACLES AT GRAVITY THICKENERS AND ASSOCIATED CONDUIT/WIRE SHALL BE DEMOLISHED. REFER TO DRAWING NOS. [E-20], [E-21], AND [E-22]. EXISTING WELDING RECEPTACLE IN SLUDGE TRANSFER PUMP BUILDING SHALL REMAIN.
4. FOR EACH BRANCH CIRCUIT BREAKER IN THIS PANEL CONTRACTOR SHALL FIELD VERIFY SIZE AND QUANTITY OF EXISTING FIELD WIRING AND SIZE OF FIELD CONDUIT ASSOCIATED WITH THIS BRANCH CIRCUIT. UPDATE THE RENOVATED PANELBOARD SCHEDULE ON DRAWING NO. [E-10] TO REFLECT AS BUILT CONDITIONS.
5. NUMEROUS BRANCH CIRCUIT LOAD DESCRIPTIONS AS INDICATED IN THE RECORD DRAWING PANEL SCHEDULE DO NOT MATCH FIELD OBSERVATIONS. CONTRACTOR SHALL FIELD VERIFY ALL BRANCH CIRCUIT LOADS AND UPDATE THE RENOVATED PANEL SCHEDULE ON DRAWING NO. [E-10] TO REFLECT AS BUILT CONDITIONS.

GENERAL NOTES:

1. DISCONNECT AND REMOVE WIRING FROM CONDUITS AS INDICATED FROM SOURCE TO DESTINATION IN THEIR ENTIRETY. WHERE CONDUITS ARE TO BE DEMOLISHED, DISCONNECT AND REMOVE EXPOSED CONDUITS AND ALL RACEWAY SUPPORTS IN THEIR ENTIRETY AS APPLICABLE. WHERE SUCH CONDUITS ARE EMBEDDED IN SLAB/WALLS, CONDUITS SHALL BE ABANDONED IN PLACE. CUT CONDUIT FLUSH TO SLAB/WALL AND GROUT PER DETAILS ON DRAWING NO. [G-E-9]. WHERE EXPOSED CONDUITS TRANSITION TO UNDERGROUND, DEMOLISH CONDUITS BACK TO LAST EXPOSED COUPLING ABOVE GRADE AND CAP. EXISTING UNDERGROUND DUCT BANKS AND CONDUITS SHALL BE ABANDONED IN PLACE. SHOULD ABANDONED CONDUITS INTERFERE WITH PROPOSED RENOVATIONS, PERFORM FURTHER DEMOLITION OF EXISTING CONDUITS AS REQUIRED.

I HEREBY CERTIFY THIS "RECORD DRAWINGS" IS CORRECT AND WAS PREPARED UNDER MY SUPERVISION.
11/1/86

STATE OF TEXAS — JAMES W. SCHULTZ 27165 — REGISTERED PROFESSIONAL ENGINEER

TRIAD ENGINEERING
CONSULTING ENGINEERS
AUSTIN, TEXAS

NO.	DATE	REVISION	APPROV.
4			
3			
2			
1			

CITY OF AUSTIN, TEXAS
ONION CREEK WASTEWATER TREATMENT FACILITIES
SLUDGE TRANSFER PUMP BUILDING
ELECTRICAL LIGHTING PLAN

Turner Collie & Braden Inc.
CONSULTING ENGINEERS
TEXAS AUSTIN/DALLAS/EL PASO/HOUSTON/PORT ARTHUR
COLORADO DENVER/GRAND JUNCTION

Unit NAIL	Scale: Horz. AS NOTED Vert.	Date APRIL, 1984	
Designed KAH	Checked KAH/JRS	Job No. 7109-025	Contract 2
Drawn JP	Approved JRS	Sheet 258 of 300	

Dwg. No. Q-E-3

SLUDGE TRANSFER PUMP BUILDING LIGHTING PLAN – DEMOLITION (1) [E-57]
SCALE: NONE

REUSE OF DOCUMENTS
This document, and the designs incorporated herein, is an instrument of professional service that has been developed, designed and prepared by Harutunian Engineering, Inc., and is not to be used, in whole or part, for any other project without giving written notice to Harutunian Engineering, Inc.

REV No	DATE	DRWN	CHKD	REMARKS
△	–	–	–	–

DESIGNED BY: HEI
DRAWN BY: HEI
SHEET CHK'D BY: HEI
CROSS CHK'D BY: HEI
APPROVED BY: HEI
DATE: APRIL 2016

CDM Smith
Riata Corporate Park, 12357-A Riata Trace Parkway, Suite 210
Austin, TX 78727
Tel: (512) 346-1100
Texas Registration Number F-3043

HARUTUNIAN ENGINEERING, INC.
305 E Huntland Dr, Ste 500; Austin, TX 78752
TBPE Firm Registration No. F-2408

CITY OF AUSTIN, TEXAS - AUSTIN WATER UTILITY
CIP 3333.016
SOUTH AUSTIN REGIONAL WWTP
THICKENER IMPROVEMENTS PROJECT

SLUDGE TRANSFER PUMP BUILDING
LIGHTING PLAN
DEMOLITION

K. A. HARUTUNIAN — STATE OF TEXAS — 59181 — REGISTERED PROFESSIONAL ENGINEER — 7/22/2016

PROJECT No 590-104217
FILE NAME: E-28

SHEET No
E-28

Plotted: 6/30/2016 11:44:20 AM

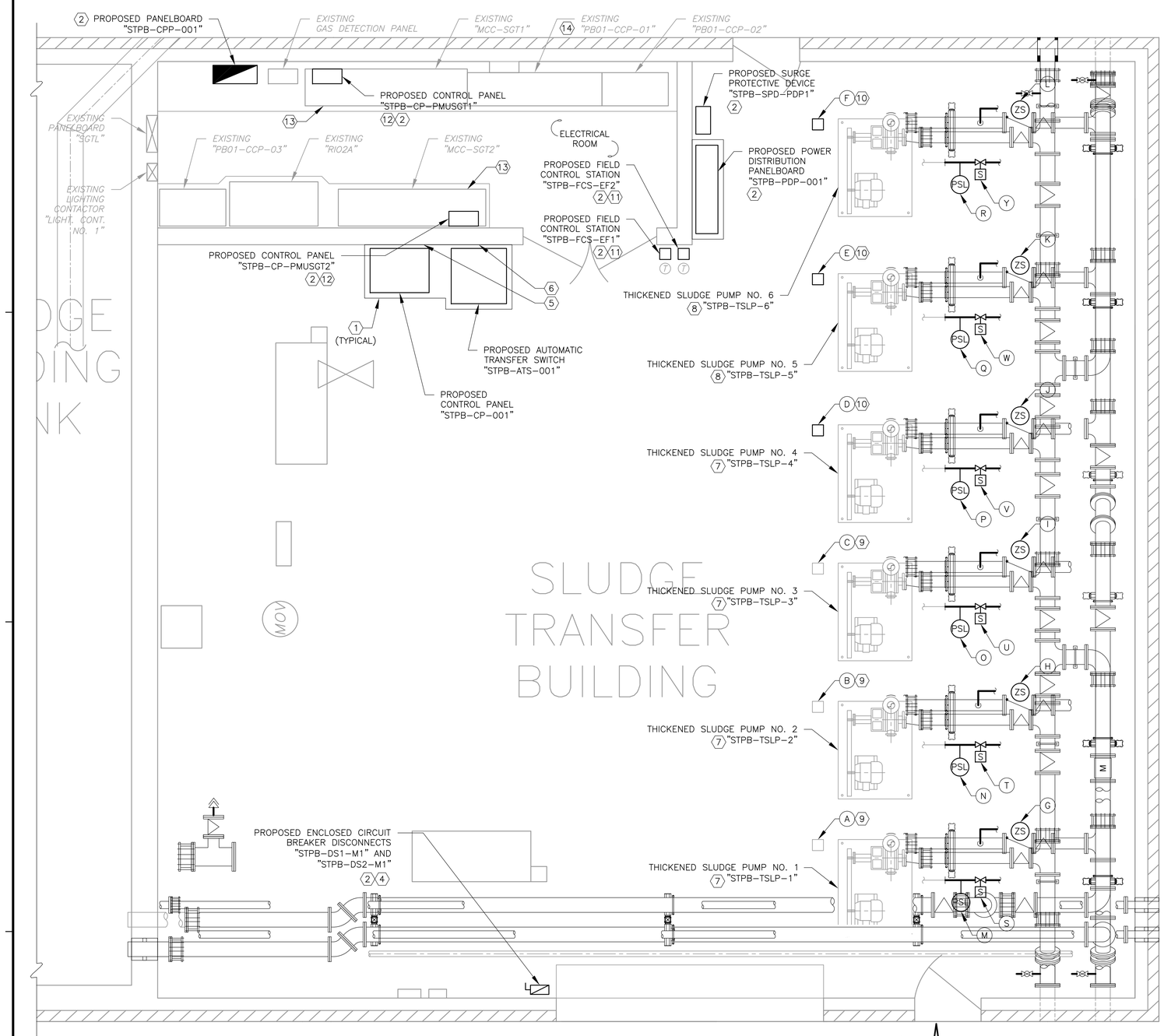

SLUDGE TRANSFER PUMP BUILDING EQUIPMENT ARRANGEMENT PLAN

SCALE: 3/8" = 1'-0"

EQUIPMENT IDENTIFICATION TABLE

MARK	DESCRIPTION	MARK	DESCRIPTION
A	"STPB-FCS-TSLP1"	M	"STPB-PSL-9211"
B	"STPB-FCS-TSLP2"	N	"STPB-PSL-9221"
C	"STPB-FCS-TSLP3"	O	"STPB-PSL-9231"
D	"STPB-FCS-TSLP4"	P	"STPB-PSL-9241"
E	"STPB-FCS-TSLP5"	Q	"STPB-PSL-9251"
F	"STPB-FCS-TSLP6"	R	"STPB-PSL-9261"
G	"STPB-ZS-CV1"	S	"STPB-SV-TSLP1"
H	"STPB-ZS-CV2"	T	"STPB-SV-TSLP2"
I	"STPB-ZS-CV3"	U	"STPB-SV-TSLP3"
J	"STPB-ZS-CV4"	V	"STPB-SV-TSLP4"
K	"STPB-ZS-CV5"	W	"STPB-SV-TSLP5"
L	"STPB-ZS-CV6"	Y	"STPB-SV-TSLP6"

NOTE:

CROSS-REFERENCE ITEMS SHOWN ON THE PLAN DRAWING WITH THE DESCRIPTIONS SHOWN IN THE "EQUIPMENT IDENTIFICATION TABLE" SHOWN ON THIS DRAWING.

KEY NOTES:

1. FURNISH AND INSTALL INDOOR REINFORCED CONCRETE EQUIPMENT PAD PER DETAIL 7 ON DRAWING NO. [G-E-10]. TYPICAL FOR ALL FREESTANDING EQUIPMENT.
2. MOUNT EQUIPMENT TO WALL PER DETAILS ON DRAWING NO. [G-E-10].
3. EXISTING AND PROPOSED PUMPING UNITS SHALL BE TAGGED ACCORDING TO TABLE ON THIS SHEET. THE EXISTING TAGS AND PUMPING UNIT DESCRIPTIONS ARE SHOWN FOR INFORMATION ONLY.
4. FURNISH AND INSTALL ENCLOSED CIRCUIT BREAKER TO SERVE AS THE DISCONNECTING MEANS FOR THE RUNWAY CONTACT CONDUCTORS AND MONORAIL HOIST MOTORS. FURNISH AND INSTALL A SECOND ENCLOSED CIRCUIT BREAKER IF REQUIRED TO MEET NEC REQUIREMENTS. NOT ALL INTERCONNECTIONS BETWEEN THE MONORAIL COMPONENTS AND THE DISCONNECTS HAVE BEEN SHOWN FOR CLARITY.
5. EXISTING H2S GAS AND COMBUSTIBLE GAS INDICATING INSTRUMENTS LOCATED IN THIS VICINITY SHALL BE RELOCATED. REFER TO DRAWING NO. [E-30] FOR NEW LOCATION.
6. EXISTING EXHAUST FAN FIELD CONTROL STATIONS LOCATED IN THIS VICINITY SHALL BE DEMOLISHED AND REPLACED, AND ASSOCIATED THERMOSTATS SHALL BE RELOCATED. REFER TO NEW LOCATIONS ON THIS SHEET.
7. EXISTING SLUDGE PUMP IN THIS LOCATION SHALL REMAIN BUT SHALL BE RETAGGED. REFER TO PUMPING UNIT TAG REPLACEMENT TABLE ON THIS SHEET.
8. EXISTING SCUM PUMP IN THIS LOCATION SHALL BE DEMOLISHED AND REPLACED WITH PROPOSED SLUDGE PUMP WITH NEW TAGGING. REFER TO PUMPING UNIT TAG REPLACEMENT TABLE ON THIS SHEET.
9. EXISTING FIELD CONTROL STATION IN THIS LOCATION SHALL REMAIN BUT SHALL BE RETAGGED.
10. FURNISH AND INSTALL PROPOSED FIELD CONTROL STATION IN LOCATION OF DEMOLISHED FIELD CONTROL STATION.
11. FURNISH AND INSTALL EXHAUST FAN FIELD CONTROL STATION AND MOUNT TO WALL IN VICINITY INDICATED. MOUNT ASSOCIATED THERMOSTAT TO WALL BELOW CONTROL STATION.
12. FURNISH AND INSTALL CONTROL PANEL ENCLOSURE ABOVE EXISTING MOTOR CONTROL CENTER. MOUNT PROPOSED POWER MONITORING UNIT/METER, CURRENT TRANSFORMER SHORTING TERMINAL BLOCK, AND CONTROL POWER TRANSFORMER SECONDARY FUSE TO BACKPLANE OF ENCLOSURE. REFER TO ONE-LINE DIAGRAMS ON DRAWING NOS. [E-06] AND [E-07] AND TO CONTROL SCHEMATIC ON DRAWING NO. [E-49] FOR ADDITIONAL REQUIREMENTS NOT SHOWN HERE.
13. FURNISH AND INSTALL REPLACEMENT DOOR FOR MAIN BREAKER SECTION. FURNISH AND INSTALL POWER MONITORING DISPLAY TO FACE OF DOOR. COORDINATE WITH MOTOR CONTROL CENTER AND POWER MONITORING UNIT MANUFACTURERS. REFER TO ONE-LINE DIAGRAMS ON DRAWING NOS. [E-06] AND [E-07] AND TO CONTROL SCHEMATIC ON DRAWING NO. [E-49] FOR ADDITIONAL REQUIREMENTS NOT SHOWN HERE.
14. AFTER INSTALLATION OF PROPOSED FIBER OPTIC CABLES AND COMPLETION OF DEMOLITION AND RENOVATION ACTIVITIES IN THIS CONTROL PANEL, FURNISH AND INSTALL REENTERABLE SEALING COMPOUND IN EXISTING DUCT BANK CONDUITS TURNING UP THROUGH FLOOR INTO BOTTOM OF CONTROL PANEL. SEALANT REQUIRED FOR ALL CONDUITS THAT ORIGINATE/TERMINATE OUTSIDE ELECTRICAL ROOM AT MINIMUM. FIELD VERIFY. REFER TO CONDUIT SEALING FITTINGS SPECIFICATIONS.

PUMPING UNIT TAG REPLACEMENT TABLE (3)

FUNCTION OF PUMP IN LOCATION INDICATED AFTER RENOVATION	PROPOSED EQUIPMENT TAG	EXISTING FUNCTION OF PUMP IN LOCATION INDICATED	EXISTING EQUIPMENT TAG
EXISTING SLUDGE PUMP	STPB-TSLP-1	EXISTING SLUDGE PUMP	TSLP-4
EXISTING SLUDGE PUMP	STPB-TSLP-2	EXISTING SLUDGE PUMP	TSLP-1
EXISTING SLUDGE PUMP	STPB-TSLP-3	EXISTING SLUDGE PUMP	TSLP-2
EXISTING SLUDGE PUMP	STPB-TSLP-4	EXISTING SLUDGE PUMP	TSLP-3
PROPOSED SLUDGE PUMP	STPB-TSLP-5	EXISTING SCUM PUMP	TSCP-1
PROPOSED SLUDGE PUMP	STPB-TSLP-6	EXISTING SCUM PUMP	TSCP-2

K. A. Harutunian
STATE OF TEXAS
K. A. HARUTUNIAN
59181
REGISTERED PROFESSIONAL ENGINEER
4/22/2016

REUSE OF DOCUMENTS

This document, and the designs incorporated herein, is an instrument of professional service that has been developed, designed and prepared by Harutunian Engineering, Inc., and is not to be used, in whole or part, for any other project without giving written notice to Harutunian Engineering, Inc.

REV No	DATE	DRWN	CHKD	REMARKS
1	–	–	–	–

DESIGNED BY: HEI
DRAWN BY: HEI
SHEET CHK'D BY: HEI
CROSS CHK'D BY: HEI
APPROVED BY: HEI
DATE: APRIL 2016

CDM Smith
Riata Corporate Park, 12357-A Riata Trace Parkway, Suite 210
Austin, TX 78727
Tel: (512) 346-1100
Texas Registration Number F-3043

HARUTUNIAN ENGINEERING, INC.
305 E Huntland Dr, Ste 500; Austin, TX 78752
TBPE Firm Registration No. F-2408

CITY OF AUSTIN, TEXAS - AUSTIN WATER UTILITY
CIP 3333.016

SOUTH AUSTIN REGIONAL WWTP
THICKENER IMPROVEMENTS PROJECT

SLUDGE TRANSFER PUMP BUILDING
EQUIPMENT ARRANGEMENT PLAN

PROJECT No 590-104217
FILE NAME: E-29

SHEET No
E-29

Plotted: 4/22/2016 8:49:20 AM

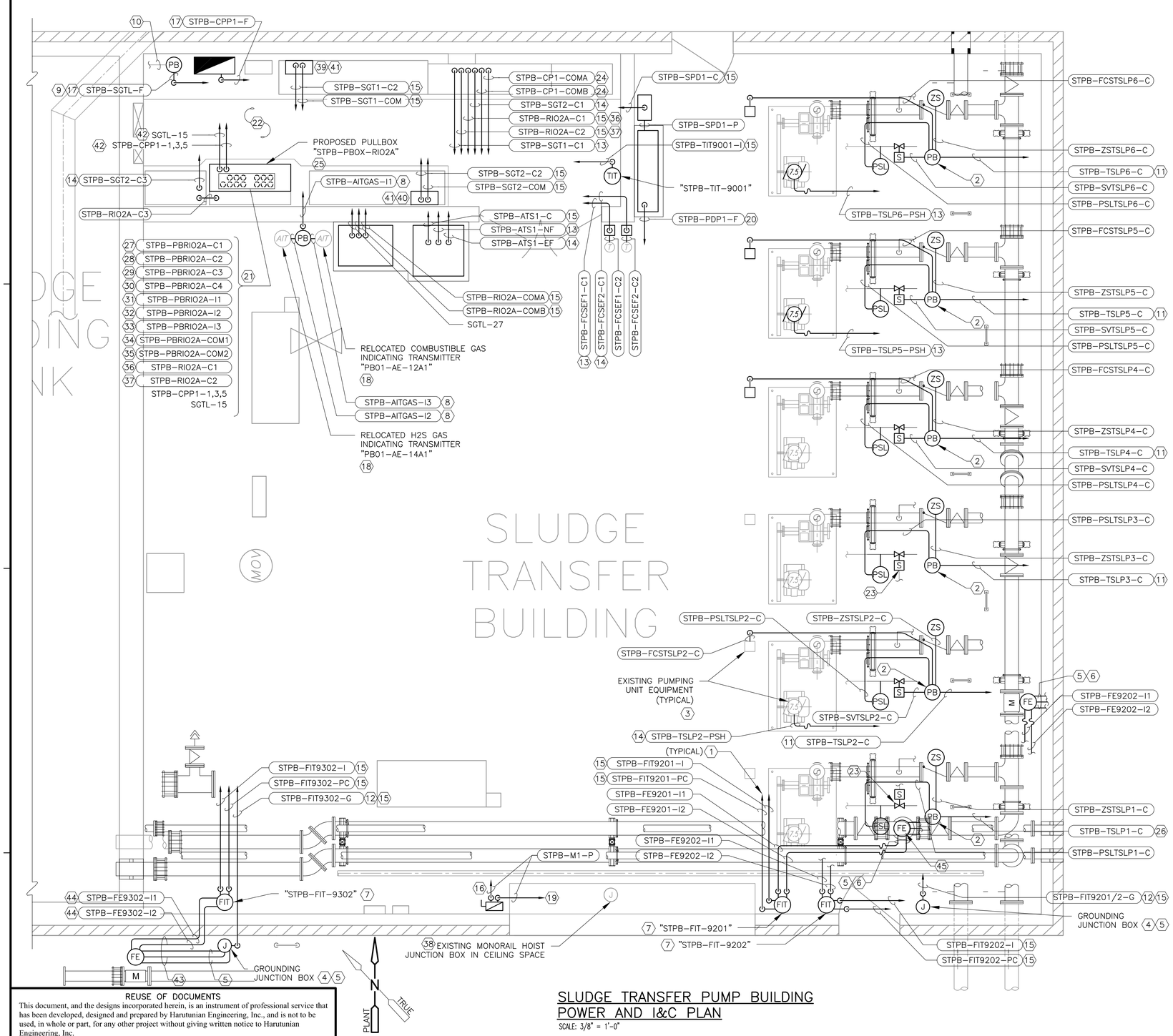

SLUDGE TRANSFER PUMP BUILDING POWER AND I&C PLAN

SCALE: 3/8" = 1'-0"

KEY NOTES:

23. TERMINATE EXISTING CONTROL CONDUIT/WIRE TO PROPOSED PUMPING UNIT CONTROL DEVICES AND MAKE ALL FINAL CONNECTIONS. COORDINATE CONNECTION REQUIREMENTS WITH MANUFACTURER OF PROPOSED EQUIPMENT. COORDINATE LOCATION OF PROPOSED DEVICES WITH PROCESS/MECHANICAL. SHOULD THE EXISTING WIRING BE DAMAGED OR OF INSUFFICIENT LENGTH TO CONNECT TO PROPOSED EQUIPMENT, CONTRACTOR SHALL REMOVE EXISTING WIRING IN ITS ENTIRETY AND FURNISH AND INSTALL NEW WIRING FROM SOURCE TO DESTINATION, WITHOUT SPLICES, AND MAKE ALL FINAL CONNECTIONS.

24. CONDUIT/WIRE CONTINUES TO PROPOSED CONTROL PANEL "STPB-CP-001".

25. REFER TO CONDUIT CORRIDORS ON DRAWING NO. [E-31] FOR ADDITIONAL INFORMATION REGARDING PROPOSED PULLBOX LOCATED ABOVE ELECTRICAL ROOM.

26. CONDUIT/WIRE CONTINUES TO EXISTING CONTROL PANEL "PB01-CCP-03".

27. CONTAINS COMBINED WIRING FROM CONDUITS TAGGED: "GT-CPDMC1-C", "GT-CPDMC2-C", "GT-CPTSCP1-C", "GT-CPTSCP2-C", "GT-CPOCP1A-C"

28. CONTAINS COMBINED WIRING FROM CONDUITS TAGGED: "GT-CPDMC3-C", "GT-CPDMC4-C", "GT-CPTSCP3-C", "GT-CPTSCP4-C", "GT-CPOCP2A-C"

29. CONTAINS COMBINED WIRING FROM CONDUITS TAGGED: "STPB-FIT9201-PC", "STPB-FIT9202-PC", "STPB-FIT9302-PC", "STPB-FIT9201/2-G", "STPB-FIT9302-G"

30. CONTAINS COMBINED WIRING FROM CONDUITS TAGGED: "STPB-ATS1-C", "STPB-SPD1-C", "STPB-SGT1-C2", "STPB-SGT2-C2"

31. CONTAINS COMBINED WIRING FROM CONDUITS TAGGED: "GT-CPTSCP1-I", "GT-CPTSCP2-I"

32. CONTAINS COMBINED WIRING FROM CONDUITS TAGGED: "GT-CPTSCP3-I", "GT-CPTSCP4-I"

33. CONTAINS COMBINED WIRING FROM CONDUITS TAGGED: "STPB-FIT9201-I", "STPB-FIT9202-I", "STPB-FIT9302-I", "STPB-TIT9001-I"

34. CONTAINS COMBINED WIRING FROM CONDUITS TAGGED: "STPB-SGT1-COM", "STPB-SGT2-COM"

35. CONTAINS COMBINED WIRING FROM CONDUITS TAGGED: "STPB-RIO2A-COMA", "STPB-RIO2A-COMB"

36. CONDUIT CONTAINS WIRING ASSOCIATED WITH THICKENED SLUDGE PUMP NOS. 2 AND 3.

37. CONDUIT CONTAINS WIRING ASSOCIATED WITH THICKENED SLUDGE PUMP NOS. 4, 5, AND 6.

38. FIELD VERIFY LOCATION.

39. PROPOSED CONDUITS/WIRE INTERCONNECTING MOTOR CONTROL CENTER AND POWER MONITORING UNIT ENCLOSURE NOT SHOWN HERE FOR CLARITY. CONDUITS ARE TAGGED: "STPB-PMUSGT1-C1", "STPB-PMUSGT1-C2", "STPB-PMUSGT1-C3", "STPB-PMUSGT1-C4"

40. PROPOSED CONDUITS/WIRE INTERCONNECTING MOTOR CONTROL CENTER AND POWER MONITORING UNIT ENCLOSURE NOT SHOWN HERE FOR CLARITY. CONDUITS ARE TAGGED: "STPB-PMUSGT2-C1", "STPB-PMUSGT2-C2", "STPB-PMUSGT2-C3", "STPB-PMUSGT2-C4"

41. FURNISH AND INSTALL GROUND CONDUIT/WIRE AND BOND TO POWER MONITORING UNIT ENCLOSURE AND EXISTING MOTOR CONTROL CENTER GROUND BUS.

42. CONNECT PROPOSED CONTROL POWER AND AUXILIARY POWER RECEPTACLE CIRCUITS AS INDICATED IN PANELBOARD SCHEDULES. FIELD VERIFY EXISTING CIRCUIT(S) IN "RIO2A" FED FROM PANEL "SGTL". RECONNECT CABINET LIGHT, HEATER, AND ALL OTHER EXISTING AUXILIARY POWER LOADS IN "RIO2A" TO EXISTING CIRCUIT(S).

43. MOUNT TO WALL PER DETAIL 1 ON DRAWING [G-E-10].

44. CONDUITS PENETRATE WALL PER DETAIL 6 ON DRAWING NO. [G-E-7] OR DETAIL 6 ON DRAWING NO. [G-E-10] AS APPLICABLE AND PER STRUCTURAL DETAILS.

45. SHOWN FOR CLARITY PURPOSES ONLY. FLOW ELEMENT TO BE INSTALLED IN VERTICAL PIPE. REFER TO MECHANICAL DRAWINGS AND SPECIFICATIONS FOR APPROXIMATE LOCATION.

KEY NOTES:

1. CONDUIT/WIRE CONTINUES IN CONDUIT CORRIDOR. REFER TO CONDUIT CORRIDOR DRAWINGS FOR CONTINUATION. TYPICAL FOR ALL HOMERUNS SHOWN ON THIS SHEET.

2. FURNISH AND INSTALL PULLBOX DEDICATED TO PUMPING UNIT CONTROLS. MOUNT TO FLOOR IN VICINITY INDICATED PER DETAIL 5 ON DRAWING NO. [G-E-11].

3. PUMPING UNIT FIELD CONTROL STATIONS, MOTORS, AND CONTROL DEVICES SHOWN WITH LIGHT LINEWEIGHT ARE EXISTING. COORDINATE CONNECTION REQUIREMENTS WITH EXISTING EQUIPMENT. WHERE INDICATED, FURNISH AND INSTALL PROPOSED CONDUIT/WIRE TO CONNECT TO EXISTING EQUIPMENT AND MAKE ALL FINAL CONNECTIONS.

4. FURNISH AND INSTALL GROUNDING JUNCTION BOX. MOUNT TO WALL PER DETAIL 2 ON DRAWING NO. [G-E-11].

5. FURNISH AND INSTALL #10 AWG INSULATED GROUNDING CONDUCTORS. GROUNDING CONDUCTORS SHALL SPLICE INSIDE JUNCTION BOX AND ROUTE EXPOSED TO FLOW ELEMENT SENSOR HOUSING AND TO EACH SENSOR PIPE GROUND DISK. SECURE/SUPPORT EXPOSED GROUNDING CONDUCTORS TO SUPPORT CHANNELS WITH WIRE TIES. FOLLOW MANUFACTURER'S GROUNDING INSTRUCTIONS.

6. #10 AWG INSULATED GROUNDING CONDUCTORS CONTINUE EXPOSED TO GROUNDING JUNCTION BOX.

7. MOUNT PROPOSED FLOW INDICATING TRANSMITTER TO WALL PER DETAIL 2 ON DRAWING NO. [G-E-11]. REFER TO INSTALLATION DETAIL 2 ON DRAWING NO. [G-I-4] FOR ADDITIONAL REQUIREMENTS.

8. FURNISH AND INSTALL CONDUIT/WIRE BETWEEN RELOCATED GAS DETECTION INSTRUMENTS, EXISTING GAS DETECTION PANEL, AND/OR CONTROL PANEL "RIO2A" AS NECESSARY AND MAKE ALL FINAL TERMINATIONS TO RESTORE GAS TRANSMITTERS TO ORIGINAL FUNCTIONALITY.

9. FURNISH AND INSTALL PULLBOX IN THIS VICINITY. EXTEND FLEX CONDUIT REMAINING FROM DEMOLITION TO PULLBOX. FURNISH AND INSTALL PROPOSED WIRING IN EXISTING AND PROPOSED CONDUITS FROM PROPOSED TRANSFORMER "STPB-XFMR-SGTL" TO EXISTING PANELBOARD "SGTL" AND MAKE ALL FINAL CONNECTIONS.

10. EXISTING CONDUIT EMBEDDED IN SLAB AND WALL CONTINUES TO PANELBOARD "SGTL".

11. CONDUIT/WIRE CONTINUES TO RENOVATED CONTROL PANEL "PB01-CCP-01".

12. TERMINATE FLOW INSTRUMENT GROUND TO GROUND BUS IN "RIO2A".

13. CONDUIT/WIRE CONTINUES TO EXISTING MOTOR CONTROL CENTER "MCC-SGT1".

14. CONDUIT/WIRE CONTINUES TO EXISTING MOTOR CONTROL CENTER "MCC-SGT2".

15. CONDUIT/WIRE CONTINUES TO PROPOSED PULLBOX "STPB-PBOX-RIO2A" LOCATED IN PUMP ROOM CEILING SPACE ABOVE ELECTRICAL ROOM.

16. CONDUIT/WIRE CONTINUES TO PROPOSED POWER DISTRIBUTION PANELBOARD "STPB-PDP-001".

17. CONDUIT/WIRE CONTINUES TO APPLICABLE TRANSFORMER LOCATED OUTSIDE ON NORTH SIDE OF BUILDING. REFER TO DRAWING NO. [E-15].

18. MOUNT EXISTING H2S GAS AND COMBUSTIBLE GAS INDICATING TRANSMITTERS TO WALL AT SAME ELEVATION AS PREVIOUSLY INSTALLED. INSTRUMENTS SHOWN APART FOR CLARITY. COORDINATE LOCATION WITH THE OWNER.

19. CONDUIT/WIRE CONTINUES TO EXISTING MONORAIL HOIST AND RUNWAY CONTACT CONDUCTORS. NOT ALL INTERCONNECTIONS BETWEEN THE MONORAIL COMPONENTS AND DISCONNECT(S) HAVE BEEN SHOWN FOR CLARITY.

20. CONDUIT/WIRE CONTINUES TO PROPOSED AUTOMATIC TRANSFER SWITCH "STPB-ATS-001".

21. MULTIPLE CONDUITS/WIRE COMBINE IN PULLBOX, CONTINUE OUT BOTTOM OF PULLBOX, PENETRATE PROPOSED CONCRETE CEILING, AND TERMINATE AT RENOVATED CONTROL PANEL "RIO2A" IN ELECTRICAL ROOM BELOW. LOCATION OF CONDUITS SHOWN FOR REPRESENTATION ONLY. FIELD VERIFY LOCATIONS OF EXISTING CONDUITS TERMINATING AT TOP OF EXISTING CONTROL PANEL REMAINING FROM DEMOLITION. FIELD ROUTE/LOCATE PROPOSED CONDUITS TO AVOID CONFLICTS.

22. CONDUIT/WIRE HOMERUNS SHALL BE ROUTED ABOVE PROPOSED ELECTRICAL ROOM CEILING. REFER TO CONDUIT CORRIDOR PLAN ON DRAWING NO. [E-31].

GENERAL NOTES:

1. REFER TO CONDUIT CORRIDOR DRAWINGS FOR ADDITIONAL INFORMATION REGARDING ROUTING OF PROPOSED CONDUITS/WIRE.

2. REFER TO ENLARGED FLOOR PLANS ON DRAWING NO. [E-15] FOR ADDITIONAL PROPOSED CONDUIT/WIRE HOMERUNS IN ROUTE TO/FROM EQUIPMENT IN PUMP ROOM AND ELECTRICAL ROOM NOT SHOWN ON THIS SHEET.

REUSE OF DOCUMENTS

This document, and the designs incorporated herein, is an instrument of professional service that has been developed, designed and prepared by Harutunian Engineering, Inc., and is not to be used, in whole or part, for any other project without giving written notice to Harutunian Engineering, Inc.

REV No	DATE	DRWN	CHKD	REMARKS
△	–	–	–	–

DESIGNED BY: HEI
DRAWN BY: HEI
SHEET CHK'D BY: HEI
CROSS CHK'D BY: HEI
APPROVED BY: HEI
DATE: APRIL 2016

CDM Smith
Riata Corporate Park, 12357-A Riata Trace Parkway, Suite 210
Austin, TX 78727
Tel: (512) 346-1100
Texas Registration Number F-3043

HARUTUNIAN ENGINEERING, INC.
305 E Huntland Dr, Ste 500: Austin, TX 78752
TBPE Firm Registration No. F-2408

CITY OF AUSTIN, TEXAS - AUSTIN WATER UTILITY
CIP 3333.016

SOUTH AUSTIN REGIONAL WWTP
THICKENER IMPROVEMENTS PROJECT

SLUDGE TRANSFER PUMP BUILDING
POWER AND I&C PLAN

K. A. HARUTUNIAN
STATE OF TEXAS
K. A. HARUTUNIAN
59181
REGISTERED PROFESSIONAL ENGINEER
4/22/2016

PROJECT No 590-104217
FILE NAME: E-30

SHEET No
E-30

Plotted: 4/22/2016 8:49:26 AM

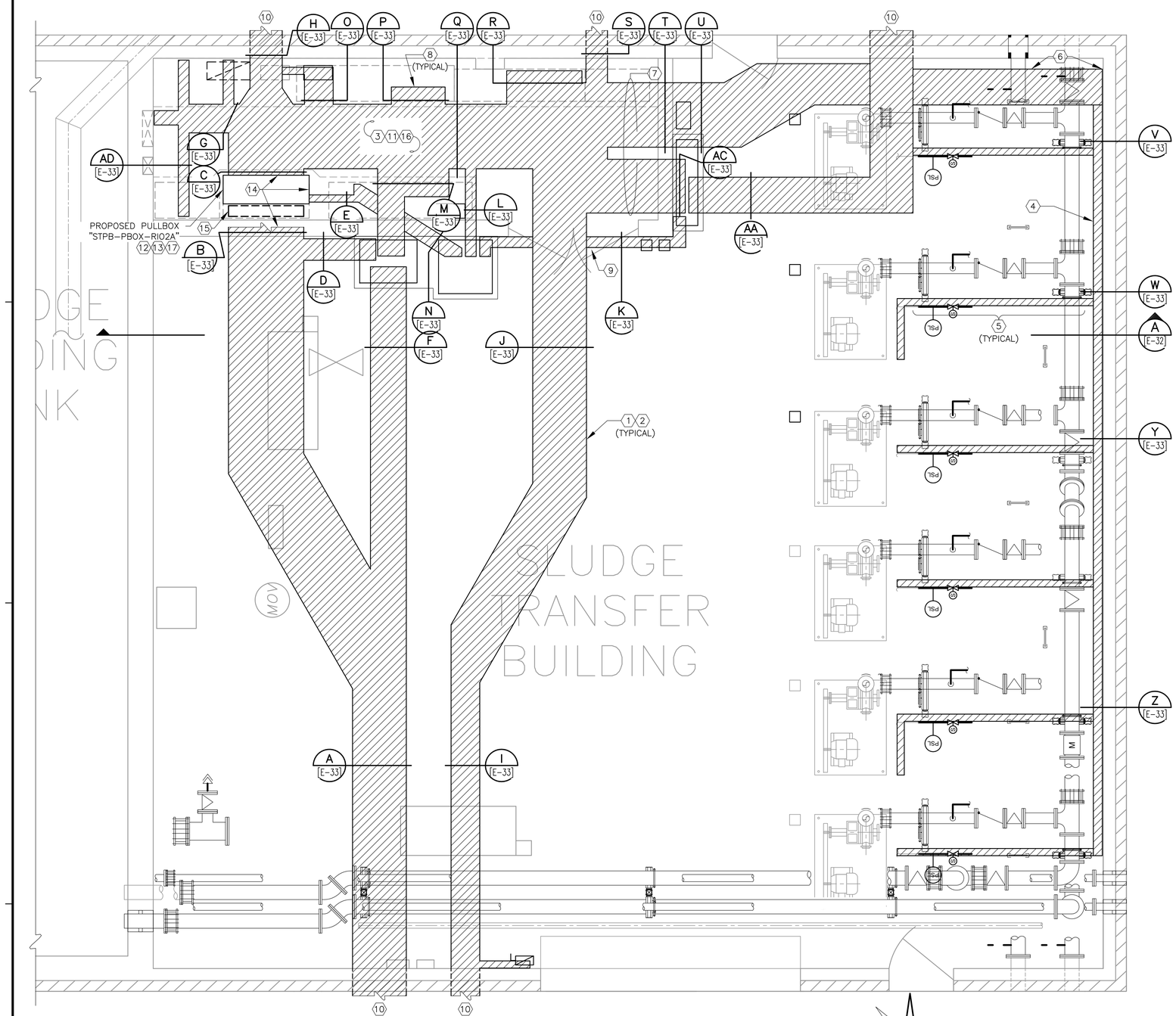

SLUDGE TRANSFER PUMP BUILDING CONDUIT CORRIDOR PLAN

SCALE: 3/8" = 1'-0"

KEY NOTES:

(11) MULTIPLE EXISTING CONDUITS REMAINING FROM DEMOLITION SHALL PENETRATE PROPOSED ELECTRICAL ROOM CONCRETE CEILING. PERFORM PENETRATIONS PER DETAIL 6 ON DRAWING NO. [G-E-7] OR DETAIL 6 ON DRAWING NO. [G-E-10] AS APPLICABLE AND PER STRUCTURAL DETAILS. COORDINATE ALL PENETRATIONS OF EXISTING CONDUITS THROUGH PROPOSED CEILING WITH STRUCTURAL. CONTRACTOR SHALL REFER TO RECORD DRAWINGS, FIELD VERIFY LOCATIONS OF ALL EXISTING CONDUITS THAT SHALL REMAIN, AND COORDINATE WITH CEILING INSTALLATION CONTRACTOR.

(12) FURNISH AND INSTALL PULLBOX DEDICATED TO CONDUITS IN ROUTE TO/FROM EXISTING CONTROL PANEL "RIO2A", SIZED 24"H X 48"W X 16"D. MOUNT PULLBOX TO TOP OF PROPOSED CONCRETE CEILING PER DETAIL 4 ON DRAWING NO. [G-E-8]. PROVIDE BOX WITH DOUBLE DOORS. ORIENT PULLBOX WITH DOORS LOCATED ON NORTH SIDE OF ENCLOSURE, FACING NORTH WALL, TO FACILITATE ACCESS FROM TOP OF ELECTRICAL ROOM CEILING.

(13) LOCATION AND SIZE OF PULLBOX AS SHOWN IS APPROXIMATE. ADJUST SIZE AND POSITIONING TO AVOID CONFLICTS WITH EXISTING CONDUITS LOCATED ALONG ELECTRICAL ROOM WALL, TURNING DOWN INTO EXISTING CONTROL PANEL "RIO2A". FIELD VERIFY LOCATION OF EXISTING CONDUITS PRIOR TO FINAL SIZING AND POSITIONING OF PROPOSED PULLBOX. MAKE ALL ADJUSTMENTS TO INSTALLATION AS REQUIRED AT NO ADDITIONAL COST TO THE OWNER.

(14) CONDUIT BANKS ARE SHOWN TERMINATING ON SIDES OF PULLBOX FOR CLARITY. CONDUIT BANKS SHALL TURN DOWN FROM CEILING JOIST SPACE INTO TOP OF PULLBOX. AT CONTRACTOR DISCRETION, CONDUITS MAY TERMINATE ON BACK AND SIDES OF PULLBOX AS REQUIRED.

(15) EXISTING CONDUITS REMAINING FROM DEMOLITION ARE LOCATED IN THIS VICINITY. CONDUITS TURN DOWN FROM PUMP ROOM CEILING SPACE ABOVE ELECTRICAL ROOM INTO TOP OF EXISTING CONTROL PANEL "RIO2A".

(16) FURNISH AND INSTALL CONDUIT SEALING FITTINGS ON ALL PROPOSED CONDUITS THAT PENETRATE PROPOSED ELECTRICAL ROOM CEILING OR EXISTING ELECTRICAL ROOM WALLS IN ROUTE TO/FROM EQUIPMENT IN ELECTRICAL ROOM. LOCATE SEALING FITTINGS BETWEEN TERMINATION AT EQUIPMENT IN ELECTRICAL ROOM AND LAST PULLBOX/CONDUIT BODY. NO PULL POINTS SHALL EXIST BETWEEN SEAL AND CONDUIT TERMINATION AT EQUIPMENT. SEALS SHALL BE LOCATED IN VERTICAL SEGMENT OF CONDUIT IN PUMP ROOM CEILING SPACE ABOVE ELECTRICAL ROOM WHERE POSSIBLE. SEALS NOT SHOWN ON DRAWING FOR CLARITY.

(17) CONDUITS/WIRE COMBINE IN PULLBOX. PROPOSED CONDUITS EXIT BOTTOM OF PULLBOX, PENETRATE ELECTRICAL ROOM CEILING, AND TERMINATE AT TOP OF EXISTING CONTROL PANEL "RIO2A". REFER TO FLOOR PLAN ON DRAWING NO. [E-30] AND SECTION VIEW ON DRAWING NO. [E-32].

KEY NOTES:

(1) ELEVATION AND CONFIGURATION OF CONDUIT BANKS WILL VARY TO AVOID CONFLICTS AND TO FACILITATE CONNECTION TO EQUIPMENT. FIELD VERIFY LOCATION OF PROPOSED AND EXISTING STRUCTURE, PIPES, CONDUITS, EQUIPMENT, ETC. BEFORE BEGINNING INSTALLATION AND ADJUST INSTALLATION AS REQUIRED. COORDINATE WITH OWNER AND PROCESS/MECHANICAL TO OPTIMIZE WORKING CLEARANCES AND TO AVOID INTERFERENCE BETWEEN SYSTEM COMPONENTS.

(2) SUSPEND PROPOSED CONDUIT BANKS FROM STRUCTURAL CEILING JOISTS PER DETAILS ON DRAWING NO. [G-E-10]. CONDUIT BANKS SHALL BE LOCATED AT AN ELEVATION ABOVE LIGHT FIXTURES UNLESS OTHERWISE NOTED. FIELD VERIFY EXISTING CONDITIONS, ADJUST FINAL LOCATION OF CONDUIT BANKS AND FIELD ROUTE AS REQUIRED.

(3) CONDUIT BANKS IN VICINITY OF ELECTRICAL ROOM ARE LOCATED IN CEILING SPACE OF BUILDING ABOVE PROPOSED ELECTRICAL ROOM CONCRETE CEILING. ELECTRICAL ROOM EQUIPMENT BENEATH CONCRETE CEILING SHOWN FOR CLARITY. CONDUITS ABOVE ELECTRICAL ROOM SHALL BE ROUTED AT AN ELEVATION AS HIGH AS POSSIBLE TO FACILITATE CONNECTIONS TO PROPOSED PULLBOX AND TO AVOID CONFLICTS WITH EXISTING CONDUITS.

(4) MOUNT CONDUIT BANK TO WALL AT AN ELEVATION JUST BELOW EXISTING LOUVERS PER DETAIL 1 ON DRAWING NO. [G-E-10]. OFFSET CONDUITS FROM WALL AS REQUIRED TO AVOID CONFLICTS.

(5) MOUNT CONDUITS TO VERTICAL CONDUIT SUPPORT CHANNELS BETWEEN PUMPING UNIT AND WALL. MOUNT SUPPORT CHANNELS TO FLOOR PER DETAIL 2 ON DRAWING NO. [G-E-10]. ROUTE CONDUITS AT AN ELEVATION BELOW SUCTION PIPE.

(6) CONDUIT BANK TURNS ALONG WALL TO/FROM CEILING SPACE. SUSPEND FROM CEILING JOISTS AT AN ELEVATION ABOVE LIGHT FIXTURES AND JUST BELOW MONORAIL BEAM. ROUTE CONDUITS AWAY FROM EXISTING UNIT HEATER.

(7) ROUTE CONDUITS AT AN ELEVATION JUST BELOW MONORAIL BEAM. CONDUITS TRANSITION TO HIGHER ELEVATION WEST OF MONORAIL BEAM.

(8) CONDUITS IN ROUTE TO/FROM EQUIPMENT IN ELECTRICAL ROOM TURN DOWN FROM CEILING SPACE AND PENETRATE PROPOSED CONCRETE CEILING PER DETAIL 6 ON DRAWING NO. [G-E-7] OR DETAIL 6 ON DRAWING NO. [G-E-10] AS APPLICABLE AND PER STRUCTURAL DETAILS. COORDINATE ALL PENETRATIONS WITH STRUCTURAL.

(9) MOUNT CONDUIT BANK TO WALL OF ELECTRICAL ROOM AT AN ELEVATION ABOVE DOORS PER DETAIL 1 ON DRAWING NO. [G-E-10].

(10) CONDUITS PENETRATE WALL AT AN ELEVATION BELOW PERIMETER STRUCTURAL ROOF BEAM. LOCATION SHOWN IS APPROXIMATE. COORDINATE PENETRATION WITH LOCATION OF ROOF JOISTS AND EXISTING CONDUITS AND ADJUST FINAL POSITIONING AS REQUIRED. PERFORM PENETRATION PER DETAIL 6 ON DRAWING NO. [G-E-7] OR DETAIL 6 ON DRAWING NO. [G-E-10] AS APPLICABLE AND PER STRUCTURAL DETAILS. COORDINATE WITH STRUCTURAL. REFER TO DRAWING NO. [E-15] FOR CONTINUATION.

GENERAL NOTES:

1. EXERCISE EXTREME CARE AND CAUTION WHEN PERFORMING PROPOSED CONDUIT PENETRATIONS OF WALLS AND SLABS. THERE ARE NO AVAILABLE AS BUILT RECORDS IDENTIFYING THE LOCATIONS OF EXISTING CONDUITS/WIRE CONCEALED INSIDE WALLS AND SLABS. REFER TO GENERAL NOTES SHEET AND SPECIFICATIONS FOR ADDITIONAL INFORMATION AND REQUIREMENTS.

2. REFER TO TABLE ON DRAWING NO. [E-33] FOR CONTENTS AND DIMENSIONS OF CORRIDORS.

STATE OF TEXAS
K. A. HARUTUNIAN
59181
REGISTERED PROFESSIONAL ENGINEER
4/22/2016

REUSE OF DOCUMENTS
This document, and the designs incorporated herein, is an instrument of professional service that has been developed, designed and prepared by Harutunian Engineering, Inc., and is not to be used, in whole or part, for any other project without giving written notice to Harutunian Engineering, Inc.

REV No	DATE	DRWN	CHKD	REMARKS
A	–	–	–	–

DESIGNED BY: HEI
DRAWN BY: HEI
SHEET CHK'D BY: HEI
CROSS CHK'D BY: HEI
APPROVED BY: HEI
DATE: APRIL 2016

CDM Smith
Riata Corporate Park, 12357-A Riata Trace Parkway, Suite 210
Austin, TX 78727
Tel: (512) 346-1100
Texas Registration Number F-3043

HARUTUNIAN ENGINEERING, INC.
305 E Huntland Dr, Ste 500; Austin, TX 78752
TBPE Firm Registration No. F-2408

CITY OF AUSTIN, TEXAS - AUSTIN WATER UTILITY
CIP 3333.016

SOUTH AUSTIN REGIONAL WWTP
THICKENER IMPROVEMENTS PROJECT

SLUDGE TRANSFER PUMP BUILDING
CONDUIT CORRIDOR PLAN

PROJECT No 590-104217
FILE NAME: E-31

SHEET No
E-31

Plotted: 4/22/2016 8:49:32 AM

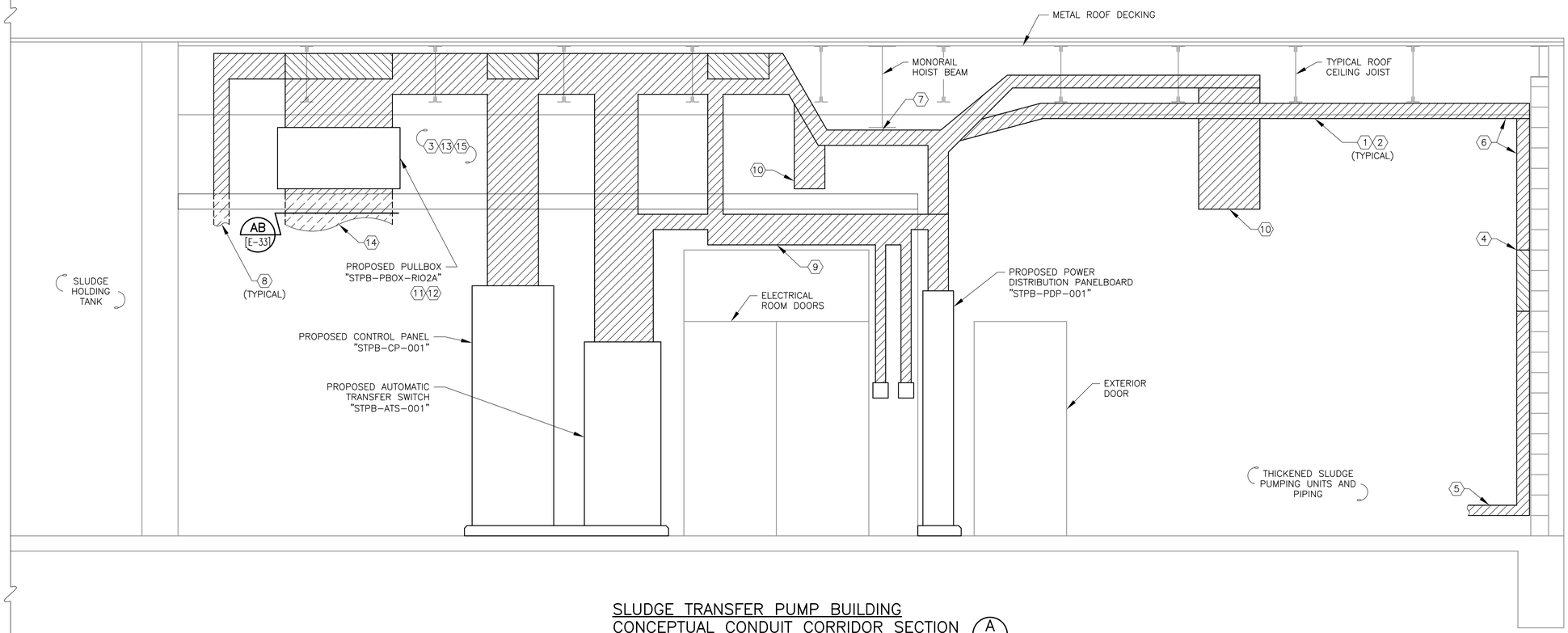

SLUDGE TRANSFER PUMP BUILDING CONCEPTUAL CONDUIT CORRIDOR SECTION

A [E-31]

SCALE: 1/2" = 1'-0"

KEY NOTES:

1. ELEVATION AND CONFIGURATION OF CONDUIT BANKS WILL VARY TO AVOID CONFLICTS AND TO FACILITATE CONNECTION TO EQUIPMENT. FIELD VERIFY LOCATION OF PROPOSED AND EXISTING STRUCTURE, PIPES, CONDUITS, EQUIPMENT, ETC. BEFORE BEGINNING INSTALLATION AND ADJUST INSTALLATION AS REQUIRED. COORDINATE WITH OWNER AND PROCESS/MECHANICAL TO OPTIMIZE WORKING CLEARANCES AND TO AVOID INTERFERENCE BETWEEN SYSTEM COMPONENTS.
2. SUSPEND PROPOSED CONDUIT BANKS FROM STRUCTURAL CEILING JOISTS PER DETAILS ON DRAWING NO. [G-E-10]. CONDUIT BANKS SHALL BE LOCATED AT AN ELEVATION ABOVE LIGHT FIXTURES UNLESS OTHERWISE NOTED. FIELD VERIFY EXISTING CONDITIONS, ADJUST FINAL LOCATION OF CONDUIT BANKS AND FIELD ROUTE AS REQUIRED.
3. CONDUITS ABOVE ELECTRICAL ROOM SHALL BE ROUTED AT AN ELEVATION AS HIGH AS POSSIBLE TO FACILITATE CONNECTIONS TO PROPOSED PULLBOX AND TO AVOID CONFLICTS WITH EXISTING CONDUITS.
4. MOUNT CONDUIT BANK TO WALL AT AN ELEVATION JUST BELOW EXISTING LOUVERS PER DETAIL 1 ON DRAWING NO. [G-E-10]. OFFSET CONDUITS FROM WALL AS REQUIRED TO AVOID CONFLICTS.
5. MOUNT CONDUITS TO VERTICAL CONDUIT SUPPORT CHANNELS BETWEEN PUMPING UNIT AND WALL. MOUNT SUPPORT CHANNELS TO FLOOR PER DETAIL 2 ON DRAWING NO. [G-E-10]. ROUTE CONDUITS AT AN ELEVATION BELOW SUCTION PIPE.
6. CONDUIT BANK TURNS ALONG WALL TO/FROM CEILING SPACE. SUSPEND FROM CEILING JOISTS AT AN ELEVATION ABOVE LIGHT FIXTURES AND JUST BELOW MONORAIL BEAM. ROUTE CONDUITS AWAY FROM EXISTING UNIT HEATER.
7. ROUTE CONDUITS BELOW MONORAIL BEAM.
8. CONDUITS IN ROUTE TO/FROM EQUIPMENT IN ELECTRICAL ROOM PENETRATE PROPOSED CONCRETE CEILING PER DETAIL 6 ON DRAWING NO. [G-E-7] OR DETAIL 6 ON DRAWING NO. [G-E-10] AS APPLICABLE AND PER STRUCTURAL DETAILS. COORDINATE ALL PENETRATIONS WITH STRUCTURAL. NOT ALL REQUIRED PENETRATIONS SHOWN.
9. MOUNT CONDUIT BANK TO WALL OF ELECTRICAL ROOM ABOVE DOORS PER DETAIL 1 ON DRAWING NO. [G-E-10].
10. CONDUITS PENETRATE EXTERIOR WALL. LOCATION SHOWN IS APPROXIMATE. COORDINATE WITH LOCATION OF ROOF JOISTS AND EXISTING CONDUITS AND ADJUST FINAL POSITIONING AS REQUIRED. PERFORM PENETRATION PER DETAIL 6 ON DRAWING NO. [G-E-7] OR DETAIL 6 ON DRAWING NO. [G-E-10] AS APPLICABLE AND PER STRUCTURAL DETAILS.
11. REFER TO CONDUIT CORRIDORS ON DRAWING NO. [E-31] FOR ADDITIONAL INFORMATION REGARDING PROPOSED PULLBOX LOCATED ABOVE ELECTRICAL ROOM.
12. LOCATION AND SIZE OF PULLBOX AS SHOWN IS APPROXIMATE. ADJUST SIZE AND POSITIONING TO AVOID CONFLICTS WITH EXISTING CONDUITS LOCATED ALONG ELECTRICAL ROOM WALL, TURNING DOWN INTO EXISTING CONTROL PANEL "RIO2A". FIELD VERIFY LOCATION OF EXISTING CONDUITS PRIOR TO FINAL SIZING AND POSITIONING OF PROPOSED PULLBOX. MAKE ALL ADJUSTMENTS TO INSTALLATION AS REQUIRED AT NO ADDITIONAL COST TO THE OWNER.
13. FURNISH AND INSTALL CONDUIT SEALING FITTINGS ON ALL PROPOSED CONDUITS THAT PENETRATE PROPOSED ELECTRICAL ROOM CEILING OR EXISTING ELECTRICAL ROOM WALLS IN ROUTE TO/FROM EQUIPMENT IN ELECTRICAL ROOM. LOCATE SEALING FITTINGS BETWEEN TERMINATION AT EQUIPMENT IN ELECTRICAL ROOM AND LAST PULLBOX/CONDUIT BODY. NO PULL POINTS SHALL EXIST BETWEEN SEAL AND CONDUIT TERMINATION AT EQUIPMENT. SEALS SHALL BE LOCATED IN VERTICAL SEGMENT OF CONDUIT IN PUMP ROOM CEILING SPACE ABOVE ELECTRICAL ROOM WHERE POSSIBLE. SEALS NOT SHOWN ON DRAWING FOR CLARITY.
14. CONDUITS/WIRE COMBINE IN PULLBOX. PROPOSED CONDUITS EXIT BOTTOM OF PULLBOX, PENETRATE ELECTRICAL ROOM CEILING, AND TERMINATE AT TOP OF EXISTING CONTROL PANEL "RIO2A". FIELD VERIFY LOCATIONS OF EXISTING CONDUITS REMAINING FROM DEMOLITION TERMINATING AT TOP OF EXISTING CONTROL PANEL. FIELD ROUTE/LOCATE PROPOSED CONDUITS TO AVOID CONFLICTS.
15. MULTIPLE EXISTING CONDUITS REMAINING FROM DEMOLITION SHALL PENETRATE PROPOSED ELECTRICAL ROOM CONCRETE CEILING. PERFORM PENETRATIONS PER DETAIL 6 ON DRAWING NO. [G-E-7] OR DETAIL 6 ON DRAWING NO. [G-E-10] AS APPLICABLE AND PER STRUCTURAL DETAILS. COORDINATE ALL PENETRATIONS OF EXISTING CONDUITS THROUGH PROPOSED CEILING WITH STRUCTURAL. CONTRACTOR SHALL REFER TO RECORD DRAWINGS, FIELD VERIFY LOCATIONS OF ALL EXISTING CONDUITS THAT SHALL REMAIN, AND COORDINATE WITH CEILING INSTALLATION CONTRACTOR.

GENERAL NOTES:

1. EXERCISE EXTREME CARE AND CAUTION WHEN PERFORMING PROPOSED CONDUIT PENETRATIONS OF WALLS AND SLABS. THERE ARE NO AVAILABLE AS BUILT RECORDS IDENTIFYING THE LOCATIONS OF EXISTING CONDUITS/WIRE CONCEALED INSIDE WALLS AND SLABS. REFER TO GENERAL NOTES SHEET AND SPECIFICATIONS FOR ADDITIONAL INFORMATION AND REQUIREMENTS.

REUSE OF DOCUMENTS

This document, and the designs incorporated herein, is an instrument of professional service that has been developed, designed and prepared by Harutunian Engineering, Inc., and is not to be used, in whole or part, for any other project without giving written notice to Harutunian Engineering, Inc.

K. A. HARUTUNIAN — STATE OF TEXAS — K. A. HARUTUNIAN 59181 — REGISTERED PROFESSIONAL ENGINEER — 4/22/2016

REV No	DATE	DRWN	CHKD	REMARKS
1	–	–	–	–

DESIGNED BY: HEI
DRAWN BY: HEI
SHEET CHK'D BY: HEI
CROSS CHK'D BY: HEI
APPROVED BY: HEI
DATE: APRIL 2016

CDM Smith
Riata Corporate Park, 12357-A Riata Trace Parkway, Suite 210
Austin, TX 78727
Tel: (512) 346-1100
Texas Registration Number F-3043

HARUTUNIAN ENGINEERING, INC.
305 E Huntland Dr, Ste 500; Austin, TX 78752
TBPE Firm Registration No. F-2408

CITY OF AUSTIN, TEXAS - AUSTIN WATER UTILITY
CIP 3333.016

SOUTH AUSTIN REGIONAL WWTP
THICKENER IMPROVEMENTS PROJECT

SLUDGE TRANSFER PUMP BUILDING
CONDUIT CORRIDOR
SECTION

PROJECT No 590-104217
FILE NAME: E-32

SHEET No
E-32

Plotted: 4/22/2016 8:49:38 AM

CONDUIT BANK SECTION DIMENSION AND CONTENTS TABLE

LEGEND:

NOTE: DIMENSIONS SHOWN ON TABLE ARE MAXIMUM DIMENSIONS IN INCHES.

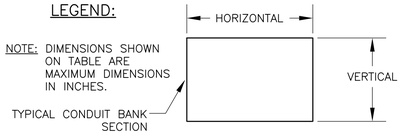

SECTION IDENTIFIER	DRAWING NUMBER	HORIZONTAL (INCHES)	VERTICAL (INCHES)	CONDUIT IDENTIFIERS			
A	[E-31]	30	10	GT-CPDMC3-C GT-CPOCP1A-COMB GT-CPTSCP3-C STPB-FIT9201/2-G STPB-FIT9202-PC	GT-CPDMC4-C GT-CPOCP2A-C GT-CPTSCP3-I STPB-FIT9201-I STPB-FIT9302-G	GT-CPOCP1A-C GT-CPOCP2A-COMA GT-CPTSCP4-C STPB-FIT9201-PC STPB-FIT9302-I	GT-CPOCP1A-COMA GT-CPOCP2A-COMB GT-CPTSCP4-I STPB-FIT9202-I STPB-FIT9302-PC
B	[E-31]	42	10	GT-CPDMC3-C GT-CPTSCP3-C STPB-FIT9201/2-G STPB-FIT9202-PC STPB-RIO2A-COMA	GT-CPDMC4-C GT-CPTSCP3-I STPB-FIT9201-I STPB-FIT9302-G STPB-RIO2A-COMB	GT-CPOCP1A-C GT-CPTSCP4-C STPB-FIT9201-PC STPB-FIT9302-I	GT-CPOCP2A-C GT-CPTSCP4-I STPB-FIT9202-I STPB-FIT9302-PC
C	[E-31]	42	10	GT-CPDMC1-C GT-CPTSCP2-C STPB-RIO2A-C1 STPB-SGT2-C2	GT-CPDMC2-C GT-CPTSCP2-I STPB-RIO2A-C2 STPB-SGT2-COM	GT-CPTSCP1-C SGTL-15 STPB-SGT1-C2 STPB-SPD1-C	GT-CPTSCP1-I STPB-CPP1-1,3,5 STPB-SGT1-COM STPB-TIT9001-I
D	[E-31]	12	5	STPB-RIO2A-COMA	STPB-RIO2A-COMB		
E	[E-31]	4	4	STPB-ATS1-C			
F	[E-31]	20	5	GT-CPOCP1A-COMA	GT-CPOCP1A-COMB	GT-CPOCP2A-COMA	GT-CPOCP2A-COMB
G	[E-31]	16	10	SGTL-15 STPB-SGT2-C3	SGTL-27 STPB-SGTL-F	STPB-CPP1-1,3,5 STPB-TSLP1-C	STPB-CPP1-F
H	[E-31]	18	10	GT-CPDMC1-C GT-CPTSCP2-C	GT-CPDMC2-C GT-CPTSCP2-I	GT-CPTSCP1-C	GT-CPTSCP1-I
I	[E-31]	16	10	GT-CPDMC3-P GT-CPTSCP3-P	GT-CPDMC4-P GT-CPTSCP4-P	GT-CPOCP1A-P GT-MPC1-F	GT-CPOCP2A-P STPB-M1-P
J	[E-31]	30	5	GT-CPDMC3-P GT-CPTSCP3-P	GT-CPDMC4-P GT-CPTSCP4-P	GT-CPOCP1A-P GT-MPC1-F	GT-CPOCP2A-P STPB-M1-P
K	[E-31]	6	12	STPB-FCSEF1-C1	STPB-FCSEF2-C1	STPB-PDP1-F	
L	[E-31]	6	6	STPB-ATS1-NF			
M	[E-31]	40	5	GT-CPOCP2A-P STPB-CP1-COMB STPB-SGT2-C3	SGTL-27 STPB-FCSEF2-C1 STPB-SGT2-COM	STPB-AITGAS-I1 STPB-SGT2-C1 STPB-TSLP2-PSH	STPB-CP1-COMA STPB-SGT2-C2
N	[E-31]	9	6	STPB-ATS1-C	STPB-ATS1-EF		
O	[E-31]	16	4	STPB-AITGAS-I1	STPB-SGT1-C2	STPB-SGT1-COM	
P	[E-31]	30	6	GT-CPOCP1A-P STPB-TSLP5-PSH	STPB-ATS1-NF STPB-TSLP6-PSH	STPB-FCSEF1-C1	STPB-SGT1-C1
Q	[E-31]	36	12	GT-CPOCP1A-P STPB-CP1-COMB STPB-RIO2A-C1 STPB-SGTL-F STPB-TSLP2-PSH	GT-CPOCP2A-P STPB-CPP1-F STPB-RIO2A-C2 STPB-SPD1-C STPB-TSLP5-PSH	STPB-ATS1-NF STPB-FCSEF1-C1 STPB-SGT1-C1 STPB-TIT9001-I STPB-TSLP6-PSH	STPB-CP1-COMA STPB-FCSEF2-C1 STPB-SGT2-C1 STPB-TSLP1-C
R	[E-31]	42	5	STPB-CP1-COMA STPB-SGT1-C1 STPB-TSLP4-C	STPB-CP1-COMB STPB-SGT2-C1 STPB-TSLP5-C	STPB-RIO2A-C1 STPB-TSLP2-C STPB-TSLP6-C	STPB-RIO2A-C2 STPB-TSLP3-C
S	[E-31]	12	5	STPB-CPP1-F	STPB-PCU1-P	STPB-XFMRCPP1-F	
T	[E-31]	36	6	STPB-SGTL-F STPB-TSLP2-PSH STPB-TSLP5-PSH	STPB-SPD1-C STPB-TSLP3-C STPB-TSLP6-C	STPB-TSLP1-C STPB-TSLP4-C STPB-TSLP6-PSH	STPB-TSLP2-C STPB-TSLP5-C
U	[E-31]	36	6	STPB-S STPB-TSLP2-PSH STPB-TSLP5-PSH	GTL-F STPB-TSLP3-C STPB-TSLP6-C	STPB-TSLP1-C STPB-TSLP4-C STPB-TSLP6-PSH	STPB-TSLP2-C STPB-TSLP5-C

CONDUIT BANK SECTION DIMENSION AND CONTENTS TABLE

LEGEND:

NOTE: DIMENSIONS SHOWN ON TABLE ARE MAXIMUM DIMENSIONS IN INCHES.

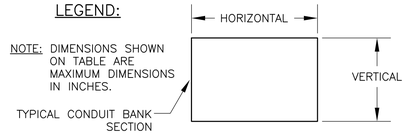

SECTION IDENTIFIER	DRAWING NUMBER	HORIZONTAL (INCHES)	VERTICAL (INCHES)	CONDUIT IDENTIFIERS			
V	[E-31]	5	30	STPB-TSLP1-C STPB-TSLP4-C STPB-TSLP6-PSH	STPB-TSLP2-C STPB-TSLP5-C	STPB-TSLP2-PSH STPB-TSLP5-PSH	STPB-TSLP3-C STPB-TSLP6-C
W	[E-31]	5	24	STPB-TSLP1-C STPB-TSLP4-C	STPB-TSLP2-C STPB-TSLP5-C	STPB-TSLP2-PSH STPB-TSLP5-PSH	STPB-TSLP3-C
Y	[E-31]	5	18	STPB-TSLP1-C STPB-TSLP4-C	STPB-TSLP2-C	STPB-TSLP2-PSH	STPB-TSLP3-C
Z	[E-31]	5	12	STPB-TSLP1-C	STPB-TSLP2-C	STPB-TSLP2-PSH	
AA	[E-31]	20	5	GT-CPDMC1-P STPB-XFMRSGTL-F	GT-CPDMC2-P	GT-CPTSCP1-P	GT-CPTSCP2-P
AB	[E-32]	42	12	SGTL-15 STPB-PBRIO2A-C3 STPB-PBRIO2A-I1 STPB-RIO2A-C2	STPB-CPP1-1,3,5 STPB-PBRIO2A-C4 STPB-PBRIO2A-I2	STPB-PBRIO2A-C1 STPB-PBRIO2A-COM1 STPB-PBRIO2A-I3	STPB-PBRIO2A-C2 STPB-PBRIO2A-COM2 STPB-RIO2A-C1
AC	[E-31]	30	5	GT-CPDMC3-P GT-MPC1-F	GT-CPDMC4-P STPB-M1-P	GT-CPTSCP3-P STPB-PCU1-P	GT-CPTSCP4-P STPB-XFMRCPP1-F
AD	[E-31]	6	4	STPB-SGT2-C3	STPB-TSLP1-C		

GENERAL NOTES:

1. ELEVATION AND CONFIGURATION OF CONDUIT BANKS WILL VARY TO AVOID CONFLICTS AND TO FACILITATE CONNECTION TO EQUIPMENT. FIELD VERIFY LOCATION OF PROPOSED AND EXISTING STRUCTURE, PIPES, CONDUITS, EQUIPMENT, ETC. BEFORE BEGINNING INSTALLATION AND ADJUST INSTALLATION AS REQUIRED. COORDINATE WITH OWNER AND PROCESS/MECHANICAL TO OPTIMIZE WORKING CLEARANCES AND TO AVOID INTERFERENCE BETWEEN SYSTEM COMPONENTS.
2. DIMENSIONS OF CONDUIT BANKS/CORRIDORS AS INDICATED IN THE TABLES ON THIS SHEET MAY VARY. FIELD VERIFY EXISTING CONDITIONS AND ADJUST DIMENSIONS OF CONDUIT BANKS AS REQUIRED AT NO ADDITIONAL COST TO OWNER.

REUSE OF DOCUMENTS

This document, and the designs incorporated herein, is an instrument of professional service that has been developed, designed and prepared by Harutunian Engineering, Inc., and is not to be used, in whole or part, for any other project without giving written notice to Harutunian Engineering, Inc.

STATE OF TEXAS — K. A. HARUTUNIAN — 59181 — REGISTERED PROFESSIONAL ENGINEER — 4/22/2016

REV No	DATE	DRWN	CHKD	REMARKS
△	–	–	–	–

DESIGNED BY: HEI
DRAWN BY: HEI
SHEET CHK'D BY: HEI
CROSS CHK'D BY: HEI
APPROVED BY: HEI
DATE: APRIL 2016

CDM Smith
Riata Corporate Park, 12357-A Riata Trace Parkway, Suite 210
Austin, TX 78727
Tel: (512) 346-1100
Texas Registration Number F-3043

HARUTUNIAN ENGINEERING, INC.
305 E Huntland Dr, Ste 500; Austin, TX 78752
TBPE Firm Registration No. F-2408

CITY OF AUSTIN, TEXAS - AUSTIN WATER UTILITY
CIP 3333.016

SOUTH AUSTIN REGIONAL WWTP
THICKENER IMPROVEMENTS PROJECT

SLUDGE TRANSFER PUMP BUILDING
CONDUIT CORRIDOR SECTIONS
CONTENTS TABLE

PROJECT No 590-104217
FILE NAME: E-33

SHEET No
E-33

Plotted: 4/22/2016 8:49:42 AM

KEY NOTES:

1. FURNISH AND INSTALL LIGHT FIXTURE. SURFACE MOUNT TO BOTTOM OF PROPOSED ELECTRICAL ROOM CEILING PER DETAIL 3 ON DRAWING NO. [G-E-6]. CONTRACTOR SHALL FIELD VERIFY EXISTING BRANCH CIRCUITING, CONDUIT/WIRE, AND SWITCHES ASSOCIATED WITH ELECTRICAL ROOM LIGHTING. FURNISH AND INSTALL CONDUIT/WIRE TO MATCH EXISTING, JUNCTION BOXES, ETC. AS NEEDED TO CONNECT PROPOSED LIGHT FIXTURE TO EXISTING SWITCH AND CIRCUIT AS APPLICABLE. REFER TO RENOVATED PANELBOARD SCHEDULE ON DRAWING NO. [E-10].

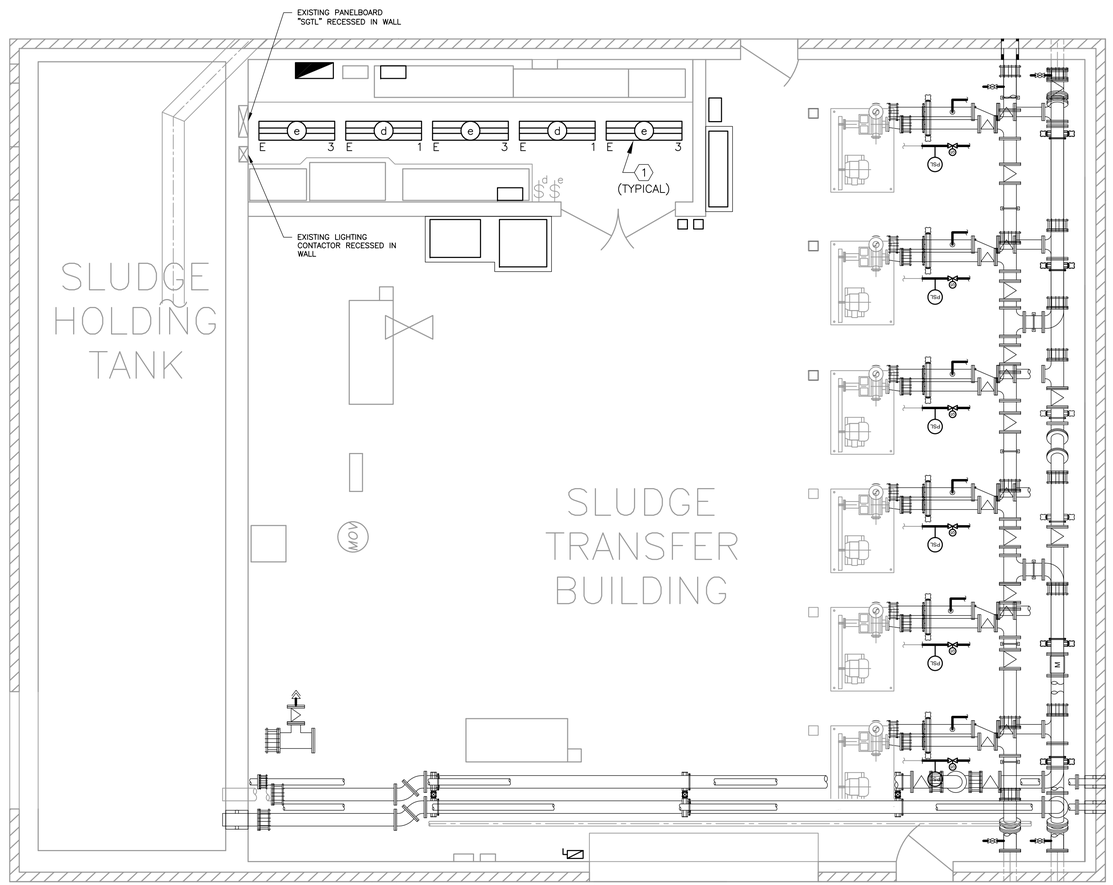

ELECTRICAL ROOM
LIGHTING RENOVATION PLAN
SCALE: 1/4" = 1'-0"

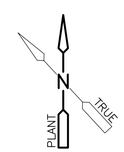

REUSE OF DOCUMENTS
This document, and the designs incorporated herein, is an instrument of professional service that has been developed, designed and prepared by Harutunian Engineering, Inc., and is not to be used, in whole or part, for any other project without giving written notice to Harutunian Engineering, Inc.

REV No	DATE	DRWN	CHKD	REMARKS
△	–	–	–	–

DESIGNED BY: HEI
DRAWN BY: HEI
SHEET CHK'D BY: HEI
CROSS CHK'D BY: HEI
APPROVED BY: HEI
DATE: APRIL 2016

CDM Smith
Riata Corporate Park, 12357-A Riata Trace Parkway, Suite 210
Austin, TX 78727
Tel: (512) 346-1100
Texas Registration Number F-3043

HARUTUNIAN ENGINEERING, INC.
305 E Huntland Dr, Ste 500; Austin, TX 78752
TBPE Firm Registration No. F-2408

CITY OF AUSTIN, TEXAS - AUSTIN WATER UTILITY
CIP 3333.016

SOUTH AUSTIN REGIONAL WWTP
THICKENER IMPROVEMENTS PROJECT

SLUDGE TRANSFER PUMP BUILDING
LIGHTING FLOOR PLAN - RENOVATION

STATE OF TEXAS
K. A. HARUTUNIAN
59181
REGISTERED PROFESSIONAL ENGINEER
4/22/2016

PROJECT No 590-104217
FILE NAME: E-34

SHEET No
E-34

Plotted: 4/22/2016 8:49:47 AM

LIGHTING FIXTURE SCHEDULE

TYPE	LAMP	MANUF./CATALOG NO.	DESCRIPTION
A	LED MINIMUM 6500 LUMENS	LITHONIA (CONTOUR SERIES) #KAD LED 40C 530 40K SR2 208 DF DDBXD OR APPROVED EQUAL	POLE MOUNTED LED LUMINAIRE, SUITABLE FOR OUTDOOR USE. LUMINAIRE SHALL SHALL HAVE ZERO UPLIGHT, AND SHALL BE LISTED AS "NIGHTTIME FRIENDLY", CONSISTENT WITH LEED GOALS FOR LIGHT POLLUTION REDUCTION. TYPE II DISTRIBUTION. POWER FACTOR GREATER THAN OR EQUAL TO 90 PERCENT LAGGING. TOTAL HARMONIC DISTORTION LESS THAN 20 PERCENT. LIGHT ENGINE SHALL HAVE L85 LIFE OF 50,000 HOURS AT MINIMUM IN AMBIENT OF 25 DEGREES C. THE DRIVER SHALL BE FUSED. LED SHALL HAVE MINIMUM CRI OF 65. HOUSING SHALL BE OF CORROSION-RESISTANT CAST COPPER-FREE ALUMINUM, FACTORY SEALED AND GASKETED TO ISOLATE FROM THE ENVIRONMENT. STAINLESS STEEL HARDWARE. POWDER COAT FINISH FOR CORROSION RESISTANCE, DARK BRONZE IN COLOR. DRIVERS/LEDS/BOARDS SHALL BE CAPABLE OF BEING DISCONNECTED FROM FIXTURE AND REPLACED IN THE FIELD. MOLDED ACRYLIC LENS. INTEGRAL ALUMINUM HEAT SINKS. COMPLETE UNIT SHALL COME WITH A 5-YEAR FULL WARRANTY. LUMINAIRE SHALL BE SUITABLE FOR OPERATION IN AMBIENT TEMPERATURES FROM -30°C TO +40°C. LUMINAIRE SHALL BE UL LISTED FOR WET LOCATIONS. FURNISH AND INSTALL DEDICATED POLE COMPLETE WITH ALL ACCESSORIES. FURNISH AND INSTALL ALL REQUIRED LUMINAIRE INSTALLATION ACCESSORIES TO COORDINATE WITH LIGHT POLE. REFER TO LIGHTING PLANS AND DETAILS FOR ADDITIONAL REQUIREMENTS. COORDINATE FINAL LUMINAIRE COLOR WITH THE OWNER AND MATCH COLOR TO POLE.
B	(1) 250W METAL HALIDE (PULSE START)	RIG-A-LITE #SXP 25-H-12-GG-FB/BP/PS/SR40A OR APPROVED EQUAL	POLE MOUNTED 250W PULSE START METAL HALIDE LUMINAIRE, SUITABLE FOR OUTDOOR USE. LUMINAIRE SHALL BE SUITABLE FOR CLASS 1, DIV. 2 ENVIRONMENT. BALLAST HOUSING AND OPTICAL ASSEMBLY SHALL BE FACTORY SEALED/GASKETED TO ISOLATE FROM THE ENVIRONMENT. BALLAST HOUSING WITH MOUNTING SHALL BE OF CAST COPPER FREE ALUMINUM WITH CORROSION-FREE EPOXY POWDER COATING INSIDE AND OUT (NATURAL ALUMINUM) FINISH. BALLAST SHALL BE HIGH POWER FACTOR. GLOBE SHALL BE OF A HIGH IMPACT, HEAT RESISTANT, INTERNALLY PRISMATIC GLASS, WITH STAINLESS STEEL WIRE GUARD. 30° ANGLE REFLECTOR SHALL BE OF KRYDON OR FIBERGLASS FILLED POLYMERIC. THE LAMP SOCKET SHALL BE PORCELAIN IN A MOGUL BASE CONFIGURATION. EXTERNAL HARDWARE SHALL BE OF #316 STAINLESS STEEL. LUMINAIRE SHALL BE SUITABLE FOR OPERATION IN AMBIENT TEMPERATURES FROM -30°C TO +40°C. LUMINAIRE SHALL BE TYPE 4X AND UL LISTED FOR WET LOCATIONS. FURNISH AND INSTALL DEDICATED POLE COMPLETE WITH ALL ACCESSORIES. FURNISH AND INSTALL ALL REQUIRED LUMINAIRE INSTALLATION ACCESSORIES TO COORDINATE WITH LIGHT POLE. REFER TO LIGHTING PLANS AND DETAILS FOR ADDITIONAL REQUIREMENTS. COORDINATE FINAL LUMINAIRE COLOR WITH THE OWNER AND MATCH COLOR TO POLE.
C	LED MINIMUM 5500 LUMENS	COOPER CROUSE-HINDS #VMV 7L P G /UNV1 P3001 S891 OR APPROVED EQUAL	POLE MOUNTED LED LUMINAIRE, SUITABLE FOR OUTDOOR USE. LUMINAIRE SHALL BE SUITABLE FOR CLASS 1, DIV. 2 ENVIRONMENT. LUMINAIRE SHALL SHALL HAVE ZERO UPLIGHT, AND SHALL BE LISTED AS "DARK SKY COMPLIANT", CONSISTENT WITH LEED GOALS FOR LIGHT POLLUTION REDUCTION. TYPE V DISTRIBUTION. POWER FACTOR GREATER THAN OR EQUAL TO 90 PERCENT LAGGING. TOTAL HARMONIC DISTORTION LESS THAN 20 PERCENT. LIGHT ENGINE SHALL HAVE L85 LIFE OF 50,000 HOURS AT MINIMUM IN AMBIENT OF 25 DEGREES C. THE DRIVER SHALL BE FUSED. LED SHALL HAVE MINIMUM CRI OF 65. HOUSING SHALL BE OF CORROSION-RESISTANT CAST COPPER-FREE ALUMINUM, FACTORY SEALED AND GASKETED TO ISOLATE FROM THE ENVIRONMENT. STAINLESS STEEL HARDWARE. POWDER COAT FINISH FOR CORROSION RESISTANCE, DARK BRONZE IN COLOR. DRIVERS/LEDS/BOARDS SHALL BE CAPABLE OF BEING DISCONNECTED FROM FIXTURE AND REPLACED IN THE FIELD. HEAT AND IMPACT RESISTANT DIFFUSED LENS. COMPLETE UNIT SHALL COME WITH A 5-YEAR FULL WARRANTY. LUMINAIRE SHALL BE SUITABLE FOR OPERATION IN AMBIENT TEMPERATURES FROM -30°C TO +40°C. LUMINAIRE SHALL BE TYPE 4X AND UL LISTED FOR WET LOCATIONS, RATED NEMA 4X. FURNISH AND INSTALL DEDICATED POLE COMPLETE WITH ALL ACCESSORIES. FURNISH AND INSTALL ALL REQUIRED LUMINAIRE INSTALLATION ACCESSORIES TO COORDINATE WITH LIGHT POLE. REFER TO LIGHTING PLANS AND DETAILS FOR ADDITIONAL REQUIREMENTS. COORDINATE FINAL LUMINAIRE COLOR WITH THE OWNER AND MATCH COLOR TO POLE.
D	(1) 175W METAL HALIDE (PULSE START) AND (1) 150W QUARTZ	APPLETON CODE MASTER 2 #CPC1710 -E -G -MT CGL250 CGU2 CF-5 OR APPROVED EQUAL	CEILING MOUNTED 175W PULSE START METAL HALIDE LUMINAIRE. LUMINAIRE SHALL BE SUITABLE FOR CLASS 1, DIV. 1, GROUP D ENVIRONMENT. BALLAST HOUSING AND OPTICAL ASSEMBLY SHALL BE FACTORY SEALED/GASKETED TO ISOLATE FROM THE ENVIRONMENT. BALLAST HOUSING WITH MOUNTING SHALL BE OF CAST COPPER FREE ALUMINUM WITH CORROSION-FREE EPOXY POWDER COATING INSIDE AND OUT (NATURAL ALUMINUM) FINISH. BALLAST SHALL BE MULTI-TAP VOLTAGE AND HIGH POWER FACTOR. GLOBE SHALL BE OF A HIGH IMPACT, HEAT RESISTANT, INTERNALLY PRISMATIC GLASS, WITH STAINLESS STEEL WIRE GUARD. THE LAMP SOCKET SHALL BE PORCELAIN IN A MOGUL BASE CONFIGURATION. EMERGENCY QUARTZ LAMP AND SOCKET. FUSING KIT. EXTERNAL HARDWARE SHALL BE OF #316 STAINLESS STEEL. LUMINAIRE SHALL BE SUITABLE FOR OPERATION IN AMBIENT TEMPERATURES FROM -30°C TO +40°C. LUMINAIRE SHALL BE TYPE 4X AND UL LISTED FOR WET LOCATIONS. FURNISH AND INSTALL ALL REQUIRED LUMINAIRE INSTALLATION ACCESSORIES TO COORDINATE WITH CEILING MOUNTING. REFER TO LIGHTING PLANS AND DETAILS FOR ADDITIONAL REQUIREMENTS.
E	(2) GE #F32 T8 cool white rapid start	COLUMBIA #KL4-232-VR-EU-PAF OR APPROVED EQUAL	CEILING MOUNTED 48" 2 LAMP FLUORESCENT RAPID START INDUSTRIAL LUMINAIRE. HOUSING AND REFLECTOR SHALL BE FORMED FROM COLD ROLLED STEEL. DIE-EMBOSSED REFLECTOR REFLECTOR WITH DEEP "V" CHANNEL SHIELDING AND TRANSVERSE RIBS FOR RIGIDITY. SLOTS IN TOP OF REFLECTOR SHALL PROVIDE 10% TO 20% UPLIGHT. BALLAST SHALL BE UNIVERSAL VOLTAGE, RAPID START, ELECTRONIC TYPE. BALLAST SHALL BE HIGH POWER FACTOR, <20% THD, THERMALLY PROTECTED, AUTO RESETTING. METAL HOUSING AND REFLECTOR SHALL BE TREATED WITH FIVE STAGE PHOSPHATE BONDING PROCESS FOR PAINT ADHESION AND RUST RESISTANCE. HIGH REFLECTANCE BAKED WHITE ENAMEL FINISH. LUMINAIRE SHALL BE SUITABLE FOR OPERATION IN AMBIENT TEMPERATURES FROM 0°F. LUMINAIRE SHALL BE UL LISTED FOR DAMP LOCATIONS. FURNISH AND INSTALL ALL REQUIRED LUMINAIRE INSTALLATION ACCESSORIES TO COORDINATE WITH CEILING MOUNTING. REFER TO LIGHTING PLANS AND DETAILS FOR ADDITIONAL REQUIREMENTS.

REUSE OF DOCUMENTS

This document, and the designs incorporated herein, is an instrument of professional service that has been developed, designed and prepared by Harutunian Engineering, Inc., and is not to be used, in whole or part, for any other project without giving written notice to Harutunian Engineering, Inc.

REV No	DATE	DRWN	CHKD	REMARKS
1	–	–	–	–

DESIGNED BY: HEI
DRAWN BY: HEI
SHEET CHK'D BY: HEI
CROSS CHK'D BY: HEI
APPROVED BY: HEI
DATE: APRIL 2016

CDM Smith
Riata Corporate Park, 12357-A Riata Trace Parkway, Suite 210
Austin, TX 78727
Tel: (512) 346-1100
Texas Registration Number F-3043

HARUTUNIAN ENGINEERING, INC.
305 E Huntland Dr, Ste 500; Austin, TX 78752
TBPE Firm Registration No. F-2408

CITY OF AUSTIN, TEXAS - AUSTIN WATER UTILITY
CIP 3333.016

SOUTH AUSTIN REGIONAL WWTP
THICKENER IMPROVEMENTS PROJECT

LIGHT FIXTURE SCHEDULE

K. A. Harutunian
STATE OF TEXAS
K. A. HARUTUNIAN
59181
REGISTERED
PROFESSIONAL ENGINEER
4/22/2016

PROJECT No 590-104217
FILE NAME: E-35

SHEET No
E-35

Plotted: 4/22/2016 9:29:05 AM

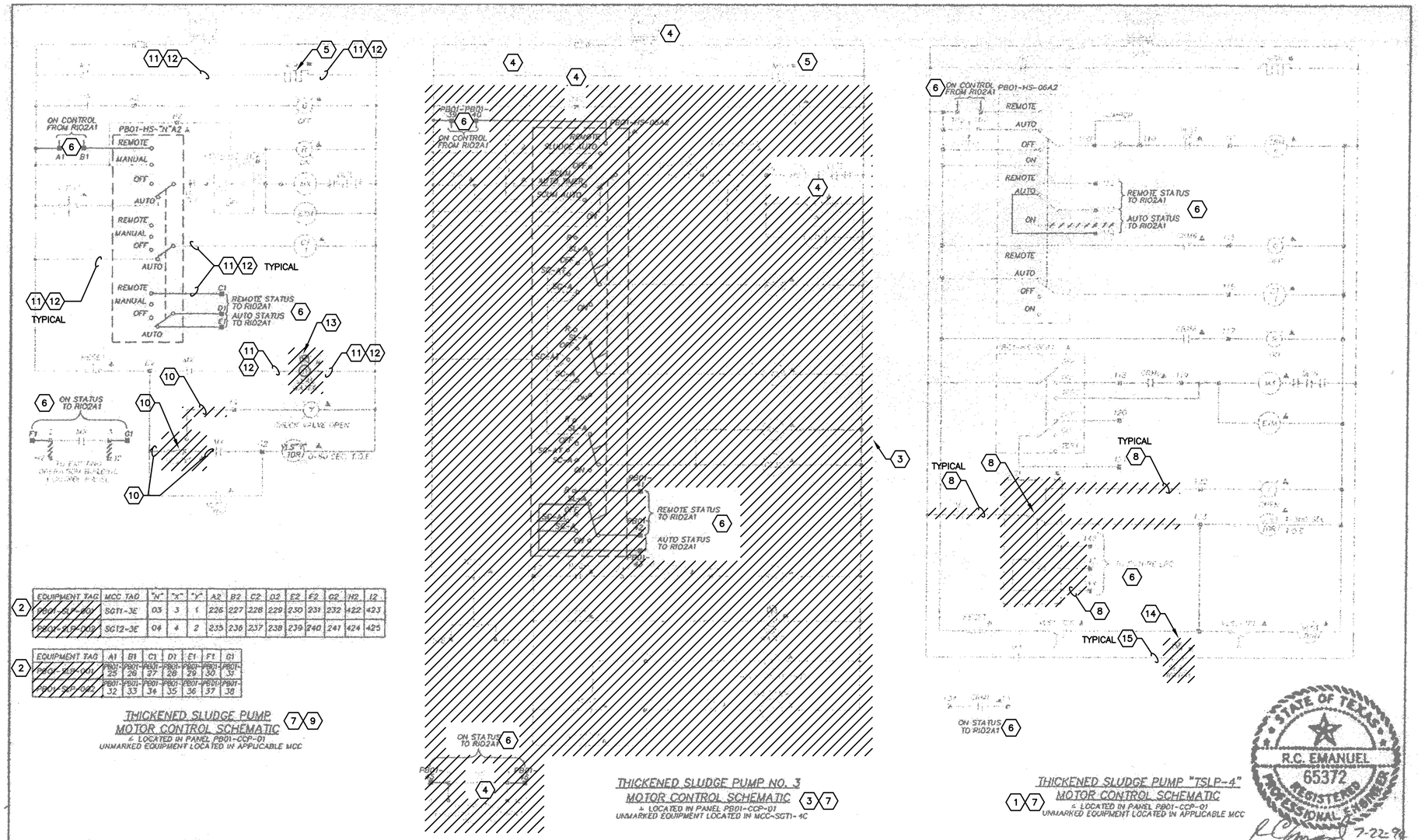

EQUIPMENT TAG	MCC TAG	"N"	"X"	"Y"	A2	B2	C2	D2	E2	F2	G2	H2	I2
PB01-SLP-4DV	SGT1-3E	03	3	1	226	227	228	229	230	231	232	422	423
PB01-SLP-5DV	SGT2-3E	04	4	2	235	236	237	238	239	240	241	424	425

EQUIPMENT TAG	A1	B1	C1	D1	E1	F1	G1
PB01-SLP-1DV	PB01-25	PB01-26	PB01-27	PB01-28	PB01-29	PB01-30	PB01-31
PB01-SLP-2DV	PB01-32	PB01-33	PB01-34	PB01-35	PB01-36	PB01-37	PB01-38

THICKENED SLUDGE PUMP MOTOR CONTROL SCHEMATIC (7)(9)
± LOCATED IN PANEL PB01-CCP-01
UNMARKED EQUIPMENT LOCATED IN APPLICABLE MCC

THICKENED SLUDGE PUMP NO. 3 MOTOR CONTROL SCHEMATIC (3)(7)
± LOCATED IN PANEL PB01-CCP-01
UNMARKED EQUIPMENT LOCATED IN MCC-SGT1-4C

THICKENED SLUDGE PUMP "TSLP-4" MOTOR CONTROL SCHEMATIC (1)(7)
± LOCATED IN PANEL PB01-CCP-01
UNMARKED EQUIPMENT LOCATED IN APPLICABLE MCC

STATE OF TEXAS
R.C. EMANUEL
65372
REGISTERED PROFESSIONAL ENGINEER
7-22-96

KEY NOTES:

1. THE CONTROL LOGIC SHOWN ON THIS DRAWING IS FOR EXISTING SLUDGE PUMPS NO. 4, "TSLP-4". DISCONNECT AND REMOVE EXISTING SOLENOID VALVES, CHECK VALVE LIMIT SWITCHES, AND LOW PRESSURE SWITCHES FOR SLUDGE PUMP NO. 4. THE DISCONNECT INSTRUMENTATION AND DEVICE SHALL BE REPLACED WITH NEW DURING RENOVATION ACTIVITIES. REFER TO DEMOLITION ONE-LINE DIAGRAMS AND DEMOLITION FLOOR PLAN DRAWINGS FOR ADDITIONAL INFORMATION.
2. THE DEVICE IDENTIFICATION TABLE SHOWN ON THIS DRAWING IS ASSOCIATED WITH THE THICKENED SLUDGE PUMP NO. 1 AND NO. 2, "TSLP-1" AND "TSLP-2".
3. THE EXISTING WIRING SCHEMATIC IS SHOWN FOR THICKENED SLUDGE PUMP/SCUM PUMP NO. 3, "TSLP-3". DISCONNECT AND REMOVE EXISTING THICKENED SLUDGE/SCUM PUMP CONTROL LOGIC IN ITS ENTIRETY INCLUDING THE SEAL WATER SOLENOID VALVE, THE CHECK VALVE LIMIT SWITCHES, PRESSURE SWITCH, AND FIELD CONTROL STATION. DISCONNECT AND REMOVE ALL CONTROL DEVICES LOCATED ON THE FACE OF EXISTING CONTROL PANEL "PB01-CCP-01" AND ALL CONTROL DEVICES/WIRING LOCATED ON THE BACKPLANE OF THE EXISTING CONTROL PANEL. EXISTING MOTOR STARTER LOCATED IN EXISTING MOTOR CONTROL CENTER AND THE EXISTING PUMP MOTOR ASSEMBLY SHALL REMAIN AND BE REUSED DURING RENOVATION ACTIVITIES. REFER TO DEMOLITION ONE-LINE DIAGRAM, DEMOLITION FLOOR PLAN DRAWINGS, RENOVATION SLUDGE PUMP NO. 3, 5, AND 6 CONTROL WIRING SCHEMATICS, DEMOLITION FRONT/INTERIOR CONTROL PANEL ELEVATION DRAWINGS FOR ADDITIONAL INFORMATION.
4. THE EXISTING MOTOR STARTER WHICH INCLUDES THE CONTROL POWER TRANSFORMER, MOTOR STARTER COIL, AUXILIARY CONTACTS, TERMINAL BLOCKS, AND AN OVERLOAD RELAY SHALL REMAIN IN THE EXISTING MOTOR CONTROL CENTER AND BE REUSED DURING RENOVATION ACTIVITIES.
5. THE EXISTING MOTOR SPACE HEATER SHALL REMAIN AND BE REUSED DURING RENOVATION ACTIVITIES.
6. MODIFY EXISTING COMPONENTS AND PLC REMOTE I/O MODULES WITHIN EXISTING PLC REMOTE I/O CONTROL PANEL "RIO-2A" AS INDICATED ON THE CONTROL PANEL DEMOLITION AND RENOVATION DRAWINGS. PLEASE NOTE THAT MODIFICATION REQUIREMENTS FOR EQUIPMENT WITHIN THE EXISTING CONTROL PANEL "RIO-2A" ARE NOT SHOWN ON THIS DRAWING FOR CLARITY. REFER TO CONTROL PANEL, "RIO-2A" DEMOLITION AND RENOVATION DESIGN DRAWINGS FOR ADDITIONAL INFORMATION AND REQUIREMENTS.
7. CONTRACTOR SHALL BE AWARE THAT HIGH AND LOW PRESSURE SWITCHES WERE ADDED TO THE EXISTING SLUDGE/SCUM PUMPING UNITS WITHIN THE SLUDGE TRANSFER BUILDING IN A DIFFERENT PROJECT ENTITLED "SOUTH AUSTIN REGIONAL CONTROL AND INSTRUMENTATION IMPROVEMENTS PROJECT" DATED AUGUST 1994 AS SHOWN ON DEMOLITION DRAWING NO. [I-8] AND REFERENCE DRAWING NO. [E-66]. PLEASE NOTE THAT THE EXISTING PRESSURE SWITCHES ARE NOT SHOWN ON THIS CONTROL LOGIC SCHEMATIC. CONTRACTOR SHALL DISCONNECT AND REMOVE EXISTING PRESSURE SWITCHES AND ASSOCIATED CONDUIT AND WIRE FOR ALL EXISTING SLUDGE AND SCUM PUMPING UNITS AS INDICATED ON DEMOLITION DRAWING NO. [I-8]. NEW PRESSURE SWITCHES SHALL BE PROVIDED DURING RENOVATION ACTIVITIES.
8. FOR SLUDGE PUMP NO. 4, "TSLP-4", DISCONNECT AND REMOVE CHECK VALVE LIMIT SWITCHES AND ASSOCIATED CONDUIT/WIRE IN ITS ENTIRETY INCLUDING CONDUIT/WIRE ROUTING TO EXISTING PLC REMOTE I/O CONTROL PANEL "RIO-2A" AS SHOWN.
9. THE CONTROL LOGIC SHOWN ON THIS DRAWING IS TYPICAL FOR EXISTING SLUDGE PUMPS NO. 1 AND 2, "TSLP-1" AND "TSLP-2". DISCONNECT AND REMOVE EXISTING SOLENOID VALVES, CHECK VALVE LIMIT SWITCHES, AND LOW PRESSURE SWITCHES FOR EACH SLUDGE PUMP. THE DISCONNECT INSTRUMENTATION AND DEVICE SHALL BE REPLACED WITH NEW DURING RENOVATION ACTIVITIES. REFER TO DEMOLITION ONE-LINE DIAGRAMS AND DEMOLITION FLOOR PLAN DRAWINGS FOR ADDITIONAL INFORMATION.
10. FOR SLUDGE PUMP NO. 1 AND 2, DISCONNECT AND REMOVE CHECK VALVE LIMIT SWITCHES AND ASSOCIATED CONDUIT/WIRE IN ITS ENTIRETY.
11. FOR SLUDGE PUMP NO. 1, DISCONNECT AND REMOVE POWER AND CONTROLS CONDUIT/WIRE ROUTING FROM MOTOR CONTROL CENTER TO FIELD MOUNTED DEVICES (I.E. FIELD CONTROL STATION, SOLENOID VALVE, MOTOR, MOTOR SPACE HEATER, ETC.) IN THEIR ENTIRETY. REFER TO DEMOLITION FLOOR PLAN DRAWINGS FOR ADDITIONAL INFORMATION.
12. FOR SLUDGE PUMP NO. 2, DISCONNECT EXISTING CONDUIT AND WIRE CONNECTED TO THE EXISTING SOLENOID VALVE., EXISTING CONDUIT/WIRE SHALL BE REUSED DURING RENOVATION ACTIVITIES. EXISTING CONDUIT/WIRE ROUTED TO MOTOR, MOTOR SPACE HEATER, AND FIELD CONTROL STATION SHALL REMAIN. REFER TO DEMOLITION FLOOR PLAN DRAWINGS FOR ADDITIONAL INFORMATION.
13. FOR SLUDGE PUMP NO. 1 AND 2, DISCONNECT AND REMOVE EXISTING SOLENOID VALVE IN IT'S ENTIRETY. THE DISCONNECTED INSTRUMENTATION AND DEVICE SHALL BE REPLACED WITH NEW DURING RENOVATION ACTIVITIES.
14. FOR SLUDGE PUMP NO. 4, "TSLP-4". DISCONNECT AND REMOVE EXISTING SOLENOID VALVE IN IT'S ENTIRETY. THE DISCONNECTED INSTRUMENTATION AND DEVICE SHALL BE REPLACED WITH NEW DURING RENOVATION ACTIVITIES.
15. FOR SLUDGE PUMP NO. 4, "TSLP-4", DISCONNECT AND WIRE CONNECTED TO THE EXISTING SOLENOID VALVE., EXISTING CONDUIT/WIRE SHALL BE REUSED DURING RENOVATION ACTIVITIES. EXISTING CONDUIT/WIRE ROUTED TO MOTOR, MOTOR SPACE HEATER, AND FIELD CONTROL STATION SHALL REMAIN.

SOUTH AUSTIN REGIONAL WASTEWATER TREATMENT PLANT
CITY OF AUSTIN, TEXAS

CH2MHILL

DSGN L. TRIPP, T. VEGA
DR E. KRISTEL, L. TRIPP
CHK R. WILLIAMS
APVD R. EMANUEL

NO.	DATE	REVISION	BY	APVD

REUSE OF DOCUMENTS
THIS DOCUMENT, AND THE IDEAS AND DESIGNS INCORPORATED HEREIN, AS AN INSTRUMENT OF PROFESSIONAL SERVICE, IS THE PROPERTY OF CH2M HILL AND IS NOT TO BE USED, IN WHOLE OR IN PART, FOR ANY OTHER PROJECT WITHOUT THE WRITTEN AUTHORIZATION OF CH2M HILL.
©CH2MHILL

BAR IS ONE INCH ON ORIGINAL DRAWING
0 1"
IF NOT ONE INCH ON THIS SHEET, ADJUST SCALES ACCORDINGLY

LADDER LOGIC DIAGRAM
THICKENED SCUM PUMPS AND SLUDGE TRANSFER PUMP CONTROL SCHEMATIC

SHEET
DWG NO. E-PB01-01
DATE JULY 1994
PROJ NO. TEX30930.02

GRAVITY THICKENERS & SLUDGE TRANSFER BUILDING EQUIPMENT CONTROL SCHEMATICS– DEMOLITION (1) [E-58]
SCALE: NONE

GENERAL NOTES:

1. THE EXISTING EQUIPMENT IS IN WORKING CONDITION. IF ANY OF THE EXISTING EQUIPMENT/ COMPONENTS WHICH SHALL BE REUSED IS DAMAGED OR STOPS FUNCTIONING CORRECTLY, THE CONTRACTOR IS RESPONSIBLE FOR FURNISHING AND INSTALLING NEW EQUIPMENT/ COMPONENTS AS APPROVED BY THE OWNER AND MAKE ALL FINAL TERMINATIONS AT NO ADDITIONAL COST TO THE OWNER.
2. IT IS THE RESPONSIBILITY OF THE CONTRACTOR TO BECOME INTIMATELY FAMILIAR WITH THE FUNCTION, OPERATION AND ASSOCIATED INTERLOCKS FOR EXISTING PUMPS "TSLP-1", "TSLP-2" AND "TSLP-4", AS APPLICABLE, ALONG WITH THE ASSOCIATED CHECK VALVE LIMIT SWITCHES, SEAL WATER PRESSURE SWITCH, SOLENOID VALVE, FIELD CONTROL STATION PRIOR TO COMMENCING MODIFICATION/ DEMOLITION/RENOVATION ACTIVITIES. CONTRACTOR SHALL FIELD VERIFY AND DENOTE ALL INTERCONNECT CONDUIT/WIRING AND THE TERMINATIONS OF INTERCONNECT WIRING BETWEEN THE DIFFERENT ENCLOSURES (I.E MOTOR CONTROL CENTER, CONTROL PANEL, PLC ENCLOSURE, ETC.) AND PUMPING UNIT EQUIPMENT PRIOR TO COMMENCING MODIFICATION/DEMOLTIION ACTIVITIES, THE CONTRACTOR SHALL EXERCISE EXTREME CARE IN THE DEMOLITION OF THE FIELD MOUNTED EQUIPMENT AS SHOWN ON THE DEMOLITION DRAWINGS FOR EXISTING PUMPS "TSLP-1", "TSLP-2" AND "TSLP-4", AND DEMOLITION OF INTERCONNECT CONDUIT/WIRE AS INDICATED ON THE DEMOLITION ONE-LINE DIAGRAMS AND DEMOLITION FLOOR PLAN DRAWINGS. CONTRACTOR SHALL CAREFULLY DOCUMENT THE OPERATIONS OF PUMPING UNITS, FIELD WIRING TERMINATION POINTS, EXISTING PUMP FIELD MOUNTED EQUIPMENT AND ITS INTERCONNECTION WITH THE EXISTING MOTOR CONTROL CENTER, EXISTING CONTROL PANEL, EXISTING PLC ENCLOSURE, ETC., AND ASSOCIATED INTERLOCKS SUCH TO ENSURE THAT THE PROPOSED REPLACEMENT FIELD DEVICES (I.E. SOLENOID VALVES, PRESSURE SWITCH, AND LIMIT SWITCHES) AND PROPOSED INTERCONNECT CONDUIT/WIRE FOR EACH PUMPING UNIT FUNCTIONS COMMENSURABLY TO THAT OF THE EXISTING PUMPING UNITS TO THE SATISFACTION OF THE OWNER AND THE ENGINEER AT NO ADDITIONAL COST TO THE OWNER.

K. A. HARUTUNIAN
STATE OF TEXAS
K. A. HARUTUNIAN
59181
REGISTERED PROFESSIONAL ENGINEER
4/22/2016

REUSE OF DOCUMENTS
This document, and the designs incorporated herein, is an instrument of professional service that has been developed, designed and prepared by Harutunian Engineering, Inc., and is not to be used, in whole or part, for any other project without giving written notice to Harutunian Engineering, Inc.

REV No	DATE	DRWN	CHKD	REMARKS
△	–	–	–	–

DESIGNED BY: HEI
DRAWN BY: HEI
SHEET CHK'D BY: HEI
CROSS CHK'D BY: HEI
APPROVED BY: HEI
DATE: APRIL 2016

CDM Smith
Riata Corporate Park, 12357-A Riata Trace Parkway, Suite 210
Austin, TX 78727
Tel: (512) 346-1100
Texas Registration Number F-3043

HEI
HARUTUNIAN ENGINEERING, INC.
305 E Huntland Dr, Ste 500; Austin, TX 78752
TBPE Firm Registration No. F-2408

CITY OF AUSTIN, TEXAS - AUSTIN WATER UTILITY
CIP 3333.016

SOUTH AUSTIN REGIONAL WWTP
THICKENER IMPROVEMENTS PROJECT

CONTROL WIRING SCHEMATIC
DEMOLITION
(SHEET 1 OF 8)

PROJECT No 590-104217
FILE NAME: E-36

SHEET No
E-36

Plotted: 6/30/2016 11:44:25 AM

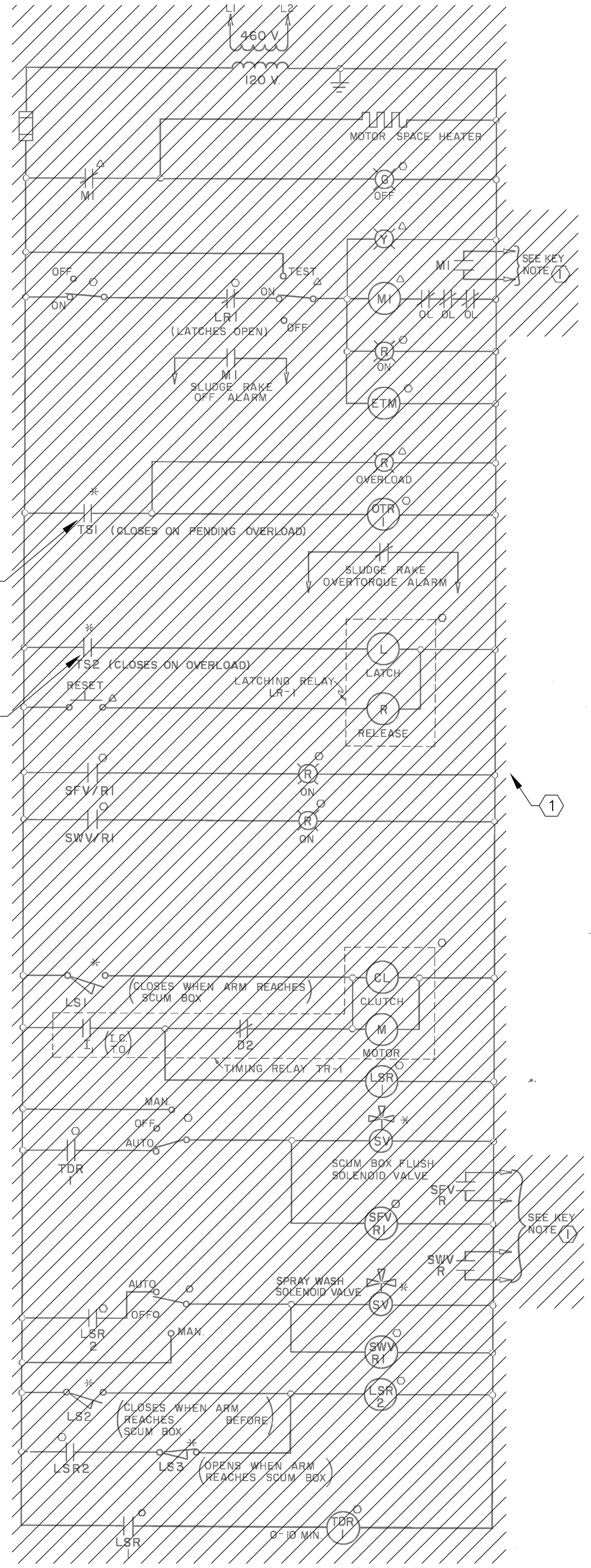

SLUDGE THICKENER CONTROL (1)

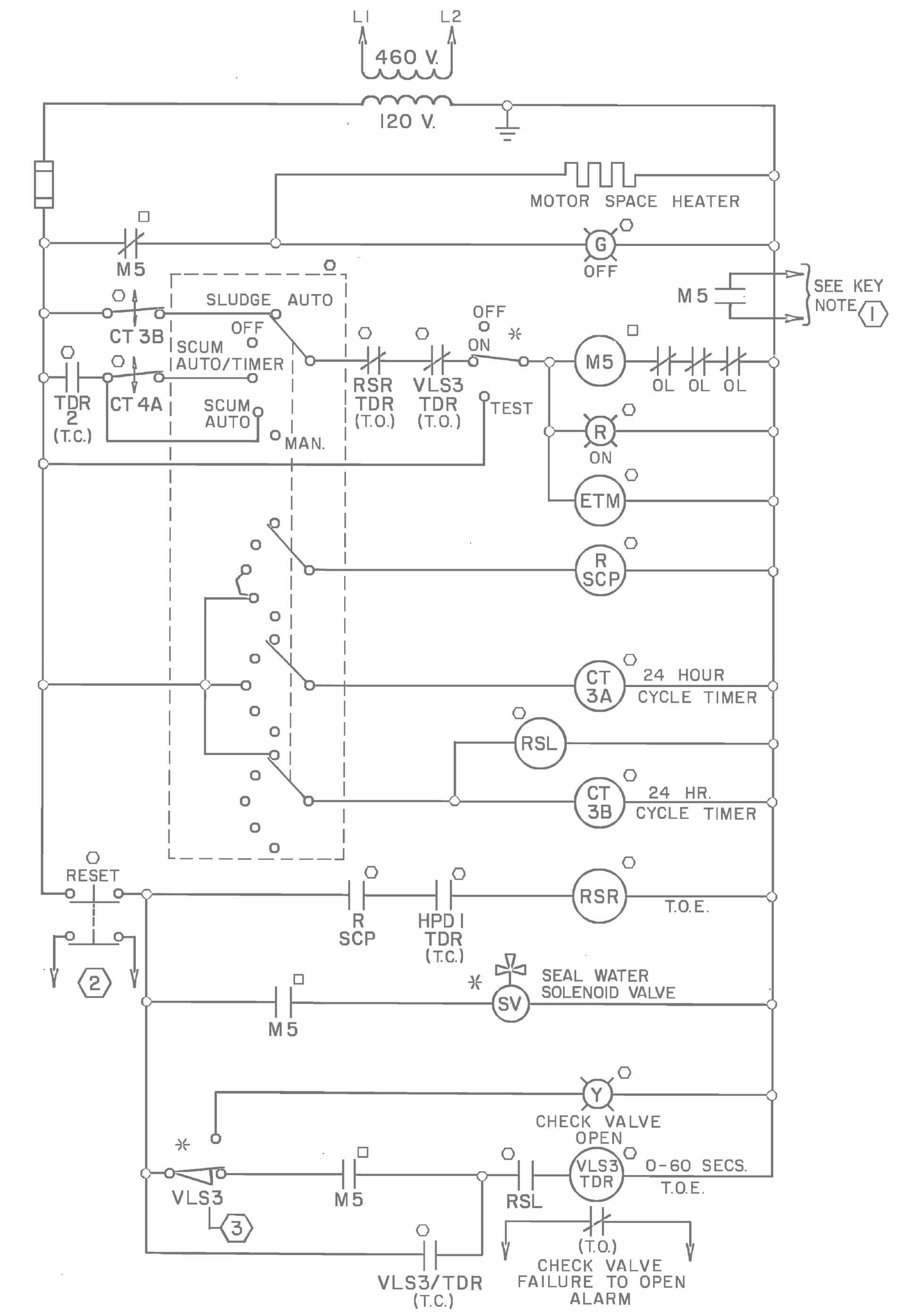

THICKENED SLUDGE PUMP TSLP-3 CONTROL (4)

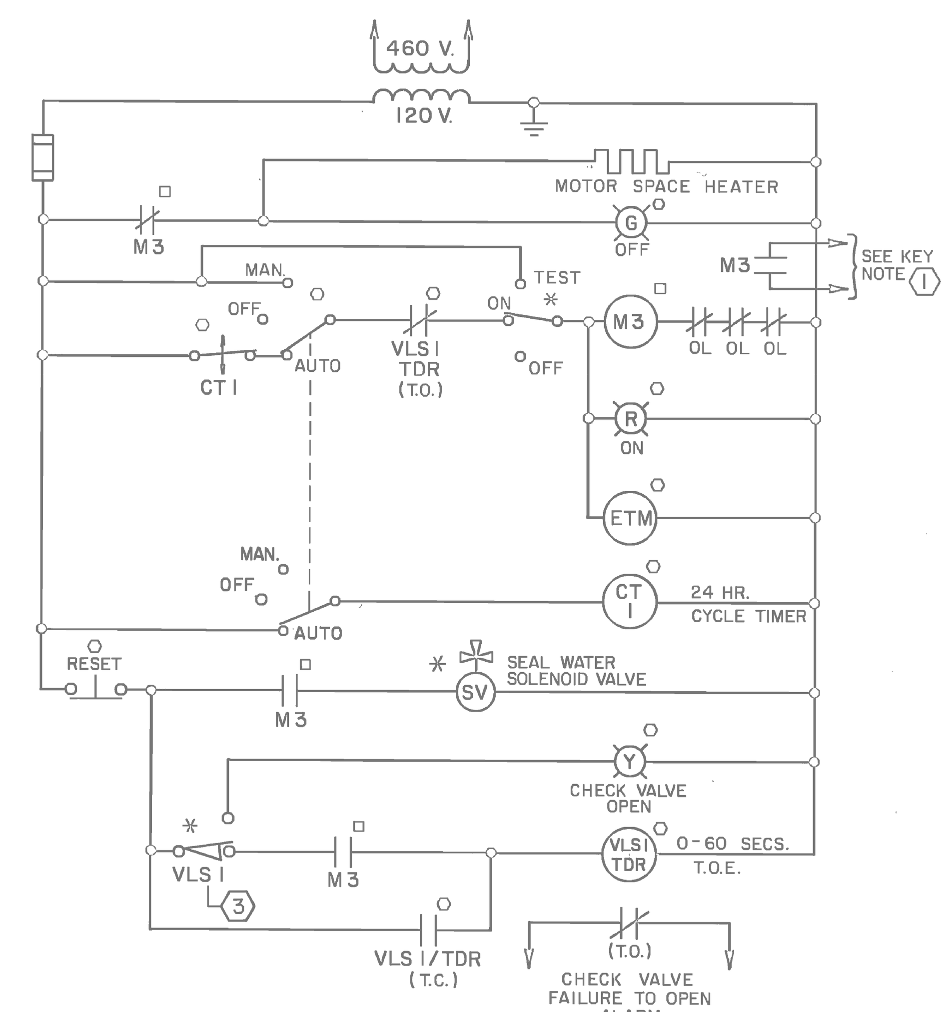

THICKENED SLUDGE PUMP TSLP CONTROL (4)
(TYPICAL FOR THICKENED SLUDGE PUMPS TSLP-1 & TSLP-2)

DEVICE IDENTIFICATION TABLE (2)

MOTOR	STARTER COIL	CHECK VALVE LIMIT SWITCH	VLS/TDR	SCUMBOX LIMIT SWITCH	LSR	TDR	OTR	SFV/R	SWV/R	TIMING RELAY TR	CONTROL TIMER "CT"	LR
SLUDGE THICKENER NO. 1	M1	-------	-------	LS1,LS2 & LS3	LSR1 & LSR2	TDR1	OTR1	SFV/R1	SWV/R1	TR-1	-------	LR1
SLUDGE THICKENER NO. 2	M2	-------	-------	LS4,LS5 & LS6	LSR3 & LSR4	TRD2	OTR2	SFV/R2	SWV/R2	TR-2	-------	LR2
TSLP-1	M3	VLS1	VLS1/TDR	-------	-------	----	-----	-------	-------	-----	CT1	----
TSLP-2	M4	VLS2	VLS2/TDR	-------	-------	----	-----	-------	-------	-----	CT2	----

KEY NOTES:

(1) RUN CONTACT WIRING TO RESPECTIVE "ON" INDICATOR LIGHT ON SECONDARY TREATMENT BUILDING GRAPHIC PANEL. SEE GRAPHIC PANEL ELEVATION DRAWING

(2) TO HIGH DISCHARGE PRESSURE RESET CIRCUITRY. FOR CONTINUATION OF CONTROL CIRCUITRY SEE SLUDGE TRANSFER BUILDING CONTROL PANEL SCHEMATIC DRAWING

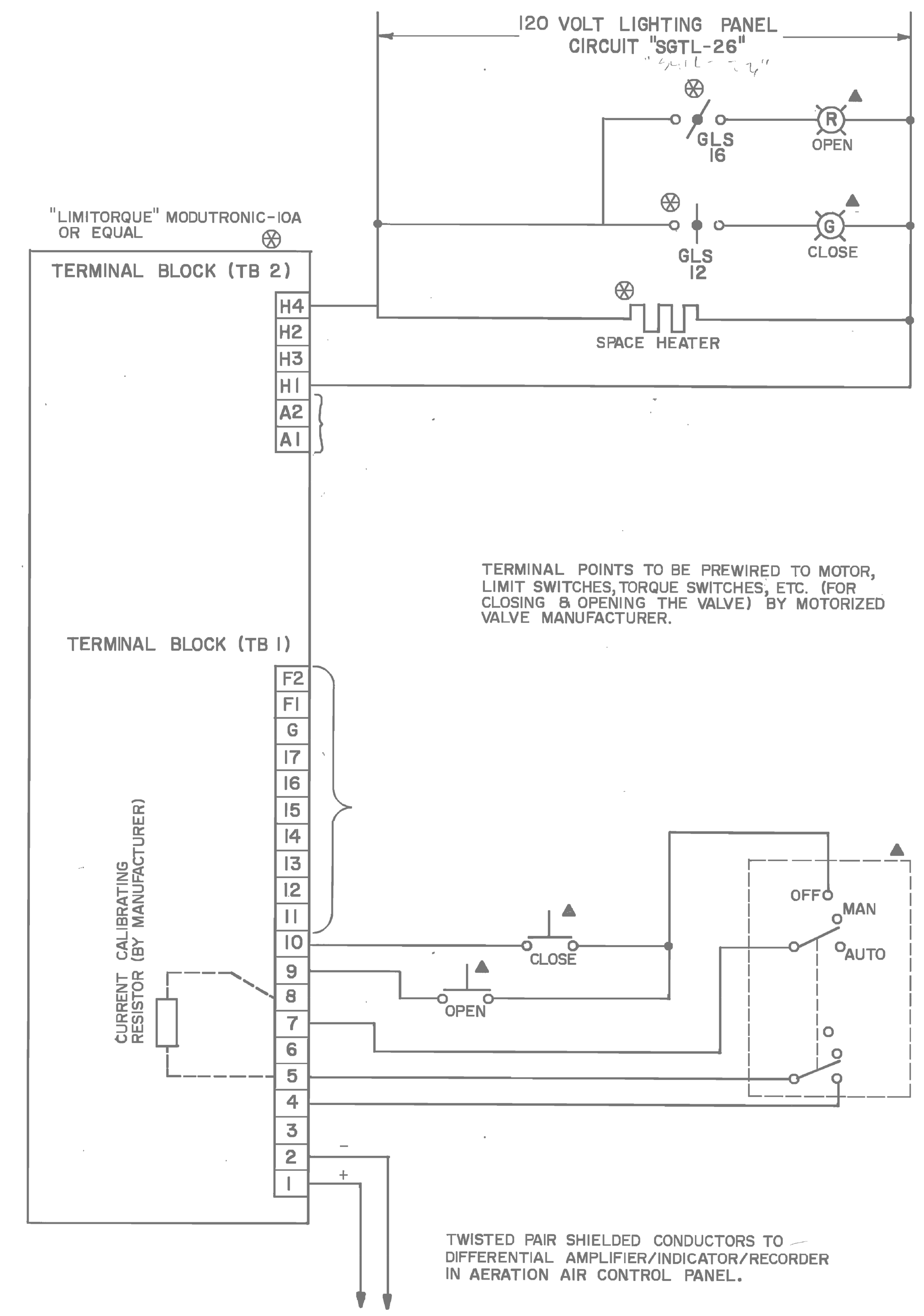

▲ INDICATES DEVICE LOCATED IN AERATION AIR CONTROL CABINET

⊗ INDICATES DEVICE LOCATED IN MOTOR OPERATED VALVE LIMIT SWITCH COMPARTMENT (BY MANUFACTURER)

ROTOR	CONTACT (GLS)	VALVE POSITION: FULLY OPEN — FULLY CLOSED	FUNCTION
OPEN	1		BY-PASS CIRCUIT
	4		OPEN LIMIT
CLOSE	5		BY-PASS CIRCUIT
	8		CLOSED LIMIT
INT.-1	9		SPARE
	12		CLOSE INDICATION LIGHT
INT.-2	13		SPARE
	16		OPEN INDICATION LIGHT

ROTORS PRE-WIRED BY MOTORIZED VALVE MANUFACTURER

MOTORIZED AERATION VALVE CONTROL

I HEREBY CERTIFY THIS "RECORD DRAWINGS" IS CORRECT AND WAS PREPARED UNDER MY SUPERVISION.

STATE OF TEXAS — JAMES R. SCHULTZ — 27165 — REGISTERED PROFESSIONAL ENGINEER

Dwg. No. Q-E-4

TRIAD ENGINEERING
CONSULTING ENGINEERS
AUSTIN, TEXAS

NO.	DATE	REVISION	APPROV.
4			
3			
2			
1			

CITY OF AUSTIN, TEXAS
ONION CREEK WASTEWATER TREATMENT FACILITIES
THICKENED SLUDGE & SLUDGE TRANSFER CONTROL SCHEMATICS - SHEET NO. 1

Turner Collie & Braden Inc.
CONSULTING ENGINEERS
TEXAS AUSTIN/DALLAS/EL PASO/HOUSTON/PORT ARTHUR
COLORADO DENVER/GRAND JUNCTION

Unit NAIL	Scale: Horz. Vert. NONE	Date APRIL, 1984
Designed JRS	Checked JRS	Job No. 7109-025 Contract 2
Drawn VMQ	Approved JRS	Sheet 259 of 300

KEY NOTES:

(1) THE EXISTING WIRING SCHEMATIC SHOWN ON THIS DRAWING IS TYPICAL FOR GRAVITY THICKENERS NO. 1A AND 2A. THE EXISTING WIRING SCHEMATIC IDENTIFIES COMPONENTS, CONTROL DEVICES, INTERNAL WIRING, ETC. WITHIN THE EXISTING CONTROL PANEL "PB01-CCP-01" AND IDENTIFIES EXISTING FIELD WIRING BETWEEN THE CONTROL PANEL AND FIELD MOUNTED ENCLOSURES/DEVICES. HOWEVER, THE FIELD MOUNTED GRAVITY THICKENER CONTROL PANELS AND FIELD MOUNTED DEVICES FOR GRAVITY THICKENERS NO. 1A, 2A, 1B AND 2B WERE MODIFIED IN A DIFFERENT PROJECT ENTITLED "SOUTH AUSTIN REGIONAL WASTEWATER TREATMENT PLANT – MISCELLANEOUS IMPROVEMENTS PROJECT" DATED DECEMBER 1995 AS SHOWN ON REFERENCE DRAWINGS NO. [E-42] AND [E-43]. THE CONTRACTOR SHALL DISCONNECT AND REMOVE EXISTING GRAVITY THICKENERS NO. 1A AND 2A IN THEIR ENTIRETY INCLUDING ALL FIELD MOUNTED EQUIPMENT, MOTOR CONTROL CENTER EQUIPMENT, FIELD WIRING, AND INTERNAL WIRING/ COMPONENTS/CONTROL DEVICES/INSTRUMENTATION LOCATED WITHIN CONTROL PANEL, "PB01-CCP-01" FOR GRAVITY THICKENERS NO. 1A AND 2A. REFER TO DEMOLITION ONE-LINE DIAGRAMS AND DEMOLITION FLOOR PLAN DRAWINGS FOR ADDITIONAL INFORMATION.

(2) THE DEVICE IDENTIFICATION TABLE SHOWN ON THIS DRAWING IS ASSOCIATED WITH THE GRAVITY THICKENER WIRING SCHEMATIC WHICH IS TYPICAL FOR EXISTING GRAVITY THICKENERS NO. 1A AND 2A.

(3) CONTRACTOR SHALL BE AWARE THAT NEW TORQUE SWITCHES AND INTERPOSING RELAYS WERE ADDED IN A DIFFERENT PROJECT ENTITLED "SOUTH AUSTIN REGIONAL CONTROL AND INSTRUMENTATION IMPROVEMENTS PROJECT" DATED AUGUST 1994 AS SHOWN ON DEMOLITION DRAWING NO. [E-40] AND ON REFERENCE DRAWING NO. [E-65]. CONTRACTOR SHALL DISCONNECT AND REMOVE THE EXISTING TORQUE SWITCHES, FIELD INTERCONNECT CONDUIT AND WIRING, AND INTERPOSING RELAYS LOCATED WITHIN CONTROL PANEL "PB01-CCP-01" IN THEIR ENTIRETY AS SHOWN ON DEMOLITION DRAWING NO. [E-40]. REFER TO DEMOLITION DRAWING NO. [E-40] FOR ADDITIONAL INFORMATION AND REQUIREMENTS.

(4) THE EXISTING CONTROL WIRING SCHEMATIC FOR EXISTING SLUDGE PUMPS NO. 1 AND 2, "TSLP-1" AND "TSLP-2", SHOWN ON THIS DRAWING IS NOT THE CURRENT CONTROL WIRING SCHEMATIC FOR THE PUMPING UNITS. REFER TO DEMOLITION CONTROL WIRING SCHEMATIC DRAWING NO. [E-36] FOR DEMOLITION REQUIREMENTS AND ADDITIONAL INFORMATION REGARDING EXISTING SLUDGE PUMPS NO. 1 AND 2, "TSLP-1" AND "TSLP-2".

(5) THE EXISTING CONTROL WIRING SCHEMATIC FOR EXISTING SLUDGE PUMP NO. 3, "TSLP-3", SHOWN ON THIS DRAWING IS NOT THE CURRENT CONTROL WIRING SCHEMATIC FOR THE SLUDGE PUMPING UNIT. REFER TO DEMOLITION CONTROL WIRING SCHEMATIC DRAWING NO. [E-36] FOR DEMOLITION REQUIREMENTS AND ADDITIONAL INFORMATION REGARDING EXISTING SLUDGE PUMP NO. 3, "TSLP-3".

GENERAL NOTES:

1. THE EXISTING EQUIPMENT IS IN WORKING CONDITION. IF ANY OF THE EXISTING EQUIPMENT/ COMPONENTS WHICH SHALL BE REUSED IS DAMAGED OR STOPS FUNCTIONING CORRECTLY, THE CONTRACTOR IS RESPONSIBLE FOR FURNISHING AND INSTALLING NEW EQUIPMENT/ COMPONENTS AS APPROVED BY THE OWNER AND MAKE ALL FINAL TERMINATIONS AT NO ADDITIONAL COST TO THE OWNER.
2. IT IS THE RESPONSIBILITY OF THE CONTRACTOR TO BECOME INTIMATELY FAMILIAR WITH THE FUNCTION, OPERATION AND ASSOCIATED INTERLOCKS FOR EXISTING PUMPS "TSLP-1" AND "TSLP-2", AS APPLICABLE, ALONG WITH THE ASSOCIATED CHECK VALVE LIMIT SWITCHES, SEAL WATER PRESSURE SWITCH, SOLENOID VALVE, FIELD CONTROL STATION PRIOR TO COMMENCING MODIFICATION/ DEMOLITION/RENOVATION ACTIVITIES. CONTRACTOR SHALL FIELD VERIFY AND DENOTE ALL INTERCONNECT CONDUIT/WIRING AND THE TERMINATIONS OF INTERCONNECT WIRING BETWEEN THE DIFFERENT ENCLOSURES (I.E MOTOR CONTROL CENTER, CONTROL PANEL, PLC ENCLOSURE, ETC.) AND PUMPING UNIT EQUIPMENT PRIOR TO COMMENCING MODIFICATION/DEMOLTIION ACTIVITIES. THE CONTRACTOR SHALL EXERCISE EXTREME CARE IN THE DEMOLITION OF THE FIELD MOUNTED EQUIPMENT AS SHOWN ON THE DEMOLITION DRAWINGS FOR EXISTING PUMPS "TSLP-1" AND "TSLP-2", AND DEMOLITION OF INTERCONNECT CONDUIT/WIRE AS INDICATED ON THE DEMOLITION ONE-LINE DIAGRAMS AND DEMOLITION FLOOR PLAN DRAWINGS. CONTRACTOR SHALL CAREFULLY DOCUMENT THE OPERATIONS OF PUMPING UNITS, FIELD WIRING TERMINATION POINTS, EXISTING PUMP FIELD MOUNTED EQUIPMENT AND ITS INTERCONNECTION WITH THE EXISTING MOTOR CONTROL CENTER, EXISTING CONTROL PANEL, EXISTING PLC ENCLOSURE, ETC., AND ASSOCIATED INTERLOCKS SUCH TO ENSURE THAT THE PROPOSED REPLACEMENT FIELD DEVICES (I.E. SOLENOID VALVES, PRESSURE SWITCH, AND LIMIT SWITCHES) AND PROPOSED INTERCONNECT CONDUIT/WIRE FOR EACH PUMPING UNIT FUNCTIONS COMMENSURABLY TO THAT OF THE EXISTING PUMPING UNITS TO THE SATISFACTION OF THE OWNER AND THE ENGINEER AT NO ADDITIONAL COST TO THE OWNER.

Plotted: 4/22/2016 8:50:01 AM

GRAVITY THICKENERS EQUIPMENT CONTROL SCHEMATICS– DEMOLITION
1 [E-59]
SCALE: NONE

REUSE OF DOCUMENTS
This document, and the designs incorporated herein, is an instrument of professional service that has been developed, designed and prepared by Harutunian Engineering, Inc., and is not to be used, in whole or part, for any other project without giving written notice to Harutunian Engineering, Inc.

REV No	DATE	DRWN	CHKD	REMARKS
–	–	–	–	–

DESIGNED BY: HEI
DRAWN BY: HEI
SHEET CHK'D BY: HEI
CROSS CHK'D BY: HEI
APPROVED BY: HEI
DATE: APRIL 2016

CDM Smith
Riata Corporate Park, 12357-A Riata Trace Parkway, Suite 210
Austin, TX 78727
Tel: (512) 346-1100
Texas Registration Number F-3043

HARUTUNIAN ENGINEERING, INC.
305 E Huntland Dr, Ste 500; Austin, TX 78752
TBPE Firm Registration No. F-2408

CITY OF AUSTIN, TEXAS - AUSTIN WATER UTILITY
CIP 3333.016
SOUTH AUSTIN REGIONAL WWTP
THICKENER IMPROVEMENTS PROJECT

CONTROL WIRING SCHEMATIC
DEMOLITION
(SHEET 2 OF 8)

K. A. Harutunian — STATE OF TEXAS — K. A. HARUTUNIAN — 59181 — REGISTERED PROFESSIONAL ENGINEER — 4/22/2016

PROJECT No 590-104217
FILE NAME: E-37
SHEET No
E-37

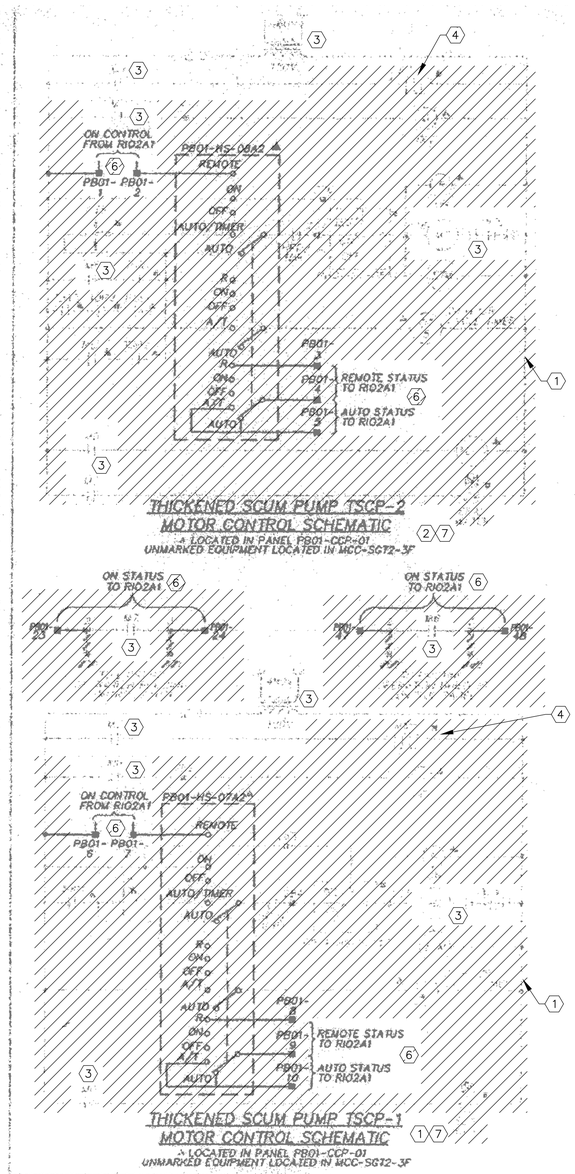

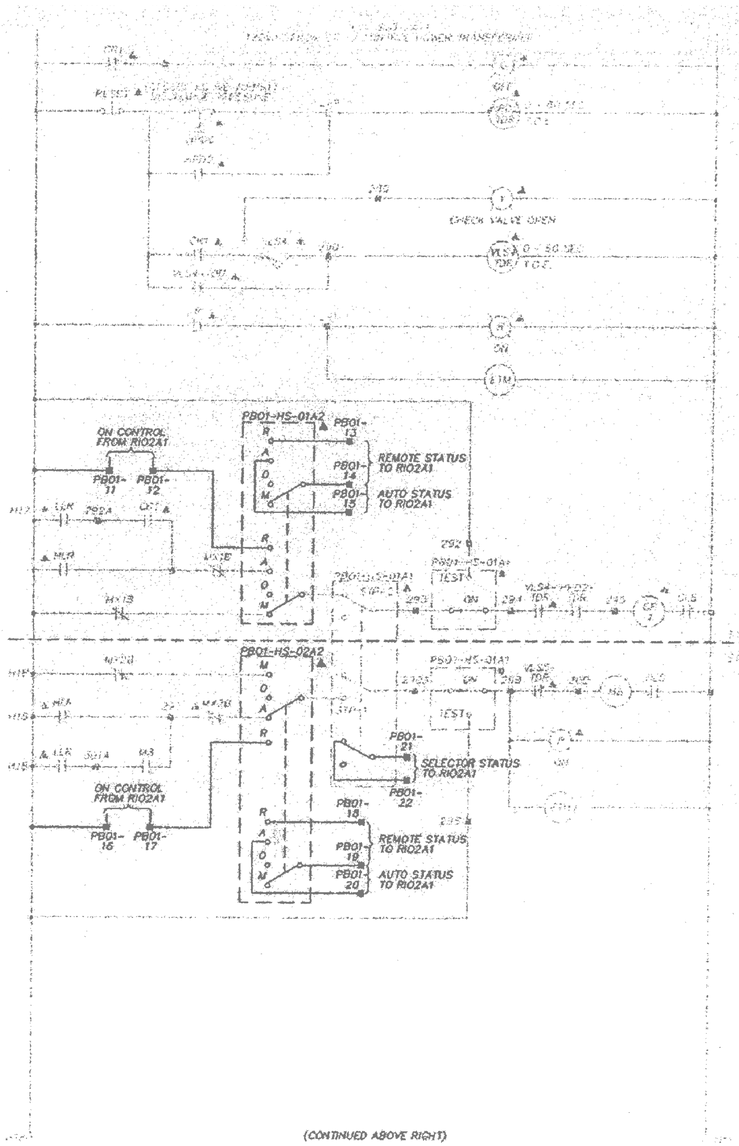

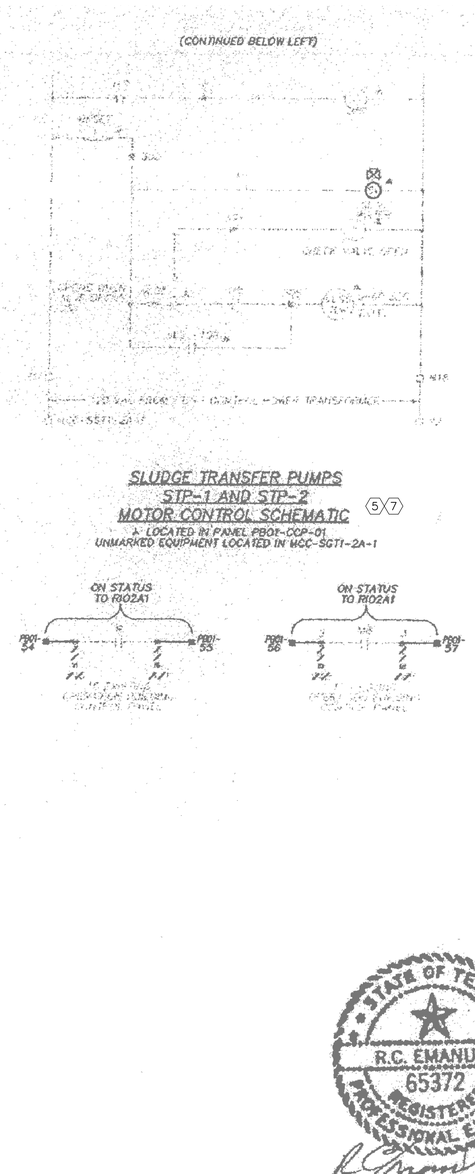

KEY NOTES:

1. THE EXISTING WIRING SCHEMATIC IS SHOWN FOR SCUM PUMP NO. 1, "TSCP-1". DISCONNECT AND REMOVE EXISTING SCUM PUMP IN ITS ENTIRETY INCLUDING THE SCUM PUMP MOTOR ASSEMBLY, THE SEAL WATER SOLENOID VALVE, PRESSURE SWITCH, AND FIELD CONTROL STATION. DISCONNECT AND REMOVE ALL CONTROL DEVICES LOCATED ON THE FACE OF EXISTING CONTROL PANEL "PB01-CCP-01" AND ALL CONTROL DEVICES/WIRING LOCATED ON THE BACKPLANE OF THE EXISTING CONTROL PANEL. EXISTING MOTOR STARTER LOCATED IN EXISTING MOTOR CONTROL CENTER, AS APPLICABLE, SHALL REMAIN AND BE REUSED DURING RENOVATION ACTIVITIES. REFER TO DEMOLITION ONE-LINE DIAGRAM, RENOVATION SLUDGE PUMP CONTROL WIRING SCHEMATICS, AND DEMOLITION FRONT/INTERIOR CONTROL PANEL ELEVATION DRAWINGS FOR ADDITIONAL INFORMATION.
2. THE EXISTING WIRING SCHEMATIC IS SHOWN FOR SCUM PUMP NO. 2, "TSCP-2". DISCONNECT AND REMOVE EXISTING SCUM PUMP IN ITS ENTIRETY INCLUDING THE SCUM PUMP MOTOR ASSEMBLY, THE SEAL WATER SOLENOID VALVE, PRESSURE SWITCH, AND FIELD CONTROL STATION. DISCONNECT AND REMOVE ALL CONTROL DEVICES LOCATED ON THE FACE OF EXISTING CONTROL PANEL "PB01-CCP-01" AND ALL CONTROL DEVICES/WIRING LOCATED ON THE BACKPLANE OF THE EXISTING CONTROL PANEL. EXISTING MOTOR STARTER LOCATED IN EXISTING MOTOR CONTROL CENTER, AS APPLICABLE, SHALL REMAIN AND BE REUSED DURING RENOVATION ACTIVITIES. REFER TO DEMOLITION ONE-LINE DIAGRAM, RENOVATION SLUDGE PUMP CONTROL WIRING SCHEMATICS, AND DEMOLITION FRONT/INTERIOR CONTROL PANEL ELEVATION DRAWINGS FOR ADDITIONAL INFORMATION.
3. THE EXISTING MOTOR STARTER WHICH INCLUDES THE CONTROL POWER TRANSFORMER, MOTOR STARTER COIL, AUXILIARY CONTACTS, TERMINAL BLOCKS AND AN OVERLOAD RELAY SHALL REMAIN IN THE EXISTING MOTOR CONTROL CENTER AND BE REUSED DURING RENOVATION ACTIVITIES.
4. THE EXISTING MOTOR AND MOTOR SPACE HEATER SHALL SHALL BE DISCONNECTED AND REMOVED DURING DEMOLITION ACTIVITIES.
5. THE EXISTING MOTOR STARTER AND CONTROL LOGIC SHALL REMAIN FOR EXISTING SLUDGE TRANSFER PUMPS "STP-1" AND "STP-2". PLEASE NOTE THAT THE EXISTING SLUDGE TRANSFER PUMPS FOR "STP-1" AND "STP-2" ARE IN WORKING ORDER AND ARE FULLY FUNCTIONING. IF ANY OF THE EXISTING EQUIPMENT/CONTROL DEVICES/ETC. ARE DAMAGED DURING RENOVATION/DEMOLITION ACTIVITIES, IT IS THE RESPONSIBILITY OF THE CONTRACTOR TO REPAIR THE DAMAGED EQUIPMENT/HARDWARE OR FURNISH/INSTALL NEW EQUIPMENT/HARDWARE TO THE SATISFACTION OF THE OWNER AND AT NO ADDITIONAL COST TO THE OWNER.
6. MODIFY EXISTING COMPONENTS AND PLC REMOTE I/O MODULES WITHIN EXISTING PLC REMOTE I/O CONTROL PANEL "RIO-2A" AS INDICATED ON THE CONTROL PANEL DEMOLITION AND RENOVATION DRAWINGS. PLEASE NOTE THAT MODIFICATION REQUIREMENTS FOR EQUIPMENT WITHIN THE EXISTING CONTROL PANEL "RIO-2A" ARE NOT SHOWN ON THIS DRAWING FOR CLARITY. REFER TO CONTROL PANEL, "RIO-2A" DEMOLITION AND RENOVATION DESIGN DRAWINGS FOR ADDITIONAL INFORMATION AND REQUIREMENTS.
7. CONTRACTOR SHALL BE AWARE THAT HIGH AND LOW PRESSURE SWITCHES WERE ADDED TO THE EXISTING SLUDGE/SCUM PUMPING UNITS WITHIN THE SLUDGE TRANSFER BUILDING IN A DIFFERENT PROJECT ENTITLED "SOUTH AUSTIN REGIONAL CONTROL AND INSTRUMENTATION IMPROVEMENTS PROJECT" DATED AUGUST 1994 AS SHOWN ON DEMOLITION DRAWING NO. [I-8] AND REFERENCE DRAWING NO. [E-66]. PLEASE NOTE THAT THE EXISTING PRESSURE SWITCHES ARE NOT SHOWN ON THIS CONTROL LOGIC SCHEMATIC. CONTRACTOR SHALL DISCONNECT AND REMOVE EXISTING PRESSURE SWITCHES AND ASSOCIATED CONDUIT AND WIRE FOR ALL EXISTING SLUDGE AND SCUM PUMPING UNITS AS INDICATED ON DEMOLITION DRAWING NO. [I-8]. NEW PRESSURE SWITCHES SHALL BE PROVIDED DURING RENOVATION ACTIVITIES. HOWEVER, EXISTING SEAL WATER PRESSURE SWITCHES FOR SLUDGE TRANSFER PUMPS NO. 1 AND 2, "STP-1" AND "STP-2" SHALL NOT BE MODIFIED AND SHALL REMAIN IN PLACE AS INDICATED ON DRAWING NO. [I-8].

GENERAL NOTES:

1. THE EXISTING EQUIPMENT IS IN WORKING CONDITION. IF ANY OF THE EXISTING EQUIPMENT/ COMPONENTS WHICH SHALL BE REUSED IS DAMAGED OR STOPS FUNCTIONING CORRECTLY, THE CONTRACTOR IS RESPONSIBLE FOR FURNISHING AND INSTALLING NEW EQUIPMENT/ COMPONENTS AS APPROVED BY THE OWNER AND MAKE ALL FINAL TERMINATIONS AT NO ADDITIONAL COST TO THE OWNER.

STATE OF TEXAS
R.C. EMANUEL
65372
REGISTERED PROFESSIONAL ENGINEER
7-22-94

SOUTH AUSTIN REGIONAL WASTEWATER TREATMENT PLANT
CITY OF AUSTIN, TEXAS

CH2M HILL

DSGN L. TRIPP
T. VEGA
DR E. KRISTEL
E. TRIPP
CHK R. WILLIAMS
APVD H. EMANUEL

NO.	DATE	REVISION	BY	APVD

REUSE OF DOCUMENTS
THIS DOCUMENT, AND THE IDEAS AND DESIGNS INCORPORATED HEREIN, AS AN INSTRUMENT OF PROFESSIONAL SERVICE, IS THE PROPERTY OF CH2M HILL AND IS NOT TO BE USED, IN WHOLE OR IN PART, FOR ANY OTHER PROJECT WITHOUT THE WRITTEN AUTHORIZATION OF CH2M HILL.
©1994 CH2M HILL

BAR IS ONE INCH ON ORIGINAL DRAWING
0 1"
IF NOT ONE INCH ON THIS SHEET, ADJUST SCALES ACCORDINGLY

LADDER LOGIC DIAGRAM
THICKENED SCUM PUMPS AND SLUDGE TRANSFER PUMP CONTROL SCHEMATIC

SHEET
DWG NO. E-PB01-02
DATE JULY 1994
PROJ NO. 7E.X309.39.02

GRAVITY THICKENERS & SLUDGE TRANSFER BUILDING EQUIPMENT CONTROL SCHEMATICS– DEMOLITION (1) [E-60]
SCALE: NONE

REUSE OF DOCUMENTS
This document, and the designs incorporated herein, is an instrument of professional service that has been developed, designed and prepared by Harutunian Engineering, Inc., and is not to be used, in whole or part, for any other project without giving written notice to Harutunian Engineering, Inc.

REV No	DATE	DRWN	CHKD	REMARKS
△	–	–	–	–

DESIGNED BY: HEI
DRAWN BY: HEI
SHEET CHK'D BY: HEI
CROSS CHK'D BY: HEI
APPROVED BY: HEI
DATE: APRIL 2016

CDM Smith
Riata Corporate Park, 12357-A Riata Trace Parkway, Suite 210
Austin, TX 78727
Tel: (512) 346-1100
Texas Registration Number F-3043

HARUTUNIAN ENGINEERING, INC.
305 E Huntland Dr, Ste 500; Austin, TX 78752
TBPE Firm Registration No. F-2408

CITY OF AUSTIN, TEXAS - AUSTIN WATER UTILITY
CIP 3333.016
SOUTH AUSTIN REGIONAL WWTP
THICKENER IMPROVEMENTS PROJECT

CONTROL WIRING SCHEMATIC
DEMOLITION
(SHEET 3 OF 8)

STATE OF TEXAS
K. A. HARUTUNIAN
59181
REGISTERED PROFESSIONAL ENGINEER
4/22/2016

PROJECT No 590-104217
FILE NAME: E-38

SHEET No
E-38

Plotted: 4/22/2016 9:51:53 AM

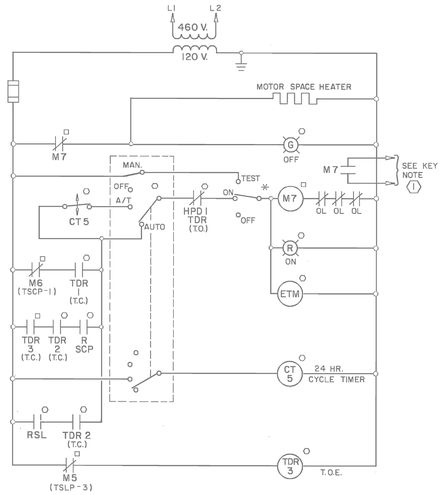

THICKENED SCUM PUMP TSCP-2 CONTROL 2

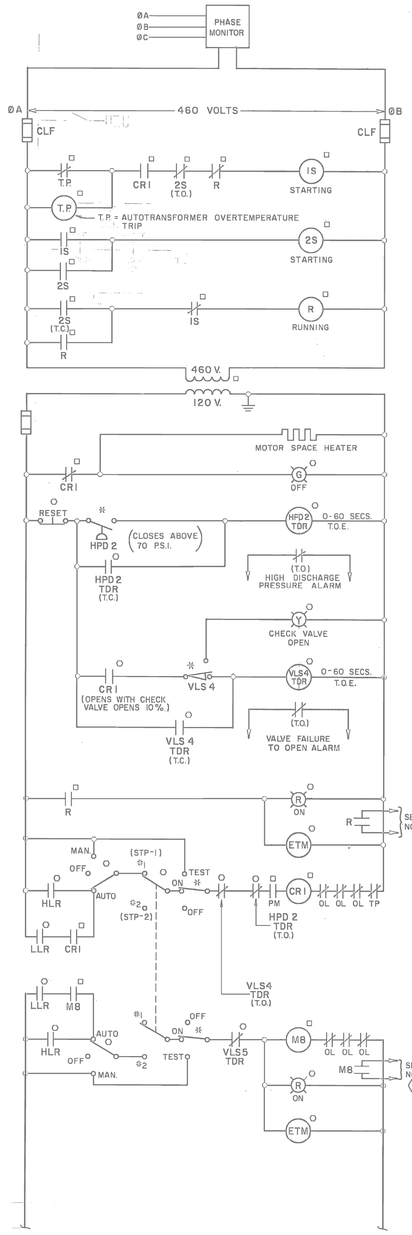

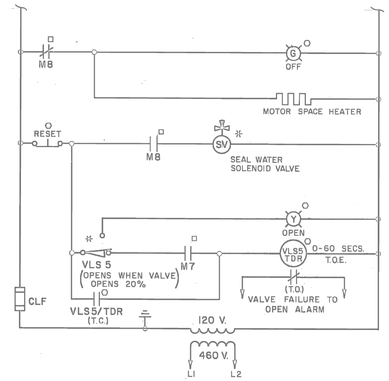

SLUDGE TRANSFER PUMPS
STP-1 & STP-2 CONTROL 3

KEY NOTES	
1	RUN CONTACT WIRING TO RESPECTIVE 'ON' INDICATOR LIGHT ON SECONDARY TREATMENT BUILDING GRAPHIC PANEL. SEE GRAPHIC PANEL ELEVATION DRAWING

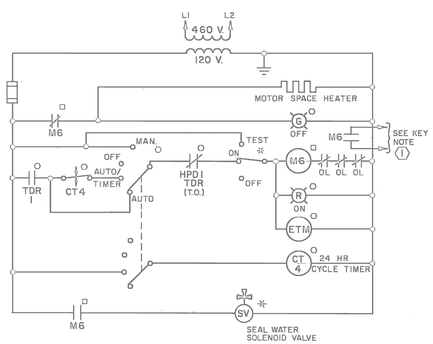

THICKENED SCUM PUMP TSCP-1 1

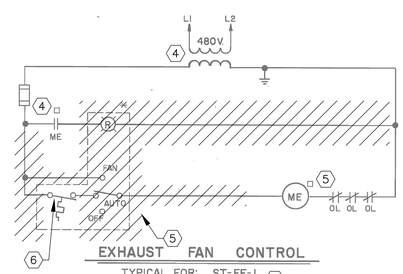

EXHAUST FAN CONTROL
TYPICAL FOR: ST-EF-1
ST-EF-2 5

KEY NOTES:

1. THE EXISTING CONTROL WIRING SCHEMATIC FOR EXISTING SLUDGE SCUM PUMP NO. 1, "TSCP-1", SHOWN ON THIS DRAWING IS NOT THE CURRENT CONTROL WIRING SCHEMATIC FOR THE PUMPING UNIT. REFER TO DEMOLITION CONTROL WIRING SCHEMATIC DRAWING NO. [E-38] FOR DEMOLITION REQUIREMENTS AND ADDITIONAL INFORMATION REGARDING EXISTING SLUDGE SCUM PUMP NO. 1, "TSCP-1".
2. THE EXISTING CONTROL WIRING SCHEMATIC FOR EXISTING SLUDGE SCUM PUMP NO. 2, "TSCP-2", SHOWN ON THIS DRAWING IS NOT THE CURRENT CONTROL WIRING SCHEMATIC FOR THE PUMPING UNIT. REFER TO DEMOLITION CONTROL WIRING SCHEMATIC DRAWING NO. [E-38] FOR DEMOLITION REQUIREMENTS AND ADDITIONAL INFORMATION REGARDING EXISTING SLUDGE SCUM PUMP NO. 2, "TSCP-2".
3. THE EXISTING CONTROL WIRING SCHEMATIC FOR EXISTING SLUDGE TRANSFER PUMPS NO. 1 AND 2, "STP-1" AND "STP-2" SHOWN ON THIS DRAWING IS NOT THE CURRENT CONTROL WIRING SCHEMATIC FOR THE PUMPING UNITS. REFER TO DEMOLITION CONTROL WIRING SCHEMATIC DRAWING NO. [E-38] FOR DEMOLITION REQUIREMENTS AND ADDITIONAL INFORMATION REGARDING EXISTING SLUDGE TRANSFER PUMPS NO. 1 AND 2, "STP-1" AND "STP-2".
4. THE EXISTING MOTOR STARTER WHICH INCLUDES THE CONTROL POWER TRANSFORMER, MOTOR STARTER COIL, AUXILIARY CONTACTS, TERMINAL BLOCKS AND AN OVERLOAD RELAY SHALL REMAIN IN THE EXISTING MOTOR CONTROL CENTER AND BE REUSED DURING RENOVATION ACTIVITIES.
5. THE EXISTING CONTROL WIRING SCHEMATIC IS TYPICAL FOR EXHAUST FANS NO. 1 AND 2, "ST-EF-1" AND "ST-EF-2". DISCONNECT AND REMOVE EXISTING FIELD CONTROL STATION FOR EACH EXHAUST FAN. THE EXISTING MOTOR STARTER AND THERMOSTAT FOR EACH EXHAUST FAN SHALL REMAIN AND BE REUSED DURING RENOVATION ACTIVITIES.
6. THE EXISTING THERMOSTAT FOR EACH EXHAUST FAN SHALL BE DISCONNECTED AND RELOCATED DURING RENOVATION ACTIVITIES. EXISTING THERMOSTAT SHALL BE RELOCATED ADJACENT TO PROPOSED FIELD CONTROL STATION. REMAKE CONNECTIONS TO MOTOR CONTROL CENTER TERMINAL BLOCKS AND PROPOSED FIELD CONTROL STATION TO RESTORE ORIGINAL FUNCTIONALITY OF EACH EXHAUST FAN. REFER TO RENOVATION CONTROL WIRING SCHEMATIC ON DRAWING NO. [E-49] AND RENOVATION FLOOR PLAN DRAWINGS FOR NEW LOCATION AND ADDITIONAL INFORMATION.

GENERAL NOTES:

1. THE EXISTING EQUIPMENT IS IN WORKING CONDITION. IF ANY OF THE EXISTING EQUIPMENT/ COMPONENTS WHICH SHALL BE REUSED IS DAMAGED OR STOPS FUNCTIONING CORRECTLY, THE CONTRACTOR IS RESPONSIBLE FOR FURNISHING AND INSTALLING NEW EQUIPMENT/ COMPONENTS AS APPROVED BY THE OWNER AND MAKE ALL FINAL TERMINATIONS AT NO ADDITIONAL COST TO THE OWNER.

I HEREBY CERTIFY THIS "RECORD DRAWINGS" IS CORRECT AND WAS PREPARED UNDER MY SUPERVISION.

STATE OF TEXAS JAMES R. SCHULTZ 27165 REGISTERED PROFESSIONAL ENGINEER

TRIAD ENGINEERING
CONSULTING ENGINEERS
AUSTIN, TEXAS

NO.	DATE	REVISION	APPROV.
4			
3			
2			
1			

CITY OF AUSTIN, TEXAS
ONION CREEK WASTEWATER TREATMENT FACILITIES
THICKENED SLUDGE & SLUDGE TRANSFER CONTROL SCHEMATICS - SHEET NO. 2

Turner Collie & Braden Inc.
CONSULTING ENGINEERS
TEXAS AUSTIN/DALLAS/EL PASO/HOUSTON/FORT ARTHUR
COLORADO DENVER/GRAND JUNCTION

Unit NAIL	Scale Horz. NONE Vert.	Date APRIL, 1984	
Designed JRS	Checked JRS	Job No. 7109-025	Contract 2
Drawn VMQ	Approved JRS	Sheet 260 of 300	
Dwg. No. Q-E-5			

SLUDGE TRANSFER BUILDING EQUIPMENT CONTROL SCHEMATICS— DEMOLITION 1 [E-61]
SCALE: NONE

REUSE OF DOCUMENTS
This document, and the designs incorporated herein, is an instrument of professional service that has been developed, designed and prepared by Harutunian Engineering, Inc., and is not to be used, in whole or part, for any other project without giving written notice to Harutunian Engineering, Inc.

REV No	DATE	DRWN	CHKD	REMARKS
△	–	–	–	–

DESIGNED BY: HEI
DRAWN BY: HEI
SHEET CHK'D BY: HEI
CROSS CHK'D BY: HEI
APPROVED BY: HEI
DATE: APRIL 2016

CDM Smith
Riata Corporate Park, 12357-A Riata Trace Parkway, Suite 210
Austin, TX 78727
Tel: (512) 346-1100
Texas Registration Number F-3043

HARUTUNIAN ENGINEERING, INC.
305 E Huntland Dr, Ste 500; Austin, TX 78752
TBPE Firm Registration No. F-2408

CITY OF AUSTIN, TEXAS - AUSTIN WATER UTILITY
CIP 3333.016
SOUTH AUSTIN REGIONAL WWTP
THICKENER IMPROVEMENTS PROJECT

CONTROL WIRING SCHEMATIC
DEMOLITION
(SHEET 4 OF 8)

STATE OF TEXAS K. A. HARUTUNIAN 59181 REGISTERED PROFESSIONAL ENGINEER 4/22/2016

PROJECT No 590-104217
FILE NAME: E-39

SHEET No
E-39

Plotted: 4/22/2016 8:50:11 AM

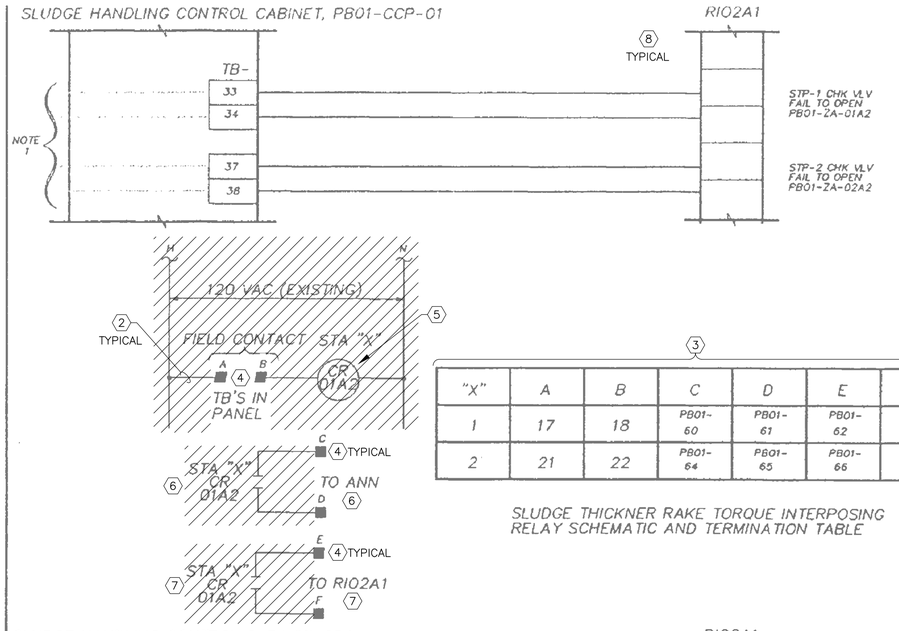

"X"	A	B	C	D	E	F
1	17	18	PB01-60	PB01-61	PB01-62	PB01-63
2	21	22	PB01-64	PB01-65	PB01-66	PB01-67

SLUDGE THICKNER RAKE TORQUE INTERPOSING RELAY SCHEMATIC AND TERMINATION TABLE

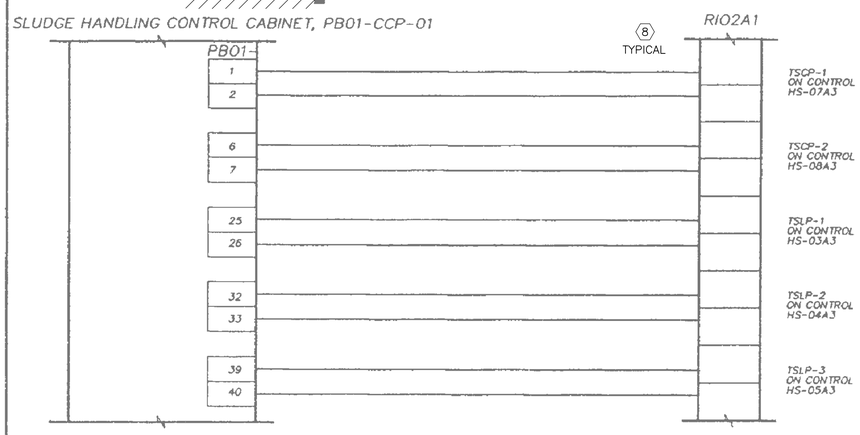

NOTES:
1. EXISTING WIRING FROM FIELD INSTRUMENTS.

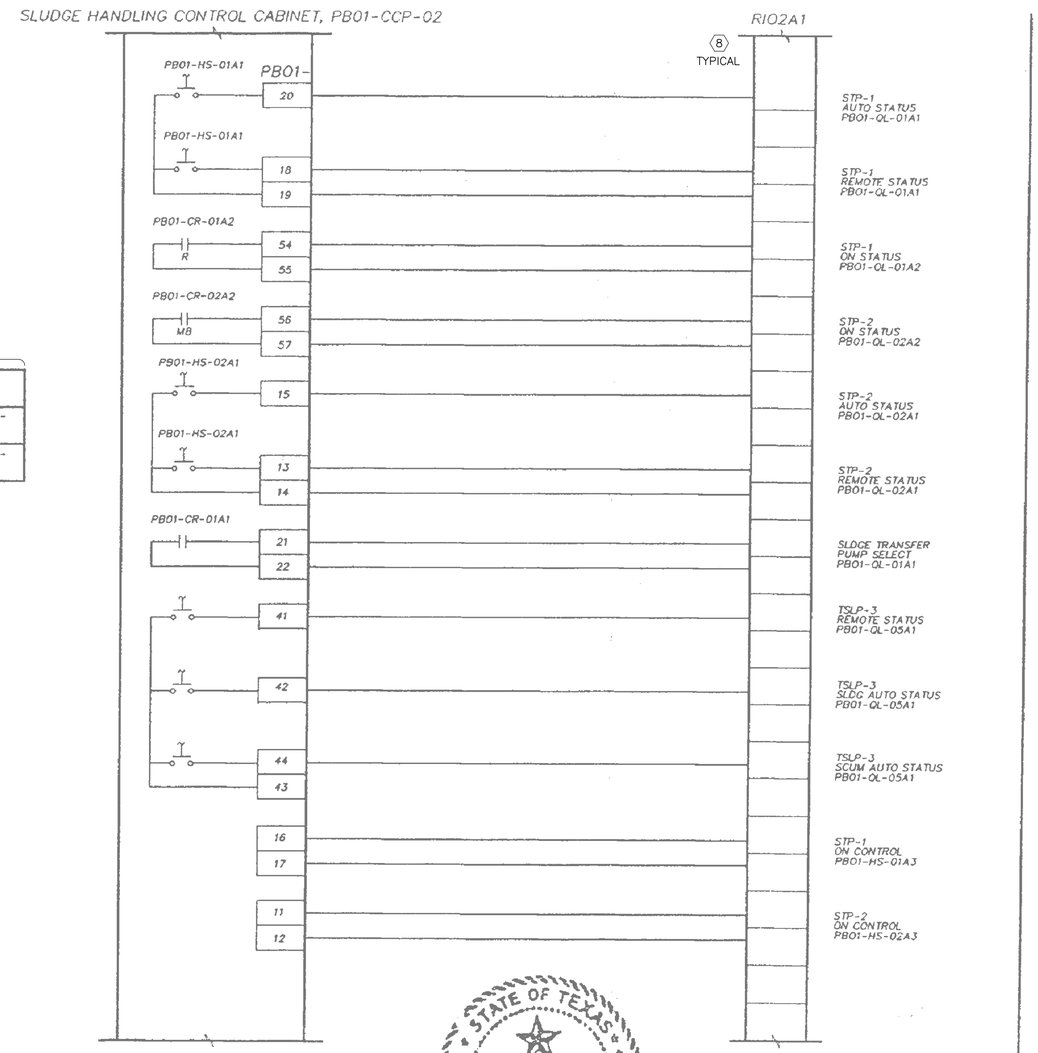

STATE OF TEXAS
R.C. EMANUEL
65372
REGISTERED PROFESSIONAL ENGINEER
7-22-98

KEY NOTES:

1. THE EXISTING CONTROL WIRING SCHEMATIC SHOWN ON THIS DRAWING IS TYPICAL FOR SLUDGE GRAVITY THICKENER RAKE DRIVE NO. 1A AND 2A TORQUE INTERPOSING RELAY CONTROLS, AS APPLICABLE. THE EXISTING WIRING SCHEMATIC IDENTIFIES COMPONENTS WITHIN EXISTING CONTROL PANELS, AS APPLICABLE.
2. DISCONNECT AND REMOVE EXISTING INTERNAL WIRING FOR GRAVITY THICKENER'S NO. 1A AND 2A RAKE DRIVE TORQUE INTERPOSING RELAY CONTROL LOGIC WITHIN EXISTING CONTROL PANEL, "PB01–CCP–01". ALSO REFER TO DEMOLITION CONTROL PANEL INTERIOR BACKPLANE ELEVATION DRAWINGS FOR ADDITIONAL INFORMATION.
3. THE DEVICE IDENTIFICATION TABLE SHOWN ON THIS DRAWING IS ASSOCIATED WITH THE EXISTING TERMINAL BLOCK NUMBERING FOR THE GRAVITY THICKENER RAKE DRIVE TORQUE INTERPOSING RELAY CONTROL LOGIC, AS APPLICABLE. EXISTING TERMINAL BLOCKS SHALL BE DISCONNECTED BUT REMAIN FOR FUTURE USE.
4. EXISTING TERMINAL BLOCKS SHALL REMAIN WITHIN EXISTING CONTROL PANEL PB01–CCP–01 AS "SPARE" TERMINAL BLOCKS FOR FUTURE USE. REFER TO DEMOLITION CONTROL PANEL INTERIOR BACKPLANE ELEVATION DRAWINGS FOR ADDITIONAL INFORMATION.
5. DISCONNECT AND REMOVE EXISTING INTERPOSING CONTROL RELAY AND ASSOCIATED CONTROL WIRING IN IT'S ENTIRETY.
6. DISCONNECT AND REMOVE EXISTING CONTROL WIRING BETWEEN INTERPOSING CONTROL RELAY AUXILIARY CONTACT AND EXISTING ANNUNCIATOR. EXISTING ANNUNCIATOR SHALL REMAIN ABANDONED IN PLACE. REFER TO CONTROL PANEL "PB01–CCP–01" FRONT ELEVATION DEMOLITION AND RENOVATION DRAWINGS FOR ADDITIONAL INFORMATION.
7. DISCONNECT AND REMOVE EXISTING CONTROL WIRING BETWEEN INTERPOSING CONTROL RELAY AUXILIARY CONTACT AND EXISTING PLC REMOTE I/O CONTROL PANEL "RIO–2A". EACH GRAVITY THICKENER SHALL BE PROVIDED WITH A PACKAGED SYSTEM DURING RENOVATION ACTIVITIES WITH PROPOSED SIGNALS ROUTING FROM PACKAGED SYSTEM CONTROL PANEL TO EXISTING PLC I/O REMOTE CONTROL PANEL ENCLOSURE "RIO–2A". REFER TO PLC REMOTE I/O CONTROL PANEL "RIO–2A" DEMOLITION AND RENOVATION DRAWINGS FOR ADDITIONAL INFORMATION.
8. MODIFICATIONS TO EXISTING PLC I/O MODULES AND INTERCONNECT WIRING NOT SHOWN ON THIS DRAWING. REFER TO PLC REMOTE I/O CONTROL PANEL "RIO–2A" DEMOLITION AND RENOVATION DRAWINGS FOR ADDITIONAL INFORMATION AND REQUIREMENTS REGARDING WORK REQUIRED TO EQUIPMENT WITHIN EXISTING CONTROL PANEL.

GENERAL NOTES:

1. THE EXISTING EQUIPMENT IS IN WORKING CONDITION. IF ANY OF THE EXISTING EQUIPMENT/ COMPONENTS WHICH SHALL BE REUSED IS DAMAGED OR STOPS FUNCTIONING CORRECTLY, THE CONTRACTOR IS RESPONSIBLE FOR FURNISHING AND INSTALLING NEW EQUIPMENT/ COMPONENTS AS APPROVED BY THE OWNER AND MAKE ALL FINAL TERMINATIONS AT NO ADDITIONAL COST TO THE OWNER.
2. IT IS THE RESPONSIBILITY OF THE CONTRACTOR TO BECOME INTIMATELY FAMILIAR WITH THE FUNCTION, OPERATION AND ASSOCIATED INTERLOCKS FOR EXISTING PUMPS , AS APPLICABLE, ALONG WITH THE ASSOCIATED CHECK VALVE LIMIT SWITCHES, SEAL WATER PRESSURE SWITCH, SOLENOID VALVE, FIELD CONTROL STATION PRIOR TO COMMENCING MODIFICATION/ DEMOLITION/RENOVATION ACTIVITIES. CONTRACTOR SHALL FIELD VERIFY AND DENOTE ALL INTERCONNECT CONDUIT/WIRING AND THE TERMINATIONS OF INTERCONNECT WIRING BETWEEN THE DIFFERENT ENCLOSURES (I.E MOTOR CONTROL CENTER, CONTROL PANEL, PLC ENCLOSURE, ETC.) AND EXISTING PUMPING UNIT EQUIPMENT PRIOR TO COMMENCING MODIFICATION/DEMOLTIION ACTIVITIES, THE CONTRACTOR SHALL EXERCISE EXTREME CARE IN THE DEMOLITION OF THE FIELD MOUNTED EQUIPMENT AND DEMOLITION OF INTERCONNECT CONDUIT/WIRE. REFER TO DEMOLITION FLOOR PLAN DRAWINGS FOR ADDITIONAL INFORMATION. CONTRACTOR SHALL CAREFULLY DOCUMENT THE OPERATIONS OF PUMPING UNITS, FIELD WIRING TERMINATION POINTS, EXISTING PUMP FIELD MOUNTED EQUIPMENT AND ITS INTERCONNECTION WITH THE EXISTING MOTOR CONTROL CENTER, EXISTING CONTROL PANEL, EXISTING PLC ENCLOSURE, ETC., AND ASSOCIATED INTERLOCKS SUCH TO ENSURE THAT THE PROPOSED REPLACEMENT FIELD DEVICES (I.E. SOLENOID VALVES, PRESSURE SWITCH, AND LIMIT SWITCHES) AND PROPOSED INTERCONNECT CONDUIT/WIRE FOR EACH PUMPING UNIT FUNCTIONS COMMENSURABLY TO THAT OF THE EXISTING PUMPING UNITS TO THE SATISFACTION OF THE OWNER AND THE ENGINEER AT NO ADDITIONAL COST TO THE OWNER.

SOUTH AUSTIN REGIONAL WASTEWATER TREATMENT PLANT
CITY OF AUSTIN, TEXAS

CH2MHILL

DSGN Y. VEGA
DR L. TRIPP
J. ALSAMEDRA
CHK L. TRIPP
APVD R. EMANUEL

NO | DATE | REVISION | BY | APVD

REUSE OF DOCUMENTS
THIS DOCUMENT, AND THE IDEAS AND DESIGNS INCORPORATED HEREIN, AS AN INSTRUMENT OF PROFESSIONAL SERVICE, IS THE PROPERTY OF CH2M HILL AND IS NOT TO BE USED, IN WHOLE OR IN PART, FOR ANY OTHER PROJECT WITHOUT THE WRITTEN AUTHORIZATION OF CH2M HILL.
© CH2M HILL

BAR IS ONE INCH ON ORIGINAL DRAWING
0 1"
IF NOT ONE INCH ON THIS SHEET, ADJUST SCALES ACCORDINGLY.

MARTINEZ & WRIGHT ENGINEERS, INC.

INTERCONNECT DIAGRAM
SLUDGE THICKENING

SHEET
DWG NO. IC-ST41-03
DATE JULY 94
PROJ NO. SYX30935.01

SLUDGE GRAVITY THICKENER TORQUE INTERPOSING RELAY CONTROL WIRING SCHEMATIC – DEMOLITION (1)(1) [E-65]
SCALE: NONE

REUSE OF DOCUMENTS
This document, and the designs incorporated herein, is an instrument of professional service that has been developed, designed and prepared by Harutunian Engineering, Inc., and is not to be used, in whole or part, for any other project without giving written notice to Harutunian Engineering, Inc.

REV No	DATE	DRWN	CHKD	REMARKS
△	–	–	–	–

DESIGNED BY: HEI
DRAWN BY: HEI
SHEET CHK'D BY: HEI
CROSS CHK'D BY: HEI
APPROVED BY: HEI
DATE: APRIL 2016

CDM Smith
Riata Corporate Park, 12357-A Riata Trace Parkway, Suite 210
Austin, TX 78727
Tel: (512) 346-1100
Texas Registration Number F-3043

HARUTUNIAN ENGINEERING, INC.
305 E Huntland Dr, Ste 500; Austin, TX 78752
TBPE Firm Registration No. F-2408

CITY OF AUSTIN, TEXAS - AUSTIN WATER UTILITY
CIP 3333.016
SOUTH AUSTIN REGIONAL WWTP
THICKENER IMPROVEMENTS PROJECT

CONTROL WIRING SCHEMATIC
DEMOLITION
(SHEET 5 OF 8)

K. A. HARUTUNIAN
STATE OF TEXAS
K. A. HARUTUNIAN
59181
REGISTERED PROFESSIONAL ENGINEER
4/22/2016

PROJECT No 590–104217
FILE NAME: E–40

SHEET No
E-40

Plotted: 4/22/2016 9:29:13 AM

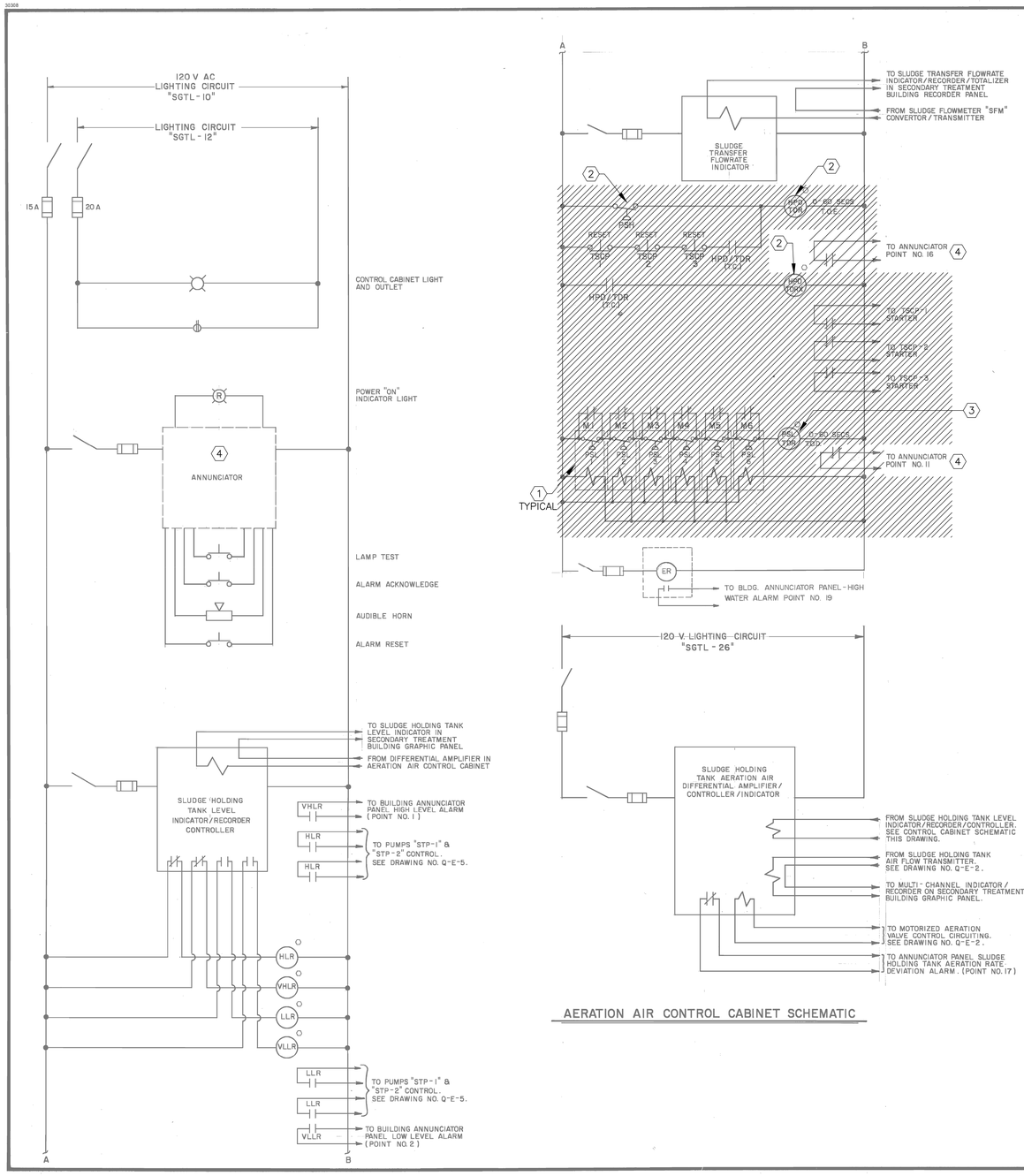

AERATION AIR CONTROL CABINET SCHEMATIC

POINT NO.	WINDOW INSCRIPTION	CONTACT WIRING	CONTACT LOCATION
1	SLUDGE HOLDING TANK - HIGH LEVEL (4)	VHLR	RELAY IN BUILDING CONTROL CABINET.
2	SLUDGE HOLDING TANK - LOW LEVEL	VLLR	RELAY IN BUILDING LOW CONTROL CABINET
3	SLUDGE THICKENER NO. 1 - RAKE OFF	M	MOTOR CONTROL CENTER "SGT - 14"
4	SLUDGE THICKENER NO. 2 - RAKE OFF	M	MOTOR CONTROL CENTER "SGT - 24" (4)
5	SLUDGE THICKENER NO. 1 - RAKE OVERTORQUE	OTR 1	RELAY IN BUILDING CONTROL CABINET
6	SLUDGE THICKENER NO. 2 - RAKE OVERTORQUE	OTR 2	RELAY IN BUILDING CONTROL CABINET
7	COMPRESSED AIR - LOW PRESSURE		COMPRESSED AIR PRESSURE GAUGE (CONTROL CABINET)
8	SLUDGE TRANSFER PUMP "STP - 2" HIGH DISCHARGE PRESSURE	HPD/TDR T.D.	TDR RELAY IN BUILDING CONTROL CABINET
9	SLUDGE TRANSFER PUMP "STP - 1" CHECK VALVE FAILED TO OPEN	VLS1 TDR T.D.	TDR RELAY IN BUILDING CONTROL CABINET
10	SLUDGE TRANSFER PUMP "STP - 2" CHECK VALVE FAILED TO OPEN	VLS2 TDR T.D.	TDR RELAY IN BUILDING CONTROL CABINET (4)
11	PUMP SEAL WATER - LOW PRESSURE	PSL/TDR T.D.	TDR RELAY IN BUILDING CONTROL CABINET
12	SLUDGE TRANSFER - LOW FLOW RATE	(AUXR)HFR	AUXILARY CONTACT IN SECONDARY TREATMENT BUILDING ANNUNCIATOR PANEL
13	THICKENED SLUDGE PUMP "TSLP - 1" CHECK VALVE FAILED TO OPEN	VLS1 TDR T.D.	FROM THICKENED SLUDGE PUMP "TSLP - 1" CONTROL (4)
14	THICKENED SLUDGE PUMP "TSLP - 2" CHECK VALVE FAILED TO OPEN	VLS2 TDR T.D.	FROM THICKENED SLUDGE PUMP "TSLP - 2" CONTROL
15	THICKENED SLUDGE/SCUM PUMP "TSLP - 3" CHECK VALVE FAILED TO OPEN	VLS3 TDR T.D.	FROM THICKENED SLUDGE PUMP "TSLP - 3" CONTROL (4)
16	THICKENED SCUM PUMP DISCHARGE - HIGH PRESSURE	HPD/TDR	TDR AUXILIARY RELAY IN BLDG. CONTROL CAB.
17	SLUDGE HOLDING TANK AERATION RATE - DEVIATION		ALARM CONTACT FROM AERATION AIR DIFFERENTIAL AMPLIFIER/CONTROLLER/ INDICATOR ON BUILDING AERATION AIR CONTROL CABINET
18	PUMP BUILDING - LOW TEMPERATURE		BUILDING LOW TEMPERATURE THERMOSTAT
19	HIGH WATER LEVEL		FROM HIGH WATER LEVEL ELECTRODE RELAY
20.	HYDROGEN GAS DETECTOR - ODOR CONTROL		HYDROGEN SULFIDE MONITOR PANEL AT GRAVITY THICKENERS ODOR CONTROL UNIT
21-25	FUTURE		

ANNUNCIATOR PANEL (4)

KEY NOTES:

(1) IT APPEARS THAT THE PRESSURE SWITCHES SHOWN HERE WERE REPLACED WITH NEW PRESSURE SWITCHES AND CONNECTED BETWEEN THE EXISTING SLUDGE/SCUM PUMPING UNITS WITHIN THE SLUDGE TRANSFER BUILDING AND THE REMOTE I/O ENCLOSURE DURING A DIFFERENT PROJECT ENTITLED "SOUTH AUSTIN REGIONAL CONTROL AND INSTRUMENTATION IMPROVEMENTS PROJECT" DATED AUGUST 1994 AS SHOWN ON REFERENCE DRAWING NO. [E-62]. CONTRACTOR SHALL FIELD VERIFY ALL EXISTING CONDITIONS AND NOTIFY ENGINEER/OWNER OF ANY DISCREPANCIES PRIOR TO COMMENCING DEMOLITION OR RENOVATION ACTIVITIES. CONTRACTOR SHALL DISCONNECT AND REMOVE EXISTING PRESSURE SWITCHES AND ASSOCIATED CONDUIT AND WIRE FOR ALL EXISTING SLUDGE AND SCUM PUMPING UNITS. NEW PRESSURE SWITCHES SHALL BE PROVIDED DURING RENOVATION ACTIVITIES.

(2) CONTRACTOR SHALL FIELD VERIFY EXISTING CONDITIONS BY DETERMINING IF THE EXISTING CONTROL RELAY AND HIGH PRESSURE SWITCH ARE ACTIVE AND CONNECTED TO THE SCUM PUMPING UNIT CONTROL SCHEMATICS. CONTRACTOR SHALL NOTIFY ENGINEER/OWNER OF ANY DISCREPANCIES PRIOR TO COMMENCING DEMOLITION/RENOVATION ACTIVITIES. CONTRACTOR SHALL DISCONNECT AND REMOVE ALL ASSOCIATED CONTROL LOGIC AND DEVICES ASSOCIATED WITH THE SCUM PUMPING UNITS INCLUDING DEVICES AND CONDUIT/WIRE IN THEIR ENTIRETY AS INDICATED ON OTHER DEMOLITION CONTROL SCHEMATIC DRAWINGS WITHIN THIS DRAWING SET.

(3) IT APPEARS THAT THE EXISTING CONTROL RELAY. "PSL-TDR" IS LOCATED ON THE INTERIOR BACKPLANE OF EXISTING CONTROL PANEL "PB01-CPP-01"; HOWEVER, AS PREVIOUSLY AFOREMENTIONED, IT APPEARS THAT THE PRESSURE SWITCHES WERE REPLACED IN A LATER PROJECT AND ROUTED TO THE EXISTING REMOTE I/O CABINET WITHIN THE SLUDGE TRANSFER PUMP BUILDING. CONTRACTOR SHALL FIELD VERIFY EXISTING CONDITIONS AND DETERMINE IF CONTROL RELAY IS ABANDONED IN PLACE. IF CONTROL RELAY IS ABANDONED, CONTRACTOR SHALL DISCONNECT ALL ASSOCIATED WIRING AND CONTROL RELAY IN ITS ENTIRETY.

(4) EXISTING ANNUNCIATOR AND ASSOCIATED ANNUNCIATOR POWER SUPPLY SHALL BE ABANDONED IN PLACE AND SHALL REMAIN WITHIN THE EXISTING CONTROL PANEL "PB01-CCP-001"; HOWEVER, THE CONTRACTOR SHALL BE AWARE THAT SEVERAL OF THE CONNECTED ALARMS SHALL BE DISCONNECTED AND REMOVED DURING DEMOLITION ACTIVITIES, AND WILL NOT BE RECONNECTED DURING RENOVATION ACTIVITIES.

GENERAL NOTES:

1. THE EXISTING INFORMATION SHOWN ON THIS DRAWING WAS OBTAINED FROM THE PROJECT ENTITLED "ONION CREEK WASTEWATER TREATMENT FACILITIES – CONTRACT NO. 2" DATED APRIL 1984. THIS DRAWING MAY NOT EXACTLY REFLECT THE EXISTING CONDITIONS. THEREFORE, THE CONTRACTOR IS TO FIELD VERIFY THE EXISTING CONDITIONS PRIOR TO COMMENCING FULL SCALE DEMOLITION OR RENOVATION ACTIVITIES. FOLLOWING THE DISCOVERY VERIFICATION OF THE EXISTING FIELD CONDITIONS, SHOULD ADJUSTMENTS BECOME A NECESSITY TO THE EXISTING OR PROPOSED SYSTEM (AS APPLICABLE), THE EXISTING DISCOVERED FIELD CONDITIONS MUST BE BROUGHT TO THE OWNER'S ATTENTION FOR EXECUTION OF THE NECESSARY ADJUSTMENTS/MODIFICATIONS.

2. THE EXISTING EQUIPMENT IS IN WORKING CONDITION. IF ANY OF THE EXISTING EQUIPMENT/ COMPONENTS WHICH SHALL BE REUSED IS DAMAGED OR STOPS FUNCTIONING CORRECTLY, THE CONTRACTOR IS RESPONSIBLE FOR FURNISHING AND INSTALLING NEW EQUIPMENT/ COMPONENTS AS APPROVED BY THE OWNER AND MAKE ALL FINAL TERMINATIONS AT NO ADDITIONAL COST TO THE OWNER.

TRIAD ENGINEERING
CONSULTING ENGINEERS
AUSTIN, TEXAS

NO.	DATE	REVISION	APPROV.
4			
3			
2			
1			

CITY OF AUSTIN, TEXAS
ONION CREEK WASTEWATER TREATMENT FACILITIES
SLUDGE TRANSFER PUMP BUILDING
CONTROL & ANNUNCIATOR PANELS SCHEMATIC

Turner Collie & Braden Inc.
CONSULTING ENGINEERS
TEXAS AUSTIN/DALLAS/EL PASO/HOUSTON/PORT ARTHUR
COLORADO DENVER/GRAND JUNCTION

Unit NAIL	Scale Horz NONE Vert	Date APRIL, 1984	
Designed KAH	Checked KAH/JRS	Job No. 7109-025	Contract 2
Drawn VMQ/JP	Approved JRS	Sheet 262 of 300	

I HEREBY CERTIFY THIS "RECORD DRAWINGS" IS CORRECT AND WAS PREPARED UNDER MY SUPERVISION.
11/1/96

STATE OF TEXAS JAMES R. SCHULTZ 22165 REGISTERED PROFESSIONAL ENGINEER
Dwg. No. Q-I-2

SLUDGE TRANSFER BUILDING CONTROL AND ANNUNCIATOR PANELS CONTROL SCHEMATICS– DEMOLITION (1) [E-62]
SCALE: NONE

REUSE OF DOCUMENTS
This document, and the designs incorporated herein, is an instrument of professional service that has been developed, designed and prepared by Harutunian Engineering, Inc., and is not to be used, in whole or part, for any other project without giving written notice to Harutunian Engineering, Inc.

STATE OF TEXAS K. A. HARUTUNIAN 59181 REGISTERED PROFESSIONAL ENGINEER 4/22/2016

REV No	DATE	DRWN	CHKD	REMARKS
–	–	–	–	

DESIGNED BY: HEI
DRAWN BY: HEI
SHEET CHK'D BY: HEI
CROSS CHK'D BY: HEI
APPROVED BY: HEI
DATE: APRIL 2016

CDM Smith
Riata Corporate Park, 12357-A Riata Trace Parkway, Suite 210
Austin, TX 78727
Tel: (512) 346-1100
Texas Registration Number F-3043

HARUTUNIAN ENGINEERING, INC.
305 E Huntland Dr, Ste 500; Austin, TX 78752
TBPE Firm Registration No. F-2408

CITY OF AUSTIN, TEXAS - AUSTIN WATER UTILITY
CIP 3333.016
SOUTH AUSTIN REGIONAL WWTP
THICKENER IMPROVEMENTS PROJECT

CONTROL WIRING SCHEMATIC
DEMOLITION
(SHEET 6 OF 8)

PROJECT No 590-104217
FILE NAME: E-41
SHEET No
E-41

Plotted: 4/22/2016 8:50:20 AM

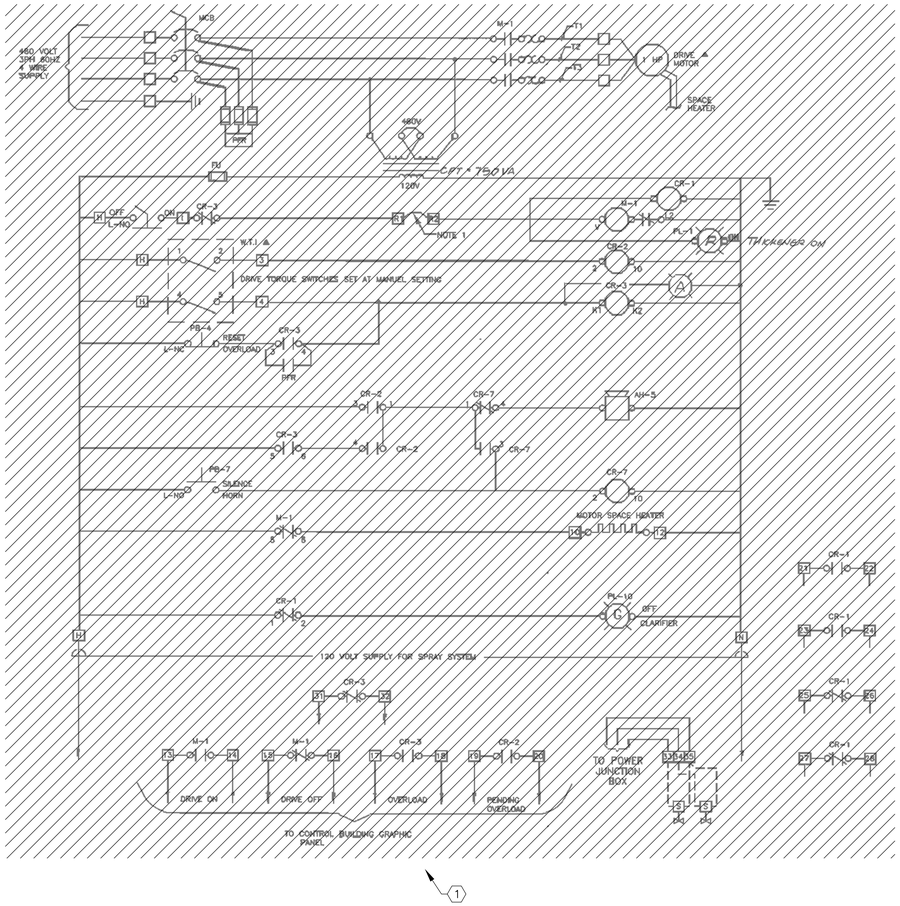

1

NOTES

1. REMOVE JUMPER AND USE TERMINALS FOR TRAIN "B" THICKENER "1B" & "2B" KEEP JUMPER INSTALLED FOR TRAIN "A".

2. PFR DENOTES PHASE FAILURE RELAY.

3. PROVIDE AND INSTALL NEW CONTROL PANEL WITH RELATED EQUIPMENT. VERIFY OPERATION, SHUTDOWN AND MONITORING EQUIPMENT REQUIREMENTS. SET DRIVE TORQUE SWITCH VALUES IN ACCORDANCE WITH MANUFACTURER'S VALUES. PROVIDE MANUFACTURER'S VALUES AND CALIBRATION CERTIFICATION FOR RECORD PURPOSES WITH SUBMITTALS.

4. TO PROVIDE CONTROL PANEL WITH THE FOLLOWING FEATURES.

A. ENCLOSURE

- RATING NEMA 4X (STAINLESS STEEL)
- FULLY HINGED DOOR
- EXTERIOR CIRCUIT BREAKER OPERATOR INTERLOCKED WITH DOOR
- ENGRAVED LAMINATED PLASTIC NAMEPLATES (BLACK LETTERS ON WHITE BACKGROUND) FASTENED WITH STAINLESS STEEL SCREWS.
- SIZE ENCLOSURE FOR EQUIPMENT PROVIDED
- MANUFACTURER HOFFMAN ENGINEERING, CFM COMPANY OR EQUAL.

B. COMPONENTS

- NEMA SIZE 1 COMBINATION MOTOR STARTER WITH MOTOR CIRCUIT PROTECTOR (MCP), CONTROL POWER TRANSFORMER, AND THERMAL OVERLOAD RELAYS SIZE TO MOTOR FULL LOAD CURRENT
- MANUFACTURER: SQUARE D, G.E. OR EQUAL
- GENERAL PURPOSE RELAY WITH MOUNTING BASE
  - CONTACT RATING 10 AMPS AT 240 VAC
  - MANUFACTURER SQUARE D, TYPE K, G.E. CR 120H OR EQUAL
- CONTROL STATION, SWITCHES, PUSHBUTTONS, DEVICES
  - OIL TIGHT CONSTRUCTION RATED FOR 10 AMP AT 600 VAC
  - MANUFACTURER SQUARE D, CLASS 9000 SK, G.E. CR 2240 OR EQUAL

C. WIRING

- COPPER CONDUCTOR WITH TYPE MIW-THHN INSULATION
- INSTALL WIRING RUNS ALONG HORIZONTAL OR VERTICAL ROUTES. ANGLED RUNS NOT ACCEPTABLE
- GROUP OR BUNDLE RUNS OF WIRE USING PLASTIC TIES. ADEQUATE SUPPORT BUNDLES
- USE INSULATED SPADE LUGS TO CONNECT WIRING TO TERMINALS
- TERMINATE ALL WIRING AT TERMINAL STRIP
- USE BARRIER-TYPE TERMINAL STRIPS WITH SCREWED CONNECTIONS AND NUMERIC IDENTIFIERS. PROVIDE 20% SPARE TERMINALS.

KEY NOTES:

1. THE EXISTING CONTROL WIRING SCHEMATIC SHOWN ON THIS DRAWING IS TYPICAL FOR GRAVITY THICKENERS NO. 1A, 2A, 1B, AND 2B FIELD MOUNTED PACKAGED CONTROL PANEL. DISCONNECT AND REMOVE EXISTING GRAVITY THICKENERS NO. 1A, 2A, 1B, AND 2B IN THEIR ENTIRETY INCLUDING ALL FIELD MOUNTED EQUIPMENT, MOTOR CONTROL CENTER EQUIPMENT, FIELD WIRING, AND INTERNAL WIRING/COMPONENTS/CONTROL DEVICES/INSTRUMENTATION LOCATED WITHIN CONTROL PANEL, "PB01-CCP-01" OR "PB01-CCP-03", AS APPLICABLE. REFER TO DEMOLITION ONE-LINE DIAGRAMS AND DEMOLITION FLOOR PLAN DRAWINGS FOR ADDITIONAL INFORMATION.

GENERAL NOTES:

1. THE EXISTING INFORMATION SHOWN ON THIS DRAWING WAS OBTAINED FROM THE PROJECT ENTITLED "SOUTH AUSTIN REGIONAL WASTEWATER TREATMENT PLANT MISCELLANEOUS IMPROVEMENTS PROJECT" DATED DECEMBER 1995. THIS DRAWING MAY NOT EXACTLY REFLECT THE EXISTING CONDITIONS. THEREFORE, THE CONTRACTOR IS TO FIELD VERIFY THE EXISTING CONDITIONS PRIOR TO COMMENCING FULL SCALE DEMOLITION OR RENOVATION ACTIVITIES. FOLLOWING THE DISCOVERY VERIFICATION OF THE EXISTING FIELD CONDITIONS, SHOULD ADJUSTMENTS BECOME A NECESSITY TO THE EXISTING OR PROPOSED SYSTEM (AS APPLICABLE), THE EXISTING DISCOVERED FIELD CONDITIONS MUST BE BROUGHT TO THE OWNER'S ATTENTION FOR EXECUTION OF THE NECESSARY ADJUSTMENTS/MODIFICATIONS.

△1 DELETE THIS SHEET
REFER TO O&M MANUAL

NO.	DATE	REVISION	APPROV.
4			
3			
2			
△1	12/97	RECORD DRAWING	

RECORD DRAWING
PREPARED BY RWB
DATE 1/13/98

WARNING
0 1/2 1
IF THIS BAR DOES NOT MEASURE 1" THEN DRAWING IS NOT TO SCALE

STATE OF TEXAS
C. J. TROUTT
41075
REGISTERED PROFESSIONAL ENGINEER
12/21/95

CITY OF AUSTIN, TEXAS
SOUTH AUSTIN REGIONAL WASTEWATER TREATMENT PLANT
MISCELLANEOUS IMPROVEMENTS PROJECT
GRAVITY THICKENERS
CONTROL DIAGRAM

Turner Collie & Braden Inc.
ENGINEERS • PLANNERS • PROJECT MANAGERS

Unit	Public Works	Scale	NONE	Date	NOV. 1995
Designed	CT	Checked	BD	Job No.	72-07109-206 Contract 1
Drawn	SCF	Approved	SGE	Sheet	93 of 97
Dwg. No.	E-44				

GRAVITY THICKENERS FIELD CONTROL PANEL CONTROL SCHEMATIC- DEMOLITION (1) [E-63]
SCALE: NONE

K. A. Harutunian
STATE OF TEXAS
K. A. HARUTUNIAN
59181
REGISTERED PROFESSIONAL ENGINEER
4/22/2016

REUSE OF DOCUMENTS
This document, and the designs incorporated herein, is an instrument of professional service that has been developed, designed and prepared by Harutunian Engineering, Inc., and is not to be used, in whole or part, for any other project without giving written notice to Harutunian Engineering, Inc.

REV No	DATE	DRWN	CHKD	REMARKS
△	–	–	–	–

DESIGNED BY: HEI
DRAWN BY: HEI
SHEET CHK'D BY: HEI
CROSS CHK'D BY: HEI
APPROVED BY: HEI
DATE: APRIL 2016

CDM Smith
Riata Corporate Park, 12357-A Riata Trace Parkway, Suite 210
Austin, TX 78727
Tel: (512) 346-1100
Texas Registration Number F-3043

HEI
HARUTUNIAN ENGINEERING, INC.
305 E Huntland Dr, Ste 500; Austin, TX 78752
TBPE Firm Registration No. F-2408

CITY OF AUSTIN, TEXAS - AUSTIN WATER UTILITY
CIP 3333.016
SOUTH AUSTIN REGIONAL WWTP
THICKENER IMPROVEMENTS PROJECT

CONTROL WIRING SCHEMATIC
DEMOLITION
(SHEET 7 OF 8)

PROJECT No 590-104217
FILE NAME: E-42

SHEET No
E-42

Plotted: 4/22/2016 8:50:24 AM

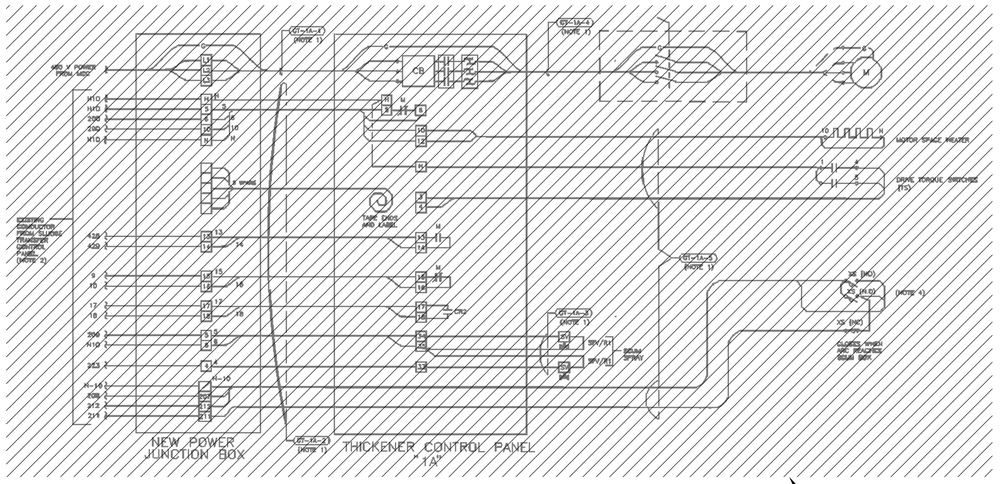

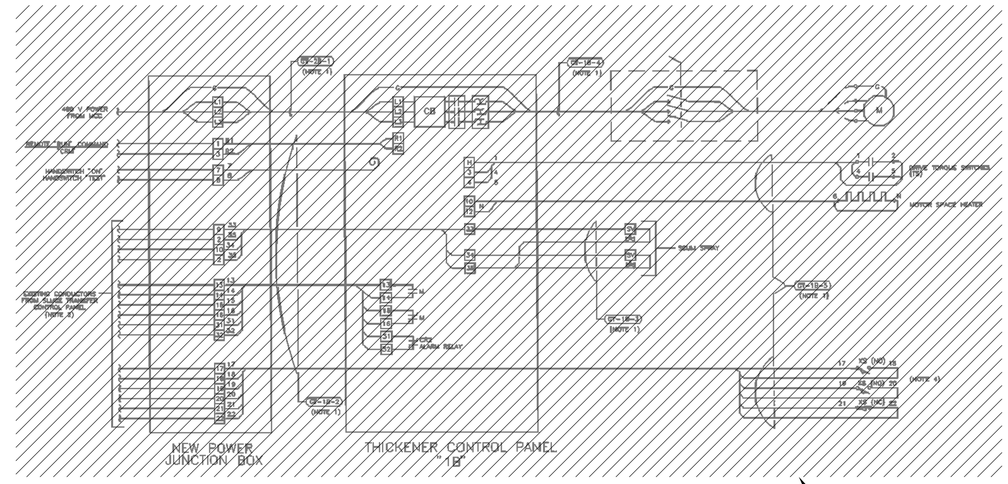

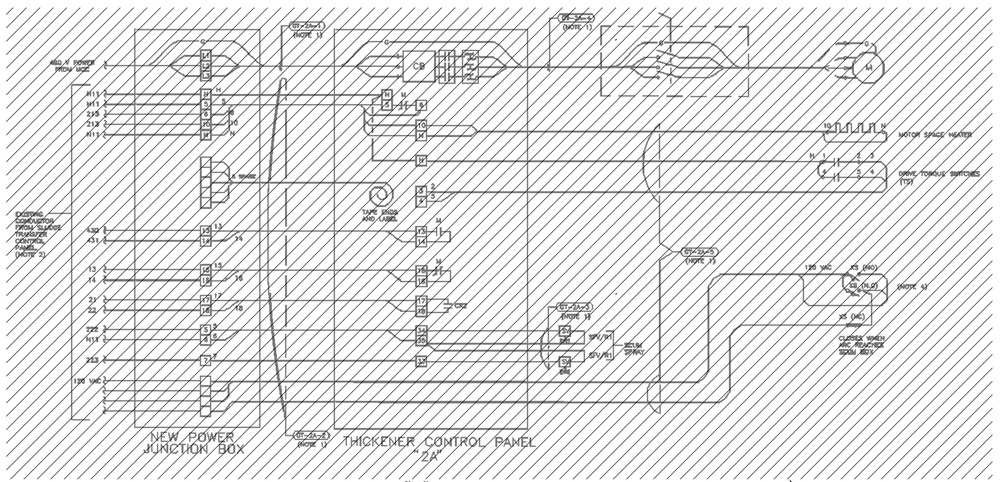

TRAIN "A"

(NOTE 3)

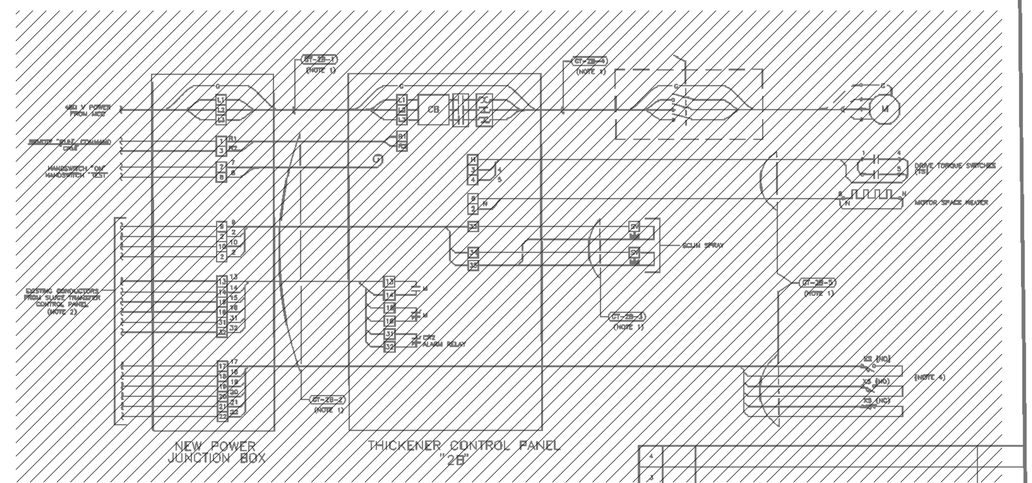

TRAIN "B"

(NOTE 3)

KEY NOTES:

(1) THE EXISTING FIELD WIRING DIAGRAM SHOWN ON THIS DRAWING IS TYPICAL FOR GRAVITY THICKENERS NO. 1A, 2A, 1B, AND 2B. DISCONNECT AND REMOVE EXISTING GRAVITY THICKENERS NO. 1A, 2A, 1B, AND 2B IN THEIR ENTIRETY INCLUDING ALL FIELD MOUNTED EQUIPMENT, MOTOR CONTROL CENTER EQUIPMENT, ASSOCIATED CONDUIT AND FIELD WIRING, JUNCTION BOXES AND INTERNAL WIRING/COMPONENTS/CONTROL DEVICES/INSTRUMENTATION LOCATED WITHIN CONTROL PANEL, "PB01-CCP-01" OR "PB01-CCP-03", AS APPLICABLE. REFER TO DEMOLITION ONE-LINE DIAGRAMS, DEMOLITION FLOOR PLAN DRAWINGS, AND DEMOLITION GRAVITY CONTROL WIRING SCHEMATICS ON DRAWINGS NO. [E-36] AND [E-40] FOR ADDITIONAL INFORMATION.

GENERAL NOTES:

1. THE EXISTING INFORMATION SHOWN ON THIS DRAWING WAS OBTAINED FROM THE PROJECT ENTITLED "SOUTH AUSTIN REGIONAL WASTEWATER TREATMENT PLANT MISCELLANEOUS IMPROVEMENTS PROJECT" DATED DECEMBER 1995. THIS DRAWING MAY NOT EXACTLY REFLECT THE EXISTING CONDITIONS. THEREFORE, THE CONTRACTOR IS TO FIELD VERIFY THE EXISTING CONDITIONS PRIOR TO COMMENCING FULL SCALE DEMOLITION OR RENOVATION ACTIVITIES. FOLLOWING THE DISCOVERY VERIFICATION OF THE EXISTING FIELD CONDITIONS, SHOULD ADJUSTMENTS BECOME A NECESSITY TO THE EXISTING OR PROPOSED SYSTEM (AS APPLICABLE), THE EXISTING DISCOVERED FIELD CONDITIONS MUST BE BROUGHT TO THE OWNER'S ATTENTION FOR EXECUTION OF THE NECESSARY ADJUSTMENTS/MODIFICATIONS.

NOTES:

1. IN ORDER TO SIMPLIFY THE DIAGRAMS CONDUIT SEALS ARE NOT SHOWN. REFER TO ONE-LINE DIAGRAM DETAIL AND ELECTRICAL PLAN FOR HAZARDOUS AREA CONDUIT SEALS.
2. AS PART OF THE WORK AND PRIOR TO THE THICKENER CONTROL PANEL RELOCATION, THE CONTRACTOR TO VERIFY AND TAG CONTROL CONDUCTORS ASSOCIATED WITH THE THICKENER CONTROL PANEL, SLUDGE TRANSFER CONTROL PANEL AND RELATED FIELD DEVICES. CONTROL OPERATION TO BE VERIFIED WITH THE FIELD DEVICES, SLUDGE TRANSFER CONTROL PANEL AND THICKENER CONTROL PANEL, AND OPERATIONAL PERSONAL PRIOR TO PANEL RELOCATION. AFTER RELOCATION AND INSTALLATION OF THICKENER CONTROL PANEL, THE OPERATION OF THE CONTROL PANEL TO BE TESTED AND VERIFIED. AS A MINIMUM, THE TEST TO INCLUDE:
   A. NORMAL OPERATION.
   B. DRIVE TORQUE SWITCH PROTECTION.
   C. ALARM AND MONITORING VERIFICATION.
3. THE CONTROL DIAGRAM WAS DEVELOPED FROM THE BEST INFORMATION AVAILABLE. THE INFORMATION INDICATED DOES NOT RELIEVE THE CONTRACTOR OF PROVIDING SERVICES TO VERIFY NORMAL AND PROTECTIVE SYSTEM OPERATION. THE CONTRACTOR TO PROVIDE A COMPLETE-IN-PLACE OPERATIONAL SYSTEM.
4. PROVIDE CLASS 1, DIV.1, GROUP D LIMIT SWITCHES CROUSE-HINDS "EMS" OR EQUAL. HOUSING MATERIALS COPPER-FREE ALUMINUM OF STAINLESS STEEL. CONFIGURE SWITCHES TO MATCH REPLACEMENT SWITCHES FOR A COMPLETE IN PLACE OPERATIONAL SYSTEM.
5. ALARM RELAY FOR TRAIN "B" IS N.O. CONTACT MODIFY ANNUNCIATION AND I/O DEVICE TO

RECORD DRAWING
PREPARED BY RWB
DATE 1/13/98

WARNING
0 1/2 1
IF THIS BAR DOES NOT MEASURE 1" THEN DRAWING IS NOT TO SCALE

STATE OF TEXAS
C. J. TROUTT
41075
REGISTERED PROFESSIONAL ENGINEER
10/21/95

Dwg. No. E-45

NO.	DATE	REVISION	APPROV.
4			
3			
2			
1			

CITY OF AUSTIN, TEXAS
SOUTH AUSTIN REGIONAL WASTEWATER TREATMENT PLANT
MISCELLANEOUS IMPROVEMENTS PROJECT

GRAVITY THICKENERS

WIRING DIAGRAM

Turner Collie & Braden Inc.
ENGINEERS • PLANNERS • PROJECT MANAGERS

Unit	Public Works	Scale	NONE	Date	NOV. 1995
Designed	CT	Checked	BD	Job No.	72-07109-206 Contract 1
Drawn	SCF	Approved	SGE	Sheet	94 of 97

GRAVITY THICKENERS FIELD WIRING DIAGRAM – DEMOLITION (1) [E-64]

SCALE: NONE

REUSE OF DOCUMENTS
This document, and the designs incorporated herein, is an instrument of professional service that has been developed, designed and prepared by Harutunian Engineering, Inc., and is not to be used, in whole or part, for any other project without giving written notice to Harutunian Engineering, Inc.

REV No	DATE	DRWN	CHKD	REMARKS
△	–	–	–	–

DESIGNED BY: HEI
DRAWN BY: HEI
SHEET CHK'D BY: HEI
CROSS CHK'D BY: HEI
APPROVED BY: HEI
DATE: APRIL 2016

CDM Smith
Riata Corporate Park, 12357-A Riata Trace Parkway, Suite 210
Austin, TX 78727
Tel: (512) 346-1100
Texas Registration Number F-3043

HARUTUNIAN ENGINEERING, INC.
305 E Huntland Dr, Ste 500; Austin, TX 78752
TBPE Firm Registration No. F-2408

CITY OF AUSTIN, TEXAS - AUSTIN WATER UTILITY
CIP 3333.016

SOUTH AUSTIN REGIONAL WWTP
THICKENER IMPROVEMENTS PROJECT

CONTROL WIRING SCHEMATIC
DEMOLITION
(SHEET 8 OF 8)

STATE OF TEXAS
K. A. HARUTUNIAN
59181
REGISTERED PROFESSIONAL ENGINEER
4/22/2016

PROJECT No 590-104217
FILE NAME: E-43

SHEET No
E-43

Plotted: 4/22/2016 8:50:28 AM

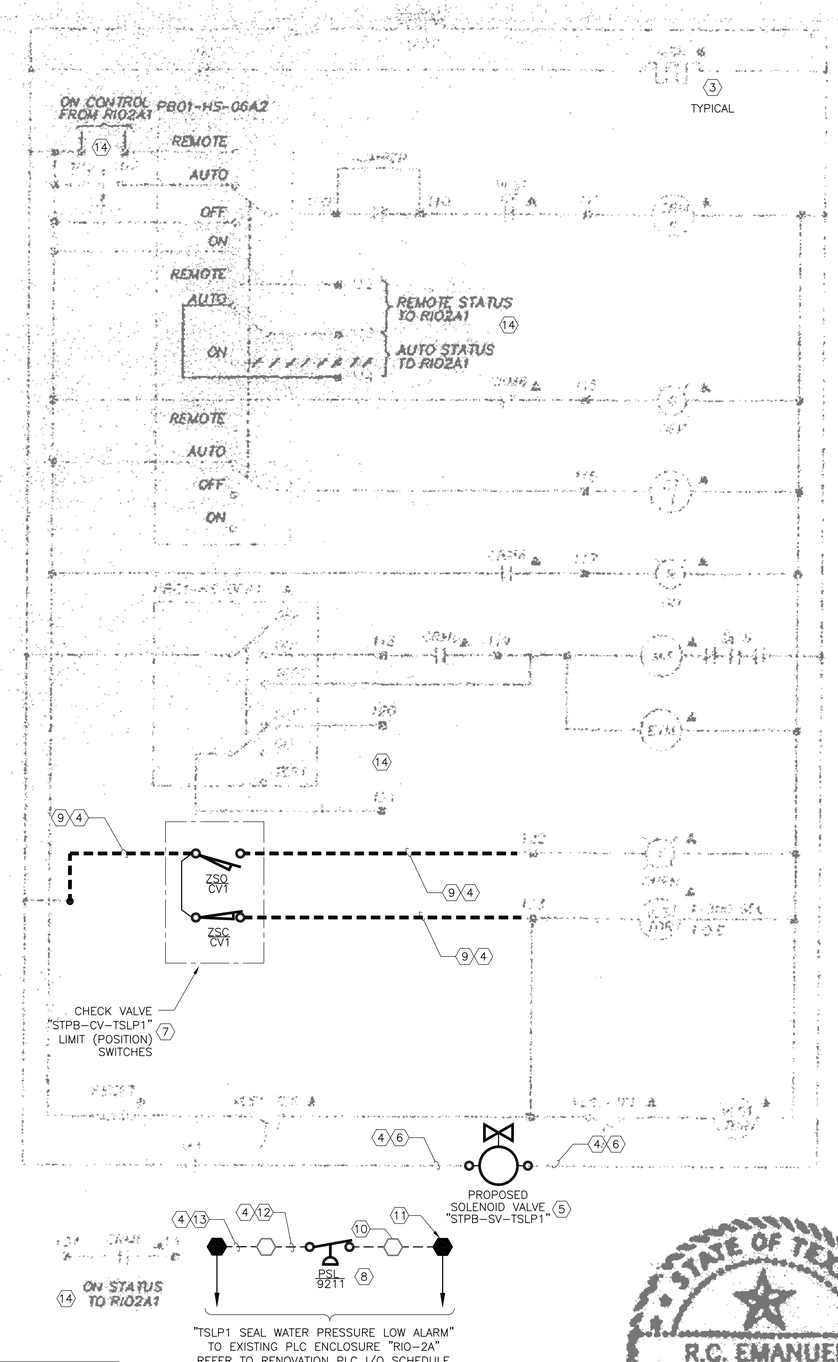

KEY NOTES:

1. THE CONTROL SCHEMATIC SHOWN ON THIS DRAWING IS A RENOVATION CONTROL SCHEMATIC FOR EXISTING SLUDGE PUMP "TSLP-4" WHICH SHALL BE RETAGGED DURING RENOVATION ACTIVITIES AS SLUDGE PUMP NO. 1, "STPB-TSLP-1". REFER TO RENOVATION ONE-LINE DIAGRAMS AND RENOVATION FLOOR PLANS FOR ADDITIONAL INFORMATION.

2. IT IS THE RESPONSIBILITY OF THE CONTRACTOR TO BECOME INTIMATELY FAMILIAR WITH THE FUNCTION, OPERATION AND ASSOCIATED INTERLOCKS FOR EXISTING PUMP "TSLP-4" ALONG WITH THE ASSOCIATED CHECK VALVE LIMIT SWITCHES, SEAL WATER PRESSURE SWITCH, SOLENOID VALVE, FIELD CONTROL STATION PRIOR TO COMMENCING MODIFICATION/ DEMOLITION/RENOVATION ACTIVITIES. CONTRACTOR SHALL FIELD VERIFY AND DENOTE ALL INTERCONNECT CONDUIT/WIRING AND THE TERMINATIONS OF INTERCONNECT WIRING BETWEEN THE DIFFERENT EXISTING ENCLOSURES (I.E MOTOR CONTROL CENTER, CONTROL PANEL, PLC ENCLOSURE, ETC.) AND PUMPING UNIT EQUIPMENT PRIOR TO COMMENCING MODIFICATION/DEMOLTIION ACTIVITIES, DURING RENOVATION ACTIVITIES, THE CONTRACTOR SHALL FURNISH AND INSTALL ALL NECESSARY INTERCONNECT CONDUIT/WIRE/CONTROL RELAYS/TERMINAL BLOCKS, ETC., AS REQUIRED, WHETHER SHOWN OR NOT SHOWN ON THE CONTRACT DRAWINGS, AND MAKE ALL FINAL CONNECTIONS TO ENSURE THE OPERATION OF THE APPLICABLE PUMP, AND ALL ASSOCIATED AUXILIARY AND FIELD MOUNTED EQUIPMENT SUCH AS THE CHECK VALVE LIMIT SWITCHES, SOLENOID VALVE, PRESSURE SWITCH, MOTOR SPACE HEATER, FIELD CONTROL STATION, ETC., IS COMMENSURATE WITH EXISTING OPERATION TO THE SATISFACTION OF THE OWNER AND THE ENGINEER AT NO ADDITIONAL COST TO THE OWNER. THEREFORE, THE CONTRACTOR SHALL EXERCISE EXTREME CARE IN THE DEMOLITION OF THE FIELD MOUNTED EQUIPMENT AS SHOWN ON THE DEMOLITION DRAWINGS FOR EXISTING PUMP "TSLP-4", AND DEMOLITION OF INTERCONNECT CONDUIT/WIRE AS INDICATED ON THE DEMOLITION ONE-LINE DIAGRAMS AND DEMOLITION FLOOR PLAN DRAWINGS. CONTRACTOR SHALL CAREFULLY DOCUMENT THE FUNCTION AND OPERATION OF THE PUMPING UNIT, FIELD WIRING TERMINATION POINTS, EXISTING PUMP FIELD MOUNTED EQUIPMENT AND ITS INTERCONNECTION WITH THE EXISTING MOTOR CONTROL CENTER, EXISTING CONTROL PANEL, EXISTING PLC ENCLOSURE, ETC., AND ASSOCIATED INTERLOCKS SUCH TO ENSURE THAT THE PROPOSED REPLACEMENT FIELD DEVICES (I.E. SOLENOID VALVES, PRESSURE SWITCH, AND LIMIT SWITCHES) AND PROPOSED INTERCONNECT CONDUIT/WIRE FOR EACH PUMPING UNIT FUNCTIONS COMMENSURABLY TO THAT OF THE EXISTING PUMPING UNITS TO THE SATISFACTION OF THE OWNER AND THE ENGINEER AT NO ADDITIONAL COST TO THE OWNER.

3. THE MOTOR AND MOTOR SPACE HEATER ARE EXISTING AND SHALL BE RECONNECTED DURING RENOVATION ACTIVITIES.

4. REFER TO RENOVATION ONE-LINE DIAGRAMS AND RENOVATION FLOOR PLAN DRAWINGS FOR ADDITIONAL INFORMATION.

5. CONTRACTOR SHALL FURNISH AND INSTALL PROPOSED SOLENOID VALVE AND MAKE ALL FINAL TERMINATIONS/CONNECTIONS. REFER TO SPECIFICATIONS FOR ADDITIONAL INFORMATION.

6. CONTRACTOR SHALL RECONNECT THE EXISTING CONTROL WIRING PREVIOUSLY DISCONNECTED FROM THE EXISTING SOLENOID VALVE TO THE PROPOSED SOLENOID VALVE AS PREVIOUSLY TERMINATED/CONNECTED BASED ON FIELD VERIFICATION PRIOR TO DEMOLITION AND MAKE ALL FINAL TERMINATIONS/CONNECTIONS.

7. CONTRACTOR SHALL FURNISH AND INSTALL PROPOSED CHECK VALVE LIMIT (POSITION) SWITCHES AND MAKE ALL FINAL TERMINATIONS/CONNECTIONS. REFER TO SPECIFICATIONS FOR ADDITIONAL INFORMATION.

8. CONTRACTOR SHALL FURNISH AND INSTALL PROPOSED SEAL WATER LOW PRESSURE SWITCH AND MAKE ALL FINAL TERMINATIONS/CONNECTIONS.

KEY NOTES (CONTINUED):

9. CONTRACTOR SHALL ROUTE PROPOSED CONDUIT/WIRE BETWEEN THE EXISTING CONTROL PANEL "PB01-CCP-03" AND THE FIELD MOUNTED EQUIPMENT AND MAKE ALL FINAL TERMINATIONS/CONNECTIONS. THE CONTRACTOR SHALL CONNECT THE PROPOSED WIRING AS PREVIOUSLY CONNECTED PRIOR TO DEMOLISHING THE EXISTING CONTROL WIRING SUCH THAT THE EXISTING PUMPING UNIT FUNCTIONS AND OPERATES THE SAME AS THE EXISTING PUMPING UNIT TO THE SATISFACTION OF THE OWNER AND THE ENGINEER. SINCE THE PROPOSED CONTROL WIRING IS ROUTING DIRECTLY TO THE EXISTING CONTROL PANEL "PB01-CCP-03", THE CONTRACTOR SHALL TERMINATE THE CONTROL WIRING TO AN EXISTING SPARE TERMINAL BLOCK WITHIN THE EXISTING CONTROL PANEL. ALL EXISTING SPARE TERMINAL BLOCKS USED FOR THIS PUMPING UNIT'S CONTROL LOGIC SHALL BE LOCATED ADJACENT TO EACH OTHER AS A BLOCK OF TERMINAL BLOCKS WITHIN THE EXISTING CONTROL PANEL. THE CONTRACTOR SHALL THEN CONTINUE THE CONTROL WIRING TO IT'S FINAL DESTINATION/SOURCE AS PREVIOUSLY CONNECTED PRIOR TO DEMOLISHING THE EXISTING CONTROL WIRING BASED ON FIELD VERIFICATION OF THE CONTROL LOGIC. FOR EXAMPLE, THE CONTRACTOR MAY NEED TO CONTINUE TO ROUTE THE CONTROL WIRING WITHIN THE EXISTING CONTROL PANEL TO A CONTROL DEVICE/INSTRUMENTATION/ETC., OR ROUTE THE WIRING TO THE EXISTING MOTOR CONTROL CENTER, OR ROUTE THE WIRING TO THE EXISTING PLC ENCLOSURE "RIO-2A" AS NECESSARY AND MAKE ALL FINAL TERMINATIONS. CONTRACTOR SHALL PROVIDE ANY ADDITIONAL HARDWARE, CONDUIT, WIRE, CONTROL DEVICES, ETC., AS NECESSARY, SO THAT EACH PUMPING UNIT FUNCTIONS COMMENSURABLY TO THAT OF THE EXISTING PUMPING UNITS TO THE SATISFACTION OF THE OWNER AND THE ENGINEER AT NO ADDITIONAL COST TO THE OWNER. ALSO REFER TO KEYNOTE 2 ON THIS DRAWING FOR ADDITIONAL REQUIREMENTS.

10. EXISTING SPARE TERMINAL BLOCK LOCATED IN THE EXISTING CONTROL PANEL, "PB01-CCP-03".

11. TERMINAL BLOCK LOCATED INSIDE THE EXISTING PLC ENCLOSURE "RIO-2A". REFER TO PLC I/O SCHEDULE TO DETERMINE WHERE TO LAND THE LOW PRESSURE SWITCH SIGNAL AND FOR ADDITIONAL INFORMATION.

12. CONTRACTOR SHALL ROUTE LOW PRESSURE SWITCH CONTROL WIRING BETWEEN THE EXISTING SEAL WATER LOW PRESSURE SWITCH AND THE EXISTING CONTROL PANEL "PB01-CCP-03" AND, MAKE ALL FINAL TERMINATIONS/CONNECTIONS.

13. CONTRACTOR SHALL ROUTE LOW PRESSURE SWITCH DIGITAL INPUT SIGNAL WIRING BETWEEN THE EXISTING CONTROL PANEL "PB01-CCP-03" AND THE EXISTING PLC ENCLOSURE "RIO-2A" AND MAKE ALL FINAL TERMINATIONS/CONNECTIONS. REFER TO PLC I/O SCHEDULE FOR ADDITIONAL INFORMATION.

14. MODIFICATIONS TO THE EQUIPMENT WITHIN THE EXISTING PLC REMOTE I/O CONTROL PANEL "RIO-2A" ARE NOT SHOWN ON THIS RENOVATION DRAWING. CONTRACTOR SHALL REFER TO THE EXISTING CONTROL PANEL "RIO-2A" RENOVATION DRAWINGS AND THE PLC I/O RENOVATION SCHEDULE FOR ADDITIONAL INFORMATION AND REQUIREMENTS. WHETHER SHOWN OR NOT, THE CONTRACTOR SHALL MODIFY THE EXISTING PLC REMOTE I/O CONTROL PANEL AS DETAILED ON THE DEMOLITION/RENOVATION CONTROL PANEL ELEVATION DRAWINGS AND SHALL PROVIDE ALL NECESSARY CONTROL DEVICES, TERMINAL BLOCKS, WIRING, HARDWARE, PLC I/O MODULES, RACK, ADAPTERS, ETC. TO TO PROVIDE A FULLY FUNCTIONAL AND OPERATIONAL SYSTEM AS NO ADDITIONAL COST TO THE OWNER.

GENERAL NOTES:

1. THE EXISTING INFORMATION SHOWN ON THIS DRAWING WAS OBTAINED FROM THE PROJECT ENTITLED "SOUTH AUSTIN REGIONAL WWTP CONTROLS AND INSTRUMENTATION IMPROVEMENTS" DATED AUGUST 1994. THIS DRAWING MAY NOT EXACTLY REFLECT THE EXISTING CONDITIONS. THEREFORE, THE CONTRACTOR IS TO FIELD VERIFY THE EXISTING CONDITIONS PRIOR TO COMMENCING FULL SCALE DEMOLITION OR RENOVATION ACTIVITIES. FOLLOWING THE DISCOVERY VERIFICATION OF THE EXISTING FIELD CONDITIONS, SHOULD ADJUSTMENTS BECOME A NECESSITY TO THE EXISTING OR PROPOSED SYSTEM (AS APPLICABLE), THE EXISTING DISCOVERED FIELD CONDITIONS MUST BE BROUGHT TO THE OWNER'S ATTENTION FOR EXECUTION OF THE NECESSARY ADJUSTMENTS/MODIFICATIONS.

2. THIS RENOVATION DRAWING SHOWS THE PROPOSED MODIFICATIONS TO THE EXISTING MOTOR STARTER CONTROL WIRING SCHEMATIC PROVIDED IN THE REFERENCE DRAWINGS. NOT ALL INTERCONNECT REQUIREMENTS ARE SHOWN ON THIS DRAWING. THIS DRAWING MAY NOT EXACTLY REFLECT THE EXISTING CONDITIONS; THEREFORE, IT IS THE RESPONSIBILITY OF THE CONTRACTOR TO FIELD VERIFY EXISTING MOTOR STARTER CONTROL LOGIC, INTERCONNECT WIRING, ETC. PRIOR TO COMMENCING DEMOLITION AND RENOVATION ACTIVITIES. WHETHER SHOWN OR NOT SHOWN ON THIS WIRING SCHEMATIC, THE CONTRACTOR SHALL PROVIDE ALL ADDITIONAL CONTROL DEVICES, TERMINAL BLOCKS, WIRING, HARDWARE, ETC. AS NECESSARY TO PROVIDE A FULLY FUNCTIONAL AND OPERATIONAL PUMPING UNIT AT NO ADDITIONAL COST TO THE OWNER.

3. THE EXISTING EQUIPMENT IS IN WORKING CONDITION. IF ANY OF THE EXISTING EQUIPMENT/ COMPONENTS WHICH SHALL BE REUSED IS DAMAGED OR STOPS FUNCTIONING CORRECTLY, THE CONTRACTOR IS RESPONSIBLE FOR FURNISHING AND INSTALLING NEW EQUIPMENT/ COMPONENTS AS APPROVED BY THE OWNER AND MAKE ALL FINAL TERMINATIONS AT NO ADDITIONAL COST TO THE OWNER.

STATE OF TEXAS
R.C. EMANUEL

K. A. Harutunian
STATE OF TEXAS
K. A. HARUTUNIAN
59181
REGISTERED PROFESSIONAL ENGINEER
4/22/2016

SLUDGE PUMPING UNIT NO. 1, "STPB-TSLP-1"
(PREVIOUSLY TAGGED "TSLP-4") – RENOVATION
SCALE: NONE

2 [E-58]

REUSE OF DOCUMENTS
This document, and the designs incorporated herein, is an instrument of professional service that has been developed, designed and prepared by Harutunian Engineering, Inc., and is not to be used, in whole or part, for any other project without giving written notice to Harutunian Engineering, Inc.

REV No	DATE	DRWN	CHKD	REMARKS
1	–	–	–	–

DESIGNED BY: HEI
DRAWN BY: HEI
SHEET CHK'D BY: HEI
CROSS CHK'D BY: HEI
APPROVED BY: HEI
DATE: APRIL 2016

CDM Smith
Riata Corporate Park, 12357-A Riata Trace Parkway, Suite 210
Austin, TX 78727
Tel: (512) 346-1100
Texas Registration Number F-3043

HARUTUNIAN ENGINEERING, INC.
305 E Huntland Dr, Ste 500; Austin, TX 78752
TBPE Firm Registration No. F-2408

CITY OF AUSTIN, TEXAS - AUSTIN WATER UTILITY
CIP 3333.016

SOUTH AUSTIN REGIONAL WWTP
THICKENER IMPROVEMENTS PROJECT

CONTROL WIRING DIAGRAM
RENOVATION
(SHEET 1 OF 7)

PROJECT No 590-104217
FILE NAME: E-44

SHEET No
E-44

Plotted: 4/22/2016 9:29:16 AM

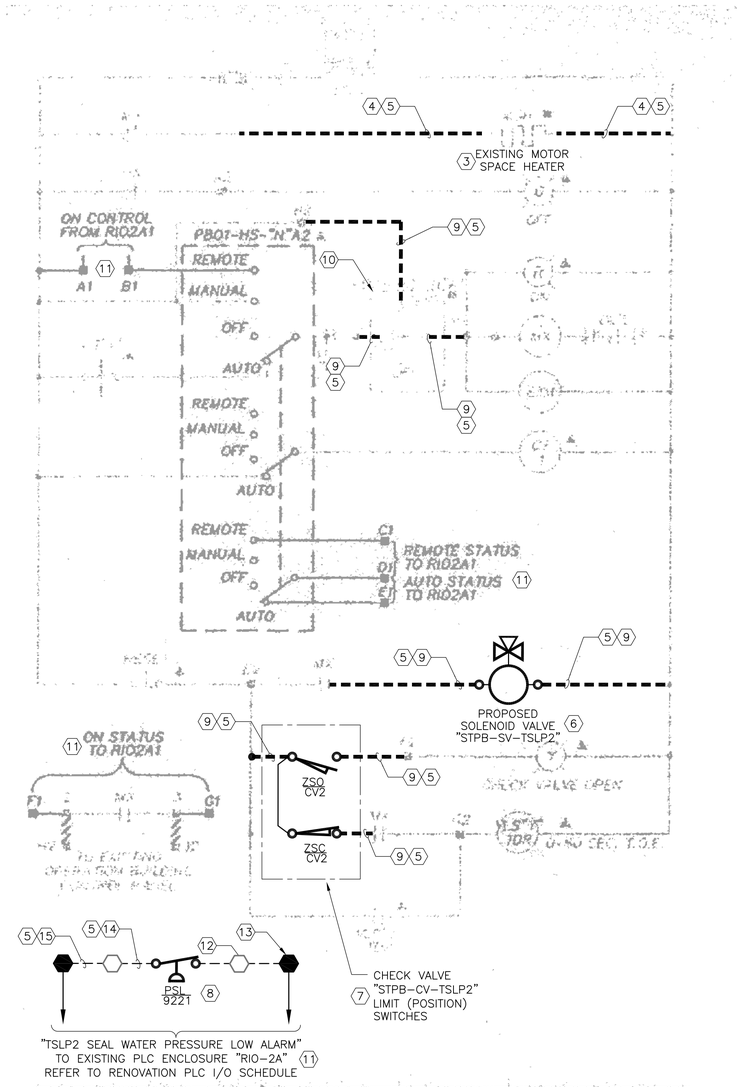

	EQUIPMENT TAG	MCC TAG	"N"	"X"	"Y"	A2	B2	C2	D2	E2	F2	G2	H2	I2
16	"STPB-TSLP-2"	SGT1-3E	03	3	1	226	227	228	229	230	231	232	422	423
	"STPB-TSLP-3"	SGT2-3E	04	4	2	235	236	237	238	239	240	241	424	425

	EQUIPMENT TAG	A1	B1	C1	D1	E1	F1	G1
16	"STPB-TSLP-2"	PB01-25	PB01-26	PB01-27	PB01-28	PB01-29	PB01-30	PB01-31
	"STPB-TSLP-3"	PB01-32	PB01-33	PB01-34	PB01-35	PB01-36	PB01-37	PB01-38

SLUDGE PUMPING UNIT NO. 2, "STPB-TSLP-2" (PREVIOUSLY TAGGED "TSLP-1") – RENOVATION

3 (1)(2) [E-58]

SCALE: NONE

KEY NOTES:

(1) THE CONTROL SCHEMATIC SHOWN ON THIS DRAWING IS A RENOVATION CONTROL SCHEMATIC FOR EXISTING SLUDGE PUMP "TSLP-1" WHICH SHALL BE RETAGGED DURING RENOVATION ACTIVITIES AS SLUDGE PUMP NO. 2, "STPB-TSLP-2". REFER TO RENOVATION ONE-LINE DIAGRAMS AND RENOVATION FLOOR PLANS FOR ADDITIONAL INFORMATION.

(2) IT IS THE RESPONSIBILITY OF THE CONTRACTOR TO BECOME INTIMATELY FAMILIAR WITH THE FUNCTION, OPERATION AND ASSOCIATED INTERLOCKS FOR EXISTING PUMPS "TSLP-1" AND "TSLP-2", AS APPLICABLE, ALONG WITH THE ASSOCIATED CHECK VALVE LIMIT SWITCHES, SEAL WATER PRESSURE SWITCH, SOLENOID VALVE, FIELD CONTROL STATION PRIOR TO COMMENCING MODIFICATION/ DEMOLITION/RENOVATION ACTIVITIES. CONTRACTOR SHALL FIELD VERIFY AND DENOTE ALL INTERCONNECT CONDUIT/WIRING AND THE TERMINATIONS OF INTERCONNECT WIRING BETWEEN THE DIFFERENT EXISTING ENCLOSURES (I.E MOTOR CONTROL CENTER, CONTROL PANEL, PLC ENCLOSURE, ETC.) AND PUMPING UNIT EQUIPMENT PRIOR TO COMMENCING MODIFICATION/DEMOLTIION ACTIVITIES, DURING RENOVATION ACTIVITIES, THE CONTRACTOR SHALL FURNISH AND INSTALL ALL NECESSARY INTERCONNECT CONDUIT/WIRE/CONTROL RELAYS/TERMINAL BLOCKS, ETC., AS REQUIRED, WHETHER SHOWN OR NOT SHOWN ON THE CONTRACT DRAWINGS, AND MAKE ALL FINAL CONNECTIONS TO ENSURE THE OPERATION OF THE APPLICABLE PUMP, AND ALL ASSOCIATED AUXILIARY AND FIELD MOUNTED EQUIPMENT SUCH AS THE CHECK VALVE LIMIT SWITCHES, SOLENOID VALVE, PRESSURE SWITCH, MOTOR SPACE HEATER, FIELD CONTROL STATION, ETC., IS COMMENSURATE WITH EXISTING OPERATION TO THE SATISFACTION OF THE OWNER AND THE ENGINEER AT NO ADDITIONAL COST TO THE OWNER. THEREFORE, THE CONTRACTOR SHALL EXERCISE EXTREME CARE IN THE DEMOLITION OF THE FIELD MOUNTED EQUIPMENT AS SHOWN ON THE DEMOLITION DRAWINGS FOR EXISTING PUMPS "TSLP-1" AND "TSLP-2", AND DEMOLITION OF INTERCONNECT CONDUIT/WIRE AS INDICATED ON THE DEMOLITION ONE-LINE DIAGRAMS AND DEMOLITION FLOOR PLAN DRAWINGS. CONTRACTOR SHALL CAREFULLY DOCUMENT THE OPERATIONS OF PUMPING UNITS, FIELD WIRING TERMINATION POINTS, EXISTING PUMP FIELD MOUNTED EQUIPMENT AND ITS INTERCONNECTION WITH THE EXISTING MOTOR CONTROL CENTER, EXISTING CONTROL PANEL, EXISTING PLC ENCLOSURE, ETC., AND ASSOCIATED INTERLOCKS SUCH TO ENSURE THAT THE PROPOSED REPLACEMENT FIELD DEVICES (I.E. SOLENOID VALVES, PRESSURE SWITCH, AND LIMIT SWITCHES) AND PROPOSED INTERCONNECT CONDUIT/WIRE FOR EACH PUMPING UNIT FUNCTIONS AND OPERATES COMMENSURABLY TO THAT OF THE EXISTING PUMPING UNITS TO THE SATISFACTION OF THE OWNER AND THE ENGINEER AT NO ADDITIONAL COST TO THE OWNER.

(3) THE MOTOR AND MOTOR SPACE HEATER ARE EXISTING. CONTRACTOR SHALL RECONNECT THE EXISTING MOTOR AND MOTOR SPACE HEATER WITH THE PROPOSED CONDUIT/WIRE AND MAKE ALL FINAL TERMINATIONS/CONNECTIONS.

(4) CONTRACTOR SHALL ROUTE PROPOSED POWER CONDUIT/WIRE BETWEEN THE EXISTING MOTOR CONTROL CENTER AND EXISTING FIELD MOUNTED MOTOR AND MOTOR SPACE HEATER AND MAKE ALL FINAL TERMINATIONS/CONNECTIONS.

(5) REFER TO RENOVATION ONE-LINE DIAGRAMS AND RENOVATION FLOOR PLAN DRAWINGS FOR ADDITIONAL INFORMATION.

(6) CONTRACTOR SHALL FURNISH AND INSTALL PROPOSED SOLENOID VALVE AND MAKE ALL FINAL TERMINATIONS/CONNECTIONS. REFER TO SPECIFICATIONS FOR ADDITIONAL INFORMATION.

(7) CONTRACTOR SHALL FURNISH AND INSTALL PROPOSED CHECK VALVE LIMIT (POSITION) SWITCHES AND MAKE ALL FINAL TERMINATIONS/CONNECTIONS. REFER TO SPECIFICATIONS FOR ADDITIONAL INFORMATION.

(8) CONTRACTOR SHALL FURNISH AND INSTALL PROPOSED SEAL WATER LOW PRESSURE SWITCH AND MAKE ALL FINAL TERMINATIONS/CONNECTIONS.

(9) CONTRACTOR SHALL ROUTE PROPOSED CONDUIT/WIRE BETWEEN THE EXISTING CONTROL PANEL "PB01-CCP-01" AND THE FIELD MOUNTED EQUIPMENT AND MAKE ALL FINAL TERMINATIONS/CONNECTIONS. THE CONTRACTOR SHALL CONNECT THE PROPOSED WIRING AS PREVIOUSLY CONNECTED PRIOR TO DEMOLISHING THE EXISTING CONTROL WIRING SUCH THAT THE EXISTING PUMPING UNIT FUNCTIONS AND OPERATES THE SAME AS THE EXISTING PUMPING UNIT TO THE SATISFACTION OF THE OWNER AND THE ENGINEER. SINCE THE PROPOSED CONTROL WIRING IS ROUTING DIRECTLY TO THE EXISTING CONTROL PANEL "PB01-CCP-01", THE CONTRACTOR SHALL TERMINATE THE CONTROL WIRING TO AN EXISTING SPARE TERMINAL BLOCK WITHIN THE EXISTING CONTROL PANEL. ALL EXISTING SPARE TERMINAL BLOCKS USED FOR THIS PUMPING UNIT'S CONTROL LOGIC SHALL BE LOCATED ADJACENT TO EACH OTHER AS A BLOCK OF TERMINAL BLOCKS WITHIN THE EXISTING CONTROL PANEL. THE CONTRACTOR SHALL THEN CONTINUE THE CONTROL WIRING TO IT'S FINAL DESTINATION/SOURCE AS PREVIOUSLY CONNECTED PRIOR TO DEMOLISHING THE EXISTING CONTROL WIRING BASED ON FIELD VERIFICATION OF THE CONTROL LOGIC. FOR EXAMPLE, THE CONTRACTOR MAY NEED TO CONTINUE TO ROUTE THE CONTROL WIRING WITHIN THE EXISTING CONTROL PANEL TO A CONTROL DEVICE/INSTRUMENTATION/ETC., OR ROUTE THE WIRING TO THE EXISTING MOTOR CONTROL CENTER, OR ROUTE THE WIRING TO THE EXISTING PLC ENCLOSURE "RIO-2A" AS NECESSARY AND MAKE ALL FINAL TERMINATIONS. CONTRACTOR SHALL PROVIDE ANY ADDITIONAL HARDWARE, CONDUIT, WIRE, CONTROL DEVICES, ETC., AS NECESSARY, SO THAT EACH PUMPING UNIT FUNCTIONS COMMENSURABLY TO THAT OF THE EXISTING PUMPING UNITS TO THE SATISFACTION OF THE OWNER AND THE ENGINEER AT NO ADDITIONAL COST TO THE OWNER. ALSO REFER TO KEYNOTE 2 ON THIS DRAWING FOR ADDITIONAL REQUIREMENTS.

KEY NOTES (CONTINUED):

(10) THE FIELD CONTROL STATION SELECTOR SWITCH IS EXISTING. CONTRACTOR SHALL CONNECT PROPOSED CONTROL WIRING TO THE EXISTING FIELD CONTROL STATION SELECTOR SWITCH AS THE PREVIOUSLY CONNECTED EXISTING CONTROL WIRING BASED ON FIELD VERIFICATION PRIOR TO DEMOLITION AND MAKE ALL FINAL TERMINATIONS/CONNECTIONS.

(11) MODIFICATIONS TO THE EQUIPMENT WITHIN THE EXISTING PLC REMOTE I/O CONTROL PANEL "RIO-2A" ARE NOT SHOWN ON THIS RENOVATION DRAWING. CONTRACTOR SHALL REFER TO THE EXISTING CONTROL PANEL "RIO-2A" RENOVATION DRAWINGS AND THE PLC I/O RENOVATION SCHEDULE FOR ADDITIONAL INFORMATION AND REQUIREMENTS. WHETHER SHOWN OR NOT, THE CONTRACTOR SHALL MODIFY THE EXISTING PLC REMOTE I/O CONTROL PANEL AS DETAILED ON THE DEMOLITION/RENOVATION CONTROL PANEL ELEVATION DRAWINGS AND SHALL PROVIDE ALL NECESSARY CONTROL DEVICES, TERMINAL BLOCKS, WIRING, HARDWARE, PLC I/O MODULES, RACK, ADAPTERS, ETC. TO TO PROVIDE A FULLY FUNCTIONAL AND OPERATIONAL SYSTEM AS NO ADDITIONAL COST TO THE OWNER.

(12) EXISTING SPARE TERMINAL BLOCK LOCATED IN THE EXISTING CONTROL PANEL, "PB01-CCP-01".

(13) TERMINAL BLOCK LOCATED INSIDE THE EXISTING PLC ENCLOSURE "RIO-2A". REFER TO PLC I/O SCHEDULE TO DETERMINE WHERE TO LAND THE LOW PRESSURE SWITCH SIGNAL AND FOR ADDITIONAL INFORMATION.

(14) CONTRACTOR SHALL ROUTE LOW PRESSURE SWITCH CONTROL WIRING BETWEEN THE EXISTING SEAL WATER LOW PRESSURE SWITCH AND THE EXISTING CONTROL PANEL "PB01-CCP-01" AND, MAKE ALL FINAL TERMINATIONS/CONNECTIONS.

(15) CONTRACTOR SHALL ROUTE LOW PRESSURE SWITCH DIGITAL INPUT SIGNAL WIRING BETWEEN THE EXISTING CONTROL PANEL "PB01-CCP-01" AND THE EXISTING PLC ENCLOSURE "RIO-2A" AND MAKE ALL FINAL TERMINATIONS/CONNECTIONS. REFER TO PLC I/O SCHEDULE FOR ADDITIONAL INFORMATION.

(16) CONTRACTOR SHALL REFER TO THE REPLACEMENT TAG TABLE SHOWN ON THIS DRAWING AND ON REFERENCE DRAWING NO. [E-58] FOR ACTUAL TAG FOR EXISTING PUMP "TSLP-1" RETAGGED AS SLUDGE PUMP NO. 2, "STPB-TSLP-2".

GENERAL NOTES:

1. THE EXISTING INFORMATION SHOWN ON THIS DRAWING WAS OBTAINED FROM THE PROJECT ENTITLED "SOUTH AUSTIN REGIONAL WWTP CONTROLS AND INSTRUMENTATION IMPROVEMENTS" DATED AUGUST 1994. THIS DRAWING MAY NOT EXACTLY REFLECT THE EXISTING CONDITIONS. THEREFORE, THE CONTRACTOR IS TO FIELD VERIFY THE EXISTING CONDITIONS PRIOR TO COMMENCING FULL SCALE DEMOLITION OR RENOVATION ACTIVITIES. FOLLOWING THE DISCOVERY VERIFICATION OF THE EXISTING FIELD CONDITIONS, SHOULD ADJUSTMENTS BECOME A NECESSITY TO THE EXISTING OR PROPOSED SYSTEM (AS APPLICABLE), THE EXISTING DISCOVERED FIELD CONDITIONS MUST BE BROUGHT TO THE OWNER'S ATTENTION FOR EXECUTION OF THE NECESSARY ADJUSTMENTS/MODIFICATIONS.
2. THIS RENOVATION DRAWING SHOWS THE PROPOSED MODIFICATIONS TO THE EXISTING MOTOR STARTER CONTROL WIRING SCHEMATIC PROVIDED IN THE REFERENCE DRAWINGS. NOT ALL INTERCONNECT REQUIREMENTS ARE SHOWN ON THIS DRAWING. THIS DRAWING MAY NOT EXACTLY REFLECT THE EXISTING CONDITIONS; THEREFORE, IT IS THE RESPONSIBILITY OF THE CONTRACTOR TO FIELD VERIFY EXISTING MOTOR STARTER CONTROL LOGIC, INTERCONNECT WIRING, ETC. PRIOR TO COMMENCING DEMOLITION AND RENOVATION ACTIVITIES. WHETHER SHOWN OR NOT SHOWN ON THIS WIRING SCHEMATIC, THE CONTRACTOR SHALL PROVIDE ALL ADDITIONAL CONTROL DEVICES, TERMINAL BLOCKS, WIRING, HARDWARE, ETC. AS NECESSARY TO PROVIDE A FULLY FUNCTIONAL AND OPERATIONAL PUMPING UNIT AT NO ADDITIONAL COST TO THE OWNER.
3. THE EXISTING EQUIPMENT IS IN WORKING CONDITION. IF ANY OF THE EXISTING EQUIPMENT/ COMPONENTS WHICH SHALL BE REUSED IS DAMAGED OR STOPS FUNCTIONING CORRECTLY, THE CONTRACTOR IS RESPONSIBLE FOR FURNISHING AND INSTALLING NEW EQUIPMENT/ COMPONENTS AS APPROVED BY THE OWNER AND MAKE ALL FINAL TERMINATIONS AT NO ADDITIONAL COST TO THE OWNER.

REUSE OF DOCUMENTS

This document, and the designs incorporated herein, is an instrument of professional service that has been developed, designed and prepared by Harutunian Engineering, Inc., and is not to be used, in whole or part, for any other project without giving written notice to Harutunian Engineering, Inc.

REV No	DATE	DRWN	CHKD	REMARKS
–	–	–	–	–

DESIGNED BY: HEI
DRAWN BY: HEI
SHEET CHK'D BY: HEI
CROSS CHK'D BY: HEI
APPROVED BY: HEI
DATE: APRIL 2016

CDM Smith
Rlata Corporate Park, 12357-A Rlata Trace Parkway, Suite 210
Austin, TX 78727
Tel: (512) 346-1100
Texas Registration Number F-3043

HARUTUNIAN ENGINEERING, INC.
305 E Huntland Dr, Ste 500: Austin, TX 78752
TBPE Firm Registration No. F-2408

CITY OF AUSTIN, TEXAS - AUSTIN WATER UTILITY
CIP 3333.016

SOUTH AUSTIN REGIONAL WWTP
THICKENER IMPROVEMENTS PROJECT

CONTROL WIRING DIAGRAM
RENOVATION
(SHEET 2 OF 7)

STATE OF TEXAS
K. A. HARUTUNIAN
59181
REGISTERED PROFESSIONAL ENGINEER
4/22/2016

PROJECT No 590-104217
FILE NAME: E-45

SHEET No
E-45

Plotted: 4/22/2016 9:29:20 AM

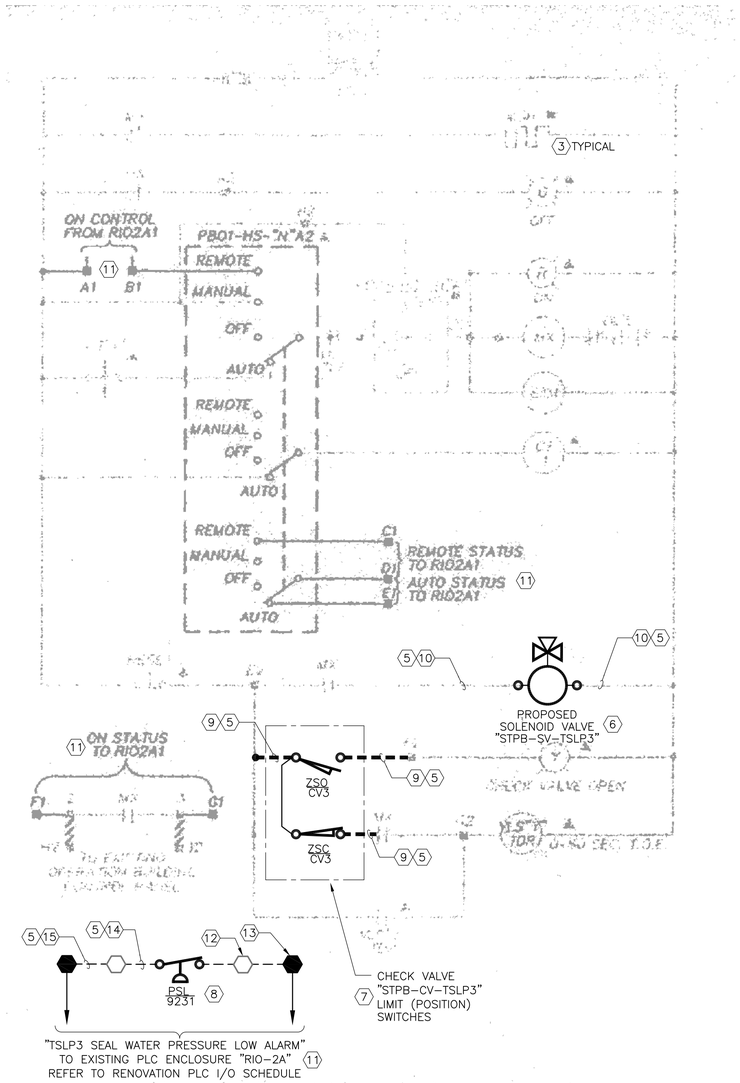

	EQUIPMENT TAG	MCC TAG	"N"	"X"	"Y"	A2	B2	C2	D2	E2	F2	G2	H2	I2
	"STPB-TSLP-2"	SGT1-3E	03	3	1	226	227	228	229	230	231	232	422	423
4	"STPB-TSLP-3"	SGT2-3E	04	4	2	235	236	237	238	239	240	241	424	425

	EQUIPMENT TAG	A1	B1	C1	D1	E1	F1	G1
	"STPB-TSLP-2"	PB01-25	PB01-26	PB01-27	PB01-28	PB01-29	PB01-30	PB01-31
4	"STPB-TSLP-3"	PB01-32	PB01-33	PB01-34	PB01-35	PB01-36	PB01-37	PB01-38

1 2 SLUDGE PUMPING UNIT NO. 3, "STPB-TSLP-3" (PREVIOUSLY TAGGED "TSLP-2") – RENOVATION

SCALE: NONE

4 [E-58]

KEY NOTES:

1. THE CONTROL SCHEMATIC SHOWN ON THIS DRAWING IS A RENOVATION CONTROL SCHEMATIC FOR EXISTING SLUDGE PUMP "TSLP-2" WHICH SHALL BE RETAGGED DURING RENOVATION ACTIVITIES AS SLUDGE PUMP NO. 3, "STPB-TSLP-3". REFER TO RENOVATION ONE-LINE DIAGRAMS AND RENOVATION FLOOR PLANS FOR ADDITIONAL INFORMATION.

2. IT IS THE RESPONSIBILITY OF THE CONTRACTOR TO BECOME INTIMATELY FAMILIAR WITH THE FUNCTION, OPERATION AND ASSOCIATED INTERLOCKS FOR EXISTING PUMPS "TSLP-1" AND "TSLP-2", AS APPLICABLE, ALONG WITH THE ASSOCIATED CHECK VALVE LIMIT SWITCHES, SEAL WATER PRESSURE SWITCH, SOLENOID VALVE, FIELD CONTROL STATION PRIOR TO COMMENCING MODIFICATION/DEMOLITION/RENOVATION ACTIVITIES. CONTRACTOR SHALL FIELD VERIFY AND DENOTE ALL INTERCONNECT CONDUIT/WIRING AND THE TERMINATIONS OF INTERCONNECT WIRING BETWEEN THE DIFFERENT EXISTING ENCLOSURES (I.E MOTOR CONTROL CENTER, CONTROL PANEL, PLC ENCLOSURE, ETC.) AND PUMPING UNIT EQUIPMENT PRIOR TO COMMENCING MODIFICATION/DEMOLTIION ACTIVITIES, DURING RENOVATION ACTIVITIES, THE CONTRACTOR SHALL FURNISH AND INSTALL ALL NECESSARY INTERCONNECT CONDUIT/WIRE/CONTROL RELAYS/TERMINAL BLOCKS, ETC., AS REQUIRED, WHETHER SHOWN OR NOT SHOWN ON THE CONTRACT DRAWINGS, AND MAKE ALL FINAL CONNECTIONS TO ENSURE THE OPERATION OF THE APPLICABLE PUMP, AND ALL ASSOCIATED AUXILIARY AND FIELD MOUNTED EQUIPMENT SUCH AS THE CHECK VALVE LIMIT SWITCHES, SOLENOID VALVE, PRESSURE SWITCH, MOTOR SPACE HEATER, FIELD CONTROL STATION, ETC., IS COMMENSURATE WITH EXISTING OPERATION TO THE SATISFACTION OF THE OWNER AND THE ENGINEER AT NO ADDITIONAL COST TO THE OWNER. THEREFORE, THE CONTRACTOR SHALL EXERCISE EXTREME CARE IN THE DEMOLITION OF THE FIELD MOUNTED EQUIPMENT AS SHOWN ON THE DEMOLITION DRAWINGS FOR EXISTING PUMPS "TSLP-1" AND "TSLP-2", AND DEMOLITION OF INTERCONNECT CONDUIT/WIRE AS INDICATED ON THE DEMOLITION ONE-LINE DIAGRAMS AND DEMOLITION FLOOR PLAN DRAWINGS. CONTRACTOR SHALL CAREFULLY DOCUMENT THE OPERATIONS OF PUMPING UNITS, FIELD WIRING TERMINATION POINTS, EXISTING PUMP FIELD MOUNTED EQUIPMENT AND ITS INTERCONNECTION WITH THE EXISTING MOTOR CONTROL CENTER, EXISTING CONTROL PANEL, EXISTING PLC ENCLOSURE, ETC., AND ASSOCIATED INTERLOCKS SUCH TO ENSURE THAT THE PROPOSED REPLACEMENT FIELD DEVICES (I.E. SOLENOID VALVES, PRESSURE SWITCH, AND LIMIT SWITCHES) AND PROPOSED INTERCONNECT CONDUIT/WIRE FOR EACH PUMPING UNIT FUNCTIONS COMMENSURABLY TO THAT OF THE EXISTING PUMPING UNITS TO THE SATISFACTION OF THE OWNER AND THE ENGINEER AT NO ADDITIONAL COST TO THE OWNER.

3. THE MOTOR AND MOTOR SPACE HEATER ARE EXISTING AND SHALL BE RECONNECTED DURING RENOVATION ACTIVITIES.

4. CONTRACTOR SHALL REFER TO THE REPLACEMENT TAG TABLE SHOWN ON THIS DRAWING AND ON REFERENCE DRAWING NO. [E-58] FOR ACTUAL TAG FOR EXISTING PUMP "TSLP-2" RETAGGED AS SLUDGE PUMP NO. 3, "STPB-TSLP-3".

5. REFER TO RENOVATION ONE-LINE DIAGRAMS AND RENOVATION FLOOR PLAN DRAWINGS FOR ADDITIONAL INFORMATION.

6. CONTRACTOR SHALL FURNISH AND INSTALL PROPOSED SOLENOID VALVE AND MAKE ALL FINAL TERMINATIONS/CONNECTIONS. REFER TO SPECIFICATIONS FOR ADDITIONAL INFORMATION.

7. CONTRACTOR SHALL FURNISH AND INSTALL PROPOSED CHECK VALVE LIMIT (POSITION) SWITCHES AND MAKE ALL FINAL TERMINATIONS/CONNECTIONS. REFER TO SPECIFICATIONS FOR ADDITIONAL INFORMATION.

8. CONTRACTOR SHALL FURNISH AND INSTALL PROPOSED SEAL WATER LOW PRESSURE SWITCH AND MAKE ALL FINAL TERMINATIONS/CONNECTIONS.

9. CONTRACTOR SHALL ROUTE PROPOSED CONDUIT/WIRE BETWEEN THE EXISTING CONTROL PANEL "PB01-CCP-01" AND THE FIELD MOUNTED EQUIPMENT AND MAKE ALL FINAL TERMINATIONS/CONNECTIONS. THE CONTRACTOR SHALL CONNECT THE PROPOSED WIRING AS PREVIOUSLY CONNECTED PRIOR TO DEMOLISHING THE EXISTING CONTROL WIRING SUCH THAT THE EXISTING PUMPING UNIT FUNCTIONS AND OPERATES THE SAME AS THE EXISTING PUMPING UNIT TO THE SATISFACTION OF THE OWNER AND THE ENGINEER. SINCE THE PROPOSED CONTROL WIRING IS ROUTING DIRECTLY TO THE EXISTING CONTROL PANEL "PB01-CCP-01", THE CONTRACTOR SHALL TERMINATE THE CONTROL WIRING TO AN EXISTING SPARE TERMINAL BLOCK WITHIN THE EXISTING CONTROL PANEL. ALL EXISTING SPARE TERMINAL BLOCKS USED FOR THIS PUMPING UNIT'S CONTROL LOGIC SHALL BE LOCATED ADJACENT TO EACH OTHER AS A BLOCK OF TERMINAL BLOCKS WITHIN THE EXISTING CONTROL PANEL. THE CONTRACTOR SHALL THEN CONTINUE THE CONTROL WIRING TO IT'S FINAL DESTINATION/SOURCE AS PREVIOUSLY CONNECTED PRIOR TO DEMOLISHING THE EXISTING CONTROL WIRING BASED ON FIELD VERIFICATION OF THE CONTROL LOGIC. FOR EXAMPLE, THE CONTRACTOR MAY NEED TO CONTINUE TO ROUTE THE CONTROL WIRING WITHIN THE EXISTING CONTROL PANEL TO A CONTROL DEVICE/INSTRUMENTATION/ETC., OR ROUTE THE WIRING TO THE EXISTING MOTOR CONTROL CENTER, OR ROUTE THE WIRING TO THE EXISTING PLC ENCLOSURE "RIO-2A" AS NECESSARY AND MAKE ALL FINAL TERMINATIONS. CONTRACTOR SHALL PROVIDE ANY ADDITIONAL HARDWARE, CONDUIT, WIRE, CONTROL DEVICES, ETC., AS NECESSARY, SO THAT EACH PUMPING UNIT FUNCTIONS COMMENSURABLY TO THAT OF THE EXISTING PUMPING UNITS TO THE SATISFACTION OF THE OWNER AND THE ENGINEER AT NO ADDITIONAL COST TO THE OWNER. ALSO REFER TO KEYNOTE 2 ON THIS DRAWING FOR ADDITIONAL REQUIREMENTS.

KEY NOTES (CONTINUED):

10. CONTRACTOR SHALL RECONNECT THE EXISTING CONTROL WIRING PREVIOUSLY DISCONNECTED FROM THE EXISTING SOLENOID VALVE TO THE PROPOSED SOLENOID VALVE AS PREVIOUSLY TERMINATED/CONNECTED BASED ON FIELD VERIFICATION PRIOR TO DEMOLITION AND MAKE ALL FINAL TERMINATIONS/CONNECTIONS.

11. MODIFICATIONS TO THE EQUIPMENT WITHIN THE EXISTING PLC REMOTE I/O CONTROL PANEL "RIO-2A" ARE NOT SHOWN ON THIS RENOVATION DRAWING. CONTRACTOR SHALL REFER TO THE EXISTING CONTROL PANEL "RIO-2A" RENOVATION DRAWINGS AND THE PLC I/O RENOVATION SCHEDULE FOR ADDITIONAL INFORMATION AND REQUIREMENTS. WHETHER SHOWN OR NOT, THE CONTRACTOR SHALL MODIFY THE EXISTING PLC REMOTE I/O CONTROL PANEL AS DETAILED ON THE DEMOLITION/RENOVATION CONTROL PANEL ELEVATION DRAWINGS AND SHALL PROVIDE ALL NECESSARY CONTROL DEVICES, TERMINAL BLOCKS, WIRING, HARDWARE, PLC I/O MODULES, RACK, ADAPTERS, ETC. TO TO PROVIDE A FULLY FUNCTIONAL AND OPERATIONAL SYSTEM AS NO ADDITIONAL COST TO THE OWNER.

12. EXISTING SPARE TERMINAL BLOCK LOCATED IN THE EXISTING CONTROL PANEL, "PB01-CCP-01".

13. TERMINAL BLOCK LOCATED INSIDE THE EXISTING PLC ENCLOSURE "RIO-2A". REFER TO PLC I/O SCHEDULE TO DETERMINE WHERE TO LAND THE LOW PRESSURE SWITCH SIGNAL AND FOR ADDITIONAL INFORMATION.

14. CONTRACTOR SHALL ROUTE LOW PRESSURE SWITCH CONTROL WIRING BETWEEN THE EXISTING SEAL WATER LOW PRESSURE SWITCH AND THE EXISTING CONTROL PANEL "PB01-CCP-01" AND, MAKE ALL FINAL TERMINATIONS/CONNECTIONS.

15. CONTRACTOR SHALL ROUTE LOW PRESSURE SWITCH DIGITAL INPUT SIGNAL WIRING BETWEEN THE EXISTING CONTROL PANEL "PB01-CCP-01" AND THE EXISTING PLC ENCLOSURE "RIO-2A" AND MAKE ALL FINAL TERMINATIONS/CONNECTIONS. REFER TO PLC I/O SCHEDULE FOR ADDITIONAL INFORMATION.

GENERAL NOTES:

1. THE EXISTING INFORMATION SHOWN ON THIS DRAWING WAS OBTAINED FROM THE PROJECT ENTITLED "SOUTH AUSTIN REGIONAL WWTP CONTROLS AND INSTRUMENTATION IMPROVEMENTS" DATED AUGUST 1994. THIS DRAWING MAY NOT EXACTLY REFLECT THE EXISTING CONDITIONS. THEREFORE, THE CONTRACTOR IS TO FIELD VERIFY THE EXISTING CONDITIONS PRIOR TO COMMENCING FULL SCALE DEMOLITION OR RENOVATION ACTIVITIES. FOLLOWING THE DISCOVERY VERIFICATION OF THE EXISTING FIELD CONDITIONS, SHOULD ADJUSTMENTS BECOME A NECESSITY TO THE EXISTING OR PROPOSED SYSTEM (AS APPLICABLE), THE EXISTING DISCOVERED FIELD CONDITIONS MUST BE BROUGHT TO THE OWNER'S ATTENTION FOR EXECUTION OF THE NECESSARY ADJUSTMENTS/MODIFICATIONS.

2. THIS RENOVATION DRAWING SHOWS THE PROPOSED MODIFICATIONS TO THE EXISTING MOTOR STARTER CONTROL WIRING SCHEMATIC PROVIDED IN THE REFERENCE DRAWINGS. NOT ALL INTERCONNECT REQUIREMENTS ARE SHOWN ON THIS DRAWING. THIS DRAWING MAY NOT EXACTLY REFLECT THE EXISTING CONDITIONS; THEREFORE, IT IS THE RESPONSIBILITY OF THE CONTRACTOR TO FIELD VERIFY EXISTING MOTOR STARTER CONTROL LOGIC, INTERCONNECT WIRING, ETC. PRIOR TO COMMENCING DEMOLITION AND RENOVATION ACTIVITIES. WHETHER SHOWN OR NOT SHOWN ON THIS WIRING SCHEMATIC, THE CONTRACTOR SHALL PROVIDE ALL ADDITIONAL CONTROL DEVICES, TERMINAL BLOCKS, WIRING, HARDWARE, ETC. AS NECESSARY TO PROVIDE A FULLY FUNCTIONAL AND OPERATIONAL PUMPING UNIT AT NO ADDITIONAL COST TO THE OWNER.

3. THE EXISTING EQUIPMENT IS IN WORKING CONDITION. IF ANY OF THE EXISTING EQUIPMENT/ COMPONENTS WHICH SHALL BE REUSED IS DAMAGED OR STOPS FUNCTIONING CORRECTLY, THE CONTRACTOR IS RESPONSIBLE FOR FURNISHING AND INSTALLING NEW EQUIPMENT/ COMPONENTS AS APPROVED BY THE OWNER AND MAKE ALL FINAL TERMINATIONS AT NO ADDITIONAL COST TO THE OWNER.

REUSE OF DOCUMENTS

This document, and the designs incorporated herein, is an instrument of professional service that has been developed, designed and prepared by Harutunian Engineering, Inc., and is not to be used, in whole or part, for any other project without giving written notice to Harutunian Engineering, Inc.

REV No	DATE	DRWN	CHKD	REMARKS
–	–	–	–	–

DESIGNED BY: HEI
DRAWN BY: HEI
SHEET CHK'D BY: HEI
CROSS CHK'D BY: HEI
APPROVED BY: HEI
DATE: APRIL 2016

CDM Smith
Riata Corporate Park, 12357-A Riata Trace Parkway, Suite 210
Austin, TX 78727
Tel: (512) 346-1100
Texas Registration Number F-3043

HARUTUNIAN ENGINEERING, INC.
305 E Huntland Dr, Ste 500: Austin, TX 78752
TBPE Firm Registration No. F-2408

CITY OF AUSTIN, TEXAS - AUSTIN WATER UTILITY
CIP 3333.016

SOUTH AUSTIN REGIONAL WWTP
THICKENER IMPROVEMENTS PROJECT

CONTROL WIRING DIAGRAM
RENOVATION
(SHEET 3 OF 7)

STATE OF TEXAS
K. A. HARUTUNIAN
59181
REGISTERED PROFESSIONAL ENGINEER
4/22/2016

PROJECT No 590-104217
FILE NAME: E-46

SHEET No
E-46

Plotted: 4/22/2016 9:29:23 AM

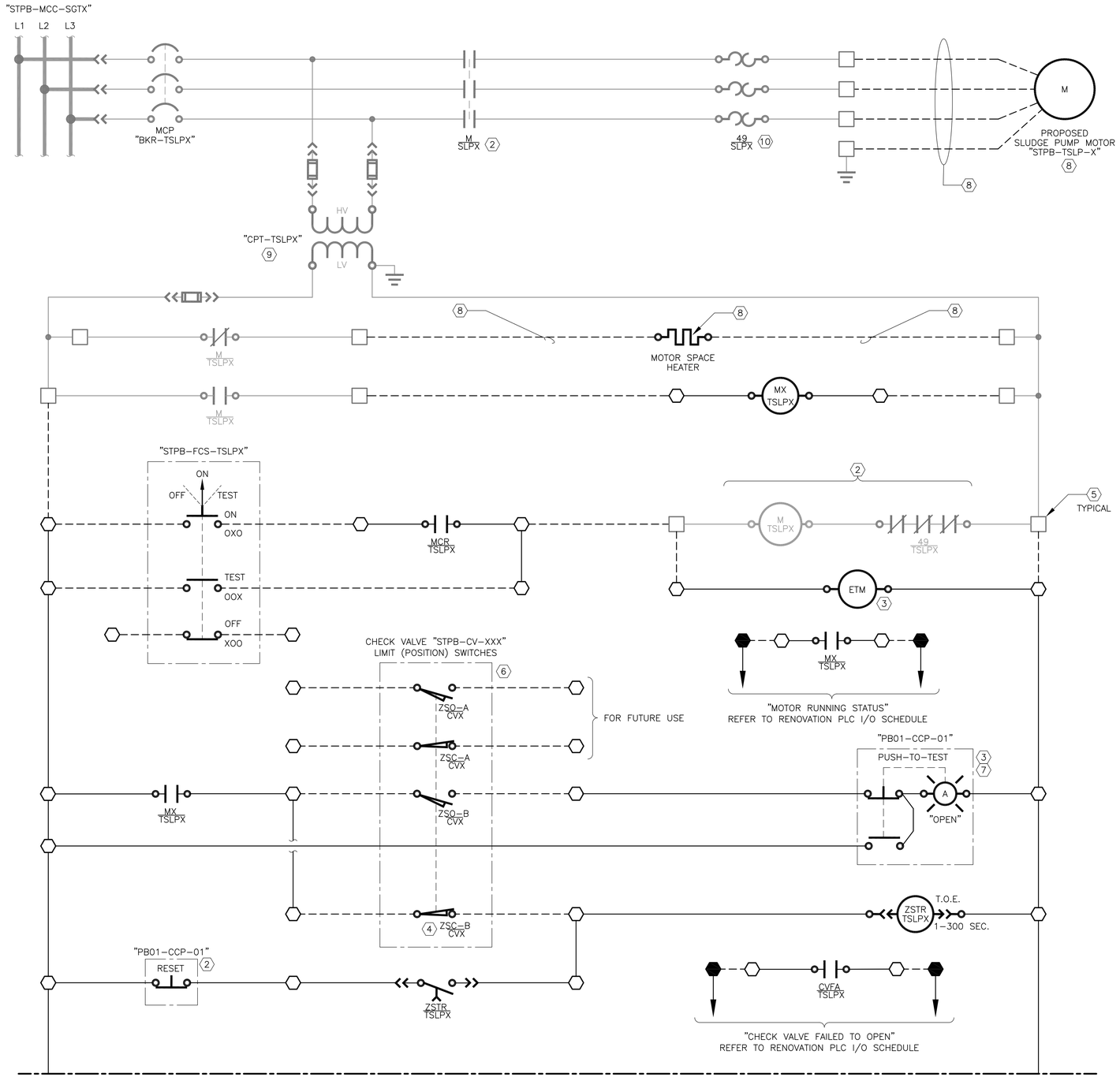

KEY NOTES:

(1) THIS DRAWING IS TYPICAL FOR MULTIPLE EQUIPMENT. THE ACTUAL TAG FOR EACH EQUIPMENT WILL DIFFER FROM THAT SHOWN HERE. REFER TO THE TAG REPLACEMENT SCHEDULE ON THIS DRAWING TO DERIVE THE CORRESPONDING TAGS FOR EACH PROPOSED EQUIPMENT.

(2) EXISTING MOTOR STARTER ASSEMBLY SHALL REMAIN AND BE REUSED DURING RENOVATION ACTIVITIES. RECONNECT EXISTING MOTOR STARTER LOCATED IN EXISTING MOTOR CONTROL CENTER AS SHOWN ON THIS CONTROL WIRING SCHEMATIC DRAWING. COORDINATE INTERFACE REQUIREMENTS WITH EXISTING MOTOR STARTER ASSEMBLY AND MAKE ALL FINAL CONNECTIONS. REFER TO RENOVATION ONE-LINE DIAGRAM ON DRAWING NO. [E-06] FOR ADDITIONAL INFORMATION.

(3) PROPOSED CONTROL DEVICE (INDICATING LIGHT, PUSHBUTTON, SELECTOR SWITCH, ELAPSED TIME METER, ETC.) SHALL BE LOCATED ON THE FACE OF THE EXISTING CONTROL PANEL "PB01-CCP-001".

(4) LIMIT SWITCH IS NORMALLY CLOSED AND OPENS WHEN CHECK VALVE IS 20% (PERCENT) OPEN.

(5) EXISTING TERMINAL BLOCK LOCATED IN EXISTING APPLICABLE MOTOR CONTROL CENTER STARTER BUCKET.

(6) FURNISH AND INSTALL LIMIT (POSITION) SWITCHES ON THE CHECK VALVE ASSEMBLY. REFER TO SPECIFICATIONS FOR ADDITIONAL INFORMATION.

(7) INDICATING PILOT LIGHT WITH INTEGRAL MOMENTARY ACTION "PUSH-TO-TEST" PUSHBUTTON. REFER TO ELECTRICAL SPECIFICATIONS.

(8) THE MOTOR AND MOTOR SPACE HEATER ARE SHOWN AS PROPOSED FOR CLARITY PURPOSES. FOR SLUDGE PUMPS NO. 5 AND 6, THE MOTOR AND MOTOR SPACE HEATER ARE PROPOSED; HOWEVER, FOR RETAGGED SLUDGE PUMP NO. 4 (PREVIOUSLY TAGGED SLUDGE/SCUM PUMP NO. 3, TSLP/TSCP-3), THE MOTOR AND MOTOR SPACE HEATER ARE EXISTING AND SHALL REMAIN AND BE REUSED AS SHOWN HERE. CONNECT PROPOSED FIELD POWER WIRING FOR THE MOTOR AND SPACE HEATER TO THE EXISTING MOTOR AND MOTOR SPACE HEATER AS SHOWN ON THIS CONTROL WIRING SCHEMATIC AND MAKE ALL FINAL TERMINATIONS. REFER TO RENOVATION ONE-LINE DIAGRAMS AND RENOVATION FLOOR PLAN DRAWINGS FOR ADDITIONAL INFORMATION.

(9) EXISTING CONTROL POWER TRANSFORMER (CPT). CONTRACTOR SHALL VERIFY THAT EXISTING CONTROL POWER TRANSFORMER IS SUFFICIENTLY SIZED TO POWER CONNECTED PROPOSED CONTROL LOGIC. IF THE CONTROL POWER TRANSFORMER IS INSUFFICIENT IN SIZE, CONTRACTOR SHALL FURNISH AND INSTALL A NEW CONTROL POWER TRANSFORMER CORRECTLY SIZED TO POWER THE CONNECTED LOAD AND MAKE ALL FINAL TERMINATIONS AT NO ADDITIONAL COST TO THE OWNER. CONTROL POWER TRANSFORMER SHALL BE OF THE SAME MANUFACTURER AS THE EXISTING CPT WITHIN THE MOTOR CONTROL CENTER. COORDINATE WITH EXISTING MOTOR CONTROL CENTER MANUFACTURER, AS NECESSARY, PRIOR TO COMMENCING DEMOLITION OR RENOVATION ACTIVITIES. ALSO REFER TO RENOVATION ONE-LINE DIAGRAM DRAWINGS FOR ADDITIONAL INFORMATION.

(10) EXISTING OVERLOAD RELAY SHALL REMAIN AND BE REUSED DURING RENOVATION ACTIVITIES. CONTRACTOR SHALL ENSURE THAT THE EXISTING OVERLOAD RELAY IS PROPERLY SIZED TO PROTECT THE PROPOSED/EXISTING SLUDGE PUMP MOTOR, AS APPLICABLE. IF THE EXISTING OVERLOAD RELAY IS INSUFFICIENTLY SIZED, THE CONTRACTOR SHALL PROVIDE A PROPERLY SIZED OVERLOAD RELAY OF THE SAME MANUFACTURER AS EXISTING, INSTALL IN EXISTING MOTOR CONTROL CENTER AND MAKE ALL FINAL TERMINATIONS AT NO ADDITIONAL COST TO THE OWNER. IF NECESSARY, CONTRACTOR SHALL COORDINATE WITH EXISTING MOTOR CONTROL CENTER MANUFACTURER PRIOR TO COMMENCING DEMOLITION OR RENOVATION ACTIVITIES. ALSO REFER TO RENOVATION ONE-LINE DIAGRAM DRAWINGS FOR ADDITIONAL INFORMATION.

SLUDGE PUMP RENOVATION EQUIPMENT TAG REPLACEMENT

EQUIPMENT DESCRIPTION	EQUIPMENT TAG	SLPX	STPB-CV-XXX	CVX	STPB-MCC-SGTX	PSL-XXXX
SLUDGE PUMP NO. 4	STPB-TSLP-4	SLP4	STPB-CV-TSLP4	CV4	STPB-MCC-SGT1	PSL-9241
SLUDGE PUMP NO. 5	STPB-TSLP-5	SLP5	STPB-CV-TSLP5	CV5	STPB-MCC-SGT1	PSL-9251
SLUDGE PUMP NO. 6	STPB-TSLP-6	SLP6	STPB-CV-TSLP6	CV6	STPB-MCC-SGT1	PSL-9261

THE EXISTING CONTROL WIRING SCHEMATIC SHOWN ON THIS DRAWING IS TYPICAL FOR PUMPING UNITS "STPB-TSLP-4', "STPB-TSLP-5", AND "STPB-TSLP-6".

STATE OF TEXAS
K. A. HARUTUNIAN
59181
REGISTERED PROFESSIONAL ENGINEER
4/22/2016

REUSE OF DOCUMENTS
This document, and the designs incorporated herein, is an instrument of professional service that has been developed, designed and prepared by Harutunian Engineering, Inc., and is not to be used, in whole or part, for any other project without giving written notice to Harutunian Engineering, Inc.

REV No	DATE	DRWN	CHKD	REMARKS
△	–	–	–	–

DESIGNED BY: HEI
DRAWN BY: HEI
SHEET CHK'D BY: HEI
CROSS CHK'D BY: HEI
APPROVED BY: HEI
DATE: APRIL 2016

CDM Smith
Riata Corporate Park, 12357-A Riata Trace Parkway, Suite 210
Austin, TX 78727
Tel: (512) 346-1100
Texas Registration Number F-3043

HARUTUNIAN ENGINEERING, INC.
305 E Huntland Dr, Ste 500: Austin, TX 78752
TBPE Firm Registration No. F-2408

CITY OF AUSTIN, TEXAS - AUSTIN WATER UTILITY
CIP 3333.016

SOUTH AUSTIN REGIONAL WWTP
THICKENER IMPROVEMENTS PROJECT

CONTROL WIRING DIAGRAM RENOVATION (SHEET 4 OF 7)

PROJECT No 590-104217
FILE NAME: E-47

SHEET No
E-47

Plotted: 4/22/2016 8:50:44 AM

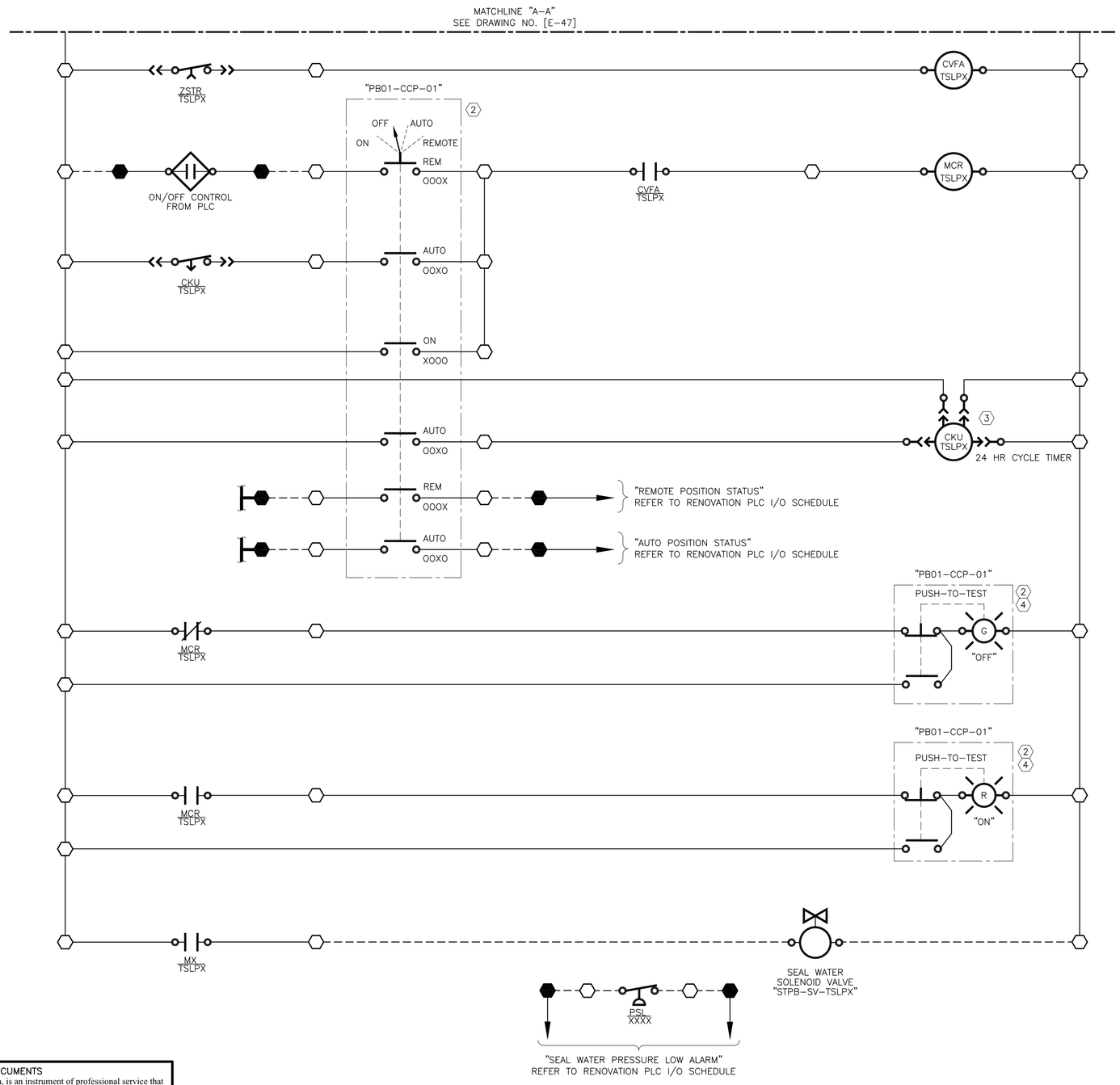

KEY NOTES:

1. THIS DRAWING IS TYPICAL FOR MULTIPLE EQUIPMENT. THE ACTUAL TAG FOR EACH EQUIPMENT WILL DIFFER FROM THAT SHOWN HERE. REFER TO THE TAG REPLACEMENT SCHEDULE ON DRAWING NO. [E-47] TO DERIVE THE CORRESPONDING TAGS FOR EACH PROPOSED EQUIPMENT.
2. PROPOSED CONTROL DEVICE (INDICATING LIGHT, PUSHBUTTON, SELECTOR SWITCH, ELAPSED TIME METER, ETC.) SHALL BE LOCATED ON THE FACE OF THE EXISTING CONTROL PANEL "PB01-CCP-01".
3. FURNISH AND INSTALL PROPOSED CURRENT TIMER ON THE BACKPLANE OF THE EXISTING CONTROL PANEL. REFER TO ELECTRICAL SPECIFICATIONS FOR ADDITIONAL REQUIREMENTS.
4. INDICATING PILOT LIGHT WITH INTEGRAL MOMENTARY ACTION "PUSH-TO-TEST" PUSHBUTTON. REFER TO ELECTRICAL SPECIFICATIONS.

THE EXISTING CONTROL WIRING SCHEMATIC SHOWN ON THIS DRAWING IS TYPICAL FOR PUMPING UNITS "STPB-TSLP-4', "STPB-TSLP-5", AND "STPB-TSLP-6".

STATE OF TEXAS
K. A. HARUTUNIAN
59181
REGISTERED PROFESSIONAL ENGINEER
4/22/2016

REUSE OF DOCUMENTS
This document, and the designs incorporated herein, is an instrument of professional service that has been developed, designed and prepared by Harutunian Engineering, Inc., and is not to be used, in whole or part, for any other project without giving written notice to Harutunian Engineering, Inc.

REV No	DATE	DRWN	CHKD	REMARKS
△	–	–	–	–

DESIGNED BY: HEI
DRAWN BY: HEI
SHEET CHK'D BY: HEI
CROSS CHK'D BY: HEI
APPROVED BY: HEI
DATE: APRIL 2016

CDM Smith
Riata Corporate Park, 12357-A Riata Trace Parkway, Suite 210
Austin, TX 78727
Tel: (512) 346-1100
Texas Registration Number F-3043

HARUTUNIAN ENGINEERING, INC.
305 E Huntland Dr, Ste 500; Austin, TX 78752
TBPE Firm Registration No. F-2408

CITY OF AUSTIN, TEXAS - AUSTIN WATER UTILITY
CIP 3333.016

SOUTH AUSTIN REGIONAL WWTP
THICKENER IMPROVEMENTS PROJECT

CONTROL WIRING DIAGRAM RENOVATION (SHEET 5 OF 7)

PROJECT No 590-104217
FILE NAME: E-48

SHEET No
E-48

Plotted: 4/22/2016 8:50:48 AM

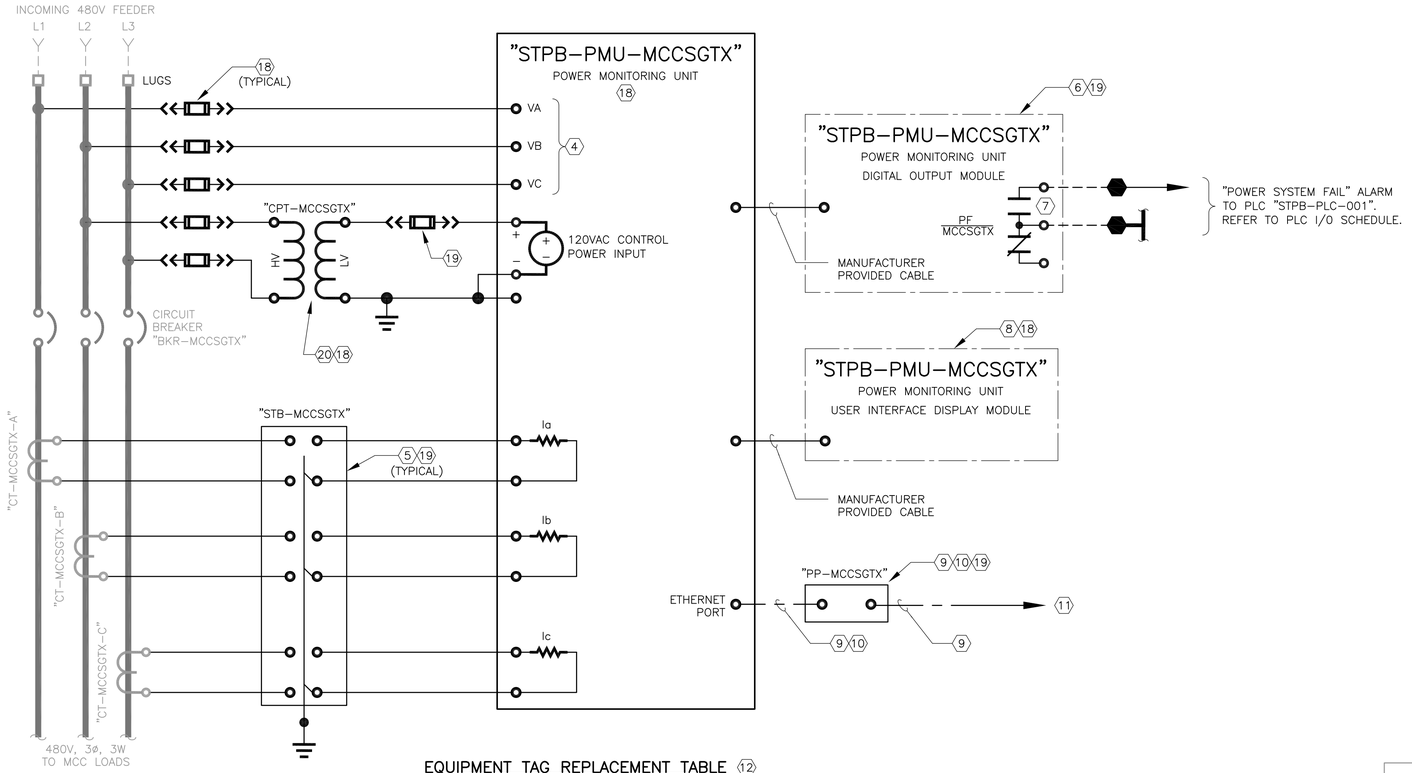

EQUIPMENT TAG REPLACEMENT TABLE (12)

EQUIPMENT DESCRIPTION	SGTX=
MOTOR CONTROL CENTER "MCC–SGT1"	SGT1
MOTOR CONTROL CENTER "MCC–SGT2"	SGT2

POWER MONITORING UNIT CONTROL WIRING SCHEMATIC (3)(12)

SCALE: N.T.S.

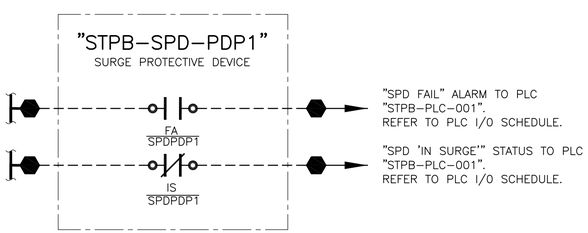

POWER DISTRIBUTION PANEL DEDICATED SURGE PROTECTIVE DEVICE CONTROL WIRING SCHEMATIC (3)

SCALE: N.T.S.

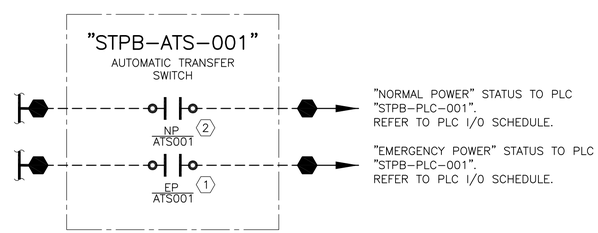

AUTOMATIC TRANSFER SWITCH CONTROL WIRING SCHEMATIC (3)

SCALE: N.T.S.

KEY NOTES:

(12) THIS DRAWING IS TYPICAL FOR MULTIPLE EQUIPMENT. THE ACTUAL TAG FOR EACH EQUIPMENT WILL DIFFER FROM THAT SHOWN HERE. REFER TO THE TAG REPLACEMENT SCHEDULE ON THIS DRAWING TO DERIVE THE CORRESPONDING TAGS FOR EACH PROPOSED EQUIPMENT.

(13) PROPOSED CONTROL DEVICE (INDICATING LIGHT AND SELECTOR SWITCH) SHALL BE LOCATED ON FACE OF PROPOSED FIELD CONTROL STATION ENCLOSURE.

(14) EXISTING THERMOSTAT SHALL BE RELOCATED ADJACENT TO PROPOSED FIELD CONTROL STATION. REMAKE CONNECTIONS TO MOTOR CONTROL CENTER TERMINAL BLOCKS AND PROPOSED FIELD CONTROL STATION TO RESTORE ORIGINAL FUNCTIONALITY.

(15) EXISTING TERMINAL BLOCK LOCATED IN EXISTING APPLICABLE MOTOR CONTROL CENTER STARTER BUCKET.

(16) INDICATING PILOT LIGHT WITH INTEGRAL MOMENTARY ACTION "PUSH–TO–TEST" PUSHBUTTON. REFER TO ELECTRICAL SPECIFICATIONS.

(17) SELECTOR SWITCH PER ELECTRICAL SPECIFICATIONS.

(18) DEVICE SHALL BE LOCATED IN EXISTING MOTOR CONTROL CENTER MAIN BREAKER SECTION.

(19) DEVICE SHALL BE LOCATED IN PROPOSED POWER MONITORING UNIT CONTROL PANEL ENCLOSURE, LOCATED ABOVE MOTOR CONTROL CENTER. REFER TO FLOOR PLANS.

(20) FURNISH AND INSTALL CONTROL POWER TRANSFORMER AND ASSOCIATED FUSES. COORDINATE WITH POWER MONITORING UNIT MANUFACTURER.

KEY NOTES:

(1) CONTACT CLOSED WHEN AUTOMATIC TRANSFER SWITCH IS PROVIDING POWER FROM EMERGENCY POWER SOURCE AND OPEN OTHERWISE.

(2) CONTACT CLOSED WHEN AUTOMATIC TRANSFER SWITCH IS PROVIDING POWER FROM NORMAL POWER SOURCE AND OPEN OTHERWISE.

(3) REFER TO ONE–LINE DIAGRAMS FOR ADDITIONAL INFORMATION.

(4) FURNISH AND INSTALL FUSES AND WIRING BETWEEN LINE SIDE OF MOTOR CONTROL CENTER MAIN BUS AND DIRECT CONNECTION TO POWER MONITORING UNIT.

(5) FURNISH AND INSTALL A SHORTING TERMINAL BLOCK FOR EACH CURRENT TRANSFORMER.

(6) POWER MONITORING UNIT DIGITAL OUTPUT MODULE. REFER TO THE SPECIFICATIONS FOR ADDITIONAL INFORMATION.

(7) MOTOR CONTROL CENTER VENDOR SHALL FURNISH AND INSTALL ALL NECESSARY PMU HARDWARE PROVISIONS AND PMU CONFIGURATION OF DRY RELAY CONTACT TO ANNUNCIATE MOTOR CONTROL CENTER POWER FAILURE. THE CONTACT SHALL OPEN ON DETECTING DISTRIBUTION EQUIPMENT BUS POWER FAIL AND IN THE EVENT OF CONTROL POWER LOSS TO THE PMU AND/OR ITS I/O MODULE. THE CONTACT SHALL BE CLOSED OTHERWISE.

(8) POWER MONITORING UNIT COMBINATION DISPLAY AND KEYPAD USER INTERFACE MODULE. REFER TO THE SPECIFICATIONS FOR ADDITIONAL INFORMATION. MOUNT TO FACE OF PROPOSED MOTOR CONTROL CENTER.

(9) REFER TO SPECIFICATIONS FOR REQUIRED COPPER COMMUNICATION CABLING AND EQUIPMENT.

(10) FURNISH AND INSTALL 2–PORT COPPER ETHERNET PATCH PANEL INSIDE ENCLOSURE. SURFACE MOUNT TO BACK PANEL. MAKE ALL FINAL TERMINATIONS.

(11) TO/FROM RENOVATED CONTROL PANEL "RIO2A". REFER TO PLC ARCHITECTURE DRAWING.

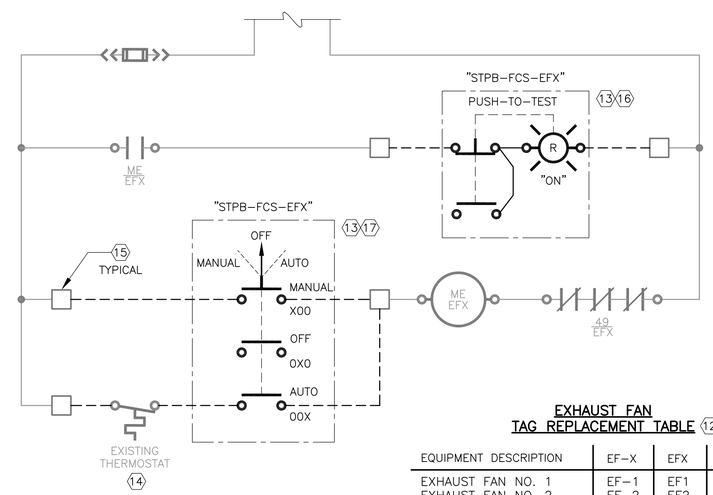

EXHAUST FAN TAG REPLACEMENT TABLE (12)

EQUIPMENT DESCRIPTION	EF–X	EFX	MCC–SGTX
EXHAUST FAN NO. 1	EF–1	EF1	MCC–SGT1
EXHAUST FAN NO. 2	EF–2	EF2	MCC–SGT2

EXHAUST FAN FIELD CONTROL STATION AND THERMOSTAT CONTROL WIRING SCHEMATIC – RENOVATION (12)

SCALE: NTS

REUSE OF DOCUMENTS
This document, and the designs incorporated herein, is an instrument of professional service that has been developed, designed and prepared by Harutunian Engineering, Inc., and is not to be used, in whole or part, for any other project without giving written notice to Harutunian Engineering, Inc.

REV No	DATE	DRWN	CHKD	REMARKS
△	–	–	–	–

DESIGNED BY: HEI
DRAWN BY: HEI
SHEET CHK'D BY: HEI
CROSS CHK'D BY: HEI
APPROVED BY: HEI
DATE: APRIL 2016

CDM Smith
Riata Corporate Park, 12357-A Riata Trace Parkway, Suite 210
Austin, TX 78727
Tel: (512) 346-1100
Texas Registration Number F-3043

HARUTUNIAN ENGINEERING, INC.
305 E Huntland Dr, Ste 500; Austin, TX 78752
TBPE Firm Registration No. F-2408

CITY OF AUSTIN, TEXAS - AUSTIN WATER UTILITY
CIP 3333.016

SOUTH AUSTIN REGIONAL WWTP
THICKENER IMPROVEMENTS PROJECT

CONTROL WIRING DIAGRAM
RENOVATION
(SHEET 6 OF 7)

STATE OF TEXAS
K. A. HARUTUNIAN
59181
REGISTERED PROFESSIONAL ENGINEER
4/22/2016

PROJECT No 590–104217
FILE NAME: E–49

SHEET No
E-49

Plotted: 4/22/2016 8:50:52 AM

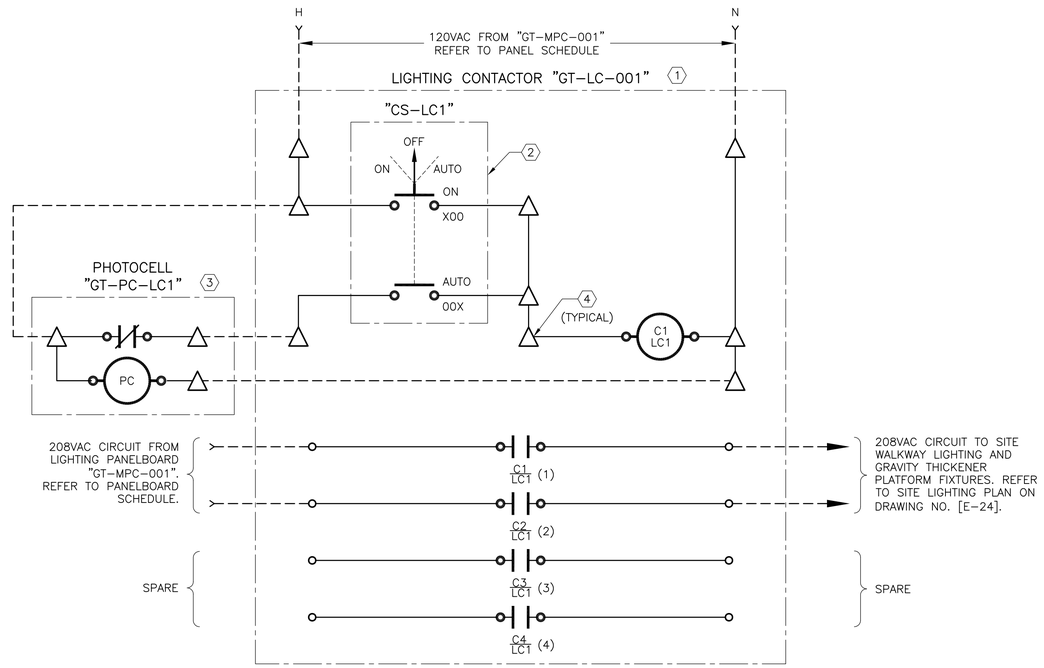

KEY NOTES:

1. PROPOSED LIGHTING CONTACTOR "GT-LC-001" LOCATED ADJACENT TO MINI POWER CENTER "GT-MPC-001" NEAR ODOR CONTROL SYSTEM NO. 1. REFER TO GRAVITY THICKENERS SITE LIGHTING ON DRAWING NO. [E-24] AND TO MINI POWER CENTER ENLARGED PLAN ON DRAWING NO. [E-15].
2. CONTRACTOR SHALL FURNISH AND INSTALL CONTROL STATION "CS-LC1". CONTRACTOR SHALL FLUSH MOUNT THE ENTIRE CONTROL STATION ASSEMBLY ON THE FRONT OF THE ENCLOSURE HOUSING OF LIGHTING CONTACTOR. CONTRACTOR SHALL FURNISH AND INSTALL ALL NECESSARY MOUNTING HARDWARE TO INSURE SECURE INSTALLATION. CONTROL STATION SHALL BE FURNISHED WITH NAMEPLATE INSCRIBED "WALKWAY LIGHTING CONTROL". NAMEPLATE TO BE SECURED TO CONTROL STATION PER SPECIFICATIONS. THE "ON/OFF/AUTO" SELECTOR SWITCH NAMEPLATE PROVIDED BY THE SELECTOR SWITCH MANUFACTURER SHALL ALSO BE DISPLAYED ON THE FACE OF THE PROPOSED CONTROL STATION.
3. REFER TO GRAVITY THICKENERS SITE LIGHTING ON DRAWING NO. [E-24] AND TO MINI POWER CENTER ENLARGED PLAN ON DRAWING NO. [E-15] FOR LOCATION OF PROPOSED PHOTOCELL. EXTEND CONDUIT/WIRE AS NECESSARY TO/FROM LIGHTING CONTACTOR AND MAKE ALL FINAL CONNECTIONS/TERMINATIONS. VERIFY PHOTOCELL/CONTACTOR OPERATION MEETS OWNER'S EXPECTATION FOR EXTERIOR WALKWAY LIGHTING FIXTURE SWITCHING.
4. TERMINAL BLOCK FURNISHED AND INSTALLED BY LIGHTING CONTACTOR MANUFACTURER.

REUSE OF DOCUMENTS
This document, and the designs incorporated herein, is an instrument of professional service that has been developed, designed and prepared by Harutunian Engineering, Inc., and is not to be used, in whole or part, for any other project without giving written notice to Harutunian Engineering, Inc.

K. A. Harutunian
STATE OF TEXAS
K. A. HARUTUNIAN
59181
REGISTERED
PROFESSIONAL ENGINEER
4/22/2016

REV No	DATE	DRWN	CHKD	REMARKS
△	–	–	–	–

DESIGNED BY: HEI
DRAWN BY: HEI
SHEET CHK'D BY: HEI
CROSS CHK'D BY: HEI
APPROVED BY: HEI
DATE: APRIL 2016

CDM Smith
Riata Corporate Park, 12357-A Riata Trace Parkway, Suite 210
Austin, TX 78727
Tel: (512) 346-1100
Texas Registration Number F-3043

HARUTUNIAN ENGINEERING, INC.
305 E Huntland Dr, Ste 500; Austin, TX 78752
TBPE Firm Registration No. F-2408

CITY OF AUSTIN, TEXAS - AUSTIN WATER UTILITY
CIP 3333.016

SOUTH AUSTIN REGIONAL WWTP
THICKENER IMPROVEMENTS PROJECT

CONTROL WIRING DIAGRAM
RENOVATION
(SHEET 7 OF 7)

PROJECT No 590-104217
FILE NAME: E-50

SHEET No
E-50

Plotted: 4/22/2016 8:50:56 AM

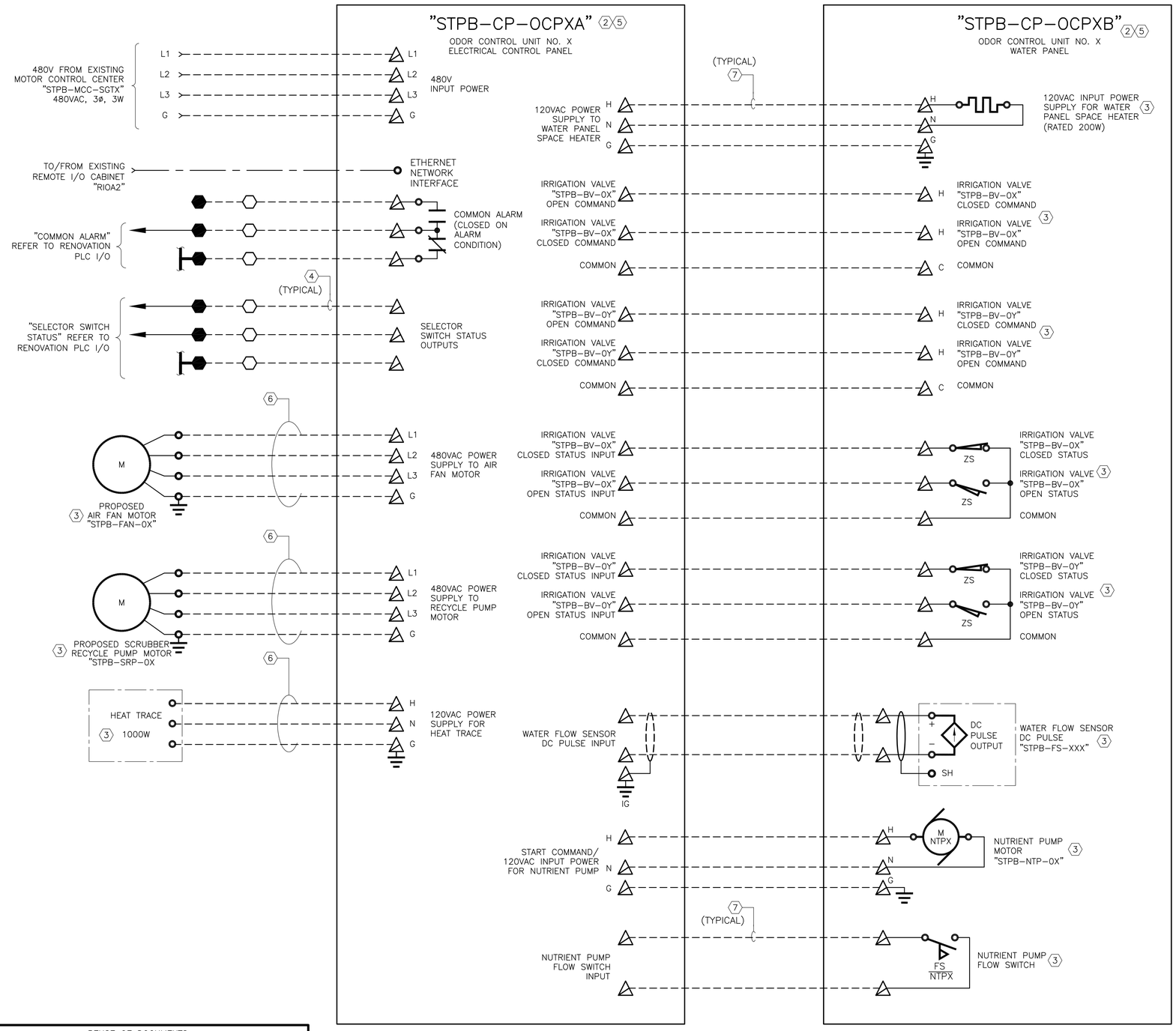

ODOR CONTROL SYSTEM FIELD INTERCONNECT WIRING DIAGRAM 1

SCALE: NTS

KEY NOTES:

1. THIS DRAWING IS TYPICAL FOR MULTIPLE EQUIPMENT. THE ACTUAL TAG FOR EACH EQUIPMENT WILL DIFFER FROM THAT SHOWN HERE. REFER TO THE TAG REPLACEMENT SCHEDULE ON THIS DRAWING TO DERIVE THE CORRESPONDING TAGS FOR EACH PROPOSED EQUIPMENT.

2. THE PROPOSED CONTROL PANEL IS FURNISHED BY THE EQUIPMENT MANUFACTURER. SIZE, FURNISH, AND INSTALL ALL CONDUIT/WIRE AND ALL NECESSARY RELATED HARDWARE TO INTERCONNECT ALL EQUIPMENT PACKAGED SYSTEM SUB–COMPONENTS WITH THE PROPOSED CONTROL PANEL, FURNISH AND INSTALL SUITABLE SUPPORT CHANNELS/CONCRETE EQUIPMENT PAD AS REQUIRED TO SUPPORT THE CONTROL PANEL, INSTALL THE CONTROL PANEL, AND MAKE ALL FINAL CONNECTIONS PER THE RECOMMENDATIONS AND WIRING DIAGRAMS PROVIDED BY THE EQUIPMENT MANUFACTURER. ALSO ADHERE TO THE REQUIREMENTS OF THE NATIONAL ELECTRICAL CODE (N.E.C.) AND THE SPECIFICATIONS. SHOULD ADDITIONAL FIELD INTERCONNECT WIRING BE REQUIRED TO FACILITATE THE FUNCTIONAL OPERATION OF THE PACKAGED CONTROL SYSTEM, THE CONTRACTOR SHALL SIZE, FURNISH, AND INSTALL THE ADDITIONAL CONDUIT/WIRE, FIELD ROUTE THE PROPOSED CONDUIT/WIRE PER THE SPECIFICATIONS, ADD ALL NECESSARY TERMINAL BLOCKS, PLC I/O MODULES, ETC., COMPLETE WITH ALL NECESSARY WIRING TO FACILITATE A COMPLETE AND FUNCTIONAL INSTALLATION, AND MAKE ALL FINAL CONNECTIONS PER THE MANUFACTURER'S RECOMMENDATIONS, THE MANUFACTURER'S WIRING DIAGRAMS, AND PERFORM ALL ASPECTS OF THE WORK TO THE SATISFACTION OF THE OWNER AT NO ADDITIONAL COST TO THE OWNER.

3. AN ATTEMPT HAS BEEN MADE TO IDENTIFY THE ACTUAL EQUIPMENT/DEVICE REQUIRED. THE EQUIPMENT/DEVICE LOCATION IS APPROXIMATE. THE ACTUAL EQUIPMENT/DEVICE QUANTITY/LOCATION MAY VARY. VERIFY LOCATION AND QUANTITY WITH THE SPECIFICATIONS AND THE EQUIPMENT MANUFACTURER. FURNISH AND INSTALL ALL NECESSARY EQUIPMENT/DEVICE(S), ALL DEVICE(S) INTERCONNECTING CONDUIT/WIRE AND MAKE ALL FINAL CONNECTIONS PER THE SPECIFICATIONS, THE MANUFACTURER'S RECOMMENDATIONS, AND THE MANUFACTURER'S WIRING DIAGRAMS.

4. THE CONTRACTOR SHALL SIZE PROPOSED CONDUIT/WIRE PER THE SPECIFICATIONS. COORDINATE EQUIPMENT/DEVICE WIRING REQUIREMENTS WITH THE MANUFACTURER'S WIRING DIAGRAMS AND THE SPECIFICATIONS. COORDINATE CONDUIT/WIRE CONNECTION WITH THE MANUFACTURER AND MAKE ALL FINAL CONNECTIONS. FIELD ROUTE PROPOSED CONDUIT/WIRE PER THE SPECIFICATIONS TO THE SATISFACTION OF THE OWNER AT NO ADDITIONAL COST TO THE OWNER. COORDINATE ROUTE OF PROPOSED CONDUIT/WIRE, VERIFYING ALL POINTS OF CONNECTION PRIOR TO COMMENCING INSTALLATION.

5. FURNISHED BY THE EQUIPMENT MANUFACTURER. INSTALL AS SHOWN ON THE PLAN DRAWINGS AND PER THE RECOMMENDATIONS OF THE EQUIPMENT MANUFACTURER. REFER TO THE PROCESS EQUIPMENT SECTION OF THE SPECIFICATIONS FOR ADDITIONAL REQUIREMENTS.

6. POWER AND CONTROL CABLE PROVIDED BY MANUFACTURER OF EQUIPMENT. INSTALL AND CONNECT MANUFACTURER SUPPLIED CABLE PER MANUFACTURER'S RECOMMENDATIONS. ALSO REFER TO THE SPECIFICATIONS.

7. THE POWER AND CONTROL CABLE SHOWN BETWEEN THE ELECTRICAL CONTROL PANEL AND THE WATER PANEL SHALL BE PROVIDED AND INSTALLED BY THE MANUFACTURER OF THE EQUIPMENT UNLESS OTHERWISE DIRECTED BY THE EQUIPMENT MANUFACTURER.

ODOR CONTROL UNIT EQUIPMENT TAG REPLACEMENT

EQUIPMENT DESCRIPTION	CP–OCPXA	CP–OCPXB	BV–OX	BV–OY	–OX	NTPX	SGTX
ODOR CONTROL UNIT NO. 1	CP–OCP1A	CP–OCP1B	BV–01	BV–02	–01	NTP1	SGT1
ODOR CONTROL UNIT NO. 2	CP–OCP2A	CP–OCP2B	BV–03	BV–04	–02	NTP2	SGT2

THE FIELD INTERFACE WIRING SCHEMATIC SHOWN ON THIS DRAWING IS TYPICAL FOR ODOR CONTROL UNIT NO. 1 AND ODOR CONTROL UNIT NO. 2.

STATE OF TEXAS
K. A. HARUTUNIAN
59181
REGISTERED PROFESSIONAL ENGINEER
4/22/2016

REUSE OF DOCUMENTS
This document, and the designs incorporated herein, is an instrument of professional service that has been developed, designed and prepared by Harutunian Engineering, Inc., and is not to be used, in whole or part, for any other project without giving written notice to Harutunian Engineering, Inc.

REV No	DATE	DRWN	CHKD	REMARKS
A	–	–	–	–

DESIGNED BY: HEI
DRAWN BY: HEI
SHEET CHK'D BY: HEI
CROSS CHK'D BY: HEI
APPROVED BY: HEI
DATE: APRIL 2016

CDM Smith
Riata Corporate Park, 12357-A Riata Trace Parkway, Suite 210
Austin, TX 78727
Tel: (512) 346-1100
Texas Registration Number F-3043

HARUTUNIAN ENGINEERING, INC.
305 E Huntland Dr, Ste 500; Austin, TX 78752
TBPE Firm Registration No. F-2408

CITY OF AUSTIN, TEXAS - AUSTIN WATER UTILITY
CIP 3333.016

SOUTH AUSTIN REGIONAL WWTP
THICKENER IMPROVEMENTS PROJECT

FIELD INTERFACE WIRING DIAGRAM
ODOR CONTROL SYSTEM

PROJECT No 590–104217
FILE NAME: E–51

SHEET No
E-51

Plotted: 4/22/2016 8:51:00 AM

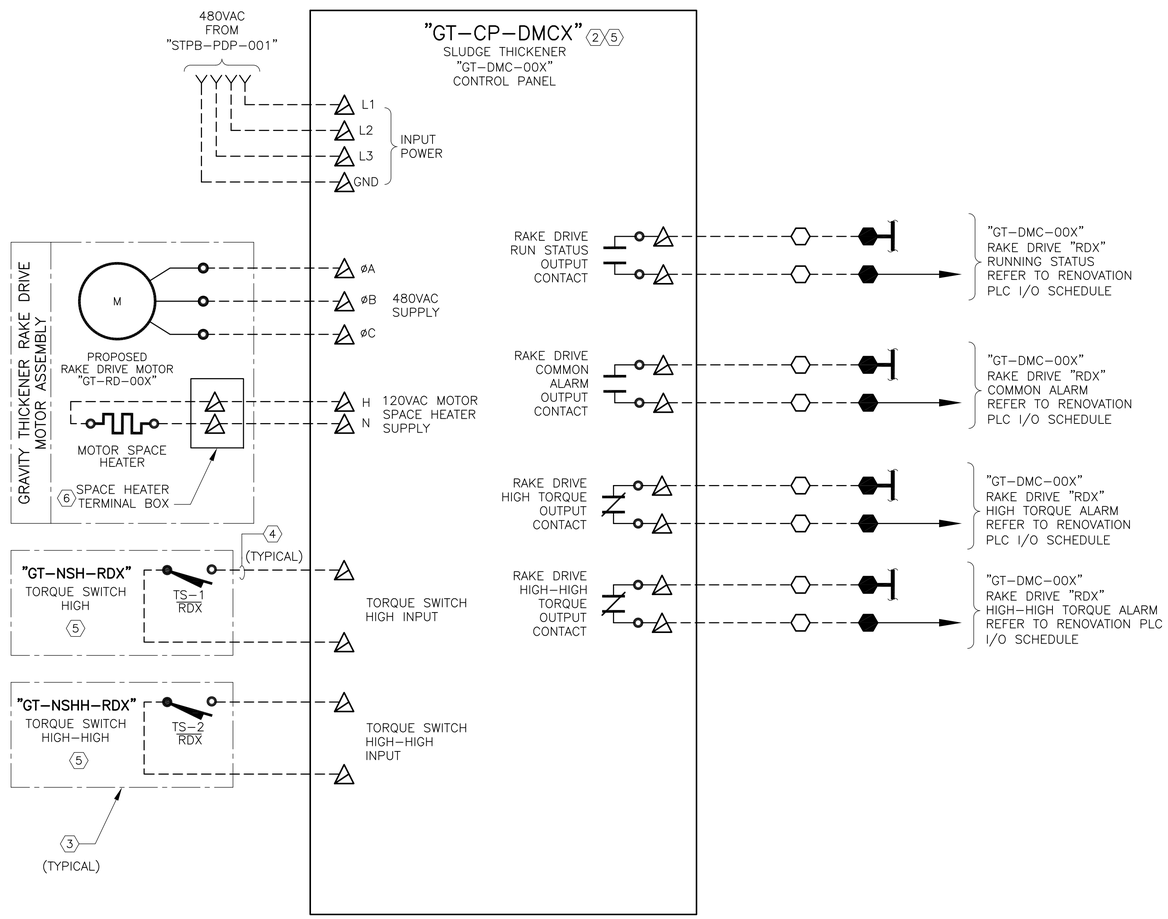

SLUDGE THICKENER CONTROL PANEL 1
FIELD INTERCONNECT WIRING DIAGRAM

SCALE: NTS

KEY NOTES:

1. THIS DRAWING IS TYPICAL FOR MULTIPLE EQUIPMENT. THE ACTUAL TAG FOR EACH EQUIPMENT WILL DIFFER FROM THAT SHOWN HERE. REFER TO THE TAG REPLACEMENT SCHEDULE ON THIS DRAWING TO DERIVE THE CORRESPONDING TAGS FOR EACH PROPOSED EQUIPMENT.

2. THE PROPOSED CONTROL PANEL IS FURNISHED BY THE EQUIPMENT MANUFACTURER. SIZE, FURNISH, AND INSTALL ALL CONDUIT/WIRE AND ALL NECESSARY RELATED HARDWARE TO INTERCONNECT ALL EQUIPMENT PACKAGED SYSTEM SUB-COMPONENTS WITH THE PROPOSED CONTROL PANEL, FURNISH AND INSTALL SUITABLE SUPPORT CHANNELS/CONCRETE EQUIPMENT PAD AS REQUIRED TO SUPPORT THE CONTROL PANEL, INSTALL THE CONTROL PANEL, AND MAKE ALL FINAL CONNECTIONS PER THE RECOMMENDATIONS AND WIRING DIAGRAMS PROVIDED BY THE EQUIPMENT MANUFACTURER. ALSO ADHERE TO THE REQUIREMENTS OF THE NATIONAL ELECTRICAL CODE (N.E.C.) AND THE SPECIFICATIONS. SHOULD ADDITIONAL FIELD INTERCONNECT WIRING BE REQUIRED TO FACILITATE THE FUNCTIONAL OPERATION OF THE PACKAGED CONTROL SYSTEM, THE CONTRACTOR SHALL SIZE, FURNISH, AND INSTALL THE ADDITIONAL CONDUIT/WIRE, FIELD ROUTE THE PROPOSED CONDUIT/WIRE PER THE SPECIFICATIONS, ADD ALL NECESSARY TERMINAL BLOCKS, PLC I/O MODULES, ETC., COMPLETE WITH ALL NECESSARY WIRING TO FACILITATE A COMPLETE AND FUNCTIONAL INSTALLATION, AND MAKE ALL FINAL CONNECTIONS PER THE MANUFACTURER'S RECOMMENDATIONS, THE MANUFACTURER'S WIRING DIAGRAMS, AND PERFORM ALL ASPECTS OF THE WORK TO THE SATISFACTION OF THE OWNER AT NO ADDITIONAL COST TO THE OWNER.

3. AN ATTEMPT HAS BEEN MADE TO IDENTIFY THE ACTUAL EQUIPMENT/DEVICE REQUIRED. THE EQUIPMENT/DEVICE LOCATION IS APPROXIMATE. THE ACTUAL EQUIPMENT/DEVICE QUANTITY/LOCATION MAY VARY. VERIFY LOCATION AND QUANTITY WITH THE SPECIFICATIONS AND THE EQUIPMENT MANUFACTURER. FURNISH AND INSTALL ALL NECESSARY EQUIPMENT/DEVICE(S), ALL DEVICE(S) INTERCONNECTING CONDUIT/WIRE AND MAKE ALL FINAL CONNECTIONS PER THE SPECIFICATIONS, THE MANUFACTURER'S RECOMMENDATIONS, AND THE MANUFACTURER'S WIRING DIAGRAMS.

4. THE CONTRACTOR SHALL SIZE PROPOSED CONDUIT/WIRE PER THE SPECIFICATIONS. COORDINATE EQUIPMENT/DEVICE WIRING REQUIREMENTS WITH THE MANUFACTURER'S WIRING DIAGRAMS AND THE SPECIFICATIONS. COORDINATE CONDUIT/WIRE CONNECTION WITH THE MANUFACTURER AND MAKE ALL FINAL CONNECTIONS. FIELD ROUTE PROPOSED CONDUIT/WIRE PER THE SPECIFICATIONS TO THE SATISFACTION OF THE OWNER AT NO ADDITIONAL COST TO THE OWNER. COORDINATE ROUTE OF PROPOSED CONDUIT/WIRE, VERIFYING ALL POINTS OF CONNECTION PRIOR TO COMMENCING INSTALLATION.

5. FURNISHED BY THE EQUIPMENT MANUFACTURER. INSTALL AS SHOWN ON THE PLAN DRAWINGS AND PER THE RECOMMENDATIONS OF THE EQUIPMENT MANUFACTURER. REFER TO THE PROCESS EQUIPMENT SECTION OF THE SPECIFICATIONS FOR ADDITIONAL REQUIREMENTS.

6. POWER AND CONTROL CABLE PROVIDED BY MANUFACTURER OF EQUIPMENT. INSTALL AND CONNECT MANUFACTURER SUPPLIED CABLE PER MANUFACTURER'S RECOMMENDATIONS. ALSO REFER TO THE SPECIFICATIONS.

SLUDGE GRAVITY THICKENER EQUIPMENT TAG REPLACEMENT

EQUIPMENT DESCRIPTION	EQUIPMENT TAG	DMCX	GT-RD-00X	RDX
GRAVITY THICKENER NO. 1A	GT-DMC-001	DMC1	GT-RD-001	RD1
GRAVITY THICKENER NO. 1B	GT-DMC-002	DMC2	GT-RD-002	RD2
GRAVITY THICKENER NO. 2A	GT-DMC-003	DMC3	GT-RD-003	RD3
GRAVITY THICKENER NO. 2B	GT-DMC-004	DMC4	GT-RD-004	RD4

THE FIELD INTERFACE WIRING SCHEMATIC SHOWN ON THIS DRAWING IS TYPICAL FOR GRAVITY THICKENERS "GT-DMC-001", "GT-DMC-002", "GT-DMC-003", AND "GT-DMC-004".

STATE OF TEXAS
K. A. HARUTUNIAN
59181
REGISTERED PROFESSIONAL ENGINEER
4/22/2016

REUSE OF DOCUMENTS
This document, and the designs incorporated herein, is an instrument of professional service that has been developed, designed and prepared by Harutunian Engineering, Inc., and is not to be used, in whole or part, for any other project without giving written notice to Harutunian Engineering, Inc.

REV No	DATE	DRWN	CHKD	REMARKS
△	–	–	–	–

DESIGNED BY: HEI
DRAWN BY: HEI
SHEET CHK'D BY: HEI
CROSS CHK'D BY: HEI
APPROVED BY: HEI
DATE: APRIL 2016

CDM Smith
Riata Corporate Park, 12357-A Riata Trace Parkway, Suite 210
Austin, TX 78727
Tel: (512) 346-1100
Texas Registration Number F-3043

HEI
HARUTUNIAN ENGINEERING, INC.
305 E Huntland Dr, Ste 500; Austin, TX 78752
TBPE Firm Registration No. F-2408

CITY OF AUSTIN, TEXAS - AUSTIN WATER UTILITY
CIP 3333.016
SOUTH AUSTIN REGIONAL WWTP
THICKENER IMPROVEMENTS PROJECT

FIELD INTERFACE WIRING DIAGRAM
SLUDGE THICKENER CONTROL PANEL

PROJECT No 590-104217
FILE NAME: E-52

SHEET No
E-52

Plotted: 4/22/2016 8:51:04 AM

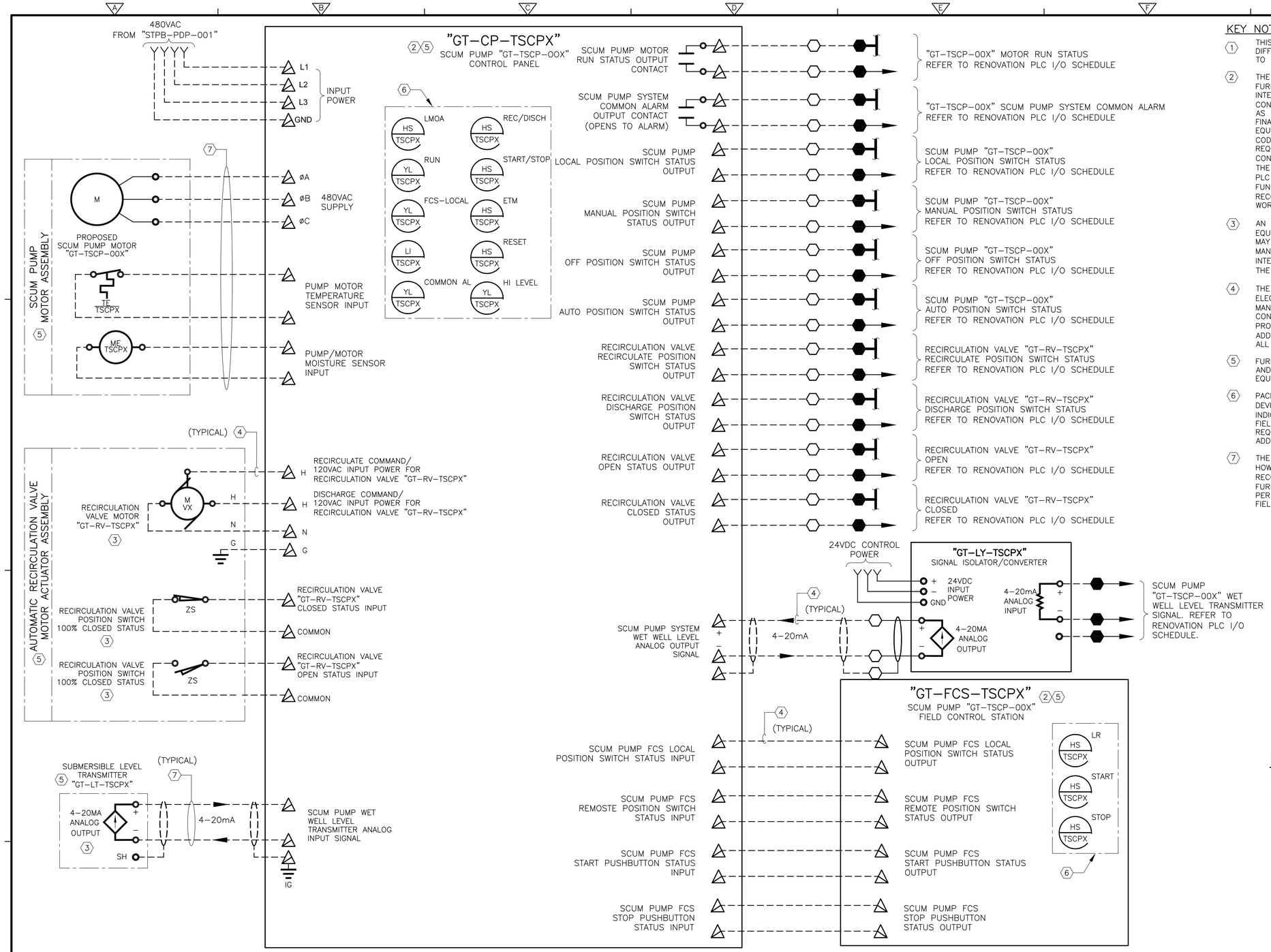

KEY NOTES:

1. THIS DRAWING IS TYPICAL FOR MULTIPLE EQUIPMENT. THE ACTUAL TAG FOR EACH EQUIPMENT WILL DIFFER FROM THAT SHOWN HERE. REFER TO THE TAG REPLACEMENT SCHEDULE ON THIS DRAWING TO DERIVE THE CORRESPONDING TAGS FOR EACH PROPOSED EQUIPMENT.
2. THE PROPOSED CONTROL PANEL IS FURNISHED BY THE EQUIPMENT MANUFACTURER. SIZE, FURNISH, AND INSTALL ALL CONDUIT/WIRE AND ALL NECESSARY RELATED HARDWARE TO INTERCONNECT ALL EQUIPMENT PACKAGED SYSTEM SUB-COMPONENTS WITH THE PROPOSED CONTROL PANEL, FURNISH AND INSTALL SUITABLE SUPPORT CHANNELS/CONCRETE EQUIPMENT PAD AS REQUIRED TO SUPPORT THE CONTROL PANEL, INSTALL THE CONTROL PANEL, AND MAKE ALL FINAL CONNECTIONS PER THE RECOMMENDATIONS AND WIRING DIAGRAMS PROVIDED BY THE EQUIPMENT MANUFACTURER. ALSO ADHERE TO THE REQUIREMENTS OF THE NATIONAL ELECTRICAL CODE (N.E.C.) AND THE SPECIFICATIONS. SHOULD ADDITIONAL FIELD INTERCONNECT WIRING BE REQUIRED TO FACILITATE THE FUNCTIONAL OPERATION OF THE PACKAGED CONTROL SYSTEM, THE CONTRACTOR SHALL SIZE, FURNISH, AND INSTALL THE ADDITIONAL CONDUIT/WIRE, FIELD ROUTE THE PROPOSED CONDUIT/WIRE PER THE SPECIFICATIONS, ADD ALL NECESSARY TERMINAL BLOCKS, PLC I/O MODULES, ETC., COMPLETE WITH ALL NECESSARY WIRING TO FACILITATE A COMPLETE AND FUNCTIONAL INSTALLATION, AND MAKE ALL FINAL CONNECTIONS PER THE MANUFACTURER'S RECOMMENDATIONS, THE MANUFACTURER'S WIRING DIAGRAMS, AND PERFORM ALL ASPECTS OF THE WORK TO THE SATISFACTION OF THE OWNER AT NO ADDITIONAL COST TO THE OWNER.
3. AN ATTEMPT HAS BEEN MADE TO IDENTIFY THE ACTUAL EQUIPMENT/DEVICE REQUIRED. THE EQUIPMENT/DEVICE LOCATION IS APPROXIMATE. THE ACTUAL EQUIPMENT/DEVICE QUANTITY/LOCATION MAY VARY. VERIFY LOCATION AND QUANTITY WITH THE SPECIFICATIONS AND THE EQUIPMENT MANUFACTURER. FURNISH AND INSTALL ALL NECESSARY EQUIPMENT/DEVICE(S), ALL DEVICE(S) INTERCONNECTING CONDUIT/WIRE AND MAKE ALL FINAL CONNECTIONS PER THE SPECIFICATIONS, THE MANUFACTURER'S RECOMMENDATIONS, AND THE MANUFACTURER'S WIRING DIAGRAMS.
4. THE CONTRACTOR SHALL SIZE PROPOSED CONDUIT/WIRE PER THE SPECIFICATIONS AND NATIONAL ELECTRICAL CODE (N.E.C.). COORDINATE EQUIPMENT/DEVICE WIRING REQUIREMENTS WITH THE MANUFACTURER'S WIRING DIAGRAMS AND THE SPECIFICATIONS. COORDINATE CONDUIT/WIRE CONNECTION WITH THE MANUFACTURER AND MAKE ALL FINAL CONNECTIONS. FIELD ROUTE PROPOSED CONDUIT/WIRE PER THE SPECIFICATIONS TO THE SATISFACTION OF THE OWNER AT NO ADDITIONAL COST TO THE OWNER. COORDINATE ROUTE OF PROPOSED CONDUIT/WIRE, VERIFYING ALL POINTS OF CONNECTION PRIOR TO COMMENCING INSTALLATION.
5. FURNISHED BY THE EQUIPMENT MANUFACTURER. INSTALL AS SHOWN ON THE PLAN DRAWINGS AND PER THE RECOMMENDATIONS OF THE EQUIPMENT MANUFACTURER. REFER TO THE PROCESS EQUIPMENT SECTION OF THE SPECIFICATIONS FOR ADDITIONAL REQUIREMENTS.
6. PACKAGED SYSTEM MANUFACTURER SHALL FURNISH AND INSTALL, AT MINIMUM, THE CONTROL DEVICES SHOWN (I.E. SELECTOR SWITCHES, ALARM/INDICATING LIGHTS, ELAPSED TIME METER, LEVEL INDICATOR, ETC.) ON THE DOOR OF THE PROPOSED PACKAGED CONTROL PANEL OR PACKAGED FIELD CONTROL STATION, AS APPLICABLE. NOT ALL CONTROL DEVICES OR INSTRUMENTATION REQUIRED IS SHOWN ON THIS DRAWING. REFER TO PACKAGED SYSTEM SPECIFICATIONS FOR ADDITIONAL INFORMATION AND REQUIREMENTS.
7. THE PROPOSED WIRING SHALL BE FURNISHED BY THE PACKAGED SYSTEM MANUFACTURER; HOWEVER, THE CONTRACTOR SHALL INSTALL THE WIRING PER MANUFACTURER'S RECOMMENDATIONS/WIRING DIAGRAMS AND MAKE ALL FINAL TERMINATIONS. CONTRACTOR SHALL FURNISH, INSTALL AND SIZE PROPOSED CONDUIT PER NATIONAL ELECTRICAL CODE (N.E.C.) AND PER SPECIFICATIONS AS REQUIRED TO ROUTE THE PACKAGED SYSTEM WIRING TO AND FROM THE FIELD EQUIPMENT AS REQUIRED AND MAKE ALL FINAL TERMINATIONS.

THICKENER SCUM PUMP EQUIPMENT TAG REPLACEMENT

EQUIPMENT DESCRIPTION	EQUIPMENT TAG	TSCPX	GT-RV-TSCPX	-00X
THICKENER SCUM PUMP NO. 1	GT-TSCP-001	TSCP1	GT-RV-TSCP1	-001
THICKENER SCUM PUMP NO. 2	GT-TSCP-002	TSCP2	GT-RV-TSCP2	-002
THICKENER SCUM PUMP NO. 3	GT-TSCP-003	TSCP3	GT-RV-TSCP3	-003
THICKENER SCUM PUMP NO. 4	GT-TSCP-004	TSCP4	GT-RV-TSCP4	-004

THE FIELD INTERFACE WIRING SCHEMATIC SHOWN ON THIS DRAWING IS TYPICAL FOR GRAVITY THICKENER SCUM PUMPS "GT-TSCP-001", "GT-TSCP-002", "GT-TSCP-003", AND "GT-TSCP-004".

THICKENER SCUM PUMP CONTROL PANEL FIELD INTERCONNECT WIRING DIAGRAM

SCALE: NTS

REUSE OF DOCUMENTS
This document, and the designs incorporated herein, is an instrument of professional service that has been developed, designed and prepared by Harutunian Engineering, Inc., and is not to be used, in whole or part, for any other project without giving written notice to Harutunian Engineering, Inc.

REV No	DATE	DRWN	CHKD	REMARKS
	–	–	–	–

DESIGNED BY: HEI
DRAWN BY: HEI
SHEET CHK'D BY: HEI
CROSS CHK'D BY: HEI
APPROVED BY: HEI
DATE: APRIL 2016

CDM Smith
Riata Corporate Park, 12357-A Riata Trace Parkway, Suite 210
Austin, TX 78727
Tel: (512) 346-1100
Texas Registration Number F-3043

HARUTUNIAN ENGINEERING, INC.
305 E Huntland Dr, Ste 500; Austin, TX 78752
TBPE Firm Registration No. F-2408

CITY OF AUSTIN, TEXAS - AUSTIN WATER UTILITY
CIP 3333.016

SOUTH AUSTIN REGIONAL WWTP
THICKENER IMPROVEMENTS PROJECT

FIELD INTERFACE WIRING DIAGRAM
THICKENER SCUM PUMP CONTROL PANEL

PROJECT No 590-104217
FILE NAME: E-53

SHEET No
E-53

STATE OF TEXAS
K. A. HARUTUNIAN
59181
REGISTERED PROFESSIONAL ENGINEER
4/22/2016

Plotted: 4/22/2016 8:51:08 AM

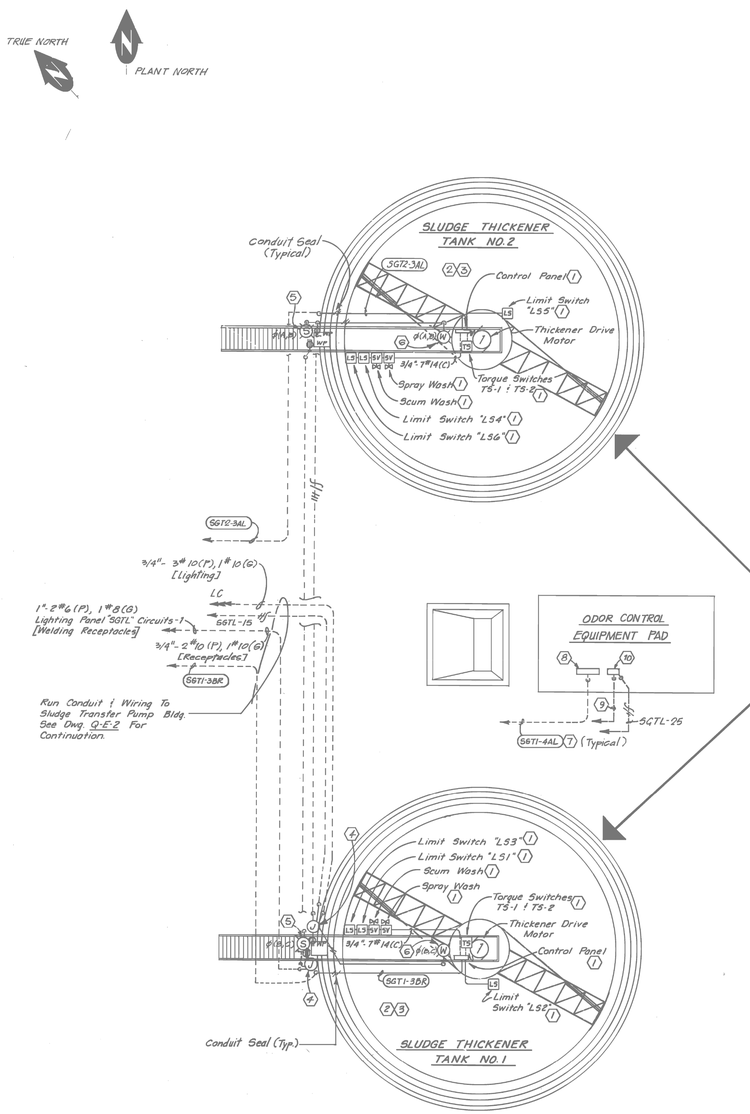

SLUDGE THICKENER TANKS NO.1 & NO.2
POWER & LIGHTING
SCALE: 1" = 10'-0"

ALL WIRING & EQUIPMENT IN SLUDGE THICKENERS NO. 1 & NO. 2 SHALL COMPLY WITH THE N.E.C. REQUIREMENTS FOR CLASS-I DIVISION-I. SEAL ALL CONDUITS AT ENTRY INTO SLUDGE THICKENER TANKS

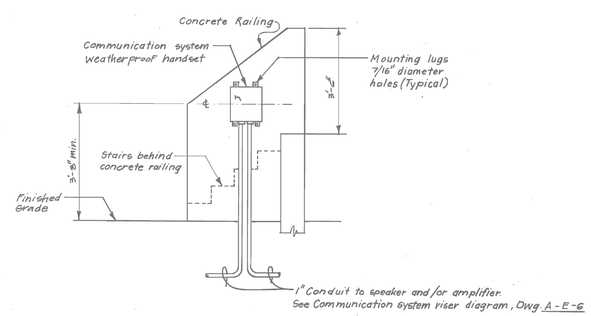

TYPICAL TREATMENT TANK
COMMUNICATION SYSTEM
HANDSET MOUNTING DETAIL
NOT TO SCALE

KEY NOTES

1. LIMIT SWITCHES, TORQUE SWITCHES, SOLENOID VALVES AND CONTROL PANEL ARE FURNISHED WITH THE CLARIFIERS.
2. RUN CONDUITS UNDER ACCESS WALKWAY. SUPPORT FROM WALKWAY STRUCTURAL MEMBERS.
3. ALL EXPOSED CONDUITS AT SLUDGE THICKENER TANKS ARE TO BE P.V.C. COATED RIGID STEEL.
4. MOUNT JUNCTION BOX ON OUTSIDE WALL OF SLUDGE THICKENER TANKS @ 3'-0" ABOVE FINISHED GRADE.
5. SEE DRAWING NO. U-E-1 FOR FIXTURE TYPE "S" AND RECEPTACLE MOUNTING DETAIL.
6. FIXTURE TYPE "W" TO BE APPLETON CAT. #CLS-15150-208V, 150 WATT, HPS LAMP WITH #CHR-4ST REFLECTOR AND #CGU2 WIRE GUARD (OR APPROVED EQUAL). FIXTURE SUITABLE FOR EXPLOSION-PROOF CLASS-I DIVISION-I. MOUNT FIXTURE SIMILAR TO DETAIL ON DRAWING U-E-1.
7. REFER TO ELECTRICAL ONE LINE DIAGRAM DRAWING Q-E-1.
8. ODOR CONTROL UNIT CONTROL PANEL. VERIFY EXACT LOCATION OF CONTROL PANEL WITH ODOR CONTROL EQUIPMENT SUPPLIER AND MAKE ALL FINAL CONNECTIONS TO MANUFACTURER'S RECOMMENDATION.
9. 3/4" 2 #14 (A) TO ANNUNCIATOR PANEL POINT #20.
10. HYDROGEN SULFIDE MONITOR PANEL MOUNTED ON ODOR CONTROL UNIT. VERIFY EXACT LOCATION OF PANEL WITH ODOR CONTROL UNIT SUPPLIER AND MAKE ALL FINAL CONNECTIONS TO MANUFACTURER'S RECOMMENDATION.

GENERAL NOTES:

1. THE EXISTING INFORMATION SHOWN ON THIS DRAWING WAS OBTAINED FROM THE PROJECT ENTITLED "ONION CREEK WASTEWATER TREATMENT FACILITIES – CONTRACT NO. 2" DATED APRIL 1984. THIS DRAWING IS PROVIDED FOR REFERENCE PURPOSES ONLY AND MAY NOT EXACTLY REFLECT THE EXISTING CONDITIONS. THEREFORE, THE CONTRACTOR IS TO EXERCISE EXTREME CARE AND FIELD VERIFY THE EXISTING CONDITIONS PRIOR TO COMMENCING FULL SCALE DEMOLITION OR RENOVATION ACTIVITIES. FOLLOWING THE DISCOVERY VERIFICATION OF THE EXISTING FIELD CONDITIONS, SHOULD ADJUSTMENTS BECOME A NECESSITY TO THE EXISTING OR PROPOSED SYSTEM (AS APPLICABLE), THE EXISTING DISCOVERED FIELD CONDITIONS MUST BE BROUGHT TO THE OWNER'S ATTENTION FOR EXECUTION OF THE NECESSARY ADJUSTMENTS/MODIFICATIONS.

1 [E-20]

I HEREBY CERTIFY THIS "RECORD DRAWINGS" IS CORRECT AND WAS PREPARED UNDER MY SUPERVISION.
11/7/86
11/7/89

STATE OF TEXAS — JAMES R. SCHILLY — 27165 — REGISTERED PROFESSIONAL ENGINEER

TRIAD ENGINEERING
CONSULTING ENGINEERS
AUSTIN, TEXAS

NO.	DATE	REVISION	APPROV.
4			
3			
2			
1			

CITY OF AUSTIN, TEXAS
ONION CREEK WASTEWATER TREATMENT FACILITIES
GRAVITY THICKENER – ELECTRICAL

Turner Collie & Braden Inc.
CONSULTING ENGINEERS
TEXAS AUSTIN/DALLAS/EL PASO/HOUSTON/PORT ARTHUR
COLORADO DENVER/GRAND JUNCTION

Unit NAIL	Scale Horz AS NOTED Vert	Date APRIL 1984	
Designed JRS / KAH	Checked JRS/KAH	Job No. 7109-025	Contract 2
Drawn GDG / JP	Approved JRS	Sheet 248 of 300	

Dwg. No. P-E-1

K. A. HARUTUNIAN — STATE OF TEXAS — 59181 — REGISTERED PROFESSIONAL ENGINEER — 7/22/2016

REUSE OF DOCUMENTS
This document, and the designs incorporated herein, is an instrument of professional service that has been developed, designed and prepared by Harutunian Engineering, Inc., and is not to be used, in whole or part, for any other project without giving written notice to Harutunian Engineering, Inc.

REV No	DATE	DRWN	CHKD	REMARKS
△	–	–	–	–

DESIGNED BY: HEI
DRAWN BY: HEI
SHEET CHK'D BY: HEI
CROSS CHK'D BY: HEI
APPROVED BY: HEI
DATE: APRIL 2016

CDM Smith
Riata Corporate Park, 12357-A Riata Trace Parkway, Suite 210
Austin, TX 78727
Tel: (512) 346-1100
Texas Registration Number F-3043

HEI
HARUTUNIAN ENGINEERING, INC.
305 E Huntland Dr, Ste 500; Austin, TX 78752
TBPE Firm Registration No. F-2408

CITY OF AUSTIN, TEXAS - AUSTIN WATER UTILITY
CIP 3333.016
SOUTH AUSTIN REGIONAL WWTP
THICKENER IMPROVEMENTS PROJECT

GRAVITY THICKENERS 1A AND 2A
AND ODOR CONTROL SYSTEM PLAN
REFERENCE DRAWING

PROJECT No 590-104217
FILE NAME: E-54

SHEET No
E-54

Plotted: 4/22/2016 8:51:15 AM

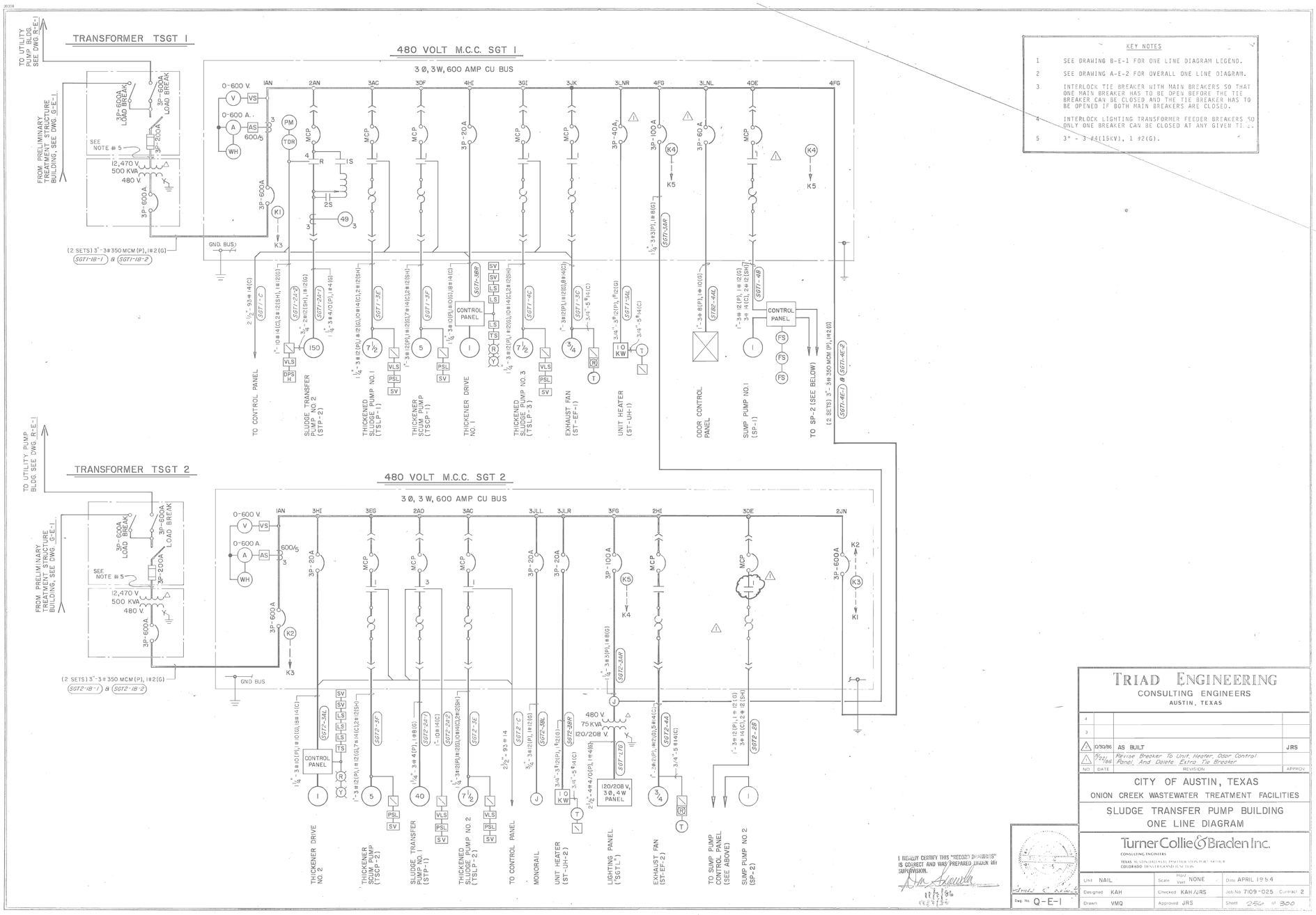

KEY NOTES

1 SEE DRAWING B-E-1 FOR ONE LINE DIAGRAM LEGEND.

2 SEE DRAWING A-E-2 FOR OVERALL ONE LINE DIAGRAM.

3 INTERLOCK TIE BREAKER WITH MAIN BREAKERS SO THAT ONE MAIN BREAKER HAS TO BE OPEN BEFORE THE TIE BREAKER CAN BE CLOSED AND THE TIE BREAKER HAS TO BE OPENED IF BOTH MAIN BREAKERS ARE CLOSED.

4 INTERLOCK LIGHTING TRANSFORMER FEEDER BREAKERS SO ONLY ONE BREAKER CAN BE CLOSED AT ANY GIVEN TI...

5 3" - 3-#4(15kV), 1 #2(G).

GENERAL NOTES:

1. THE EXISTING INFORMATION SHOWN ON THIS DRAWING WAS OBTAINED FROM THE PROJECT ENTITLED "ONION CREEK WASTEWATER TREATMENT FACILITIES – CONTRACT NO. 2" DATED APRIL 1984. THIS DRAWING IS PROVIDED FOR REFERENCE PURPOSES ONLY AND MAY NOT EXACTLY REFLECT THE EXISTING CONDITIONS. THEREFORE, THE CONTRACTOR IS TO EXERCISE EXTREME CARE AND FIELD VERIFY THE EXISTING CONDITIONS PRIOR TO COMMENCING FULL SCALE DEMOLITION OR RENOVATION ACTIVITIES. FOLLOWING THE DISCOVERY VERIFICATION OF THE EXISTING FIELD CONDITIONS, SHOULD ADJUSTMENTS BECOME A NECESSITY TO THE EXISTING OR PROPOSED SYSTEM (AS APPLICABLE), THE EXISTING DISCOVERED FIELD CONDITIONS MUST BE BROUGHT TO THE OWNER'S ATTENTION FOR EXECUTION OF THE NECESSARY ADJUSTMENTS/MODIFICATIONS.

1 [E-01] 1 [E-02] 1 [E-03]

I HEREBY CERTIFY THIS "RECORD DRAWINGS" IS CORRECT AND WAS PREPARED UNDER MY SUPERVISION.

TRIAD ENGINEERING
CONSULTING ENGINEERS
AUSTIN, TEXAS

NO	DATE	REVISION	APPROV
4			
3			
2	0/30/86	AS BUILT	JRS
1	5/21/86	Revise Breaker To Unit Heater, Odor Control Panel, And Delete Extra Tie Breaker	

CITY OF AUSTIN, TEXAS
ONION CREEK WASTEWATER TREATMENT FACILITIES
SLUDGE TRANSFER PUMP BUILDING
ONE LINE DIAGRAM

Turner Collie & Braden Inc.
CONSULTING ENGINEERS
TEXAS AUSTIN DALLAS FORT WORTH HOUSTON PORT ARTHUR
COLORADO DENVER GRAND JUNCTION

Unit NAIL	Scale Horz NONE Vert	Date APRIL 1984	
Designed KAH	Checked KAH/JRS	Job No 7109-025	Contract 2
Drawn VMQ	Approved JRS	Sheet 254 of 300	

Dwg. No. Q-E-1

Plotted: 4/22/2016 8:51:20 AM

K. A. HARUTUNIAN
STATE OF TEXAS
K. A. HARUTUNIAN
59181
REGISTERED
PROFESSIONAL ENGINEER
4/22/2016

REUSE OF DOCUMENTS
This document, and the designs incorporated herein, is an instrument of professional service that has been developed, designed and prepared by Harutunian Engineering, Inc., and is not to be used, in whole or part, for any other project without giving written notice to Harutunian Engineering, Inc.

REV No	DATE	DRWN	CHKD	REMARKS
△	–	–	–	–

DESIGNED BY: HEI
DRAWN BY: HEI
SHEET CHK'D BY: HEI
CROSS CHK'D BY: HEI
APPROVED BY: HEI
DATE: APRIL 2016

CDM Smith
Riata Corporate Park, 12357-A Riata Trace Parkway, Suite 210
Austin, TX 78727
Tel: (512) 346-1100
Texas Registration Number F-3043

HARUTUNIAN ENGINEERING, INC.
305 E Huntland Dr, Ste 500; Austin, TX 78752
TBPE Firm Registration No. F-2408

CITY OF AUSTIN, TEXAS - AUSTIN WATER UTILITY
CIP 3333.016

SOUTH AUSTIN REGIONAL WWTP
THICKENER IMPROVEMENTS PROJECT

ONE-LINE DIAGRAM
REFERENCE DRAWING

PROJECT No 590-104217
FILE NAME: E-55

SHEET No
E-55

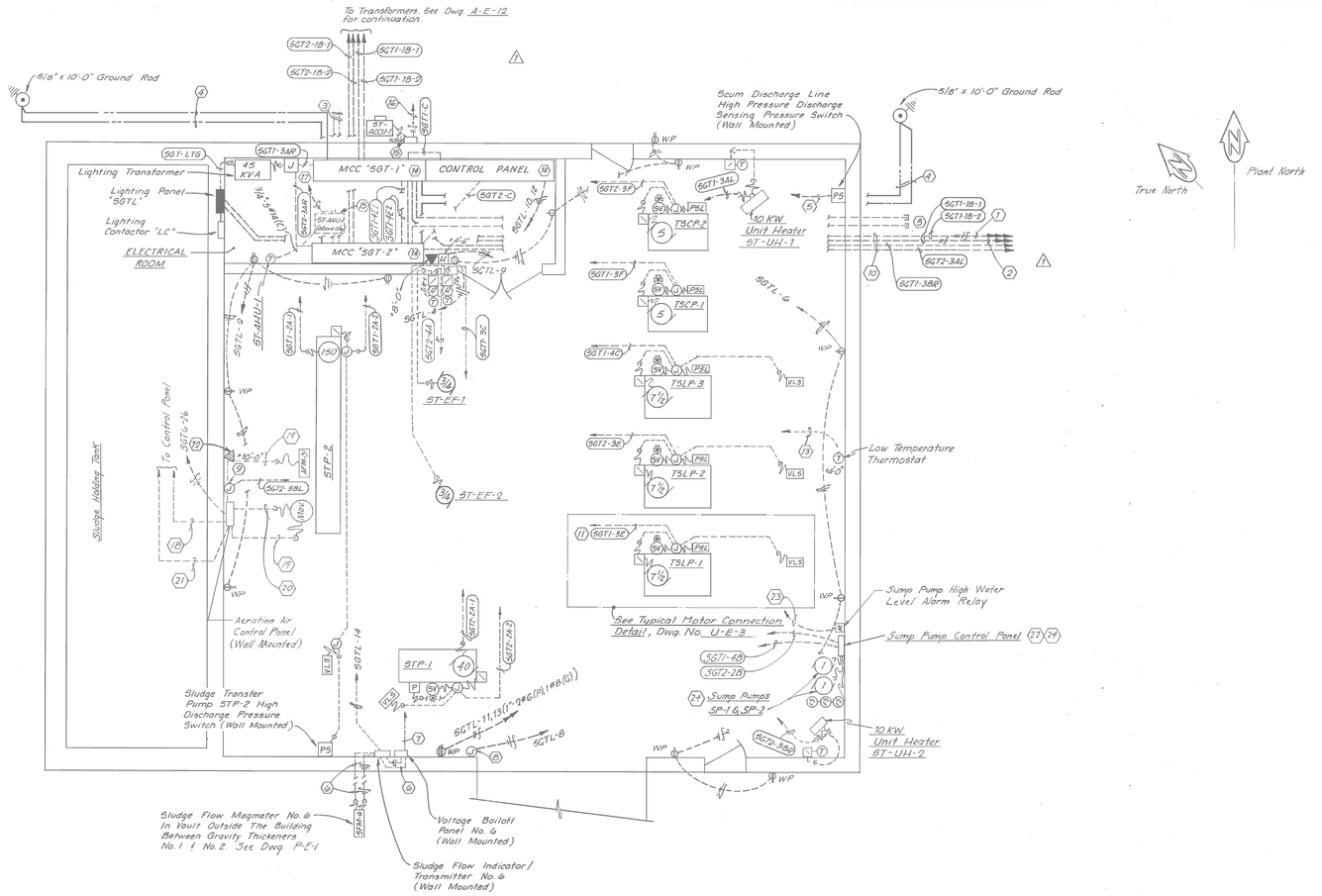

SLUDGE TRANSFER PUMP BLDG. - POWER

SCALE: 1/4" = 1'-0"

KEY NOTES

1. 1" - 4#10(P), 1#10(G) TO GRAVITY THICKENERS NO. 1 & NO. 2 (LIGHTS AND 120 VOLT RECEPTACLES). SEE DRAWING P-E-1 FOR CONTINUATION OF CIRCUITING.
2. 1" - 2#6(P), 1#8(G) TO GRAVITY THICKENERS NO. 1 & NO. 2 (208 V WELDING RECEPTACLES). SEE DRAWING P-E-1 FOR CONTINUATION OF CIRCUITING.
3. STUB OUT AND CAP FOUR 1 1/2" E.C. FOR FUTURE USE. SEE DETAIL, DRAWING U-E-2.
4. #4/0 BARE COPPER GROUND WIRE. CONNECT TO GROUND ROD USING CADWELD, OR EQUAL PROCESS.
5. 3/4" - 2#14(C) TO CONTROL PANEL/SCUM PUMPS RESET CONTROL CIRCUITRY AND HIGH DISCHARGE PRESSURE ALARM CIRCUITRY.
6. 1" - FIVE (5) CONDUCTOR CABLE. CABLE TO BE FURNISHED BY OTHERS AND INSTALLED BY CONTRACTOR.
7. 3/4" - 1#18 AWG (TWISTED PAIR) SHIELDED CONDUCTORS FROM SLUDGE FLOW TRANSMITTER NO. 6 TO RECORDER/CONTROLLER IN BUILDING CONTROL PANEL.
8. INSTALL JUNCTION BOX FOR MOTOR OPERATED ROLL-UP DOOR AT DOOR HEIGHT AND LOCATION RECOMMENDED BY MANUFACTURER. MOTOR STARTERS, KEY AND PUSHBUTTON CONTROL STATION OPERATORS BY OTHERS. MAKE ALL FINAL CONNECTIONS TO MOTOR STARTER AND CONTROL STATIONS AS PER MANUFACTURER'S RECOMMENDATION. USE SEALTITE WEATHERPROOF FLEXIBLE CONDUIT, OR EQUAL.
9. INSTALL JUNCTION BOX ON WALL AT HEIGHT OF MONORAIL. CONNECT TO MONORAIL PER MONORAIL MANUFACTURER'S RECOMMENDATION. USE SEALTITE WEATHERPROOF FLEXIBLE CONDUIT, OR EQUAL. SEE DETAIL DRAWING U-E-3.
10. RUN CONDUITS AND WIRING TO GRAVITY THICKENERS. SEE DRAWING P-E-1 FOR CONTINUATION OF CIRCUITING.
11. SEE ONE LINE DIAGRAM, DRAWING Q-E-1 FOR WIRING AND CONDUIT SIZES NOT SHOWN ON THE DRAWINGS (TYPICAL).
12. FOR WIRING OF HANDSET & SPEAKERS, SEE COMMUNICATIONS SYSTEM RISER DIAGRAM, DRAWING A-E-6.
13. 3/4" - 2 #14(A) TO CONTROL PANEL ANNUNCIATOR POINT #18.
14. INSTALL CONTROL PANEL, MOTOR CONTROL CENTERS ON 6" HIGH HOUSEKEEPING PADS. SEE DETAIL 18, DRAWING U-S-2.
15. PROVIDE DISCONNECT AS REQUIRED BY NATIONAL ELECTRICAL CODE.
16. 3/4" - 2 #10(P), 1 #10(G). CIRCUIT SGTL - 20, 22.
17. 3/4" - 2 #12(P), 1 #12(G). CIRCUIT SGTL - 16 18.
18. 3/4" - 2#16 (TWISTED PAIR) SHIELDED CONDUCTORS
19. 3/4" - 1#16 (TWISTED PAIR) SHIELDED CONDUCTORS
20. 3/4" - 2#12(P), 1#12(G). CIRCUIT SGTL-26
21. 3/4" - 2#12(A) TO ANNUNCIATOR POINT NO. 17.
22. REFER TO SUMP PUMP CONTROL PANEL DETAIL DRAWING F-E-3.
23. 3/4" - 2#12(P), 1#12(G), 2#14(A) TO CONTROL PANEL ANNUNCIATOR POINT #19.
24. SUMP PUMPS, CONTROL PANEL, FLOAT SWITCHES ETC. ARE SHOWN AT THIS LOCATION FOR CLARITY REASONS ONLY. SUMP PUMP ARE TO BE LOCATED IN SOUTH EAST CORNER OF BUILDING (BELOW UNIT HEATER ST-UH-2).

GENERAL NOTES:

1. THE EXISTING INFORMATION SHOWN ON THIS DRAWING WAS OBTAINED FROM THE PROJECT ENTITLED "ONION CREEK WASTEWATER TREATMENT FACILITIES – CONTRACT NO. 2" DATED APRIL 1984. THIS DRAWING IS PROVIDED FOR REFERENCE PURPOSES ONLY AND MAY NOT EXACTLY REFLECT THE EXISTING CONDITIONS. THEREFORE, THE CONTRACTOR IS TO EXERCISE EXTREME CARE AND FIELD VERIFY THE EXISTING CONDITIONS PRIOR TO COMMENCING FULL SCALE DEMOLITION OR RENOVATION ACTIVITIES. FOLLOWING THE DISCOVERY VERIFICATION OF THE EXISTING FIELD CONDITIONS, SHOULD ADJUSTMENTS BECOME A NECESSITY TO THE EXISTING OR PROPOSED SYSTEM (AS APPLICABLE), THE EXISTING DISCOVERED FIELD CONDITIONS MUST BE BROUGHT TO THE OWNER'S ATTENTION FOR EXECUTION OF THE NECESSARY ADJUSTMENTS/MODIFICATIONS.

1 [E-27]

Plotted: 4/22/2016 8:51:25 AM

TRIAD ENGINEERING
CONSULTING ENGINEERS
AUSTIN, TEXAS

NO.	DATE	REVISION	APPROV.
4			
3			
2			
1	6/6/85	Revised Location of conduit stub-out to Transformers & Sludge Thickeners	

CITY OF AUSTIN, TEXAS
ONION CREEK WASTEWATER TREATMENT FACILITIES

SLUDGE TRANSFER PUMP BUILDING
ELECTRICAL POWER PLAN

Turner Collie & Braden Inc.
CONSULTING ENGINEERS
TEXAS AUSTIN/DALLAS/EL PASO/HOUSTON/PORT ARTHUR
COLORADO DENVER/GRAND JUNCTION

Unit NAIL	Scale Horz. AS SHOWN Vert.	Date APRIL, 1984	
Designed KAH	Checked KAH/JRS	Job No. 7109-025	Contract 2
Drawn JP	Approved JRS	Sheet 257 of 300	

Dwg. No. Q-E-2

I HEREBY CERTIFY THIS "RECORD DRAWINGS" IS CORRECT AND WAS PREPARED UNDER MY SUPERVISION.
4/19/86

STATE OF TEXAS — JAMES R. SCHULTZ 27165 — REGISTERED PROFESSIONAL ENGINEER

STATE OF TEXAS — K. A. HARUTUNIAN 59181 — REGISTERED PROFESSIONAL ENGINEER — 4/22/2016

REUSE OF DOCUMENTS
This document, and the designs incorporated herein, is an instrument of professional service that has been developed, designed and prepared by Harutunian Engineering, Inc., and is not to be used, in whole or part, for any other project without giving written notice to Harutunian Engineering, Inc.

REV No	DATE	DRWN	CHKD	REMARKS
1	–	–	–	–

DESIGNED BY: HEI
DRAWN BY: HEI
SHEET CHK'D BY: HEI
CROSS CHK'D BY: HEI
APPROVED BY: HEI
DATE: APRIL 2016

CDM Smith
Riata Corporate Park, 12357-A Riata Trace Parkway, Suite 210
Austin, TX 78727
Tel: (512) 346-1100
Texas Registration Number F-3043

HEI
HARUTUNIAN ENGINEERING, INC.
305 E Huntland Dr, Ste 500; Austin, TX 78752
TBPE Firm Registration No. F-2408

CITY OF AUSTIN, TEXAS - AUSTIN WATER UTILITY
CIP 3333.016

SOUTH AUSTIN REGIONAL WWTP
THICKENER IMPROVEMENTS PROJECT

SLUDGE TRANSFER PUMP BUILDING
FLOOR PLAN
REFERENCE DRAWING

PROJECT No 590-104217
FILE NAME: E-56

SHEET No
E-56

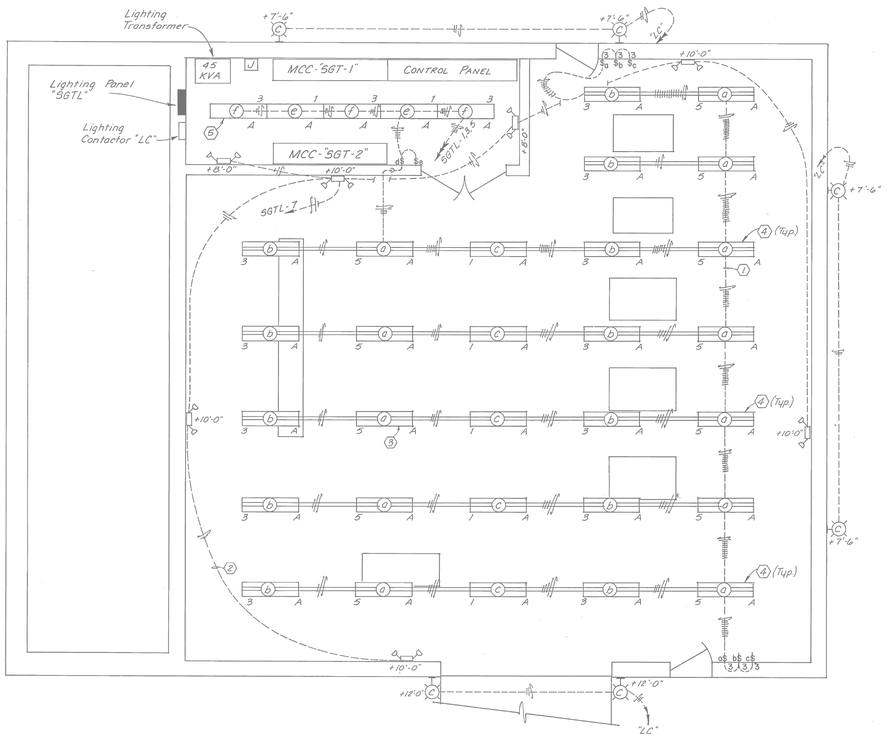

SLUDGE TRANSFER PUMP BUILDING - LIGHTING

SCALE: 1/4" = 1'-0"

KEY NOTES

1. RUN CONDUITS, WHICH CONNECT FIXTURE ROWS, CONCEALED IN ROOF SLAB (TYPICAL).
2. RUN CONDUIT CONNECTING EMERGENCY FIXTURES CONCEALED IN ROOF SLAB (TYPICAL).
3. FOR MOUNTING OF "A" TYPE FIXTURE. SEE DRAWING U-E-1 (TYPICAL).
4. MOUNT FIXTURES @ 12' - 0" A.F.F. (TYPICAL FOR ALL PUMP ROOM FIXTURES).
5. MOUNT ELECTRICAL ROOM FIXTURES @ 8' - 0" A.F.F.

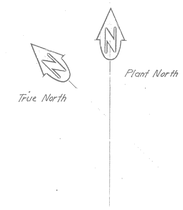

VOLT: 120/208V AMPS: 225A MAIN: 225A PHASE/WIRE: 3Ø,4W

CIRCUIT BREAKER PANEL SCHEDULE -"SGTL"

CIRCUIT-BREAKER SIZE	CKT NO.	LOAD DESCRIPTION	PHASE A	PHASE B	PHASE C	LOAD DESCRIPTION	CKT NO.	CIRCUIT BREAKER SIZE
20A/1P	1	ELECTRICAL & PUMP RM'S. LIGHTING	800			WEST WALL - BLDG. RECEPTACLES	2	20A/1P
			700					
20A/1P	3	ELECTRICAL & PUMP RM'S. LIGHTING		800		BLDG. NORTH WALL & ELECT. ROOM RECEPTACLES	4	20A/1P
				1500				
20A/1P	5	PUMP ROOM LIGHTING			800	BLDG. WEST & SOUTH WALLS RECEPTACLES	6	20A/1P
					1200			
20A/1P	7	EMERGENCY LIGHTS	1176			MOTOR OPERATED ROLL UP DOOR	8	20A/1P
			300					
20A/1P	9	COMMUNICATION SYSTEM		1200		CONTROL PANEL POWER	10	20A/1P
				1200				
50A/2P	11	WELDING			1200	CONTROL PANEL POWER	12	20A/1P
					4160			
	13	RECEPTACLE	600			VOLTAGE BOILOFF & FLOW TRANSMITTER NO. 6	14	20A/1P
			4160					
20A/1P	15	GRAVITY THICKENER RECEPTACLES		2600		AIR HANDLING UNIT ST-AHU-1	16	2P/20
				400				
	17				2600		18	
					1800			
3P/30	19	OUTSIDE LIGHTS THRU CONTACTOR	1600			CONDENSING UNIT ST-ACCU-1	20	2P/20
			1800					
	21			1600			22	
				1800				
1P/20	23	CONTACTOR COIL			1200	RECEPTACLES AND THICKENER	24	1P/20
					1200			
1P/20	25	HYDROGEN SULFIDE MONITOR (ODOR CONTROL UNIT)	1200			AERATION AIR CONTROL CABINET	26	1P/20
			1200					
	27	SPACE		1200		SPARE	28	1P/20
	29	SPACE			1200	SPARE	30	1P/20
	31	SPACE	1200			SPARE	32	1P/20
	33	SPACE				SPACE	34	
	35	SPACE				SPACE	36	
	37	SPACE				SPACE	38	
	39	SPACE				SPACE	40	
	41	SPACE				SPACE	42	

GENERAL NOTES:

1. THE EXISTING INFORMATION SHOWN ON THIS DRAWING WAS OBTAINED FROM THE PROJECT ENTITLED "ONION CREEK WASTEWATER TREATMENT FACILITIES – CONTRACT NO. 2" DATED APRIL 1984. THIS DRAWING IS PROVIDED FOR REFERENCE PURPOSES ONLY AND MAY NOT EXACTLY REFLECT THE EXISTING CONDITIONS. THEREFORE, THE CONTRACTOR IS TO EXERCISE EXTREME CARE AND FIELD VERIFY THE EXISTING CONDITIONS PRIOR TO COMMENCING FULL SCALE DEMOLITION OR RENOVATION ACTIVITIES. FOLLOWING THE DISCOVERY VERIFICATION OF THE EXISTING FIELD CONDITIONS, SHOULD ADJUSTMENTS BECOME A NECESSITY TO THE EXISTING OR PROPOSED SYSTEM (AS APPLICABLE), THE EXISTING DISCOVERED FIELD CONDITIONS MUST BE BROUGHT TO THE OWNER'S ATTENTION FOR EXECUTION OF THE NECESSARY ADJUSTMENTS/MODIFICATIONS.

1 [E-28] 1 [E-10]

I HEREBY CERTIFY THIS "RECORD DRAWINGS" IS CORRECT AND WAS PREPARED UNDER MY SUPERVISION.
11/1/86

STATE OF TEXAS JAMES R. SCHULTZ 27165 REGISTERED PROFESSIONAL ENGINEER

TRIAD ENGINEERING
CONSULTING ENGINEERS
AUSTIN, TEXAS

NO.	DATE	REVISION	APPROV.
4			
3			
2			
1			

CITY OF AUSTIN, TEXAS
ONION CREEK WASTEWATER TREATMENT FACILITIES

SLUDGE TRANSFER PUMP BUILDING
ELECTRICAL LIGHTING PLAN

Turner Collie & Braden Inc.
CONSULTING ENGINEERS
TEXAS AUSTIN/DALLAS/EL PASO/HOUSTON/PORT ARTHUR
COLORADO DENVER/GRAND JUNCTION

Unit NAIL	Scale Horz. AS NOTED Vert.	Date APRIL, 1984	
Designed KAH	Checked KAH/JRS	Job No. 7109-025	Contract 2
Drawn JP	Approved JRS	Sheet 258 of 300	

Dwg. No. Q-E-3

K. A. HARUTUNIAN 59181 STATE OF TEXAS REGISTERED PROFESSIONAL ENGINEER 4/22/2016

Plotted: 4/22/2016 8:51:31 AM

REUSE OF DOCUMENTS
This document, and the designs incorporated herein, is an instrument of professional service that has been developed, designed and prepared by Harutunian Engineering, Inc., and is not to be used, in whole or part, for any other project without giving written notice to Harutunian Engineering, Inc.

REV No	DATE	DRWN	CHKD	REMARKS
△	–	–	–	–

DESIGNED BY: HEI
DRAWN BY: HEI
SHEET CHK'D BY: HEI
CROSS CHK'D BY: HEI
APPROVED BY: HEI
DATE: APRIL 2016

CDM Smith
Riata Corporate Park, 12357-A Riata Trace Parkway, Suite 210
Austin, TX 78727
Tel: (512) 346-1100
Texas Registration Number F-3043

HEI
HARUTUNIAN ENGINEERING, INC.
305 E Huntland Dr, Ste 500; Austin, TX 78752
TBPE Firm Registration No. F-2408

CITY OF AUSTIN, TEXAS - AUSTIN WATER UTILITY
CIP 3333.016

SOUTH AUSTIN REGIONAL WWTP
THICKENER IMPROVEMENTS PROJECT

SLUDGE TRANSFER PUMP BUILDING
LIGHTING PLAN
REFERENCE DRAWING

PROJECT No 590-104217
FILE NAME: E-57

SHEET No
E-57

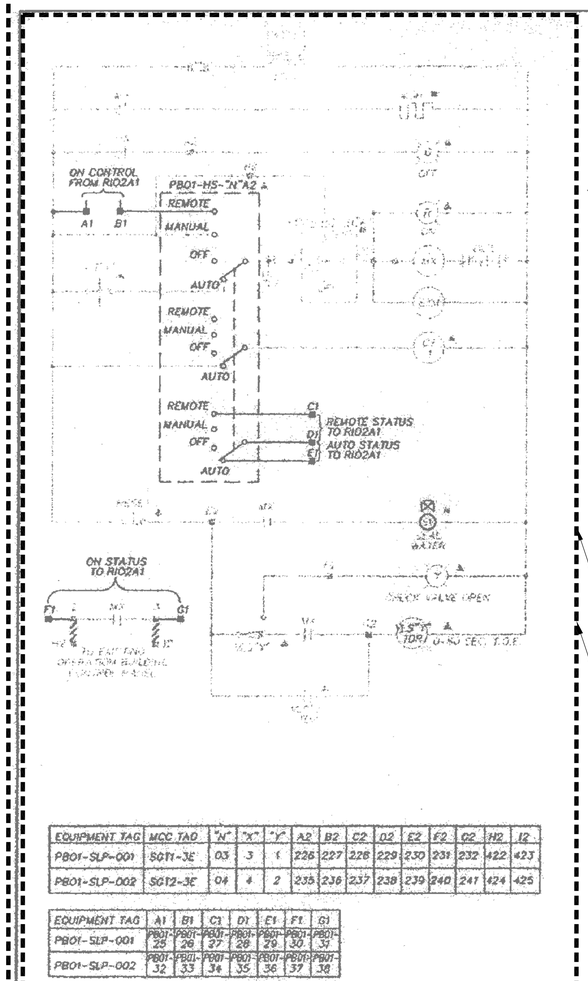

EQUIPMENT TAG	MCC TAG	"N"	"X"	"Y"	A2	B2	C2	D2	E2	F2	G2	H2	I2
PB01-SLP-001	SGT1-3E	03	3	1	226	227	228	229	230	231	232	422	423
PB01-SLP-002	SGT2-3E	04	4	2	235	236	237	238	239	240	241	424	425

EQUIPMENT TAG	A1	B1	C1	D1	E1	F1	G1
PB01-SLP-001	PB01-26	PB01-28	PB01-27	PB01-29	PB01-29	PB01-30	PB01-31
PB01-SLP-002	PB01-32	PB01-33	PB01-34	PB01-35	PB01-36	PB01-37	PB01-38

THICKENED SLUDGE PUMP MOTOR CONTROL SCHEMATIC

∠ LOCATED IN PANEL PB01-CCP-01
UNMARKED EQUIPMENT LOCATED IN APPLICABLE MCC

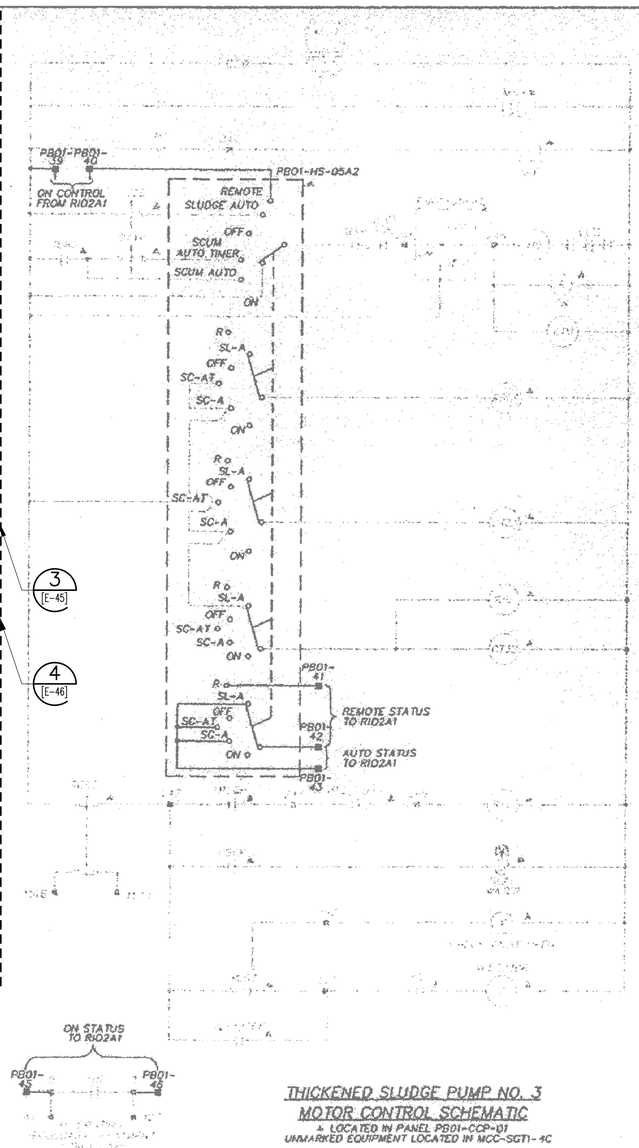

THICKENED SLUDGE PUMP NO. 3 MOTOR CONTROL SCHEMATIC

∠ LOCATED IN PANEL PB01-CCP-01
UNMARKED EQUIPMENT LOCATED IN MCC-SGT1-4C

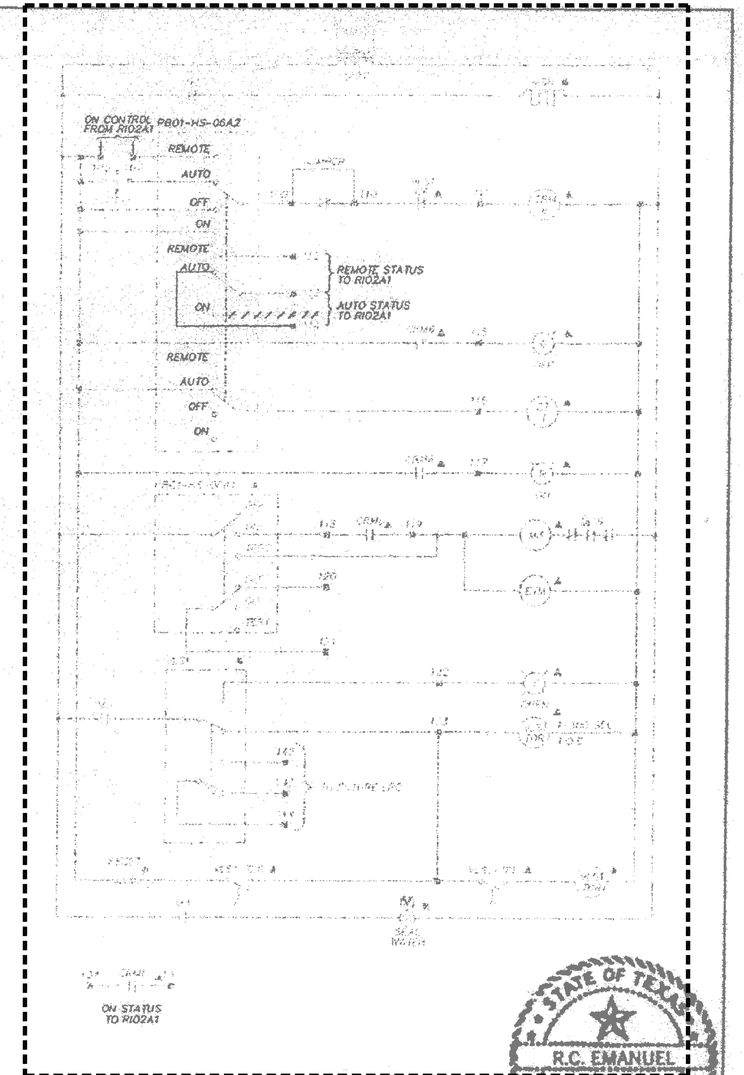

THICKENED SLUDGE PUMP "TSLP-4" MOTOR CONTROL SCHEMATIC

∠ LOCATED IN PANEL PB01-CCP-01
UNMARKED EQUIPMENT LOCATED IN APPLICABLE MCC

STATE OF TEXAS
R.C. EMANUEL
65372
REGISTERED
PROFESSIONAL ENGINEER
7-22-96

SOUTH AUSTIN REGIONAL WASTEWATER TREATMENT PLANT
CITY OF AUSTIN, TEXAS

CH2MHILL

DSGN L. TRIPP / T. VEGA
DR E. KRISTEL / L. TRIPP
CHK R. WILLIAMS
APVD R. EMANUEL

NO.	DATE	REVISION	BY	APVD

REUSE OF DOCUMENTS
THIS DOCUMENT, AND THE IDEAS AND DESIGNS INCORPORATED HEREIN, AS AN INSTRUMENT OF PROFESSIONAL SERVICE, IS THE PROPERTY OF CH2M HILL AND IS NOT TO BE USED, IN WHOLE OR IN PART, FOR ANY OTHER PROJECT WITHOUT THE WRITTEN AUTHORIZATION OF CH2M HILL.
©CH2MHILL

BAR IS ONE INCH ON ORIGINAL DRAWING
0 1"
IF NOT ONE INCH ON THIS SHEET, ADJUST SCALES ACCORDINGLY

LADDER LOGIC DIAGRAM
THICKENED SCUM PUMPS AND SLUDGE TRANSFER PUMP CONTROL SCHEMATIC

SHEET
DWG E-PB01-01
NO.
DATE JULY 1994
PROJ NO. TEX30930.02

GENERAL NOTES:

1. THE EXISTING INFORMATION SHOWN ON THIS DRAWING WAS OBTAINED FROM THE PROJECT ENTITLED "SOUTH AUSTIN REGIONAL WWTP CONTROL AND INSTRUMENTATION IMPROVEMENTS" DATED AUGUST 1994. THIS DRAWING IS PROVIDED FOR REFERENCE PURPOSES ONLY AND MAY NOT EXACTLY REFLECT THE EXISTING CONDITIONS. THEREFORE, THE CONTRACTOR IS TO EXERCISE EXTREME CARE AND FIELD VERIFY THE EXISTING CONDITIONS PRIOR TO COMMENCING FULL SCALE DEMOLITION OR RENOVATION ACTIVITIES. FOLLOWING THE DISCOVERY VERIFICATION OF THE EXISTING FIELD CONDITIONS, SHOULD ADJUSTMENTS BECOME A NECESSITY TO THE EXISTING OR PROPOSED SYSTEM (AS APPLICABLE), THE EXISTING DISCOVERED FIELD CONDITIONS MUST BE BROUGHT TO THE OWNER'S ATTENTION FOR EXECUTION OF THE NECESSARY ADJUSTMENTS/MODIFICATIONS.

REUSE OF DOCUMENTS
This document, and the designs incorporated herein, is an instrument of professional service that has been developed, designed and prepared by Harutunian Engineering, Inc., and is not to be used, in whole or part, for any other project without giving written notice to Harutunian Engineering, Inc.

REV No	DATE	DRWN	CHKD	REMARKS
△	–	–	–	–

DESIGNED BY: HEI
DRAWN BY: HEI
SHEET CHK'D BY: HEI
CROSS CHK'D BY: HEI
APPROVED BY: HEI
DATE: APRIL 2016

CDM Smith
Riata Corporate Park, 12357-A Riata Trace Parkway, Suite 210
Austin, TX 78727
Tel: (512) 346-1100
Texas Registration Number F-3043

HEI
HARUTUNIAN ENGINEERING, INC.
305 E Huntland Dr, Ste 500; Austin, TX 78752
TBPE Firm Registration No. F-2408

CITY OF AUSTIN, TEXAS - AUSTIN WATER UTILITY
CIP 3333.016

SOUTH AUSTIN REGIONAL WWTP
THICKENER IMPROVEMENTS PROJECT

CONTROL WIRING SCHEMATIC
REFERENCE DRAWING
(SHEET 1 OF 8)

STATE OF TEXAS
K. A. HARUTUNIAN
59181
REGISTERED
PROFESSIONAL ENGINEER
4/22/2016

PROJECT No 590-104217
FILE NAME: E-58

SHEET No
E-58

Plotted: 4/22/2016 9:29:28 AM

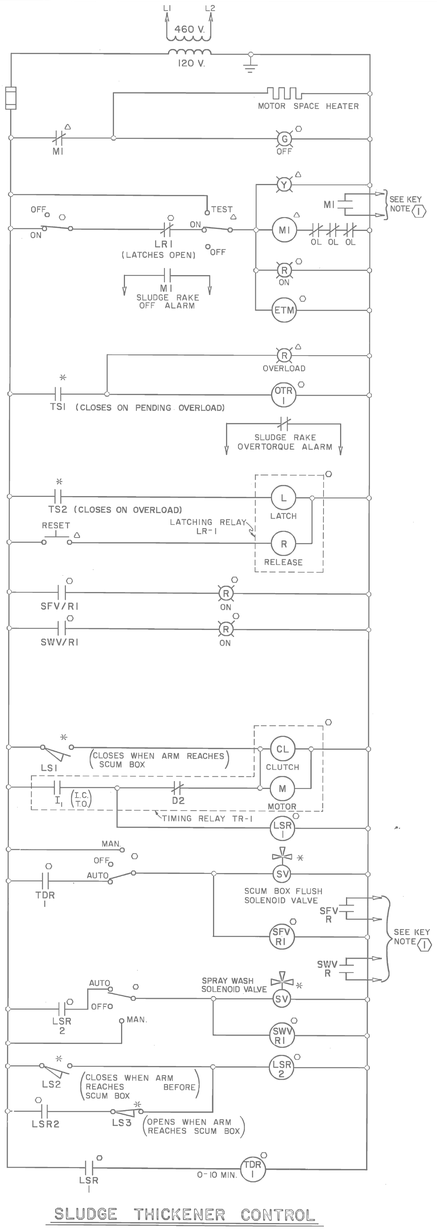

SLUDGE THICKENER CONTROL

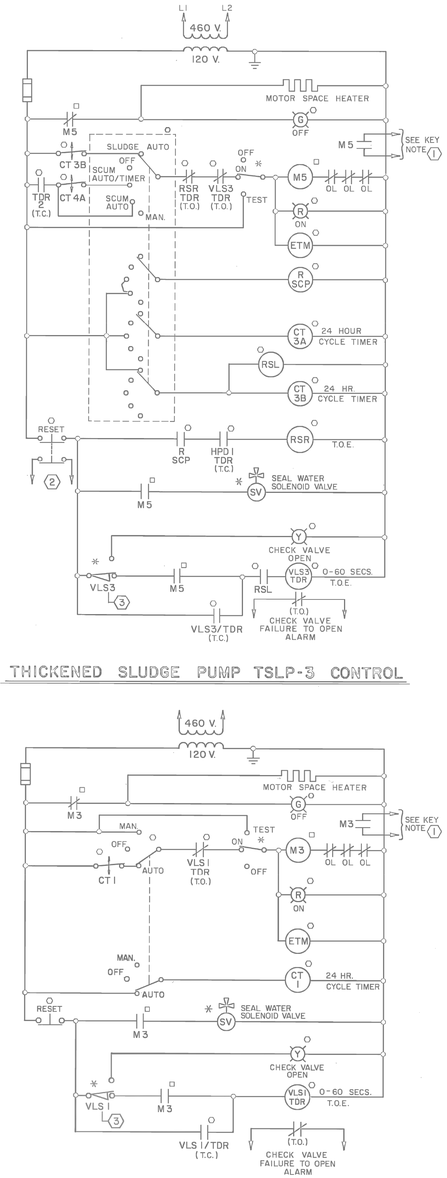

THICKENED SLUDGE PUMP TSLP-3 CONTROL

THICKENED SLUDGE PUMP TSLP CONTROL

(TYPICAL FOR THICKENED SLUDGE PUMPS TSLP-1 & TSLP-2)

DEVICE IDENTIFICATION TABLE

MOTOR	STARTER COIL	CHECK VALVE LIMIT SWITCH	VLS/TDR	SCUMBOX LIMIT SWITCH	LSR	TDR	OTR	SFV/R	SWV/R	TIMING RELAY TR	CONTROL TIMER "CT"	LR
SLUDGE THICKENER NO. 1	M1	-------	-------	LS1,LS2 & LS3	LSR1 & LSR2	TDR1	OTR1	SFV/R1	SWV/R1	TR-1	-------	LR1
SLUDGE THICKENER NO. 2	M2	-------	-------	LS4,LS5 & LS6	LSR3 & LSR4	TRD2	OTR2	SFV/R2	SWV/R2	TR-2	-------	LR2
TSLP-1	M3	VLS1	VLS1/TDR	-------	-------	----	-----	-------	-------	-----	CT1	----
TSLP-2	M4	VLS2	VLS2/TDR	-------	-------	----	-----	-------	-------	-----	CT2	----

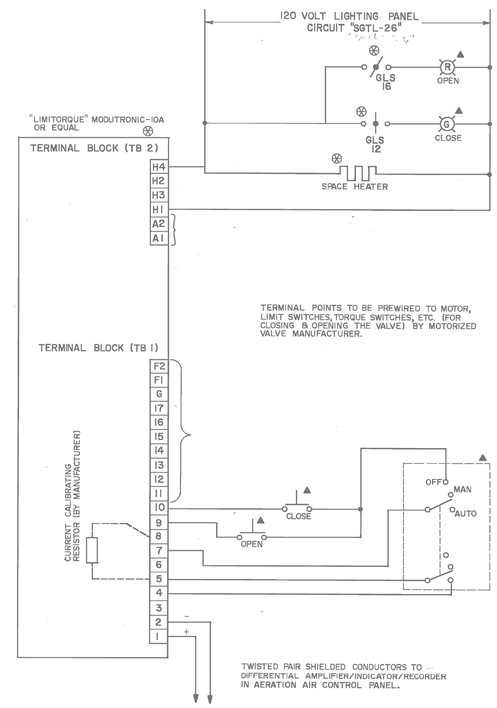

▲ INDICATES DEVICE LOCATED IN AERATION AIR CONTROL CABINET

⊛ INDICATES DEVICE LOCATED IN MOTOR OPERATED VALVE LIMIT SWITCH COMPARTMENT (BY MANUFACTURER)

ROTOR	CONTACT (GLS)	VALVE POSITION: FULLY OPEN / FULLY CLOSED	FUNCTION
OPEN	1		BY-PASS CIRCUIT
	4		OPEN LIMIT
CLOSE	5		BY-PASS CIRCUIT CLOSED LIMIT
	8		
INT.-1	9		SPARE
	12		CLOSE INDICATION LIGHT
INT.-2	13		SPARE
	16		OPEN INDICATION LIGHT

ROTORS PRE-WIRED BY MOTORIZED VALVE MANUFACTURER

MOTORIZED AERATION VALVE CONTROL

KEY NOTES:

1. RUN CONTACT WIRING TO RESPECTIVE "ON" INDICATOR LIGHT ON SECONDARY TREATMENT BUILDING GRAPHIC PANEL. SEE GRAPHIC PANEL ELEVATION DRAWING .
2. TO HIGH DISCHARGE PRESSURE RESET CIRCUITRY. FOR CONTINUATION OF CONTROL CIRCUITRY SEE SLUDGE TRANSFER BUILDING CONTROL PANEL SCHEMATIC DRAWING .

I HEREBY CERTIFY THIS "RECORD DRAWINGS" IS CORRECT AND WAS ENGINEERED UNDER MY SUPERVISION.

STATE OF TEXAS — JAMES R. SCHULTZ — 27165 — REGISTERED PROFESSIONAL ENGINEER — 4/22/2016

TRIAD ENGINEERING
CONSULTING ENGINEERS
AUSTIN, TEXAS

NO.	DATE	REVISION	APPROV.
4			
3			
2			
1			

CITY OF AUSTIN, TEXAS
ONION CREEK WASTEWATER TREATMENT FACILITIES

THICKENED SLUDGE & SLUDGE TRANSFER CONTROL SCHEMATICS - SHEET NO. 1

Turner Collie & Braden Inc.
CONSULTING ENGINEERS
TEXAS AUSTIN/DALLAS/EL PASO/HOUSTON/PORT ARTHUR
COLORADO DENVER/GRAND JUNCTION

Unit NAIL	Scale: Horz. NONE Vert.	Date APRIL, 1984	
Designed JRS	Checked JRS	Job No. 7109-025	Contract 2
Drawn VMQ	Approved JRS	Sheet 259 of 300	
Dwg. No. Q-E-4			

1 [E-37]

GENERAL NOTES:

1. THE EXISTING INFORMATION SHOWN ON THIS DRAWING WAS OBTAINED FROM THE PROJECT ENTITLED "ONION CREEK WASTEWATER TREATMENT FACILITIES – CONTRACT NO. 2" DATED APRIL 1984. THIS DRAWING IS PROVIDED FOR REFERENCE PURPOSES ONLY AND MAY NOT EXACTLY REFLECT THE EXISTING CONDITIONS. THEREFORE, THE CONTRACTOR IS TO EXERCISE EXTREME CARE AND FIELD VERIFY THE EXISTING CONDITIONS PRIOR TO COMMENCING FULL SCALE DEMOLITION OR RENOVATION ACTIVITIES. FOLLOWING THE DISCOVERY VERIFICATION OF THE EXISTING FIELD CONDITIONS, SHOULD ADJUSTMENTS BECOME A NECESSITY TO THE EXISTING OR PROPOSED SYSTEM (AS APPLICABLE), THE EXISTING DISCOVERED FIELD CONDITIONS MUST BE BROUGHT TO THE OWNER'S ATTENTION FOR EXECUTION OF THE NECESSARY ADJUSTMENTS/MODIFICATIONS.

Plotted: 4/22/2016 9:29:33 AM

REUSE OF DOCUMENTS
This document, and the designs incorporated herein, is an instrument of professional service that has been developed, designed and prepared by Harutunian Engineering, Inc., and is not to be used, in whole or part, for any other project without giving written notice to Harutunian Engineering, Inc.

REV No	DATE	DRWN	CHKD	REMARKS
△	–	–	–	–

DESIGNED BY: HEI
DRAWN BY: HEI
SHEET CHK'D BY: HEI
CROSS CHK'D BY: HEI
APPROVED BY: HEI
DATE: APRIL 2016

CDM Smith
Riata Corporate Park, 12357-A Riata Trace Parkway, Suite 210
Austin, TX 78727
Tel: (512) 346-1100
Texas Registration Number F-3043

HARUTUNIAN ENGINEERING, INC.
305 E Huntland Dr, Ste 500; Austin, TX 78752
TBPE Firm Registration No. F-2408

CITY OF AUSTIN, TEXAS - AUSTIN WATER UTILITY
CIP 3333.016

SOUTH AUSTIN REGIONAL WWTP
THICKENER IMPROVEMENTS PROJECT

CONTROL WIRING SCHEMATIC
REFERENCE DRAWING
(SHEET 2 OF 8)

K. A. HARUTUNIAN — STATE OF TEXAS — 59181 — REGISTERED PROFESSIONAL ENGINEER — 4/22/2016

PROJECT No 590-104217
FILE NAME: E-59

SHEET No
E-59

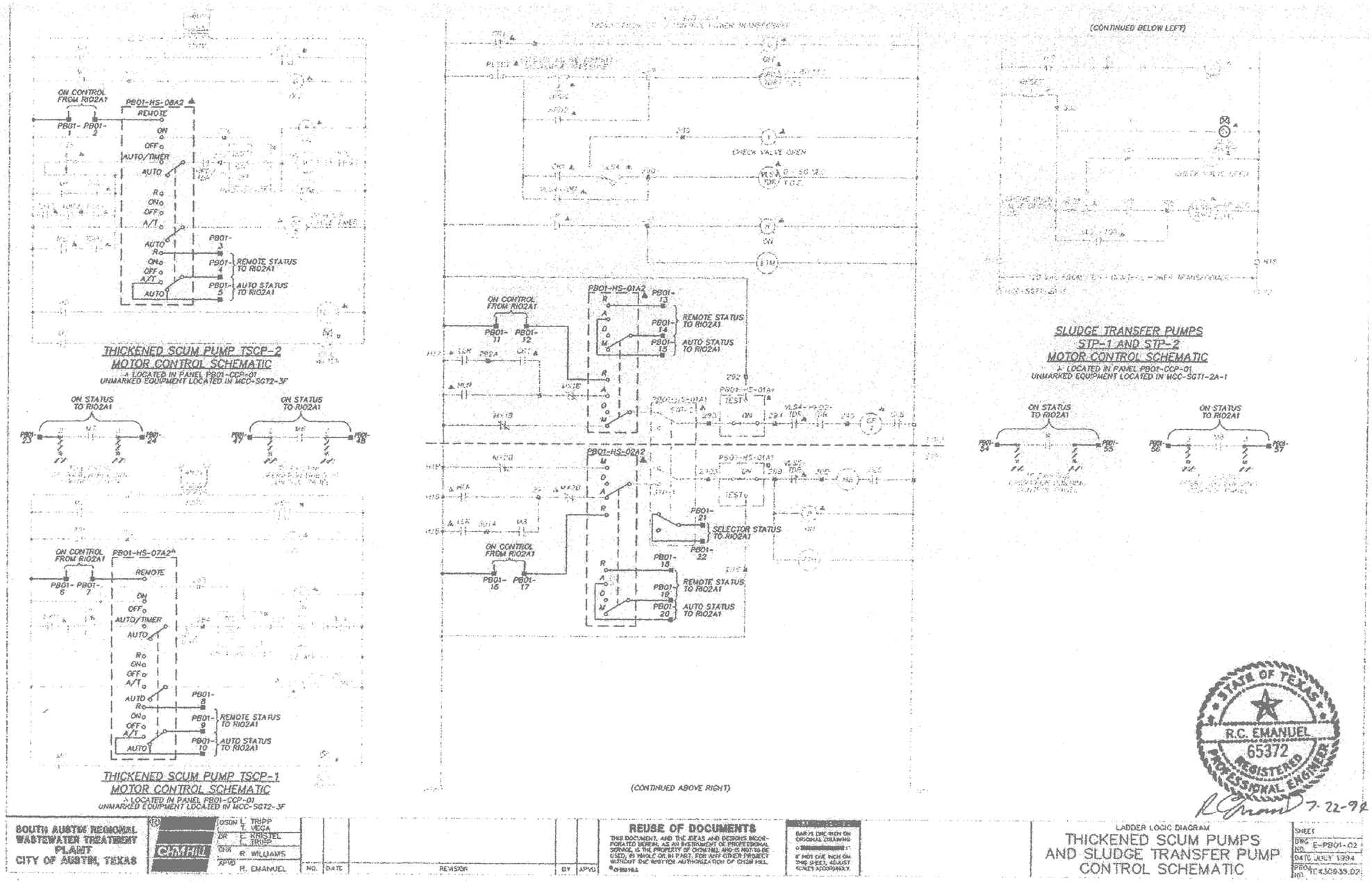

GENERAL NOTES:

1. THE EXISTING INFORMATION SHOWN ON THIS DRAWING WAS OBTAINED FROM THE PROJECT ENTITLED "SOUTH AUSTIN REGIONAL WWTP CONTROL AND INSTRUMENTATION IMPROVEMENTS" DATED AUGUST 1994. THIS DRAWING IS PROVIDED FOR REFERENCE PURPOSES ONLY AND MAY NOT EXACTLY REFLECT THE EXISTING CONDITIONS. THEREFORE, THE CONTRACTOR IS TO EXERCISE EXTREME CARE AND FIELD VERIFY THE EXISTING CONDITIONS PRIOR TO COMMENCING FULL SCALE DEMOLITION OR RENOVATION ACTIVITIES. FOLLOWING THE DISCOVERY VERIFICATION OF THE EXISTING FIELD CONDITIONS, SHOULD ADJUSTMENTS BECOME A NECESSITY TO THE EXISTING OR PROPOSED SYSTEM (AS APPLICABLE), THE EXISTING DISCOVERED FIELD CONDITIONS MUST BE BROUGHT TO THE OWNER'S ATTENTION FOR EXECUTION OF THE NECESSARY ADJUSTMENTS/MODIFICATIONS.

1 [E-38]

Plotted: 4/22/2016 9:29:37 AM

STATE OF TEXAS
K. A. HARUTUNIAN
59181
REGISTERED PROFESSIONAL ENGINEER
4/22/2016

REUSE OF DOCUMENTS
This document, and the designs incorporated herein, is an instrument of professional service that has been developed, designed and prepared by Harutunian Engineering, Inc., and is not to be used, in whole or part, for any other project without giving written notice to Harutunian Engineering, Inc.

REV No	DATE	DRWN	CHKD	REMARKS
△	–	–	–	–

DESIGNED BY: HEI
DRAWN BY: HEI
SHEET CHK'D BY: HEI
CROSS CHK'D BY: HEI
APPROVED BY: HEI
DATE: APRIL 2016

CDM Smith
Riata Corporate Park, 12357-A Riata Trace Parkway, Suite 210
Austin, TX 78727
Tel: (512) 346-1100
Texas Registration Number F-3043

HEI
HARUTUNIAN ENGINEERING, INC.
305 E Huntland Dr, Ste 500; Austin, TX 78752
TBPE Firm Registration No. F-2408

CITY OF AUSTIN, TEXAS - AUSTIN WATER UTILITY
CIP 3333.016

SOUTH AUSTIN REGIONAL WWTP
THICKENER IMPROVEMENTS PROJECT

CONTROL WIRING SCHEMATIC
REFERENCE DRAWING
(SHEET 3 OF 8)

PROJECT No 590-104217
FILE NAME: E-60

SHEET No
E-60

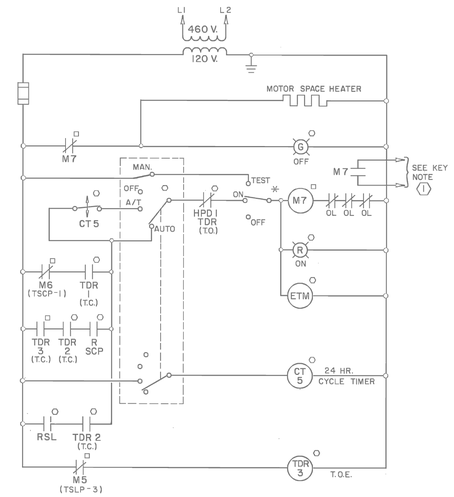

THICKENED SCUM PUMP TSCP-2 CONTROL

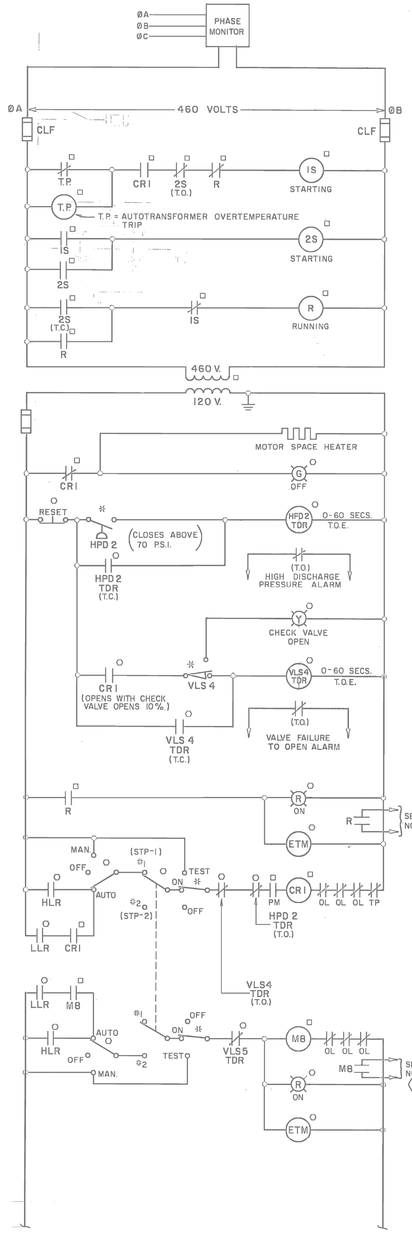

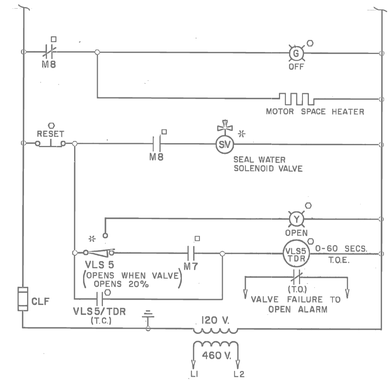

SLUDGE TRANSFER PUMPS

STP-1 & STP-2 CONTROL

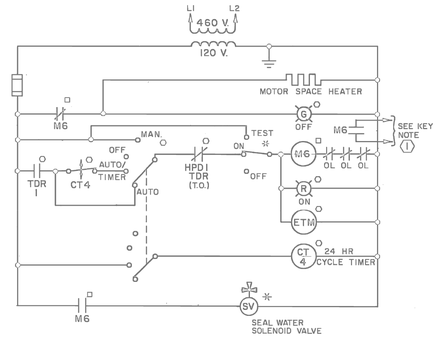

THICKENED SCUM PUMP TSCP-1

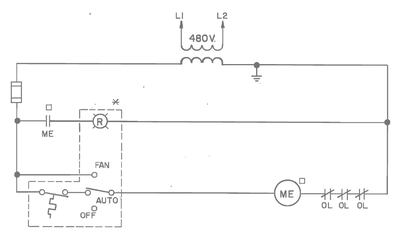

EXHAUST FAN CONTROL

TYPICAL FOR: ST-EF-1
ST-EF-2

GENERAL NOTES:

1. THE EXISTING INFORMATION SHOWN ON THIS DRAWING WAS OBTAINED FROM THE PROJECT ENTITLED "ONION CREEK WASTEWATER TREATMENT FACILITIES – CONTRACT NO. 2" DATED APRIL 1984. THIS DRAWING IS PROVIDED FOR REFERENCE PURPOSES ONLY AND MAY NOT EXACTLY REFLECT THE EXISTING CONDITIONS. THEREFORE, THE CONTRACTOR IS TO EXERCISE EXTREME CARE AND FIELD VERIFY THE EXISTING CONDITIONS PRIOR TO COMMENCING FULL SCALE DEMOLITION OR RENOVATION ACTIVITIES. FOLLOWING THE DISCOVERY VERIFICATION OF THE EXISTING FIELD CONDITIONS, SHOULD ADJUSTMENTS BECOME A NECESSITY TO THE EXISTING OR PROPOSED SYSTEM (AS APPLICABLE), THE EXISTING DISCOVERED FIELD CONDITIONS MUST BE BROUGHT TO THE OWNER'S ATTENTION FOR EXECUTION OF THE NECESSARY ADJUSTMENTS/MODIFICATIONS.

KEY NOTES

(1) RUN CONTACT WIRING TO RESPECTIVE 'ON' INDICATOR LIGHT ON SECONDARY TREATMENT BUILDING GRAPHIC PANEL. SEE GRAPHIC PANEL ELEVATION DRAWING

1 [E-39]

TRIAD ENGINEERING
CONSULTING ENGINEERS
AUSTIN, TEXAS

NO	DATE	REVISION	APPROV.
4			
3			
2			
1			

CITY OF AUSTIN, TEXAS
ONION CREEK WASTEWATER TREATMENT FACILITIES
THICKENED SLUDGE & SLUDGE TRANSFER CONTROL SCHEMATICS - SHEET NO. 2

Turner Collie & Braden Inc.
CONSULTING ENGINEERS
TEXAS AUSTIN/DALLAS/EL PASO/HOUSTON/PORT ARTHUR
COLORADO DENVER/GRAND JUNCTION

Unit	NAIL	Scale Horz. Vert.	NONE	Date	APRIL, 1984
Designed	JRS	Checked	JRS	Job No 7109-025	Contract 2
Drawn	VMQ	Approved	JRS	Sheet 260 of 300	

Dwg. No. Q-E-5

STATE OF TEXAS
JAMES R. SCHULTZ
27185
REGISTERED PROFESSIONAL ENGINEER

I HEREBY CERTIFY THIS "RECORD DRAWINGS" IS CORRECT AND WAS PREPARED UNDER MY SUPERVISION.
4/22/16

STATE OF TEXAS
K. A. HARUTUNIAN
59181
REGISTERED PROFESSIONAL ENGINEER
4/22/2016

Plotted: 4/22/2016 8:51:55 AM

REUSE OF DOCUMENTS
This document, and the designs incorporated herein, is an instrument of professional service that has been developed, designed and prepared by Harutunian Engineering, Inc., and is not to be used, in whole or part, for any other project without giving written notice to Harutunian Engineering, Inc.

REV No	DATE	DRWN	CHKD	REMARKS
△	–	–	–	–

DESIGNED BY: HEI
DRAWN BY: HEI
SHEET CHK'D BY: HEI
CROSS CHK'D BY: HEI
APPROVED BY: HEI
DATE: APRIL 2016

CDM Smith
Riata Corporate Park, 12357-A Riata Trace Parkway, Suite 210
Austin, TX 78727
Tel: (512) 346-1100
Texas Registration Number F-3043

HARUTUNIAN ENGINEERING, INC.
305 E Huntland Dr, Ste 500; Austin, TX 78752
TBPE Firm Registration No. F-2408

CITY OF AUSTIN, TEXAS - AUSTIN WATER UTILITY
CIP 3333.016

SOUTH AUSTIN REGIONAL WWTP
THICKENER IMPROVEMENTS PROJECT

CONTROL WIRING SCHEMATIC
REFERENCE DRAWING
(SHEET 4 OF 8)

PROJECT No 590-104217
FILE NAME: E-61

SHEET No
E-61

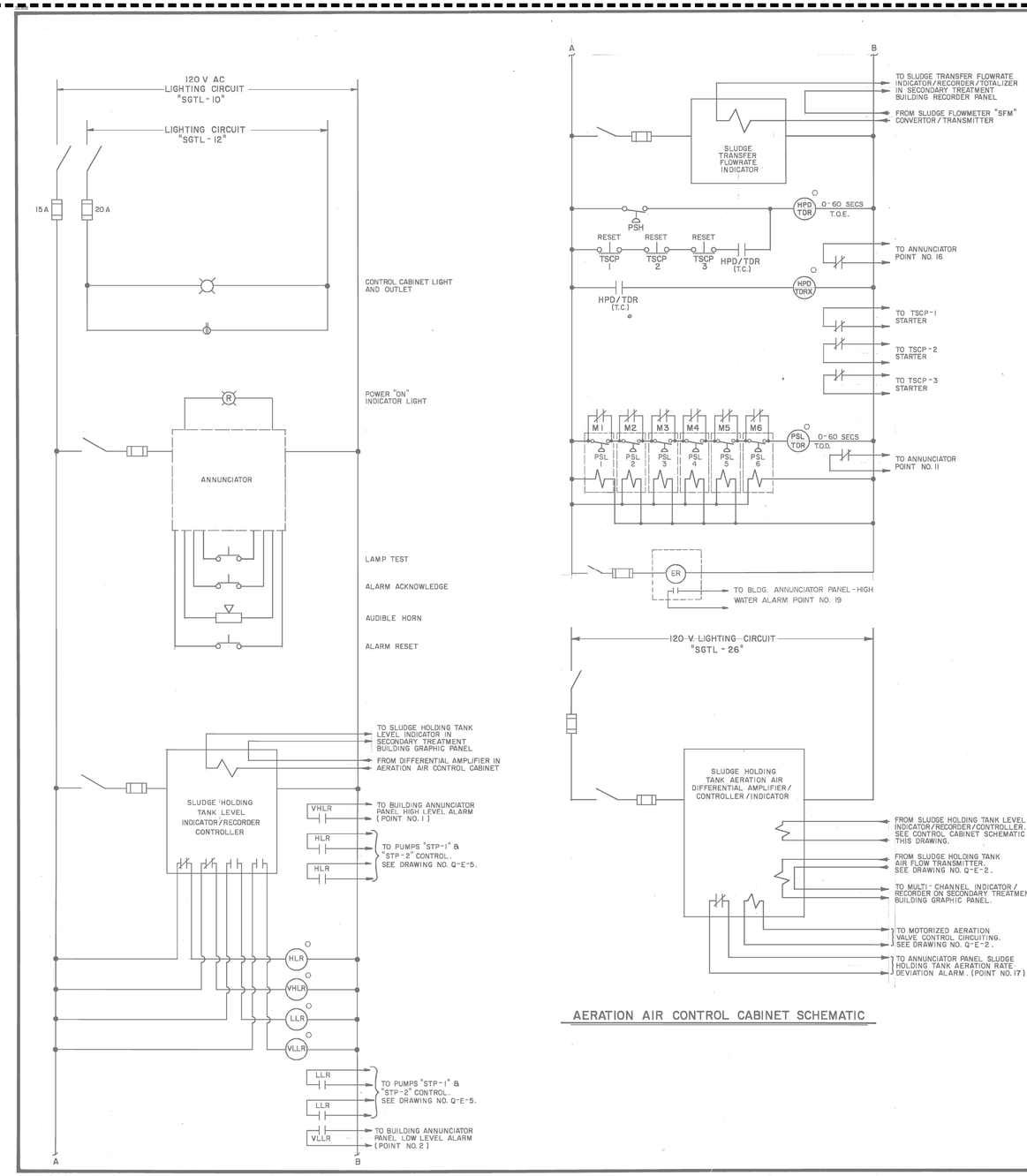

AERATION AIR CONTROL CABINET SCHEMATIC

POINT NO.	WINDOW INSCRIPTION	CONTACT WIRING	CONTACT LOCATION
1	SLUDGE HOLDING TANK - HIGH LEVEL	VHLR	RELAY IN BUIDLING CONTROL CABINET.
2	SLUDGE HOLDING TANK - LOW LEVEL	VLLR	RELAY IN BUILDING LOW CONTROL CABINET
3	SLUDGE THICKENER NO. 1 - RAKE OFF	M	MOTOR CONTROL CENTER "SGT - 1"
4	SLUDGE THICKENER NO. 2 - RAKE OFF	M	MOTOR CONTROL CENTER "SGT - 2"
5	SLUDGE THICKENER NO. 1 - RAKE OVERTORQUE	OTR 1	RELAY IN BUILDING CONTROL CABINET
6	SLUDGE THICKENER NO. 2 - RAKE OVERTORQUE	OTR 2	RELAY IN BUILDING CONTROL CABINET
7	COMPRESSED AIR - LOW PRESSURE		COMPRESSED AIR PRESSURE GAUGE (CONTROL CABINET)
8	SLUDGE TRANSFER PUMP "STP - 2" HIGH DISCHARGE PRESSURE	HPD1 TDR T.O.	TDR RELAY IN BUILDING CONTROL CABINET
9	SLUDGE TRANSFER PUMP "STP - 1" CHECK VALVE FAILED TO OPEN	VLS6 TDR T.O.	TDR RELAY IN BUILDING CONTROL CABINET
10	SLUDGE TRANSFER PUMP "STP - 2" CHECK VALVE FAILED TO OPEN	VLS7 TDR T.O.	TDR RELAY IN BUILDING CONTROL CABINET
11	PUMP SEAL WATER - LOW PRESSURE	PSL/TDR T.O.	TDR RELAY IN BUILDING CONTROL CABINET
12	SLUDGE TRANSFER - LOW FLOW RATE	(AUXR)HFR	AUXILARY CONTACT IN SECONDARY TREATMENT BUILDING ANNUNCIATOR PANEL
13	THICKENED SLUDGE PUMP "TSLP - 1" CHECK VALVE FAILED TO OPEN	VLS1 TDR T.O.	FROM THICKENED SLUDGE PUMP "TSLP - 1" CONTROL
14	THICKENED SLUDGE PUMP "TSLP - 2" CHECK VALVE FAILED TO OPEN	VLS2 TDR T.O.	FROM THICKENED SLUDGE PUMP "TSLP - 2" CONTROL
15	THICKENED SLUDGE/SCUM PUMP "TSLP - 3" CHECK VALVE FAILED TO OPEN	VLS3 TDR T.O.	FROM THICKENED SLUDGE PUMP "TSLP - 3" CONTROL
16	THICKENED SCUM PUMP DISCHARGE - HIGH PRESSURE	HPD/TDRX	TDR AUXILIARY RELAY IN BLDG. CONTROL CAB.
17	SLUDGE HOLDING TANK AERATION RATE - DEVIATION		ALARM CONTACT FROM AERATION AIR DIFFERENTIAL AMPLIFIER/CONTROLLER/ INDICATOR ON BUILDING AERATION AIR CONTROL CABINET
18	PUMP BUILDING - LOW TEMPERATURE		BUILDING LOW TEMPERATURE THERMOSTAT
19	HIGH WATER LEVEL		FROM HIGH WATER LEVEL ELECTRODE RELAY
20.	HYDROGEN GAS DETECTOR - ODOR CONTROL		HYDROGEN SULFIDE MONITOR PANEL AT GRAVITY THICKENERS ODOR CONTROL UNIT
21-25	FUTURE		

ANNUNCIATOR PANEL

GENERAL NOTES:

1. THE EXISTING INFORMATION SHOWN ON THIS DRAWING WAS OBTAINED FROM THE PROJECT ENTITLED "ONION CREEK WASTEWATER TREATMENT FACILITIES – CONTRACT NO. 2" DATED APRIL 1984. THIS DRAWING IS PROVIDED FOR REFERENCE PURPOSES ONLY AND MAY NOT EXACTLY REFLECT THE EXISTING CONDITIONS. THEREFORE, THE CONTRACTOR IS TO EXERCISE EXTREME CARE AND FIELD VERIFY THE EXISTING CONDITIONS PRIOR TO COMMENCING FULL SCALE DEMOLITION OR RENOVATION ACTIVITIES. FOLLOWING THE DISCOVERY VERIFICATION OF THE EXISTING FIELD CONDITIONS, SHOULD ADJUSTMENTS BECOME A NECESSITY TO THE EXISTING OR PROPOSED SYSTEM (AS APPLICABLE), THE EXISTING DISCOVERED FIELD CONDITIONS MUST BE BROUGHT TO THE OWNER'S ATTENTION FOR EXECUTION OF THE NECESSARY ADJUSTMENTS/MODIFICATIONS.

1 [E-41]

TRIAD ENGINEERING
CONSULTING ENGINEERS
AUSTIN, TEXAS

NO.	DATE	REVISION	APPROV.
4			
3			
2			
1			

CITY OF AUSTIN, TEXAS
ONION CREEK WASTEWATER TREATMENT FACILITIES
SLUDGE TRANSFER PUMP BUILDING
CONTROL & ANNUNCIATOR PANELS SCHEMATIC

Turner Collie & Braden Inc.
CONSULTING ENGINEERS
TEXAS AUSTIN/DALLAS/EL PASO/HOUSTON/PORT ARTHUR
COLORADO DENVER/GRAND JUNCTION

Unit NAIL	Scale Horz NONE Vert	Date APRIL, 1984	
Designed KAH	Checked KAH/JRS	Job No. 7109-025	Contract 2
Drawn VMQ/JP	Approved JRS	Sheet 262 of 300	

STATE OF TEXAS JAMES R. SCHULTZ 22165 REGISTERED PROFESSIONAL ENGINEER
Dwg. No. Q-I-2

I HEREBY CERTIFY THIS "RECORD DRAWINGS" IS CORRECT AND WAS PREPARED UNDER MY SUPERVISION.
11/1/86

STATE OF TEXAS K. A. HARUTUNIAN 59181 REGISTERED PROFESSIONAL ENGINEER
4/22/2016

Plotted: 4/22/2016 8:52:01 AM

REUSE OF DOCUMENTS
This document, and the designs incorporated herein, is an instrument of professional service that has been developed, designed and prepared by Harutunian Engineering, Inc., and is not to be used, in whole or part, for any other project without giving written notice to Harutunian Engineering, Inc.

REV No	DATE	DRWN	CHKD	REMARKS
1	–	–	–	–

DESIGNED BY: HEI
DRAWN BY: HEI
SHEET CHK'D BY: HEI
CROSS CHK'D BY: HEI
APPROVED BY: HEI
DATE: APRIL 2016

CDM Smith
Riata Corporate Park, 12357-A Riata Trace Parkway, Suite 210
Austin, TX 78727
Tel: (512) 346-1100
Texas Registration Number F-3043

HARUTUNIAN ENGINEERING, INC.
305 E Huntland Dr, Ste 500; Austin, TX 78752
TBPE Firm Registration No. F-2408

CITY OF AUSTIN, TEXAS - AUSTIN WATER UTILITY
CIP 3333.016

SOUTH AUSTIN REGIONAL WWTP
THICKENER IMPROVEMENTS PROJECT

CONTROL WIRING SCHEMATIC
REFERENCE DRAWING
(SHEET 5 OF 8)

PROJECT No 590-104217
FILE NAME: E-62

SHEET No
E-62

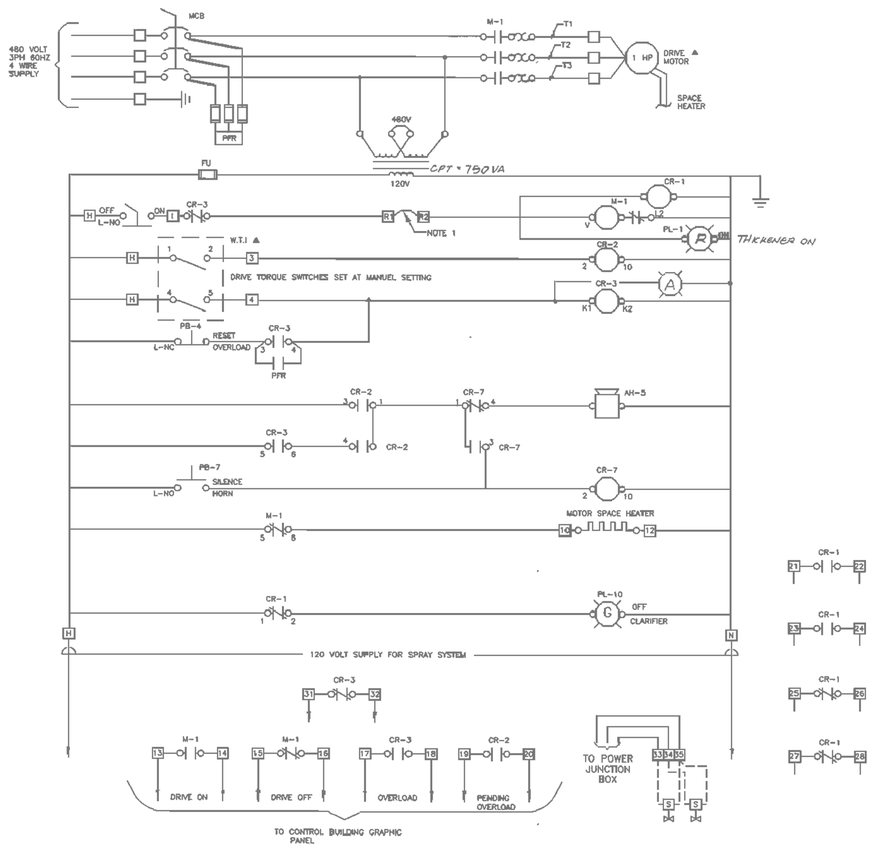

NOTES

1. REMOVE JUMPER AND USE TERMINALS FOR TRAIN "B" THICKENER "1B" & "2B" KEEP JUMPER INSTALLED FOR TRAIN "A".
2. PFR DENOTES PHASE FAILURE RELAY.
3. PROVIDE AND INSTALL NEW CONTROL PANEL WITH RELATED EQUIPMENT. VERIFY OPERATION, SHUTDOWN AND MONITORING EQUIPMENT REQUIREMENTS. SET DRIVE TORQUE SWITCH VALUES IN ACCORDANCE WITH MANUFACTURER'S VALUES. PROVIDE MANUFACTURER'S VALUES AND CALIBRATION CERTIFICATION FOR RECORD PURPOSES WITH SUBMITTALS.
4. TO PROVIDE CONTROL PANEL WITH THE FOLLOWING FEATURES.
   A. ENCLOSURE
      - RATING NEMA 4X (STAINLESS STEEL)
      - FULLY HINGED DOOR
      - EXTERIOR CIRCUIT BREAKER OPERATOR INTERLOCKED WITH DOOR
      - ENGRAVED LAMINATED PLASTIC NAMEPLATES (BLACK LETTERS ON WHITE BACKGROUND) FASTENED WITH STAINLESS STEEL SCREWS.
      - SIZE ENCLOSURE FOR EQUIPMENT PROVIDED
      - MANUFACTURER HOFFMAN ENGINEERING, CFM COMPANY OR EQUAL.
   B. COMPONENTS
      - NEMA SIZE 1 COMBINATION MOTOR STARTER WITH MOTOR CIRCUIT PROTECTOR (MCP), CONTROL POWER TRANSFORMER, AND THERMAL OVERLOAD RELAYS SIZE TO MOTOR FULL LOAD CURRENT
      - MANUFACTURER: SQUARE D, G.E. OR EQUAL
      - GENERAL PURPOSE RELAY WITH MOUNTING BASE
        - CONTACT RATING 10 AMPS AT 240 VAC
        - MANUFACTURER SQUARE D, TYPE K, G.E. CR 120H OR EQUAL
      - CONTROL STATION, SWITCHES, PUSHBUTTONS, DEVICES
        - OIL TIGHT CONSTRUCTION RATED FOR 10 AMP AT 600 VAC
        - MANUFACTURER SQUARE D, CLASS 9000 SK, G.E. CR 2240 OR EQUAL
   C. WIRING
      - COPPER CONDUCTOR WITH TYPE MIW-THHN INSULATION
      - INSTALL WIRING RUNS ALONG HORIZONTAL OR VERTICAL ROUTES, ANGLED RUNS NOT ACCEPTABLE
      - GROUP OR BUNDLE RUNS OF WIRE USING PLASTIC TIES. ADEQUATE SUPPORT BUNDLES
      - USE INSULATED SPADE LUGS TO CONNECT WIRING TO TERMINALS
      - TERMINATE ALL WIRING AT TERMINAL STRIP
      - USE BARRIER-TYPE TERMINAL STRIPS WITH SCREWED CONNECTIONS AND NUMERIC IDENTIFIERS. PROVIDE 20% SPARE TERMINALS.

GENERAL NOTES:

1. THE EXISTING INFORMATION SHOWN ON THIS DRAWING WAS OBTAINED FROM THE PROJECT ENTITLED "SOUTH AUSTIN REGIONAL WASTEWATER TREATMENT PLANT MISCELLANEOUS IMPROVEMENTS PROJECT" DATED DECEMBER 1995. THIS DRAWING MAY NOT EXACTLY REFLECT THE EXISTING CONDITIONS. THEREFORE, THE CONTRACTOR IS TO FIELD VERIFY THE EXISTING CONDITIONS PRIOR TO COMMENCING FULL SCALE DEMOLITION OR RENOVATION ACTIVITIES. FOLLOWING THE DISCOVERY VERIFICATION OF THE EXISTING FIELD CONDITIONS, SHOULD ADJUSTMENTS BECOME A NECESSITY TO THE EXISTING OR PROPOSED SYSTEM (AS APPLICABLE), THE EXISTING DISCOVERED FIELD CONDITIONS MUST BE BROUGHT TO THE OWNER'S ATTENTION FOR EXECUTION OF THE NECESSARY ADJUSTMENTS/MODIFICATIONS.

△1 DELETE THIS SHEET
REFER TO O&M MANUAL

NO.	DATE	REVISION	APPROV.
4			
3			
2			
△1	12/97	RECORD DRAWING	

RECORD DRAWING
PREPARED BY RWB
DATE 1/13/98

WARNING
0 1/2 1
IF THIS BAR DOES NOT MEASURE 1" THEN DRAWING IS NOT TO SCALE

STATE OF TEXAS
C. J. TROUTT
41075
REGISTERED
PROFESSIONAL ENGINEER
12/21/97

Dwg. No. E-44

CITY OF AUSTIN, TEXAS
SOUTH AUSTIN REGIONAL WASTEWATER TREATMENT PLANT
MISCELLANEOUS IMPROVEMENTS PROJECT
GRAVITY THICKENERS
CONTROL DIAGRAM

Turner Collie & Braden Inc.
ENGINEERS • PLANNERS • PROJECT MANAGERS

Unit	Public Works	Scale	NONE	Date	NOV. 1995
Designed	CT	Checked	BD	Job No.	72-07109-206 Contract 1
Drawn	SCF	Approved	SGE	Sheet	93 of 97

1 [E-42]

K. A. HARUTUNIAN
STATE OF TEXAS
K. A. HARUTUNIAN
59181
REGISTERED
PROFESSIONAL ENGINEER
3/22/2016

Plotted: 4/22/2016 8:52:05 AM

REUSE OF DOCUMENTS
This document, and the designs incorporated herein, is an instrument of professional service that has been developed, designed and prepared by Harutunian Engineering, Inc., and is not to be used, in whole or part, for any other project without giving written notice to Harutunian Engineering, Inc.

REV No	DATE	DRWN	CHKD	REMARKS
△	–	–	–	–

DESIGNED BY: HEI
DRAWN BY: HEI
SHEET CHK'D BY: HEI
CROSS CHK'D BY: HEI
APPROVED BY: HEI
DATE: APRIL 2016

CDM Smith
Riata Corporate Park, 12357-A Riata Trace Parkway, Suite 210
Austin, TX 78727
Tel: (512) 346-1100
Texas Registration Number F-3043

HEI
HARUTUNIAN ENGINEERING, INC.
305 E Huntland Dr, Ste 500; Austin, TX 78752
TBPE Firm Registration No. F-2408

CITY OF AUSTIN, TEXAS - AUSTIN WATER UTILITY
CIP 3333.016

SOUTH AUSTIN REGIONAL WWTP
THICKENER IMPROVEMENTS PROJECT

CONTROL WIRING SCHEMATIC
REFERENCE DRAWING
(SHEET 6 OF 8)

PROJECT No 590-104217
FILE NAME: E-63

SHEET No
E-63

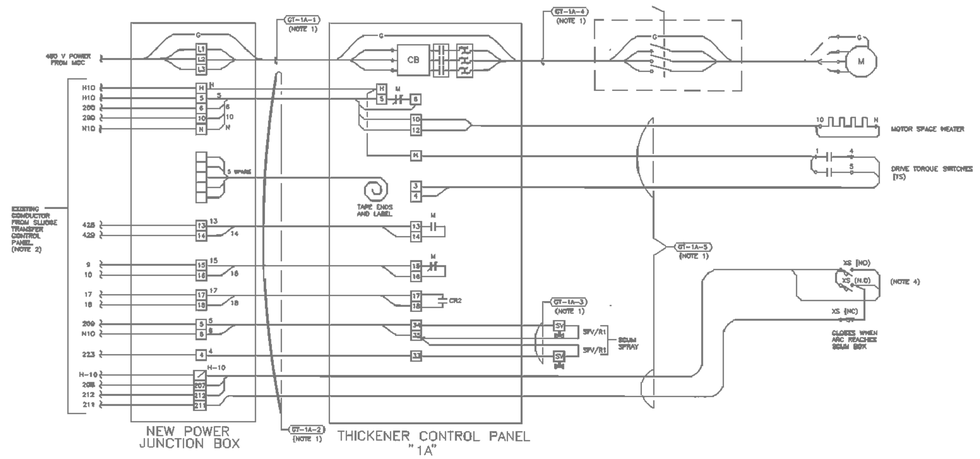

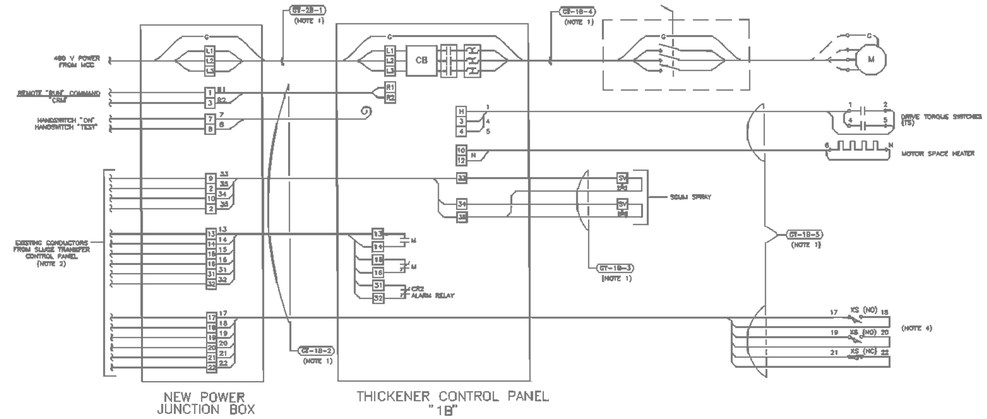

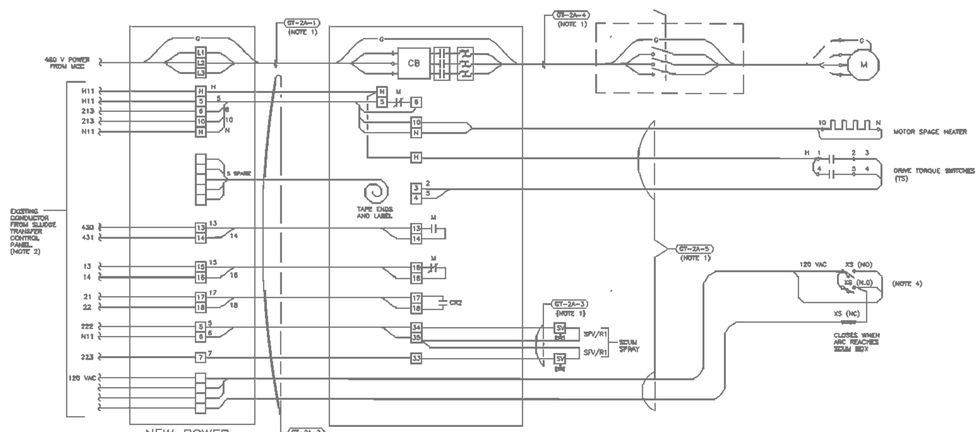

TRAIN "A"

(NOTE 3)

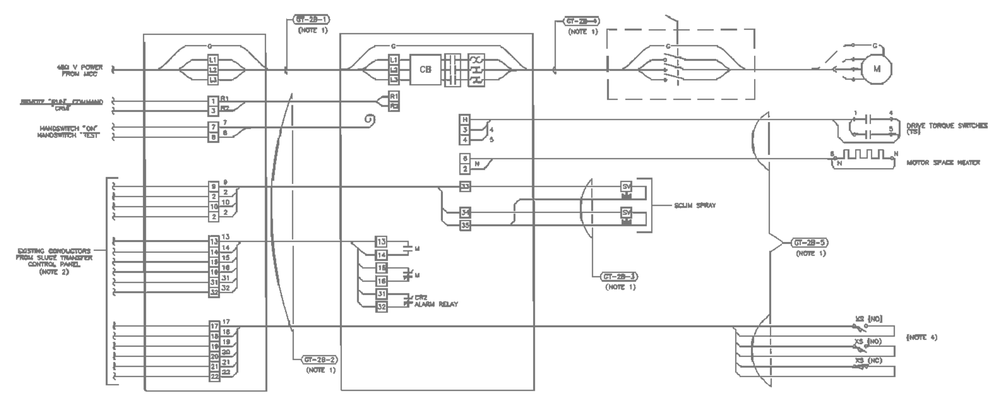

TRAIN "B"

(NOTE 3)

GENERAL NOTES:

1. THE EXISTING INFORMATION SHOWN ON THIS DRAWING WAS OBTAINED FROM THE PROJECT ENTITLED "SOUTH AUSTIN REGIONAL WASTEWATER TREATMENT PLANT MISCELLANEOUS IMPROVEMENTS PROJECT" DATED DECEMBER 1995. THIS DRAWING MAY NOT EXACTLY REFLECT THE EXISTING CONDITIONS. THEREFORE, THE CONTRACTOR IS TO FIELD VERIFY THE EXISTING CONDITIONS PRIOR TO COMMENCING FULL SCALE DEMOLITION OR RENOVATION ACTIVITIES. FOLLOWING THE DISCOVERY VERIFICATION OF THE EXISTING FIELD CONDITIONS, SHOULD ADJUSTMENTS BECOME A NECESSITY TO THE EXISTING OR PROPOSED SYSTEM (AS APPLICABLE), THE EXISTING DISCOVERED FIELD CONDITIONS MUST BE BROUGHT TO THE OWNER'S ATTENTION FOR EXECUTION OF THE NECESSARY ADJUSTMENTS/MODIFICATIONS.

1 [E-43]

NOTES:

1. IN ORDER TO SIMPLIFY THE DIAGRAMS CONDUIT SEALS ARE NOT SHOWN. REFER TO ONE-LINE DIAGRAM DETAIL AND ELECTRICAL PLAN FOR HAZARDOUS AREA CONDUIT SEALS.
2. AS PART OF THE WORK AND PRIOR TO THE THICKENER CONTROL PANEL RELOCATION, THE CONTRACTOR TO VERIFY AND TAG CONTROL CONDUCTORS ASSOCIATED WITH THE THICKENER CONTROL PANEL, SLUDGE TRANSFER CONTROL PANEL AND RELATED FIELD DEVICES. CONTROL OPERATION TO BE VERIFIED WITH THE FIELD DEVICES, SLUDGE TRANSFER CONTROL PANEL AND THICKENER CONTROL PANEL, AND OPERATIONAL PERSONAL PRIOR TO PANEL RELOCATION. AFTER RELOCATION AND INSTALLATION OF THICKENER CONTROL PANEL, THE OPERATION OF THE CONTROL PANEL TO BE TESTED AND VERIFIED. AS A MINIMUM, THE TEST TO INCLUDE:
   A. NORMAL OPERATION.
   B. DRIVE TORQUE SWITCH PROTECTION.
   C. ALARM AND MONITORING VERIFICATION.
3. THE CONTROL DIAGRAM WAS DEVELOPED FROM THE BEST INFORMATION AVAILABLE. THE INFORMATION INDICATED DOES NOT RELIEVE THE CONTRACTOR OF PROVIDING SERVICES TO VERIFY NORMAL AND PROTECTIVE SYSTEM OPERATION. THE CONTRACTOR TO PROVIDE A COMPLETE-IN-PLACE OPERATIONAL SYSTEM.
4. PROVIDE CLASS 1, DIV.1, GROUP D LIMIT SWITCHES CROUSE-HINDS "ENS" OR EQUAL. HOUSING MATERIALS COPPER-FREE ALUMINUM OF STAINLESS STEEL. CONFIGURE SWITCHES TO MATCH REPLACEMENT SWITCHES FOR A COMPLETE IN PLACE OPERATIONAL SYSTEM.
5. ALARM RELAY FOR TRAIN "B" IS N.O. CONTACT MODIFY ANNUNCIATION AND I/O DEVICE TO

RECORD DRAWING
PREPARED BY RWB
DATE 1/13/98

WARNING
0 1/2 1
IF THIS BAR DOES NOT MEASURE 1" THEN DRAWING IS NOT TO SCALE

STATE OF TEXAS
C. J. TROUTT
41075
REGISTERED PROFESSIONAL ENGINEER
12/21/95

Dwg. No. E-45

NO.	DATE	REVISION	APPROV.
4			
3			
2			
1			

CITY OF AUSTIN, TEXAS
SOUTH AUSTIN REGIONAL WASTEWATER TREATMENT PLANT
MISCELLANEOUS IMPROVEMENTS PROJECT

GRAVITY THICKENERS

WIRING DIAGRAM

Turner Collie & Braden Inc.
ENGINEERS • PLANNERS • PROJECT MANAGERS

Unit	Public Works	Scale	NONE	Date	NOV. 1995
Designed	CT	Checked	BD	Job No.	72-07109-206 Contract 1
Drawn	SCF	Approved	SGE	Sheet	94 of 97

Plotted: 4/22/2016 8:52:09 AM

REUSE OF DOCUMENTS
This document, and the designs incorporated herein, is an instrument of professional service that has been developed, designed and prepared by Harutunian Engineering, Inc., and is not to be used, in whole or part, for any other project without giving written notice to Harutunian Engineering, Inc.

K. A. HARUTUNIAN
STATE OF TEXAS
K. A. HARUTUNIAN
59181
REGISTERED PROFESSIONAL ENGINEER
4/22/2016

REV No	DATE	DRWN	CHKD	REMARKS
1	–	–	–	–

DESIGNED BY: HEI
DRAWN BY: HEI
SHEET CHK'D BY: HEI
CROSS CHK'D BY: HEI
APPROVED BY: HEI
DATE: APRIL 2016

CDM Smith
Riata Corporate Park, 12357-A Riata Trace Parkway, Suite 210
Austin, TX 78727
Tel: (512) 346-1100
Texas Registration Number F-3043

HEI
HARUTUNIAN ENGINEERING, INC.
305 E Huntland Dr, Ste 500; Austin, TX 78752
TBPE Firm Registration No. F-2408

CITY OF AUSTIN, TEXAS - AUSTIN WATER UTILITY
CIP 3333.016

SOUTH AUSTIN REGIONAL WWTP
THICKENER IMPROVEMENTS PROJECT

CONTROL WIRING SCHEMATIC
REFERENCE DRAWING
(SHEET 7 OF 8)

PROJECT No 590-104217
FILE NAME: E-64

SHEET No
E-64

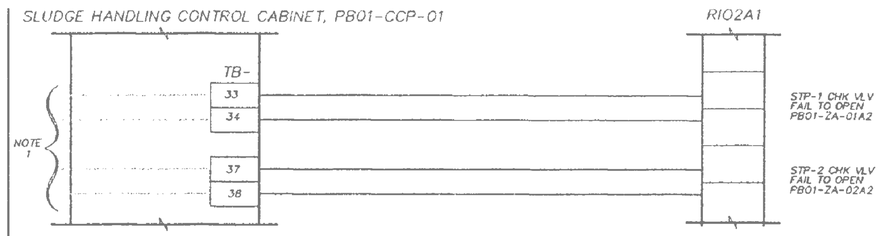

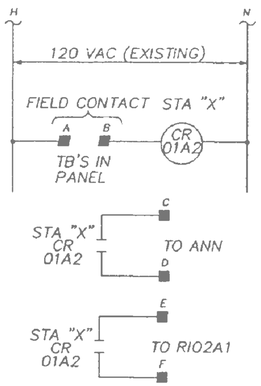

"X"	A	B	C	D	E	F
1	17	18	PB01-60	PB01-61	PB01-62	PB01-63
2	21	22	PB01-64	PB01-65	PB01-66	PB01-67

SLUDGE THICKNER RAKE TORQUE INTERPOSING RELAY SCHEMATIC AND TERMINATION TABLE

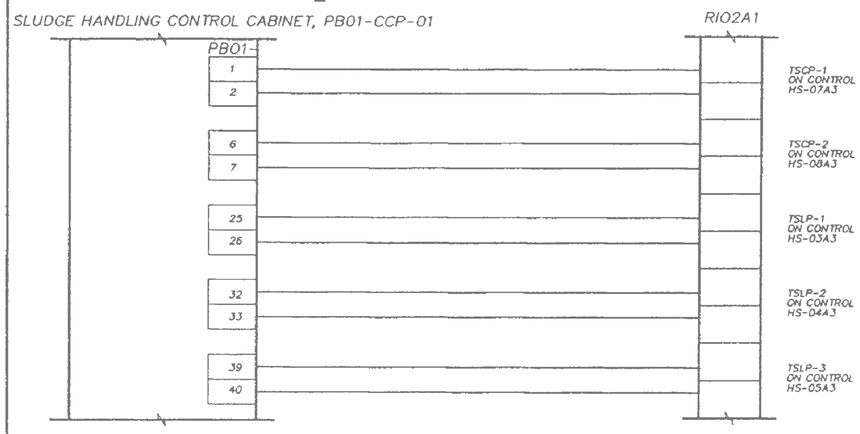

NOTES:
1. EXISTING WIRING FROM FIELD INSTRUMENTS.

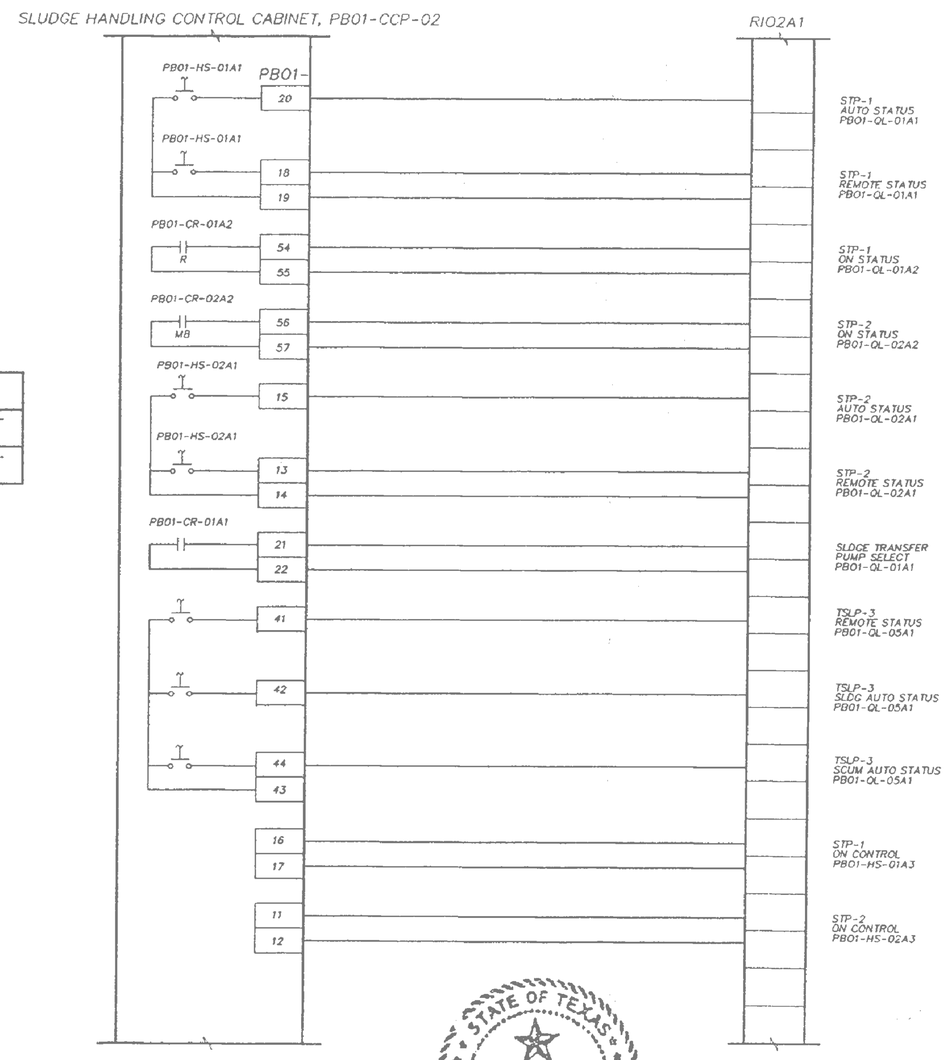

STATE OF TEXAS
R.C. EMANUEL
65372
REGISTERED PROFESSIONAL ENGINEER
7-22-98

1 [E-40]

SOUTH AUSTIN REGIONAL WASTEWATER TREATMENT PLANT
CITY OF AUSTIN, TEXAS

CH2M HILL

DSGN T. VEGA
DR L. TRIPP
DR F. MENDEZ
J.A. SANCHEZ-IRA
CHK L. TRIPP
APVD R. EMANUEL

NO.	DATE	REVISION	BY	APVD

REUSE OF DOCUMENTS
THIS DOCUMENT, AND THE IDEAS AND DESIGNS INCORPORATED HEREIN, AS AN INSTRUMENT OF PROFESSIONAL SERVICE, IS THE PROPERTY OF CH2M HILL AND IS NOT TO BE USED, IN WHOLE OR IN PART, FOR ANY OTHER PROJECT WITHOUT THE WRITTEN AUTHORIZATION OF CH2M HILL.
© CH2M HILL

VERIFY SCALE
BAR IS ONE INCH ON ORIGINAL DRAWING
0 1"
IF NOT ONE INCH ON THIS SHEET, ADJUST SCALES ACCORDINGLY.

MARTINEZ & WRIGHT ENGINEERS, INC.

INTERCONNECT DIAGRAM
SLUDGE THICKENING

SHEET
DWG NO. IC-STA1-03
DATE JULY 94
PROJ NO. STXIC935.01

GENERAL NOTES:

1. THE EXISTING INFORMATION SHOWN ON THIS DRAWING WAS OBTAINED FROM THE PROJECT ENTITLED "SOUTH AUSTIN REGIONAL WWTP CONTROL AND INSTRUMENTATION IMPROVEMENTS" DATED AUGUST 1994. THIS DRAWING IS PROVIDED FOR REFERENCE PURPOSES ONLY AND MAY NOT EXACTLY REFLECT THE EXISTING CONDITIONS. THEREFORE, THE CONTRACTOR IS TO EXERCISE EXTREME CARE AND FIELD VERIFY THE EXISTING CONDITIONS PRIOR TO COMMENCING FULL SCALE DEMOLITION OR RENOVATION ACTIVITIES. FOLLOWING THE DISCOVERY VERIFICATION OF THE EXISTING FIELD CONDITIONS, SHOULD ADJUSTMENTS BECOME A NECESSITY TO THE EXISTING OR PROPOSED SYSTEM (AS APPLICABLE), THE EXISTING DISCOVERED FIELD CONDITIONS MUST BE BROUGHT TO THE OWNER'S ATTENTION FOR EXECUTION OF THE NECESSARY ADJUSTMENTS/MODIFICATIONS.

Plotted: 4/22/2016 9:29:41 AM

REUSE OF DOCUMENTS
This document, and the designs incorporated herein, is an instrument of professional service that has been developed, designed and prepared by Harutunian Engineering, Inc., and is not to be used, in whole or part, for any other project without giving written notice to Harutunian Engineering, Inc.

REV No	DATE	DRWN	CHKD	REMARKS
	–	–	–	–

DESIGNED BY: HEI
DRAWN BY: HEI
SHEET CHK'D BY: HEI
CROSS CHK'D BY: HEI
APPROVED BY: HEI
DATE: APRIL 2016

CDM Smith
Riata Corporate Park, 12357-A Riata Trace Parkway, Suite 210
Austin, TX 78727
Tel: (512) 346-1100
Texas Registration Number F-3043

HARUTUNIAN ENGINEERING, INC.
305 E Huntland Dr, Ste 500; Austin, TX 78752
TBPE Firm Registration No. F-2408

CITY OF AUSTIN, TEXAS - AUSTIN WATER UTILITY
CIP 3333.016

SOUTH AUSTIN REGIONAL WWTP
THICKENER IMPROVEMENTS PROJECT

CONTROL WIRING SCHEMATIC
REFERENCE DRAWING
(SHEET 8 OF 8)

STATE OF TEXAS
K. A. HARUTUNIAN
59181
REGISTERED PROFESSIONAL ENGINEER
4/22/2016

PROJECT No 590-104217
FILE NAME: E-65

SHEET No
E-65

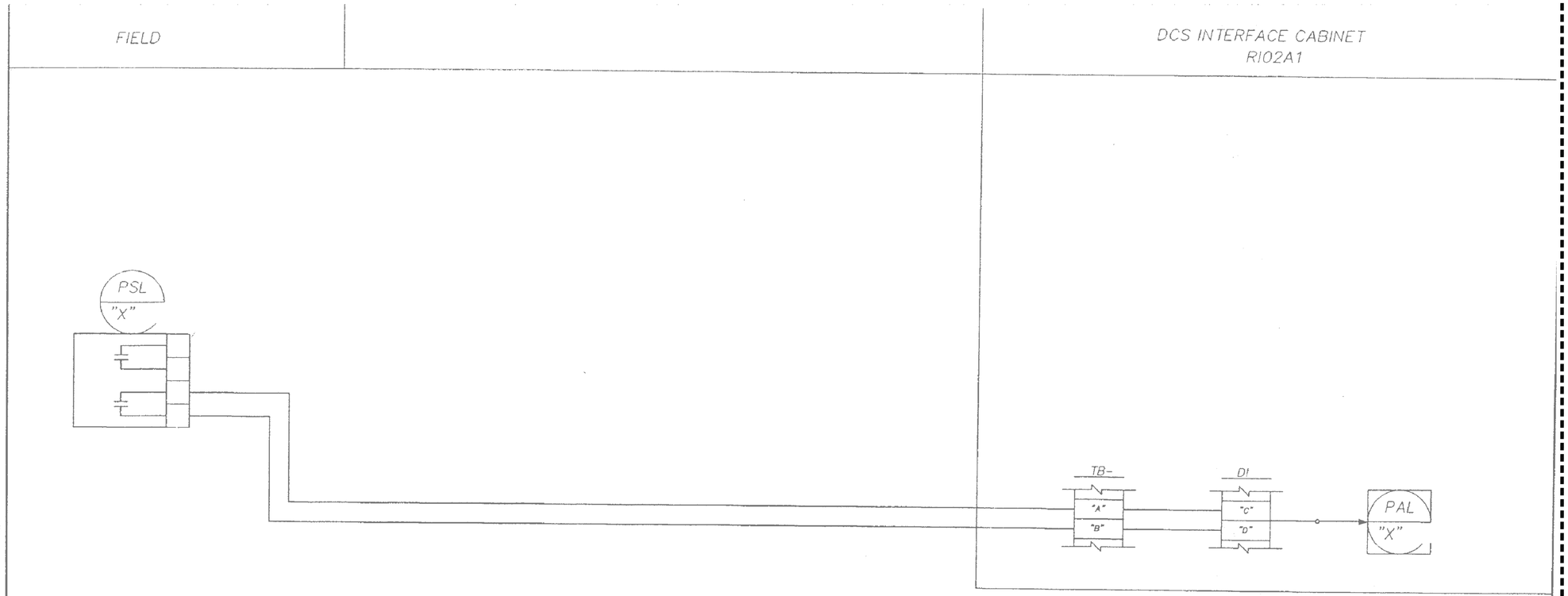

PSL/PAL-"X"	"A"	"B"	"C"	"D"
PB01-01A1				
PB01-02A1				
PB01-03A1				
PB01-04A1				
PB01-05A1				
PB01-06A1				
PB01-07A1				
PB01-08A1				

1
[I-8]

STATE OF TEXAS
R.C. EMANUEL
65372
REGISTERED
PROFESSIONAL ENGINEER
7/22/97

GENERAL NOTES:

1. THE EXISTING INFORMATION SHOWN ON THIS DRAWING WAS OBTAINED FROM THE PROJECT ENTITLED "SOUTH AUSTIN REGIONAL WWTP CONTROL AND INSTRUMENTATION IMPROVEMENTS" DATED AUGUST 1994. THIS DRAWING IS PROVIDED FOR REFERENCE PURPOSES ONLY AND MAY NOT EXACTLY REFLECT THE EXISTING CONDITIONS. THEREFORE, THE CONTRACTOR IS TO EXERCISE EXTREME CARE AND FIELD VERIFY THE EXISTING CONDITIONS PRIOR TO COMMENCING FULL SCALE DEMOLITION OR RENOVATION ACTIVITIES. FOLLOWING THE DISCOVERY VERIFICATION OF THE EXISTING FIELD CONDITIONS, SHOULD ADJUSTMENTS BECOME A NECESSITY TO THE EXISTING OR PROPOSED SYSTEM (AS APPLICABLE), THE EXISTING DISCOVERED FIELD CONDITIONS MUST BE BROUGHT TO THE OWNER'S ATTENTION FOR EXECUTION OF THE NECESSARY ADJUSTMENTS/MODIFICATIONS.

SOUTH AUSTIN REGIONAL WASTEWATER TREATMENT PLANT
CITY OF AUSTIN, TEXAS

CH2M HILL

DSGN T. VEGA
T. THIPE
DR T. HOLLINGSHEAD
CHK S. STAHL
CHKD R. EMANUEL

NO.	DATE	REVISION	BY	APVD

REUSE OF DOCUMENTS
THIS DOCUMENT, AND THE IDEAS AND DESIGNS INCORPORATED HEREIN, AS AN INSTRUMENT OF PROFESSIONAL SERVICE, IS THE PROPERTY OF CH2M HILL AND IS NOT TO BE USED, IN WHOLE OR IN PART, FOR ANY OTHER PROJECT WITHOUT THE WRITTEN AUTHORIZATION OF CH2M HILL.
© CH2M HILL

BAR IS ONE INCH ON ORIGINAL DRAWING
0 1"
IF NOT ONE INCH ON THIS SHEET, ADJUST SCALES ACCORDINGLY

MARTINEZ & WRIGHT ENGINEERS, INC.

LOOP PB01-(TYP)
SLUDGE HANDLING BUILDING
SEAL WATER PRESSURE

SHEET CHK'D NO. L-PB01-04
DATE JULY 1994
PROJ NO. HEX30835.D2

Plotted: 4/22/2016 9:29:44 AM

K. A. Harutunian
STATE OF TEXAS
K. A. HARUTUNIAN
59181
REGISTERED
PROFESSIONAL ENGINEER
4/22/2016

REUSE OF DOCUMENTS
This document, and the designs incorporated herein, is an instrument of professional service that has been developed, designed and prepared by Harutunian Engineering, Inc., and is not to be used, in whole or part, for any other project without giving written notice to Harutunian Engineering, Inc.

REV No	DATE	DRWN	CHKD	REMARKS
△	–	–	–	–

DESIGNED BY: HEI
DRAWN BY: HEI
SHEET CHK'D BY: HEI
CROSS CHK'D BY: HEI
APPROVED BY: HEI
DATE: APRIL 2016

CDM Smith
Riata Corporate Park, 12357-A Riata Trace Parkway, Suite 210
Austin, TX 78727
Tel: (512) 346-1100
Texas Registration Number F-3043

HARUTUNIAN ENGINEERING, INC.
305 E Huntland Dr, Ste 500; Austin, TX 78752
TBPE Firm Registration No. F-2408

CITY OF AUSTIN, TEXAS - AUSTIN WATER UTILITY
CIP 3333.016
SOUTH AUSTIN REGIONAL WWTP
THICKENER IMPROVEMENTS PROJECT

INSTRUMENT WIRING SCHEMATIC
REFERENCE DRAWING
(SHEET 1 OF 1)

PROJECT No 590-104217
FILE NAME: E-66

SHEET No
E-66

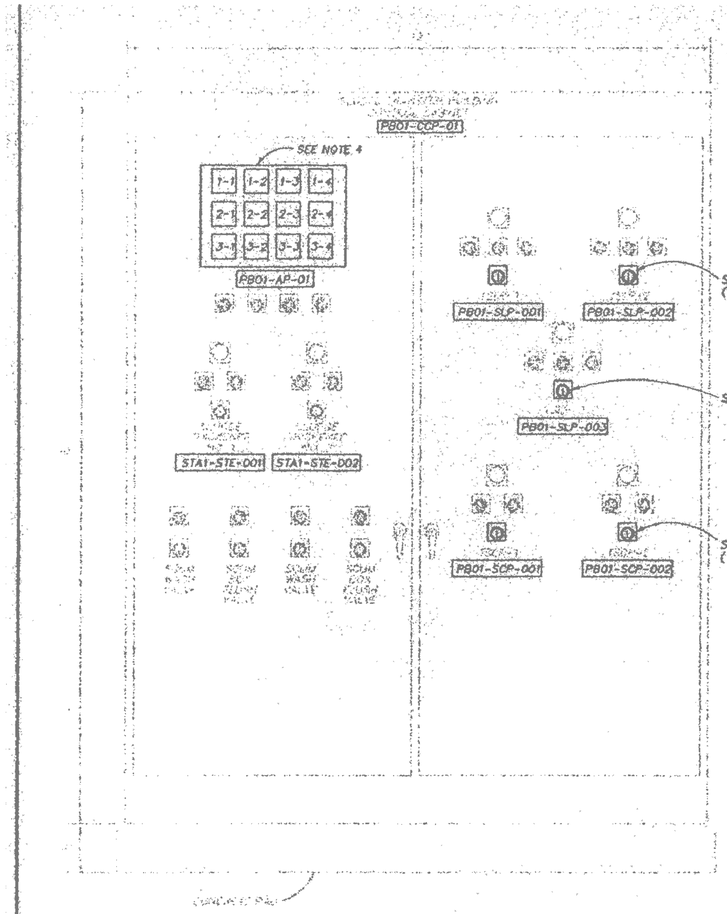

PB01-CCP-01

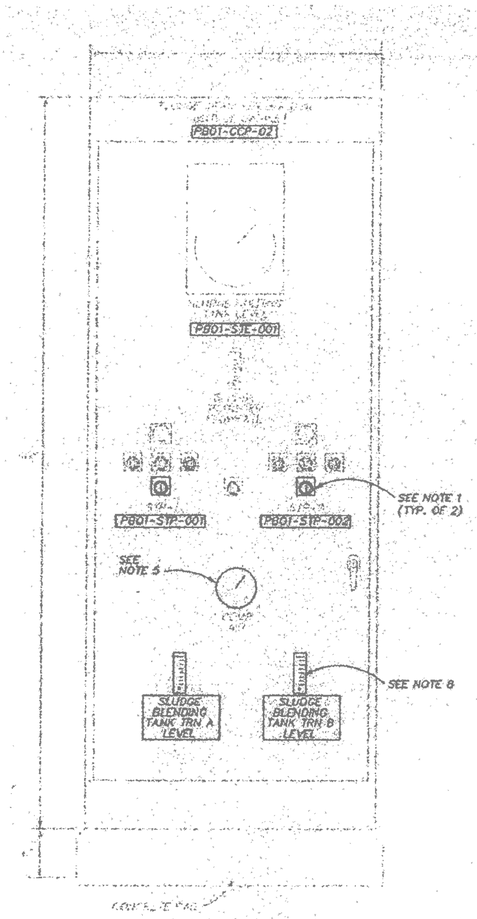

PB01-CCP-02

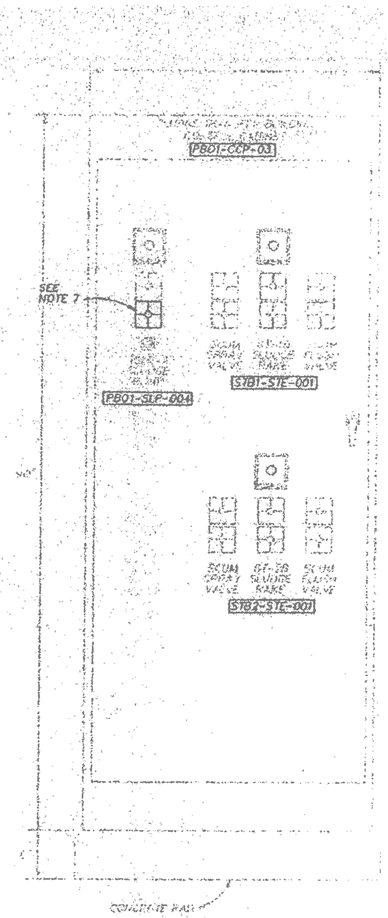

PB01-CCP-03

GENERAL NOTES:

1. THE EXISTING INFORMATION SHOWN ON THIS DRAWING WAS OBTAINED FROM THE PROJECT ENTITLED "SOUTH AUSTIN REGIONAL WWTP CONTROL AND INSTRUMENTATION IMPROVEMENTS" DATED AUGUST 1994. THIS DRAWING IS PROVIDED FOR REFERENCE PURPOSES ONLY AND MAY NOT EXACTLY REFLECT THE EXISTING CONDITIONS. THEREFORE, THE CONTRACTOR IS TO EXERCISE EXTREME CARE AND FIELD VERIFY THE EXISTING CONDITIONS PRIOR TO COMMENCING FULL SCALE DEMOLITION OR RENOVATION ACTIVITIES. FOLLOWING THE DISCOVERY VERIFICATION OF THE EXISTING FIELD CONDITIONS, SHOULD ADJUSTMENTS BECOME A NECESSITY TO THE EXISTING OR PROPOSED SYSTEM (AS APPLICABLE), THE EXISTING DISCOVERED FIELD CONDITIONS MUST BE BROUGHT TO THE OWNER'S ATTENTION FOR EXECUTION OF THE NECESSARY ADJUSTMENTS/MODIFICATIONS.

NOTES:

1. CONTRACTOR TO DISCONNECT/REMOVE EXISTING "MANUAL-OFF-AUTO" THREE POSITION SELECTOR SWITCH WITH LEGEND PLATES AND REPLACE WITH "ON-OFF-AUTO-REMOTE" FOUR POSITION SELECTOR SWITCH AND LEGEND PLATES. REFER TO APPLICABLE CONTROL SCHEMATICS FOR NUMBER OF STAGES REQUIRED ON SWITCHES.
2. CONTRACTOR TO DISCONNECT/REMOVE EXISTING "MANUAL-OFF-SCUM/AUTO-SCUM/AUTO TIMER-SLUDGE/AUTO" FIVE POSITION SELECTOR SWITCH WITH LEGEND PLATES AND REPLACE WITH "ON-OFF-SCUM/AUTO-SCUM/AUTO TIMER-SLUDGE/AUTO-REMOTE" SIX POSITION SELECTOR SWITCH AND LEGEND PLATES. REFER TO APPLICABLE CONTROL SCHEMATICS FOR NUMBER OF STAGES REQUIRED ON SWITCHES.
3. CONTRACTOR TO DISCONNECT/REMOVE EXISTING "MANUAL-OFF-AUTO/TIMER-AUTO" FOUR POSITION SELECTOR SWITCH WITH LEGEND PLATES AND REPLACE WITH "ON-OFF-AUTO/TIMER-AUTO-REMOTE" FIVE POSITION SELECTOR SWITCH AND LEGEND PLATES. REFER TO APPLICABLE CONTROL SCHEMATICS FOR NUMBER OF STAGES REQUIRED ON SWITCHES.
4. CONTRACTOR TO COVER EXISTING HOLE AND FIT NEW ANNUNCIATOR INTO NEW PANEL PLATE. FOR ANNUNCIATOR NAMEPLATE LEGEND SEE DWG NO. E-STOT-01.
5. CONTRACTOR TO REPLACE EXISTING MURPHY SWITCH AND MAINTAIN EXISTING WIRING.
6. CONTRACTOR TO ADD NEW NAMEPLATES TO THE PANEL FACE REPRESENTED BY DARK BOXED TEXT. NAMEPLATES SHOULD BE WHITE ON RED AND HAVE THE SAME TEXT SIZE AS EXISTING NAMEPLATES.
7. CONTRACTOR TO REMOVE EXISTING "MANUAL-OFF-LOCAL/AUTO-NORMAL" LEGEND PLATES AND REPLACE WITH "ON-OFF-AUTO-REMOTE" LEGEND PLATES. REFER TO APPLICABLE CONTROL SCHEMATICS FOR NUMBER OF STAGES REQUIRED ON SWITCHES.
8. CONTRACTOR TO ADD NEW LEVEL INDICATORS SPECIFIED IN SPEC. 13400.

STATE OF TEXAS
R.C. EMANUEL
65372
REGISTERED PROFESSIONAL ENGINEER
7/22/96

PANELS ARE NOT DRAWN TO SCALE.

SOUTH AUSTIN REGIONAL WASTEWATER TREATMENT PLANT
CITY OF AUSTIN, TEXAS

CH2M HILL

DSGN L. TRIPP / T. VEGA
DR E. KRISTEL / L. TRIPP
CHK R. WILLIAMS
APVD R. EMANUEL

NO.	DATE	REVISION	BY	APVD

REUSE OF DOCUMENTS
THIS DOCUMENT, AND THE IDEAS AND DESIGNS INCORPORATED HEREIN, AS AN INSTRUMENT OF PROFESSIONAL SERVICE, IS THE PROPERTY OF CH2M HILL AND IS NOT TO BE USED, IN WHOLE OR IN PART, FOR ANY OTHER PROJECT WITHOUT THE WRITTEN AUTHORIZATION OF CH2M HILL.
©CH2M HILL

BAR IS ONE INCH ON ORIGINAL DRAWING
0 1"
IF NOT ONE INCH ON THIS SHEET, ADJUST SCALES ACCORDINGLY

PANEL MODIFICATIONS
SLUDGE HANDLING CONTROL CABINETS TRN A & B

SHEET
DWG NO. P-PD01-01
DATE JULY 1983
PROJ NO. TEX30035.D2

K. A. HARUTUNIAN
STATE OF TEXAS
K. A. HARUTUNIAN
59181
REGISTERED PROFESSIONAL ENGINEER
7/22/2016

Plotted: 4/22/2016 9:29:48 AM

REUSE OF DOCUMENTS
This document, and the designs incorporated herein, is an instrument of professional service that has been developed, designed and prepared by Harutunian Engineering, Inc., and is not to be used, in whole or part, for any other project without giving written notice to Harutunian Engineering, Inc.

REV No	DATE	DRWN	CHKD	REMARKS
△	–	–	–	–

DESIGNED BY: HEI
DRAWN BY: HEI
SHEET CHK'D BY: HEI
CROSS CHK'D BY: HEI
APPROVED BY: HEI
DATE: APRIL 2016

CDM Smith
Riata Corporate Park, 12357-A Riata Trace Parkway, Suite 210
Austin, TX 78727
Tel: (512) 346-1100
Texas Registration Number F-3043

HEI
HARUTUNIAN ENGINEERING, INC.
305 E Huntland Dr, Ste 500: Austin, TX 78752
TBPE Firm Registration No. F-2408

CITY OF AUSTIN, TEXAS - AUSTIN WATER UTILITY
CIP 3333.016

SOUTH AUSTIN REGIONAL WWTP
THICKENER IMPROVEMENTS PROJECT

SLUDGE TRANSFER BUILDING CONTROL PANELS "PB01-CCP-01" & "PB01-CCP-02" REFERENCE DRAWING

PROJECT No 590-104217
FILE NAME: E-67

SHEET No
E-67

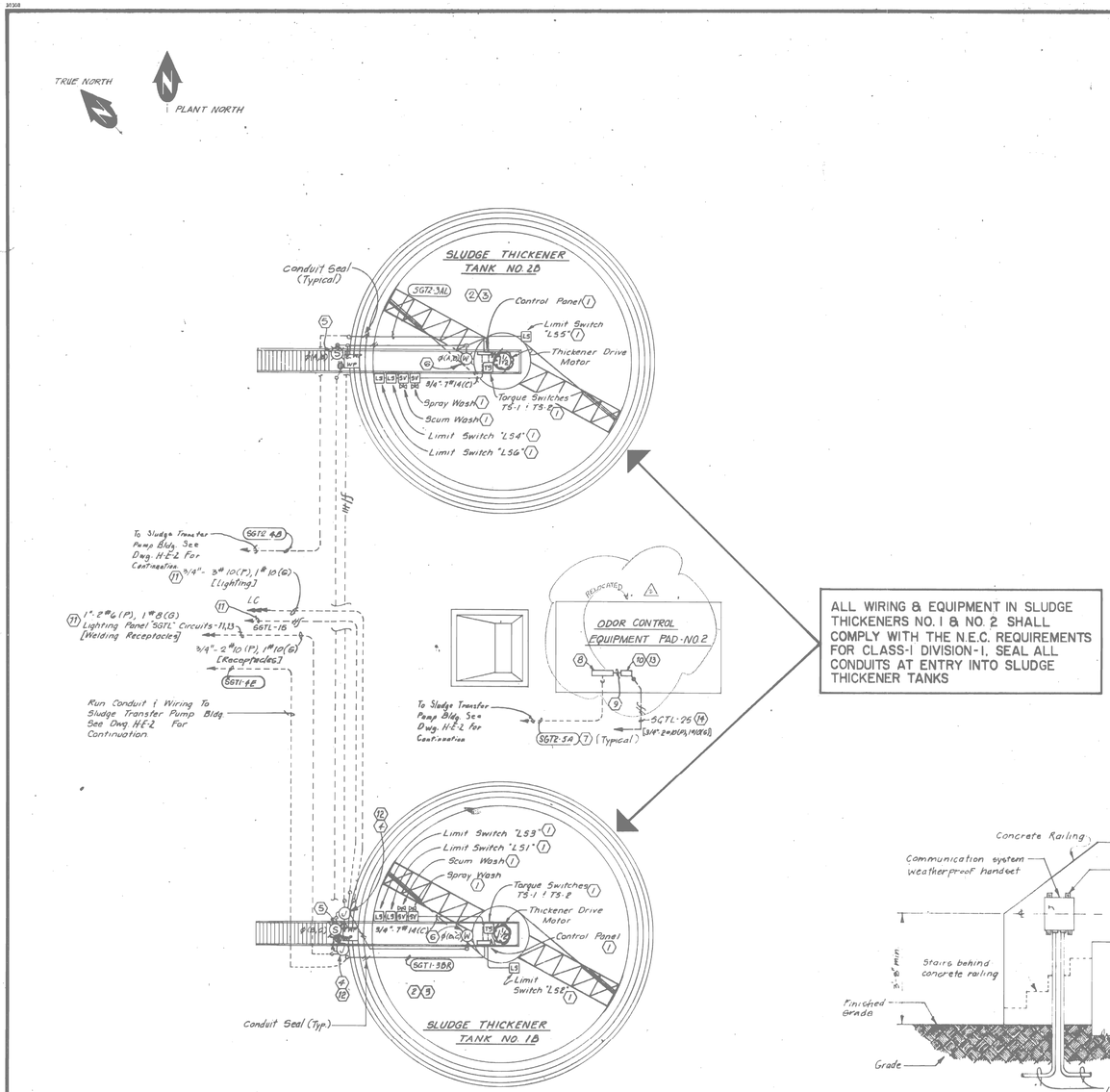

ALL WIRING & EQUIPMENT IN SLUDGE THICKENERS NO. 1 & NO. 2 SHALL COMPLY WITH THE N.E.C. REQUIREMENTS FOR CLASS-I DIVISION-I, SEAL ALL CONDUITS AT ENTRY INTO SLUDGE THICKENER TANKS

SLUDGE THICKENER TANKS NO. 1 & NO. 2 POWER & LIGHTING

SCALE : 1" = 10'-0"

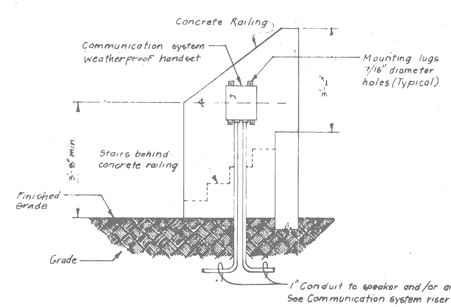

TYPICAL TREATMENT TANK COMMUNICATION SYSTEM HANDSET MOUNTING DETAIL

NOT TO SCALE

KEY NOTES

1. LIMIT SWITCHES, TORQUE SWITCHES, SOLENOID VALVES AND CONTROL PANEL ARE FURNISHED WITH THE SLUDGE THICKENERS.
2. RUN CONDUITS UNDER ACCESS WALKWAY. SUPPORT FROM WALKWAY STRUCTURAL MEMBERS.
3. ALL EXPOSED CONDUITS AT SLUDGE THICKENER TANKS ARE TO BE P.V.C. COATED RIGID STEEL.
4. MOUNT JUNCTION BOX ON OUTSIDE OF SLUDGE THICKENER TANKS @ 3'-0" ABOVE FINISHED GRADE.
5. SEE DRAWING NO. O-E-11 FOR FIXTURE TYPE "S" AND RECEPTACLE MOUNTING DETAIL.
6. FIXTURE TYPE "M" TO BE APPLETON CAT. #CLS-15150-208V, 150 WATT; HPS LAMP WITH #CNR-4ST REFLECTOR AND #CGU2 WIRE GUARD (OR APPROVED EQUAL). FIXTURE SUITABLE FOR EXPLOSION-PROOF CLASS-I DIVISION-1. MOUNT FIXTURE SIMILAR TO DETAIL ON DRAWING
7. REFER TO ELECTRICAL ONE LINE DIAGRAM DRAWING FOR CONDUIT AND WIRE SIZES.
8. ODOR CONTROL UNIT CONTROL PANEL. VERIFY EXACT LOCATION OF CONTROL PANEL WITH ODOR CONTROL EQUIPMENT SUPPLIER AND MAKE ALL FINAL CONNECTIONS TO MANUFACTURER'S RECOMMENDATION.
9. 3/4" 2 #14 (A) [ODOR CONTROL SYSTEM TROUBLE ALARM].
10. HYDROGEN SULFIDE MONITOR PANEL MOUNTED ON ODOR CONTROL UNIT. VERIFY EXACT LOCATION OF PANEL WITH ODOR CONTROL UNIT SUPPLIER AND MAKE ALL FINAL CONNECTIONS TO MANUFACTURER'S RECOMMENDATION.
11. RUN CONDUIT AND WIRING TO EXISTING JUNCTION BOX AT GRAVITY THICKENER NO. 1. SEE KEY NOTE NO. 12. SPLICE TO EXISTING CIRCUITS "SGTL-11,13,15" AND LIGHTING CONTACTOR CIRCUITS IN EXISTING JUNCTION BOXES. REFER TO DRAWING A-E-11 FOR EXACT LOCATION OF SLUDGE THICKENER NO. 1.
12. PRESENTLY THERE IS A SIMILAR JUNCTION BOX AT EXISTING SLUDGE THICKENER NO. 1 FOR WELDING RECEPTACLE, 120V CONVENIENCE OUTLETS AND/OR LIGHTING CIRCUITING OF EXISTING SLUDGE THICKENERS NO. 1 & NO. 2. REFER TO DRAWING A-E-11FOR EXACT LOCATION OF SLUDGE THICKENERS NO. 1 & NO. 2.
13. PRESENTLY THERE IS A SIMILAR HYDROGEN SULFIDE MONITORING PANEL MOUNTED ON EXISTING ODOR CONTROL UNIT NO. 1 (BETWEEN SLUDGE THICKENERS NO. 1 & NO. 2). REFER TO DRAWING A-E-11 FOR EXACT LOCATION OF EXISTING ODOR CONTROL UNIT NO. 1.
14. RUN CONDUIT AND WIRING TO HYDROGEN SULFIDE MONITORING PANEL (AT EXISTING ODOR CONTROL UNIT NO. 1. SEE KEY NOTE NO. 13.) AND SPLICE TO EXISTING LIGHTING CIRCUIT "SGTL-25".

GENERAL NOTES:

1. THE EXISTING INFORMATION SHOWN ON THIS DRAWING WAS OBTAINED FROM THE PROJECT ENTITLED "SOUTH AUSTIN REGIONAL WASTEWATER TREATMENT PLANT – CONTRACT NO. 2" DATED FEBRUARY 1986. THIS DRAWING IS PROVIDED FOR REFERENCE PURPOSES ONLY AND MAY NOT EXACTLY REFLECT THE EXISTING CONDITIONS. THEREFORE, THE CONTRACTOR IS TO EXERCISE EXTREME CARE AND FIELD VERIFY THE EXISTING CONDITIONS PRIOR TO COMMENCING FULL SCALE DEMOLITION OR RENOVATION ACTIVITIES. FOLLOWING THE DISCOVERY VERIFICATION OF THE EXISTING FIELD CONDITIONS, SHOULD ADJUSTMENTS BECOME A NECESSITY TO THE EXISTING OR PROPOSED SYSTEM (AS APPLICABLE), THE EXISTING DISCOVERED FIELD CONDITIONS MUST BE BROUGHT TO THE OWNER'S ATTENTION FOR EXECUTION OF THE NECESSARY ADJUSTMENTS/MODIFICATIONS.

1 [E-21]

AS BUILT

RECORD DRAWING PREPARED BY _____ DATE _____

STATE OF TEXAS JAMES R. SCHULTZ 27155 REGISTERED PROFESSIONAL ENGINEER

TRIAD ENGINEERING
CONSULTING ENGINEERS
AUSTIN, TEXAS

NO	DATE	REVISION	APPROV
4			
3			
2	10/14/87	AS-BUILT BY EPC	DSB/ABC
1	3-29-86	ADDENDUM NO. 1	JRS

CITY OF AUSTIN, TEXAS
SOUTH AUSTIN REGIONAL WASTEWATER TREATMENT PLANT
GRAVITY THICKENER – ELECTRICAL

Turner Collie & Braden Inc.
CONSULTING ENGINEERS
TEXAS AUSTIN/DALLAS/EL PASO/HOUSTON/PORT ARTHUR
COLORADO DENVER/CAND JUNCTION

Unit BURKE	Scale: "Horz AS NOTED Vert	Date FEBRUARY 1986	
Designed JRS / KAH	Checked JRS/KAH	Job No. 410710B-102	Contract 2
Drawn GDG / JP	Approved JRS	Sheet 94 of 133	

Dwg. No. G-E-1

ADDENDUM No. 1 Sht. 119 of 146

STATE OF TEXAS K. A. HARUTUNIAN 59181 REGISTERED PROFESSIONAL ENGINEER 4/22/2016

Plotted: 4/22/2016 8:52:26 AM

REUSE OF DOCUMENTS
This document, and the designs incorporated herein, is an instrument of professional service that has been developed, designed and prepared by Harutunian Engineering, Inc., and is not to be used, in whole or part, for any other project without giving written notice to Harutunian Engineering, Inc.

REV No	DATE	DRWN	CHKD	REMARKS
△	–	–	–	–

DESIGNED BY: HEI
DRAWN BY: HEI
SHEET CHK'D BY: HEI
CROSS CHK'D BY: HEI
APPROVED BY: HEI
DATE: APRIL 2016

CDM Smith
Riata Corporate Park, 12357-A Riata Trace Parkway, Suite 210
Austin, TX 78727
Tel: (512) 346-1100
Texas Registration Number F-3043

HARUTUNIAN ENGINEERING, INC.
305 E Huntland Dr, Ste 500; Austin, TX 78752
TBPE Firm Registration No. F-2408

CITY OF AUSTIN, TEXAS - AUSTIN WATER UTILITY
CIP 3333.016

SOUTH AUSTIN REGIONAL WWTP
THICKENER IMPROVEMENTS PROJECT

GRAVITY THICKENERS 1B AND 2B AND ODOR CONTROL SYSTEM PLAN
REFERENCE DRAWING

PROJECT No 590-104217
FILE NAME: E-68

SHEET No
E-68

07-14-94 0935E125.DWG

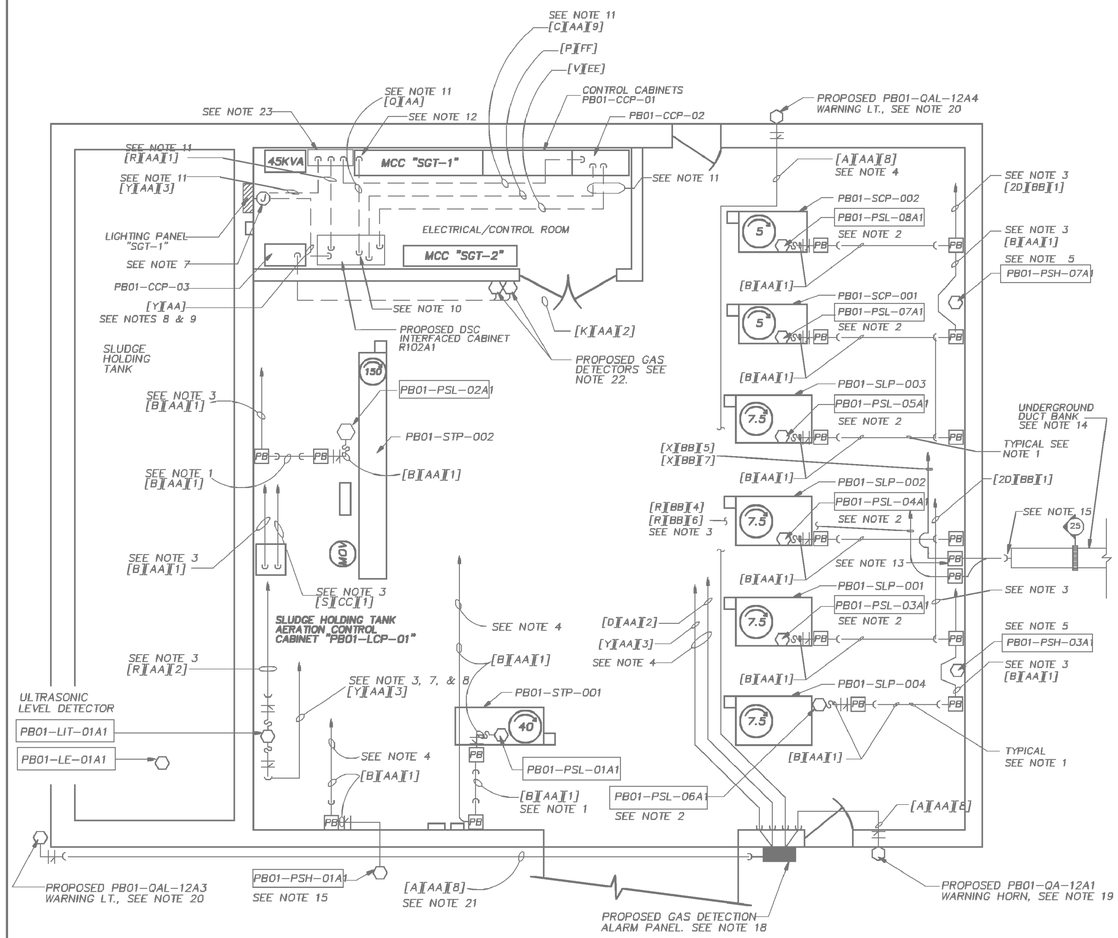

SLUDGE TRANSFER PUMP BLDG. PLAN

SCALE: 1/4"=1'-0"

N

LEGEND NOTES

1) THE CIRCUIT DESIGNATIONS WILL APPEAR AS FOR EXAMPLE IN THE FORM [A][AA][6] WHERE THE LETTERS IN BRACKETS ARE THE RACEWAY DESIGNATORS, THE FOLLOWING NUMBER IN BRACKETS IS THE DESIGNATION OF THE CIRCUIT.

[A] 3 #14
[B] 4 #14
[C] 2 #14
[D] 8 #14
[F] 12 #12
[K] TWO (2) #20 AWG THREE CONDUCTOR, SPIRAL SHIELDED CABLES (ONE CABLE PER GAS DETECTOR)
[P] 88 #14 PER CONDUIT
[Q] 1 #6 GROUND INSULATED CONDUCTOR
[R] 1 PAIR OF #16 AWG TWISTED SHEILDED CABLES
[S] 3 PAIRS OF #16 AWG TWISTED SHIELDED CABLES PER CONDUIT
[S] 8 PAIRS OF #16 AWG TWISTED SHIELDED CABLES
[X] 2 #8, 1#10G FOR POWER
[Y] 2 #10, 1 #10 FOR POWER
[AA] .75 ALUMINUM CONDUIT
[BB] 1.00" ALUMINUM CONDUIT
[CC] 1.25" ALUMINUM CONDUIT
[EE] 2.00" ALUMINUM CONDUIT
[FF] TWO (2) 2.50" ALUMINUM CONDUIT

[1] TO PROPOSED DCS INTERFACE CABINET R102A1
[2] TO EXISTING CONTROL CABINET PB01 –CCP–02. SEE NOTE 11.
[3] TO EXISTING LIGHTING PANEL "STG–1." SEE NOTES 7,8, AND 9.
[4] FROM PROPOSED ULTRASONIC LEVEL DETECTOR (STB1–LIT–01A1 AT SLUDGE BLEND TANK 'B') TO SLUDGE HANDLING CONTROL CABINET PB01–CCP–02 IN ELECTICAL/CONTROL ROOM IN SLUDGE TRANSFER PUMP BUILDING.
[5] FROM PROPOSED ULTRASONIC LEVEL DETECTOR (STB1–LIT–01A1/STB1–LE–01A1 AT SLUDGE BLEND TANK 'B') TO PROPOSED PANEL "SGT–1" IN ELECTRICAL/ CONTROL ROOM IN SLUDGE TRANSFER PUMP BUILDING. SEE NOTES 8 & 9.
[6] FROM PROPOSED ULTRASONIC LEVEL DETECTOR (STA1–LIT–01A1/STA1–LE–01A1 AT SLUDGE BLEND TANK 'A')TO SLUDGE HANDLING CONTROL CABINET PB01–CCP–02 IN ELECTRICAL/CONTROL ROOM IN SLUDGE TRANSFER PUMP BUILDING.
[7] FROM PROPOSED ULTRASONIC LEVEL DETECTOR (STA1–LIT–01A1/STA1–LE–01A1 AT SLUDGE BLEND TANK 'A') TO PROPOSED PANEL "SGT–1" IN ELECTRICAL/CONTROL ROOM IN SLUDGE TRANSFER PUMP BUILDING. SEE NOTES 8 & 9.
[8] TO PROPOSED GAS DETECTION ALARM PANEL.
[9] TO CONTROL CABINET PB01–CCP–02 ANNUNCIATOR.

NOTES:

1. FOR THE ENTIRE LENGTH OF THE CONDUIT RUNS, RUN CONDUIT BENEATH THE DISCHARGE/SUCTION PIPING OF THE PROCESS MECHANICAL EQUIPMENT (PUMPS, ETC.). INSTALL CONDUITS ON A SEPARATE CONDUIT RACK SIMILAR TO TYPICAL DETAILS SHOWN ON DRAWING No. ED–GEN–01. PROPOSED CONDUIT RACK IS TO BE COMPLETELY SERARATE AND MECHANICALLY ISOATED FROM THE EXISTING SUCTION/DISCHARGEPIPING SUPPORTS OF THE PROCESS EQUIPMENT. CONDUIT ROUTING AND LOCATION SHOWN ON THE PLAN VIEW ARE APPROXIMATE AND CONCEPTUAL. THE CONTRACTOR IS TO FIELD VERIFY EXACT ROUTING, LOCATION; ETC. OF THE EXISTING MECHANICAL PIPING FOR DETERMINING THE EXACT ROUTING OF THE PROPOSED CONDUIT SYSTEM. THIS NOTE AT IT'S ENTIRETY APPLIES TO THE FOLLOWING ROUTES SHOWN ON THIS PLAN DRAWING.
   A. CONDUIT ROUTE BETWEEN PULLBOXES LOCATED AT DIFFERENT PROCESS MECHANICAL EQUIPMENT PADS.
   B. CONDUIT ROUTE BETWEEN PULLBOXES LOCATED NEARBY AND/OR AT PROCESS MECHANICAL EQUIPMENT PAD AND BUILDING WALL.
   C. CONDUIT ROUTE BETWEEN PULLBOXES LOCATED NEARBY PROCESS MECHANICAL EQUIPMENT PAD.
2. PROPOSED REPLACEMENT OF SEAL WATER PRESSURE SWITCH. REMOVE EXISTING CONDUIT/WIRING FROM EXISTING SEAL WATER WATER PRESSURE SWITCH PER DETAIL SHOWN ON DRAWING No. ED–GEN–01.
3. RUN CONDUIT AGAINST WALL AS CLOSE AS POSSIBLE TO BOTTOM OF ROOF STRUCTURE. REFER TO DETAIL ON DRAWING NO. No. ED–GEN–07.
4. RUN CONDUIT DIRECTLY BELOW ROOF JOIST TO FINAL DESTINATION. REFER TO APPLICABLE DETAIL ON DRAWING NO. ED–GEN–07.
5. PROPOSED REPLACEMENT OF HIGH DISCHARGE PRESSURE SWITCH, DISCONNECT CONDUIT AND WIRING FROM EXISTING PRESSSURE SWITCH AND RECONNECT TO PROPOSED SWITCH.
6. PROPOSED REPLACEMENT OF HIGH DISCHARGE PRESSURE SWITCH. DISCONNECT EXISTING CONDUIT AND WIRING.
7. EXISTING UNTAGGED, SINGLE JUNCTION BOX ABOVE CEILING OF ELECTRICAL/CONTROL ROOM. ROUTE PROPOSED 120V CIRCUITS THROUGH JUNCTION BOX TO EXISTING LIGHTING PANEL SGT–1.
8. ROUTE CONDUIT CONCEALED ABOVE CEILING OF ELECTRICAL/CONTROL ROOM TO EXISTING JUNCTION BOX ABOVE CEILING AND EXISTING PANEL "SGT–1".
9. INSTALL 20A–1P CIRCUIT BREAKER IN EXISTING SPACE IN PANEL "SGT–1" AND CONNECT PROPOSED CIRCUIT. NOTE CIRCUIT IN PANEL DIRECTORY.
10. GROUND PROCESSOR INPUT/OUTPUT CPU RACKS, ETC IN DCS INTERFACED CABINET R102A1.
11. ROUTE CONDUIT CONCEALED ABOVE CEILING OF ELECTRICAL/CONTROL ROOM.
12. CONNECT TO EXISTING GROUND BUS IN MOTOR CONTROL CENTER.
13. REFER TO "INSTRUMENT AND CONTROL CONDUIT ENTRY/PULLBOX DETATIL– TYPE A"ON DRAWING NO. ED–GEN–03.
14. FOR CONSTRUCTION REFER TO DRAWING NO. ED–GEN–02. FOR ROUTING OF DUCT BANK REFER TO OVERALL SITE PLAN, DRAWING NO. E–YE01–01 AND DRAWING NO. ED–UB01–01 FOR DUCT BANK CROSS SECTIONAL DETAILS.
15. CONDUITS WILL TURN UP FROM DUCT BANK AND TRANSITION AT 6" ABOVE FINISHED GRADE TO ALUMINUM CONDUITS.
16. SEE DRAWING GD–YE01–01 FOR SILT FENCE REQUIREMENTS AND DETAILS
17. COMPONENTS NO. A010 & A019 NOUNTED IN MSA MODEL #5300 WALL MOUNTED CABINET.
18. REFER TO DRAWING E–YE01–06.
19. REFERENCE COMPONENT CODE M030. MOUNT 12'–0" ABOVE FINISHED BUILDING FLOOR SLAB.
20. REFERENCE COMPONENT CODE M031. MOUNT FIXTURE AT 12'–0" ABOVE FINISHED BUILDING FLOOR SLAB.
21. ROUTE CONDUIT HIGH NEAR ROOF.
22. PROPOSED HYDROGEN SULFIDE AND COMBUSTILBE GAS DETECTORS ARE "PB01–AE–12A1 & PB01–AE–14A1"
23. PROPOSED MSA GAS DETECTORS MONITOR (NEMA 12) – SEE NOTE 17.

GENERAL NOTES:

1. THE INSTRUMENT, JUNCTION BOX, PULLBOX, ETC., LOCATIONS SHOWN ARE APPROXIMATE ONLY.

RECORD DOCUMENTS

GENERAL NOTES:

1. THE EXISTING INFORMATION SHOWN ON THIS DRAWING WAS OBTAINED FROM THE PROJECT ENTITLED "SOUTH AUSTIN REGIONAL WASTEWATER TREATMENT PLANT" DATED MARCH 1995. THIS DRAWING IS PROVIDED FOR REFERENCE PURPOSES ONLY AND MAY NOT EXACTLY REFLECT THE EXISTING CONDITIONS. THEREFORE, THE CONTRACTOR IS TO EXERCISE EXTREME CARE AND FIELD VERIFY THE EXISTING CONDITIONS PRIOR TO COMMENCING FULL SCALE DEMOLITION OR RENOVATION ACTIVITIES. FOLLOWING THE DISCOVERY VERIFICATION OF THE EXISTING FIELD CONDITIONS, SHOULD ADJUSTMENTS BECOME A NECESSITY TO THE EXISTING OR PROPOSED SYSTEM (AS APPLICABLE), THE EXISTING DISCOVERED FIELD CONDITIONS MUST BE BROUGHT TO THE OWNER'S ATTENTION FOR EXECUTION OF THE NECESSARY ADJUSTMENTS/MODIFICATIONS.

1 [E-26]

Plotted: 4/22/2016 8:52:31 AM

CROUCH ELECTRIC, INC.
1106 SMITH RD. SUITE 100 / AUSTIN, TEXAS 78721
P.O. BOX 140855 / AUSTIN, TEXAS 78714-0855
PHONE 512/386-5000
FAX 512/386-5010

SOUTH AUSTIN REGIONAL WASTEWATER TREATMENT PLANT
CITY OF AUSTIN, TEXAS

CH2M HILL

DSGN T. TURMAN / L. TRIPP
DR HOLLINGSHEAD / J.A.SAAVEDRA
CHK T. VEGA
APVD K. HARUTUNIAN

NO.	DATE	REVISION	BY	APVD
2	3/2/95	ADDENDUM 2	TV	RCE
1	1/3/95	REBID	RRM	RCE

REUSE OF DOCUMENTS
THIS DOCUMENT, AND THE IDEAS AND DESIGNS INCORPORATED HEREIN, AS AN INSTRUMENT OF PROFESSIONAL SERVICE, IS THE PROPERTY OF CH2M HILL AND IS NOT TO BE USED, IN WHOLE OR IN PART, FOR ANY OTHER PROJECT WITHOUT THE WRITTEN AUTHORIZATION OF CH2M HILL.
©CH2M HILL

VERIFY SCALES
BAR IS ONE INCH ON ORIGINAL DRAWING
0 1"
IF NOT ONE INCH ON THIS SHEET, ADJUST SCALES ACCORDINGLY.

HARUTUNIAN ENGINEERING, INC.
ENGINEERING & ENVIRONMENTAL CONSULTANTS
AUSTIN, TEXAS

MARTINEZ & WRIGHT ENGINEERS, INC.

SITE PLANS
SLUDGE TRANSFER PUMP BUILDING PLAN ELECTRICAL MODIFICATION

SHEET
DWG NO. SP–PB01–01
DATE JULY 1994
PROJ. NO. TEX30935.D2

K. A. Harutunian
STATE OF TEXAS
K. A. HARUTUNIAN
59181
REGISTERED PROFESSIONAL ENGINEER
4/22/2016

REUSE OF DOCUMENTS
This document, and the designs incorporated herein, is an instrument of professional service that has been developed, designed and prepared by Harutunian Engineering, Inc., and is not to be used, in whole or part, for any other project without giving written notice to Harutunian Engineering, Inc.

REV No	DATE	DRWN	CHKD	REMARKS
△	–	–	–	–

DESIGNED BY: HEI
DRAWN BY: HEI
SHEET CHK'D BY: HEI
CROSS CHK'D BY: HEI
APPROVED BY: HEI
DATE: APRIL 2016

CDM Smith
Riata Corporate Park, 12357-A Riata Trace Parkway, Suite 210
Austin, TX 78727
Tel: (512) 346-1100
Texas Registration Number F-3043

HEI
HARUTUNIAN ENGINEERING, INC.
305 E Huntland Dr, Ste 500; Austin, TX 78752
TBPE Firm Registration No. F-2408

CITY OF AUSTIN, TEXAS - AUSTIN WATER UTILITY
CIP 3333.016
SOUTH AUSTIN REGIONAL WWTP
THICKENER IMPROVEMENTS PROJECT

SLUDGE TRANSFER PUMP BUILDING
ELECTRICAL MODIFICATION FLOOR PLAN
REFERENCE DRAWING

PROJECT No 590–104217
FILE NAME: E–69

SHEET No
E-69

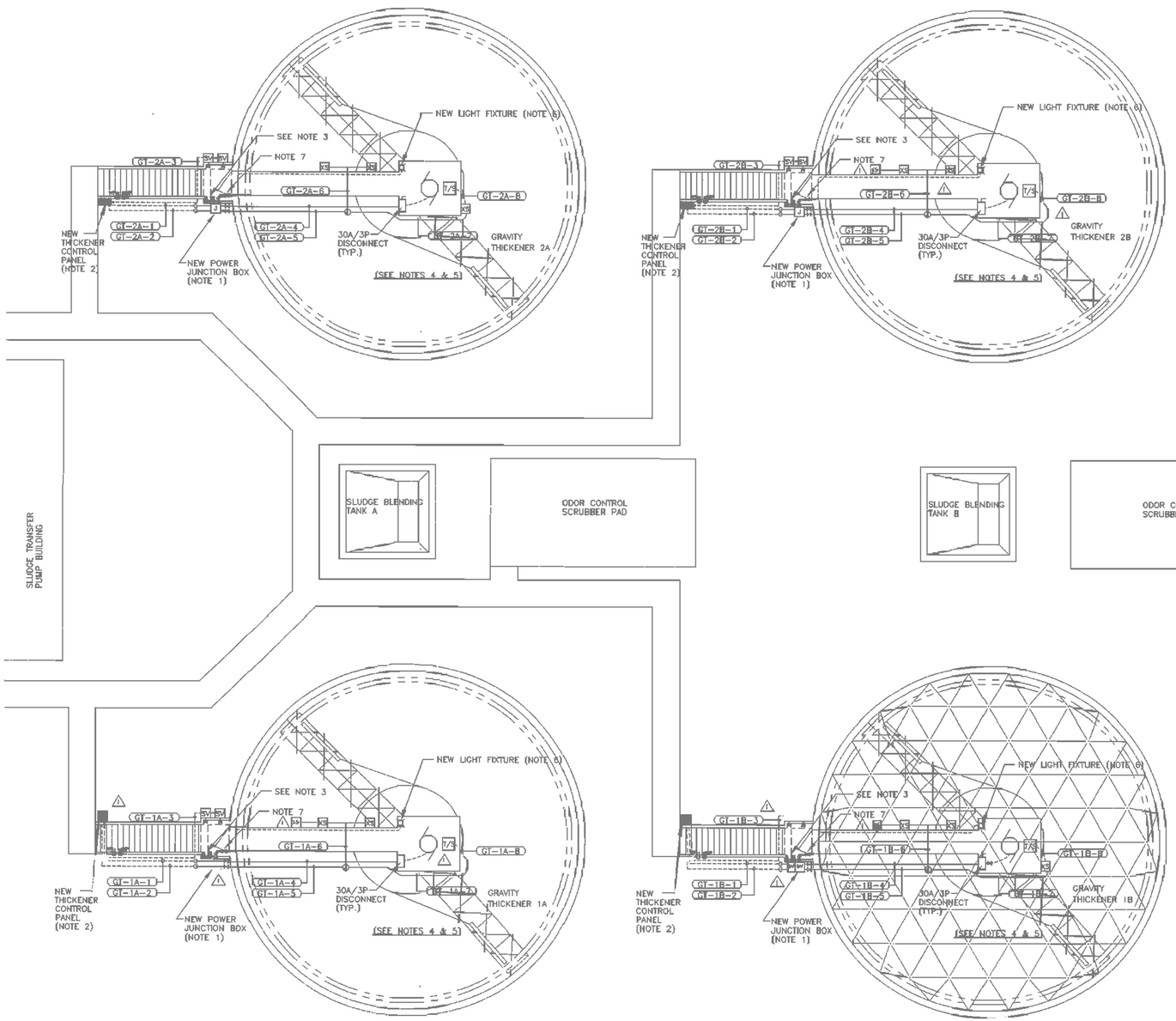

NOTES:

1. INSTALL NEW POWER JUNCTION BOX. LOCATE JUNCTION BOX TO SUIT FIELD CONDITION. SEE DETAIL 2/E-46 FOR TYPICAL INSTALLATION.
2. FIELD LOCATE THICKENER CONTROL PANEL TO SUIT EXISTING FIELD CONDITIONS.
3. REMOVE EXISTING 120 VAC AND 250 VAC RECEPTACLES AT TOP OF STAIRS. CONVERT DEVICE BOX INTO JUNCTION BOX. EXTEND EXISTING CIRCUITS TO NEW/PROPOSED RECEPTACLES NEAR THICKENER CONTROL PANEL.
4. ALL MATERIALS AND INSTALLATION OF MATERIALS, IN THE THICKENER DOME AREA, TO CONFORM WITH HAZARD AREA CLASSIFICATION CLASS 1, DIV. 1 GROUP D. AS DEFINED IN THE 1993 REVISION OF NFPA-70 (NATIONAL ELECTRICAL CODE).
5. ALL EXPOSED CONDUIT PROVIDED TO BE RIGID ALUMINUM. ALL CONDUIT SUPPORTS TO BE ALUMINUM.
6. REFER TO DETAIL 3/E-46 FOR LIGHT FIXTURE DETAIL.
7. PROVIDE NEW LIGHT SWITCH ON EXTERIOR OF DOME. LIGHT SWITCH TO BE CROUSE-HINDS "EDS" OR EQUAL. CONNECT TO EXISTING POWER CIRCUIT.

GENERAL NOTES:

1. THE EXISTING INFORMATION SHOWN ON THIS DRAWING WAS OBTAINED FROM THE PROJECT ENTITLED "SOUTH AUSTIN REGIONAL WASTEWATER TREATMENT PLANT MISCELLANEOUS IMPROVEMENTS PROJECT" DATED DECEMBER 1995. THIS DRAWING IS PROVIDED FOR REFERENCE PURPOSES ONLY AND MAY NOT EXACTLY REFLECT THE EXISTING CONDITIONS. THEREFORE, THE CONTRACTOR IS TO EXERCISE EXTREME CARE AND FIELD VERIFY THE EXISTING CONDITIONS PRIOR TO COMMENCING FULL SCALE DEMOLITION OR RENOVATION ACTIVITIES. FOLLOWING THE DISCOVERY VERIFICATION OF THE EXISTING FIELD CONDITIONS, SHOULD ADJUSTMENTS BECOME A NECESSITY TO THE EXISTING OR PROPOSED SYSTEM (AS APPLICABLE), THE EXISTING DISCOVERED FIELD CONDITIONS MUST BE BROUGHT TO THE OWNER'S ATTENTION FOR EXECUTION OF THE NECESSARY ADJUSTMENTS/MODIFICATIONS.

1 [E-22]

RECORD DRAWING
PREPARED BY KWA
DATE 1/13/98

NO.	DATE	REVISION	APPROV.
4			
3			
2			
1	12/97	RECORD DRAWING	

WARNING
0 1/2 1
IF THIS BAR DOES NOT MEASURE 1" THEN DRAWING IS NOT TO SCALE

STATE OF TEXAS
C. J. TROUTT
41075
REGISTERED PROFESSIONAL ENGINEER
12/31/95

CITY OF AUSTIN, TEXAS
SOUTH AUSTIN REGIONAL WASTEWATER TREATMENT PLANT
MISCELLANEOUS IMPROVEMENTS PROJECT
GRAVITY THICKENERS
ELECTRICAL PLAN

Turner Collie & Braden Inc.
ENGINEERS • PLANNERS • PROJECT MANAGERS

Unit Public Works	Scale 1/8"=1'-0"	Date NOV. 1995	
Designed CT	Checked SGE	Job No. 72-07109-206	Contract 1
Drawn DW	Approved HCA	Sheet 92 of 97	

Drg. No. E-43

Plotted: 4/22/2016 8:52:35 AM

STATE OF TEXAS
K. A. HARUTUNIAN
59181
REGISTERED PROFESSIONAL ENGINEER
4/22/2016

REUSE OF DOCUMENTS
This document, and the designs incorporated herein, is an instrument of professional service that has been developed, designed and prepared by Harutunian Engineering, Inc., and is not to be used, in whole or part, for any other project without giving written notice to Harutunian Engineering, Inc.

REV No	DATE	DRWN	CHKD	REMARKS
1	–	–	–	–

DESIGNED BY: HEI
DRAWN BY: HEI
SHEET CHK'D BY: HEI
CROSS CHK'D BY: HEI
APPROVED BY: HEI
DATE: APRIL 2016

CDM Smith
Riata Corporate Park, 12357-A Riata Trace Parkway, Suite 210
Austin, TX 78727
Tel: (512) 346-1100
Texas Registration Number F-3043

HARUTUNIAN ENGINEERING, INC.
305 E Huntland Dr, Ste 500; Austin, TX 78752
TBPE Firm Registration No. F-2408

CITY OF AUSTIN, TEXAS - AUSTIN WATER UTILITY
CIP 3333.016
SOUTH AUSTIN REGIONAL WWTP
THICKENER IMPROVEMENTS PROJECT

GRAVITY THICKENERS 1A, 2A, 1B AND 2B
PLAN
REFERENCE DRAWING

PROJECT No 590-104217
FILE NAME: E-70

SHEET No
E-70

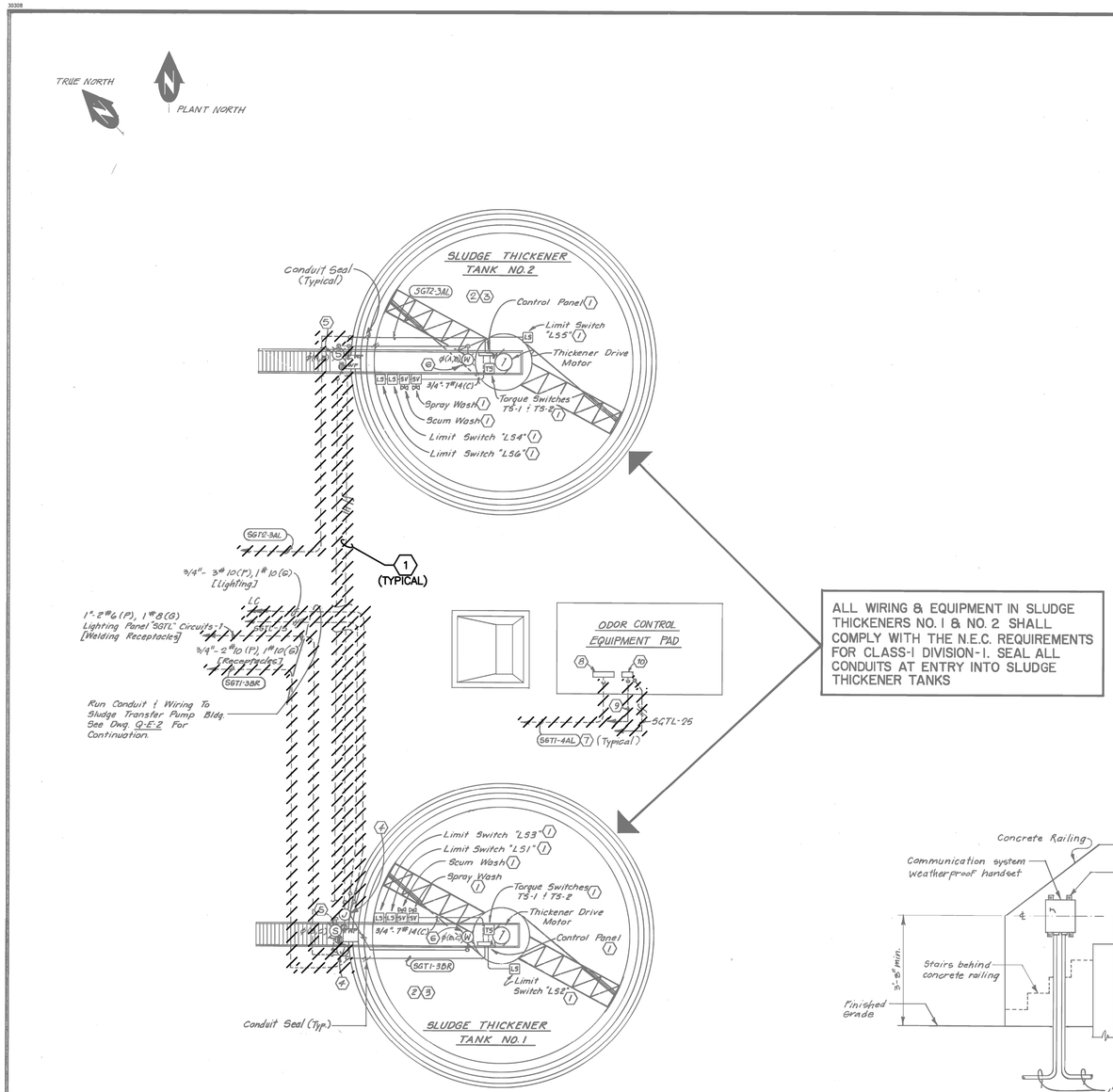

ALL WIRING & EQUIPMENT IN SLUDGE THICKENERS NO. 1 & NO. 2 SHALL COMPLY WITH THE N.E.C. REQUIREMENTS FOR CLASS-1 DIVISION-1. SEAL ALL CONDUITS AT ENTRY INTO SLUDGE THICKENER TANKS

SLUDGE THICKENER TANKS NO. 1 & NO. 2
POWER & LIGHTING
SCALE : 1" = 10'-0"

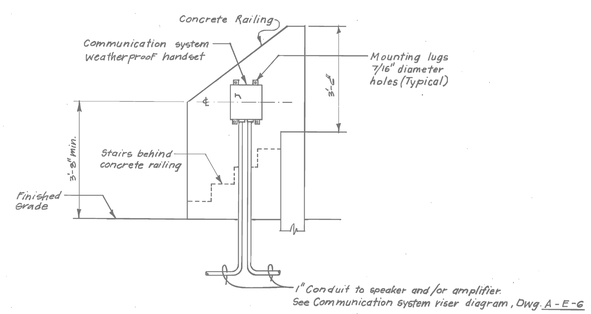

TYPICAL TREATMENT TANK COMMUNICATION SYSTEM HANDSET MOUNTING DETAIL
NOT TO SCALE

KEY NOTES

1. LIMIT SWITCHES, TORQUE SWITCHES, SOLENOID VALVES AND CONTROL PANEL ARE FURNISHED WITH THE CLARIFIERS.
2. RUN CONDUITS UNDER ACCESS WALKWAY. SUPPORT FROM WALKWAY STRUCTURAL MEMBERS.
3. ALL EXPOSED CONDUITS AT SLUDGE THICKENER TANKS ARE TO BE P.V.C. COATED RIGID STEEL.
4. MOUNT JUNCTION BOX ON OUTSIDE WALL OF SLUDGE THICKENER TANKS @ 3'-0" ABOVE FINISHED GRADE.
5. SEE DRAWING NO. U-E-1 FOR FIXTURE TYPE "S" AND RECEPTACLE MOUNTING DETAIL.
6. FIXTURE TYPE "W" TO BE APPLETON CAT. #CLS-15150-208V, 150 WATT, HPS LAMP WITH #CHR-4ST REFLECTOR AND #CGU2 WIRE GUARD (OR APPROVED EQUAL). FIXTURE SUITABLE FOR EXPLOSION-PROOF CLASS-1 DIVISION-1. MOUNT FIXTURE SIMILAR TO DETAIL ON DRAWING U-E-1.
7. REFER TO ELECTRICAL ONE LINE DIAGRAM DRAWING Q-E-1.
8. ODOR CONTROL UNIT CONTROL PANEL. VERIFY EXACT LOCATION OF CONTROL PANEL WITH ODOR CONTROL EQUIPMENT SUPPLIER AND MAKE ALL FINAL CONNECTIONS TO MANUFACTURER'S RECOMMENDATION.
9. 3/4" 2 #14 (A) TO ANNUNCIATOR PANEL POINT #20.
10. HYDROGEN SULFIDE MONITOR PANEL MOUNTED ON ODOR CONTROL UNIT. VERIFY EXACT LOCATION OF PANEL WITH ODOR CONTROL UNIT SUPPLIER AND MAKE ALL FINAL CONNECTIONS TO MANUFACTURER'S RECOMMENDATION.

KEY NOTES:

1. DEMOLISH ALL EXISTING UNDERGROUND DUCT BANKS AND CONDUITS ON THIS DRAWING, BETWEEN THE SITE STUB UPS BACK TO SLUDGE TRANSFER PUMP BUILDING.

GENERAL NOTES:

1. REFER TO DEMOLITION BID ALTERNATE ON DRAWING NOS. [E-72] AND [E-73] FOR ADDITIONAL REQUIREMENTS NOT SHOWN HERE.

I HEREBY CERTIFY THIS "RECORD DRAWINGS" IS CORRECT AND WAS PREPARED UNDER MY SUPERVISION.
11/7/86
11/1/89

STATE OF TEXAS — JAMES R. SCHILLY 27165 — REGISTERED PROFESSIONAL ENGINEER

TRIAD ENGINEERING
CONSULTING ENGINEERS
AUSTIN, TEXAS

NO.	DATE	REVISION	APPROV.
4			
3			
2			
1			

CITY OF AUSTIN, TEXAS
ONION CREEK WASTEWATER TREATMENT FACILITIES
GRAVITY THICKENER – ELECTRICAL

Turner Collie & Braden Inc.
CONSULTING ENGINEERS
TEXAS AUSTIN/DALLAS/EL PASO/HOUSTON/PORT ARTHUR
COLORADO DENVER/GRAND JUNCTION

Unit NAIL	Scale Horz AS NOTED Vert	Date APRIL 1984
Designed JRS / KAH	Checked JRS/KAH	Job No. 7109-025 Contract 2
Drawn GDG / JP	Approved JRS	Sheet 248 of 300

Dwg. No. P-E-1

GRAVITY THICKENERS 1A AND 2A AND
ODOR CONTROL SYSTEM PLAN DEMOLITION BID ALTERNATE
SCALE: NONE

1 [E-54]

K. A. HARUTUNIAN — STATE OF TEXAS — 59181 — REGISTERED PROFESSIONAL ENGINEER
4/22/2016

REUSE OF DOCUMENTS
This document, and the designs incorporated herein, is an instrument of professional service that has been developed, designed and prepared by Harutunian Engineering, Inc., and is not to be used, in whole or part, for any other project without giving written notice to Harutunian Engineering, Inc.

REV No	DATE	DRWN	CHKD	REMARKS
△	–	–	–	–

DESIGNED BY: HEI
DRAWN BY: HEI
SHEET CHK'D BY: HEI
CROSS CHK'D BY: HEI
APPROVED BY: HEI
DATE: APRIL 2016

CDM Smith
Riata Corporate Park, 12357-A Riata Trace Parkway, Suite 210
Austin, TX 78727
Tel: (512) 346-1100
Texas Registration Number F-3043

HARUTUNIAN ENGINEERING, INC.
305 E Huntland Dr, Ste 500; Austin, TX 78752
TBPE Firm Registration No. F-2408

CITY OF AUSTIN, TEXAS - AUSTIN WATER UTILITY
CIP 3333.016
SOUTH AUSTIN REGIONAL WWTP
THICKENER IMPROVEMENTS PROJECT

BID ALTERNATE
DUCTBANK DEMOLITION
(SHEET 1 OF 4)

PROJECT No 590-104217
FILE NAME: E-71
SHEET No
E-71

Plotted: 7/1/2016 10:47:20 AM

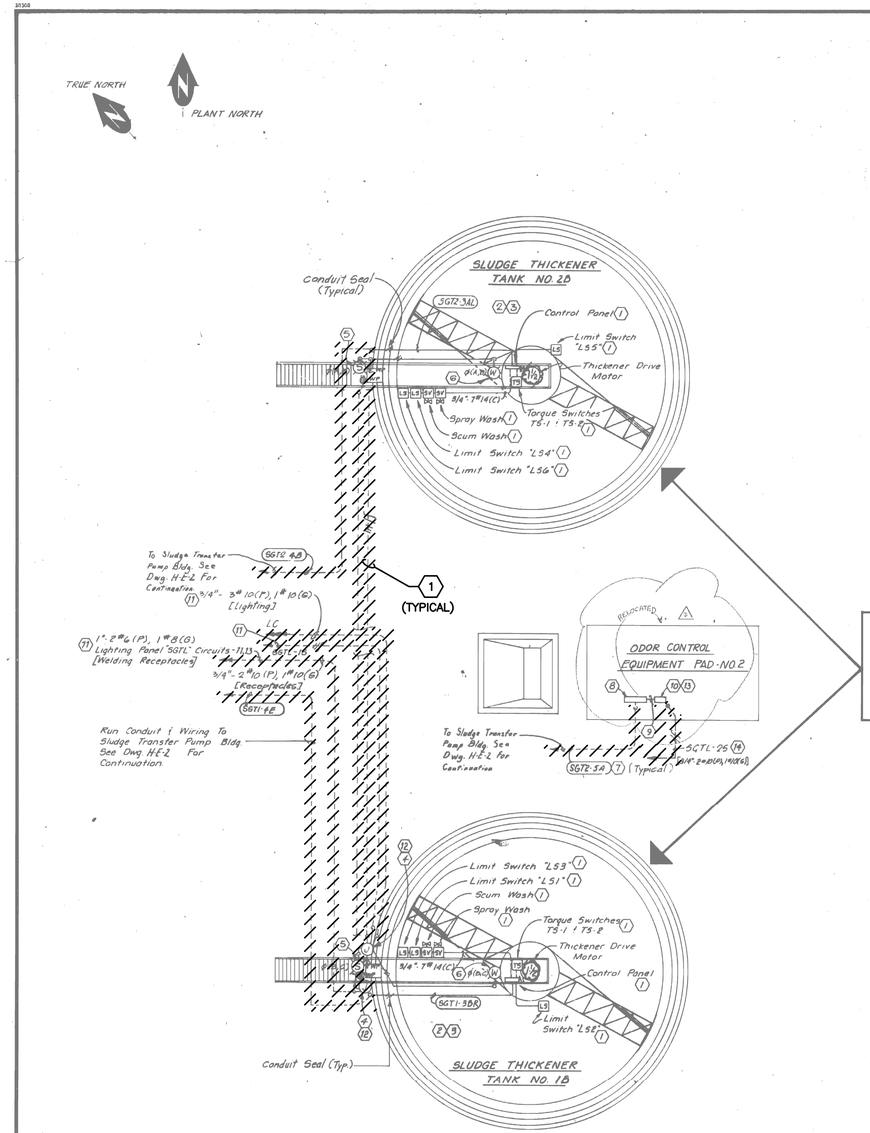

ALL WIRING & EQUIPMENT IN SLUDGE THICKENERS NO. 1 & NO. 2 SHALL COMPLY WITH THE N.E.C. REQUIREMENTS FOR CLASS-I DIVISION-I, SEAL ALL CONDUITS AT ENTRY INTO SLUDGE THICKENER TANKS

SLUDGE THICKENER TANKS NO. 1 & NO. 2
POWER & LIGHTING
SCALE: 1" = 10'-0"

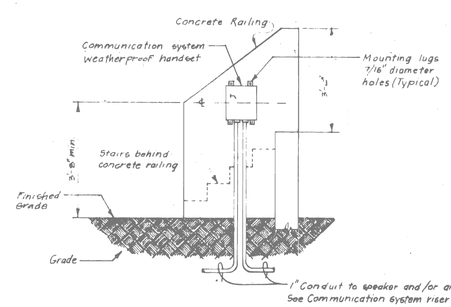

TYPICAL TREATMENT TANK COMMUNICATION SYSTEM HANDSET MOUNTING DETAIL
NOT TO SCALE

KEY NOTES

1. LIMIT SWITCHES, TORQUE SWITCHES, SOLENOID VALVES AND CONTROL PANEL ARE FURNISHED WITH THE SLUDGE THICKENERS.
2. RUN CONDUITS UNDER ACCESS WALKWAY. SUPPORT FROM WALKWAY STRUCTURAL MEMBERS.
3. ALL EXPOSED CONDUITS AT SLUDGE THICKENER TANKS ARE TO BE P.V.C. COATED RIGID STEEL.
4. MOUNT JUNCTION BOX ON OUTSIDE OF SLUDGE THICKENER TANKS @ 3'-0" ABOVE FINISHED GRADE.
5. SEE DRAWING NO. O-E-11 FOR FIXTURE TYPE "S" AND RECEPTACLE MOUNTING DETAIL.
6. FIXTURE TYPE "W" TO BE APPLETON CAT. #CLS-15150-208V, 150 WATT; HPS LAMP WITH #CWR-4ST REFLECTOR AND #CGU2 WIRE GUARD (OR APPROVED EQUAL). FIXTURE SUITABLE FOR EXPLOSION-PROOF CLASS-I DIVISION-1. MOUNT FIXTURE SIMILAR TO DETAIL ON DRAWING
7. REFER TO ELECTRICAL ONE LINE DIAGRAM DRAWING FOR CONDUIT AND WIRE SIZES.
8. ODOR CONTROL UNIT CONTROL PANEL. VERIFY EXACT LOCATION OF CONTROL PANEL WITH ODOR CONTROL EQUIPMENT SUPPLIER AND MAKE ALL FINAL CONNECTIONS TO MANUFACTURER'S RECOMMENDATION.
9. 3/4" 2 #14 (A) [ODOR CONTROL SYSTEM TROUBLE ALARM].
10. HYDROGEN SULFIDE MONITOR PANEL MOUNTED ON ODOR CONTROL UNIT. VERIFY EXACT LOCATION OF PANEL WITH ODOR CONTROL UNIT SUPPLIER AND MAKE ALL FINAL CONNECTIONS TO MANUFACTURER'S RECOMMENDATION.
11. RUN CONDUIT AND WIRING TO EXISTING JUNCTION BOX AT GRAVITY THICKENER NO. 1. SEE KEY NOTE NO. 12. SPLICE TO EXISTING CIRCUITS "SGTL-11,13,15" AND LIGHTING CONTACTOR CIRCUITS IN EXISTING JUNCTION BOXES. REFER TO DRAWING A-E-11 FOR EXACT LOCATION OF SLUDGE THICKENER NO. 1.
12. PRESENTLY THERE IS A SIMILAR JUNCTION BOX AT EXISTING SLUDGE THICKENER NO. 1 FOR WELDING RECEPTACLE, 120V CONVENIENCE OUTLETS AND/OR LIGHTING CIRCUITING OF EXISTING SLUDGE THICKENERS NO. 1 & NO. 2. REFER TO DRAWING A-E-11FOR EXACT LOCATION OF SLUDGE THICKENERS NO. 1 & NO. 2.
13. PRESENTLY THERE IS A SIMILAR HYDROGEN SULFIDE MONITORING PANEL MOUNTED ON EXISTING ODOR CONTROL UNIT NO. 1 (BETWEEN SLUDGE THICKENERS NO. 1 & NO. 2). REFER TO DRAWING A-E-11 FOR EXACT LOCATION OF EXISTING ODOR CONTROL UNIT NO. 1.
14. RUN CONDUIT AND WIRING TO HYDROGEN SULFIDE MONITORING PANEL (AT EXISTING ODOR CONTROL UNIT NO. 1. SEE KEY NOTE NO. 13.) AND SPLICE TO EXISTING LIGHTING CIRCUIT "SGTL-25".

KEY NOTES:

1. DEMOLISH ALL EXISTING UNDERGROUND DUCT BANKS AND CONDUITS ON THIS DRAWING, BETWEEN SITE STUB UPS BACK TO SLUDGE TRANSFER PUMP BUILDING.

GENERAL NOTES:

1. REFER TO DEMOLITION BID ALTERNATE ON DRAWING NOS. [E-71] AND [E-73] FOR ADDITIONAL REQUIREMENTS NOT SHOWN HERE.

TRIAD ENGINEERING
CONSULTING ENGINEERS
AUSTIN, TEXAS

NO	DATE	REVISION	APPROV
4			
3			
2	10/14/87	"AS-BUILT BY EPC	DSB/ABC
1	3-29-86	ADDENDUM NO. 1	JRS

CITY OF AUSTIN, TEXAS
SOUTH AUSTIN REGIONAL WASTEWATER TREATMENT PLANT
GRAVITY THICKENER - ELECTRICAL

Turner Collie & Braden Inc.
CONSULTING ENGINEERS
TEXAS AUSTIN/DALLAS/EL PASO/HOUSTON/PORT ARTHUR
COLORADO DENVER/CANADA JUNCTION

Unit BURKE	Scale: "Horz AS NOTED Vert	Date FEBRUARY 1986	
Designed JRS/KAH	Checked JRS/KAH	Job No. 410710B-102	Contract 8
Drawn GDG/JP	Approved JRS	Sheet 94 of 122	

Dwg. No. G-E-1

AS BUILT

RECORD DRAWING
PREPARED BY _____
DATE _____

STATE OF TEXAS
JAMES H. SCHULTZ
27165
REGISTERED PROFESSIONAL ENGINEER

ADDENDUM No. 1 Sht. 119 of 126

GRAVITY THICKENERS 1B AND 2B AND
ODOR CONTROL SYSTEM PLAN DEMOLITION BID ALTERNATE (1) [E-68]
SCALE: NONE

REUSE OF DOCUMENTS
This document, and the designs incorporated herein, is an instrument of professional service that has been developed, designed and prepared by Harutunian Engineering, Inc., and is not to be used, in whole or part, for any other project without giving written notice to Harutunian Engineering, Inc.

REV No	DATE	DRWN	CHKD	REMARKS
△	–	–	–	–

DESIGNED BY: HEI
DRAWN BY: HEI
SHEET CHK'D BY: HEI
CROSS CHK'D BY: HEI
APPROVED BY: HEI
DATE: APRIL 2016

CDM Smith
Riata Corporate Park, 12357-A Riata Trace Parkway, Suite 210
Austin, TX 78727
Tel: (512) 346-1100
Texas Registration Number F-3043

HARUTUNIAN ENGINEERING, INC.
305 E Huntland Dr, Ste 500; Austin, TX 78752
TBPE Firm Registration No. F-2408

CITY OF AUSTIN, TEXAS - AUSTIN WATER UTILITY
CIP 3333.016
SOUTH AUSTIN REGIONAL WWTP
THICKENER IMPROVEMENTS PROJECT

BID ALTERNATE
DUCTBANK DEMOLITION
(SHEET 2 OF 4)

STATE OF TEXAS
K. A. HARUTUNIAN
59181
REGISTERED PROFESSIONAL ENGINEER
4/22/2016

PROJECT No 590-104217
FILE NAME: E-72

SHEET No
E-72

Plotted: 7/1/2016 10:47:27 AM

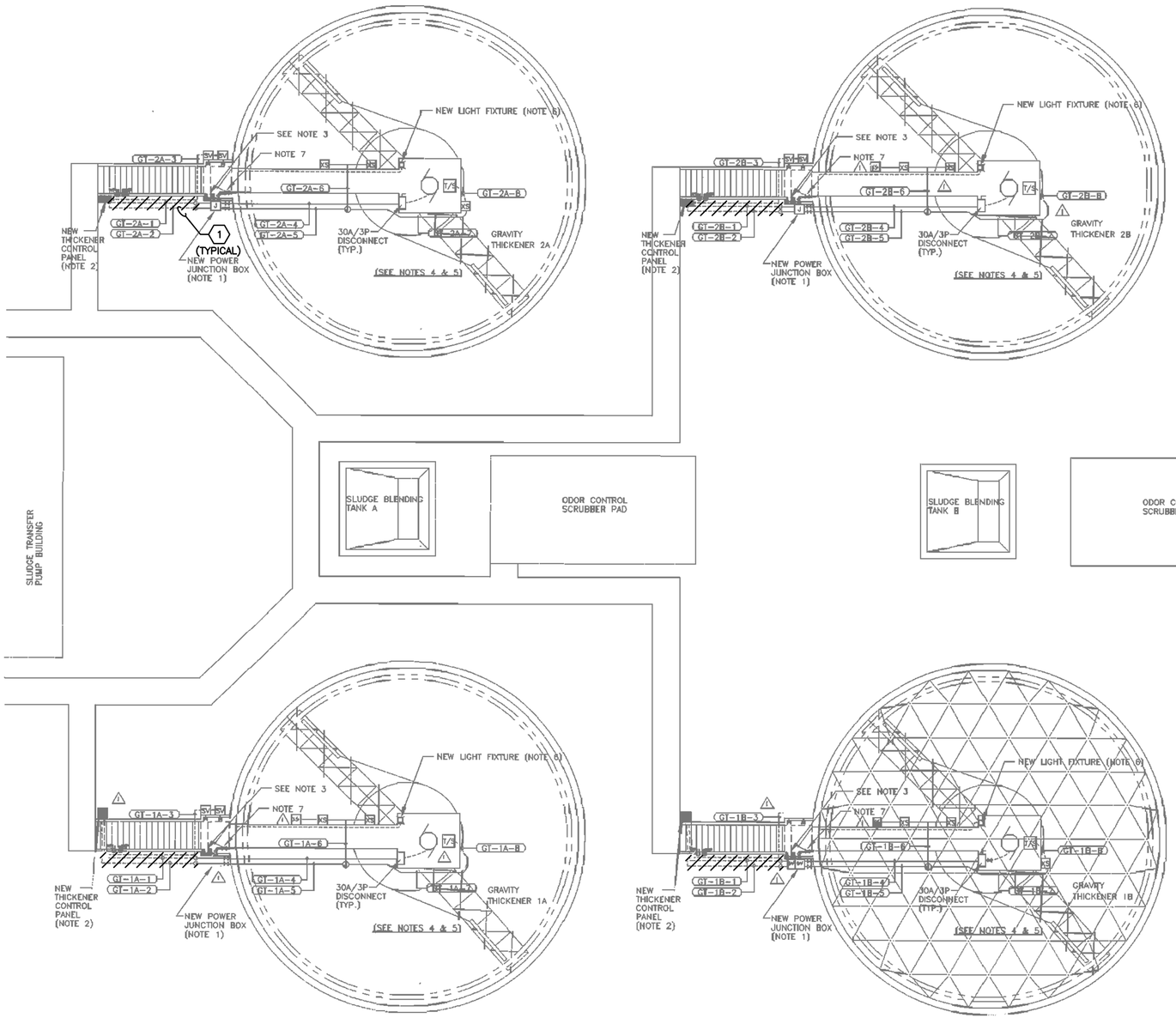

NOTES:

1. INSTALL NEW POWER JUNCTION BOX. LOCATE JUNCTION BOX TO SUIT FIELD CONDITION. SEE DETAIL 2/E-46 FOR TYPICAL INSTALLATION.
2. FIELD LOCATE THICKENER CONTROL PANEL TO SUIT EXISTING FIELD CONDITIONS.
3. REMOVE EXISTING 120 VAC AND 250 VAC RECEPTACLES AT TOP OF STAIRS. CONVERT DEVICE BOX INTO JUNCTION BOX. EXTEND EXISTING CIRCUITS TO NEW/PROPOSED RECEPTACLES NEAR THICKENER CONTROL PANEL.
4. ALL MATERIALS AND INSTALLATION OF MATERIALS, IN THE THICKENER DOME AREA, TO CONFORM WITH HAZARD AREA CLASSIFICATION CLASS 1, DIV. 1 GROUP D. AS DEFINED IN THE 1993 REVISION OF NFPA-70 (NATIONAL ELECTRICAL CODE).
5. ALL EXPOSED CONDUIT PROVIDED TO BE RIGID ALUMINUM. ALL CONDUIT SUPPORTS TO BE ALUMINUM.
6. REFER TO DETAIL 3/E-46 FOR LIGHT FIXTURE DETAIL.
7. PROVIDE NEW LIGHT SWITCH ON EXTERIOR OF DOME. LIGHT SWITCH TO BE CROUSE-HINDS "EDS" OR EQUAL. CONNECT TO EXISTING POWER CIRCUIT.

KEY NOTES:

1. DEMOLISH EXISTING UNDERGROUND DUCT BANK AND CONDUITS AS INDICATED, BETWEEN CONTROL PANEL, JUNCTION BOXES, AND SOLENOID VALVES.

GENERAL NOTES:

1. REFER TO DEMOLITION BID ALTERNATE ON DRAWING NOS. [E-71] AND [E-72] FOR ADDITIONAL REQUIREMENTS NOT SHOWN HERE.

RECORD DRAWING
PREPARED BY KWB
DATE 1/13/98

NO.	DATE	REVISION	APPROV.
4			
3			
2			
1	10/97	RECORD DRAWING	

WARNING
0 1/2 1
IF THIS BAR DOES NOT MEASURE 1" THEN DRAWING IS NOT TO SCALE

STATE OF TEXAS
C. J. TROUTT
41075
REGISTERED PROFESSIONAL ENGINEER
12/01/95

CITY OF AUSTIN, TEXAS
SOUTH AUSTIN REGIONAL WASTEWATER TREATMENT PLANT
MISCELLANEOUS IMPROVEMENTS PROJECT
GRAVITY THICKENERS
ELECTRICAL PLAN

Turner Collie & Braden Inc.
ENGINEERS • PLANNERS • PROJECT MANAGERS

Unit Public Works	Scale 1/8"=1'-0"	Date NOV. 1995	
Designed CT	Checked SGE	Job No. 72-07109-206	Contract 1
Drawn DW	Approved HCA	Sheet 92 of 97	

Dwg. No. E-43

GRAVITY THICKENERS 1A, 2A, 1B AND 2B PLANS – DEMOLITION BID ALTERNATE (1 [E-70])
SCALE: NONE

STATE OF TEXAS
K. A. HARUTUNIAN
59181
REGISTERED PROFESSIONAL ENGINEER
4/22/2016

REUSE OF DOCUMENTS
This document, and the designs incorporated herein, is an instrument of professional service that has been developed, designed and prepared by Harutunian Engineering, Inc., and is not to be used, in whole or part, for any other project without giving written notice to Harutunian Engineering, Inc.

REV No	DATE	DRWN	CHKD	REMARKS
1	–	–	–	–

DESIGNED BY: HEI
DRAWN BY: HEI
SHEET CHK'D BY: HEI
CROSS CHK'D BY: HEI
APPROVED BY: HEI
DATE: APRIL 2016

CDM Smith
Riata Corporate Park, 12357-A Riata Trace Parkway, Suite 210
Austin, TX 78727
Tel: (512) 346-1100
Texas Registration Number F-3043

HARUTUNIAN ENGINEERING, INC.
305 E Huntland Dr, Ste 500; Austin, TX 78752
TBPE Firm Registration No. F-2408

CITY OF AUSTIN, TEXAS - AUSTIN WATER UTILITY
CIP 3333.016
SOUTH AUSTIN REGIONAL WWTP
THICKENER IMPROVEMENTS PROJECT

BID ALTERNATE
DUCTBANK DEMOLITION
(SHEET 3 OF 4)

PROJECT No 590-104217
FILE NAME: E-73

SHEET No
E-73

Plotted: 7/1/2016 10:47:31 AM

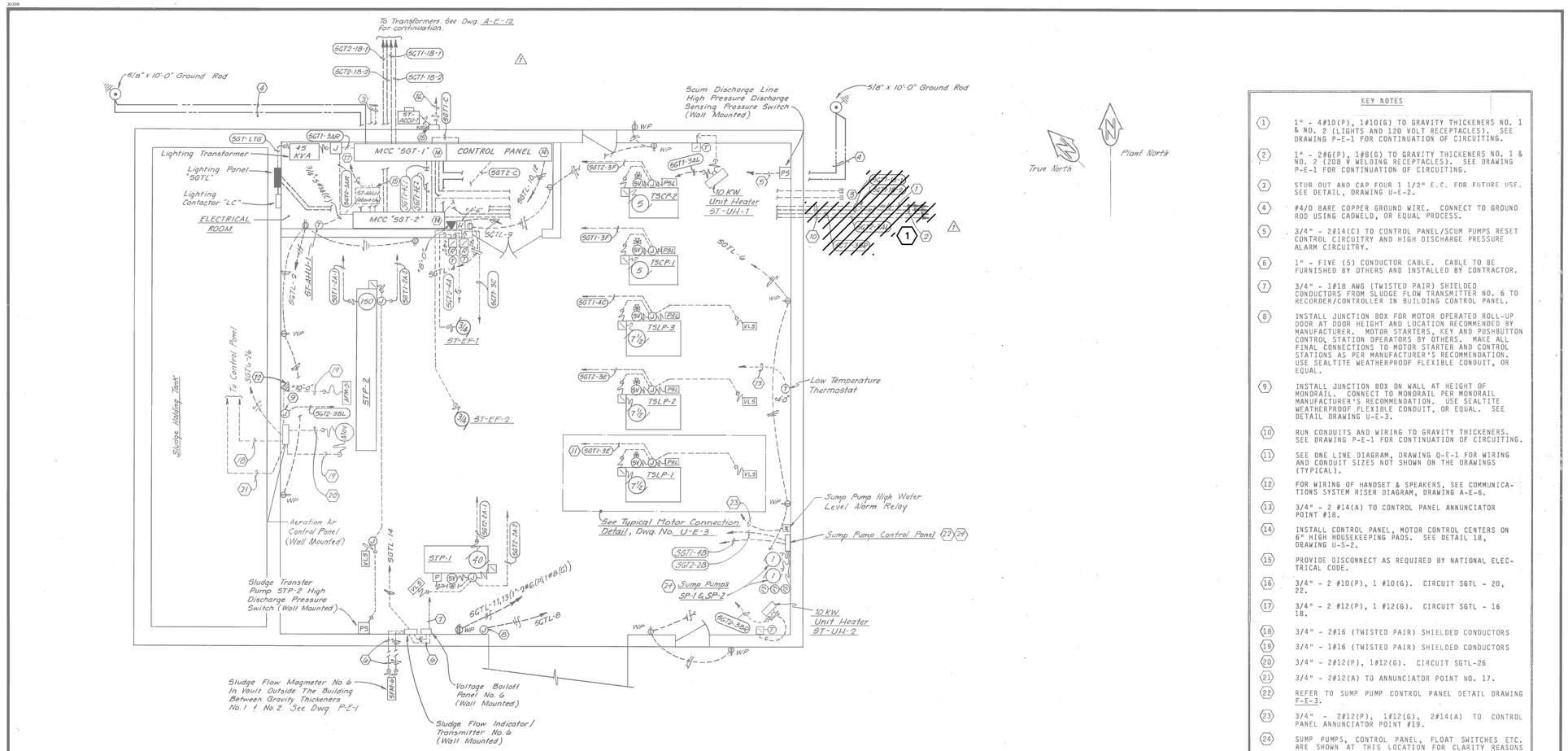

SLUDGE TRANSFER PUMP BLDG. - POWER

SCALE: 1/4" = 1'-0"

KEY NOTES:

1. DEMOLISH EXISTING UNDERGROUND DUCT BANK AND CONDUITS AS INDICATED, BETWEEN SITE STUB UPS BACK TO SLUDGE TRANSFER PUMP BUILDING.

KEY NOTES

1. 1" - 4#10(P), 1#10(G) TO GRAVITY THICKENERS NO. 1 & NO. 2 (LIGHTS AND 120 VOLT RECEPTACLES). SEE DRAWING P-E-1 FOR CONTINUATION OF CIRCUITING.
2. 1" - 2#6(P), 1#8(G) TO GRAVITY THICKENERS NO. 1 & NO. 2 (208 V WELDING RECEPTACLES). SEE DRAWING P-E-1 FOR CONTINUATION OF CIRCUITING.
3. STUB OUT AND CAP FOUR 1 1/2" E.C. FOR FUTURE USE. SEE DETAIL, DRAWING U-E-2.
4. #4/0 BARE COPPER GROUND WIRE. CONNECT TO GROUND ROD USING CADWELD, OR EQUAL PROCESS.
5. 3/4" - 2#14(C) TO CONTROL PANEL/SCUM PUMPS RESET CONTROL CIRCUITRY AND HIGH DISCHARGE PRESSURE ALARM CIRCUITRY.
6. 1" - FIVE (5) CONDUCTOR CABLE. CABLE TO BE FURNISHED BY OTHERS AND INSTALLED BY CONTRACTOR.
7. 3/4" - 1#18 AWG (TWISTED PAIR) SHIELDED CONDUCTORS FROM SLUDGE FLOW TRANSMITTER NO. 6 TO RECORDER/CONTROLLER IN BUILDING CONTROL PANEL.
8. INSTALL JUNCTION BOX FOR MOTOR OPERATED ROLL-UP DOOR AT DOOR HEIGHT AND LOCATION RECOMMENDED BY MANUFACTURER. MOTOR STARTERS, KEY AND PUSHBUTTON CONTROL STATION OPERATORS BY OTHERS. MAKE ALL FINAL CONNECTIONS TO MOTOR STARTER AND CONTROL STATIONS AS PER MANUFACTURER'S RECOMMENDATION. USE SEALTITE WEATHERPROOF FLEXIBLE CONDUIT, OR EQUAL.
9. INSTALL JUNCTION BOX ON WALL AT HEIGHT OF MONORAIL. CONNECT TO MONORAIL PER MONORAIL MANUFACTURER'S RECOMMENDATION. USE SEALTITE WEATHERPROOF FLEXIBLE CONDUIT, OR EQUAL. SEE DETAIL DRAWING U-E-3.
10. RUN CONDUITS AND WIRING TO GRAVITY THICKENERS. SEE DRAWING P-E-1 FOR CONTINUATION OF CIRCUITING.
11. SEE ONE LINE DIAGRAM, DRAWING Q-E-1 FOR WIRING AND CONDUIT SIZES NOT SHOWN ON THE DRAWINGS (TYPICAL).
12. FOR WIRING OF HANDSET & SPEAKERS, SEE COMMUNICATIONS SYSTEM RISER DIAGRAM, DRAWING A-E-6.
13. 3/4" - 2 #14(A) TO CONTROL PANEL ANNUNCIATOR POINT #18.
14. INSTALL CONTROL PANEL, MOTOR CONTROL CENTERS ON 6" HIGH HOUSEKEEPING PADS. SEE DETAIL 18, DRAWING U-S-2.
15. PROVIDE DISCONNECT AS REQUIRED BY NATIONAL ELECTRICAL CODE.
16. 3/4" - 2 #10(P), 1 #10(G). CIRCUIT SGTL - 20, 22.
17. 3/4" - 2 #12(P), 1 #12(G). CIRCUIT SGTL - 16 18.
18. 3/4" - 2#16 (TWISTED PAIR) SHIELDED CONDUCTORS
19. 3/4" - 1#16 (TWISTED PAIR) SHIELDED CONDUCTORS
20. 3/4" - 2#12(P), 1#12(G). CIRCUIT SGTL-26
21. 3/4" - 2#12(A) TO ANNUNCIATOR POINT NO. 17.
22. REFER TO SUMP PUMP CONTROL PANEL DETAIL DRAWING F-E-3.
23. 3/4" - 2#12(P), 1#12(G), 2#14(A) TO CONTROL PANEL ANNUNCIATOR POINT #19.
24. SUMP PUMPS, CONTROL PANEL, FLOAT SWITCHES ETC. ARE SHOWN AT THIS LOCATION FOR CLARITY REASONS ONLY. SUMP PUMP ARE TO BE LOCATED IN SOUTH EAST CORNER OF BUILDING (BELOW UNIT HEATER ST-UH-2).

GENERAL NOTES:

1. REFER TO DEMOLITION BID ALTERNATE ON DRAWING NOS. [E-72] AND [E-73] FOR ADDITIONAL REQUIREMENTS NOT SHOWN HERE.

TRIAD ENGINEERING
CONSULTING ENGINEERS
AUSTIN, TEXAS

NO.	DATE	REVISION	APPROV.
4			
3			
2			
1	6/6/85	Revised Location of conduit stub-out to Transformers & Sludge Thickeners	

CITY OF AUSTIN, TEXAS
ONION CREEK WASTEWATER TREATMENT FACILITIES

SLUDGE TRANSFER PUMP BUILDING
ELECTRICAL POWER PLAN

Turner Collie & Braden Inc.
CONSULTING ENGINEERS
TEXAS AUSTIN/DALLAS/EL PASO/HOUSTON/PORT ARTHUR
COLORADO DENVER/GRAND JUNCTION

Unit NAIL	Scale Horz. AS SHOWN Vert.	Date APRIL, 1984	
Designed KAH	Checked KAH/JRS	Job No. 7109-025	Contract 2
Drawn JP	Approved JRS	Sheet 257 of 300	

Dwg. No. Q-E-2

I HEREBY CERTIFY THIS "RECORD DRAWINGS" IS CORRECT AND WAS PREPARED UNDER MY SUPERVISION.
4/22/2016

STATE OF TEXAS
JAMES R. SCHULTZ
27165
REGISTERED PROFESSIONAL ENGINEER

SLUDGE TRANSFER PUMP BUILDING
FLOOR PLAN DEMOLITION BID ALTERNATE
SCALE: NONE

1 [E-56]

STATE OF TEXAS
K. A. HARUTUNIAN
59181
REGISTERED PROFESSIONAL ENGINEER
4/22/2016

REUSE OF DOCUMENTS
This document, and the designs incorporated herein, is an instrument of professional service that has been developed, designed and prepared by Harutunian Engineering, Inc., and is not to be used, in whole or part, for any other project without giving written notice to Harutunian Engineering, Inc.

REV No	DATE	DRWN	CHKD	REMARKS
1	–	–	–	–

DESIGNED BY: HEI
DRAWN BY: HEI
SHEET CHK'D BY: HEI
CROSS CHK'D BY: HEI
APPROVED BY: HEI
DATE: APRIL 2016

CDM Smith
Riata Corporate Park, 12357-A Riata Trace Parkway, Suite 210
Austin, TX 78727
Tel: (512) 346-1100
Texas Registration Number F-3043

HEI
HARUTUNIAN ENGINEERING, INC.
305 E Huntland Dr, Ste 500; Austin, TX 78752
TBPE Firm Registration No. F-2408

CITY OF AUSTIN, TEXAS - AUSTIN WATER UTILITY
CIP 3333.016

SOUTH AUSTIN REGIONAL WWTP
THICKENER IMPROVEMENTS PROJECT

BID ALTERNATE
DUCTBANK DEMOLITION
(SHEET 4 OF 4)

PROJECT No 590-104217
FILE NAME: E-74

SHEET No
E-74

Plotted: 7/1/2016 10:47:37 AM

INSTRUMENT IDENTIFICATION

EXAMPLE SYMBOLS

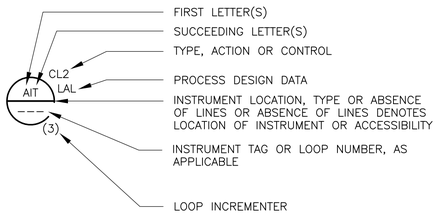

DIGITAL SYSTEM INTERFACES

- ▲ ANALOG INPUT
- ▼ ANALOG OUTPUT
- △ DISCRETE INPUT
- ▽ DISCRETE OUTPUT

GENERAL INSTRUMENTS OR FUNCTIONAL SYMBOLS

- XX — FIELD MOUNTED INSTRUMENT
- XX X/X — REAR-OF-PANEL MOUNTED INSTRUMENT
- XX — PANEL MOUNTED INSTRUMENT
- XX — MOTOR CONTROL CENTER OR VFD MOUNTED INSTRUMENT
- CONTROL OR DISPLAY FUNCTION VIA THE OPERATOR INTERFACE WITH THE DISTRIBUTED CONTROL SYSTEM. (FUNCTION NOT NORMALLY ACCESSIBLE TO THE OPERATOR)
- CONTROL OR DISPLAY FUNCTION VIA THE OPERATOR INTERFACE WITH THE DISTRIBUTED CONTROL SYSTEM. (FUNCTION OPERATOR ACCESSIBLE)
- X-X — ANNUNCIATOR DISPLAY FUNCTION WITH SIGNAL FOLLOWER CONTACTS X-X = ROW AND COLUMN POSITION

TRANSDUCERS

A	ANALOG	I	CURRENT
D	DIGITAL	P	PNEUMATIC
E	VOLTAGE	PF	PULSE FREQUENCY
F	FREQUENCY	PD	PULSE DURATION
H	HYDRAULIC	R	RESISTANCE

EXAMPLE:

FY I/P — CURRENT TO PNEUMATIC TRANSDUCER (BACK OF PANEL, IN A FLOW LOOP)

INSTRUMENT SOCIETY OF AMERICA TABLE

	FIRST-LETTER		SUCCEEDING-LETTERS		
LETTER	PROCESS OR INITIATING VARIABLE	MODIFIER	READOUT OR PASSIVE FUNCTION	OUTPUT FUNCTION	MODIFIER
A	ANALYSIS (+)		ALARM		
B	BURNER, COMBUSTION		USER'S CHOICE (+)	USER'S CHOICE (+)	USER'S CHOICE (+)
C	USER'S CHOICE (+)			CONTROL	
D	DENSITY (S.G)	DIFFERENTIAL			
E	VOLTAGE		PRIMARY ELEMENT		
F	FLOW RATE	RATIO			
G	DATA		GLASS,GAUGE VIEWING DEVICE	GATE	
H	HAND (MANUAL)				HIGH
I	CURRENT (ELECTRICAL)		INDICATE		
J	POWER	SCAN			
K	TIME, TIME SCHEDULE	TIME RATE OF CHANGE		CONTROL STATION	
L	LEVEL		LIGHT (PILOT)		LOW
M	MOTION	MOMENTARY			MIDDLE
N	TORQUE		USER'S CHOICE (+)	USER'S CHOICE (+)	USER'S CHOICE (+)
O	USER'S CHOICE (+)		ORIFICE RESTRICTION		
P	PRESSURE, VACUUM		POINT (TEST) CONNECTION		
Q	QUANTITY	INTEGRATE			
R	RADIATION		RECORD OR PRINT		
S	SPEED, FREQUENCY	SAFETY		SWITCH	
T	TEMPERATURE			TRANSMIT	
U	MULTIVARIABLE (+)		MULTIFUNCTION (+)	MULTIFUNCTION (+)	MULTIFUNCTION (+)
V	VIBRATION,MECHANICAL ANALYSIS			VALVE, DAMPER LOUVER	
W	WEIGHT, FORCE		WELL		
X	UNCLASSIFIED (+)	X AXIS	UNCLASSIFIED (+)	UNCLASSIFIED (+)	UNCLASSIFIED (+)
Y	EVENT, STATE OR PRESENCE	Y AXIS		RELAY, COMPUTE, CONVERT	
Z	POSITION	Z AXIS		DRIVE, ACTUATOR, UNCLASSIFIED FINAL CONTROL ELEMENT	

(+) WHEN USED, EXPLANATION IS SHOWN ADJACENT TO INSTRUMENT SYMBOL. SEE ABBREVIATIONS AND LETTER SYMBOLS.

SPECIAL CASES

- YL OO — ON AND OFF EVENT LIGHTS
- YL FAIL — FAIL INDICATING LIGHT
- ZL OC — OPENED AND CLOSED POSITION LIGHTS
- HS OSC — OPEN, STOP, CLOSE MOMENTARY PUSHBUTTONS
- HS LOR — LOCAL-OFF-REMOTE SWITCH. MAINTAINED CONTACT SWITCH (CONTROLLED DEVICE WILL RESTART ON RETURN OF POWER AFTER POWER FAILURE).
- NSH OC — HIGH TORQUE ON OPEN TORQUE SWITCH AND HIGH TORQUE ON CLOSE TORQUE SWITCH
- ZS 100% OP — POSITION SWITCH INDICATING 100% OPEN POSITION
- ZS 100% CL — POSITION SWITCH INDICATING 100% CLOSED POSITION
- ZTC 0-100% — POSITION TRANSMITTER CONTROLLER FROM 1 TO 100%
- HS SS — START AND STOP PUSHBUTTONS
- ZI %OP — % OPEN POSITION INDICATION

LINES LEGEND

- A — A — ANALOG SIGNAL (4 TO 20 mAdc, ETC.)
- DISCRETE SIGNAL (ON/OFF, ETC.) OR OTHER ELECTRICAL SIGNAL
- O — O — O — DATA LINK
- PD — PD — PULSE DURATION SIGNAL
- PF — PF — PULSE FREQUENCY SIGNAL
- PNEUMATIC SIGNAL
- FILLED SYSTEM SIGNAL
- HYDRAULIC SYSTEM SIGNAL
- TYPICAL ASSEMBLY

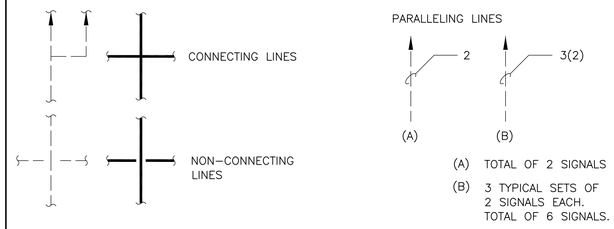

INTERFACE SYMBOLS

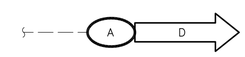

- = SIGNAL INTERFACE
- A = INTERFACE LETTER
- D = DESTINATION DRAWING NO.
- S = SOURCE DRAWING NO.

N — SIGNAL LINE CONTINUATION N=1,2,3,ETC

ABBREVIATIONS & LETTER SYMBOLS

AC	ALTERNATING CURRENT
ACK	ACKNOWLEDGE
ALKY	ALKALINITY
AM	AUTO-MANUAL
AOM	AUTO-OFF-MANUAL
CAM	COMPUTER-AUTO-MANUAL
CCS	CENTRAL CONTROL SYSTEM
CF	CUBIC FEET
CL2 etc.	CHLORINE (TYPICAL:USE STANDARD CHEMICAL ELEMENT ABBREVIATION)
CM	COMPUTER-MANUAL
COMB	COMBUSTIBLE
DC	DIRECT CURRENT
DCP	DISTRIBUTED CONTROL PANEL
DCS	PLANT DISTRIBUTION CONTROL SYSTEM
DO	DISSOLVED OXYGEN
E-STOP	EMERGENCY STOP
ETM	ELAPSED TIME METER
FCL2	FREE CHLORINE RESIDUAL
FOR	FORWARD-OFF-REVERSE
FOS	FAST-OFF-SLOW
FOSA	FAST-OFF-SLOW-AUTO
FOSR	FAST-OFF-SLOW-REMOTE
FP-W-X	FIELD PANEL NO. WX (W = UNIT PROCESS NUMBER X = PANEL NUMBER)
FR	FORWARD-REVERSE
H2S	HYDROGEN SULFIDE
HOA	HAND-OFF-AUTO
HOD	HAND-OFF-DCS
HOR	HAND-OFF-REMOTE
LCP-X	LOCAL CONTROL PANEL NO.X
LEL	LOWER EXPLOSIVE LIMIT
LOD	LOCAL-OFF-DCS
LOR	LOCAL-OFF-REMOTE
LOS	LOCKOUT STOP
LR	LOCAL-REMOTE
LRM	LOCAL-REMOTE-MAINTENANCE
LWMR	LOCKOUT RELAY WITH MANUAL RESET
MA	MANUAL-AUTO
MCC-X	MOTOR CONTROL CENTER NO.X
MMR	MOTOR MANAGEMENT PROTECTIVE RELAY
MR	MANUAL REMOTE
MSC	MANUFACTURER SUPPLIED CABLE
NH_2CL	CHLORAMINE
NH_3	AMMONIA
OC	OPEN-CLOSE (D)
OCA	OPEN-CLOSE-AUTO
OCD	OPEN-CLOSE-DCS
OCR	OPEN-CLOSE-REMOTE
OLR	OFF-LOCAL-REMOTE
OO	ON-OFF
OOA	ON-OFF-AUTO
OOAM	ON-OFF-AUTO-MAINTENANCE
OOM	ON-OFF-MAINTENANCE
OOR	ON-OFF-REMOTE
OOT	ON-OFF-TEST
OR	OPEN-REMOTE
ORP	OXIDATION REDUCTION POTENTIAL
OSC	OPEN-STOP-CLOSE
P/B	PUSHBUTTON
PFCC	POWER FACTOR CORRECTION CAPACITOR
pH	HYDROGEN ION CONCENTRATION
PMU	POWER MONITORING UNIT
RM-X	REMOTE MULTIPLEXING MODULE NO.X
RMOA	REMOTE/MANUAL/OFF/AUTO
ROJ	RUN-OFF-JOG
RTU-X	REMOTE TELEMETRY UNIT NO.X
S/D	SHUTDOWN
SF	SLOWER-FASTER
SPD	SURGE PROTECTIVE DEVICE
SS	START-STOP
SSA	START-STOP-AUTO
SSC	SUPERVISORY SET POINT CONTROL
TCL_2	TOTAL CHLORINE RESIDUAL
TOC	TOTAL ORGANIC CARBON
TOD	TOTAL OXYGEN DEMAND
TURB	TURBIDITY
VFD	VARIABLE FREQUENCY DRIVE
VHC	VOLATILE HYDROCARBONS
VIB	VIBRATION

GENERAL NOTES

1. COMPONENTS AND PANELS SHOWN WITH A DOUBLE ASTERISK (**) SHALL BE PROVIDED AS PART OF MECHANICAL, DIVISION 11, 13 OR 15.

2. THIS IS A STANDARD LEGEND. THEREFORE, NOT ALL OF THIS INFORMATION MAY BE USED ON THIS PROJECT.

3. EQUIPMENT AND STRUCTURES SHOWN SCREENED ARE EXISTING AND THEREFORE SHOWN FOR REFERENCE ONLY.

INDICATES EQUIPMENT/DEVICES TO BE DEMOLITIONED AS PART OF THIS PROJECT

SYMBOLS

Δ	DIFFERENCE
Σ	SUM
X	MULTIPLY
÷	DIVIDE
f(x)	CHARACTERIZED
X^n	RAISE TO THE Nth POWER
√	SQUARE ROOT
AVG	AVERAGE
1:1	REPEAT OR BOOST
>	SELECT HIGHEST SIGNAL
<	SELECT LOWEST SIGNAL
+/-	BIAS
%	GAIN OR ATTENUATE

STATE OF TEXAS
K. A. HARUTUNIAN
59181
REGISTERED PROFESSIONAL ENGINEER
4/22/2016

REUSE OF DOCUMENTS
This document, and the designs incorporated herein, is an instrument of professional service that has been developed, designed and prepared by Harutunian Engineering, Inc., and is not to be used, in whole or part, for any other project without giving written notice to Harutunian Engineering, Inc.

REV No	DATE	DRWN	CHKD	REMARKS
△	–	–	–	–

DESIGNED BY: HEI
DRAWN BY: HEI
SHEET CHK'D BY: HEI
CROSS CHK'D BY: HEI
APPROVED BY: HEI
DATE: APRIL 2016

CDM Smith
Riata Corporate Park, 12357-A Riata Trace Parkway, Suite 210
Austin, TX 78727
Tel: (512) 346-1100
Texas Registration Number F-3043

HARUTUNIAN ENGINEERING, INC.
305 E Huntland Dr, Ste 500; Austin, TX 78752
TBPE Firm Registration No. F-2408

CITY OF AUSTIN, TEXAS - AUSTIN WATER UTILITY
CIP 3333.016

SOUTH AUSTIN REGIONAL WWTP
THICKENER IMPROVEMENTS PROJECT

INSTRUMENTATION SYMBOLS LEGEND
(SHEET 1 OF 3)

PROJECT No 590-104217
FILE NAME: G-I-1

SHEET No
G-I-1

Plotted: 4/22/2016 8:53:53 AM

INSTRUMENT POWER SYMBOLS

120VAC — 120 VOLT, 60 HZ POWER

M — ELECTRIC MOTOR

CONTROL LOGIC SYMBOLS

I — INTERLOCK

MCC ELECTRICAL INTERLOCK

ACTUATOR SYMBOLS

E XX — ELECTRIC

NOTE
ON LOSS OF PRIMARY POWER (PNEUMATIC, ELECTRICAL OR HYDRAULIC)
XX: FO = FAIL OPEN
FC = FAIL CLOSED
FLP = FAIL TO LAST POSITION

GAUGE INSTRUMENT SYMBOLS

MECHANICAL PRESSURE GAUGE (UNLESS NOTED, AS TEMPERATURE OR OTHER)

PRIMARY FLOW ELEMENT SYMBOLS

ELECTROMAGNETIC FLOWMETER (INLINE)

PRIMARY LEVEL ELEMENT SYMBOLS

LEVEL (ULTRASONIC)

LE — SUBMERSIBLE LEVEL TRANSDUCER

INSTRUMENTATION LOOP WIRING SCHEMATIC SYMBOLS

INSTRUMENT RELAY CONTACT SPDT (FORM C) CONTACT

RESISTANCE TEMPERATURE DETECTOR (RTD)

T/C — THERMOCOUPLE TEMPERATURE SENSING ELEMENT

3-CONDUCTOR SHIELDED CABLE

2-CONDUCTOR SHIELDED CABLE

4-20mADC ANALOG INPUT — INSTRUMENT ANALOG INPUT

4-20mADC ANALOG OUTPUT — OUT — LOOP POWERED ANALOG OUTPUT

24VDC CONTROL POWER INPUT — 24VDC INSTRUMENT LOOP POWER SUPPLY

CONTROL SYSTEM ARCHITECTURE SYMBOLS

LEGEND:

- SINGLE MODE FIBER OPTIC PATCH CORD CABLE
- SINGLE MODE LOOSE TUBE FIBER OPTIC CABLE
- ETHERNET (COPPER)
- MULTI-MODE FIBER OPTIC CABLE
- FIBER OPTIC PATCH CORD
- SINGLE MODE FIBER OPTIC
- GBIC MODULE (GIGABIT INTERFACE CONVERTER)

PLC ABBREVIATIONS & LETTER SYMBOLS

SYMBOL	DESCRIPTION
CPU	CENTRAL PROCESSING UNIT
DI	DISCREET INPUT MODULE
DO	DISCREET OUTPUT MODULE
AI	ANALOG INPUT PLC MODULE
AO	ANALOG OUTPUT PLC MODULE
POWER SUPPLY	POWER SUPPLY
ETHERNET	NETWORK INTERFACE MODULE
SPACE	UNOCCUPIED SPACE (FOR FUTURE USE)

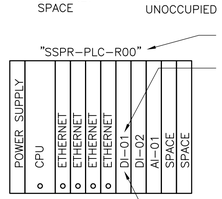

PLC RACK TAG

MODULE NUMBER

PROGRAMMABLE LOGIC CONTROLLER. RACK SIZE, MODULE QUANTITY, TYPE, AND LOCATION MAY VARY. (TAGGED "SSPR-PLC-R00", WITH FOUR ETHERNET MODULES, TWO DI MODULES, ONE AI MODULES, TWO SPACE, ONE CPU, AND ONE POWER SUPPLY SHOWN)

MODULE TYPE (SEE ABBREVIATIONS)

WIRING AND TERMINAL DEVICE LEGEND:

- DEVICE WIRING TERMINAL.
- TERMINAL BLOCK LOCATED IN EXISTING 480V MOTOR CONTROL CENTER "MCC-SGT1" OR "MCC-SGT2", AS APPLICABLE. ANY DEVICE SHOWN WITH DEVICE WIRING TERMINALS CONNECTED DIRECTLY TO THESE SYMBOLS WITH SOLID LINES IS ALSO LOCATED IN MOTOR CONTROL CENTER "MCC-SGT1" OR "MCC-SGT2", AS APPLICABLE.
- TERMINAL BLOCK LOCATED IN EXISTING CONTROL PANEL "PB01-CCP-01" OR "PB01-CCP-03", AS APPLICABLE. ANY DEVICE SHOWN WITH DEVICE WIRING TERMINALS CONNECTED DIRECTLY TO THESE SYMBOLS WITH SOLID LINES IS ALSO LOCATED IN RESPECTIVE CONTROL PANEL.
- TERMINAL BLOCK LOCATED IN EXISTING PROGRAMMABLE LOGIC CONTROLLER (PLC) CONTROL PANEL "RIO-2A". ANY DEVICE SHOWN WITH DEVICE WIRING TERMINALS CONNECTED DIRECTLY TO THESE SYMBOLS WITH SOLID LINES IS ALSO LOCATED IN RESPECTIVE CONTROL PANEL.
- TERMINAL BLOCK LOCATED IN FIELD. ANY DEVICE SHOWN WITH DEVICE WIRING TERMINALS CONNECTED DIRECTLY TO THESE SYMBOLS WITH SOLID LINES IS ALSO LOCATED SAME DEVICE.
- TERMINAL BLOCK LOCATED IN FIELD. ANY DEVICE SHOWN WITH DEVICE WIRING TERMINALS CONNECTED DIRECTLY TO THESE SYMBOLS WITH SOLID LINES IS ALSO LOCATED SAME DEVICE.
- TERMINAL BLOCK LOCATED IN PACKAGED SYSTEM CONTROL PANEL, AS APPLICABLE. ANY DEVICE SHOWN WITH DEVICE WIRING TERMINALS CONNECTED DIRECTLY TO THESE SYMBOLS WITH SOLID LINES IS ALSO LOCATED IN RESPECTIVE PACKAGED SYSTEM CONTROL PANEL.
- WIRING BETWEEN PANELS OR WIRING TO A FIELD MOUNTED DEVICE.

GENERAL NOTES:

1. TYPICAL DRAWINGS ARE PRESENTED FOR MULTIPLE EQUIPMENT. THESE TYPICAL DRAWINGS INCLUDE, BUT ARE NOT LIMITED TO:

   A. CONTROL WIRING SCHEMATICS,
   B. WIRING SCHEMATIC DETAILS,
   C. INSTRUMENT LOOP WIRING SCHEMATICS,
   D. FIELD INTERFACE WIRING SCHEMATICS,
   E. POWER WIRING SCHEMATICS,
   F. EQUIPMENT TAGGING REPLACEMENT TABLES, G. FIELD CONTROL STATION FRONT ELEVATIONS, ETC.

   ALTHOUGH TYPICAL WIRING SCHEMATICS ARE PRESENTED FOR EQUIPMENT, THE CONTRACTOR SHALL GENERATE SPECIFIC EQUIPMENT WIRING SCHEMATICS (I.E., INDIVIDUAL WIRING SCHEMATICS DEDICATED FOR EACH SPECIFIC EQUIPMENT) BASED UPON THE TYPICAL WIRING SCHEMATICS AND THE EQUIPMENT TAGS APPLICABLE TO THE TYPICAL WIRING SCHEMATICS AS SHOWN ON THE TYPICAL WIRING SCHEMATICS. THE CONTRACTOR GENERATED SPECIFIC EQUIPMENT WIRING SCHEMATICS SHALL FOLLOW THE SAME OVERALL PRESENTATION FORMAT AS THE TYPICAL EQUIPMENT WIRING SCHEMATICS PRESENTED HEREIN. THE SPECIFIC EQUIPMENT WIRING SCHEMATICS, COMPLETE WITH ALL SPECIFIC EQUIPMENT/DEVICE TAGS (AS MINIMUM, ALSO REFER TO THE SPECIFICATIONS), SHALL BE GENERATED BY THE CONTRACTOR AND INCLUDED WITH THE PROJECT SUBMITTALS (I.E., PRIOR TO EQUIPMENT PURCHASE) AND THE "AS-BUILT" DRAWINGS. ANY CONTRACTOR GENERATED WIRING SCHEMATICS SHOWN AS APPLICABLE TO MULTIPLE EQUIPMENT SHALL NOT BE ACCEPTED. THIS APPLIES TO ALL OTHER TYPES DRAWINGS, I.E., SCHEMATICS, FRONT ELEVATIONS, DETAILS, ETC., AS PRESENTED IN THIS PROJECT.

2. THE MAIN CONTROL PANEL/FIELD CONTROLS STATION SIZES SHOWN REPRESENT THE MINIMUM REQUIRED SIZES AND ARE APPROXIMATE. CONTRACTOR TO DETERMINE EXACT AS-BUILT SIZE REQUIRED FOR THE MAIN CONTROL PANEL/FIELD CONTROLS STATION TO MEET THE CONTRACT DOCUMENTS (DRAWINGS AND SPECIFICATIONS) WITHOUT ANY ADDITIONAL COST TO THE OWNER (SHOULD THE FINAL SIZE BE LARGER THAN THE MINIMUM SIZE REQUIRED BY THIS DRAWING). ADDITIONALLY, THE CONTRACTOR IS TO CAREFULLY REVIEW THE ELECTRICAL/CONTROL FLOOR PLAN DRAWING AND MAKE ANY ADJUSTMENTS/EQUIPMENT REARRANGEMENTS NECESSARY TO MEET NATIONAL ELECTRICAL CODE REQUIREMENTS AND ANY OTHER SAFETY CODES ADOPTED BY THE OWNER SHOULD THE MAIN CONTROL PANEL/FIELD CONTROLS STATION SIZE BE ANY GREATER/LARGER THAN THE MINIMUM SIZE REQUIRED BY THE PLANS. CONDUIT/WIRING, ETC. ADJUSTMENT CAUSED BY ANY EQUIPMENT REARRANGEMENT, ETC. SHALL ALSO BE PROVIDED AT NO ADDITIONAL COST TO THE OWNER.

3. THE MAIN CONTROL PANEL/FIELD CONTROL STATION FRONT ELEVATION DRAWINGS ARE INTENDED, IN PART, AS AN OVERALL CONCEPTUAL LAYOUT OF THE INTERIOR/EXTERIOR (AS APPLICABLE) OF THE MAIN CONTROL PANEL/FIELD CONTROLS STATION AND REPRESENTS THE OVERALL LAYOUT PATTERN OF MAJOR DEVICES AND TERMINATION OF DEVICES IN RELATION TO THE PROPOSED PROCESS/MECHANICAL SYSTEM. DO NOT INFER EXACT COMPONENT QUANTITIES AND LOCATIONS FROM THESE FRONT ELEVATION DRAWINGS. THE FRONT ELEVATION DRAWINGS ARE NOT INCLUSIVE OF ALL REQUIREMENTS AND DOES NOT DEPICT ALL COMPONENTS OR REQUIREMENTS OF THE MAIN CONTROL PANEL/FIELD CONTROLS STATION. COORDINATE ALL CONTROL DEVICES, CONTROL RELAYS, ETC., REQUIREMENTS WITH THE APPLICABLE EQUIPMENT WIRING SCHEMATICS. ALSO REFER TO THE WIRING SCHEMATICS DRAWINGS AND TO THE SPECIFICATIONS FOR ADDITIONAL INFORMATION AND REQUIREMENTS. PLEASE NOTE THAT THE EQUIPMENT AS IDENTIFIED ON EACH MAIN CONTROL PANEL/FIELD CONTROLS STATION FRONT ELEVATION DRAWING ARE TYPICAL FOR THE ENTIRE DRAWING UNLESS NOTED OTHERWISE. NUMBER IN CIRCLE CORRESPONDS TO IDENTIFICATION MARK IN THE APPLICABLE EQUIPMENT SCHEDULE.

4. CERTAIN SECTIONS OF THE DIVISION 17 SPECIFICATIONS CONTAIN ATTACHMENTS. THESE ATTACHMENTS INCLUDE, BUT ARE NOT LIMITED TO THE FOLLOWING:

   A. FIELD INSTRUMENT SCHEDULE,
   B. PLC I/O SCHEDULE,

   THE CONTRACTOR IS REMINDED THAT ALTHOUGH THESE ATTACHMENTS ARE PRESENTED IN THE CONTRACT SPECIFICATIONS, THEY SHALL BE CONTINUALLY MAINTAINED, I.E. "BLUE-LINED" AS DESCRIBED IN SECTION 1300, BY THE CONTRACTOR ALONG WITH THE OTHER CONTRACT DOCUMENTS AS RECORD DRAWINGS THROUGHOUT THE ENTIRE PROJECT DURATION AND SUBMITTED AS PART OF THE "AS-BUILT" DRAWINGS. ALSO REFER TO THE SPECIFICATIONS.

5. FOR PURPOSES OF CLARITY ON THE PROCESS AND INSTRUMENTATION DIAGRAMS, THE AREA CODE PORTION OF OWNER'S TAGGING SCHEME IS NOT SHOWN FOR THE INSTRUMENTS. REGARDLESS, THE INSTRUMENTS SHALL BE TAGGED INCLUSIVE OF THE AREA CODE. REFER TO THE INSTRUMENT LIST FOR THE COMPLETE INSTRUMENT TAGS AND TAG THE INSTRUMENTS ACCORDINGLY.

6. REFER TO PLC I/O WIRING SCHEDULE FOR INTERFACE POINTS TO THE DISTRIBUTED CONTROL SYSTEM THAT ARE SHOWN ON THE CONTROL WIRING SCHEDULE BUT NOT IDENTIFIED ON TAG REPLACEMENT SCHEDULE.

7. REFER TO AND COMPLY WITH THE GENERAL NOTES SHOWN ON THE ELECTRICAL GENERAL NOTES DRAWING NO. [G-E-4].

8. WHERE TYPICAL DRAWINGS ARE SHOWN, THE ACTUAL TAG FOR EACH EQUIPMENT WILL DIFFER FROM THAT SHOWN ON THE TYPICAL DRAWINGS. REFER TO THE APPLICABLE TAG REPLACEMENT SCHEDULES TO DERIVE THE CORRESPONDING TAGS FOR EACH EQUIPMENT. THE EQUIPMENT TAG REPLACEMENT SCHEDULE SHALL BE CROSS-REFERENCED WITH THE TYPICAL CONTROL SCHEMATIC/ INSTRUMENT LOOP/ETC. DRAWINGS IN ORDER TO ASSIGN THE PROPER REQUIRED TAGS TO ALL OF THE SPECIFIC DEVICES FOR EACH EQUIPMENT. THE CONTRACTOR SHALL FURNISH AND INSTALL ALL TAGS FOR EACH EQUIPMENT AS SHOWN. FOR EQUIPMENT TAGS THAT MAY BE SHOWN ON THE TYPICAL SCHEMATIC BUT NOT IDENTIFIED IN THE TAG REPLACEMENT SCHEDULE, REFER TO THE DETAILED ONE-LINE DIAGRAMS, ASSOCIATED TYPICAL WIRING SCHEMATIC DETAILS, PLC I/O SCHEDULE, AND OTHER CONTRACT DOCUMENTS.

9. THE CONTRACTOR SHALL USE CAUTION DURING THE DEMOLITION ACTIVITIES AND CAREFULLY IDENTIFY AND RECORD ALL EXISTING WIRES, WIRE NUMBERS, TERMINAL BLOCKS, AND ASSOCIATED DEVICE TERMINAL CONNECTIONS PRIOR TO COMMENCING DEMOLITION ACTIVITIES. THE CONTRACTOR SHALL USE THIS INFORMATION DURING THE RENOVATION ACTIVITIES TO RECONNECT EXISTING EQUIPMENT THAT IS SCHEDULED FOR REUSE.

STATE OF TEXAS
K. A. HARUTUNIAN
59181
REGISTERED PROFESSIONAL ENGINEER
4/22/2016

REUSE OF DOCUMENTS
This document, and the designs incorporated herein, is an instrument of professional service that has been developed, designed and prepared by Harutunian Engineering, Inc., and is not to be used, in whole or part, for any other project without giving written notice to Harutunian Engineering, Inc.

REV No	DATE	DRWN	CHKD	REMARKS
△	–	–	–	–

DESIGNED BY: HEI
DRAWN BY: HEI
SHEET CHK'D BY: HEI
CROSS CHK'D BY: HEI
APPROVED BY: HEI
DATE: APRIL 2016

CDM Smith
Riata Corporate Park, 12357-A Riata Trace Parkway, Suite 210
Austin, TX 78727
Tel: (512) 346-1100
Texas Registration Number F-3043

HARUTUNIAN ENGINEERING, INC.
305 E Huntland Dr, Ste 500; Austin, TX 78752
TBPE Firm Registration No. F-2408

CITY OF AUSTIN, TEXAS - AUSTIN WATER UTILITY
CIP 3333.016

SOUTH AUSTIN REGIONAL WWTP
THICKENER IMPROVEMENTS PROJECT

INSTRUMENTATION SYMBOLS LEGEND
(SHEET 2 OF 3)

PROJECT No 590-104217
FILE NAME: G-I-2

SHEET No
G-I-2

Plotted: 4/22/2016 8:53:58 AM

TYPICAL PIPE TAG NUMBERS & DESIGNATION

6"–RW–DI–L12W01

- FLOW DIRECTION
- LINE NUMBER (FIRST TWO DIGITS DENOTE ASSOCIATED AREA. IF 'W' IS PRESENT, PIPE REMAINS WITHIN ASSOCIATED AREA. IF NOT PRESENT, THEN PIPE RUNS FROM AREA DENOTED BY FIRST TWO DIGITS TO AREA DENOTED BY SECOND TWO DIGITS)
- SPEC
- SERVICE
- SIZE

PIPE LINE SYMBOLS

- PIPE UNION
- FLEXIBLE BELLOWS TYPE COUPLING
- FLEXIBLE COUPLING (GENERAL SYMBOL)
- QUICK CONNECT TYPE COUPLING
- HOSE CONNECTION
- Y–STRAINER
- REDUCER/ENLARGER
- BLIND FLANGE
- FLANGE CONNECTION
- CONTINUED PIPE
- DIAPHRAGM ISOLATOR
- OPEN EQUIPMENT DRAIN
- CHEMICAL DIFFUSER
- BASKET STRAINER
- FILTER
- PULSATION DAMPENER
- MAJOR PROCESS LINE
- MINOR PROCESS LINE
- DOUBLE WALLED PIPE
- E (S) — ELECTRIC (OR STEAM) TRACING
- PROCESS FLUID / DWG NO. / TO/FROM LOCATION — DRAWING INTERFACE FLAG
- CHEMICAL INJECTION
- HOSE BIB

VALVE SYMBOLS

- GATE VALVE (GV)
- PLUG VALVE (PV)
- BUTTERFLY VALVE (BFV)
- BALL VALVE (BV)
- GLOBE VALVE (GLV)
- PINCH VALVE (PCHV)
- DIAPHRAGM VALVE (DV)
- SWING CHECK VALVE (CV)
- BALL CHECK VALVE (BCV)
- SOLENOID VALVE (SV)
- THREE WAY BALL VALVE
- NEEDLE VALVE (NV)
- KNIFE VALVE (KNV)
- MUD VALVE (MV)
- PRESSURE REGULATING VALVE (PREGV)
- BACK PRESSURE REGULATING VALVE (BPV)
- DIFFERENTIAL PRESSURE REGULATING VALVE W/ EXTERIOR TAPS
- SELF–CONTAINED DIFFERENTIAL PRESSURE REGULATING VALVE
- SELF–CONTAINED DIFFERENTIAL PRESSURE REGULATING VALVE (SOLENOID OPERATED)
- PRESSURE RELIEF VALVE (PRV)
- AIR/VACUUM RELIEF VALVE (VRV)
- AIR RELEASE VALVE (ARV)
- SURGE RELIEF/SURGE ARRESTOR VALVE (SRV)
- CHEMICAL SEAL

TYPICAL EQUIPMENT TAG NUMBERS & DESIGNATION

P–1000–1A

- WHEN USED, LETTER DISTINGUISHES BETWEEN MULTIPLE, SIMILAR DEVICES.
- USED WHEN MULTIPLE TRAINS ARE USED AND REPRESENTS THE TRAIN NUMBER.
- EQUIPMENT IDENTIFICATION (FIRST TWO DIGITS DENOTE ASSOCIATED AREA)
- EQUIPMENT TYPE

VALVE ACTUATORS

- HAND (MANUALLY) OPERATED
- DIAPHRAGM, SPRING OPPOSED
- DIAPHRAGM, PRESSURE–BALANCED
- SOLENOID
- ELECTRIC ACTUATOR
- PNEUMATIC ACTUATOR
- ELECTROHYDRAULIC
- CYLINDER, SINGLE–ACTING, SPRING OPPOSED WITHOUT POSITIONER OR PILOT.
- CYLINDER, DOUBLE ACTING, WITHOUT POSITIONER OR PILOT
- EXAMPLE OF CYLINDER WITH POSITIONER
- ANY CYLINDER THAT IS ASSEMBLED WITH A PILOT SO THAT ASSEMBLY IS ACTUATED BY ONE CONTROLLED INPUT. PILOT MAY BE POSITIONER, SOLENOID VALVE, SIGNAL CONVERTER, etc.
- FLOAT ACTUATOR

GATE SYMBOLS

- FLAP GATE
- SLUICE GATE (SG)
- SLIDE GATE (SLG)
- WEIR SLIDE GATE (WSG)
- BUTTERFLY GATE
- BULK HEAD GATE

PROCESS EQUIPMENT

PARTIAL LIST
ADDITIONAL SYMBOLS MAY BE SHOWN ON THE FLOW DIAGRAMS

- CENTRIFUGAL PUMP
- PLUNGER / POSITIVE DISPLACEMENT PUMP
- PROGRESSING CAVITY PUMP
- DIAPHRAGM METERING PUMP
- AIR OPERATED DIAPHRAGM PUMP
- ROTARY PUMP
- ROTARY BLOWER
- CENTRIFUGAL BLOWER
- BELT CONVEYOR
- SCREW CONVEYOR
- GRINDER
- MIXER
- SUBMERSIBLE PUMP
- GRIT PUMP
- VERTICAL TURBINE PUMP
- VERTICAL TURBINE CAN PUMP
- STATIC MIXER
- MECHANICAL SCREEN
- CALIBRATION COLUMN
- CLARIFIER
- SLUDGE COLLECTOR
- COMPACTING SCREW CONVEYOR
- WATER HEATER

REUSE OF DOCUMENTS
This document, and the designs incorporated herein, is an instrument of professional service that has been developed, designed and prepared by Harutunian Engineering, Inc., and is not to be used, in whole or part, for any other project without giving written notice to Harutunian Engineering, Inc.

REV No	DATE	DRWN	CHKD	REMARKS
1	–	–	–	–

DESIGNED BY: HEI
DRAWN BY: HEI
SHEET CHK'D BY: HEI
CROSS CHK'D BY: HEI
APPROVED BY: HEI
DATE: APRIL 2016

CDM Smith
Riata Corporate Park, 12357-A Riata Trace Parkway, Suite 210
Austin, TX 78727
Tel: (512) 346-1100
Texas Registration Number F-3043

HARUTUNIAN ENGINEERING, INC.
305 E Huntland Dr, Ste 500; Austin, TX 78752
TBPE Firm Registration No. F-2408

CITY OF AUSTIN, TEXAS - AUSTIN WATER UTILITY
CIP 3333.016
SOUTH AUSTIN REGIONAL WWTP
THICKENER IMPROVEMENTS PROJECT

INSTRUMENTATION SYMBOLS LEGEND (SHEET 3 OF 3)

STATE OF TEXAS — K. A. HARUTUNIAN 59181 — REGISTERED PROFESSIONAL ENGINEER — 4/22/2016

PROJECT No 590–104217
FILE NAME: G–I–3

SHEET No
G-I-3

Plotted: 4/22/2016 8:54:02 AM

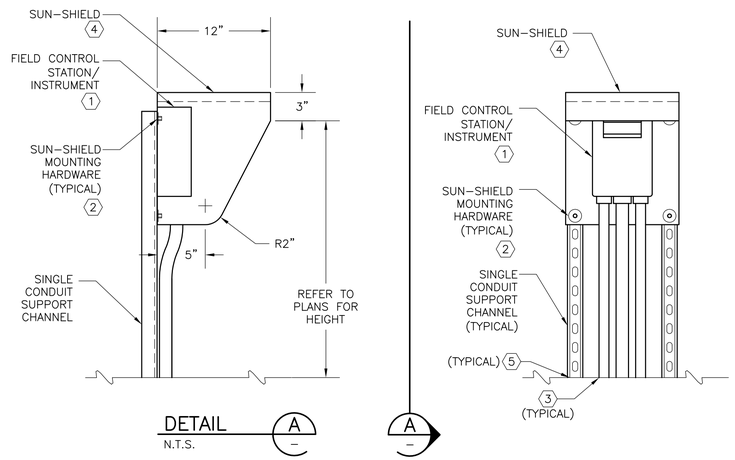

SUN-SHIELD MOUNTING DETAIL 1

N.T.S.

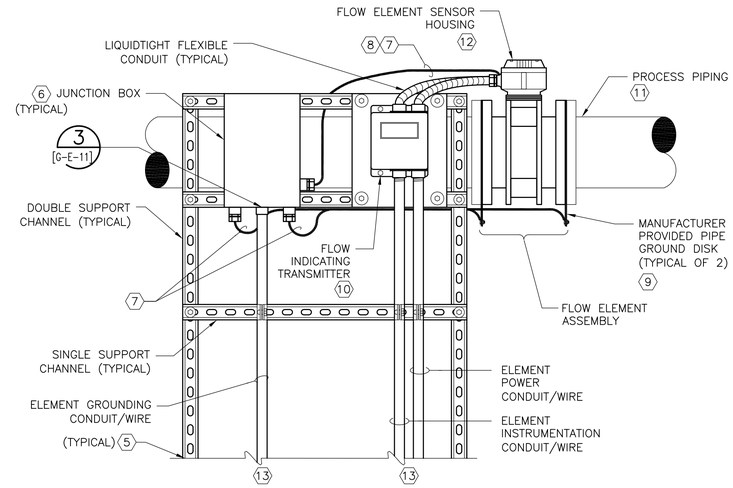

ELECTROMAGNETIC INLINE FLOW ELEMENT ASSEMBLY 2

N.T.S.

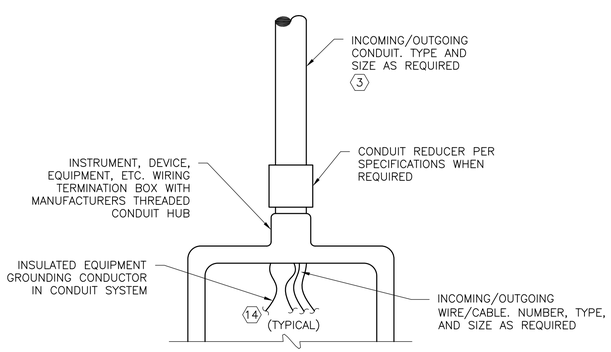

CONDUIT REDUCER INSTALLATION DETAIL 3

N.T.S.

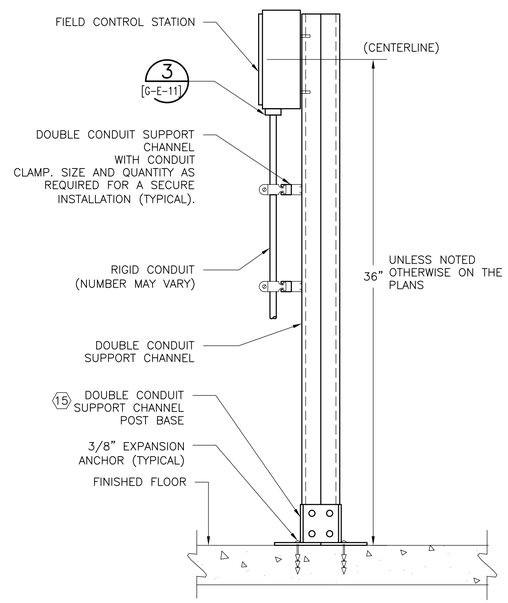

FIELD CONTROL STATION INSTALLATION DETAIL 4

N.T.S.

KEY NOTES:

1. MOUNT FIELD CONTROL STATION/INSTRUMENT TO FABRICATED FIELD CONTROL STATION SUN-SHIELD WITH HARDWARE SIZED PER MANUFACTURER'S RECOMMENDATION. USE FLAT WASHERS AND LOCK WASHERS AT EACH MOUNTING LOCATION. INSTRUMENT SIZE SHOWN IS FOR REPRESENTATION ONLY. ACTUAL FIELD CONTROL STATION/INSTRUMENT DIMENSIONS VARY. COORDINATE EXACT FINAL ELEVATION OF EACH RESPECTIVE FIELD CONTROL STATION/INSTRUMENT WITHIN THE CONFINES OF THE SUN-SHIELD IN ORDER TO PROVIDE MAXIMUM SUN-SHIELDING OF DIGITAL DISPLAY, WHILE MAINTAINING A REASONABLE LINE-OF-SIGHT TO DISPLAY. COORDINATE THIS FINAL ELEVATION WITH OWNERS REPRESENTATIVE PRIOR TO INSTALLATION.
2. MOUNT PROPOSED SUN-SHIELD TO PROPOSED CONDUIT SUPPORT CHANNEL WITH MINIMUM 1/4" HARDWARE.
3. REFER TO FLOOR PLAN FOR CONDUIT/WIRE CONTINUATION. REFER TO CONDUIT/WIRE SCHEDULE FOR SPECIFIC CONDUIT/WIRE INFORMATION. PROPOSED CONDUIT/WIRE QUANTITY MAY VARY.
4. TOP OF PROPOSED SUNSHIELD SHALL BE A DOUBLE-WALL ALUMINUM CONSTRUCTION HAVING A 1-INCH CLEAR UNOBSTRUCTED SPACE BETWEEN THE TWO ALUMINUM WALLS/PLATES. THE INTERIOR 1-INCH SPACE BETWEEN THE TWO ALUMINUM WALLS/PLATES SHALL CONTAIN A CONTINUOUS SHEET OF 1-INCH THICK RIGID FOAM INSULATION. REFER TO SPECIFICATIONS FOR ADDITIONAL INFORMATION.
5. SUPPORT CHANNEL CONTINUES TO FINISHED FLOOR/PLATFORM AND ATTACHES WITH POST BASE FITTINGS. LAYOUT AND LOCATIONS MAY VARY AND MAY REQUIRE ADDITIONAL SUPPORT METHODS. CAREFULLY COORDINATE THE NEED FOR SUCH AND FURNISH AND INSTALL AT NO ADDITIONAL COST TO THE OWNER. RAISE ALL STRUT SUPPORT FEET 1/2-INCHES OFF FINSIHED FLOOR AND GROUT UNDERNEATH.
6. FURNISH AND INSTALL JUNCTION BOX 12" X 8" X 6" (MINIMUM) WITH MANUFACTURER PROVIDED BACK PANEL. FURNISH AND INSTALL WIRE/CABLE CONNECTOR PER SECTION 16200, WITH SUFFICIENT NUMBER OF PORTS TO SPLICE GROUNDING CONDUCTORS ROUTED TO/FROM THE FLOW ELEMENT SENSOR AND THE SENSOR PIPE GROUND DISKS WITH THE GROUNDING CONDUCTOR ROUTED TO/FROM THE APPLICABLE MAIN CONTROL PANEL.
7. FURNISH AND INSTALL NO. 10 AWG INSULATED GROUNDING CONDUCTOR. GROUNDING CONDUCTOR SHALL SPLICE IN JUNCTION BOX AND ROUTE EXPOSED TO FLOW ELEMENT SENSOR HOUSING AND SENSOR PIPE GROUND DISKS. SECURE/SUPPORT EXPOSED GROUNDING CONDUCTOR TO SUPPORT CHANNEL/CONDUIT/ EQUIPMENT/ETC. WITH WIRE TIES. COORDINATE WITH INSTRUMENT MANUFACTURER TO IMPLEMENT POTENTIAL MATCHING. REFER TO INSTRUMENT WIRING SCHEMATICS FOR ADDITIONAL INFORMATION.
8. CONNECT NO. 10 AWG GROUNDING CONDUCTOR DIRECTLY TO FLOW ELEMENT SENSOR HOUSING EXTERNAL GROUNDING TERMINAL.
9. CONNECT NO. 10 AWG GROUNDING CONDUCTOR DIRECTLY TO PIPE GROUND DISK FURNISHED BY FLOW ELEMENT SENSOR MANUFACTURER.
10. MOUNT TRANSMITTER MAXIMUM 54 INCHES ABOVE FINISHED FLOOR, UNLESS OTHERWISE STATED ON DRAWINGS.
11. PROCESS PIPING LOCATION MAY VARY RELATIVE TO THE FLOW INDICATING TRANSMITTER. REFER TO PLAN DRAWINGS FOR PROPOSED LOCATIONS OF PROCESS PIPING AND FLOW TRANSMITTER.
12. FLOW ELEMENT SHALL BE LOCATED ON PROCESS PIPING WHERE SHOWN ON PLAN DRAWINGS. REFER TO PLAN DRAWINGS FOR ADDITIONAL INFORMATION.
13. CONDUIT/WIRE CONTINUES. REFER TO PLAN DRAWINGS FOR EXACT CONFIGURATION.
14. BOND CONDUIT SYSTEM INSULATED GROUNDING CONDUCTOR TO WIRING TERMINATION BOX BY MEANS OF GROUND BUS BAR/TERMINATION BLOCK/LUG FURNISHED IN WIRING TERMINATION BOX.
15. RAISE ALL STRUT SUPPORT FEET 1/2-INCHES OFF FINSIHED FLOOR AND GROUT UNDERNEATH.

Plotted: 4/22/2016 8:54:06 AM

STATE OF TEXAS
K. A. HARUTUNIAN
59181
REGISTERED PROFESSIONAL ENGINEER
4/22/2016

REUSE OF DOCUMENTS
This document, and the designs incorporated herein, is an instrument of professional service that has been developed, designed and prepared by Harutunian Engineering, Inc., and is not to be used, in whole or part, for any other project without giving written notice to Harutunian Engineering, Inc.

REV No	DATE	DRWN	CHKD	REMARKS
△	–	–	–	–

DESIGNED BY: HEI
DRAWN BY: HEI
SHEET CHK'D BY: HEI
CROSS CHK'D BY: HEI
APPROVED BY: HEI
DATE: APRIL 2016

CDM Smith
Rlata Corporate Park, 12357-A Rlata Trace Parkway, Suite 210
Austin, TX 78727
Tel: (512) 346-1100
Texas Registration Number F-3043

HARUTUNIAN ENGINEERING, INC.
305 E Huntland Dr, Ste 500; Austin, TX 78752
TBPE Firm Registration No. F-2408

CITY OF AUSTIN, TEXAS - AUSTIN WATER UTILITY
CIP 3333.016

SOUTH AUSTIN REGIONAL WWTP
THICKENER IMPROVEMENTS PROJECT

INSTRUMENTATION & CONTROLS DETAILS
(SHEET 1 OF 2)

PROJECT No 590-104217
FILE NAME: G-I-4

SHEET No
G-I-4

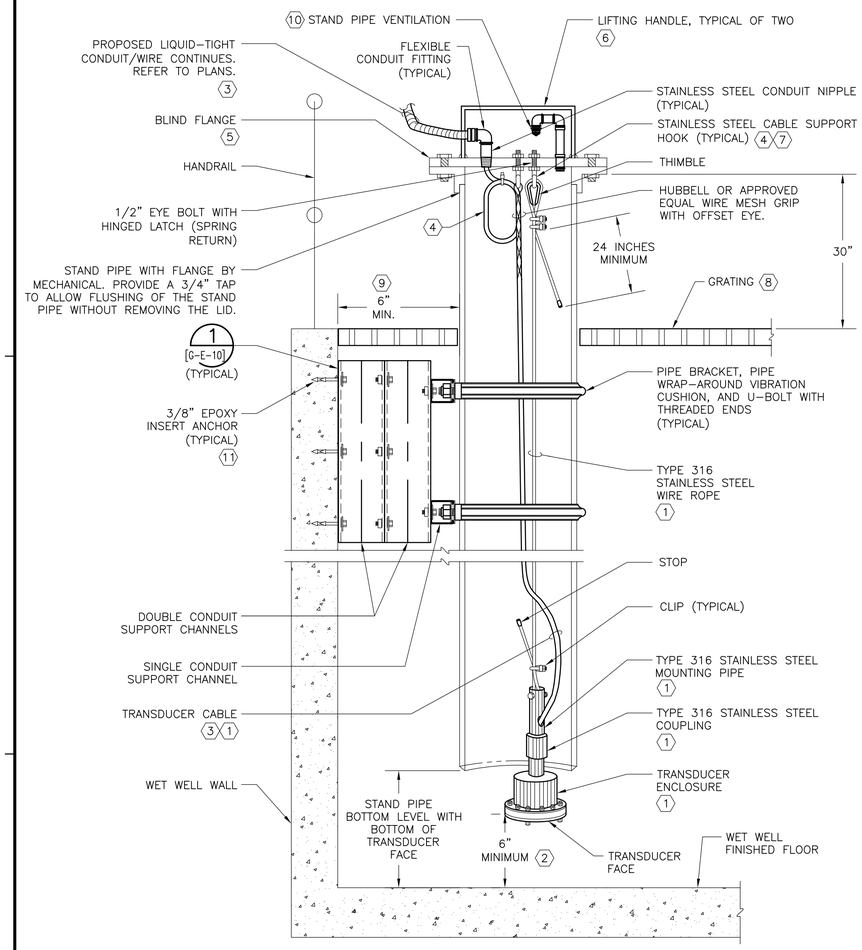

SUBMERSIBLE LEVEL TRANSMITTER INSTALLATION DETAIL

1 / –

N.T.S.

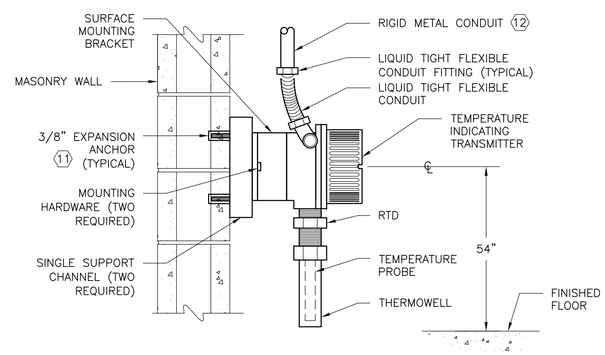

AMBIENT TEMPERATURE INDICATING TRANSMITTER AND ELEMENT INSTALLATION DETAIL

2 / –

N.T.S.

KEY NOTES:

12 POINT OF CONDUIT ENTRY SHOWN FOR REPRESENTATION ONLY. ACTUAL POINT OF CONDUIT ENTRY AS WELL AS QUANTITY AND SIZE OF CONDUIT MAY VARY WITH EACH APPLICATION.

KEY NOTES:

1. FURNISHED BY INSTRUMENT MANUFACTURER. COORDINATE WITH INSTRUMENT MANUFACTURER AND INSTALL PER MANUFACTURER'S RECOMMENDATIONS. ADD WEIGHT AS REQUIRED TO COUNTERACT BOYANCY.
2. PROVIDE 6" CLEAR SPACE ALL AROUND TRANSDUCER ENCLOSURE/FACE AT MINIMUM. COORDINATE MOUNTING ELEVATION WITH OWNER AND MECHANICAL.
3. CONTRACTOR SHALL COORDINATE CABLE LENGTH WITH CONTRACT DOCUMENTS AND PROVIDE REQUIRED LENGTH FOR INTERCONNECTION TO TRANSMITTER. COORDINATE LENGTH OF CABLE WITH EQUIPMENT MANUFACTURER TO ENSURE ADEQUATE LENGTH OF PROPOSED CABLE. CONTRACTOR SHALL INSTALL AND MAKE ALL FINAL CONNECTIONS PER THE MANUFACTURER'S WIRING DIAGRAMS AND RECOMMENDATIONS.
4. ALLOW MINIMUM 24" EXTRA CABLE AT THIS LOCATION.
5. WHERE BLIND FLANGE NOT PROVIDED BY MECHANICAL, FURNISH AND INSTALL BLIND FLANGE AND HARDWARE TO PROVIDE INSTRUMENT MOUNTING SURFACE. COORDINATE WITH MECHANICAL FOR FLANGE SIZE AND ADDITIONAL INFORMATION. BLIND FLANGE SIZE/MATERIAL/FINISH/PSI CLASSIFICATION/BOLT PATTERN TO MATCH THAT OF STAND PIPE/FLANGE.
6. EACH FLANGE SHALL HAVE TWO LIFTING HANDLES ATTACHED TO THE FLANGE. ONLY ONE HANDLE SHOWN HERE FOR CLARITY. EACH HANDLE SHALL BE OF STEEL CONSTRUCTION, 0.25" THICK BY 0.75" WIDE AND OF LENGTH AS REQUIRED TO FORM INTO HANDLE SHAPE AS SHOWN. PROVIDE A MINIMUM OF 6" CLEAR SPACE BETWEEN TOP OF HANDLE AND TOP OF BLIND FLANGE TO ALLOW HAND SPACE TO ACCESS/GRAB HANDLES WITHOUT OBSTRUCTION. WHERE BLIND FLANGE IS OF STEEL CONSTRUCTION, THE TYPE OF STEEL OF EACH HANDLE SHALL MATCH THAT OF THE BLIND FLANGE, AND EACH END OF EACH HANDLE SHALL BE ATTACHED ONTO THE BLIND FLANGE WITH CONTINUOUS WELDS. WHERE BLIND FLANGE IS TO BE PAINTED/COATED, PAINT/COAT EACH HANDLE IN THE SAME MANNER AS BLIND FLANGE. WHERE BLIND FLANGE IS OF STAINLESS STEEL CONSTRUCTION, THE BLIND FLANGE AND EACH HANDLE SHALL BE OF TYPE "L" LOW CARBON STAINLESS STEEL SUITABLE FOR WELDING. WHERE BLIND FLANGE IS OF PLASTIC MATERIAL, EACH HANDLE SHALL BE CONSTRUCTED OF TYPE 316 STAINLESS STEEL, AND EACH END OF EACH HANDLE SHALL BE FASTENED ONTO THE BLIND FLANGE WITH 1/4" DIAMETER TYPE 316 STAINLESS STEEL BOLT, NUT AND WASHER HARDWARE.
7. TYPE 316 STAINLESS STEEL SUPPORT HOOK WITH A MINIMUM 1/4 INCH BOLT AND MINIMUM 3/4 INCH HOOK RADIUS.
8. CONTRACTOR TO CUT AND MODIFY GRATING AS REQUIRED. PERFORM MODIFICATIONS TO GRATING SUCH THAT INSTRUMENT ASSEMBLY AND ASSOCIATED CONDUITS AND SUPPORTS DO NOT OBSTRUCT REMOVAL OF GRATING.
9. FURNISH AND INSTALL PVC PIPE A MINIMUM OF 6" AWAY FROM WALL.
10. VENTILATION PIPING SHALL BE CONSTRUCTED OF INSTRUMENT TUBING AND FITTINGS. PROVIDE VENT SCREEN FITTING AT TERMINATION OF STAND PIPE VENT PIPING. BOTTOM OF VENT SCREEN SHALL BE 3" ABOVE TOP OF BLIND FLANGE. ATTACH PIPING TO BLIND FLANGE WITH INSTRUMENT TUBING MALE CONNECTOR FITTING, BOLTS AND WASHERS. REFER TO SPECIFICATIONS FOR STAND PIPE VENTILATION TUBING, VENT SCREEN FITTING AND ELBOWS/FITTINGS MATERIALS AND REQUIREMENTS.
11. THE STRUCTURE TYPE TO WHICH EQUIPMENT AND/OR SUPPORT SYSTEMS SHALL BE MOUNTED MAY VARY. THE EQUIPMENT ANCHOR TYPE SHALL CORRESPOND TO THE TYPE OF STRUCTURE TO WHICH THE EQUIPMENT AND/OR SUPPORT SYSTEMS ARE ATTACHED. THE DRAWING REFLECTS A SPECIFIC STRUCTURE TYPE WITH CORRESPONDING ANCHOR TYPE AND IS TYPICAL FOR THE STRUCTURE TYPE SHOWN. TO ATTACH EQUIPMENT/SUPPORT SYSTEMS TO AN EXISTING STEEL STRUCTURE TYPE, FURNISH AND INSTALL BOLTING ASSEMBLY PER SPECIFICATIONS AND STRUCTURAL REQUIREMENTS. CLOSELY AND CAREFULLY COORDINATE ATTACHMENT REQUIREMENTS WITH STRUCTURAL AND SPECIFICATION SECTION 05120.

Plotted: 4/22/2016 8:54:09 AM

STATE OF TEXAS
K. A. HARUTUNIAN
59181
REGISTERED PROFESSIONAL ENGINEER
4/22/2016

REUSE OF DOCUMENTS

This document, and the designs incorporated herein, is an instrument of professional service that has been developed, designed and prepared by Harutunian Engineering, Inc., and is not to be used, in whole or part, for any other project without giving written notice to Harutunian Engineering, Inc.

REV No	DATE	DRWN	CHKD	REMARKS
1	–	–	–	–

DESIGNED BY: HEI
DRAWN BY: HEI
SHEET CHK'D BY: HEI
CROSS CHK'D BY: HEI
APPROVED BY: HEI
DATE: APRIL 2016

CDM Smith
Riata Corporate Park, 12357-A Riata Trace Parkway, Suite 210
Austin, TX 78727
Tel: (512) 346-1100
Texas Registration Number F-3043

HARUTUNIAN ENGINEERING, INC.
305 E Huntland Dr, Ste 500; Austin, TX 78752
TBPE Firm Registration No. F-2408

CITY OF AUSTIN, TEXAS - AUSTIN WATER UTILITY
CIP 3333.016

SOUTH AUSTIN REGIONAL WWTP
THICKENER IMPROVEMENTS PROJECT

INSTRUMENTATION & CONTROLS DETAILS
(SHEET 2 OF 2)

PROJECT No 590–104217
FILE NAME: G–I–5

SHEET No
G-I-5

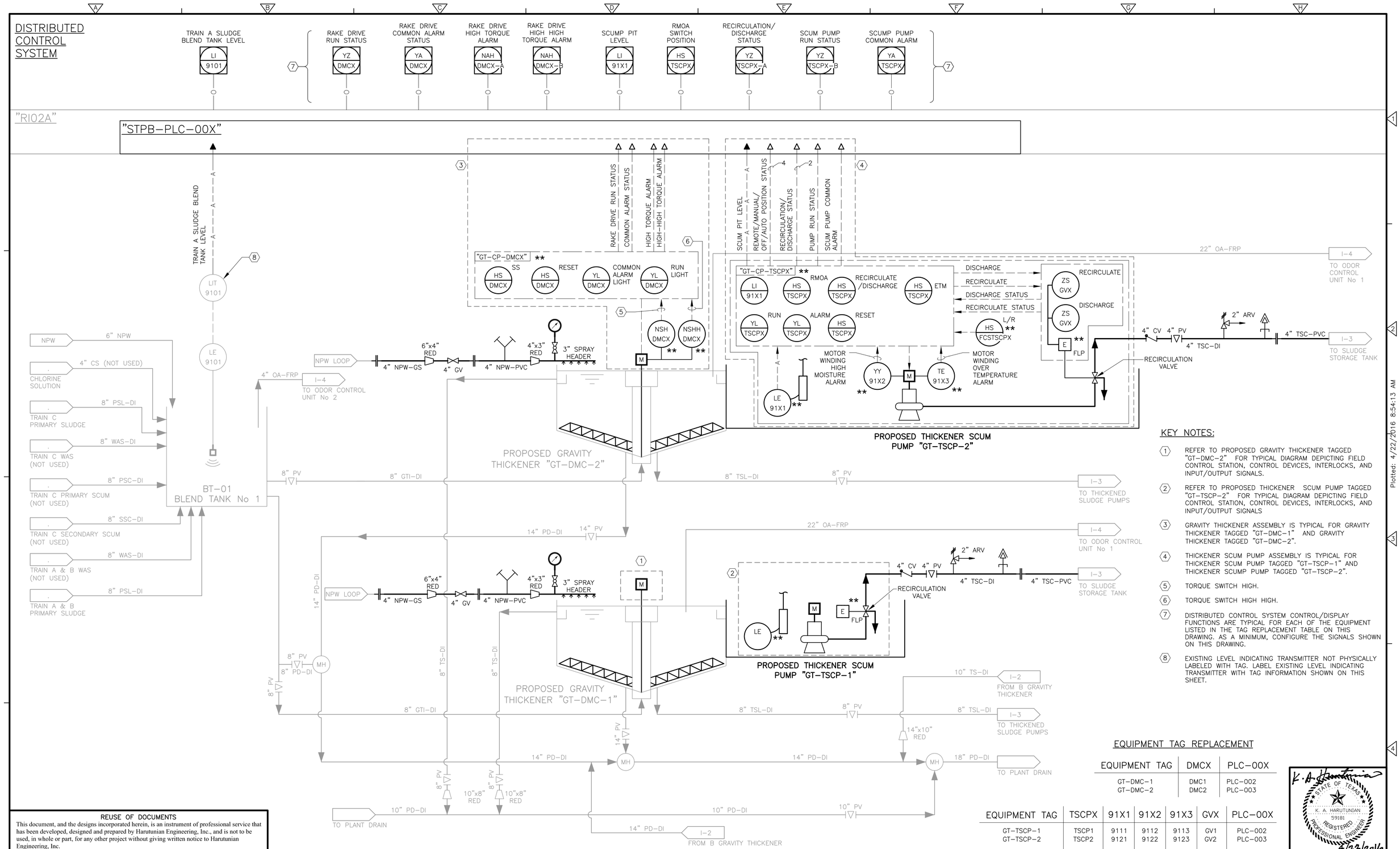

KEY NOTES:

1. REFER TO PROPOSED GRAVITY THICKENER TAGGED "GT-DMC-2" FOR TYPICAL DIAGRAM DEPICTING FIELD CONTROL STATION, CONTROL DEVICES, INTERLOCKS, AND INPUT/OUTPUT SIGNALS.
2. REFER TO PROPOSED THICKENER SCUM PUMP TAGGED "GT-TSCP-2" FOR TYPICAL DIAGRAM DEPICTING FIELD CONTROL STATION, CONTROL DEVICES, INTERLOCKS, AND INPUT/OUTPUT SIGNALS
3. GRAVITY THICKENER ASSEMBLY IS TYPICAL FOR GRAVITY THICKENER TAGGED "GT-DMC-1" AND GRAVITY THICKENER TAGGED "GT-DMC-2".
4. THICKENER SCUM PUMP ASSEMBLY IS TYPICAL FOR THICKENER SCUM PUMP TAGGED "GT-TSCP-1" AND THICKENER SCUMP PUMP TAGGED "GT-TSCP-2".
5. TORQUE SWITCH HIGH.
6. TORQUE SWITCH HIGH HIGH.
7. DISTRIBUTED CONTROL SYSTEM CONTROL/DISPLAY FUNCTIONS ARE TYPICAL FOR EACH OF THE EQUIPMENT LISTED IN THE TAG REPLACEMENT TABLE ON THIS DRAWING. AS A MINIMUM, CONFIGURE THE SIGNALS SHOWN ON THIS DRAWING.
8. EXISTING LEVEL INDICATING TRANSMITTER NOT PHYSICALLY LABELED WITH TAG. LABEL EXISTING LEVEL INDICATING TRANSMITTER WITH TAG INFORMATION SHOWN ON THIS SHEET.

EQUIPMENT TAG REPLACEMENT

EQUIPMENT TAG	DMCX	PLC-00X
GT-DMC-1	DMC1	PLC-002
GT-DMC-2	DMC2	PLC-003

EQUIPMENT TAG	TSCPX	91X1	91X2	91X3	GVX	PLC-00X
GT-TSCP-1	TSCP1	9111	9112	9113	GV1	PLC-002
GT-TSCP-2	TSCP2	9121	9122	9123	GV2	PLC-003

REUSE OF DOCUMENTS
This document, and the designs incorporated herein, is an instrument of professional service that has been developed, designed and prepared by Harutunian Engineering, Inc., and is not to be used, in whole or part, for any other project without giving written notice to Harutunian Engineering, Inc.

STATE OF TEXAS — K. A. HARUTUNIAN 59181 — REGISTERED PROFESSIONAL ENGINEER — 4/22/2016

REV No	DATE	DRWN	CHKD	REMARKS
A	–	–	–	–

DESIGNED BY: HEI
DRAWN BY: HEI
SHEET CHK'D BY: HEI
CROSS CHK'D BY: HEI
APPROVED BY: HEI
DATE: APRIL 2016

CDM Smith
Riata Corporate Park, 12357-A Riata Trace Parkway, Suite 210
Austin, TX 78727
Tel: (512) 346-1100
Texas Registration Number F-3043

HARUTUNIAN ENGINEERING, INC.
305 E Huntland Dr, Ste 500; Austin, TX 78752
TBPE Firm Registration No. F-2408

CITY OF AUSTIN, TEXAS - AUSTIN WATER UTILITY
CIP 3333.016

SOUTH AUSTIN REGIONAL WWTP THICKENER IMPROVEMENTS PROJECT

P&ID GRAVITY THICKENER No 1A AND 2A

PROJECT No 590-104217
FILE NAME: I-01

SHEET No
I-01

Plotted: 4/22/2016 8:54:13 AM

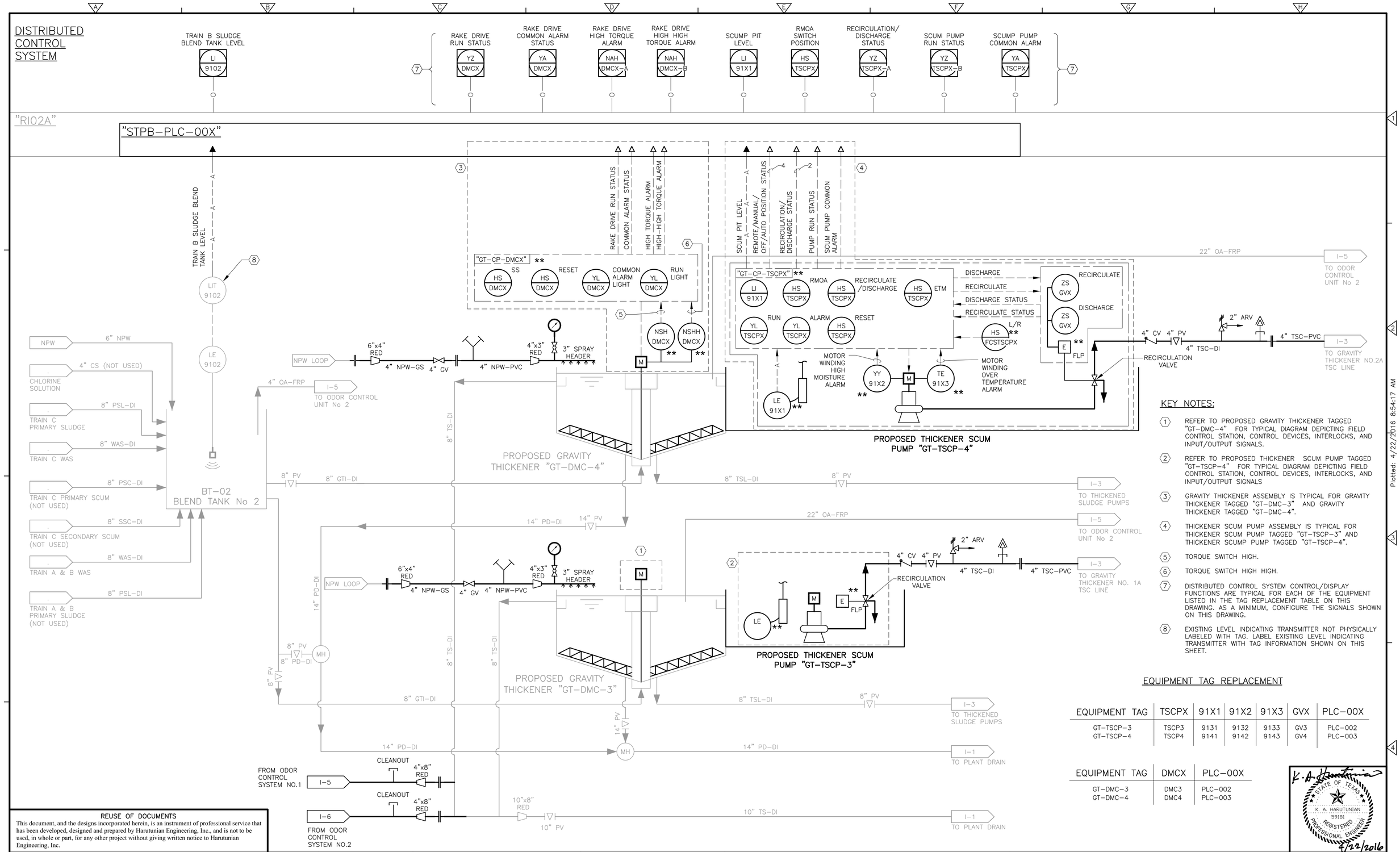

KEY NOTES:

1. REFER TO PROPOSED GRAVITY THICKENER TAGGED "GT-DMC-4" FOR TYPICAL DIAGRAM DEPICTING FIELD CONTROL STATION, CONTROL DEVICES, INTERLOCKS, AND INPUT/OUTPUT SIGNALS.
2. REFER TO PROPOSED THICKENER SCUM PUMP TAGGED "GT-TSCP-4" FOR TYPICAL DIAGRAM DEPICTING FIELD CONTROL STATION, CONTROL DEVICES, INTERLOCKS, AND INPUT/OUTPUT SIGNALS
3. GRAVITY THICKENER ASSEMBLY IS TYPICAL FOR GRAVITY THICKENER TAGGED "GT-DMC-3" AND GRAVITY THICKENER TAGGED "GT-DMC-4".
4. THICKENER SCUM PUMP ASSEMBLY IS TYPICAL FOR THICKENER SCUM PUMP TAGGED "GT-TSCP-3" AND THICKENER SCUMP PUMP TAGGED "GT-TSCP-4".
5. TORQUE SWITCH HIGH.
6. TORQUE SWITCH HIGH HIGH.
7. DISTRIBUTED CONTROL SYSTEM CONTROL/DISPLAY FUNCTIONS ARE TYPICAL FOR EACH OF THE EQUIPMENT LISTED IN THE TAG REPLACEMENT TABLE ON THIS DRAWING. AS A MINIMUM, CONFIGURE THE SIGNALS SHOWN ON THIS DRAWING.
8. EXISTING LEVEL INDICATING TRANSMITTER NOT PHYSICALLY LABELED WITH TAG. LABEL EXISTING LEVEL INDICATING TRANSMITTER WITH TAG INFORMATION SHOWN ON THIS SHEET.

EQUIPMENT TAG REPLACEMENT

EQUIPMENT TAG	TSCPX	91X1	91X2	91X3	GVX	PLC-00X
GT-TSCP-3	TSCP3	9131	9132	9133	GV3	PLC-002
GT-TSCP-4	TSCP4	9141	9142	9143	GV4	PLC-003

EQUIPMENT TAG	DMCX	PLC-00X
GT-DMC-3	DMC3	PLC-002
GT-DMC-4	DMC4	PLC-003

REUSE OF DOCUMENTS
This document, and the designs incorporated herein, is an instrument of professional service that has been developed, designed and prepared by Harutunian Engineering, Inc., and is not to be used, in whole or part, for any other project without giving written notice to Harutunian Engineering, Inc.

REV No	DATE	DRWN	CHKD	REMARKS
△	–	–	–	–

DESIGNED BY: HEI
DRAWN BY: HEI
SHEET CHK'D BY: HEI
CROSS CHK'D BY: HEI
APPROVED BY: HEI
DATE: APRIL 2016

CDM Smith
Riata Corporate Park, 12357-A Riata Trace Parkway, Suite 210
Austin, TX 78727
Tel: (512) 346-1100
Texas Registration Number F-3043

HEI
HARUTUNIAN ENGINEERING, INC.
305 E Huntland Dr, Ste 500; Austin, TX 78752
TBPE Firm Registration No. F-2408

CITY OF AUSTIN, TEXAS - AUSTIN WATER UTILITY
CIP 3333.016

SOUTH AUSTIN REGIONAL WWTP
THICKENER IMPROVEMENTS PROJECT

P&ID
GRAVITY THICKENER No 1B AND 2B

PROJECT No 590-104217
FILE NAME: I-02

SHEET No
I-02

STATE OF TEXAS
K. A. HARUTUNIAN
59181
REGISTERED PROFESSIONAL ENGINEER
4/22/2016

Plotted: 4/22/2016 8:54:17 AM

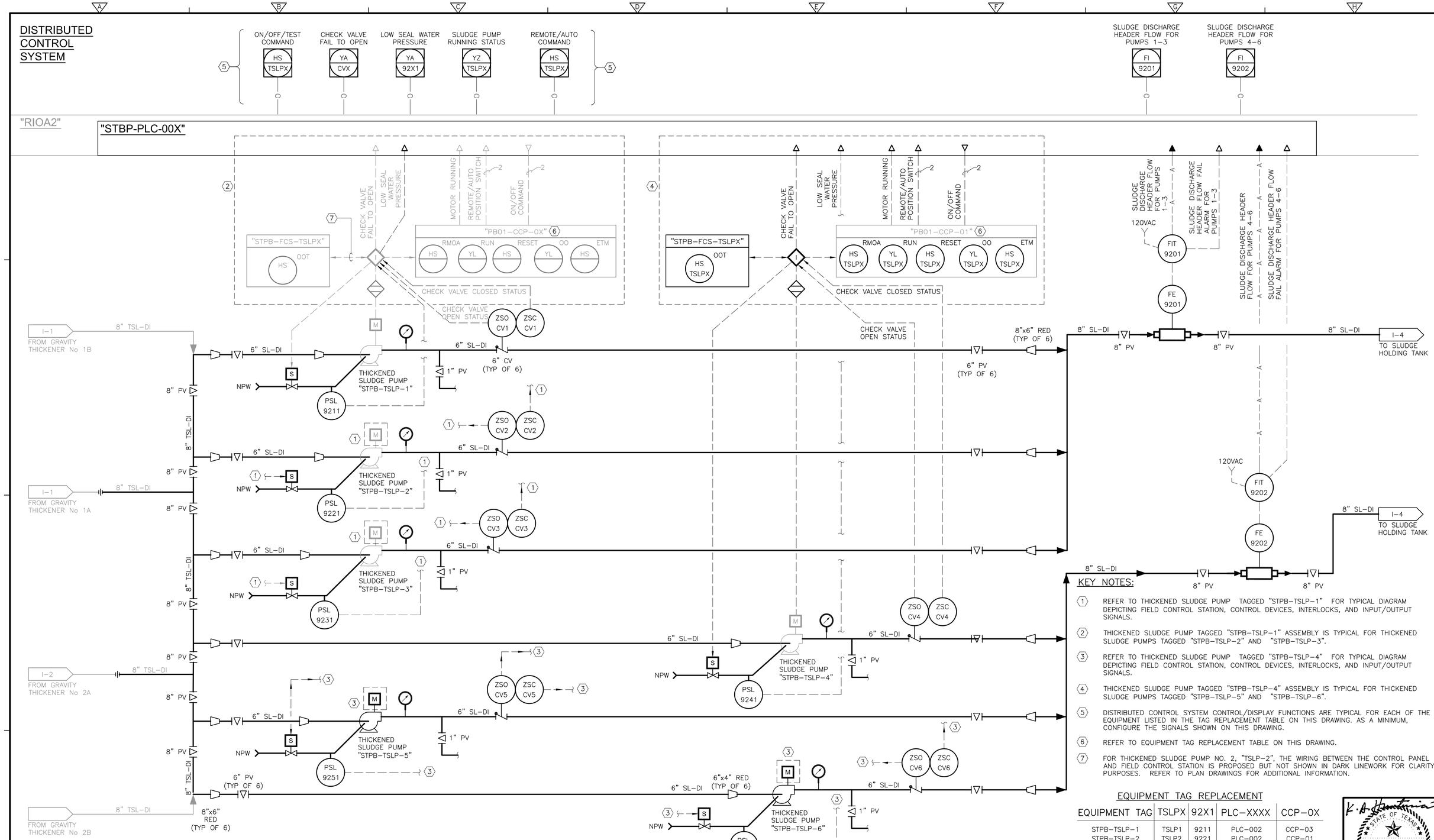

KEY NOTES:

1. REFER TO THICKENED SLUDGE PUMP TAGGED "STPB–TSLP–1" FOR TYPICAL DIAGRAM DEPICTING FIELD CONTROL STATION, CONTROL DEVICES, INTERLOCKS, AND INPUT/OUTPUT SIGNALS.
2. THICKENED SLUDGE PUMP TAGGED "STPB–TSLP–1" ASSEMBLY IS TYPICAL FOR THICKENED SLUDGE PUMPS TAGGED "STPB–TSLP–2" AND "STPB–TSLP–3".
3. REFER TO THICKENED SLUDGE PUMP TAGGED "STPB–TSLP–4" FOR TYPICAL DIAGRAM DEPICTING FIELD CONTROL STATION, CONTROL DEVICES, INTERLOCKS, AND INPUT/OUTPUT SIGNALS.
4. THICKENED SLUDGE PUMP TAGGED "STPB–TSLP–4" ASSEMBLY IS TYPICAL FOR THICKENED SLUDGE PUMPS TAGGED "STPB–TSLP–5" AND "STPB–TSLP–6".
5. DISTRIBUTED CONTROL SYSTEM CONTROL/DISPLAY FUNCTIONS ARE TYPICAL FOR EACH OF THE EQUIPMENT LISTED IN THE TAG REPLACEMENT TABLE ON THIS DRAWING. AS A MINIMUM, CONFIGURE THE SIGNALS SHOWN ON THIS DRAWING.
6. REFER TO EQUIPMENT TAG REPLACEMENT TABLE ON THIS DRAWING.
7. FOR THICKENED SLUDGE PUMP NO. 2, "TSLP–2", THE WIRING BETWEEN THE CONTROL PANEL AND FIELD CONTROL STATION IS PROPOSED BUT NOT SHOWN IN DARK LINEWORK FOR CLARITY PURPOSES. REFER TO PLAN DRAWINGS FOR ADDITIONAL INFORMATION.

EQUIPMENT TAG REPLACEMENT

EQUIPMENT TAG	TSLPX	92X1	PLC–XXXX	CCP–0X
STPB–TSLP–1	TSLP1	9211	PLC–002	CCP–03
STPB–TSLP–2	TSLP2	9221	PLC–002	CCP–01
STPB–TSLP–3	TSLP3	9231	PLC–002	CCP–01
STPB–TSLP–4	TSLP4	9241	PLC–003	CCP–01
STPB–TSLP–5	TSLP5	9251	PLC–003	CCP–01
STPB–TSLP–6	TSLP6	9261	PLC–003	CCP–01

REUSE OF DOCUMENTS
This document, and the designs incorporated herein, is an instrument of professional service that has been developed, designed and prepared by Harutunian Engineering, Inc., and is not to be used, in whole or part, for any other project without giving written notice to Harutunian Engineering, Inc.

REV No	DATE	DRWN	CHKD	REMARKS
1	–	–	–	–

DESIGNED BY: HEI
DRAWN BY: HEI
SHEET CHK'D BY: HEI
CROSS CHK'D BY: HEI
APPROVED BY: HEI
DATE: APRIL 2016

CDM Smith
Riata Corporate Park, 12357-A Riata Trace Parkway, Suite 210
Austin, TX 78727
Tel: (512) 346-1100
Texas Registration Number F-3043

HARUTUNIAN ENGINEERING, INC.
305 E Huntland Dr, Ste 500; Austin, TX 78752
TBPE Firm Registration No. F-2408

CITY OF AUSTIN, TEXAS - AUSTIN WATER UTILITY
CIP 3333.016

SOUTH AUSTIN REGIONAL WWTP
THICKENER IMPROVEMENTS PROJECT

P&ID
THICKENED SLUDGE PUMPS

PROJECT No 590–104217
FILE NAME: I–03

SHEET No
I-03

STATE OF TEXAS
K. A. HARUTUNIAN
59181
REGISTERED PROFESSIONAL ENGINEER
4/22/2016

Plotted: 4/22/2016 8:54:21 AM

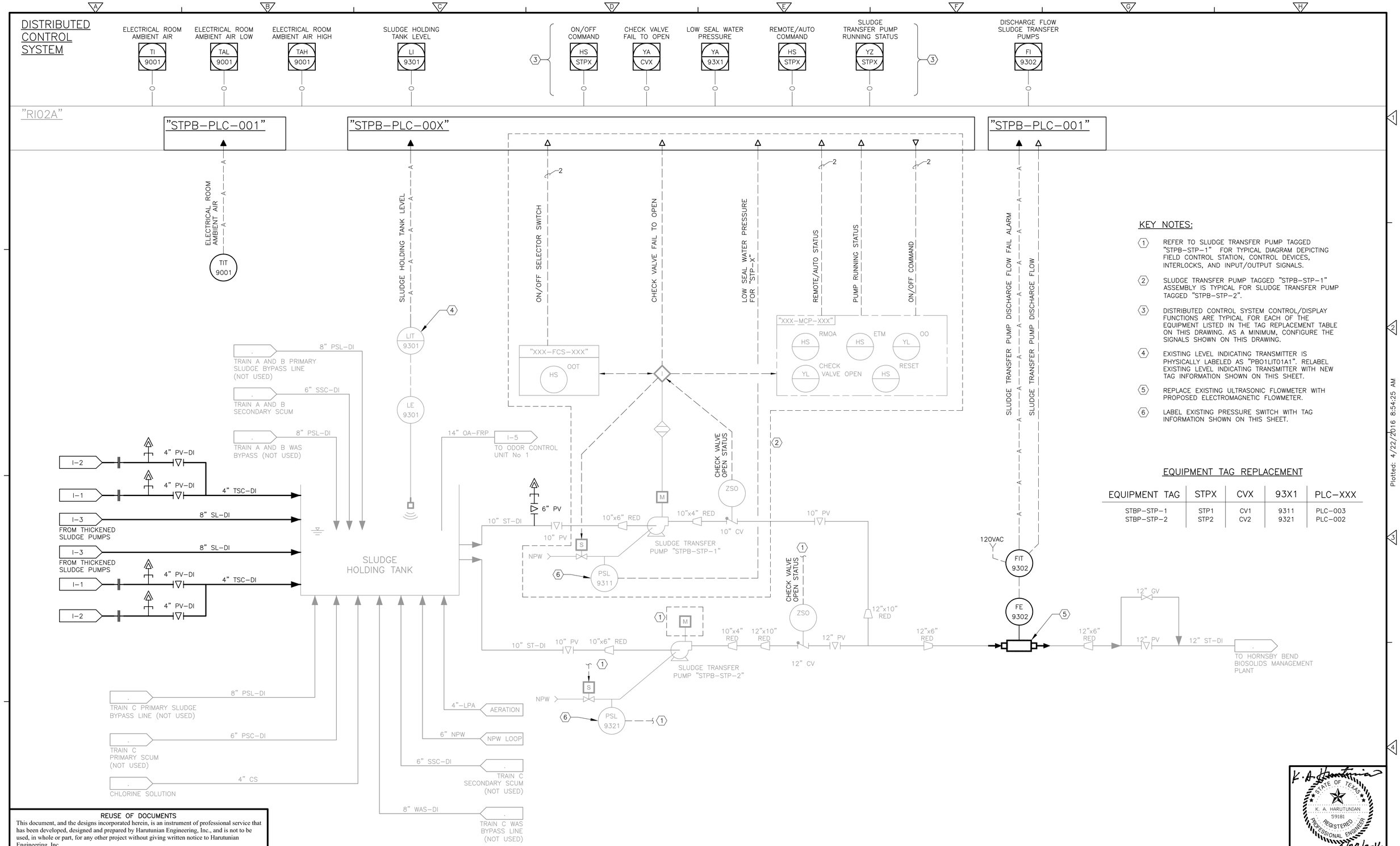

KEY NOTES:

1. REFER TO SLUDGE TRANSFER PUMP TAGGED "STPB-STP-1" FOR TYPICAL DIAGRAM DEPICTING FIELD CONTROL STATION, CONTROL DEVICES, INTERLOCKS, AND INPUT/OUTPUT SIGNALS.
2. SLUDGE TRANSFER PUMP TAGGED "STPB-STP-1" ASSEMBLY IS TYPICAL FOR SLUDGE TRANSFER PUMP TAGGED "STPB-STP-2".
3. DISTRIBUTED CONTROL SYSTEM CONTROL/DISPLAY FUNCTIONS ARE TYPICAL FOR EACH OF THE EQUIPMENT LISTED IN THE TAG REPLACEMENT TABLE ON THIS DRAWING. AS A MINIMUM, CONFIGURE THE SIGNALS SHOWN ON THIS DRAWING.
4. EXISTING LEVEL INDICATING TRANSMITTER IS PHYSICALLY LABELED AS "PB01LIT01A1". RELABEL EXISTING LEVEL INDICATING TRANSMITTER WITH NEW TAG INFORMATION SHOWN ON THIS SHEET.
5. REPLACE EXISTING ULTRASONIC FLOWMETER WITH PROPOSED ELECTROMAGNETIC FLOWMETER.
6. LABEL EXISTING PRESSURE SWITCH WITH TAG INFORMATION SHOWN ON THIS SHEET.

EQUIPMENT TAG REPLACEMENT

EQUIPMENT TAG	STPX	CVX	93X1	PLC-XXX
STBP-STP-1	STP1	CV1	9311	PLC-003
STBP-STP-2	STP2	CV2	9321	PLC-002

REUSE OF DOCUMENTS

This document, and the designs incorporated herein, is an instrument of professional service that has been developed, designed and prepared by Harutunian Engineering, Inc., and is not to be used, in whole or part, for any other project without giving written notice to Harutunian Engineering, Inc.

REV No	DATE	DRWN	CHKD	REMARKS
1	–	–	–	–

DESIGNED BY: HEI
DRAWN BY: HEI
SHEET CHK'D BY: HEI
CROSS CHK'D BY: HEI
APPROVED BY: HEI
DATE: APRIL 2016

CDM Smith
Riata Corporate Park, 12357-A Riata Trace Parkway, Suite 210
Austin, TX 78727
Tel: (512) 346-1100
Texas Registration Number F-3043

HARUTUNIAN ENGINEERING, INC.
305 E Huntland Dr, Ste 500; Austin, TX 78752
TBPE Firm Registration No. F-2408

CITY OF AUSTIN, TEXAS - AUSTIN WATER UTILITY
CIP 3333.016

SOUTH AUSTIN REGIONAL WWTP
THICKENER IMPROVEMENTS PROJECT

P&ID
SLUDGE HOLDING TANK AND
SLUDGE TRANSFER PUMPS

STATE OF TEXAS
K. A. HARUTUNIAN
59181
REGISTERED PROFESSIONAL ENGINEER
4/22/2016

PROJECT No 590-104217
FILE NAME: I-04

SHEET No
I-04

Plotted: 4/22/2016 8:54:25 AM

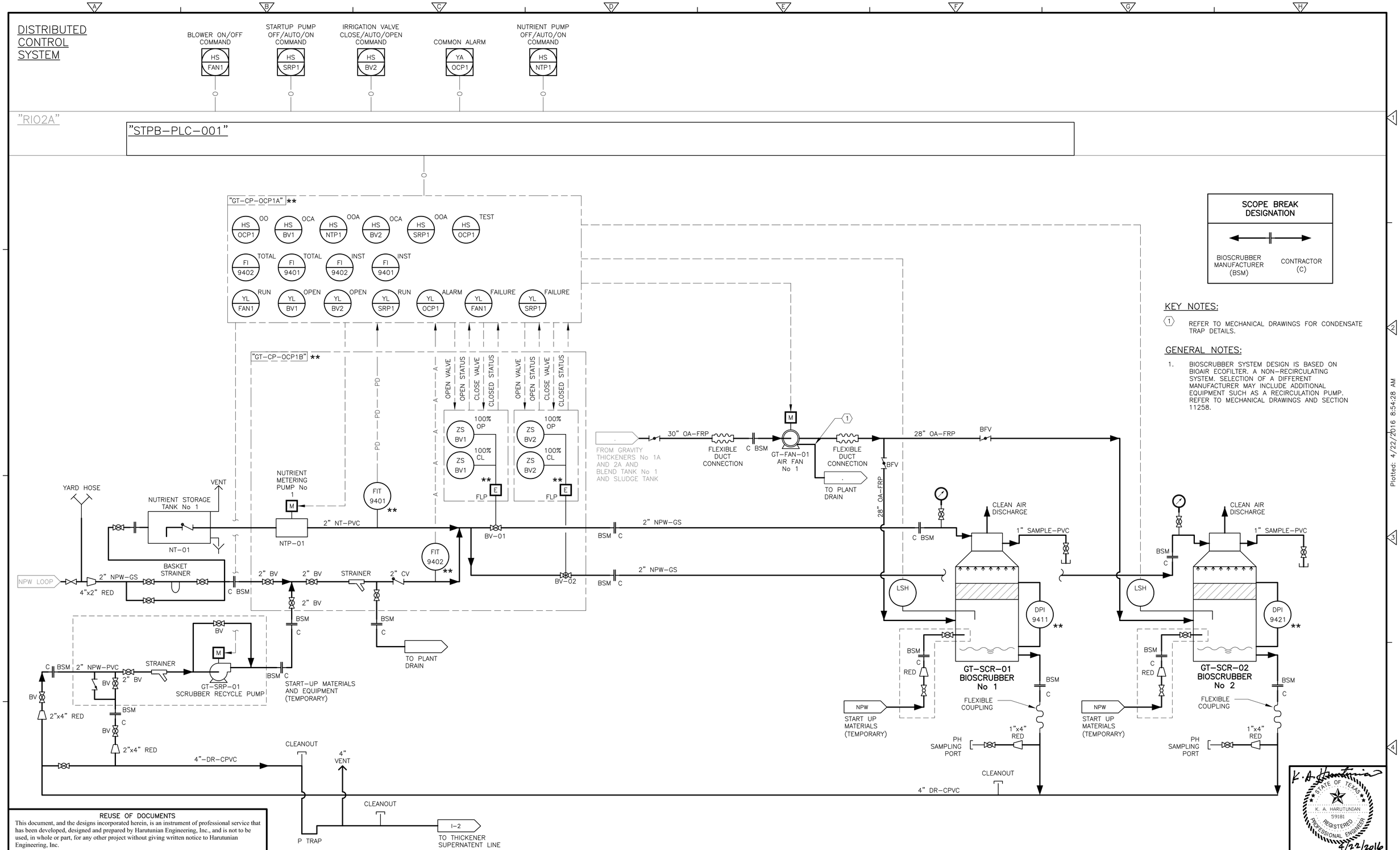

SCOPE BREAK DESIGNATION

BIOSCRUBBER MANUFACTURER (BSM) — CONTRACTOR (C)

KEY NOTES:

1. REFER TO MECHANICAL DRAWINGS FOR CONDENSATE TRAP DETAILS.

GENERAL NOTES:

1. BIOSCRUBBER SYSTEM DESIGN IS BASED ON BIOAIR ECOFILTER. A NON-RECIRCULATING SYSTEM. SELECTION OF A DIFFERENT MANUFACTURER MAY INCLUDE ADDITIONAL EQUIPMENT SUCH AS A RECIRCULATION PUMP. REFER TO MECHANICAL DRAWINGS AND SECTION 11258.

REUSE OF DOCUMENTS
This document, and the designs incorporated herein, is an instrument of professional service that has been developed, designed and prepared by Harutunian Engineering, Inc., and is not to be used, in whole or part, for any other project without giving written notice to Harutunian Engineering, Inc.

REV No	DATE	DRWN	CHKD	REMARKS
1	–	–	–	–

DESIGNED BY: HEI
DRAWN BY: HEI
SHEET CHK'D BY: HEI
CROSS CHK'D BY: HEI
APPROVED BY: HEI
DATE: APRIL 2016

CDM Smith
Riata Corporate Park, 12357-A Riata Trace Parkway, Suite 210
Austin, TX 78727
Tel: (512) 346-1100
Texas Registration Number F-3043

HARUTUNIAN ENGINEERING, INC.
305 E Huntland Dr, Ste 500; Austin, TX 78752
TBPE Firm Registration No. F-2408

CITY OF AUSTIN, TEXAS - AUSTIN WATER UTILITY
CIP 3333.016

SOUTH AUSTIN REGIONAL WWTP
THICKENER IMPROVEMENTS PROJECT

P&ID
ODOR CONTROL SYSTEM NO. 1

K. A. HARUTUNIAN
STATE OF TEXAS
K. A. HARUTUNIAN
59181
REGISTERED PROFESSIONAL ENGINEER
4/22/2016

PROJECT No 590-104217
FILE NAME: I-05

SHEET No
I-05

Plotted: 4/22/2016 8:54:28 AM

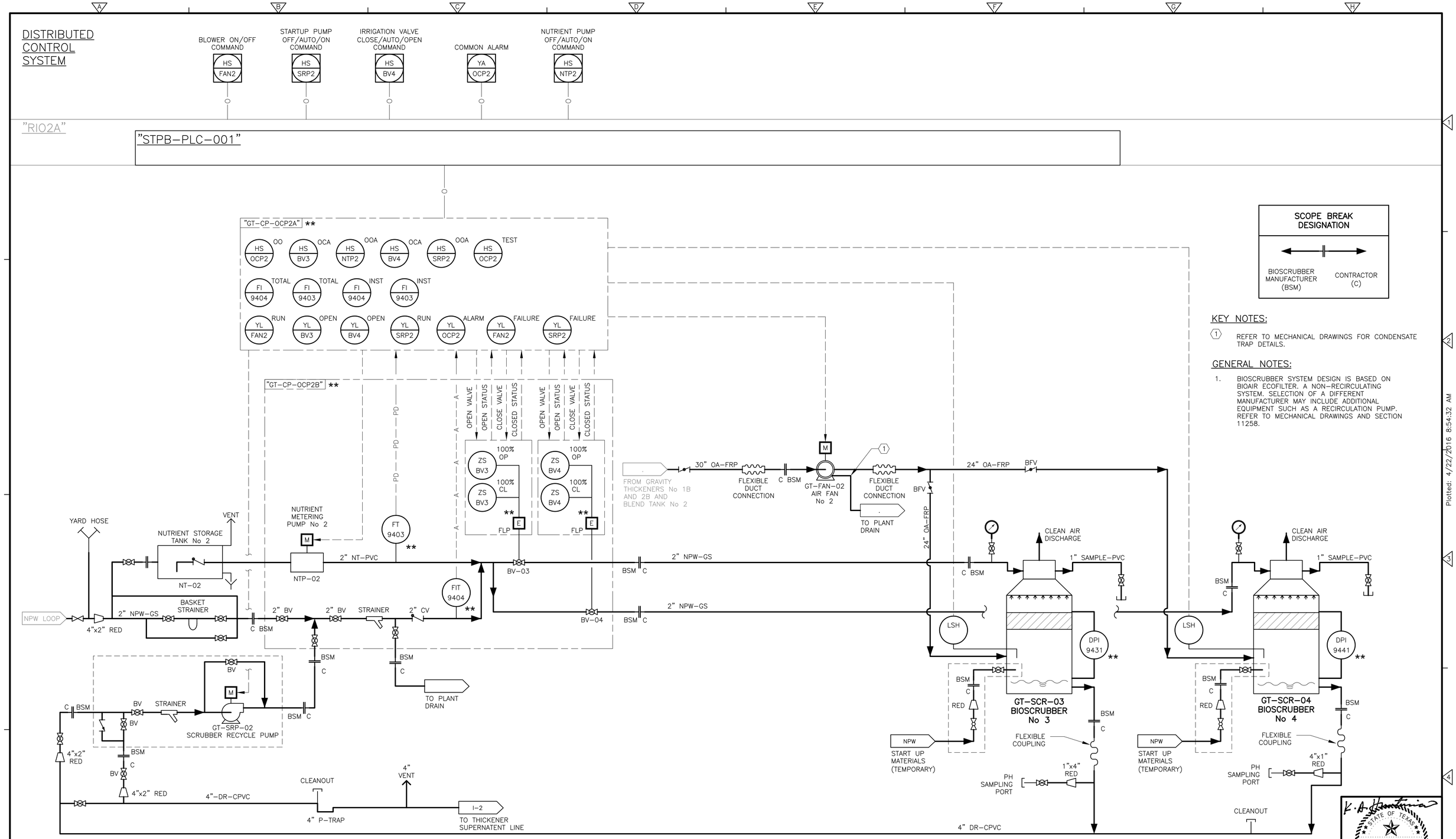

KEY NOTES:

1. REFER TO MECHANICAL DRAWINGS FOR CONDENSATE TRAP DETAILS.

GENERAL NOTES:

1. BIOSCRUBBER SYSTEM DESIGN IS BASED ON BIOAIR ECOFILTER. A NON-RECIRCULATING SYSTEM. SELECTION OF A DIFFERENT MANUFACTURER MAY INCLUDE ADDITIONAL EQUIPMENT SUCH AS A RECIRCULATION PUMP. REFER TO MECHANICAL DRAWINGS AND SECTION 11258.

REUSE OF DOCUMENTS

This document, and the designs incorporated herein, is an instrument of professional service that has been developed, designed and prepared by Harutunian Engineering, Inc., and is not to be used, in whole or part, for any other project without giving written notice to Harutunian Engineering, Inc.

REV No	DATE	DRWN	CHKD	REMARKS
△	–	–	–	–

DESIGNED BY: HEI
DRAWN BY: HEI
SHEET CHK'D BY: HEI
CROSS CHK'D BY: HEI
APPROVED BY: HEI
DATE: APRIL 2016

CDM Smith
Riata Corporate Park, 12357-A Riata Trace Parkway, Suite 210
Austin, TX 78727
Tel: (512) 346-1100
Texas Registration Number F-3043

HARUTUNIAN ENGINEERING, INC.
305 E Huntland Dr, Ste 500; Austin, TX 78752
TBPE Firm Registration No. F-2408

CITY OF AUSTIN, TEXAS - AUSTIN WATER UTILITY
CIP 3333.016

SOUTH AUSTIN REGIONAL WWTP
THICKENER IMPROVEMENTS PROJECT

P&ID
ODOR CONTROL SYSTEM NO. 2

K. A. HARUTUNIAN
STATE OF TEXAS
K. A. HARUTUNIAN
59181
REGISTERED PROFESSIONAL ENGINEER
4/22/2016

PROJECT No 590-104217
FILE NAME: I-06

SHEET No
I-06

Plotted: 4/22/2016 8:54:32 AM

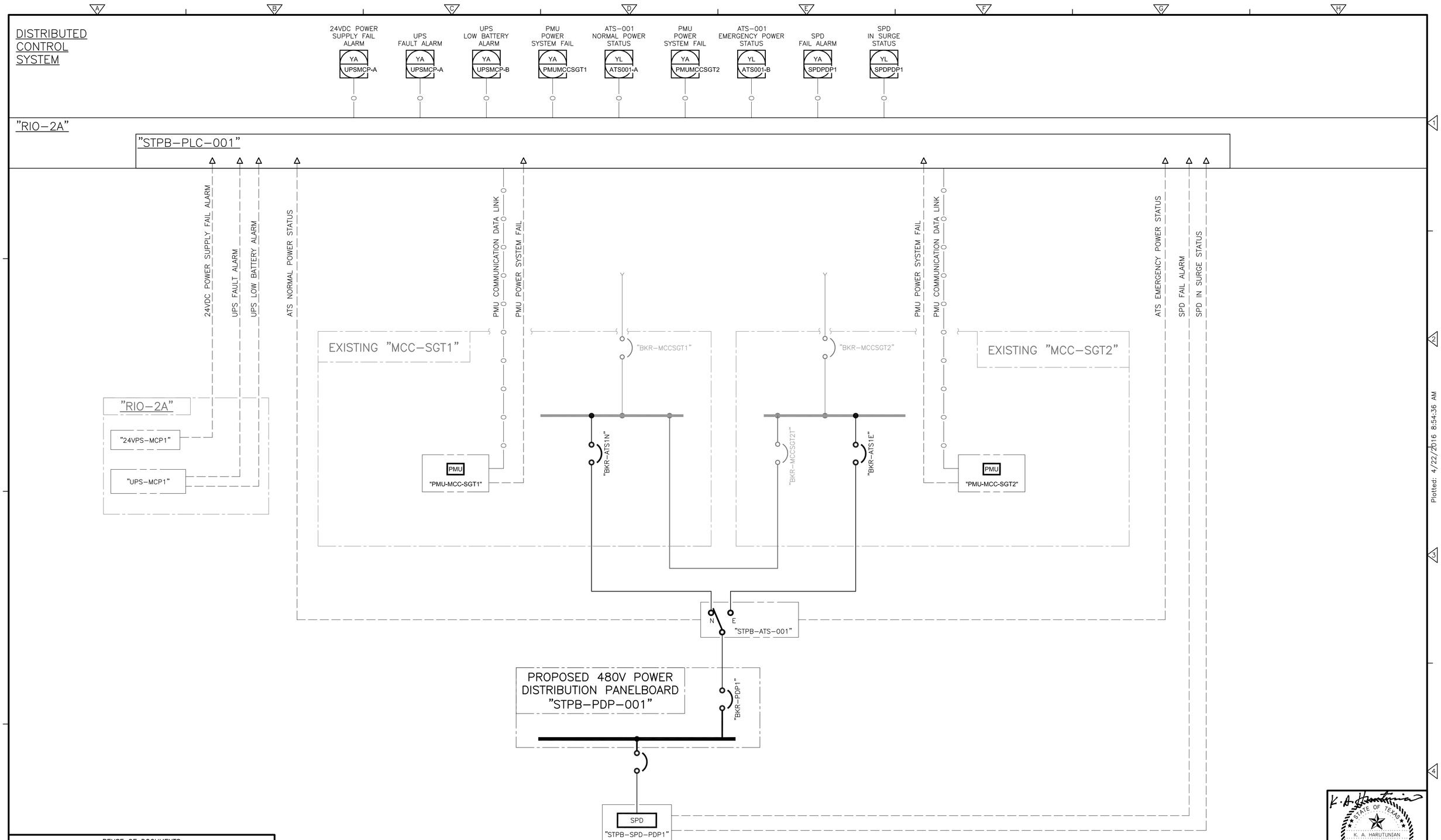

Plotted: 4/22/2016 8:54:36 AM

REUSE OF DOCUMENTS

This document, and the designs incorporated herein, is an instrument of professional service that has been developed, designed and prepared by Harutunian Engineering, Inc., and is not to be used, in whole or part, for any other project without giving written notice to Harutunian Engineering, Inc.

REV No	DATE	DRWN	CHKD	REMARKS
△	–	–	–	–

DESIGNED BY: HEI
DRAWN BY: HEI
SHEET CHK'D BY: HEI
CROSS CHK'D BY: HEI
APPROVED BY: HEI
DATE: APRIL 2016

CDM Smith
Riata Corporate Park, 12357-A Riata Trace Parkway, Suite 210
Austin, TX 78727
Tel: (512) 346-1100
Texas Registration Number F-3043

HARUTUNIAN ENGINEERING, INC.
305 E Huntland Dr, Ste 500; Austin, TX 78752
TBPE Firm Registration No. F-2408

CITY OF AUSTIN, TEXAS - AUSTIN WATER UTILITY
CIP 3333.016
SOUTH AUSTIN REGIONAL WWTP
THICKENER IMPROVEMENTS PROJECT

P&ID
POWER MONITORING

STATE OF TEXAS
K. A. HARUTUNIAN
59181
REGISTERED PROFESSIONAL ENGINEER
4/22/2016

PROJECT No 590-104217
FILE NAME: I-07

SHEET No
I-07

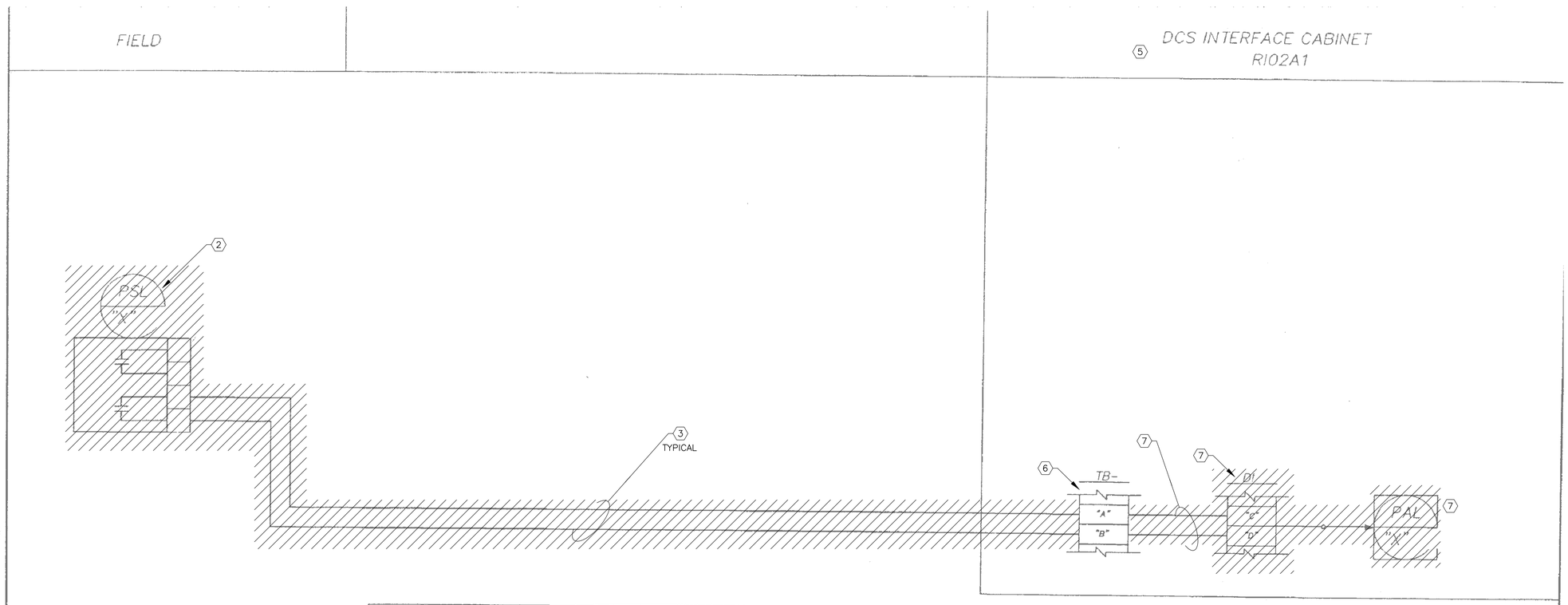

PSL/PAL-"X"	"A"	"B"	"C"	"D"
PB01-01A1				
PB01-02A1				
PB01-03A1				
PB01-04A1				
PB01-05A1				
PB01-06A1				
PB01-07A1				
PB01-08A1				

KEY NOTES:

1. THE EXISTING LOOP WIRING DIAGRAM SHOWN ON THIS DRAWING IS TYPICAL FOR EACH THICKENED SLUDGE PUMP AND THICKENED SCUM PUMPS, AS APPLICABLE. THE EXISTING WIRING SCHEMATIC IDENTIFIES COMPONENTS LOCATED IN THE FIELD, EXISTING FIELD WIRING, AND COMPONENTS/CONTROL DEVICES/INTERNAL WIRING, ETC. WITHIN EXISTING PLC REMOTE I/O CONTROL PANEL "RIO-2A".
2. DISCONNECT AND REMOVE EACH EXISTING SEAL WATER PRESSURE SWITCH FOR EACH THICKENED SLUDGE PUMP OR THICKENED SCUM PUMP, AS APPLICABLE, IN IT'S ENTIRETY. REFER TO DEMOLITION FLOOR PLAN DRAWING FOR ADDITIONAL INFORMATION. ALSO REFER TO EXISTING FLOOR PLAN REFERENCE DRAWING NO. [E-69] FOR LOCATION OF EXISTING LOW PRESSURE SWITCHES AND ADDITIONAL INFORMATION.
3. DISCONNECT AND REMOVE EXISTING FIELD WIRING AND CONDUIT BETWEEN THE EXISTING SEAL WATER PRESSURE SWITCH AND EXISTING PLC REMOTE I/O ENCLOSURE "RIO-2A". ALSO REFER TO DEMOLITION FLOOR PLAN DRAWINGS FOR ADDITIONAL INFORMATION.
4. THE DEVICE IDENTIFICATION TABLE SHOWN ON THIS DRAWING IS ASSOCIATED WITH THE THICKENER SLUDGE PUMPS OR THICKENED SCUM PUMPS, AS APPLICABLE.
5. MODIFY EXISTING PLC REMOTE I/O CONTROL PANEL "RIO-2A" AS APPLICABLE. REFER TO PLC REMOTE I/O CONTROL PANEL "RIO-2A" DEMOLITION AND RENOVATION DRAWINGS FOR ADDITIONAL INFORMATION.
6. EXISTING TERMINAL BLOCKS SHALL REMAIN WITHIN EXISTING PLC REMOTE I/O CONTROL PANEL "RIO-2A". REFER TO CONTROL PANEL DEMOLITION AND RENOVATION DRAWINGS FOR ADDITIONAL INFORMATION.
7. DISCONNECT AND REMOVE EXISTING PLC I/O MODULES AND ASSOCIATED INTERNAL WIRING AS SHOWN. REFER TO CONTROL PANEL DEMOLITION AND RENOVATION DRAWINGS FOR ADDITIONAL INFORMATION.
8. EXISTING SEAL WATER LOW PRESSURE SWITCHES ARE CONNECTED TO EXISTING SLUDGE TRANSFER PUMPS "STP-1" AND "STP-2" AND SHALL REMAIN. DO NOT DISCONNECT OR REMOVE EXISTING LOW PRESSURE SWITCHES "PB01-01A1" OR "PB01-01A2". REFER TO EXISTING FLOOR PLAN REFERENCE DRAWING NO. [E-69] FOR LOCATION OF EXISTING LOW PRESSURE SWITCHES AND ADDITIONAL INFORMATION.

GENERAL NOTES:

1. THE EXISTING EQUIPMENT IS IN WORKING CONDITION. IF ANY OF THE EXISTING EQUIPMENT/ COMPONENTS WHICH SHALL BE REUSED IS DAMAGED OR STOPS FUNCTIONING CORRECTLY, THE CONTRACTOR IS RESPONSIBLE FOR FURNISHING AND INSTALLING NEW EQUIPMENT/ COMPONENTS AS APPROVED BY THE OWNER AND MAKE ALL FINAL TERMINATIONS AT NO ADDITIONAL COST TO THE OWNER.
2. IT IS THE RESPONSIBILITY OF THE CONTRACTOR TO BECOME INTIMATELY FAMILIAR WITH THE FUNCTION, OPERATION AND ASSOCIATED INTERLOCKS FOR EXISTING PUMPS , AS APPLICABLE, ALONG WITH THE ASSOCIATED CHECK VALVE LIMIT SWITCHES, SEAL WATER PRESSURE SWITCH, SOLENOID VALVE, FIELD CONTROL STATION PRIOR TO COMMENCING MODIFICATION/ DEMOLITION/RENOVATION ACTIVITIES. CONTRACTOR SHALL FIELD VERIFY AND DENOTE ALL INTERCONNECT CONDUIT/WIRING AND THE TERMINATIONS OF INTERCONNECT WIRING BETWEEN THE DIFFERENT ENCLOSURES (I.E MOTOR CONTROL CENTER, CONTROL PANEL, PLC ENCLOSURE, ETC.) AND EXISTING PUMPING UNIT EQUIPMENT PRIOR TO COMMENCING MODIFICATION/DEMOLTIION ACTIVITIES, THE CONTRACTOR SHALL EXERCISE EXTREME CARE IN THE DEMOLITION OF THE FIELD MOUNTED EQUIPMENT AND DEMOLITION OF INTERCONNECT CONDUIT/WIRE. REFER TO DEMOLITION FLOOR PLAN DRAWINGS FOR ADDITIONAL INFORMATION. CONTRACTOR SHALL CAREFULLY DOCUMENT THE OPERATIONS OF PUMPING UNITS, FIELD WIRING TERMINATION POINTS, EXISTING PUMP FIELD MOUNTED EQUIPMENT AND ITS INTERCONNECTION WITH THE EXISTING MOTOR CONTROL CENTER, EXISTING CONTROL PANEL, EXISTING PLC ENCLOSURE, ETC., AND ASSOCIATED INTERLOCKS SUCH TO ENSURE THAT THE PROPOSED REPLACEMENT FIELD DEVICES (I.E. SOLENOID VALVES, PRESSURE SWITCH, AND LIMIT SWITCHES) AND PROPOSED INTERCONNECT CONDUIT/WIRE FOR EACH PUMPING UNIT FUNCTIONS COMMENSURABLY TO THAT OF THE EXISTING PUMPING UNITS TO THE SATISFACTION OF THE OWNER AND THE ENGINEER AT NO ADDITIONAL COST TO THE OWNER.

STATE OF TEXAS
R.C. EMANUEL
65372
REGISTERED
PROFESSIONAL ENGINEER
7/22/17

SOUTH AUSTIN REGIONAL WASTEWATER TREATMENT PLANT
CITY OF AUSTIN, TEXAS

CH2MHILL

DSGN T. VEGA
L. TRIPP
DR T. HOLLINGSHEAD
CHK S. STAHL
APVD R. EMANUEL

NO.	DATE	REVISION	BY	APVD

REUSE OF DOCUMENTS
THIS DOCUMENT, AND THE IDEAS AND DESIGNS INCORPORATED HEREIN, AS AN INSTRUMENT OF PROFESSIONAL SERVICE, IS THE PROPERTY OF CH2M HILL AND IS NOT TO BE USED, IN WHOLE OR IN PART, FOR ANY OTHER PROJECT WITHOUT THE WRITTEN AUTHORIZATION OF CH2M HILL.
© CH2M HILL

SCALE 22x34
BAR IS ONE INCH ON ORIGINAL DRAWING
0 1"
IF NOT ONE INCH ON THIS SHEET, ADJUST SCALES ACCORDINGLY

MARTINEZ & WRIGHT ENGINEERS, INC.

LOOP PB01-(TYP)
SLUDGE HANDLING BUILDING
SEAL WATER PRESSURE

SHEET
DWG NO. L-PB01-04
DATE JULY 1994
PROJ NO. HEX30935.D2

THICKENED SLUDGE/SCUM PUMPS SEAL WATER PRESSURE SWITCH LOOP WIRING DIAGRAM – DEMOLITION (1)(1) [E-66]
SCALE: NONE

REUSE OF DOCUMENTS
This document, and the designs incorporated herein, is an instrument of professional service that has been developed, designed and prepared by Harutunian Engineering, Inc., and is not to be used, in whole or part, for any other project without giving written notice to Harutunian Engineering, Inc.

REV No	DATE	DRWN	CHKD	REMARKS
△	–	–	–	–

DESIGNED BY: HEI
DRAWN BY: HEI
SHEET CHK'D BY: HEI
CROSS CHK'D BY: HEI
APPROVED BY: HEI
DATE: APRIL 2016

CDM Smith
Riata Corporate Park, 12357-A Riata Trace Parkway, Suite 210
Austin, TX 78727
Tel: (512) 346-1100
Texas Registration Number F-3043

HARUTUNIAN ENGINEERING, INC.
305 E Huntland Dr, Ste 500: Austin, TX 78752
TBPE Firm Registration No. F-2408

CITY OF AUSTIN, TEXAS - AUSTIN WATER UTILITY
CIP 3333.016
SOUTH AUSTIN REGIONAL WWTP
THICKENER IMPROVEMENTS PROJECT

INSTRUMENT WIRING SCHEMATIC
DEMOLITION
(SHEET 1 OF 1)

STATE OF TEXAS
K. A. HARUTUNIAN
59181
REGISTERED
PROFESSIONAL ENGINEER
4/22/2016

PROJECT No 590-104217
FILE NAME: I-08

SHEET No
I-08

Plotted: 4/22/2016 9:29:55 AM

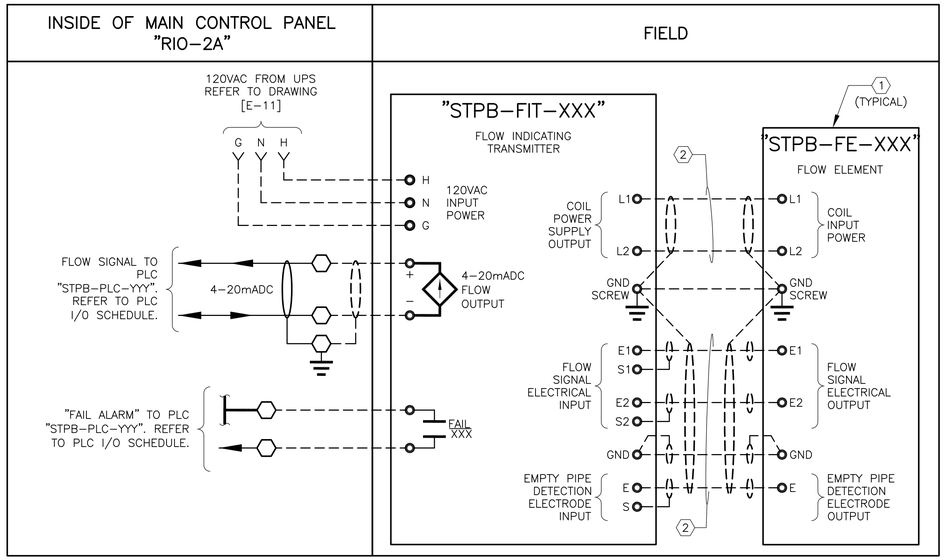

SLUDGE DISCHARGE HEADER FLOW – INSTRUMENT WIRING SCHEMATIC

SCALE: NTS

KEY NOTES:

1. THIS DRAWING IS TYPICAL FOR MULTIPLE EQUIPMENT. THE ACTUAL TAG FOR EACH EQUIPMENT WILL DIFFER FROM THAT SHOWN HERE. REFER TO THE APPLICABLE TAG REPLACEMENT SCHEDULE TO DERIVE THE CORRESPONDING TAGS FOR EACH PROPOSED EQUIPMENT.
2. CABLE TO BE FURNISHED BY LEVEL INDICATING TRANSMITTER MANUFACTURER. CONTRACTOR SHALL COORDINATE CABLE LENGTH WITH THE CONTRACT DRAWINGS TO PROVIDE ADEQUATE LENGTH FOR INTERCONNECTION. CONTRACTOR TO INSTALL CABLE WITHOUT ANY SPLICES BETWEEN LEVEL ELEMENT AND LEVEL TRANSMITTER AND MAKE ALL FINAL CONNECTIONS PER THE MANUFACTURER'S WIRING DIAGRAMS AND RECOMMENDATIONS.

MUDWELL LEVEL TAG REPLACEMENT TABLE (1)

EQUIPMENT DESCRIPTION	XXX=	YYY=
SLUDGE DISCHARGE HEADER FLOW PUMPS 1–3	9201	002
SLUDGE DISCHARGE HEADER FLOW PUMPS 4–6	9202	003
SLUDGE TRANSFER PUMPS DISCHARGE FLOW	9302	001

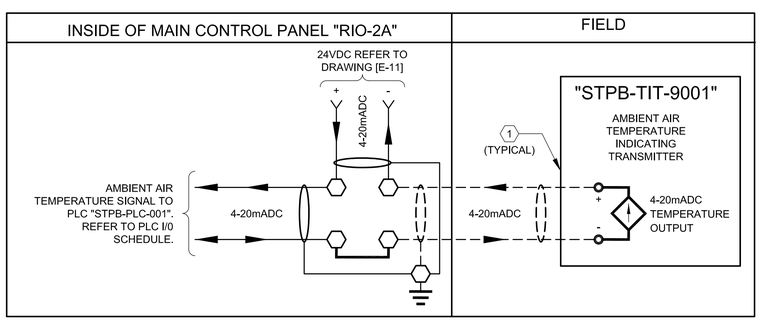

ELECTRICAL AIR TEMPERATURE - INSTRUMENT WIRING SCHEMATIC

SCALE: NTS

REUSE OF DOCUMENTS

This document, and the designs incorporated herein, is an instrument of professional service that has been developed, designed and prepared by Harutunian Engineering, Inc., and is not to be used, in whole or part, for any other project without giving written notice to Harutunian Engineering, Inc.

REV No	DATE	DRWN	CHKD	REMARKS
△	–	–	–	–

DESIGNED BY: HEI
DRAWN BY: HEI
SHEET CHK'D BY: HEI
CROSS CHK'D BY: HEI
APPROVED BY: HEI
DATE: APRIL 2016

CDM Smith
Riata Corporate Park, 12357-A Riata Trace Parkway, Suite 210
Austin, TX 78727
Tel: (512) 346-1100
Texas Registration Number F-3043

HARUTUNIAN ENGINEERING, INC.
305 E Huntland Dr, Ste 500; Austin, TX 78752
TBPE Firm Registration No. F-2408

CITY OF AUSTIN, TEXAS - AUSTIN WATER UTILITY
CIP 3333.016

SOUTH AUSTIN REGIONAL WWTP
THICKENER IMPROVEMENTS PROJECT

SLUDGE TRANSFER PUMP BUILDING
PROPOSED INSTRUMENT WIRING
SCHEMATICS (SHEET 1 OF 1)

STATE OF TEXAS
K. A. HARUTUNIAN
59181
REGISTERED PROFESSIONAL ENGINEER
4/22/2016

PROJECT No 590–104217
FILE NAME: I–09

SHEET No
I-09

Plotted: 4/22/2016 8:54:43 AM

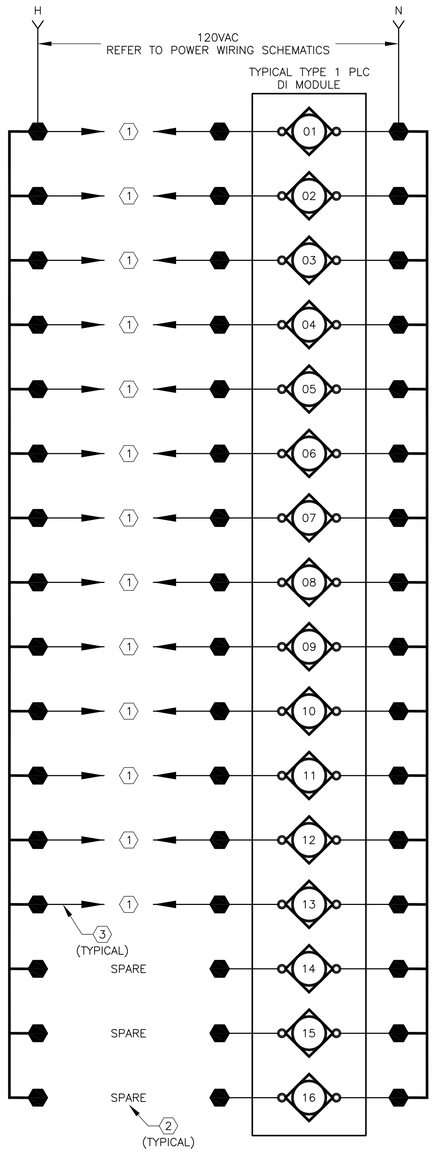

TYPICAL TYPE 1 PLC DISCRETE INPUT MODULE WIRING SCHEMATIC

SCALE: N.T.S.

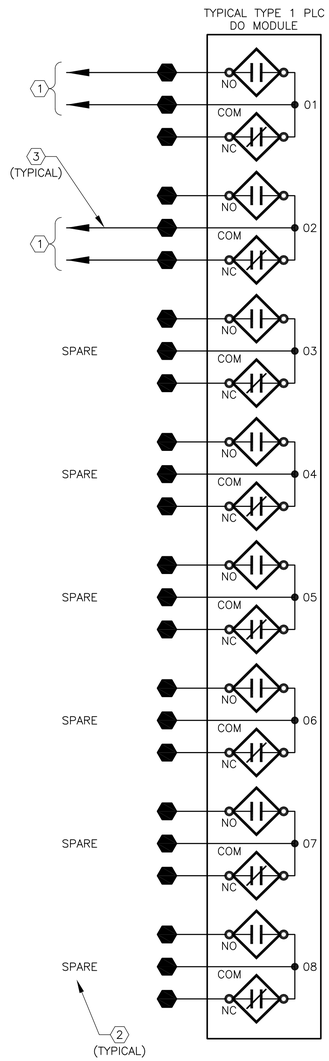

TYPICAL TYPE 1 PLC DISCRETE OUTPUT MODULE WIRING SCHEMATIC

SCALE: N.T.S.

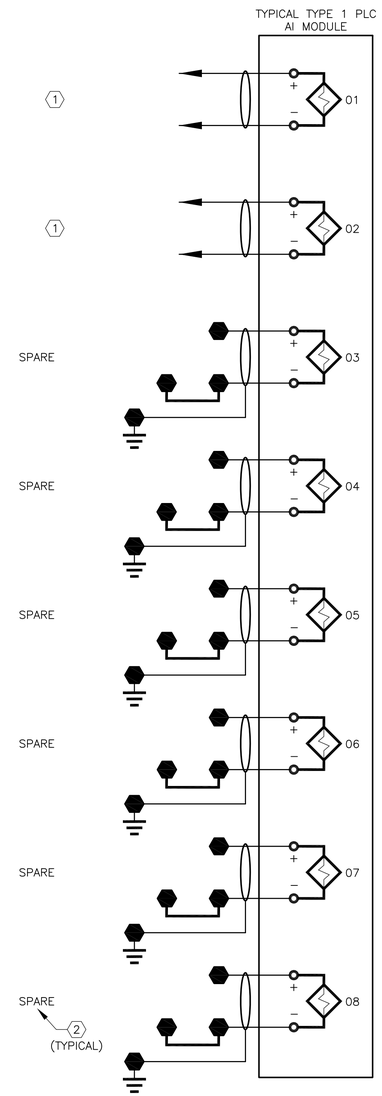

TYPICAL TYPE 1 PLC ANALOG INPUT MODULE WIRING SCHEMATIC

SCALE: N.T.S.

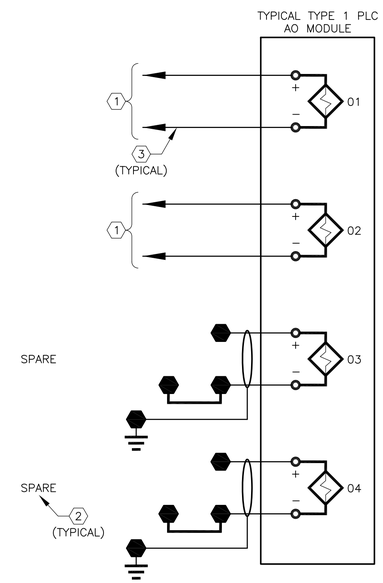

TYPICAL TYPE 1 PLC ANALOG OUTPUT MODULE WIRING SCHEMATIC

SCALE: N.T.S.

KEY NOTES:

1. WIRING CONTINUES TO CONTROL LOGIC, INSTRUMENT LOOPS, OR FIELD DEVICES AS APPLICABLE. REFER TO CONTROL/INSTRUMENT WIRING SCHEMATICS.
2. QUANTITY AND LOCATION OF USED AND SPARE PLC I/O POINTS WILL VARY. WIRE ALL SPARE POINTS TO TERMINAL BLOCKS. REFER TO CONTROL/INSTRUMENT WIRING SCHEMATICS AND PLC I/O SCHEDULE.
3. SOLID LINES ARE SHOWN FOR THE CONTINUATION OF THE CONTROL/INSTRUMENT WIRING FOR CLARITY. HOWEVER, THE WIRING SHALL BE SHOWN AS SOLID LINES IF CONTINUING TO CONTROL LOGIC, INSTRUMENT LOOPS, OR OTHER DEVICES WITHIN THE SAME CONTROL PANEL. THE WIRING SHALL BE SHOWN AS DASHED LINES IF CONTINUING TO FIELD DEVICES EXTERNAL TO THE CONTROL PANEL.

REUSE OF DOCUMENTS

This document, and the designs incorporated herein, is an instrument of professional service that has been developed, designed and prepared by Harutunian Engineering, Inc., and is not to be used, in whole or part, for any other project without giving written notice to Harutunian Engineering, Inc.

K. A. HARUTUNIAN
STATE OF TEXAS
K. A. HARUTUNIAN
59181
REGISTERED
PROFESSIONAL ENGINEER
4/22/2016

REV No	DATE	DRWN	CHKD	REMARKS
△	–	–	–	–

DESIGNED BY: HEI
DRAWN BY: HEI
SHEET CHK'D BY: HEI
CROSS CHK'D BY: HEI
APPROVED BY: HEI
DATE: APRIL 2016

CDM Smith
Riata Corporate Park, 12357-A Riata Trace Parkway, Suite 210
Austin, TX 78727
Tel: (512) 346-1100
Texas Registration Number F-3043

HARUTUNIAN ENGINEERING, INC.
305 E Huntland Dr, Ste 500; Austin, TX 78752
TBPE Firm Registration No. F-2408

CITY OF AUSTIN, TEXAS - AUSTIN WATER UTILITY
CIP 3333.016

SOUTH AUSTIN REGIONAL WWTP
THICKENER IMPROVEMENTS PROJECT

TYPICAL TYPE 1 PLC
I/O POINT WIRING SCHEMATICS

PROJECT No 590–104217
FILE NAME: I–10

SHEET No
I-10

Plotted: 4/22/2016 8:54:48 AM

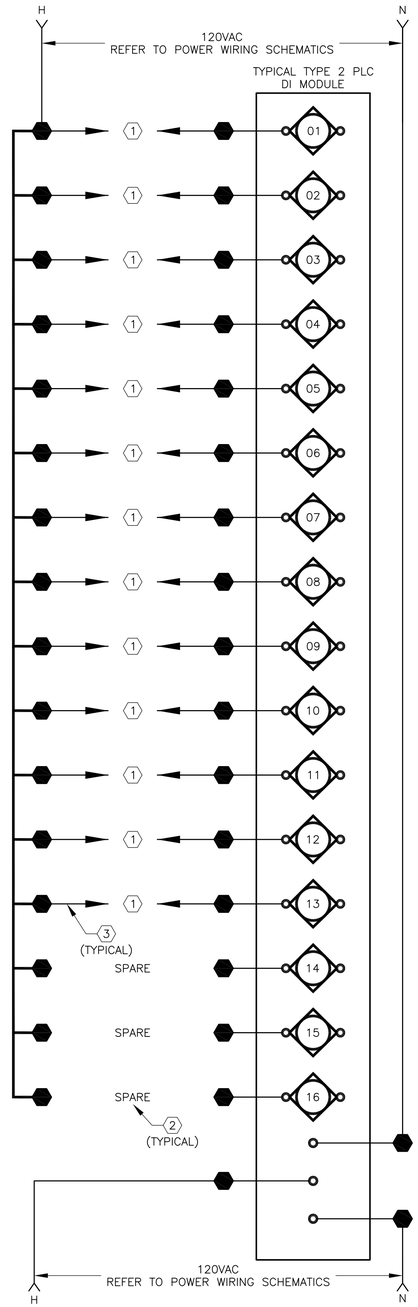

TYPICAL TYPE 2 PLC DISCRETE INPUT MODULE WIRING SCHEMATIC

SCALE: N.T.S.

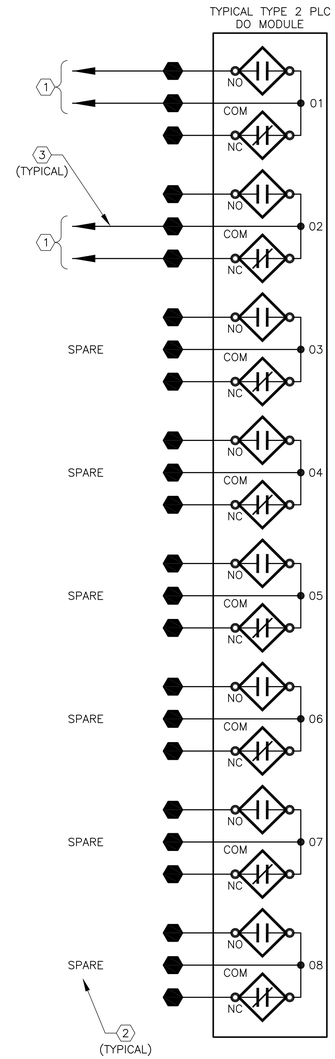

TYPICAL TYPE 2 PLC DISCRETE OUTPUT MODULE WIRING SCHEMATIC

SCALE: N.T.S.

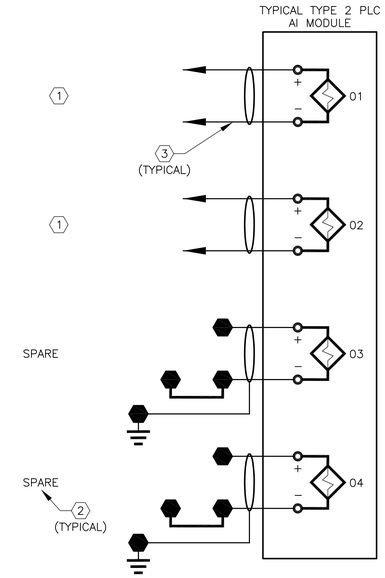

TYPICAL TYPE 2 PLC ANALOG INPUT MODULE WIRING SCHEMATIC

SCALE: N.T.S.

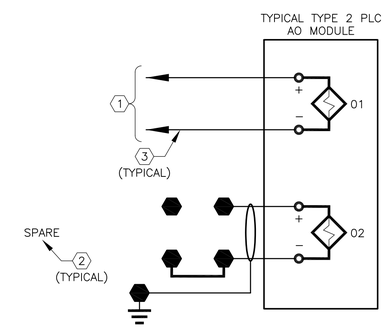

TYPICAL TYPE 2 PLC ANALOG OUTPUT MODULE WIRING SCHEMATIC

SCALE: N.T.S.

KEY NOTES:

1. WIRING CONTINUES TO CONTROL LOGIC, INSTRUMENT LOOPS, OR FIELD DEVICES AS APPLICABLE. REFER TO CONTROL/INSTRUMENT WIRING SCHEMATICS.
2. QUANTITY AND LOCATION OF USED AND SPARE PLC I/O POINTS WILL VARY. WIRE ALL SPARE POINTS TO TERMINAL BLOCKS. REFER TO CONTROL/INSTRUMENT WIRING SCHEMATICS AND PLC I/O SCHEDULE.
3. SOLID LINES ARE SHOWN FOR THE CONTINUATION OF THE CONTROL/INSTRUMENT WIRING FOR CLARITY. HOWEVER, THE WIRING SHALL BE SHOWN AS SOLID LINES IF CONTINUING TO CONTROL LOGIC, INSTRUMENT LOOPS, OR OTHER DEVICES WITHIN THE SAME CONTROL PANEL. THE WIRING SHALL BE SHOWN AS DASHED LINES IF CONTINUING TO FIELD DEVICES EXTERNAL TO THE CONTROL PANEL.

REUSE OF DOCUMENTS

This document, and the designs incorporated herein, is an instrument of professional service that has been developed, designed and prepared by Harutunian Engineering, Inc., and is not to be used, in whole or part, for any other project without giving written notice to Harutunian Engineering, Inc.

REV No	DATE	DRWN	CHKD	REMARKS
1	–	–	–	–

DESIGNED BY: HEI
DRAWN BY: HEI
SHEET CHK'D BY: HEI
CROSS CHK'D BY: HEI
APPROVED BY: HEI
DATE: APRIL 2016

CDM Smith
Riata Corporate Park, 12357-A Riata Trace Parkway, Suite 210
Austin, TX 78727
Tel: (512) 346-1100
Texas Registration Number F-3043

HARUTUNIAN ENGINEERING, INC.
305 E Huntland Dr, Ste 500; Austin, TX 78752
TBPE Firm Registration No. F-2408

CITY OF AUSTIN, TEXAS - AUSTIN WATER UTILITY
CIP 3333.016

SOUTH AUSTIN REGIONAL WWTP
THICKENER IMPROVEMENTS PROJECT

TYPICAL TYPE 2 PLC
I/O POINT WIRING SCHEMATICS

K. A. Harutunian
STATE OF TEXAS
K. A. HARUTUNIAN
59181
REGISTERED PROFESSIONAL ENGINEER
4/22/2016

PROJECT No 590-104217
FILE NAME: I-11

SHEET No
I-11

Plotted: 4/22/2016 8:54:50 AM

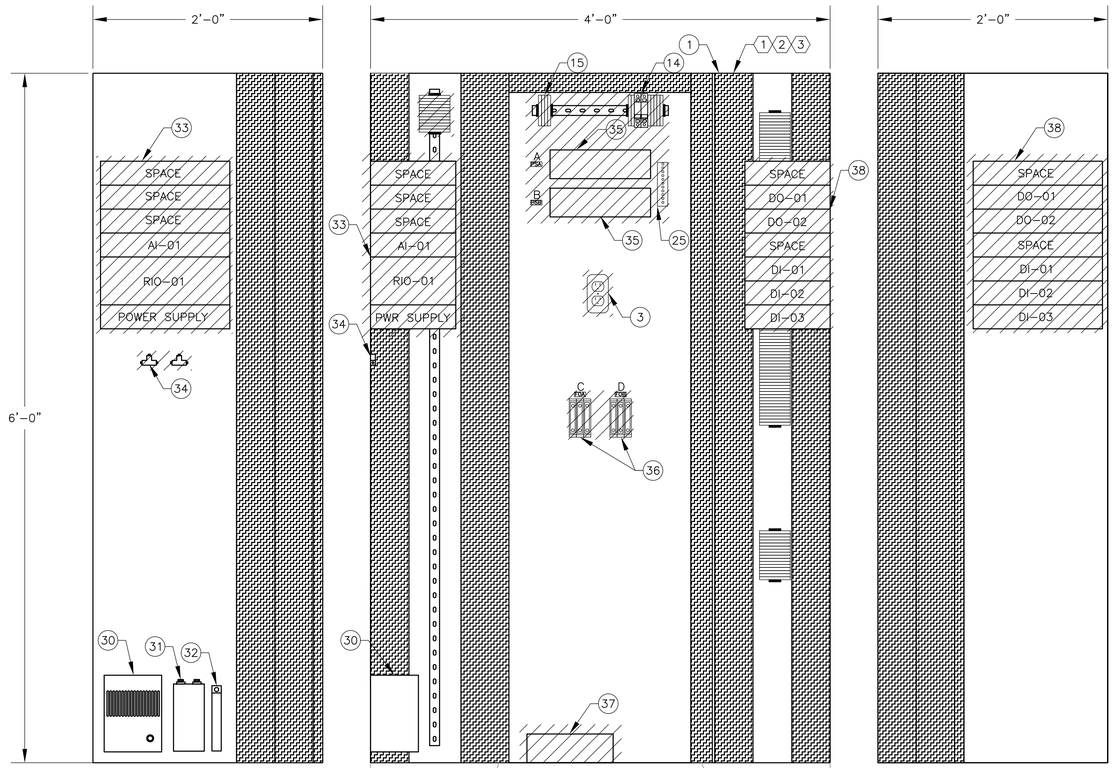

EXISTING PLC CONTROL PANEL "RIO-2A"INTERIOR LEFTSIDE ELEVATION-EXISTING

SCALE: 1'-1/2"=1'-0"

EXISTING PLC CONTROL PANEL "RIO-2A" INTERIOR RIGHTSIDE ELEVATION-DEMOLITION

SCALE: 1'-1/2"=1'-0"

EXISTING PLC CONTROL PANEL"RIO-2A" INTERIOR BACKPLANE ELEVATION-DEMOLITION

SCALE: 1'-1/2"=1'-0"

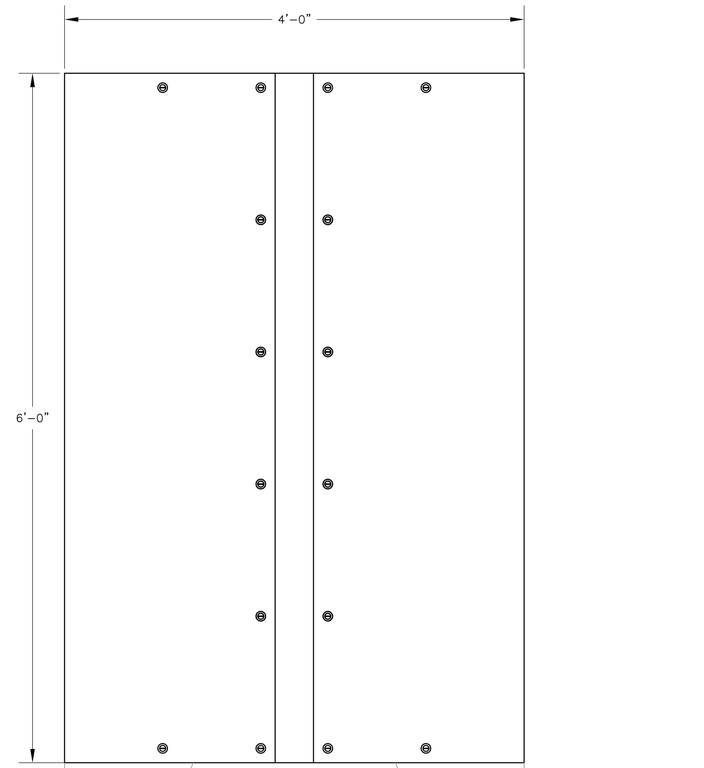

EXISTING PLC CONTROL PANEL"RIO-2A" INTERIOR FRONT ELEVATION-DEMOLITION

SCALE: 1'-1/2"=1'-0"

KEY NOTES:

1. DISCONNECT AND REMOVE ALL EXISTING WIRING CONNECTED TO THE EQUIPMENT TO BE DEMOLITIONED, AS APPLICABLE AND AS INDICATED. REMOVE THE EXISTING EQUIPMENT, AS SHOWN FROM EXISTING CONTROL CABINET "RIO-2A". EXTREME CARE MUST BE TAKEN WHEN DISCONNECTING WIRES FROM INSTRUMENTATION AND CONTROLS. FIELD VERIFY ALL CONNECTIONS AND EQUIPMENT PRIOR TO DEMOLISHING EXISTING WIRING, INSTRUMENTATION AND CONTROLS.
2. IDENTIFICATION MARK CORRESPONDS TO LETTERS ON MAIN CONTROL PANEL ELEVATION. REFER TO DRAWING NUMBER [I-19].
3. ALSO REFER TO ELECTRICAL SPECIFICATIONS FOR ADDITIONAL REQUIREMENTS.

GENERAL NOTES:

1. AN ATTEMPT IS MADE TO SHOW ALL EXISTING EQUIPMENT, CONDUIT AND WIRE ON THIS WIRING DIAGRAM. HOWEVER THE CONTRACTOR MUST EXERCISE EXTREME CARE AS THERE ARE NO AVAILABLE AS BUILT RECORDS IDENTIFYING THE ROUTING AND SIZES OF ALL CONDUIT/WIRING BETWEEN AND WITHIN THE VARIOUS MOTOR CONTROL CENTERS, CONTROL PANELS/STATIONS, LIGHTING PANELS, LOADS, ETC. AND THEIR COORDINATION WITH THE EXISTING MECHANICAL/PIPING SYSTEM. THE ACTUAL FIELD DEVICE AND INTERCONNECT EQUIPMENT, QUANTITY AND/OR LOCATION MAY VARY. IT IS THE RESPONSIBILITY OF THE CONTRACTOR TO CLOSELY AND CAREFULLY COORDINATE AND VERIFY ALL POINTS OF CONNECTION PRIOR TO COMMENCING INSTALLATION, DEMOLITION OR MODIFICATION ACTIVITIES. IT IS THE RESPONSIBILITY OF THE CONTRACTOR TO INSTALL ALL NECESSARY FIELD DEVICE(S), FIELD DEVICE(S) INTERCONNECT CONDUIT/WIRE AND INTERCONNECT EQUIPMENT AND TO MAKE ALL FINAL CONNECTIONS PER THE SPECIFICATIONS, THE MANUFACTURER'S RECOMMENDATIONS AND THE MANUFACTURER'S WIRING DIAGRAMS. FOLLOWING THE DISCOVERY VERIFICATION OF THE EXISTING FIELD CONDITIONS SHOULD ADJUSTMENTS BECOME A NECESSITY TO THE EXISTING OR PROPOSED SYSTEM (AS APPLICABLE), THE EXISTING DISCOVERED FIELD CONDITIONS MUST BE BROUGHT TO THE ENGINEER'S ATTENTION FOR EXECUTION OF THE NECESSARY ADJUSTMENTS AND/OR MODIFICATIONS.
2. ALL EQUIPMENT DEPICTED ON THIS DRAWING IS EXISTING. CROSS HATCHED LINEWORK DENOTES EQUIPMENT TO BE DEMOLITIONED UNLESS OTHERWISE NOTED. ALL DEMOLITIONED EQUIPMENT SHALL REMAIN THE PROPERTY OF THE OWNER. ALL DEMOLITION ACTIVITIES SHALL BE FULLY COORDINATED WITH MECHANICAL/STRUCTURAL/ETC., DEMOLITION ACTIVITIES.
3. THE CONTRACTOR SHALL BE AWARE THAT WHEN ANY EXISTING EQUIPMENT IS DISCONNECTED, REMOVED, RELOCATED OR OTHERWISE MODIFIED, THE POSSIBILITY MAY EXIST FOR SUCH ACTION TO LEAD TO INTERRUPTION OF OPERATION OF THE PLANT. IF EXTREME CARE, VERIFICATION, AND VALIDATION IS NOT CAREFULLY EXERCISED PRIOR TO COMMENCEMENT OF SUCH TYPE OF DEMOLITION ACTIVITY, THE CONTRACTOR SHALL KNOW THAT ANY INTERRUPTION TO THE CONTINUITY OF PLANT OPERATION AT ITS FULLY RATED TREATMENT CAPACITY IS UNACCEPTABLE DURING THE CONSTRUCTION COURSE OF THIS PROJECT. HOWEVER, SHOULD ANY INTERRUPTION TO PLANT OPERATION OCCUR FOR ANY UNFORESEEN REASON THAT WAS TOTALLY ACCIDENTAL AND NOT RELATED TO IMPROPER FIELD INVESTIGATION AND IMPROPER PLANNING PRIOR TO COMMENCEMENT OF THE ELECTRICAL/INSTRUMENTATION DEMOLITION EFFORT, IN SUCH A CONDITION, THE RESPONSIBLE CONTRACTOR SHALL DETERMINE THE PROBLEM, CORRECT IT, AND START UP THE INTERRUPTED EQUIPMENT WITHIN A CERTAIN TIME PERIOD AS DETERMINED BY THE OWNER AT NO ADDITIONAL COST TO THE OWNER. THE CONTRACTOR SHALL PROVIDE ALL NECESSARY LABOR, EQUIPMENT, MATERIAL, AND ACCESSORIES TO ENSURE THAT ANY EFFECTED EQUIPMENT SHALL OPERATE AS PREVIOUSLY OPERATED, AT NO ADDITIONAL COST TO THE OWNER AND TO THE OWNER'S SATISFACTION.

REUSE OF DOCUMENTS

This document, and the designs incorporated herein, is an instrument of professional service that has been developed, designed and prepared by Harutunian Engineering, Inc., and is not to be used, in whole or part, for any other project without giving written notice to Harutunian Engineering, Inc.

REV No	DATE	DRWN	CHKD	REMARKS
△	–	–	–	–

DESIGNED BY: HEI
DRAWN BY: HEI
SHEET CHK'D BY: HEI
CROSS CHK'D BY: HEI
APPROVED BY: HEI
DATE: APRIL 2016

CDM Smith
Riata Corporate Park, 12357-A Riata Trace Parkway, Suite 210
Austin, TX 78727
Tel: (512) 346-1100
Texas Registration Number F-3043

HARUTUNIAN ENGINEERING, INC.
305 E Huntland Dr, Ste 500: Austin, TX 78752
TBPE Firm Registration No. F-2408

CITY OF AUSTIN, TEXAS - AUSTIN WATER UTILITY
CIP 3333.016

SOUTH AUSTIN REGIONAL WWTP
THICKENER IMPROVEMENTS PROJECT

SLUDGE TRANSFER BUILDING
"RIO-2A" INTERIOR BACKPLANE
DEMOLITION

STATE OF TEXAS
K. A. HARUTUNIAN
59181
REGISTERED PROFESSIONAL ENGINEER
4/22/2016

PROJECT No 590-104217
FILE NAME: I-12

SHEET No
I-12

Plotted: 4/22/2016 8:54:54 AM

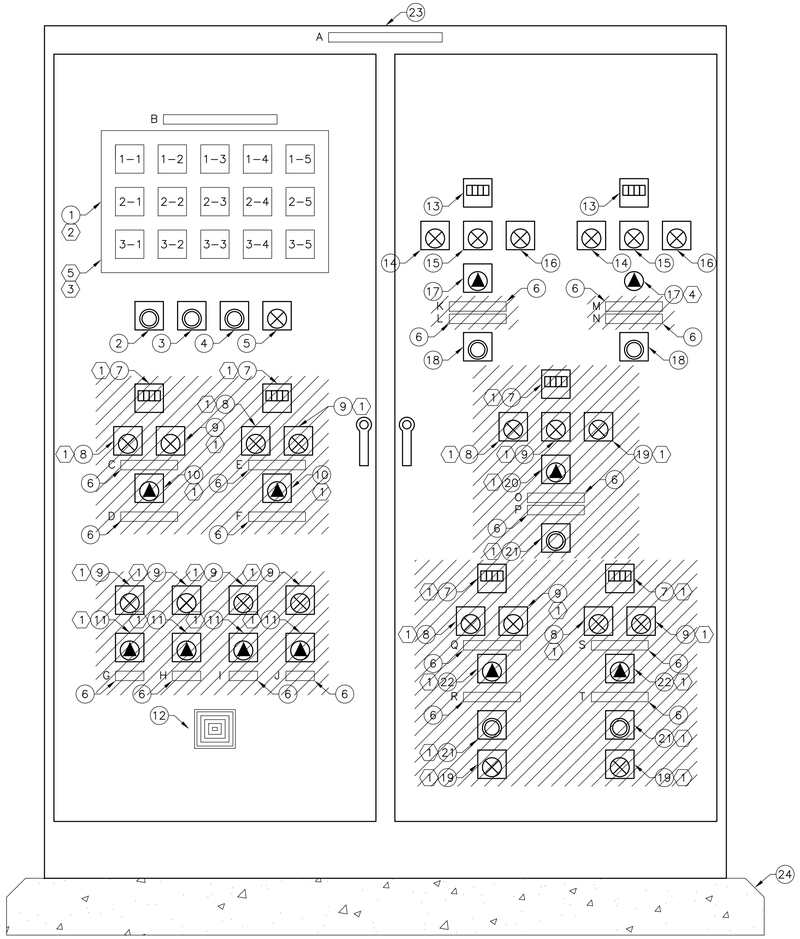

EXISTING CONTROL CABINET "PB01-CCP-01" EXTERIOR FRONT ELEVATION – DEMOLITION

SCALE: NTS

SLUDGE THICKENER BUILDING CONTROL CABINET "PB01-CCP-01" EQUIPMENT SCHEDULE

MARK	DESCRIPTION
1	ANNUNCIATOR ALARM PANEL
2	"ACKNOWLEDGE-ANNUNCIATOR ALARM" – INDICATING PUSHBUTTON, BLACK BUTTON WITH YELLOW/WHITE LEGEND PLATE
3	"RESET-ANNUNCIATOR ALARM" – INDICATING PUSHBUTTON, BLACK BUTTON WITH YELLOW/WHITE LEGEND PLATE COLOR
4	"TEST-ANNUNCIATOR ALARM" – INDICATING PUSHBUTTON, BLACK BUTTON WITH YELLOW/WHITE LEGEND PLATE COLOR
5	"ON-ANNUNCIATOR POWER" – INDICATING PILOT LIGHT, RED/WHITE LEGEND PLATE COLOR
6	EQUIPMENT NAMEPLATE IDENTIFIER
7	ELAPSED TIME METER (ETM)
8	"OFF" – INDICATING LIGHT, GREEN
9	"ON" – INDICATING LIGHT, RED
10	"ON-OFF" – TWO POSITION SELECTOR SWITCH, BLACK
11	"MANUAL-OFF-AUTO" – THREE POSITION SELECTOR SWITCH, BLACK
12	AUDIBLE ALARM
13	ELAPSED TIME METER
14	"OFF" – INDICATING LIGHT, GREEN
15	"ON' – INDICATING LIGHT, RED
16	"OPEN" – INDICATING LIGHT, ORANGE
17	"ON-OFF-AUTO-REMOTE" – FOUR POSITION SELECTOR SWITCH, BLACK
18	"RESET" – PUSHBUTTON, BLACK
19	"OPEN" – INDICATING LIGHT, ORANGE
20	"ON-OFF-SCUM/AUTO-SCUM/AUTO TIMER-SLUDGE/AUTO-REMOTE" – SIX POSITION SELECTOR SWITCH, BLACK
21	"RESET" – PUSHBUTTON, BLACK
22	"ON-OFF-AUTO/TIMER-AUTO-REMOTE" – FIVE POSITION SELECTOR SWITCH, BLACK
23	DOUBLE DOOR ENCLOSURE 7'-6" HIGH X 6'-0" WIDE X 20" DEEP
24	CONCRETE HOUSEKEEPING PAD

SLUDGE THICKENER BUILDING CONTROL CABINET "PB01-CCP-01" EXTERIOR FRONT ELEVATION NAMEPLATE SCHEDULE

ID MARK	NAMEPLATE INSCRIPTION
A	SLUDGE TRANSFER BUILDING CONTROL CABINET "PB01-CCP-01"
B	PB01-AP-01
C	STA1-STE-001
D	SLUDGE THICKENER NO. 1A
E	STA1-STE-002
F	SLUDGE THICKENER NO. 2A
G	SLUDGE THICKENER NO. 1A SCUM WASH VALVE
H	SLUDGE THICKENER NO. 2A SCUM WASH VALVE
I	SLUDGE THICKENER NO. 1A SCUM BOX FLUSH VALVE
J	SLUDGE THICKENER NO. 2A SCUM BOX FLUSH VALVE
K	THICKENED SLUDGE PUMP "TSLP-1"
L	PB01-SLP-001
M	THICKENED SLUDGE PUMP "TSLP-2"
N	PB01-SLP-002
O	THICKENED SLUDGE/SCUM PUMP "TSLP-3"
P	PB01-SLP-003
Q	PB01-SCP-001
R	THICKENED SCUM PUMP "TSCP-1"
S	PB01-SCP-002
T	THICKENED SCUM PUMP "TSCP-2"
U	NOT USED
V	NOT USED
W	NOT USED
X	NOT USED
Y	NOT USED
Z	NOT USED

SLUDGE THICKENER BUILDING CONTROL CABINET "PB01-CCP-01" ANNUNCIATOR ALARM SCHEDULE (2)

ID MARK	ANNUNCIATOR ALARM INSCRIPTION
1-1	SLUDGE TRANSFER PUMP NO. 1 (STP1) – PMR TROUBLE
1-2	SLUDGE TRANSFER PUMP NO. 2 (STP2) – PMR TROUBLE
1-3	SLUDGE THICKENER NO. 1B (GT1B) RAKE – HIGH TORQUE
1-4	SLUDGE THICKENER NO. 2B (GT2B) RAKE – HIGH TORQUE
1-5	SLUDGE HOLDING TANK – HIGH LEVEL
2-1	SCUM PUMP NO. 1 (TSCP1) – CHECK VALVE FAILED TO OPEN
2-2	SCUM PUMP NO. 2 (TSCP2) – CHECK VALVE FAILED TO OPEN
2-3	SLUDGE THICKENER NO. 1A (GT1A) RAKE – HIGH TORQUE
2-4	SLUDGE THICKENER NO. 2A (GT2A) RAKE – HIGH TORQUE
2-5	SLUDGE HOLDING TANK – LOW LEVEL
3-1	PUMP SEAL WATER LOW PRESSURE
3-2	SLUDGE TRANSFER PUMPS – HIGH DISCHARGE PRESSURE
3-3	SLUDGE THICKENER BUILDING – LOW TEMPERATURE
3-4	SLUDGE THICKENER BUILDING – HIGH SUMP LEVEL
3-5	SPARE

KEY NOTES:

1. DISCONNECT AND REMOVE ALL EXISTING WIRING CONNECTED TO THE INDICATING PILOT LIGHT, PUSHBUTTON, SELECTOR SWITCH, OR ELAPSED TIME METER, AS APPLICABLE AND AS INDICATED. REMOVE THE EXISTING INDICATING PILOT LIGHT, PUSHBUTTON, SELECTOR SWITCH, OR ELAPSED TIME METER, AS SHOWN FROM EXISTING CONTROL CABINET "PB01-CCP-01". EXTREME CARE MUST BE TAKEN WHEN DISCONNECTING WIRES FROM INSTRUMENTATION AND CONTROLS. FIELD VERIFY ALL CONNECTIONS AND EQUIPMENT PRIOR TO DEMOLISHING EXISTING WIRING, INSTRUMENTATION AND CONTROLS.
2. EXISTING ANNUNCIATOR ALARM PANEL SHALL REMAIN AND ABANDONED IN PLACE. REFER TO ANNUNCIATOR ALARM SCHEDULE ON THIS DRAWING. ALL ANNUNCIATOR ALARM INSCRIPTIONS PLATES SHALL REMAIN EVEN IF THE ALARM IS TO BE DISCONNECTED DURING DEMOLITION ACTIVITIES.
3. DISCONNECT AND REMOVE EXISTING WIRING FROM ANNUNCIATOR ALARM PANEL ONLY FOR EXISTING ALARMS ASSOCIATED WITH THE EXISTING EQUIPMENT TO BE DEMOLISHED AND MODIFIED SUCH AS THE EXISTING GRAVITY THICKENERS NO. 1A AND NO. 2A, ASSOCIATED SCUM WASH/FLUSH VALVES, EXISTING SLUDGE/SCUM PUMP NO. 3 AND EXISTING SCUM PUMPS NO. 1 AND 2, AS APPLICABLE. ALL OTHER WIRES CONNECTED TO THE EXISTING ANNUNCIATOR ALARM PANEL FOR OTHER EQUIPMENT WHICH IS NOT BEING DEMOLISHED OR MODIFIED SHALL REMAIN AND BE ABANDONED IN PLACE. EXTREME CARE MUST BE TAKEN WHEN DISCONNECTING WIRES FROM INSTRUMENTATION AND CONTROLS. FIELD VERIFY ALL CONNECTIONS AND EQUIPMENT PRIOR TO DEMOLISHING EXISTING WIRING, INSTRUMENTATION AND CONTROLS.
4. EXISTING SELECTOR SWITCH DOES NOT HAVE A LEGEND PLATE. CONTRACTOR SHALL CLEAN MARKINGS MADE IN MARKER AROUND THE EXISTING SELECTOR SWITCH AND PROVIDE A LEGEND PLATE FOR THE EXISTING SELECTOR SWITCH DURING RENOVATION ACTIVITIES.
5. REFER TO ANNUNCIATOR SCHEDULE SHOWN ON THIS DRAWING FOR ANNUNCIATOR ALARM INSCRIPTIONS.
6. REMOVE EXISTING NAMEPLATE TAG. EXISTING SLUDGE PUMPS SHALL BE RETAGGED DURING RENOVATION ACTIVITIES. A NEW NAMEPLATE SHALL BE PROVIDED FOR THE EXISTING SLUDGE PUMPS.

GENERAL NOTES:

1. AN ATTEMPT IS MADE TO SHOW ALL EXISTING EQUIPMENT ON THIS CONTROL PANEL FRONT ELEVATION. HOWEVER THE CONTRACTOR MUST EXERCISE EXTREME CARE AS THERE ARE NO AVAILABLE AS BUILT RECORDS IDENTIFYING THE ROUTING OF ALL CONDUIT/WIRING BETWEEN THE VARIOUS MOTOR CONTROL CENTERS, CONTROL PANELS, PLC CABINET, LOADS, ETC., NO RECORDS IDENTIFYING THE COMPONENTS OF THE EXISTING CONTROL PANEL, AND NO RECORDS IDENTIFYING THE INTERNAL WIRING OF THE EXISTING CONTROL PANEL. THEREFORE, THE CONTRACTOR IS TO EXERCISE EXTREME CARE, VERIFY THE ROUTING OF EXISTING CONDUIT/WIRING AND VERIFYING THE COMPONENTS AND INTERNAL WIRING OF THE CONTROL PANEL, IF NECESSARY, PRIOR TO COMMENCING FULL SCALE DEMOLITION OR RENOVATION ACTIVITIES. FOLLOWING THE DISCOVERY VERIFICATION OF THE EXISTING FIELD CONDITIONS, SHOULD ADJUSTMENTS BECOME A NECESSITY TO THE EXISTING OR PROPOSED SYSTEM (AS APPLICABLE), THE EXISTING DISCOVERED FIELD CONDITIONS MUST BE BROUGHT TO THE ENGINEER'S ATTENTION FOR EXECUTION OF THE NECESSARY ADJUSTMENTS/MODIFICATIONS.
2. THE EXISTING INFORMATION SHOWN ON THIS DRAWING WAS OBTAINED FROM THE PROJECT ENTITLED "ONION CREEK WASTEWATER TREATMENT FACILITIES – CONTRACT NO. 2" DATED APRIL 1984 AND FROM THE PROJECT ENTITLED "SOUTH AUSTIN REGIONAL WASTEWATER TREATMENT PLANT CONTROL AND INSTRUMENTATION IMPROVEMENTS" DATED JULY 1994. THIS DRAWING MAY NOT EXACTLY REFLECT THE EXISTING CONDITIONS. THEREFORE, THE CONTRACTOR IS TO FIELD VERIFY THE EXISTING CONDITIONS PRIOR TO COMMENCING FULL SCALE DEMOLITION OR RENOVATION ACTIVITIES. FOLLOWING THE DISCOVERY VERIFICATION OF THE EXISTING FIELD CONDITIONS, SHOULD ADJUSTMENTS BECOME A NECESSITY TO THE EXISTING OR PROPOSED SYSTEM (AS APPLICABLE), THE EXISTING DISCOVERED FIELD CONDITIONS MUST BE BROUGHT TO THE OWNER'S ATTENTION FOR EXECUTION OF THE NECESSARY ADJUSTMENTS/MODIFICATIONS.
3. REFER TO EXISTING CONTROL PANEL REFERENCE DRAWINGS FOR ADDITIONAL INFORMATION PRIOR TO COMMENCING MODIFICATION, DEMOLITION, OR RENOVATION ACTIVITIES.

STATE OF TEXAS
K. A. HARUTUNIAN
59181
REGISTERED PROFESSIONAL ENGINEER
4/22/2016

REUSE OF DOCUMENTS
This document, and the designs incorporated herein, is an instrument of professional service that has been developed, designed and prepared by Harutunian Engineering, Inc., and is not to be used, in whole or part, for any other project without giving written notice to Harutunian Engineering, Inc.

REV No	DATE	DRWN	CHKD	REMARKS
1	–	–	–	–

DESIGNED BY: HEI
DRAWN BY: HEI
SHEET CHK'D BY: HEI
CROSS CHK'D BY: HEI
APPROVED BY: HEI
DATE: APRIL 2016

CDM Smith
Riata Corporate Park, 12357-A Riata Trace Parkway, Suite 210
Austin, TX 78727
Tel: (512) 346-1100
Texas Registration Number F-3043

HARUTUNIAN ENGINEERING, INC.
305 E Huntland Dr, Ste 500; Austin, TX 78752
TBPE Firm Registration No. F-2408

CITY OF AUSTIN, TEXAS - AUSTIN WATER UTILITY
CIP 3333.016

SOUTH AUSTIN REGIONAL WWTP
THICKENER IMPROVEMENTS PROJECT

CONTROL CABINET "PB01-CCP-01"
FRONT ELEVATION AND SCHEDULES
- DEMOLITION

PROJECT No 590-104217
FILE NAME: I-13

SHEET No
I-13

Plotted: 4/22/2016 8:55:00 AM

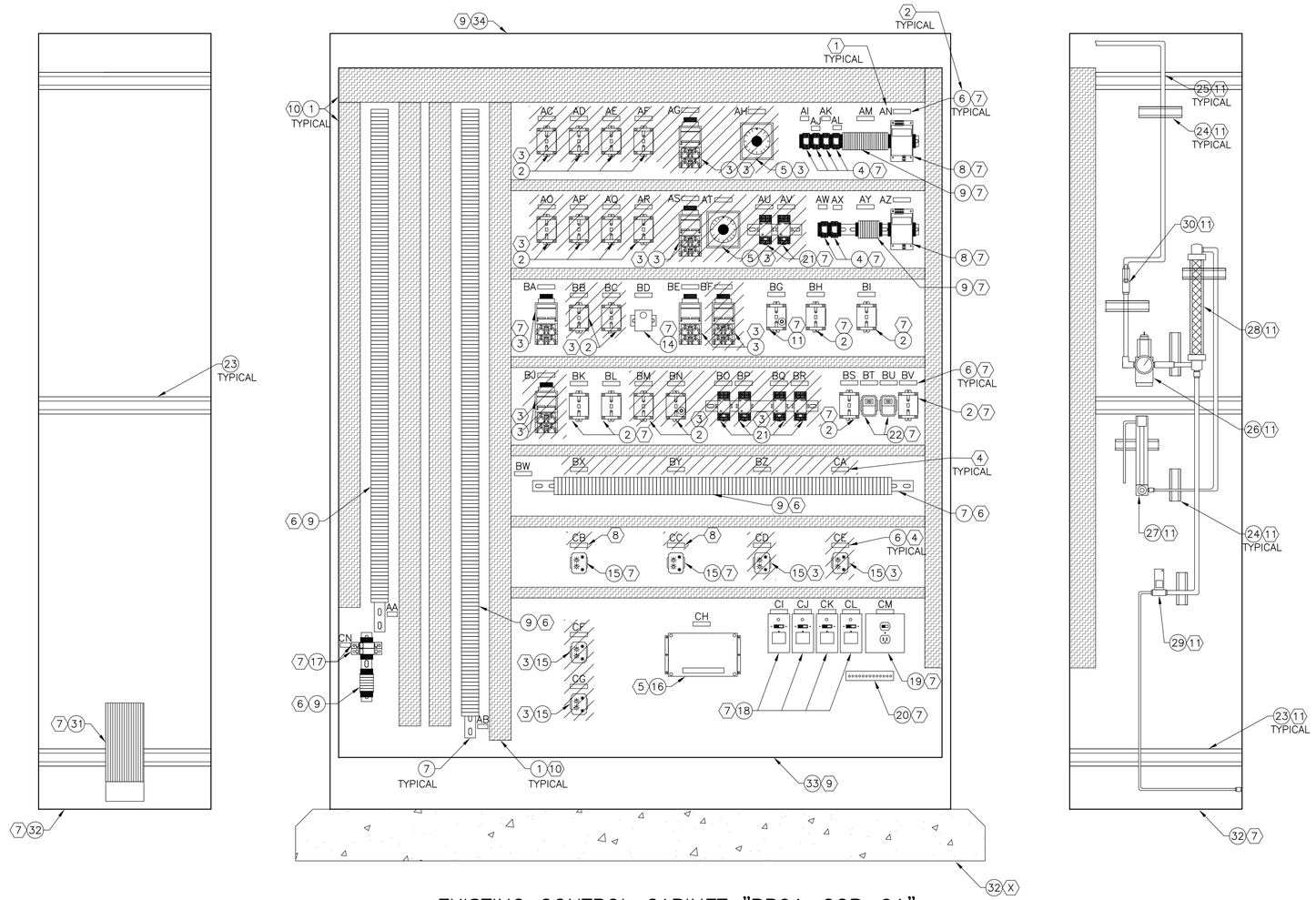

EXISTING CONTROL CABINET "PB01-CCP-01"
INTERIOR BACKPLANE ELEVATION – DEMOLITION

SCALE: NTS

KEY NOTES:

1. LETTER IDENTIFICATION MARK CORRESPONDS TO IDENTIFICATION MARK SHOWN IN CONTROL PANEL NAMEPLATE SCHEDULE ON DRAWING NO. [I–15].
2. NUMBER IN CIRCLE CORRESPONDS TO IDENTIFICATION MARK IN CONTROL PANEL EQUIPMENT SCHEDULE ON DRAWING NO. [I–15].
3. CONTRACTOR SHALL DISCONNECT AND REMOVE EXISTING CONTROL DEVICES (I.E. CONTROL RELAYS, TIMING RELAYS, ETC.), INSTRUMENTATION, AND INTERNAL WIRING WITHIN THE EXISTING CONTROL PANEL "PB01–CCP–01" FOR EXISTING SCUM PUMPING UNITS NO. 1 AND 2, "TSCP–1" AND "TSCP–2" AND FOR EXISTING SLUDGE/SCUM PUMP NO. 3, "TSLP/TSCP–3" IN THEIR ENTIRETY. CONTRACTOR SHALL REFER TO DEMOLITION CONTROL WIRING SCHEMATICS AND DEMOLITION LOOP DIAGRAMS FOR ADDITIONAL INFORMATION.
4. REMOVE EXISTING NAMEPLATE OR EXISTING INSCRIPTION WRITTEN IN MARKER ON THE BACKPLANE OF THE CONTROL PANEL NAMEPLATE IN ITS ENTIRETY. TYPICAL FOR ALL NAMEPLATES OR MARKER INSCRIPTIONS SHOWN WITH HATCHED LINEWORK.
5. EXISTING ANNUNCIATOR POWER SUPPLY SHALL REMAIN AND BE ABANDONED IN PLACE.
6. EXISTING TERMINAL BLOCKS AND EXISTING DIN RAIL SHALL REMAIN AND BE REUSED DURING RENOVATION ACTIVITIES.
7. EXISTING EQUIPMENT OR NAMEPLATE, AS APPLICABLE, SHALL REMAIN WITHIN EXISTING CONTROL PANEL.
8. REMOVE EXISTING NAMEPLATE OR EXISTING INSCRIPTION WRITTEN IN MARKER ON THE BACKPLANE OF THE EXISTING CONTROL PANEL, AS APPLICABLE. NEW NAMEPLATES SHALL BE PROVIDED DURING RENOVATION ACTIVITIES.
9. EXISTING CONTROL PANEL BACKPLANE SHALL REMAIN AND BE REUSED DURING RENOVATION ACTIVITIES.
10. EXISTING WIREWAY SHALL REMAIN AND BE REUSED DURING RENOVATION ACTIVITIES.

GENERAL NOTES:

1. AN ATTEMPT IS MADE TO SHOW ALL EXISTING EQUIPMENT ON THIS CONTROL PANEL FRONT ELEVATION. HOWEVER THE CONTRACTOR MUST EXERCISE EXTREME CARE AS THERE ARE NO AVAILABLE AS BUILT RECORDS IDENTIFYING THE ROUTING OF ALL CONDUIT/WIRING BETWEEN THE VARIOUS MOTOR CONTROL CENTERS, CONTROL PANELS, PLC CABINET, LOADS, ETC., NO RECORDS IDENTIFYING THE COMPONENTS OF THE EXISTING CONTROL PANEL, AND NO RECORDS IDENTIFYING THE INTERNAL WIRING OF THE EXISTING CONTROL PANEL. THEREFORE, THE CONTRACTOR IS TO EXERCISE EXTREME CARE, VERIFY THE ROUTING OF EXISTING CONDUIT/WIRING AND VERIFYING THE COMPONENTS AND INTERNAL WIRING OF THE CONTROL PANEL, IF NECESSARY, PRIOR TO COMMENCING FULL SCALE DEMOLITION OR RENOVATION ACTIVITIES. FOLLOWING THE DISCOVERY VERIFICATION OF THE EXISTING FIELD CONDITIONS, SHOULD ADJUSTMENTS BECOME A NECESSITY TO THE EXISTING OR PROPOSED SYSTEM (AS APPLICABLE), THE EXISTING DISCOVERED FIELD CONDITIONS MUST BE BROUGHT TO THE ENGINEER'S ATTENTION FOR EXECUTION OF THE NECESSARY ADJUSTMENTS/MODIFICATIONS.
2. THE EXISTING INFORMATION SHOWN ON THIS DRAWING WAS OBTAINED FROM THE PROJECT ENTITLED "ONION CREEK WASTEWATER TREATMENT FACILITIES – CONTRACT NO. 2" DATED APRIL 1984 AND FROM THE PROJECT ENTITLED "SOUTH AUSTIN REGIONAL WASTEWATER TREATMENT PLANT CONTROL AND INSTRUMENTATION IMPROVEMENTS" DATED JULY 1994. THIS DRAWING MAY NOT EXACTLY REFLECT THE EXISTING CONDITIONS. THEREFORE, THE CONTRACTOR IS TO FIELD VERIFY THE EXISTING CONDITIONS PRIOR TO COMMENCING FULL SCALE DEMOLITION OR RENOVATION ACTIVITIES. FOLLOWING THE DISCOVERY VERIFICATION OF THE EXISTING FIELD CONDITIONS, SHOULD ADJUSTMENTS BECOME A NECESSITY TO THE EXISTING OR PROPOSED SYSTEM (AS APPLICABLE), THE EXISTING DISCOVERED FIELD CONDITIONS MUST BE BROUGHT TO THE OWNER'S ATTENTION FOR EXECUTION OF THE NECESSARY ADJUSTMENTS/MODIFICATIONS.
3. REFER TO EXISTING CONTROL PANEL REFERENCE DRAWINGS FOR ADDITIONAL INFORMATION PRIOR TO COMMENCING MODIFICATION, DEMOLITION, OR RENOVATION ACTIVITIES.

STATE OF TEXAS
K. A. HARUTUNIAN
59181
REGISTERED PROFESSIONAL ENGINEER
4/22/2016

REUSE OF DOCUMENTS
This document, and the designs incorporated herein, is an instrument of professional service that has been developed, designed and prepared by Harutunian Engineering, Inc., and is not to be used, in whole or part, for any other project without giving written notice to Harutunian Engineering, Inc.

REV No	DATE	DRWN	CHKD	REMARKS
△	–	–	–	–

DESIGNED BY: HEI
DRAWN BY: HEI
SHEET CHK'D BY: HEI
CROSS CHK'D BY: HEI
APPROVED BY: HEI
DATE: APRIL 2016

CDM Smith
Riata Corporate Park, 12357-A Riata Trace Parkway, Suite 210
Austin, TX 78727
Tel: (512) 346-1100
Texas Registration Number F-3043

HARUTUNIAN ENGINEERING, INC.
305 E Huntland Dr, Ste 500; Austin, TX 78752
TBPE Firm Registration No. F-2408

CITY OF AUSTIN, TEXAS - AUSTIN WATER UTILITY
CIP 3333.016

SOUTH AUSTIN REGIONAL WWTP
THICKENER IMPROVEMENTS PROJECT

CONTROL CABINET "PB01-CCP-01"
INTERIOR BACKPLANE ELEVATION
- DEMOLITION

PROJECT No 590–104217
FILE NAME: I–14

SHEET No
I-14

Plotted: 4/22/2016 8:55:06 AM

SLUDGE THICKENER BUILDING CONTROL CABINET "PB01-CCP-01" INTERIOR BACKPLANE ELEVATION NAMEPLATE SCHEDULE

(5) (TYPICAL)

ID MARK	NAMEPLATE INSCRIPTION	ASSOCIATED EQUIPMENT (AS APPLICABLE)
AA	TS-1	
AB	TS-2	
AC	SFVR1	SLUDGE THICKENER NO. 1A
AD	SWVR1	SLUDGE THICKENER NO. 1A
AE	LSR1	SLUDGE THICKENER NO. 1A
AF	LSR2	SLUDGE THICKENER NO. 1A
AG	TDR1	SLUDGE THICKENER NO. 1A
AH	TR1	SLUDGE THICKENER NO. 1A
AI	CVLS11X	
AJ	CVLS12X	
AK	CVLS13X	
AL	CVLS14X	
AM	TB4	
AN	PS1	CONTROL PANEL 24VDC POWER SUPPLY
AO	SFVR2	SLUDGE THICKENER NO. 2A
AP	SWVR2	SLUDGE THICKENER NO. 2A
AQ	LSR3	SLUDGE THICKENER NO. 2A
AR	LSR4	SLUDGE THICKENER NO. 2A
AS	TDR2	SLUDGE THICKENER NO. 2A
AT	TR2	SLUDGE THICKENER NO. 2A
AU	STA1-CR-01A1	SLUDGE THICKENER NO. 1A
AV	STA2-CR-01A1	SLUDGE THICKENER NO. 2A
AW	CVLS21X	
AX	CVLS22X	
AY	TB5	
AZ	PS2	CONTROL PANEL 24VDC POWER SUPPLY
BA	VLS1-TDR	SLUDGE PUMP NO. 1, TSLP-1 (3)
BB	RSCP	SLUDGE/SCUM PUMP NO. 3, TSLP/TSCP-3
BC	RSL	SLUDGE/SCUM PUMP NO. 3, TSLP/TSCP-3
BD	T-STAT	
BE	VLS2-TDR	SLUDGE PUMP NO. 2, TSLP-2 (3)
BF	VLS3-TDR	SLUDGE/SCUM PUMP NO. 3, TSLP/TSCP-3
BG	BWH	
BH	BLT	
BI	HLL	
BJ	TDR3	SCUM PUMP NO. 2, TSCP-2
BK	VLS1X	SLUDGE PUMP NO. 1, TSLP-1 (3)
BL	VLS2X	SLUDGE PUMP NO. 2, TSLP-2 (3)
BM	VLS3X	SLUDGE/SCUM PUMP NO. 3, TSLP/TSCP-3
BN	PSL-TDR	COMMON FOR SLUDGE/SCUM PUMPS
BO	STB1-CR-01A2	SLUDGE THICKENER NO. 1B
BP	STB2-CR-01A2	SLUDGE THICKENER NO. 2B
BQ	STA1-CR-01A2	SLUDGE THICKENER NO. 1A
BR	STA2-CR-01A2	SLUDGE THICKENER NO. 2A
BS	VLS6X	
BT	VLS6-TDR	
BU	VLS7-TDR	
BV	VLS7X	
BW	PB01	
BX	CT1	
BY	CT2	
BZ	CT3A	

(1) (TYPICAL)

(1) (TYPICAL)

SLUDGE THICKENER BUILDING CONTROL CABINET "PB01-CCP-01" INTERIOR BACKPLANE ELEVATION NAMEPLATE SCHEDULE

ID MARK	NAMEPLATE INSCRIPTION	ASSOCIATED EQUIPMENT (AS APPLICABLE)
CA	CT3	
CB	CT1-TSLP1 (4)	SLUDGE PUMP NO. 1, TSLP-1 (3)
CC	CT2-TSLP2 (4)	SLUDGE PUMP NO. 2, TSLP-2 (3)
CD	CT3A-TSCP3	SLUDGE/SCUM PUMP NO. 3, TSLP/TSCP-3
CE	CT3B-TSLP3	SLUDGE/SCUM PUMP NO. 3, TSLP/TSCP-3
CF	CT4-TSCP1	SCUM PUMP NO. 1, TSCP-1
CG	CT5-TSCP2	SCUM PUMP NO. 2, TSCP-2
CH	ANNUNC-PS	ANNUNCIATOR ALARM PANEL
CI	FS-1 LIGHT	
CJ	FS-2	
CK	FS-3	
CL	FS-6	
CM	DS/RECP	
CN	TS-1	

(1) (TYPICAL)

(2) SLUDGE THICKENER BUILDING CONTROL CABINET "PB01-CCP-01" INTERIOR BACKPLANE EQUIPMENT SCHEDULE

MARK	DESCRIPTION
(1)	WIREWAY
(2)	120VAC INDUSTRIAL CONTROL RELAY (MFG: ALLEN BRADLEY)
(3)	TIME DELAY RELAY (MFG: AGASTAT)
(4)	24VDC CONTROL RELAY (MFG: OMRON)
(5)	RESET TIMER (MFG: EAGLE SIGNAL CONTROLS)
(6)	EQUIPMENT NAMEPLATE IDENTIFIER
(7)	DIN RAIL
(8)	24VDC POWER SUPPLY (MFG: SOLA)
(9)	TERMINAL BLOCKS
(10)	POWER SUPPLY 24VDC (MFG: ACOPIAN)
(11)	TIME DELAY RELAY – OPEN TYPE W/PNEUMATIC TIME-DELAY UNIT (MFG: ALLEN BRADLEY)
(12)	AUDIBLE ALARM (MFG: PANALARM)
(13)	ELAPSED TIME METER
(14)	THERMOSTAT (MFG: PFANNENBERG)
(15)	CYCLE TIMER – TIME DELAY RELAY (MFG: MACROMATIC)
(16)	ANNUNCIATOR POWER SUPPLY (MFG: PANALARM)
(17)	120VAC CIRCUIT BREAKER (MFG: ALLEN-BRADLEY)
(18)	ENCLOSED CIRCUIT BREAKER
(19)	ENCLOSED DISCONNECT SWITCH AND DEDICATED RECEPTACLE
(20)	GROUNDING BUS BAR WITH TERMINALS
(21)	120VAC GENERAL PURPOSE CONTROL RELAY (MFG: ALLEN BRADLEY)
(22)	TIME DELAY RELAY W/ TIME SELECT AND RANGE SELECT (MFG: DAYTON)
(23)	STABILIZING CHANNEL/HARDWARE FOR ENCLOSURE
(24)	SINGLE SUPPORT CHANNEL WITH MOUNTING HARDWARE (I.E. CLAMPS, BOLTS, ETC.)
(25)	STAINLESS STEEL TUBING WITH ACCESSORIES
(26)	FILTER REGULATOR 1/4" (MFG: MADONEILAN)
(27)	GLASS TUBE VARIABLE AREA FLOW METER (MFG: BROOKS)
(28)	FILTER (MFG: DELTECH)
(29)	PLUG IN SOLENOID VALVE IN-LINE HEATER (MFG: PARKER)
(30)	MECHANICAL VALVE (MFG: MILWAUKEE VALVE CO.)
(31)	FAN HEATER (MFG: PFANNENBERG)
(32)	ENCLOSURE SIDE WALL
(33)	BACK PANEL
(34)	DOUBLE DOOR ENCLOSURE 7'-6" HIGH X 6'-0" WIDE X 20" DEEP
(35)	HOUSEKEEPING CONCRETE PAD

KEY NOTES:

(1) REMOVE EXISTING NAMEPLATE OR REMOVE EXISTING IDENTIFICATION MARKING ON THE BACKPLANE OF THE EXISTING CONTROL PANEL, PB01-CCP-01, AS INDICATED.

(2) DEMOLITION HATCHING ON THE EQUIPMENT SCHEDULE IS NOT SHOWN FOR CLARITY PURPOSES. REFER TO DEMOLITION CONTROL PANEL ELEVATION DRAWING NO. [E-30] FOR DISCONNECTION AND REMOVAL OF EXISTING EQUIPMENT.

(3) EXISTING SLUDGE PUMPS SHALL BE RETAGGED AS SHOWN ON RENOVATION ONE-LINE DIAGRAMS, FLOOR PLAN DRAWINGS AND RENOVATION P&ID DRAWINGS. CONTRACTOR SHALL BE AWARE THAT EXISTING SLUDGE PUMP NO. 1, TSLP-1 SHALL BE RETAGGED AS SLUDGE PUMP NO. 2, "STPB-TSLP-2". ALSO, EXISTING SLUDGE PUMP NO. 2, TSLP-2 SHALL BE RETAGGED AS SLUDGE PUMP NO. 2, "TSLP-3". REFER TO RENOVATION DRAWINGS FOR ADDITIONAL INFORMATION.

(4) CONTRACTOR SHALL PROVIDE A 3-PLY PHENOLIC NAMEPLATE FOR EQUIPMENT/CONTROL DEVICES (I.E. CONTROL RELAY, TIMING RELAY, CYCLE TIMER, ETC.) WHICH ARE TO REMAIN ON THE BACKPLANE OF THE EXISTING CONTROL PANEL AND BE REUSED DURING RENOVATION ACTIVITIES. CONTRACTOR SHALL RETAG THE EXISTING EQUIPMENT/CONTROL DEVICES TO MATCH THE RENOVATION SLUDGE PUMP EQUIPMENT TAG AS SHOWN ON THE RENOVATION DRAWINGS.

(5) CONTRACTOR SHALL FIELD VERIFY ALL EXISTING DEVICES IN CABINET "PB01-CCP-01" THAT ARE NOT BEING DEMOLISHED AND UPDATE THE NAMEPLATE DATA AND DESCRIPTIONS IN THESE TABLES.

GENERAL NOTES:

1. AN ATTEMPT IS MADE TO SHOW ALL EXISTING EQUIPMENT ON THIS CONTROL PANEL INTERIOR ELEVATION AND SCHEDULES. HOWEVER THE CONTRACTOR MUST EXERCISE EXTREME CARE AS THERE ARE NO AVAILABLE AS BUILT RECORDS IDENTIFYING THE ROUTING OF ALL CONDUIT/WIRING BETWEEN THE VARIOUS MOTOR CONTROL CENTERS, CONTROL PANELS, PLC CABINET, LOADS, ETC., NO RECORDS IDENTIFYING THE COMPONENTS OF THE EXISTING CONTROL PANEL, AND NO RECORDS IDENTIFYING THE INTERNAL WIRING OF THE EXISTING CONTROL PANEL. THEREFORE, THE CONTRACTOR IS TO EXERCISE EXTREME CARE, VERIFY THE ROUTING OF EXISTING CONDUIT/WIRING AND VERIFYING THE COMPONENTS AND INTERNAL WIRING OF THE CONTROL PANEL, IF NECESSARY, PRIOR TO COMMENCING FULL SCALE DEMOLITION OR RENOVATION ACTIVITIES. FOLLOWING THE DISCOVERY VERIFICATION OF THE EXISTING FIELD CONDITIONS, SHOULD ADJUSTMENTS BECOME A NECESSITY TO THE EXISTING OR PROPOSED SYSTEM (AS APPLICABLE), THE EXISTING DISCOVERED FIELD CONDITIONS MUST BE BROUGHT TO THE ENGINEER'S ATTENTION FOR EXECUTION OF THE NECESSARY ADJUSTMENTS/MODIFICATIONS.

2. THE EXISTING INFORMATION SHOWN ON THIS DRAWING WAS OBTAINED FROM THE PROJECT ENTITLED "ONION CREEK WASTEWATER TREATMENT FACILITIES – CONTRACT NO. 2" DATED APRIL 1984 AND FROM THE PROJECT ENTITLED "SOUTH AUSTIN REGIONAL WASTEWATER TREATMENT PLANT CONTROL AND INSTRUMENTATION IMPROVEMENTS" DATED JULY 1994. THIS DRAWING MAY NOT EXACTLY REFLECT THE EXISTING CONDITIONS. THEREFORE, THE CONTRACTOR IS TO FIELD VERIFY THE EXISTING CONDITIONS PRIOR TO COMMENCING FULL SCALE DEMOLITION OR RENOVATION ACTIVITIES. FOLLOWING THE DISCOVERY VERIFICATION OF THE EXISTING FIELD CONDITIONS, SHOULD ADJUSTMENTS BECOME A NECESSITY TO THE EXISTING OR PROPOSED SYSTEM (AS APPLICABLE), THE EXISTING DISCOVERED FIELD CONDITIONS MUST BE BROUGHT TO THE OWNER'S ATTENTION FOR EXECUTION OF THE NECESSARY ADJUSTMENTS/MODIFICATIONS.

3. REFER TO EXISTING CONTROL PANEL REFERENCE DRAWINGS FOR ADDITIONAL INFORMATION PRIOR TO COMMENCING MODIFICATION, DEMOLITION, OR RENOVATION ACTIVITIES.

REUSE OF DOCUMENTS

This document, and the designs incorporated herein, is an instrument of professional service that has been developed, designed and prepared by Harutunian Engineering, Inc., and is not to be used, in whole or part, for any other project without giving written notice to Harutunian Engineering, Inc.

REV No	DATE	DRWN	CHKD	REMARKS
–	–	–	–	

DESIGNED BY: HEI
DRAWN BY: HEI
SHEET CHK'D BY: HEI
CROSS CHK'D BY: HEI
APPROVED BY: HEI
DATE: APRIL 2016

CDM Smith
Riata Corporate Park, 12357-A Riata Trace Parkway, Suite 210
Austin, TX 78727
Tel: (512) 346-1100
Texas Registration Number F-3043

HEI
HARUTUNIAN ENGINEERING, INC.
305 E Huntland Dr, Ste 500: Austin, TX 78752
TBPE Firm Registration No. F-2408

CITY OF AUSTIN, TEXAS - AUSTIN WATER UTILITY
CIP 3333.016

SOUTH AUSTIN REGIONAL WWTP
THICKENER IMPROVEMENTS PROJECT

CONTROL PANEL "PB01-CCP-01"
INTERIOR BACKPLANE ELEVATION
SCHEDULES - DEMOLITION

STATE OF TEXAS
K. A. HARUTUNIAN
59181
REGISTERED PROFESSIONAL ENGINEER
4/22/2016

PROJECT No 590-104217
FILE NAME: I-15

SHEET No
I-15

Plotted: 4/22/2016 8:55:11 AM

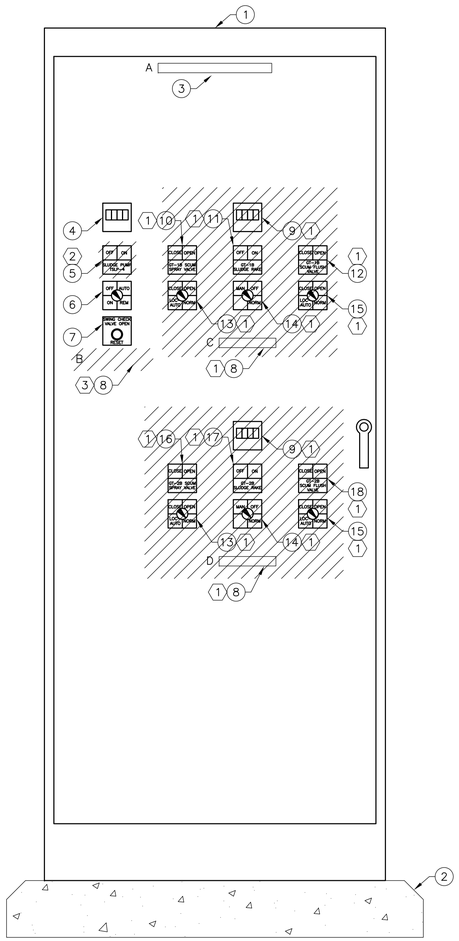

EXISTING CONTROL CABINET "PB01-CCP-03"
EXTERIOR FRONT ELEVATION - DEMOLITION

SCALE: NTS

SLUDGE THICKENER BUILDING CONTROL CABINET "PB01-CCP-03" EQUIPMENT SCHEDULE

MARK	DESCRIPTION
1	DOUBLE DOOR ENCLOSURE 7'-6" HIGH X 6'-0" WIDE X 20" DEEP
2	CONCRETE HOUSEKEEPING PAD
3	EQUIPMENT NAMEPLATE IDENTIFIER
4	ELAPSED TIME METER (ETM)
5	"ON-OFF" INDICATING LIGHT / "SLUDGE PUMP TSLP-4" EQUIPMENT TAG (2)
6	"ON-OFF-AUTO-REMOTE" - FOUR POSITION SELECTOR SWITCH
7	"SWING CHECK VALVE OPEN" INDICATING LIGHT/ "RESET" PUSHBUTTON
8	EQUIPMENT NAMEPLATE IDENTIFIER
9	ELAPSED TIME METER (ETM)
10	"CLOSE-OPEN" INDICATING LIGHTS / "GT-1B SCUM SPRAY VALVE" EQUIPMENT TAG
11	"OFF=ON" INDICATING LIGHTS / "GT-1B SLUDGE RAKE" EQUIPMENT TAG
12	"CLOSE-OPEN" INDICATING LIGHTS / "GT-1B SCUM FLUSH VALVE" EQUIPMENT TAG
13	"CLOSE-OPEN-NORMAL-LOCAL/AUTO" - FOUR POSITION SELECTOR SWITCH
14	"MANUAL-OFF-NORMAL" - THREE POSITION SELECTOR SWITCH
15	"CLOSE-OPEN" INDICATING LIGHTS / "GT-2B SCUM SPRAY VALVE" EQUIPMENT TAG
16	"OFF=ON" INDICATING LIGHTS / "GT-2B SLUDGE RAKE" EQUIPMENT TAG
17	"CLOSE-OPEN" INDICATING LIGHTS / "GT-2B SCUM FLUSH VALVE" EQUIPMENT TAG

SLUDGE THICKENER BUILDING CONTROL CABINET "PB01-CCP-03" EXTERIOR FRONT ELEVATION NAMEPLATE SCHEDULE

ID MARK	NAMEPLATE INSCRIPTION
A	SLUDGE TRANSFER BUILDING CONTROL CABINET "PB01-CCP-03"
B	PB01-SLP-04 (THICKENED SLUDGE PUMP "TSLP-4") (3)
C	STB1-STE-001 (SLUDGE THICKENER NO. 1B)
D	STB1-STE-002 (SLUDGE THICKENER NO. 2B)

KEY NOTES:

(1) DISCONNECT AND REMOVE ALL EXISTING WIRING CONNECTED TO THE INDICATING PILOT LIGHT, PUSHBUTTON, SELECTOR SWITCH, EQUIPMENT NAMEPLATE, OR ELAPSED TIME METER, AS APPLICABLE AND AS INDICATED. REMOVE THE EXISTING INDICATING PILOT LIGHT, PUSHBUTTON, SELECTOR SWITCH, ELAPSED TIME METER, OR EQUIPMENT NAMEPLATE AS SHOWN FROM EXISTING CONTROL CABINET "PB01-CCP-03". DISCONNECT AND REMOVE EXISTING WIRING AND CONTROL DEVICES ASSOCIATED WITH THE EXISTING GRAVITY THICKENER NO. 1B AND NO. 2B IN THEIR ENTIRETY WHETHER SHOWN OR NOT ON THIS DRAWING. EXTREME CARE MUST BE TAKEN WHEN DISCONNECTING WIRES FROM INSTRUMENTATION AND CONTROLS. FIELD VERIFY ALL CONNECTIONS AND EQUIPMENT PRIOR TO DEMOLISHING EXISTING WIRING, INSTRUMENTATION AND CONTROLS.

(2) REMOVE EXISTING CONTROL DEVICE (INDICATING LIGHT) COVER WITH THE INSCRIPTION "OFF-ON/SLUDGE PUMP TSLP-4". EXISTING CONTROL DEVICE SHALL REMAIN, BUT THE INSCRIPTION COVER SHALL BE REPLACED DURING RENOVATION ACTIVITIES.

(3) REMOVE EXISTING NAMEPLATE TAG. EXISTING SLUDGE PUMP SHALL BE RETAGGED DURING RENOVATION ACTIVITIES. A NEW NAMEPLATE SHALL BE PROVIDED FOR THE EXISTING SLUDGE PUMPS.

GENERAL NOTES:

1. AN ATTEMPT IS MADE TO SHOW ALL EXISTING EQUIPMENT ON THIS CONTROL PANEL FRONT ELEVATION. HOWEVER THE CONTRACTOR MUST EXERCISE EXTREME CARE AS THERE ARE NO AVAILABLE AS BUILT RECORDS IDENTIFYING THE ROUTING OF ALL CONDUIT/WIRING BETWEEN THE VARIOUS MOTOR CONTROL CENTERS, CONTROL PANELS, PLC CABINET, LOADS, ETC., NO RECORDS IDENTIFYING THE COMPONENTS OF THE EXISTING CONTROL PANEL, AND NO RECORDS IDENTIFYING THE INTERNAL WIRING OF THE EXISTING CONTROL PANEL. THEREFORE, THE CONTRACTOR IS TO EXERCISE EXTREME CARE, VERIFY THE ROUTING OF EXISTING CONDUIT/WIRING AND VERIFYING THE COMPONENTS AND INTERNAL WIRING OF THE CONTROL PANEL, IF NECESSARY, PRIOR TO COMMENCING FULL SCALE DEMOLITION OR RENOVATION ACTIVITIES. FOLLOWING THE DISCOVERY VERIFICATION OF THE EXISTING FIELD CONDITIONS, SHOULD ADJUSTMENTS BECOME A NECESSITY TO THE EXISTING OR PROPOSED SYSTEM (AS APPLICABLE), THE EXISTING DISCOVERED FIELD CONDITIONS MUST BE BROUGHT TO THE ENGINEER'S ATTENTION FOR EXECUTION OF THE NECESSARY ADJUSTMENTS/MODIFICATIONS.

2. THE EXISTING INFORMATION SHOWN ON THIS DRAWING WAS OBTAINED FROM THE PROJECT ENTITLED "ONION CREEK WASTEWATER TREATMENT FACILITIES - CONTRACT NO. 2" DATED APRIL 1984 AND FROM THE PROJECT ENTITLED "SOUTH AUSTIN REGIONAL WASTEWATER TREATMENT PLANT CONTROL AND INSTRUMENTATION IMPROVEMENTS" DATED JULY 1994. THIS DRAWING MAY NOT EXACTLY REFLECT THE EXISTING CONDITIONS. THEREFORE, THE CONTRACTOR IS TO FIELD VERIFY THE EXISTING CONDITIONS PRIOR TO COMMENCING FULL SCALE DEMOLITION OR RENOVATION ACTIVITIES. FOLLOWING THE DISCOVERY VERIFICATION OF THE EXISTING FIELD CONDITIONS, SHOULD ADJUSTMENTS BECOME A NECESSITY TO THE EXISTING OR PROPOSED SYSTEM (AS APPLICABLE), THE EXISTING DISCOVERED FIELD CONDITIONS MUST BE BROUGHT TO THE OWNER'S ATTENTION FOR EXECUTION OF THE NECESSARY ADJUSTMENTS/MODIFICATIONS.

3. REFER TO EXISTING CONTROL PANEL REFERENCE DRAWINGS FOR ADDITIONAL INFORMATION PRIOR TO COMMENCING MODIFICATION, DEMOLITION, OR RENOVATION ACTIVITIES.

Plotted: 4/22/2016 8:55:16 AM

STATE OF TEXAS
K. A. HARUTUNIAN
59181
REGISTERED PROFESSIONAL ENGINEER
4/22/2016

REUSE OF DOCUMENTS
This document, and the designs incorporated herein, is an instrument of professional service that has been developed, designed and prepared by Harutunian Engineering, Inc., and is not to be used, in whole or part, for any other project without giving written notice to Harutunian Engineering, Inc.

REV No	DATE	DRWN	CHKD	REMARKS
△	–	–	–	–

DESIGNED BY: HEI
DRAWN BY: HEI
SHEET CHK'D BY: HEI
CROSS CHK'D BY: HEI
APPROVED BY: HEI
DATE: APRIL 2016

CDM Smith
Riata Corporate Park, 12357-A Riata Trace Parkway, Suite 210
Austin, TX 78727
Tel: (512) 346-1100
Texas Registration Number F-3043

HARUTUNIAN ENGINEERING, INC.
305 E Huntland Dr, Ste 500; Austin, TX 78752
TBPE Firm Registration No. F-2408

CITY OF AUSTIN, TEXAS - AUSTIN WATER UTILITY
CIP 3333.016

SOUTH AUSTIN REGIONAL WWTP
THICKENER IMPROVEMENTS PROJECT

CONTROL CABINET "PB01-CCP-03"
FRONT ELEVATION AND SCHEDULES
- DEMOLITION

PROJECT No 590-104217
FILE NAME: I-16

SHEET No
I-16

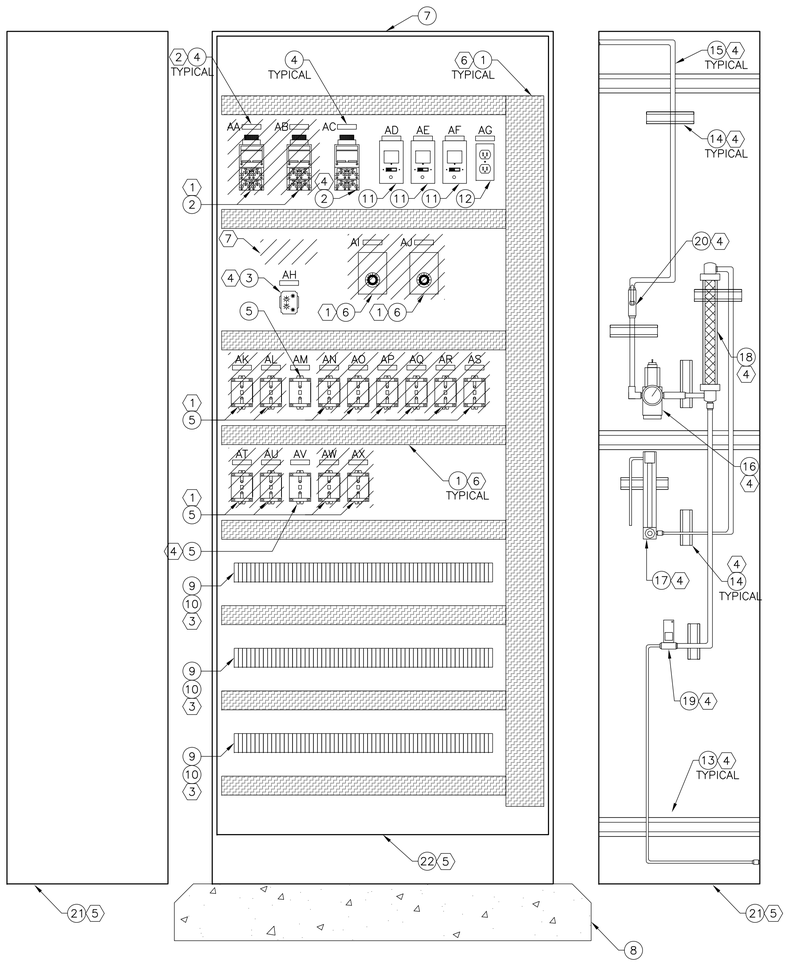

EXISTING CONTROL CABINET "PB01–CCP–03"
INTERIOR FRONT ELEVATION – DEMOLITION

SCALE: NTS

SLUDGE THICKENER BUILDING CONTROL CABINET "PB01–CCP–01" INTERIOR BACKPLANE ELEVATION NAMEPLATE SCHEDULE

ID MARK	NAMEPLATE INSCRIPTION	ASSOCIATED EQUIPMENT (AS APPLICABLE)	
AA	TDR–1B	SLUDGE THICKENER NO. 1B	
AB	TDR–2B	SLUDGE THICKENER NO. 2B	
AC	VLS1–TDR	SLUDGE PUMP NO. 4, TSLP–4	9
AD	CABINET LIGHT/ DUPLEX RECEPTACLE		
AE	PSL17 CONTROL		
AF	LPC POWER SUPPLY		
AG	RECP		
AH	CT1	SLUDGE PUMP NO. 4, TSLP–4	9
AI	TR–1	SLUDGE THICKENER NO. 1B	
AJ	TR–2	SLUDGE THICKENER NO. 2B	
AK	CRM–1	SLUDGE THICKENER NO. 1B	
AL	CRM–2	SLUDGE THICKENER NO. 2B	
AM	CRM–6	SLUDGE PUMP NO. 4, TSLP–4	9
AN	LSR–1A	SLUDGE THICKENER NO. 1B	
AO	LSR–1B	SLUDGE THICKENER NO. 2B	
AP	LSR–2A	SLUDGE THICKENER NO. 1B	
AQ	LSR–2B	SLUDGE THICKENER NO. 2B	
AR	SFV–R1	SLUDGE THICKENER NO. 1B	
AS	SFV–R2	SLUDGE THICKENER NO. 2B	
AT	SWV–R1	SLUDGE THICKENER NO. 1B	
AU	SWV–R2	SLUDGE THICKENER NO. 2B	
AV	VLS1–CR	SLUDGE PUMP NO. 4, TSLP–4	9
AW	TDR–1B–CR	SLUDGE THICKENER NO. 1B	
AX	TDR–2B–CR	SLUDGE THICKENER NO. 2B	

8 SLUDGE THICKENER BUILDING CONTROL CABINET "PB01–CCP–01" INTERIOR BACKPLANE EQUIPMENT SCHEDULE

MARK	DESCRIPTION
1	WIREWAY
2	TIME DELAY RELAY (MFG: AGASTAT)
3	CYCLE TIMER – TIME DELAY RELAY (MFG: MACROMATIC)
4	EQUIPMENT NAMEPLATE IDENTIFIER
5	120VAC INDUSTRIAL CONTROL RELAY (MFG: CUTLER–HAMMER)
6	SPDT MOTOR DRIVEN TDR SWITCHES (MFG: AUTOMATIC TIMING AND CONTROLS)
7	SINGLE DOOR ENCLOSURE 7'–6" HIGH X 36" WIDE X 20" DEEP
8	HOUSEKEEPING CONCRETE PAD
9	TERMINAL BLOCKS
10	DIN RAIL
11	ENCLOSED SWITCH
12	ENCLOSED DUPLEX RECEPTACLE
13	STABILIZING CHANNEL/HARDWARE FOR ENCLOSURE
14	SINGLE SUPPORT CHANNEL WITH MOUNTING HARDWARE (I.E. CLAMPS, BOLTS, ETC.)
15	STAINLESS STEEL TUBING WITH ACCESSORIES
16	FILTER REGULATOR 1/4" (MFG: MADONEILAN)
17	GLASS TUBE VARIABLE AREA FLOW METER (MFG: BROOKS)
18	FILTER (MFG: DELTECH)
19	PLUG IN SOLENOID/SKINNER VALVE W/ ELECTRONIC TIMER (MFG: HONEYWELL)
20	MECHANICAL VALVE (MFG: MILWAUKEE VALVE CO.)
21	ENCLOSURE SIDE PANEL
22	BACK PANEL

KEY NOTES:

1. CONTRACTOR SHALL DISCONNECT AND REMOVE EXISTING CONTROL DEVICES (I.E. CONTROL RELAYS, TIMING RELAYS, ETC.), INSTRUMENTATION, AND INTERNAL WIRING WITHIN THE EXISTING CONTROL PANEL "PB01–CCP–03" FOR EXISTING THICKENER NO. 1B AND NO. 2B IN THEIR ENTIRETY. CONTRACTOR SHALL REFER TO DEMOLITION CONTROL WIRING SCHEMATICS AND DEMOLITION LOOP DIAGRAMS FOR ADDITIONAL INFORMATION.
2. REMOVE EXISTING NAMEPLATE LOCATED ON THE BACKPLANE OF THE CONTROL PANEL IN ITS ENTIRETY. TYPICAL FOR ALL NAMEPLATES OR MARKER INSCRIPTIONS SHOWN WITH HATCHED LINEWORK.
3. EXISTING TERMINAL BLOCKS AND EXISTING DIN RAIL SHALL REMAIN AND BE REUSED DURING RENOVATION ACTIVITIES OR ABANDONED IN PLACE, AS APPLICABLE.
4. EXISTING EQUIPMENT OR NAMEPLATE, AS APPLICABLE, SHALL REMAIN WITHIN EXISTING CONTROL PANEL.
5. EXISTING CONTROL PANEL BACKPLANE AND SIDE PANELS SHALL REMAIN AND BE REUSED DURING RENOVATION ACTIVITIES.ER
6. EXISTING WIREWAY SHALL REMAIN AND BE REUSED DURING RENOVATION ACTIVITIES.
7. REMOVE EXISTING INSCRIPTION TAGGED "TSLP–4 TIMER" WRITTEN IN MARKER ON THE BACKPLANE OF THE CONTROL PANEL IN IT'S ENTIRETY. A NEW NAMEPLATE SHALL BE PROVIDED DURING RENOVATION ACTIVITIES.
8. DEMOLITION HATCHING ON THE EQUIPMENT SCHEDULE IS NOT SHOWN FOR CLARITY PURPOSES. REFER TO DEMOLITION CONTROL PANEL INTERIOR ELEVATION ON THIS DRAWING FOR DISCONNECTION AND REMOVAL OF EXISTING EQUIPMENT.
9. EXISTING SLUDGE PUMP SHALL BE RETAGGED AS SHOWN ON RENOVATION ONE–LINE DIAGRAMS, FLOOR PLAN DRAWINGS AND RENOVATION P&ID DRAWINGS. CONTRACTOR SHALL BE AWARE THAT EXISTING SLUDGE PUMP NO. 4, TSLP–4 SHALL BE RETAGGED AS SLUDGE PUMP NO. 1, "STPB–TSLP–1". REFER TO RENOVATION DRAWINGS FOR ADDITIONAL INFORMATION.

GENERAL NOTES:

1. AN ATTEMPT IS MADE TO SHOW ALL EXISTING EQUIPMENT ON THIS CONTROL PANEL INTERIOR ELEVATION. HOWEVER THE CONTRACTOR MUST EXERCISE EXTREME CARE AS THERE ARE NO AVAILABLE AS BUILT RECORDS IDENTIFYING THE ROUTING OF ALL CONDUIT/WIRING BETWEEN THE VARIOUS MOTOR CONTROL CENTERS, CONTROL PANELS, PLC CABINET, LOADS, ETC., NO RECORDS IDENTIFYING THE COMPONENTS OF THE EXISTING CONTROL PANEL, AND NO RECORDS IDENTIFYING THE INTERNAL WIRING OF THE EXISTING CONTROL PANEL. THEREFORE, THE CONTRACTOR IS TO EXERCISE EXTREME CARE, VERIFY THE ROUTING OF EXISTING CONDUIT/WIRING AND VERIFYING THE COMPONENTS AND INTERNAL WIRING OF THE CONTROL PANEL, IF NECESSARY, PRIOR TO COMMENCING FULL SCALE DEMOLITION OR RENOVATION ACTIVITIES. FOLLOWING THE DISCOVERY VERIFICATION OF THE EXISTING FIELD CONDITIONS, SHOULD ADJUSTMENTS BECOME A NECESSITY TO THE EXISTING OR PROPOSED SYSTEM (AS APPLICABLE), THE EXISTING DISCOVERED FIELD CONDITIONS MUST BE BROUGHT TO THE ENGINEER'S ATTENTION FOR EXECUTION OF THE NECESSARY ADJUSTMENTS/MODIFICATIONS.
2. THE EXISTING INFORMATION SHOWN ON THIS DRAWING WAS OBTAINED FROM THE PROJECT ENTITLED "ONION CREEK WASTEWATER TREATMENT FACILITIES – CONTRACT NO. 2" DATED APRIL 1984 AND FROM THE PROJECT ENTITLED "SOUTH AUSTIN REGIONAL WASTEWATER TREATMENT PLANT CONTROL AND INSTRUMENTATION IMPROVEMENTS" DATED JULY 1994. THIS DRAWING MAY NOT EXACTLY REFLECT THE EXISTING CONDITIONS. THEREFORE, THE CONTRACTOR IS TO FIELD VERIFY THE EXISTING CONDITIONS PRIOR TO COMMENCING FULL SCALE DEMOLITION OR RENOVATION ACTIVITIES. FOLLOWING THE DISCOVERY VERIFICATION OF THE EXISTING FIELD CONDITIONS, SHOULD ADJUSTMENTS BECOME A NECESSITY TO THE EXISTING OR PROPOSED SYSTEM (AS APPLICABLE), THE EXISTING DISCOVERED FIELD CONDITIONS MUST BE BROUGHT TO THE OWNER'S ATTENTION FOR EXECUTION OF THE NECESSARY ADJUSTMENTS/MODIFICATIONS.
3. REFER TO EXISTING CONTROL PANEL REFERENCE DRAWINGS FOR ADDITIONAL INFORMATION PRIOR TO COMMENCING MODIFICATION, DEMOLITION, OR RENOVATION ACTIVITIES.

REUSE OF DOCUMENTS
This document, and the designs incorporated herein, is an instrument of professional service that has been developed, designed and prepared by Harutunian Engineering, Inc., and is not to be used, in whole or part, for any other project without giving written notice to Harutunian Engineering, Inc.

REV No	DATE	DRWN	CHKD	REMARKS
△	–	–	–	–

DESIGNED BY: HEI
DRAWN BY: HEI
SHEET CHK'D BY: HEI
CROSS CHK'D BY: HEI
APPROVED BY: HEI
DATE: APRIL 2016

CDM Smith
Riata Corporate Park, 12357-A Riata Trace Parkway, Suite 210
Austin, TX 78727
Tel: (512) 346-1100
Texas Registration Number F-3043

HARUTUNIAN ENGINEERING, INC.
305 E Huntland Dr, Ste 500; Austin, TX 78752
TBPE Firm Registration No. F-2408

CITY OF AUSTIN, TEXAS - AUSTIN WATER UTILITY
CIP 3333.016
SOUTH AUSTIN REGIONAL WWTP
THICKENER IMPROVEMENTS PROJECT

CONTROL CABINET "PB01-CCP-03"
INTERIOR BACKPLANE ELEVATION
- DEMOLITION

PROJECT No 590–104217
FILE NAME: I–17

SHEET No
I-17

Plotted: 4/22/2016 8:55:21 AM

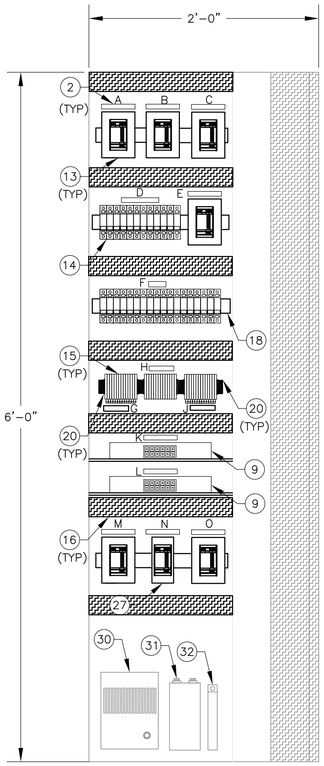

EXISTING PLC CONTROL PANEL "RIO-2A" INTERIOR LEFTSIDE ELEVATION-RENOVATION

SCALE: NTS

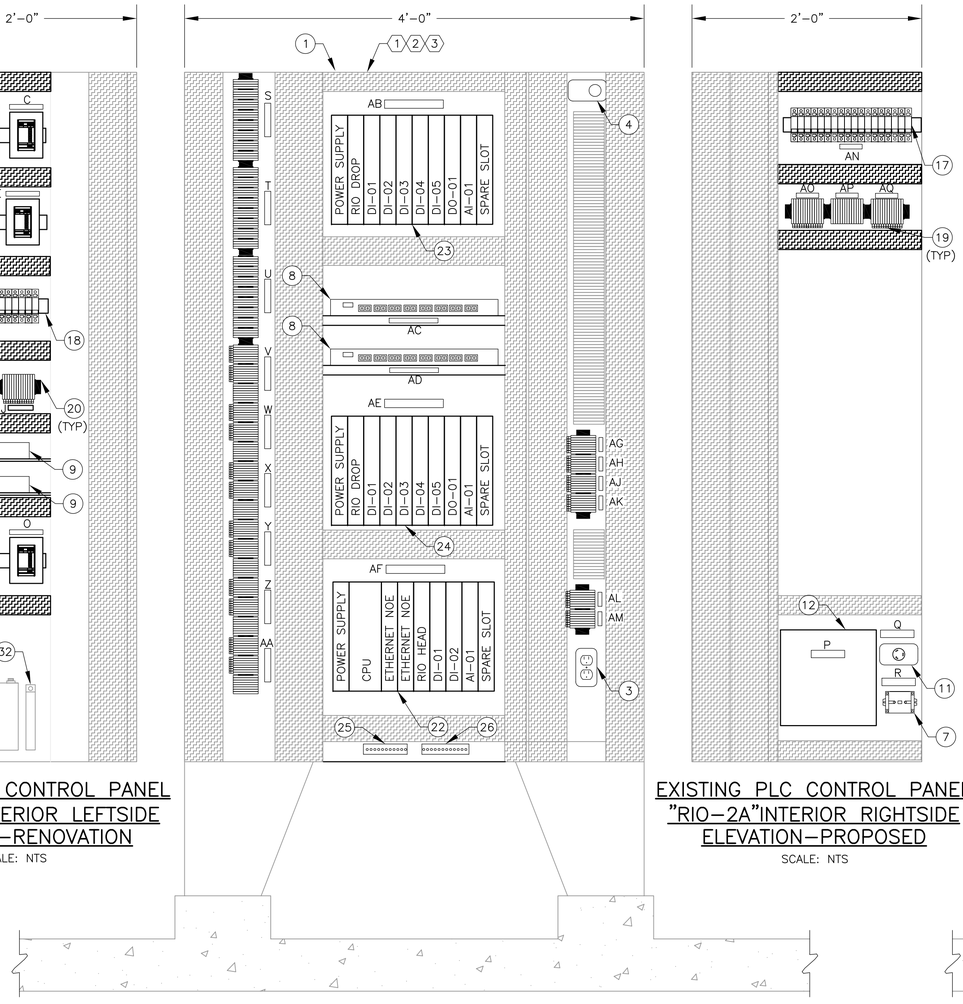

EXISTING PLC CONTROL PANEL"RIO-2A" INTERIOR BACKPLANE ELEVATION-RENOVATION

SCALE: NTS

EXISTING PLC CONTROL PANEL "RIO-2A"INTERIOR RIGHTSIDE ELEVATION-PROPOSED

SCALE: NTS

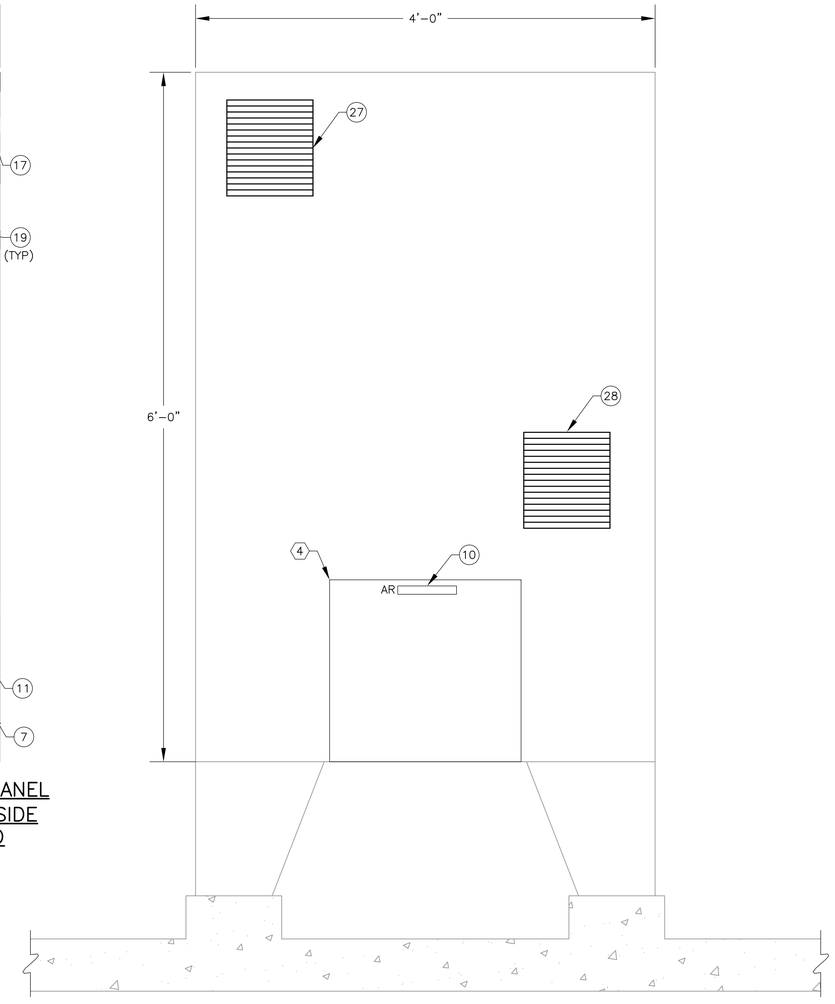

EXISTING CONTROL PANEL"RIO-2A" INTERIOR FRONT ELEVATION-RENOVATION

SCALE: NTS

KEY NOTES:

1. THE PROPOSED INTERNAL COMPONENTS ARE FURNISHED BY THE EQUIPMENT MANUFACTURER. CONTRACTOR SHALL INSTALL CONTROL PANEL AND MAKE ALL FINAL CONNECTIONS PER THE SPECIFICATIONS, THE MANUFACTURER'S RECOMMENDATIONS, AND THE MANUFACTURER'S WIRING DIAGRAMS. REFER TO FIELD INTERFACE WIRING SCHEMATICS FOR ADDITIONAL INFORMATION.
2. IDENTIFICATION MARK CORRESPONDS TO LETTERS ON MAIN CONTROL PANEL ELEVATION. REFER TO DRAWING NUMBER [I-19].
3. ALSO REFER TO ELECTRICAL SPECIFICATIONS FOR ADDITIONAL REQUIREMENTS.
4. THE UNINTERRUPTIBLE POWER SUPPLY SHALL BE PLACED ON THE FLOOR OF THE RIO-2A CABINET.

GENERAL NOTES:

1. DARK LINEWORK DENOTES PROPOSED EQUIPMENT. LIGHT LINEWORK DENOTES EXISTING EQUIPMENT.
2. THE CONTRACTOR SHALL BE AWARE THAT WHEN ANY EXISTING EQUIPMENT IS DISCONNECTED, REMOVED, RELOCATED OR OTHERWISE MODIFIED, THE POSSIBILITY MAY EXIST FOR SUCH ACTION TO LEAD TO INTERRUPTION OF OPERATION OF THE PLANT IF EXTREME CARE, VERIFICATION, AND VALIDATION IS NOT CAREFULLY EXERCISED PRIOR TO COMMENCEMENT OF SUCH DEMOLITION ACTIVITY. THE CONTRACTOR SHALL KNOW THAT ANY INTERRUPTION TO THE CONTINUITY OF PLANT OPERATION AT ITS FULLY RATED TREATMENT CAPACITY IS UNACCEPTABLE DURING THE CONSTRUCTION COURSE OF THIS PROJECT. HOWEVER, SHOULD ANY INTERRUPTION TO PLANT OPERATION OCCUR FOR ANY UNFORESEEN REASON, WHETHER TOTALLY ACCIDENTAL OR DUE TO IMPROPER FIELD INVESTIGATION AND IMPROPER PLANNING PRIOR TO COMMENCEMENT OF THE ELECTRICAL/INSTRUMENTATION DEMOLITION EFFORT, THE RESPONSIBLE CONTRACTOR SHALL DETERMINE THE PROBLEM, CORRECT IT, AND START UP THE INTERRUPTED EQUIPMENT WITHIN A CERTAIN TIME PERIOD AS DETERMINED BY THE OWNER AT NO ADDITIONAL COST TO THE OWNER. THE CONTRACTOR SHALL PROVIDE CONTINUOUS, 24-HOUR, LABOR, EQUIPMENT, MATERIAL, AND ACCESSORIES UNTIL SUCH TIME THAT ANY EFFECTED EQUIPMENT OPERATES AS PREVIOUSLY OPERATED, AT NO ADDITIONAL COST TO THE OWNER AND TO THE OWNER'S SATISFACTION.
3. COORDINATE/VERIFY ALL POINTS OF CONNECTION PRIOR TO COMMENCING DEMOLITION/RENOVATION ACTIVITIES.
4. THE INTENT IS TO KEEP THE EXISTING FACILITY OPERATIONAL AT ALL TIMES. COORDINATE ALL DEMOLITION AND RENOVATION WORK WITH SEQUENCE OF WORK PLANS/SPECIFICATIONS FOR THIS FACILITY.
5. THIS DRAWING IS INTENDED TO REPRESENT CONTROL SYSTEM ARCHITECTURE DRAWINGS IN EACH PROCESS AREA. ONLY MAJOR CONTROL SYSTEM EQUIPMENT HAVE BEEN SHOWN FOR CLARITY.
6. FURNISH AND INSTALL ALL NECESSARY TEMPORARY MEANS TO FACILITATE CONTINUOUS OPERATION OF THE EXISTING DATA COMMUNICATION NETWORKS DURING ALL PHASES OF CONSTRUCTION.

Plotted: 4/22/2016 8:55:26 AM

STATE OF TEXAS
K. A. HARUTUNIAN
59181
REGISTERED PROFESSIONAL ENGINEER
4/22/2016

REUSE OF DOCUMENTS
This document, and the designs incorporated herein, is an instrument of professional service that has been developed, designed and prepared by Harutunian Engineering, Inc., and is not to be used, in whole or part, for any other project without giving written notice to Harutunian Engineering, Inc.

REV No	DATE	DRWN	CHKD	REMARKS
△	–	–	–	–

DESIGNED BY: HEI
DRAWN BY: HEI
SHEET CHK'D BY: HEI
CROSS CHK'D BY: HEI
APPROVED BY: HEI
DATE: APRIL 2016

CDM Smith
Riata Corporate Park, 12357-A Riata Trace Parkway, Suite 210
Austin, TX 78727
Tel: (512) 346-1100
Texas Registration Number F-3043

HEI
HARUTUNIAN ENGINEERING, INC.
305 E Huntland Dr, Ste 500; Austin, TX 78752
TBPE Firm Registration No. F-2408

CITY OF AUSTIN, TEXAS - AUSTIN WATER UTILITY
CIP 3333.016

SOUTH AUSTIN REGIONAL WWTP
THICKENER IMPROVEMENTS PROJECT

SLUDGE TRANSFER BUILDING
"RIO-2A" INTERIOR BACKPLANE
RENOVATION

PROJECT No 590-104217
FILE NAME: I-18

SHEET No
I-18

KEY NOTES:

1. IDENTIFICATION MARK CORRESPONDS TO LETTERS ON MAIN CONTROL PANEL ELEVATION. REFER TO DRAWING NUMBER [I–19].
2. ALSO REFER TO ELECTRICAL SPECIFICATIONS FOR ADDITIONAL REQUIREMENTS.
3. NUMBER IN CIRCLE CORRESPONDS TO NUMBERS ON MAIN CONTROL PANEL ELEVATION. REFER TO DRAWING NUMBER [I-19].

(1)(2)

EXISTING PLC CONTROL PANEL "RIO–2A" AND CONTROL PANEL "STPB–CP–001" NAMEPLATE SCHEDULE

ID	LINE NO.	LEGEND PLATE INSCRIPTION	LETTER SIZE (MINIMUM)
A	FIRST	"STPB–PS–001"	1/4"
B	FIRST	"STPB–PS–002"	1/4"
C	FIRST	"STPB–PS–003"	1/4"
D	FIRST	"120V DI MODULES"	1/4"
E	FIRST	"STPB–PS–004"	1/4"
F	FIRST	"UPS"	3/8"
G	FIRST	"UPS–H"	1/4"
H	FIRST	"UPS–FIELD"	1/4"
J	FIRST	"UPS–N"	1/4"
K	FIRST	"STPB–ESWA–002"	1/4"
L	FIRST	"STPB–ESWB–002"	1/4"
M	FIRST	"STPB–PS–005"	1/4"
N	FIRST	"STPB–RPS–001"	1/4"
O	FIRST	"STPB–PS–007"	1/4"
P	FIRST	"STPB–BPS"	3/8"
Q	FIRST	"STPB–UPS"	3/8"
R	FIRST	"STPB–24V"	3/8"
S	FIRST	"PLC1–AI01"	3/8"
T	FIRST	"PLC2–AI01"	3/8"
U	FIRST	"PLC3–AI01"	3/8"
V	FIRST	"PLC3–DI02"	3/8"
W	FIRST	"PLC3–DI03"	3/8"
X	FIRST	"PLC3–DI04"	3/8"
Y	FIRST	"PLC3–DI05"	3/8"
Z	FIRST	"PLC1–DI01"	3/8"
AA	FIRST	"PLC1–DI02"	3/8"
AB	FIRST	"STPB–PLC–02"	1/2"
AC	FIRST	"STPB–ESWA–01"	3/8"
AD	FIRST	"STPB–ESWB–01"	3/8"
AE	FIRST	"STPB–PLC–03"	1/2"
AF	FIRST	"STPB–PLC–01"	1/2"
AG	FIRST	"DI–01N"	1/4"
AH	FIRST	"DI–02N"	1/4"
AJ	FIRST	"DI–03N"	1/4"
AK	FIRST	"DI–04N"	1/4"
AL	FIRST	"DI–05N"	1/4"
AM	FIRST	"DI–06N"	1/4"
AN	FIRST	"24VDC"	3/8"
AO	FIRST	"24V +"	3/8"
AP	FIRST	"24V F"	3/8"
AQ	FIRST	"24V –"	3/8"
AR	FIRST	"STPB–UPS"	3/8"
AS	FIRST	"EBB–FDPP–02A"	3/8"
AT	FIRST	"EBB–FDPP–02B"	3/8"
AU	FIRST	"STPB–TIT–001"	3/8"
AV	FIRST	"STPB–FPPA–EBB"	3/8"
AW	FIRST	"STPB–FPPB–EBB"	3/8"
AX	FIRST	"STPB–CPPA–CP"	3/8"
AY	FIRST	"STPB–CPPB–CP"	3/8"

(3)

EXISTING PLC CONTROL PANEL "RIO–2A" AND CONTROL PANEL "STPB–CP–001" EQUIPMENT SCHEDULE

MARK	DESCRIPTION	LEGEND PLATE INSCRIPTION	LETTER SIZE (MINIMUM)	OPERATOR OR LENS COLOR
1	4'–0" WIDE X 2'–0" DEEP X 6'–0" TALL, FREE STATING INDIVIDUAL MODULAR CABINET SECTION, QUANTITY AS REQUIRED. REFER TO DRAWINGS AND SPECIFICATIONS.	N/A	N/A	N/A
2	3–PLY, WHITE–BLACK–WHITE PHENOLIC NAMEPLATE. LETTERS BESIDE NAMEPLATE CORRESPOND TO IDENTIFICATION MARK IN NAMEPLATE SCHEDULE.	SEE NAMEPLATE SCHEDULE	SEE NAMEPLATE SCHEDULE	SEE NAMEPLATE SCHEDULE
3	DUPLEX RECEPTACLE	N/A	N/A	N/A
4	FAN CONTROL THERMOMETER	N/A	N/A	N/A
5	FIBER OPTIC PANEL (TYPE 1)	N/A	N/A	N/A
6	FIBER OPTIC PANEL (TYPE 2)	N/A	N/A	N/A
7	UNINTERRUPTIBLE POWER SUPPLY ALARM RELAY	N/A	N/A	N/A
8	ETHERNET SWITCH (TYPE 1)	N/A	N/A	N/A
9	ETHERNET SWITCH (TYPE 2)	N/A	N/A	N/A
10	UNINTERRUPTIBLE POWER SUPPLY	N/A	N/A	N/A
11	UNINTERRUPTIBLE POWER SUPPLY RECEPTACLE	N/A	N/A	N/A
12	UNINTERRUPTIBLE POWER SUPPLY BYPASS	N/A	N/A	N/A
13	24 VDC POWER SUPPLY	N/A	N/A	N/A
14	120 VOLT AC CIRCUIT BREAKER	N/A	N/A	N/A
15	TERMINAL BLOCK	N/A	N/A	N/A
16	SLOTTED WALL WIRING DUCT	N/A	N/A	N/A
17	24 VOLT DC CIRCUIT BREAKER	N/A	N/A	N/A
18	MOUNTING DIN RAIL	N/A	N/A	N/A
19	INSULATED JUMPER TERMINAL BLOCK	N/A	N/A	N/A
20	END ANCHORS	N/A	N/A	N/A
21	END BARRIERS	N/A	N/A	N/A
22	1 PLC 10 SLOT RACK CONTAINS: 1 POWER MODULE 1 CPU 2 ETHERNET MODULES 1 DUAL RIO HEAD MODULE 2 DISCRETE INPUT MODULES 1 ANALOG MODULE	N/A	N/A	N/A
23	1 PLC 10 SLOT RACK CONTAINS: 1 POWER MODULE 1 DUAL RIO DROP MODULE 5 DISCRETE INPUT MODULES 1 DISCRETE OUTPUT MODULES 1 ANALOG MODULE	N/A	N/A	N/A
24	1 PLC 10 SLOT RACK CONTAINS: 1 POWER MODULE 1 DUAL RIO DROP MODULE 5 DISCRETE INPUT MODULES 1 DISCRETE OUTPUT MODULES 1 ANALOG MODULE	N/A	N/A	N/A
25	GROUNDING KIT	N/A	N/A	N/A
26	ISOLATED GROUNDING KIT	N/A	N/A	N/A
27	REDUNDANT POWER SUPPLY	N/A	N/A	N/A
28	10" HIGH X 9" WIDE UPPER FAN & VENTILATION PLATE FINISHED TO MATCH PANEL.	N/A	N/A	N/A
29	10" HIGH X 9" WIDE LOWER VENTILATION PLATE FINISHED TO MATCH PANEL.	N/A	N/A	N/A
30	ELECTRICAL HEATER	N/A	N/A	N/A
31	TEMPERATURE CONTROLLER	N/A	N/A	N/A
32	THERMOSTAT SENSOR	N/A	N/A	N/A

(3)

EXISTING PLC CONTROL PANEL "RIO–2A" AND CONTROL PANEL "STPB–CP–001" EQUIPMENT SCHEDULE

MARK	DESCRIPTION	LEGEND PLATE INSCRIPTION	LETTER SIZE (MINIMUM)	OPERATOR OR LENS COLOR
33	PLC 7 SLOT RACK CONTAINS: 1 POWER MODULE 1 DUAL RIO HEAD MODULE 1 ANALOG MODULE	N/A	N/A	N/A
34	RIO TAP	N/A	N/A	N/A
35	24VDC POWER SUPPLY	N/A	N/A	N/A
36	FIBER OPTIC MODULES	N/A	N/A	N/A
37	FIBER PATCH PANEL	N/A	N/A	N/A
38	1 PLC 7 SLOT RACK CONTAINS: 3 DISCRETE INPUT MODULES 2 DISCRETE OUTPUT MODULES	N/A	N/A	N/A
39	2'–8" WIDE X 2'–8" DEEP X 7'–2" TALL, FREE STATING INDIVIDUAL MODULAR CABINET SECTION, QUANTITY AS REQUIRED. REFER TO DRAWINGS AND SPECIFICATIONS.	N/A	N/A	N/A
40	TEMPERATURE TRANSMITTER	N/A	N/A	N/A
41	COPPER PATCH PANEL	N/A	N/A	N/A

REUSE OF DOCUMENTS

This document, and the designs incorporated herein, is an instrument of professional service that has been developed, designed and prepared by Harutunian Engineering, Inc., and is not to be used, in whole or part, for any other project without giving written notice to Harutunian Engineering, Inc.

K. A. Harutunian
STATE OF TEXAS
K. A. HARUTUNIAN
59181
REGISTERED
PROFESSIONAL ENGINEER
4/22/2016

REV No	DATE	DRWN	CHKD	REMARKS
△	–	–	–	–

DESIGNED BY: HEI
DRAWN BY: HEI
SHEET CHK'D BY: HEI
CROSS CHK'D BY: HEI
APPROVED BY: HEI
DATE: APRIL 2016

CDM Smith
Riata Corporate Park, 12357-A Riata Trace Parkway, Suite 210
Austin, TX 78727
Tel: (512) 346-1100
Texas Registration Number F-3043

HARUTUNIAN ENGINEERING, INC.
305 E Huntland Dr, Ste 500; Austin, TX 78752
TBPE Firm Registration No. F-2408

CITY OF AUSTIN, TEXAS - AUSTIN WATER UTILITY
CIP 3333.016

SOUTH AUSTIN REGIONAL WWTP
THICKENER IMPROVEMENTS PROJECT

SLUDGE TRANSFER BUILDING
"RIO-2A" AND "STPB-CP-001"
EQUIPMENT/NAMEPLATE SCHEDULES

PROJECT No 590–104217
FILE NAME: I–19

SHEET No
I-19

Plotted: 4/22/2016 8:55:29 AM

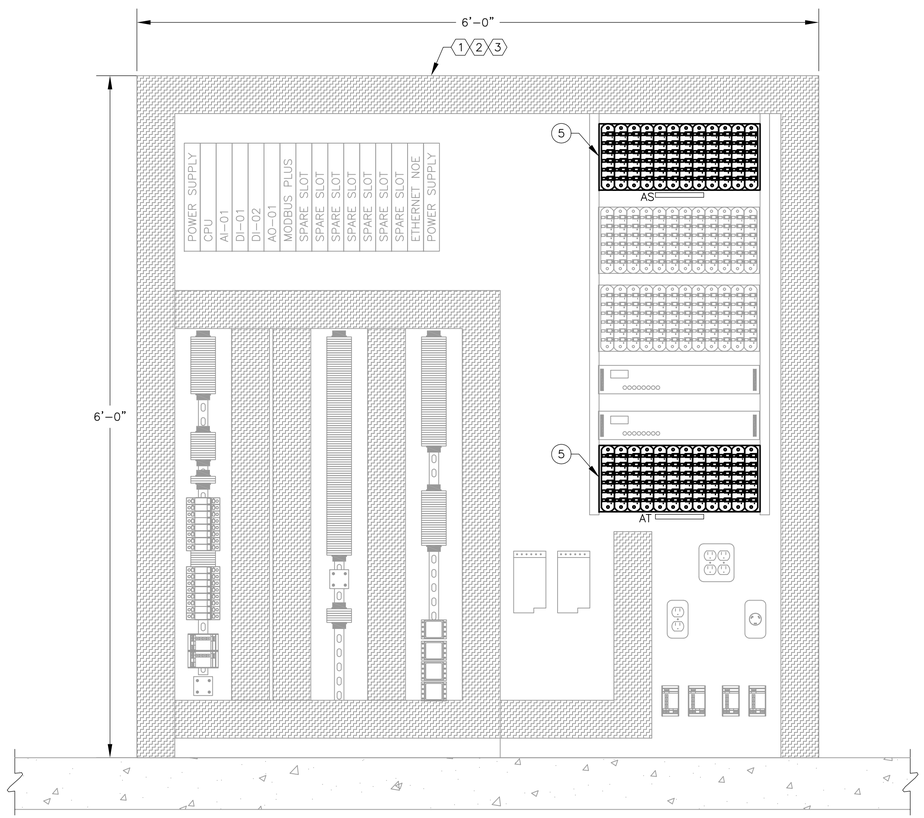

CONTROL PANEL"EBB1-DCP-01"
INTERIOR BACKPLANE ELEVATION-RENOVATION
SCALE: 1'-1/2"=1'-0"

KEY NOTES:

1. DISCONNECT AND REMOVE ALL EXISTING WIRING CONNECTED TO THE EQUIPMENT TO BE DEMOLITIONED, AS APPLICABLE AND AS INDICATED. REMOVE THE EXISTING EQUIPMENT, AS SHOWN FROM EXISTING CONTROL CABINET "RIO-2A". EXTREME CARE MUST BE TAKEN WHEN DISCONNECTING WIRES FROM INSTRUMENTATION AND CONTROLS. FIELD VERIFY ALL CONNECTIONS AND EQUIPMENT PRIOR TO DEMOLISHING EXISTING WIRING, INSTRUMENTATION AND CONTROLS.
2. IDENTIFICATION MARK CORRESPONDS TO LETTERS ON MAIN CONTROL PANEL ELEVATION. REFER TO DRAWING NUMBER [I-19].
3. ALSO REFER TO ELECTRICAL SPECIFICATIONS FOR ADDITIONAL REQUIREMENTS.

GENERAL NOTES:

1. DARK LINEWORK DENOTES PROPOSED EQUIPMENT. LIGHT LINEWORK DENOTES EXISTING EQUIPMENT.
2. THE CONTRACTOR SHALL BE AWARE THAT WHEN ANY EXISTING EQUIPMENT IS DISCONNECTED, REMOVED, RELOCATED OR OTHERWISE MODIFIED, THE POSSIBILITY MAY EXIST FOR SUCH ACTION TO LEAD TO INTERRUPTION OF OPERATION OF THE PLANT IF EXTREME CARE, VERIFICATION, AND VALIDATION IS NOT CAREFULLY EXERCISED PRIOR TO COMMENCEMENT OF SUCH DEMOLITION ACTIVITY. THE CONTRACTOR SHALL KNOW THAT ANY INTERRUPTION TO THE CONTINUITY OF PLANT OPERATION AT ITS FULLY RATED TREATMENT CAPACITY IS UNACCEPTABLE DURING THE CONSTRUCTION COURSE OF THIS PROJECT. HOWEVER, SHOULD ANY INTERRUPTION TO PLANT OPERATION OCCUR FOR ANY UNFORESEEN REASON, WHETHER TOTALLY ACCIDENTAL OR DUE TO IMPROPER FIELD INVESTIGATION AND IMPROPER PLANNING PRIOR TO COMMENCEMENT OF THE ELECTRICAL/INSTRUMENTATION DEMOLITION EFFORT, THE RESPONSIBLE CONTRACTOR SHALL DETERMINE THE PROBLEM, CORRECT IT, AND START UP THE INTERRUPTED EQUIPMENT WITHIN A CERTAIN TIME PERIOD AS DETERMINED BY THE OWNER AT NO ADDITIONAL COST TO THE OWNER. THE CONTRACTOR SHALL PROVIDE CONTINUOUS, 24-HOUR, LABOR, EQUIPMENT, MATERIAL, AND ACCESSORIES UNTIL SUCH TIME THAT ANY EFFECTED EQUIPMENT OPERATES AS PREVIOUSLY OPERATED, AT NO ADDITIONAL COST TO THE OWNER AND TO THE OWNER'S SATISFACTION.
3. COORDINATE/VERIFY ALL POINTS OF CONNECTION PRIOR TO COMMENCING DEMOLITION/RENOVATION ACTIVITIES.
4. THE INTENT IS TO KEEP THE EXISTING FACILITY OPERATIONAL AT ALL TIMES. COORDINATE ALL DEMOLITION AND RENOVATION WORK WITH SEQUENCE OF WORK PLANS/SPECIFICATIONS FOR THIS FACILITY.
5. THIS DRAWING IS INTENDED TO REPRESENT CONTROL SYSTEM ARCHITECTURE DRAWINGS IN EACH PROCESS AREA. ONLY MAJOR CONTROL SYSTEM EQUIPMENT HAVE BEEN SHOWN FOR CLARITY.
6. FURNISH AND INSTALL ALL NECESSARY TEMPORARY MEANS TO FACILITATE CONTINUOUS OPERATION OF THE EXISTING DATA COMMUNICATION NETWORKS DURING ALL PHASES OF CONSTRUCTION.

Plotted: 4/22/2016 8:55:33 AM

STATE OF TEXAS
K. A. HARUTUNIAN
59181
REGISTERED PROFESSIONAL ENGINEER
4/22/2016

REUSE OF DOCUMENTS
This document, and the designs incorporated herein, is an instrument of professional service that has been developed, designed and prepared by Harutunian Engineering, Inc., and is not to be used, in whole or part, for any other project without giving written notice to Harutunian Engineering, Inc.

REV No	DATE	DRWN	CHKD	REMARKS
1	–	–	–	–

DESIGNED BY: HEI
DRAWN BY: HEI
SHEET CHK'D BY: HEI
CROSS CHK'D BY: HEI
APPROVED BY: HEI
DATE: APRIL 2016

CDM Smith
Riata Corporate Park, 12357-A Riata Trace Parkway, Suite 210
Austin, TX 78727
Tel: (512) 346-1100
Texas Registration Number F-3043

HEI
HARUTUNIAN ENGINEERING, INC.
305 E Huntland Dr, Ste 500; Austin, TX 78752
TBPE Firm Registration No. F-2408

CITY OF AUSTIN, TEXAS - AUSTIN WATER UTILITY
CIP 3333.016
SOUTH AUSTIN REGIONAL WWTP
THICKENER IMPROVEMENTS PROJECT

ELECTRICAL BUILDING
"EBB1-DCP-01" INTERIOR BACKPLANE
ELEVATION RENOVATION

PROJECT No 590-104217
FILE NAME: I-20

SHEET No
I-20

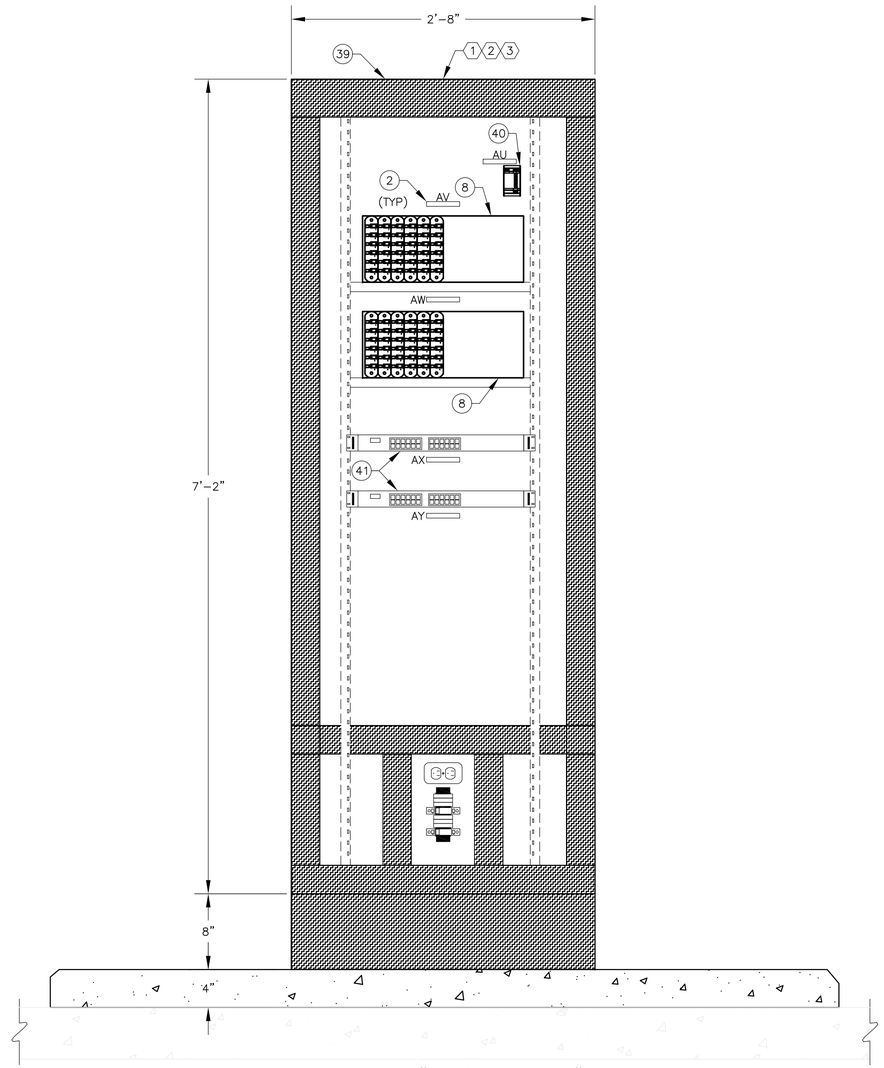

CONTROL PANEL"STPB-CP-001"
INTERIOR BACKPLANE ELEVATION-PROPOSED

SCALE: 1'-1/2"-1'-0"

KEY NOTES:

1. THE PROPOSED INTERNAL COMPONENTS ARE FURNISHED BY THE EQUIPMENT MANUFACTURER. CONTRACTOR SHALL INSTALL CONTROL PANEL AND MAKE ALL FINAL CONNECTIONS PER THE SPECIFICATIONS, THE MANUFACTURER'S RECOMMENDATIONS, AND THE MANUFACTURER'S WIRING DIAGRAMS. REFER TO FIELD INTERFACE WIRING SCHEMATICS FOR ADDITIONAL INFORMATION.

2. IDENTIFICATION MARK CORRESPONDS TO LETTERS ON MAIN CONTROL PANEL ELEVATION. REFER TO DRAWING NUMBER [I-19].

3. ALSO REFER TO ELECTRICAL SPECIFICATIONS FOR ADDITIONAL REQUIREMENTS.

GENERAL NOTES:

1. DARK LINEWORK DENOTES PROPOSED EQUIPMENT. LIGHT LINEWORK DENOTES EXISTING EQUIPMENT.

2. THE CONTRACTOR SHALL BE AWARE THAT WHEN ANY EXISTING EQUIPMENT IS DISCONNECTED, REMOVED, RELOCATED OR OTHERWISE MODIFIED, THE POSSIBILITY MAY EXIST FOR SUCH ACTION TO LEAD TO INTERRUPTION OF OPERATION OF THE PLANT IF EXTREME CARE, VERIFICATION, AND VALIDATION IS NOT CAREFULLY EXERCISED PRIOR TO COMMENCEMENT OF SUCH DEMOLITION ACTIVITY. THE CONTRACTOR SHALL KNOW THAT ANY INTERRUPTION TO THE CONTINUITY OF PLANT OPERATION AT ITS FULLY RATED TREATMENT CAPACITY IS UNACCEPTABLE DURING THE CONSTRUCTION COURSE OF THIS PROJECT. HOWEVER, SHOULD ANY INTERRUPTION TO PLANT OPERATION OCCUR FOR ANY UNFORESEEN REASON, WHETHER TOTALLY ACCIDENTAL OR DUE TO IMPROPER FIELD INVESTIGATION AND IMPROPER PLANNING PRIOR TO COMMENCEMENT OF THE ELECTRICAL/INSTRUMENTATION DEMOLITION EFFORT, THE RESPONSIBLE CONTRACTOR SHALL DETERMINE THE PROBLEM, CORRECT IT, AND START UP THE INTERRUPTED EQUIPMENT WITHIN A CERTAIN TIME PERIOD AS DETERMINED BY THE OWNER AT NO ADDITIONAL COST TO THE OWNER. THE CONTRACTOR SHALL PROVIDE CONTINUOUS, 24-HOUR, LABOR, EQUIPMENT, MATERIAL, AND ACCESSORIES UNTIL SUCH TIME THAT ANY EFFECTED EQUIPMENT OPERATES AS PREVIOUSLY OPERATED, AT NO ADDITIONAL COST TO THE OWNER AND TO THE OWNER'S SATISFACTION.

3. COORDINATE/VERIFY ALL POINTS OF CONNECTION PRIOR TO COMMENCING DEMOLITION/RENOVATION ACTIVITIES.

4. THE INTENT IS TO KEEP THE EXISTING FACILITY OPERATIONAL AT ALL TIMES. COORDINATE ALL DEMOLITION AND RENOVATION WORK WITH SEQUENCE OF WORK PLANS/SPECIFICATIONS FOR THIS FACILITY.

5. THIS DRAWING IS INTENDED TO REPRESENT CONTROL SYSTEM ARCHITECTURE DRAWINGS IN EACH PROCESS AREA. ONLY MAJOR CONTROL SYSTEM EQUIPMENT HAVE BEEN SHOWN FOR CLARITY.

6. FURNISH AND INSTALL ALL NECESSARY TEMPORARY MEANS TO FACILITATE CONTINUOUS OPERATION OF THE EXISTING DATA COMMUNICATION NETWORKS DURING ALL PHASES OF CONSTRUCTION.

Plotted: 4/22/2016 8:55:38 AM

STATE OF TEXAS
K. A. HARUTUNIAN
59181
REGISTERED PROFESSIONAL ENGINEER
4/22/2016

REUSE OF DOCUMENTS
This document, and the designs incorporated herein, is an instrument of professional service that has been developed, designed and prepared by Harutunian Engineering, Inc., and is not to be used, in whole or part, for any other project without giving written notice to Harutunian Engineering, Inc.

REV No	DATE	DRWN	CHKD	REMARKS
△	–	–	–	–

DESIGNED BY: HEI
DRAWN BY: HEI
SHEET CHK'D BY: HEI
CROSS CHK'D BY: HEI
APPROVED BY: HEI
DATE: APRIL 2016

CDM Smith
Riata Corporate Park, 12357-A Riata Trace Parkway, Suite 210
Austin, TX 78727
Tel: (512) 346-1100
Texas Registration Number F-3043

HEI
HARUTUNIAN ENGINEERING, INC.
305 E Huntland Dr, Ste 500; Austin, TX 78752
TBPE Firm Registration No. F-2408

CITY OF AUSTIN, TEXAS - AUSTIN WATER UTILITY
CIP 3333.016

SOUTH AUSTIN REGIONAL WWTP
THICKENER IMPROVEMENTS PROJECT

SLUDGE TRANSFER BUILDING
"STPB- CP-001" INTERIOR BACKPLANE
ELEVATION PROPOSED

PROJECT No 590-104217
FILE NAME: I-21

SHEET No
I-21

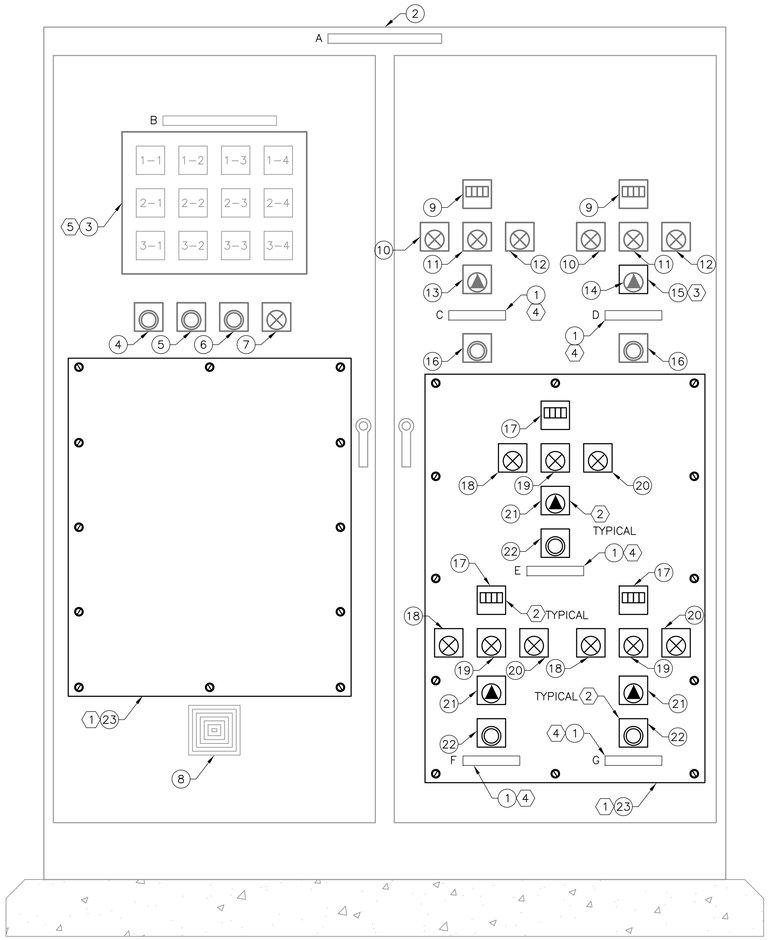

EXISTING CONTROL CABINET "PB01–CCP–01" FRONT ELEVATION – RENOVATION

SCALE: NTS

SLUDGE THICKENER BUILDING CONTROL CABINET "PB01–CCP–01" EQUIPMENT SCHEDULE

IDENTIF–ICATION MARK	DESCRIPTION	LEGEND PLATE INSCRIPTION	LETTER SIZE (MINIMUM)	OPERATOR OR LENS COLOR
1	3–PLY PHENOLIC NAMEPLATE PER SPECIFICATIONS. LETTER NEXT TO NAMEPLATE CORRESPONDS TO IDENTIFICATION MARK IN CONTROL PANEL NAMEPLATE SCHEDULE ON THIS DRAWING.	NOT APPLICABLE	NOT APPLICABLE	NOT APPLICABLE
2	DOUBLE DOOR ENCLOSURE 7'–6" HIGH X 6'–0" WIDE X 20" DEEP	NOT APPLICABLE	NOT APPLICABLE	NOT APPLICABLE
3	ANNUNCIATOR ALARM PANEL	NOT APPLICABLE	NOT APPLICABLE	NOT APPLICABLE
4	INDICATING LIGHTED PUSHBUTTON WITH LEGEND PLATE.	ACKNOWLEDGE–ANNUNCIATOR ALARM	NOT APPLICABLE	BLACK BUTTON YELLOW PLATE
5	INDICATING LIGHTED PUSHBUTTON WITH LEGEND PLATE.	RESET–ANNUNCIATOR ALARM	NOT APPLICABLE	BLACK BUTTON YELLOW PLATE
6	INDICATED LIGHTED PUSHBUTTON WITH LEGEND PLATE.	TEST–ANNUNCIATOR ALARM	NOT APPLICABLE	BLACK BUTTON YELLOW PLATE
7	INDICATING LIGHT WITH LEGEND PLATE.	ON–ANNUNCIATOR ALARM	NOT APPLICABLE	RED AND WHITE
8	AUDIBLE ALARM	NOT APPLICABLE	NOT APPLICABLE	NOT APPLICABLE
9	ELAPSED TIME METER	NOT APPLICABLE	NOT APPLICABLE	NOT APPLICABLE
10	INDICATING LIGHT WITH LEGEND PLATE.	OFF	NOT APPLICABLE	GREEN
11	INDICATING LIGHT WITH LEGEND PLATE.	ON	NOT APPLICABLE	RED
12	INDICATING LIGHT WITH LEGEND PLATE.	OPEN	NOT APPLICABLE	ORANGE
13	4–POSITION SELECTOR SWITCH WITH LEGEND PLATE	ON–OFF–AUTO–REMOTE	NOT APPLICABLE	BLACK
14	4–POSITION SELECTOR SWITCH	NOT APPLICABLE	NOT APPLICABLE	BLACK
15	LEGEND PLATE PER SPECIFICATIONS FOR EXISTING SELECTOR SWITCH	ON–OFF–AUTO–REMOTE	3/16"	NOT APPLICABLE
16	PUSHBUTTON WITH LEGEND PLATE	RESET	NOT APPLICABLE	BLACK
17	ELAPSED TIME METER PER SPECIFICATIONS.	NOT APPLICABLE	NOT APPLICABLE	NOT APPLICABLE
18	PUSH–TO–TEST INDICATING PILOT LIGHT PER SPECIFICATIONS WITH LEGEND PLATE.	OFF	3/16"	GREEN
19	PUSH–TO–TEST INDICATING PILOT LIGHT PER SPECIFICATIONS WITH LEGEND PLATE.	ON	3/16"	RED
20	PUSH–TO–TEST INDICATING PILOT LIGHT PER SPECIFICATIONS WITH LEGEND PLATE.	OPEN	3/16"	AMBER
21	4–POSITION SELECTOR SWITCH PER SPECIFICATIONS WITH LEGEND PLATE.	ON–OFF–AUTO–REMOTE	3/16"	BLACK
22	PUSHBUTTON PER SPECIFICATIONS WITH LEGEND PLATE.	RESET	3/16"	BLACK
23	STAINLESS STEEL PLATE TO MATCH EXISTING CONTROL PANEL, SIZED TO COVER ENTIRE FRONT PANEL AREA OF EXISTING CONTROL PANEL, AND WITH NECESSARY HARDWARE TO ATTACH TO FACE OF EXISTING CONTROL PANEL.	NOT APPLICABLE	NOT APPLICABLE	NOT APPLICABLE

SLUDGE THICKENER BUILDING CONTROL CABINET "PB01–CCP–01" EXTERIOR FRONT ELEVATION NAMEPLATE SCHEDULE

IDENTIF–ICATION MARK	LINE NO.	LEGEND PLATE INSCRIPTION	LETTER SIZE (MIN)
A	FIRST	SLUDGE TRANSFER	N/A
	SECOND	BUILDING CONTROL	N/A
	THIRD	CABINET	N/A
	FOURTH	PB01–CCP–01	N/A
B	FIRST	PB01–AP–01	N/A
C	FIRST	SLUDGE PUMP NO. 2	3/8"
	SECOND	"STPB–TSLP–2"	3/8"
D	FIRST	SLUDGE PUMP NO. 3	3/8"
	SECOND	"STPB–TSLP–3"	3/8"
E	FIRST	SLUDGE PUMP NO. 4	3/8"
	SECOND	"STPB–TSLP–4"	3/8"
F	FIRST	SLUDGE PUMP NO. 5	3/8"
	SECOND	"STPB–TSLP–5"	3/8"
G	FIRST	SLUDGE PUMP NO. 6	3/8"
	SECOND	"STPB–TSLP–6"	3/8"

KEY NOTES:

1. AFTER ALL CONTROL DEVICES HAVE BEEN REMOVED FROM FACE OF THE EXISTING CONTROL PANEL, "PB01–CCP–01", THE CONTRACTOR SHALL FURNISH AND INSTALL A STAINLESS STEEL PLATE TO MATCH THE EXISTING CONTROL PANEL AND SECURE TO FRONT OF EXISTING CONTROL PANEL. CONTRACTOR SHALL PROVIDE ALL LABOR AND HARDWARE NECESSARY TO SECURE THE PROPOSED STEEL PLATE TO THE FRONT OF THE EXISTING CONTROL PANEL TO THE SATISFACTION OF THE OWNER AND ENGINEER WITH NO ADDITIONAL COSTS TO THE OWNER. CONTRACTOR SHALL USE EXTREME CARE WHEN SECURING STAINLESS STEEL PLATE DUE TO EXISTING/REMAINING TERMINAL BLOCKS, WIRING, CONTROL DEVICES, ETC. LOCATED INSIDE THE EXISTING CONTROL PANEL.
2. AFTER INSTALLATION OF PROPOSED STEEL PLATE TO FRONT OF EXISTING CONTROL PANEL, CONTRACTOR SHALL DRILL A HOLE FOR PROPOSED CONTROL DEVICE (I.E. INDICATING PILOT LIGHT, SELECTOR SWITCH, PUSHBUTTON, ELAPSED TIME METER, ETC.). CONTRACTOR SHALL USE EXTREME CARE WHEN DRILLING THROUGH EXISTING CONTROL PANEL DUE TO EXISTING/REMAINING TERMINAL BLOCKS, WIRING, CONTROL DEVICES, ETC. LOCATED INSIDE THE EXISTING CONTROL PANEL. FURNISH AND INSTALL PROPOSED CONTROL DEVICE IN LOCATION AS INDICATED ON THIS DRAWING. PLEASE NOTE THAT DRAWING IS NOT TO SCALE SO THE CONTROL DEVICES SHALL BE MOUNTED AT A HEIGHT SIMILAR TO THE PREVIOUSLY DISCONNECTED AND REMOVED CONTROL DEVICES. CONTRACTOR SHALL FURNISH AND INSTALL PROPOSED WIRING BETWEEN THE CONTROL DEVICES AND PROPOSED TERMINAL BLOCKS LOCATED INSIDE THE EXISTING CONTROL PANEL AS SHOWN ON THE RENOVATION SLUDGE PUMP CONTROL SCHEMATIC DRAWINGS AND MAKE ALL FINAL TERMINATIONS/CONNECTIONS. CONTRACTOR SHALL PROVIDE ANY ADDITIONAL LABOR, COMPONENTS, OR WIRING TO ENSURE A FULLY FUNCTIONAL SYSTEM AT NO ADDITIONAL COST TO THE OWNER.
3. FURNISH AND INSTALL A LEGEND PLATE PER SPECIFICATIONS TO THE EXISTING SELECTOR SWITCH WITH INSCRIPTION AS INDICATED IN EQUIPMENT SCHEDULE ON THIS DRAWING.
4. FURNISH AND INSTALL A PROPOSED NAMEPLATE PER SPECIFICATIONS IN THE LOCATION AS INDICATED ON THIS CONTROL PANEL ELEVATION DRAWINGS AS INDICATED ON THE NAMEPLATE SCHEDULE ON THIS DRAWING.
5. ANNUNCIATOR SHALL REMAIN AND BE ABANDONED IN PLACE. POWER TO ANNUNCIATOR SHALL REMAIN AND NOT BE DISCONNECTED. REFER TO DEMOLITION CONTROL PANEL ELEVATION DRAWING NO. [I–13] FOR EXISTING ANNUNCIATOR ALARM INSCRIPTION SCHEDULE.

GENERAL NOTES:

1. AN ATTEMPT IS MADE TO SHOW ALL EXISTING EQUIPMENT ON THIS CONTROL PANEL FRONT ELEVATION. HOWEVER THE CONTRACTOR MUST EXERCISE EXTREME CARE AS THERE ARE NO AVAILABLE AS BUILT RECORDS IDENTIFYING THE ROUTING OF ALL CONDUIT/WIRING BETWEEN THE VARIOUS MOTOR CONTROL CENTERS, CONTROL PANELS, PLC CABINET, LOADS, ETC., NO RECORDS IDENTIFYING THE COMPONENTS OF THE EXISTING CONTROL PANEL, AND THE INTERNAL WIRING OF THE CONTROL PANEL. THEREFORE, THE CONTRACTOR IS TO EXERCISE EXTREME CARE, VERIFY THE ROUTING OF EXISTING CONDUIT/WIRING AND VERIFYING THE COMPONENTS AND INTERNAL WIRING OF THE CONTROL PANEL, IF NECESSARY, PRIOR TO COMMENCING FULL SCALE DEMOLITION OR RENOVATION ACTIVITIES. FOLLOWING THE DISCOVERY VERIFICATION OF THE EXISTING FIELD CONDITIONS, SHOULD ADJUSTMENTS BECOME A NECESSITY TO THE EXISTING OR PROPOSED SYSTEM (AS APPLICABLE), THE EXISTING DISCOVERED FIELD CONDITIONS MUST BE BROUGHT TO THE ENGINEER'S ATTENTION FOR EXECUTION OF THE NECESSARY ADJUSTMENTS/MODIFICATIONS.
2. THE EXISTING INFORMATION SHOWN ON THIS DRAWING WAS OBTAINED FROM THE PROJECT ENTITLED "ONION CREEK WASTEWATER TREATMENT FACILITIES – CONTRACT NO. 2" DATED APRIL 1984 AND FROM A PROJECT ENTITLED "SOUTH AUSTIN REGIONAL WASTEWATER TREATMENT PLANT CONTROL AND INSTRUMENTATION IMPROVEMENTS" DATED JULY 1994. THIS DRAWING MAY NOT EXACTLY REFLECT THE EXISTING CONDITIONS. THEREFORE, THE CONTRACTOR IS TO FIELD VERIFY THE EXISTING CONDITIONS PRIOR TO COMMENCING FULL SCALE DEMOLITION OR RENOVATION ACTIVITIES. FOLLOWING THE DISCOVERY VERIFICATION OF THE EXISTING FIELD CONDITIONS, SHOULD ADJUSTMENTS BECOME A NECESSITY TO THE EXISTING OR PROPOSED SYSTEM (AS APPLICABLE), THE EXISTING DISCOVERED FIELD CONDITIONS MUST BE BROUGHT TO THE OWNER'S ATTENTION FOR EXECUTION OF THE NECESSARY ADJUSTMENTS/MODIFICATIONS.
3. REFER TO EXISTING CONTROL PANEL REFERENCE DRAWINGS FOR ADDITIONAL INFORMATION PRIOR TO COMMENCING MODIFICATION, DEMOLITION, OR RENOVATION ACTIVITIES.

Plotted: 4/22/2016 8:55:45 AM

STATE OF TEXAS
K. A. HARUTUNIAN
59181
REGISTERED PROFESSIONAL ENGINEER
4/22/2016

REUSE OF DOCUMENTS
This document, and the designs incorporated herein, is an instrument of professional service that has been developed, designed and prepared by Harutunian Engineering, Inc., and is not to be used, in whole or part, for any other project without giving written notice to Harutunian Engineering, Inc.

REV No	DATE	DRWN	CHKD	REMARKS
1	–	–	–	–

DESIGNED BY: HEI
DRAWN BY: HEI
SHEET CHK'D BY: HEI
CROSS CHK'D BY: HEI
APPROVED BY: HEI
DATE: APRIL 2016

CDM Smith
Riata Corporate Park, 12357-A Riata Trace Parkway, Suite 210
Austin, TX 78727
Tel: (512) 346-1100
Texas Registration Number F-3043

HARUTUNIAN ENGINEERING, INC.
305 E Huntland Dr, Ste 500; Austin, TX 78752
TBPE Firm Registration No. F-2408

CITY OF AUSTIN, TEXAS - AUSTIN WATER UTILITY
CIP 3333.016

SOUTH AUSTIN REGIONAL WWTP
THICKENER IMPROVEMENTS PROJECT

CONTROL CABINET "PB01-CCP-01"
FRONT ELEVATION AND SCHEDULES
- RENOVATION

PROJECT No 590–104217
FILE NAME: I–22

SHEET No
I-22

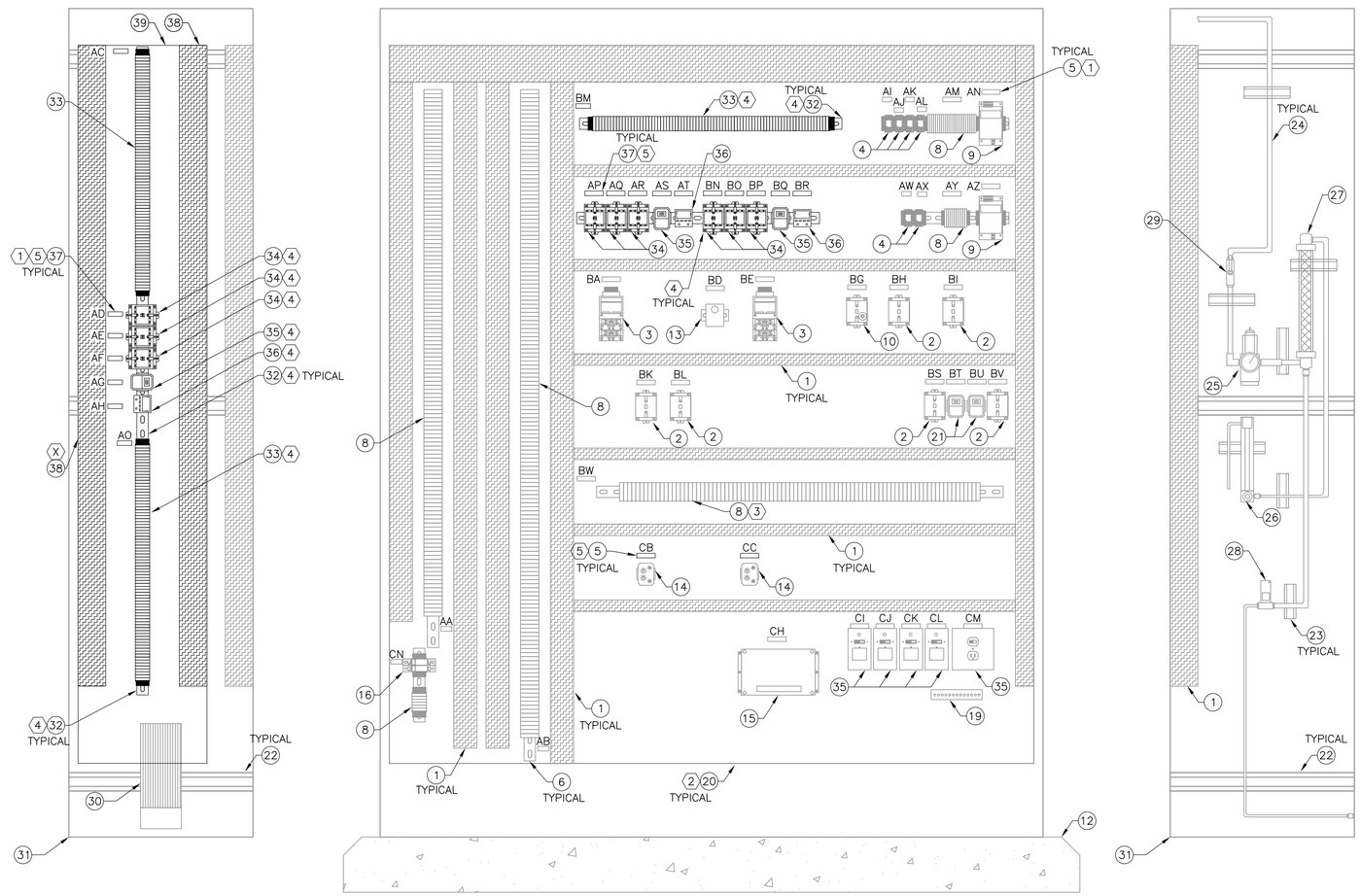

EXISTING CONTROL CABINET "PB01–CCP–01" INTERIOR BACKPLANE ELEVATION – RENOVATION

SCALE: NTS

KEY NOTES:

1. LETTER IDENTIFICATION MARK CORRESPONDS TO IDENTIFICATION MARK IN CONTROL PANEL NAMEPLATE SCHEDULE ON DRAWING NO. [I–24]. TYPICAL FOR ALL LETTER IDENTIFICATION MARKS SHOWN ON THIS DRAWING.
2. NUMBER IN CIRCLE CORRESPONDS TO IDENTIFICATION MARK IN CONTROL PANEL EQUIPMENT SCHEDULE ON DRAWING NO. [I–24]. TYPICAL FOR ALL CIRCLED NUMBERS IDENTIFYING CONTROL PANEL EQUIPMENT.
3. REUSE EXISTING TERMINAL BLOCKS AND DIN RAIL WHERE INDICATED. REFER TO RENOVATION CONTROL WIRING SCHEMATICS AND LOOP DIAGRAMS FOR ADDITIONAL INFORMATION.
4. FURNISH AND INSTALL PROPOSED EQUIPMENT AS SHOWN ON THIS INTERIOR ELEVATION DRAWING. NOT ALL REQUIRED EQUIPMENT IS SHOWN ON THIS DRAWING. CONTRACTOR SHALL PROVIDE ANY ADDITIONAL HARDWARE, CONTROL DEVICES, WIRING, ETC. NECESSARY FOR A FULLY FUNCTIONAL AND OPERATIONAL INSTALLATION FOR ALL PROPOSED AND MODIFIED EQUIPMENT WHETHER SHOWN OR NOT SHOWN ON THIS DRAWING AT NO ADDITIONAL COST TO THE OWNER. REFER TO RENOVATION INSTRUMENTATION AND CONTROL WIRING SCHEMATICS FOR ADDITIONAL INFORMATION AND REQUIREMENTS. ALSO REFER TO SPECIFICATIONS.
5. FURNISH AND INSTALL 3–PLY PHENOLIC NAMEPLATE PER SPECIFICATIONS AND PER NAMEPLATE SCHEDULE ON DRAWING NO. [I–24].

GENERAL NOTES:

1. AN ATTEMPT IS MADE TO SHOW ALL EXISTING EQUIPMENT ON THIS CONTROL PANEL INTERIOR ELEVATION AND SCHEDULES. HOWEVER THE CONTRACTOR MUST EXERCISE EXTREME CARE AS THERE ARE NO AVAILABLE AS BUILT RECORDS IDENTIFYING THE ROUTING OF ALL CONDUIT/WIRING BETWEEN THE VARIOUS MOTOR CONTROL CENTERS, CONTROL PANELS, PLC CABINET, LOADS, ETC., NO RECORDS IDENTIFYING THE COMPONENTS OF THE EXISTING CONTROL PANEL, AND NO RECORDS IDENTIFYING THE INTERNAL WIRING OF THE EXISTING CONTROL PANEL. THEREFORE, THE CONTRACTOR IS TO EXERCISE EXTREME CARE, VERIFY THE ROUTING OF EXISTING CONDUIT/WIRING AND VERIFYING THE COMPONENTS AND INTERNAL WIRING OF THE CONTROL PANEL, IF NECESSARY, PRIOR TO COMMENCING FULL SCALE DEMOLITION OR RENOVATION ACTIVITIES. FOLLOWING THE DISCOVERY VERIFICATION OF THE EXISTING FIELD CONDITIONS, SHOULD ADJUSTMENTS BECOME A NECESSITY TO THE EXISTING OR PROPOSED SYSTEM (AS APPLICABLE), THE EXISTING DISCOVERED FIELD CONDITIONS MUST BE BROUGHT TO THE ENGINEER'S ATTENTION FOR EXECUTION OF THE NECESSARY ADJUSTMENTS/MODIFICATIONS.
2. THE EXISTING INFORMATION SHOWN ON THIS DRAWING WAS OBTAINED FROM THE PROJECT ENTITLED "ONION CREEK WASTEWATER TREATMENT FACILITIES – CONTRACT NO. 2" DATED APRIL 1984 AND FROM THE PROJECT ENTITLED "SOUTH AUSTIN REGIONAL WASTEWATER TREATMENT PLANT CONTROL AND INSTRUMENTATION IMPROVEMENTS" DATED JULY 1994. THIS DRAWING MAY NOT EXACTLY REFLECT THE EXISTING CONDITIONS. THEREFORE, THE CONTRACTOR IS TO FIELD VERIFY THE EXISTING CONDITIONS PRIOR TO COMMENCING FULL SCALE DEMOLITION OR RENOVATION ACTIVITIES. FOLLOWING THE DISCOVERY VERIFICATION OF THE EXISTING FIELD CONDITIONS, SHOULD ADJUSTMENTS BECOME A NECESSITY TO THE EXISTING OR PROPOSED SYSTEM (AS APPLICABLE), THE EXISTING DISCOVERED FIELD CONDITIONS MUST BE BROUGHT TO THE OWNER'S ATTENTION FOR EXECUTION OF THE NECESSARY ADJUSTMENTS/MODIFICATIONS.
3. REFER TO EXISTING CONTROL PANEL REFERENCE DRAWINGS FOR ADDITIONAL INFORMATION PRIOR TO COMMENCING MODIFICATION, DEMOLITION, OR RENOVATION ACTIVITIES.

Plotted: 4/22/2016 8:55:50 AM

STATE OF TEXAS
K. A. HARUTUNIAN
59181
REGISTERED PROFESSIONAL ENGINEER
4/22/2016

REUSE OF DOCUMENTS

This document, and the designs incorporated herein, is an instrument of professional service that has been developed, designed and prepared by Harutunian Engineering, Inc., and is not to be used, in whole or part, for any other project without giving written notice to Harutunian Engineering, Inc.

REV No	DATE	DRWN	CHKD	REMARKS
△	–	–	–	–

DESIGNED BY: HEI
DRAWN BY: HEI
SHEET CHK'D BY: HEI
CROSS CHK'D BY: HEI
APPROVED BY: HEI
DATE: APRIL 2016

CDM Smith
Riata Corporate Park, 12357-A Riata Trace Parkway, Suite 210
Austin, TX 78727
Tel: (512) 346-1100
Texas Registration Number F-3043

HARUTUNIAN ENGINEERING, INC.
305 E Huntland Dr, Ste 500; Austin, TX 78752
TBPE Firm Registration No. F-2408

CITY OF AUSTIN, TEXAS - AUSTIN WATER UTILITY
CIP 3333.016

SOUTH AUSTIN REGIONAL WWTP
THICKENER IMPROVEMENTS PROJECT

CONTROL CABINET "PB01-CCP-01"
INTERIOR BACKPLANE ELEVATION
- RENOVATION

PROJECT No 590–104217
FILE NAME: I–23

SHEET No
I-23

(1)(3) SLUDGE THICKENER BUILDING CONTROL CABINET "PB01-CCP-01" INTERIOR BACKPLANE ELEVATION NAMEPLATE SCHEDULE – RENOVATION

ID MARK	NAMEPLATE INSCRIPTION	LETTER SIZE (MINIMUM)
AA	TS-1	N/A
AB	TS-2	N/A
AC	TB-TSLP4	3/8"
AD	MX-TSLP4	3/8"
AE	MCR-TSLP4	3/8"
AF	CVFA-TSLP4	3/8"
AG	ZSTR-TSLP4	3/8"
AH	CKU-TSLP4	3/8"
AI	CVLS11X	N/A
AJ	CVLS12X	N/A
AK	CVLS13X	N/A
AL	CVLS14X	N/A
AM	TB4	N/A
AN	PS1	N/A
AO	TB-TSLP5	3/8"
AP	MX-TSLP5	3/8"
AQ	MCR-TSLP5	3/8"
AR	CVFA-TSLP5	3/8"
AS	ZSTR-TSLP5	3/8"
AT	CKU-TSLP5	3/8"
AU		
AV		
AW	CVLS21X	N/A
AX	CVLS22X	N/A
AY	TB5	N/A
AZ	PS2	N/A
BA	VLS1-TDR	N/A
BB		
BC		
BD	T-STAT	N/A
BE	VLS2-TDR	N/A
BF		
BG	BWH	N/A
BH	BLT	N/A
BI	HLL	N/A
BJ		
BK	VLS1X	N/A
BL	VLS2X	N/A
BM	TB-TSLP6	3/8"
BN	MX-TSLP6	3/8"
BO	MCR-TSLP6	3/8"
BP	CVFA-TSLP6	3/8"
BQ	ZSTR-TSLP6	3/8"
BR	CKU-TSLP6	3/8"
BS	VLS6X	N/A
BT	VLS6-TDR	N/A
BU	VLS7-TDR	N/A
BV	VLS7X	N/A
BW	PB01	N/A
BX		
BY		
BZ		

(1)(3) SLUDGE THICKENER BUILDING CONTROL CABINET "PB01-CCP-01" INTERIOR BACKPLANE ELEVATION NAMEPLATE SCHEDULE – RENOVATION

ID MARK	NAMEPLATE INSCRIPTION	LETTER SIZE (MINIMUM)
CA		
CB	CT1-TSLP2 (4)	3/8"
CC	CT2-TSLP3 (4)	3/8"
CD		
CE		
CF		
CG		
CH	ANNUNC-PS	N/A
CI	FS-1 LIGHT	N/A
CJ	FS-2	N/A
CK	FS-3	N/A
CL	FS-6	N/A
CM	DS/RECP	N/A
CN	TS-1	N/A

(1)(3) SLUDGE THICKENER BUILDING CONTROL CABINET "PB01-CCP-01" INTERIOR BACKPLANE EQUIPMENT SCHEDULE – RENOVATION

MARK	DESCRIPTION
(1)	WIREWAY
(2)	120VAC INDUSTRIAL CONTROL RELAY (MFG: ALLEN BRADLEY)
(3)	TIME DELAY RELAY (MFG: AGASTAT)
(4)	24VDC CONTROL RELAY (MFG: OMRON)
(5)	EQUIPMENT NAMEPLATE IDENTIFIER
(6)	DIN RAIL
(7)	24VDC POWER SUPPLY (MFG: SOLA)
(8)	TERMINAL BLOCKS
(9)	POWER SUPPLY 24VDC (MFG: ACOPIAN)
(10)	TIME DELAY RELAY – OPEN TYPE W/PNEUMATIC TIME-DELAY UNIT (MFG: ALLEN BRADLEY)
(11)	DOUBLE DOOR ENCLOSURE 7'-6" HIGH X 6'-0" WIDE X 20" DEEP
(12)	HOUSEKEEPING CONCRETE PAD
(13)	THERMOSTAT (MFG: PFANNENBERG)
(14)	CYCLE TIMER – TIME DELAY RELAY (MFG: MACROMATIC)
(15)	ANNUNCIATOR POWER SUPPLY (MFG: PANALARM)
(16)	120VAC CIRCUIT BREAKER (MFG: ALLEN-BRADLEY)
(17)	ENCLOSED CIRCUIT BREAKER
(18)	ENCLOSED DISCONNECT SWITCH AND DEDICATED RECEPTACLE
(19)	GROUNDING BUS BAR WITH TERMINALS
(20)	BACK PANEL
(21)	TIME DELAY RELAY W/ TIME SELECT AND RANGE SELECT (MG: DAYTON)
(22)	STABILIZING CHANNEL/HARDWARE FOR ENCLOSURE
(23)	SINGLE SUPPORT CHANNEL WITH MOUNTING HARDWARE (I.E. CLAMPS, BOLTS, ETC.)
(24)	STAINLESS STEEL TUBING WITH ACCESSORIES
(25)	FILTER REGULATOR 1/4" (MFG: MADONEILAN)
(26)	GLASS TUBE VARIABLE AREA FLOW METER (MFG: BROOKS)
(27)	FILTER (MFG: DELTECH)
(28)	PLUG IN SOLENOID VALVE IN-LINE HEATER (MFG: PARKER)
(29)	MECHANICAL VALVE (MFG: MILWAUKEE VALVE CO.)
(30)	FAN HEATER (MFG: PFANNENBERG)
(31)	ENCLOSURE SIDE WALL
(32)	DIN RAIL
(33)	TERMINAL BLOCKS
(34)	TYPE 1 – 120VAC INDUSTRIAL CONTROL RELAY
(35)	120VAC TIMING DELAY RELAY

(1)(3) SLUDGE THICKENER BUILDING CONTROL CABINET "PB01-CCP-01" INTERIOR BACKPLANE EQUIPMENT SCHEDULE – RENOVATION

MARK	DESCRIPTION
(36)	CYCLE TIMER
(37)	EQUIPMENT NAMEPLATE IDENTIFIER
(38)	WIREWAY
(39)	SIDE PANEL

KEY NOTES:

(1) EXISTING NAMEPLATE AND EQUIPMENT SCHEDULE ARE PROVIDED FOR THE EXISTING INTERIOR BACKPLANE ELEVATION FOR CONTROL PANEL "PB01-CCP-01" SHOWN ON DRAWING NO. [I-23].

(2) CONTRACTOR SHALL FIELD VERIFY ALL EXISTING DEVICES IN CABINET "PB01-CCP-01" THAT ARE NOT BEING DEMOLISHED AND UPDATE THE NAMEPLATE DATA AND DESCRIPTIONS IN THESE TABLES, AS APPLICABLE.

(3) REFER TO SPECIFICATIONS FOR EQUIPMENT REQUIREMENTS AND ADDITIONAL INFORMATION.

GENERAL NOTES:

1. AN ATTEMPT IS MADE TO SHOW ALL EXISTING EQUIPMENT ON THIS CONTROL PANEL INTERIOR ELEVATION AND SCHEDULES. HOWEVER THE CONTRACTOR MUST EXERCISE EXTREME CARE AS THERE ARE NO AVAILABLE AS BUILT RECORDS IDENTIFYING THE ROUTING OF ALL CONDUIT/WIRING BETWEEN THE VARIOUS MOTOR CONTROL CENTERS, CONTROL PANELS, PLC CABINET, LOADS, ETC., NO RECORDS IDENTIFYING THE COMPONENTS OF THE EXISTING CONTROL PANEL, AND NO RECORDS IDENTIFYING THE INTERNAL WIRING OF THE EXISTING CONTROL PANEL. THEREFORE, THE CONTRACTOR IS TO EXERCISE EXTREME CARE, VERIFY THE ROUTING OF EXISTING CONDUIT/WIRING AND VERIFYING THE COMPONENTS AND INTERNAL WIRING OF THE CONTROL PANEL, IF NECESSARY, PRIOR TO COMMENCING FULL SCALE DEMOLITION OR RENOVATION ACTIVITIES. FOLLOWING THE DISCOVERY VERIFICATION OF THE EXISTING FIELD CONDITIONS, SHOULD ADJUSTMENTS BECOME A NECESSITY TO THE EXISTING OR PROPOSED SYSTEM (AS APPLICABLE), THE EXISTING DISCOVERED FIELD CONDITIONS MUST BE BROUGHT TO THE ENGINEER'S ATTENTION FOR EXECUTION OF THE NECESSARY ADJUSTMENTS/MODIFICATIONS.
2. THE EXISTING INFORMATION SHOWN ON THIS DRAWING WAS OBTAINED FROM THE PROJECT ENTITLED "ONION CREEK WASTEWATER TREATMENT FACILITIES – CONTRACT NO. 2" DATED APRIL 1984 AND FROM THE PROJECT ENTITLED "SOUTH AUSTIN REGIONAL WASTEWATER TREATMENT PLANT CONTROL AND INSTRUMENTATION IMPROVEMENTS" DATED JULY 1994. THIS DRAWING MAY NOT EXACTLY REFLECT THE EXISTING CONDITIONS. THEREFORE, THE CONTRACTOR IS TO FIELD VERIFY THE EXISTING CONDITIONS PRIOR TO COMMENCING FULL SCALE DEMOLITION OR RENOVATION ACTIVITIES. FOLLOWING THE DISCOVERY VERIFICATION OF THE EXISTING FIELD CONDITIONS, SHOULD ADJUSTMENTS BECOME A NECESSITY TO THE EXISTING OR PROPOSED SYSTEM (AS APPLICABLE), THE EXISTING DISCOVERED FIELD CONDITIONS MUST BE BROUGHT TO THE OWNER'S ATTENTION FOR EXECUTION OF THE NECESSARY ADJUSTMENTS/MODIFICATIONS.
3. REFER TO EXISTING CONTROL PANEL REFERENCE DRAWINGS FOR ADDITIONAL INFORMATION PRIOR TO COMMENCING MODIFICATION, DEMOLITION, OR RENOVATION ACTIVITIES.

Plotted: 4/22/2016 9:29:59 AM

K. A. Harutunian
STATE OF TEXAS
K. A. HARUTUNIAN
59181
REGISTERED
PROFESSIONAL ENGINEER
4/22/2016

REUSE OF DOCUMENTS
This document, and the designs incorporated herein, is an instrument of professional service that has been developed, designed and prepared by Harutunian Engineering, Inc., and is not to be used, in whole or part, for any other project without giving written notice to Harutunian Engineering, Inc.

REV No	DATE	DRWN	CHKD	REMARKS
1	–	–	–	–

DESIGNED BY: HEI
DRAWN BY: HEI
SHEET CHK'D BY: HEI
CROSS CHK'D BY: HEI
APPROVED BY: HEI
DATE: APRIL 2016

CDM Smith
Riata Corporate Park, 12357-A Riata Trace Parkway, Suite 210
Austin, TX 78727
Tel: (512) 346-1100
Texas Registration Number F-3043

HARUTUNIAN ENGINEERING, INC.
305 E Huntland Dr, Ste 500; Austin, TX 78752
TBPE Firm Registration No. F-2408

CITY OF AUSTIN, TEXAS - AUSTIN WATER UTILITY
CIP 3333.016

SOUTH AUSTIN REGIONAL WWTP
THICKENER IMPROVEMENTS PROJECT

CONTROL PANEL "PB01-CCP-01"
INTERIOR BACKPLANE ELEVATION
SCHEDULES - RENOVATION

PROJECT No 590-104217
FILE NAME: I-24

SHEET No
I-24

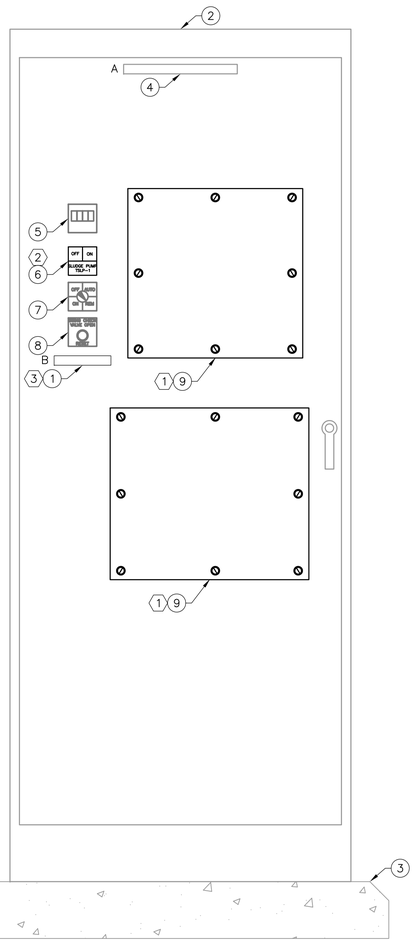

EXISTING CONTROL CABINET "PB01-CCP-03"
EXTERIOR FRONT ELEVATION – RENOVATION

SCALE: NTS

SLUDGE THICKENER BUILDING
CONTROL CABINET "PB01-CCP-03"
EQUIPMENT SCHEDULE

	IDENTIF-ICATION MARK	DESCRIPTION	LEGEND PLATE INSCRIPTION	LETTER SIZE (MINIMUM)	OPERATOR OR LENS COLOR
3	1	3-PLY PHENOLIC NAMEPLATE PER SPECIFICATIONS. LETTER NEXT TO NAMEPLATE CORRESPONDS TO IDENTIFICATION MARK IN CONTROL PANEL NAMEPLATE SCHEDULE ON THIS DRAWING.	NOT APPLICABLE	NOT APPLICABLE	NOT APPLICABLE
	2	DOUBLE DOOR ENCLOSURE 7'-6" HIGH X 6'-0" WIDE X 20" DEEP	NOT APPLICABLE	NOT APPLICABLE	NOT APPLICABLE
	3	CONCRETE HOUSEKEEPING PAD	NOT APPLICABLE	NOT APPLICABLE	NOT APPLICABLE
	4	EQUIPMENT NAMEPLATE IDENTIFIER	NOT APPLICABLE	NOT APPLICABLE	NOT APPLICABLE
	5	ELAPSED TIME METER (ETM)	NOT APPLICABLE	NOT APPLICABLE	NOT APPLICABLE
2	6	LEGEND COVER FOR EXISTING INDICATING LIGHT CONTROL DEVICE	OFF-ON / SLUDGE PUMP NO. 1	AS REQUIRED	GREEN/RED/ WHITE/WHITE
	7	FOUR-POSITION SELECTOR SWITCH WITH LEGEND COVER	ON-OFF-AUTO-REMOTE	NOT APPLICABLE	RED/GREEN/ WHITE/WHITE
	8	INDICATING LIGHT AND PUSHBUTTON WITH LEGEND COVER.	SWING CHECK VALVE OPEN / RESET	NOT APPLICABLE	YELLOW/ BLACK PB
1	9	STAINLESS STEEL PLATE TO MATCH EXISTING CONTROL PANEL, SIZED TO COVER ENTIRE FRONT PANEL AREA OF EXISTING CONTROL PANEL, AND WITH NECESSARY HARDWARE TO ATTACH TO FACE OF EXISTING CONTROL PANEL.	NOT APPLICABLE	NOT APPLICABLE	NOT APPLICABLE

SLUDGE THICKENER BUILDING
CONTROL CABINET "PB01-CCP-03"
EXTERIOR FRONT ELEVATION NAMEPLATE SCHEDULE

IDENTIF-ICATION MARK	LINE NO.	LEGEND PLATE INSCRIPTION	LETTER SIZE (MIN)
A	FIRST	SLUDGE TRANSFER	N/A
	SECOND	BUILDING CONTROL	N/A
	THIRD	CABINET	N/A
	FOURTH	PB01-CCP-01	N/A
B	FIRST	SLUDGE PUMP NO. 1	3/8"
	SECOND	"STPB-TSLP-1"	3/8"

KEY NOTES:

1. AFTER ALL CONTROL DEVICES HAVE BEEN REMOVED FROM FACE OF THE EXISTING CONTROL PANEL, "PB01-CCP-03", THE CONTRACTOR SHALL FURNISH AND INSTALL A STAINLESS STEEL PLATE TO MATCH THE EXISTING CONTROL PANEL AND SECURE TO FRONT OF EXISTING CONTROL PANEL. CONTRACTOR SHALL PROVIDE ALL LABOR AND HARDWARE NECESSARY TO SECURE THE PROPOSED STEEL PLATE TO THE FRONT OF THE EXISTING CONTROL PANEL TO THE SATISFACTION OF THE OWNER AND ENGINEER WITH NO ADDITIONAL COSTS TO THE OWNER. CONTRACTOR SHALL USE EXTREME CARE WHEN SECURING STAINLESS STEEL PLATE DUE TO EXISTING/REMAINING TERMINAL BLOCKS, WIRING, CONTROL DEVICES, ETC. LOCATED INSIDE THE EXISTING CONTROL PANEL.
2. FURNISH AND INSTALL A LEGEND COVER PLATE PER SPECIFICATIONS TO THE EXISTING INDICATING LIGHT WITH INSCRIPTION AS INDICATED IN EQUIPMENT SCHEDULE ON THIS DRAWING.
3. FURNISH AND INSTALL A PROPOSED NAMEPLATE PER SPECIFICATIONS IN THE LOCATION AS INDICATED ON THIS CONTROL PANEL ELEVATION DRAWINGS AS INDICATED ON THE NAMEPLATE SCHEDULE ON THIS DRAWING.

GENERAL NOTES:

1. AN ATTEMPT IS MADE TO SHOW ALL EXISTING EQUIPMENT ON THIS CONTROL PANEL FRONT ELEVATION. HOWEVER THE CONTRACTOR MUST EXERCISE EXTREME CARE AS THERE ARE NO AVAILABLE AS BUILT RECORDS IDENTIFYING THE ROUTING OF ALL CONDUIT/WIRING BETWEEN THE VARIOUS MOTOR CONTROL CENTERS, CONTROL PANELS, PLC CABINET, LOADS, ETC., NO RECORDS IDENTIFYING THE COMPONENTS OF THE EXISTING CONTROL PANEL, AND THE INTERNAL WIRING OF THE CONTROL PANEL. THEREFORE, THE CONTRACTOR IS TO EXERCISE EXTREME CARE, VERIFY THE ROUTING OF EXISTING CONDUIT/WIRING AND VERIFYING THE COMPONENTS AND INTERNAL WIRING OF THE CONTROL PANEL, IF NECESSARY, PRIOR TO COMMENCING FULL SCALE DEMOLITION OR RENOVATION ACTIVITIES. FOLLOWING THE DISCOVERY VERIFICATION OF THE EXISTING FIELD CONDITIONS, SHOULD ADJUSTMENTS BECOME A NECESSITY TO THE EXISTING OR PROPOSED SYSTEM (AS APPLICABLE), THE EXISTING DISCOVERED FIELD CONDITIONS MUST BE BROUGHT TO THE ENGINEER'S ATTENTION FOR EXECUTION OF THE NECESSARY ADJUSTMENTS/MODIFICATIONS.
2. THE EXISTING INFORMATION SHOWN ON THIS DRAWING WAS OBTAINED FROM THE PROJECT ENTITLED "ONION CREEK WASTEWATER TREATMENT FACILITIES – CONTRACT NO. 2" DATED APRIL 1984 AND FROM A PROJECT ENTITLED "SOUTH AUSTIN REGIONAL WASTEWATER TREATMENT PLANT CONTROL AND INSTRUMENTATION IMPROVEMENTS" DATED JULY 1994. THIS DRAWING MAY NOT EXACTLY REFLECT THE EXISTING CONDITIONS. THEREFORE, THE CONTRACTOR IS TO FIELD VERIFY THE EXISTING CONDITIONS PRIOR TO COMMENCING FULL SCALE DEMOLITION OR RENOVATION ACTIVITIES. FOLLOWING THE DISCOVERY VERIFICATION OF THE EXISTING FIELD CONDITIONS, SHOULD ADJUSTMENTS BECOME A NECESSITY TO THE EXISTING OR PROPOSED SYSTEM (AS APPLICABLE), THE EXISTING DISCOVERED FIELD CONDITIONS MUST BE BROUGHT TO THE OWNER'S ATTENTION FOR EXECUTION OF THE NECESSARY ADJUSTMENTS/MODIFICATIONS.
3. REFER TO EXISTING CONTROL PANEL REFERENCE DRAWINGS FOR ADDITIONAL INFORMATION PRIOR TO COMMENCING MODIFICATION, DEMOLITION, OR RENOVATION ACTIVITIES.

Plotted: 4/22/2016 8:56:00 AM

STATE OF TEXAS
K. A. HARUTUNIAN
59181
REGISTERED PROFESSIONAL ENGINEER
4/22/2016

REUSE OF DOCUMENTS
This document, and the designs incorporated herein, is an instrument of professional service that has been developed, designed and prepared by Harutunian Engineering, Inc., and is not to be used, in whole or part, for any other project without giving written notice to Harutunian Engineering, Inc.

REV No	DATE	DRWN	CHKD	REMARKS
△	–	–	–	–

DESIGNED BY: HEI
DRAWN BY: HEI
SHEET CHK'D BY: HEI
CROSS CHK'D BY: HEI
APPROVED BY: HEI
DATE: APRIL 2016

CDM Smith
Riata Corporate Park, 12357-A Riata Trace Parkway, Suite 210
Austin, TX 78727
Tel: (512) 346-1100
Texas Registration Number F-3043

HEI
HARUTUNIAN ENGINEERING, INC.
305 E Huntland Dr, Ste 500; Austin, TX 78752
TBPE Firm Registration No. F-2408

CITY OF AUSTIN, TEXAS - AUSTIN WATER UTILITY
CIP 3333.016

SOUTH AUSTIN REGIONAL WWTP
THICKENER IMPROVEMENTS PROJECT

CONTROL CABINET "PB01-CCP-03"
FRONT ELEVATION AND SCHEDULES
- RENOVATION

PROJECT No 590-104217
FILE NAME: I-25

SHEET No
I-25

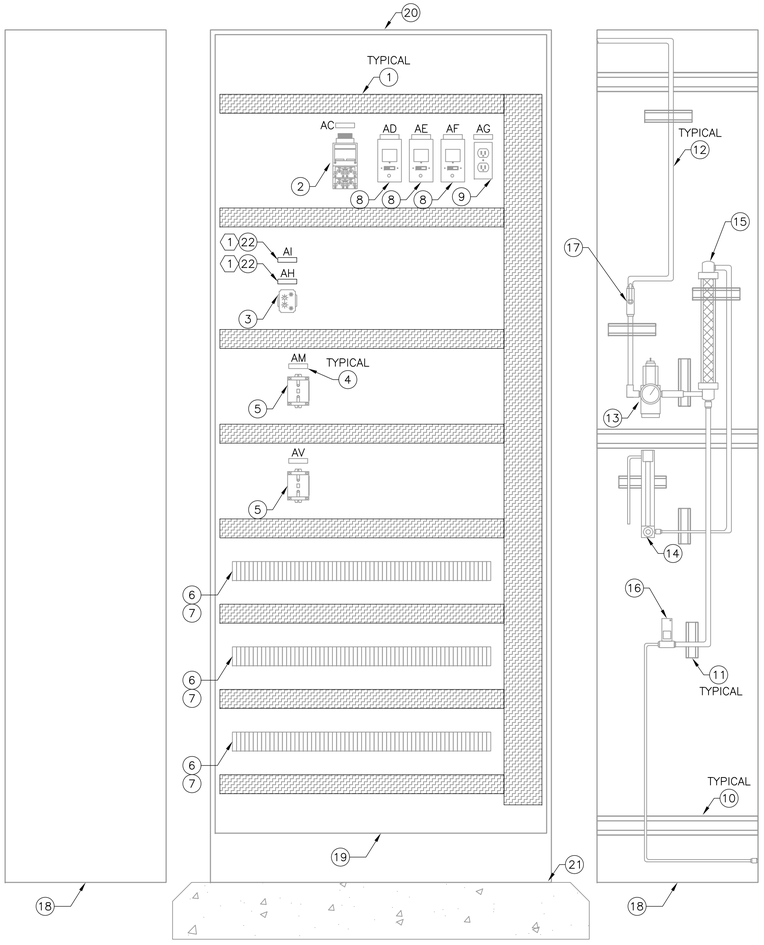

EXISTING CONTROL CABINET "PB01-CCP-03"
INTERIOR FRONT ELEVATION – RENOVATION

SCALE: NTS

SLUDGE THICKENER BUILDING
(3) CONTROL CABINET "PB01-CCP-03"
INTERIOR BACKPLANE ELEVATION
NAMEPLATE SCHEDULE – RENOVATION

ID MARK	NAMEPLATE INSCRIPTION	LETTER SIZE (MINIMUM)
AA	(2) TYPICAL	
AB		
AC	VLS1-TDR	N/A
AD	CABINET LIGHT/DUPLEX RECEPTACLE	N/A
AE	PSL17 CONTROL	N/A
AF	LPC POWER SUPPLY	N/A
AG	RECP	N/A
AH	CT1	3/8"
AI	TSLP-1 TIMER	3/8"
AJ		
AK		
AL		
AM	CRM-6	N/A
AN		
AO		
AP		
AQ		
AR		
AS		
AT		
AU		
AV	VLS1-CR	N/A
AW		
AX		

(3) SLUDGE THICKENER BUILDING
CONTROL CABINET "PB01-CCP-03"
INTERIOR BACKPLANE EQUIPMENT SCHEDULE – RENOVATION

MARK	DESCRIPTION
(1)	WIREWAY
(2)	TIME DELAY RELAY (MFG: AGASTAT)
(3)	CYCLE TIMER – TIME DELAY RELAY (MFG: MACROMATIC)
(4)	EQUIPMENT NAMEPLATE IDENTIFIER
(5)	120VAC INDUSTRIAL CONTROL RELAY (MFG: CUTLER-HAMMER)
(6)	TERMINAL BLOCKS
(7)	DIN RAIL
(8)	ENCLOSED SWITCH
(9)	ENCLOSED DUPLEX RECEPTACLE
(10)	STABILIZING CHANNEL/HARDWARE FOR ENCLOSURE
(11)	SINGLE SUPPORT CHANNEL WITH MOUNTING HARDWARE (I.E. CLAMPS, BOLTS, ETC.)
(12)	STAINLESS STEEL TUBING WITH ACCESSORIES
(13)	FILTER REGULATOR 1/4" (MFG: MADONEILAN)
(14)	GLASS TUBE VARIABLE AREA FLOW METER (MFG: BROOKS)
(15)	FILTER (MFG: DELTECH)
(16)	PLUG IN SOLENOID/SKINNER VALVE W/ ELECTRONIC TIMER (MFG: HONEYWELL)
(17)	MECHANICAL VALVE (MFG: MILWAUKEE VALVE CO.)
(18)	ENCLOSURE SIDE PANEL
(19)	BACK PANEL
(20)	SINGLE DOOR ENCLOSURE 7'-6" HIGH X 36" WIDE X 20" DEEP
(21)	HOUSEKEEPING CONCRETE PAD
(22)	3-PLY PHENOLIC NAMEPLATE PER NAMEPLATE SCHEDULE AND PER SPECIFICATIONS.

KEY NOTES:

(1) FURNISH AND INSTALL PROPOSED NAMEPLATE FOR CONTROL DEVICE AS INDICATED ON NAMEPLATE SCHEDULE.

(2) PLEASE NOTE THAT THERE IS NO NAMEPLATE INSCRIPTION FOR SOME OF THE PROVIDED ID MARKS SINCE THESE WERE PREVIOUSLY DESIGNATED FOR EXISTING EQUIPMENT THAT WAS DISCONNECTED AND REMOVED. THESE ID MARK DESIGNATORS ARE SPARE FOR FUTURE USE.

(3) REFER TO SPECIFICATIONS FOR ADDITIONAL INFORMATION AND REQUIREMENTS.

GENERAL NOTES:

1. AN ATTEMPT IS MADE TO SHOW ALL EXISTING EQUIPMENT ON THIS CONTROL PANEL INTERIOR ELEVATION. HOWEVER THE CONTRACTOR MUST EXERCISE EXTREME CARE AS THERE ARE NO AVAILABLE AS BUILT RECORDS IDENTIFYING THE ROUTING OF ALL CONDUIT/WIRING BETWEEN THE VARIOUS MOTOR CONTROL CENTERS, CONTROL PANELS, PLC CABINET, LOADS, ETC., NO RECORDS IDENTIFYING THE COMPONENTS OF THE EXISTING CONTROL PANEL, AND NO RECORDS IDENTIFYING THE INTERNAL WIRING OF THE EXISTING CONTROL PANEL. THEREFORE, THE CONTRACTOR IS TO EXERCISE EXTREME CARE, VERIFY THE ROUTING OF EXISTING CONDUIT/WIRING AND VERIFYING THE COMPONENTS AND INTERNAL WIRING OF THE CONTROL PANEL, IF NECESSARY, PRIOR TO COMMENCING FULL SCALE DEMOLITION OR RENOVATION ACTIVITIES. FOLLOWING THE DISCOVERY VERIFICATION OF THE EXISTING FIELD CONDITIONS, SHOULD ADJUSTMENTS BECOME A NECESSITY TO THE EXISTING OR PROPOSED SYSTEM (AS APPLICABLE), THE EXISTING DISCOVERED FIELD CONDITIONS MUST BE BROUGHT TO THE ENGINEER'S ATTENTION FOR EXECUTION OF THE NECESSARY ADJUSTMENTS/MODIFICATIONS.

2. THE EXISTING INFORMATION SHOWN ON THIS DRAWING WAS OBTAINED FROM THE PROJECT ENTITLED "ONION CREEK WASTEWATER TREATMENT FACILITIES – CONTRACT NO. 2" DATED APRIL 1984 AND FROM THE PROJECT ENTITLED "SOUTH AUSTIN REGIONAL WASTEWATER TREATMENT PLANT CONTROL AND INSTRUMENTATION IMPROVEMENTS" DATED JULY 1994. THIS DRAWING MAY NOT EXACTLY REFLECT THE EXISTING CONDITIONS. THEREFORE, THE CONTRACTOR IS TO FIELD VERIFY THE EXISTING CONDITIONS PRIOR TO COMMENCING FULL SCALE DEMOLITION OR RENOVATION ACTIVITIES. FOLLOWING THE DISCOVERY VERIFICATION OF THE EXISTING FIELD CONDITIONS, SHOULD ADJUSTMENTS BECOME A NECESSITY TO THE EXISTING OR PROPOSED SYSTEM (AS APPLICABLE), THE EXISTING DISCOVERED FIELD CONDITIONS MUST BE BROUGHT TO THE OWNER'S ATTENTION FOR EXECUTION OF THE NECESSARY ADJUSTMENTS/MODIFICATIONS.

3. REFER TO EXISTING CONTROL PANEL REFERENCE DRAWINGS FOR ADDITIONAL INFORMATION PRIOR TO COMMENCING MODIFICATION, DEMOLITION, OR RENOVATION ACTIVITIES.

REUSE OF DOCUMENTS
This document, and the designs incorporated herein, is an instrument of professional service that has been developed, designed and prepared by Harutunian Engineering, Inc., and is not to be used, in whole or part, for any other project without giving written notice to Harutunian Engineering, Inc.

REV No	DATE	DRWN	CHKD	REMARKS
1	–	–	–	–

DESIGNED BY: HEI
DRAWN BY: HEI
SHEET CHK'D BY: HEI
CROSS CHK'D BY: HEI
APPROVED BY: HEI
DATE: APRIL 2016

CDM Smith
Riata Corporate Park, 12357-A Riata Trace Parkway, Suite 210
Austin, TX 78727
Tel: (512) 346-1100
Texas Registration Number F-3043

HEI
HARUTUNIAN ENGINEERING, INC.
305 E Huntland Dr, Ste 500; Austin, TX 78752
TBPE Firm Registration No. F-2408

CITY OF AUSTIN, TEXAS - AUSTIN WATER UTILITY
CIP 3333.016
SOUTH AUSTIN REGIONAL WWTP
THICKENER IMPROVEMENTS PROJECT

CONTROL CABINET "PB01-CCP-03"
INTERIOR BACKPLANE ELEVATION
- RENOVATION

STATE OF TEXAS
K. A. HARUTUNIAN
59181
REGISTERED PROFESSIONAL ENGINEER
4/22/2016

PROJECT No 590-104217
FILE NAME: I-26

SHEET No
I-26

Plotted: 4/22/2016 8:56:05 AM

KEY NOTES:

1. LETTER IN CIRCLE CORRESPONDS TO IDENTIFICATION MARK IN FIELD CONTROL STATION NAMEPLATE SCHEDULE.
2. NUMBER IN CIRCLE CORRESPONDS TO IDENTIFICATION MARK IN FIELD CONTROL STATION EQUIPMENT SCHEDULE.
3. ALSO REFER TO ELECTRICAL SPECIFICATIONS FOR ADDITIONAL REQUIREMENTS.

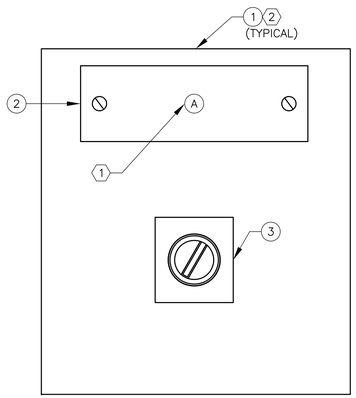

TYPICAL SLUDGE PUMP FIELD CONTROL STATION ELEVATION
SCALE: NTS

3 NAMEPLATE SCHEDULE FIELD CONTROL STATION

IDENTIFICATION MARK	LINE NO.	LEGEND PLATE INSCRIPTION	LETTER SIZE (MINIMUM)
A	FIRST	"STPB–FCS–TSLPX" WHERE TSLPX =TSLP1 FOR "STPB–TSLP–4" =TSLP2 FOR "STPB–TSLP–5" =TSLP3 FOR "STPB–TSLP–6"	3/8"
	SECOND	CONTROL STATION	1/4"

3 EQUIPMENT SCHEDULE FIELD CONTROL STATION

MARK	DESCRIPTION	LEGEND PLATE INSCRIPTION	LETTER SIZE (MINIMUM)	OPERATOR OR LENS COLOR
1	FIELD CONTROL STATION ENCLOSURE	N/A	N/A	N/A
2	3–PLY, BLACK–WHITE–BLACK PHENOLIC NAMEPLATE LETTER(S) CORRESPOND TO IDENTIFICATION MARK IN NAMEPLATE SCHEDULE ON THIS DRAWING.	SEE NAMEPLATE SCHEDULE	SEE NAMEPLATE SCHEDULE	N/A
3	3–POSITION SELECTOR SWITCH WITH LEGEND PLATE.	OFF–ON–TEST	3/16"	BLACK

REUSE OF DOCUMENTS
This document, and the designs incorporated herein, is an instrument of professional service that has been developed, designed and prepared by Harutunian Engineering, Inc., and is not to be used, in whole or part, for any other project without giving written notice to Harutunian Engineering, Inc.

REV No	DATE	DRWN	CHKD	REMARKS
1	–	–	–	–

DESIGNED BY: HEI
DRAWN BY: HEI
SHEET CHK'D BY: HEI
CROSS CHK'D BY: HEI
APPROVED BY: HEI
DATE: APRIL 2016

CDM Smith
Riata Corporate Park, 12357-A Riata Trace Parkway, Suite 210
Austin, TX 78727
Tel: (512) 346-1100
Texas Registration Number F-3043

HARUTUNIAN ENGINEERING, INC.
305 E Huntland Dr, Ste 500; Austin, TX 78752
TBPE Firm Registration No. F-2408

CITY OF AUSTIN, TEXAS - AUSTIN WATER UTILITY
CIP 3333.016

SOUTH AUSTIN REGIONAL WWTP
THICKENER IMPROVEMENTS PROJECT

SLUDGE PUMP
FIELD CONTROL STATION ELEVATION
- RENOVATION

K. A. Harutunian
STATE OF TEXAS
K. A. HARUTUNIAN
59181
REGISTERED
PROFESSIONAL ENGINEER
4/22/2016

PROJECT No 590–104217
FILE NAME: I–27

SHEET No
I-27

Plotted: 4/22/2016 8:56:09 AM

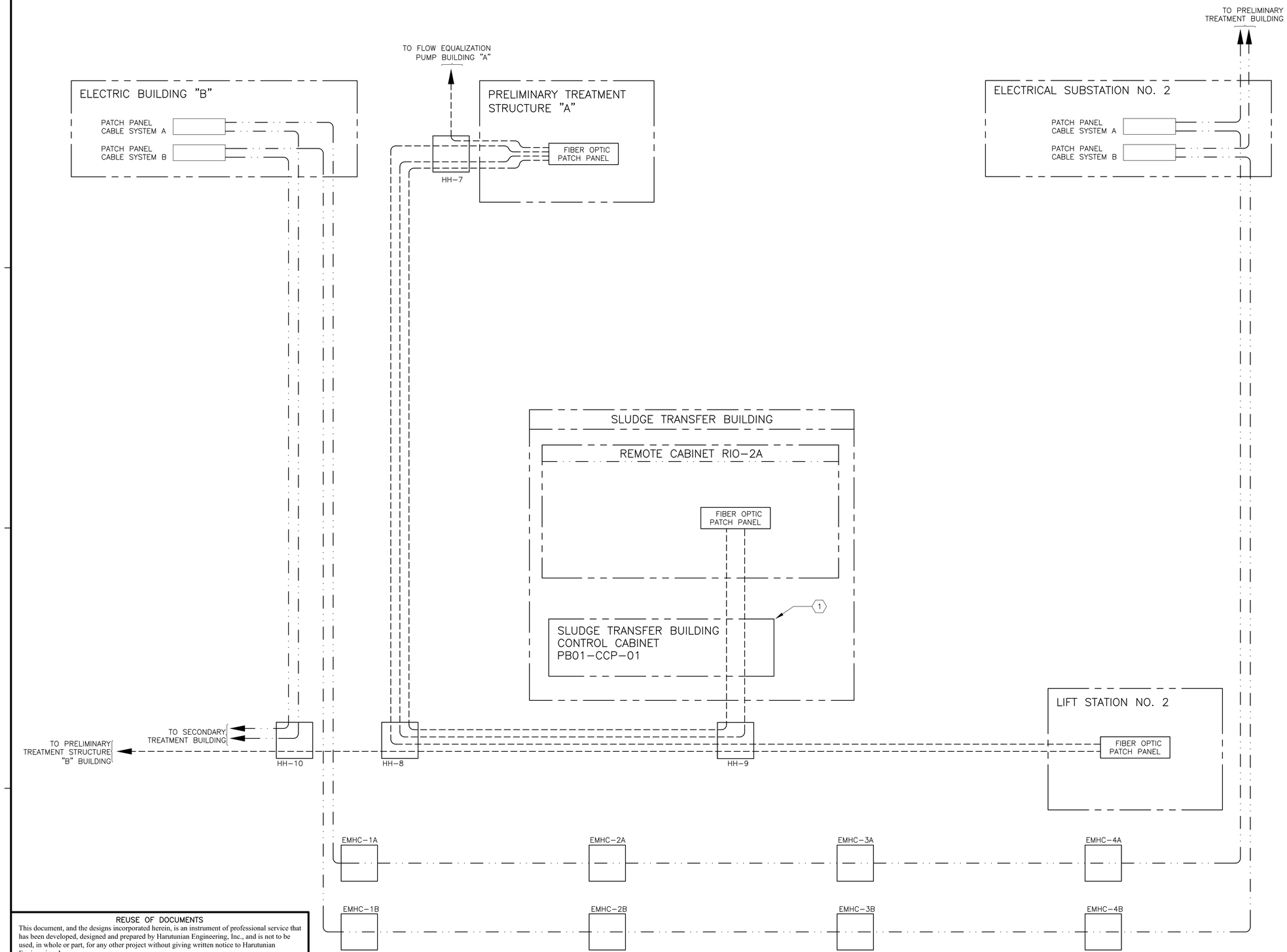

KEY NOTES:

1. FIBER OPTICS CABLES EXIT REMOTE CABINET RIO-2A IN A COMMON CONDUIT AND ENTERS TOP OF SLUDGE TRANSFER BUILDING CONTROL CABINET. FIBER OPTICS CABLES EXIT OUT THE BOTTOM OF SLUDGE TRANSFER BUILDING CONTROL CABINET AND ENTERS HH-9.

GENERAL NOTES:

1. ALL EQUIPMENT SHOWN ON THIS DRAWING IS EXISTING.
2. THE CONTRACTOR SHALL BE AWARE THAT WHEN ANY EXISTING EQUIPMENT IS DISCONNECTED, REMOVED, RELOCATED OR OTHERWISE MODIFIED, THE POSSIBILITY MAY EXIST FOR SUCH ACTION TO LEAD TO INTERRUPTION OF OPERATION OF THE PLANT IF EXTREME CARE, VERIFICATION, AND VALIDATION IS NOT CAREFULLY EXERCISED PRIOR TO COMMENCEMENT OF SUCH DEMOLITION ACTIVITY. THE CONTRACTOR SHALL KNOW THAT ANY INTERRUPTION TO THE CONTINUITY OF PLANT OPERATION AT ITS FULLY RATED TREATMENT CAPACITY IS UNACCEPTABLE DURING THE CONSTRUCTION COURSE OF THIS PROJECT. HOWEVER, SHOULD ANY INTERRUPTION TO PLANT OPERATION OCCUR FOR ANY UNFORESEEN REASON, WHETHER TOTALLY ACCIDENTAL OR DUE TO IMPROPER FIELD INVESTIGATION AND IMPROPER PLANNING PRIOR TO COMMENCEMENT OF THE ELECTRICAL/INSTRUMENTATION DEMOLITION EFFORT, THE RESPONSIBLE CONTRACTOR SHALL DETERMINE THE PROBLEM, CORRECT IT, AND START UP THE INTERRUPTED EQUIPMENT WITHIN A CERTAIN TIME PERIOD AS DETERMINED BY THE OWNER AT NO ADDITIONAL COST TO THE OWNER. THE CONTRACTOR SHALL PROVIDE CONTINUOUS, 24-HOUR, LABOR, EQUIPMENT, MATERIAL, AND ACCESSORIES UNTIL SUCH TIME THAT ANY EFFECTED EQUIPMENT OPERATES AS PREVIOUSLY OPERATED, AT NO ADDITIONAL COST TO THE OWNER AND TO THE OWNER'S SATISFACTION.
3. CAREFULLY COORDINATE/VERIFY ALL POINTS OF CONNECTION PRIOR TO COMMENCING DEMOLITION/RENOVATION ACTIVITIES.
4. THE INTENT IS TO KEEP THE EXISTING FACILITY OPERATIONAL AT ALL TIMES. CAREFULLY COORDINATE ALL DEMOLITION AND RENOVATION WORK WITH SEQUENCE OF WORK PLANS/SPECIFICATIONS FOR THIS FACILITY.
5. THIS DRAWING IS INTENDED TO REPRESENT CONTROL SYSTEM ARCHITECTURE DRAWINGS IN EACH PROCESS AREA. ONLY MAJOR CONTROL SYSTEM EQUIPMENT HAVE BEEN SHOWN FOR CLARITY.

REUSE OF DOCUMENTS
This document, and the designs incorporated herein, is an instrument of professional service that has been developed, designed and prepared by Harutunian Engineering, Inc., and is not to be used, in whole or part, for any other project without giving written notice to Harutunian Engineering, Inc.

STATE OF TEXAS
K. A. HARUTUNIAN
59181
REGISTERED PROFESSIONAL ENGINEER
4/22/2016

REV No	DATE	DRWN	CHKD	REMARKS
1	–	–	–	–

DESIGNED BY: HEI
DRAWN BY: HEI
SHEET CHK'D BY: HEI
CROSS CHK'D BY: HEI
APPROVED BY: HEI
DATE: APRIL 2016

CDM Smith
Riata Corporate Park, 12357-A Riata Trace Parkway, Suite 210
Austin, TX 78727
Tel: (512) 346-1100
Texas Registration Number F-3043

HEI
HARUTUNIAN ENGINEERING, INC.
305 E Huntland Dr, Ste 500; Austin, TX 78752
TBPE Firm Registration No. F-2408

CITY OF AUSTIN, TEXAS - AUSTIN WATER UTILITY
CIP 3333.016

SOUTH AUSTIN REGIONAL WWTP
THICKENER IMPROVEMENTS PROJECT

SLUDGE TRANSFER BUILDING
OVERALL PLC SYSTEM ARCHITECTURE
EXISTING

PROJECT No 590-104217
FILE NAME: I-28

SHEET No
I-28

Plotted: 4/22/2016 8:56:13 AM

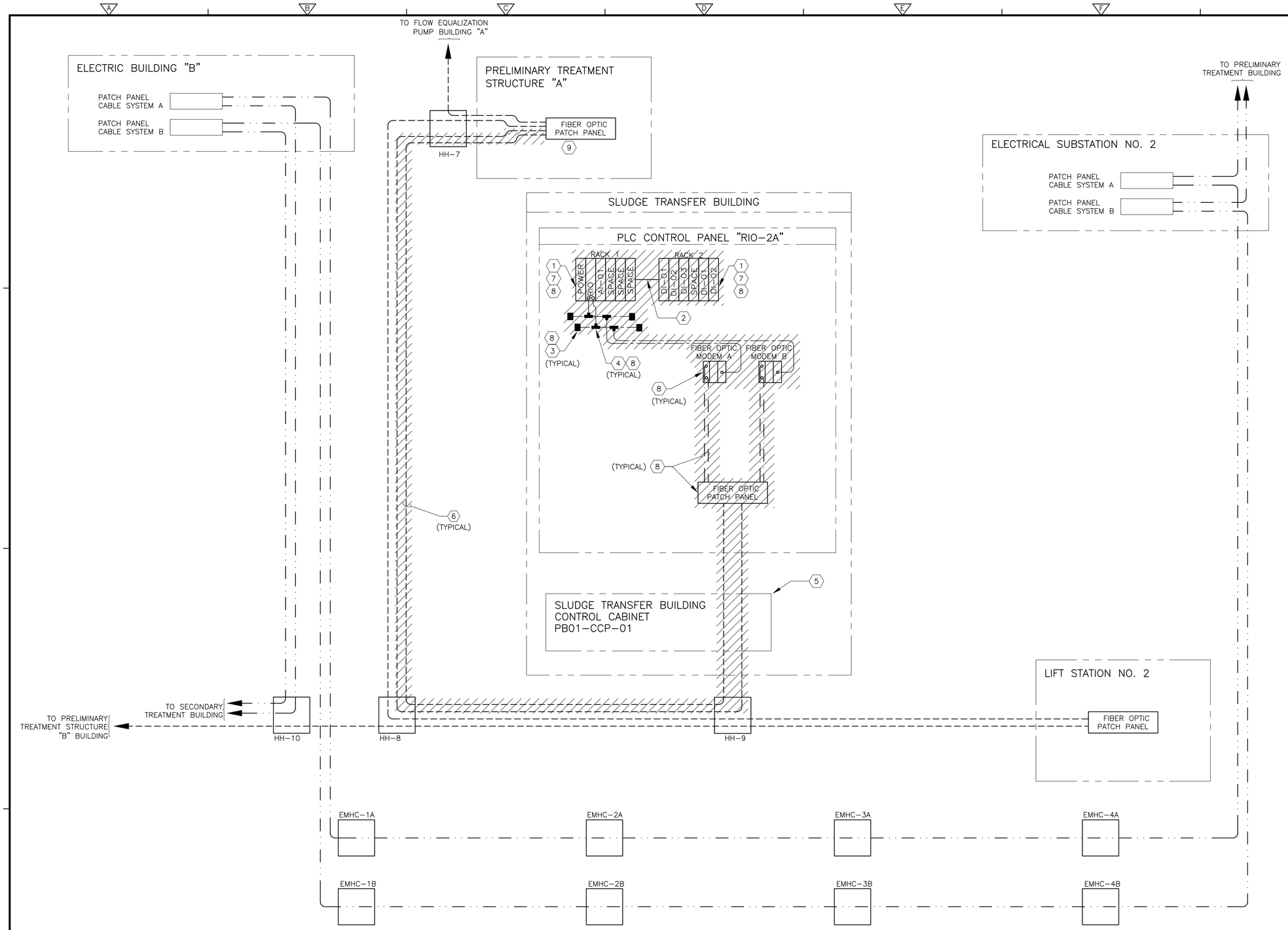

KEY NOTES:

1. MODICON COMPACT 984 SERIES RACK DOES NOT CONTAIN A CENTRAL PROCESSING UNIT.
2. RACK SIGNAL CABLE CONNECTION (W801) IS USED TO CONNECT PRIMARY RACK TO SECONDARY RACK. THE INCOMING RACK SIGNAL CONNECTION IS LOCATED ON TOP OF RACK AND OUTGOING RACK SIGNAL CONNECTION IS LOCATED AT THE BOTTOM OF THE RACK.
3. REMOTE I/O TRUNK LINE TERMINATOR.
4. REMOTE I/O TAP. MODBUS PLUS RUGGEDIZED TAP WITH TERMINATORS.
5. FIBER OPTICS CABLES ENTER/EXIT REMOTE CABINET RIO-2A IN A COMMON CONDUIT AND EXITS/ENTERS TOP OF SLUDGE TRANSFER BUILDING CONTROL CABINET. FIBER OPTICS CABLES EXIT/ENTER OUT THE BOTTOM OF SLUDGE TRANSFER BUILDING CONTROL CABINET AND ENTERS/EXITS HH-9.
6. DISCONNECT AND REMOVE EXISTING MULTI-MODE FIBER OPTIC CABLE BETWEEN THE PRELIMINARY TREATMENT BUILDING AND THE SLUDGE TRANSFER BUILDING.
7. EXISTING PLC I/O SIGNAL WIRING WILL BE RE-TERMINATED TO PROPOSED PLC DURING RENOVATION ACTIVITIES. FIELD VERIFY EXISTING WIRING TERMINATIONS AND MAKE RECORDS OF EXISTING WIRING TERMINATIONS. THESE RECORDS WILL BE USED TO FACILITATE THE RE-TERMINATION OF THE SIGNAL WIRING DURING RENOVATION ACTIVITIES.
8. DISCONNECT AND REMOVE EXISTING PLC AND DATA COMMUNICATION EQUIPMENT INSIDE OF CONTROL PANEL "RIO-2A".
9. EXISTING PATCH PANEL TO REMAIN.

GENERAL NOTES:

1. ALL EXISTING EQUIPMENT IS NOT SHOWN ON THIS DRAWING.
2. FURNISH AND INSTALL ALL NECESSARY TEMPORARY MEANS TO FACILITATE CONTINUOUS OPERATION OF THE EXISTING DATA COMMUNICATION NETWORKS DURING ALL PHASES OF CONSTRUCTION.

OVERALL PLANT PARTIAL CONTROL SYSTEM ARCHITECTURE - DEMOLITION (1 / -)

SCALE: NONE

REUSE OF DOCUMENTS
This document, and the designs incorporated herein, is an instrument of professional service that has been developed, designed and prepared by Harutunian Engineering, Inc., and is not to be used, in whole or part, for any other project without giving written notice to Harutunian Engineering, Inc.

REV No	DATE	DRWN	CHKD	REMARKS
1	–	–	–	–

DESIGNED BY: HEI
DRAWN BY: HEI
SHEET CHK'D BY: HEI
CROSS CHK'D BY: HEI
APPROVED BY: HEI
DATE: APRIL 2016

CDM Smith
Riata Corporate Park, 12357-A Riata Trace Parkway, Suite 210
Austin, TX 78727
Tel: (512) 346-1100
Texas Registration Number F-3043

HARUTUNIAN ENGINEERING, INC.
305 E Huntland Dr, Ste 500; Austin, TX 78752
TBPE Firm Registration No. F-2408

CITY OF AUSTIN, TEXAS - AUSTIN WATER UTILITY
CIP 3333.016

SOUTH AUSTIN REGIONAL WWTP
THICKENER IMPROVEMENTS PROJECT

OVERALL PLANT PARTIAL CONTROL SYSTEM ARCHITECTURE DEMOLITION

STATE OF TEXAS
K. A. HARUTUNIAN
59181
REGISTERED PROFESSIONAL ENGINEER
4/22/2016

PROJECT No 590-104217
FILE NAME: I-29

SHEET No
I-29

Plotted: 4/22/2016 8:56:16 AM

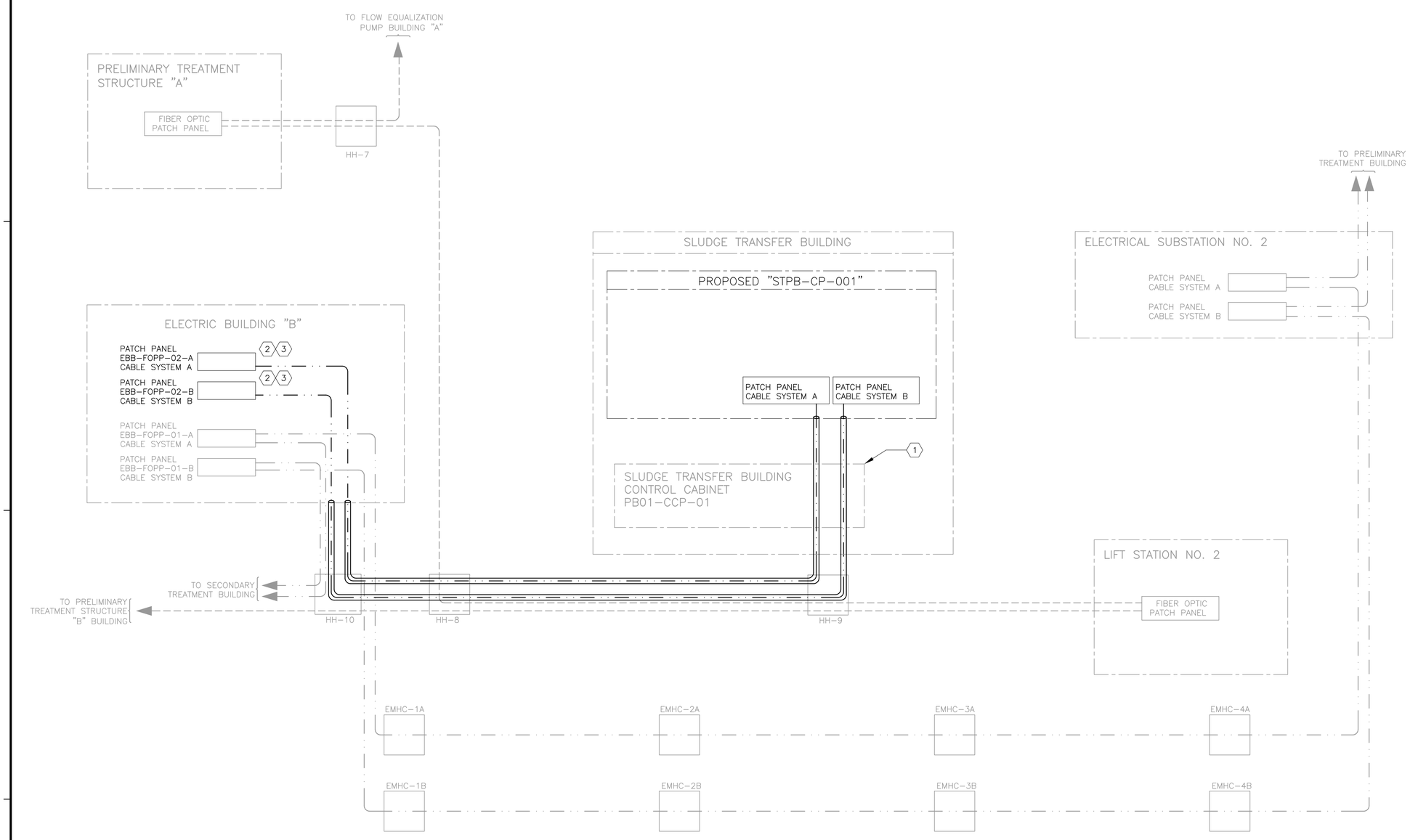

KEY NOTES:

1. PROPOSED LOOSE TUBE SINGLE MODE FIBER OPTICS CABLES ROUTE THROUGH EXISTING SLUDGE TRANSFER BUILDING CONTROL CABINET. FIBER OPTICS CABLES EXIT/ENTER OUT THE BOTTOM OF SLUDGE TRANSFER BUILDING CONTROL CABINET AND ENTERS/EXITS HH-9.
2. FURNISH AND INSTALL SINGLE MODE FIBER OPTIC PATCH CORDS BETWEEN EBB-FOPP-01-A AND EBB-FOPP-02-A AS WELL AS BETWEEN EBB-FOPP-01-B AND EBB-FOPP-02-B INSIDE THIS CONTROL PANEL FOR COMMUNICATION NETWORK CONNECTIVITY.
3. FURNISH AND INSTALL PROPOSED PATCH PANELS INSIDE OF THE EXISTING CONTROL PANEL AND MAKE ALL FINAL CONNECTIONS.

GENERAL NOTES:

1. DARK LINEWORK DENOTES PROPOSED EQUIPMENT. LIGHT LINEWORK DENOTES EXISTING EQUIPMENT.
2. THE CONTRACTOR SHALL BE AWARE THAT WHEN ANY EXISTING EQUIPMENT IS DISCONNECTED, REMOVED, RELOCATED OR OTHERWISE MODIFIED, THE POSSIBILITY MAY EXIST FOR SUCH ACTION TO LEAD TO INTERRUPTION OF OPERATION OF THE PLANT IF EXTREME CARE, VERIFICATION, AND VALIDATION IS NOT CAREFULLY EXERCISED PRIOR TO COMMENCEMENT OF SUCH DEMOLITION ACTIVITY. THE CONTRACTOR SHALL KNOW THAT ANY INTERRUPTION TO THE CONTINUITY OF PLANT OPERATION AT ITS FULLY RATED TREATMENT CAPACITY IS UNACCEPTABLE DURING THE CONSTRUCTION COURSE OF THIS PROJECT. HOWEVER, SHOULD ANY INTERRUPTION TO PLANT OPERATION OCCUR FOR ANY UNFORESEEN REASON, WHETHER TOTALLY ACCIDENTAL OR DUE TO IMPROPER FIELD INVESTIGATION AND IMPROPER PLANNING PRIOR TO COMMENCEMENT OF THE ELECTRICAL/INSTRUMENTATION DEMOLITION EFFORT, THE RESPONSIBLE CONTRACTOR SHALL DETERMINE THE PROBLEM, CORRECT IT, AND START UP THE INTERRUPTED EQUIPMENT WITHIN A CERTAIN TIME PERIOD AS DETERMINED BY THE OWNER AT NO ADDITIONAL COST TO THE OWNER. THE CONTRACTOR SHALL PROVIDE CONTINUOUS, 24-HOUR, LABOR, EQUIPMENT, MATERIAL, AND ACCESSORIES UNTIL SUCH TIME THAT ANY EFFECTED EQUIPMENT OPERATES AS PREVIOUSLY OPERATED, AT NO ADDITIONAL COST TO THE OWNER AND TO THE OWNER'S SATISFACTION.
3. CAREFULLY COORDINATE/VERIFY ALL POINTS OF CONNECTION PRIOR TO COMMENCING DEMOLITION/RENOVATION ACTIVITIES.
4. THE INTENT IS TO KEEP THE EXISTING FACILITY OPERATIONAL AT ALL TIMES. CAREFULLY COORDINATE ALL DEMOLITION AND RENOVATION WORK WITH SEQUENCE OF WORK PLANS/SPECIFICATIONS FOR THIS FACILITY.
5. THIS DRAWING IS INTENDED TO REPRESENT CONTROL SYSTEM ARCHITECTURE DRAWINGS IN EACH PROCESS AREA. ONLY MAJOR CONTROL SYSTEM EQUIPMENT HAVE BEEN SHOWN FOR CLARITY.

REUSE OF DOCUMENTS
This document, and the designs incorporated herein, is an instrument of professional service that has been developed, designed and prepared by Harutunian Engineering, Inc., and is not to be used, in whole or part, for any other project without giving written notice to Harutunian Engineering, Inc.

K. A. Harutunian
STATE OF TEXAS
K. A. HARUTUNIAN
59181
REGISTERED PROFESSIONAL ENGINEER
4/22/2016

REV No	DATE	DRWN	CHKD	REMARKS
△	–	–	–	–

DESIGNED BY: HEI
DRAWN BY: HEI
SHEET CHK'D BY: HEI
CROSS CHK'D BY: HEI
APPROVED BY: HEI
DATE: APRIL 2016

CDM Smith
Riata Corporate Park, 12357-A Riata Trace Parkway, Suite 210
Austin, TX 78727
Tel: (512) 346-1100
Texas Registration Number F-3043

HARUTUNIAN ENGINEERING, INC.
305 E Huntland Dr, Ste 500: Austin, TX 78752
TBPE Firm Registration No. F-2408

CITY OF AUSTIN, TEXAS - AUSTIN WATER UTILITY
CIP 3333.016

SOUTH AUSTIN REGIONAL WWTP
THICKENER IMPROVEMENTS PROJECT

OVERALL PLANT PARTIAL CONTROL SYSTEM ARCHITECTURE RENOVATIONS

PROJECT No 590-104217
FILE NAME: I-30

SHEET No
I-30

Plotted: 4/22/2016 8:56:19 AM

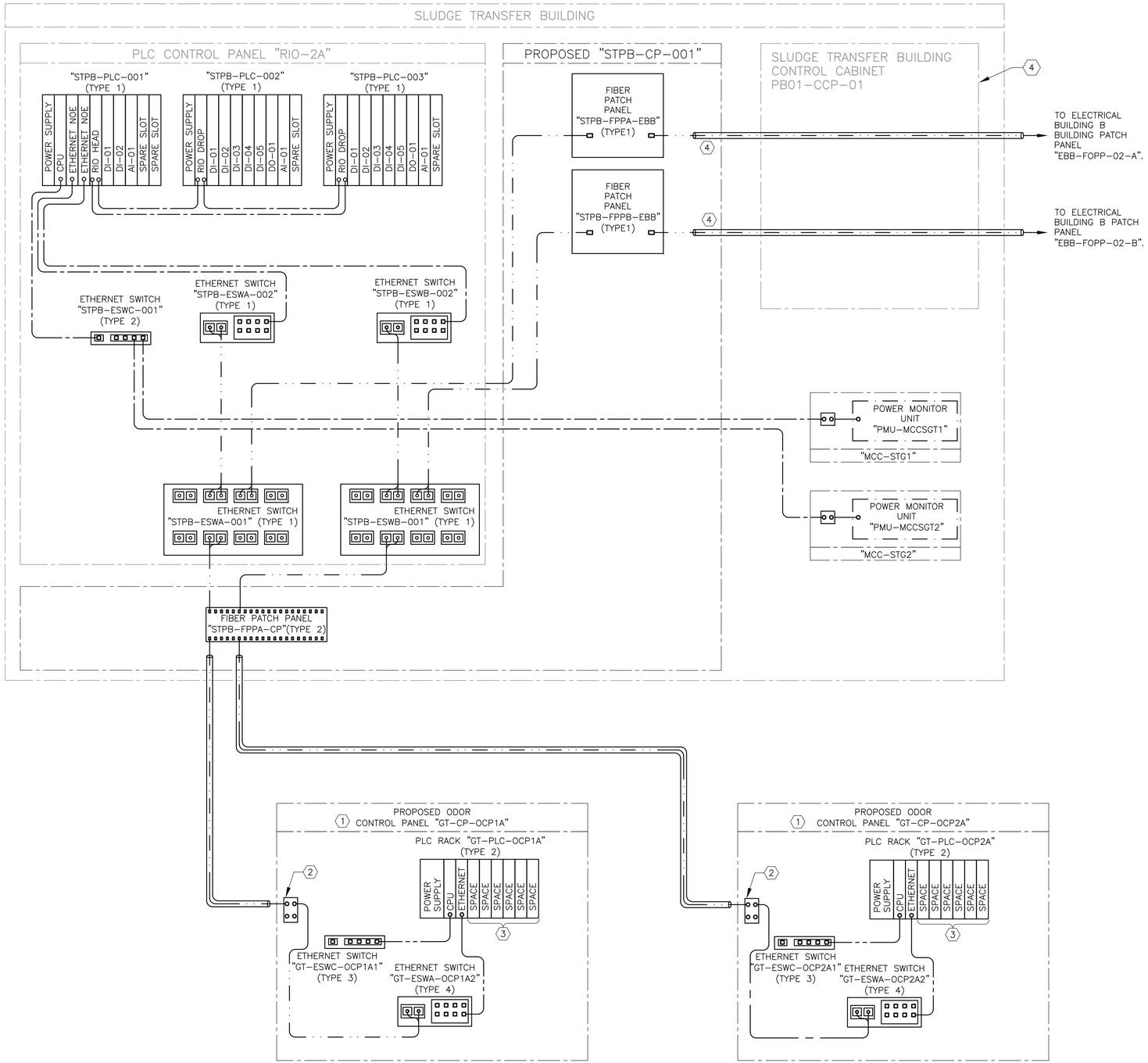

KEY NOTES:

1. THE PROPOSED CONTROL PANEL AND INTERNAL COMPONENTS ARE FURNISHED BY THE EQUIPMENT MANUFACTURER. CONTRACTOR SHALL INSTALL CONTROL PANEL AND MAKE ALL FINAL CONNECTIONS PER THE SPECIFICATIONS, THE MANUFACTURER'S RECOMMENDATIONS, AND THE MANUFACTURER'S WIRING DIAGRAMS. REFER TO FIELD INTERFACE WIRING SCHEMATICS FOR ADDITIONAL INFORMATION.

2. TYPE 2 FIBER PATCH PANEL, FIBER PATCH PANEL AND PATCH CORD FROM PATCH PANEL TO PACKAGED CONTROL PANEL MOUNTED DEVICE TO BE SUPPLIED BY PACKAGED SYSTEM MANUFACTURER.

3. PACKAGED SYSTEM EQUIPMENT MANUFACTURER SHALL PROVIDE THE NECESSARY PLC I/O MODULES (I.E. DISCRETE INPUT, OUTPUT, OR ANALOG INPUT/OUTPUT, ETC.) AS REQUIRED TO ENSURE A COMPLETE AND FUNCTIONAL SYSTEM. REFER TO SPECIFICATIONS FOR ADDITIONAL REQUIREMENTS.

4. FIBER OPTICS CABLES EXIT REMOTE CABINET RIO-2A IN A COMMON CONDUIT AND ENTERS TOP OF SLUDGE TRANSFER BUILDING CONTROL CABINET. FIBER OPTICS CABLES EXIT OUT THE BOTTOM OF SLUDGE TRANSFER BUILDING CONTROL CABINET AND ENTERS HH-9.

GENERAL NOTES:

1. DARK LINEWORK DENOTES PROPOSED EQUIPMENT. LIGHT LINEWORK DENOTES EXISTING EQUIPMENT.

2. THE CONTRACTOR SHALL BE AWARE THAT WHEN ANY EXISTING EQUIPMENT IS DISCONNECTED, REMOVED, RELOCATED OR OTHERWISE MODIFIED, THE POSSIBILITY MAY EXIST FOR SUCH ACTION TO LEAD TO INTERRUPTION OF OPERATION OF THE PLANT IF EXTREME CARE, VERIFICATION, AND VALIDATION IS NOT CAREFULLY EXERCISED PRIOR TO COMMENCEMENT OF SUCH DEMOLITION ACTIVITY. THE CONTRACTOR SHALL KNOW THAT ANY INTERRUPTION TO THE CONTINUITY OF PLANT OPERATION AT ITS FULLY RATED TREATMENT CAPACITY IS UNACCEPTABLE DURING THE CONSTRUCTION COURSE OF THIS PROJECT. HOWEVER, SHOULD ANY INTERRUPTION TO PLANT OPERATION OCCUR FOR ANY UNFORESEEN REASON, WHETHER TOTALLY ACCIDENTAL OR DUE TO IMPROPER FIELD INVESTIGATION AND IMPROPER PLANNING PRIOR TO COMMENCEMENT OF THE ELECTRICAL/INSTRUMENTATION DEMOLITION EFFORT, THE RESPONSIBLE CONTRACTOR SHALL DETERMINE THE PROBLEM, CORRECT IT, AND START UP THE INTERRUPTED EQUIPMENT WITHIN A CERTAIN TIME PERIOD AS DETERMINED BY THE OWNER AT NO ADDITIONAL COST TO THE OWNER. THE CONTRACTOR SHALL PROVIDE CONTINUOUS, 24-HOUR, LABOR, EQUIPMENT, MATERIAL, AND ACCESSORIES UNTIL SUCH TIME THAT ANY EFFECTED EQUIPMENT OPERATES AS PREVIOUSLY OPERATED, AT NO ADDITIONAL COST TO THE OWNER AND TO THE OWNER'S SATISFACTION.

3. CAREFULLY COORDINATE/VERIFY ALL POINTS OF CONNECTION PRIOR TO COMMENCING DEMOLITION/RENOVATION ACTIVITIES.

4. THE INTENT IS TO KEEP THE EXISTING FACILITY OPERATIONAL AT ALL TIMES. CAREFULLY COORDINATE ALL DEMOLITION AND RENOVATION WORK WITH SEQUENCE OF WORK PLANS/SPECIFICATIONS FOR THIS FACILITY.

5. THIS DRAWING IS INTENDED TO REPRESENT CONTROL SYSTEM ARCHITECTURE DRAWINGS IN EACH PROCESS AREA. ONLY MAJOR CONTROL SYSTEM EQUIPMENT HAVE BEEN SHOWN FOR CLARITY.

REUSE OF DOCUMENTS

This document, and the designs incorporated herein, is an instrument of professional service that has been developed, designed and prepared by Harutunian Engineering, Inc., and is not to be used, in whole or part, for any other project without giving written notice to Harutunian Engineering, Inc.

REV No	DATE	DRWN	CHKD	REMARKS
1	–	–	–	–

DESIGNED BY: HEI
DRAWN BY: HEI
SHEET CHK'D BY: HEI
CROSS CHK'D BY: HEI
APPROVED BY: HEI
DATE: APRIL 2016

CDM Smith
Riata Corporate Park, 12357-A Riata Trace Parkway, Suite 210
Austin, TX 78727
Tel: (512) 346-1100
Texas Registration Number F-3043

HARUTUNIAN ENGINEERING, INC.
305 E Huntland Dr, Ste 500; Austin, TX 78752
TBPE Firm Registration No. F-2408

CITY OF AUSTIN, TEXAS - AUSTIN WATER UTILITY
CIP 3333.016

SOUTH AUSTIN REGIONAL WWTP
THICKENER IMPROVEMENTS PROJECT

SLUDGE TRANSFER BUILDING
PLC SYSTEM ARCHITECTURE
RENOVATION

STATE OF TEXAS
K. A. HARUTUNIAN
59181
REGISTERED PROFESSIONAL ENGINEER
4/22/2016

PROJECT No 590-104217
FILE NAME: I-31

SHEET No
I-31

Plotted: 4/22/2016 8:56:24 AM

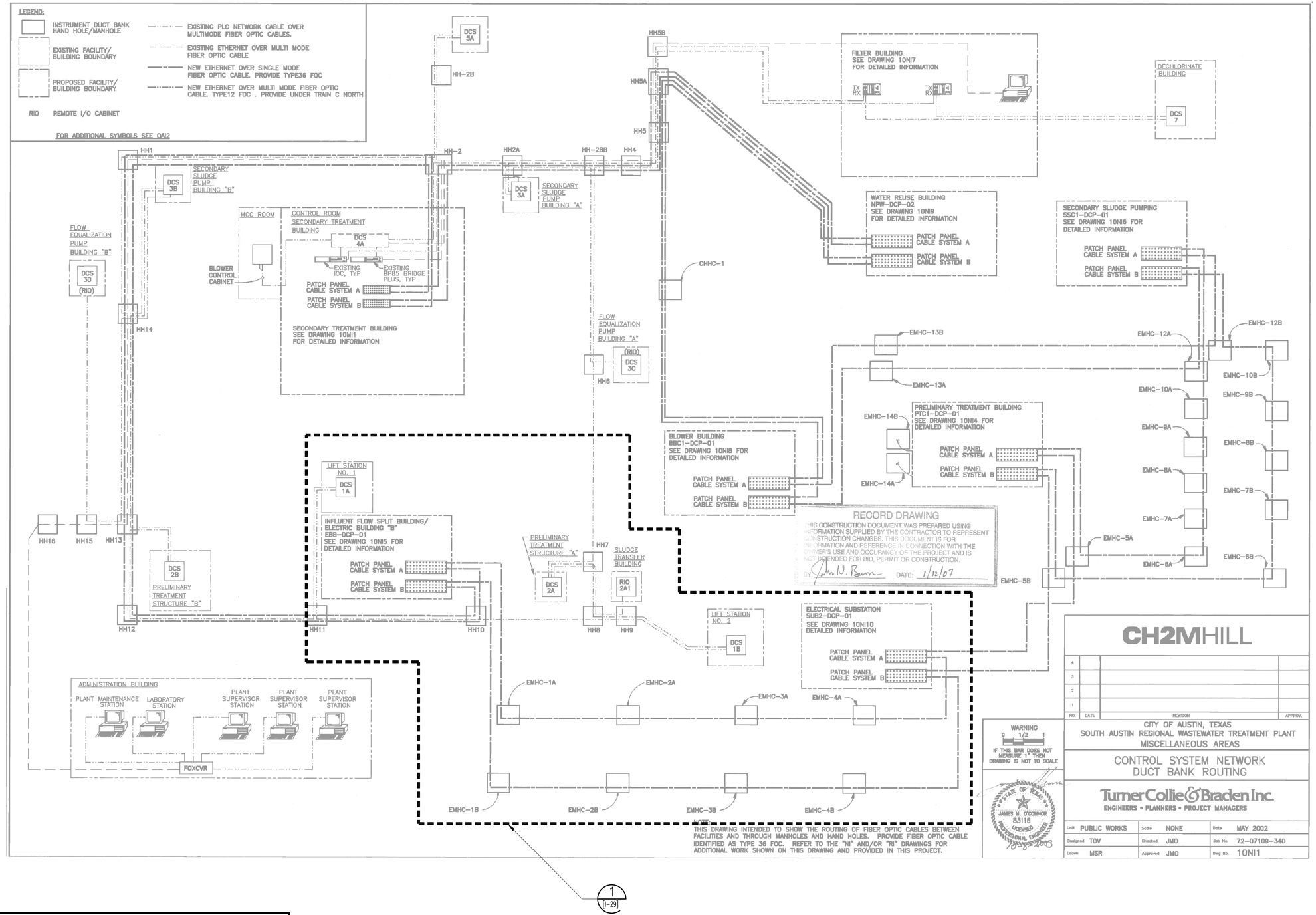

GENERAL NOTES:

1. THE EXISTING INFORMATION SHOWN ON THIS DRAWING WAS OBTAINED FROM THE PROJECT ENTITLED "SOUTH AUSTIN REGIONAL WASTEWATER TREATMENT PLANT TRAIN C SUBSTATION CONSOLIDATED" DATED MAY 2002. THIS DRAWING IS PROVIDED FOR REFERENCE PURPOSES ONLY AND MAY NOT EXACTLY REFLECT THE EXISTING CONDITIONS. THEREFORE, THE CONTRACTOR IS TO EXERCISE EXTREME CARE AND FIELD VERIFY THE EXISTING CONDITIONS PRIOR TO COMMENCING FULL SCALE DEMOLITION OR RENOVATION ACTIVITIES. FOLLOWING THE DISCOVERY VERIFICATION OF THE EXISTING FIELD CONDITIONS, SHOULD ADJUSTMENTS BECOME A NECESSITY TO THE EXISTING OR PROPOSED SYSTEM (AS APPLICABLE), THE EXISTING DISCOVERED FIELD CONDITIONS MUST BE BROUGHT TO THE OWNER'S ATTENTION FOR EXECUTION OF THE NECESSARY ADJUSTMENTS/MODIFICATIONS.

CH2MHILL

NO.	DATE	REVISION	APPROV.
4			
3			
2			
1			

WARNING
0 1/2 1
IF THIS BAR DOES NOT MEASURE 1" THEN DRAWING IS NOT TO SCALE

STATE OF TEXAS
JAMES M. O'CONNOR
83116
LICENSED
PROFESSIONAL ENGINEER
7/22/2003

CITY OF AUSTIN, TEXAS
SOUTH AUSTIN REGIONAL WASTEWATER TREATMENT PLANT
MISCELLANEOUS AREAS

CONTROL SYSTEM NETWORK
DUCT BANK ROUTING

Turner Collie & Braden Inc.
ENGINEERS • PLANNERS • PROJECT MANAGERS

Unit	PUBLIC WORKS	Scale	NONE	Date	MAY 2002
Designed	TOV	Checked	JMO	Job No.	72-07109-340
Drawn	MSR	Approved	JMO	Dwg No.	10NI1

STATE OF TEXAS
K. A. HARUTUNIAN
59181
REGISTERED
PROFESSIONAL ENGINEER
4/22/2016

Plotted: 4/22/2016 8:56:27 AM

REUSE OF DOCUMENTS
This document, and the designs incorporated herein, is an instrument of professional service that has been developed, designed and prepared by Harutunian Engineering, Inc., and is not to be used, in whole or part, for any other project without giving written notice to Harutunian Engineering, Inc.

REV No	DATE	DRWN	CHKD	REMARKS
△	–	–	–	–

DESIGNED BY: HEI
DRAWN BY: HEI
SHEET CHK'D BY: HEI
CROSS CHK'D BY: HEI
APPROVED BY: HEI
DATE: APRIL 2016

CDM Smith
Riata Corporate Park, 12357-A Riata Trace Parkway, Suite 210
Austin, TX 78727
Tel: (512) 346-1100
Texas Registration Number F-3043

HEI
HARUTUNIAN ENGINEERING, INC.
305 E Huntland Dr, Ste 500; Austin, TX 78752
TBPE Firm Registration No. F-2408

CITY OF AUSTIN, TEXAS - AUSTIN WATER UTILITY
CIP 3333.016

SOUTH AUSTIN REGIONAL WWTP
THICKENER IMPROVEMENTS PROJECT

TRAIN C CONTROL SYSTEM NETWORK
DUCT BANK ROUTING
REFERENCE DRAWING

PROJECT No 590-104217
FILE NAME: I-32

SHEET No
I-32