ADDENDUM No. __2__

Date: March 15, 2016

City of Austin

Project Name SAR WWTP Trains A & B Blower Replacement

C.I.P. No. 3333.028 IFB No.: 6100 CLMC 573

This Addendum forms a part of the Contract and corrects or modifies original Bid Documents, dated February 1, 2016. Acknowledge receipt of this addendum in space provided on bid form. Failure to do so may subject bidder to disqualification.

A. PROJECT MANUAL REVISIONS:

1. VOLUME 1, TABLE OF CONTENTS

   REPLACE Section in its entirety with the attached section.

2. VOLUME 1, SECTION 00300L LUMP SUM BID FORM

   REPLACE Section in its entirety with the attached section.

3. VOLUME 1, SECTION 00425A INSURANCE COST FORM

   DELETE Section in its entirety.

4. VOLUME 1, SECTION 00425B ROLLING OWNER CONTROLLED INSURANCE PROGRAM INFORMATION

   DELETE Section in its entirety.

5. VOLUME 1, SECTION 00608 ASSIGNMENT OF PROCUREMENT CONTRACT FOR AERATION AIR BLOWERS AND AIR SUPPLY CONTROL SYSTEM

   REPLACE Section in its entirety with the attached section.

6. VOLUME 1, SECTION 00810 SUPPLEMENTAL GENERAL CONDITIONS

   REPLACE section in its entirety with the attached section.

7. VOLUME 1, SECTION 00820 MODIFICATIONS TO BIDDING REQUIREMENTS AND CONTRACT FORMS

   DELETE Item 14 "ROCIP Requirements" in its entirety.

   ADD the following paragraph after Item 14:

   "**18. Heavy and Highway Wage Rates**

   Heavy and Highway Construction rates in Section 00830HH shall apply only to outside pipe work associate with construction of the elevated air header described in Section 01010."

8. VOLUME 1, SECTION 00830HH WAGE RATES AND PAYROLL REPORTING

   ADD attached Section in its entirety.

9. VOLUME 1, SECTION 01020 ALLOWANCES
   a. 1.02 ALLOWANCE AMOUNTS, A 1:

      DELETE "$3,193,755"

      REPLACE WITH "$3,135,710"
   b. 1.02 ALLOWANCE AMOUNTS, A 2:

      DELETE "$155,585"

      REPLACE WITH "$176,040"
   c. 1.02 ALLOWANCE AMOUNTS, A 2 c 4):

      ADD "and E" after "C"
   d. 1.02 ALLOWANCE AMOUNTS, A 3 c:

      ADD "B and" before "C"
   e. 1.02 ALLOWANCE AMOUNTS, A 4:

      DELETE "4. Allowance #4: $28,500 for construction document management via EADOC, a web-based electronic media site hosted by EADOC, LLC, as described in Section 01322."
   f. 1.06 ALLOWANCES, A. Allowance:

      DELETE "4. Allowance #4: Specified in Section 01322"
10. VOLUME 1, SECTION 01140 WORK RESTRICTIONS
   a. 1.04 SHUTDOWN AND CONSTRUCTION CONSTRAINTS, D. Dewatering of existing process and disposal of residue, Paragraph 1a:

      ADD "CONTRACTOR shall request that OWNER drain the basin 30 days before CONTRACTOR is ready to begin work in that basin. OWNER will drain the basins as much as possible using the aeration basin drain valve. Contractor shall be responsible for removing remaining aeration basin contents as required in the Contract Documents."
   b. 1.04 SHUTDOWN AND CONSTRUCTION CONSTRAINTS, D. Dewatering of existing process and disposal of residue, Paragraph 1b:

      DELETE "Biosolids, sand, and grit may be pumped or hauled to the headworks only as permitted by the OWNER."
   c. 1.10 WORK SEQUENCE, C. Stage 1 Train A/B Blower Construction Sequence - Install Blower 1, Paragraph 13:

      DELETE "auger cast-in-place piles"
      REPLACE with "drilled piers"
   d. 1.10 WORK SEQUENCE, D. Stage 2 Train A/B Blower Construction Sequence - Install Blower 2, Paragraph 11:

      DELETE "auger cast-in-place piles"
      REPLACE with "drilled piers"

11. VOLUME 1, SECTION 01322 WEB BASED CONSTRUCTION DOCUMENT MANAGEMENT

    1.02 REQUIREMENTS, A:

    DELETE "2. EADOC is paid for by the Contractor."

12. VOLUME 1, SECTION 01380 CONSTRUCTION PHOTOGRAPHY & VIDEOS

    3.5 ADDITIONAL ASSET PHOTOGRAPHS:

    DELETE "A specific complete list of assets to be installed within this contract is identified in the Submittals Section of the Contract (Section 01300)."

    REPLACE with "Refer to Plan Sheet 00G07 for the complete list of assets. In addition to the list in the referenced plan sheet add an additional 150 electrical and instrumentation assets that will require photos."

13. VOLUME 1, ALL CITY STANDARD SPECIFICATIONS, SPECIAL PROVISIONS

    REMOVE the header on all pages that reads: "ROCIP Project: Withhold Insurance cost. Please refer to sections 00425 & 00810 for information."

14. VOLUME 2, TABLE OF CONTENTS:

    REPLACE Section in its entirety with the attached section.

15. VOLUME 2, SECTION 03071 EPOXIES

    ADD attached Section in its entirety.

16. VOLUME 2, SECTION 03925 CONCRETE REPAIR

    ADD attached Section in its entirety.

17. VOLUME 2, SECTION 03926 STRUCTURAL CONCRETE REPAIR

    ADD attached Section in its entirety.

18. VOLUME 2, SECTION 03931 EPOXY INJECTION SYSTEM

    ADD attached Section in its entirety.

19. VOLUME 2, SECTION 07218B SPRAY INSULATION

    MODIFY this section as indicated in the attached document titled "ADDENDA - ARCHITECTURAL ITEMS"

20. VOLUME 2, SECTION 09714 METAL FACED ACOUSTICAL PANELS

    MODIFY this section as indicated in the attached document titled "ADDENDA - ARCHITECTURAL ITEMS"

21. VOLUME 2, SECTION 09840 ACOUSTICAL WALL TREATMENT – CEMENTITIOUS WOOD FIBER PANELS

    ADD attached Section as indicated in the attached document titled "ADDENDA - ARCHITECTURAL ITEMS"

22. VOLUME 2, SECTION 15052 COMMON WORK RESULTS FOR GENERAL PIPING:

    3.05 Piping Schedule, Aeration Air

    CHANGE 'Aboveground 3 - 48' to "'Aboveground 3-36'"

    ADD the following row as the next row before the 'Aboveground 0.5-2.5':

Air	Aboveground	48	SST	0.312"	15286	WLD or FL, FL where shown	13 psig/AM	None	None	Do not exceed 15 psig during pressure test

23. VOLUME 2, SECTION 15061 PIPE SUPPORTS

    CHANGE paragraph 3.01.L.1 from "Support 2-inch and smaller piping on horizontal and vertical runs at maximum 5 feet on center, unless otherwise specified." to read as follows "Support 2-inch and smaller piping on horizontal and vertical runs at maximum 5 feet on center, unless provided on the drawings."

    CHANGE paragraph 3.01.L.2 from "Support larger than 2-inch piping on horizontal and vertical runs at maximum 10 feet on center, unless otherwise specified." to read as follows "Support larger than 2-inch piping on horizontal and vertical runs at maximum 10 feet on center, unless provided on the drawings."

24. VOLUME 2, SECTION 15103 STAINLESS STEEL PIPE, FITTINGS & ACCESSORIES FOR LOW PRESSURE AIR SERVICE, 4 INCH & LARGER

    ADD attached Section in its entirety.

25. VOLUME 2, SECTION 15121 PIPE COUPLINGS:

    g. Paragraph 2.04: **REVISE** heading to read "PIPE COUPLINGS FOR STAINLESS STEEL PIPING"

    h. Paragraph 2.05: **DELETE** Paragraph in its entirety.

26. VOLUME 2, SECTION 17600, DISTRIBUTED CONTROL SYSTEM:

    a. **CHANGE** paragraph 2.07.F.4.c from “Connector Panels: Minimum of two (4) connector panels” to read as follows “Connector Panels: Minimum of two (2) connector panels”.

    b. **CHANGE** paragraph 2.07.F.4.e from “Corning Cable Systems LLC, Model CCH-01U” to read as follows “Corning Cable Systems LLC, Model CCH-02U”.

    c. **CHANGE** paragraph 2.08.C.2 from “Each patch panel shall be as follows:” to read as follows “Each Type 1 patch panel shall be as follows:”.

    d. **ADD** the following paragraph 2.08.C.3 “Each Type 2 patch panel shall be as follows:

        1) Construction: Plastic, fully enclosed type,

        2) Quantity of ports: minimum 2

        3) Mounting: surface mounted. Secure patch panel to backpanel with screws.

        4) Manufacturer: “Panduit”, Model Mini-Com #CBXJ2IW-A, with “Mini-Com” UTP Coupler Module Model CC688IW and blank cover plates, or approved equal.”

27. VOLUME 3, Table of Contents:

    REPLACE Section in its entirety with the attached section.

28. VOLUME 4, Table of Contents:

    REPLACE Section in its entirety with the attached section.

29. VOLUME 4, BLOWER PROCUREMENT DOCUMENTS (FOR REFERENCE ONLY):

    ADD attached executed Contract between the City of Austin and Siemens Energy, Inc. for the one time purchase of aeration blowers for the SAR Trains A & B Blower Replacement.

30. VOLUME 5, ROCIP PROJECT SAFETY MANUAL:

    DELETE Volume in its entirety.

B. DRAWING REVISIONS:

1. VOLUME 6, Sheet 36 of 320, Drawing 00TS02, Detail S111/Typ:

   DELETE “ANCHOR INSTALLATION INFORMATION” table in its entirety.

   ADD the following note:

   “7. REFER TO SPEC SECTION 05051 FOR ADDITIONAL INFORMATION”

2. VOLUME 6, Sheet 96 of 320, Drawing 01C02:

   REPLACE Drawing in its entirety with the attached Drawing.

3. VOLUME 6, Sheet 97 of 320, Drawing 01C03:

   REPLACE Drawing in its entirety with the attached Drawing.

4. VOLUME 6, Sheet 105 of 320, Drawing 00GA01:

   MODIFY this sheet as indicated in the attached document titled "ADDENDA - ARCHITECTURAL ITEMS"

5. VOLUME 6, Sheet 122 of 320, Drawing 01S01:

   REPLACE the reference to C (01S02) with D (01S02) for the following supports: 14, 27, 31, 32, 34, 35, and 37.

   REPLACE the reference to C (01S02) with A (01S02) for the following supports: 29 and 38.

6. VOLUME 6, Sheet 123 of 320, Drawing 01S02:

   REPLACE Drawing in its entirety with the attached Drawing.

7. VOLUME 6, Sheet 124 of 320, Drawing 01S03:

   REPLACE Drawing in its entirety with the attached Drawing.

8. VOLUME 6, Sheet 138 of 320, Drawing 03S01:

   REPLACE the reference to 3 (03S02) with 2 (03S02) for Supports 19 and 21.

9. VOLUME 6, Sheet 139 of 320, Drawing 03S02:

   DELETE Detail 3 and indicate it as 'NOT USED"

   DELETE Section 7 and indicate it as 'NOT USED"

   ADD references to Supports 19 and 21 to Detail 2 and Section 6.

10. VOLUME 6, Sheet 140 of 320, Drawing 03S03:

    DELETE Section 3 and indicate it as 'NOT USED"

    ADD references to Supports 19 and 21 to Section 2.

11. VOLUME 6, Sheet 141 of 320, Drawing 04S01:

    REPLACE the reference to 2 (04S02) with 3 (04S02) for the following Supports: 2, 4 and 6.

    REPLACE the reference to C (01S02) with B (01S02) for Support 10.

12. VOLUME 6, Sheet 142 of 320, Drawing 04S02:

    DELETE Detail 2 and indicate it as 'NOT USED"

    DELETE Section 6 and indicate it as 'NOT USED"

    ADD references to Supports 2, 4 and 6 to Detail 3 and Section 7.

13. VOLUME 6, Sheet 143 of 320, Drawing 04S03:

    DELETE Section 2 and indicate it as 'NOT USED"

    ADD references to Supports 2, 4 and 6 to Section 3.

14. VOLUME 6, Sheet 144 of 320, Drawing 00GM01:

    REPLACE Drawing in its entirety with the attached Drawing.

15. VOLUME 6, Sheet 146 of 320, Drawing 01M01:

    DELETE Key Note #2, 48" RESTRAINED COUPLING.

    ADD the following Key Notes:

    "7. COUPLING SHALL ALLOW FOR AT LEAST 1.5" OF PIPE EXPANSION."

    "8. COUPLING SHALL ALLOW FOR AT LEAST 1.0" OF PIPE EXPANSION."

    REPLACE the reference to Key Note 2 with Key Notes 1 and 8

    ADD a reference to Key Notes 1 and 7 for Support 29 (See Drawing 01C03 for Support numbering).

16. VOLUME 6, Sheet 147 of 320, Drawing 01M02:

    ADD the following Note 4 to Section E: "GAP SHALL BE 3/4" ON BOTH SIDES FOR 36" PIPE SUPPORT SADDLES."

17. VOLUME 6, Sheet 153 of 320, Drawing 02M06:

    ADD the following Key Note:

    "14. COUPLING SHALL ALLOW FOR AT LEAST 1.0" OF PIPE EXPANSION."

    ADD references to Key Notes 1 and 14 for Supports 11, 13 and 14 (See Drawing 01C02 for Support numbering).

18. VOLUME 6, Sheet 154 of 320, Drawing 03M01:

    DELETE Key Note #2, 48" RESTRAINED COUPLING.

    DELETE the reference to Key Note 2 at Support 21 (See Drawing 01C02 for Support numbering).

    ADD the following Key Note:

    "12. COUPLING SHALL ALLOW FOR AT LEAST 1.0" OF PIPE EXPANSION."

    ADD a reference to Key Notes 1 and 12 for Supports 18, 19, 20, 21, and 22 (See Drawing 01C02 for Support numbering).

19. VOLUME 6, Sheet 155 of 320, Drawing 03M02:

    DELETE Key Note #2, 48" RESTRAINED COUPLING.

DELETE the reference to Key Note 2 at Support 19 (See Drawing 01C02 for Support numbering).

ADD the following Key Notes:

"3. COUPLING SHALL ALLOW FOR AT LEAST 1.5" OF PIPE EXPANSION."

"4. COUPLING SHALL ALLOW FOR AT LEAST 1.0" OF PIPE EXPANSION."

ADD references to Key Notes 1 and 4 for Supports 15, 18, 19 and 20 (See Drawing 01C02 for Support numbering).

ADD references to Key Notes 1 and 3 for Support 16 (See Drawing 01C02 for Support numbering).

20. VOLUME 6, Sheet 156 of 320, Drawing 03M03:

DELETE Key Note #2, 48" RESTRAINED COUPLING.

DELETE the reference to Key Note 2 at Support 21 (See Drawing 01C02 for Support numbering).

ADD the following Key Note:

"3. COUPLING SHALL ALLOW FOR AT LEAST 1.0" OF PIPE EXPANSION."

ADD references to Key Notes 1 and 3 for Supports 21, 22, 23, 24 and 25 (See Drawing 01C02 for Support numbering).

21. VOLUME 6, Sheet 157 of 320, Drawing 03M04:

DELETE reference to "SCH 40" so that the dropleg callout reads: "PVC BY DIFFUSER MANUFACTURER (TYP)".

22. VOLUME 6, Sheet 158 of 320, Drawing 03M05:

DELETE reference to "SCH 40" so that the dropleg callout reads: "PVC BY DIFFUSER MANUFACTURER (TYP)".

23. VOLUME 6, Sheet 159 of 320, Drawing 03M06:

DELETE Key Note #4, 48" RESTRAINED COUPLING.

DELETE the reference to Key Note 4 at Support 21 (See Drawing 01C02 for Support numbering).

DELETE reference to "SCH 40" so that the dropleg callout reads: "PVC BY DIFFUSER MANUFACTURER (TYP)".

ADD the following Key Notes:

"6. COUPLING SHALL ALLOW FOR AT LEAST 1.5" OF PIPE EXPANSION."

"7. COUPLING SHALL ALLOW FOR AT LEAST 1.0" OF PIPE EXPANSION."

ADD references to Key Notes 1 and 7 for Supports 18, 19, 20, 21, 22, 23 and 24 (See Drawing 01C02 for Support numbering).

ADD references to Key Notes 1 and 6 for Support 16 (See Drawing 01C02 for Support numbering).

24. VOLUME 6, Sheet 160 of 320, Drawing 04M01:

DELETE Key Note #2, 48" RESTRAINED COUPLING.

DELETE the reference to Key Note 2 at Support 6 (See Drawing 01C02 for Support numbering).

ADD the following Key Note:

"12. COUPLING SHALL ALLOW FOR AT LEAST 1.0" OF PIPE EXPANSION."

ADD references to Key Notes 1 and 12 for Supports 2, 3, 4, 5, 6, 7 and 8 (See Drawing 01C02 for Support numbering).

25. VOLUME 6, Sheet 161 of 320, Drawing 04M02:

DELETE Key Note #2, 48" RESTRAINED COUPLING.

DELETE the reference to Key Note 2 at Supports 2 & 4 (See Drawing 01C02 for Support numbering).

ADD the following Key Note:

"3. COUPLING SHALL ALLOW FOR AT LEAST 1.0" OF PIPE EXPANSION."

ADD references to Key Notes 1 and 3 for Supports 2, 3 and 4 (See Drawing 01C02 for Support numbering).

26. VOLUME 6, Sheet 162 of 320, Drawing 04M03:

DELETE Key Note #2, 48" RESTRAINED COUPLING.

DELETE the reference to Key Note 2 at Support 6 (See Drawing 01C02 for Support numbering).

ADD the following Key Notes:

"3. COUPLING SHALL ALLOW FOR AT LEAST 1.5" OF PIPE EXPANSION."

"4. COUPLING SHALL ALLOW FOR AT LEAST 1.0" OF PIPE EXPANSION."

ADD references to Key Notes 1 and 3 for Support 9 (See Drawing 01C02 for Support numbering).

ADD references to Key Notes 1 and 4 for Supports 5, 6, 7 and 8 (See Drawing 01C02 for Support numbering).

27. VOLUME 6, Sheet 163 of 320, Drawing 04M04:

DELETE reference to "SCH 40" so that the dropleg callout reads: "PVC BY DIFFUSER MANUFACTURER (TYP)".

28. VOLUME 6, Sheet 165 of 320, Drawing 04M06:

DELETE Key Note #4, 48" RESTRAINED COUPLING.

DELETE the reference to Key Note 4 at Support 6 (See Drawing 01C02 for Support numbering).

DELETE reference to "SCH 40" so that the dropleg callout reads: "PVC BY DIFFUSER MANUFACTURER (TYP)".

ADD the following Key Note in its entirety:

"8. COUPLING SHALL ALLOW FOR AT LEAST 1.0" OF PIPE EXPANSION."

ADD references to Key Notes 3 and 8 for Supports 2, 3, 4, 5, 6, 7 and 8 (See Drawing 01C02 for Support numbering).

29. VOLUME 6, Sheet 166 of 320, Drawing 05M01:

DELETE Key Note #2, 36" RESTRAINED COUPLING.

MODIFY Key Note #3 as:

"3. 36" RESTRAINED COUPLING **ALLOWING FOR DEFLECTION"**

MODIFY Key Note #8 as:

"8. CONNECT TO EXISTING 36" AIR PIPE AT CL = 437.21 **WITH FLANGES**"

ADD the following Key Notes:

"13. 48" EXPANSION COUPLING."

"14. COUPLING SHALL ALLOW FOR AT LEAST 1.5" OF PIPE EXPANSION."

DELETE the reference to Key Note 3.

DELETE the reference to Key Note 7 on Support 39 (See Drawing 01C03 for Support numbering).

ADD references to Key Notes 3, 6 and 7 for Support 39 (See Drawing 01C03 for Support numbering).

ADD references to Key Notes 13 and 14 for Support 38 (See Drawing 01C03 for Support numbering).

30. VOLUME 6, Sheet 167 of 320, Drawing 05M02:

MODIFY Key Note #1 to say:

"1. 36" **RESTRAINED** COUPLING **ALLOWING FOR DEFLECTION**."

DELETE Key Note #2, 48" RESTRAINED COUPLING.

MODIFY Key Note #9 to say:

"9. WELD STAINLESS STEEL **FLANGE** ON EXISTING 36" AIR PIPE AND ATTACH NEW PIPE WITH A **FLANGE**."

ADD the following Key Notes:

"12. 48" EXPANSION COUPLING."

"13. COUPLING SHALL ALLOW FOR AT LEAST 1.5" OF PIPE EXPANSION."

"14. COUPLING SHALL ALLOW FOR AT LEAST 1.0" OF PIPE EXPANSION."

REPLACE the reference to Key Note 2 with Key Notes 12 and 14.

ADD references to Key Notes 12 and 13 for Support 38 (See Drawing 01C03 for Support numbering).

This addendum consists of 101 page(s)/sheet(s).

Approved by OWNER

Approved by ENGINEER/ARCHITECT

STATE OF TEXAS
JASON E. ANDERSON
87963
LICENSED
PROFESSIONAL ENGINEER
03/15/16

END

Document Number	Title	
VOLUME 1		
INTRODUCTORY INFORMATION		
05/06/11	Title Page	
01/15/16	Table of Contents	ADDENDUM NO. 2 - 3/15/2016
BIDDING REQUIREMENTS, CONTRACT FORMS, & CONDITIONS OF THE CONTRACT		
Pre-Bid Information		
00020	01/15/16 Invitation for Bids	
Instructions to Bidders		
00100	01/15/16 Instructions to Bidders	ADDENDUM NO. 2 - 3/15/2016
Information Available to Bidders		
00220	05/06/11 Geotechnical Data	
Bid Forms		
00300L	01/15/16 Bid Form (Lump Sum)	ADDENDUM NO. 2 - 3/15/2016
Supplements to Bid Forms		
00400	04/22/13 Statement of Bidder's Experience	
00405	09/25/05 Certificate of Non-Suspension or Debarment	
00410	01/15/16 Statement of Bidder's Safety Experience	
~~00425A~~	~~10/19/15 Insurance Cost Form~~	ADDENDUM NO. 2 - 3/15/2016
~~00425B~~	~~11/02/15 Rolling Owner Controlled Insurance Program Information~~	
00440	10/19/15 Affidavit - Prohibited Activities	
00475	05/11/15 Nonresident Bidder Provisions	
Agreement Form		
00500	1/15/16 Agreement	
Bonds and Certificates		
00608	01/25/16 Assignment of Procurement Contract	ADDENDUM NO. 2 - 3/15/2016
00609	01/25/16 Surety's Agreement to Assignment	
00610	02/23/10 Performance Bond	
00620	02/23/10 Payment Bond	
00630	05/11/15 Nondiscrimination Certificate	
00631	03/06/14 Title VI Assurances Appendix A	
00650	07/30/12 Certificate of Insurance	
00670	03/20/14 Sales Tax Exemption Certificate	
00680	06/05/06 Non-Use of Asbestos Affidavit (Prior to Construction)	
00681	06/05/06 Non-Use of Asbestos Affidavit (After Construction)	
General Conditions		
00700	10/19/15 General Conditions	
Supplementary Conditions		
00810	**01/15/16 Supplemental General Conditions**	ADDENDUM NO. 2 - 3/15/2016
00819	06/10/05 Security Requirements	
SP1070	09/16/14 Facility Security Procedure for Contractors	

Document Number		Title
00820	01/15/16	Modifications to Bidding Requirements and Contract Forms
00830	02/04/15	Wage Rates and Payroll Reporting
00830BC	01/15/16	Wage Rates Building Construction Trades
00830HH	**01/11/16**	**Wage Rates and Payroll Reporting - Heavy and Highway Construction**

ADDENDUM NO. 2 - 3/15/2016

Addenda

00900	01/15/16	Addendum

SPECIFICATIONS

Division 1 - General Requirements

*	01010	04/22/13	Summary of Work
	01020	01/25/16	Allowances
	01025	12/18/15	Measurement and Payment
	01030	12/18/15	Alternates
	01045	12/18/15	Cutting and Patching
*	01050	10/19/15	Grades Lines & Levels
*	01095	07/21/03	Reference Standards and Definitions
	01096	05/06/11	Stormwater Pollution Prevention Plan (SWPPP)
	01140	12/18/15	Work Restrictions
*	01200	08/09/12	Project Meetings
	01292	12/18/15	Schedule of Values
*	01300	04/22/13	Submittals
	01310	12/18/15	Schedules and Reports
	01322	12/18/15	Web Based Construction Document Management
	01350	12/18/15	Special Procedures
	01352	04/22/13	Sustainable Construction Requirements
*	01353	08/09/12	Construction Equipment Emissions Reduction Plan
	01356	12/18/15	Alteration Project Procedures
	01380	08/09/12	Construction Photography & Videos
	01400	12/18/15	Quality Control Services
	01410	12/18/15	Regulatory Requirements
	01424	12/18/15	Abbreviations and Acronyms
	01455	12/18/15	Special Tests and Inspections
*	01500	08/09/12	Temporary Facilities
*	01505	04/22/13	Construction and Demolition Waste Management
	01510	02/23/10	Construction Indoor Air Quality Management Plan
*	01550	08/09/12	Public Safety and Convenience
	01600	12/18/15	Materials and Equipment *{e.g. Qualified Products List}*
	01610	12/18/15	Project Design Criteria
	01612	12/18/15	Seismic Design Criteria
	01614	12/18/15	Wind Design Criteria
	01670	12/18/15	Training
	01700	12/18/15	Contract Closeout
	01730	12/18/15	Operation and Maintenance Data
	01738	12/18/15	Selective Site Demolition
	01756	12/18/15	Testing, Training, and Facility Start-Up
*	01900	03/12/12	Prohibition of Asbestos Containing Materials
*	01900a	06/05/06	Statement of Non-Inclusion of Asbestos Containing Material (E/A Prior to Design)
*	01900b	06/05/06	Statement of Non-Inclusion of Asbestos Containing Material (E/A After Design)
	01901	12/14/15	Asbestos Abatement Specifications

Document Number	Title	
City Standard Technical Specifications		
Series 100 - Earthwork		ADDENDUM NO. 2 - 3/15/2016
104S	09/26/12	Removing Portland Cement Concrete
111S	09/26/12	Excavation
Series 200 - Subgrade and Base Construction		ADDENDUM NO. 2 - 3/15/2016
201S	08/20/07	Subgrade Preparation
210S	02/24/10	Flexible Base
220S	02/24/10	Sprinkling for Dust Control
230S	08/20/07	Rolling (Flat Wheel)
232S	08/20/07	Rolling (Pneumatic Tire)
234S	08/20/07	Rolling (Tamping)
236S	08/20/07	Proof Rolling
Series 300 - Street Surface Courses		ADDENDUM NO. 2 - 3/15/2016
360S	09/26/12	Concrete Pavement
Series 400 - Concrete Structures and Miscellaneous Concrete		ADDENDUM NO. 2 - 3/15/2016
401S	09/26/12	Structural Excavation and Backfill
402S	11/13/07	Controlled Low Strength Material
403S	09/26/12	Concrete for Structures
405S	11/13/07	Concrete Admixtures
406S	09/26/12	Reinforcing Steel
408S	11/13/07	Concrete Joint Materials
409S	11/13/07	Membrane Curing
410S	09/26/12	Concrete Structures
411S	11/13/07	Surface Finishes for Concrete
413S	11/13/07	Cleaning and/or Sealing Joints and Cracks (Portland Cement Concrete)
416S	11/13/07	Waterstops
420S	09/26/12	Drilled Shaft Foundations
432S	01/04/10	Portland Cement Concrete Sidewalks
433S	12/09/08	P.C. Concrete Sidewalks
Series 500 - Pipe and Appurtenances		ADDENDUM NO. 2 - 3/15/2016
505S	02/24/10	Concrete Encasement
509S	09/26/12	Excavation Safety Systems
510	10/03/13	Pipe
511S	09/26/12	Water Valves
Series 600 - Environmental Enhancement		ADDENDUM NO. 2 - 3/15/2016
604S	08/18/10	Seeding for Erosion Control
642S	09/01/11	Silt Fence
Series 700 - Incidental Construction		ADDENDUM NO. 2 - 3/15/2016
700S	09/26/12	Mobilization
720S	09/26/12	Metal for Structures
721S	09/26/12	Steel Structures
723	09/26/12	Structural Welding

Document Number		Title

Special Provisions to City Standard Technical Specifications

ADDENDUM NO. 2 - 3/15/2016

Special Specifications

SP1	07/29/15	Special Provision to Measurement and Payments
SP403S	09/26/13	Special Provision to Concrete for Structures
SP410S	09/26/13	Special Provision to Concrete Structures
SP411S	11/13/07	Special Provision to Surface Finishes for Concrete
SP510	10/03/13	Special Provision to Pipe

VOLUME 2

Special Specifications

DIVISION 2 - SITE CONSTRUCTION

02222	12/18/15	Building Demolition

DIVISION 3 - CONCRETE

ADDENDUM NO. 2 - 3/15/2016

03071	**03/01/16**	**Epoxies**
03925	**03/01/16**	**Concrete Repair and Coating**
03926	**03/01/16**	**Structural Concrete Repair**
03931	**03/01/16**	**Epoxy Injection System**
03350	12/18/15	Concrete Chemical Stain Finishing
03520	12/18/15	Lightweight Insulating Concrete
03600	12/18/15	Grout
03740	12/18/15	Modifications to Existing Concrete

DIVISION 4 - MASONRY

04065	12/18/15	Mortar and Masonry Grout
04810	12/18/15	Unit Masonry

DIVISION 5 - METALS

05051	12/18/15	Anchorages
05120	12/18/15	Structural Steel
05210	12/18/15	Steel Joists
05311	12/18/15	Metal Roof Decking
05501	12/18/15	Miscellaneous Metal Fabrication

DIVISION 6 - WOOD AND PLASTICS

06100	12/18/15	Rough Carpentry

DIVISION 7 - THERMAL AND MOISTURE PROTECTION

07110	12/18/15	Dampproofing
07190	12/18/15	Water Repellents
07214	12/18/15	Foamed-In-Place Insulation
07218a	12/18/15	Pour Fill Foamed-In-Place Insulation
07218b	12/18/15	Spray Insulation
07560	12/18/15	Fluid Applied Roofing
07620	12/18/15	Sheet Metal Flashing Trim
07710	12/18/15	Gutters and Downspouts
07900	12/18/15	Joint Sealants

DIVISION 8 - DOORS AND WINDOWS

08114	12/18/15	Standard Steel Doors
08115	12/18/15	Standard Steel Frames
08333	12/18/15	Overhead Coiling Doors

Document Number		Title
08710	12/18/15	Door Hardware
DIVISION 9 - FINISHES		
09216	12/18/15	Gypsum Board Assemblies
09510	12/18/15	Acoustical Ceilings
09714	12/18/15	Metal Faced Acoustical Panels
09840	**02/29/16**	**Acoustical Wall Treatment – Cementitious Wood Fiber Panels**
09910	12/18/15	Painting
09960	12/18/15	High-Performance Coatings
DIVISION 10 - SPECIALTIES		
10400	12/18/15	Signage
DIVISION 11 - EQUIPMENT		
11167	12/18/15	Scissor Lift
11375	01/27/16	Aeration Blowers
11378C	12/18/15	Ceramic Disc Fine Bubble Diffused Aeration System
DIVISION 13 - SPECIAL CONSTRUCTION		
13446	12/18/15	Manual Actuators
13447	12/18/15	Electric Motorized Actuators
DIVISION 15 - MECHANICAL		
15050	12/18/15	Basic Mechanical Materials and Methods
15052	12/18/15	Common Work Results for General Piping
15057	12/18/15	Fusion Bonded Epoxy Lining
15061	12/18/15	Pipe Supports
15062	12/18/15	Preformed Channel Pipe Support System
15075	12/18/15	Equipment Identification
15076	12/18/15	Pipe Identification
15082	12/18/15	Piping Insulation
15084	12/18/15	Ductwork Insulation
15103	**03/01/16**	**Stainless Steel Pipe, Fittings & Accessories for Low Pressure Air Service, 4 inch & Larger**
15110	12/18/15	Common Work Results for Valves
15111	12/18/15	Ball Valves
15112	12/18/15	Butterfly Valves for Air Service
15114	12/18/15	Check Valves
15115	12/18/15	Gate, Globe, and Angle Valves
15116	12/18/15	Plug Valves
15117	12/18/15	Specialty Valves
15118	12/18/15	Pressure Reducing and Pressure Relief Valves
15119	12/18/15	Air and Vacuum Relief Valves
15120	12/18/15	Piping Specialties
15121	12/18/15	Pipe Couplings
15125	12/18/15	Strainers
15170	12/18/15	Electrical Motor, Induction, 600 Volts and Below
15259	12/18/15	Chlorinated Polyvinyl Chloride (CPVC) Pipe: ASTM F 441
15270	12/18/15	Steel Pipe: Galvanized and Black, ASTM A 53
15281	12/18/15	Copper Water Tube: Seamless, ASTM B 88
15286	12/18/15	Stainless Steel Pipe and Tubing
15732	12/18/15	Air Conditioning Units
15812	12/18/15	Metal Ducts
15820	12/18/15	Ductwork Accessories
15830	12/18/15	Fans
15852	12/18/15	Louvers

ADDENDUM NO. 2 - 3/15/2016

ADDENDUM NO. 2 - 3/15/2016

Document Number		Title
15936	12/18/15	Instrumentation and Control Devices for HVAC
15954	12/18/15	Testing, Adjusting, and Balancing for HVAC
15956	12/18/15	Piping Systems Testing
15958	12/18/15	Mechanical Equipment Testing

DIVISION 16 - ELECTRICAL

16040	12/18/15	5KV Motor Control Centers
16120	12/18/15	480 Volt Motor Control Centers
16150	12/18/15	Raceways, Fittings and Supports
16182	12/18/15	Medium Voltage Cables
16200	12/18/15	Wiring (600 Volts and Below)
16250	12/18/15	Boxes and Cabinets
16264	12/18/15	480 Volt Uninterruptible Power
16300	12/18/15	Wiring Devices
16350	12/18/15	Lighting
16440	12/18/15	Medium Voltage Substation Class Distribution Transformer
16450	12/18/15	600 Volts and Below Dry Type Transformers
16480	12/18/15	Over 600 Volt Dry Type Transformers
16500	12/18/15	Panelboard
16524	12/18/15	480 Volt Automatic Transfer Switches
16540	12/18/15	Field Control Stations
16550	12/18/15	Grounding
16600	12/18/15	Disconnect Switches and Enclosures
16800	12/18/15	Calibration, Testing and Settings

DIVISION 17 - INSTRUMENTATION AND CONTROLS

17100	12/18/15	Process Instrumentation and Control Systems (PICS)
17101	12/18/15	Specific Control Strategies
17200	12/18/15	Instrumentation and Control Cabinets and Associated Equipment
17380	12/18/15	Field Instrumentation and Sensing Devices
17404	12/18/15	Pressure/Vacuum Measurement - Gauges
17600	12/18/15	Distributed Control System
17602	12/18/15	Temperature Measurement - Temperature Gauge

VOLUME 3

10/09/00 MBE/WBE Procurement Program Package

VOLUME 4 (FOR REFERENCE ONLY, NOT FOR BIDDING PURPOSES)

APPENDIX A Blower Procurement Documents
2016-01-07 COA Executed Contract with Siemens ADDENDUM NO. 2 - 3/15/2016

~~**VOLUME 5**~~ ADDENDUM NO. 2 - 3/15/2016

~~12/10/15 ROCIP Project Safety Manual~~

VOLUME 6

02/01/16 Drawings

END

City Manager
Austin, Texas

The undersigned, in compliance with the Invitation for Bids for construction of the following Project: SAR WWTP Trains A & B Blower Replacement.

(CIP ID# 3333.028) (IFB# 6100 CLMC 573) for the City of Austin, Texas, having examined the Project Manual, Drawings and Addenda, the site of the proposed Work and being familiar with all of the conditions surrounding construction of the proposed Project, having conducted all inquiries, tests and investigations deemed necessary and proper; hereby proposes to furnish all labor, permits, material, machinery, tools, supplies and equipment, and incidentals, and to perform all Work required for construction of the Project in accordance with the Project Manual, Drawings and Addenda within the time indicated for the lump sum price of:

EXCAVATION SAFETY SYSTEMS UNIT PRICES: The undersigned Bidder agrees that the Base Bid for the Work includes the following amounts in the Bid for excavation safety systems as specified in Item Number 509S of the Specifications and in case of an authorized adjustment to the scope of Work, the following unit price(s) will be used in adjusting the Contract Amount:

Quantity	Unit	Item Description	Unit Price	Amount
500	LF	Trench Safety Systems	$_____	$_____

ALLOWANCES

Allowance #1: Three Siemens Single Stage Blowers, and ancillary equipment to integrate control of three existing Siemens Single Stage Blowers as described in Blower Manufacturer's Proposal dated March 27, 2015, and included as Volume 4. $**3,135,710**

Allowance #2: Provide the listed items below per Section 11375. $**176,040**

1. Tools and spare parts per Section 11375 1.05.
2. Double-tag wiring with both the Siemens wire tag numbers and the wire tagging system specific to this project per Section 11375 2.09 B.
3. Additional Appurtenances and Equipment Associated with new Train A & B Blowers as listed below.
   a. Provide main header instruments specified in the Procurement Package with remote mount per Section 11375 2.10 B.
   b. Additional blower instrumentation per Section 11375 2.11 B.
   c. Remote field control stations per Section 11375 2.12 B.
   d. Additional blower LCP items per Section 11375 2.12 C and E.
   e. Additional blower MCP items per Section 11375 2.12 D.

Allowance #3: Provide the listed items below per Section 11375. $**285,480**

1. Additional 1-year warranty per Section 11375 1.07.
2. Provide a new water-to-oil heat exchanger for each of the three (3) existing Train C Blowers per in Section 11375 2.05 B.
3. Field services for ORT and I&C system PAT testing of the aeration blower system per Section 11375 3.03 B and C.
4. Provide a 5 year factory protective maintenance contract from the blower manufacturer for the three new blower units per Section 11375 3.04.

SUBTOTAL ALLOWANCES $**3,597,230**

BASE BID..... = $ _____
Figures

(Base Bid includes Allowances and Excavation Safety Systems Unit Prices, if applicable.)

ALTERNATE NO. 1: Additional demolition in Train B Aeration Basins 1 through 4 to remove BNR structural and mechanical components.

= $ _____
Figures

TOTAL BID (Base Bid Plus Alternate)..... = $ _____
Figures

BASE BID MINUS ALLOWANCES (1, 2, and 3)..... = $ _____
Figures

Notes:

1. For information pertaining to Bid Alternate prioritization, see Section 00820.
2. For a more detailed explanation of Bid Alternates, see Section 01030.
3. For a more detailed explanation of Bid Allowances, see Section 01020.
4. Base Bid Minus Allowances (1, 2, and 3) is for inclusion in Compliance Plans, Appendix A, Page 12, "Total Base Bid (if applicable)."

UNIT PRICES: The undersigned Bidder agrees that, in case of an authorized adjustment to the scope of Work shown, the following unit price(s) will be used in adjusting the Contract Amount (add or deduct):

Quantity	Unit	Item Description	Unit Price	Amount
3,000	CU YD	Sludge/grit disposal in Aeration Basins as needed, per Section 01140.	$_____	$_____
5,000	LF	Epoxy injection at Aeration Basins for concrete crack repair as needed, per Section 03931.	$_____	$_____

BID GUARANTY: A Bid guaranty must be enclosed with this Bid, as required in Section 00020, in the amount of not less than five percent (5%) of the total Bid. Following the Bid opening, submitted Bids may not be withdrawn for a period of 90 Calendar Days. Award of Contract will occur within this period, unless mutually agreed between the parties. The Bid guaranty may become the property of the OWNER, or the OWNER may pursue any other action allowed by law, if:

- Bidder withdraws a submitted Bid within the period stated above;
- Bidder fails to submit the required post Bid information within the period specified in Section 00020 or 00100, or any mutually agreed extension of that period; or
- Bidder fails to execute the Contract and furnish the prescribed documentation (bonds, insurance, etc.) needed to complete execution of the Contract within five (5) Working Days after notice of award, or any mutually agreed extension of that period.

GEOTECHNICAL BASELINE ACKNOWLEDGEMENT: The undersigned bidder certifies that he/she has read and understands the Geotechnical Baseline Report (GBR), the Geotechnical Data Report, the Reflection Survey Report, and all other geological and geotechnical information and data as provided in the Contract Documents, including all Addenda. ***The***

Bidder acknowledges and agrees that the GBR represents the contractual statement of the subsurface conditions reasonably anticipated to be encountered during construction. The GBR will be used to evaluate whether subsurface conditions differ materially from those indicated in the GBR.

TIME OF COMPLETION: The undersigned Bidder agrees to commence work on the date specified in the written "Notice to Proceed" to be issued by the OWNER and to **substantially** complete construction of the improvements, as required by the Project Manual, Drawings and Addenda for the Work within **six-hundred seventy (670) Calendar Days**. **If a Substantial Completion date has been specified, the Bidder further agrees to reach Final Completion within thirty (30) Calendar Days after Substantial Completion as required by the Project Manual, Drawings and Addenda for the work.** The Bidder further agrees that should the Bidder fail to **substantially complete the Work or to finally** complete the Work within the number of days indicated in the Bid or as subsequently adjusted, Bidder shall pay the liquidated damages for each consecutive day thereafter as provided below; unless the OWNER elects to pursue any other action allowed by law.

WAIVER OF ATTORNEY FEES: In submitting its bid, in consideration for the waiver of its right to attorney's fees by the OWNER, the Bidder knowingly and intentionally agrees to and shall waive the right to attorney's fees under Section 271.153 of the Texas Local Government Code in any administrative proceeding, alternative dispute resolution proceeding, or litigation arising out of or connected to any Contract awarded pursuant to this solicitation process.

LIQUIDATED DAMAGES: The Bidder understands and agrees that the timely completion of the described Work is of the essence. The Bidder and OWNER further agree that the OWNER's actual damages for delay caused by failure to timely complete the Project are difficult, if not impossible to measure. However, with respect to the additional administrative and consultant costs to be incurred by OWNER, the reasonable estimate of such damages has been calculated and agreed to by OWNER and Bidder. Therefore, the Bidder and the OWNER agree that for each and every **Calendar** Day the Work or any portion thereof, remains incomplete after the **Substantial** Completion date as established by the above paragraph, "Time of Completion", payment will be due to the Owner in the amount of two-thousand five-hundred dollars ($2,500) per **Calendar** Day as liquidated damages, not as a penalty, but for delay damages to the OWNER. If both Substantial and Final Completion dates have been specified, the Bidder and the OWNER further agree that for each and every Calendar Day the Work or any portion thereof, remains incomplete after the Final Completion date as established by the above paragraph , "Time of Completion", payment will be due to the OWNER in the amount of one-thousand, five-hundred dollars ($1,500) per Calendar Day as liquidated damages, not as a penalty, but for delay damages to the OWNER. Such amount shall be deducted by the OWNER from any Contract payment due. In the event of a default or breach by the CONTRACTOR and demand is made upon the surety to complete the project, in accordance with the Contract Documents, the surety shall be liable for liquidated damages pursuant to the Contract Documents in the same manner as the CONTRACTOR would have been.

OWNER reserves the right to reject any or all Bids and to waive any minor informality in any Bid or solicitation procedure (a minor informality is one that does not affect the competitiveness of the Bidders).

The undersigned acknowledges receipt of the following addenda:

Addendum No. 1 dated _____ Received _____

Addendum No. 2 dated _____ Received _____

Addendum No. 3 dated _____ Received _____

Addendum No. 4 dated _____ Received _____

Addendum No. 5 dated _____ Received _____

_____ _____

Secretary, *if Bidder is a Corporation Bidder

_____

(Seal) Authorized Signature

_____

Title

_____

Date

_____

_____

Address

_____

Telephone Number / FAX Number

_____

Email Address for Person Signing Bid

_____

Email Address for Bidder's Primary Contact Person

* Copy of Corporate Resolution and minutes with certificate of officer of Bidder as to authority of signatory to bind Bidder is to be signed and dated no earlier than one week before Bid date, and attached to this document.

End

DOCUMENT 00608

**ASSIGNMENT OF PROCUREMENT CONTRACT
FOR AERATION AIR BLOWERS AND AIR SUPPLY CONTROL SYSTEM**

The Contract between **the City of Austin** (Owner) and **Siemens Energy, Inc.** (Supplier) for the procurement of **Three KA66SV-GL400 Aeration Blowers for the South Austin Regional Wastewater Treatment Plant** under the Procurement Documents entitled **CIP 3333.028, SAR WWTP TRAINS A&B BLOWER REPLACEMENT, AERATION AIR BLOWERS AND AIR SUPPLY CONTROL SYSTEM PROCUREMENT DOCUMENTS** is hereby assigned, transferred, and set over to _____, the Contractor for the General Construction Work, who shall be totally responsible for all work performed by the Supplier and for the Owner's obligations and rights contained in the Procurement Documents excluding Owner's obligation to pay.

This assignment will be effective on the Effective Date of the Agreement between the Owner and the Contractor for the General Construction Work.

Assignment, Assumption and Novation Agreement

This Assignment, Assumption and Novation Agreement ("Novation Agreement") by and among the City of Austin ("City"), Siemens Energy, Inc. ("Contractor") and the successful bidder to the invitation for bids described herein ("Installing Contractor") and is made and entered into as of the last signature ("Effective Date"). The City, the Contractor and the Installing Contractor arc sometimes referred to herein individually as a "Party and collectively as the "Parties."

WHEREAS, the City is the owner of the SAR Wastewater Treatment Plant in Austin, Texas ("Plant");

WHEREAS, concurrently with the execution of this Novation Agreement, the City and the Contractor have entered into a contract ("Contract') for the purchase of aeration blowers and a blower control system for the Plant ("Blower System Equipment");

WHEREAS, the City will subsequently competitively bid the work for the installation and construction of the Blower System Equipment and associated improvements ("Blower System Improvements") through the City's competitive bid solicitation process;

WHEREAS, the Contract provides that it may be assigned to a City general for the Blower System Improvements project selected on the basis of competitive bidding;

WHEREAS, the Installing Contractor will be selected as the bidder for the construction of the Blower System Improvements through the competitive bidding process;

WHEREAS, the City and the Installing Contractor will enter into an agreement for the construction of the Blower System Improvements using the City's construction contract documents ("Construction Agreement");

WHEREAS, pursuant to this Novation Agreement, when the Construction Agreement is awarded, the City will substitute the Installing Contractor in its place with respect to the Contract;

WHEREAS, the Installing Contractor will then assume, as a substitute party, all rights, duties, liabilities and obligations of the City in and to the Contract by virtue of the assignment, assumption and novation contained herein;

NOW, THEREFORE, and in consideration of the mutual covenants set forth herein, in the Contract, and for good and valuable consideration, the receipt and sufficiency of which is hereby acknowledged, the undersigned agree as follows:

1. <u>Novation.</u>
   a. Through the execution of this Novation Agreement, the Contractor acknowledges and approves of the substitution and novation of the Installing Contractor for the City as it relates to the Contract;
   b. The City and the Contractor agree that the Installing Contractor will be substituted for the City with respect to all of the City's rights, duties, liabilities and obligations in and to the Contract, such that the resulting Contract is between the Installing Contractor and the Contractor an effectively replaces the Contract between the City and the Contractor in its entirety from and after the Effective Date;
   c. The City further agrees that it will have no further rights or claims under the Contract from and after the Effective Date, save and except those specifically reserved to the City in the Contract; and
   d. On and after the Effective Date, the Installing Contractor will accept the Novation Agreement and be bound by and to perform the obligations otherwise owed by the City under the Contract.

IN WITNESS WHREOF, the Parties hereto have executed and delivered this Novation Agreement effective as of the dates of execution set forth below.

THE CITY OF AUSTIN
By:_____
Name:_____
Title:_____
Date:_____

SIEMENS ENERGY, INC.
By:_____
Name: Tim Robyns
Title: Site Director
Date: 12/17/15

INSTALLING CONTRACTOR
By:_____
Name:_____
Title:_____
Date:_____

APPROVED AS TO FORM:

_____, 2016

By: _____
Owner's Attorney

END OF DOCUMENT

The Supplemental General Conditions contained herein amend or supplement the General Conditions, Section 00700.

ARTICLE 1 - DEFINITIONS

Add the following definition:

"1.20 Engineer/Architect (E/A): Add the following:

Name: Carollo Engineers, Inc.

Jason E. Anderson, P.E. (TBPE No. 87963)

Address: 8911 Capital of Texas Hwy North, Suite 2200, Austin, Texas, 78759"

Add the following definition:

"1.51 Allowance - Allowance is defined as "a not-to-be-exceeded amount", either individually or in the aggregate, which is established between the Owner and the Contractor as part of its Bid Proposal when the precise scope of a particular line item(s) has not been defined to a level which is adequate for the Contractor to provide a definitive line item pricing for that particular scope of Work. The use of any Allowances by the Contractor will be subject to the Owner's sole approval and it is the Owner's intent to minimize the use of Allowances to the fullest extent possible. For any Allowances which the Owner allows the Contractor to use, the following rules shall apply: (i) Allowances shall cover the cost to the Contractor of the Cost of Work; (ii) Contractor's overhead and profit associated with the stated Allowance shall be included in the Allowance; and (iii) upon completion of the portion of the Work subject to an Allowance, the Contract Amount for that portion of the Work will be adjusted based upon the approved actual cost of the Work, which will not exceed the approved aggregate amount of the Allowances."

Add the following definition:

"**1.52** "Mobilization Prompt Payment Program - The Owner's Mobilization Prompt Payment Program, will allow bimonthly payments during "critical mobilization stages" as specified in the Contract Documents by the Prime Contractor. The Mobilization Prompt Payment Program will only apply to projects with a construction cost of greater than $2,000,000."

ARTICLE 2 - PRELIMINARY MATTERS

2.4 Before Starting Construction:

Add the following modification to the end of 2.4.2.1:

.1 The Baseline Schedule and schedule submittals for Projects in the Mobilization Prompt Payment Program, must identify periods of "critical mobilization." The periods of critical mobilization will include the first two months of the Contract Time and additional periods identified by the Contractor and approved by Owner when peak Subcontractor mobilization will occur.

Delete 2.4.2.6 and replace with the following (changes to the original text are identified by underlining):

"**.6** a preliminary schedule of values for all of the Work, subdivided into component parts in sufficient detail to serve as the basis for progress payments during construction. At a minimum, the schedule of values shall be broken out by trade and split between materials and labor. Prices will include an appropriate amount of overhead and profit applicable to each item of Work;"

ARTICLE 5 - BONDS AND INSURANCE

"5.3 Insurance:

5.3.1 CONTRACTOR Provided Insurance

5.3.1.1 General Requirements.

.1 CONTRACTOR shall carry insurance in the types and amounts indicated below for the duration of the Contract, which shall include items owned by OWNER in the care, custody and control of CONTRACTOR prior to and during construction and warranty period.

.2 CONTRACTOR must complete and forward the Certificate of Insurance, Section 00650, to OWNER before the Contract is executed as verification of coverage required below. CONTRACTOR shall not commence Work until the required insurance is obtained and until such insurance has been reviewed by OWNER. Approval of insurance by OWNER shall not relieve or decrease the liability of CONTRACTOR hereunder and shall not be construed to be a limitation of liability on the part of CONTRACTOR. CONTRACTOR must also complete and forward the Certificate of Insurance, Section 00650, to OWNER whenever a previously identified policy period has expired as verification of continuing coverage.

.3 CONTRACTOR's insurance coverage is to be written by companies licensed to do business in the State of Texas at the time the policies are issued and shall be written by companies with A.M. Best ratings of B+VII or better, except for hazardous material insurance which shall be written by companies with A.M. Best ratings of A- or better.

.4 All endorsements naming the OWNER as additional insured, waivers, and notices of cancellation endorsements as well as the Certificate of Insurance shall indicate: City of Austin, Capital Contracting Office, P.O. Box 1088, Austin, Texas 78767.

.5 The "other" insurance clause shall not apply to the OWNER where the OWNER is an additional insured shown on any policy. It is intended that policies required in the Contract, covering both OWNER and CONTRACTOR, shall be considered primary coverage as applicable.

.6 If insurance policies are not written for amounts specified below, CONTRACTOR shall carry Umbrella or Excess Liability Insurance for any differences in amounts specified. If Excess Liability Insurance is provided, it shall follow the form of the primary coverage.

.7 OWNER shall be entitled, upon request and without expense, to receive certified copies of policies and endorsements thereto and may make any

reasonable requests for deletion or revision or modification of particular policy terms, conditions, limitations, or exclusions except where policy provisions are established by law or regulations binding upon either of the parties hereto or the underwriter on any such policies.

.8 OWNER reserves the right to review the insurance requirements set forth during the effective period of this Contract and to make reasonable adjustments to insurance coverage, limits, and exclusions when deemed necessary and prudent by OWNER based upon changes in statutory law, court decisions, the claims history of the industry or financial condition of the insurance company as well as CONTRACTOR.

.9 CONTRACTOR shall not cause any insurance to be canceled nor permit any insurance to lapse during the term of the Contract or as required in the Contract.

.10 CONTRACTOR shall be responsible for premiums, deductibles and self-insured retentions, if any, stated in policies. All deductibles or self-insured retentions shall be disclosed on the Certificate of Insurance.

.11 CONTRACTOR shall provide OWNER thirty (30) days written notice of erosion of the aggregate limits below occurrence limits for all applicable coverages indicated within the Contract.

.12 If OWNER owned property is being transported or stored off-site by CONTRACTOR, then the appropriate property policy will be endorsed for transit and storage in an amount sufficient to protect OWNER's property.

.13 The insurance coverages required under this contract are required minimums and are not intended to limit the responsibility or liability of CONTRACTOR.

5.3.1.2 Business Automobile Liability Insurance. Provide coverage for all owned, non-owned and hired vehicles. The policy shall contain the following endorsements in favor of OWNER:

a) Waiver of Subrogation endorsement CA 0444;

b) 30 day Notice of Cancellation endorsement CA 0244; and

c) Additional Insured endorsement CA 2048.

Provide coverage in the following types and amounts:

.2 A minimum combined single limit of $<1,000,000 minimum> per occurrence for bodily injury and property damage.

5.3.1.3 Workers' Compensation And Employers' Liability Insurance. Coverage shall be consistent with statutory benefits outlined in the Texas Workers' Compensation Act (Section 401). CONTRACTOR shall assure compliance with this Statute by submitting two (2) copies of a standard certificate of coverage (e.g. ACCORD form) to Owner's Representative for every person providing services on the Project as acceptable proof of coverage. The Certificate of Insurance, Section 00650, must be presented as evidence of coverage for CONTRACTOR. CONTRACTOR's policy shall apply to the State of Texas and include these endorsements in favor of OWNER:

a) Waiver of Subrogation, form WC 420304; and

b) 30 day Notice of Cancellation, form WC 420601.

The minimum policy limits for Employers' Liability Insurance coverage shall be as follows:

.1 $100,000 bodily injury per accident, $500,000 bodily injury by disease policy limit and $100,000 bodily injury by disease each employee.

5.3.1.4 Commercial General Liability Insurance. The Policy shall contain the following provisions:

a) Contractual liability coverage for liability assumed under the Contract and all contracts relative to this Project.

b) Completed Operations/Products Liability for the duration of the warranty period.

c) Explosion, Collapse and Underground (X, C & U) coverage.

d) Independent Contractors coverage (Contractors/ Subcontractors work).

e) Aggregate limits of insurance per project, endorsement CG 2503.

f) OWNER listed as an additional insured, endorsement CG 2010 and CG 2037 or equivalent.

g) 30 day notice of cancellation in favor of OWNER, endorsement CG 0205.

h) Waiver of Transfer of Recovery Against Others in favor of OWNER, endorsement CG 2404.

Provide coverages A&B with minimum limits as follows:

.1 A combined bodily injury and property damage limit of $<1,000,000 minimum> per occurrence.

5.3.1.5 Builders' Risk Insurance. CONTRACTOR shall maintain Builders' Risk Insurance or Installation Insurance on an all risk physical loss form in the Contract Amount. Coverage shall continue until the Work is accepted by OWNER. OWNER shall be a loss payee on the policy. If off-site storage is permitted, coverage shall include transit and storage in an amount sufficient to protect property being transported or stored.

5.3.1.6 Hazardous Materials Insurance.

For Work which involves asbestos or any hazardous materials or pollution defined as asbestos, CONTRACTOR or Subcontractor responsible for the Work shall comply with the following insurance requirements in addition to those specified above:

.1 Provide an asbestos abatement endorsement to the Commercial General Liability policy with minimum bodily injury and property damage limits of $1,000,000 per occurrence for coverages A&B and products/completed operations coverage with a separate aggregate of $1,000,000. This policy shall not exclude asbestos or any hazardous materials or pollution defined as asbestos, and shall provide "occurrence" coverage without a sunset clause. The policy shall provide 30 day Notice of Cancellation and Waiver of Subrogation endorsements in favor of OWNER.

.2 CONTRACTOR or Subcontractor responsible for transporting asbestos or any hazardous materials defined as asbestos shall provide pollution coverage. Federal law requires interstate or intrastate transporters of asbestos to provide an MCS 90 endorsement with a $5,000,000 limit when transporting asbestos in bulk in conveyances of gross vehicle weight rating of 10,000 pounds or more. Interstate transporters of asbestos in non-bulk in conveyances of gross vehicle weight rating of 10,000 pounds or more must provide an MCS 90 endorsement with a $1,000,000 limit. The terms "conveyance" and "bulk" are defined by Title 49 CFR 171.8. All other transporters of asbestos shall provide either an MCS 90 endorsement with

minimum limits of $1,000,000 or an endorsement to their Commercial General Liability Insurance policy which provides coverage for bodily injury and property damage arising out of the transportation of asbestos. The endorsement shall, at a minimum, provide a $1,000,000 limit of liability and cover events caused by the hazardous properties of airborne asbestos arising from fire, wind, hail, lightning, overturn of conveyance, collision with other vehicles or objects, and loading and unloading of conveyances.

.3 CONTRACTOR shall submit complete copies of the policy providing pollution liability coverage to OWNER.

5.3.1.7 Professional Liability Insurance. For Work which requires professional engineering or professional survey services to meet the requirements of the Contract, including but not limited to excavation safety systems, traffic control plans, and construction surveying, the CONTRACTOR or Subcontractors, responsible for performing the professional services shall provide Professional Liability Insurance with a minimum limit of $500,000 per claim and in the aggregate to pay on behalf of the assured all sums which the assured shall become legally obligated to pay as damages by reason of any negligent act, error, or omission committed with respect to all professional services provided in due course of the Work of this Contract.

ARTICLE 6 - CONTRACTOR'S RESPONSIBILITIES

6.6 Permits, Fees: Add the following:

"OWNER will obtain and pay for the following permits, licenses and/or fees:

.1 Site Development Permit.

.2 Building Permit(s). OWNER's responsibility for obtaining and paying for the Building Permit(s) shall be limited to the following where applicable: the required Electrical Service (Aid of Construction) Fee, Water and Wastewater Tap Fees, Water and Wastewater Capital Recovery Fees, and Septic Permit Fee. The OWNER's responsibility for obtaining and paying for the Building Permit(s) excludes securing and paying for the following where applicable: Driveway Permit (Concrete) Fee, Electrical Permit, Mechanical Permit, Plumbing Permit, Water Engineering Inspection Fee, Temporary Use of Right-of Way Permit, the gas company's Gas Yard Line Contribution Fee, and any other permits/fees not listed above.

6.7 Laws and Regulations: Add the following:

"**6.7.4** This Work is subject to the Texas Pollution Discharge Elimination System (TPDES) permitting requirements for the installation and maintenance of temporary and permanent erosion and sediment controls and storm water pollution prevention measures throughout the construction period.

OWNER has prepared a Storm Water Pollution Prevention Plan (SWPPP). Reference Section 01096 for this SWPPP.

OWNER shall file the Owner's Notice of Intent and Notice of Termination to the Texas Commission on Environmental Quality (TCEQ). OWNER shall pay the TPDES storm water application fee.

CONTRACTOR's responsibilities are as follows.

.1 File a Notice of Intent (NOI) form with the TCEQ at least two (2) days prior to start of construction activity and pay for the permit. Form is available from OWNER or on the Internet at http://www.tceq.state.tx.us/assets/public/permitting/waterquality/forms/20022.pdf.

The form shall be mailed or submitted online to the TCEQ. If submitting online, the web address is https://www6.tceq.state.tx.us/steers/. If CONTRACTOR has not already registered to use the TCEQ online application submittal service, it will take up to ten (10) Working Days to receive a user name and password. CONTRACTOR shall take this timeframe into consideration if applying online. A Time Extension shall not be granted for this timeframe.

The mailing address is:

Texas Commission on Environmental Quality
Storm Water & General Permits Team; MC-228
P.O. Box 13087
Austin, TX 78711-3087

A copy of the completed Notice of Intent (NOI) form must also be mailed to the local Municipal Separate Storm Sewer Systems (MS4) representative:

TPDES Program Coordinator
City of Austin – WPD – ERM
P.O. Box 1088
Austin, TX 78767

.2 Obtain a signed certification statement from all Subcontractors responsible for implementing the erosion and sediment control measures. This statement shall indicate that the Subcontractor understands the permit requirements. The certified statement forms shall be attached to and become part of the SWPPP.

.3 Post a notice near the main entrance of the Work with the following information.

- The TPDES permit number for the Work or a copy of the NOI if a permit number has not yet been assigned,
- The name and telephone number of a local contact person,
- A brief description of the Work, and
- The location of the SWPPP if the site is inactive or does not have an on-site location to store the plan.

If posting this information near a main entrance is infeasible due to safety concerns, the notice must be posted in a local public building. If the Work is linear (pipeline, highway, etc.), the notice must be placed in a publicly accessible location near where construction is actively underway and moved as necessary. For linear Work, multiple postings of the information may be required by OWNER (e.g. postings at both ends of the Work).

.4 Maintain all erosion and sediment control measures and other protective measures identified in the SWPPP in effective operating condition.

.5 Perform inspections every five (5) working days and after every ½ inch rainfall event, noting the following observations on an inspection form provided by OWNER:

- Locations of discharges of sediment or other pollutants from the site.

- Locations of storm water / erosion / sedimentation controls that are in need of maintenance.
- Locations of storm water / erosion / sedimentation controls that are not performing, failing to operate, or are inadequate.
- Locations where additional storm water / erosion / sedimentation controls are needed.

.6 Maintain at Work site at all times a copy of the SWPPP (with all updates, as described below) and inspection reports.

.7 Update the SWPPP as necessary to comply with TPDES permitting requirements, which includes noting changes in erosion / sedimentation controls and other best management practices that are part of the SWPPP and which may be necessary due to the results of inspection reports. Any SWPPP revisions or updates must be signed and certified by a Certified Professional in Erosion and Sedimentation Control (CPESC) or a Registered Professional Engineer. If the SWPPP includes engineering calculations, then SWPPP must be sealed and signed by a Registered Professional Engineer.

.8 File a Notice of Termination with the TCEQ within thirty (30) days of final stabilization on all portions of the Work site. Form is available from OWNER or on the Internet at http://www.tceq.state.tx.us/assets/public/permitting/waterquality/forms/20023.pdf.

The NOT shall be mailed to:
Storm Water & General Permits Team; MC-228
P.O. Box 13087
Austin, TX 78711-3087
(512) 239-4671

.9 Upon completion of the Work, provide TPDES records to OWNER."

6.11 Safety and Protection: Add the following to paragraph 6.11.3:

"6.11.3 At the minimum, the safety representative will be certified in personal protective equipment, hazard communication, demolition and blasting, trench/excavation, hand and power tools, welding/cutting, cranes/derricks/hoists/conveyors/, scaffolding, confined space, CPR and first aid."

ARTICLE 11 - CHANGE OF CONTRACT AMOUNT

11.4 Determination of Value of Work: Add the following to paragraph 11.4.1.2:

"11.4.1.2 In the case of a Change Order determined by a mutually agreed lump sum or unit price properly itemized and supported by sufficient substantiating data, including documentation by subcontractors performing the work, to permit evaluation, the following method may be used:

COMPONENT ONE - The R.S. Means Co., Inc. 'Building Construction Cost Data' - latest edition - will be used as a basis for evaluating:

1a - the cost of labor (base rate, including fringe benefits),

1b - the cost of material and equipment to be incorporated in the Work, and

1c - the cost of tools, equipment and facilities necessary to accomplish the Work described in the change.

COMPONENT TWO - The costs of payroll taxes and insurance, Liability and Builder's Risk Insurance, shall be calculated as follows:

2a - Payroll taxes and Workers' Compensation Insurance <25% of payroll (Item 1a) (14.65% of 1a for ROCIP Projects)>

2b - Liability and Builder's Risk Insurance <2% of "total costs" (Items 1a, 1b, 1c, and 2a) (.034% of "total costs" for ROCIP Projects)>

COMPONENT THREE - Overhead and profit shall be calculated as follows:

3a - For Subcontractors and for those portions of the Work performed by CONTRACTOR'S own forces:

15% of the first $10,000.00 of costs and 10% of the balance over $10,000.00.

("costs" = Items 1a, 1b, and 1c, above, broken down into Contractor and Subcontractor costs).

3b - For the CONTRACTOR for that portion of the Work performed by Subcontractors:

10% of the first $10,000.00 of the Subcontractor costs and 7.5% of the balance over $10,000.00.

("costs" = Items 1a, 1b, and 1c, above, broken down into Subcontractor costs)

COMPONENT FOUR - Bonds

Performance and Payment Bond according to the following table ("TOTAL COST" = Items 1a, 1b, 1c, 2a, 2b, 3a and 3b,):

DOLLAR VALUE OF CONTRACT			% OF TOTAL COST OF CHANGE ORDER ADDED FOR BOND EXPENSE
100,000	or	less	2.5
100,001	thru	500,000	1.5
500,001	thru	2,500,000	1.0
2,500,001	thru	5,000,000	0.75
5,000,001	thru	7,500,000	0.70
OVER 7,500,000			0.65

- The total costs for the change, whether additive or deductive, shall be the sum total of COMPONENTS ONE - FOUR.

ARTICLE 13 - TESTS AND INSPECTIONS; CORRECTION, REMOVAL OR ACCEPTANCE OF DEFECTIVE WORK

13.7 Warranty Period: Add the following:

"**13.7.5** OWNER will utilize a "Warranty Item Form" (attached at the end of this Section) for the purpose of providing Written Notice of warranty defects to CONTRACTOR. CONTRACTOR shall date, sign, complete and return the form to OWNER when the defect is corrected, including such information on or attached to the form to describe the nature of the repairs or corrections that were made. If the defect cannot be corrected in seven (7) Calendar Days, CONTRACTOR shall provide a written explanation to the Owner's Representative describing the repairs needed and the time required to complete the repairs."

ARTICLE 14 - PAYMENTS TO CONTRACTOR AND COMPLETION

14.1 Application for Progress Payment: Delete 14.1.1 and replace with the following (changes to the original text are identified by underling):

"14.1.1 No more often than once a month, unless authorized as part of the Mobilization Prompt Payment Program, CONTRACTOR shall submit to Owner's Representative for review a completed and executed Application for Payment, in a form acceptable to OWNER, covering the Work completed as of the date of the Application and not previously paid and accompanied by such supporting documentation as required by the Contract Documents.

Add the following .1:

.1 - Mobilization Prompt Payment Program. During critical mobilization periods, as identified by the CONTRACTOR and as approved by OWNER in accordance with 00700 2.4.2.1 of this Contract, CONTRACTOR shall submit bi-monthly Applications for Payment. The additional Pay Applications will include any costs accrued during the periods of critical mobilization. The Program will allow the CONTRACTOR and Subcontractors to invoice for costs as they are accrued during periods of critical mobilization. The CONTRACTOR shall submit bimonthly invoices to the OWNER for such costs. The CONTRACTOR shall pay Subcontractors for costs within 10 days of receipt of payment from OWNER.

14.7 Substantial Completion:

Add the following:

"**14.7.3 Substantial Completion**

.1 Phase 1 Substantial Completion - Blower 1 must have been installed, tested, placed into service, and providing beneficial use to the City of Austin, powered either from temporary power, or the proposed permanent electrical gear.

.2 Phase 2 Substantial Completion - Blower 2 must have been installed, tested, placed into service, and providing beneficial use to the City of Austin, powered from the proposed permanent electrical gear.

.3 Phase 3 Substantial Completion - The remainder of the Work substantially complete; Blower 3, the entirety of the aeration header, associated air distribution piping, the diffuser grids in all three trains, and the modifications to the Train C Blowers must have been installed, tested, placed into service, and must be providing beneficial use to the City of Austin."

14.8 Partial Utilization: Delete 14.8.1 and replace with the following (changes to the original text are identified by underlining):

".1 OWNER at any time may request CONTRACTOR to permit OWNER to use any such part of the Work which OWNER believes to be ready for its intended use and substantially complete. If CONTRACTOR agrees that such part of the Work is substantially complete, CONTRACTOR will certify to Owner's Representative that such part of the Work is substantially complete and request Owner's Representative to issue a notice specifying what portion of the Work is substantially complete for the purpose of payment and what Work remains to be done on the portion being accepted. CONTRACTOR at any time may notify Owner's Representative that CONTRACTOR considers any such part of the Work ready for its intended use and substantially complete and request Owner's Representative to issue a notice specifying what portion of the Work is partially completed for the purpose of payment and what Work remains to be done on the portion being accepted. The provisions of paragraphs 14.7.1 and 14.7.2 will apply with respect to the notice specifying what portion of the Work is partially completed for the purpose of payment and what Work remains to be done on the portion being accepted."

14.10 Final Application for Payment: Add the following paragraph(s) to 14.10:

".10 TPDES records in accordance with 6.7.4."

WARRANTY ITEM NO. _____ **SAR WWTP TRAIN A & B BLOWER REPLACEMENT PROJECT**

The General Conditions of the Contract require that Warranty Defects be corrected within 7 days after written notice is received.

TO: _____
contractor name address / telephone / fax / email

ATTENTION OF: _____

FROM: _____
project manager name / address / telephone / fax / email

PROJECT: _____
name / location / CIP ID number

END OF ONE YEAR WARRANTY:_____

SUBJECT:_____

[ ] If checked, the damage requires immediate attention. The Contractor has been called.
[ ] If checked, the Consultant has been asked to consult with the Contractor on the problem.

PLEASE CORRECT OR REPAIR THE FOLLOWING ITEM(S):

DATE OF REQUEST_____ **SIGNATURE** _____
Project Manager

xc:
[ ] _____Phone No._____
[ ] _____Phone No._____
[ ] _____Phone No._____
[ ] _____Phone No._____

RESPONSE FROM CONTRACTOR: DATE CORRECTION WAS MADE:_____

The Contractor must endeavor to correct the defect within 7 calendar days after written notice is given. If the defect cannot be corrected in that time, Contractor shall provide a written explanation to the Owner's Representative describing the repairs needed and the time required to complete the repairs.

Description of corrections made:

DATE OF REPLY_____SIGNATURE_____

When the repair is complete, the contractor should return a copy to each of the following:

[ ] _____Phone No._____
[ ] _____Phone No._____
[ ] _____Phone No._____
[ ] _____Phone No._____

END

PREVAILING WAGE RATE DETERMINATION

HEAVY AND HIGHWAY CONSTRUCTION

COUNTY NAME: TRAVIS

Wages based on DOL General Decision:TX160016 1/8/2016 TX16

Classification	Wage Rate	Classification	Wage Rate
Agricultural Tractor Operator	$ 12.69	Laborer, Utility	$ 12.27
Asphalt Distributor Operator	$ 15.55	Loader/Backhoe Operator	$ 14.12
Asphalt Paving Machine Operator	$ 14.36	Mechanic	$ 17.10
Asphalt Raker	$ 12.12	Milling Machine	$ 14.18
Boom Truck Operator	$ 18.36	Motor Grader Operator - Fine Grade	$ 18.51
Broom or Sweeper Operator	$ 11.04	Motor Grader Operator - Rough	$ 14.63
Cement Mason/Concrete Finisher	$ 12.56	Painter - Structures	$ 18.34
Concrete Pavement Finishing Machine Operator	$ 15.48	Pavement Marking Machine Operator	$ 19.17
		Pipelayer	$ 12.79
Crane, Hydraulic 80 tons or less	$ 18.36	Reclaimer/Pulverizer	$ 12.88
Crane, Lattice Boom, 80 tons or less	$ 15.87	Reinforcing Steel Setter	$ 14.00
Crane, Lattice Boom, over 80 tons	$ 19.38	Roller Operator, Asphalt	$ 12.78
Crawler Tractor	$ 15.67	Roller Operator, Other	$ 10.50
Directional Drilling Locator	$ 11.67	Scraper Operator	$ 12.27
Directional Drilling Operator	$ 17.24	Servicer	$ 14.51
Electrician	$ 26.35	Spreader Box Operator	$ 14.04
Excavator, 50,000 lbs. or less	$ 12.88	Structural Steel Worker	$ 19.29
Excavator, over 50,000 lbs.	$ 17.71	Traffic Signal Installer/Light Pole Worker	$ 16.00
Flagger	$ 10.15	Trenching Machine Operator, Heavy	$ 18.48
Form Builder/Form Setter - Paving & Curb	$ 12.94	Truck Driver Tandem Axle Semi-Trailer	$ 12.81
Form Builder/Form Setter - Structures	$ 12.87	Truck Driver, Lowboy-Float	$ 15.66
Foundation Drill Operator, Truck Mounted	$ 16.93	Truck Driver, Single Axle	$ 11.79
		Truck Driver, Off Road Hauler	$ 11.88
Front End Loader Operator, 3CY or less	$ 13.04	Truck Driver, Single or Tandem Axle Dump Truck	$ 11.68
Front End Loader Operator, over 3 CY	$ 13.21	Welder	$ 15.97
Laborer, Common	$ 10.50	Work Zone Barricade Servicer	$ 11.85

http://www.wdol.gov/wdol/scafiles/davisbacon/tx.html

The Wage Compliance information detailed below was excerpted from General Decision TX20070043 or other DOL sources.

1. **Additional Trade information:**
   Unlisted classifications needed for work not listed within the scope of the classifications listed may be added upon the advance approval of Contract Procurement. CONTRACTOR shall submit to City of Austin Contract Procurement the following: classification, a bona fide definition of work to be performed and a proposed wage with sample payrolls conforming to area practice **prior** to the start of the job for that type of work. Proposed trade may not be performed by any trade already listed.

2. **Wages**
   For overtime, the basic hourly rate listed in the contract wage determination must be used in computing pay obligations.

3. Proper Designation of Trade

A work classification from the Prevailing Wage Poster for each worker must be made based on the actual type of work he/she performed on the job. In summary the work performed, not the "title" determines the correct worker classification and wage. Each worker must be paid no less than the wage rate on the wage decision for that classification **regardless** of his/her level of skill (exclusive of a bona fide apprentice currently registered in a DOL approved apprentice program - proof of individual registration must be supplied in advance to the City of Austin).

4. Split Classification

If a firm has employees that perform work in more than one classification, it can pay the wage rates specified for each classification ONLY if it maintains accurate time records showing the amount of time spent in each classification. If accurate time records are not maintained, these employees must be paid the highest wage rate of all the classifications of work performed by each worker. Accurate time records tracking how many hours a worker performed the work of one trade and then switched to another trade must be accounted for on a daily basis and reflected on Employer Certified Payroll accordingly.

WELDERS - Receive rate prescribed for craft performing operation to which welding is incidental.

==========

Unlisted classifications needed for work not included within the scope of the classifications listed may be added after award only as provided in the labor standards contract clauses (29CFR 5.5 (a) (1) (ii)).

In the listing above, the "SU" designation means that rates listed under the identifier do not reflect collectively bargained wage and fringe benefit rates. Other designations indicate unions whose rates have been determined to be prevailing.

WAGE DETERMINATION APPEALS PROCESS

1.) Has there been an initial decision in the matter? This can be:

* an existing published wage determination
* a survey underlying a wage determination
* a Wage and Hour Division letter setting forth a position on a wage determination matter
* a conformance (additional classification and rate) ruling

On survey related matters, initial contact, including requests for summaries of surveys, should be with the Wage and Hour Regional Office for the area in which the survey was conducted because those Regional Offices have responsibility for the Davis-Bacon survey program. If the response from this initial contact is not satisfactory, then the process described in 2.) and 3.) should be followed.

With regard to any other matter not yet ripe for the formal process described here, initial contact should be with the Branch of Construction Wage Determinations. Write to:

Branch of Construction Wage Determinations
Wage and Hour Division
U.S. Department of Labor
200 Constitution Avenue, N.W.
Washington, DC 20210

2.) If the answer to the question in 1.) is yes, then an interested party (those affected by the action) can request review and reconsideration from the Wage and Hour Administrator (See 29 CFR Part 1.8 and 29 CFR Part 7). Write to:

Wage and Hour Administrator
U.S. Department of Labor

200 Constitution Avenue, N.W.
Washington, DC 20210

The request should be accompanied by a full statement of the interested party's position and by any information (wage payment data, project description, area practice material, etc.) that the requestor considers relevant to the issue.

3.) If the decision of the Administrator is not favorable, an interested party may appeal directly to the Administrative Review Board (formerly the Wage Appeals Board). Write to:

Administrative Review Board
U.S. Department of Labor
200 Constitution Avenue, N.W.
Washington, DC 20210

4.) All decisions by the Administrative Review Board are final.

==========

SECTION 03071

EPOXIES

PART 1 GENERAL

1.01 SUMMARY

A. Section includes:
   1. Epoxy.
   2. Epoxy gel.
   3. Epoxy bonding agent.

B. Related sections:
   1. The Contract Documents are complementary; what is called for by one is as binding as if called for by all.
   2. It is the Contractor's responsibility for scheduling and coordinating the Work of subcontractors, suppliers, and other individuals or entities performing or furnishing any of Contractor's Work.
   3. The following Sections are related to the Work described in this Section. This list of Related Sections is provided for convenience only and is not intended to excuse or otherwise diminish the duty of the Contractor to see that the completed Work complies accurately with the Contract Documents.
      a. Section 03072 - Epoxy Resin/Portland Cement Bonding Agent.

1.02 REFERENCES

A. ASTM International (ASTM):
   1. D 638 - Standard Test Method for Tensile Properties of Plastics.
   2. D 695 - Standard Test Method for Compressive Properties of Rigid Plastics.
   3. D 790 - Standard Test Methods for Flexural Properties of Unreinforced and Reinforced Plastics and Electrical Insulating Materials.

1.03 SYSTEM DESCRIPTION

A. Performance requirements:
   1. Provide epoxy materials that are new and use them within shelf life limitations set forth by manufacturer.
   2. Perform and conduct work of this Section in neat orderly manner.

1.04 SUBMITTALS

A. Product Data: Submit manufacturer's data completely describing epoxy materials.

B. Quality control submittals:
   1. Manufacturer's installation instructions.

PART 2 PRODUCTS

2.01 MATERIALS

A. Epoxy: Water-insensitive 2-part type low viscosity epoxy adhesive material containing 100 percent solids and meeting or exceeding following characteristics when tested in accordance with standards specified: Manufacturers: One of the following or equal:
   1. BASF, MBT, Concresive Standard LVI.
   2. Sika Chemical Corp., Sikadur 35 Hi-Mod LV.

PHYSICAL CHARACTERISTIC	TEST METHOD	REQUIRED RESULTS
Tensile Strength	ASTM D 638	8,000 pounds per square inch minimum at 14 days and 77 degrees Fahrenheit cure.
Flexure Strength	ASTM D 790	11,000 pounds per square inch minimum at 14 days and 77 degrees Fahrenheit cure.
Compressive Strength	ASTM D 695	16,000 pounds per square inch minimum at 24 hours and 77 degrees Fahrenheit cure.
Bond Strength	--	Concrete shall fail before failure of epoxy.
Gel Time for 5 Mil Film	--	4 hours maximum at 77 degrees Fahrenheit.
Elongation	ASTM D 638	1 percent minimum at 14 days and 77 degrees Fahrenheit.

B. Epoxy gel: Manufacturers: One of the following or equal:
   1. Sika Chemical Corp., Sikadur 31, Hi-Mod Gel.

C. Epoxy bonding agent: Manufacturers: One of the following or equal:
   1. BASF, MBT, Concresive Liquid LPL.
   2. Sika Chemical Corp., Sikadur 32 Hi-Mod LPL.
   3. If increased tack time is required for concrete placement, epoxy resin/portland cement bonding agent as specified in Section 03072 may be used instead of epoxy bonding agent.

PART 3 EXECUTION

3.01 INSTALLATION

A. Install and cure epoxy materials in accordance with manufacturer's installation instructions.

B. Epoxy:
   1. Apply in accordance with manufacturer's installation instructions.

C. Epoxy gel:
   1. Apply in accordance with manufacturer's installation instructions.
   2. Use for vertical or overhead work, or where high viscosity epoxy is required.
   3. Epoxy gel used for vertical or overhead work may be used for horizontal work.

D. Epoxy bonding agent:
   1. Apply in accordance with manufacturer's installation instructions.
   2. Bonding agent will not be required for filling form tie holes or for normal finishing and patching of similar sized small defects.

END OF SECTION

SECTION 03925

CONCRETE REPAIR

PART 1 GENERAL

1.01 SUMMARY

A. Section includes: Field repair of existing concrete.

B. Related sections:
1. The Contract Documents are complementary; what is called for by one is as binding as if called for by all.
2. It is the Contractor's responsibility for scheduling and coordinating the Work of subcontractors, suppliers, and other individuals or entities performing or furnishing any of Contractor's Work.
3. The following Sections are related to the Work described in this Section. This list of Related Sections is provided for convenience only and is not intended to excuse or otherwise diminish the duty of the Contractor to see that the completed Work complies accurately with the Contract Documents.
   a. Section 03931 - Epoxy Injection System.
   b. Section 09960 - High-Performance Coatings.

1.02 REFERENCES

A. ASTM International (ASTM):
1. C 109 - Standard Test Method for Compressive Strength of Hydraulic Cement Mortars (Using 2-in. or [50-millimeter] Cube Specimens).
2. C 496 - Standard Test Method for Splitting Tensile Strength of Cylindrical Concrete Specimens.
3. C 580 - Standard Test Method for Flexural Strength and Modulus of Elasticity of Chemical-Resistant Mortars, Grouts, Monolithic Surfacings, and Polymer Concretes.
4. C 666 - Standard Test Method for Resistance of Concrete to Rapid Freezing and Thawing.
5. C 882 - Standard Test Method for Bond Strength of Epoxy-Resin Systems Used With Concrete By Slant Shear.
6. C 884 - Standard Test Method for Thermal Compatibility Between Concrete and an Epoxy-Resin Overlay.
7. D 16 - Standard Terminology for Paint, Related Coatings, Materials, and Applications.
8. D 624 - Standard Test Method for Tear Strength of Conventional Vulcanized Rubber and Thermoplastic Elastomers.
9. D 638 - Standard Test Method for Tensile Properties for Plastic.
10. D 1653 - Standard Test Methods for Water Vapor Transmission of Organic Coating Films.
11. D 2240 - Standard Test Method for Rubber Property - Durometer Hardness.
12. D 2794 - Standard Test Method for Resistance of Organic Coatings to the Effects of Rapid Deformation (Impact).
13. D 4060 - Standard Test Method for Abrasion Resistance of Organic Coatings by the Taber Abraser.

14. D 4264 - 90 Test Method for Pressure Testing of Assemblies of Rubber-Lines Fire Hose and Rubber Booster Hose in Service on Interior Standpipes.
15. F 1249 - Standard Test Method for Water Vapor Transmission Rate Through Plastic Film Sheeting Using a Modulated Infrared Sensor.

B. The Society for Protective Coatings (SSPC):
1. SP-2 - Hand Tool Cleaning.
2. SP-3 - Power Tool Cleaning.
3. SP-10 - Near-White Blast Cleaning.

C. United States Department of Agriculture (USDA).

1.03 DESCRIPTION OF WORK

A. Furnish all labor, tools, equipment, materials, and other items required to:
1. Repair damaged/deteriorated concrete as determined necessary and as required by Engineer; if required, it will be added as change order.
   a. Do not include in Total Bid Amount.
2. Repair cracks in concrete by epoxy injection, as specified in Section 03931 as determined necessary and as required by Engineer; if required, it will be added as change order.
   a. Do not include in Total Bid Amount.

B. As determined necessary by Engineer, remove piping, fittings, and associated items where work is to be accomplished.
1. Replace and coat such items upon completion of work.

1.04 AREAS OF WORK

A. Interior surfaces of existing concrete structures as indicated on the Drawings and described herein:
1. Prepare, and repair all interior surfaces.

1.05 SEQUENCE OF WORK

A. Prepare interior surfaces of concrete structures in preparation for viewing by Engineer, Owner, Contractor, and coating manufacturer's technical representative:
1. Steam clean and degrease all interior surfaces.
2. Remove any items as required by Engineer, such as piping, brackets, prior to abrasive blast cleaning of concrete surfaces.
3. Abrasive blast clean all concrete surfaces to remove loose concrete and provide a "broom" type finish similar to 60-grit sandpaper.
4. Work shall be completed within 7 days after structure is taken out of service.

B. Upon completion of review of interior surfaces of each structure by Engineer and determination made by Engineer that concrete repair is required, Contractor shall prepare and submit a cost proposal to Engineer for concrete repair work to be completed.

C. Complete all modification work in concrete structures as specified in Contract Documents:
1. Replace all items previously removed and prepare for coating application.

D. Complete all concrete repair work, necessary epoxy injection work, additional abrasive blast cleaning, and coating application as specified and required by Engineer and in this Section.

1.06 SUBMITTALS

A. Shop drawings: Submit prior to start of work.

B. Product data (general): Submit prior to start of work.

C. Testing procedure in accordance with ASTM F 1249.

D. Manufacturer's instructions: Submit in accordance with requirements for product data.

E. Manufacturer's technical representative's field reports.

1.07 QUALITY ASSURANCE

A. Qualifications of concrete repair contractor:
   1. Manufacturer of specified concrete repair products shall have in existence, for a minimum of 10 years, a program of training, certifying, and technically supporting a nationally organized approved contractor program with annual recertification of its participants.
   2. Provide list of at least 5 job references where contractor has successfully repaired spalled concrete surfaces.

B. Regulatory requirements: Include requirements concerning the following:
   1. Abrasives and abrasive blast cleaning techniques and disposal.

C. Pre-installation conference:
   1. Conduct prior to start of work at mutually agreed time by Owner and Contractor.

1.08 DELIVERY, STORAGE, AND HANDLING

A. Remove unspecified and unapproved materials from Project site immediately.

B. Deliver containers with labels identifying the manufacturer's name, brand name, product type, batch number, date of manufacturer, expiration date or shelf life, color, and mixing and reducing instructions.

C. Store materials in a well-ventilated facility that provides protection from the sun, weather, and fire hazards.
   1. Maintain ambient storage temperature between 45 and 90 degrees Fahrenheit, unless otherwise recommended by the manufacturer.

D. Take precautions to prevent fire and spontaneous combustion.

1.09 WARRANTY

A. Provide 3-year warranty for all concrete repair work accomplished under this Contract stating that Contractor will provide all labor and materials to repair any defects that occur within 3 years from completion and acceptance date of work at no cost to Owner.

PART 2 PRODUCTS

2.01 MANUFACTURERS

A. Polymer-modified portland cement mortar concrete repair materials: One of the following or equal:
   1. Saueriesen Cements, Pittsburgh, PA.

2.02 MATERIALS

A. Polymer-modified portland cement mortar for horizontal surfaces:
   1. Component A: Liquid polymer emulsion of an acrylic copolymer base and additives. Provide acrylic copolymer with following properties:
      a. pH: 4.5 to 6.5.
      b. Film forming temperature: 73 degrees Fahrenheit maximum.
      c. Tear strength: 950 pounds per square inch minimum.
      d. Elongation at break: 500 percent minimum.
      e. Particle size: Less than 0.1 micron.
   2. Component B: Blend of selected portland cements, specially graded aggregates, admixtures for controlling setting time, water reducers for workability, corrosion inhibitor, and organic accelerator.
   3. Ratio of Component A to Component B: 1 to 7.2 by weight.
   4. Provide material that contains no asbestos, chlorides, nitrates, added gypsum, added lime, or high aluminum cements.
   5. Provide material that is non-combustible, either before or after cure.
   6. Supply polymer-modified portland cement mortar in a factory proportioned unit.
   7. Provide polymer-modified portland cement mortar that can be finished with a power trowel.
   8. Provide polymer-modified portland cement that is placable from 1/8 inch to 1 inch in depth and extendable in greater depths.
   9. Aggregate to extend polymer modified portland cement mortar: 1/2 inch or 3/8 inch clean, well graded, saturated surface dry material, having low absorptions and high density.

B. Polymer-modified portland cement for vertical and overhead surfaces:
   1. Component A: Liquid polymer emulsion of an acrylic copolymer base and additives. Provide acrylic copolymer with following properties:
      a. pH: 4.5 to 6.5.
      b. Film forming temperature: 73 degrees Fahrenheit maximum.
      c. Tear strength: 950 pounds per square inch minimum.
      d. Elongation at break: 500 percent minimum.
      e. Particle size: Less than 0.1 micron.
   2. Component B: Blend of selected portland cements, specially graded aggregates, admixtures for controlling settling time, water reducers for workability, corrosion inhibitor, and organic accelerator.

3. Ratio of Component A to Component B: 1 to 5.2 by weight.
4. Provide material that contains no asbestos, chlorides, nitrates, added gypsum, added lime, or high aluminum cements.
5. Provide material that is non-combustible, either before or after cure.
6. Supply modified portland cement mortar in a factory proportioned unit.
7. Provide polymer modified portland cement mortar that is placeable from 1/8 inch to 1-1/2 inch depth per lift.

C. Reinforcing steel coating:
   1. Solvent-free, moisture-tolerant, epoxy-modified, cementitious, corrosion inhibiting product.

2.03 PERFORMANCE

A. Polymer-modified portland cement mortar for horizontal surfaces:
   1. Properties of mixed polymer-modified portland cement mortar:
      a. Working time: 10 to 15 minutes.
      b. Finishing time: 20 to 60 minutes.
      c. Color: Concrete gray.
   2. Properties of cured polymer-modified portland cement mortar:
      a. Compressive strength in accordance with ASTM C 109 modified:
         1) At 4 hours: 250 pounds per square inch minimum.
         2) At 1 day: 3,800 pounds per square inch minimum.
         3) At 28 days: 7,000 pounds per square inch minimum.
      b. Splitting tensile strength: 880 pounds per square inch minimum in accordance with ASTM C 496 at 28 days.
      c. Flexural strength (modulus of rupture): 1,600 pounds per square inch minimum in accordance with ASTM C 580 at 28 days.
      d. Rapid freeze/thaw durability: Relative Durability Factor at 300 cycles: 90 minimum, in accordance with ASTM C 666; Procedure A.
      e. Bond strength: 2,200 pounds per square inch minimum in accordance with ASTM C 882 Modified at 28 days.
      f. Thermal compatibility: Passes test minimum in accordance with ASTM C 884 Modified.
      g. Abrasion at 7 days:
         1) Test using Taber Abraser (Abrader) manufactured by Taber Industries.
         2) Weight loss: 70 grams maximum using H-22 wheel, 1,000 grams load, and 1,000 cycles.
      h. Provide polymer-modified portland cement mortar approved by USDA.
      i. Provide polymer-modified portland cement mortar that does not produce a vapor barrier.

B. Polymer-modified portland cement mortar for vertical and overhead surfaces:
   1. Properties of mixed polymer-modified portland cement mortar:
      a. Working time: 10 to 15 minutes.
      b. Finishing time: 20 to 60 minutes.
      c. Color: Concrete gray.
   2. Properties of cured polymer-modified portland cement mortar:
      a. Compressive strength:
         1) At 4 hours: 250 pounds per square inch minimum in accordance with ASTM C 109 Modified.

2) At 1 day: 3,800 pounds per square inch minimum in accordance with ASTM C 109 Modified.
3) At 28 days: 7,200 pounds per square inch minimum in accordance with ASTM C 109 Modified.

b. Splitting tensile strength: 850 pounds per square inch minimum in accordance with ASTM C 496 at 28 days.
c. Flexural strength (modulus of rupture): 1,650 pounds per square inch minimum in accordance with ASTM C 580 at 28 days.
d. Rapid freeze/thaw durability: Relative Durability Factor at 300 cycles: 90 minimum in accordance with ASTM C 666; Procedure A.
e. Bond strength: 2,500 pounds per square inch minimum in accordance with ASTM C 882 modified at 28 days.
f. Thermal compatibility: Passes test minimum in accordance with ASTM C 884 Modified.
g. Abrasion (table abrador) at 7 days: Weight loss: 8.9 grams maximum (H-22 wheel; 1,000 grams load; 1,000 cycles).
h. Provide polymer-modified portland cement mortar approved by USDA.
i. Provide polymer-modified portland cement mortar that does not produce a vapor barrier.

PART 3 EXECUTION

3.01 GENERAL PREPARATION

A. As required, remove all existing piping, pipe hangers, concrete inserts, and other items as necessary from areas where repair and coating of concrete is required to facilitate repair and coating work, and acceptable to Engineer.

B. Steam clean and degrease all surfaces prior to abrasive blasting.

C. Utilize abrasive blast cleaning to remove surface contaminants and loose material for preparation of concrete surfaces.
1. Remove debris from structure and dispose of material off site:
a. Compressed air used for blasting or blow downs must be clean and free of oil particles.
b. Air compressors must be equipped with efficient oil and water traps.

D. Utilize SSPC SP2 and SSPC SP3 standards to remove damaged and deteriorated concrete for repair:
1. For areas of concrete deterioration between 1/2 inch and 3 inches, provide the polymer modified portland cement mortar repair.
2. For area with concrete deterioration beyond 3 inches, with exposed reinforcing bars, the concrete must be chipped back to 4-1/2 inches and reinforcing bars repaired as required.

E. Remove loose concrete from spalled areas and cracks:
1. In areas where concrete deterioration dovetails to original concrete surface, make entire cavity to be repaired at least 1/2-inch deep from original concrete surface by means of saw-cutting.
2. Provide straight edges, a minimum of 1/2-inch deep in sound concrete 2-inches away from deterioration.

3. Repair with polymer modified mortar so as to provide a minimum of 1/2 inch of concrete repair material at all locations.
4. Prepare surface edges of cavity by grinding.
5. Remove dust, dirt, and loosely bonded material resulting from cleaning.
6. Ensure cavity surfaces are dry.

F. Use following procedures where reinforcing steel with active corrosion is encountered:
1. Clean exposed reinforcing bars to SSPC SP10 standard.
2. Determine reinforcement bar section loss, splice new reinforcing bars where there is more than 15 percent loss as determined by Engineer.
   a. If more than half the diameter of reinforcing steel is exposed, chip out behind reinforcing steel a minimum of 1/2 inch.
   b. Cut reinforcing bars, butt weld new reinforcing bars to undamaged existing reinforcing bars and place polymer modified portland cement to original surface.
3. Coat all exposed reinforcing steel with high solids epoxy immersed service, as specified in Section 09960, before installation of final concrete repair material.

G. Restore damaged and deteriorated edges with approved concrete repair material and in accordance with manufacturer's recommendations.

H. For all concrete repair areas:
1. Provide smooth steel towel finish free from trowel marks and depressions greater than 1/4 inch.

I. Cleanliness:
1. At the direction of the coating manufacturer's technical representative or the Owner, all surfaces shall be pressure cleaned with clean, potable water at a minimum pressure of 1,500 pounds per square inch to remove all dust, dirt, and other debris prior to the application of the elastomeric polyurethane coating.

J. Abrasive-blast and concrete debris:
1. Remove debris generated from the preparation operations from the structures.
2. Haul and dispose of debris in accordance with all federal, State, and local regulations.

3.02 INSPECTION AND TESTING

A. The following inspection equipment (or engineer accepted equal) shall be provided and utilized for performing quality control testing:
1. Sling psychrometer.
2. Surface temperature thermometer.
3. Ambient temperature thermometer.
4. Psychrometric charts for determining relative humidity and dew point.
5. High range wet and dry film thickness gauges.
6. Micrometer.
7. Durometer: A scale.
8. Sample cans.
9. Inspection glass: 30 power minimum.

B. The following quality control tests shall be performed, with results recorded and made available to Engineer:
   1. Compressed air quality in accordance with blotter test.
   2. Environmental conditions prior to coating application, including substrate temperature, ambient temperature, relative humidity, and dew point.
   3. Observation of surface preparation, including anchor pattern prior to coating application.
   4. Results of ratio check of plural component proportioning equipment.

C. Surface cleanliness, pH condition:
   1. Use either pH paper or a pH meter to determine the pH of the concrete surface.
   2. A pH range of 5 to 9 is considered acceptable.

3.03 REPLACEMENT OF REMOVED ITEMS

A. Clean and recoat items removed from work areas prior to commencing work such as piping, pipe hangers, and associated equipment replace in like manner as removed.

3.04 FINAL INSPECTION AND ACCEPTANCE

A. Final inspection:
   1. Following replacement of previously removed items, a final inspection of the repaired structures shall be made by Engineer, Owner, and Contractor.

B. Final acceptance:
   1. Written final acceptance of the concrete repair work accomplished to the interiors of the concrete structures, as specified in the Contract Documents, shall be prepared by the Engineer or Owner and issued to the Contractor.

END OF SECTION

SECTION 03926

STRUCTURAL CONCRETE REPAIR

PART 1 GENERAL

1.01 SUMMARY

A. Section includes: Repairing damaged structural concrete.

B. Related sections:
1. The Contract Documents are complementary; what is called for by one is as binding as if called for by all.
2. It is the Contractor's responsibility for scheduling and coordinating the Work of subcontractors, suppliers, and other individuals or entities performing or furnishing any of Contractor's Work.
3. The following Sections are related to the Work described in this Section. This list of Related Sections is provided for convenience only and is not intended to excuse or otherwise diminish the duty of the Contractor to see that the completed Work complies accurately with the Contract Documents.
   a. Section 03071 - Epoxies.

1.02 REFERENCES

A. ASTM International (ASTM):
1. C 78 - Standard Test Method for Flexural Strength of Concrete (Using Simple Beam with Third-Point Loading).
2. C 109 - Standard Test Method for Compressive Strength of Hydraulic Cement Mortars (Using 2-in. or [50-millimeter] Cube Specimens.
3. C 496 - Standard Test Method for Splitting Tensile Strength of Cylindrical Concrete Specimens.
4. C 666 - Standard Test Method for Resistance of Concrete to Rapid Freezing and Thawing.
5. C 882 - Standard Test Method for Bond Strength of Epoxy-Resin Systems Used With Concrete By Slant Shear.

1.03 SYSTEM DESCRIPTION

A. General: Structural repair concrete composed of cementitious material capable of being placed in formed vertical and overhead applications, and on horizontal surfaces.

B. Design requirements:
1. Provide material suitable for performing in environments subject to corrosive attack by chlorides and sulfates, freeze/thaw cycles, low permeability, and abrasion resistant.
2. Provide concrete repair mortar cement that is placeable from 1 inch in depth and extendable in greater depths.
3. Concrete repair mortar shall be capable of being poured in place or troweled in place to suit the conditions encountered.

1.02 SUBMITTALS

A. Product data: Submit manufacturer's data completely describing structural repair concrete materials.

B. Certificates of Compliance.

C. Manufacturer's Instructions.

1.03 QUALITY ASSURANCE

A. Manufacturer qualifications: The manufacturer of the specified product shall have been in existence, for a minimum of 10 years.

B. Allowable tolerances: Deviation from plumb or level shall not exceed 1/8 inch within 10 feet in any direction, as determined with a 10-foot straight edge.

1.04 DELIVERY, STORAGE, AND HANDLING

A. Deliver the specified product in original, unopened containers with the manufacturer's name, labels, product identification, and batch numbers.

B. Store and condition the specified product as recommended by the manufacturer.

C. Deliver, store, and handle packaged materials in the manufacturer's original, sealed containers, each clearly identified with the manufacturer's name, and name and type of product.

D. Store materials subject to damage by dirt and moisture in a clean, dry location, off the ground, and suitably protected.

1.05 PROJECT CONDITIONS

A. Existing conditions:
   1. Hot weather: ACI 305.
   2. Cold weather: ACI 306.
   3. Do not place concrete repair mortar during precipitation, unless adequate protection is provided.

PART 2 PRODUCTS

2.01 MATERIALS

A. Structural repair concrete:
   1. Manufacturers: One of the following or equal:
      a. Master Builders, “EMACO S66-CR.”
      b. Sika, "Sikatop 123 Plus."
   2. Compressive strength: As follows in accordance with ASTM C 109:
      a. 1 day: 2,500 pounds per square inch, minimum.
      b. 7 day: 6,000 pounds per square inch, minimum.
      c. 28 day: 8,000 pounds per square inch, minimum.

3. Bond strength: 2,200 pounds per square inch minimum at 28 days, in accordance with ASTM C 882 modified.
4. Slant shear bond strength: 3,300 pounds per square inch minimum at 28 days, in accordance with ASTM C 496.
5. Flexural strength: 770 pounds per square inch minimum at 28 days, in accordance with ASTM C 78.
6. Rapid freeze/thaw durability: in accordance with ASTM C 666; Procedure A.
   a. Relative durability factor at 300 cycles: 90 minimum.
7. Working time: 30 to 40 minutes.
8. Color: Concrete gray.

B. Water: Potable, clean, not detrimental to concrete.

C. Form materials:
   1. Smooth finish.
   2. Brace as required to maintain tolerances.

PART 3 EXECUTION

3.01 EXAMINATION

A. Verify that concrete surfaces and exposed reinforcing are clean and free of contaminates.

3.02 PREPARATION

A. Prepare existing concrete by cleaning with steel brush and applying bonding agent in accordance with manufacturer's instructions.

B. Thoroughly clean reinforcement and other embedded items to remove loose rust and other objectionable matter.

C. Thoroughly wet wood forms, except coated plywood, and adjacent concrete at least 1 hour in advance of placing concrete; securely close cleanout end inspection ports; repeat wetting as necessary to keep forms damp.

3.03 PREPARATION

A. Damaged concrete:
   1. Areas to be repaired shall be clean, sound, and free of contaminants.
      a. Remove all loose and deteriorated concrete by mechanical means acceptable to the Engineer.
      b. Saw cut perimeter 1/2-inch maximum.
   2. Chip concrete substrate to obtain a surface profile of 1/16 inch to 1/8 inch in depth with a new fractured aggregate surface.
      a. The area to be repaired shall be not less than 1 inch in depth.
   3. Concrete removal shall extend along the reinforcing steel to locations along the bar free of bond inhibiting corrosion, and where the bar is well bonded to surrounding concrete.

B. Use the following procedures where reinforcing steel with active corrosion is encountered:
   1. Sandblast reinforcing steel to remove all contaminants and rust.

2. Determine section loss, splice new reinforcing steel where there is more than 15 percent loss as directed by the Engineer.
    a. If more than half the diameter of the reinforcing steel is exposed, chip out behind the reinforcing steel a minimum of 1/2 inch. The distance chipped behind the reinforcing steel must also equal or exceed the minimum placement depth of the accepted material.

C. Treat cracks in the substrate at the area of patching or overlay work as directed by the Engineer.

D. Extend existing control and expansion joints through any concrete repair.

E. Apply an epoxy-bonding agent to area to be repaired, as specified in Section 03071, prior to patching concrete with polymer-modified portland cement mortar.

3.04 MIXING

A. Mix in accordance with manufacturer's mixing instructions.

3.05 INSTALLATION

A. Formed surface finishes:
    1. Smooth finish:
        a. Obtain by the use of plywood, sheet metal, or lined wood forms; no fins, pockmarks, or other irregularities shall be present in the exposed surfaces of concrete.
        b. Place no structural repair concrete without prior authorization of Engineer.

Addendum No. 2 - Page 46 of 101

B. Verify that form materials are in place and ready to receive installation of concrete repair material.

C. Install in accordance with manufacturer's installation instructions.

D. In accordance with ACI recommendations, apply concrete repair material only when ambient conditions of moisture, temperature, humidity, and wind are favorable for curing.

E. Scrub mortar into substrate, filling all cracks, voids, and pores.

F. For new construction, finish of repaired area shall match required finish for concrete being repaired.

G. For existing concrete, finish of repair area shall match finish of concrete being repaired.

H. During the curing process, protect concrete repair from rain, wind, or freezing as required.
    1. Keep sufficient covering on hand at all times for protection of repair concrete.

3.06 CLEANING

A. Remove debris and excess material. Leave work site in a neat, clean condition.

END OF SECTION

SECTION 03931

EPOXY INJECTION SYSTEM

PART 1 GENERAL

1.01 SUMMARY

A. Section includes: Epoxy injection system.

1.02 REFERENCES

A. ASTM International (ASTM):
   1. D 638 - Standard Test Method for Tensile Properties of Plastics.
   2. D 695 - Standard Test Method for Compressive Properties of Rigid Plastics.
   3. D 790 - Standard Test Methods for Flexural Properties of Unreinforced and Reinforced Plastics and Electrical Insulating Materials.

1.03 SUBMITTALS

A. Product data:
   1. Submit manufacturer's data completely describing epoxy injection system materials.

B. Quality control submittals:
   1. Certificates of Compliance.
   2. Manufacturer's Instructions.

PART 2 PRODUCTS

2.01 MATERIALS

A. Manufacturers: One of the following or equal:
   1. Master Builders, Inc., Concressive Standard LVI.
   2. Sika Chemical Corp., Sikadur 35 Hi-Mod LV.

B. Epoxy:
   1. Use epoxy materials that are new and use them within shelf-life limitations set forth by manufacturer.
   2. Water-insensitive 2-part type low viscosity epoxy adhesive material containing 100 percent solids and meeting or exceeding following characteristics when tested in accordance with standards specified:

Physical Characteristic	Test Method	Required Results
Tensile Strength	ASTM D 638	8,000 pounds per square inch at 14 days.
Flexure Strength	ASTM D 790	11,000 pounds per square inch at 14 days.
Compressive Strength	ASTM D 695	11,000 pounds per square inch at 24 hours.
Bond Strength	--	Concrete shall fail before failure of epoxy.

Physical Characteristic	Test Method	Required Results
Gel Time for 5 Mil Film	--	4 hours maximum.
Elongation	ASTM D 638	1 percent minimum at 14 days.

2.02 EQUIPMENT

A. Injection pump:
   1. Use positive displacement injection pump with interlock to provide in-line mixing and metering system for 2 component epoxy.
   2. Use pressure hoses and injection nozzle designed to properly mix of 2 components of epoxy.
   3. Standby injection unit may be required.

PART 3 EXECUTION

3.01 PREPARATION

A. Surface preparation:
   1. Sweep or clean area in vicinity of cracks that will be injected with epoxy. Leave area in generally clean condition after epoxy injection is complete.
   2. Clean cracks so they are free from dirt, laitance, and other loose matter.

3.02 INSTALLATION

A. Install and cure epoxy materials in accordance with manufacturer's installation instructions.

B. Mix epoxy in accordance with manufacturer's installation instructions.

C. Do not use solvents to thin epoxy.

D. Crack injection:
   1. Apply adequate surface seal to crack to prevent leakage of epoxy.
   2. Establish injection points at distance along crack not less than thickness of cracked member.
   3. Crack injection sequence:
      a. Inject epoxy into crack at first port with sufficient pressure to advance epoxy to adjacent port.
      b. Seal original port and shift injection to port where epoxy appears.
      c. Continue port-to-port injection until crack has been injected for its entire length.
      d. For small amounts of epoxy, or where excessive pressure developed by injection pump might further damage structure, premixed epoxy and use hand caulking gun to inject epoxy if acceptable to the Engineer.
      e. Seal ports, including adjacent locations where epoxy seepage occurs, as necessary to prevent drips or run out.
      f. After epoxy injection is complete, remove surface seal material and refinish concrete in area where epoxy was injected to match existing concrete.

END OF SECTION

ADDENDA – ARCHITECTURAL ITEMS

ADDENDUM NUMBER TWO

DATE: March 14, 2016

PROJECT: 1403

PROJECT NUMBER: 9469B10

NK PROJECT NUMBER: 1403

OWNER: City of Austin

ARCHITECT: Negrete & Kolar Architects, LLP, David Negrete AIA

TO: Prospective Bidders

CHANGES TO THE PROJECT MANUAL

1) Specification 07218B Spray Insulation
   a) Add numbered sub item 2.3.A.8 to read "Color: Tan".
2) Specification 09714 Metal Faced Acoustical Panels
   a) At section 2.1.A, delete from the list of manufacturers and models the following:
      i) Acoustical Solutions – Alphaperf
      ii) Industrial Noise Control, Inc. – Panelsorb PS-C.
      iii) McGill – WA-1000.
   b) Change wording of section 2.1.A.2 to read: "Alpro – Acoustical Wall Panel Pattern B".
   c) Change wording of section 2.1.A.3 to read "Eckels – EFP folded panel profile".
3) Add new attached specification 09840 Acoustical Wall Treatment – Cementitious Wood Fiber Panels.

CHANGES TO THE DRAWINGS

1) Sheet 00GA01
   a) Under the heading "SOUND ATTENUATION PANEL TYPES", add the following note:
      "REFERENCE SECTIONS 09714 METAL FACED ACOUSTICAL PANELS AND 09840 ACOUSTICAL WALL TREATMENT – CEMENTITIOUS WOOD FIBER PANELS FOR PANEL REQUIREMENTS. PANELS AS SPECIFIED BY EITHER SPECIFICATION MAY BE INSTALLED BUT ALL PANELS MUST BE OF THE SAME TYPE AND FROM THE SAME MANUFACTURER."

APPROVAL OF ADDITIONAL PRODUCTS/SYSTEMS

END OF DOCUMENT

REGISTERED ARCHITECT
DAVID NEGRETE
11640
STATE OF TEXAS

3/14/16

SECTION 09840

ACOUSTICAL WALL TREATMENT – CEMENTITIOUS WOOD FIBER PANELS

PART 1 GENERAL

1.1 SUMMARY

A. Section Includes:
   1. Section Includes cementitious wood fiber plank acoustical Wall panel system and installation accessories.

B. Related Requirements:
   1. Section 01352 - Sustainable Construction Requirements.
   2. Section 04810 – Unit Masonry Assemblies: Substrate at new wall conditions.
   3. Section 06100 – Rough Carpentry: Wood blocking/furring.
   4. Section 09910 – Painting: Painting of substrate prior to installation.

1.2 REFERENCE STANDARDS

A. ASTM International:
   1. C 423 - Standard Test Method for Sound Absorption and Sound Absorption Coefficients by the Reverberation Room Method.
   2. ASTM E84 - Standard Test Method for Surface Burning Characteristics of Building Materials.

B. Ceilings and Interior Systems Construction Association (CISCA)
   1. CISCA Code of Practices

1.3 PRE-INSTALLATION MEETINGS

A. Section 01400 – Quality Control Services: Pre-installation meeting.

B. Convene minimum one week prior to commencing work of this section.

1.4 SUBMITTALS

A. Section 01300 - Submittals: Requirements for submittals.

B. Product Data: Manufacturer's data sheets on each product to be used, including:
   1. Materials and finishes.
   2. Preparation instructions and recommendations.
   3. Storage and handling requirements and recommendations.
   4. Installation methods.
   5. Cleaning procedures.
   6. Test Reports: Results of sound absorption tests by independent acoustical laboratory.

C. Shop Drawings:
   1. Submit shop drawings showing layout, edge profiles and baffle / cloud components, including suspension method, accessories, finish colors and textures.

1.5 SUSTAINABLE DESIGN SUBMITTALS

A. Section 01352 - Sustainable Design Requirements: Requirements for sustainable design submittals.

B. Manufacturer's Certificate: Certify products meet or exceed specified sustainable design requirements.
   1. Materials Resources Certificates:
      a. Certify recycled material content for recycled content products.

C. Product Cost Data: Submit cost of products to verify compliance with Project sustainable design requirements. Exclude cost of labor and equipment to install products.
   1. Provide cost data for the following products:
      a. Products with recycled material content.

1.6 QUALITY ASSURANCE

A. Sound Absorption:
   1. Minimum, expressed in absorption coeficient, at following octave band center frequencies for a 2 inch thick panel with R-8 thick acoustical insulation, when tested in accordance with ASTM C 423 mounting type C-40:
      a. 125 Hertz: 0.42.
      b. 250 Hertz: 0.89.
      c. 500 Hertz: 1.19.
      d. 1000 Hertz: 0.85.
      e. 2000 Hertz: 1.08.
      f. 4000 Hertz: 0.94.
   2. Minimum NRC: 1.00

REGISTERED ARCHITECT DAVID NEGRETE 11640 STATE OF TEXAS

3/14/16

B. Fire Ratings: Class A flame spread and smoke developed when tested in accordance with ASTM E 84.
   1. Flamespread: <5
   2. Smoke Developed: <15

1.7 QUALIFICATIONS

A. Manufacturer: Company specializing in manufacturing products specified in this section with minimum five years documented experience.

1.8 DELIVERY, STORAGE, & HANDLING

A. Section 01600 – Materials and Equipment: Product storage and handling requirements.

B. Store materials protected from exposure to harmful environmental conditions and at temperature and humidity conditions recommended by the manufacturer.
   1. Prevent soiling, physical damage or wetting.
   2. Store cartons open at each end to stabilize moisture content and temperature.

PART 2 PRODUCTS

2.1 MANUFACTURERS

A. Cementitious Wood Fiber Acoustical Panel Manufacturer and Model List:
   1. Tectum – Finale Panels
   2. Section 00700 - General Conditions: Requirements for substitutions for other manufacturers and products.

2.2 SUSTAINABILITY CHARACTERISTICS

A. Section 01352 - Sustainable Design Requirements: Requirements for sustainable design compliance.

B. Materials and Resources Characteristics:
   1. Recycled Content Materials: Furnish materials with maximum available recycled content.

2.3 MATERIALS

A. Cement Fiber Panels:
   1. Inorganic hydraulic cement.
   2. Aspen wood fibers bonded to cement and compressed into finished panels.
   3. Bevel edges. Build up outside perimeter to conceal furring and insulation.
   4. Sizes of Panels:
      a. Widths: Nominal 24”, 32”, and 48” as indicated on the drawings.
      b. Lengths: 24”, 32”, 36”, 48”, 72”, and 96” as indicated on the drawings.
   5. Complete panels to be factory fabricated. Field fabrication is not acceptable.

B. Insulation: Fiberglass acoustical batt insulation meeting ASTM C655, 2.5 inch thick.

C. Drywall Screws to fasten panel to furring.
   1. Material: Steel.
   2. Length: 3 inches.
   3. Color: Natural color to match panel color, factory applied.

D. Tough up paint: Match color of panels.

E. Preservative treated 2X furring, reference section 06100 Rough Carpenty.

F. Furring anchors: Tapcon White Ultrashield 1/4" diameter 2.75” long.

REGISTERED ARCHITECT
DAVID NEGRETE
11640
STATE OF TEXAS

3/14/16

PART 3 EXECUTION

3.1 EXAMINATION

A. Section 01400 – Quality Control Services: Coordination and project conditions.

B. Verify wall substrates are ready to receive work.

3.2 INSTALLATION

A. Install acoustical panels in accordance with manufacturer's instructions.

B. Install materials in accordance with governing regulations, fire resistance rating requirements and industry standards applicable to work.
   1. Comply with CISCA Code of Practices.

C. Install required 2X furring with masonry screws specified.

D. Attach panel with insulation directly to furring with specified drywall screws. Screw head flush with panel surface. Do not counter sink.

E. Space panels equally and symmetrically whenever possible, unless indicated otherwise.

F. Install panels plumb or level.

3.3 CLEANING

A. Clean exposed surfaces of acoustical panel, trim, moldings and suspension members to comply with manufacturer's instructions for cleaning.

B. Touch up any minor finish damage.

C. Remove and replace work that cannot be successfully cleaned and repaired to permanently eliminate evidence of damage.

3.4 PROTECTION OF FINISHED WORK

A. Protect installed work from damage due to subsequent construction activity, including temperature and humidity limitations and dust control, so that the work will be without damage and deterioration at the time of acceptance by the Owner.

3.5 SCHEDULE

A. Reference Drawings.

END OF SECTION

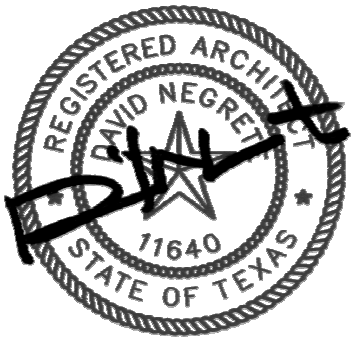

3/14/16

SECTION 15103

STAINLESS STEEL PIPE, FITTINGS AND ACCESSORIES FOR LOW PRESSURE AIR SERVICE, 4-INCH AND LARGER

PART 1 GENERAL

1.01 DESCRIPTION

A. Scope:
1. Provide all labor, materials, tools equipment and incidentals as shown on the Drawings, specified and required to furnish and install stainless steel pipe, fittings and accessories.
2. The extent of pipe, fittings and accessories is shown on the Drawings and Section 15050, Piping Systems.

1.02 QUALITY ASSURANCE

A. Manufacturer's Qualifications:
1. Manufacturers of stainless steel pipe, and fittings shall have a minimum of five years of experience producing stainless steel pipe, and fittings, and shall be able to show evidence of at least five installations in satisfactory operation.

B. Reference Standards: Comply with applicable provisions and recommendations of the following, except as otherwise shown or specified.
1. ANSI B16.1, Cast Iron Pipe Flanges and Flanged Fittings.
2. ANSI B36.19, Stainless Steel Pipe.
3. ASME Boiler and Pressure Vessel Code, Sections VIII and IX.
4. ASME B31.3, Process Piping.
5. ASTM A 193, Specification for Alloy Steel and Stainless Steel Bolting Materials for High Temperature Service.
6. ASTM A 194, Specification for Carbon and Alloy Steel Nuts for Bolts for High Pressure and High Temperature Service.
7. ASTM A 240, Specification for Heat-Resisting Chromium and Chromium-Nickel Stainless Steel Plate, Sheet, and Strip for Pressure Vessels.
8. ASTM A 276, Specification for Stainless Steel Bars and Shapes.
9. by providing suitable protection during handling and installation and until final . Steel Pipes.
10. ASTM A 380, Practice for Cleaning and Descaling Stainless Steel Parts, Equipment, and Systems.
11. ASTM A 403, Specification for Wrought Austenitic Stainless Steel Piping Fittings.
12. ASTM A 479, Specification for Stainless and Heat-Resisting Steel Bars and Shapes for Use in Boilers and Other Pressure Vessels.
13. ASTM A 530, Specification for General Requirements for Specialized Carbon and Alloy Steel Pipe.
14. ASTM A 774, Specification for As-Welded Wrought Austenitic Stainless Fittings for General Corrosive Service at Low and Moderate Temperatures.
15. ASTM A 778, Specification for Welded, Unannealed Austenitic Stainless Steel Tubular Products.

16. ASNT SNT-TC-1A, Recommended Practice for Non-destructive Testing Personnel Qualification and Certification.
17. AWWA C207, Steel Pipe Flanges for Waterworks Service Sizes 4-inch through 144-inch.
18. AWWA C208, Dimensions for Fabricated Steel Water Pipe Fittings.
19. AWWA C219, Bolted, Sleeve Type Couplings for Plain-End Pipe.
20. AWWA C606, Grooved and Shouldered Joints.
21. AWWA M11, Steel Pipe - A Guide for Design and Installation.
22. PFI ES-3, Fabricating Tolerances.
23. Standards of the Expansion Joint Manufacturers Association, Inc.

1.03 DESIGN REQUIREMENTS

A. Piping layout: Lay out and fabricate piping systems with piping sections as long as possible, while still allowing shipment, so that joints are minimized.
   1. Piping design indicated on the Drawings illustrates piping layout and configuration and does not indicate the location of every joint and flexible coupling that may be needed to connect piping sections fabricated in the shop.
   2. Add joints and flexible couplings in a manner that achieves intent of maximizing size of individual piping sections.

B. Shop fabrication: Fabricate piping sections in the shop and pickle and passivate at point of manufacture.

C. Field assembly:
   1. Assemble shop-fabricated piping in the field using the joints designed into the piping layout or by using flexible couplings.
   2. Field welding is prohibited except where expressly shown on the drawings.

1.04 SUBMITTALS

A. Shop Drawings: Submit for approval the following:
   1. Submit detailed drawings and data for stainless steel pipe and fittings.
   2. Submit laying schedules and detailed plan and profile drawings for all stainless steel piping showing full details of piping, valves, hangers, supports, restraints, couplings, accessories and specials.
   3. Submit design calculations signed and sealed by a Registered Professional Engineer showing that the wall thickness of pipes and fittings, and that the pipe reinforcement at lugs and pipe supports are adequate for all loads imposed by the manufacturer's design and for the specified service conditions. The design calculations shall also include verification of strength of pipe joints within the spans between pipe supports and verification of the design of the blind flanges.
   4. Coordinate and submit with Shop Drawings required under Section 15051, Exposed Piping Installation.
   5. Manufacturer’s literature including materials of construction, dimensions, weights, specifications and other engineering data.
   6. List of existing installations with contact names and telephone numbers.
   7. Welding procedures and welder's certifications.
   8. Certificates:
      a. Certificates of compliance with applicable portions of the referenced standards.
      b. Certificates of elastomers used for the gaskets.

9. Quality control, inspection and test records.
10. Provide stainless steel expansion joint calculations for bellows, sleeves, limit rods, lugs, natural frequency, expansion, contraction and spring rates.
11. Provide stainless steel expansion joint ISO 9001 certification or confirmation of quality assurance program verified by a third party inspection agency.

1.05 DELIVERY, STORAGE AND HANDLING

A. Protect all stainless steel pipe, fittings and other appurtenances from contamination during shipment and storage.

B. Protect all pipe and fittings to maintain dimensional tolerances and from any physical damage, including dents and kinks.

C. Store products on heavy wood blocking or platforms in accordance with the manufacturer's recommendations. Do not store on the ground. Maintain the interiors of products free from dirt and foreign matter.

PART 2 PRODUCTS

2.01 STAINLESS STEEL PIPE AND FITTINGS

A. General Provisions:
1. Handling of stainless steel fabrications during manufacturing:
   a. Avoid contact of any ferrous materials with stainless steel.
   b. Use tools dedicated for stainless steel.
   c. Use nylon slings and alloy chains, cable or straps for handling of stainless steel.
   d. Use storage racks of non-ferrous metal or lined with rubber for storing of stainless steel pipe, fittings, and accessories.
2. Clean and descale welded stainless steel items in accordance with ASTM A 380, and as follows:
   a. Up to 36-inch diameter welded items, passivate by immersion in a pickling solution of minimum six percent nitric acid and three percent hydrofluoric acid. Temperature and detention time shall be sufficient for removal of oxidation and ferrous contamination without etching the surface. Perform a complete rinsing operation with clean water.
   b. For larger sizes and all other shop [TW1]fabrications where pickling by immersion is not feasible, scrub all accessible weld surfaces with the same pickling solution or pickling paste and clean with stainless steel wire brushes or by grinding with non-metallic abrasive tools to remove weld discoloration, and then rinse with clean water.
3. There shall be no staining or streaking from iron and other surface contaminants on the ready-to-be-shipped stainless steel items.
4. Coordinate jointing requirements with equipment specified in other Sections.
5. Coordinate dimensional tolerances of pipe and fittings as required for couplings.
6. All paints and markers used for marking stainless steel shall be free of any harmful metal or metal salts, such as zinc, lead, copper or sulfur.

B. Design Temperature Range: 32 to 250 degrees Fahrenheit.

C. Material: ASTM A 240, Type 304L stainless steel with No. 1 mill finish or better.

D. The actual vs. nominal diameters of pipe and fittings shall conform to ANSI B36.19 and shall be as follows:

Nominal Pipe Diameter (inch)	**Outside Diameter (inch)**
4	4.5
5	5.563
6	6.625
8	8.625
10	10.75
12	12.75
14 and Larger	Nominal Diameter

E. Wall Thickness of Pipe and Fittings:

Nominal Pipe Diameter (inch)	**Minimum Nominal Wall Thickness (inch)**
4 to 6	Schedule 40
6 to 12	Schedule 10S
14 to 18	Schedule 10S
20 to 36	Schedule 10S
42 to 48	0.312
Note: (1) For reducers and reducing elbows, wall thickness for the larger diameter shall apply for the whole fitting.	

F. Manufacture of Mill Pipes:
1. Conform to ASTM A 778 and as specified herein. ASTM A 312 pipe may be substituted for ASTM A 778 pipe.
2. Longitudinal Seams: Maximum of two per section up to 30-inch diameter and three seams on larger diameter pipes.
3. Girth Seams: Not less than eight feet apart.
4. Pipe Ends: Plain ends, perpendicular to longitudinal axis, with all burrs removed.
5. Permissible Variations in Outside Diameter: The difference in extreme outside diameters in any cross section along the length shall not exceed 1.5 percent of the specified outside diameter, in conformance with ASTM A 530.
6. Straightness: Maximum deviation shall not exceed 1/8-inch per ten feet length, in conformance with ASTM A 530.

7. Edges: All joint-edges shall be true so as not to leave a shoulder on the inside or outside of the pipe.

G. Shop Fabrication of Pipes:
1. The required lengths of fabricated pipes shall be based on considerations of piping layout, transportation limitations, and feasibility of handling for actual installation at the job site.
2. Fabricate pipes in the shop by circumferential welding of mill pipes. Spiral welded pipe is not acceptable.
3. Prepare ends for the pipe joints as specified herein and in Section 15052, Exposed Piping Installation.
4. Prepare ends for couplings, including harnessing in accordance with the recommendations of the coupling manufacturers. Provide reinforcement plates at lugs if required to maintain reduced stress levels in the pipe wall and to prevent buckling. Harnessing lugs for sleeve type couplings and end rings for split couplings shall be of Type 304L stainless steel to match piping material.
5. Fabricating Tolerances: Conform to Pipe Fabrication Institute recommendations, PFI-ES-3.

H. Fabrication of Fittings:
1. Conform to ASTM A 774 and as specified herein. ASTM A 403 fittings may be substituted for ASTM A 774 fittings.
2. Long Radius Elbows (11-1/4 through 90 degrees):
   a. Minimum Radius: 1.5 x nominal pipe diameter.
   b. 24-inch and Smaller: Smooth radius, die formed.
   c. Larger than 24-inch: Mitered with minimum five pieces for 90 degree and three pieces for 30 to 60 degree elbows.
3. Short Radius Elbows:
   a. Minimum Radius: 1.0 x nominal pipe diameter.
   b. All Sizes: Mitered with minimum four pieces for 90 degree, three pieces for 45-degree or less.
4. Tees, Wyes, Laterals and Crosses: Fabricate true and square from pipe and conform to AWWA C208 for dimensions.
5. Reducers: Eccentric or straight cone type as shown on the Drawings. Minimum length of the reducers shall be equal to four times the difference in larger and smaller diameters.
6. For larger than 48-inch size fittings, conform to the applicable requirements of shop fabrication of pipes.

I. Fabrication of Pipe Sections:
1. Welding: Weld in accordance with ASME B31.3.
2. Weld seams:
   a. Full penetration welds, free of oxidation, crevices, pits and cracks, and without undercuts.
   b. Provide weld crowns of 1/16 inch with tolerance of plus 1/16 inch and minus 1/32 inch.
   c. Where internal weld seams are not accessible, use gas tungsten-arc procedures with internal gas purge.
   d. Where internal weld seams are accessible, weld seams inside and outside using manual shielded metal-arc procedures.
   e. Field welded joints must be pickled and passivated, inside and out.

J. Cleaning (pickling) and passivation:
   1. Following shop fabrication of pipe sections, straight spools, fittings, and other piping components, clean (pickle) and passivate fabricated pieces.
   2. Clean (pickle) and passivate in shop fabricated pieces in accordance with ASTM A 380 or A 967, and field welded joints in accordance with ASTM A 380 Table A1.1 Code B.
      a. If degreasing is required before cleaning to remove scale or iron oxide, cleaning (pickling) treatments with citric acid are permissible.
         1) However, these treatments must be followed by inorganic cleaners such as nitric acid/hydrofluoric acid.
      b. Passivation treatments with citric acid are not allowed.
   3. Finish requirements: Remove free iron, heat tint oxides, weld scale, and other impurities, and obtain a passive finished surface.
      a. Owner has the option to test finish of any stainless steel per wet cloth method described in ASTM A380. If there is a failed test, the Contractor shall re-pickle stainless steel until the area passes testing. The re-pickling shall be done at no cost to the owner.

K. Shop Quality Control and Inspection:
   1. For all stainless steel welded fabrications, maintain a quality control program and provide documentation of the following as a minimum:
      a. Welding procedure specification and procedure qualification record conforming to Section IX of ASME Code.
      b. Welder/welding operator performance qualification record in accordance with Section IX of ASME Code.
      c. Maintain detailed procedures and test results relative to the examination of welds.
      d. Verification of dimensional tolerances.
      e. Verification of materials used in the fabrication of pipe and fittings traceable to the original heat numbers.
      f. Passivation, including pickling and cleaning, of all stainless steel fabrication welds.

L. Product Marking:
   1. Conform to ASTM A 774 and A 778.

M. Product and Manufacturers: Provide one of the following:
   1. Alaskan Copper.
   2. Felker Bros. Corporation.
   3. Northwest Pipe Company.
   4. Or equal.

2.02 JOINTS

A. General:
   1. Provide pipe joints as specified herein and in Section 15050, Piping Systems.
   2. Provide flanged joints at equipment, valves, expansion joints, flowmeters, drop leg connections and other locations as shown on the Drawings.
   3. Provide flanged joints with welded plate flanges in piping within the long spans between supports. Provide Van Stone flanged joints with follower flanges at other locations.

4. Strength of the flanged joints within the long spans between supports shall be equal to or greater than the strength of the pipes, both for bending and shear. Locate flanged joints within the spans close to the points of zero bending moment.

B. Flanged Joints:
1. Welded Plate Flanges:
   a. Provide Type 304L stainless steel plate flanges to match piping material, ASTM A 240, welded to pipes and fittings. Conform to AWWA C207, Standard Steel Ring Flanges, Class B (86 psi) for flange thickness and drilling.
   b. Test flanges for true plane after welding and reface, if required.
   c. Flanges shall be free of nicks and gouges.
   d. Flanges shall conform to welding requirements of Paragraph 2.1.I, above.
2. Two-Part Flange:
   a. Provide slip-on rolled angle face rings of Type 304L stainless steel to match piping material with continuous weld on both sides of angle face rings.

Pipe Diameter (inch)	**Minimum Nominal Size of Angle (inch)**
4	1 by 1 by 3/16
6 to 10	1 by 1 by 3/16
12 to 20	1-1/2 by 1-1/2 by 1/4
24 to 30	2 by 2 by 1/4
36 to 48	2-1/2 by 2-1/2 by 1/4
54 to 72	3 by 3 by 3/8
78 to 96	3 by 3 by 1/2

   b. Test angle faces for true plane after welding and reface, if required.
   c. Provide follower flanges of Type 304 stainless steel to match piping material for non-welded or Type 304L stainless steel to match piping material for welded construction. Conform to AWWA C207, Standard Steel Ring Flanges, Class B (86 psi) for flange thickness and drilling.

C. Blind Flanges:
1. Provide reinforced blind flanges rated for the test pressures.
2. Minimum plate thickness shall be the same as for the ring flanges.
3. Materials of Construction:
   a. Temporary Blind Flanges: Carbon steel attached with high strength carbon steel bolts.
   b. Permanent Blind Flanges: Plate and bolting materials shall be the same as the specified piping.

D. Gaskets:
1. Rubber:
   a. EPDM, rated for -40° to 250 degrees Fahrenheit.

b. Silicone, rated for -40° to 350 degrees Fahrenheit.

2. Provide full face gaskets for welded flanged joints and ring gaskets for Van Stone flanged joints.
3. Thickness:
   a. 1/8-inch for 36-inch diameter and smaller, minimum.
   b. 3/16-inch for 42-inch diameter and larger, minimum.
4. The seating load of the gaskets shall be compatible with the strength of the flanged joints.

E. Bolts, Nuts and Washers:
1. Exposed: Type 304 stainless steel.
2. Submerged or below top of water bearing structures: Type 316 stainless steel.
3. Bolts: ASTM A 193, Grade B8M.
4. Nuts: ASTM A 194, Grade 8M.
5. The bolts shall have rolled threads and both bolts and nuts shall be electropolished to remove burrs.
6. Provide anti-seize compound, graphite free, for stainless steel nuts and bolts to prevent galling. Strength of the bolted joints shall not be affected by the use of anti-seize compound.

2.03 SPECIALS

A. Taps:
1. Provide taps where shown on the Drawings or required for small pipe and instrument connections.
2. Connections shall be made in welded, forged threaded Type 304L or 316L stainless steel boss to match piping material.
3. Product and Manufacturer: Provide one of the following:
   a. Thredolet by Grinnell Company.
   b. Or equal.

B. Pipe Adapters: Where necessary to join pipe of different type, Contractor shall provide the required adapters. Ends shall conform to Specifications for the appropriate type joint.

2.04 SADDLE SUPPORTS

A. Provide stainless steel welded saddle supports for air piping as shown on the Drawings.

B. Guide supports shall permit movement of the pipe consistent with the specified movement of the expansion joints.

C. Fixed supports shall be capable of handling thrust at the specified test pressure, spring force of expansion joint and frictional resistance from guide supports due to weight of the pipe.

D. Materials, welding and cleaning requirements shall be as specified for the pipe.

PART 3 EXECUTION

3.01 INSPECTION

A. Inspect all piping to ensure that all items are free of defects in material and workmanship.

3.02 INSTALLATION

A. Conform to the requirements of exposed piping installation as specified in Section 15050, Piping Systems, and Section 15052, Exposed Piping Installation.

B. Install piping in such a manner as not to impart strain to connected equipment.

C. Provide valve drains at low points in piping systems.

D. Supports for all air piping shall provide for expansion and contraction of the piping system as shown on the Drawings.

E. Do not use carbon steel wire rope or uncoated chain slings and rigging to install stainless steel piping.

F. Use anti-seize compound for stainless steel nuts and bolts to prevent galling.

G. Conform to manufacturer's recommendations and instructions for installation of expansion joints and couplings.

H. Install harnessing rods on expansion joints and couplings where shown on the Drawings or specified.

I. After installation of stainless steel piping, wash all foreign matter from the piping surface with detergent and hot water followed by rinse cleaning.

J. If rusting of embedded iron occurs, pickle the affected surface with Oakite Deoxidizer or equal, scrub with stainless steel brushes and rinse clean.

3.03 FIELD ASSEMBLY OF SHOP-FABRICATED PIPING SECTIONS

A. Join shop-fabricated piping sections together using backing flanges, flexible couplings, flanged coupling adapters, grooved couplings, or flanges.

3.04 FIELD QUALITY CONTROL

A. Test piping to pressure and by method as specified in Section 15052.
   1. If pressure testing is accomplished with water:
      a. Use only potable quality water.
      b. Piping: Thoroughly drained and dried or place immediately into service.

B. Visually inspect pipe for welding defects such as crevices, pits, cracks, protrusions, and oxidation deposits.

3.05 PROTECTION

A. Preserve appearance and finish of stainless steel piping by providing suitable protection during handling and installation and until final acceptance of the Work.
   1. Use handling methods and equipment to prevent damage to the coating, include the use of wide canvas slings and wide padded skids.
   2. Do not use bare cables, chains, hooks, metal bars, or narrow skids.
   3. Store stainless steel piping and fittings away from any other piping or metals. Storage in contact with ground or outside without projection from bad weather is prohibited.
   4. Protect stainless steel piping and fittings from carbon steel projections (when grinding carbon steel assemblies in proximity) and carbon steel contamination (do not contact stainless steel with carbon steel wire brush or other carbon steel tool).

3.06 COMMISSIONING AND PROCESS START-UP REQUIREMENTS

A. As specified in Section 01756 and this Section.

B. Manufacturer services:
   1. Provide Manufacturer's Certificate of Source Testing.
   2. Provide Manufacturer's Certificate of Installation and Functionality Compliance.

3.07 TESTING

A. Conform to the requirements of Section 15050, Piping Systems.

END OF SECTION

City of Austin
Purchasing Office, Financial Services Department
P.O. Box 1088, Austin, TX 78767

January 6, 2016

Siemens Energy Inc.
Tim Dobyns
Site Director
P.O. Box 312040
New Braunfels, TX. 78131
Brian.marks@siemens.com

Dear Mr. Dobyns:

The City of Austin has approved the award and execution of a contract with your company for the one-time purchase of Aeration Blowers in accordance with certificate of exemption sole source.

Responsible Department:	Austin Water
Department Contact Person:	Charle Celauro
Department Contact Email Address:	Charles.celauro@austintexas.gov
Department Contact Telephone:	512-972-0208
Project Name:	Aeration Blowers
Contractor Name:	Siemens Energy Inc.
Contract Number:	CT 2200 16010600216
Contract Period Amount:	$3,193,775.00
Requisition Number:	2200 15083100982
Agenda Item Number:	51
Council Approval Date:	11/19/2015

A copy of the contract is attached.

Thank you for your interest in doing business with the City of Austin. If you have any questions regarding this contract, please contact the person referenced under Department Contact Person.

Sincerely,

Irene Sanchez-Rocha
Senior Buyer
City of Austin
Purchasing Office

cc: Lydia Torres, Austin Water

PURCHASE ORDER

PO CITY SINGLE

PAGE NO: 1
REFERENCE NUMBER: CT 2200 16010600216
P.O DATE: 01/06/16
PRICE AGREEMENT #:

VENDOR
DEBBIE KEOPP
SIE7128365 1
SIEMENS ENERGY INC
PO BOX 312040
NEW BRAUNFELS TX 78131

SHIP TO

BILL TO

Requestor: Lydia Torres, 972-0329
Buyer: See Solicitation, 512-974-2500

The City's standard purchase terms and conditions are hereby incorporated into this order by reference, with the same force and effect as if they were incorporated in full text. The full versions are available at https://www.austintexas.gov/financeonline/vendor_connection/index.cfm#STANDARDBIDDOCUMENTS or call the Purchasing Office at (512) 974-2500. Please include above reference number on all packages, deliveries, and invoices.

Line	Quantity	Unit	Commodity Information / Description (s)	Unit Price	Extended Amount
1			**Commodity:** 03111 Aeration Blowers for SAR	0.000000	$ 3,193,775.00

Line	Fund	Dept	Unit	Objt	Actv	Func	Rept	Task Ord	Prog	Prog Period	Line Amount
1	4570	2307	4670	9051	3211		2807				$ 3,193,775.00

Order Total: $ 3,193,775.00

VENDOR INSTRUCTIONS:

1. SEND ORIGINAL INVOICE WITH DUPLICATE COPY TO THE CITY DEPARTMENT TO WHICH THE GOOD(S) WERE DELIVERED.
2 SHIPPING INSTRUCTIONS: F.O.B. DESTINATION UNLESS OTHERWISE SPECIFIED.
3. NO FEDERAL OR STATE SALES TAX SHALL BE INCLUDED IN PRICES BILLED. LIMITED SALES TAX #74-6000085.

Authorized Agent for City Manager
By acceptance of this purchase order, you agree to comply with the terms and conditions incorporated herein by reference and made a part of this order.

1/6/16
Date

CONTRACT BETWEEN THE CITY OF AUSTIN
AND
SIEMENS ENERGY, INC.
FOR
THREE KA66SV-GL400 AERATION BLOWERS FOR THE SOUTH AUSTIN REGIONAL WASTEWATER TREATMENT PLANT

This Contract is made by and between the City of Austin ("City"), a home-rule municipality incorporated by the State of Texas, and Siemens Energy, Inc. ("Contractor"), at PO Box 312040, New Braunfels, Texas 78131.

SECTION 1. GRANT OF AUTHORITY, SERVICES AND DUTIES

1.1 **Engagement of the Contractor.** Subject to the general supervision and control of the City and subject to the provisions of the Terms and Conditions contained herein, the Contractor is engaged to provide the services set forth in Section 2, Scope of Work.

1.2 **Responsibilities of the Contractor.** The Contractor shall provide all technical and professional expertise, knowledge, management, and other resources required for providing the commodities identified in Section 2. In the event that the need arises for the Contractor to provide deliverables beyond those stated in the Section 2, the Contractor and the City shall negotiate mutually agreeable terms and compensation for such.

1.3 **Responsibilities of the City.** The City's Contract Manager will be responsible for exercising general oversight of the Contractor's activities in delivering the commodities. Specifically, the Contract Manager will represent the City's interests in resolving day-to-day issues that may arise during the term of this Contract, shall participate regularly in conference calls or meetings for status reporting, shall promptly review any written reports submitted by the Contractor, and shall approve all invoices for payment, as appropriate. The City's Contract Manager shall give the Contractor timely feedback on the acceptability of progress.

1.4 **Designation of Key Personnel.** The Contractor's Contract Manager for this engagement shall be Oscar Ollervides, Phone: (417) 864-5599, Email Address: oscar.ollervides@siemens.com. The City's Contract Manager for the engagement shall be Charles Celauro, (512) 972-0208, Email Address: charles.celauro@austintexas.gov. The City's and the Contractor resolve to keep the same key personnel assigned to this engagement throughout its term. In the event that it becomes necessary for the Contractor to replace any key personnel, the replacement will be an individual having equivalent experience and competence in executing projects such as the one described herein. Additionally, the Contractor will promptly notify the City Contract Manager and obtain approval for the replacement. Such approval shall not be unreasonably withheld.

1.5 **Novation Agreement.** It is the intent of this Contract to provide for its assignment to a general contractor ("Installing Contractor") under award of a separate contract for construction. The City, Contractor, and Installing Contractor shall execute a novation agreement ("Novation Agreement") at a time to be determined by the City in a form substantially similar to Exhibit B. The Novation Agreement shall ensure that the Installing Contractor as assignee of the Contract shall be substituted for the City and all references in the Contract that in any provide for communications between the Contractor and the City or call for instructions to be received or sent between any of those parties shall be construed to run between the Contractor and the Installing Contractor and from the Installing Contractor to the Contractor, unless otherwise indicated. Notwithstanding the foregoing, any such purported assignment is subject to the understanding that there shall be no increase in Contractor's obligations, in their liability nor shall there be any added restriction to the Contractor's rights other than as provided in the original Contract with the City. Further, no assignment shall be permitted if the Installing Contractor is (i) a competitor or an affiliate of a competitor of Contractor; (ii) an entity in litigation with Contractor; or (iii) fails to provide and demonstrate adequate assurances of payment to Contractor. Any purported assignment contrary to such requirements shall be null and void.

SECTION 2. SCOPE OF WORK

2.1 **Contractor's Obligations.** The Contractor shall fully and timely provide all deliverables described herein and in the Contractor's Offer in strict accordance with the terms, covenants, and conditions of the Contract and all applicable Federal, State, and local laws, rules, and regulations.

2.2 Contractor shall ship the following (the "Goods"):

Quantity/Size/Model No:	Three (3) STC GO (66-SV-GL400)
Capacity of each, SCFM:	32,000 (14.7 psia, 68 degrees F, 36% RH)
Discharge Pressure, psig	10.55
Motor HP	2000

Submittal Drawings	$125,000
Equipment	$2,985,910
Freight	$24,300
Total:	**$3,135,710**
Optional Storage and Maintenance	$600/blower/month

2.3 **Description of the Goods and Services.** This Contract includes the supply of: three (3) single stage centrifugal blower units, motors, lube oil systems, silencers, motorized discharge blowoff valves, check valves, air filters, and the blower control system. The blower control system shall monitor and protect the blowers and operate the blowers to maintain a pressure set by the operator at minimum power consumption. The blower control system shall include: blower instrumentation, pressure transmitters, local control panels for each blower and a single master control panel - each with integral programmable logic controller (PLC), operator interface hardware, control and monitoring software and graphics; surge and vibration protection; and all devices, accessories, software, and appurtenances necessary for a complete and fully automated air supply system. The master control panel shall integrate control of both the Train A/B Blowers provided with this procurement, and the existing Train C Blowers, with the six blowers working together as part of a common air supply system. The Services shall include: cooperation and coordination with the City's Engineer and Installing Contractor; design drawings review and assistance; shop drawings and control documentation; O&M manuals, installation, startup and testing support, record drawings, warranties, and training as required for efficient installation, operation and maintenance of the system. If requested by the City, the Contractor shall provide storage and maintenance of the Goods after they are ready for shipment at the Contractor's manufacturing facility in Springfield, Missouri at the rates specified above.

2.4 The Goods and Services shall be provided within the number of days following the notice to proceed established by the following schedule:

Goods and Services	Cumulative Calendar Days following Notice to Proceed if Notice to Proceed is Received no Earlier than January 18, 2016, and no later than March 1, 2016
Delivery of initial shop drawing submittal and manufacturers' data	60
Delivery of final shop drawings and manufacturers' data	105
Delivery of preliminary O&M manuals and data	375
Delivery of all equipment to the site or to an agreed upon storage warehouse:	435
Earliest acceptable delivery	465
Latest acceptable delivery	555
Latest acceptable delivery of final operation and maintenance manuals	585
Anticipated blower testing and startup period for first blower installed	645
Anticipated substantial completion and final acceptance of equipment and blower control systems	705

2.5 The Contractor shall provide the Goods and Services and all associated equipment, labor, materials, supplies, appurtenances, and delivery in compliance with the Project Manual for CIP 3333.028 SAR Blower Improvement Project Aeration Air Blowers and Air Control System Procurement Documents Technical Specifications (Divisions 01 through 17) dated March 2015 attached as Exhibit C and the Contractor's Proposal dated November 4, 2015 attached as Exhibit D. Any and all technical comments, clarifications and exceptions taken and shown in Exhibit D shall take precedence over any other specification or reference made in the agreement herein.

2.6 **Liquidated Damages.** The Contractor understands and agrees that the delivery schedule described in Section 2.4 above is critical to the City, therefore, for each calendar day subsequent to the substantial failure to meet the delivery schedule described in Section 2.4 above, the City, may, in its discretion, impose liquidated damages of one-thousand five-hundred dollars ($1500) a day as liquidated damages from the fees otherwise payable to the Contractor not to exceed an aggregate of Fifteen-Percent (15%) of the Contract Price ("Delay Liquidated Damages"). The parties agree that the City's actual damages would be difficult, if not impossible to calculate, but the amounts set forth in this Section represent a reasonable calculation of the City's damages and that the withholding of any such liquidated damages will not constitute a penalty but will be considered the agreed to measure of damages for late performance as determined by the parties hereto. The City has the right to offset any liquidated damages payable to the City, as specified above, against any payments due to the Contractor. If insufficient payments are available to offset such liquidated damages, then the Contractor shall

pay the City any remaining liquidated damages within forty-five (45) calendar days following receipt of written notice of the amount due. Any additional delay attributable to the City shall extend the delivery date of the equipment in reasonable proportion to account for the number of days delayed by the City. Further the City agrees to accept delivery on the agreed upon delivery date. Should the City fail to take possession or request we hold the shipment upon readiness to ship, the City shall be responsible for payment in full as if delivered plus any applicable storage charges. The performance guarantees and liquidated damages for impaired performance (the "Performance Liquidated Damages") of the equipment are as set forth in the agreed specifications. Contractor's obligation to pay Performance Liquidated Damages shall be limited to an aggregate of Fifteen-Percent (15%) of the Contract Price for liquidated damages arising from failure to achieve the guaranteed performance criteria. The parties agree that the City's actual damages would be difficult, if not impossible to calculate, but the amounts set forth in this section represent a reasonable calculation of the City's damages and that the withholding of any such liquidated damages will not constitute a penalty but will be considered the agreed to measure of damages for performance of the equipment as determined by the parties hereto. The Contractor's sole and exclusive liability and the City's sole and exclusive remedy for delay in delivery of the equipment caused by the Contractor and/or performance of the equipment shall be the payment of Delay Liquidated Damages and/or Performance Liquidated Damages as set forth herein and no other remedies of any kind whatsoever shall apply whether based in contract, in tort (including negligence and strict liability) or any other theory of recovery. The maximum aggregate for any and all liquidated damages payable under this Contract shall not exceed Twenty-Percent (20%) of the Contract amount.

SECTION 3. COMPENSATION

3.1 **Contract Amount.** The Contractor will be paid an amount not-to-exceed $3,193,775 for all fees and expenses according to the below payment schedule:

Goods and Services Provided	Payment (Cumulative Percentage of the Not-to-Exceed Amount)
Delivery of Initial Shop Drawing Submittal, and manufacturers' data	5
Final approval of Shop Drawings and manufacturers' data	10
Start of Production	45
Delivery of all equipment to the site or to an agreed upon storage warehouse in acceptable condition	75
Completion of installation, including Final O&M Manual, startup, field testing, and installation check	95
No later than ninety (90) days after successful commissioning	100

3.2 **Invoices.**

3.2.1 The Contractor shall submit separate invoices in duplicate within 10 calendar days after completion and final approval. If partial shipments or deliveries are authorized by the City, a separate invoice must be sent for each shipment or delivery made.

3.2.2. **Invoices shall include, but not be limited to, the following: the Contractor's name on a professionally pre-printed form; the Contractor's sequential numbering on the invoices; the Contractor's address and phone number; the City's purchase order number; date of service; location of service; itemized description of the work; copy of signed ticket(s).** Invoices shall be itemized. The Contractor's name and, if applicable, the tax identification number on the invoice must exactly match the information in the Contractor's registration with the City. Unless otherwise instructed in writing, the City may rely on the remittance address specified on the Contractor's invoice. Invoices received without all required information cannot be processed and will be returned to the Contractor. Invoices shall be itemized and transportation charges, if any, shall be listed separately. A copy of the bill of lading and the freight waybill, when applicable, shall be attached to the invoice. Invoices shall be mailed to the below address:

	City of Austin
Department	Austin Water Utility, Facility Engineering Division
Attn:	Charles Celauro

Address	625 East 10th Street, Suite 400
City, State, Zip Code	Austin, Texas 78701

3.2.2 Invoices for labor shall include a copy of all time-sheets with trade labor rate and deliverables order number clearly identified. Invoices shall also include a tabulation of work-hours at the appropriate rates a grouped by work order number. Time billed for labor shall be limited to hours actually worked at the work site.

3.2.3 Unless otherwise expressly authorized in the Contract, the Contractor shall pass through all Subcontract and other authorized expenses at actual cost without markup.

3.2.4 Federal excise taxes, State taxes, or City sales taxes must not be included in the invoiced amount. The City will furnish a tax exemption certificate upon request.

3.3 **Payment.**

3.3.1 All proper invoices received by the City will be paid within thirty (30) calendar days of the City's receipt of the deliverables or of the invoice, whichever is later.

3.3.2 If payment is not timely made, (per this paragraph), interest shall accrue on the unpaid balance at the lesser of the rate specified in Texas Government Code Section 2251.025 or the maximum lawful rate; except, if payment is not timely made for a reason for which the City may withhold payment hereunder, interest shall not accrue until ten (10) calendar days after the grounds for withholding payment have been resolved.

3.3.3 The City may withhold or set off the entire payment or part of any payment otherwise due the Contractor to such extent as may be necessary on account of:

3.3.3.1 delivery of defective or non-conforming deliverables by the Contractor;

3.3.3.2 the Contractor to submit proper invoices with all required attachments and supporting documentation; or

3.3.3.3 failure of the Contractor to comply with any material provision of the Contract Documents for which Contractor has failed to cure after being provided a reasonable period of time in which to do so.

3.3.4 Notice is hereby given of Article VIII, Section 1 of the Austin City Charter which prohibits the payment of any money to any person, firm or corporation who is in arrears to the City for taxes, and of §2-83 of the Austin City Code concerning the right of the City to offset indebtedness owed the City.

3.3.5 Payment will be made by check unless the parties mutually agree to payment by credit card or electronic transfer of funds. The Contractor agrees that there shall be no additional charges, surcharges, or penalties to the City for payments made by credit card or electronic transfer of funds.

3.4 **Non-Appropriation.** The awarding or continuation of this Contract is dependent upon the availability of funding. The City's payment obligations are payable only and solely from funds Appropriated and available for this contract. The absence of Appropriated or other lawfully available funds shall be deemed a termination for the convenience of the City, accordingly any and all charges for such termination will be made payable to Contractor upon such termination in accordance with Article 4.5 herein. The City shall provide the Contractor written notice of the failure of the City to make an adequate Appropriation for any fiscal year to pay the amounts due under the Contract, or the reduction of any Appropriation to an amount insufficient to permit the City to pay its obligations under the Contract. Insufficient funds shall be treated in the same fashion as the absence of funds from any Appropriation. If payments are not made when due Contractor, upon fifteen (15) days written notice, may, at its option, (i) terminate this Contract (which termination shall be treated as a termination pursuant to Article 4,5) or (ii) suspend all further work hereunder. Resumption of work thereafter is contingent upon correction of the payments deficiency by City. The schedule for the resumed work will be established by Contractor based on its then current work load and the availability of other resources. All Contractor expenses associated with any such suspension shall be for the account of City.

3.5 **Final Payment and Close-Out.**

3.5.1 If an MBE/WBE Program Compliance Plan is required by the Solicitation, and the Contractor has identified Subcontractors, the Contractor is required to submit a Contract Close-Out MBE/WBE Compliance Report to the project manager or contract manager no later than the 15th calendar day after completion of all work under the contract. Final payment, retainage, or both may be withheld if the Contractor is not in compliance with the requirements of the Compliance Plan as accepted by the City.

3.5.2 The making and acceptance of final payment will constitute:

3.5.2.1 a waiver of all claims by the City against the Contractor, except claims (1) which have been previously asserted in writing and not yet settled, (2) arising from defective work appearing after final inspection, (3) arising from failure of the Contractor to comply with the Contract or the terms of any warranty specified herein, (4) arising from the

Contractor's continuing obligations under the Contract, including but not limited to indemnity and warranty obligations, and

3.5.2.2 a waiver of all claims by the Contractor against the City other than those previously asserted in writing and not yet settled.

3.5.3 All performance tests will be deemed successfully passed such that Equipment will be deemed finally accepted, if the performance tests have not been completed due to delay, other than delay caused by Contractor, by the earlier of (i) three (3) months following delivery or (ii) the date the Equipment is put into commercial operation.

SECTION 4. TERM AND TERMINATION

4.1 **Term of Contract.** The Contract shall become effective on the date executed by the City ("Effective Date") and shall be in effect for a term of two (2) years.

4.1.1 Upon expiration of the initial term or period of extension, the Contractor agrees to hold over under the terms and conditions of this Contract for such a period of time as is reasonably necessary to re-solicit and/or complete the project (not to exceed 120 calendar days unless mutually agreed on in writing). In the event that that 120 day time period is exceeded, the contract shall be deemed terminated as for the convenience of the City and subject to the provisions of Article 4.5 herein.

4.1.2 Upon written notice to the Contractor from the City's Purchasing Officer or his designee and acceptance of the Contractor, the term of this contract shall be extended on the same terms and conditions for an additional period as indicated in this paragraph.

4.2 **Right To Assurance.** Whenever one party to the Contract in good faith has reason to question the other party's intent to perform, demand may be made to the other party for written assurance of the intent to perform.

4.3 **Default.** The Contractor shall be in default under the Contract if the Contractor (a) breaches any of the material obligations under the Contract and fails to commence to cure within thirty (30) days after notice from the City and diligently pursue thereafter, (b) becomes insolvent or seeks relief under the bankruptcy laws of the United States or (c) makes a fraudulent misrepresentation in Contractor's Offer, or in any report or deliverable required to be submitted by Contractor to the City.

4.4 **Termination For Cause.** In the event of a default by the Contractor, the City shall have the right to terminate the Contract for cause, by written notice effective thirty (30) calendar days, unless otherwise specified, after the date of such notice, unless the Contractor cures such default, or provides evidence sufficient to prove to the City's reasonable satisfaction that such default does not, in fact, exist. The City may place Contractor on probation for a specified period of time within which the Contractor must correct any non-compliance issues. Probation shall not normally be for a period of more than nine (9) months, however, it may be for a longer period, not to exceed one (1) year depending on the circumstances. If the City determines the Contractor has failed to perform satisfactorily during the probation period, the City may proceed with suspension. In the event of a default by the Contractor, the City may suspend or debar the Contractor in accordance with the "City of Austin Purchasing Office Probation, Suspension and Debarment Rules for Vendors" and remove the Contractor from the City's vendor list for up to five (5) years and any Offer submitted by the Contractor may be disqualified for up to five (5) years. Such debarment, suspension or probation shall apply strictly to the Contractor tendering the Work and not to any of Contractor's affiliates In the event of such termination for cause, Contractor will reimburse City for its reasonable and verifiable costs to complete the Services or obtain replacement Equipment up to the total price paid to Contractor under the Contract. In the event of any breach of the Contract by City, Contractor shall be entitled to an extension of time to the extent necessitated by the breach and to reimbursement for all costs and expenses incurred by Contractor as a result of such breach. Contractor may also terminate the Contract for cause in the event of (i) an act of insolvency or bankruptcy by City or (ii) a material breach of the Contract by City which City fails to commence to cure within thirty (30) days after notice thereof from Contractor and fails to diligently pursue thereafter. In such event, the termination charges shall be calculated based upon the portion of the purchase price for the work performed, man hours expended and materials acquired at as the date of termination plus the expenses associated with the breach and termination, including, but not limited to, any additional expense incurred by reason of termination or cancellation of agreements between Contractor and its Suppliers, and any applicable cost allocated in contemplation of performance.

4.5 **Termination for Convenience.**

City may terminate the Agreement for convenience upon thirty (30) days prior written notice to Contractor and payment of reasonable and proper termination charges. This Contract shall be deemed to have been terminated by the City in the event that (i) the work is delayed for a period in excess of six (6) months for any reason attributable to City and/or Force Majeure; (ii) there is Non-Appropriation of funding for this contract. Termination charges shall be calculated based upon the portion of the purchase price for the work performed, man hours expended and materials acquired at as the date of termination plus the expenses associated with the termination, including, but not limited to, any additional expense incurred by reason of termination or cancellation of agreements between Contractor and its

Suppliers, and any applicable cost allocated in contemplation of performance. Contractor will make every reasonable effort to minimize such termination charges. All termination charges shall be due and payable thirty (30) days from the date of the Contractor's invoice.

4.5 **Fraud.** Fraudulent statements by the Contractor on any Offer or in any report or deliverable required to be submitted by the Contractor to the City shall be grounds for the termination of the Contract for cause by the City and may result in legal action.

SECTION 5. OTHER DELIVERABLES

5.1 **Insurance:** The following insurance requirements apply.

5.1.1 **General Requirements.**

5.1.1.1 The Contractor shall at a minimum carry insurance in the types and amounts indicated herein for the duration of the Contract and during any warranty period.

5.1.1.2 The Contractor shall provide a Certificate of Insurance as verification of coverages required below to the City at the below address prior to Contract execution and within fourteen (14) calendar days after written request from the City.

5.1.1.3 The Contractor must also forward a Certificate of Insurance to the City whenever a previously identified policy period has expired, or an extension option or holdover period is exercised, as verification of continuing coverage.

5.1.1.4 The Contractor shall not commence work until the required insurance is obtained and certificates have been reviewed by City. Approval of insurance by the City shall not relieve or decrease the liability of the Contractor hereunder and shall not be construed to be a limitation of liability on the part of the Contractor.

5.1.1.5 The Contractor's insurance coverage shall be written by companies licensed to do business in the State of Texas at the time the policies are issued and shall be written by companies with A.M. Best ratings of B+VII or better.

5.1.1.6 All endorsements naming the City as additional insured, waivers, and notices of cancellation endorsements as well as the Certificate of Insurance shall be mailed to the following address:

City of Austin
Purchasing Office
P. O. Box 1088
Austin, Texas 78767

5.1.1.7 The "other" insurance clause shall not apply to the City where the City is an additional insured shown on any policy. The additional insured status for City shall apply solely to the extent that bodily injury, death and third party property damage are caused by the negligent acts or omissions of Contractor and/or its subcontractors. It is intended that policies required in the Contract, covering both the City and the Contractor, shall be considered primary coverage as respects the additional insureds.

5.1.1.8 If insurance policies are not written for amounts specified in Paragraph 5.1.2, Specific Coverage Requirements, the Contractor shall carry Umbrella or Excess Liability Insurance for any differences in amounts specified. If Excess Liability Insurance is provided, it shall follow the form of the primary coverage.

5.1.1.9 The City reserves the right to review the insurance requirements set forth during the effective period of the Contract and to make reasonable adjustments to insurance coverage, limits, and exclusions when deemed necessary and prudent by the City based upon changes in statutory law, court decisions, the claims history of the industry or financial condition of the insurance company as well as the Contractor. If any such changes are made to the insurance requirements herein, Contractor shall be entitled to a change order.

5.1.1.10 The Contractor shall not cause any insurance to be canceled nor permit any insurance to lapse during the term of the Contract or as required in the Contract.

5.1.1.11 The Contractor shall be responsible for premiums, deductibles and self-insured retentions, if any, stated in such policies.

5.1.1.12 The Contractor shall endeavor to provide the City thirty (30) calendar days written notice of erosion of the aggregate limits below occurrence limits for all applicable coverages indicated within the Contract.

5.1.2 **Specific Coverage Requirements.** The Contractor shall carry insurance in the types and amounts indicated below for the duration of the Contract, including extension options and hold over periods, and during any warranty period. These insurance coverages stated below are not intended to limit the responsibility or liability of the Contractor.

5.1.2.1 **Commercial General Liability Insurance.** The bodily injury and property damage per occurrence and in the aggregate are $1,000,000 for coverages A (Bodily Injury and Property Damage) and B (Personal and Advertising Injuries). The policy shall contain the following provisions and endorsements.

5.1.2.1.1 Contractual liability coverage for liability assumed under the Contract and all other Contracts related to the project.

5.1.2.1.2 Contractor/Subcontracted Work.

5.1.2.1.3 Products/Completed Operations Liability for the duration of the warranty period.

5.1.2.1.4 Waiver of Subrogation, Endorsement CG 2404, or equivalent coverage.

5.1.2.1.5 Thirty (30) calendar days Notice of Cancellation, Endorsement CG 0205, or equivalent coverage.

5.1.2.1.6 The City of Austin listed as an additional insured to the extent that bodily injury, death and third party property damage are caused by the negligent acts or omissions of Contractor and its subcontractors.

5.1.2.2 **Business Automobile Liability Insurance.** The Contractor shall provide coverage for all owned, non-owned and hired vehicles with a combined single limit of $1,000,000 per occurrence for bodily injury and property damage and in the aggregate. The policy shall contain the following endorsements:

5.1.2.2.1 Waiver of Subrogation, Endorsement CA0444, or equivalent coverage.

5.1.2.2.2 Thirty (30) calendar days Notice of Cancellation, Endorsement CA0244, or equivalent coverage.

5.1.2.2.3 The City of Austin listed as an additional insured, to the extent that bodily injury, death and third party property damage are caused by the negligent acts or omissions of Contractor and its subcontractors.

5.1.2.3 **Worker's Compensation and Employers' Liability Insurance.** Coverage shall be consistent with statutory benefits outlined in the Texas Worker's Compensation Act (Section 401). The policy limits for Employer's Liability are $1,000,000 bodily injury each accident, $1,000,000 bodily injury by disease policy limit and $1,000,000 in the aggregate. The policy shall contain the following provisions and endorsements:

5.1.2.3.1 The Contractor's policy shall apply to the State of Texas.

5.1.2.3.2 Waiver of Subrogation, Form WC420304, or equivalent coverage.

5.1.2.3.3 Thirty (30) calendar days Notice of Cancellation, Form WC420601, or equivalent coverage.

5.1.2.4 **Umbrella Liability Insurance.**

5.1.2.4.1 The Contractor shall provide coverage, at a limit of $3,000,000 per occurrence and in the aggregate.

5.1.2.4.2 The policy shall be excess over the Commercial General Liability, Business Automobile Liability, and Employer's Liability coverages.

5.1.2.5 **Endorsements.** The specific insurance coverage endorsements specified above, or their equivalents must be provided. In the event that endorsements, which are the equivalent of the required coverage, are proposed to be substituted for the required coverage, copies of the equivalent endorsements must be provided for the City's review and approval.

In connection with the Contract, the City shall purchase and maintain insurance as specified below:

5.1.3 **Property Insurance**: Upon completion of the project, City shall purchase and maintain property damage insurance for the facilities at the site until the expiration of the last of the applicable Warranty Periods.

5.2 **Shipment and Delivery**

5.2.1 All materials shall be suitably packaged to facilitate handling and protect against damage during transit and storage. Painted surfaces shall be protected against impact, abrasion, discoloration, and other damage. All painted surfaces which are damaged prior to acceptance of equipment shall be repainted to the satisfaction of the City's Engineer. Each item, package, or bundle of material shall be tagged or marked as identified in the delivery schedule or on the shop drawings. Complete packing lists and bills of material shall be included with each shipment.

5.2.2 All Goods will be delivered DAP South Austin Regional Wastewater Treatment Plant (INCOTERMS 2010). The Contractor shall select and be responsible for the means and methods of transportation. All transportation charges, including but not limited to switching, trucking, lighterage and special handling, shall be paid by the Contractor.

5.2.3 The Contractor shall give the City and the City's Engineer at least 15 days' prior written notice of the date when the Goods will be ready for shipment and the manner of shipment. Such notice will include instructions concerning any special equipment or services required at the point of delivery to unload and care for the Goods. The Contractor also shall require the carrier to give the City and the City's Engineer not less than 24 hours' notice by telephone of the anticipated hour of delivery.

5.2.4 The City or the City's Engineer shall inspect the Goods upon delivery for purposes of identifying the Goods and general verification of quantities and observation of apparent condition in order to provide a basis for a progress payment. The City may refuse to accept delivery of any Goods that are apparently defective. If no apparent defects are discovered, the City shall accept delivery.

5.2.5 Notice of the City's acceptance of delivery will be provided to the Contractor by a receipted copy of the shipping documents or by such other document as may be specified in the Contract.

5.2.6 All equipment and materials provided under this Contract shall be shipped and delivered at the expense of the Contractor, and all costs relative thereto shall be included in the Contract price.

5.2.7 The equipment and materials shall be shipped to:

South Austin Regional Wastewater Treatment Plant 1017
Fallwell Lane
Del Valle, Texas 78617

5.2.8 Delivery to the designated location shall be made by truck, and shall be subject to all applicable laws and regulations governing such shipment and delivery.

5.2.9 The equipment and materials shall be delivered to the Installing Contractor, according to the assigned contract, at the designated location between the hours of 8 a.m. and 5 p.m., Monday through Friday. Delivery shall be coordinated with the Installing Contractor to provide adequate time for unloading during normal working hours.

5.2.10 The Installing Contractor shall be responsible for unloading the equipment and materials, and for inspecting and inventorying the delivered equipment and materials upon receipt at the site. To that end, the Contractor shall advise regarding unloading, and the City's Engineer shall assist the Installing Contractor with the inventory and verification, to the mutual satisfaction of both parties. The Contractor shall perform no direct supervision of the City's or Installing Contractor's personnel.

5.2.11 The Contractor shall provide to the Installing Contractor copies of all bills of lading and other documents necessary for the inventory. The Contractor shall cooperate with the Installing Contractor during the unloading and inventory activities, so that joint agreement can be reached. In the event of disagreement, the City's Engineer shall be notified and decisions will be made under the terms of this Contract.

5.2.12 After acceptance, the Installing Contractor shall be responsible for the handling, storage, and installation of the equipment and materials and for administration of the assigned Contract, all in accordance with the Contract.

5.3 **Shipment Under Reservation Prohibited.** The Contractor is not authorized to ship the deliverables under reservation and no tender of a bill of lading will operate as a tender of deliverables.

5.4 **Title & Risk of Loss.** Title to and risk of loss of the deliverables shall pass to the City only when the City actually receives the deliverables.

5.5 **Right Of Inspection And Rejection.** The City expressly reserves the right to inspect the deliverables at delivery before accepting them, and to reject defective or non-conforming deliverables and have them repaired ore replaced as per the warranty provisions hererein. The City has the right to reasonably inspect the Contractor's facilities during business hours, or the deliverables at the Contractor's premises, the Contractor shall furnish, or cause to be furnished, without additional charge, all reasonable facilities and assistance to the City to facilitate such inspection to enable city to observe any tests on the equipment. Siemens, if requested, will inform the City of those tests and procedures which can be witnessed. Should City elect to witness specific tests, City must so specify such requirement in ample time to permit Contractor to include said witness tests in the schedule. Contractor, if requested, will advise City of the schedule of such tests. However, no rescheduling of tests or delays in manufacturing or shipment will be made to accommodate such inspection. Contractor will exercise reasonable efforts to secure similar rights with respect to the inspection of the work at Supplier's premises.

5.6 **Substitute and "Or Equal" Items.** Provisions for evaluation of substitutes and "or-equal" items of materials and equipment are as stated below. Requests for review of equivalency will not be accepted by the City's Engineer from anyone except the Contractor, and such requests will not be considered until after the Contract has been executed.

5.6.1 Whenever an item of material or equipment is specified or described in the Contract by using the name of a proprietary item or the name of the Contractor, the specification or description is intended to establish the type, function, and quality required. Unless the specification or description contains or is followed by words reading that no like, equivalent or substitution is permitted, other items of material or equipment may be accepted by City's Engineer if sufficient information is submitted by the Contractor to allow the City's Engineer to determine that the material or equipment proposed is equivalent to that named.

5.6.2 If the Contractor wishes to furnish or use a substitute item of material or equipment, the Contractor shall first make written application to the City's Engineer for acceptance thereof, certifying that the proposed substitute will perform adequately the functions and achieve the results called for by the general design, be similar in substance to that specified and be suited to the same use as that specified.

5.6.3 The Contractor shall submit sufficient information to allow the City's Engineer to determine that the item of material or equipment proposed is essentially equivalent to that named and an acceptable substitute therefor and include the following:

5.6.3.1 All variations of the proposed substitute from that specified, together with maintenance, repair and replacement service.

5.6.3.2 An itemized estimate of all costs or credits that will result directly or indirectly from acceptance of such substitute, including costs of redesign and claims of other contractors affected by the resulting change.

5.6.3.3 The City's Engineer may require the Contractor to furnish additional data about the proposed substitute at the Contractor's expense.

5.6.4 The City's Engineer will within a reasonable time evaluate each proposal or submittal. The City's Engineer will be the sole judge of acceptability, acting reasonably. No substitute will be ordered, installed or utilized without the City Engineer's prior written acceptance.

5.7 **Special Tools & Test Equipment.** If the price stated on the Offer includes the cost of any special tooling or special test equipment fabricated or required by the Contractor for the purpose of filling this order, such special tooling equipment and any process sheets related thereto shall become the property of the City and shall be identified by the Contractor as such.

5.8 **Equal Opportunity.**

5.8.1 **Equal Employment Opportunity.** No Contractor or Contractor's agent, shall engage in any discriminatory employment practice as defined in Chapter 5-4 of the City Code. No Bid submitted to the City shall be considered, nor any Purchase Order issued, or any Contract awarded by the City unless the Contractor has executed and filed with the City Purchasing Office a current Non-Discrimination Certification. The Contractor shall sign and return the Non-Discrimination Certification attached hereto as

Exhibit A. Noncompliance with Chapter 5-4 of the City Code may result in sanctions, including termination of the Contract and the Contractor's suspension or debarment from participation on future City contracts until deemed compliant with Chapter 5-4.

5.8.2 **Americans With Disabilities Act (ADA) Compliance.** No Contractor, or Contractor's agent shall engage in any discriminatory employment practice against individuals with disabilities as defined in the ADA.

5.9 **Delays.**

5.10.1 The City may delay scheduled delivery or other due dates by written notice to the Contractor if the City deems it is in its best interest. If such delay causes an increase in the cost of the work under the Contract, the City and the Contractor shall negotiate an equitable adjustment for costs incurred by the Contractor in the Contract price and execute an amendment to the Contract. Such change order shall include (i) payment for the work performed to date, (ii) payment for the costs associated with the suspension and (iii) schedule and price adjustments. All such items must be agreed prior to recommencement. The Contractor must assert its right to an adjustment within thirty (30) calendar days from the date of receipt of the notice of delay. Failure to agree on any adjusted price shall be handled under the Dispute Resolution process specified herein.

5.10.2 Neither party shall be liable for any default or delay in the performance of its obligations under this Contract if, while and to the extent such default or delay is caused by acts of God, fire, riots, civil commotion, labor disruptions, sabotage, sovereign conduct, or any other cause beyond the reasonable control of such Party ("Force Majeure"). In the event of default or delay in Contract performance due to any of the foregoing causes, then the time for completion of the services will be extended; provided, however, in such an event, a conference will be held within three (3) business days to establish a mutually agreeable period of time reasonably necessary to overcome the effect of such failure to perform.

5.11 **Ownership And Use Of Deliverables.**

5.11.1 **Patents & Copyrights.** The City shall be entitled to a non-exclusive royalty free license to use any goods, equipment, and equipment designs, drawings or other data and deliverables from the Contractor for which the City has paid the Contractor. Such right, however, is limited solely to the use necessary for the operation and maintenance of the deliverables provided for the plant and is fully subject to the confidentiality and proprietary rights set forth herein. Nothing herein shall be construed as granting to the City any other rights or interests in any intellectual property of the Contractor including but not limited to any patents or copyrights.

5.11.2 **Infringement.** The Contractor will, at its own expense, defend or at its option settle any suit or proceeding brought against the City so far as based on an allegation that any services or the equipment (including parts thereof), or use thereof for their intended purpose, constitutes an infringement of any United States patent or copyright or misappropriation of a trade secret, if the Contractor is notified promptly in writing and given authority, information, and assistance in a timely manner for the defense of said suit or proceeding. The Contractor will pay the damages and costs awarded in any suit or proceeding so defended. The Contractor will not be responsible for any settlement of such suit or proceeding made without its prior written consent. In case the services or the equipment, or any part thereof, as a result of any suit or proceeding so defended is held to constitute infringement of any such United States patent, copyright or trade secret, or its use by the City is enjoined, the Contractor will, at its option and its own expense, either: (i) procure for the City the right to continue using said equipment; (ii) replace it with substantially equivalent non-infringing equipment; or (iii) modify it so it becomes non-infringing. The Contractor will have no duty or obligation to the City to the extent that the services or equipment is (i) supplied according to the City's design or instructions wherein compliance therewith has caused the Contractor to deviate from its normal course of performance, (ii) modified by the City or its contractors after delivery, or (iii) combined by the City or its contractors with items not furnished hereunder and by reason of said design, instruction, modification, or combination a suit is brought against the City. In addition, if by reason of such design, instruction, modification or combination, a suit or proceeding is brought against the Contractor, the City shall protect the Contractor in the same manner and to the same extent that the Contractor has agreed to protect the City under the provisions herein.

5.12 **Rights to Proposal and Contractual Material.** All material submitted by the Contractor to the City shall become property of the City upon receipt. Any portions of such material claimed by the Contractor to be proprietary must be clearly marked as such. Determination of the public nature of the material is subject to the Texas Public Information Act, Chapter 552, Texas Government Code.

5.13 **Publications.** All published material and written reports submitted under the Contract must be originally developed material unless otherwise specifically provided in the Contract. When material not originally developed is included in a report in any form, the source shall be identified.

SECTION 6. WARRANTIES

6.1 **Warranty – Equipment.**

6.1.1 The Contractor warrants that each component of the equipment furnished to the City, including any part repaired or replaced by the Contractor during the Equipment Warranty Period, will be free of defects in design, workmanship and materials until the earlier of eighteen (18) months after the delivery of such component of the equipment or one (1) year from the date of first use of the item of equipment (the "Equipment Warranty Period"). If during the Equipment Warranty Period Contractor is promptly notified in writing that the equipment or any component thereof fails to conform to the Equipment Warranty, the Contractor will at its option and expense correct such nonconformity by repair or replacement.

6.2 **Warranty – Services.**

6.2.1 The Contractor warrants and represents that all services to be provided to the City under the Contract will be fully performed in a good and workmanlike manner and that (i) the advice, recommendations and performance of its personnel will reflect competent professional knowledge and judgment and (ii) the technical information, reports and analyses transmitted by Contractor in connection therewith will reflect competent professional knowledge and judgment.

6.2.2 The warranty period shall be one year from the completion of the services (the "Services Warranty Period"). If during the warranty period, one or more of the warranties are breached and upon written notice, the Contractor shall promptly upon receipt of demand perform the services again in accordance with above standard at no additional cost to the City or if such reperformance is impractical Contractor shall refund the amount of the compensation paid to Contractor for such nonconforming portion of the Services.

6.3 **Warranty Conditions.**

6.3.1 The warranties and remedies set forth in this herein are conditioned upon:

i. The City's receipt, handling, storage, installation, testing, operation and maintenance, including tasks incident thereto, of the equipment in accordance with the recommendations of the Contractor to the extent applicable or, in the absence of such recommendations or to the extent not applicable, in accordance with the generally accepted practices of the industry. In addition, such equipment shall not have been operated in excess of limitations specified in writing by the Contractor and not have been subjected to accident, alteration, abuse or misuse.

ii. For all warranty work, where disassembly, removal, replacement and reinstallation of equipment, materials or structures was not part of the Contractor's scope of work under the Agreement; the City providing, without cost to the Contractor, access to the nonconformity by disassembling, removing, replacing and reinstalling any equipment, materials or structures to the extent necessary to permit the Contractor to perform its warranty obligations.

iii. All warranty work being performed on a single-shift straight-time basis, Monday through Friday. In the event the City requests correction of warranty items on an overtime or multiple shift schedule, the premium portion of such overtime or multiple shift shall be to City's account.

iv. The City, without cost to Contractor, making its site facilities and personnel (to the extent consistent with personnel job classifications) available to assist the Contractor in the performance of its warranty obligations.

6.4 **Exclusivity of Warranty.**

THE WARRANTIES SET FORTH IN THIS ARTICLE ARE EXCLUSIVE AND ARE IN LIEU OF ALL OTHER WARRANTIES WHETHER STATUTORY, EXPRESS, OR IMPLIED (INCLUDING ALL WARRANTIES OF MERCHANTABILITY AND FITNESS FOR A PARTICULAR PURPOSE, AND ALL WARRANTIES ARISING FROM COURSE OF DEALING OR USAGE OF TRADE).

SECTION 7. MISCELLANEOUS

7.1 **Place and Condition of Work.** The City shall provide the Contractor access to the sites where the Contractor is to perform the services as required in order for the Contractor to perform the services in a timely and efficient manner in accordance with and subject to the applicable security laws, rules, and regulations. The Contractor acknowledges that it has satisfied itself as to the nature of the

City's service requirements and specifications, the location and essential characteristics of the work sites, the quality and quantity of materials, equipment, labor and facilities necessary to perform the services, and any other condition or state of fact which could in any way affect performance of the Contractor's obligations under the Contract. The Contractor hereby releases and holds the City harmless from and against any liability or claim for damages of any kind or nature if the actual site or service conditions differ from expected conditions. Notwithstanding the foregoing, the Contractor shall have no responsibility or liability with regard to any hazardous material which it does not know or have reason to know of its existence in the performance of the services, and the City shall be responsible for all pollution and environmental impairment arising from the property, the deliverables and the services other than for any such hazardous materials which the Contractor may have brought onsite. In the event that any such hazardous materials, including any asbestos materials, are discovered at the site, the Contractor shall have the right to suspend the work in progress, without consequence, until such time as the hazard has been safely remediated or contained by the City.

7.2 **Workforce.**

7.2.1 The Contractor shall employ only orderly and competent workers, skilled in the performance of the services which they will perform under the Contract.

7.2.2 The Contractor, its employees, subcontractors, and subcontractor's employees may not while engaged in participating or responding to a solicitation or while in the course and scope of delivering goods or services under a City of Austin contract or on the City's property:

7.2.2.1 use or possess a firearm, including a concealed handgun that is licensed under state law, except as required by the terms of the Contract; and

7.2.2.2 use or possess alcoholic or other intoxicating beverages, illegal drugs or controlled substances, nor may such workers be intoxicated, or under the influence of alcohol or drugs, on the job.

7.2.3 If the City or the City's representative notifies the Contractor that any worker is incompetent, disorderly or disobedient, has knowingly or repeatedly violated safety regulations, has possessed any firearms, or has possessed or was under the influence of alcohol or drugs on the job, the Contractor shall immediately remove such worker from Contract services, and may not employ such worker again on Contract services without the City's prior written consent.

7.3 **Compliance with Health, Safety, and Environmental Regulations.** The Contractor, its Subcontractors, and their respective employees, shall comply fully with all applicable federal, state, and local health, safety, and environmental laws, ordinances, rules and regulations in the performance of the services, including but not limited to those promulgated by the City and by the Occupational Safety and Health Administration (OSHA). In case of conflict, the most stringent safety requirement shall govern. The Contractor shall be liable for any resulting fines or penalties arising from the breach of the Contractor's obligations under this paragraph.

7.4 **Significant Event.** The Contractor shall immediately notify the City's Contract Manager of any events which Contractor reasonably believes may affect the scope of supply or the schedule. All notifications shall be submitted in writing to the Contract Manager. Such events may include but are not limited to the following:

7.4.1 Force Majeure events;

7.4.2 any major computer software conversion, enhancement or modification to the operating systems, security systems, and application software, used in the performance of this Contract which directly affects any software to be provided to the City and for no other purpose;

7.4.3 any significant termination or addition of provider contracts;

7.4.4 the Contractor's insolvency or the imposition of, or notice of the intent to impose, a receivership, conservatorship or special regulatory monitoring, or any bankruptcy proceedings, voluntary or involuntary, or reorganization proceedings;7.4.5 strikes, or catastrophic impairment of the Contractor's facilities or of other facilities used by the Contractor in the performance of this Contract;

7.5 **Right To Audit.**

7.5.1 The Contractor agrees that for any time and material items provided the representatives of the Office of the City Auditor by

and through an independent audit firm shall have access to, and the right to audit, examine, or reproduce, those records which pertain specifically to invoices and purchases with respect to such time and material items of the Contractor related to the performance under this Contract. The Contractor shall retain all such records for a period of three (3) years after final payment on this Contract or until all audit and litigation matters that the City has brought to the attention of the Contractor are resolved, whichever is longer. The Contractor agrees to refund to the City any verified overpayments disclosed by any such audit.

7.6 **Stop Work Notice.** The City may issue an immediate Stop Work Notice in the event the Contractor is observed performing in a manner that is in violation of Federal, State, or local guidelines, or in a manner that is determined by the City to be unsafe to either life or property. Upon notification, the Contractor will first be given a reasonable opportunity in which to cure and if such cure is or cannot be completed then Contractor shall cease all work until notified by the City that the violation or unsafe condition has been corrected. The Contractor shall be liable for all costs incurred by the City as a result of the issuance of such Stop Work Notice.

7.7 **Indemnity.**

7.7.1 Definitions:

7.7.1.1 "Indemnified Claims" shall include any and all claims, demands, suits, causes of action, judgments and liability of every character, type or description, including all reasonable costs and expenses of any reasonable legal fees including attorney fees for:

7.7.1.1.1 damage to or loss of third party property (excluding, property of the City or property incorporated in or intended to be incorporated in the project)); and/or;

7.7.1.1.2 death or bodily injury to any person (including but not limited to the agents, officers and employees of the City, the Contractor, the Contractor's subcontractors, and third parties),

7.7.1.2"Fault" shall include the negligent acts or omissions or willful misconduct, of the Contractor.

7.7.2 THE CONTRACTOR SHALL DEFEND (AT THE OPTION OF THE CITY), INDEMNIFY, AND HOLD THE CITY, ITS SUCCESSORS, ASSIGNS, OFFICERS, EMPLOYEES AND ELECTED OFFICIALS HARMLESS FROM AND AGAINST ALL INDEMNIFIED CLAIMS DIRECTLY ARISING OUT OF, CONCERNING OR RESULTING FROM, THE FAULT OF THE CONTRACTOR, OR THE CONTRACTOR'S AGENTS, EMPLOYEES OR SUBCONTRACTORS, IN THE PERFORMANCE OF THE CONTRACTOR'S OBLIGATIONS UNDER THE CONTRACT. NOTHING HEREIN SHALL BE DEEMED TO LIMIT THE RIGHTS OF THE CITY OR THE CONTRACTOR (INCLUDING, BUT NOT LIMITED TO, THE RIGHT TO SEEK CONTRIBUTION) AGAINST ANY THIRD PARTY WHO MAY BE LIABLE FOR AN INDEMNIFIED CLAIM.

7.9 **Notices.** Unless otherwise specified, all notices, requests, or other communications required or appropriate to be given under the Contract shall be in writing and shall be deemed delivered three (3) business days after postmarked if sent by U.S. Postal Service Certified or Registered Mail, Return Receipt Requested. Notices delivered by other means shall be deemed delivered upon receipt by the addressee. Routine communications may be made by first class mail, telefax, or other commercially accepted means. Notices to the City and the Contractor shall be addressed as follows:

To the City:	To the Contractor:
City of Austin, Purchasing Office	Siemen's Energy, Inc.
ATTN: Tracy Franklin, Contract Administrator	ATTN: Oscar Ollervides
P.O. Box 1088	4654 W. Junction Street
Austin, TX 78767	Springfield, MO 65802

7.10 **Confidentiality.** In order to provide the deliverables to the City, Contractor may require access to certain of the City's and/or its licensors' confidential information (including inventions, employee information, trade secrets, confidential know-how, confidential business information, and other information which the City or its licensors consider confidential) (collectively, "Confidential Information"). Contractor acknowledges and agrees that the Confidential Information is the valuable property of the City and/or its licensors and any unauthorized use, disclosure, dissemination, or other release of the Confidential Information will substantially injure the City and/or its licensors. The Contractor (including its employees, subcontractors, agents, or representatives) agrees that it will maintain the Confidential Information in strict confidence and shall not disclose, disseminate, copy, divulge, recreate, or otherwise use

the Confidential Information without the prior written consent of the City or in a manner not expressly permitted under this Contract, unless the Confidential Information is required to be disclosed by law or an order of any court or other governmental authority with proper jurisdiction, provided the Contractor promptly notifies the City before disclosing such information so as to permit the City reasonable time to seek an appropriate protective order. The Contractor agrees to use protective measures no less stringent than the Contractor uses within its own business to protect its own most valuable information, which protective measures shall under all circumstances be at least reasonable measures to ensure the continued confidentiality of the Confidential Information. The same shall apply mutatis mutandis to any and all Confidential Information conveyed from the Contractor to the City in the maximum extent possible under the Texas Public Information Act.

7.11 **Advertising.** The Contractor shall not advertise or publish, without the City's prior consent, the fact that the City has entered into the Contract, except to the extent required by law.

7.12 **NOT USED**

7.13 **Gratuities.** The City may, by written notice to the Contractor, terminate the Contract for default if it is determined by the City that gratuities were offered or given by the Contractor or any agent or representative of the Contractor to any officer or employee of the City with a view toward securing the Contract or securing favorable treatment with respect to the awarding or amending or the making of any determinations with respect to the performing of such contract. In the event the Contract is terminated by the City pursuant to this provision, the City shall be entitled, in addition to any other rights and remedies, to recover or withhold the amount of the cost incurred by the Contractor in providing such gratuities.

7.14 **Prohibition Against Personal Interest in Contracts.** No officer, employee, independent consultant, or elected official of the City who is involved in the development, evaluation, or decision-making process of the performance of any solicitation shall have a financial interest, direct or indirect, in the Contract resulting from that solicitation. Any willful violation of this section shall constitute impropriety in office, and any officer or employee guilty thereof shall be subject to disciplinary action up to and including dismissal. Any violation of this provision, with the knowledge, expressed or implied, of the Contractor shall render the Contract voidable by the City.

7.15 **Independent Contractor.** The Contract shall not be construed as creating an employer/employee relationship, a partnership, or a joint venture. The Contractor's services shall be those of an independent contractor. The Contractor agrees and understands that the Contract does not grant any rights or privileges established for employees of the City.

7.16 **Assignment-Delegation.** The Contract shall be binding upon and enure to the benefit of the City and the Contractor and their respective successors and assigns, provided however, that no right or interest in the Contract shall be assigned and no obligation shall be delegated by the Contractor without the prior written consent of the City unless such assignment or delegation is to an affiliate of the Contractor. Any attempted assignment or delegation by the Contractor shall be void unless made in conformity with this paragraph. The Contract is not intended to confer rights or benefits on any person, firm or entity not a party hereto; it being the intention of the parties that there be no third party beneficiaries to the Contract.

7.17 **Waiver.** No claim or right arising out of a breach of the Contract can be discharged in whole or in part by a waiver or renunciation of the claim or right unless the waiver or renunciation is supported by consideration and is in writing signed by the aggrieved party. No waiver by either the Contractor or the City of any one or more events of default by the other party shall operate as, or be construed to be, a permanent waiver of any rights or obligations under the Contract, or an express or implied acceptance of any other existing or future default or defaults, whether of a similar or different character.

7.18 **Modifications.** The Contract can be modified or amended only in writing signed by both parties. No preprinted or similar terms on any Contractor invoice, order or other document shall have any force or effect to change the terms, covenants, and conditions of the Contract. Expenses incurred by Contractor due to changes in applicable laws, regulations and technical codes and standards or the imposition of new laws, regulations and/or technical codes and standards after the execution date of this Contract will be treated as changes to the scope of work and the Contract will be adjusted as set forth herein.

7.19 **Interpretation.** The Contract is intended by the parties as a final, complete and exclusive statement of the terms of their agreement. No course of prior dealing between the parties or course of performance or usage of the trade shall be relevant to supplement or explain any term used in the Contract. Although the Contract may have been substantially drafted by one party, it is the intent of the parties that all provisions be construed in a manner to be fair to both parties, reading no provisions more strictly against one party or the other.

7.20 **Dispute Resolution.**

7.20.1 If a dispute arises out of or relates to the Contract, or the breach thereof, the parties agree to negotiate prior to prosecuting

a suit for damages. However, this section does not prohibit the filing of a lawsuit to toll the running of a statute of limitations or to seek injunctive relief. Either party may make a written request for a meeting between representatives of each party within fourteen (14) calendar days after receipt of the request or such later period as agreed by the parties. Each party shall include, at a minimum, one (1) senior level individual with decision-making authority regarding the dispute. The purpose of this and any subsequent meeting is to attempt in good faith to negotiate a resolution of the dispute. If, within thirty (30) calendar days after such meeting, the parties have not succeeded in negotiating a resolution of the dispute, they will proceed directly to mediation as described below. Negotiation may be waived by a written agreement signed by both parties, in which event the parties may proceed directly to mediation as described below.

7.20.2 If the efforts to resolve the dispute through negotiation fail, or the parties waive the negotiation process, the parties may select, within thirty (30) calendar days to pursue further legal remedies. Any trial of any dispute not so settled will be resolved by a judge sitting without a jury and **EACH PARTY EXPRESSLY WAIVES ITS RIGHT TO A JURY TRIAL.** The parties further agree that, for purposes of this provision, tort claims relate to this Contract if they involve or relate to any products or service provided under or pursuant to this Contract or any action or conduct related to this Contract.

7.21 **Minority And Women Owned Business Enterprise (MBE/WBE) Procurement Program.**

7.21.1 All City procurements are subject to the City's Minority-Owned and Women-Owned Business Enterprise Procurement Program found at Chapters 2-9A, 2-9B, 2-9C and 2-9D of the City Code. The Program provides Minority-Owned and Women-Owned Business Enterprises (MBEs/WBEs) full opportunity to participate in all City contracts.

7.21.2 The City of Austin has determined that no goals are appropriate for this Contract. **Even though no goals have been established for this Contract, the Contractor is required to comply with the City's MBE/WBE Procurement Program, Chapters 2-9A, 2-9B, 2-9C and 2-9D, of the City Code, as applicable, if areas of subcontracting are identified.**

7.21.3 If any service is needed to perform the Contract and the Contractor does not perform the service with its own workforce or if supplies or materials are required and the Contractor does not have the supplies or materials in its inventory, the Contractor shall contact the Department of Small and Minority Business Resources (DSMBR) at (512) 974-7600 to obtain a list of MBE and WBE firms available to perform the service or provide the supplies or materials. The Contractor must also make a Good Faith Effort to use available MBE and WBE firms. Good Faith Efforts include but are not limited to contacting the listed MBE and WBE firms to solicit their interest in performing on the Contract; using MBE and WBE firms that have shown an interest, meet qualifications, and are competitive in the market; and documenting the results of the contacts.

7.22 **Subcontractors.**

7.22.1 If the Contractor identified Subcontractors in an MBE/WBE Program Compliance Plan or a No Goals Utilization Plan, the Contractor shall comply with the provisions of Chapters 2-9A, 2-9B, 2-9C, and 2-9D, as applicable, of the Austin City Code and the terms of the Compliance Plan or Utilization Plan as approved by the City (the "Plan"). The Contractor shall not initially employ any Subcontractor except as provided in the Contractor's Plan. The Contractor shall not substitute any Subcontractor identified in the Plan, unless the substitute has been accepted by the City in writing in accordance with the provisions of Chapters 2-9A, 2-9B, 2-9C and 2-9D, as applicable. No acceptance by the City of any Subcontractor shall constitute a waiver of any rights or remedies of the City with respect to defective deliverables provided by a Subcontractor. If a Plan has been approved, the Contractor is additionally required to submit a monthly Subcontract Awards and Expenditures Report to the Contract Manager and the Purchasing Office Contract Compliance Manager no later than the tenth calendar day of each month.

7.22.2 Work performed for the Contractor by a Subcontractor shall be pursuant to a written contract between the Contractor and Subcontractor. The terms of the subcontract may not conflict with the terms of the Contract, and shall contain provisions that:

7.22.2.1 require that all deliverables to be provided by the Subcontractor be provided in strict accordance with the provisions, specifications and terms of the Contract.

7.22.2.2 prohibit the Subcontractor from further subcontracting any portion of the Contract without the prior written consent of the City and the Contractor. The City may require, as a condition to such further subcontracting, that the Subcontractor post a payment bond in form, substance and amount acceptable to the City;

7.22.2.3 require Subcontractors to submit all invoices and applications for payments, including any claims for additional payments, damages or otherwise, to the Contractor in sufficient time to enable the Contractor to include same with its invoice or application for payment to the City in accordance with the terms of the Contract;

7.22.2.4 require that all Subcontractors obtain and maintain, throughout the term of their contract, insurance in the type and amounts specified for the Contractor, with the City being a named insured as its interest shall appear; and

7.22.2.5 require that the Subcontractor indemnify and hold the City harmless to the same extent as the Contractor is required to indemnify the City. 7.22.3 The Contractor shall be fully responsible to the City for all acts and omissions of the Subcontractors just as the Contractor is responsible for the Contractor's own acts and omissions. Nothing in the Contract shall create for the benefit of any such Subcontractor any contractual relationship between the City and any such Subcontractor, nor shall it create any obligation on the part of the City to pay or to see to the payment of any moneys due any such Subcontractor except as may otherwise be required by law.7.22.4 The Contractor shall pay each Subcontractor its appropriate share of payments made to the Contractor not later than ten (10) calendar days after receipt of payment from the City.

7.23 **Jurisdiction And Venue.** The Contract is made under and shall be governed by the laws of the State of Texas excluding any rule or principle that would refer to and apply the substantive law of another state or jurisdiction. All issues arising from this Contract shall be resolved in the courts of Travis County, Texas and the parties agree to submit to the exclusive personal jurisdiction of such courts. The foregoing, however, shall not be construed or interpreted to limit or restrict the right or ability of the City to seek and secure injunctive relief from any competent authority as contemplated herein.

7.24 **Invalidity.** The invalidity, illegality, or unenforceability of any provision of the Contract shall in no way affect the validity or enforceability of any other portion or provision of the Contract. Any void provision shall be deemed severed from the Contract and the balance of the Contract shall be construed and enforced as if the Contract did not contain the particular portion or provision held to be void. The parties further agree to reform the Contract to replace any stricken provision with a valid provision that comes as close as possible to the intent of the stricken provision. The provisions of this section shall not prevent this entire Contract from being void should a provision which is the essence of the Contract be determined to be void.

7.25 **Holidays.** The following holidays are observed by the City:

Holiday	Date Observed
New Year's Day	January 1
Martin Luther King, Jr.'s Birthday	Third Monday in January
Presidents Day	Third Monday in February
Memorial Day	Last Monday in May
Independence Day	July 4
Labor Day	First Monday in September
Veterans Day	November 11
Thanksgiving Day	Fourth Thursday in November
Friday after Thanksgiving	Friday after Thanksgiving
Christmas Eve	December 24
Christmas Day	December 25

If a Legal Holiday falls on Saturday, it will be observed on the preceding Friday. If a Legal Holiday falls on Sunday, it will be observed on the following Monday.

7.26 **Survivability of Obligations.** All provisions of the Contract that impose continuing obligations on the parties, including but not limited to the warranty, indemnity, and confidentiality obligations of the parties, shall survive the expiration or termination of the Contract.

7.27 **Non-Suspension or Debarment Certification.** The City of Austin is prohibited from contracting with or making prime or sub-awards to parties that are suspended or debarred or whose principals are suspended or debarred from Federal, State, or City of Austin Contracts. By accepting a Contract with the City, the Vendor certifies that its firm and its principals are not currently suspended or

debarred from doing business with the Federal Government, as indicated by the General Services Administration List of Parties Excluded from Federal Procurement and Non-Procurement Programs, the State of Texas, or the City of Austin.

7.28 **NOT USED**

7.29 **Order of Precedence.** The Contract includes, without limitation, all Exhibits attached hereto. Any inconsistency or conflict in the Contract documents shall be resolved by giving precedence in the following order:

7.29.1 Exhibit D (with respect to the technical comments, clarifications and exceptions);

7.29.2 The main body of the Contract;

7.29.3 Exhibit A;

7.29.4 Exhibit B;

7.29.5 Exhibit C;

7.29 **Tobacco Free Workplace.** The Austin Water Utility ("AWU") adheres to a Tobacco-Free Workplace ("TFW") policy. Tobacco use of any kind, including snuff, and e-cigarettes, are prohibited while on any AWU location. This includes buildings, garages, construction sites, treatments plants, and a 100 foot parameter from entrances and exits. Tobacco use is prohibited in vehicles parked on AWU sites. The Contractor and its employees and subcontractors shall comply with this policy when making deliveries or providing services to any AWU location.

7.30 **Export Control.** The City acknowledges that the Contractor is required to comply with all applicable export laws and regulations, specifically including but not limited to any U.S. export administration regulations and including the requirement for obtaining any export license relating to the sale, exportation, transfer, assignment, disposal and use of any hardware, technology, technical data, software, and/or services under this Contract. The City agrees that any hardware, technology, technical data, and/or software delivered or services performed (including all kinds of consulting engineering and/or technical support) under this Contract shall not at any time directly or indirectly be used, exported, re-exported, sold, transferred, assigned or otherwise disposed of in a manner which will result in non-compliance with such applicable export laws and regulations. It shall be a condition of the continuing performance of Contractor and of its obligations hereunder that compliance with such export laws and regulations be maintained at all times. The City agrees to indemnify, defend and hold the Contractor harmless from any and all costs, liabilities, penalties, sanctions and fines related to non-compliance with applicable export laws and regulations to the extent allowed by law.

7.31 **LIMITATION OF LIABILITY: THE PARTIES EXPRESSLY AGREE THAT NEITHER PARTY WILL UNDER ANY CIRCUMSTANCES BE LIABLE UNDER ANY THEORY OF RECOVERY, WHETHER BASED IN CONTRACT, IN TORT (INCLUDING NEGLIGENCE AND STRICT LIABILITY), UNDER WARRANTY, OR OTHERWISE, FOR ANY SPECIAL, LIQUIDATED, INDIRECT, INCIDENTAL OR CONSEQUENTIAL LOSS OR DAMAGE WHATSOEVER; INCLUDING BUT NOT LIMITED TO DAMAGE TO OR LOSS OF ANY PROPERTY OR DELIVERABLES; LOSS OF PROFITS OR REVENUE OR LOSS OF USE THEREOF. CITY AND CONTRACTOR EXPRESSLY AGREE THAT THE REMEDIES PROVIDED IN THE CONTRACT ARE EXCLUSIVE, AND THAT NOTWITHSTANDING ANY OTHER PROVISION OF THE CONTRACT, UNDER NO CIRCUMSTANCES SHALL THE TOTAL AGGREGATE LIABILITY OF CONTRACTOR EXCEED THE TOTAL CONTRACT PRICE PAID TO CONTRACTOR. ALL LIABILITY OF CONTRACTOR AND ITS SUPPLIERS UNDER THIS CONTRACT SHALL TERMINATEAT THE EXPIRATION OF THE WARRANTY PERIOD. THE PROVISIONS OF THIS ARTICLE SHALL PREVAIL OVER ANY CONFLICTING OR INCONSISTENT PROVISIONS SET FORTH ELSEWHERE IN THE CONTRACT. FURTHER, THESE PROVISIONS DO NOT APPLY TO THE CONTRACTOR'S INDEMNIFICATION OBLIGATIONS WITH RESPECT TO ANY THIRD PARTY CLAIMS.**

SIGNATURE PAGE TO FOLLOW

In witness whereof, the parties have caused duly authorized representatives to execute this Contract on the dates set forth below.

SIEMENS ENERGY, INC.	CITY OF AUSTIN
By:	By: Stephen T. Adem
Signature	Signature
Name: Tim Dobyns	Name: Stephen T. Adem
Printed Name	Printed Name
Title: Site Director	Title: Corporate Purchasing Manager
Date: 12/17/15	Date: 12/31/15

List of Exhibits

Exhibit A	Non Discrimination Certification
Exhibit B	Sample Novation Agreement
Exhibit C	Project Manual
Exhibit D	Contractor's Proposal dated November 4, 2015

EXHIBIT A
City of Austin, Texas
EQUAL EMPLOYMENT/FAIR HOUSING OFFICE
NON-DISCRIMINATION CERTIFICATION

City of Austin, Texas
Human Rights Commission

To: City of Austin, Texas, ("OWNER")

I hereby certify that our firm conforms to the Code of the City of Austin, Section 5-4-2 as reiterated below:

Chapter 5-4. Discrimination in Employment by City Contractors.

Sec. 4-2 Discriminatory Employment Practices Prohibited. As an Equal Employment Opportunity (EEO) employer, the Contractor will conduct its personnel activities in accordance with established federal, state and local EEO laws and regulations and agrees:

(B) (1) Not to engage in any discriminatory employment practice defined in this chapter.

(2) To take affirmative action to ensure that applicants are employed, and that employees are treated during employment, without discrimination being practiced against them as defined in this chapter. Such affirmative action shall include, but not be limited to: all aspects of employment, including hiring, placement, upgrading, transfer, demotion, recruitment, recruitment advertising; selection for training and apprenticeship, rates of pay or other form of compensation, and layoff or termination.

(3) To post in conspicuous places, available to employees and applicants for employment, notices to be provided by OWNER setting forth the provisions of this chapter.

(4) To state in all solicitations or advertisements for employees placed by or on behalf of the Contractor, that all qualified applicants will receive consideration for employment without regard to race, creed, color, religion, national origin, sexual orientation, gender identity, disability, veteran status, sex or age.

(5) To obtain a written statement from any labor union or labor organization furnishing labor or service to Contractors in which said union or organization has agreed not to engage in any discriminatory employment practices as defined in this chapter and to take affirmative action to implement policies and provisions of this chapter.

(6) To cooperate fully with OWNER's Human Rights Commission in connection with any investigation or conciliation effort of said Human Rights Commission to ensure that the purpose of the provisions against discriminatory employment practices are being carried out.

(7) To require compliance with provisions of this chapter by all subcontractors having fifteen or more employees who hold any subcontract providing for the expenditure of $2,000 or more in connection with any contract with OWNER subject to the terms of this chapter.

For the purposes of this Offer and any resulting Contract, Contractor adopts the provisions of the City's Minimum Standard Nondiscrimination Policy set forth below.

City of Austin
Minimum Standard Non-Discrimination in Employment Policy:

As an Equal Employment Opportunity (EEO) employer, the Contractor will conduct its personnel activities in accordance with established federal, state and local EEO laws and regulations.

The Contractor will not discriminate against any applicant or employee based on race, creed, color, national origin, sex, age, religion, veteran status, gender identity, disability, or sexual orientation. This policy covers all aspects of employment, including hiring, placement, upgrading, transfer, demotion, recruitment, recruitment advertising, selection for training and apprenticeship, rates of pay or other forms of compensation, and layoff or termination.

Further, employees who experience discrimination, sexual harassment, or another form of harassment should immediately report it to their supervisor. If this is not a suitable avenue for addressing their complaint, employees are advised to contact another member of management or their human resources representative. No employee shall be discriminated against, harassed, intimidated, nor suffer any reprisal as a result of reporting a violation of this policy.

Furthermore, any employee, supervisor, or manager who becomes aware of any such discrimination or harassment should immediately report it to executive management or the human resources office to ensure that such conduct does not continue.

Contractor agrees that to the extent of any inconsistency, omission, or conflict with its current non-discrimination employment policy, the Contractor has expressly adopted the provisions of the City's Minimum Non-Discrimination Policy contained in Section 5-4-2 of the City Code and set forth above, as the Contractor's Non-Discrimination Policy or as an amendment to such Policy and such provisions are intended to not only supplement the Contractor's policy, but will also supersede the Contractor's policy to the extent of any conflict.

UPON CONTRACT AWARD, THE CONTRACTOR SHALL PROVIDE A COPY TO THE CITY OF THE CONTRACTOR'S NON-DISCRIMINATION POLICY ON COMPANY LETTERHEAD, WHICH CONFORMS IN FORM, SCOPE, AND CONTENT TO THE CITY'S MINIMUM NON-DISCRIMINATION POLICY, AS SET FORTH HEREIN, **OR** THIS NON-DISCRIMINATION POLICY, WHICH HAS BEEN ADOPTED BY THE CONTRACTOR FOR ALL PURPOSES (THE FORM OF WHICH HAS BEEN APPROVED BY THE CITY'S EQUAL EMPLOYMENT/FAIR HOUSING OFFICE), WILL BE CONSIDERED THE CONTRACTOR'S NON-DISCRIMINATION POLICY WITHOUT THE REQUIREMENT OF A SEPARATE SUBMITTAL.

Sanctions:
Our firm understands that non-compliance with Chapter 5-4 may result in sanctions, including termination of the contract and suspension or debarment from participation in future City contracts until deemed compliant with the requirements of Chapter 5-4.

Term:
The Contractor agrees that this Section 0800 Non-Discrimination Certificate or the Contractor's separate conforming policy, which the Contractor has executed and filed with the Owner, will remain in force and effect for one year from the date of filing. The Contractor further agrees that, in consideration of the receipt of continued Contract payments, the Contractor's Non-Discrimination Policy will automatically renew from year-to-year for the term of the underlying Contract.

Dated this _____ day of _____, _____

CONTRACTOR _____

Authorized Signature _____

Tim Dobyns

Title Site Director

Exhibit B

Assignment, Assumption and Novation Agreement

This Assignment, Assumption and Novation Agreement ("Novation Agreement") by and among the City of Austin ("City"), Siemens Energy, Inc. ("Contractor") and the successful bidder to the invitation for bids described herein ("Installing Contractor") and is made and entered into as of the last signature ("Effective Date"). The City, the Contractor and the Installing Contractor are sometimes referred to herein individually as a "Party and collectively as the "Parties."

WHEREAS, the City is the owner of the SAR Wastewater Treatment Plant in Austin, Texas ("Plant");

WHEREAS, concurrently with the execution of this Novation Agreement, the City and the Contractor have entered into a contract ("Contract") for the purchase of aeration blowers and a blower control system for the Plant ("Blower System Equipment");

WHEREAS, the City will subsequently competitively bid the work for the installation and construction of the Blower System Equipment and associated improvements ("Blower System Improvements") through the City's competitive bid solicitation process;

WHEREAS, the Contract provides that it may be assigned to a City general for the Blower System Improvements project selected on the basis of competitive bidding;

WHEREAS, the Installing Contractor will be selected as the bidder for the construction of the Blower System Improvements through the competitive bidding process;

WHEREAS, the City and the Installing Contractor will enter into an agreement for the construction of the Blower System Improvements using the City's construction contract documents ("Construction Agreement");

WHEREAS, pursuant to this Novation Agreement, when the Construction Agreement is awarded, the City will substitute the Installing Contractor in its place with respect to the Contract;

WHEREAS, the Installing Contractor will then assume, as a substitute party, all rights, duties, liabilities and obligations of the City in and to the Contract by virtue of the assignment, assumption and novation contained herein;

NOW, THEREFORE, and in consideration of the mutual covenants set forth herein, in the Contract, and for good and valuable consideration, the receipt and sufficiency of which is hereby acknowledged, the undersigned agree as follows:

1. **Novation.**

   a. Through the execution of this Novation Agreement, the Contractor acknowledges and approves of the substitution and novation of the Installing Contractor for the City as it relates to the Contract;

   b. The City and the Contractor agree that the Installing Contractor will be substituted for the City with respect to all of the City's rights, duties, liabilities and obligations in and to the Contract, such that the resulting Contract is between the Installing Contractor and the Contractor an effectively replaces the Contract between the City and the Contractor in its entirety from and after the Effective Date;

   c. The City further agrees that it will have no further rights or claims under the Contract from and after the Effective Date, save and except those specifically reserved to the City in the Contract; and

   d. On and after the Effective Date, the Installing Contractor will accept the Novation Agreement and be bound by and to perform the obligations otherwise owed by the City under the Contract.

2. **Contractor's Acknowledgement.** The Contractor will recognize the Installing Contractor as the City's successor in interest in and to the Contract and the Installing Contractor will become entitled to al right, title and interest of the City in and to the Contract.

3. **Contractor Release of the City.** Pursuant to this Novation Agreement, upon the Effective Date, the Contractor waives and releases all claims of any nature whatsoever the Contractor currently has, has had or may have in the future against the City arising in any way from the Contract and the Contractor will look solely to the Installing Contractor for satisfaction of the City's obligations under the Contract.

4. **Further Assurances.** The Parties hereto will take all appropriate action and execute all additional documents, instruments or conveyances of any kind which may be reasonably necessary or advisable to carry out any of the provisions hereof.

5. **Modification and Waiver.** No supplement, modification, waiver or termination of this Novation Agreement or any provision hereof shall be binding unless executed in writing by the undersigned. No waiver of any of the provisions of this Novation Agreement shall constitute a waiver of any other provision, nor shall such waiver constitute a continuing waiver unless otherwise expressly provided.

6. **Counterparts; Electronic Signatures.** This Novation Agreement may be executed in multiple counterparts, each of which shall be deemed an original and all of which collectively shall constitute one and the same instrument. The exchange of copies of this Novation Agreement and of the signature pages by electronic mail or facsimile transmission shall constitute effective delivery of this Novation Agreement as to the Parties and may be used in lieu of the original Novation Agreement for all purposes.

7. **Entire Agreement.** This Novation Agreement embodies the complete agreement and understanding among the Parties concerning the subject matter set forth herein and supersedes and preempts any prior understandings, agreements or representations by or among the parties, written or oral, which may have related to such subject matter in any way.

8. **Applicable Law.** This Novation Agreement shall be governed by and construed in accordance with the laws of the State of Texas, without regard to the principles of conflicts of law.

SIGNATURE PAGE TO FOLLOW

IN WITNESS WHREOF, the Parties hereto have executed and delivered this Novation Agreement effective as of the dates of execution set forth below.

THE CITY OF AUSTIN
By:_____
Name:_____
Title:_____
Date:_____

SIEMENS ENERGY, INC.
By:_____
Name: Tim Dobyns
Title: Site Director
Date: 12/17/15

INSTALLING CONTRACTOR
By:_____
Name:_____
Title:_____
Date:_____

CERTIFICATE OF LIABILITY INSURANCE

DATE (MM/DD/YYYY) 12/18/2015

THIS CERTIFICATE IS ISSUED AS A MATTER OF INFORMATION ONLY AND CONFERS NO RIGHTS UPON THE CERTIFICATE HOLDER. THIS CERTIFICATE DOES NOT AFFIRMATIVELY OR NEGATIVELY AMEND, EXTEND OR ALTER THE COVERAGE AFFORDED BY THE POLICIES BELOW. THIS CERTIFICATE OF INSURANCE DOES NOT CONSTITUTE A CONTRACT BETWEEN THE ISSUING INSURER(S), AUTHORIZED REPRESENTATIVE OR PRODUCER, AND THE CERTIFICATE HOLDER.

IMPORTANT: If the certificate holder is an ADDITIONAL INSURED, the policy(ies) must be endorsed. If SUBROGATION IS WAIVED, subject to the terms and conditions of the policy, certain policies may require an endorsement. A statement on this certificate does not confer rights to the certificate holder in lieu of such endorsement(s).

PRODUCER
MARSH USA, INC.
445 SOUTH STREET
MORRISTOWN, NJ 07960-6454

100129-FED-CRIME-15/16 ENERG Shelto

INSURED
SIEMENS ENERGY INC.
4400 ALAFAYA TRAIL
ORLANDO, FL 32826

CONTACT NAME:
PHONE (A/C, No, Ext):
FAX (A/C, No):
E-MAIL ADDRESS:

INSURER(S) AFFORDING COVERAGE	NAIC #
INSURER A : Travelers Property Casualty Company of America	25674
INSURER B :	
INSURER C :	
INSURER D :	
INSURER E :	
INSURER F :	

COVERAGES **CERTIFICATE NUMBER:** NYC-008383384-02 **REVISION NUMBER:**

THIS IS TO CERTIFY THAT THE POLICIES OF INSURANCE LISTED BELOW HAVE BEEN ISSUED TO THE INSURED NAMED ABOVE FOR THE POLICY PERIOD INDICATED. NOTWITHSTANDING ANY REQUIREMENT, TERM OR CONDITION OF ANY CONTRACT OR OTHER DOCUMENT WITH RESPECT TO WHICH THIS CERTIFICATE MAY BE ISSUED OR MAY PERTAIN, THE INSURANCE AFFORDED BY THE POLICIES DESCRIBED HEREIN IS SUBJECT TO ALL THE TERMS, EXCLUSIONS AND CONDITIONS OF SUCH POLICIES. LIMITS SHOWN MAY HAVE BEEN REDUCED BY PAID CLAIMS.

INSR LTR	TYPE OF INSURANCE	ADDL INSD	SUBR WVD	POLICY NUMBER	POLICY EFF (MM/DD/YYYY)	POLICY EXP (MM/DD/YYYY)	LIMITS	
	COMMERCIAL GENERAL LIABILITY						EACH OCCURRENCE	$
	CLAIMS-MADE / OCCUR						DAMAGE TO RENTED PREMISES (Ea occurrence)	$
							MED EXP (Any one person)	$
							PERSONAL & ADV INJURY	$
	GEN'L AGGREGATE LIMIT APPLIES PER:						GENERAL AGGREGATE	$
	POLICY / PRO-JECT / LOC						PRODUCTS - COMP/OP AGG	$
	OTHER:							$
	AUTOMOBILE LIABILITY						COMBINED SINGLE LIMIT (Ea accident)	$
	ANY AUTO						BODILY INJURY (Per person)	$
	ALL OWNED AUTOS / SCHEDULED AUTOS						BODILY INJURY (Per accident)	$
	HIRED AUTOS / NON-OWNED AUTOS						PROPERTY DAMAGE (Per accident)	$
								$
	UMBRELLA LIAB / OCCUR						EACH OCCURRENCE	$
	EXCESS LIAB / CLAIMS-MADE						AGGREGATE	$
	DED / RETENTION $							$
	WORKERS COMPENSATION AND EMPLOYERS' LIABILITY						PER STATUTE / OTH-ER	
	ANY PROPRIETOR/PARTNER/EXECUTIVE OFFICER/MEMBER EXCLUDED? (Mandatory in NH) Y/N: N	N / A					E.L. EACH ACCIDENT	$
	If yes, describe under DESCRIPTION OF OPERATIONS below						E.L. DISEASE - EA EMPLOYEE	$
							E.L. DISEASE - POLICY LIMIT	$
A	FIDELITY/EMPLOYEE DISHONESTY			TC2JFID7440L39915	10/01/2015	10/01/2016		5,000,000

DESCRIPTION OF OPERATIONS / LOCATIONS / VEHICLES (ACORD 101, Additional Remarks Schedule, may be attached if more space is required)
RE: JOBSITE # 6496

CERTIFICATE HOLDER

CITY OF AUSTIN
ATTN: TRACY FRANKLIN
124 WEST 8TH STREET
SUITE 310
AUSTIN, TX 78701

CANCELLATION

SHOULD ANY OF THE ABOVE DESCRIBED POLICIES BE CANCELLED BEFORE THE EXPIRATION DATE THEREOF, NOTICE WILL BE DELIVERED IN ACCORDANCE WITH THE POLICY PROVISIONS.

AUTHORIZED REPRESENTATIVE of Marsh USA Inc.
Manashi Mukherjee Manashi Mukherjee

© 1988-2014 ACORD CORPORATION. All rights reserved.

CERTIFICATE OF LIABILITY INSURANCE

DATE (MM/DD/YYYY): 12/18/2015

THIS CERTIFICATE IS ISSUED AS A MATTER OF INFORMATION ONLY AND CONFERS NO RIGHTS UPON THE CERTIFICATE HOLDER. THIS CERTIFICATE DOES NOT AFFIRMATIVELY OR NEGATIVELY AMEND, EXTEND OR ALTER THE COVERAGE AFFORDED BY THE POLICIES BELOW. THIS CERTIFICATE OF INSURANCE DOES NOT CONSTITUTE A CONTRACT BETWEEN THE ISSUING INSURER(S), AUTHORIZED REPRESENTATIVE OR PRODUCER, AND THE CERTIFICATE HOLDER.

IMPORTANT: If the certificate holder is an ADDITIONAL INSURED, the policy(ies) must be endorsed. If SUBROGATION IS WAIVED, subject to the terms and conditions of the policy, certain policies may require an endorsement. A statement on this certificate does not confer rights to the certificate holder in lieu of such endorsement(s).

PRODUCER
MARSH USA, INC.
445 SOUTH STREET
MORRISTOWN, NJ 07960-6454

100129-ENERG--15/16 ENERG Shelto NOC60

CONTACT NAME:
PHONE (A/C, No, Ext): **FAX (A/C, No):**
E-MAIL ADDRESS:

INSURER(S) AFFORDING COVERAGE	NAIC #
INSURER A : HDI-Gerling America Insurance Company	41343
INSURER B : The Travelers Indemnity Company	25658
INSURER C : Travelers Property Casualty Co. of America	25674
INSURER D :	
INSURER E :	
INSURER F :	

INSURED
SIEMENS ENERGY, INC.
4400 ALAFAYA TRAIL
ORLANDO, FL 32826-2399

COVERAGES **CERTIFICATE NUMBER:** NYC-008383383-02 **REVISION NUMBER:**

THIS IS TO CERTIFY THAT THE POLICIES OF INSURANCE LISTED BELOW HAVE BEEN ISSUED TO THE INSURED NAMED ABOVE FOR THE POLICY PERIOD INDICATED. NOTWITHSTANDING ANY REQUIREMENT, TERM OR CONDITION OF ANY CONTRACT OR OTHER DOCUMENT WITH RESPECT TO WHICH THIS CERTIFICATE MAY BE ISSUED OR MAY PERTAIN, THE INSURANCE AFFORDED BY THE POLICIES DESCRIBED HEREIN IS SUBJECT TO ALL THE TERMS, EXCLUSIONS AND CONDITIONS OF SUCH POLICIES. LIMITS SHOWN MAY HAVE BEEN REDUCED BY PAID CLAIMS.

INSR LTR	TYPE OF INSURANCE	ADDL INSD	SUBR WVD	POLICY NUMBER	POLICY EFF (MM/DD/YYYY)	POLICY EXP (MM/DD/YYYY)	LIMITS	
A	X COMMERCIAL GENERAL LIABILITY			GLD1110107	10/01/2015	10/01/2016	EACH OCCURRENCE	$ 1,000,000
	CLAIMS-MADE X OCCUR						DAMAGE TO RENTED PREMISES (Ea occurrence)	$ 1,000,000
							MED EXP (Any one person)	$ 100,000
							PERSONAL & ADV INJURY	$ 1,000,000
	GEN'L AGGREGATE LIMIT APPLIES PER:						GENERAL AGGREGATE	$ 2,000,000
	X POLICY PRO-JECT LOC						PRODUCTS - COMP/OP AGG	$ INCL.
	OTHER:							$
C	AUTOMOBILE LIABILITY			TC2JCAP7440L34A15	10/01/2015	10/01/2016	COMBINED SINGLE LIMIT (Ea accident)	$ 2,000,000
	X ANY AUTO						BODILY INJURY (Per person)	$ N/A
	X ALL OWNED AUTOS / SCHEDULED AUTOS						BODILY INJURY (Per accident)	$ N/A
	X HIRED AUTOS / X NON-OWNED AUTOS						PROPERTY DAMAGE (Per accident)	$ N/A
								$
A	X UMBRELLA LIAB X OCCUR			CUD1110207	10/01/2015	10/01/2016	EACH OCCURRENCE	$ 3,000,000
	EXCESS LIAB CLAIMS-MADE						AGGREGATE	$ 3,000,000
	DED RETENTION $							$
C	WORKERS COMPENSATION AND EMPLOYERS' LIABILITY			TC2JUB7440L27115 (AOS)	10/01/2015	10/01/2016	X PER STATUTE OTH-ER	
B	ANY PROPRIETOR/PARTNER/EXECUTIVE OFFICER/MEMBER EXCLUDED? Y/N N (Mandatory in NH) If yes, describe under DESCRIPTION OF OPERATIONS below	N/A		TRKUB7440L28315 (AZ, MA, OR & WI)	10/01/2015	10/01/2016	E.L. EACH ACCIDENT	$ 1,000,000
							E.L. DISEASE - EA EMPLOYEE	$ 1,000,000
							E.L. DISEASE - POLICY LIMIT	$ 1,000,000

DESCRIPTION OF OPERATIONS / LOCATIONS / VEHICLES (ACORD 101, Additional Remarks Schedule, may be attached if more space is required)
RE: JOBSITE # 6496

SEE ATTACHED

CERTIFICATE HOLDER

CITY OF AUSTIN
ATTN: TRACY FRANKLIN
124 WEST 8TH STREET
SUITE 310
AUSTIN, TX 78701

CANCELLATION

SHOULD ANY OF THE ABOVE DESCRIBED POLICIES BE CANCELLED BEFORE THE EXPIRATION DATE THEREOF, NOTICE WILL BE DELIVERED IN ACCORDANCE WITH THE POLICY PROVISIONS.

AUTHORIZED REPRESENTATIVE
of Marsh USA Inc.
Manashi Mukherjee Manashi Mukherjee

© 1988-2014 ACORD CORPORATION. All rights reserved.

ACORD 25 (2014/01) **The ACORD name and logo are registered marks of ACORD**

AGENCY CUSTOMER ID: 100129
LOC #: Morristown

ADDITIONAL REMARKS SCHEDULE

AGENCY	NAMED INSURED
MARSH USA, INC.	SIEMENS ENERGY, INC. 4400 ALAFAYA TRAIL ORLANDO, FL 32826-2399
POLICY NUMBER	
CARRIER / NAIC CODE	EFFECTIVE DATE:

ADDITIONAL REMARKS

THIS ADDITIONAL REMARKS FORM IS A SCHEDULE TO ACORD FORM,
FORM NUMBER: 25 FORM TITLE: Certificate of Liability Insurance

RE: JOBSITE # 6496

CITY OF AUSTIN IS HEREBY ADDITIONAL INSURED AS OBLIGATED UNDER CONTRACT UNDER THE REFERENCED GENERAL LIABILITY AND AUTOMOBILE LIABILITY INSURANCE POLICIES. SUCH INSURANCE AS IS AFFORDED BY THE ADDITIONAL INSURED ENDORSEMENT SHALL APPLY AS PRIMARY INSURANCE & OTHER INSURANCE MAINTAINED BY THE CERTIFICATE HOLDER SHALL BE EXCESS ONLY & NOT CONTRIBUTING WITH INSURANCE PROVIDED UNDER THIS POLICY.

WAIVER OF SUBROGATION APPLIES.

$1,000,000 PROFESSIONAL LIABILITY IS INCLUDED UNDER THE GENERAL LIABILITY POLICY AND $2,000,000 IS INCLUDED UNDER THE UMBRELLA LIABILITY POLICY.

EXCESS/UMBRELLA LIABILITY FOLLOWS FORM.

IF THESE POLICIES ARE CANCELLED FOR ANY REASON OTHER THAN NON-PAYMENT OF PREMIUM, THE INSURER WILL DELIVER NOTICE OF CANCELLATION TO THE CERTIFICATE HOLDER UP TO 60 DAYS PRIOR TO THE CANCELLATION OR AS REQUIRED BY WRITTEN CONTRACT, WHICHEVER IS LESS.

© 2008 ACORD CORPORATION. All rights reserved.
The ACORD name and logo are registered marks of ACORD

GENERAL MECHANICAL NOTES

1. GENERAL MECHANICAL. NOTES APPLY TO ALL MECHANICAL DRAWINGS.
2. ALL PIPE PENETRATIONS THROUGH WALLS AND FLOOR SLABS SHALL BE PROVIDED WITH SLEEVES PER TYPICAL DETAIL NUMBER P304 UNLESS NOTED OTHERWISE.
3. ALL PIPE PENETRATIONS THROUGH DRY WALLS SHALL BE PROVIDED WITH SLEEVES PER TYPICAL DETAIL NUMBER P302 UNLESS NOTED OTHERWISE.
4. NOT ALL THE REQUIRED PIPE SUPPORTS ARE SHOWN ON THE DRAWINGS. THE CONTRACTOR SHALL PROVIDE ALL THE PIPE SUPPORTS SHOWN ON THE DRAWINGS AND ADDITIONAL PIPE SUPPORTS AS REQUIRED PER SPECIFICATIONS.
5. SUCTION AND DISCHARGE PIPING OF BLOWERS SHALL BE INSTALLED AND SUPPORTED IN SUCH A MANNER SO THAT THEY DO NOT IMPART STRAIN ON BLOWERS AND BLOWER BASE.
6. NOT ALL THE REQUIRED FITTINGS ARE SHOWN ON THE DRAWINGS. THE CONTRACTOR SHALL PROVIDE ALL THE FITTINGS SHOWN ON THE DRAWINGS AND ADDITIONAL FITTINGS AS REQUIRED FOR PIPING ARRANGEMENTS SHOWN ON DRAWINGS AND PER EQUIPMENT FURNISHED.
7. PIPING IS SHOWN DIAGRAMMATICALLY ON THE DRAWINGS. NOT EVERY OFFSET AND FITTING OR DIFFICULTY THAT MAY BE ENCOUNTERED HAS BEEN SHOWN ON THE DRAWINGS. THE CONTRACTOR SHALL MAKE MODIFICATIONS TO PIPING ALIGNMENT WHERE NECESSARY. MODIFICATIONS SHALL BE DONE AT NO ADDITIONAL COST TO THE OWNER AND SHALL BE DONE AFTER OWNER'S APPROVAL.
8. NOT ALL THE ITEMS ARE SHOWN IN PLANS, SECTIONS, DETAILS, SCHEMATICS, ISOMETRICS, AND P&ID DRAWINGS, THE CONTRACTOR SHALL PROVIDE ALL THE ITEMS EVEN IF THEY ARE SHOWN AT ONLY ONE LOCATION ON THE DRAWINGS. IN ADDITION, THE CONTRACTOR SHALL PROVIDE ALL THE ITEMS REQUIRED PER SPECIFICATIONS WHETHER OR NOT THEY ARE SHOWN ON THE DRAWINGS.
9. IN CASE OF A CONFLICT BETWEEN THE DRAWINGS, THE MOST STRINGENT REQUIREMENTS SHALL GOVERN UNLESS SPECIFICALLY APPROVED OTHERWISE BY THE ENGINEER.
10. OVERALL PHYSICAL SIZE OF THE EQUIPMENT SELECTED BY THE CONTRACTOR SHALL NOT EXCEED THE SIZE SHOWN ON THE DRAWING OR SPECIFIED IN THE SPECIFICATIONS. CLEARANCES, DIMENSIONS OR SCALED DISTANCES SHOWN ON THE DRAWINGS SHALL BE MAINTAINED. ALL PROPOSED CHANGES AND ADDITIONS SHALL BE SUBMITTED FOR OWNER'S REVIEW AND SHALL BE DONE ONLY IF APPROVED BY OWNER AND AT NO ADDITIONAL COST TO THE OWNER. THE CONTRACTOR SHALL BEAR ALL COSTS OF THE ASSOCIATED CHANGES AND ADDITIONS INCLUDING CHANGES TO BUILDINGS AND STRUCTURE SIZES AND OWNERS' ENGINEERING COSTS.
11. WARNING SIGNS SHALL BE PROVIDED PER SPECIFICATIONS ON FRONT AND BACK OF ALL REMOTELY CONTROLLED EQUIPMENT. FOR CONVEYORS THAT SPAN TWO STRUCTURES, WARNING SIGNS SHALL ALSO BE PROVIDED NEAR BOTH ENDS OF CONVEYORS.
12. SEE ARCHITECTURAL AND STRUCTURAL DRAWINGS FOR ROOFTOP EQUIPMENT SUPPORTS, CURB AND FLASHING DETAILS.
13. SEE ARCHITECTURAL AND STRUCTURAL DRAWINGS FOR ALL EQUIPMENT BASE DETAILS.
14. POWER ROOF VENTILATORS AND ROOF HOODS SHALL BE PROVIDED WITH 1/2" MESH STAINLESS STEEL BIRD-SCREEN OVER ALL OPENINGS, UNLESS NOTED OTHERWISE.
15. ALL PIPING JOINTS SHALL BE PER PIPE SCHEDULE AND IN ACCORDANCE WITH THE SPECIFICATIONS, EXCEPT WHERE MODIFIED ON THE DRAWINGS WITH A WRITTEN NOTE.
16. REFER TO SPECIFICATIONS FOR WORK RESTRICTIONS AND CONSTRAINTS.
17. VERIFY LOCATIONS, ELEVATIONS, SIZES, CONNECTIONS, AND MATERIALS OF EXISTING PIPING AND EQUIPMENT BEFORE FABRICATING NEW PIPE.
18. ALL PIPING UNDER STRUCTURES OR CONCRETE SLABS SHALL BE CONCRETE ENCASED PER TYPICAL DETAIL P040. CONTINUE ENCASEMENT BEYOND THE EDGE OF FOOTING TO A DIMENSION EQUAL TO THE DISTANCE FROM BOTTOM OF FOOTING TO TOP OF PIPE.
19. THE FIRST PIPE JOINT OUT OF STRUCTURES OR OUT OF CONCRETE ENCASEMENTS SHALL BE AT THE EDGE OF WALL, OR TWO FEET FROM THE EDGE OF WALL OR END OF CONCRETE ENCASEMENT. THE NEXT TWO JOINTS SHALL BE MAXIMUM 4 FEET ON CENTER UNLESS NOTED OTHERWISE.
20. ALL FLEXIBLE COUPLINGS SHALL BE RESTRAINED PER APPLICABLE TYPICAL DETAILS P110 OR P112, UNLESS SPECIFICALLY NOTED OTHERWISE.
21. PLUG VALVES: REFER TO SPECIFICATIONS FOR SPECIFIC INSTALLATION REQUIREMENTS REGARDING ORIENTATION OF SEAT (UPSTREAM VS. DOWNSTREAM) AND ORIENTATION OF VALVE STEM.
22. ALL STAINLESS STEEL SHALL BE TYPE 304 OR TYPE 304L UNLESS SPECIFICALLY NOTED OTHERWISE. (1)
23. PIPE AND DUCT SIZES INDICATED ON P&IDs ARE FOR GENERAL REFERENCE ONLY IN CASE OF A CONFLICT WITH MECHANICAL OR CIVIL DRAWINGS, THE PIPE AND DUCT SIZES INDICATED ON THE MECHANICAL AND CIVIL DRAWINGS SHALL GOVERN.
24. NOT ALL VALVING AND FITTINGS REQUIRED FOR INSTRUMENT INSTALLATION ARE SHOWN ON THE MECHANICAL DRAWINGS. INSTRUMENTS SHOWN ON MECHANICAL DRAWINGS SHALL BE INSTALLED WITH VALVING AND FITTINGS PER ASSOCIATED DETAILS AND MANUFACTURER'S REQUIREMENTS.
25. ALL PROPOSED MECHANICAL PENETRATIONS THROUGH EXISTING EXTERIOR WALLS SHALL BE REMEDIATED FOR LEAD/ASBESTOS. REFER TO SPECIFICATIONS FOR ADDITIONAL REQUIREMENTS.

REV	DATE	BY	DESCRIPTION
1	02/22/16	DE	ADDENDUM NO. 1

DESIGNED JEA
DRAWN DMS
CHECKED GCS
DATE FEBRUARY 2016

Digitally signed by Jason Anderson
Contact Info: Carollo Engineers, Inc.
Date: 2016.02.26 17:05:01-06'00'

STATE OF TEXAS — JASON E. ANDERSON — 87963 — LICENSED PROFESSIONAL ENGINEER

carollo® TBPE No. F-882

CITY OF AUSTIN, TEXAS
SOUTH AUSTIN REGIONAL WWTP
TRAINS A & B BLOWER REPLACEMENT
MECHANICAL
GENERAL MECHANICAL NOTES

VERIFY SCALES
BAR IS ONE INCH ON ORIGINAL DRAWING
0 — 1"
IF NOT ONE INCH ON THIS SHEET, ADJUST SCALES ACCORDINGLY

JOB NO. 9469B.10
DRAWING NO. 00GM01
SHEET NO. 144 OF 320

LAST SAVED BY: denriquez Model: Layout1 ColorTable: gshade.ctb DesignScript: Carollo_Std_Pen_v0905.pen PlotScale: 1:1 Plot Date: 25-FEB-2016 9:27:12 AM User: denriquez

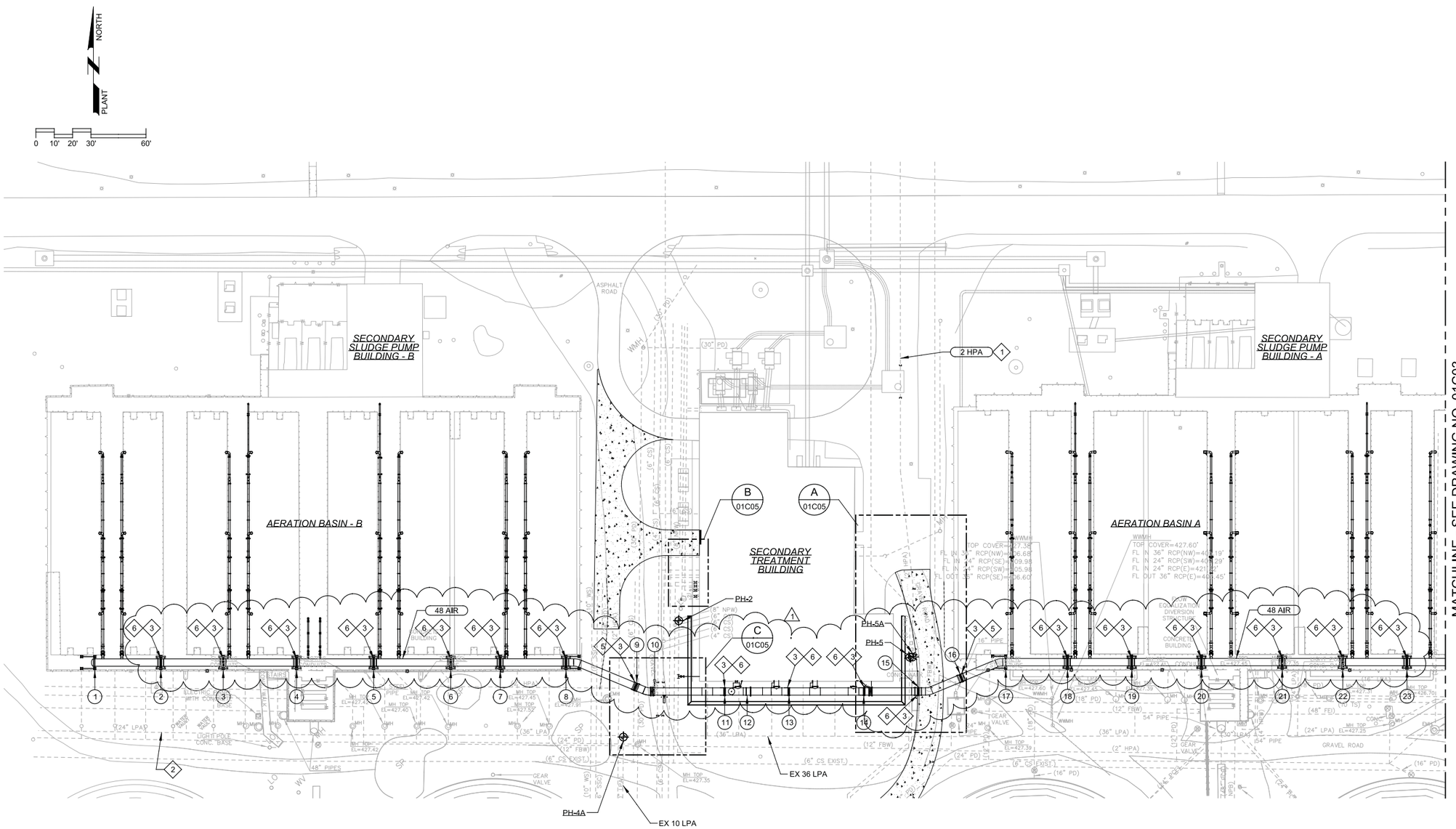

GENERAL NOTES

1. CONTRACTOR SHALL VACUUM EXCAVATE TO A DEPTH OF 8 FT AT EACH PILE LOCATION TO VERIFY THERE ARE NO UTILITY CONFLICTS. RELOCATE PIER IF NECESSARY.

KEY NOTES = (#)

1 EXISTING 2" HPA LINE IS NO LONGER IN SERVICE AND MAY BE CUT DURING INSTALLATION OF NEW ELECTRICAL MANHOLE. PLUG (CAP) PIPE AT BOTH ENDS OF CUT.

2 FILL EXISTING 24"/36" LPA WITH CLSM SLURRY PER SPECIFICATION SECTION 402S ONCE TAKEN OUT OF SERVICE. SEE DEMOLITION DRAWINGS FOR ADDITIONAL INFORMATION.

3 48" EXPANSION COUPLING

4 (NOT USED)

5 COUPLING SHALL ALLOW FOR AT LEAST 1.5" OF PIPE EXPANSION

6 COUPLING SHALL ALLOW FOR AT LEAST 1.0" OF PIPE EXPANSION

1

LEGEND

(XX) PIPE SUPPORT - SEE DWG 01S02 FOR SCHEDULE

POTHOLING SCHEDULE

TAG	NORTHING	EASTING	PIPE	TOP ELEV
PH-2	N=10050029.03	E=3158185.11	8 NPW	423.35
PH-4A	N=10050001.24	E=3158119.74	10 LPA	419.54
PH5	N=10049926.62	E=3158263.62	8 PW	422.10
PH-5A	N=10049925.73	E=3158264.63	2 HPA	423.78

REV	DATE	BY	DESCRIPTION
1	02/22/16	DE	ADDENDUM NO. 1

DESIGNED TMW
DRAWN LGD
CHECKED LHA
DATE FEBRUARY 2016

STATE OF TEXAS — THOMAS M. WESSLING 116151 — LICENSED PROFESSIONAL ENGINEER

Digitally signed by Thomas Wessling
Contact Info: Carollo Engineers, Inc.
Date: 2016.02.25 16:34:09-06'00'

carollo® TBPE No. F-882

CITY OF AUSTIN, TEXAS
SOUTH AUSTIN REGIONAL WWTP
TRAINS A & B BLOWER REPLACEMENT
CIVIL
YARD PIPING PLAN - AREA I

VERIFY SCALES
BAR IS ONE INCH ON ORIGINAL DRAWING
0 1"
IF NOT ONE INCH ON THIS SHEET, ADJUST SCALES ACCORDINGLY

JOB NO. 9469B.10
DRAWING NO. 01C02
SHEET NO. 96 OF 320

Plot Date: 25-FEB-2016 9:49:18 AM User: denriquez PlotScale: 1:1 DesignScript: Carollo_Std_Pen_v0905.pen ColorTable: gshade.ctb Model: Layout1 LAST SAVED BY: denriquez

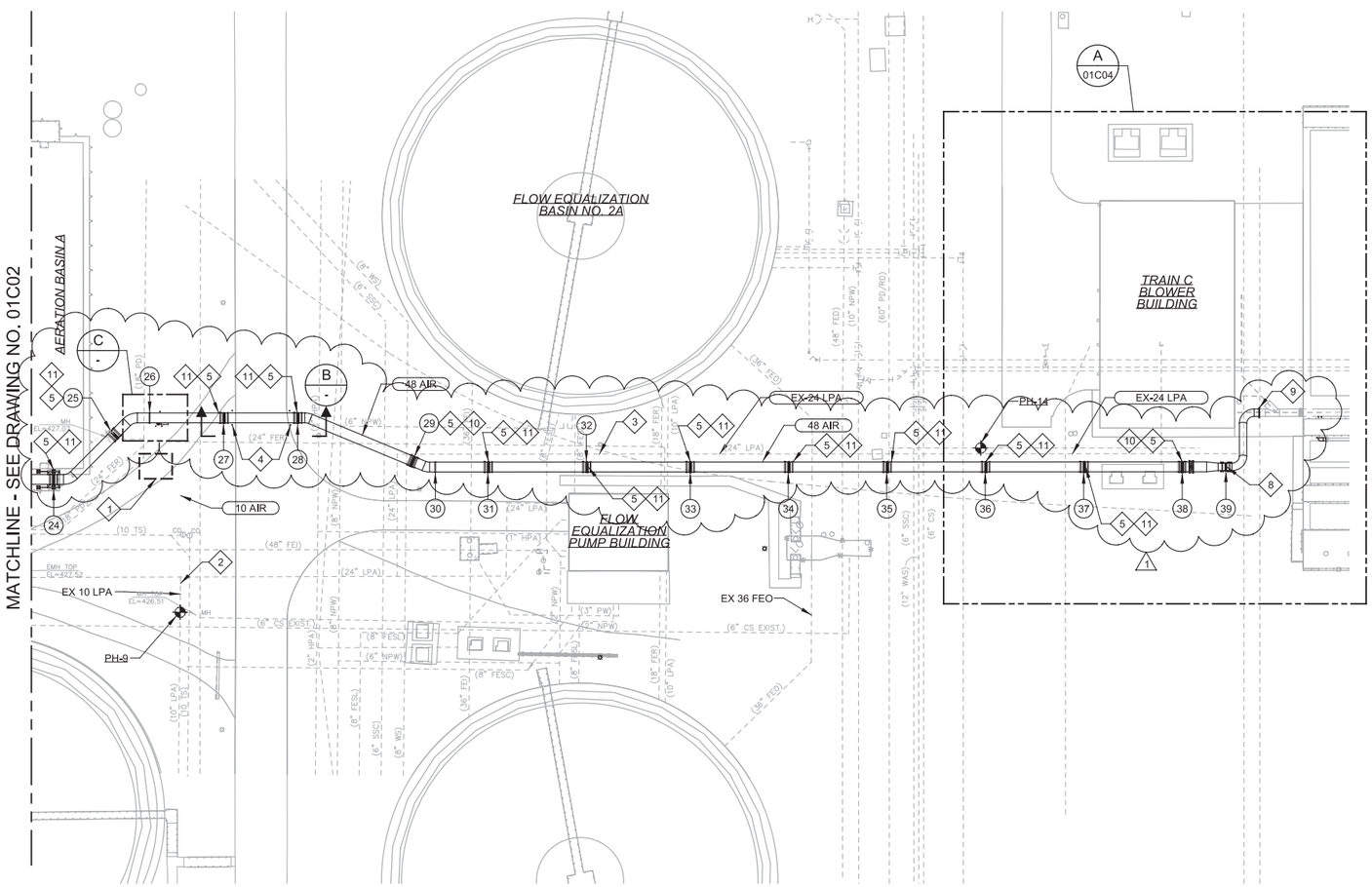

LEGEND

(XX) PIPE SUPPORT - SEE DWG 01S02 FOR SCHEDULE

GENERAL NOTES

1. CONTRACTOR SHALL VACUUM EXCAVATE TO A DEPTH OF 8 FT AT EACH PILE LOCATION TO VERIFY THERE ARE NO UTILITY CONFLICTS. RELOCATE PIER IF NECESSARY.

KEY NOTES = (#)

1 CONSTRUCTION OF SPLITTER STRUCTURE UNDER SEPARATE CONTRACT.

2 CONNECT EXISTING 10" LPA BRANCH LINE TO THE NEW 10" AIR LINE, CAP EXISTING 36" LPA AT BRANCH LOCATIONS.

3 FILL EXISTING 24"/36" LPA WITH CLSM SLURRY PER SPECIFICATION SECTION 402S ONCE TAKEN OUT OF SERVICE. SEE DEMOLITION DRAWINGS FOR ADDITIONAL INFORMATION.

4 GUARD POST PER TYPICAL DETAIL C160

5 48" EXPANSION COUPLING

6 (NOT USED)

7 (NOT USED)

8 36" RESTRAINED COUPLING

9 36" FLANGED CONNECTION TO EXISTING PIPING

10 COUPLING SHALL ALLOW FOR AT LEAST 1.5" OF PIPE EXPANSION

11 COUPLING SHALL ALLOW FOR AT LEAST 1.0" OF PIPE EXPANSION

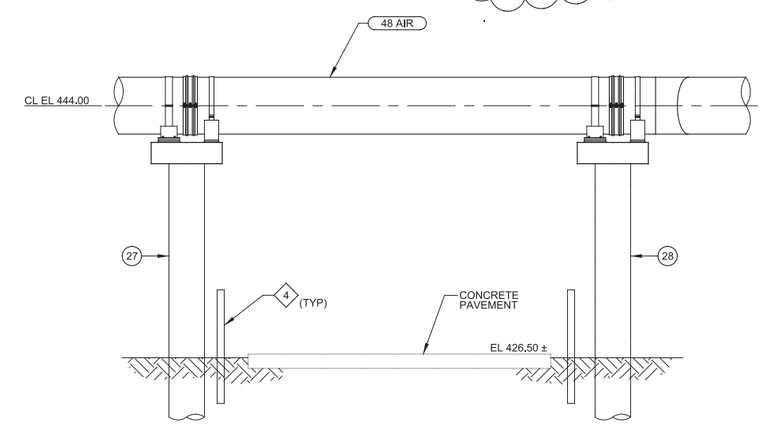

B SECTION

SCALE: 3/16" = 1'-0"
FILE: 9469B1003M305-C_EXT

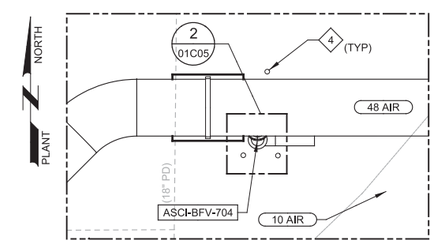

C ENLARGED PLAN

SCALE: 3/16" = 1'-0"
FILE: -

POTHOLING SCHEDULE

TAG	NORTHING	EASTING	PIPE	TOP ELEV
PH-9	N=10049644.90	E=3158482.73	10 LPA	422.43
PH-14	N=10049471.95	E=3158766.04	24 PD	UNKNOWN

REV	DATE	BY	DESCRIPTION
1	02/22/16	DE	ADDENDUM NO. 1

DESIGNED TMW
DRAWN LGD
CHECKED LHA
DATE FEBRUARY 2016

STATE OF TEXAS — THOMAS M. WESSLING — 116151 — LICENSED PROFESSIONAL ENGINEER

Thomas Wessling — Digitally signed by Thomas Wessling DN: CN=Thomas Wessling, O=Carollo Engineers, Inc., E=twessling@carollo.com, C=US, Reason: I am approving this document Location: Date: 2016.03.11 16:29:06'00'

carollo® TBPE No. F-882

CITY OF AUSTIN, TEXAS
SOUTH AUSTIN REGIONAL WWTP
TRAINS A & B BLOWER REPLACEMENT
CIVIL
YARD PIPING PLAN - AREA II - 1

VERIFY SCALES
BAR IS ONE INCH ON ORIGINAL DRAWING
0 1"
IF NOT ONE INCH ON THIS SHEET, ADJUST SCALES ACCORDINGLY

JOB NO. 9469B.10
DRAWING NO. 01C03
SHEET NO. 97 OF 320

User: dseivert Plot Date: 11-MAR-2016 4:10:19 PM PlotScale: 1:1 DesignScript: Carollo_Std_Pen_v0905.pen ColorTable: gshade.ctb Model: Layout1 LAST SAVED BY: denriquez

YARD PIPING SUPPORT SCHEDULE									
SUPPORT (SEE NOTE 1)	STRUCT SUPPORT DETAIL	GRADE ELEVATION (SEE NOTE 2)	TOP OF PIER/CONCRETE ELEVATION (SEE NOTE 3)	CENTERLINE AIR PIPING ELEVATION	TOP OF CONCRETE/STEEL ELEVATION (SEE NOTE 4)	SUPPORT TYPE	PIPE SUPPORT DETAIL	PIPE SPAN (SEE NOTE 6)	MINIMUM EXPANSION ACCOMMODATION (SEE NOTE 6)
1	1 / 04S02	-	434.50	444.75	442.17	ANCHOR		1	1 -
2	1 3 / 04S02	-	434.50	444.75	442.17	1 GUIDE / EXP JT / ANCHOR		35.0	1"
3	3 / 04S02	-	434.50	444.75	442.17	GUIDE / EXP JT / ANCHOR		35.0	1"
4	1 3 / 04S02	-	434.50	444.75	442.17	1 GUIDE / EXP JT / ANCHOR		38.5	1"
5	3 / 04S02	-	434.50	444.75	442.17	GUIDE / EXP JT / ANCHOR		37.0	1"
6	1 3 / 04S02	-	434.50	444.75	442.17	1 GUIDE / EXP JT / ANCHOR		35.5	1"
7	3 / 04S02	-	434.50	444.75	442.17	GUIDE / EXP JT / ANCHOR		37.5	1"
8	4 / 04S02	-	434.50	444.75	442.17	GUIDE / EXP JT / ANCHOR		35.0	1"
9	1 / 01S03	426.50	422.50	444.25	441.54	GUIDE / EXP JT / GUIDE	A / 01S02	35.0	1.5"
10	4 / 01S03	426.50	422.50	444.00	441.29	ANCHOR	B / 01S02	5.0	-
11	4 / 01S03	426.50	422.50	444.00	441.29	GUIDE / EXP JT / ANCHOR	D / 01S02	35.5	1"
12		426.50		444.00		TEMPORARY SUPPORT	P697 SIM		-
13	4 / 01S03	426.50	422.50	444.00	441.29	GUIDE / EXP JT / ANCHOR	D / 01S02	33.5	1"
14	1 / 01S03	426.50	422.50	444.00	441.29	1 GUIDE / EXP JT / ANCHOR	1 D / 01S02	40.0	1"
15	1 / 01S03	426.50	422.50	444.00	441.29	GUIDE / EXP JT / ANCHOR	D / 01S02	30.5	1"
16	1 / 01S03	426.50	422.50	444.25	441.54	GUIDE / EXP JT / GUIDE	A / 01S02	22.0	1.5"
17	1 / 03S02	-	434.50	444.75	442.17	ANCHOR		25.0	-
18	2 / 03S02	-	434.50	444.75	442.17	GUIDE / EXP JT / ANCHOR		34.0	1"
19	1 2 / 03S02	-	434.50	444.75	442.17	1 GUIDE / EXP JT / ANCHOR		33.5	1"
20	2 / 03S02	-	434.50	444.75	442.17	GUIDE / EXP JT / ANCHOR		38.0	1"
21	1 2 / 03S02	-	434.50	444.75	442.17	1 GUIDE / EXP JT / ANCHOR		38.5	1"
22	2 / 03S02	-	434.50	444.75	442.17	GUIDE / EXP JT / ANCHOR		37.0	1"
23	2 / 03S02	-	434.50	444.75	442.17	GUIDE / EXP JT / ANCHOR		34.5	1"
24	4 / 03S02	-	434.50	444.75	442.17	GUIDE / EXP JT / ANCHOR		30.0	1"
25	1 / 01S03	426.50	422.50	444.25	441.54	GUIDE / EXP JT/ GUIDE	A / 01S02	28.0	1"
26	4 / 01S03	426.50	422.50	444.00	441.29	ANCHOR	B / 01S02		-
27	1 / 01S03	426.50	422.50	444.00	441.29	1 GUIDE / EXP JT / ANCHOR	1 D / 01S02	35.0	1"
28	1 / 01S03	426.50	422.50	444.00	441.29	GUIDE / EXP JT / ANCHOR	D / 01S02	32.0	1"
29	1 / 01S03	426.50	422.50	444.00	441.29	GUIDE / EXP JT/ GUIDE	A / 01S02	37.5	1.5"
30	1 / 01S03	426.50	422.50	444.00	441.29	ANCHOR	B / 01S02	12.0	-
31	1 / 01S03	426.50	422.50	444.00	441.29	1 GUIDE / EXP JT / ANCHOR	1 D / 01S02	28.0	1"
32	1 / 01S03	426.50	422.50	444.00	441.29	1 GUIDE / EXP JT / ANCHOR	1 D / 01S02	35.0	1"
33	1 / 01S03	426.50	422.50	444.00	441.29	GUIDE / EXP JT / ANCHOR	D / 01S02	40.0	1"
34	1 / 01S03	426.50	422.50	444.00	441.29	1 GUIDE / EXP JT / ANCHOR	1 D / 01S02	40.0	1"
35	1 / 01S03	426.50	422.50	444.00	441.29	1 GUIDE / EXP JT / ANCHOR	1 D / 01S02	40.0	1"
36	1 / 01S03	426.50	422.50	444.00	441.29	GUIDE / EXP JT / ANCHOR	D / 01S02	35.0	1"
37	1 / 01S03	426.50	422.50	444.00	441.29	1 GUIDE / EXP JT / ANCHOR	1 D / 01S02	40.0	1"
38	1 / 01S03	426.50	422.50	444.00	441.29	1 GUIDE / EXP JT / GUIDE	1 A / 01S02	40.0	1.5"
39	1 / 01S03	426.50	422.50	444.00	441.29	1 ANCHOR / RESTRAINED JT / GUIDE	E / 01S02	25.0	-

NOTE 1: REFER TO THE CIVIL DRAWINGS FOR SITE LOCATION OF PIPE SUPPORT STATIONS.

NOTE 2: THE TOP OF PIER CAP ELEVATION SHALL BE AT LEAST SIX (6) INCHES ABOVE GRADE. EXISTING GRADE ELEVATIONS AND TOP OF PIER ELEVATIONS SCHEDULED ARE FOR BIDDING PURPOSES AND SHALL BE FIELD VERIFIED BY THE CONTRACTOR PRIOR TO DRILLING PIERS. REFER TO CIVIL DWGS FOR GRADE ELEVATIONS.

NOTE 3: THE TOP OF PIER ELEVATION SHALL BE 4'-0" BELOW THE EXISTING GRADE ELEVATION. CONTRACTOR SHALL FIELD ALL EXISTING TOP OF GRADE ELEVATIONS PRIOR TO INSTALLING THE PIERS.

NOTE 4: ALL PIPE PARAMETERS AND SUPPORT TYPES SHALL BE COORDINATED WITH THE CIVIL PIPING DRAWINGS. USE CIVIL SHEET INFORMATION IN CASE OF CONFLICT WITH INFORMATION SCHEDULED HERE.

NOTE 5: CONTRACTOR SHALL LOCATE ALL EXISTING UNDERGROUND PIPING AND UTILITIES PRIOR TO DRILLING PIERS. NOTIFY ENGINEER IN CASE OF CONFLICT.

NOTE 6: PIPE SPAN AND EXPANSION GAPS SHOWN IN THIS TABLE SHALL BE COORDINATED WITH THE PIPING FABRICATOR. COORDINATE ANY CONFLICTS ON THE PIPE SPAN AND EXPANSION GAPS SHOWN WITH CIVIL/MECH.

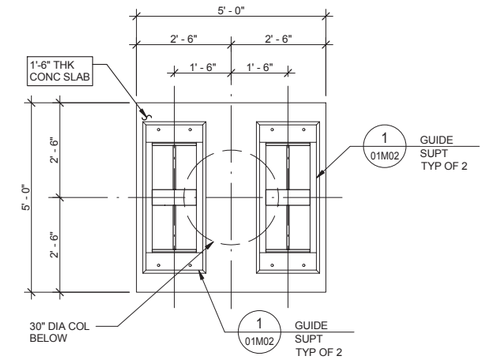

A **PLAN**
SCALE: 1/2" = 1'-0"

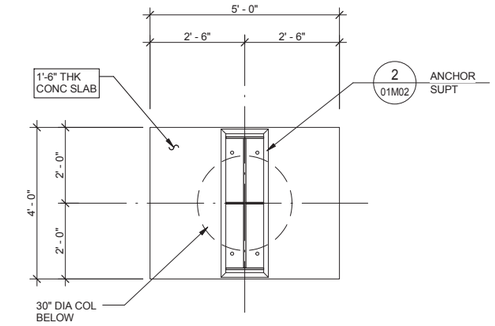

B **PLAN**
SCALE: 1/2" = 1'-0"

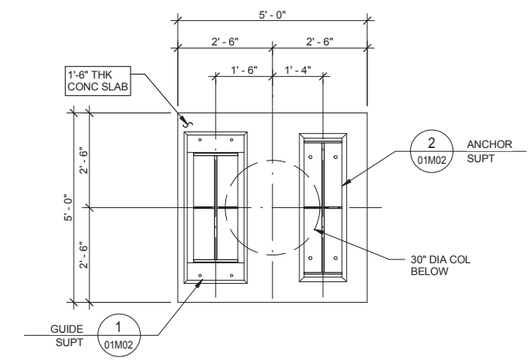

D **PLAN**
SCALE: 1/2" = 1'-0"

1 C **NOT USED**
SCALE: 1/2" = 1'-0"

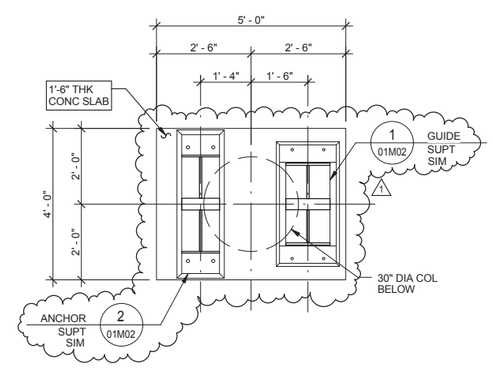

E **PLAN**
SCALE: 1/2" = 1'-0"

shaping the built environment
JQ Infrastructure
JQ INFRASTRUCTURE
100 GLASS STREET, SUITE 201
972.392.7340
DALLAS, TEXAS 75207
JQ PROJECT NO: 3150137
TBPE FIRM 7986

REV	DATE	BY	DESCRIPTION
1	2/23/16	CNS	ADDENDUM NO 1

DESIGNED JDM/GRS
DRAWN JMN/BD
CHECKED JDS
DATE DECEMBER 2015

02/25/2016 STATE OF TEXAS CHRISTOPHER N. STORY 89485 LICENSED PROFESSIONAL ENGINEER

carollo® TBPE No. F-882

CITY OF AUSTIN FOUNDED 1839

CITY OF AUSTIN, TEXAS
SOUTH AUSTIN REGIONAL WWTP
TRAINS A & B BLOWER REPLACEMENT
STRUCTURAL
YARD PIPING SUPPORTS - SCHEDULES AND DETAILS

VERIFY SCALES
BAR IS ONE INCH ON ORIGINAL DRAWING
0 1"
IF NOT ONE INCH ON THIS SHEET, ADJUST SCALES ACCORDINGLY

JOB NO. 9469B.10
DRAWING NO. 01S02
SHEET NO. 123 OF 320

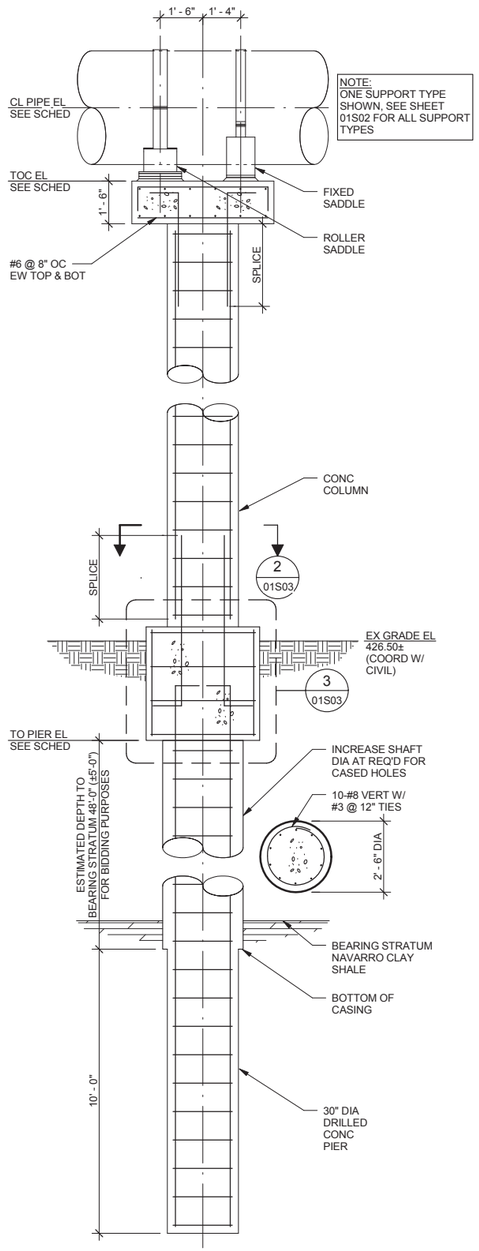

1 TYPICAL YARD SUPPORT

SCALE: 3/8" = 1'-0"

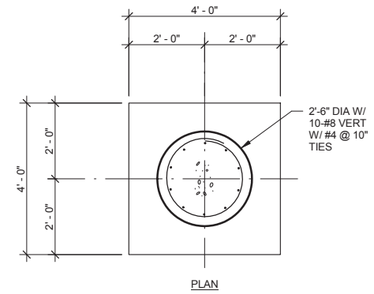

2 PIER CAP DETAIL

SCALE: 1/2" = 1'-0"

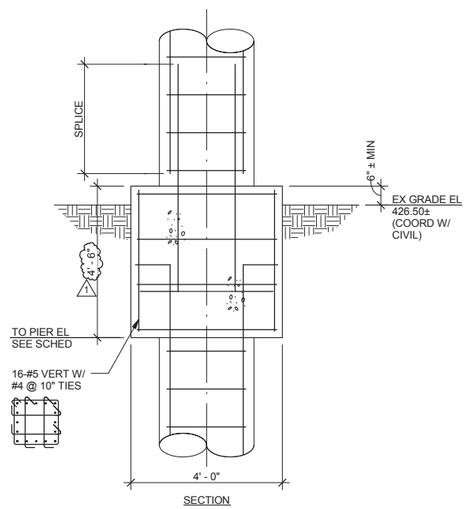

3 SECTION

SCALE: 1/2" = 1'-0"

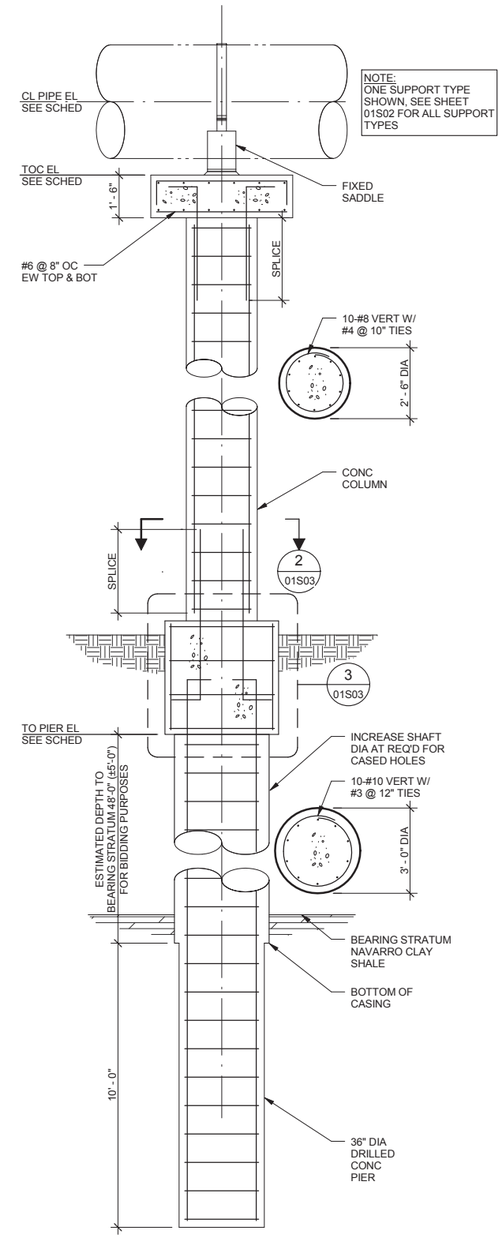

4 YARD SUPPORT 10, 11, 14, AND 26

SCALE: 3/8" = 1'-0"

GENERAL NOTES:

1. CONTRACTOR SHALL VACUUM EXCAVATE TO A DEPTH OF 8 FEET AT EVERY PIER LOCATION TO VERIFY THERE IS NO CONFLICT WITH EXISTING UTILITIES PRIOR TO BORING. RELOCATE PIER AS NEEDED.

shaping the built environment
JQ INFRASTRUCTURE
100 GLASS STREET, SUITE 201
972.392.7340
DALLAS, TEXAS 75207
JQI PROJECT NO: 3150137
TBPE FIRM 7986

REV	DATE	BY	DESCRIPTION
1	2/23/16	CNS	ADDENDUM NO 1

DESIGNED JDM/GRS
DRAWN JMN/BD
CHECKED JDS
DATE DECEMBER 2015

STATE OF TEXAS — CHRISTOPHER N. STORY — 89485 — LICENSED PROFESSIONAL ENGINEER — 05/01/2014

carollo
TBPE No. F-882

CITY OF AUSTIN, TEXAS
SOUTH AUSTIN REGIONAL WWTP
TRAINS A & B BLOWER REPLACEMENT
STRUCTURAL
YARD PIPING SUPPORTS - SECTIONS AND DETAILS

VERIFY SCALES
BAR IS ONE INCH ON ORIGINAL DRAWING
0 1"
IF NOT ONE INCH ON THIS SHEET, ADJUST SCALES ACCORDINGLY

JOB NO. 9469B.10
DRAWING NO. 01S03
SHEET NO. 124 OF 320