ADDENDUM No. 3

Date May 18, 2016

City of Austin

Project Name: Waters Park Relief Main & Southern Portion of Northern Walnut Creek Trail Phase 1A

C.I.P. No. 3168.039

This Addendum forms a part of Contract and clarifies, corrects or modifies original Bid Documents, dated April 11, 2016. Acknowledge receipt of this addendum in space provided on bid form. Failure to do so may subject bidder to disqualification.

A. Project Manual Revisions:

VOLUME 1 OF 2: REMOVE IN ITS ENTIRETY THE TABLE OF CONTENTS AND REPLACE WITH THE ATTACHED TABLE OF CONTENTS.

VOLUME 1 OF 2: REMOVE IN ITS ENTIRETY SECTION 00300U UNIT PRICE BID FORM AND REPLACE WITH THE ATTACHED SECTION 00300U UNIT PRICE BID FORM

VOLUME 1 OF 2: ADD SPECIAL PROVISION SP402S CONTROLLED LOW STRENGTH MATERIAL

VOLUME 1 OF 2: ADD SPECIAL PROVISION SP658S VOID AND WATER FLOW MITIGATION

VOLUME 1 OF 2: DELETE SPECIAL SPECIFICATION SS02430 AND REPLACE WITH THE ATTACHED SECTION SPECIAL SPECIFICATION SS02430:

B. Drawing Revisions:

REPLACE SHEET 10 IN ITS ENTIRETY AND REPLACE WITH ATTACHED SHEET 10

REPLACE SHEET 11 IN ITS ENTIRETY AND REPLACE WITH ATTACHED SHEET 11

REPLACE SHEET 15 IN ITS ENTIRETY AND REPLACE WITH ATTACHED SHEET 15

REPLACE SHEET 21 IN ITS ENTIRETY AND REPLACE WITH ATTACHED SHEET 21

This addendum consists of 38 page(s)/sheet(s).

Approved by OWNER

Approved by ENGINEER/ARCHITECT

STATE OF TEXAS
THOMAS M. OWENS
84764
LICENSED
PROFESSIONAL ENGINEER
18 MAY 16

END

Document Number		Title

VOLUME 1

INTRODUCTORY INFORMATION

05/06/11		Title Page
03/18/16		Table of Contents

BIDDING REQUIREMENTS, CONTRACT FORMS, & CONDITIONS OF THE CONTRACT

Pre-Bid Information

00020	01/15/16	Invitation for Bids

Instructions to Bidders

00100	01/15/16	Instructions to Bidders

Information Available to Bidders

00220	05/06/11	Geotechnical Data

Bid Forms

00300U	01/15/16	Bid Form

Supplements to Bid Forms

00400	04/22/13	Statement of Bidder's Experience
00405	09/25/05	Certificate of Non-Suspension or Debarment
00410	01/14/16	Statement of Bidder's Safety Experience
00425A	10/19/15	Insurance Cost Form
00425B	11/02/15	Rolling Owner Controlled Insurance Program Information
00440	10/19/15	Affidavit - Prohibited Activities
00475	05/11/15	Nonresident Bidder Provisions

Agreement Form

00500	1/15/16	Agreement

Bonds and Certificates

00610	02/23/10	Performance Bond
00620	02/23/10	Payment Bond
00630	05/11/15	Nondiscrimination Certificate
00631	03/06/14	Title VI Assurances Appendix A
00650	07/30/12	Certificate of Insurance
00670	03/20/14	Sales Tax Exemption Certificate
00680	06/05/06	Non-Use of Asbestos Affidavit (Prior to Construction)
00681	06/05/06	Non-Use of Asbestos Affidavit (Contractor After Construction)

General Conditions

00700	10/19/15	General Conditions

Supplementary Conditions

00810	01/15/16	Supplemental General Conditions
00820	01/15/16	Modifications to Bidding Requirements and Contract Forms
00830	02/04/15	Wage Rates and Payroll Reporting
00830HH	01/11/16	Wage Rates Highway Heavy

Document Number		Title

Addenda

00900	01/15/16	Addendum

SPECIFICATIONS

Division 1 - General Requirements

01010	04/22/13	Summary of Work
01050	10/19/15	Grades Lines & Levels
01095	07/21/03	Reference Standards and Definitions
01096	05/06/11	Storm water Pollution Prevention Plan (SWPPP)
01200	08/09/12	Project Meetings
01300	04/22/13	Submittals
01353	08/09/12	Construction Equipment Emissions Reduction Plan
01380	08/09/12	Construction Photography & Videos
01500	08/09/12	Temporary Facilities
01505	04/22/13	Construction and Demolition Waste Management
01550	08/09/12	Public Safety and Convenience
01900	03/12/12	Prohibition of Asbestos Containing Materials
01900a	06/05/06	Statement of Non-Inclusion of Asbestos Containing Material (E/A Prior to Design)
01900b	06/05/06	Statement of Non-Inclusion of Asbestos Containing Material (E/A After Design)
01901	01/13/16	Asbestos Abatement
01902	01/13/16	Asbestos Abatement Project Coordination
01904	01/13/16	Asbestos Abatement Codes and Regulations
01910	01/13/16	Asbestos Abatement Worker Protection
01911	01/13/16	Asbestos Abatement Respiratory Protection
01915	01/13/16	Asbestos Abatement Work Area Clearance (PCM)
01917	01/13/16	Disposal of Asbestos-Containing Waste Material

City Standard Technical Specifications

Series 100 – Earthwork

101S	01/04/11	Preparing Right of Way
102S	08/20/07	Clearing and Grubbing
104S	09/26/12	Removing Portland Cement Concrete
111S	09/26/12	Excavation
130S	09/26/12	Borrow
132S	08/20/07	Embankment

Series 200 – Subgrade and Base Construction

201S	08/20/07	Subgrade Preparation
204S	09/26/12	Portland Cement Treatment for Materials in Place
210S	02/24/10	Flexible Base
220S	02/24/10	Sprinkling for Dust Control
230S	08/20/07	Rolling (Flat Wheel)
232S	08/20/07	Rolling (Pneumatic Tire)
234S	08/20/07	Rolling (Tamping)
236S	08/20/07	Proof Rolling

Series 300 – Street Surface Courses

301S	08/20/07	Asphalts, Oils, and Emulsions
306S	02/24/10	Prime Coat

Document Number		Title
307S	02/24/10	Tack Coat
315S	09/26/12	Milling Asphaltic Concrete Pavement and Non-Portland Cement Concrete Bases
340S	09/26/12	Hot Mix Asphaltic Concrete Pavement
360S	09/26/12	Concrete Pavement
Series 400 – Concrete Structures and Miscellaneous Concrete		
401S	09/26/12	Structural Excavation and Backfill
402S	11/13/07	Controlled Low Strength Material
403S	09/26/12	Concrete for Structures
405S	11/13/07	Concrete Admixtures
406S	09/26/12	Reinforcing Steel
408S	11/13/07	Concrete Joint Materials
409S	11/13/07	Membrane Curing
410S	09/26/12	Concrete Structures
411S	11/13/07	Surface Finishes for Concrete
414S	11/13/07	Concrete Retaining Walls
430S	11/15/11	P.C. Concrete Curb and Gutter
432S	01/04/10	P.C. Concrete Sidewalks
Series 500 – Pipe and Appurtenances		
501S	09/26/12	Jacking or Boring Pipe
503S	02/17/00	Frames, Grates, Rings and Covers
504S	02/24/10	Adjusting Structures
505S	02/24/10	Concrete Encasement and Encasement Pipe
506	03/15/11	Manholes
508S	02/24/10	Miscellaneous Structures and Appurtenances
509S	09/26/12	Excavation Safety Systems
510	10/03/13	Pipe
Series 600 – Environmental Enhancement		
601S	09/01/11	Salvaging and Placing Topsoil
602S	06/16/08	Sodding for Erosion Control
604S	12/30/14	Seeding for Erosion Control
605S	06/21/07	Soil Retention Blanket
606S	06/21/07	Fertilizer
608S	09/26/12	Planting
609S	08/18/10	Native Grassland Seeding and Planting for Erosion Control
610S	09/26/12	Preservation of Trees and Other Vegetation
628S	12/31/13	Sediment Containment Dikes
639S	08/18/10	Rock Berm
641S	06/21/07	Stabilized Construction Entrance
642S	09/01/11	Silt Fence
648S	08/18/10	Mulch Sock
658S	04/04/12	Void and Water Flow Mitigation
Series 700 – Incidental Construction		
700S	09/26/12	Mobilization
701S	09/26/12	Fencing
702S	05/20/02	Removal and Relocation of Existing Fences
703	09/22/88	Fencing for Excavations
Series 800 – Urban Transportation		
801S	06/21/07	Constructing a Detour
802S	09/26/12	Project Signs
803S	11/15/11	Barricades, Signs and Traffic Handling

Document Number		Title
824S	02/24/10	Traffic Signs
860S	09/26/12	Pavement Marking Paint
862S	05/05/03	Temporary Removable Pavement Markings
863S	09/26/12	Reflectorized Pavement Markers
870S	11/21/05	Work Zone Pavement Markings
871S	06/21/07	Reflectorized Pavement Markings
874S	04/03/09	Eliminating Existing Pavement Markings and Markers
875S	11/21/05	Pavement Surface Preparation for Markings

Special Provisions to City Standard Technical Specifications

SP101S	11/19/13	Preparing Right of Way
SP402S	05/16/16	Controlled Low Strength Material
SP414S	06/30/14	Concrete Retaining Wall
SP503S	11/11/13	Frames, Grates, Rings and Covers
SP510	11/11/13	Pipe
SP610S	03/11/16	Preservation of Trees and Other Vegetation
SP658S	05/11/16	Void and Water flow Mitigation
SP803S	08/21/15	Barricades, Signs and Traffic Handling
SP862S	08/21/15	Temporary Removable Pavement Markings
SP870S	08/21/15	Work Zone Pavement Markings
SP874S	08/21/15	Eliminating Existing Pavement Markings and Markers
SP875S	03/23/16	Pavement Surface Preparation for Markings

Special Specifications

SS01070	08/04/15	Tunneling and Trenchless Definitions
SS01510	08/14/15	Interim Tunnel Mechanical Systems
SS01520	08/14/15	Construction Power and Interim Electrical Systems
SS01540	08/20/15	Bypass Pumping
SS02015	08/14/15	Pre/Post Condition Surveys
SS02016	08/14/15	Vibration and Noise Monitoring
SS02400	08/14/15	Access Shafts
SS02420	08/14/15	Tunnel Excavation by Micro tunnel Boring Machine
SS02430	08/14/15	Tunnel Excavation by Tunnel Boring Machine
SS02440	08/14/15	Tunnel Ground Support
SS02450	08/14/15	Installation of Pipe in Tunnel
SS02460	08/14/15	Groundwater Control for Shafts and Tunnels
SS03330	08/14/15	Low Density Cellular Concrete
SS03465	11/17/14	Pre-Cast Polymer Concrete Manholes

VOL. 2 04/04/16 MBE/WBE Procurement Program Package

VOL. 3 12/10/15 ROCIP SAFETY MANUAL

END

The undersigned, in compliance with the Invitation for Bids for construction of the following Project: Waters Park Relief Main and southern Portion of Northern Walnut Creek Trail Phase 1A

(CIP ID# 3168.039) (IFB# 6100 CLMC577) for the City of Austin, Texas, having examined the Project Manual, Drawings and Addenda, the site of the proposed Work and being familiar with all of the conditions surrounding construction of the proposed Project, having conducted all inquiries, tests and investigations deemed necessary and proper; hereby proposes to furnish all labor, permits, material, machinery, tools, supplies and equipment, and incidentals, and to perform all Work required for construction of the Project in accordance with the Project Manual, Drawings and Addenda within the time indicated for the following prices of:

Note: The Bidder will enter the line item subtotal in the "Amount" column below, which is the product of the estimated "Quantity" multiplied by the "Unit Price". Any mathematical errors will be corrected for the purpose of determining the correct Amount to be entered in the Bid Form. The Amounts, including any corrected Amounts, will then be totaled to determine the actual amount of the Bid.

SECTION A - GENERAL ITEMS

Bid Item	Quantity	Unit	Item Description	Unit Price	Amount
101S-A	7.6	AC	Preparing Right of Way _____ _____	$_____	$_____
602S-B	275	SY	St. Augustine Block Sodding _____ _____	$_____	$_____
602S-D	1,290	SY	Grass Sodding _____ _____	$_____	$_____
604S-A	4,005	SY	Non-Native Seeding for Erosion Control Method, Hydraulic Planting_____	$_____	$_____
604S-D	11,500	SY	Native Seeding for Erosion Control Method, Hydraulic Planting_____	$_____	$_____

Bid Item	Quantity	Unit	Item Description	Unit Price	Amount
604S-G	440	SY	Mulch_____ _____ _____	$_____	$_____
608S-1(B)	15	EA	Planting Type "Burr Oak", Size in inches 3_____ _____	$_____	$_____
608S-1(C)	15	EA	Planting Type "Cedar Elm", Size in inches 3_____ _____	$_____	$_____
608S-1(D)	20	EA	Planting Type "Desert Willow", Size in inches 2_____ _____	$_____	$_____
608S-1(L)	17	EA	Planting Type "Lacey Oak", Size in inches 2_____ _____	$_____	$_____
608S-1(M)	11	EA	Planting Type "Mountain Laurel", Size in inches 1.5_____ _____	$_____	$_____
608S-1(O)	5	EA	Planting Type "Live Oak", Size in inches 3_____ _____	$_____	$_____
608S-1(P)	5	EA	Planting Type "Possumhaw", Size in inches 1.5_____ _____	$_____	$_____

Bid Item	Quantity	Unit	Item Description	Unit Price	Amount
608S-1(T)	12	EA	Planting Type "Texas Persimmon", Size in inches 1.5_ _____	$_____	$_____
608S-1(X)	25	EA	Planting Type "Mexican Plum", Size in inches 2_____ _____	$_____	$_____
609S-A	10,160	SY	Topsoil and Seedbed Preparation _____ _____	$_____	$_____
609S-C	95	SY	Native Grassland Seeding and Planting_____ _____	$_____	$_____
610S-A	2,400	LF	Protective Fencing Type A Chain Link fence (Typical Application - high damage potential_____	$_____	$_____
SP610S-P	1	LS	Remedial Tree Care_____ _____ _____	$_____	$_____
610S-R1	81	EA	Removal of Existing Trees (4” to 12”)_____ _____	$_____	$_____
610S-R2	3	EA	Removal of Existing Trees (12” to 18”)_____ _____	$_____	$_____

Bid Item	Quantity	Unit	Item Description	Unit Price	Amount
610S-R3	1	EA	Removal of Existing Trees (18” to 24”)_____ _____	$_____	$_____
628S-B	375	LF	Sediment Containment Dikes with filter fabric_____ _____	$_____	$_____
639S	45	LF	Rock Berm_____ _____ _____	$_____	$_____
641S	1	EA	Stabilized Construction Entrance _____ _____	$_____	$_____
642S	3,240	LF	Silt Fence for Erosion Control _____ _____	$_____	$_____
648S	32	LF	Mulch Sock_____ _____ _____	$_____	$_____
700S-TM	1	LS	Total Mobilization Payment____ _____ _____	$_____	$_____
701S-T	4,500	LF	Temporary Fence, 8 Foot High, Chain Link Type_____ _____	$_____	$_____

Bid Item	Quantity	Unit	Item Description	Unit Price	Amount
802S-B C.I.P.	2	EA	C.I.P. Project Sign_____ _____ _____	$_____	$_____
803S-CD	540	CD	Barricades, Signs and Traffic Handling_____ _____	$_____	$_____
803S-SF	500	LF	Safety Fence_____ _____ _____	$_____	$_____
SP803S-PCMB	540	CD	Portable Changeable Message Board_____ _____	$_____	$_____

SUBTOTAL SECTION A – GENERAL ITEMS…….. $_____

SECTION B – WASTEWATER LINE ITEMS

Bid Item	Quantity	Unit	Item Description	Unit Price	Amount
210S-A	3,350	CY	Flexible Base_____ _____ _____	$_____	$_____
315S-A	12,095	SY	Surface Milling_____ _____ _____	$_____	$_____
340S-B(B)	55	SY	Hot Mix Asphaltic Concrete Pavement, 4 inches, Type B _____	$_____	$_____

Bid Item	Quantity	Unit	Item Description	Unit Price	Amount
340S-B(D)	12,095	SY	Hot Mix Asphaltic Concrete Pavement, 2 inches, Type D _____	$_____	$_____
SP402S-B	2,145	LF	Normal Set Controlled Low Strength Material used with Item 510 Pipe work	$_____	$_____
432SR-5	365	SF	Reconstruct Concrete Sidewalks to 5 Inch thickness, including removal of existing sidewalk	$_____	$_____
SP503A	21	EA	Watertight Ring and Cover _____ _____	$_____	$_____
504S-3W	8	EA	Adjusting Water Valve Boxes to Grade_____ _____	$_____	$_____
505S-B	564	LF	Encasement Pipe 54 inch Dia., Type Steel_____ _____	$_____	$_____
506S 4WW	8	EA	Minor Manhole Height Adjustment, 48 inch Dia. _____	$_____	$_____
506S ABWW	4	EA	Abandonment of existing Manholes_____ _____	$_____	$_____

Bid Item	Quantity	Unit	Item Description	Unit Price	Amount
506S M1WW48	1	EA	Standard Pre-Cast Manhole w/ CIP Base, 48 inch Dia._____ _____	$_____	$_____
508S-I10S	1	EA	Inlet, Standard_____ _____ _____	$_____	$_____
509S-1	3,329	LF	Trench Excavation Safety Protective Systems (all depths) _____	$_____	$_____
510-ASD 18Dia	17	LF	Pipe, 18 inch Dia. RCP (all depths), including excavation and Backfill _____	$_____	$_____
510-AW6Dia	200	LF	Pipe, 6 inch Dia. Ductile Iron Type (all depth) including Excavation and Backfill_____	$_____	$_____
510-AW8Dia	200	LF	Pipe, 8 inch Dia. Ductile Iron Type (all depth) including Excavation and Backfill_____	$_____	$_____
510-AWW 6Dia	45	LF	Pipe, 6 inch Dia. PVC ASTM 3034 SDR 26 Type (all depth) including Excavation and Backfill	$_____	$_____
510-AWW 12Dia	40	LF	Pipe, 12 inch Dia. PVC ASTM 3034 SDR 26 Type (all depth) including Excavation and Backfill	$_____	$_____

Bid Item	Quantity	Unit	Item Description	Unit Price	Amount
510-AWW 36Dia	3,357	LF	Pipe, 36 inch Dia. PVC ASTM F679 PS 115 Type (all depth) including Excavation and Backfill	$_____	$_____
510-AWW 42Dia	34	LF	Pipe, 42 inch Dia. PVC ASTM F679 PS 115 Type (all depth) including Excavation and Backfill	$_____	$_____
SP510-ABWW	522	LF	Abandonment of Existing AC Pipe including Controlled Low Strength Material	$_____	$_____
510-BWW 6X6	1	EA	Connecting New 6” Service to Existing Private Service (6” Dia. New Service to 6” Dia. Private Service) _____	$_____	$_____
510-FWW	83	LF	Concrete Trench Cap, 4 Ft. Width_____ _____	$_____	$_____
SP510-FWW5	368	LF	Rock Rubble Trench Cap, 5 Ft. Width_____ _____	$_____	$_____
SP510-FWW9	160	LF	Scour Channel Trench Cap, 9 Ft. Width_____ _____	$_____	$_____
SP510-RWW	131	LF	Removal of Existing AC Pipe _____ _____	$_____	$_____

Bid Item	Quantity	Unit	Item Description	Unit Price	Amount
658S-1	1	EA	Temporary Void Protection (Plywood Planking)_____ _____	$_____	$_____
658S-2	3	CY	Controlled Low Strength Material for Void Mitigation____ _____	$_____	$_____
658S-3	3	EA	Pea Gravel-Filled Polypropylene Bags for Void Mitigation _____ _____	$_____	$_____
658S-4	2	CF	3 to 5 Inch Rock for Void Mitigation_____ _____	$_____	$_____
658S-5	3	SY	Filter Fabric for Void Mitigation _____ _____	$_____	$_____
658S-6	12	SY	Permanent Turf Reinforcement Mat for Void Mitigation _____	$_____	$_____
658S-7	3	CF	Low Slump Concrete _____ _____	$_____	$_____
658S-8	5	LF	Special Trench Safety Associated With Observation of Voids and/or Flowing Water _____	$_____	$_____

Bid Item	Quantity	Unit	Item Description	Unit Price	Amount
SP658S-10	5	DAY	Downtime Associated with Observation of Voids and/or Flowing Water associated with item 510 Pipe work	$_____	$_____
SP658S-11	5	DAY	Downtime Associated with Observation of Voids and/or Flowing Water associated with item SS02430 Tunnel Excavation by MTBM or TBM method work	$_____	$_____
824S	4	EA	Traffic Signs_____ _____ _____	$_____	$_____
863S-4	4	EA	Reflectorized Pavement Markers (Type II-B-B)_____ _____	$_____	$_____
871S-A	30	LF	Reflectorized Type I Thermoplastic Pavement Markings, 24 Inches in width, 90 mils in thickness white in color	$_____	$_____
SS01540A	1	LS	Bypass Pumping – Complete in Place at WWMH No. 30_____ _____	$_____	$_____
SS01540B	1	LS	Bypass Pumping – Complete in Place at WWMH No. 4_____ _____	$_____	$_____

Bid Item	Quantity	Unit	Item Description	Unit Price	Amount
SS01540C	1	LS	Bypass Pumping – Complete in Place at WWMH No. 86191____ _____	$_____	$_____
SS01540D	1	LS	Bypass Pumping – Complete in Place at WWMH No. 124770___ _____	$_____	$_____
SS02430	564	LF	Tunnel Excavation by MTBM or TBM Method _____ _____	$_____	$_____
SS03330	564	LF	Low Density Cellular Concrete _____ _____	$_____	$_____
SS03465 A72	14	EA	Watertight Pre-Cast Polymer Concrete Manhole, 72 inch Diameter _____	$_____	$_____
SS03465 B72	7	EA	Pre-Cast Polymer Concrete Manhole, 72 inch Diameter _____	$_____	$_____
SS03465 C72	42	VF	Pre-Cast Polymer Concrete Manhole Riser, 72 inch Diameter _____	$_____	$_____
SS03465 D1	1	LS	WWMH No. 1, including 120" Base and Riser, complete in Place _____	$_____	$_____
SS03465 D2	1	LS	WWMH No. 2, including 120" Base and Riser, complete in Place _____	$_____	$_____

Bid Item	Quantity	Unit	Item Description	Unit Price	Amount
SS03465 D5	1	LS	Drop WWMH No. 5, including 72" Base and Riser, complete in Place _____	$_____	$_____
SS03465 D6	1	LS	Drop WWMH No. 6, including 72" Base and Riser, complete in Place _____	$_____	$_____
SS03465 D29	1	LS	Cast-in-Place WWMH No. 29, including 84" Base and Riser, complete in Place _____	$_____	$_____
SS03465 D30	1	LS	Cast-in-Place WWMH No. 30, including 84" Base and Riser, complete in Place _____	$_____	$_____

SUBTOTAL SECTION B – WASTEWATER LINE ITEMS…….. $_____

SECTION C - TRAIL SEGMENT 2 ITEMS

Bid Item	Quantity	Unit	Item Description	Unit Price	Amount
104S-C	612	SF	Remove P.C. Concrete Sidewalks and Driveways_____ _____	$_____	$_____
111S-A (C)	78	CY	Excavation_____ _____ _____	$_____	$_____
132S-A (C)	188	CY	Embankment_____ _____ _____	$_____	$_____

Bid Item	Quantity	Unit	Item Description	Unit Price	Amount
204S-A (C)	1,058	SY	Portland Cement Treatment of Materials in Place 6 inch Thickness_____	$_____	$_____
204S-B (C)	76	BL	Portland Cement (6 lb/cf)_____ _____ _____	$_____	$_____
360S-A (C)	757	SY	6 In. Concrete Pavement_____ _____ _____	$_____	$_____
401S-A (C)	68	CY	Unclassified Structural Excavation, Plan Quantity_____ _____	$_____	$_____
414S-C (C)	51	CY	Cast-in-place Portland Cement Concrete Retaining Wall, including Reinforcement	$_____	$_____
SP414S-FL (C)	532	SF	Form Liner for Cast-in-Place Portland Cement Concrete Retaining Wall	$_____	$_____
432S-PRC-2	85	LF	Pedestrian ADA Railing – Option 1 (Standard 707S-2) _____ _____	$_____	$_____

SUBTOTAL SECTION C – TRAIL SEGMENT 2 ITEMS…… $_____

SECTION D - TRAIL SEGMENT 1 ITEMS

Bid Item	Quantity	Unit	Item Description	Unit Price	Amount
104S-F	7	EA	Remove P.C. Concrete Foundations_____ _____	$_____	$_____
111S-A (D)	87	CY	Excavation_____ _____	$_____	$_____
132S-A (D)	212	CY	Embankment_____ _____ _____	$_____	$_____
204S-A (D)	1,192	SY	Portland Cement Treatment of Materials in Place 6 inch Thickness_____	$_____	$_____
204S-B (D)	86	BL	Portland Cement (6 lb/cf)_____ _____ _____	$_____	$_____
360S-A (D)	853	SY	6 In. Concrete Pavement_____ _____ _____	$_____	$_____
401S-A (D)	76	CY	Unclassified Structural Excavation, Plan Quantity ____ _____	$_____	$_____
414S-C (D)	36	CY	Cast-in-place Portland Cement Concrete Retaining Wall, including Reinforcement	$_____	$_____

Bid Item	Quantity	Unit	Item Description	Unit Price	Amount
SP414S-FL (D)	418	SF	Form Liner for Cast-in-Place Portland Cement Concrete Retaining Wall	$_____	$_____
824S (D)	14	EA	Traffic Signs_____ _____ _____	$_____	$_____

SUBTOTAL SECTION D – TRAIL SEGMENT 1 ITEMS…… $_____

SUBTOTAL SECTION A – GENERAL ITEMS…… **$_____**

SUBTOTAL SECTION B – WASTEWATER LINE ITEMS.…… **$_____**

SUBTOTAL SECTION C – TRAIL SEGMENT 2 ITEMS…… **$_____**

SUBTOTAL SECTION D – TRAIL SEGMENT 1 ITEMS…… **$_____**

TOTAL BID: …… **$_____**

In the event of a mathematical error, the correct product, determined by using the "Unit Price" and "Quantity", and the correct sum, determined by totaling the correct line item Amounts, will prevail over the amount entered by the Bidder. The unit prices shown above will be the unit prices used to tabulate the Bid and used in the Contract, if awarded by the City.

Optional Information on Bid Prices Submitted by Computer Printout

In lieu of handwritten unit prices in figures in ink on the Bid forms above, Bidders, at their option, may submit an original computer printout sheet bearing certification by, and signature for, the Bidding firm. The unit prices shown on acceptable printouts will be the unit prices used to tabulate the Bid and used in the Contract if awarded by the City. As a minimum, computer printouts must contain all information and in the format shown on the attached page: "Example of Bid Prices Submitted by Computer Printout" form.

If a computer printout is used, the Bidder must still execute that portion of the unit price Bid form which acknowledges the Bid Guaranty, Time of Completion, Liquidated Damages, and all addenda that may have been issued.

Bids with unit prices by computer printout may be rejected, if:

1. The computer printout does not include the required certification, set forth in the attached “Example”.
2. The computer printout is not signed in the name of the firm to whom the Project Manual was issued.
3. The computer printout is non-responsive or otherwise omits required Bid items or includes items not shown on the Bid forms in the Project Manual.
4. The other required Bid documents issued by the City are not fully executed as provided above.
5. The signed Section 00300U is not returned with the signed computer printout.

If the Bid submitted by the Bidder contains both the form furnished by the City, completed according the instructions, and also a computer printout, completed according to the instructions, unit prices of only one will be considered. In this situation, the unit Bid prices shown on the computer printout will be used to determine the Bid.

BID GUARANTY: A Bid guaranty must be enclosed with this Bid, as required in Section 00020, in the amount of not less than five percent (5%) of the total Bid. Following the Bid opening, submitted Bids may not be withdrawn for a period of (120) Calendar Days. Award of Contract will occur within this period, unless mutually agreed between the parties. The Bid guaranty may become the property of the OWNER, or the OWNER may pursue any other action allowed by law, if:

- Bidder withdraws a submitted Bid within the period stated above;
- Bidder fails to submit the required post Bid information within the period specified in Section 00020 or 00100, or any mutually agreed extension of that period;
- or Bidder fails to execute the Contract and furnish the prescribed documentation (bonds, insurance, etc.) needed to complete execution of the Contract within five (5) Working Days after notice of award, or any mutually agreed extension of that period.

GEOTECHNICAL BASELINE ACKNOWLEDGEMENT: The undersigned bidder certifies that he/she has read and understands the Geotechnical Baseline Report (GBR), the Geotechnical Data Report, the Reflection Survey Report, and all other geological and geotechnical information and data as provided in the Contract Documents, including all Addenda. ***The Bidder acknowledges and agrees that the GBR represents the contractual statement of the subsurface conditions reasonably anticipated to be encountered during construction. The GBR will be used to evaluate whether subsurface conditions differ materially from those indicated in the GBR.***

TIME OF COMPLETION:

The undersigned Bidder agrees to commence work on the date specified in the written "Notice to Proceed" to be issued by the OWNER and to **substantially** complete the Intermediate Milestone as defined in 01010 “Summary of Work” within 364 Calendar Days. All work shall be substantially complete, as required by the Project Manual, Drawings and Addenda for the Work within **Five Hundred Forty (540) Calendar Days. The Bidder further agrees to reach Final Completion within One Hundred twenty (120) Calendar Days after Substantial Completion as required by the Project Manual, Drawings and Addenda for the work.** The Bidder further agrees that should the Bidder fail to (**substantially complete the Work or to**)(**finally**) complete the Work within the number of days indicated in the Bid or as subsequently adjusted, Bidder shall pay the liquidated damages for each consecutive day thereafter as provided below; unless the OWNER elects to pursue any other action allowed by law.

WAIVER OF ATTORNEY FEES: In submitting its bid, in consideration for the waiver of its right to attorney’s fees by the OWNER, the Bidder knowingly and intentionally agrees to and shall waive the right to attorney’s fees under Section 271.153 of the Texas Local Government Code in any administrative proceeding, alternative dispute resolution proceeding, or litigation arising out of or connected to any Contract awarded pursuant to this solicitation process.

LIQUIDATED DAMAGES: The Bidder understands and agrees that the timely completion of the described Work is of the essence. The Bidder and OWNER further agree that the OWNER’s actual damages for delay caused by failure to timely complete the Project are difficult, if not impossible to measure. However, with respect to the additional administrative and consultant costs to be incurred by OWNER, the reasonable estimate of such damages has been calculated and agreed to by OWNER and Bidder. Therefore, the Bidder and the OWNER agree that for each and every **Calendar Day** the Work or any portion thereof, remains incomplete after the Intermediate Milestone date as established by the above paragraph, "Time of Completion", **payment will be due to the Owner in the amount of nine hundred ninety dollars ($990) per Calendar Day for failure to complete the work associated with the Intermediate Milestone, one**

<u>thousand three hundred twenty ($1,320) per Calendar Day for failure to substantially complete the work, and three hundred sixty ($360) per Calendar Day for failure to achieve final completion within 120 Calendar Days after substantial completion</u>, as liquidated damages, not as a penalty, but for delay damages to the OWNER. Such amount shall be deducted by the OWNER from any Contract payment due. In the event of a default or breach by the CONTRACTOR and demand is made upon the surety to complete the project, in accordance with the Contract Documents, the surety shall be liable for liquidated damages pursuant to the Contract Documents in the same manner as the CONTRACTOR would have been.

OWNER reserves the right to reject any or all Bids and to waive any minor informality in any Bid or solicitation procedure (a minor informality is one that does not affect the competitiveness of the Bids).

The undersigned acknowledges receipt of the following addenda:

Addendum No. 1 dated _____ Received _____

Addendum No. 2 dated _____ Received _____

Addendum No. 3 dated _____ Received _____

Addendum No. 4 dated _____ Received _____

Addendum No. 5 dated _____ Received _____

_____
Secretary, *if Bidder is a Corporation

_____
Bidder

(Seal)

_____
Authorized Signature

_____
Title

_____
Date

_____

_____
Address

_____
Telephone Number / FAX Number

_____
Email Address for Person Signing Bid

_____
Email Address for Bidder's Primary Contact Person

* Copy of Corporate Resolution and minutes with certificate of officer of Bidder as to authority of signatory to bind Bidder is to be signed and dated no earlier than one week before Bid date, and attached to this document.

EXAMPLE: BID PRICES SUBMITTED BY COMPUTER PRINTOUT

Project Name:
CIP ID #:
IFB #:

Bid Item #	***Bid Item Description***	***Unit***	***Qty***	***Unit Bid Price***	***Total Amount***
				Total Bid:	

(YOUR FIRM'S NAME) certifies that the unit prices shown on this completed computer printout for all of the bid items and the alternates contained in this proposal are the unit prices intended and that its Bid will be tabulated using these unit prices and no other information from this printout. (YOUR FIRM'S NAME) acknowledges and agrees that the total bid amount shown will be read as its total bid. *In the event of a mathematical error*, the correct product, determined by using the "Unit Price" and "Quantity", and the correct sum, determined by totaling the correct line item Amounts, will prevail over the amount entered by the Bidder.

Signed: _____

Title: _____

Date: _____

End

SPECIAL PROVISION TO
Standard Specification 402S (Version November 13, 2007)
Controlled Low Strength Material

For this project 402S Controlled Low Strength Material of the City of Austin Standard Technical Specifications is hereby amended with respect to the clauses cited below. No other clauses or requirements of this Section of the City of Austin Standard Specifications are waived or changed.

402S.9 B Construction Methods

REPLACE the first sentence with the following two sentences:

"After the utility pipe and the proper bedding material have been placed in accordance with the details on the drawings, any trench depth greater than 10 feet as measured from the finished street riding surface to the top of the bedding material shall be filled with Controlled Low Strength Material placed over the bedding material. The 10 feet or less depth as measured from the finished street riding surface shall be filled with compacted backfill to the bottom of the proposed street cross section."

402S.11 Measurement and Payment

ADD the following after the second paragraph:

"When used in the work Item SP402S-B shall be measured per the linear foot of trench requiring Controlled Low Strength Material.

Any Controlled Low Strength Material used with Item 506 work shall be included in the Item 506 unit price bid."

ADD the following pay item:

"Pay Item SP402S-B: Normal Set Controlled Low Strength Material used with Item 510 Pipe work - Per Linear Foot"

End

SPECIAL PROVISION TO
Standard Specification 658S (Version April 04, 2012)
Void and Water Flow Mitigation

For this project 658S Void and Water Flow Mitigation of the City of Austin Standard Technical Specifications is hereby amended with respect to the clauses cited below. No other clauses or requirements of this Section of the City of Austin Standard Specifications are waived or changed.

658S.7 Payment

ADD the following two pay items at the end of the current list of pay items:

"Pay Item SP658S-10: Downtime Associated with Observation of Voids and/or Flowing Water associated with Item 510 Pipe work - Per Day

Pay Item SP658S-11: Downtime Associated with Observation of Voids and/or Flowing Water associated with Item SS02430 Tunnel Excavation by MTBM or TBM Method work - Per Day"

End

SPECIAL SPECIFICATION SS02430
TUNNEL EXCAVATION BY TUNNEL BORING MACHINE

PART 1: GENERAL

1.01 SCOPE OF WORK

A. The work includes design, procurement, installation, and execution of tunnel excavation by Tunnel Boring Machine for the Waters Park Relief Main Project, Austin Texas.

B. All work specified is the responsibility of the Contractor, subject to the approval of the Engineer. Perform work in accordance with all current applicable regulations and codes of Federal, State, and local agencies. In the event of conflict, comply with the strictest requirements. No part of this specification shall be construed as a relaxation of any of these rules, laws, and regulations.

C. The tunnel has been classified as potentially gassy in accordance with the Code of Federal Regulations, 29 CFR 1926 Safety and Health Regulations for Construction (OSHA). All operations including, but not limited to excavation, support installation and ventilation shall be performed following OSHA and all other local, State and Federal laws and regulations for work in a potentially gassy underground environment.

D. Furnish all labor, materials, and equipment required to excavate the Waters Park Relief Main tunnel to the minimum dimensions and grades as shown on the Drawings and as required to perform the work by use of a Tunnel Boring Machine (TBM).

E. Construction methods shall satisfy the requirements of this section while utilizing and preserving the inherent strength of the ground surrounding the tunnel. The ground forms the foundation of the permanent support for this tunnel. Minimizing disturbance to the ground is also essential to minimizing the surface effects of tunnel excavation.

F. Excavated dimensions and arrangements shown on the Drawings for the tunnel are approximate dimensions. Subject to the approval of the Engineer, the Contractor may select such dimensions as he may require to conduct the work, based on space requirements for the equipment, installation of components, handling of excavated material, methods of construction, and ancillary services.

G. Furnish all labor, materials and equipment to install tunnel ground support, as shown on the Drawings, for the tunnel ground support type determined during construction. The Contractor's methods of excavation shall be compatible with the requirements for the initial tunnel support, as indicated in the referenced specification items or on the Drawings. If the selected tunnel ground support type fails to provide satisfactory performance within the encountered ground conditions, the Contractor shall provide another support type at no additional cost to the Owner.

H. Furnishing all material and labor to install and maintain pumps, piping, drains and other facilities for the control, collection and disposal of groundwater and construction related water from inside the tunnel and shaft excavations. Water collected in the tunnel shall be directed to the tunnel access shaft for disposal.

I. The Contractor shall be responsible for furnishing and installing all electrical equipment required to complete the tunnel construction activities both on the surface and underground at the construction sites. The Contractor shall also furnish the electrical equipment for all of the auxiliary systems which shall include but not be limited to

transformers, panel boards, security lighting, grounding, power for vent fans, sump pumps, disconnect switches, voice communication equipment, office trailers, etc. The work shall include the following:

1) Electric lines shall be sized for the loads and rated properly for the delivery voltage.

2) Lighting along the length of the tunnel, in the shaft areas, and in the vicinity of all operating equipment.

3) The Contractor as required will provide communication equipment.

1.02 RELATED WORK

A. Section SS01510: Interim Tunnel Mechanical Systems

B. Section SS01520: Construction Power and Interim Electrical Systems

C. Section SS02400: Access Shafts

D. Section SS02420: Tunnel Excavation by Microtunnel Boring Machine

E. Section SS02440: Tunnel Ground Support

F. Section SS02450: Installation of Pipe in Tunnel

G. Section SS02460: Groundwater Control for Shafts and Tunnels

1.03 DEFINITIONS

A. See Definitions as provided in Section SS01070, Tunneling and Trenchless Definitions.

1.04 JOB CONDITIONS

A. Maintain an adequate supply of all ground support elements on site to prevent delays to the work.

B. The Contractor shall be solely responsible for providing a TBM suitable for this job and in accordance with these specifications. The Engineer shall provide a summary review to ensure that the intent of the specifications is met. Engineer's acceptance of the TBM does not relieve the Contractor of the responsibility of supplying a suitable TBM.

C. The Contractor shall have the sole responsibility for maintenance and protection of existing utilities, structures, and facilities within the zone impacted by the access shaft and tunnel. The zone of impact shall include the zone of ground movement in the vicinity of this work.

D. The Contractor shall have the sole responsibility for sizing the tunnel within the limits specified and shown on the Drawings. The size of the excavation shall be adequate to construct all structures required and to gain access to tunneling operations for all materials, equipment, and personnel.

E. The Contractor shall allow the Engineer's and Owner's representatives access to the access shaft, and to use the access shaft to access tunnel operations.

1.05 SUBMITTALS

A. For submittal procedures refer to Section 01300: Submittals.

B. Submit to the Engineer the following a minimum of eight weeks before the scheduled start of the applicable activity.

1) Name and qualifications of person responsible for tunnel support system design. This work shall be preformed and sealed by a Professional Engineer licensed in the State of Texas.

2) Shop drawings and design calculations indicating arrangement of supports and construction sequence for proposed Tunnel support system(s). Calculations shall include estimates of likely deflections or deformations of the supports and maximum tolerable values.

3) Breakout plans indicating type of support installed to transfer loads and maintain excavation support and stability of the excavation during tunneling.

4) Provisions for protecting adjacent facilities and utilities.

C. Qualification for Tunnel Staff: Submit within 30 days of the contract execution, qualifications and experience of individuals to be involved in tunnel construction including the proposed Tunnel Project Manager, Tunnel Engineer, and TBM Operators that meet the requirements as specified (see Section 1.08).

D. Working Drawings: Submit within 30 days of the contract execution, detailed description, data, or calculation of proposed facilities, equipment to be utilized, and method of construction, including, but not limited to, the following:

1) Sequence of excavation and support installation including number, location, direction, and timing of all tunnel headings, including details of size, length and support system design for tunnels for TBM or Shield operations.

2) Tunnel ventilation, lighting, communications and draining systems.

3) Methods of controlling line and grade, and survey protocols.

4) Method of protecting tunnel invert during construction of the tunnel.

5) Detailed list and description of all equipment to be used for tunnel excavation and installation of support.

6) A work plan covering access to the TBM face and to the tunnel heading for inspection, maintenance, and cutter replacement.

E. Documentation:

1) Permits for the disposal of excavated material: The Contractor shall obtain and submit written permits from the owners of property where excavated material (spoil) will be deposited off-site. Permits shall absolve the Engineer and the Engineer's subcontractors from responsibility in connection with disposal of such material.

2) Temporary ventilation plan: The Contractor shall submit details of the ventilation fans and ducting and computations showing ventilation volumes that meet the ventilation requirements specified herein.

3) A schedule of the estimated delivery time, assembly time, and start-up time for tunnel excavation.

4) Estimated overall average daily advance rate for tunnel excavation, in feet/day, from start of tunnel excavation to finish of tunnel excavation, along with estimated average TBM Penetration rate in feet/hour for each ground type."

F. Tunnel Boring Machine: No more than ten working days after contract execution, submit schedule of design, manufacture, and delivery of TBM. Contractor shall submit all documentation and drawings needed to clearly demonstrate that the TBM, and supporting equipment is adequate to excavate the material types and conditions indicated in the GDR and GBR. Include description of thrust and steering system, cutter-head design, drive system, system for installing ground support, back-up systems, dust suppression and ventilation systems, environmental control systems, air monitoring, and documentation of complete spoil handling system including types and capacities of equipment to be used for spoil loading and transport underground and above ground.

G. Maintain and submit on a daily basis shift records, including:

1) Starting and ending stations for each shift.

2) Crew size and allocations for each shift.

3) Starting and ending clock reading for each shift.

4) Type, quantity, and location of support installed.

5) Horizontal and vertical alignment from theoretical centerline at the end of each push.

6) Air quality reports of tests for dust, toxic and hazardous gases, and other atmospheric impurities in the working environment including the time, location and gas levels.

7) Record of water inflow.

8) Submit on a daily basis records of any unusual occurrences, including falls, unstable ground, groundwater problems, equipment malfunction, power outages, damage to tunnel ground support systems and the location and time of each such occurrence.

9) Other pertinent data as necessary.

H. Submit all down time to account for 24 hours of each day from the first day of tunnel excavation. Reasons for and activities during down times must be described in detail. Submit on a weekly basis.

I. Maintain and submit weekly a progress chart showing tunnel advance on a time scale, annotated with significant events and activities.

J. All daily and weekly submittals shall be signed, at the time of submission, by the Contractor's Project Superintendent and also by the City of Austin's CID Inspector.

1.06 SAFETY

A. All methods of construction shall ensure the safety of the work, project participants, the public, third parties, and adjacent property, whether public or private. All work shall conform to the requirements of all Federal, State, and local laws and regulations. The Contractor is solely and completely responsible for maintaining safe work conditions at the site at all times.

B. The Contractor shall have a full time, on-site Safety Officer. The Safety Officer shall only be employed in administration and implementation of the Safety Program. The Safety Officer shall not report directly to any supervisory personnel on site.

C. The Safety Officer shall administer an accident prevention program, and shall prepare a code of safe practices and an emergency plan. Provide the Engineer with a copy of each prior to starting tunnel excavation. Hold safety meetings and provide safety instruction for new employees.

1.07 GROUND CONDITIONS

A. The work will be performed through subsurface conditions which have been investigated for the purpose of developing assumptions about ground conditions. Both a Geotechnical Data Report (GDR) and Geotechnical Baseline Report (GBR) have been prepared based on this information.

B. The primary objective of the GDR is to present the results of geotechnical investigations conducted for the project in a factual manner. These results include descriptions of field and laboratory investigations performed and procedures used, background physiography and regional geology information, and summaries of site subsurface conditions.

C. The primary objectives of the GBR are to present the Engineer's interpretation of subsurface conditions and ground behavior, to present the basis of geotechnical design, and to describe how these conditions may affect tunnel construction. The GBR also represents the geotechnical "baseline" for design that will be the basis for resolving of potential differing site conditions with respect to the occurrence of different soil types and ground water anticipated for the work.

1.08 QUALITY ASSURANCE AND CONTROL

A. Tunnel Project Manager: The Contractor must identify an employee as the Tunnel Project Manager who has at least 10 years of experience in tunnel construction with the methods specified.

B. Drawings, calculations, or other submittals in this and related specifications requiring an Engineer's Seal shall be performed by a Civil, Geological, or Mining Engineer Licensed in Texas."

C. The Contractor's TBM Operators shall have a minimum of five years' experience in tunnel excavation with the methods specified.

D. The Contractor shall provide quality control, testing, and inspection as required herein, and in accordance with approved submittals. The designer of the tunnel initial support shall visit the site to observe the work in progress as necessary to assure the work is conducted in accordance with the design and that design assumptions are accurate based on field conditions.

E. Tolerances to line and grade for the tunnel construction shall be as follows:

1) Horizontal Alignment: Maximum departure of 3 inches at any point along the theoretical tunnel centerline.

2) Vertical Alignment: Maximum departure of 3 inches at any point along the theoretical tunnel grade line.

PART 2: PRODUCTS

2.01 EXCAVATION

A. Tunnel Boring Machine

1) The TBM shall be designed and built or rebuilt for the ground conditions on this project. All of the various components and systems, which make up the TBM shall be new or reconditioned so that the machine is ready to operate upon installation at the site. It shall be able, with excess capacity, to accommodate the range of ground and groundwater conditions and ground support requirements indicated in the Contract Documents and GBR.

2) A letter shall be obtained from the Contractor that the TBM is either new or has been reconditioned to accepted industry standards.

3) Design TBM with cutterhead and teeth, thrust and torque that will enable it to bore tunnel full face on alignment and grade to minimum diameter excavation lines in the formations indicated by the GBR. Design the TBM with a cutterhead that will excavate while rotating in either direction to help prevent rolling of the machine. The TBM shall have adequate thrust, torque, and cutterhead rotational speed to maintain advance rates that will permit completion of the work within the allowed schedule, with appropriate excess capacity as recommended by the TBM manufacturer. Select gauge-cutting diameter so as to permit ground support to be placed within tolerances, considering also the wear on the gauge cutters.

4) Provide manholes in the TBM cutterhead as required, providing access for inspection, service of cutters, and removal of pieces of material, if required.

5) Provide a propulsion system capable of moving the TBM in a forward direction while maintaining the construction tolerances with respect to line, grade, and direction.

6) Design TBM and supporting equipment with capacity to steer as necessary to maintain specified tolerances without delays.

7) Provisions shall be included in the design of the TBM for installation of ground support. The trailing gear shall be able to advance through all ground support types without delay and without damaging the ground support.

8) Provide a dust suppression and environment control system, which when combined with the ventilation system, is capable of meeting OSHA or Project requirements, whichever is more rigorous.

9) For guidance during operation, the TBM shall include a control system capable of maintaining the excavation to the tolerances specified herein.

B. Spoil Removal

1) Provide system for handling and transport of excavated material from the tunnel face, through the TBM, to the disposal area, with a capacity to sustain peak hourly penetration, peak shift, and peak daily advance rates.

2) The spoil removal system shall be able to handle all excavated material.

3) A slurry based spoil removal system will not be allowed.

4) Dispose of tunnel spoil in accordance with the requirements of the City of Austin. No tunnel spoil shall be stored on site. Tunnel spoil must be hauled daily to the approved disposal site, during approved hauling hours.

C. Maintain an inventory of spare parts recommended by the TBM manufacturer and backup systems manufacturers. Provide maintenance and parts replacement services for all equipment so as to minimize unscheduled down time leading to delay in tunnel advance.

PART 3: EXECUTION

3.01 GENERAL

A. Prior to commencement of tunnel excavation, the Contractor shall furnish all labor, materials, and equipment to excavate and support a starter tunnel, as necessary, to initiate TBM tunneling operations.

B. Perform tunnel excavation as shown on the Contract Drawings and as specified in this section.

C. Following acceptance of the Contractor designed initial tunnel ground support type, install the necessary support, as specified in Section SS02440: Tunnel Ground Support.

3.02 GROUND CLASSIFICATION AND GROUND SUPPORT

A. Generally, the determination of tunnel type shall be made by the Contractor through his Tunnel Engineer, in association with the Engineer.

B. Evaluation of the ground conditions and of the appropriate ground support shall be made immediately following the completion of a thrust cycle and upon consideration of the anticipated subsurface conditions immediately ahead of the face.

C. The approval of the proposed tunnel support type by the Engineer or his failure to call attention to improper ground support or to require a respective change will not relieve

the Contractor of his responsibility for the integrity of the tunnel excavation, the ground support system, and the proper execution and safety of the work.

D. Perform work such as to minimize safety hazards and exposure of workers and equipment to hazardous and potentially hazardous conditions in accordance with specified safety requirements.

E. In the event, methane or other flammable or toxic gases are encountered during tunnel construction, the Contractor shall notify the Engineer and immediately take steps to control gas concentrations as described in 29 CFR 1926.

F. In case of emergency likely to endanger excavation or adjacent structures, continuously maintain full work force 24 hours per day including weekends and holidays until emergency or hazardous conditions no longer jeopardize stability and safety of the work.

3.03 ANCILLARY SYSTEMS

A. Ventilation System

1) The ventilation system should be designed to provide a minimum fresh air at the face of all excavated tunnels with accordance to Section SS01510: Interim Tunnel Mechanical Systems.

2) Provide, operate and maintain for duration of the project a temporary ventilation system, which conforms to specified safety requirements and those of jurisdictional authorities, and the requirements of Section SS01510 “Interim Tunnel Mechanical Systems.” Review by the Engineer of the Contractor’s proposed ventilation scheme shall not relieve the Contractor of his responsibility to provide an adequate ventilation system in accordance with this specification.

3) Written Records of Readings: The Contractor shall provide air-testing devices for flammable, toxic, and carbon dioxide gases. The Contractor shall keep written records of all readings. Testing frequency and location shall be determined according to 29 CFR 1926.55 and 1926.800.

B. Groundwater Control

1) If necessary to control or minimize the inflow of groundwater into the tunnel, the Contractor shall install, operate and maintain a tunnel groundwater control system in accordance with Section SS02460: Groundwater Control for Shafts and Tunnels.

C. Illumination

1) The Contractor shall illuminate the working areas in accordance with the requirements of 29 CFR 1926 and as specified in Section SS01510: Interim Tunnel Mechanical Systems.

3.04 STRUCTURAL SETTLEMENT MONITORING

A. Buildings within 50 feet of the tunnel centerline shall have a structural settlement monitoring point installed at the closest location to the tunnel possible. Install and

monitor surface settlement points as accepted by the ENGINEER and the property owner.

B. Measurements shall be taken daily while tunneling operations are taking place and within 100 feet of the settlement points, and at least once per week thereafter until completion of all the work

PART 4: MEASUREMENT AND PAYMENT METHOD

A. Tunnel excavation will be measured by the lineal foot (meter: 1 meter equals 3.281 feet), for the length of the tunnel. The measurement will be made between the ends of the tunnel, along the central axis as installed.

B. Work performed and materials furnished as prescribed by this item will be included in a unit price bid item for: Tunnel Excavation by MTBM or TBM Method. The unit bid price shall include full compensation for furnishing all equipment, labor, tools and incidentals necessary to complete the work.

Payment, when included as a contract pay item, will be made under:

Pay Item No. SS02430:	Tunnel Excavation by MTBM or TBM Method	Per Linear Foot.

END OF SECTION SS02430

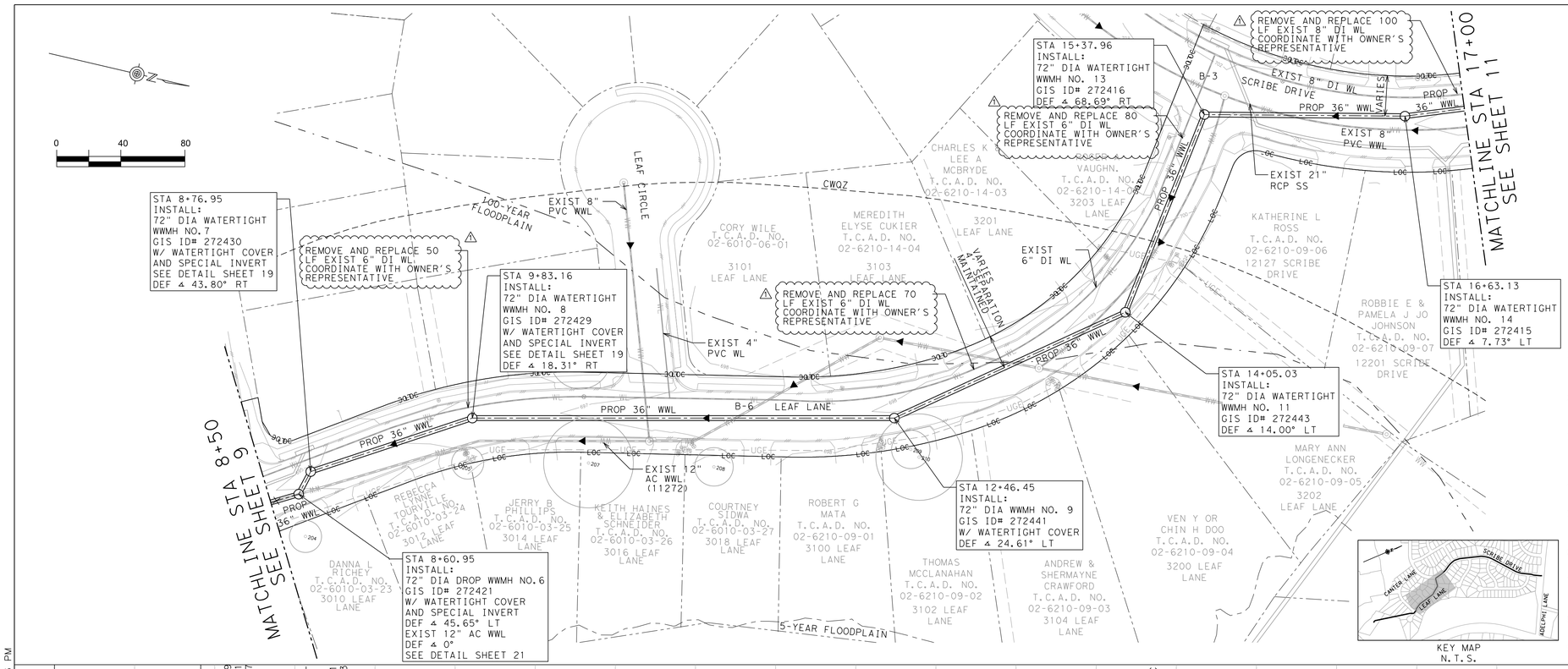

LEGEND

- PROP WASTEWATER LINE
- PROPERTY LINE
- LIMITS OF CONSTRUCTION
- EXIST EDGE OF PAVEMENT
- EXIST EASEMENT
- PROP EASEMENT
- EXIST WATERLINE
- EXIST WASTEWATER LINE
- EXIST WASTEWATER LINE TO BE ABANDONED
- EXIST WASTEWATER LINE TO BE REMOVED
- EXIST STORM SEWER
- EXIST UNDERGROUND ELECTRIC
- EXIST OVERHEAD ELECTRIC
- 5-YEAR FLOODPLAIN
- 100-YEAR FLOODPLAIN
- CRITICAL WATER QUALITY ZONE
- GEOTECHNICAL BORE
- EXIST TREE TO REMAIN
- EXIST TREE TO BE REMOVED

NOTES:

1. WATERTIGHT MANHOLE COVERS SHALL BE INSTALLED AS NOTED PER CITY OF AUSTIN STANDARD DETAIL 503S-6W.
2. EXIST WASTEWATER LINES WILL BE ABANDONED IN PLACE OR REMOVED AS NOTED. SEE WASTEWATER ABANDONMENT PLAN SHEET 23.
3. CONTRACTOR SHALL PROTECT ALL EXIST WATER AND WASTEWATER SERVICES ENCOUNTERED DURING CONSTRUCTION. DAMAGED SERVICES SHALL BE REPLACED AT CONTRACTOR'S EXPENSE.
4. SEE SPECIAL MANHOLE DETAILS SHEET 19 FOR MANHOLE INVERT DETAILS.
5. SEE SHEETS 47 TO FOR 53 EROSION & SEDIMENTATION CONTROL AND TREE PROTECTION PLANS.
6. SEE SHEET 6 AND 7 EASEMENT AND RECORDATION INFORMATION LIMITS.
7. CONTRACTOR SHALL PROVIDE MANHOLE SHOP DRAWINGS TO AWU FOR APPROVAL BEFORE PLACING ORDERS WITH MANUFACTURERS.
8. ALL PRECAST MANHOLES TO BE POLYMER CONCRETE.
9. CONTARCTOR SHALL SUBMIT PLAN TO PROTECT EXISTING LINES PRIOR TO TRENCHING.

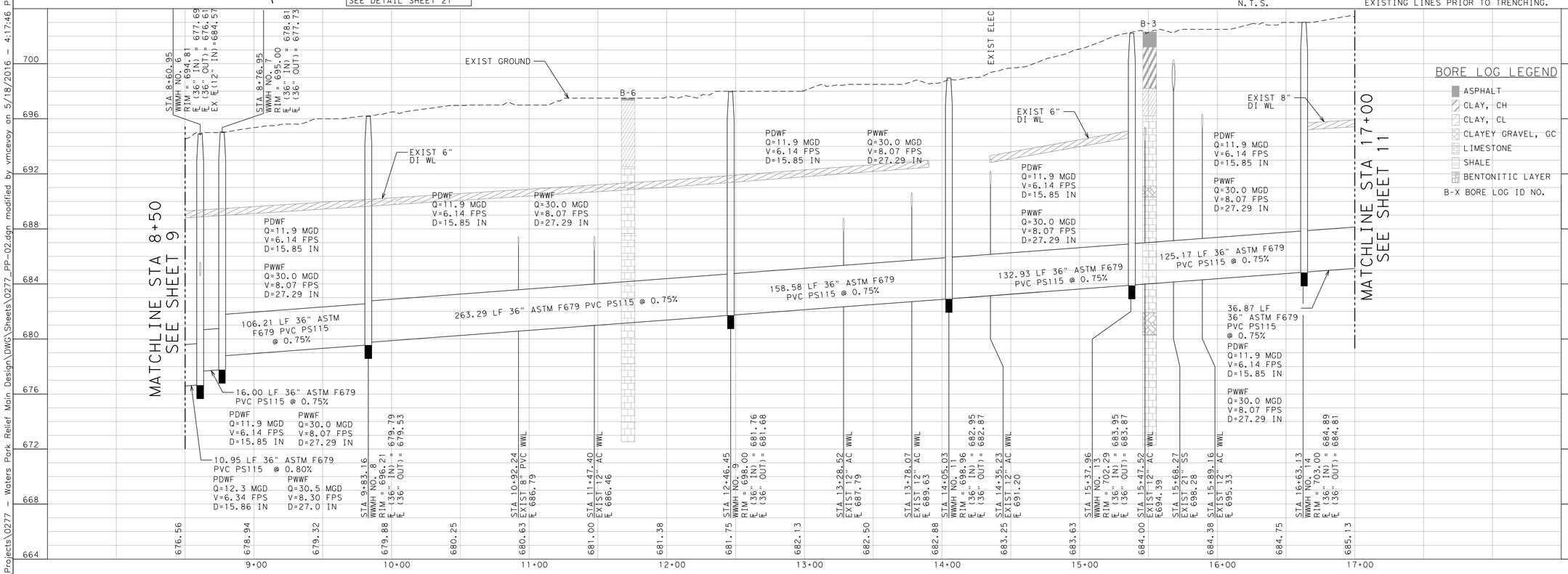

BORE LOG LEGEND

- ASPHALT
- CLAY, CH
- CLAY, CL
- CLAYEY GRAVEL, GC
- LIMESTONE
- SHALE
- BENTONITIC LAYER

B-X BORE LOG ID NO.

REV. NO.	BY	DATE	REVISION DESCRIPTION
1	TO	5/11/16	ADDENDUM #3 - WATERLINE REMOVAL

STATE OF TEXAS
THOMAS M. OWENS
84764
LICENSED PROFESSIONAL ENGINEER
11 MAY 2016

K FRIESE & ASSOCIATES, INC.
1120 S. CAPITAL OF TEXAS HIGHWAY, CITYVIEW II, SUITE 100, AUSTIN, TEXAS 78746

CITY OF AUSTIN
WATERS PARK RELIEF MAIN

PLAN AND PROFILE STA 8+50 TO STA 17+00

K·FRIESE + ASSOCIATES
PUBLIC PROJECT ENGINEERING
(FIRM # 6535)

CITY OF AUSTIN

PERMIT #	
SCALE	1" = 40' H 1" = 4' V
DATE	5/18/2016
SHEET NUMBER	10 OF 82

X:\Projects\0277 - Waters Park Relief Main Design\DWG\Sheets\0277_PP-02.dgn modified by vmcevoy on 5/18/2016 - 4:17:46 PM

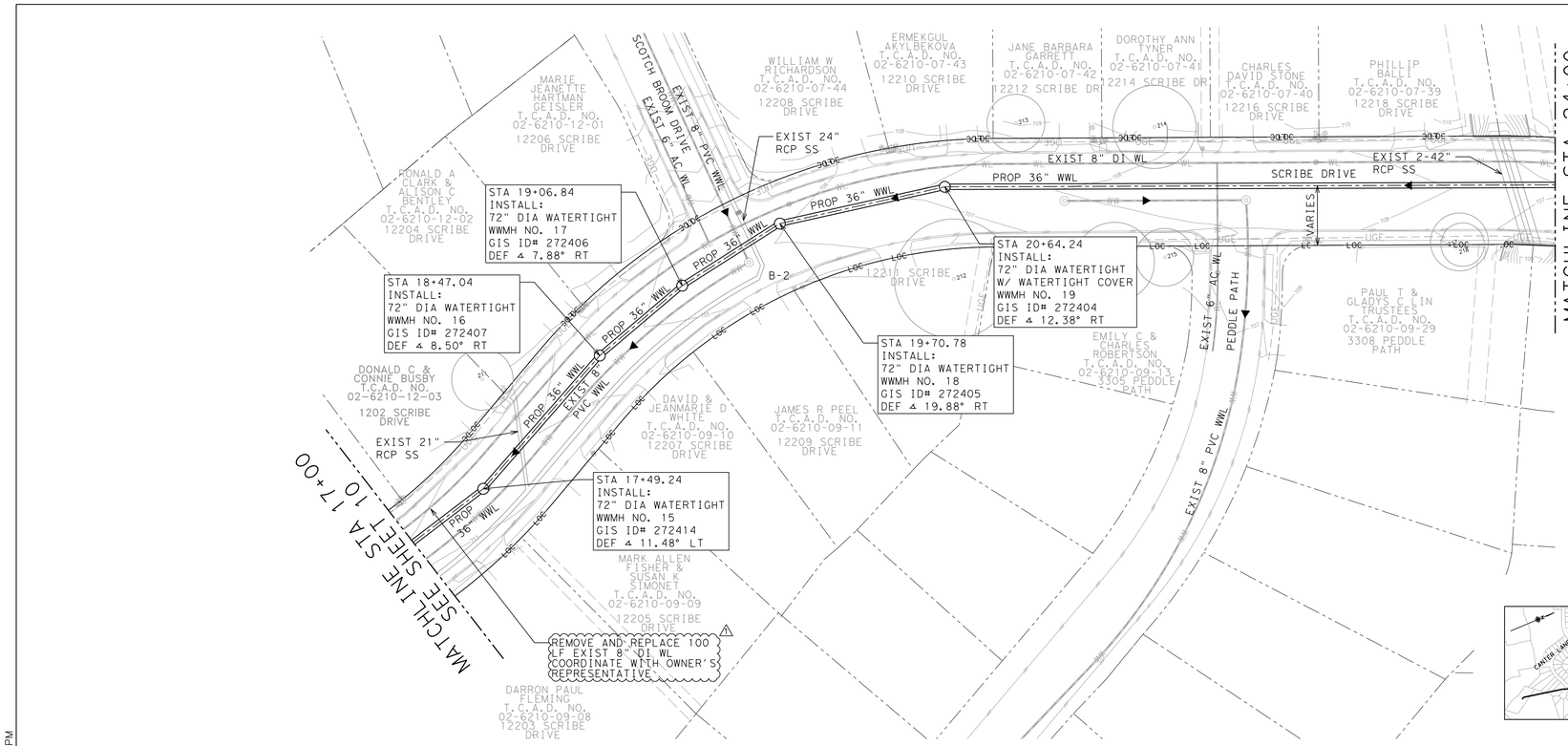

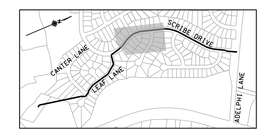

KEY MAP
N.T.S.

LEGEND

- PROP WASTEWATER LINE
- PROPERTY LINE
- LOC — LIMITS OF CONSTRUCTION
- EXIST EDGE OF PAVEMENT
- EXIST EASEMENT
- PROP EASEMENT
- WL — EXIST WATERLINE
- WW — EXIST WASTEWATER LINE
- WW — EXIST WASTEWATER LINE TO BE ABANDONED
- X WW X EXIST WASTEWATER LINE TO BE REMOVED
- EXIST STORM SEWER
- UGE — EXIST UNDERGROUND ELECTRIC
- OHE — EXIST OVERHEAD ELECTRIC
- 5-YEAR FLOODPLAIN
- 100-YEAR FLOODPLAIN
- CWQZ — CRITICAL WATER QUALITY ZONE
- B-X — GEOTECHNICAL BORE
- EXIST TREE TO REMAIN
- EXIST TREE TO BE REMOVED

NOTES:

1. WATERTIGHT MANHOLE COVERS SHALL BE INSTALLED AS NOTED PER CITY OF AUSTIN STANDARD DETAIL 503S-6W.
2. EXIST WASTEWATER LINES WILL BE ABANDONED IN PLACE OR REMOVED AS NOTED. SEE WASTEWATER ABANDONMENT PLAN SHEET 23.
3. CONTRACTOR SHALL PROTECT ALL EXIST WATER AND WASTEWATER SERVICES ENCOUNTERED DURING CONSTRUCTION. DAMAGED SERVICES SHALL BE REPLACED AT CONTRACTOR'S EXPENSE.
4. SEE SPECIAL MANHOLE DETAILS SHEET 19 FOR MANHOLE INVERT DETAILS.
5. SEE SHEETS 47 TO FOR 53 EROSION & SEDIMENTATION CONTROL AND TREE PROTECTION PLANS.
6. SEE SHEET 6 AND 7 EASEMENT AND RECORDATION INFORMATION LIMITS.
7. CONTRACTOR SHALL PROVIDE MANHOLE SHOP DRAWINGS TO AWU FOR APPROVAL BEFORE PLACING ORDERS WITH MANUFACTURERS.
8. ALL PRECAST MANHOLES TO BE POLYMER CONCRETE.
9. CONTARCTOR SHALL SUBMIT PLAN TO PROTECT EXISTING LINES PRIOR TO TRENCHING.

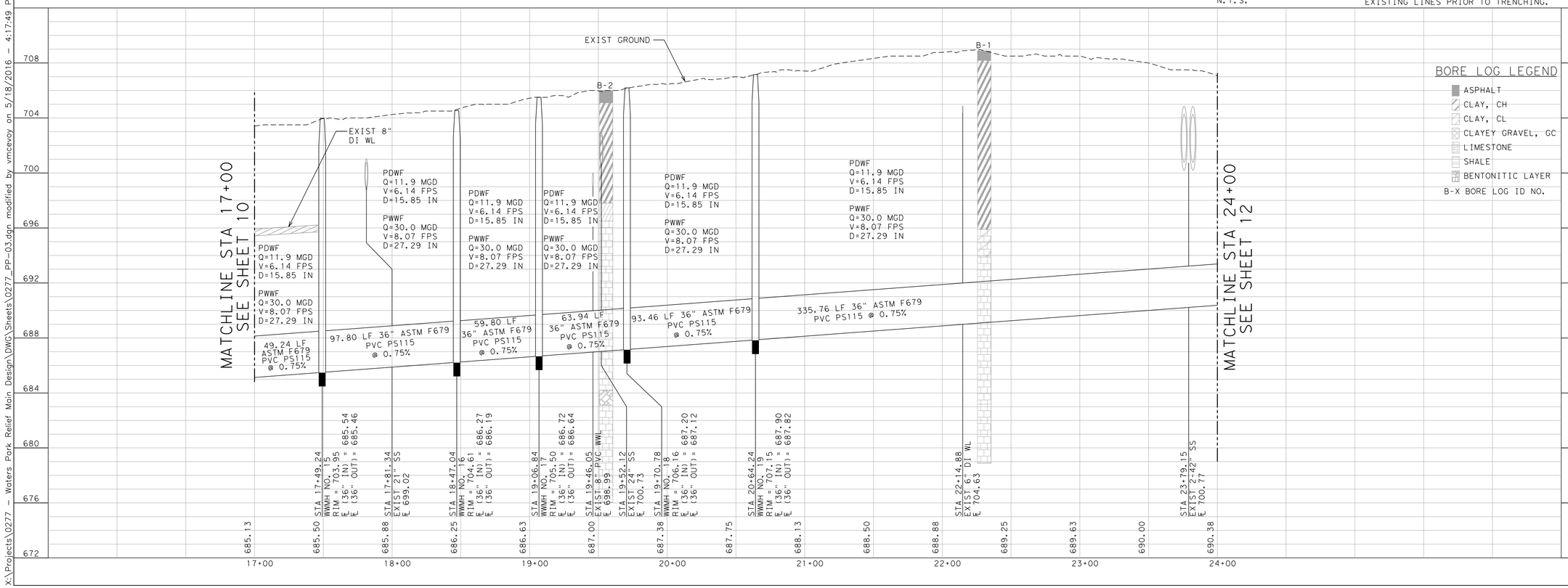

BORE LOG LEGEND

- ASPHALT
- CLAY, CH
- CLAY, CL
- CLAYEY GRAVEL, GC
- LIMESTONE
- SHALE
- BENTONITIC LAYER
- B-X BORE LOG ID NO.

REV. NO.	BY	DATE	REVISION DESCRIPTION
1	TO	5/11/16	ADDENDUM #3 - WATERLINE REMOVAL

STATE OF TEXAS
THOMAS M. OWENS
84764
LICENSED PROFESSIONAL ENGINEER
11 MAY 2016

K FRIESE & ASSOCIATES, INC.
1120 S. CAPITAL OF TEXAS HIGHWAY, CITYVIEW II, SUITE 100, AUSTIN, TEXAS 78746

CITY OF AUSTIN
WATERS PARK RELIEF MAIN

PLAN AND PROFILE STA 17+00 TO STA 24+00

K·FRIESE + ASSOCIATES
PUBLIC PROJECT ENGINEERING
(FIRM # 6535)

CITY OF AUSTIN

PERMIT #	
SCALE	1" = 40' H 1" = 4' V
DATE	5/18/2016
SHEET NUMBER	11 OF 82

X:\Projects\0277 - Waters Park Relief Main Design\DWG\Sheets\0277_PP-03.dgn modified by vmcevoy on 5/18/2016 - 4:17:49 PM

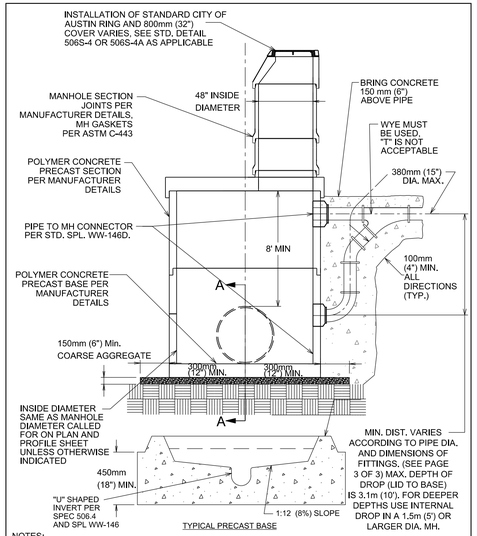

NOTES:
1. THE MANHOLE BASE SHALL BE BEDDED ON 150mm (6") COARSE AGGREGATE. THE CONTRACTOR SHALL LEVEL AND PLUMB THE BASE PRIOR TO SETTING THE PRECAST POLYMER CONCRETE MANHOLE RISER SECTIONS ON THE PRECAST POLYMER CONCRETE BASE.
2. MANHOLE FOUNDATION SHALL MEET OR EXCEED STD. SPEC 506.5B.

PRECAST STEEL REINFORCED POLYMER CONCRETE MANHOLE WITH DROP INLET ON PRECAST BASE

STANDARD NO. 506S-8R
1 OF 3

INVERT DETAIL

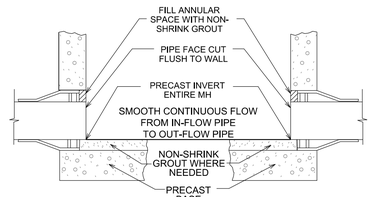

SECTION A-A

INVERT PLAN VIEW

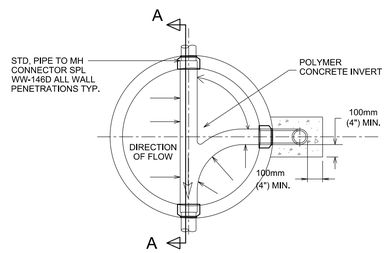

PRECAST STEEL REINFORCED POLYMER CONCRETE MANHOLE WITH DROP INLET ON PRECAST BASE

STANDARD NO. 506S-8R
2 OF 3

STANDARD DROP CONNECTIONS
MINIMUM DIMENSIONS
(FOR INFORMATION ONLY)

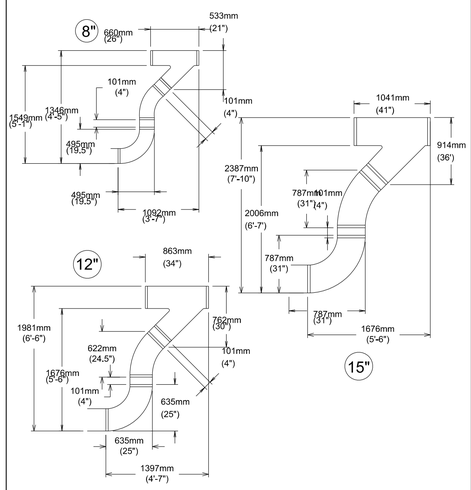

PRECAST STEEL REINFORCED POLYMER CONCRETE MANHOLE WITH DROP INLET ON PRECAST BASE

STANDARD NO. 506S-8R
3 OF 3

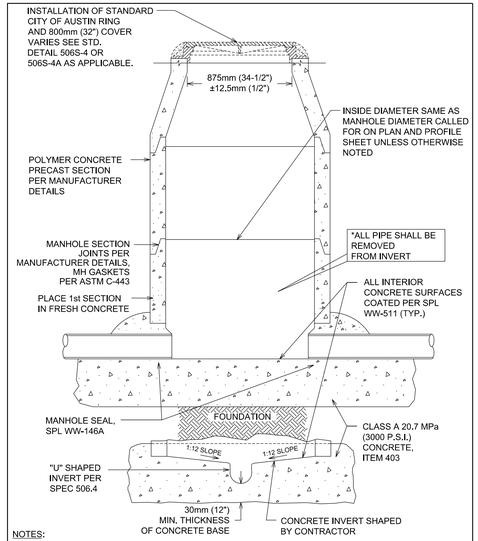

NOTES:
1. FOR EXISTING WW LINES ONLY.
2. MANHOLE FOUNDATION SHALL MEET OR EXCEED STD. SPEC 506.5B
3. FIRST RISER SECTION SHALL BE PLACED PLUMB & LEVEL PRIOR TO SETTING ANY ADDITIONAL SECTIONS.

PRECAST STEEL REINFORCED POLYMER CONCRETE MANHOLE ON CAST IN PLACE BASE

506S-9R

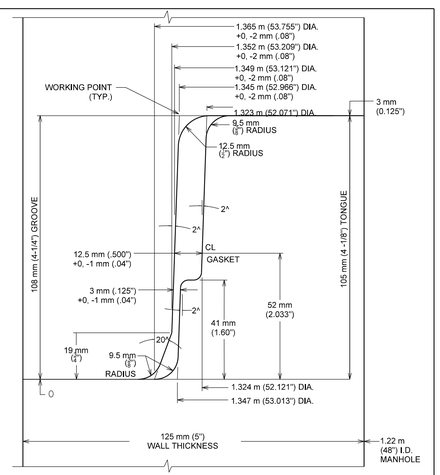

NOTES:
1. DRAWING NOT TO SCALE FOR CLARIFICATION OF DIMENSIONS.
2. GASKET STRETCH; MIN. 10, MAX. 15%.

CITY OF AUSTIN
AUSTIN WATER UTILITY

RECORD COPY SIGNED BY KATHI L FLOWERS 06/01/10
ADOPTED

WEDGE - SEAL JOINT DETAIL
PRECAST MANHOLE SECTION

THE ARCHITECT/ENGINEER ASSUMES RESPONSIBILITY FOR APPROPRIATE USE OF THIS STANDARD.

STANDARD NO. 506S-13

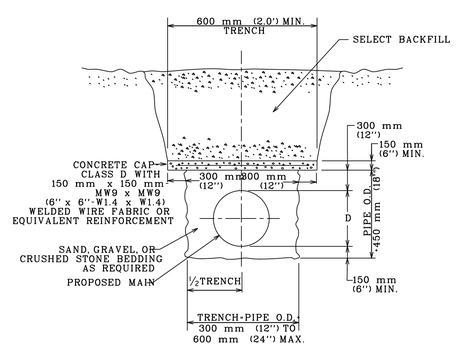

CITY OF AUSTIN
WATER AND WASTEWATER UTILITY

RECORD COPY SIGNED BY KATHI L FLOWERS 2/17/00
ADOPTED

CONCRETE TRENCH CAP

THE ARCHITECT/ENGINEER ASSUMES RESPONSIBILITY FOR APPROPRIATE USE OF THIS STANDARD.

STANDARD NO. 510S-1

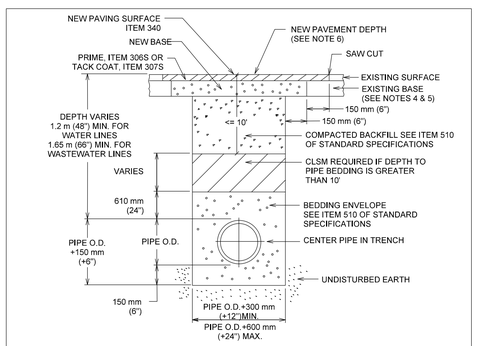

NOTES:
1. THE EXISTING PAVING SURFACE SHALL BE SAW CUT IN A STRAIGHT LINE A MINIMUM OF 300 mm (12") WIDER THAN THE UNDISTURBED SIDES OF THE TRENCH. SYMETRICAL ABOUT THE CENTER LINE OF THE EXCAVATION.
2. ANY CONCRETE PAVING SHALL BE SAW CUT 150 mm (6") WIDER THAN UNDISTURBED SIDES OF EXCAVATION.
3. IF EXCAVATION AREA IS OPEN FOR TEMPORARY PUBLIC USE, THE SURFACE SHALL BE MAINTAINED LEVEL WITH ADJACENT RIDING SURFACE WITH COLD MIX OR TEMPORARY HOT MIX ASPHALTIC CONCRETE.
4. ROAD BASE AND SURFACE MATERIALS IN THE TRENCH CUT SHALL BE REPLACED IN KIND OF EQUAL THICKNESS, OR MINIMUM BASE THICKNESS OF 250 mm (10"), WHICHEVER IS GREATER.
5. ALL DAMAGED AREAS OF PAVEMENT OUTSIDE THE TRENCH CUT SHALL BE REMOVED AND REPLACED WITH MINIMUM OF 200 mm (8") OF BASE OR MATCH EXISTING THICKNESS, WHICHEVER IS GREATER.
6. SURFACE PAVEMENT SHALL BE OF THE KIND AND THICKNESS AS EXISTING, OR MINIMUM 50 mm (2"), WHICHEVER IS GREATER.
7. WHEN THE SIDEWALLS OF THE TRENCH ARE FINE GRAINED SOILS AND THE PRESENCE OF GROUND WATER IS NOTED DURING CONSTRUCTION, THE BEDDING MATERIALS SHALL BE WRAPPED IN GEOTEXTILE FABRIC (SIMILAR TO MIRAFI 140N)

TYPICAL TRENCH WITH PAVED SURFACE

STANDARD NO. 510S-3R

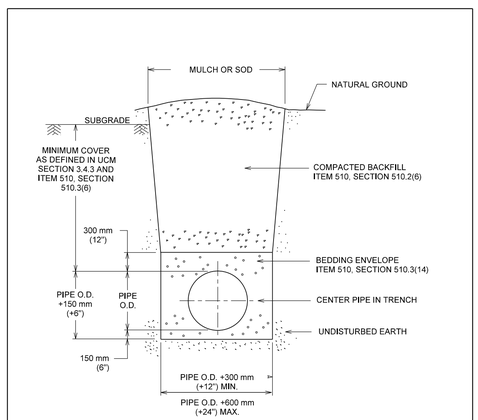

REFERENCES:
1. UTILITY CRITERIA MANUAL SECTION 3.4.3, "FINAL DESIGN"
2. STANDARD SPECIFICATION MANUAL ITEM 510, SECTION 510.2(6), "SELECT BACKFILL OR BORROW"; SECTION 510.3(6), "TRENCH DEPTH AND DEPTH OF COVER"; SECTION 510.3(14), "PIPE BEDDING ENVELOPE"

CITY OF AUSTIN
DEPARTMENT OF PUBLIC WORKS

RECORD COPY SIGNED BY BILL GARDNER 03/13/06
ADOPTED

TYPICAL TRENCH DETAIL
WITH UNFINISHED SURFACE

THE ARCHITECT/ENGINEER ASSUMES RESPONSIBILITY FOR APPROPRIATE USE OF THIS STANDARD.

STANDARD NO. 510S-5

REV. NO.	BY	DATE	REVISION DESCRIPTION
1	TO	5/17/16	ADDENDUM #3 - REPLACE DETAIL

STATE OF TEXAS
THOMAS M. OWENS
84764
LICENSED PROFESSIONAL ENGINEER
17 MAY 2016

K FRIESE & ASSOCIATES, INC.
1120 S. CAPITAL OF TEXAS HIGHWAY, CITYVIEW II, SUITE 100, AUSTIN, TEXAS 78746

CITY OF AUSTIN
WATERS PARK RELIEF MAIN

TYPICAL DETAILS

K·FRIESE + ASSOCIATES
PUBLIC PROJECT ENGINEERING
(FIRM # 6535)

CITY OF AUSTIN
FOUNDED 1839

CITY OF AUSTIN

PERMIT #

SCALE

DATE 5/18/2016

SHEET NUMBER 15 OF 82

X:\Projects\0277 - Waters Park Relief Main Design\DWG\Sheets\0277_DET-02.dgn modified by vmcevoy on 5/18/2016 - 4:17:52 PM

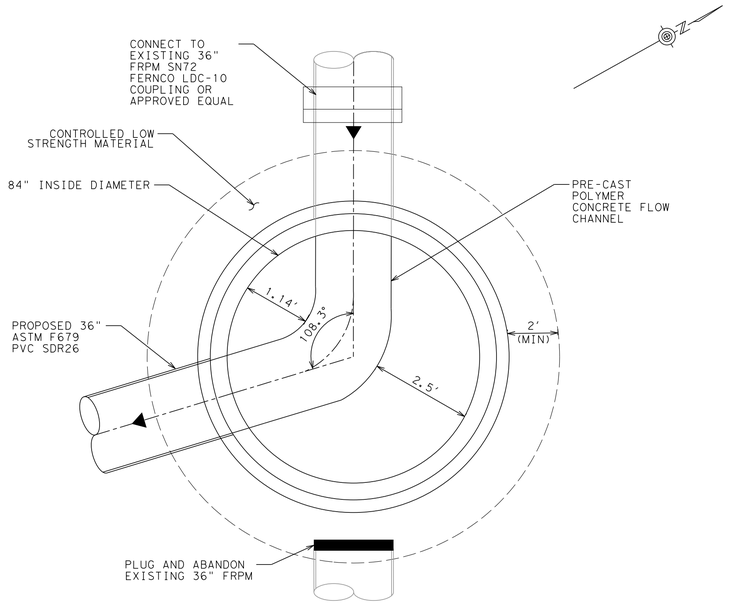

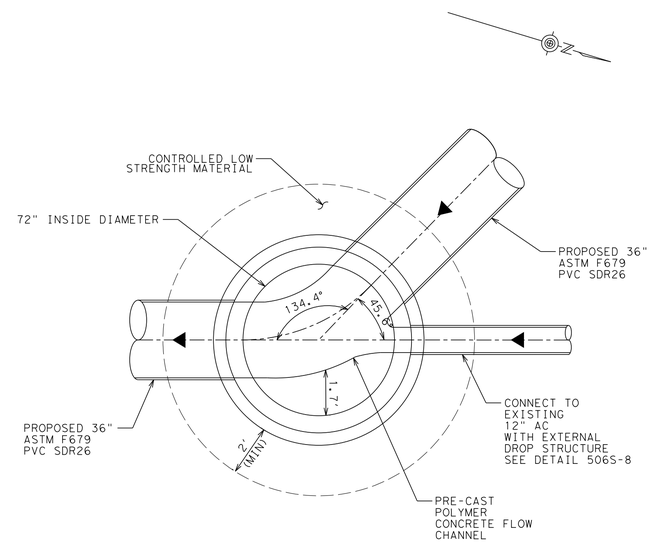

NOTES:

1. BENCH SHALL EXTEND 6" ABOVE THE SOFFIT OF THE LARGEST PIPE. SLOPE OF BENCH IS 1:12
2. MANHOLE WALL THICKNESS SHALL MEET THE MINIMUM REQUIREMENTS OF APPROVED PIPE-TO-MANHOLE CONNECTOR MANUFACTURER. REDUCTION SLAB AND WALLS SHALL BE DESIGNED BY MANUFACTURER. PERFORMANCE SPECIFICATIONS INCLUDE REQUIREMENT THAT MANUFACTURER'S CALCULATIONS ARE SIGNED BY REGISTERED ENGINEER AND INCLUDED IN SUBMITTAL.
3. AUSTIN WATER UTILITY SHALL APPROVE ALL POLYMER CONCRETE MANHOLE SUBMITTALS.
4. SUBMITTALS SHALL INCLUDE ALL INFORMATION REQUIRED IN THE CITY OF AUSTIN SPECIFICATION 506-MANHOLES, PARAGRAPH 506.3 PROJECT SUBMITTALS.

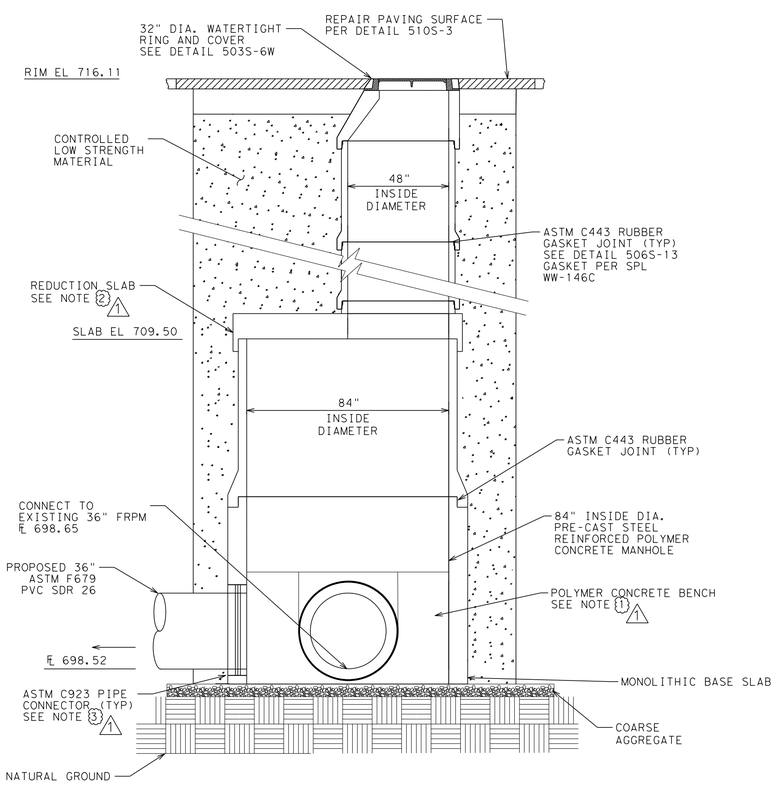

WASTEWATER MANHOLE NO 29

N.T.S.

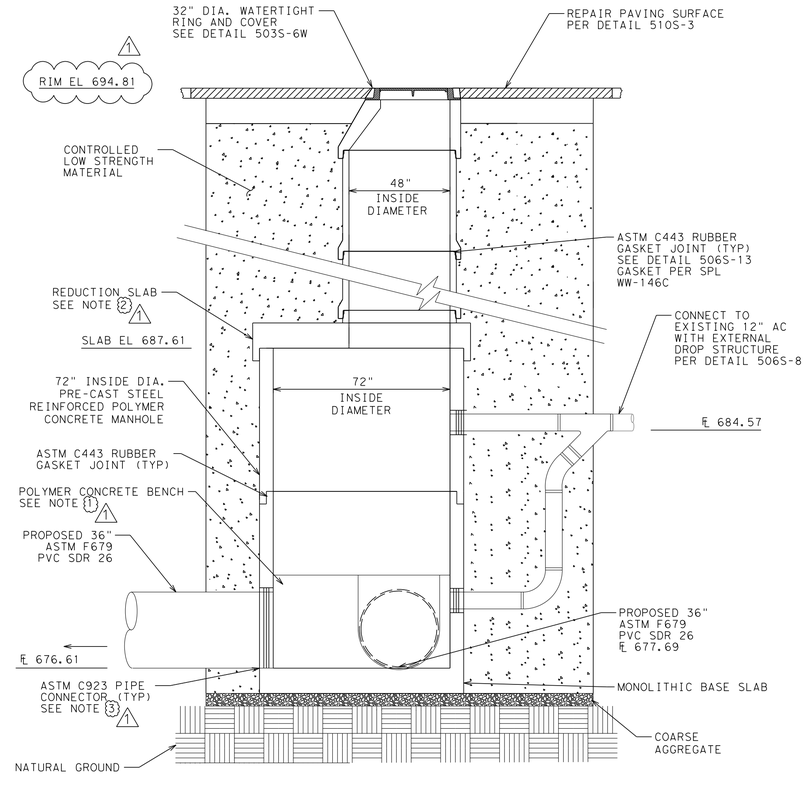

WASTEWATER MANHOLE NO 6

N.T.S.

REV. NO.	BY	DATE	REVISION DESCRIPTION
1	TO	5/17/16	ADDENDUM #3 - REVISE CALLOUTS

STATE OF TEXAS
THOMAS M. OWENS
84764
LICENSED
PROFESSIONAL ENGINEER
17 MAY 2016

K FRIESE & ASSOCIATES, INC.
1120 S. CAPITAL OF TEXAS HIGHWAY, CITYVIEW II, SUITE 100, AUSTIN, TEXAS 78746

CITY OF AUSTIN
WATERS PARK RELIEF MAIN

SPECIAL MANHOLE DETAILS

K·FRIESE + ASSOCIATES
PUBLIC PROJECT ENGINEERING
(FIRM # 6535)

CITY OF AUSTIN
FOUNDED 1839

CITY OF AUSTIN

PERMIT # _____

SCALE

DATE 5/18/2016

SHEET NUMBER 21 OF 82

X:\Projects\0277 - Waters Park Relief Main Design\DWG\Sheets\0277_DET-08.dgn modified by vmcevoy on 5/18/2016 - 4:17:54 PM