CITY OF AUSTIN
PUBLIC WORKS DEPARTMENT

PROJECT MANUAL
Contract Documents and Technical Specifications

VOLUME 2 of 3

Walnut Creek Tertiary Filter Rehabilitation Project

C.I.P. PROJECT NUMBER: 3023.025

SOLICITATION NO: CLMC 587

FDU: 4480 2307 8235

CITY OF AUSTIN
Public Works Department
PO Box 1088
Austin, TX 78767

September 19, 2016

PROJECT MANUAL
FOR THE
WALNUT CREEK WWTP TERTIARY FILTER REHABILITATION PROJECT

Carlos Chavez
STATE OF TEXAS
CARLOS A. CHAVEZ
119722
LICENSED
PROFESSIONAL ENGINEER
9/8/2016

Carlos A. Chavez, P.E.
Black & Veatch Corporation
General, Civil, and Mechanical Process Design

STATE OF TEXAS
HENRY CALDER LEIGHTON
97914
LICENSED
PROFESSIONAL ENGINEER
9/24/2014

Henry Leighton, P.E.
CAS Consulting & Services, Inc.
Civil & Mechanical Process Design

Brandon Goodloe
STATE OF TEXAS
BRANDON M. GOODLOE
92456
REGISTERED
PROFESSIONAL ENGINEER
9·24·2014

Brandon Goodloe, P.E.
Jose I. Guerra, Inc.
Structural Design

REGISTERED ARCHITECT
KENNETH J. KRNA
21241
STATE OF TEXAS
4/4/2014

Kenneth J. Krna, R.A.
Black & Veatch Corporation
Architectural Design

CERTIFICATIONS

STATE OF TEXAS
LYNN C. BROWN
55248
LICENSED
PROFESSIONAL ENGINEER
09/26/2014

Lynn C. Brown, P.E.
Encotech Engineering Consultants
HVAC & Plumbing Design

STATE OF TEXAS
RANDY W. CANTRELL
115374
LICENSED
PROFESSIONAL ENGINEER
4/4/14

Randy W. Cantrell, P.E.
Black & Veatch Corporation
Clearwell Vent Design

STATE OF TEXAS
K. A. HARUTUNIAN
59181
REGISTERED
PROFESSIONAL ENGINEER
9/23/2014

K.A. Harutunian, P.E.
Harutunian Engineering, Inc.
Electrical Design

STATE OF TEXAS
CHARLES E. MORRIS
106414
LICENSED
PROFESSIONAL ENGINEER
6/10/16

Charles E. Morris, P.E.
Black & Veatch Corporation
Process & Instrumentation Design

CERTIFICATIONS

Document Number		Title

VOLUME 1 of 3

INTRODUCTORY INFORMATION

05/06/11		Title Page
		Texas Professional Seals Certifications
09/06/16		Table of Contents

BIDDING REQUIREMENTS, CONTRACT FORMS, & CONDITIONS OF THE CONTRACT

Pre-Bid Information

00020	09/06/16	Invitation for Bids

Instructions to Bidders

00100	09/06/16	Instructions to Bidders

Information Available to Bidders

00220	05/06/11	Geotechnical Data

Bid Forms

00300L	06/01/16	Bid Form (Lump Sum)

Supplements to Bid Forms

00400	06/01/16	Statement of Bidder's Experience
00405	09/25/05	Certificate of Non-Suspension or Debarment
00410	01/15/16	Statement of Bidder's Safety Experience
00440	10/19/15	Affidavit - Prohibited Activities

Agreement Form

00500	1/15/16	Agreement

Bonds and Certificates

00610	02/23/10	Performance Bond
00620	02/23/10	Payment Bond
00630	05/11/15	Nondiscrimination Certificate
00631	03/06/14	Title VI Assurances Appendix A
00650	06/01/16	Certificate of Insurance
00670	03/20/14	Sales Tax Exemption Certificate
00680	06/05/06	Non-Use of Asbestos Affidavit (Prior to Construction)
00681	06/05/06	Non-Use of Asbestos Affidavit (After Construction)

General Conditions

00700	09/06/16	General Conditions

Supplementary Conditions

00810	09/06/16	Supplemental General Conditions
00810-TWDB	05/11/16	TWDB Supplemental General Conditions
00819	06/10/05	Security Requirements
00820	09/06/16	Modifications to Bidding Requirements and Contract Forms
00830	05/03/16	Wage Rates and Payroll Reporting
00830BC	09/06/16	Wage Rates Building Construction Trades

Addenda

00900	01/15/16	Addendum {If any addendum is issued, it will be bound in the front of Contract sets following contract execution.}

Document Number		Title
SPECIFICATIONS		
Division 1 - General Requirements		
01010	09/23/14	Summary of Work
01020	09/06/16	Allowances
01030	09/06/16	Alternates
01050	10/19/15	Grades Lines & Levels
01070		Identification Systems –*See Section 01615*
01080	06/02/16	Construction Sequencing
01095	07/21/03	Reference Standards and Definitions
01096	05/06/11	Stormwater Pollution Prevention Plan (SWPPP)
01200	08/09/12	Project Meetings
01300	09/08/16	Submittals
01310		Schedules and Reports –*See Section 01080*
01352	04/22/13	Sustainable Construction Requirements
01353	08/09/12	Construction Equipment Emissions Reduction Plan
01380	08/09/12	Construction Photography & Videos
01400	08/23/16	Quality Control
01500	08/09/12	Temporary Facilities
01505	04/22/13	Construction and Demolition Waste Management
01510	02/23/10	Construction Indoor Air Quality Management Plan
01550	08/09/12	Public Safety and Convenience
01600		Materials and Equipment –*See Sections 01620 and 01630*
01610	04/04/14	General Equipment Stipulations
01611	08/22/16	Meteorological and Seismic Design Criteria
01612	04/04/14	Product Delivery Requirements
01614	04/04/14	Product Storage and Handling Requirements
01615	04/04/14	Equipment and Valve Identification
01620	04/04/14	Equipment Schedule
01630	04/04/14	Pipeline Schedule
01650	08/18/16	Facility Startup/Commissioning
01730		Operation and Maintenance Data –*See Sections 01300 and 01820*
01820	08/22/16	Demonstration and Training
01900	03/12/12	Prohibition of Asbestos Containing Materials
01900a	06/05/06	Statement of Non-Inclusion of Asbestos Containing Material (E/A Prior to Design)
01900b	06/05/06	Statement of Non-Inclusion of Asbestos Containing Material (E/A After Design)
01901 thru 01999		
	07/27/16	Hazardous Materials (Asbestos, Lead, PCBs, CFCs, etc.) Definition and Standards, Abatement Procedures, Temporary Facilities, Cleaning and Decontamination, Testing, etc.

Document Number		Title

VOLUME 2 of 3

INTRODUCTORY INFORMATION

05/06/11		Title Page
		Texas Professional Seals Certifications
09/06/16		Table of Contents

City Standard Technical Specifications

0104S	09/26/12	Removing Portland Cement Concrete
0110S	11/18/04	Street Excavation
0111S	09/26/12	Excavation
0130S	09/26/12	Borrow
0201S	08/20/07	Subgrade Preparation
0210S	02/24/10	Flexible Base
0230S	08/20/07	Rolling (Flatwheel)
0232S	08/20/07	Rolling (Pneumatic Tire)
0236S	08/20/07	Rolling (Proof)
0340S	09/26/12	Hot Mix Asphaltic Concrete Pavement
0341S	09/26/12	Paving Fabric
0360S	09/26/12	Concrete Pavement
0401S	09/26/12	Structural Excavation and Backfill
0402S	11/13/07	Controlled Low Strength Material
0403S	09/26/12	Concrete for Structures
0406S	09/26/12	Reinforcing Steel
0407S	07/01/09	Fibrous Concrete
0410S	09/26/12	Concrete Structures
0430S	11/15/11	P.C. Concrete Curb and Gutter
0432S	01/04/10	P.C. Concrete Sidewalks
0433S	12/09/08	P.C. Concrete Driveways
0470S	03/26/08	Curb Cuts for Sidewalk Ramps and Driveways
0503S	02/17/00	Frames, Grates, Rings and Covers
0504S	02/24/10	Adjusting Structures
0505S	02/24/10	Concrete Encasement and Encasement Pipe
0506	03/15/11	Manholes
0507S	03/26/08	Bulkheads
0509S	09/26/12	Excavation Safety Systems
0510	01/02/13	Pipe
0511S	09/26/12	Water Valves
0551	11/08/04	Pipe Underdrains
0601S	09/01/11	Salvaging and Placing Topsoil
0602S	06/16/08	Sodding for Erosion Control
0604S	08/18/10	Seeding for Erosion Control
0605S	06/21/07	Soil Retention Blanket
0609S	08/18/10	Native Grassland Seeding and Planting for Erosion Control
0642S	09/01/11	Silt Fence

Document Number		Title
0700S	9/26/12	Mobilization
0703	09/22/88	Fencing for Excavations
0802S	09/26/12	Project Signs
0803S	11/15/11	Barricades, Signs and Traffic Handling
0824S	02/24/10	Traffic Signs

Special Provisions to City Standard Technical Specifications

SP-1	07/26/13	Measurement and Payment
SP401S	09/26/12	Structural Excavation and Backfill
SP403S	09/26/12	Concrete for Structures
SP406S	09/26/12	Reinforcing Steel
SP410S	09/26/12	Concrete Structures

Special Specifications

Division 02

02050	06/02/16	Demolition and Salvage
02202	08/22/16	Trenching and Backfilling
02704	04/04/14	Pipeline Pressure and Leakage Testing

Division 04

04200	04/04/14	Masonry
04210	04/04/14	Cast Stone

Division 05

05120	09/24/14	Structural Steel for Blower Building
05310	09/24/14	Steel Deck for Blower Building
05520	04/04/14	Handrailing, Guardrailing and Ladders
05550	04/04/14	Anchorage in Concrete and Masonry
05990	06/02/16	Miscellaneous Metals

Division 06

06100	04/04/14	Rough Carpentry
06600	08/01/16	Fiberglass Reinforced Plastic Fabrications

Division 07

07200	04/04/14	Thermal Insulation
07532	04/04/14	Single-Ply Roofing, Fully Adhered
07600	04/04/14	Sheet Metal
07700	04/04/14	Roof Specialties and Accessories
07900	04/04/14	Joint Sealants

Division 08

08110	04/04/14	Steel Doors and Frames
08115	04/04/14	Fiberglass Reinforced Plastic Doors and Frames
08305	04/04/14	Floor Access Doors and Hatches
08331	04/04/14	Overhead Coiling Aluminum Doors
08700	04/04/14	Finish Hardware

Document Number		Title
08800	04/04/14	Glass and Glazing
Division 09		
09510	04/04/14	Suspended Acoustical Ceilings
09660	04/04/14	Resilient Flooring
09810	04/04/14	Polyurethane Coating for Steel Pipe
09880	04/04/14	Corrosion Protection Lining Systems
09920	08/02/16	Architectural Painting
09940	08/01/16	Protective Coatings
Division 10		
10200	04/04/14	Louvers
10990	04/04/14	Miscellaneous Specialties
Division 11		
11060	04/04/14	Equipment Installation
11065	04/04/14	Common Control Panel Requirements for Equipment
11066	08/01/16	General Wiring Methods
11067	04/04/14	Wire Tagging
11068	04/04/14	Packaged System PLC Programming Criteria
11110	04/04/14	Horizontal Split Case Centrifugal Pumps
11115	04/04/14	Horizontal End Suction Centrifugal Pumps
11465	08/23/16	Filter Control System
11610	08/01/16	Multistage Centrifugal Blowers
11640	04/04/14	Vacuum Pump System
11727	04/04/14	Liquid Chemical Feed Systems
Division 13		
13122	04/04/14	Metal Building Systems
13125	08/22/16	Modular Building
13220	08/01/16	Filter Underdrains and Media
Division 14		
14475	04/04/14	Boom Lifts
14621	04/04/14	Monorail Chain Hoists
Division 15		
15010	04/04/14	Valve Installation
15015	04/04/14	Valve Schedule
15020	08/02/16	Miscellaneous Piping and Accessories Installation
15053	04/04/14	Common Work Results for HVAC Equipment
15058	04/04/14	Common Motor Requirements for HVAC Equipment
15059	04/04/14	Hangers and Supports for HVAC Piping and Equipment
15060	04/04/14	Miscellaneous Piping and Pipe Accessories
15061	04/04/14	Ductile Iron Pipe
15062	04/04/14	Steel Pipe
15064	04/04/14	Stainless Steel Pipe and Alloy Pipe, Tubing and Accessories
15065	04/04/14	Miscellaneous Steel Pipe, Tubing, and Accessories
15067	04/04/14	Miscellaneous Plastic Pipe, Tubing, and Accessories
15070	04/04/14	Copper Tubing and Accessories
15077	04/04/14	Identification for HVAC Piping and Equipment
15083	04/04/14	HVAC Insulation

Document Number		Title
15091	04/04/14	Miscellaneous Ball Valves
15092	04/04/14	Industrial Butterfly Valves
15093	04/04/14	Check Valves
15096	04/04/14	Globe Valves
15099	04/04/14	Pressure Regulating Valves
15101	04/04/14	AWWA Butterfly Valves
15102	04/04/14	Eccentric Plug Valves
15103	04/04/14	AWWA Ball Valves
15111	04/04/14	Gate Installation
15112	04/04/14	Cast-Iron Slide Gates
15114	04/04/14	Open-Channel Metal Slide Gates and Weir Gates
15130	04/04/14	Pressure Gauges
15140	04/04/14	Pipe Supports
15170	04/04/14	Electrical Motor, Induction, 600 Volt and Below
15175	04/04/14	Electrical Motor, Induction, 5KV
15180	06/02/16	Valve and Gate Actuators
15183	04/04/14	Refrigerant Piping
15250	04/04/14	Mechanical Insulation
15410	04/04/14	Common Work Results for Plumbing
15495	04/04/14	Automatic Straining Equipment
15499	04/04/14	Seal Water Stations
15530	04/04/14	Air Handlers
15671	04/04/14	Condensing Units
15815	04/04/14	Metal Ducts
15820	04/04/14	Duct Accessories
15838	04/04/14	Power Ventilators
15855	04/04/14	Diffusers, Registers, and Grilles
15885	04/04/14	Vent Roof Hoods
15950	04/04/14	Testing, Adjusting and Balancing
15990	09/09/14	Commissioning of HVAC
Division 16		
16041	04/04/14	5KV Motor Control Centers Modifications
16120	04/04/14	480 Volt Motor Control Centers
16150	09/23/14	Raceways, Fittings and Supports
16182	04/04/14	Medium Voltage Cables
16200	09/23/14	Wiring (600 Volts and Below)
16250	04/04/14	Boxes and Cabinets
16300	04/04/14	Wiring Devices
16350	04/04/14	Lighting
16444	04/04/14	Combination Motor Starters
16450	04/04/14	600 Volts and Below Dry Type Transformers
16500	04/04/14	Panelboards
16524	04/04/14	480 Volt Automatic Transfer Switches
16550	04/04/14	Grounding
16600	04/04/14	Disconnect Switch and Enclosures
16800	04/04/14	Electrical Calibration, Testing and Settings

VOL. 3 of 3 10/09/00 **MBE/WBE Procurement Program Package**

END

Item No. 104S
Removing Portland Cement Concrete

104S.1 Description

This item shall govern the demolition, removal and satisfactory disposal of existing Portland cement concrete, as classified, at locations indicated on the Drawings or as directed by the Engineer or designated representative.

This specification is applicable for projects or work involving either inch-pound or SI units. Within the text inch-pound units are given preference followed by SI units shown within parentheses.

104S.2 Submittals

The submittal requirements of this specification item may include:

A. A permit when utility adjustments are made in the right-of-way, and

B. A plan for removal and deposition of all 'broken up' existing Portland cement (p.c.) concrete materials and debris.

104S.3 Classification

Existing Portland cement concrete, when removed under this section, will be classified as follows:

1. Concrete Curb will include curb, curb and gutter and combinations thereof,
2. Concrete Slabs will include, but not be limited to, house slabs, patio slabs, porch slabs, concrete riprap and concrete pavement,
3. Sidewalks and Driveways will include concrete sidewalks and driveways,
4. Concrete Walls will include all walls, regardless of height, and wall footings,
5. Concrete Steps will include all steps and combinations of walls and steps,
6. Abandoned Foundations will include abandoned utility foundations,
7. Miscellaneous Concrete shall include all other concrete items, which are not identified in items 1 through 6 above.

104S.4 Materials

Mortar shall conform to mortar specified in Standard Specification Item No. 403S, “Concrete for Structures”.

104S.5 Construction Methods

Prior to commencement of this work, all required erosion control and tree protection measures shall be in place. The existing utilities shall be located and protected as specified in the Standard Contract Documents, Section 00700, "General Conditions". A permit shall be required when utility adjustments are to be made in preparation for

highway construction, as specified in Section 5.2.0 of the City of Austin Utilities Criteria Manual.

The existing Portland cement concrete shall be broken up, removed in accordance with Item No. 101S, "Preparing Right of Way" and disposed of by the Contractor and deposited at a permitted disposal site.

When it is specified that only a portion of the existing Portland cement (p.c.) concrete is to be removed and that the remaining p.c. concrete will continue to serve its purpose, special care shall be exercised to avoid damage to that portion which will remain in place. Unless otherwise established by the Engineer or designated representative, existing p.c. concrete shall be cut to the neat lines, that are indicated on the Drawings, by sawing with an appropriate type circular type circular concrete saw to a minimum depth of 1/2 inch (12.5 mm). Any reinforcing steel encountered shall be cut off 1 inch (25 mm) inside of p.c. concrete sawed line. Any existing p.c. concrete, which is damaged or destroyed beyond the neat lines so established, shall be replaced at the Contractor's expense. Remaining p.c. concrete shall be mortared to protect the reinforcing steel and provide a neat clean appearance.

When reinforcement is encountered during the removal of portions of existing structures to be modified, a minimum of 1 foot (300 mm) of steel length shall be cleaned of all old p.c. concrete and left in place to tie into the new construction where applicable. All unsuitable material shall be removed and replaced with approved material. All foundations, walls or other objectionable material shall be removed to a minimum depth of 18 inches (450 mm) below all structures and 12 inches (300 mm) below areas to be vegetated.

104S.6 Measurement

When included in the contract as a separate pay item, the removal of p.c. concrete curb and p.c. concrete wall as prescribed above will be measured by the lineal foot (meter: 1 meter is equal to 3.281 feet) in its original position regardless of the dimensions or size. The removal of p.c. concrete slabs, p.c. concrete sidewalks and driveways, as prescribed above, will be measured by the square foot (square meter: 1 square meter is equal to 10.764 square feet) in original position, regardless of the thickness and existence of reinforcing steel. Portland cement concrete steps removed will be measured per lineal foot (meter: 1 meter is equal to 3.281 feet) of each individual step tread including the bottom step. The removal of p.c. concrete foundations will be measured per each individual foundation. The removal of miscellaneous concrete will be measured per lump sum.

104S.7 Payment

The work and materials presented herein will generally not be paid for directly, but shall be included in the unit price bid for the item of construction in which this item is used.

When specified in the contract bid form as a separate pay item, the item will be paid for at the contract unit bid price(s) for "Remove P.C. Concrete Curb", "Remove P.C. Concrete Slab", "Remove P.C. Concrete Sidewalks and Driveways", "Remove P.C. Concrete Walls", "Remove P.C. Concrete Steps", "Remove P.C. Concrete Foundations" and "Remove Miscellaneous P.C. Concrete". The bid prices shall include full compensation for all Work herein specified, including the disposal of all material not required in the

Work, the furnishing of all materials, equipment, tools, labor and incidentals necessary to complete the Work.

Payment will be made under one of the following:

Pay Item No.	**104S-A:**	Remove P.C. Concrete Curb	Per Lineal foot.
Pay Item No.	**104S-B:**	Remove P.C. Concrete Slab	Per Square foot.
Pay Item No.	**104S-C:**	Remove P.C. Concrete Sidewalks and Driveways	Per Square foot
Pay Item No.	**104S-D:**	Remove P.C. Concrete Wall	Per Lineal foot.
Pay Item No.	**104S-E:**	Remove P.C. Concrete Steps	Per Lineal foot.
Pay Item No.	**104S-F:**	Remove P.C. Concrete Foundations	Per Each.
Pay Item No.	**104S-G:**	Remove Miscellaneous P.C. Concrete	Per Lump Sum.

End

SPECIFIC CROSS REFERENCE MATERIALS
Specification Item 104S, "REMOVING CONCRETE"

City of Austin Standard Contract Documents

Designation	Description
00700	General Conditions

City of Austin Utilities Criteria Manual

Designation	Description
Section 5.2.0	Permit for Excavation in the Public Right-of-Way

City of Austin Standard Specifications

Designation	Description
Item No. 101S	Preparing Right of Way
Item No. 110S	Street Excavation
Item No. 111S	Excavation
Item No. 120S	Channel Excavation
Item No. 132S	Embankment
Item No. 403S	Concrete for Structures
Item No. 610S	Preservation of Trees and Other Vegetation

RELATED CROSS REFERENCE MATERIALS

City of Austin Standard Contract Documents

Designation	Description
01500	Temporary Facilities
01550	Public Safety and Convenience

The Code of the City of Austin, Code of Ordinances, Volume 1

Designation	Description
Article 14-11-181	Permit Required
Article 14-11-189	Conditions for Permit Issuance
Article 14-11-190	Excavation Sequence and Permit Term

City of Austin Standard Specifications

Designation	Description
Item No. 201S	Subgrade Preparation
Item No. 602S	Sodding for Erosion Control
Item No. 604S	Seeding for Erosion Control

Item No. 622S	Diversion Dike
Item No. 628S	Sediment Containment Dikes
Item No. 642S	Silt Fence

RELATED CROSS REFERENCE MATERIALS - Continued
Specification Item 104S, "REMOVING CONCRETE"

City of Austin Standard Details

Designation	Description
610S-1	Tree Protection Fence Locations
610S-2	Tree Protection Fence, Type B Chainlink
610S-3	Tree Protection Fence, Type B Wood
610S-4	Tree Protection Fence, Modified Type A
610S-5	Tree Protection Fence, Modified Type B
621S-1	Diversion
622S-1	Diversion Dike
624S-1	Earth Outlet Sediment Trap
625S-1	Grade Stabilization Structure
627S-1	Grass Lined Swale
627S-2	Grass Lined Swale With Stone Center
628S	Triangular Sediment Filter Dike
628S-1	Hay Bale Dike
629S-1	Brush Berm
630S-1	Interceptor Dike
631S-1	Interceptor Swale
632S-1	Storm Inlet Sediment Trap
633S-1	Landgrading
634S-1	Level Spreader
635S-1	Perimeter Dike
636S-1	Perimeter Swale
637S-1	Pipe Slope Drain (Flexible)
637S-2	Pipe Slope Drain (Flexible)
638S-1	Pipe Outlet Sediment Trap
639S-1	Rock Berm
641S-1	Stabilized Construction Entrance
642S-1	Silt Fence
643S-1	Stone Outlet Structure
644S-1	Stone Outlet Sediment Trap

Texas Department of Transportation: Standard Specifications for Construction and Maintenance of Highways, Streets, and Bridges

Designation	Description
Item No. 100	Preparing Right of Way
Item No. 104	Removing Concrete
Item No. 110	Excavation
Item No. 112	Subgrade Widening
Item No. 132	Embankment
Item No. 158	Specialized Excavation Work
Item No. 420	Concrete Structures

Item No. 110S
Street Excavation

110S.1 Description

This item shall govern: (1) the excavation and proper utilization or otherwise satisfactory disposal of all excavated material, of whatever character, within the right of way or other limits of the work indicated and (2) the construction, compaction, shaping and finishing of all earthwork on the entire project in accordance with the specification requirements herein outlined, in conformity with the required lines, grades and typical cross sections indicated on the Drawings or as directed by the Engineer or designated representative. When not otherwise included in the Contract Documents, this item shall include the Work described in specification Item Nos. 101S, "Preparing Right of Way", 102S, "Clearing and Grubbing", 104S, "Removing Portland Cement Concrete", 132S, "Embankment", 201S, "Subgrade Preparation" and 236S, “Proof Rolling”.

This specification is applicable for projects or work involving either inch-pound or SI units. Within the text inch-pound units are given preference followed by SI units shown within parentheses.

110S.2 Submittals

The submittal requirements of this specification item may include:

A. A permit when utility adjustments are made in the right-of-way,

B. A plan for removal and deposition of all 'Waste' materials, and

C. A Blasting Permit if blasting is required and allowed on the project.

110S.3 Classification

All excavation shall be unclassified and shall include all materials encountered regardless of their nature or the manner in which they are removed.

110S.4 Construction Methods

Prior to commencement of this work, all required erosion control and tree protection measures shall be in place. The existing utilities shall be located and protected as specified in the Standard Contract Documents, Section 00700, "General Conditions" and/or indicated on the Drawings. A permit shall be required when utility adjustments are to be made in preparation for construction in the right-of-way, as specified in Section 5.2.0 of the City of Austin Utilities Criteria Manual.

Construction equipment shall not be operated nor construction materials stockpiled under the canopies of trees, unless otherwise indicated on the Drawings. Excavation or embankment materials shall not be placed within the drip line of trees until tree wells are constructed, that conform to Item No. 610S, " Preservation of Trees and Other Vegetation ".

All street excavation shall be performed as specified herein and shall conform to the established alignment, grades and cross sections. The Contractor will be required to set blue-tops for the subgrade along centerlines, at quarter points and curb lines or edge of

pavement at intervals not exceeding 50 feet (15 meters). Suitable excavated materials shall be utilized, insofar as practicable, in constructing any required embankments. The construction of all embankments shall conform to Item No. 132S, "Embankment".

All earth cuts for base and/or pavement structure construction shall be scarified to a uniform depth of at least 6 inches (150 millimeters) below the required finished subgrade elevation for the entire roadbed width. The material shall be mixed, reshaped by blading, sprinkled and then rolled in accordance with Section 2 of the City of Austin Specification Item 132S, "Embankment".

High PI materials (i.e. PI $\geq$ 20 %) which exhibit a Plasticity Index (PI) greater by 5 % than the surrounding materials or any materials with a moisture content greater than 2 percent (%) in excess of optimum moisture shall be classified as unsuitable and must be removed or manipulated to meet the above criteria before use.

Unsuitable excavated materials or excavation in excess of that needed for construction shall be known as "Waste" and shall become the property of the Contractor. Unsuitable material encountered below the subgrade elevation in roadway cuts, when declared “Waste” by the Engineer, shall be replaced with material from the roadway excavation or with other suitable material as approved by the Engineer or designated representative. It shall become the Contractor’s responsibility to dispose of this material off the limits of the right of way in an environmentally sound manner at a permitted disposal site.

All blasting shall conform to the General Notes on the Drawings and to the Standard Contract Document Section 01550, "Public Safety and Convenience". In all cases where blasting is permitted, a Blasting Permit must be obtained in advance from the City of Austin Department of Public Works and Transportation.

110S.5 Measurement

All accepted street excavation will be measured by either Method A or B as follows:

A. Method A

Measurement of the volume of excavation in cubic yards (cubic meters: 1 cubic meter is equal to 1.308 cubic yards) by the average end areas. Cross sectional areas shall be computed from the existing ground surface to the established line of the subgrade over the limits of the right of way or other work limits shown on the Drawings, including parkway slopes and sidewalk areas.

B. Method B

Measurement of the volume of excavation in cubic yards (cubic meters: 1 cubic meter is equal to 1.308 cubic yards), based upon the average end areas taken from pre-construction cross sections and planned grades. The planned quantities for street excavation will be used as the measurement for payment of this item.

110S.6 Payment

This item will be paid for at the contract unit bid price for "Street Excavation", as provided under measurement Method A or B as included in the bid. The bid price shall include full compensation for all work herein specified, including subgrade preparation, unless specified otherwise, and the furnishing of all materials, equipment, tools, labor and incidentals necessary to complete the work.

Payment will be made under one of the following:

Pay Item No. 110S-A:	Street Excavation	Per Cubic yard.
Pay Item No. 110S-B:	Street Excavation, Plan Quantity	Per Cubic yard.

End

SPECIFIC CROSS REFERENCE MATERIALS
Specification Item 110S, "STREET EXCAVATION"

City of Austin Standard Contract Documents

Designation	Description
00700	General Conditions
01550	Public Safety and Convenience

City of Austin Utilities Criteria Manual

Designation	Description
Section 5.2.0	Permit for Excavation in the Public Right-of-Way

City of Austin Standard Specifications

Designation	Description
Item No. 101S	Preparing Right of Way
Item No. 102S	Clearing and Grubbing
Item No. 104S	Removing Portland Cement Concrete
Item No. 132S	Embankment
Item No. 201S	Subgrade Preparation
Item No. 236S	Proof Rolling
Item No. 610S	Preservation of Trees and Other Vegetation

RELATED CROSS REFERENCE MATERIALS

City of Austin Standard Contract Documents

Designation	Description
01500	Temporary Facilities

The Code of the City of Austin, Code of Ordinances, Volume 1

Designation	Description
Article 14-11-181	Permit Required
Article 14-11-189	Conditions for Permit Issuance
Article 14-11-190	Excavation Sequence and Permit Term

City of Austin Standard Specifications

Designation	Description
Item No. 111S	Excavation
Item No. 120S	Channel Excavation
Item No. 203S	Lime Treatment for Materials In Place
Item No. 204S	Portland Cement Treatment for Materials In Place
Item No. 230S	Rolling (Flat Wheel)
Item No. 232S	Rolling (Pneumatic Tire)
Item No. 234S	Rolling (Tamping)
Item No. 602S	Sodding for Erosion Control
Item No. 604S	Seeding for Erosion Control
Item No. 610S	Preservation of Trees and Other Vegetation
Item No. 622S	Diversion Dike
Item No. 628S	Sediment Containment Dikes
Item No. 642S	Silt Fence

RELATED CROSS REFERENCE MATERIALS - Continued
Specification Item 110S, "STREET EXCAVATION"

City of Austin Standard Details

Designation	Description
610S-1	Tree Protection Fence Locations
610S-2	Tree Protection Fence, Type B Chainlink
610S-3	Tree Protection Fence, Type B Wood
610S-4	Tree Protection Fence, Modified Type A
610S-5	Tree Protection Fence, Modified Type B
610S-6	Tree Protection, Tree Wells
621S-1	Diversion
622S-1	Diversion Dike
624S-1	Earth Outlet Sediment Trap
625S-1	Grade Stabilization Structure
627S-1	Grass Lined Swale
627S-2	Grass Lined Swale With Stone Center
628S	Triangular Sediment Filter Dike
628S-1	Hay Bale Dike
629S-1	Brush Berm
630S-1	Interceptor Dike
631S-1	Interceptor Swale
632S-1	Storm Inlet Sediment Trap
633S-1	Landgrading
634S-1	Level Spreader
635S-1	Perimeter Dike
636S-1	Perimeter Swale
637S-1	Pipe Slope Drain (Flexible)
637S-2	Pipe Slope Drain (Rigid)
638S-1	Pipe Outlet Sediment Trap
639S-1	Rock Berm
641S-1	Stabilized Construction Entrance
642S-1	Silt Fence
643S-1	Stone Outlet Structure
644S-1	Stone Outlet Sediment Trap

Texas Department of Transportation: Standard Specifications for Construction and Maintenance of Highways, Streets, and Bridges

Designation	Description
Item No. 100	Preparing Right of Way
Item No. 110	Excavation
Item No. 112	Subgrade Widening
Item No. 132	Embankment
Item No. 150	Blading
Item No. 158	Specialized Excavation Work
Item No. 160	Furnishing and Placing Topsoil
Item No. 164	Seeding for Erosion Control
Item No. 204	Sprinkling
Item No. 210	Rolling (Flat Wheel)
Item No. 211	Rolling (Tamping)
Item No. 213	Rolling (Pneumatic Tire)
Item No. 260	Lime Treatment for Materials Used as Subgrade (Road Mixed)
Item No. 265	Lime-Fly Ash (LFA) Treatment for Materials Used as Subgrade

RELATED CROSS REFERENCE MATERIALS - Continued
Specification Item 110S, "STREET EXCAVATION"

Texas Department of Transportation:
Manual of Testing Procedures

Designation	Description
Tex-103-E	Determination of Moisture Content of Soil Materials
Tex-104-E	Determination of Liquid Limit of Soils
Tex-105-E	Determination of Plastic Limit of Soils
Tex-106-E	Method of Calculating the Plasticity Index of Soils
Tex-114-E	Laboratory Compaction Characteristics and Moisture-Density Relationship of Subgrade & Embankment Soil
Tex-115-E	Field Method for Determination of In-Place Density of Soils and Base Materials

Item No. 111S
Excavation

111S.1 Description

This item shall govern: (1) the excavation and proper utilization or satisfactory disposal of all excavated materials, of whatever character, within the limits of the Work and (2) construction, compaction, shaping and finishing of all designated earthwork areas in accordance with the specification requirements outlined herein and in conformity with the required lines, grades and typical cross sections indicated on the Drawings or as directed by the Engineer or designated representative. When not otherwise included in the Contract Documents, this item shall include the work described in Specification Item Nos. 101S, "Preparing Right of Way", No. 102S, "Clearing and Grubbing", No. 104S, "Removing Portland Cement Concrete", No. 132S "Embankment" and No. 201S, "Subgrade Preparation".

This specification is applicable for projects or work involving either inch-pound or SI units. Within the text inch-pound units are given preference followed by SI units shown within parentheses.

111S.2 Submittals

The submittal requirements of this specification item may include:

A. A permit when utility adjustments are made in the right-of-way,

B. A plan for removal and deposition of all 'Waste' materials, and

C. A Blasting Permit if blasting is required and allowed on the project.

111S.3 Classification

All excavation shall be unclassified and shall include all materials encountered regardless of their nature or the manner in which they are removed.

111S.4 Construction Methods

Prior to commencement of this work, all required erosion control and tree protection measures shall be in place. The existing utilities shall be located and shall be protected as specified in the Standard Contracts Document Section 00700, "General Conditions" and/or indicated on the Drawings. A permit shall be required when utility adjustments are to be made in preparation for construction in the right-of-way, as specified in Section 5.2.0 of the City of Austin Utilities Criteria Manual.

Construction equipment shall not be operated nor construction materials stockpiled under the canopies of trees, unless otherwise indicated on the Drawings. Excavation or embankment materials shall not be placed within the drip line of trees until tree wells are constructed, that conform to Specification Item No. 610S, “Preservation of Trees and Other Vegetation”.

All excavation shall be performed as specified herein and shall conform to the established alignment, grades and cross sections indicated on the Drawings. Suitable excavated

materials shall be utilized, insofar as practical, in constructing required embankments. The construction of all embankments shall conform to Specification Item No. 132S, "Embankment". No material shall be stockpiled within the banks of a waterway.

Unsuitable excavated materials or excavation in excess of that needed for construction shall be known as "Waste" and shall become the property of the Contractor. Unsuitable material encountered below the subgrade elevation in roadway cuts, when declared “Waste” by the Engineer or designated representative, shall be replaced with material from the roadway excavation or with other suitable material as approved by the Engineer. It shall become the Contractor’s responsibility to dispose of this material off the limits of the right of way in an environmentally sound manner at a permitted disposal site.

All blasting shall conform to the Provisions of the Standard Contract Document Section 01550, "Public Safety and Convenience". In all cases, a Blasting Permit must be obtained in advance from the City of Austin, Department of Public Works and Transportation.

Adequate dewatering and drainage of excavation shall be maintained throughout the time required to complete the excavation work.

111S.5 Measurement

All accepted excavation will be measured by either Method A or B as follows:

(1) Method A

Measurement of the volume of excavation in cubic yards (cubic meters: 1 square meter is equal to 1.306 square yards) by the average end area methods. Cross-sectional areas shall be computed from the existing ground surface to the established line of the subgrade, as shown on typical sections in the Drawings, over the limits of the right of way or other work limits, including parkway slopes and sidewalk areas.

(2) Method B

Measurement of the volume of excavation in cubic yards (cubic meters: 1 square meter is equal to 1.306 square yards), based upon the average end area method taken from pre-construction cross sections and planned grades. The planned quantities for excavation will be used as the measurement for payment for this item.

111S.6 Payment

This item will be paid for at the contract unit bid price for "Excavation", as provided under measurement Method A or B as included in the bid. The bid price shall include full compensation for all work herein specified including dewatering, drainage, subgrade preparation, unless otherwise indicated, and the furnishing of all materials, equipment, tools, labor and incidentals necessary to complete the work.

Payment will be made under one of the following:

Pay Item No. 111S-A:	Excavation	Per Cubic Yard.
Pay Item No. 111S-B:	Excavation, Plan Quantity	Per Cubic Yard.

End

SPECIFIC CROSS REFERENCE MATERIALS
Specification Item 111S, "EXCAVATION"

City of Austin Standard Contract Documents

Designation	Description
00700	General Conditions
01550	Public Safety and Convenience

City of Austin Utilities Criteria Manual

Designation	Description
Section 5.2.0	Permit for Excavation in the Public Right-of-Way

City of Austin Technical Specifications

Designation	Description
Item No. 101S	Preparing Right of Way
Item No. 102S	Clearing and Grubbing-
Item No. 104S	Removing Portland Cement Concrete
Item No. 132S	Embankment
Item No. 201S	Subgrade Preparation
Item No. 236S	Proof Rolling
Item No. 610S	Preservation of Trees and Other Vegetation

RELATED CROSS REFERENCE MATERIALS
Specification Item 111S, "EXCAVATION"

City of Austin Standard Contract Documents

Designation	Description
01500	Temporary Facilities

City of Austin Standard Specifications

Designation	Description
Item No. 120S	Channel Excavation
Item No. 203	Lime Treatment for Materials In Place
Item No. 204S	Portland Cement Treatment for Materials In Place
Item No. 230S	Rolling (Flat Wheel)
Item No. 232S	Rolling (Pneumatic Tire)
Item No. 234S	Rolling (Tamping)
Item No. 602S	Sodding for Erosion Control
Item No. 604S	Seeding for Erosion Control
Item No. 622S	Diversion Dike
Item No. 628S	Sediment Containment Dikes
Item No. 642S	Silt Fence

City of Austin Standard Details

Designation	Description
No. 610S-1	Tree Protection Fence Locations
No. 610S-2	Tree Protection Fence, Type B Chainlink
No. 610S-3	Tree Protection Fence, Type B Wood
No. 610S-4	Tree Protection Fence, Modified Type A

No. 610S-5	Tree Protection Fence, Modified Type B
No. 621S-1	Diversion
No. 622S-1	Diversion Dike
No. 624S-1	Earth Outlet Sediment Trap
No. 625S-1	Grade Stabilization Structure
No. 627S-1	Grass Lined Swale
No. 627S-2	Grass Lined Swale With Stone Center
No. 628S	Triangular Sediment Filter Dike

City of Austin Standard Details

Designation	Description
No. 628S-1	Hay Bale Dike
No. 629S-1	Brush Berm
No. 630S-1	Interceptor Dike
No. 631S-1	Interceptor Swale
No. 632S-1	Storm Inlet Sediment Trap
No. 633S-1	Landgrading
No. 634S-1	Level Spreader
No. 635S-1	Perimeter Dike
No. 636S-1	Perimeter Swale
No. 637S-1	Pipe Slope Drain (Flexible)
No. 637S-2	Pipe Slope Drain (Flexible)
No. 638S-1	Pipe Outlet Sediment Trap
No. 639S-1	Rock Berm
No. 641S-1	Stabilized Construction Entrance
No. 642S-1	Silt Fence
No. 643S-1	Stone Outlet Structure
No. 644S-1	Stone Outlet Sediment Trap

The Code of the City of Austin, Code of Ordinances, Volume 1

Designation	Description
Article 14-11-181	Permit Required
Article 14-11-189	Conditions for Permit Issuance
Article 14-11-190	Excavation Sequence and Permit Term

Texas Department of Transportation: Standard Specifications for Construction and Maintenance of Highways, Streets, and Bridges

Designation	Description
Item No. 100	Preparing Right of Way
Item No. 110	Excavation
Item No. 112	Subgrade Widening
Item No. 132	Embankment
Item No. 150	Blading
Item No. 158	Specialized Excavation Work
Item No. 160	Furnishing and Placing Topsoil
Item No. 164	Seeding for Erosion Control
Item No. 204	Sprinkling
Item No. 210	Rolling (Flat Wheel)
Item No. 211	Rolling (Tamping)
Item No. 213	Rolling (Pneumatic Tire)
Item No. 260	Lime Treatment for Materials Used as Subgrade (Road Mixed)
Item No. 265	Lime-Fly Ash (LFA) Treatment for Materials Used as Subgrade

Texas Department of Transportation: Manual of Testing Procedures

Designation	Description
Tex-103-E	Determination of Moisture Content of Soil Materials
Tex-104-E	Determination of Liquid Limit of Soils
Tex-105-E	Determination of Plastic Limit of Soils
Tex-106-E	Method of Calculating the Plasticity Index of Soils
Tex-114-E	Laboratory Compaction Characteristics and Moisture-Density Relationship of Subgrade & Embankment Soil
Tex-115-E	Field Method for Determination of In-Place Density of Soils and Base Materials

Item No. 130S
Borrow

130S.1 Description

This item shall govern required excavation, removal and proper utilization of materials secured from sources, selected by the Contractor and approved by the Engineer or designated representative. The compaction of embankments constructed from borrow as provided herein shall conform to the appropriate sections of Specification Item Nos. 132S, "Embankment" and 236S, “Proof Rolling”.

Borrow will be used only when indicated on the Drawings or directed by the Engineer or designated representative and shall only be acquired from approved sources.

This specification is applicable for projects or work involving either inch-pound or SI units. Within the text inch-pound units are given preference followed by SI units shown within parentheses.

130S.2 Submittals

The submittal requirements of this specification item may include:

A. Identification of Class, source and characteristics (P.I., linear shrinkage, etc.) of proposed borrow material, and
B. A plan for managing and maintaining borrow sites.

130S.3 Materials

All authorized borrow shall conform to one of the following classes:

Class A (Select Borrow)

Class A Borrow material shall consist of suitable granular material, free from vegetation or other objectionable matter and reasonably free from lumps of earth. When tested by standard TxDOT laboratory methods Tex-105-E, Tex-106-E and Tex-107-E, the Class A Select Borrow, shall meet the following requirements:

The Liquid Limit shall not exceed	45
The Plasticity Index shall not exceed	15
The bar linear shrinkage shall not be less than	2

Class B (Borrow)

Class B Borrow material shall consist of suitable non swelling [i.e. soils with a plasticity index (P.I.) less than 20] earth material such as loam, clay or other such materials that will form a stable embankment.

Class C (Topsoil)

See Standard Specification Item No. 601S.3(A)

130S.4 Construction Methods

Prior to commencing this work, all required erosion control and environmental measures shall be in place. All suitable materials removed from excavations shall be used, insofar as practicable in the formation of embankments conforming to Specification Item No. 132S, "Embankment", as otherwise indicated on the Drawings or as directed by the Engineer or designated representative. The completed work shall conform to the established alignment, grades and cross section as shown on the Drawings. The additional material necessary to complete the work described above shall be "Borrow" of the class specified.

The Contractor shall arrange for borrow from one of the following sources:

1. Existing borrow pit,
2. New borrow pit, or
3. Surplus excavated material from a site, with a site development permit.

The Contractor shall notify the Engineer 3 weeks prior to opening a pit or any other borrow source to allow necessary testing for approval of materials. All borrow sites shall comply with the requirements of the site development permit.

During construction, borrow sources shall be kept drained to permit final cross sections to be measured, when required.

Borrow sites shall be managed and maintained to minimize the impact of the appearance of the natural topographic features and at no time create a potential hazard to the public.

130S.5 Measurement

Borrow will be measured by the cubic yard (cubic meters: 1 cubic meter is equal to 1.196 cubic yards) in its final position based upon the average end areas, calculated from pre-construction cross sections and plan grades. The plan quantities for Borrow or Topsoil will be used as the measurement for payment for this item.

130S.6 Payment

All work performed as required herein and measured as provided under "Measurement" will be paid for at the unit bid price. The bid prices shall include full compensation for furnishing all labor; all materials; all royalty and freight involved; all hauling and delivering on the road; and all tools, equipment and incidentals necessary to complete the work. Payment will not be made for unauthorized work.

Payment will be made under one of the following:

Pay Item No. 130S-A:	Class A (Select Borrow), Plan Quantity	Per Cubic Yard.
Pay Item No. 130S-B:	Class B (Borrow), Plan Quantity	Per Cubic Yard.
Pay Item No. 130S-T:	Class C (Topsoil), Plan Quantity	Per Cubic Yard.

End

SPECIFIC CROSS REFERENCE MATERIALS
Specification 130S, "BORROW"

City of Austin Standard Specifications

Designation	Description
Item No. 132S	Embankment
Item No. 236S	Rolling (Proof)

Texas Department of Transportation: Manual of Testing Procedures

Designation	Description
Tex-105-E	Determination of Plastic Limit of Soils
Tex-106-E	Method of Calculating the Plasticity Index of Soils
Tex-107-E	Determination of Bar Linear Shrinkage of Soils

RELATED CROSS REFERENCE MATERIALS
Specification 130S, "BORROW"

City of Austin Standard Contract Documents

Designation	Description
00700	General Conditions

City of Austin Standard Specifications

Designation	Description
Item No. 101S	Preparing Right of Way
Item No. 102S	Clearing and Grubbing
Item No. 110S	Street Excavation
Item No. 111S	Excavation
Item No. 230S	Rolling (Flat Wheel)
Item No. 232S	Rolling (Pneumatic Tire)
Item No. 234S	Rolling (Tamping)
Item No. 602S	Sodding for Erosion Control
Item No. 604S	Seeding for Erosion Control
Item No. 610S	Preservation of Trees and Other Vegetation
Item No. 622S	Diversion Dike
Item No. 628S	Sediment Containment Dikes
Item No. 642S	Silt Fence

City of Austin Standard Details

Designation	Description
No. 610S-1	Tree Protection Fence Locations
No. 610S-2	Tree Protection Fence, Type B Chainlink
No. 610S-3	Tree Protection Fence, Type B Wood
No. 610S-4	Tree Protection Fence, Modified Type A
No. 610S-5	Tree Protection Fence, Modified Type B
No. 621S-1	Diversion
No. 622S-1	Diversion Dike
No. 624S-1	Earth Outlet Sediment Trap
No. 625S-1	Grade Stabilization Structure
No. 626S-1	Grass Lined Swale
No. 627S-1	Grass Lined Swale With Stone Center
No. 628S	Triangular Sediment Filter Dike

No. 628S-1	Hay Bale Dike
No. 629S-1	Brush Berm
No. 630S-1	Interceptor Dike
No. 631S-1	Interceptor Swale
No. 632S-1	Storm Inlet Sediment Trap
No. 633S-1	Landgrading
No. 634S-1	Level Spreader

City of Austin Standard Details

Designation	Description
No. 635S-1	Perimeter Dike
No. 636S-1	Perimeter Swale
No. 637S-1	Pipe Slope Drain (Flexible)
No. 637S-2	Pipe Slope Drain (Flexible)
No. 638S-1	Pipe Outlet Sediment Trap
No. 639S-1	Rock Berm
No. 641S-1	Stabilized Construction Entrance
No. 642S-1	Silt Fence
No. 643S-1	Stone Outlet Structure
No. 644S-1	Stone Outlet Sediment Trap

Texas Department of Transportation: Standard Specifications for Construction and Maintenance of Highways, Streets, and Bridges

Designation	Description
Item No. 100	Preparing Right of Way
Item No. 110	Excavation
Item No. 132	Embankment
Item No. 158	Specialized Excavation Work
Item No. 160	Furnishing and Placing Topsoil
Item No. 164	Seeding for Erosion Control
Item No. 204	Sprinkling
Item No. 210	Rolling (Flat Wheel)
Item No. 211	Rolling (Tamping)
Item No. 213	Rolling (Pneumatic Tire)

Texas Department of Transportation: Manual of Testing Procedures

Designation	Description
Tex-103-E	Determination of Moisture Content of Soil Materials
Tex-104-E	Determination of Liquid Limit of Soils
Tex-114-E	Laboratory Compaction Characteristics and Moisture-Density Relationship of Subgrade & Embankment Soil
Tex-115-E	Field Method for Determination of In-Place Density of Soils and Base Materials

Item No. 201S
Subgrade Preparation

201S.1 Description

This item shall govern scarifying; blading and rolling the subgrade to obtain a uniform texture and provide as nearly as practicable a uniform density for the top 6 inches (150 mm) of the subgrade.

This specification is applicable for projects or work involving either inch-pound or SI units. Within the text and accompanying tables, the inch-pound units are given preference followed by SI units shown within parentheses.

201S.2 Submittals

The submittal requirements of this specification item may include:

A. A plan identifying classification and characteristics (P.I., optimum moisture-density, etc.) of insitu subgrade soils, as well as the source, classification and characteristics of any proposed borrow material,
B. Type and size of equipment proposed to produce the required compaction, and
C. Compaction (moisture-density, etc) test results for in-situ subgrade soils and/or borrow materials.

201S.3 Construction Methods

Prior to initiation of subgrade preparation activities, all operations involving Standard Specification Item No. 101S," Preparing Right of Way" and/or Standard Specification Item No. 102S, "Clearing and Grubbing" shall be completed. The surface of the subgrade shall be scarified and shaped in conformity with the typical sections and the lines and grades indicated on the Drawings; by the removal of existing material or addition of approved material as established by the Engineer or designated representative. Any deviation in the subgrade cross section which exceeds 1/2 inch in a length of 10 feet (12 mm in a length of 3 meters), measured longitudinally, shall be corrected by loosening, adding or removing material, and then reshaping and compacting by sprinkling and rolling.

All unsuitable material shall be removed and replaced with approved material. All foundations, walls or other objectionable material shall be removed in accordance with Standard Specification Item No. 104S, "Removing Portland Cement Concrete" to a minimum depth of 18 inches (450 mm) under all structures and 12 inches (300 mm) under areas to be vegetated. All holes, ruts and depressions shall be filled with approved material and compacted by approved methods.

The subgrade shall be prepared sufficiently in advance to insure satisfactory prosecution of the Work. The Contractor will be required to set blue tops for the subgrade on the centerline, at the quarter points and along the curb lines or edge of pavement at maximum intervals of 50 feet (15 meters). The subgrade shall be tested by proof rolling

in conformity with Standard Specification Item No. 236S, "Proof Rolling" prior to placement of the first course of base material. Any unstable or spongy subgrade areas identified by proof rolling shall be corrected either by additional re-working, drying and compaction, or by removal and replacement of unsuitable materials. When specifically directed by the Engineer or designated representative, the Contractor shall re-work the subgrade* as follows:

A. Remove the unstable subgrade to the full depth of the unstable insitu material or to a minimum depth of 6 inches (150 mm), whichever is greater;
B. Spread the material over a sufficient area to allow reworking of the excavated material;
C. Disc, scarify or otherwise breakup the excavated material and allow to dry (Note: If approved by the Engineer or designated representative, the addition of lime or other additive may be used to aid in the drying process or to stabilize the unstable material);
D. Fill the excavated area with the re-worked material and compact to specified densities; and
E. Proof roll the re-worked area.

* The Rework process will not be allowed for unstable organic subgrade soils. These type soils will be permanently removed and replaced with materials approved by the Engineer or designated representative.

All suitable material removed in accordance with Standard Specification Item No, 111S, "Excavation", may be utilized in the subgrade with the approval of the Engineer or designated representative. All other material required for completion of the Subgrade, including those defined in accordance with Specification Item No. 130S, "Borrow", shall also be subject to approval by the Engineer or designated representative.

It is the intent of this specification to provide the required density and moisture control for the subgrade based on the plasticity characteristics of the approved materials. The subgrade materials shall be sprinkled as required and compacted to the extent necessary to provide the density specified below, unless otherwise indicated on the Drawings. The Plasticity Index (P.I.) will be established in accordance with TxDOT Test Methods Tex-104-E, Tex-105-E and Tex-106-E. The density determination will be made in accordance with TxDOT Test Method Tex-114-E and field density measurements will be made in accordance with TxDOT Test Method Tex-115-E.

Description	Density, Percent	Moisture
Non-swelling Soils (P.I. less than 20)	Not less than 95	
Swelling Soils (P.I. between 20 and 35)	Not less than 95 nor more than 102	Not less than optimum
Swelling Soils (P.I. greater than 35)	Not less than 95 nor more than 100	Not less than optimum

Subgrade materials on which planting or turf will be established shall be compacted to a minimum of 85 percent of the density as determined in accordance with TxDOT Test

Method Tex-114-E. Field tests for density in accordance with TxDOT Test Method Tex-115-E will be made as soon as possible after compaction operations are completed. If the material fails to meet the density specified, it shall be reworked as necessary to obtain the density required.

Prior to placement of any base materials, the in-place density and moisture content of the top 6 inches (150 mm) of compacted subgrade shall be checked. If the tests indicate that the relative density and moisture do not meet the limits specified in the table above, the subgrade shall be reworked as necessary to obtain the specified compaction and moisture content. All initial testing will be paid for by the City of Austin. All retesting shall be paid for by the Contractor.

201S.4 Measurement

All acceptable subgrade preparation when included in the contract as a separate pay item, will be measured by the square yard (square meter: 1 square meter equals 1.196 Square yards). The measured area includes the entire width of the roadway for the entire length as indicated on the Drawings.

201S.5 Payment

The work and materials presented herein will generally not be paid for directly, but shall be included in the unit price bid for the item of construction in which this item is used when specified as a separate pay item in the contract bid form, subgrade preparation shall be measured as specified above and paid for at the contract unit bid price for "Subgrade Preparation". The bid price shall include full compensation for all work herein specified, including the furnishing of all materials, equipment, tools and labor and incidentals necessary to complete the work.

Payment, when included as a contract pay item, will be made under:

Pay Item No. 201S: Subgrade Preparation Per Square Yard.

End

SPECIFIC CROSS REFERENCE MATERIALS
Specification Item 201S, "SUBGRADE PREPARATION"

City of Austin Standard Specification Items

Designation	Description
Item No. 101S	Preparing Right of Way
Item No. 102S	Clearing and Grubbing
Item No. 104S	Removing Portland Cement Concrete
Item No. 110S	Street Excavation
Item No. 111S	Excavation
Item No. 130S	Borrow
Item No. 236S	Proof Rolling

Texas Department of Transportation: Manual of Testing Procedures

Designation	Description
Tex-103-E	Determination of Moisture Content of Soil Materials
Tex-104-E	Determination of Liquid Limit of Soils
Tex-105-E	Determination of Plastic limit of Soils
Tex-106-E	Method of Calculating the Plasticity Index of Soils
Tex-114-E	Laboratory Compaction Characteristics & Moisture Density Relationship of Subgrade & Embankment Soil
Tex-115-E	Field Method for Determination of In-Place Density of Soils & Base Materials

RELATED CROSS REFERENCE MATERIALS

City of Austin Standard Specifications

Designation	Description
Item No.132S	Embankment

Texas Department of Transportation: Standard Specifications for Construction and Maintenance of Highways, Streets, and Bridges

Designation	Description
Item No. 100	Preparing Right of Way
Item No. 110	Excavation
Item No. 112	Subgrade Widening
Item No. 132	Embankment
Item No. 150	Blading
Item No. 158	Specialized Excavation Work
Item No. 204	Sprinkling
Item No. 210	Rolling (Flat Wheel)
Item No. 211	Rolling (Tamping)
Item No. 213	Rolling (Pneumatic Tire)

Texas Department of Transportation: Manual of Testing Procedures

Designation	Description
Tex-103-E	Determination of Moisture Content of Soil Materials

210S.1 Description

This item governs furnishing and placing a crushed stone base course for surfacing, pavement, or other base courses. “Flexible Base" shall be constructed on an approved, prepared surface in one or more courses conforming to the typical sections and to the lines and grades, indicated on the Drawings or established by the Engineer or designated representative.

This specification is applicable for projects or work involving either inch-pound or SI units. Within the text and accompanying tables, the inch-pound units are given preference followed by SI units shown within parentheses.

210S.2 Submittals

The submittal requirements of this specification item may include:

A. Source, gradation and test results for the crushed limestone material,

B. Notification that the crushed limestone stockpile is completed and ready for testing, and

C. Field density test results for in-place compacted flexible base,

210S.3 Material

A. Mineral Aggregate

The material shall be crushed argillaceous limestone meeting the requirements specified herein. The material shall be from sources approved by the City and shall consist of durable crushed stone that has been screened to the required gradation.

Flexible base materials shall be tested according to the following TxDoT standard test methods:

a) Preparation for Soil Constants and Sieve Analysis	Tex-101-E
b) Liquid Limit	Tex-104-E
c) Plastic Limit[1]	Tex-105-E
d) Plasticity Index	Tex-106-E
e) Sieve Analysis	Tex-110-E
f) Wet Ball Mill[2]	Tex-116-E
g) Triaxial Test	Tex-117-E, Part II

1. Plasticity Index shall be determined in accordance with Tex-107-E (Linear Shrinkage) when liquid limit is unattainable as defined in Tex-104-E.
2. When a soundness value is required on the drawings, the material shall be tested in accordance with Tex-411-A.

Base material shall be stockpiled after crushing, then tested by the City's designated laboratory and approved by the Engineer or designated representative prior to being hauled to the Project.

The material shall be well graded and shall meet the following requirements:

Sieve Designation		Other Requirements	% Retained	
US	SI			
1 3/4"	45 mm		0	
7/8"	22.4 mm		10-35	
3/8"	9.5 mm		30-50	
#4	4.75 mm		45-65	
#40	425 μm		70-85	
		Maximum Plasticity Index		10
		Maximum Wet Ball Mill		42
Maximum Increase in passing #40 (425 μm) sieve from Wet Ball Mill Test			20	

Minimum compressive strength when subjected to the triaxial test shall be 35 psi at 0 psi lateral pressure [240 kiloPascal (kPa) at 0 kPa lateral pressure] and 175 psi at 15 psi lateral pressure [1200 kiloPascal (kPa) at 100 kPa lateral pressure].

B. Asphaltic Material

Prime Coat. Prime Coat shall conform to the requirements of Standard Specification Item 306S, "Prime Coat", except for measurement and payment.

210S.4 Stockpiling, Storage and Management

A. Managing Material**:**

The stockpile shall be constructed on a relatively smooth area that has been cleared of debris, weeds, brush, trees and grass. Stockpiles shall contain between 25,000 and 50,000 cubic yards (19,100 to 38,200 cubic meters). The stockpile shall be constructed using scrapers, bottom dumps or other similar equipment that allows dumping and spreading without rehandling. The stockpile shall be constructed to allow dumping and spreading in one direction only. The height of the stockpile shall not exceed the capabilities of available equipment to make a full cut (bottom to top) on any of the four sides.

A stockpile shall be completed before being tested by the City. The Contractor’s supplier shall notify the City when a stockpile has been completed and is ready to be tested. The stockpile shall not be added to after it has been tested.

The Contractor shall provide material only from stockpiles that have been inspected, tested and accepted by the City. A ticket showing the date, source, stockpile number, and net weight (mass) shall be provided to the Inspector with each load of material delivered to the Project.

Material shall be loaded from the stockpile by making successive vertical cuts through its entire depth.

B. Test Sampling:

The Contractor's supplier may choose the method of sample gathering for testing by the City's laboratory as follows:

1. The supplier shall make a full-height cut a sufficient distance into each side of the stockpile to obtain a uniform sample. The four samples (one from each side of the stockpile) shall then be combined and mixed into a single "test" specimen from which the City's laboratory can obtain a sample.

2. As the stockpile is constructed, a perpendicular cut will be made across the spreading direction at every two feet to four feet (0.6 to 1.2 meters) of height and the sample used to start a "mini" stockpile. The process shall be repeated in two feet to four feet (0.6 to 1.2 meter) increments of height, until the stockpile and the "mini" stockpile are completed. Samples shall be obtained from the "mini" stockpile in the same manner described in (1) above.

C. Testing and Acceptance:

When initial tests indicate
that the material is unacceptable, the City may, if requested by the Contractor's supplier, sample and test the material one more time. The additional sampling and testing shall be paid for by the supplier.

210S.5 Construction Methods

A. Preparation of Subgrade:

Flexible base shall not be placed until the Contractor has verified by proof rolling that the subgrade has been prepared and compacted in conformity with Standard Specification Item 201S, "Subgrade Preparation," to the typical sections, lines and grades indicated on the Drawings. Any deviation shall be corrected and proof rolled prior to placement of the flexible base material.

The Contractor shall not place flexible base until the subgrade has cured to the satisfaction of the Engineer or designated representative, regardless of whether or not the subgrade has been successfully proof rolled. As a minimum, this will be after the surface displays no damp spots and there is no evidence of "sponginess" in the subgrade.

B. First Lift:

Immediately before placing the flexible base material, the subgrade shall be checked for conformity with grade and section. The thickness of each lift of flexible base shall be equal increments of the total base depth. No single lift shall be more than six inches (150 mm) or less than three inches (75 mm) compacted thickness.

The material shall be delivered in approved vehicles. It shall be the responsibility of the Contractor to deliver the required amount of material. If it becomes evident that insufficient material was placed, additional material as

necessary shall be delivered and the entire course scarified, mixed and compacted.

Material deposited upon the subgrade shall be spread and shaped the same day unless otherwise approved by the Engineer or designated representative. In the event inclement weather or other unforeseen circumstances render spreading of the material impractical, the material shall be spread as soon as conditions allow.

Additionally, if the material cannot be spread and worked the same day it is deposited, the Contractor shall "close up" the dump piles before leaving the job site. “Closed up” shall be defined as the use of a motor grader to blade all dump piles together, leaving no open space between piles.

The material shall be spread, sprinkled, if required, then thoroughly mixed; bladed, dragged and shaped to conform to the typical sections indicated on the Drawings.

All areas and "nests" of segregated coarse or fine material shall be corrected or removed and replaced with well-graded material.

Each lift shall be sprinkled as required to bring the material to optimum moisture content, then compacted to the extent necessary to provide not less than the percent density specified in Section 210S.5.D, "Density." In addition to the requirements specified for density, the full depth of flexible base material shall be compacted to the extent necessary to remain firm and stable under construction equipment. After each section of flexible base material is completed, tests, as necessary, will be made by the Engineer or designated representative. As a minimum, three in-place density tests per section per day will be taken. If the material fails to meet the density requirements, it shall be reworked as necessary to meet these requirements. All initial testing will be paid for by the City. All retesting shall be paid for by the Contractor.

Throughout the entire operation, the surface of the material shall be maintained by blading and, upon completion, shall be smooth and shall conform to the typical section indicated on the Drawings and to the established lines and grades.

In that area on which pavement is to be placed, any deviation in excess of 1/4 inch (6.5 mm) in cross section or 1/4 inch in a length of 16 feet (6.5 mm in a length of 5 meters) measured longitudinally shall be corrected by loosening, adding or removing material, and by reshaping and recompacting. All irregularities, depressions or weak spots shall be corrected immediately by scarifying the areas affected, adding suitable material as required, and by reshaping and recompacting. Should the lift, due to any reason or cause, lose the required stability, density and/or finish before the surfacing is complete, it shall be recompacted and refinished at the Contractor's expense.

C. Succeeding Lifts:

Construction methods for succeeding lifts shall be the same as prescribed for the first lift. For that lift of the flexible base upon which the curb and gutter will be constructed, as well as the last flexible base lift (i.e. top of the flexible base), the Contractor shall check the surface of the lift for conformity to the lines and grades by setting "blue tops" at intervals not exceeding 50 feet (15 meters) on

the centerline, at quarterpoints, at curb lines or edge of pavement, and at other points that may be indicated on the Drawings.

When the thickness of a particular lift of the flexible base is in question, the Contractor shall check the surface of the lift for conformity to the lines and grades by setting "blue tops" at intervals not exceeding 50 feet (15 meters) on the centerline, at quarter points, at curb lines or edge of pavement, and at other points that may be indicated on the Drawings

D. Density:

The flexible base shall be compacted to not less than 100 percent density as determined by TxDoT Test Method Tex-113-E.

Field density determination shall be made in accordance with TxDoT Test Method Tex-115-E unless otherwise approved by the Engineer or designated representative. Each lift of the flexible base shall also be tested by proof rolling in conformity with Standard Specification Item 236S “Proof Rolling.”

E. Priming:

After the flexible base material has been compacted to not less than 100 percent density, and tested by proof rolling, a prime coat will be applied in accordance with Standard Specification Item 306S, "Prime Coat."

F. Curing:

Pavement materials, such as a tack coat or surface course, shall not be placed on the primed surface until the prime coat has been absorbed into the base course. At least 24 hours, or longer if designated by the Engineer or designated representative, shall be allowed when cutback asphalt is used as the prime coat.

210S.6 Measurement

"Flexible Base" will be measured by the cubic yard (cubic meter: 1 cubic meter equals 1.196 cubic yards), complete in place, as indicated in the Contract Documents.

210S.7 Payment

This item will be paid for at the contract unit bid price for "Flexible Base". The unit bid price shall include full compensation for all work specified herein, including the furnishing, hauling, placing and compacting of all materials; for rolling, proof rolling, recompacting and refinishing; for all water required; for retesting as necessary; for priming; and for all equipment, tools, labor and incidentals necessary to complete the Work.

Prime coat will not be measured and paid for directly but shall be included in the unit price bid for Standard Specification Item 210S, "Flexible Base.”

Payment will be made under one of the following:

Pay Item No. 210S-A: Flexible Base Per Cubic Yard.

End

SPECIFIC CROSS REFERENCE MATERIALS

City of Austin Standard Specifications

Designation	Description
Item No. 201S	Subgrade Preparation
Item No. 236S	Proof Rolling
Item No. 306S	Prime Coat

Texas Department of Transportation: Standard Specifications for Construction and Maintenance of Highways, Streets, and Bridges

Designation	Description
Tex-101-E	Preparation of Soil and Flexible Base Materials for Testing
Tex-104-E	Determination of Liquid Limit of Soils
Tex-105-E	Determination of Plastic Limit of Soils
Tex-106-E	Method of Calculating the Plasticity Index of Soils
Tex-107-A	Determination of Bar Linear Shrinkage of Soils
Tex-110-E	Determination of Particle Size Analysis of Soils
Tex-113-E	Laboratory Compaction Characteristics and Moisture-Density Relationship of Base Materials and Cohesionless Sands
Tex-115-E	Field Method for Determination of In-Place Density of Soils and Base Materials
Tex-116-E	Ball Mill Method for Determination of the Disintegration of Flexible Base Material
Tex-117-E	Triaxial Compression Tests for Disturbed Soils and Base Materials
Tex-411-A	Soundness of Aggregate By Use Of Sodium Sulfate Or Magnesium Sulfate

RELATED CROSS REFERENCE MATERIALS

City of Austin Standard Details

Designation	Description
No. 1000S-2	Flexible Base with Asphalt Surface Trench Repair-Existing Pavement
No. 510S-3	Typical Trench with Paved Surface
No. 1000S	Bus Stop Paving
No. 1000S-10	Local Street Sections
No. 1000S-11(1)	Residential and City of Austin Neighborhood Collector Street Sections
No. 1000S-11(2)	Industrial and Commercial Collector Street Sections
No. 1000S-12(1)	Primary Collector Street Sections
No. 1000S-12(2)	Primary Arterial Street Sections
No. 1000S-13(1)	Minor Arterial Street Sections (4 Lanes)
No. 1000S-13(2)	Minor Arterial Street Sections-(4 Lanes divided)
No. 1000S-14	Major Arterial Street Sections

City of Austin Utility Criteria Manual

Designation	Description
Section 5.8.2	Flexible Base
Section 5.7.3	Flexible Base with Asphalt Surface
Section 5.9.1	Excavation in Alley

City of Austin Transportation Criteria Manual

Designation	Description
Section 3.2.0	General Criteria
Section 3.4.3 .D	Layer Data-Minimum Thickness
Table 3-1	Minimum Layer Thickness
Section 3.4.3 .F	Layer Data- Minimum Thickness
Table 3-2	Layer Thickness Increment
Section 3.4.3 .J	Layer Data- Stiffness Coefficient
Table 3-3	Stiffness Coefficient
Table 3-9	Recommended Salvage values
Table 3-10	AASHTO Layer Coefficients

Item No. 230S
Rolling (Flat Wheel)

230S.1 Description

This item shall govern compaction of subgrade, embankment, flexible base, surface treatments and asphalt surfaces by the operation of approved power rollers as herein specified and as directed by the Engineer or designated representative.

This specification is applicable for projects or work involving either inch-pound or SI units. Within the text and accompanying tables, the inch-pound units are given preference followed by SI units shown within parentheses.

230S.2 Submittals

The submittal requirements of this specification item may include:

A. A plan describing the condition of each roller proposed for the work, as well as the type, size, weight, configuration (three wheel, tandem, etc) for each individual roller, and
B. The operating speed proposed for each individual roller.

230S.3 Equipment

A. Embankments and Flexible Bases

Power rollers shall be of the 3-wheel, self-propelled type, weighing not less than 10 tons (9 megagrams) and shall provide compression on the rear wheels of not less than 325 pounds per linear inch (5.80 kilograms per linear millimeter) of wheel width. All wheels shall be flat. The rear wheels shall have a diameter of not less than 48 inches (1.2 meters) and each shall have a wheel width of not less than 20 inches (510 millimeters).

B. Surface Treatments and Pavements

Power rollers shall be the 3-wheel or tandem, self-propelled type, weighing not less than 3 tons (2.7 megagrams) nor more than 6 tons (5.4 megagrams). All wheels shall be flat. Rollers shall be equipped with an adequate scraping or cleaning device on each wheel. Rollers used to compact asphalt mixture shall be equipped with a water system, which will keep all tires uniformly wet.

In lieu of the rolling equipment specified, the Contractor may, upon written permission from the Engineer or designated representative, operate other compacting equipment that will produce equivalent relative compaction in the same period of time as the specified equipment. If the substituted compaction equipment fails to produce the desired compaction within the same period of time as would be expected of the specified equipment, as determined by the Engineer or designated representative, its use shall be discontinued and the Contractor will be required to furnish the specified equipment.

Rollers shall be maintained in good repair and operating condition and shall be approved by the Engineer or designated representative.

230S.4 Construction Methods

This work shall only be conducted at the direction of the Engineer or designated representative. A sufficient number of rollers shall be provided to compact the material in a satisfactory manner. When operations are isolated and a single roller unit cannot produce the required compaction satisfactorily, additional roller units shall be provided.

A. Subgrades, Embankments and Flexible Base

The subgrade, embankment layer or base course shall be sprinkled, if required by Standard Specification Item Nos. 201S, "Subgrade Preparation" and 210S, "Flexible Base". Rolling with a power roller shall start longitudinally at the sides of the designated area and proceed towards the center, overlapping on successive trips by at least 1/2 the width of the rear wheel of the power roller. On superelevated curves, rolling shall begin at the low sides and progress toward the high sides. Alternate trips of the roller shall be slightly different in length. Rolling shall be conducted in accordance with Standard Specification Item Nos. 201S, "Subgrade Preparation" and 210S, "Flexible Base". The rollers, unless otherwise directed by the Engineer or designated representative, shall be operated at a speed between 2 and 3 miles (3 and 5 kilometers) per hour.

B. Surface Treatments and Pavements

Rolling shall be done as called for in the surface treatment (Items 310S and 320S) and asphalt pavement (Item 340S) Standard Specification Items. The sequence of work shall be as specified above for embankment layer or base course. The operating speed shall be determined by the Contractor and approved by the Engineer or designated representative.

230S.4 Measurement and Payment

Compensation will not be allowed for materials, equipment or labor required by this item, but shall be included in the unit price bid for the item of construction in which this item is used.

End

SPECIFIC CROSS REFERENCE MATERIALS
Specification 230S, "ROLLING (FLATWHEEL)"

City of Austin Standard Specifications

Designation	Description
Item No. 201S	Subgrade Preparation
Item No. 210S	Flexible Base
Item No. 310S	Emulsified Asphalt Treatment
Item No. 320S	Two Course Surface Treatment

RELATED CROSS REFERENCE MATERIALS
Specification 230S, "ROLLING (FLATWHEEL)"

City of Austin Standard Specifications

Designation	**Description**
Item No. 101S	Preparing Right of Way
Item No. 102S	Clearing and Grubbing
Item No. 104S	Removing Portland Cement Concrete
Item No. 110S	Street Excavation
Item No. 111S	Excavation
Item No. 130S	Borrow
Item No. 132S	Embankment
Item No. 202S	Hydrated Lime and Lime Slurry
Item No. 203S	Lime Treatment for Materials in Place
Item No. 232S	Rolling (Pneumatic Tire)
Item No. 236S	Proof Rolling
Item No. 301S	Asphalts, Oils and Emulsions
Item No. 306S	Prime Coat
Item No. 307S	Tack Coat
Item No. 402S	Controlled Low Strength Material
Item No. 403S	Concrete for Structures

City of Austin Standard Details

Designation	**Description**
No. 1000S-10	Local Street Sections
No. 1000S-11(1)	Residential and City of Austin Neighborhood Collector Street Sections
No. 1000S-11(2)	Industrial and Commercial Collector Street Sections
No. 1000S-12(1)	Primary Collector Street Sections
No. 1000S-12(2)	Primary Arterial Street Sections
No. 1000S-13(1)	Minor Arterial Street Sections (4 Lanes)
No. 1000S-13(2)	Minor Arterial Street Sections- (4 Lanes divided)
No. 1000S-14	Major Arterial Street Sections

Texas Department of Transportation: Standard Specifications for Construction and Maintenance of Highways, Streets, and Bridges

Designation	Description
Item No. 100	Preparing Right of Way
Item No. 110	Excavation
Item No. 112	Subgrade Widening
Item No. 132	Embankment
Item No. 150	Blading

Item No. 158	Specialized Excavation Work
Item No. 204	Sprinkling
Item No. 210	Rolling (Flat Wheel)
Item No. 211	Rolling (Tamping)
Item No. 264	Lime and Lime Slurry
Item No. 300	Asphalts, Oils and Emulsions
Item No. 301	Asphalt Anti-stripping Agents
Item No. 310	Prime Coat (Cutback Asphaltic Materials)
Item No. 314	Emulsified Asphalt Treatment
Item No. 316	Surface Treatments
Item No. 345	Asphalt Stabilized Base (Plant Mixed)

RELATED CROSS REFERENCE MATERIALS
Specification 230S, "ROLLING (FLATWHEEL)"

Texas Department of Transportation: Manual of Testing Procedures

Designation	Description
Tex-101-E	Surveying and Sampling Soils for Highways
Tex-103-E	Determination of Moisture Content of Soil Materials
Tex-104-E	Determination of Liquid Limit of Soils
Tex-105-E	Determination of Plastic limit of Soils
Tex-106-E	Method of Calculating the Plasticity Index of Soils
Tex-114-E	Laboratory Compaction Characteristics & Moisture Density Relationship of Subgrade & Embankment Soil
Tex-115-E	Field Method for Determination of In-Place Density of Soils & Base Materials
Tex-117-E	Triaxial Compression Tests for Disturbed Soils and Base Materials
Tex-120-E	Soil Cement Testing
Tex-121-E	Soil Lime Testing
Tex-126-E	Molding, Testing and Evaluation of Bituminous Black Base
Tex-207-F	Determination of Density of Compacted Bituminous Mixtures
Tex-210-F	Determination of Asphalt Content of Bituminous Mixtures by Extraction
Tex-222-F	Method of Sampling Bituminous Mixtures
Tex-228-F	Determination of Asphalt Content of Bituminous Mixtures By The Nuclear Method
Tex-600-J	Sampling and Testing of Hydrated Lime, Quicklime & Commercial Lime Slurry

Item No. 232S
Rolling (Pneumatic Tire)

232S.1 Description

This item shall govern compaction of embankment, flexible base, surface treatments or pavements by the operation of approved pneumatic tire rollers as herein specified and as directed by the Engineer or designated representative.

This specification is applicable for projects or work involving either inch-pound or SI units. Within the text and accompanying tables, the inch-pound units are given preference followed by SI units shown within parentheses.

232S.2 Submittals

The submittal requirements of this specification item may include:

A. A plan describing the condition of each roller proposed for the work, as well as the type of traction (self propelled or drawn), Type, size, weight, tire pressure and configuration for each individual roller, and

B. The operating speed proposed for each individual roller.

232S.3 Equipment

A. General Requirements

When used on seal coats, asphaltic surface treatments and bituminous mixture pavements, the roller shall be self propelled and equipped with smooth tread tires whether "Rolling (Light Pneumatic Tire)" or "Rolling (Medium Pneumatic Tire)" is specified on the Drawings. The roller shall be so constructed as to be capable of being operated in both a forward and a reverse direction. When used on bituminous mixture pavements, the roller shall have suitable provisions for moistening the surface of the tires while operating.

When turning is impractical or detrimental to the work and when specifically directed by the Engineer or designated representative, the roller shall be capable of being operated in a forward or backward motion.

In lieu of the rolling equipment specified, the Contractor may, upon written permission of the Engineer or designated representative, operate other compacting equipment that will produce equivalent relative compaction in the same period of time as the specified equipment. If the substituted compaction equipment fails to produce the desired compaction within the same period of time as would be expected of the specified equipment, as determined by the Engineer or designated representative, its use shall be discontinued and the Contractor will be required to furnish the specified equipment.

Rollers shall be maintained in good repair and operating condition and shall be approved by the Engineer or designated representative.

Tire pressure is critical to successful operation of the roller. The Contractor shall have equipment on the construction site to inflate tires as required.

B. Light Pneumatic Tire Roller

The light pneumatic tire roller shall consist of not less than 9 pneumatic tired wheels, running on axles in such manner that the rear group of tires will cover the entire gap between adjacent tires of the forward group and mounted in a rigid frame and provided with a loading platform or body suitable for ballast loading. The front axle shall be attached to the frame in such a manner that the roller may be turned within a minimum circle. The pneumatic tire roller, under working conditions, shall have an effective rolling width of approximately 60 inches (1.5 meters) and shall be so designed that by ballast loading, the total load may be varied uniformly from 9,000 pounds (4 megagrams) or less to 18,000 pounds (8 megagrams) or more. The roller shall be equipped with tires that will afford ground contact pressures to 45 pounds per square inch (310 kiloPascals) or more. The operating load and tire air pressure shall be within the range of the manufacturer's chart or tabulations showing the contact areas and contact pressures for the full range of tire inflation pressures and for the full range of loadings for the particular tires furnished. The roller under working conditions shall provide a uniform compression under all wheels. Individual tire inflation pressures shall be within + 5 psi (+ 34 kiloPascals) of each other. The pneumatic tire roller shall be drawn by a suitable crawler type tractor, a pneumatic tired tractor, a truck of adequate tractive effort or may be of the self-propelled type. The roller, when drawn or propelled by either type of equipment, shall be considered a light pneumatic tire roller unit.

C. Medium Pneumatic Tire Roller (Type A)

The medium pneumatic tire roller (Type A) shall consist of not less than 7 pneumatic tired wheels, running on axles in such manner that the rear group of tires will cover the entire gap between adjacent tires of the forward group and mounted in a rigid frame and provided with a loading platform or body suitable for ballast loading. The front axle shall be attached to the frame in such a manner that the roller may be turned within a minimum circle. The pneumatic tire roller, under working conditions, shall have an effective rolling width of approximately 84 inches (2.1 meters) and shall be so designed that, by ballast loading, the total load may be varied uniformly from 23,500 pounds (10.5 megagrams) or less to 50,000 pounds (22.5 megagrams) or more. The roller shall be equipped with tires that will afford ground contact pressures of 80 pounds per square inch (550 kiloPascals) or more. The operating load and tire air pressure shall be within the range of the manufacturer’s chart. The roller under working conditions shall provide a uniform compression under all wheels. Individual tire inflation pressures shall be within + 5 psi (+ 34 kiloPascals) of each other.

The pneumatic tire roller shall be drawn by a suitable crawler type tractor, a pneumatic tired tractor, a truck of adequate tractive effort or may be of the self-propelled type. The roller, when drawn or propelled by any type of equipment, shall be considered a medium pneumatic tire roller unit. The power unit shall have adequate tractive effort to properly move the operating roller at variable uniform speeds up to approximately 5 miles per hour (8 kilometers per hour).

D. Medium Pneumatic Tire Roller (Type B)

The medium pneumatic tire roller (Type B) shall conform to the requirements for Medium Pneumatic Tire Roller (Type A) as specified above, except that the roller shall be equipped with tires that will afford ground contact pressures to 90 psi (620 kiloPascals) or more.

232S.4 Construction Methods

The embankment layer or the base course shall be sprinkled in accordance with Standard Specification Item Nos. 201S, "Subgrade Preparation" and 210S, "Flexible Base". Rolling with a pneumatic tire roller shall start longitudinally at the sides of the designated area and shall proceed towards the center, overlapping on successive trips by at least 1/2 of the width of the pneumatic tire roller. On superelevated curves, rolling shall begin at the low sides and progress toward the high sides. Alternate trips of the roller shall be slightly different in length.

The light pneumatic tire roller shall be operated at speeds, which shall be between 3 and 11 miles per hour (between 6 and 19 kilometers per hour) for asphalt surfacing work and between 2 and 6 miles per hour (between 3 and 10 kilometers per hour) for all other work.

The medium pneumatic tire roller shall be operated at speeds as directed by the Engineer or designated representative, which produce a satisfactory product.

Sufficient rollers shall be provided to compact the material in a satisfactory manner. When operations are so isolated from one another that 1 roller unit cannot produce the required compaction satisfactorily, additional roller units shall be provided.

232S.5 Measurement and Payment

Compensation will not be allowed for materials, equipment or labor required by this item. These items shall be included in the unit price bid for the item of construction in which this item is used.

End

SPECIFIC CROSS REFERENCE MATERIALS
Specification 232S, "Rolling (Pneumatic Tire)"

City of Austin Standard Specifications

Designation	Description
Item No. 201S	Subgrade Preparation
Item No. 210S	Flexible Base

RELATED CROSS REFERENCE MATERIALS

City of Austin Contract Documents

Designation	Description
Section 00700	General Conditions

City of Austin Standard Specifications

Designation	Description
Item No. 101S	Preparing Right of Way
Item No. 102S	Clearing and Grubbing
Item No. 110S	Street Excavation
Item No. 111S	Excavation
Item No. 130S	Borrow
Item No. 132S	Embankment
Item No. 202S	Hydrated Lime and Lime Slurry
Item No. 203S	Lime Treatment for Materials in Place
Item No. 230S	Rolling (Flat Wheel)

RELATED CROSS REFERENCE MATERIALS-Continued

Specification 232S, "Rolling (Pneumatic Tire)"

City of Austin Standard Specifications

Designation	Description
Item No. 236S	Proof Rolling
Item No. 301S	Asphalts, Oils and Emulsions
Item No. 306S	Prime Coat
Item No. 307S	Tack Coat
Item No. 310S	Emulsified Asphalt Treatment
Item No. 320S	Two Course Surface Treatment
Item No. 340S	Hot Mix Asphaltic Concrete Pavement
Item No. 402S	Controlled Low Strength Material
Item No. 403S	Concrete for Structures

City of Austin Standard Details

Designation	Description
No. 1000S-10	Local Street Sections
No. 1000S-11(1)	Residential and City of Austin Neighborhood Collector Street Sections
No. 1000S-11(2)	Industrial and Commercial Collector Street Sections
No. 1000S-12(1)	Primary Collector Street Sections
No. 1000S-12(2)	Primary Arterial Street Sections
No. 1000S-13(1)	Minor Arterial Street Sections (4 Lanes)
No. 1000S-13(2)	Minor Arterial Street Sections- (4 Lanes divided)
No. 1000S-14	Major Arterial Street Sections

Texas Department of Transportation: Standard Specifications for Construction and Maintenance of Highways, Streets, and Bridges

Designation	Description
Item No. 100	Preparing Right of Way
Item No. 110	Excavation
Item No. 112	Subgrade Widening
Item No. 132	Embankment
Item No. 150	Blading
Item No. 158	Specialized Excavation Work
Item No. 204	Sprinkling
Item No. 210	Rolling (Flat Wheel)
Item No. 211	Rolling (Tamping)
Item No. 213	Rolling (Pneumatic Tire)
Item No. 264	Lime and Lime Slurry
Item No. 300	Asphalts, Oils and Emulsions
Item No. 301	Asphalt Anti-stripping Agents
Item No. 310	Prime Coat (Cutback Asphaltic Materials)
Item No. 314	Emulsified Asphalt Treatment
Item No. 316	Surface Treatments
Item No. 345	Asphalt Stabilized Base (Plant Mixed)

Texas Department of Transportation: Manual of Testing Procedures

Designation	Description
Tex-101-E	Surveying and Sampling Soils for Highways
Tex-103-E	Determination of Moisture Content of Soil Materials
Tex-104-E	Determination of Liquid Limit of Soils
Tex-105-E	Determination of Plastic limit of Soils
Tex-106-E	Method of Calculating the Plasticity Index of Soils

RELATED CROSS REFERENCE MATERIALS-Continued

Specification 232S, “Rolling (Pneumatic Tire)”

Texas Department of Transportation: Manual of Testing Procedures

Designation	Description
Tex-114-E	Laboratory Compaction Characteristics & Moisture Density Relationship of Subgrade & Embankment Soil
Tex-115-E	Field Method for Determination of In-Place Density of Soil & Base Materials
Tex-117-E	Triaxial Compression Tests for Disturbed Soils and Base Materials
Tex-120-E	Soil Cement Testing
Tex-121-E	Soil Lime Testing
Tex-126-E	Molding, Testing and Evaluation of Bituminous Black Base Materials
Tex-207-F	Determination of Density of Compacted Bituminous Mixtures
Tex-210-F	Determination of Asphalt Content of Bituminous Mixtures by Extraction
Tex-228-F	Determination of Asphalt Content of Bituminous Mixtures By The Nuclear Method
Tex-600-J	Sampling and Testing of Hydrated Lime, Quicklime & Commercial Lime Slurry

Item No. 236S
Proof Rolling

236S.1 Description

This item shall govern furnishing and operating heavy pneumatic tired compaction equipment for locating unstable areas of embankment, subgrade and flexible base courses.

This specification is applicable for projects or work involving either inch-pound or SI units. Within the text, the inch-pound units are given preference followed by SI units shown within parentheses.

236S.2 Submittals

The submittal requirements of this specification item may include:

A. A plan describing the condition of each roller proposed for the work, as well as the type of traction (self propelled or drawn), Type of roller, size, weight, tire pressure (if appropriate) and configuration of each individual roller, and

B. The operating speed proposed for each individual roller.

236S.3 Equipment

A. Standard Proof Roller:

The proof rolling equipment shall have a loading platform or body suitable for ballast loading that is supported on a minimum of two (2) axles with not more than two (2) pneumatic tired wheels per axle. All wheels shall be arranged so that they will carry approximately equal loads when operating on uneven surfaces. Pneumatic proof rolling equipment with multiple pivotal axles and more than two tires along the front or rear axle axis shall have articulating axle supports to equally distribute the load to all tires over uneven surfaces.

The proof roller unit, under working conditions, shall have a minimum contact width of 7-1/2 feet (2.3 meters) and shall be so designed that the gross roller weight may be varied uniformly from 25 tons to 50 tons (23 megagrams to 45 megagrams) by ballast loading. The tires shall be capable of operating under various loads with variable air pressures up to 145 psi (up to 1000 kiloPascals). The tires shall be smooth tread and shall impart a minimum ground contact pressure of 75 pounds per square inch (520 kiloPascals). Tires shall be practically full of liquid (i.e. when liquid will flow from the valve stem of a fully inflated tire with the stem in the uppermost position). The operating load and tire pressure shall be within the range of the manufacturer's chart as directed by the Engineer or designated representative.

The proof roller shall be drawn by a power train of adequate tractive effort or may be of a self-propelled type. The proof rolling equipment shall be equipped with a reverse mode transmission or be capable of turning 180 degrees in the street width. When a separate power train is used to draw the proof roller, the power train weight shall not be considered in the weight of the proof roller. The power train shall be rubber-tired when rolling subgrade and base materials. A cleated or track-type power train may be used on earth and rock embankments.

B. Alternate Equipment:

With the written approval of the Engineer or designated representative, the Contractor may utilize alternate equipment on embankment courses, subgrade and base courses subject to the requirements of the standard proof roller except with respect to minimum contact width, axle/tire arrangement and tire tread.

Alternate equipment for stability testing of embankments shall be restricted to equipment that can be shown to impart a stress distribution on the embankment structure equivalent to or greater than the stress induced by the concentrated weight of a standard proof roller.

C. Equipment Submittals:

All standard proof rollers and proposed alternate equipment must be approved by the Engineer or designated representative prior to their use. The Contractor shall furnish the Engineer or designated representative with charts or tabulations showing the contact areas and contact pressures for the full range of tire inflation pressures and for the full range of loadings for the particular tires furnished.

Alternate equipment submittals for proof rolling of embankments shall be signed and sealed by a registered Professional Engineer licensed in the State of Texas.

236S.4 Construction Methods

A. General:

Within the ranges set forth in Section 236S.3, the load and tire inflation pressures shall be adjusted as directed by the Engineer or designated representative. It is proposed to use a contact pressure corresponding as nearly as practical to the maximum supporting value of the earthwork or base. The entirety of prepared surfaces to be tested by this method shall be proof rolled by a minimum of two passes of the proof roller tires. Each succeeding trip of the proof roller shall be offset by not greater than one tire width.

When alternate equipment is proposed and only one axle meets minimum requirements, only the qualifying axle shall be used to proof roll. If the operation of the proof roller shows an area to be unstable, the substandard area shall be brought to satisfactory stability and uniformity by additional curing, compaction, or by removal and replacement of unsuitable materials. The re-worked area shall then be proof rolled.

Proof rollers shall be operated at speeds between 2 and 6 miles per hour (3 and 10 kilometers per hour) or as directed by the Engineer or designated representative.

Acceptable limits of elastic and plastic deformation of prepared subgrade courses shall be established by proof rolling Test Sections of representative soil conditions, previously tested and approved for density and moisture requirements of the governing subgrade and earth embankment items. Proof rolling of first course base over a plastic subgrade may be waived by the Engineer or designated representative if it is determined that the prepared first course base will be damaged by the proof roller.

B. Roadway Construction:

The subgrade and all lifts of base material shall be proof rolled in new roadway construction and in the reconstruction of existing streets. Proof rolling of the curb course base shall be substituted for proof rolling of final course base at the direction of the Engineer or designated representative. Proof rolling may be waived by the Engineer or designated representative where construction is limited to turn lanes, street widening less than 7-1/2 feet (2.3 meters) in width, or where the site is otherwise congested.

C. Trenches:

Trenches shall be proof rolled where no limitations to the operation of the proof roller exist as may be determined by the Engineer subject to the provisions hereunder.

All trenches shall be proof rolled in new roadways or in existing roadways under reconstruction. Trenches shall be proof rolled at the street subgrade elevation by longitudinal and perpendicular passes of the roller as may be dictated by the width of the trench.

Proof rolling of trenches in existing paved streets shall be limited to pavement cross-sections capable of sustaining the weight of the proof rolling equipment without imparting damage to the remaining pavement structure as determined by the Engineer. Trenches less than 4 feet (1.2 meters) in width shall be exempted of all proof rolling requirements. Only the final course base shall be proof rolled in trenches 4 feet (1.2 meters) or wider but narrower than the proof roller contact width. The subgrade, the first course and the final course base shall be proof rolled in trenches 7-1/2 feet (2.3 meters) or wider.

D. Embankment Construction:

All embankment courses shall be proof rolled, unless otherwise directed by the Engineer or designated representative.

If required by the Engineer or designated representative, stability testing of embankments constructed to the finished cross-section and elevation or to interim elevations shall either be conducted with a standard proof roller or alternate equipment, which can be proven to impart a horizontal and vertical pressure distributions equivalent to or greater than those induced by a standard proof roller.

236S.5 Measurement and Payment

No direct payment will be made for the materials, equipment or labor required by this item, but shall be included in the unit price bid for the item of construction in which this item is used.

End

RELATED CROSS REFERENCE MATERIALS
Specification Item 236S, “Proof Rolling”

City of Austin Contract Documents

Designation	Description
Section 00700	General Conditions

City of Austin Standard Specifications

Designation	Description
Item No. 101S	Preparing Right of Way
Item No. 102S	Clearing and Grubbing
Item No. 110S	Street Excavation
Item No. 111S	Excavation
Item No. 130S	Borrow
Item No. 132S	Embankment

RELATED CROSS REFERENCE MATERIALS-Continued
Specification 236S, “Proof Rolling”

City of Austin Standard Specifications

Designation	Description
Item No. 201S	Subgrade Preparation
Item No. 202S	Hydrated Lime and Lime Slurry
Item No. 203S	Lime Treatment for Materials in Place
Item No. 204S	Portland Cement Treatment For Materials in Place
Item No. 206S	Asphalt Stabilized Base (Plant Mix)
Item No. 210S	Flexible Base
Item No. 230S	Rolling (Flat Wheel)
Item No. 232S	Rolling (Pneumatic Tire)
Item No. 234S	Rolling (Tamping)
Item No. 301S	Asphalts, Oils and Emulsions
Item No. 306S	Prime Coat
Item No. 307S	Tack Coat
Item No. 310S	Emulsified Asphalt Treatment
Item No. 320S	Two Course Surface Treatment
Item No. 340S	Hot Mix Asphaltic Concrete Pavement
Item No. 402S	Controlled Low Strength Material
Item No. 403S	Concrete for Structures

City of Austin Standard Details

Designation	Description
No. 1000S-10	Local Street Sections
No. 1000S-11(1)	Residential and City of Austin Neighborhood Collector Street Sections
No. 1000S-11(2)	Industrial and Commercial Collector Street Sections
No. 1000S-12(1)	Primary Collector Street Sections
No. 1000S-12(2)	Primary Arterial Street Sections
No. 1000S-13(1)	Minor Arterial Street Sections (4 Lanes)
No.1000S-13 (2)	Minor Arterial Street Sections- (4 Lanes divided)
No. 1000S-14	Major Arterial Street Sections

Texas Department of Transportation: Standard Specifications for Construction and Maintenance of Highways, Streets, and Bridges

Designation	Description
Item No. 100	Preparing Right of Way
Item No. 110	Excavation
Item No. 112	Subgrade Widening
Item No. 132	Embankment
Item No. 150	Blading
Item No. 158	Specialized Excavation Work
Item No. 204	Sprinkling
Item No. 210	Rolling (Flat Wheel)
Item No. 211	Rolling (Tamping)
Item No. 213	Rolling (Pneumatic Tire)
Item No. 264	Lime and Lime Slurry
Item No. 300	Asphalts, Oils and Emulsions
Item No. 301	Asphalt Anti-stripping Agents
Item No. 310	Prime Coat (Cutback Asphaltic Materials)
Item No. 314	Emulsified Asphalt Treatment
Item No. 316	Surface Treatments
Item No. 345	Asphalt Stabilized Base (Plant Mixed)

RELATED CROSS REFERENCE MATERIALS-Continued
Specification 236S, “Proof Rolling”

Texas Department of Transportation: Manual of Testing Procedures

Designation	Description
Tex-101-E	Surveying and Sampling Soils for Highways
Tex-103-E	Determination of Moisture Content of Soil Materials
Tex-104-E	Determination of Liquid Limit of Soils
Tex-105-E	Determination of Plastic limit of Soils
Tex-106-E	Method of Calculating the Plasticity Index of Soils
Tex-114-E	Laboratory Compaction Characteristics & Moisture Density Relationship of Subgrade & Embankment Soil
Tex-115-E	Field Method for Determination of In-Place Density of Soils & Base Materials
Tex-117-E	Triaxial Compression Tests for Disturbed Soil and Base Materials
Tex-120-E	Soil Cement Testing
Tex-121-E	Soil Lime Testing
Tex-126-E	Molding, Testing and Evaluation of Bituminous Black Base Materials
Tex-207-F	Determination of Density of Compacted Bituminous Mixtures
Tex-210-F	Determination of Asphalt Content of Bituminous Mixtures
Tex-600-J	Sampling and Testing of Hydrated Lime, Quicklime & Commercial Lime Slurry

Item No. 340S
Hot Mix Asphaltic Concrete Pavement

340S.1 Description

This item shall govern base, level up, and pavement surface courses composed of a compacted mixture of aggregate and asphaltic cement mixed hot in a mixing plant. The hot mix asphaltic (HMA) concrete pavement shall be constructed on a previously completed and approved subgrade, subbase material, base material, concrete slab or existing pavement.

This specification is applicable for projects or work involving either inch-pound or SI units. Within the text and accompanying tables, the inch-pound units are given preference followed by SI units shown within parentheses.

340S.2 Submittals

The submittal requirements of this specification item may include:

A. A mix design submittal including the plant corrected Job Mix Formula (JMF) for the hot mix asphaltic concrete,
B. Certification that the aggregate materials meet appropriate quality requirements.
C. Particle-size gradation and specific gravity tests on all aggregate materials.
D. Certification that the asphalt cement for paving materials meet appropriate quality requirements.

340S.3 Materials

The Contractor shall furnish materials to meet the requirements specified herein and shall be solely responsible for the quality and consistency of the product delivered to the Project.

A. Aggregate: The aggregate shall be composed of coarse aggregate, a fine aggregate and, if required or allowed, mineral filler and reclaimed asphalt pavement (RAP). RAP use will be allowed in all base course mixtures except as specifically excluded herein, in the Contract Documents or on the Drawings, provided no more than 20% RAP is used.

   RAP use will not be permitted in pavement surface courses.

   Aggregates shall meet the quality requirements of Table 1 and other requirements as specified herein. The aggregate contained in RAP will not be required to meet Table 1 requirements unless indicated otherwise on the Drawings.

   1. Coarse Aggregate: Coarse aggregate is defined as that part of the aggregate retained on the No. 10 (2.00 mm) sieve and shall consist of clean, tough, durable fragments of crushed stone or crushed gravel of uniform quality throughout.

      Gravel from each source shall be crushed to the extent that it has a minimum of 85% of the particles retained on the No. 4 (4.75 mm) sieve with two or more mechanically induced crushed faces as determined by TxDOT Test Method TEX-460-A (Part I). The material passing the No. 4 (4.75 mm) sieve and retained on the No. 10 (2.00 mm) sieve must be the produced from crushing aggregate that was originally retained on the No. 4 (4.75 mm) sieve.

   2. Reclaimed Asphalt Pavement (RAP): RAP is defined as a salvaged, milled, pulverized, broken or crushed asphaltic pavement. The RAP to be used in the mix shall be crushed or broken to the extent that 100 percent will pass the 2-inch (50 mm) sieve.

The RAP shall be stockpiled in such a manner that assures that it will not become contaminated by dirt or other objectionable materials. Unless indicated otherwise on the Drawings, stockpiled, crushed RAP must not exhibit a decantation more than 5 percent or a plasticity index more than 8, when tested in accordance with TxDOT Test Method Tex-406-A, Part I, or Test Method Tex-106-E, respectively.

3. Fine Aggregate: Fine aggregate is defined as that part of the aggregate passing the No. 10 (2.00 mm) sieve and shall be of uniform quality throughout. A maximum of 15 percent of the total aggregate may be field sand or other uncrushed fine aggregate.

   Screenings shall be supplied from sources whose coarse aggregate meets the abrasion and magnesium sulfate soundness loss requirements shown in Table 1.

   a) Unless indicated otherwise on the Drawings, stone screenings, which are the product of a rock crushing operation, are required and shall meet the following gradation requirements when tested in accordance with TxDOT Test Method Tex-200-F, Part I.

Material	Percent by Weight (Mass)
Passing 3/8 inch (9.50 mm) sieve	100
Passing No. 10 (2.00 mm) sieve	70-100
Passing No. 200 (75 µm) sieve	0-15

   b) Crushed gravel screenings may be used with, or in lieu of, stone screenings only when indicated on the Drawings. Crushed gravel screenings must be the product of crushing aggregate that was originally retained on the No. 4 (4.75 mm) sieve and must meet the gradation for stone screenings shown above.

4) Mineral Filler: Mineral filler shall consist of thoroughly dried stone dust, Portland cement, fly ash, lime or other mineral dust approved by the Engineer or designated representative. The mineral filler shall be free from foreign matter.

   Portland cement manufactured in a cement kiln fueled by hazardous waste shall be considered as an approved product if the production facility is authorized to operate under regulation of the Texas Natural Resource Conservation Commission (TNRCC) and the U. S. Environmental Protection Agency (EPA). Supplier shall provide current TNRCC and EPA authorizations to operate the facility.

   Fly ash obtained from a source using a process fueled by hazardous waste shall be considered as an approved product if the production facility is authorized to operate under regulation of the Texas Natural Resource Conservation Commission (TNRCC) and the U. S. Environmental Protection Agency (EPA). Supplier shall provide current TNRCC and EPA authorizations to operate the facility.

   The addition of baghouse fines or other collected fines will be permitted if the mixture quality is not adversely affected in the opinion of the Engineer or designated representative. In no case shall the amount of material passing the No. 200 (75 µm) sieve exceed the tolerances of the job-mix formula or the master gradation limits.

   When tested by TEX-200-F (Part I or Part III, as applicable), the mineral filler shall meet the following gradation requirements. Baghouse fines are not required to meet the gradation requirements.

Material	Percent by Weight (mass)
Passing No. 30 (600 µm) Sieve	95 - 100
Passing No. 80 (187.5 µm) Sieve, not less than	75
Passing No. 200 (75 µm) Sieve, not less than	55

TABLE 1: AGGREGATE QUALITY REQUIREMENTS *

Requirement	Test Method	Amount
COARSE AGGREGATE		
Deleterious Material, percent, maximum	Tex-217-F, I	1.5
Decantation, percent, maximum	Tex-217-F, II	1.5
Los Angeles Abrasion, percent, maximum	Tex-410-A	40
Magnesium Sulfate Soundness Loss 5 cycle, percent, maximum	Tex-410-A	30
FINE AGGREGATE		
Linear Shrinkage, maximum	Tex-107-E, II	3
COMBINED AGGREGATES		
Sand Equivalent Value, minimum	Tex-203-F	45

***** - Aggregates, without added mineral filler or additives, combined as used in the job-mix formula (Plant Corrected).

B. Asphaltic Material

1. Paving Mixture. Asphalt cement for the paving mixture shall conform to the requirements of Standard Specification Item No. 301S, "Asphalts, Oils and Emulsions", for AC-20 or PG64-22, Styrene (SBS) Modified Asphalt Cement, AC-SBS Blend AC-45P or PG76-22S, unless otherwise indicated in the Project Documents.

2. Tack Coat: Tack Coat shall conform to Standard Specification Item No. 307S, "Tack Coat".

C. Additives: Additives to facilitate mixing and/or improve the quality of the asphaltic mixture or tack coat may be used with the authorization of the Engineer or designated representative. The Contractor may choose to use either lime or a liquid anti-stripping agent to reduce moisture susceptibility of the aggregate.

340S.4 Paving Mixtures

An asphalt mixture design is developed by a laboratory process, which includes the determination of the quality and quantity of the asphalt cement and the individual aggregates, and the testing of the combined mixture (Laboratory Design). The Laboratory Design is subsequently revised to produce an appropriate job mix formula.

The job mix formula (JMF) lists the quantity of each component to be used in the mix after the laboratory design has been adjusted by running it through a particular plant (i.e. the mix design is Plant Corrected). The JMF will be the standard to which the Acceptance Plan will be applied. The JMF of one drum or batching unit shall not be used for another unit.

The Contractor shall submit to the Engineer on forms provided by the Engineer or designated representative, an asphalt mixture design reviewed, signed and sealed by a Registered Professional Engineer licensed in the State of Texas or certified by a TxDOT Level II Certified

Asphalt Technician. An asphalt mixture design shall be submitted for a comprehensive review every two (2) years. Mix designs older than one year will not be accepted without a review of current test data of the proposed materials and current mix design to ensure that the materials meet specification requirements.

The JMF (Plant Corrected) shall be submitted to the Engineer or designated representative on a form provided by the Engineer through the Construction Inspector or Project Manager of the Project for review, for each individual Project, a minimum of three (3) working days before the mixture is to be placed. Under no circumstances will a mixture be placed before its use is reviewed and approved by the Engineer or designated representative.

Performance of the mix design shall remain the responsibility of the Contractor.

A. Mixture Design: The mix shall be designed in accordance with TxDOT Construction Bulletin C-14 and Test Method Tex-204-F to conform with the requirements herein. The master grading limits of the appropriate type and the JMF will be plotted on a graduated chart with sieve sizes raised to the 0.45 power and will be submitted to the Engineer or designated representative with the asphalt mixture design.

   The Bulk Specific Gravity of aggregates in RAP will be determined on extracted aggregates.

B. Types: The blend of coarse aggregate, fine aggregate, and mineral filler, if allowed, that is established by TxDOT Test Method Tex-200-F, Dry Sieve Analysis, shall conform to the master gradation shown in Table 2 for the type of specified mixture. The voids in the mineral aggregate (VMA) will be determined as a mixture design requirement only, in accordance with TxDOT Test Method Tex-207-F, and shall not be less than the value indicated in Table 2.

TABLE 2: Master Grading - Percent Passing by Weight (Mass) or Volume

Sieve Size US (SI)	Type A Coarse Base	Type B Fine Base	Type C Coarse Surface	Type D Fine Surface	Type F Fine Mixture
1-1/2" (37.5 mm)	100				
1-1/4" " (31 mm)	95-100				
1" (25 mm)		100			
7/8" (22 mm)	70-90	95-100	100		
5/8 (15.5 mm)"		75-95	95-100		
1/2" (12.5 mm)	50-70			100	
3/8" (9.5 mm)		60-80	70-85	85-100	100
1/4" (6.25 mm)					95-100
No. 4 (4.75 mm)	30-50	40-60	43-63	50-70	
No. 10 (2.00 mm)	20-34	27-40	30-40	32-42	32-42
No. 40 (425 µm)	5-20	10-25	10-25	11-26	9-24
No. 80 (187.5 µm)	2-12	3-13	3-13	4-14	3-13
No. 200 (75 µm)	1-6*	1-6*	1-6*	1-6*	1-6*
VMA % minimum	11	12	13	14	15
Rec. Min. Lift	3" (75 mm)	2" (50 mm)	1-3/4" (45 mm)	1" (25 mm)	3/4" (20 mm)

C. Tolerances: Fluctuations in the aggregate gradation and asphalt content of the Job Mix Formula (JMF) shall not vary by more than the following criteria but the aggregate gradation shall be limited to the range of the master gradation as established by TEX-210-F.

SIEVES	Percent By Weight (Mass)
2" " (50 mm) Sieve through No. 10 " (2.00 mm) Sieve	±5.0
No. 40 (425 µm) through No. 200 (75 µm) Sieve	± 3.0
Asphalt Content	±0.5

D. Stability and Density: The mixture shall be designed at or near optimum density, as indicated on the Drawings, to conform to the following percent of Maximum Theoretical Density as measured by TxDOT Test Method TEX-227-F and Stability conforming to TxDOT Test Method TEX-208-F. The laboratory mixture shall be molded in accordance with TxDOT Test Method TEX-206-F and the Bulk Specific Gravity determined in accordance with TxDOT Test Method TEX-207-F.

	Optimum Laboratory Density (%)	Laboratory Density (%) Min.	Laboratory Density (%) Max.	Stability
Local Streets Surface Courses	96	94.5	97.5	35 Min.
Collectors & Arterials Surface Courses	96	94.5	97.5	40-60
All Base Courses	96	94.5	97.5	35 Min.

E. Job Mix Formula Field Adjustments: The Contractor shall produce a mixture of uniform composition closely conforming to the reviewed JMF, that falls within the limits of the tolerances given above and the Acceptance Plan.

If it is determined by the City of Austin that adjustments to the JMF are necessary to achieve the specified requirements, the Engineer or designated representative may allow adjustments of the JMF within the following limits without a laboratory redesign of the mixture. The adjusted JMF shall not exceed the master grading criteria for the type of mixture specified. The proposed JMF adjustments shall not exceed 5 percent on any one sieve, ½-inch (12.5 mm) size and larger, or 3 percent on the sieve size below the 1/2-inch (12.5 mm) sieve of the JMF (Plant Corrected) reviewed for the Project.

When the proposed adjustments exceed either the 5 or 3 percent limits, and the Engineer or designated representative determines that the impact of these changes may adversely affect pavement performance, a new laboratory mixture design will be required.

The asphalt content may be adjusted with the concurrence of the Engineer or designated representative to maintain desirable laboratory density near the optimum value while achieving other mix requirements. However, increasing the asphalt content of the mixture in order to reduce pavement air voids will not be allowed. Also, if the percent air voids is determined to be less than 4 percent, adjustments shall be made to the plant production by the Contractor, within the tolerances as outlined above, so that an adequate air void level is attained.

340S.5 Equipment

The trucks that deliver the hot mix asphalt concrete material to the project shall be of sufficient number to insure a continuous paving operation. All equipment used for the production, placement and compaction of the mixture shall be maintained in good repair and operating

conditions to the satisfaction of the Engineer or designated representative. All equipment shall be made available for inspection. If the Engineer or designated representative expresses concern about the condition of any equipment, it shall not be used until it is repaired to the satisfaction of the Engineer or designated representative.

A. Mixing Plants: Plants may be of the weigh-batch type, the modified weigh-batch type or drum-mix type equipped with suitable material conveyers, power units, mixing equipment, aggregate proportioning devices, dryers, bins, dust collectors and sensing and recording devices as appropriate for the mixing plant type. The mixing plants shall meet the requirements specified in Section 340.4, 'Equipment' of TxDOT Specification Item No. 340, "Hot Mix Asphaltic Concrete Pavement".

B. Spreading and Finishing Paving Machine: The paving machine shall be self-propelled and equipped with a heated compacting screed capable of producing a finish surface meeting the requirements of the street cross-section indicated on the Drawings and all surface criteria. Extensions to the screed shall have the same heating and compacting capabilities as the primary unit, except for use on variable depth tapered areas and/or as approved by the Engineer or designated representative.

   The paving machine shall be equipped with an approved automatic dual longitudinal screed control system and an automatic transverse screed control system. The longitudinal controls shall be capable of operating from any longitudinal grade reference including a string line, ski, mobile string line or matching shoe. Unless indicated otherwise on the Drawings, the Contractor may use any one of these grade references. The selected grade reference equipment shall be maintained in good operating condition by personnel trained in the use of the specific type of equipment.

   The Contractor shall furnish all labor and equipment required for establishing and maintaining appropriate grade reference.

C. Rollers: The Contractor shall select rollers conforming to Item 230S, "Rolling (Flat Wheel)" and Item 232S, "Rolling (Pneumatic Tire)". Rollers that do not conform to these requirements shall be immediately removed from the Project.

D. Motor Grader: A self-propelled power motor grader may only be used, when its use is approved by the Engineer or designated representative. It shall have a blade of not less than 12 feet (3.66 meters) and a wheelbase of not less than 16 feet (4.88 meters). Smaller graders may be used for small irregular areas when approved by the Engineer or designated representative.

E. Material Transfer Equipment: Equipment for transferring the HMA mixture from the hauling units or the roadbed to the spreading and finishing machine will be allowed unless indicated otherwise on the Drawings.

   Windrow pick-up equipment, if permitted by the Engineer or designated representative, shall be constructed in such a manner that substantially all of the HMA mixture deposited on the roadbed is picked up and loaded into the spreading and finishing machine. The HMA mixture shall not be contaminated with foreign material. The loading equipment shall be designed so that it does not interfere with the spreading and finishing machine in obtaining the required line, grade and surface without resorting to hand finishing.

F. Straightedges and Templates: The Contractor shall provide a ten-foot (3.05 meter) straightedge acceptable to the Engineer or designated representative for surface testing. Satisfactory templates shall be provided as required by the Engineer or designated representative.

340S.6 Stockpiling Aggregates

Aggregates shall be stockpiled to facilitate blending. When the aggregate is not stockpiled on a hard, non-contaminant base, the bottom six-inch (150 mm) depth of the stockpiles shall not be used in asphaltic mixtures. Where space is limited at the plant site, the aggregate stockpiles shall be separated by walls or other appropriate barriers.

Aggregates shall be stockpiled and handled in a manner that will insure minimization of segregation and contamination. Aggregate and RAP stockpiles shall only contain material from a single source.

340S.7 Mixture Temperature

The Contractor shall select a target temperature for discharge of the HMA mixture from the mixer between 250°F (120°C) and 350°F (176°C) that is suitable to weather and Project conditions. The target temperature shall be reported to the Engineer or designated representative daily and recorded in the Daily Progress Report. The HMA mixture temperature shall not vary by more than 25°F (14°C) from the target temperature for discharge from the mixer. HMA mixtures that are discharged from the mixer at a temperature exceeding 360°F (182°C) or a temperature more than 50°F (28°C) below the target temperature shall not be accepted and shall not be placed on the Project.

340S.8 Mixture Storage

A surge-storage system may be used to minimize production interruptions during a normal day of operation. When approved by the Engineer or designated representative, overnight storage of HMA mixture in insulated storage bins may be used provided that material temperature and physical properties of the HMA mixture are not adversely affected. HMA mixtures that include hardened lumps shall not be used. Stored HMA mixtures shall not be exempt from any requirements provided in this specification.

When a surge-storage system is used, it shall be equipped with a device such as a gob hopper or other device approved by the Engineer or designated representative to prevent segregation in the surge-storage bin.

340S.9 Mixture Moisture Content

Hot mix asphalt (HMA) mixtures produced from any plant shall not have a moisture content in excess of 1 percent by weight (mass) when discharged from the mixer. The moisture content shall be determined in accordance with TxDOT Test Method Tex-212-F, Part II, except that the sample shall be left in the oven a total of not less than four (4) hours.

340S10 Construction Methods

A General: The Contractor shall be responsible for the production, transportation, placement and compaction of the specified HMA paving mixture to the requirements of this specification. The Contractor shall also be responsible for providing a safe environment for inspection personnel to inspect the equipment and to acquire samples.

All hot mix asphalt concrete pavement surface courses shall be placed with a spreading and finishing (lay-down) machine only. All hot mix asphalt concrete pavement base layers with the possible exception of the first lift of the base layer shall also be placed with a

spreading and finishing (lay-down) machine. Longitudinal pavement joints shall be located under the proposed lane lines. Density tests shall be taken prior to opening to traffic.

The first lift of a base layer may be placed with a motor grader if approved in advance by the Engineer or designated representative. The loose measure thickness of this first lift shall not exceed 6 inches (150 mm). If placed with a motor grader, the first lift shall achieve a minimum in-place relative density of 89% as determined by TxDOT test procedures TEX-207-F and TEX-227-F. All subsequent lifts should be placed with a spreading and finishing (lay-down) machine and shall be subject to the requirements of Section 340S.12, "Acceptance Plan". Density tests will be taken randomly to confirm compliance with the specification requirements.

For hot mix asphalt overlays, an automatic screed shall be used with outriggers.

Any material delivered to the Project that by visual inspection can reasonably be expected not to meet specification requirements (i.e. segregated or burned material, deficient or excess asphalt, low mixing temperature, visible contaminants, etc.), as determined by the Engineer or designated representative, shall not be used or left in place.

Equipment shall be inspected prior to use and, if found to be defective or in an operating condition that could potentially affect the quality of the finished pavement, as determined by the Engineer or designated representative, its use shall not be allowed. Leakage of fuels, oils, grease, hydraulic or brake fluids or other contaminants onto the prepared surface or newly-laid HMA layer will not be allowed and may require replacement of the affected pavement area.

The HMA paving mixture, when placed with a spreading and finishing machine, shall not be placed when the air temperature is below 50°F (10°C) and is falling, but it may be placed when the air temperature is above 40°F (4°C) and is rising.

The paving mixture, when used as a level-up course or when spread with a motor grader, shall not be placed when the air temperature is below 60°F (15°C) and is falling, but it may be placed when the air temperature is 50°F (10°C) and is rising. An HMA layer with a thickness of 1-1/2 inches (37.5 mm) and less shall not be placed when the temperature of the surface on which the layer is to be placed is below 50°F (10°C). The temperature shall be taken in a shaded area away from artificial heat.

Additional surface temperature requirements may be included in the Contract Documents or indicated on the Drawings.

Surfaces to be paved shall be finished, primed, cured, broomed and tacked, as appropriate, to the satisfaction of the Engineer or designated representative. If the surface on which the first course of the paving mixture is to be placed is a flexible base course, and a cut-back asphalt is to be used as a prime coat, the flexible base shall have been primed and cured a minimum of 24 hours before the paving mixture may be placed. The 24-hour restriction will not apply to a flexible base that has been primed with material other than a cutback. However, the surface on which the tack coat and/or paving mixture are to be placed shall be in a dry condition.

Pavement shall be opened to traffic as soon as possible after temporary pavement markings or permanent markings are in place as indicated on the Drawings) or as directed by the Engineer or designated representative. Construction traffic allowed on pavements open to the public will be subject to all laws governing traffic on streets and highways.

B. Tack Coat: The surface upon which the tack is to be placed shall be cleaned thoroughly to the satisfaction of the Engineer or designated representative. The surface shall be given a

uniform application of tack coat as governed by Standard Specification Item No. 307S, "Tack Coat". The tack coat shall be applied, as directed by the Engineer or designated representative, with an approved sprayer at a rate not to exceed 0.05 gallons per square yard. (0.225 liters per square meter) of surface area. Where the paving mixture will adhere to the surface on which it is to be placed without the use of a tack coat, the tack coat may be eliminated when approved by the Engineer or designated representative. All contact surfaces of curbs, castings and all structures and all joints shall be painted with a thin uniform application of tack coat.

During the application of tack coat, care shall be taken to prevent splattering of adjacent pavement, curb and gutter and structures. Before the Work can be accepted, all splatter shall be removed by the Contractor at the Contractor's expense.

C. Transporting Hot Mix Asphaltic (HMA) Concrete: The HMA mixture shall be hauled to the Work site in tight vehicles that were previously cleaned of all foreign material. Dispatching of the vehicles shall normally be arranged so that all material delivered is placed and all rolling completed during daylight hours. Nighttime paving may be allowed, when approved in advance by the Engineer or designated representative.

In cool weather or for long hauls, truck bodies containing the HMA mixture shall be covered.

If necessary, to prevent the HMA mixture from adhering to the truck body, the inside of the truck may be given a light coating of a release agent satisfactory to the Engineer or designated representative.

D. HMA Placement: The HMA mixture shall be dumped and spread on the approved prepared surface with the spreading and finishing machine. When properly compacted, the finished pavement shall be smooth, of uniform texture and density and shall meet the requirements of the typical cross sections and the surface tests. In addition the placement of the HMA mixture shall be done without tearing, shoving, gouging or segregating the mixture and without producing streaks in the HMA layer.

Discharge of the HMA mixture into the finishing machine shall be controlled so that the spreading and finishing machine is not bounced or jarred and the required lines and grades shall be obtained without resorting to hand finishing except as permitted below in this Section.

Unless indicated otherwise on the Drawings, dumping of the HMA material in a windrow and then placing the HMA mixture in the finishing machine with windrow pick-up equipment will be permitted provided the temperature of the HMA mixture does not drop more than 50°F (28°C) below the target temperature before being placed by the finishing machine.

Under no circumstances will the HMA material be permitted to be dumped on or near the job site and then reloaded for hauling to the site of placement. Exceptions may be allowed if approved by the Engineer or designated representative.

The windrow pick-up equipment shall be operated in such a manner that substantially all the mixture deposited on the roadbed or prepared surface is picked up and loaded into the finishing machine without contamination by foreign material. The windrow pick-up equipment will also be so operated that the finishing machine will obtain the required line, grade and surface without resorting to hand finishing. Any operation of the windrow pick-up equipment resulting in accumulation and subsequent shedding of accumulated material into the HMA mixture will not be permitted.

When approved by the Engineer or designated representative, level-up courses may be spread with a motor grader that meets the requirements of this specification item.

The spreading and finishing machine shall be operated at a uniform forward speed consistent with the plant production rate, hauling capability and roller train capacity to result in a continuous operation. Stopping of the spreading and finishing machine between trucks is to be held to a minimum. If, in the opinion of the Engineer or designated representative, delivery of material is adversely affecting the condition of the HMA layer (excessive stopping of the spreading and finishing machine, loss of mixture temperature, etc.), the Engineer or designated representative may require paving operations to cease until acceptable methods are provided to minimize starting and stopping of the spreading and finishing machine.

The hopper gates of the spreading and finishing machine shall be adjusted to provide an adequate and consistent flow of material. This shall result in enough material being delivered to the augers so that they are operating approximately 85 percent of the time or more. The augers shall provide means to supply adequate flow of material to the center of the paver. Augers shall supply an adequate flow of material for the full width of the mat being placed, as approved by the Engineer or designated representative. Augers should be kept approximately one-half to three-quarters full of HMA mixture at all times during the paving operation.

When the HMA mixture is placed in a narrow strip along the edge of an existing pavement, or is used to level up small areas of an existing pavement or is placed in small irregular areas where the use of a finishing machine is not practical, the finishing machine may be eliminated when permitted by the Engineer or designated representative.

The paving material adjacent to castings and flush curb and gutter and structures shall be finished uniformly high so that when compacted, it will be slightly above but not more than 1/8 inch (3 mm) above the edge of the casting or gutter lip.

Construction joints of successive courses of HMA material shall be offset at least 6 inches (150 mm). Longitudinal joints in the layer shall be placed to coincide with lane lines as directed the Engineer or designated representative. Transverse joints shall be offset a minimum of 5 feet (1.5 meters).

E. Compaction: The pavement layers/lifts shall be compacted thoroughly and uniformly to obtain the compaction and cross section meeting the requirements indicated on the Drawings and this specification item.

Regardless of the method used for compaction, all rolling to achieve specified density shall cease before the temperature of the HMA mixture drops below 175°F (80°C).

Rolling with a pneumatic tire roller shall be used to seal the surface. Rolling with a tandem or other steel-wheel roller shall be provided if required to iron out any roller marks. Surface sealing and removal of roller marks may be accomplished at HMA temperatures below 175°F (80°C).

Vibratory rollers shall not be allowed in the vibrating mode on layers with a plan thickness less than 1-1/2 inches (37.5 mm).

The motion of the rollers shall be slow enough to avoid other than usual initial displacement. If any displacement occurs, it shall be corrected to the satisfaction of the Engineer or designated representative.

The roller shall not be allowed to stand on pavement, which has not been compacted to minimum density requirements. In order to prevent adhesion of the surface mixture to the steel-wheel rollers, the wheels shall be thoroughly moistened with water; however an excess

of water will not be allowed. Necessary precautions shall be taken to prevent the dropping of diesel, gasoline, oil, grease or other foreign matter on the pavement, either when the rollers are in operation or when standing.

The edges of the pavement along curbs, headers and similar structures, and all places not accessible to the roller, or in such positions as will not allow thorough compaction with the rollers, shall be thoroughly compacted with lightly oiled tamps.

Rolling with a trench roller will be required on widened areas, in trenches and other limited areas where satisfactory density cannot be obtained with the approved rollers.

340S.11 Sampling and Testing

The HMA mixture shall be tested daily at the Project site for conformance to specification requirements. The Engineer or designated representative shall utilize a random selection method to determine sample locations based on the Contractor's anticipated production. Each day's anticipated production shall be divided into three (3) essentially equal single-pass, sub-area lots. Each day's sample locations shall be equally distributed over the three (3) sub-areas. If, due to the weather or plant malfunctions, the Contractor’s daily-anticipated production is not attained, the random locations will not be recalculated. Also, no more than one location of the three (3) sub-areas shall be located in an irregular shaped area such as a cul-de-sac.

Unless directed otherwise by the Engineer or designated representative, a minimum of three bag samples and three correlating 6-inch (150-mm) cores will be obtained from each day's production.

Bag samples shall be taken during lay-down operations. The primary sampling point for the bag samples shall be from the windrow if a windrow elevator is used. If a windrow elevator is not used, the sample shall be taken from the middle of the paving machine hopper. This sampling location will require a stoppage in the paving operation in order for the Inspector to safely secure a sample from the hopper.

One core shall be taken for every 2,000 single-pass square yards (1 675 single-pass square meters) with a minimum of three (3) cores for all projects. One core shall be taken at the same station and pass sampled for each of the bag samples. Cores shall be taken by the City’s laboratory within 48 hours of pavement laydown unless otherwise directed by the Engineer or designated representative.

For total areas of less than 500 square yards (420 square meters), a total of only two bag samples and two correlating cores will be obtained. If the Contractor desires additional testing, it shall be at its own entire expense.

The Engineer or designated representative may alter, increase or waive the testing schedule to ensure that the Work performed and the material used meet specification requirements. Acceptability of the completed pavement shall be based on the average of test results for the Project as defined in Section 340S.12, "Acceptance Plan" of this item.

Gradation, asphalt content and stability value of the HMA mixture shall be reported for each of the bag samples. The stability value reported for each of the bag samples shall be the average of three (3) tests per bag.

Pavement thickness and density shall be determined from 6-inch (150 mm) field cores. For each day's placement, density of cores for which no corresponding bag samples were taken shall be determined by using the average Maximum Theoretical Density of the day's three (3) bag samples or as may otherwise be determined by the Engineer or designated representative.

When, in the opinion of the Engineer or designated representative, test results appear unrepresentative, additional testing may be authorized. The retesting will be at the expense of the Contractor and the results of the retesting shall be averaged with the results of the original testing. If the results of retesting indicate that the original test results were erroneous, the original test results will be discarded. In the instance of erroneous original test results the subsequent first set of retests will be at the expense of the City of Austin.

Pavements with low-density results may be recored; but the pavement shall not receive any additional compactive effort.

Pavements that will not or cannot be cored within 48 hours shall be closed to both public and construction traffic.

340S.12 Acceptance Plan

For the purpose of the Acceptance Plan only, the "Paving Project" of each of the specified mixture types shall be defined by the Engineer or designated representative before the paving operation begins

Considerations for defining the Paving Project shall include paving operations staged due to traffic considerations, pavement structural section (i.e. with varying layer thicknesses), time required for paving, changes to the Job Mix Formula, phasing of large projects, or other factors affecting the consistency in the production, lay-down/compaction, use of completed portions, and/or aging of in-place material.

Acceptability of the completed pavement structure for a Paving Project shall be based on all daily averages of three test results and when approved by the Engineer or designated representative the overall average of all test results for each of the mixture/layer types specified on the Drawings.

Pay adjustments for two or more acceptance factors shall be accumulative. Pay adjustments of 100% unit price reduction shall require removal and replacement of the Work. Replacement materials shall be subject to all requirements of this specification. Alternatively, the Engineer or designated representative may allow the Work to remain in place without payment provided that the Work is warranted for an extended period under conditions as determined by the Engineer or designated representative. The decision of the Engineer or designated representative related to the removal and replacement of the Work shall be the final authority.

A. Non-Pay-Adjustment Acceptance Factors:

1 Surface Characteristics: Unless otherwise directed by the Engineer or designated representative, all pavements shall be tested for smoothness. Surfaces shall be tested with a 10-foot (3.05 meter) straightedge parallel to the roadway centerline and perpendicular to the centerline on flat, cross-slope sections. Maximum allowable deviation in 10 feet shall be 1/8 inch (1-mm per meter) parallel to the centerline and 1/4 inch (2-mm per meter) perpendicular to the centerline. Sections exceeding these maximums shall be corrected to the satisfaction of the Engineer or designated representative. The completed surface must meet the approval of the Engineer or designated representative for surface smoothness, finish and appearance.

If the surface ravels, ruts or deteriorates in any manner prior to the end of the warranty period, it will be the Contractor's responsibility to correct this condition at its own entire expense to the satisfaction of the Engineer or designated representative in conformance with the requirements of this specification.

For HMAC rehabilitation and overlay projects, if cracks develop in the pavement surface within the one-year warranty period, the Contractor shall seal the cracks in accordance with Standard Specification Item No. 313S, "Cleaning and/or Sealing Joints and Cracks (Asphaltic Concrete). Payment for this work will be measured and paid for as Mobilization (LS) and Crack Sealing (LF).

For new HMAC roadways constructed in accordance with the Drawings and specifications, if cracks less than 1/4 inch (6 mm) in width develop in the pavement surface within the one year warranty period the Contractor shall seal the cracks in accordance with Standard Specification Item No. 313S, "Cleaning and/or Sealing Joints and Cracks (Asphaltic Concrete). Payment for this Work will be measured and paid for as Mobilization (LS) and Crack Sealing (LF).

If cracks equal to or greater than 1/4 inch (6 mm) in width develop in the pavement surface within the one-year warranty period, the cracking shall be reviewed and evaluated by the Engineer or designated representative before corrective action is taken.

2. Stability: Stability test results shall be used as indicators of potential problems. Where stability test results fall below the range specified in this specification, additional tests shall be taken as directed by the Engineer or designated representative for further evaluation and monitoring of the paving mixture. This additional stability testing will be at the expense of the Contractor. When, in the opinion of the Engineer or designated representative, the stability is deemed unacceptable for the intended use of the pavement, the paving mixture shall be removed and replaced to the limits indicated by test results or may be left in place on conditions acceptable to the Engineer or designated representative. When the paving mixture is removed and replaced, it shall be at the sole expense of the Contractor.

3. Laboratory Density: Laboratory density results as determined by TxDOT Test Method Tex-207-F shall be used as indicators of potential problems. Where laboratory density test results are less than 94.5% or more than 97.5% of mix design maximum density, additional tests shall be taken as directed by the Engineer or designated representative for further evaluation and monitoring of the paving mixture. This additional laboratory density testing will be at the expense of the Contractor. When, in the opinion of the Engineer or designated representative, the laboratory density is deemed unacceptable for the intended use of the pavement, the paving mixture shall be removed and replaced to the limits indicated by test results.

   The removal and replacement of the paving mixture shall be at the sole expense of the Contractor.

4. Limited Areas: Irrespective of an acceptable overall Paving Project average for any or all of the Pay-Adjustment Acceptance Factors, limited substandard portions of the Work, as determined by the Engineer or designated representative, shall be remedied or removed and replaced to the satisfaction of the Engineer or designated representative at the sole expense of the Contractor.

B. Pay-Adjustment Acceptance Factors: Contract unit prices shall be adjusted for paving mixtures that fail to meet acceptance criteria for gradation, asphalt content, density and mat thickness in accordance with the following:

Gradation Acceptance Schedule (TEX-210-F)

Sieve	Deviation From Job Mix Formula		Percent Contract Unit Price Reduction
	Daily Average	Overall Average	
Total retained on No. 10 (2.00 mm)	± 6.5 6.6±	± 5.0 5.1±	0 10
Passing No. 200 (75 µm)	± 3.9 4.0±	± 3.0 3.1±	0 5

Asphalt Content Acceptance Schedule (TEX-210-F, PartII)

Deviation from the Job Mix Formula		Percent Contract Unit Price Reduction	
Daily Average	Overall Average	Local Streets*	All Others
± 0.5	± 0.4	0	0
±0.51 to ±0.60	±0. 41 to ±0.50	15	25
+0.61 to +0.70	+0.51 to +0.60	25**	100; Remove and Replace
-0.61 to -0.70	-0.51 to -0.60	100: Remove and Replace	100; Remove and Replace
Over ±0.70	Over ±0.60	100: Remove and Replace	100; Remove and Replace

*A local or residential street that serves as access to residence or other abutting property.

**If the street has an ADT of 500, or less, with 1%, or less, of truck traffic, plus a 2 year warranty; otherwise, Remove and Replace

Density Acceptance Schedule (TEX-207-F/TEX-227-F)

*Percent Density		Percent Contract Unit Price Reduction	
Daily Average	Overall Average	1-1/2" (38 mm) Thickness or Greater	Less than 1-1/2" (38 mm) Thickness
Above 96.5	Above 96	100; Remove and Replace	100; Remove and Replace
90.5 to 96.5	91 to 96	0	0
90.5 to 87.6	90.9 to 88.1	0.625 per 0.10% deficiency in density	0.50 per 0.10% deficiency in density
Less than 87.6	Less than 88.1	100: Remove and Replace	100; Remove and Replace

*Core bulk density divided by max. theoretical density

Thickness Acceptance Schedule

Variance Percent of Thickness		Percent Contract Unit Price Reduction
Daily Average	Overall Average	
0 – 15.0	0 - 10	0
15.1 – 20.0	10.1 - 16	20
20.1 – 30.0	16.1 - 25	50
Over 30.0	Over 25	100; Remove and Replace or mill/overlay 1" (25 mm) minimum

The Density Acceptance Schedule For Irregularly Shaped Areas; Hike And Bike Trails And Utility Trenches (see following table) will apply to utility trenches of widths less than 4 feet

(1.2 meter) and to irregular shaped areas and hike and bike trails in which an appropriate rolling pattern cannot be established making it difficult to achieve compaction.

Density Acceptance Schedule For Irregularly Shaped Areas; Hike And Bike Trails and Utility Trenches (TEX-207-F/TEX-227-F)

*Percent Density	Percent Contract Unit Price Reduction	
Daily Average	1-1/2" (38 mm) Thickness or Greater	Less than 1-1/2" (38 mm) Thickness
Above 96.5	100; Remove and Replace	100; Remove and Replace
96.5 to 89.0	0	0
89.0 to 86.1	0.625 per 0.10% deficiency in density	0.50 per 0.10% deficiency in density
Less than 86.1	100: Remove and Replace	100; Remove and Replace
*Core bulk density divided by maximum theoretical density		

The Density Acceptance Schedule will apply to utility trenches 4 feet (1.2 meter) or wider.

Core thicknesses greater than Drawing requirements shall be factored into the average thickness calculation as the Drawing required thickness. If total thickness of lift(s) proves to be less than required, the Contractor may remove and replace the overlay deficient areas as agreed to by the Engineer or designated representative. Overlays to correct thickness deficiencies shall be not less than one (1) inch (25-mm) thick. Overlays shall require milling of the asphalt in order to prevent a “featheredge” of the overlaying pavement.

The extent of the area to be overlaid or removed and replaced shall be determined by additional cores with thicknesses greater than or equal to the required thickness. All additional coring that is necessary to determine the area shall be paid for by the Contractor.

340S.13 Measurement

Work performed and material placed shall be measured under one of the following methods. When Drawing quantity measurement is specified, adjustment of quantity may be made as follows. If the quantity measured as outlined vary from those shown on the Drawings by more than 5%, either party to the Contract may request in writing and adjustment of the quantity by each separate bid item. The party to the Contract which requests the adjustment shall present to the other party one copy of measurements and calculations showing the revised quantity in question. This revised quantity, when approved by the Engineer or designated representative, shall constitute the final quantity for which payment will be made. However, no adjustment will be made for any quantity, which exceeds the Drawing required thickness.

A. Method A: Asphaltic concrete pavement shall be measured by the ton (2,000 pounds) of the type actually used in completed and accepted Work in accordance with the Drawings and specifications.

   The measurement shall be made on approved truck scales that meet the requirements of the National Institute of Standards and Technology Handbooks 44 and 112 except that the required accuracy shall be 0.4 percent of the load being weighed. The Contractor shall furnish a report of calibration from a scale mechanic licensed by the Texas Department of Agriculture certifying that the scales meet this requirement.

B. Method B: Asphaltic concrete pavement shall be measured by the square yard of specified total thickness of the type of paving mixture actually used in completed and accepted Work in

accordance with Drawings and specifications. Multiple lifts of the same type shall be considered as one for square yard measurement purposes.

C. Method C: Asphaltic concrete pavement shall be measured by the lineal foot of specified total thickness of the type of paving mixture actually used in completed and accepted Work in accordance with Drawings and specifications. Multiple lifts of the same type shall be considered as one for linear foot measurement purposes.

340S.14 Payment

Work performed and materials furnished as prescribed by this item and measured as provided under "Measurement" will be paid for at the unit bid prices or pay adjusted unit price for Hot Mix Asphaltic Concrete Pavement, of the types and thicknesses specified. The unit bid prices shall include full compensation for furnishing all labor, equipment, time, materials and incidentals necessary to complete the Work.

Removal of existing hot mix asphalt concrete transition areas prior to overlay, tack coat, saw cutting and temporary pavement markings will not be measured or paid for directly but shall be included in the unit price bid for Standard Specification Item No. 340S, "Hot Mix Asphaltic Concrete Pavement".

Payment for Work meeting these specifications will be made under one of the following:

Pay Item No. 340S-A:	Hot Mix Asphaltic Concrete Pavement, Type ____,	Per Ton.
Pay Item No. 340S-B:	Hot Mix Asphaltic Concrete Pavement, ___Inches, Type ____,	Per Square Yard.
Pay Item No. 340S-C:	Hot Mix Asphaltic Concrete Pavement, ___Inches, Type ____,	Per Lineal Foot.
Pay Item No. 340S-PQ:	Hot Mix Asphaltic Concrete Pavement, ___Inches, Type ____, Plan Quantity,	Per Ton
Pay Item No. 340S-L:	Hot Mix Asphaltic Concrete Pavement, ___In., Type ____, Level-up Course,	Lump Sum.
Pay Item No. 340S-M:	Crack Sealing Mobilization,	Lump Sum.
Pay Item No. 340S-S:	Crack Sealing,	Per Lineal Foot.

End

SPECIFIC CROSS REFERENCE MATERIALS
Special Specification Item 340S "Hot Mix Asphaltic Concrete Pavement"

City of Austin Standard Specifications

Designation	Description
Item No. 230S	Rolling (Flat Wheel)
Item No. 232S	Rolling (Pneumatic Tire)
Item No. 301S	Asphalts, Oils and Emulsions
Item No. 307S	Tack Coat
Item No. 313S	Cleaning and/or Sealing Joints and Cracks (Asphaltic Concrete)

Texas Department of Transportation: Manual of Testing Procedures

Designation	Description
Tex-106E	Method of Calculating the Plasticity Index of Soils
Tex-107E	Determination of Bar Linear Shrinkage of Soils
Tex-200-F	Sieve Analysis of Fine and Coarse Aggregates
Tex-203-F	Sand Equivalent Test
Tex-204-F	Design of Bituminous Mixtures
Tex-207-F	Determination of Density of Compacted Bituminous Mixtures
Tex-208-F	Test for Stabilometer Value of Bituminous Mixtures
Tex-210-F	Determination of Asphalt Content of Bituminous Mixtures by Extraction
Tex-212-F, Part II	Determination of Moisture Content of Bituminous Mixtures (by oven drying)
Tex-217-F	Determination of Deleterious Material and Decantation Test For Coarse Aggregates
Tex-227-F	Theoretical Maximum Specific Gravity of Bituminous Mixtures
Tex-410-A	Abrasion of Coarse Aggregate Using the Los Angeles Machine
Tex-460-A	Determination of Crushed Face Particle

Texas Department of Transportation: Standard Specifications for Construction and Maintenance of Highways, Streets, and Bridges

Designation	Description
Item 340	Hot Mix Asphalt Concrete Pavement

RELATED CROSS REFERENCE MATERIALS
Special Specification Item 340S "Hot Mix Asphaltic Concrete Pavement"

City of Austin Standard Specifications

Designation	Description
Item No. 206S	Asphalt Stabilized Base
Item No. 210S	Flexible Base
Item No. 306S	Prime Coat
Item No. 310S	Emulsified Asphalt Treatment
Item No. 311S	Emulsified Asphalt Repaving
Item No. 320S	Two Course Surface Treatment

Texas Department of Transportation: Manual of Testing Procedures

Designation	Description
Tex-215-F	Determination of Asphalt Content of Rock Asphalt By Hot Solvent Method
Tex-224-F	Determination of Flakiness
Tex-400-A	Method of Sampling Stone, Gravel, Sand and Mineral Aggregates

Tex-411-A	Soundness of Aggregate by Use of Sodium Sulfate or magnesium Sulfate
Tex-438-A	Accelerated Polish Test for Aggregate

Item No. 341S
Paving Fabric

341S.1 Description

This item shall consist of the furnishing and installation of a fabric underseal in accordance with this specification and as indicated on the Drawings. This work shall consist of a single application of asphalt covered with 1 layer of the fabric with or without sand.

This specification is applicable for projects or work involving either inch-pound or SI units. Within the text, the inch-pound units are given preference followed by SI units shown within parentheses.

341S.2 Submittals

The submittal requirements of this specification item include:

A. Catalog cuts,
B. Samples of material selected,
C. Testing results,
D. Manufacturer's recommended installation procedures, and
E. Manufacturer certification of compliance with this specification.

341S.3 Material

A. Tack Coat

Asphalt cement tack coat shall conform to Item No. 301S, "Asphalt, Oils and Emulsions", AC-10.

B. Sand

Washed concrete sand shall be Aggregate Grade No. 1 and shall conform to Item No. 403S, "Concrete for Structures".

C. Paving Fabric

Fabric shall be constructed exclusively of thermoplastic fibers. These fibers may be oriented in the fabric in either a random or an aligned orientation and the fibers may be either continuous or discontinuous throughout the fabric.

The fabric itself shall be mildew resistant, rot proof and shall be designed for use with asphalt cements at temperatures up to 325°F (163°C).

1. Physical Requirements

The fabric supplied shall meet the following requirements when sampled and tested in accordance with the methods specified.

TEST		REQUIREMENT	
Original Physical Properties	METHOD	Minimum	Maximum
Fabric weight, oz./sq.yd (kg/m^2).	TxDoT Tex-616-J*	3.5 (0.12)	9.0 (0.30)
"Apparent elongation" at "breaking load" on warp-wise and fill-wise specimens, percent	ASTM D 5034 Method G**	50	150
"Breaking load", on warp-wise and fill-wise specimens, pounds (Newtons)	ASTM D 5034 Method G**	80 (356)	__
Asphalt retention, gal/yd^2 (L/m^2).	TxDoT Tex-616-J*	0.15 (0.68)	.60 (2.72)
Change in area, %		__	±15

* TxDoT Tex-616-J, "Testing of Construction Fibers

** ASTM D 5034, grab method G, "Test Method for Breaking Strength and Elongation of Textile Fabrics (Grab Test)

2. Packaging Requirements

The fabric shall be packaged in rolls of the length and width specified on the Drawings or as directed by the Engineer or designated representative. The fabric itself shall be uniformly wound onto suitable cylindrical forms or cores to aid in handling and unrolling. Each roll of fabric and the form or core upon which it is rolled shall be packaged individually in a suitable sheath, wrapper or container to help protect the fabric from damage due to ultraviolet light and moisture during normal storage and handling.

3. Identification Requirements

Each roll shall be identified by a label or tag securely fixed to the outside of the roll on one end. This label or tag must list the following required information (example of each shown in parenthesis):

- A unique roll number, serially designated (Roll No. 31275)
- Manufacturer lot number or control numbers, if any (Lot 290 Control 6740)
- Name of fabric manufacturer (Afghan Fabrics)
- Date of manufacture (Jan. 16, 1999)
- Brand name of the product ("Fabriweld"),
- Manufacturer's style or catalog designation of the fabric, if any ("300-X")
- Roll width in inches or yards (millimeters or meters) [Width 150 inches (3.8 meters)]
- Roll length in yards (meters) [Length 100 yards (91.4 meters)]
- gross weight of the entire package which is to include fabric, core, wrapping and sheath or container identification tag, etc [Gross 147 pounds (66.6 kilograms)]
- Tare weight of core, wrapping sheath or container identification tag, etc [Tare 18 pounds (8.15 kilograms)]
- Net weight of fabric alone [Net Wt. 129 pounds (58.4 kilograms)]

4. Sampling Requirements

   Sampling for testing purposes shall be acquired in accordance with TxDoT Test Method "Tex-735-I, Sampling of Construction Fabrics".

5. Basis for Rejection

   If any individual roll fails to meet the fabric weight requirement when the entire roll is weighed then that roll is subject to rejection. If any individual sample, selected at random from 100 rolls (or fraction thereof), fails to meet any specification requirement, then that roll shall be rejected and two additional samples shall be taken, 1 from each of 2 other additional rolls selected at random from the same 100 roll lot (or fraction thereof). If either of these 2 additional samples fails to comply with any portion of the specification, then the entire quantity of rolls represented by that sample shall be rejected.

6. Testing Requirements

   Testing shall be conducted in accordance with the test methods identified in this specification item.

7. Manufacturers Certification

   The manufacturer will furnish certification of compliance with the specifications with each batch of rolls.

341S.4 Equipment

A. Asphalt Distributor

A hydrostatic type distributor shall be used which is capable of spraying the asphaltic binder at the temperature and application rate specified on the Drawings or as directed by the Engineer or designated representative. The Contractor shall provide all necessary facilities for determining the temperature of the asphaltic material. The distributor shall apply the asphalt cement evenly and smoothly under a pressure necessary for proper distribution. It must be adjustable to give a uniform spray pattern over the entire width of application.

The distributor shall be equipped with a hand spray with only 1 nozzle. The hand spray must be easily controlled and have a positive shut off valve. Hand spraying shall be kept to a minimum and limited to areas where a distributor cannot be used.

B. Fabric Handling Equipment

The fabric may be placed with machine laydown equipment or by manual method. A length of A.S.A. standard 1-inch (25 mm) pipe to handle the roll width being used, together with a suitable roll braking device, shall be used for the manual method.

C. Asphalt Storage and Handling Equipment

All equipment used in storing or handling asphalt cement shall be kept clean and in good working order at all times, and shall be operated in such a manner that there will be no contamination of the asphalt cement. The Contractor shall provide and maintain a recording thermometer to continuously indicate the asphalt cement temperature at the storage-heating unit.

D. Miscellaneous Equipment

Stiff bristle brooms to smooth fabric and scissors for cutting the fabric shall be used. Buckets and squeegees can be used for applying asphalt tack coat to fabric laps and joints. A pneumatic roller to smooth fabric into the asphalt binder may be needed should rain or other unforeseeable conditions cause bubbles or wrinkling.

E. Roller

A light pneumatic tire roller conforming to Item No. 232S, "Rolling (Pneumatic Tire)" shall be used.

341S.5 Construction Methods

A. General

It shall be the responsibility of the Contractor to produce, transport, furnish and place the tack coat and paving fabric in accordance with these specifications and as approved by the Engineer or designated representative.

The tack coat shall not be applied when the air temperature is below 60^0F (15^oC) and falling, but may be applied when the air temperature is above 50^oF (10^oC) and rising. In addition the tack coat shall not be applied when the temperature of the surface on which it is to be placed is below 60^0F (15^oC). The tack coat shall only be placed when the humidity, general weather conditions, temperature and moisture condition of the base, in the opinion of the Engineer or designated representative, are suitable.

Application temperature of the tack coat will be selected within the limits recommended in Standard Specification Item No. 301S, "Asphalts, Oils and Emulsions", as approved by the Engineer or designated representative. The Contractor shall apply the asphalt cement at a temperature within 15^{oF} (8^oC) of the temperature selected.

B. Level-up Courses

Placing a level-up course with a spreading and finishing machine, where required, shall precede the placement of the tack coat and paving fabric and shall conform to Standard Specification Item No. 340S, "Hot Mix Asphaltic Concrete Pavement".

C. Surface Preparation

The surface area upon which the fabric layer is to be placed shall be cleaned of dirt, dust or other deleterious material by sweeping or other approved methods.

D. Application of Asphalt Cement

Asphalt cement shall be applied ahead of the fabric placement in widths 6 inches (150 mm) wider than the fabric, except when placed against a curb and gutter.

The asphalt tack coat shall be uniformly applied with the specified distributor. Hand spraying shall be kept to a minimum. Tack coat shall be applied at a rate between 0.15 and 0.28 gallons per square yard (0.68 to 1.27 liters per square meter). The exact rate to be used shall be approved by the Engineer or designated representative. The rate may require slight adjustment as directed by the Engineer or designated representative to prevent an excessive application.

String lines shall be set by the Contractor for alignment as required by the Engineer or designated representative.

E. Fabric Laydown

Immediately upon application of the asphalt cement tack coat, the fabric shall be aligned and carefully broomed and/or rolled onto the fresh asphalt cement tack coat with equipment approved by the Engineer or designated representative. The fabric shall be placed essentially wrinkle free. Air bubbles shall be removed by brooming to insure complete contact with the roadway surface. In the event the initial alignment is not satisfactory and causes the fabric to wrinkle during placement, the fabric shall be cut out and realigned overlapping the previous material and proceeding as before. The replacement fabric shall be lapped 6 inches (150 mm) minimum and additional asphalt cement tack coat shall be applied to satisfy the absorption of the resulting double layer.

If the edges of the fabric tend to be displaced because of air currents, the Engineer or designated representative may require that the edges be secured at 15-foot (5 meter) intervals. In the event this procedure does not prove satisfactory, then work will be suspended until conditions are more favorable.

All fabric transverse joints shall be lapped a minimum of 6 inches (150 mm). Laps shall be in the direction of travel when traffic is allowed directly on the fabric. In lapping joints, the top fabric shall be folded back to allow application of a light coat of asphalt cement. The top fabric shall then be placed back onto the asphalt cement, broomed and squeegeed out smoothly. Rolling and/or brooming the fabric into the asphalt cement at the joints shall be accomplished in such a way that the air bubbles, which form under the fabric will be removed. This may be accomplished by brooming from the center of the fabric toward the outer edges. The fabric shall be neatly cut and contoured at all joints as directed by the Engineer or designated representative.

Adjacent longitudinal rolls of fabric shall overlap a minimum of 4 inches (100 mm). Additional asphalt cement shall be applied to satisfy the absorption of the resulting double layer.

The fabric shall be carefully cut to fit around utility castings.

When required by the Engineer or designated representative, the installed fabric shall be covered with a thin layer of clean sand or clean crusher screenings at a rate sufficient to absorb any excess asphalt cement. If localized areas appear, which indicate excessive amounts of tack coat (bleeding), they shall be blotted with concrete sand.

If for any reason, there is bond loss before application of the HMAC overlay, it shall be corrected by pneumatic rolling until adhesion is restored. If traffic must be temporarily allowed on the membrane prior to the overlay, the fabric shall be lightly sanded (1 to 2 pounds/square yard) for protection during the period of use.

Turning of the laydown machine and other vehicles shall be gradual and kept to a minimum to avoid damage to the fabric membrane. If equipment tires tend to stick to the fabric membrane during the overlay operation, a small quantity of sand shall be broadcast ahead of the paving equipment.

F. Asphaltic Overlay

The Asphaltic Concrete shall conform to Item No. 340S, "Hot Mix Asphaltic Concrete Pavement" and be placed as soon as possible after the paving fabric has been rolled into the tack coat.

G. Manufacturers Recommendations

In other matters not specifically detailed on the Drawings or included herein, the Contractor shall use recommended procedures as prescribed by the manufacturer of the fabric.

341S.6 Measurement

Accepted work performed as prescribed by this item will be measured by the square yard (square meter: 1 square meter equals 1.196 square yards) of surface area covered. Level-up and finished Hot Mix Asphaltic Concrete courses, performed where required, will be measured and paid in conformance with Standard Specification Item No. 340S, "Hot Mix Asphaltic Concrete Pavement".

341S.7 Payment

The work performed as prescribed by this item will be paid for at the unit bid price per square yard for "Paving Fabric". The unit bid price shall include full compensation for: a) preparation of the surface to receive the fabric; b) furnishing and placement of all materials, including asphalt cement tack coat and paving fabric, sand and all other materials and manipulation, labor, tools, equipment and incidentals necessary to complete the work.

Payment will be made under:

Pay Item No. 341S: Paving Fabric Per Square Yard.

End

SPECIFIC CROSS REFERENCE MATERIALS
Specification 341S, “Paving Fabric"

American Society for Testing and Materials (ASTM)

Designation	Description
D 5034	Test Method for Breaking Strength and Elongation of Textile Fabrics (Grab Test)
D 1682	Test Methods for Breaking Load and Elongation of Textile Fabrics

Texas Department of Transportation Manual of Testing Procedures

Designation	Description
Tex-616-J	Testing of Construction Fabrics
Tex-735-I	Sampling of Construction Fabrics

RELATED CROSS REFERENCE MATERIALS
Specification 341S, “Paving Fabric"

City of Austin Standard Specifications

Designation	Description
Item No. 232S	Rolling (Pneumatic Tire)
Item No. 301S	Asphalts, Oils and Emulsions
Item No. 340S	Hot Mix Asphaltic Concrete Pavement
Item No. 403S	Concrete for Structures
Item No. 307S	Tack Coat
Item No. 312S	Seal Coat
Item No. 315S	Milling Asphaltic Concrete Pavement
Item No. 316S	Polymerized Asphalt Concrete Pavement
Item No. 801S	Construction Detours
Item No. 803S	Barricades, Signs and Traffic Handling

Item No. 360S
Concrete Pavement

360S.1 Description

This item shall consist of a pavement and/or base of Portland Cement concrete, with or without reinforcement as indicated on the Drawings, with or without monolithic curbs, constructed as herein specified, on prepared subgrade or base course in conformity with the thickness and typical cross sections indicated on the Drawings. Concrete to be considered of satisfactory quality provided it is made (a) of materials accepted for job, (b) in the proportions established by the Contractor and (c) mixed, placed, finished and cured in accordance with the requirements of this specification.

This specification is applicable for projects or work involving either inch-pound or SI units. Within the text and accompanying tables, the inch-pound units are given preference followed by SI units shown within parentheses.

360S.2 Submittals

The submittal requirements of this specification item may include:

Mix design option(s) of the class of concrete required on the project,

The supplier of the concrete mix design(s) and type of mixing equipment, and

Type of admixtures to be used with the concrete mixes.

360S.3 Materials

A. Cementatious Materials

Portland cement shall conform to ASTM C 150, Type I (General Purpose) and Type III (High Early Strength). Type III cement shall be used when high early strength concrete is indicated on the Drawings. If the use of high early cement is not specified and the Contractor desires to use it, the Contractor shall obtain written permission from the Engineer or designated representative prior to its use and shall assume all additional costs incurred by the use of such cement. All cement shall be of the same type and from the same source for a project unless written permission if first received from the Engineer or designated representative.

Portland cement manufactured in a cement kiln fueled by hazardous waste shall be considered as an approved product if the production facility is authorized to operate under regulation of the Texas Commission on Environmental Quality (TCEQ) and the United States Environmental Protection Agency (USEPA). Supplier shall provide current TCEQ and EPA authorizations to operate the facility.

Bulk or sacked cement may be used and a bag shall contain 94 pounds (42.6 KG) net. All bags shall be in good condition at the time of inspection. Bulk cement shall be weighed on approved scales as herein prescribed.

All cement shall be stored in a suitable weather tight building or bin, which will protect the cement from dampness. The cement shall be so stored as to provide easy access for proper inspection. Any cement, which has become partially set or which contains hard lumps or cakes or cement salvaged from discarded or used bags, shall not be used.

Fly ash (denoted by Texas DOT designations Type A and Type B) may replace 20 to 35 percent of a mix design's Portland cement content by absolute volume. Fly ash shall not be used in mix designs with less that five (5) sacks of Portland cement per cubic yard [six and a half (6.5) sacks of Portland cement per cubic meter] unless specifically permitted by the Contract plans of project manual. Fly ash shall conform to the requirements of Item 405S, "Concrete Admixtures".

B. Admixtures

Concrete admixtures conforming to Item No. 405S, "Concrete Admixtures" may be used when approved by the Engineer or designated representative to minimize segregation, improve workability, reduce the amount of mixing water and to provide normal hot weather concreting provisions. The use of admixtures shall not alter the approved mix designs, except for water content.

C. Coarse Aggregate

Coarse aggregate shall consist of durable particles of gravel, crushed blast furnace slag and/or crushed stone of reasonably uniform quality throughout, free from injurious amounts of salt, alkali, vegetable matter or other objectionable material, either free or as an adherent coating on the aggregate. It shall not contain more than 0.25 percent by weight of clay lumps nor more than 1.0 percent by weight of shale nor more than 5.0 percent by weight of laminated and/or friable particles when tested in accordance with TxDOT Test Method Tex-413-A.

Coarse aggregate shall have a wear of not more than 45 percent when tested according to TxDOT Test Method Tex-410-A and when tested by standard laboratory methods shall meet the following grading requirements:

Retained on 1 3/4 inch (43.75 mm) sieve	0%
Retained on 1 1/2 inch (37.5 mm) sieve	0 to 5%
Retained on 3/4 inch (19.0 mm)sieve	30 to 65%
Retained on 3/8 inch (9.5 mm) sieve	70 to 90%
Retained on No. 4 (4.75 mm) sieve	95 to 100%

Loss by Decantation TxDOT Test Method *Tex-406-A. 1.0% Maximum

* In the case of aggregate made primarily from crushing of stone. If the material finer than the 200 sieve is definitely established to be the dust of fracture

essentially free from clay or shale as established by Part III of TxDOT Test Method Tex-406-A, the percent may be increased to 1.5.

When the plans do not require a monolithic pour of curb or curb and gutter, the Contractor may elect to use the following gradation of coarse aggregate for curb or curb and gutter:

Retained on 1 1/2 inch (37.5 mm) sieve	0%
Retained on 3/8 inch (9.5 mm) sieve	5 to 30%
Retained on No. 4 (4.75 mm) sieve	75 to 100%

Where the coarse aggregate is delivered on the job in 2 or more sizes or types, each type and/or size shall be batched and weighed separately.

All aggregates shall be handled and stored in such a manner as to prevent size segregation and contamination by foreign substances and maintain as nearly as possible in a uniform condition of moisture. When segregation is apparent, the aggregate shall be remixed with suitable equipment as required. At time of its use, the aggregate shall be free from frozen material and aggregate containing foreign materials will be rejected. Coarse aggregate that contains more than 0.5 percent free moisture by weight shall be stockpiled for at least 24 hours prior to use.

Adequate storage facilities shall be provided for approved materials. The intermixing of non-approved materials with approved materials either in stockpiles or in bins will not be permitted. Aggregates from different sources shall be stored in different stockpiles unless otherwise approved by the Engineer or designated representative.

D. Fine Aggregate

Fine aggregate shall be free from injurious materials of salt, alkali or vegetable matter. It shall not contain more than 0.5 percent by weight of clay lumps. When subjected to the color test for organic impurities, TxDOT Test Method Tex-408-A, the fine aggregate shall not show a color darker than standard.

Unless shown otherwise on the drawings, fine aggregate shall have an acid insoluble residue of at least 60% by weight when tested in accordance with Tex 612-J.

Unless specified otherwise, fine aggregate shall meet the following grading requirements:

Retained on 3/8 inch (9.5 mm) sieve	0%
Retained on No. 4 (4.75 mm) sieve	0 to 5%

Retained on No. 8 (2.36 mm) sieve	0 to 20%
Retained on No. 16 (1.185 mm) sieve	15 to 30%
Retained on No. 30 (600 µm) sieve	35 to 75%
Retained on No. 50 (300 µm) sieve	70 to 90%
Retained on No. 100 (150 µm) sieve	90 to 100%
Retained on No. 200 (75 µm) sieve	97 to 100%

Fine aggregate will be subjected to the Sand Equivalent Test, TxDOT Test Method Tex-203-F. The sand equivalent value shall not be less than 80.

E. Mineral Filler

Mineral filler shall consist of clean stone dust, crushed sand, crushed shell or other approved inert material. It shall meet the following requirements when tested in accordance with TxDOT Test Method Tex-401-A:

Retained on No. 30 (600 µm) sieve	0%
Retained on No. 200 (75 µm) sieve	0 to 35%

Where fine aggregate is delivered to the job in 2 or more sizes or types, each type and/or size of material shall be batched and weighed separately. Where mineral filler is used, it shall be batched and weighed separately. At the time of its use the fine aggregate shall be free from frozen material and aggregate containing foreign material will be rejected.

All fine aggregate shall be stockpiled for at least 24 hours prior to use.

F. Mixing Water

Water for use in concrete and for curing shall be free from oils, acids, organic matter or other deleterious substances and shall not contain more than 1,000 parts per million of chlorides as Cl nor more than 1,000 parts per million of sulfates as SO4.

Water from municipal supplies approved by the State Health Department will not require testing. Contractor shall sample and test water from other sources and submit test results to the Engineer or designated representative for approval 10 days prior to proposed use.

Tests shall be made in accordance with "Standard Method of Test for Quality of Water to be used in Concrete", AASHTO Method T-26.

G. Transit-mixed Concrete

The use of transit-mixed (ready-mixed) concrete will be permitted by the Engineer or designated representative provided the batching plant and mixer trucks meet requirements of quality specified herein.

When ready-mixed concrete is used, additional mortar (1 sack cement, 3 parts sand and sufficient water) shall be added to each batch to coat the drum of the mixer or agitator truck. Delivery of concrete to the site of the work and its discharge from the truck mixer, agitator or non-agitating equipment shall be in accordance with the requirements of Item No. 410S, "Concrete Structures".

Ready-mixed concrete, batching plant and mixer truck operation shall include the following:

1) A ticket system will be used that includes a copy for the construction inspector. The ticket will have machine stamped time/date of the concrete batch, weight of cement, sand and aggregates; exact nomenclature and written quantities of admixtures and water. Any item missing or incomplete on the ticket may be cause for rejection of the concrete.

2) Sufficient trucks will be available to support continuous slab placements. The Contractor will satisfy the Engineer or designated representative that adequate standby trucks are available to support monolithic placement requirements.

3) A portion of the mixing water, required by the batch design to produce the specified slump, may be withheld and added at the job site but only with the permission of the Engineer or designated representative and under the Inspector's observation. When water is added under these conditions, it will be thoroughly mixed before any slump or strength samples are taken.

H. Joint Sealer

Unless otherwise shown on the plans, joint sealant for concrete pavement used on airport runways and/or taxiways shall be TxDOT Class 5. All other joint sealant shall be TxDOT Class 2.

As a minimum, the joint sealant shall comply with the following. The manufacturer of the joint sealant shall furnish certification that the product to be supplied meets or exceeds the specification.

1) Class 2 (Hot Poured Rubber-Asphalt). This sealer shall conform to Standard Specification Item No. 313S, “Cleaning and/or Sealing Joints and Cracks (Asphaltic Concrete)The sealer must be compatible with asphaltic concrete.

2) Class 5 (Low Modulus Silicone Sealant for Concrete Pavement). This material shall conform to Item 413S, “Cleaning and/or Sealing Joints and Cracks (PCC) and shall be furnished in a one-part silicone formulation, which does not require a primer for bond to concrete. A backer rod shall be

required which will be compatible with the sealant. No bond or reaction shall occur between the rod and sealant. The sealant shall adhere to the sides of the concrete joint. It shall not crack or break when exposed to temperatures below 32°F (0°C).

The sealant material shall have the following properties:

Color	Gray
Flow, MIL-2-8802D, Sec 4.8.4, max	0.2
Working time, minutes	10
Tack-free time at 77° F +/- 2 o F (25°C +/- 1.1^{o}C), MIL-2-8802D,	
Sec 4.8.7, minutes	60
Cure time at 77°F (25oC), days	7-14
Full Adhesion, days	14-21

As Cured - after 7 days at 77°F (25°C), and 40% Relative Humidity

Elongation, minimum percent	1200
Durometer Hardness, Shore A, ASTM D 2240, min	15
Joint movement capability, percent	+100/-50
Tensile Strength, maximum elongation, percent	100
Peal strength, psi	25 (172 kPa)

I. Backer Rod

Backer Rod shall be expanded closed cell polyethylene foam compatible with sealant. No bond or reaction shall occur between rod and sealant. Backer Rod shall be of sufficient width to be in compression after placement.

J. Joint Filler

Boards for expansion joint filler and for contraction and longitudinal joints shall be of the size, shape and type indicated.

Board shall be obtained from Redwood, Cypress, Gum, Southern Yellow Pine or Douglas Fir timber. They shall be solid heartwood and shall be free from sapwood, knots, clustered birdseye, checks and splits. Occasional sound or hollow birdseye, when not in clusters, will be permitted provided the board is free from any other defects that will impair its usefulness as a joint filler. With the exception of Redwood and Cypress, all boards shall have a creosote or pentachlorophenol treatment of 6 pounds per cubic foot (96 kg/m3). When oven dried at 230°F (110oC) to a constant weight, the weight of the board per cubic foot (minus treatment), shall not be less than 20 pounds nor more than 35 pounds (not less than 320 nor more than 561 kgs per cubic meter).

K. Asphalt Board

Asphalt board when used as indicated shall be of required size, full depth of concrete placement and uniform thickness. When used in transverse joints, it shall conform approximately to shape of the pavement crown as indicated. Asphalt board shall consist of 2 liners of 0.016-inch (0.4 mm) asphalt impregnated paper filled with a mastic mixture of asphalt and vegetable fiber and/or mineral filler. Boards shall be smooth, flat and straight throughout and shall be sufficiently rigid to permit easy installation. Boards that crack or shatter during installing and finishing operations will not be acceptable. Board shall be furnished in lengths equal to 1/2 the pavement width or in lengths equal to the width between longitudinal joints and may be furnished in strips or scored sheets of the required shape. When tested in accordance with TxDOT Test Method Tex-524-C the asphalt boards shall not deflect from the horizontal more than 3/4 inch in 3 1/2 inches (19.3 cm in 90 cm). The asphalt board shall be placed such that they will not interfere with the bonding of the joint sealer.

L. Load Transmission Devices for Expansion and Contraction Joints

Approved load transmission devices, when indicated, shall meet the requirements specified herein:

Smooth steel bar dowels, used when indicated, shall be of the size and type indicated and shall be open-hearth, basic oxygen or electric-furnace steel conforming to the properties specified for grade 60 in ASTM A 615. The free end of dowel bars shall be smooth and free of shearing burrs.

When indicated, one end of each dowel bar shall be encased in an approved cap having an inside diameter of 1/16 inch (16 mm) greater than the diameter of the dowel bar. The cap shall be of such strength, durability and design as to provide free movement of the dowel bar and shall be approved by the Engineer or designated representative prior to use. One end of the cap shall be filled with a soft felt plug or shall be void in order to permit free movement of the dowel bar for a distance equivalent to 150 percent of the width of the expansion joint used. The dowel caps and dowel bars shall be held securely in place by bar ties as indicated on the drawings. Mechanical methods of implanting dowel bars in the plastic concrete may be used when approved by the Engineer or designated representative.

Where required, dowel bars shall be coated with a plastic material meeting the requirements indicated.

Where red lead and oil bar coating is indicated, the red lead may be of any standard commercial grade and the oil shall be clean and no lighter than Standard No. 30 SAE grade. Approved thinner and dryer may be added to the red lead, but the material upon application shall be of such consistency that will provide a uniform and heavy coating on the bar. Where asphalt bar coating is indicated, the material may be any standard grade of oil asphalt and shall be applied hot. Cutback asphalt will not be permitted for bar coating.

M. Metal Installing Devices for Joint Assembly

Metal installing devices for expansion and contraction joint assemblies (such as welded wire bar chairs, bar stakes and marker channels, channel caps, etc.) shall be as indicated or may be similar devices of equivalent or greater strength, approved by the Engineer or designated representative, that will secure joint assembly in correct position during the placing and finishing of concrete. Load transmission devices used in joint assemblies shall be secured in position by a transverse metal brace of the type and design indicated or may be secured in position by other approved devices of equivalent or greater strength that will provide positive mechanical connection between the brace and each unit (or than by wire tie) and prevent transverse movement of each load transmission device.

N. Steel Reinforcement

Steel reinforcing bars as required including tie bars shall be open-hearth, basic oxygen or electric-furnace new billet steel of Grade 60 or Grade 40 for concrete reinforcement as indicated. Bars that require bending shall be Grade 40 conforming to the requirements of ASTM A 615.

High yield reinforcing steel shall be either (a) open-hearth, basic oxygen or electric-furnace new billet steel conforming to ASTM A 615 Grade 60 or (b) rail steel bars for concrete reinforcement, conforming to ASTM A 616 Grade 60. Bars produced by piling method will not be accepted. High yield reinforcing steel bars shall be further identified by a special marking rolled into each bar. All reinforcing steel shall be deformed bars conforming to the requirements of pertinent ASTM Specifications.

Where prefabricated deformed wire mats are indicated or permitted, the wire shall be cold worked deformed steel wire conforming to the requirements of ASTM A 496, except that steel shall be made by open-hearth, electric-furnace or basic oxygen processes. The prefabricated deformed wire mats shall conform to the requirements of ASTM A 497, except that wires used shall be deformed and transverse wires shall project beyond the centerline of each edge longitudinal wire as indicated. Mats that have been bent or wires dislocated or parted during shipping or project handling shall be realigned to within 1/2 inch (13 mm) of original horizontal plane of the mat. Mats with any portion of the wires out of vertical alignment more than 1/2 inch (13 mm) after realignment and/or wires dislocated or mutilated so that, in the opinion of the Engineer, they do not represent the original mat, shall be rejected. The reinforcement may be clamped or wired so that the reinforcement will retain the horizontal and vertical alignment as indicated or as approved by the Engineer or designated representative. Deformed wire may be

used for tie bars and load transfer bars that require bending. The nominal size, area and theoretical weight of reinforcing steel wires covered by this provision are as listed in Table II. When fabricated steel bars or rod mats are indicated, the mats shall meet requirements of ASTM A 184.

Steel wire fabric reinforcement shall be of the gage and spacing indicated and shall conform to the requirements of ASTM A 82. Longitudinal and transverse wires shall be electrically welded together at all points of intersection and the welds shall be of sufficient strength that they will not be broken during handling or placing. All welding and fabrication of fabric sheets shall conform to the requirements of ASTM A 185. Welded steel wire fabric shall be furnished in sheets as indicated and steel having been previously bundled into rolls will not be accepted. An approved hinge will be permitted in each sheet to provide for each sheet longitudinally. When wire fabric is used, it will replace only the longitudinal and transverse bars. The tie bars and load transmission units at joints will not be affected.

Table II: DIMENSIONAL REQUIREMENTS FOR DEFORMED STEEL WIRE FOR CONCRETE REINFORCEMENT

Deformed Wire	Unit Weight	Diameter	Cross-Sectional Area,	Perimeter
Size No	Pounds Per Ft. (Kgs per Meter)	Inches (Centimeters)	Sq. inches (Sq, Centimeters)	Inches (Centimeters)
D-1	0.034 (.051)	0.113 (.287)	0.01 (.06)	0.355 (.902)
D-2	0.068 (.101)	0.159 (.404)	0.02 (.13)	0.499 (1.267)
D-3	0.102 (.152)	0.195 (.495)	0.03 (.19)	0.612 (1.554)
D-4	0.136 (.202)	0.225 (.572)	0.04 (.26)	0.706 (1.793)
D-5	0.170 (.253)	0.252 (.640)	0.05 (.32)	0.791 (2.009)
D-6	0.204 (.304)	0.276 (.701)	0.06 (.39)	0.867 (2.202)
D-7	0.238 (.354)	0.296 (.752)	0.07 (.45)	0.936 (2.377)
D-8	0.272 (.405)	0.319 (.810)	0.08 (.52)	1.002 (2.545)
D-9	0.306 (.455)	0.338 (.859)	0.09 (.58)	1.061 (2.695)
D-10	0.340 (.506)	0.356 (.904)	0.10 (.65)	1.118 (2.840)

D-11	0.374 (.557)	0.374 (.950)	0.11 (.71)	1.174 (2.982)
D-12	0.408 (.607)	0.390 (.991)	0.12 (.77)	1.225 (3.112)
D-13	0.442 (.658)	0.406 (1.031)	0.13 (.84)	1.275 (3.239)
D-14	0.476 (.708)	0.422 (1.072)	0.14 (.90)	1.325 (3.366)
D-15	0.510 (.759)	0.437 (1.110)	0.15 (.97)	1.372 (3.485)
D-16	0.544 (.810)	0.451 (1.146)	0.16 (1.03)	1.416 (3.600)
D-17	0.578 (.860)	0.465 (1.181)	0.17 (1.10)	1.460 (3.708)
D-18	0.612 (.911)	0.478 (1.214)	0.18 (1.16)	1.501 (3.813)
D-19	0.646 (.961)	0.491 (1.247)	0.19 (1.23)	1.542 (3.917)
D-20	0.680 (1.012)	0.504 (1.280)	0.20 (1.29)	1.583 (4.021)
D-21	0.714 (1.063)	0.517 (1.313)	0.21 (1.35)	1.624 (4.125)
D-22	0.748 (1.113)	0.529 (1.344)	0.22 (1.42)	1.662 (4.221)
D-23	0.782 (1.164)	0.541 (1.375)	0.23 (1.48)	1.700 (4.318)
D-24	0.816 (1.214)	0.553 (1.405)	0.24 (1.55)	1.737 (4.412)
D-25	0.850 (1.265)	0.564 (1.433)	0.25 (1.61)	1.772 (4.500)
D-26	0.884 (1.316)	0.575 (1.461)	0.26 (1.68)	1.806 (4.587)
D-27	0.918 (1.366)	0.586 (1.488)	0.27 (1.74)	1.841 (4.676)
D-28	0.952 (1.417)	0.597 (1.516)	0.28 (1.81)	1.876 (4.765)
D-29	0.986 (1.467)	0.608 (1.544)	0.29 (1.87)	1.910 (4.851)
D-30	1.020 (1.518)	0.618 (1.570)	0.30 (1.94)	1.942 (4.933)
D-31	1.054 (1.569)	0.628 (1.595)	0.31 (2.00)	1.973 (5.011)

O. Polyethylene Film

Polyethylene film shall be opaque pigmented white in color and shall be manufactured from virgin resin without additives or scrap. It shall be sufficiently strong and tough to permit its use under the conditions existing on street paving work without being torn or otherwise rendered unfit for the purpose during the curing period. The film shall have a minimum thickness of 4 mils (0.004 inch), shall have a minimum tensile strength of 1,700 psi at 77°F (11,720 kPa at 25°C) in the longitudinal direction and 1,200 psi at 77°F (8,275 kPa at 25°C) in the transverse direction and shall have a minimum elongation of 200 percent at 77°F (25°C)in the longitudinal direction and 150 percent at 77°F(25°C) in the transverse direction. The permissible percent moisture loss shall not exceed 2 percent after 24 hours and 4 percent after 72 hours. Tests for tensile strength and elongation will be conducted in accordance with ASTM Designation: D 882, Method A. Tests for moisture retention will be conducted in accordance with ASTM Designation: C 156.

P. Membrane Curing Compound

Membrane curing compound shall conform to Item No. 409S, "Membrane Curing", Type 2 white pigmented.

Q. Asphalt Curing

Where asphalt is to be placed on a concrete base, asphalt shall be used for curing concrete base, the material shall conform to Item No. 301S, "Asphalts, Oils and Emulsions" for RS-2 or RS-2h or as indicated on the drawings.

360S.4 Equipment

A. General

All equipment necessary for construction of this item shall be on the Project and shall be approved by Engineer or designated representative as to conditions before the Contractor will be permitted to begin construction operations on which the equipment is to be used. When approved by the Engineer or designated representative in writing, a commercial or independently operated batching plant for measuring materials outside limits of the project may be used.

B. Mixer

The mixer furnished may be either a paving mixer (operated at site of construction or centrally located), a stationary mixer (central mixer) or a paving mixer (truck mounted) that will produce adequately mixed concrete meeting the specified requirements. The mixer, or mixers, shall conform to the following requirements:

1) Each mixer shall have attached in a prominent place a manufacturer's plate showing rated capacity of the drum in terms of volume of mixed concrete and the recommended speed of rotation of the mixing drum or blades.

2) The stationary mixer (central mixer) or truck mounted paving mixer shall be operated at the manufacturer's recommended speed.

3) The size of the paving mixer shall not be less than that of a 27-E paver, as established by the Mixer Manufacturer's Bureau of Associated General Contractors. The paving mixer shall be operated at a drum speed of not less than 16 revolutions per minute and not more than 22 revolutions per minute. Pickup and throw over blades in the drum of the mixer shall be replaced when worn down 3/4 inch (19 mm) or more.

4) Each truck mounted paving mixer shall be approved by the Engineer or designated representative prior to use on the project. It shall be classified as a "paving mixer" by the manufacturer and shall be so designed that a uniform and low slump concrete (approximately 1 1/2 inch [38 mm] slump) can be mixed without aggregate size segregation. The mixer shall be capable of discharging the low slump concrete at a speed of 10 seconds per cubic yard (13 seconds per cubic meter) or faster.

5) Each mixer shall be equipped with an approved automatic device for satisfactorily timing the mix and locking the discharging device in order to prevent the discharging of the mixer before the end of the required mixing period. This timing device shall operate a sounding device to signal plainly the completion of the mixing time. When permitted by the Engineer a light signal device may be used.

6) Multiple drum mixers will be permitted provided their operation is properly synchronized. The mixing time shall be determined exclusive of the time required to transfer concrete from one drum to the next drum.

7) Each mixer shall be equipped with a water-measuring device so constructed that it will measure the water within 1 percent of the total amount required for each batch. Unless the water is to be weighed, the water measuring equipment shall include an auxiliary tank with a capacity greater than that of the measuring tank and from which the measuring tank will be filled by gravity flow. The measuring tank shall be open to the atmosphere and shall be so placed and constructed that the water for a batch can be discharged into a calibrated tank or weighing device for checking the accuracy of water measurement without seriously delaying the paving operations. The Contractor shall have a calibrated tank or weighing device available at all times at a location satisfactory to the Engineer or designated representative.

8) If a paving mixer is furnished and operated at the site of construction, it shall be equipped with a power controlled boom and bucket, so designed as to permit uniform distribution of the concrete for the full width between pavement forms. Alternate equipment for distributing concrete may be substituted when approved by the Engineer in writing, provided uniform distribution is obtained without segregation.

9) If central mixed concrete is used on the project, the Contractor shall provide equipment designed to provide uniform distribution for the concrete for the full width between pavement forms without segregation.

C. Transit-mix Trucks

When transit-mix (ready-mix) concrete is used, additional mortar (1 sack cement, 3 parts sand and sufficient water) shall be added to the batch to coat the drum of the mixer or agitator truck. This shall be required for every load of concrete. The mixing speed shall be attained as soon as all ingredients are in the mixer. Each complete batch (containing all the required ingredients) shall be mixed not less than 70 nor more than 100 revolutions of the drum at mixing speed.

A portion of the mixing water, required by the batch design to produce the desired slump, may be withheld and added at the job site, but only with permission of the Engineer and under the Engineer's supervision. When water is added at the job site, 25 revolutions (minimum) at mixing speed, will be required to flush down the blades after charging shall be accurately measured and included in the quantity of mixing water. The introduction of the initial mixing water, except blade wash down water and that permitted in this Article shall be prior to or simultaneous with the charging of the aggregates and cementitious material.

Mixing and agitating speed shall be as designated by the mixer manufacturer. All revolutions after prescribed mixing shall be at agitating speed. Except for short periods of time during discharge, the drum shall be kept in continuous motion from the time the mixing is started until the discharge is completed.

Additional mortar, consisting of 1 sack cement, 3 parts sand and sufficient water, shall be added to the batch to coat the drum of the transit mixer or agitator truck. This shall be required for every load of concrete.

The loading of transit-mixers shall not exceed 63 percent of the drum volume. When used as an agitator only, the loading of truck mixers shall not exceed 80 percent of the drum volume.

The batching plant and transit-mix trucks shall operate under the following system:

1) A ticket system will be used that includes a copy for the construction inspector. The ticket will have machine stamped time/date of water/cement batch; weight of cement, fly ash (if applicable), water, sand and aggregates; exact nomenclature and quantities of admixture. Any item missing or incomplete on the ticket will be cause for rejection. Coded readouts may be used if approved in advance by the Engineer.

2) Sufficient trucks will be available to support continuous placements. The Contractor will satisfy the Engineer that adequate standby trucks are available to support monolithic placement when required.

3) A portion of the mixing water, required by the batch design to produce the desired slump, may be withheld and added at the job site, but only with the permission of the Engineer and under the Inspector's observation. When water is added under these conditions, it will be thoroughly mixed before any slump or strength beam samples are taken.

D. Hauling Equipment

Batch hauling equipment for the transportation of measured materials from the batching plant to the mixer shall be equipped with tight covers, which shall be used to prevent excessive evaporation of moisture or any loss of material.

If a central mixer is used, concrete may be transported to the point of delivery in truck agitators or non-agitating trucks.

If a truck mounted paving mixer is used, it may be used to transport the concrete after mixing is complete.

If non-agitator trucks are used they shall conform to the following requirements:

The bed of non-agitating hauling equipment shall be a smooth, mortar-tight, metal container. The hauling equipment shall be capable of delivering the concrete to the work site in a thoroughly mixed and uniform mass and capable of discharging the concrete at a satisfactory controlled rate without segregation. If in the opinion of the Engineer any appreciable segregation or accumulation of excess water and/or mortar occurs on the surface of the concrete, this may be cause for rejection and this method of transporting the concrete to the point of delivery shall be suspended as directed by the Engineer.

E. Subgrade or Subbase Planer and Templates

Unless a stabilized subbase is provided, an approved subbase planer shall be provided, mounted on visible rollers riding on the forms and having adjustable cutting blades which shall trim the subgrade to the exact section as indicated. The planer frame shall be heavy enough to remain on the forms at all times and shall be of such strength and rigidity that, under a test made by changing the support from the wheels to the center, it shall not develop a deflection for more than 1/8 inch (3 mm). Tractive power equipment used to pull the planer shall not be such as to produce ruts or indentations in the subgrade.

When the slip form method of paving is to be used, the subgrade planer will be operated on a prepared track grade or controlled by an electronic sensor system operated from a string line that establishes the horizontal alignment and the elevation of the subbase.

A template for checking the contour of the subbase shall be provided and operated by the Contractor. The template shall rest upon the side forms and shall be of such strength and rigidity that, under a test made by changing the support to the center, it shall not show a deflection of more than 1/8 inch (3 mm). It shall be provided with accurately adjustable rods projecting downward to the subgrade at 1-foot (30 cm) intervals and these rods shall be adjusted to the required cross section of the bottom of the slab when the template is resting upon the side forms. Where stabilized subbase is provided, use of a scratch template will be required.

F. Forms

Side forms shall be of metal of approved cross section. The preferred depth of the form shall be equal to the required edge thickness of the pavement. Forms with depth greater than the required edge thickness of the pavement will be permitted.

The length of form sections shall not be less than 10 feet (0.3 meters) and each section shall provide for staking in position with not less than 3 pins. Flexible or curved forms of wood or metal of proper radius shall be used for curves of 200-foot (61 meter) radius or less. Forms shall be of ample strength and shall be provided with adequate devices for secure setting so that when in place they will withstand, without visible springing or settlement, the impact and vibration of the spreading

and finishing machinery. In no case shall the base be less than 6 inches (15.2 cm) for a form 6 inches (15.2 cm) or more in height. The forms shall be free from warps, bends or kinks and shall be sufficiently true to provide a reasonably straight edge on the concrete. The top of each form section, when tested with a straightedge shall conform to the requirements specified for the surface of the completed pavement. Sufficient forms shall be provided for satisfactory prosecution of the work.

Outside curb forms shall be of wood or metal of a section satisfactory to the Engineer or designated representative, straight, free of warp and shall be in a depth at least equal to the depth of the curb. They shall be mounted on the paving forms and securely attached thereto and maintained in true position during the placing of the concrete. Inside curb forms, if required, shall be of approved material and of such design as to provide the curb required and shall be rigidly attached to the outside forms.

G. Concrete Spreader

Use of concrete spreader shall be required and it shall be a self-propelled machine having sufficient power and traction to spread and strike off concrete without slippage on the forms. It shall be equipped with a power driven device for spreading the concrete uniformly between the forms. The spreading device may be either a reciprocating blade, a screw conveyer or a belt conveyer. The spreader shall be capable of striking off the surface of the concrete between the forms in the longitudinal direction of the slab at any required elevation.

Mechanically operated concrete spreaders of other designs, which uniformly distribute the concrete with a minimum of segregation, may be used when approved by the Engineer.

H. Slipform Paver

With prior approval, the Contractor may place concrete with slip form paver. This paver shall be equipped with a longitudinal trans-angular finishing float adjustable to crown and grade and be satisfactory to the Engineer or designated representatve. The float shall extend across the pavement practically to the side forms and/or the edge of slab. A "string line" shall be used to provide grade control for the paver.

I. Mechanical Vibratory Equipment

All concrete placed for pavement shall be consolidated by approved mechanical vibrators operated ahead of the transverse finishing machine and designed to vibrate the concrete internally and/or from the surface. Vibratory members shall extend across the pavement practically to, but shall not come in contact with the side forms. Mechanically operated vibrators shall be mounted in such manner as not to interfere with transverse or longitudinal joints. The internal-type vibrators shall be spaced at not more than 24 inches (61 cm) and shall be equipped with synchronized vibratory units. Separate vibratory units shall be spaced at sufficiently close intervals to provide uniform vibration and consolidation to the entire width of the pavement. The frequency in air of the interval spud type vibratory units shall be not less than 8,000 cycles per minute and not less than 5,000 cycles per minute for tube types and the method of operation shall be as

directed by the Engineer or designated representative. The Contractor shall have a satisfactory tachometer available for checking vibratory the elements.

The pavement vibrators shall not be used to level or spread the concrete but shall be used only for purposes of consolidation. The vibrators will not be operated where the surface of the concrete, as spread, is below the elevation of the finished surface of the pavement, except for the first lift of concrete where double strike off method of placement is employed and the vibrators shall not be operated for more than 15 seconds while the machine upon which they are installed is standing still.

The pan type vibratory units shall apply the vibrating impulses directly to the surface of the concrete. The operating frequency shall be not less than 3,500 cycles nor more than 4,200 cycles per minute in air. The Contractor shall have a satisfactory tachometer available for checking the speed of the vibratory elements.

Approved hand manipulated mechanical vibrators shall be furnished in the number required for provision of proper consolidation of the concrete along forms, at joints and in areas not covered by mechanically controlled vibrators. These vibrators shall be sufficiently rigid to insure control of the operating position of the vibrating head.

Complete and satisfactory consolidation of the concrete pavement is a most important requirement of this specification. Cores taken shall be carefully examined for voids, honeycombing or other evidence of incomplete consolidation. If such evidence is present, changes in the consolidation procedures and/or equipment will be made to insure satisfactory consolidation.

J. Finishing Equipment

1. Transverse Finishing Machine

The Transverse finishing machine shall be provided with 2 screeds accurately adjusted to the crown of the pavement, shall be self-propelled and mounted in a substantial frame equipped to ride on the forms, or may be slip form finished, and shall be so designed and operated as to strike off and consolidate the concrete.

2. Longitudinal Finishing

A transverse drag float may be used in lieu of the longitudinal finishing machine with the Engineer's approval. Finishing machines shall be maintained in a tight and good operating condition, accurately adjusted to the required crown or profile and free from deflection, wobble or vibration tending to affect the precision of finish. Machines failing to meet these requirements will be rejected by the Engineer or designated representative and the Contractor shall provide approved equipment.

Where hand finishing is permitted under this specification, the Contractor shall provide a strike template and a tamping template both of 4 by 10 inch (10 by 25 cm) lumber or equivalent metal section and at least 2 feet longer than the width of the pavement. Both templates to conform to the crown section of the pavement and the tamp, if of wood, shall have a steel face not less than 3/8 inch (9.5 mm) in thickness. The Contractor shall also provide a

longitudinal float of approved design and not less than 14 feet (4.25 meters) in length.

The Contractor shall furnish and maintain at least two standard 10-foot (3.05 meter) steel straightedges on the work site at all times during the paving operations. The Contractor shall operate same in the presence of the Engineer or designated representative.

The Contractor shall furnish a sufficient number of bridges to ride on the forms and span the pavement for finishing operations and for the installation and finishing of joints. All necessary finishing and edging tools shall be furnished as may be required to complete the pavement as indicated.

360S.5 Proportioning of Concrete

A. Proportions

Concrete shall be composed of Cementitious Materials, fine aggregate, coarse aggregate, mineral filler and/or admixture if used and water, mixed in the proportions designated by the approved Mix Design and in the manner set forth in this specification. On the basis of job and laboratory investigations of the proposed materials, the Contractor will fix proportions by weight of water, coarse aggregate, fine aggregate, cementitious materials, admixture and mineral filler where required, in order to produce concrete of the specified strength and workability for the actual delivery time and site conditions to be encountered. Where curbs are placed separately, the Engineer or designated representative. may allow aggregate gradation conforming to Class A Concrete, Item No. 403S, "Concrete for Structures".

B. Concrete Strength

The concrete mix to be designed to produce a concrete with the following requirements:

Table 1: CONCRETE PAVEMENT		
Item	Test	Value
Entrained Air	Tex-416-A	3 to 6 percent
Water-Cement Ratio gal.(liter)/sack, Maximum		6.25 (23.66)
Sacks Cement, Minimum, 4 pounds (42.6 KG) ea		6 per cubic yard (7.85 per cubic meter)
Coarse Aggregate Factor		0.65 min - 0.85 max.
Compressive Strength after 7 Day, psi	Tex-418-A	4000 (27,600)

(kPa)		
Compressive Strength after 28 day, psi (kPa)	Tex-418-A	4500 (31,000)
Maximum Concrete Mix Temperature ^{o}F (^{o}C)		95 (35)
Retarder: Regular Concrete increase in time over 360S.7(3) , minutes, Maximum		60

Table 2: HIGH EARLY STRENGTH CONCRETE		
Item	Test	Value
Cement Type		III
Entrained Air	Tex-416-A	3 to 6 percent
Water-Cement Ratio gal. .(liter)/sack, Maximum		6.25 (23.66)
Sacks Cement, Minimum, 94 pounds (42.6 KG) ea		7 per (9.16 per cubic meter)
Coarse Aggregate Factor		0.65 min-0.85 max
Slump, inches (Centimeters)	Tex-415-A	1/2 to 2 (1.25 to 5.0)
Compressive Strength, after 24 hours, psi (kPa)	Tex-418-A	2,100 (14,500)
Compressive Strength, after 3 days, psi (kPa)	Tex-418-A	2,750 (19,000)
Compressive Strength, after 7 Days, psi (kPa)	Tex-418-A	4,500 (31,000)
Compressive Strength, after 28 Days,	Tex-418-A	4,925 (34,000)

psi (kPa)		
Maximum Concrete Mix, Temperature oF (oC)		95 (35)

The Contractor may submit a mix design using high range water reducing admixtures conforming to Item No. 405S, "Concrete Admixtures" in lieu of the concrete pavement mix specified and shall meet the following requirements:

Table 3: HIGH RANGE WATER REDUCING ADMIXTURES: SUPERPLASTERSIZER CONFORMING TO SPECIFICATION ITEM NO. 405S, "CONCRETE ADMIXTURES"		
Item	Test	Value
Entrained Air	Tex-416-A	3 to 6 percent
Water-Cement Ratio, (liter)//sack, Maximum		6.25
Sacks Cement, Minimum, 94 pounds (42.6 KG) ea		6 per cubic yard(7.85 per cubic meter)
Coarse Aggregate Factor		0.65 min. - 0.85 max.
Slump, inches (cms) before Admixture	Tex-415-A	1/2 to 2 (1.25 to 5)
Slump, Inches (cms) after Admixture	Tex-415-A	4 to 10 (2.5 to 25)
Compressive Strength, after 3 days, psi (kPa)	Tex-418-A	3,125 (21,500)
Compressive Strength, after 7 days, psi, (kPa)	Tex-418-A	4,500 (31,000)
Compressive l Strength, after 28 days, psi (kPa)	Tex-418-A	4,925 (34,000)
Maximum Concrete Mix, Temperature, ^{o}F (^{o}C)		100 (37.8)
Retarder, Regular Concrete Over 360S.7C, Minutes, Maximum		120

Table 4: Over Design Required to Meet Compressive Strength Requirements1					
Number Of Tests2,3	Standard Deviation, psi (mPa)				
	300 (2.06)	400 (2.75)	500 (3.44)	600 (4.13)	700 (4.82)
15	470 (3.24)	620 (4.27)	850 (5.85)	1,120 (7.71)	1,390 (9.57)
20	430 (2.96)	580 (3.99)	760 (5.23)	1,010 (6.95)	1,260 (8.67)
30 or more	400 (2.75)	530 (3.65)	670 (4.61)	900 (6.20)	1,130 (7.78)

Notes:

1. When designing the mix, add the tabulated amounts to the minimum design strength in Tables 1, 2 or 3.Maximum water-cement or water-cementitious ratio by weight

2. Number of tests of a concrete mixture used to estimate the standard deviation of a concrete production facility. Test of another mix within 1,000 psi (6.88 MPa) of the specified strength may be used.

3. If less than 15 prior tests are available, the overdesign should be 1,200 psi (8.26 MPa) for specified strengths from 3,000 to 5,000 psi (20.65 to 34.42 MPa) and 1,400 psi (9.64 MPa) for specified strengths greater than 5,000 psi (34.42 MPa).

High range water reducing admixtures shall be capable of maintaining the original slump until placement and screeding, which may be 2 hours, without the addition of water, additional admixture or other retempering or remixing techniques.

C. Workability of Concrete

Concrete shall be uniformly plastic, cohesive and workable. Workable concrete is defined as concrete which can be placed without honeycomb and without voids in the surface of the pavement after the specified finishing machine has been over a given area twice. Workability shall be obtained without producing a condition such that free water appears on the surface of the slab when being finished as specified. Where water appears on the surface of the concrete after finishing and this condition cannot be corrected by reasonable adjustment in the batch design, the bleeding to be immediately corrected by one of the following measures or a combination of two or more of the following listed measures:

1. Redesign of the batch.

2. Addition of mineral filler to fine aggregates.

3. Increase of cement content.

4. Use of an approved air entraining agent or approved admixture.

In the event that the measures taken do not eliminate the bleeding immediately, concrete placement operations will be suspended, as directed by the Engineer or designated representative, by placing a bulkhead or "header" as indicated and

according to applicable requirements for intentional stoppage of placement of concrete under Item No. 360S, "Concrete Pavement" and will remain suspended until such time as additional trial mixes demonstrate that a non-bleeding batch design has been achieved. Failing to achieve a satisfactory laboratory batch design the Contractor will be required to use different materials and to submit samples thereof for additional trial mixes and pilot beams.

The mix will be designed with the intention of producing concrete, which will have a slump of 1 1/2 inches (3.8 cms). The slump shall not be less than 1/2 inch (1.25 cms) nor more than 2 inches (5 cms).

D. Mix Design

The Contractor shall be responsible for the design of the concrete mix. The mix design shall be prepared and sealed by a person qualified and experienced in such work. Establish proportions on the basis either of laboratory trial batches or of field experience with the materials to be employed.

When ice is used to lower the concrete temperature during hot weather concrete placement (Section 13 of Standard Specification Item No.410S, “Concrete Structures”), the Contractor shall furnish a mix design (Section 6 of Standard Specification Item No. 403S, “Concrete for Structures”) acceptable to the Engineer or designated representative for class of concrete specified. The addition of ice shall not exceed 50% of the total mix water weight.

Complete concrete mix design data shall be submitted to the Engineer or designated representative for approval at least 10 days before concrete placement begins. Submittal of the mix shall be accompanied by such test data and certifications as may be necessary to demonstrate compliance with specification requirements. Approval of this mix design shall in no way relieve the Contractor of responsibility for the quality of the concrete.

It shall also be the responsibility of the Contractor to determine and measure batch quantity of each ingredient, including water, not only for batch designs but for all concrete produced for the project, so that the mix conforms to these specifications.

Trial batches shall be made and tested using all the proposed ingredients prior to the placing of concrete and also when the aggregate and/or type, brand or source of cement or admixture is changed. When the brand and/or source of cement only is changed, the Engineer or designated representative may waive trial batches only if a prior record of satisfactory performance of the cement has been established.

Mix designs used successfully on previous or concurrent jobs may be approved by the Engineer or designated representative without trial batches if it is shown that there is no substantial change in any of the proposed ingredients.

The Contractor shall prepare a minimum of four concrete test beams of each mix design, cure and test two each at the age of 7 and 28 days. From these preliminary tests the water-cement ratio required to produce concrete of the specified strength will be selected by the Contractor for approval by the Engineer or designated representative. The Contractor may at any time present in writing a suggested mix design and if the Engineer or designated representative concurs with the suggested design, the Contractor shall conduct trial batches necessary to determine its acceptability under these specification requirements.

The Contractor shall furnish and operate the mixer approved for use on this project unless the concrete is to be furnished from a transit mix (ready-mix) plant. For mixing the concrete to be used in making the preliminary test specimens, a minimum 1 cubic yard (1 cubic meter) batch shall be mixed or a batch of sufficient size to afford proper mixing, whichever is the greater. In lieu of the above mixer and procedure, the Contractor may furnish a portable mixer of sufficient rated capacity to mix a minimum 3-sack batch; in which case, the batch mixed for the preliminary test not to be less than the rated capacity of the mixer furnished. A coating batch will be mixed prior to mixing for test beams.

No additional compensation to be allowed for equipment, materials or labor involved in making job mix design test specimens.

After the mix proportions and water-cement ratio required to produce concrete of the specified strength have been determined, placing of the concrete may be started. The strength of the concrete in the completed pavement will be determined by a minimum of four compressive strength test specimens made, cured with a minimum of two each tested at 7 and 28 days as provided in Texas DOT Bulletin C-11. Modifications of the mix design may be requested by the Contractor on basis of conformity of the strength of these test specimens with the requirements and intent of this specification.

Changes in the water-cement ratio and the mix design, including an increase in cement factor if necessary, will be made when the average 7 day and/or 28 day compressive strength of the concrete, as indicated by the last 10 compressive strength values obtained from tests of cylinders made from concrete of the same water-cement ratio, departs from the desired minimum average strength by more than 4 percent.

E. Construction Testing:

Straightedge surface testing to be carried out as prescribed above.

The Engineer shall take test cylinders for compressive strength values on a random basis. The comparative results shall consist of the average of 2 cylinders each at 7 and 28 days for regular concrete, High early strength concrete and high range water reducing admixture concrete. Tests shall be made for each 500 square yards constructed, in accordance with TxDOT Bulletin C-11. Additional tests may be taken as determined by the concrete placement conditions or for adequately determining the strength of concrete where the early opening of the pavement to traffic is dependent upon concrete strength tests. No extra compensation will be allowed for materials and work involved in fulfilling these requirements.

360S.6 Construction Methods

A. Preparation of Subgrade

Where stabilized subbase is not provided, the subgrade shall be excavated as required, all unstable or otherwise objectionable material removed and all holes, ruts and depressions filled with approved material and compacted. Rolling and sprinkling shall be performed when and to the extent required and the roadbed

shall be completed to or above the plane of the typical sections, lines and grades indicated or as established by the Engineer or designated representative. The subgrade shall be proof rolled and any soft areas shall be repaired before the forms are placed. In the event that the proof rolled subgrade is exposed to rainfall or other conditions, which may soften the subgrade, corrective measures shall be taken and the subgrade shall be proof rolled again.

The subgrade planer shall be operated from approved forms immediately ahead of paving operations and the subgrade shall be finished to the exact section of the bottom of the pavement as indicated. Where traveling form pavers are used, the subgrade planer shall operate on a prepared track grade or be controlled by electronic sensors operating from a stringline that establishes line and grade. It shall be tested with the approved template, operated and maintained by the Contractor. The subgrade shall be maintained in a smooth, compacted condition in conformity with the required section and established grade until the pavement is placed and shall be kept thoroughly wetted down sufficiently in advance of placing any pavement to insure its being in a firm and moist condition for at least 2 inches (5 cms) below the prepared surface. Sufficient subgrade shall always be prepared in advance to insure satisfactory prosecution of the work.

No equipment or hauling shall be permitted on the prepared subgrade, except by special permission of the Engineer or designated representative, which will be granted only in exceptional cases and only where suitable protection in the form of 2-ply timber mats or other approved material is provided.

B. Placing and Removing Forms

The subgrade under the forms shall be firm and cut true to grade so that each form section when placed will be firmly in contact for its whole length and base width and exactly at the established grade. Any subgrade under the forms below established grade shall be corrected, using suitable material, placed, sprinkled and rolled as directed. Forms shall be staked with at least 3 pins for each 10-foot (3-meter) section. A pin shall be placed at each side of every joint. Form sections shall be tightly joined and keyed to prevent relative displacement. Forms shall be cleaned and oiled each time they are used.

Forms shall be set for a sufficient distance in advance of the point where concrete is being placed to permit a finished and approved subgrade length of not less than 300 feet (90 meters) ahead of the mixer. Conformity of the grade and alignment of forms shall be checked immediately prior to placing concrete and necessary corrections made by the Contractor. Where any form has been disturbed or any subgrade becomes unstable, the form shall be reset and rechecked. In exceptional cases, the Engineer or designated representative may require suitable stakes driven to the grade of the bottom of the forms to afford additional support. Sufficient stability of forms to support the equipment operated and to withstand its vibration without springing or settlement shall be required. If forms settle and/or deflect over 1/8 inch (3 mm) under finishing operations, paving operations shall be stopped and the forms shall be reset to line and grade.

Forms shall be leveled using cement-stabilized material containing not less than 1 1/2 sacks of cement per ton (1 2/3 sacks of cement per MG) of mix as placed. The aggregate gradation and water content shall be determined by the Contractor. The cement-stabilized material shall be sufficiently plastic to insure filling voids

underneath the paving forms. Paving equipment will not to be permitted on the forms until the cement-stabilized material has cured for at least 12 hours.

Forms shall remain in place for not less than 8 hours after the concrete has been placed. Forms shall be carefully removed in such a manner that little or no damage will be done to the edge of the pavement. Any damage resulting from this operation shall be immediately repaired. After the forms have been removed, the ends of all joints shall be cleaned and any honeycombed areas pointed up with approved mortar and the surfaces protected with curing material conforming to Item No. 409S, "Membrane Curing".

Immediately after pointing is complete, the form trench, if used, shall be filled with granular material or earth from the shoulders in such manner as to shed water from rainfall and prevent curing material from washing away from the edge of pavement. On completion of the required curing, the subgrade or shoulders adjacent to the pavement shall be placed and compacted in condition to maintain drainage.

360S.7 Concrete Mixing and Placing

A. Mixing Methods

The concrete shall be mixed in a mixer conforming to the requirements of this item.

B. Mixing

The aggregates, mineral filler if required, cementitious materials and water shall be measured separately, introduced into the mixer and mixed for a period of not less than 50 seconds nor more than 90 seconds, measured from the time the last aggregate enters the drum to the time discharge of the concrete begins. The required water shall be introduced into the mixing drum during the first 15 seconds of mixing. The entire contents of the drum shall be discharged before any materials of the succeeding batch are introduced.

The Engineer or designated representative may increase the minimum mixing time to that necessary to produce thoroughly mixed concrete based on inspection or appropriate uniformity tests. The mixing time may be varied at any time as necessary to produce acceptable concrete.

If a central mixer is used, the concrete shall be discharged into the specified hauling equipment and delivered to the road site. If truck agitators are used, the concrete shall be continuously agitated at not less than 1 nor more than 6 rpm as directed by the Engineer or designated representative.

The maximum size of the concrete batch, absolute volume, shall not exceed 120 percent of the rated size of the mixer (40.8 cubic feet maximum batch for 34 cubic foot paver-1.2 cubic meter maximum batch for 1 cubic meter paver). Spilling of material from the mixer drum shall be corrected by reducing the size of the batch. Retempering or remixing of concrete will not be permitted.

The initial batch of concrete mixed after each time the mixer is washed out shall be enriched by additional mortar. The additional mortar shall be 1 sack of cement and 3 parts of sand.

When transit-mix (ready-mix) concrete is permitted, the batching plant shall meet the requirements of Item 403S, "Concrete for Structures".

C. Placement

Unless otherwise indicated, the concrete may be placed by using forms or by use of a slipform paver. Any concrete not placed as herein prescribed within 30 minutes after mixing shall be rejected and disposed of as directed except as provided otherwise herein. If in the opinion of the Engineer or designated representative, the temperature, wind and/or humidity conditions are such that the quality of concrete will not be adversely affected, the specified placing time may be extended by a maximum of 45 minutes. Concrete with high range water reducing admixture shall not be placed after the slump has dropped by 3 inches (7.5 cms) or more. Except by specific written authorization of the Engineer or designated representative, concrete shall not be placed when the temperature is below 40oF (4.5oC) and falling but may be placed when the temperature is above 35oF (1.7oC) and rising, the temperature being taken in the shade and away from artificial heat.

When the temperature of the air is above 85oF (29.4oC), an approved retarding agent will be required in concrete. The maximum temperature of all regular concrete placed shall not exceed 95oF (35.0oC), unless otherwise specified.

When concrete is being placed in cold weather, the Contractor shall have available a sufficient supply of an approved covering material to immediately protect concrete if the air temperature falls to 32oF (0oC) or below, before concrete has been placed 4 hours. Such protection shall remain in place during the period the temperature continues below 32oF (0oC) or for a period of not more than 5 days. Neither salt nor other chemical admixtures shall be added to the concrete to prevent freezing. The Contractor shall be responsible for the quality and strength of concrete under cold weather conditions and any concrete damaged by freezing shall be removed and replaced at the Contractor's expense. Concrete shall not be placed before sunrise and shall not be placed later than will permit finishing of the pavement during sufficient natural light.

Concrete shall be placed only on approved subgrade or subbase and unless otherwise indicated on the drawings, the full width of the pavement shall be constructed monolithically. The concrete shall be deposited on the subgrade or subbase in such manner as to require as little rehandling as possible. Where hand spreading is necessary, concrete shall be distributed to the required depth by use of shovels. The use of rakes will not be permitted. Workers will not be permitted to walk in the concrete with any earth or foreign material on their boots or shoes. The placing of concrete shall be rapid and continuous.

When the concrete is to be placed in separate lanes, the junction line shall not deviate from the true line more than 1/2 inch (1.25 cm) at any point and shall be finished as indicated on the drawings.

The mixer shall not be located on completed pavement, except as herein provided, but may be located on the subgrade of that lane of the pavement being constructed, as provided under "Preparation of Subgrade". When limited space, in the opinion of the Engineer or designated representative, requires operation of the mixer on completed pavement, the mixer may be so operated provided the concrete has attained the minimum average compressive strength required and

provided suitable protection to the pavement in the form of 2 ply timber mats or otherwise approved material is provided.

Concrete shall be distributed to such depth that when consolidated and finished, the slab thickness indicated will be obtained at all points and the surface shall not, at any point, be below established grade. Special care shall be exercised in placing and spading concrete against forms and at all joints to prevent the forming of honeycombs and voids.

Concrete for the monolithic curbs shall be the same as for the pavement and if carried back from the paving mixer shall be placed within 20 minutes after being mixed. It may be placed from the separate mixer, if desired, but in any case must be placed while the pavement concrete is still plastic. When sawed joints are used, curbs shall be doweled as indicated and poured after sawing. Curbs doweled on and placed separately may be placed with an extrusion machine.

If a central mixer or batcher is used, the Contractor shall provide a system satisfactory to the Engineer or designated representative for determining that concrete delivered to the road meets the specified requirements for mixing and time of placing.

Unless otherwise indicated, 2 mixers or transit mixers will be required where the double strike off method is employed.

D. Reinforcing Steel and Joint Assemblies

All reinforcing steel, including steel, welded wire fabric reinforcement, tie bars, dowel bars and load transmission devices used in accordance with plan provisions shall be accurately placed and secured in position in accordance with details indicated on the drawings. Reinforcing bars shall be securely wired together at alternate intersections, following a pattern approved by the Engineer or designated representative and at all splices and shall be securely wired to each dowel intersected. When wire fabric is used, it shall replace only the longitudinal and transverse bars and shall be securely wired together at all splices and to each dowel intersected. When welded wire fabric is selected, the Contractor shall pour the lower half of the slab, place the welded wire fabric and place the remaining concrete. Tie bars shall be installed in the required position by the method and device indicated. Bar coating indicated and of material specified, shall be completed and the bars and coating shall be free of dirt or other foreign matter at the time of installation in the concrete.

Tightly adhered scale or rust which resists removal by vigorous wire brushing need not be removed except that excessive loss of section to the reinforcement due to rust shall be cause for rejection. Excessive loss of section shall be defined as loss of section to the extent that the reinforcement will no longer meet the physical requirements for the size and grade of steel specified.

Where indicated on the drawings, an assembly of parts at pavement joints, the assembly shall be completed, placed at required location and elevated and all parts rigidly secured in required position by the method and devices indicated on the drawings. Dowel bars shall be accurately installed in joint assemblies as indicated on the drawings, each parallel to the pavement surface and to the center line of the pavement and shall be rigidly secured in the required position by such

means as indicated that will prevent their displacement during placing and finishing of the concrete. Unless specifically authorized by the Engineer or designated representative in writing, the load transmission devices shall be accurately installed in joint assemblies indicated, each unit vertical with its length parallel to the center line of the pavement and all units shall be rigidly secured in required position by such means as indicated that will prevent their displacement during placing and finishing of the concrete. Header boards, joint filler and other material used for forming joints shall be accurately notched to receive each load transmission device. All load transmission devices shall be free of rust and clean when installed in the concrete.

The Contractor has the option of substituting welded wire fabric in place of reinforcement bars. The welded wire fabric selected shall have an area and distribution of steel at least equal to the plan requirements. The Contractor shall submit their proposed design to the Engineer for approval before any material is ordered.

If welded wire fabric is used, the entire width of the bottom layer of concrete shall be struck off to conform to the cross section and elevation indicated on the drawings. The reinforcement shall then be placed immediately upon the concrete, after which the top layer of concrete shall be placed, struck off and screeded. Any portion of the bottom layer of concrete which has been placed more than 15 minutes without being covered with the top layer of concrete shall be removed and replaced with freshly mixed concrete at the Contractor's expense.

E. Joints

1. General

All transverse and longitudinal joints when required in the pavement shall be of the types indicated and shall be at required location, on required alignment, in required relationship to tie bars and joint assemblies and in accordance with details indicated. When no transverse joints are indicated, joints shall not exceed 40 feet (13.1 meters). Such stakes, braces, brackets or other devices shall be used as necessary to keep the entire joint assembly in true vertical and horizontal position. Where concrete base is overlaid by asphaltic concrete, the joints to be prepared as specified herein, but joint sealing will not be required unless indicated.

If necessary for proper installation of the sealer, excessive spalling of the joint groove shall be repaired to the satisfaction of the Engineer.

Care shall be exercised during the construction of all joints to insure that the concrete sections are completely separated by an open joint or by the joint materials and to insure that the joints will be true to the outline indicated on the drawings. The Contractor shall install joint materials, which will function as a compatible system. Joint sealer shall not be placed where a bond breaker is present.

Green concrete or wet sawed joints are permitted provided the Contractor cleans the joint within 5 minutes after cutting with a 3000 psi (20.7 mPa) water blast followed by a minimum of 7 day cure and sand blast the saw cut immediately prior to placing joint sealer.

Dry sawed joints are permitted provided the Contractor sand blasts the saw cut immediately prior to placing joint sealer.

2. Expansion Joints

Transverse expansion joints shall be formed perpendicular to the centerline and surface of pavement and shall be constructed in accordance with the sequence of operations indicated on the drawings. After the transverse finishing machine and before the longitudinal finishing machine have passed over the joint, the Contractor shall test the joint filler for correctness of position and make any required adjustment in the position of the filler and shall install the joint seal space form as indicated on the drawings. After removal of the joint seal form as indicated on the drawings, the joint seal space above the joint filler shall be thoroughly sandblasted or machine routed to remove all projecting concrete, laitance, dirt or foreign matter. The concrete faces of the joint seal space shall be left true to line and section throughout the entire length of the joint. On completion of curing of the pavement, the joint sealing filler of the type specified shall be placed as indicated. The faces of the joint seal space shall be clean and surface dry at the time joint sealing filler is placed. On completion of the joint seal, the pavement adjacent to the joint shall be left free of joint sealing material. The joint seal space shall be exactly above and not narrower than the joint filler with no concrete overhangings.

3. Weakened Plane Joints

Weakened plane joints shall consist of transverse contraction joints and longitudinal joints and shall be formed or sawed as indicated on the drawings. When the joints are sawed, the saw shall be power driven, shall be manufactured especially for the purpose of sawing concrete and shall be capable of performing the work. Saw blades shall be as indicated. Tracks adequately anchored, the chalk, string line or other approved methods shall be used to provide true alignment of the joints. The concrete saw shall be maintained in good operating condition and the Contractor shall keep a standby power saw on the project at all times when concrete operations are under way.

If membrane curing is used, the portion of the seal, which has been disturbed by sawing operations, shall be restored by the Contractor by spraying the areas with additional curing seal.

Forming, finishing and sealing of the joint seal space shall conform to this item, described above and details indicated on the drawings.

4. Contraction Joints

Transverse contraction joints shall be formed or sawed joints perpendicular to the centerline and surface of the pavement and shall be constructed by the method and in the sequence of operations as indicated. Where sawed joints are used, contraction joints at intervals indicated shall be sawed as soon as sawing can be accomplished without damage to the pavement and before 24

hours after the concrete has been placed, the exact time to be approved by the Engineer or designated representative. The remaining contraction joints shall be sawed in a uniform pattern as directed by the Engineer or designated representative and they shall be completed before uncontrolled cracking of the pavement takes place. All joints shall be completed before placing concrete in succeeding lanes and before permitting traffic to use the pavement.

5. Longitudinal Joints

Longitudinal joints shall be of the type or alternate types indicated and shall be constructed of specified materials in accordance with provisions indicated on the drawings. Longitudinal joints shall be constructed accurately to required lines, shall be perpendicular to the pavement surface at the joint and the pavement surface over and adjacent to the joint shall be finished as specified on the drawings.

Longitudinal joints shall be sawed as soon as sawing can be accomplished without damage to the pavement. Sawing shall not cause damage to the pavement and the groove shall be cut with a minimum of spalling. No traffic (including construction traffic) shall be permitted on pavement until the longitudinal joint is cut.

6. Construction Joints

Intentional stoppage of the placing of the concrete shall be at either an expansion joint or at a weakened plane joint. The following provisions shall govern for each type of joint at which the placing of concrete is stopped:

a) When the placing of concrete is stopped at an expansion joint, the complete joint assembly shall be installed and rigidly secured in required position as indicated. A bulkhead of sufficient cross sectional area to prevent deflection, accurately notched to receive the load transmission devices or dowels, as the case may be, and shaped accurately to the cross section of the pavement shall be provided and installed as a back-up for the joint filler and rigidly secured in required position to permit accurate finishing of the concrete up to the joint. After the concrete has been finished to the joint, formation of the joint seal space and finishing of the joint shall be executed as specified herein and as indicated. The backup bulkhead shall remain in place until immediately prior to the time when concrete placement is resumed, then it shall be carefully removed in such manner that no element of the joint assembly will be disturbed. The exposed portion of the joint assembly shall be free of adherent concrete, dirt or other material at the time placing of concrete is resumed.

b) When placing of concrete is stopped at a weakened plane joint, all applicable provisions of paragraph (a) above shall apply in addition to the following requirement:

The face of the bulkhead adjoining the slab end shall be notched and grooved to fit the exposed half section of the joint assembly and shall be shaped to form the slab end at the center of the joint as indicated on

the drawings. The 1/2 width of joint seal space may be formed by a strip of required section placed and removed as indicated for construction of transverse contraction joints. The Contractor shall have available a bulkhead shaped to section of the pavement. This bulkhead must be drilled to permit the continuation of all longitudinal reinforcing steel through the construction joint and shall be of sufficient section and strength to prevent deflection.

c) When load transmission devices are not provided in the design, intentional stopping of placement of concrete shall occur in the middle of a slab. Provisions shall be made to provide a bulkhead, which will accommodate tie bars of the same length, size and spacing as tie bars used for the longitudinal joints. When the concrete placement is resumed, the bulkhead shall be removed without bending tie bars or damaging the concrete. The joint seal space and sealer shall be the same as for longitudinal joints.

Immediately upon the unintended stoppage of the placing of concrete, the Contractor shall place the available concrete to a line and install the above-described bulkhead at right angles to the centerline of the pavement, perpendicular to the surface and at the required elevation. Concrete shall be placed and finished to this bulkhead. Any concrete remaining on the subgrade ahead shall be removed and disposed of as directed by the Engineer or designated representative. When placing of concrete is resumed before the concrete has set to the extent that the concrete will stand on removal of the bulkhead, the new concrete shall be rodded with the first. An edge created by a construction joint of this type shall have a joint seal space and shall be sealed as required for contraction joints.

F. Joint Sealers

1. Class 2 Material

This material shall conform to Standard Specification Item No. 313S, ""Cleaning and/or Sealing Joints and Cracks (Asphaltic Concrete).

For placement in vertical joints (curb faces, etc.) either of the following procedures may be used.

a) An amount of the mixed material may be set aside until partial curing has taken place and carefully trowelled into the joint with a suitable tool.

b) The portion of the joint in the roadway shall be poured and cured. The vertical curb faces shall then be taped or formed and the material poured into the vertical joint from the top.

2. Class 5 Material

This material together with backer rods shall be applied as indicated in accordance with manufacturer's recommendations.

G. Asphalt Board

Premolded materials, wherever used, shall be anchored to the concrete on one side of the joint by means of copper wire or nails not lighter than No. 12 B and S gage. Such anchorage shall be sufficient to overcome the tendency of the material to fall out of the joint. The Contractor shall not contaminate joints to receive Class 5 Joint Material with asphalt from the asphalt board.

H. Curbs

The curb shall be constructed in lengths equal to the adjoining pavement slab lengths and expansion joints shall be provided in the curb opposite each transverse expansion joint in the pavement. Expansion joint material shall be of the same thickness, type and quality as indicated for the pavement and shall be of the section as indicated for the curb. All expansion joints shall be carried through the curb, sidewalk and retaining walls when these items are indicated.

When sawed joints are provided for the pavement, the curb placement shall be delayed until all transverse joints have been sawed. To provide bond for the curb, dowel bars shall be placed as indicated on the drawings, while the pavement concrete is still plastic.

Weakened plane joints shall be formed in monolithic curbs at a spacing to coincide with the joints in the concrete pavement. The joints shall be formed by inserting in the curb an asphaltic board strip cut to conform to the shape of the curb. When the concrete is sufficiently set, the joint on the top and face of curb shall be grooved with an approved type of grooving tool.

A finish coat of mortar shall be applied on the exposed surfaces of the monolithic curbs. The mortar shall be composed of 1 part of Portland Cement and 2 parts of fine aggregate. A mortar coat will not be required for extruded curbs.

The curb face, lower radius and top of curb shall be plastered with the sand-cement mortar. The mortar shall be applied with a template or "mule" made to conform to the curb dimensions as indicated. All exposed surfaces of the curb shall be finished with a steel trowel and brushed to a smooth and uniform surface. The mortar finish as required shall be included in the unit price bid for this item.

I. Machine Finishing

All concrete pavement shall be finished mechanically with approved self-propelled machines, except as herein provided. Hand finishing will be permitted on the transition from a crowned section to a superelevated section without crown on curves, on straight line superelevation sections less than 300 feet (91.4 meters) in length, on that portion of a widened pavement outside normal pavement width and on sections where the pavement width is not uniform, isolated, narrow in width or required monolithic widths are greater than that of available finishing machines.

Machine finishing of pavement shall include the use of power-driven vibrators, power-driven transverse strike off and screed or such alternate equipment as may be substituted and approved under this item.

All concrete pavement shall be consolidated by a mechanical vibrator. As soon as concrete has been spread between the forms, the approved mechanical vibrator

shall be operated to consolidate the concrete and remove all voids. Hand manipulated vibrators shall be used for areas not covered by the mechanical vibratory unit.

The transverse finishing machine shall first be operated to compact and finish pavement to the required section and grade, without surface voids. The machine shall be operated over each area as many times and at such intervals as directed. At least 2 trips will be required and the last trip over a given area shall be a continuous run of not less than 40 feet (12.2 meters). After completion of finishing with the transverse finishing machine, a transverse drag float may be used.

The consistency of the concrete as placed should allow completion of finishing operations without the addition of water to the surface. When field conditions are such that additional moisture is needed for the final concrete surface finishing operation, the required water shall be applied to surface by fog spray only and shall be held to a minimum.

After finishing is complete and the concrete still workable, the surface shall be tested by the Contractor for trueness with an approved 10 foot (3.05 meter) straightedge. The straightedge shall be operated from the side of the pavement, placed parallel to the pavement centerline and passed across the slab to reveal any high spots or depressions. The straightedge shall be advanced along the pavement in successive stages of not more than 1/2 its length. Practically perfect contact of the straightedge with the surface will be required and the pavement shall be leveled to this condition, in order to insure conformity with the surface test required below after the pavement has fully hardened. Any correction of the surface required shall be accomplished by adding concrete if required and by operating the longitudinal float over the area. The surface test with the straightedge shall then be repeated.

For one lane pavement placement and uniform widening, the equipment for machine finishing of concrete pavement shall be as directed by the Engineer or designated representative but shall not exceed requirements of these specifications.

After completion of the straightedge operation, as soon as construction operations permit, texture shall be applied with 1/8 inch (3 mm) wide metal tines with clear spacing between the tines being not less than 1/4 inch (6.3 mm)nor more than 1/2 inch (12.7 mm).

If approved by the Engineer or designated representative, other equipment and methods may be used, provided that a surface texture meeting the specified requirements is obtained. The texture shall be applied transversely. It is the intent that the average depth resulting from the number of tests directed by the Engineer or designated representative be not less than 0.060 inch (1.52 mm) with a minimum texture depth of 0.050 inch (1.27 mm) for any one test when tested in accordance with TxDOT Test Method Tex-436-A. Should the texture depth fall below that intended, the finishing procedures shall be revised to produce the desired texture.

1. Emergency Procedures

The Contractor shall have available at all times hand rakes with tines for the purpose of providing textures in the event of equipment breakdown.

The Contractor also shall have available a conventional garden spray type can containing a commercially available monomolecular film compound. This shall be applied in the case of equipment breakdown or other emergencies to prevent the pavement from drying too rapidly. The use of this product will give the Contractor additional time to provide adequate texturing.

After completion of texturing and about the time the concrete becomes hard, the edge of the slab and joints shall be carefully finished with an edger and the pavement shall be left smooth and true to line.

J. Hand Finishing

Hand finishing shall be resorted to only in those conditions provided for above and upon specific authorization by the Engineer or designated representative. When hand finishing is permitted, concrete shall be struck off with an approved strike off screed to such elevation that when consolidated and finished the surface of the pavement to conform to the required section and grade. The strike template shall be moved forward with a combined transverse and longitudinal motion in the direction work is progressing, maintaining the template in contact with the forms and maintaining a slight excess of material in front of the cutting edge. The Concrete shall then be tamped with an approved tamping template to compact the concrete thoroughly and eliminate surface voids and the surface screed to required section.

After completion of a strike off, consolidation and transverse screeding, a hand-operated longitudinal float shall be operated to test and level the surface to the required grade.

Workers shall operate the float from approved bridges riding on the forms and spanning the pavement. The longitudinal float shall be held in contact with the surface and parallel to the centerline and operated with short longitudinal strokes while being passed from one side of the pavement to the other. If contact with the pavement is not made at all points, additional concrete shall be placed, if required and screed and the float shall be used to produce a satisfactory surface. Care shall be exercised to keep the ends of the float from digging into the surface of the pavement. After a section has been smoothed so that the float maintains contact with the surface at all points in being passed from one side to the other, the bridges may be moved forward half the length of the float and the operations repeated.

Other operations and surface tests shall be as required for machine finishing.

K. Surface Testing:

After the concrete has been placed 12 hours or more, the Engineer or designated representative will test the surface of the pavement with a 10-foot (3.05 meter) straightedge placed parallel to the centerline. Unless specified otherwise, the surface shall not vary from the straightedge by more than 1/16 inch per foot (5 mm per meter) from the nearest point of contact and in no case shall the maximum

ordinate from a straightedge to the pavement be greater than 1/8 inch (3 mm). Any high spots causing a departure from the straightedge in excess of that specified shall be ground down by the Contractor to meet the surface test requirements. Where the texture of the pavement is removed by extensive grinding, the texture shall be restored by grooving the concrete to meet the surface finishing specifications.

L. Curing

All concrete pavement shall be cured by protecting it against loss of moisture for a period of not less than 72 hours from the beginning of the curing operations. Immediately after finishing operations have been completed, the entire surface of the newly laid concrete shall be covered and cured in accordance with the requirements specified for whichever of the following methods the Contractor may elect. Newly laid concrete base to be overlaid by asphaltic concrete shall not be cured by "Membrane Curing" and surfaces not to be overlaid by asphaltic concrete shall not be cured by "Asphalt Curing". In all cases in which curing requires the use of water, the curing shall have prior right to water supply or supplies. Failure to provide sufficient cover material of the type the Contractor elects to use, failure to maintain saturation in wet curing methods, lack of water to adequately take care of both curing and other requirements or other failures to comply with curing requirements shall be cause for immediate suspension of concreting operations. The covering material used in curing shall be removed as necessary to saw joints or to comply with the requirements for "Surface Test". The concrete surface shall be maintained wet with a water spray if indicated and the covering material replaced immediately on completion of sawing and testing and any required surface correction.

1. Waterproofed Paper Curing

Immediately after the finishing of the surface has been completed and the concrete has taken its initial set, it shall be wetted with water applied in the form of a fine spray and covered with waterproofed paper so placed and weighted as to cause it to remain in intimate contact with the surface. Waterproofed paper used for the curing of concrete pavement shall be of a type and quality approved by the Engineer. It shall be sufficiently strong and tough to permit its use under the conditions existing on street paving work without being torn or otherwise rendered unfit for the purpose during the curing period. The paper covering shall be maintained in place continuously for not less than the specified curing period.

The waterproofed paper shall be prepared to form blankets of sufficient width to cover the entire surface and both edges of the pavement slab and such blankets shall not be more than 60 feet in length. All joints in the blankets occasioned by joining paper sheets shall lap not less than 5 inches (12.7 cms) and shall be securely sealed with asphalt cement having a melting point of approximately 180o F (82.2 oC). Blankets shall be placed to secure an overlap of at least 12 inches (30.5 cms) and this lap securely weighted to form a closed joint.

The waterproofed paper blankets shall be adequately weighted to prevent displacement or billowing due to wind and the paper folded down over the

side of the pavement shall be secured by a continuous bank of earth. Plowing of this windrow into place will not be permitted.

All tears or holes appearing in the paper during the curing period shall be immediately repaired by cementing patches over such defects. It shall be the Contractor's responsibility to prevent damage to paper blankets, which would affect their serviceability and effectiveness as a concrete curing method. Blankets may be rejected by the Engineer or designated representative at any time if it appears they do not provide an airtight covering.

Paper blankets rejected on account of pinholes or minor tears may be continued in service by folding the blanket over lengthwise, first thoroughly spraying 1/2 the blanket with the asphalt cement used for seams. The 2 thicknesses shall be firmly pressed together and well cemented. Blankets shall be of a width sufficient to cover the pavement surface and both edges. Doubled blankets may be rejected for the same cause as provided for single blankets. All paper blankets rejected by the

Engineer shall be immediately marked by the Contractor for identification and then destroyed or stored entirely separate from approved blankets.

No walking on paper shall be permitted at any time and, in locations where pedestrian traffic cannot be entirely controlled, the Contractor shall provide walkways and barricades or shall substitute other permissible curing methods on such sections of pavement.

2. Polyethylene Film Curing

Immediately after the finishing of the surface has been completed and the concrete has taken its initial set, it shall be wetted with water applied in the form of a fine spray and covered with the polyethylene film so placed and weighted as to cause it to remain in intimate contact with the surface. The polyethylene film covering shall be maintained in place continuously for not less than the specified curing period.

The film shall be prepared to form blankets of sufficient width to cover the entire surface and both edges of the pavement slab. All joints in the blankets occasioned by joining film sheets shall lap not less than 12 inches (30.5 cms). All joints shall be sealed in a manner acceptable to the Engineer or designated representative to provide a moisture-proof lap.

The polyethylene film blankets shall be adequately weighted to prevent displacement or billowing due to wind and the film folded down over the side of the pavement shall be secured by a continuous bank of earth. Plowing of this windrow into place not to be permitted.

All tears or holes appearing in the polyethylene film during the curing period shall be immediately repaired by placing acceptable moisture proof patches over such defects or by replacing the blankets. It shall be the Contractor's responsibility to prevent damage to the film blankets, which would affect their serviceability and effectiveness as a concrete curing method. Blankets may be rejected by the Engineer at any time if it appears they do not provide an airtight covering.

Polyethylene film blankets rejected on account of pinholes or minor tears may be continued in service when repaired to an airtight condition. All polyethylene film blankets rejected by the Engineer or designated representative shall be immediately marked by the Contractor for identification and then destroyed or stored entirely separate from approved blankets.

Should the film blanket be damaged or torn for any cause during the first 72 hours of the curing period such damage shall be repaired immediately.

3. Membrane Curing

Immediately after the finishing of pavement has been completed and after the free surface moisture has disappeared, the pavement shall be sprayed uniformly with a curing compound. Membrane curing shall conform to Standard Specification Item No. 409S, "Membrane Curing", Type 2 white pigmented. Should the film of compound be damaged from any cause before the expiration of 72 hours after original application, the damaged portions shall be repaired with additional compound. Unless otherwise indicated on the drawings, membrane curing shall be used when the concrete (except that concrete to be used as a base) is placed with a slip form paver.

4. Asphalt Curing

Where emulsified asphalt is used for curing concrete base, the material shall conform to Item No. 301S, "Asphalts, Oils and Emulsions", for the type and grade shown on the drawings. The rate of application may vary between the limits of 1 gallon per 180 square feet and 1 gallon per 90 square feet (1 liter per 4.4 square meters and 1 liter per 2.2 square meters). The rate of application will be determined by the Engineer or designated representative, after observation of sections where amounts varying between the above limits have been applied. If it is found necessary to add water to the emulsion for the proper distribution through the spray, this may be done upon approval of the Engineer or designated representative. When the emulsion is diluted with water the amount of the applied mixture shall be increased to give a coverage of the original emulsion between the limits as set out herein. Care shall be taken to properly mix the emulsion and water and to keep the mixture well agitated during application.

M. Protection of Pavement

The Contractor shall erect and maintain the barricades indicated on the drawings and such other standard and approved devices as will exclude public traffic and traffic of the Contractor's employees and agents from the newly placed pavement for a minimum of 14 days. Portions of the roadway or crossings of the roadbed required to be maintained open for use by traffic shall not be obstructed by above required barricades. Crossings of the pavement indicated on the drawings or by construction sequence, during the period prior to opening to traffic as herein indicated, shall be provided with an adequate and substantial bridge approved by the Engineer or designated representative.

Curb shall be backfilled to the full height of the concrete, tamped and sloped as indicated on the drawings or as directed by the Engineer. The top 4 inches (10

cms) of backfill shall be of clean, friable soil capable of supporting plant life. This material shall also be free of stones and all other debris.

N. Opening Pavement to Traffic

The pavement shall be closed to traffic, including vehicles of the Contractor, until the concrete is at least 14 days old and has attained an average compressive strength acceptable to the Engineer or designated representative. This period of closure to traffic may be extended if, in the opinion of the Engineer or designated representative, weather or other conditions make it advisable to provide an extension of the time of protection.

At the end of the 14 day period and as long thereafter as ordered by the Engineer or designated representative and if so desired by the Contractor, the pavement may be opened for use by vehicles of the Contractor provided the gross weight (vehicle plus load) of such vehicles does not exceed 14,000 pounds (6350 KGs). Such opening, however, shall in no manner relieve the Contractor from responsibility for the Contractor's work. On those sections of the pavement thus opened to traffic, all joints shall first be sealed, the pavement cleaned and topsoil placed against the pavement edges or behind the curb where turf or vegetation is to be established before permitting vehicles thereon.

After the concrete in any section is 14 days old or as long thereafter as ordered by the Engineer, such section of pavement may be opened to all traffic indicated on the drawings or when so directed by the Engineer or designated representative. On those sections of the pavement thus opened to traffic, all joints shall first be sealed, the pavement cleaned and 4 inches (10 cms) of top soil placed against the pavement edges and all other work performed as required for the safety of traffic. Such opening, however, shall in no manner relieve the Contractor from responsibility for the Contractor's work.

When High Early Strength Concrete, resulting from the use of Type III cement as indicated on the drawings is used, the pavement may be opened to all traffic after the concrete is 7 days old or as long thereafter as ordered by the Engineer or designated representative, subject to the same provisions governing the opening after 14 days as above indicated.

Where the Contractor desires to move any equipment not licensed for operation on public streets, on or across any pavement opened to traffic, the Contractor shall protect the pavement from damage by means of 2 ply timber mats of 2 inch (5 cm) stock or runways of heavier material laid on a layer of earth, all as approved by the Engineer or designated representative.

1. Emergency Opening to Traffic

The Engineer or designated representative may require the opening of pavement to traffic prior to the minimum time specified above under conditions of emergency, which in the Engineer's or designated representative's opinion require such action in the interest of the public. In no case will the Engineer or designated representative order opening of the pavement to traffic within less than 72 hours after the last concrete in the section is placed. The Contractor shall remove all obstructing materials, place earth against pavement edges and perform other work involved in

providing for the safety of traffic as required by the Engineer or designated representative in ordering emergency opening. Orders for emergency opening of the pavement to traffic will be issued by the Engineer or designated representative in writing.

360S.8 Penalty for Deficient Pavement Thickness or Strength

The adjustment in unit prices provided for in this item will apply only when measurement for payment is by the square yard.

It is the intent of this specification that the pavement be constructed in strict conformity with the thickness, strength and typical sections indicated on the drawings. Where any pavement is found not so constructed, the following rules relative to adjustment of payment for acceptable pavement and to replacement of faulty pavement shall govern.

A. Pavement

The pavement will be core drilled after any grinding operations have been completed for surface corrections prior to final acceptance. Locations of core tests may be selected by the Engineer or designated representative; however, spacing interval for core tests, as specified herein, shall be maintained. The thickness of the pavement will be determined by measurement of the cores in accordance with TxDOT Test Method Tex-424-A.

For the purpose of establishing an adjusted unit price for pavement, units to be considered separately are defined as 1000 linear feet of pavement in each traffic lane starting at the end of the pavement bearing the smaller station number. The last unit in each lane shall be 1000 feet plus the fractional part of 1000 feet remaining. Traffic lane width will be as shown on typical sections and pavement design standards.

For the purpose of establishing an adjusted unit price for ramps, widening, acceleration and deceleration lanes that are machine placed, isolated pavements of traffic lane width but less than 1000 feet in length and other areas designated by the Engineer or designated representative, units will be considered separately and are defined as 1000 square yards of pavement or fraction thereof.

One core will be taken at the location selected by the Engineer or designated representative or at random in each unit. When the measurement of the core from any unit is not deficient more than 0.2 inches from the plan thickness, full payment will be made. When the measurement of the core from any unit is deficient more than 0.2 inch but not more than 0.75 inch from the plan thickness, 2 additional cores will be taken from the unit and the average of the 3 cores determined. The 2 additional cores from any 1000-foot unit will be taken at intervals of not less than 300 feet. The 2 additional cores from any 1000 square yard unit will be taken at locations such that the pavement in the unit will be well represented. If the average measurement of these 3 cores is not deficient more than 0.2 inches from the plan thickness, full payment will be made. If the average thickness of the 3 cores is deficient by more than 0.2 inch but not more than 0.75 inch from the

indicated thickness, an adjusted unit price as provided below will be paid for the areas represented by these cores.

In calculating the average thickness of the pavement, measurements which are in excess of the specified thickness by more than 0.2 inch will be considered as the specified thickness plus 0.2 inch and measurements which are less than the specified thickness by more than 0.75 inch will be considered as the specified thickness less 0.75 inch.

When the measurement of any core is less than the specified thickness by more than 0.75 inch, the actual thickness of pavement in this area will be determined by taking additional cores at 10 foot intervals parallel to the center line in each direction from the deficient core until, in each direction, a core is taken which is not deficient by more than 0.75 inch. Exploratory cores for deficient thickness will not be used in averages for adjusted unit price. Exploratory cores are to be used only to determine the length of pavement in a unit that is to be left in place without pay and/or removed and replaced as provided herein.

For new Concrete Pavement roadways, and for Concrete Pavement rehabilitation and overlay projects, if cracks develop in the pavement surface within the one year warranty period, the Contractor shall seal the cracks in accordance Standard Specification Item No. 313S, “Cleaning and/or Sealing Joints and Cracks (Asphaltic Concrete), or perform other corrective measures as directed by the Engineer. Payment for this work will be included in the unit price bid for Concrete Pavement, unless included as a separate pay item in the Contract.

For new Concrete Pavement roadways constructed in accordance with the plans and specifications, if cracks greater than or equal to 1/4 inch in width develop in the pavement surface within the one year warranty period, complete replacement of pavement sections as directed by the Engineer shall be performed by the Contractor at no additional expense to the City.

Irrespective of an acceptable overall project average for any or all of the Pay-Adjustment Acceptance Factors, limited substandard portions of the work, as determined by the Engineer or designated representative, shall be remedied or removed and replaced to the satisfaction thereof.

B. Price Adjustments

After any grinding or milling operations have been completed to meet the surface-testing requirement of this specification, if average thickness of pavement is deficient in thickness by more than 0.2 inch, but not more than 0.75 inch, payment will be made at an adjusted price as specified in the following table:

Concrete Pavement Deficiency	
Deficiency in Thickness Determined by Cores, Inches	Proportional Part of Contract Price Allowed

0.00 to 0.20	100 percent
0.21 to 0.30	80 percent
0.31 to 0.40	72 percent
0.41 to 0.50	68 percent
0.51 to 0.75	57 percent

Any area of pavement found deficient in thickness by more than 0.75 inch but not more than 1 inch or 1/8 of the indicated thickness, whichever is greater, shall be evaluated by the Engineer. If, in the judgment of the Engineer, the area of such deficiency should not be removed and replaced, there will be no payment for the area retained. If, in the judgment of the Engineer, the area of such deficiency warrants removal, the area shall be removed and replaced at the Contractor's entire expense, with concrete of the thickness indicated on the drawings.

Any area of pavement found deficient in thickness by more than 1 inch or more than 1/8 of the indicated thickness, whichever is greater, shall be removed and replaced, at the Contractor's entire expense, with concrete of the thickness indicated on the drawings.

No additional payment over the Contract unit price will be made for any pavement of a thickness exceeding that indicated on the drawings.

If the average compressive strength based on concrete test cylinders at 28 days is less than the specified minimum strength of the concrete, then payment will be made at an adjusted price as specified in the following table.

Pay Adjustment Factor for Deficient Compressive Strength	
Ratio of Average Strength from Test Cylinders to Specified Minimum Compressive Strength both at 28 Days	Proportional Part of Contract Price Allowed
More then 0.95	100 percent
0.90 to 0.95	85 percent
0.85 to 0.90	70 percent
0.80 to 0.85	60 percent
Less than 0.80	0 percent (Remove & Replace)

When, in the opinion of the Engineer or designated representative, the compressive strength test results appear unrepresentative, additional testing of field cores may be authorized. To be considered acceptable for consideration the

field cores shall be acquired, properly handled and tested in accordance with ASTM C 42/C 42M, "Standard Test Method for Obtaining and Testing Drilled Cores and Sawed Beams of Concrete" within 45 days of the original concrete placement date. The retesting will be at the expense of the Contractor and the results of the retesting shall be averaged with the results of the original testing. If the results of retesting indicate that the original test results were erroneous in the opinion of the Engineer or designated representative, the original test results will be discarded. In the instance of erroneous original test results the subsequent first set of retests will be at the expense of the City of Austin.

When, in the opinion of the Engineer or designated representative, the concrete compressive strength is deemed unacceptable for the intended use of the pavement, the concrete shall be removed and replaced to the limits indicated by test results.

360S.9 Measurement

A. When indicated, concrete pavement will be measured by the square yard of surface area of completed and accepted work. The surface area shall be so measured to also include that portion of pavement slab extending beneath the curb. When concrete pavement is to be measured by the square yard and monolithic curb is required, measurements for "Monolithic Curb" will be by the linear foot complete in place.

B. When indicated on the drawing, concrete pavement, including monolithic curb when required, will be measured by the cubic yard of absolute volume of materials entering the mixture.

360S.10 Payment

The work performed and materials furnished as prescribed by this item and measured as provided under "Measurement" will be paid for at the unit price bid for "Concrete Pavement", of the depth indicated on the drawings, "Concrete Pavement (High Early Strength)" of the depth indicated on the drawings and "Monolithic Curb" of the type indicated on the drawings (when pavement is measured by the square yard), as required or adjusted unit price for pavement of deficient thickness as provided under "Deficient Pavement Thickness", which price shall be full compensation for shaping and fine grading the roadbed, including furnishing and applying all water required; for furnishing, loading and unloading, storing, hauling and handling all concrete ingredients, including all freight and royalty involved; for placing and adjusting forms, including supporting material or preparing track grade; for mixing, placing, finishing, sawing, cleaning and sealing joints and curing all concrete; for furnishing and installing all reinforcing steel; for furnishing all materials for sealing joints and placing longitudinal, expansion and weakened plane joints, including all steel dowel caps and load transmission devices required and wire and devices for placing, holding and supporting steel bars, load transmission devices and joint filler material in proper position, for coating steel bars where complete the work.

Excavation required by this item in the preparation of the subgrade and for completion of the parkway will be measured and paid for in accordance with provisions governing the Items of "Street Excavation" and "Borrow", respectively, with provision that yardage to be measured and paid for once only, regardless of manipulations involved. Measurement of subgrade excavation for payment shall be limited to a total width of that of pavement plus 1 foot on each side.

Sprinkling and rolling required for the compaction of the rough subgrade in advance of fine grading will be measured and paid for as indicated in the governing items of excavation. Maintenance of a moist condition of the subgrade in advance of fine grading and concrete placing will not be paid for directly but shall be included in the unit price bid, as provided above.

Payment will be made under one of the following:

Pay Item No.	360S-A:	__In. Concrete Pavement	Per Square Yard.
Pay Item No.	360S-AH:	__In. Concrete Pavement (High Early Strength)	Per Square Yard.
Pay Item No.	360S-AS:	__In. Concrete Pavement (High Range Water Reducing Admixture)	Per Square Yard.
Pay Item No.	360S-B:	Monolithic Curb	Per Linear Foot.
Pay Item No.	360S-C:	__Concrete Pavement Including Monolithic Curb	Per Cubic Yard.

End

SPECIFIC CROSS REFERENCE MATERIALS
Standard Specification Item 360S, "Concrete Pavement"

City of Austin Standard Specification Items

Designation	Description
Item No. 301S	Asphalts, Oils and Emulsions
Item No. 313S	Cleaning and/or Sealing Joints and Cracks (Asphaltic Concrete)
Item No. 403S	Concrete for Structures
Item No. 405S	Concrete Admixtures
Item No. 410S	Concrete Structures
Item No. 411S	Surface Finishes for Concrete
Item No. 413S	Cleaning and/or Sealing Joints and Cracks (PCC)

American Society for Testing and Materials, ASTM

Designation	Description
ASTM C 42/C 42M	Standard Test Method for Obtaining and Testing Drilled Cores and Sawed Beams of Concrete"
ASTM A 82	Specification for Steel Wire, Plain, for Concrete Reinforcement
ASTM A 184	Specification for Fabricated Deformed Steel Bar Mats for Concrete Reinforcement
ASTM A 185	Specification for Steel Welded Wire Fabric, Plain, for Concrete Reinforcement
ASTM A 496	Specification for Steel Wire, Deformed, for Concrete Reinforcement
ASTM A 497	Specification for Steel Welded Wire Fabric, Deformed, for Concrete Reinforcement

ASTM A 615 Specification for Deformed and Plain Billet-Steel Bars, for Concrete Reinforcement

ASTM A 616 Specification Rail-Steel Deformed and Plain Bars for Concrete Reinforcement

ASTM C 94 Specification for Ready-Mixed Concrete

ASTM C 150 Specification for Portland Cement

ASTM C 156 Test Method for Water Retention by Concrete Curing Materials

ASTM D 2240 Test Method for Rubber Property-Durameter Hardness

ASTM D 882, Method A Test Methods for Tensile Properties of Thin Plastic Sheeting

Texas Department of Transportation: Publications

Designation	Description
Bulletin C-11	Construction Bulletin

Texas Department of Transportation: Manual of Testing Procedures

Designation	Description
TEX-203-F	Sand Equivalent Test
TEX-401-A	Sieve Analysis of Fine and Coarse Aggregate
TEX-406-A	Mineral Finer than 75 µm (No. 200) Sieve in Mineral Aggregates (Decantation Test for Concrete Aggregates)
TEX-408-A	Organic Impurities in Fine Aggregate for Concrete
TEX-410-A	Abrasion of Coarse Aggregate Using The Los Angeles Machine
TEX-411-A	Soundness of Aggregate by Use of Sodium Sulfate or Magnesium Sulfate
TEX-413-A	Determination of Deleterious Materials in Mineral Aggregate

TEX-415-A	Slump of Portland Cement Concrete
TEX-416-A	Air Content of Freshly-Mixed Concrete by the Pressure Method
Tex-424-A	Obtaining and Testing Drilled Cores of Concrete
Tex-436-A	Measurement of Texture Depth by the Sand Patch Method
Tex 418-A	Compressive Strength of Cylindrical Concrete
Tex-524-C	Testing Premolded Joint Filler for Concrete
Tex-612	Acid Insoluble Residue

Texas Department of Transportation: Departmental Material Specifications

Designation	Description
DMS 8900	Fly Ash

American Association of State Highway & Transportation Officials, AASHTO Standard

Designation	Description
Method T 26	Quality of Water to be Used in Concrete

RELATED CROSS REFERENCE MATERIALS
Standard Specification Item 360S, "Concrete Pavement"

Texas Department of Transportation: Standard Specifications for Construction and Maintenance of Highways, Streets, and Bridges

Designation	Description
Item 360	Concrete Pavement
Item 420	Concrete Structures

Item 421	Hydraulic Cement Concrete
Item 427	Surface Finishes for Concrete
Item 431	Pneumatically Placed Concrete
Item 520	Weighing and Measuring Equipment

Texas Department of Transportation: Departmental Material Specifications

Designation	Description
DMS-4650	Hydraulic Cement Concrete Curing Materials and Evaporation Retardants"
DMS-6100	Epoxy and Adhesives

American Society for Testing and Materials, ASTM

Designation	Description
ASTM C 685	Concrete Made By Volumetric Batching and Continuous Mixing
ASTM C-1260	Standard Test Method for Potential Alkali Reactivity of Aggregates
ASTM D-512	Test Methods for Chloride Ion in Water
ASTM D-516	Test Methods for Sulfate Ion in Water
ASTM D-4191	Test Method for Sodium in Water by Atomic Absorption
ASTM D-4192	Test Method for Potassium Water by Atomic Absorption

American Concrete Institute, ACI

Designation	Description
ACI 211.1	Standard Practice for Selecting Proportions for Normal, Heavyweight, and Mass Concrete

Texas Department of Transportation: Manual of Testing Procedures

Designation	Description
TEX-418-A	Compressive Strength of Cylindrical Concrete Specimens

Item No. 401S
Structural Excavation and Backfill

401S.1 Description

This item shall govern the excavation for placement of structures, except pipe sewers, the disposal of such excavated material and the backfill around completed structures to the level of the original ground or grade indicated on the Drawings. The work shall include all necessary pumping or bailing, sheathing, drainage, and the construction and removal of any required cofferdams. Unless otherwise indicated on the Drawings, the work included hereunder shall provide for the removal of old structures or portions thereof (abutments, buildings, foundations, wingwalls, piers, etc.), trees and all other obstructions necessary to the proposed construction.

Where excavation is not classified, it will be grouped under "Unclassified Structural Excavation", which shall include the removal of all materials encountered regardless of their nature or the manner in which they are removed.

Where excavation is classified, it shall be classed as "Common Structural Excavation" or "Rock Structural Excavation" in accordance with the following criteria:

"Common Structural Excavation" shall include the removal of all materials other than rock.

"Rock Structural Excavation" shall include the removal of firm and compact materials that cannot be excavated with power equipment, without first being loosened or broken by blasting, sledging or drilling.

This specification is applicable for projects or work involving either inch-pound or SI units. Within the text and accompanying tables, the inch-pound units are given preference followed by SI units shown within parentheses.

401S.2 Submittals

The submittal requirements of this specification item may include:

Supplier and certified test results for fine aggregate/sand material

Supplier and certified test results for flexible base material

Mix design and test results for lime stabilized subgrade material

Mix design and test results for Class J Concrete Base

Supplier and certified test results for granular material (coarse aggregate, foundation rock and pea gravel)

Mix design and test results for cement-stabilized backfill

Mix design and test results for controlled low strength material (CLSM)

Excavation Safety System Plan for proposed cofferdams, trench excavation and special shoring installations

401S.3 Materials

A. Sand

1. Fine aggregate sand shall be Grade 1 conforming to Standard Specification Item No. 302S, "Aggregates for Surface Treatments".

2. Native Sand shall be local material obtained from approved sources and subject to the approval of the Engineer or designated representative.

B. Flexible Base

Flexible base shall conform to the requirements of Standard Specification Item No. 210S, "Flexible Base".

C. Lime Stabilized Base

Lime stabilized base shall conform to the requirements of Standard Specification Item No. 202S, "Hydrated Lime and Lime Slurry" and Item No. 203S, "Lime Treatment for Materials in Place".

D. Concrete Base

Concrete base shall conform to a Class J Concrete as defined in Standard Specification Item No. 403S, "Concrete for Structures".

E. Granular Material

1. Coarse aggregate shall conform to the requirements of section 403S.3.C of Standard Specification Item No. 403S "Concrete for Structures".

2. Foundation Rock

Foundation rock shall be well graded, hard, durable coarse aggregate ranging in size from 2 to 6 inches (50 to 150 mm).

3. Pea Gravel

Pea gravel shall consist of hard, durable, opaque gravel, free of clay, loam, sand or other foreign substances, ranging in size from 1/4 inch to 3/8 inch (6.4 to 9.5 mm) conforming to ASTM C 33.

F. Cement Stabilized Backfill

Cement stabilized backfill shall contain aggregate, water and a minimum of 7% hydraulic cement based on the dry weight of the aggregate in accordance with TxDoT Test Method Tex-120-E, “Soil-Cement Testing". Unless directed otherwise

on the Drawings, the aggregate shall be clean sand approved by the Engineer or designated representative.

G. Controlled Low Strength Material

Controlled low strength material (CLSM) shall conform to Standard Specification Item No. 402S, "Controlled Low Strength Material" and shall be approved by the Engineer or designated representative.

401S.4 Construction Methods

A. Erosion Control and Tree Protection

Prior to commencement of this work, all required erosion control and tree protection measures indicated on the Drawings shall be in place. The existing utilities shall be located and protected as specified in the Standard Contract Documents, Section 00700, "General Conditions" and/or indicated on the Drawings. A permit shall be required when utility adjustments are to be made in preparation for construction in the right-of-way, as specified in Section 5.2.0 of the City of Austin Utilities Criteria Manual.

Areas within the construction limits indicated on the Drawings shall be cleared of all trees, stumps, brush, etc., except trees or shrubs scheduled for preservation which shall be carefully trimmed as directed by the Engineer or designated representative, in accordance with Standard Specification Item No. 610S, " Preservation of Trees and Other Vegetation" and shall be protected from scarring, barking or other injuries during construction operations. All exposed cuts over 2 inches (50 millimeters) in diameter, exposed ends of pruned limbs or scarred bark shall be treated with an approved asphalt material within 24 hours of the pruning or injury.

Construction equipment shall not be operated nor construction materials stockpiled under the canopies of trees, unless otherwise indicated on the Drawings and/or specified in the Contract Documents. Excavation or embankment materials shall not be placed within the drip line of trees until tree wells are constructed.

Within the construction limits or areas indicated, all obstructions, stumps, roots, vegetation, abandoned structures, rubbish and objectionable material shall be removed to the following depths:

1. In areas to receive 6 inches (150 mm) or more embankment, a minimum of 12 inches (300 mm) below natural ground.

2. In areas to receive embankment less than 6 inches (150 mm), a minimum of 18 inches (450 mm) below the lower elevation of embankment, structure or excavation.

3. In areas to be excavated a minimum of 18 inches (450 mm) below the lower elevation of the embankment, structure or excavation.

4. In all other areas a minimum of 12 inches (300 mm) below natural ground.

When abandoned storm drains, sewers or other drainage systems are encountered they shall be removed as required to clear the new structure and plugged in a manner approved by the Engineer or designated representative.

Holes remaining after removal of all obstructions, objectionable material, trees, stumps, etc. shall be backfilled with select embankment material and compacted by approved methods. All cleared and grubbed material shall be disposed of in a manner satisfactory to the Engineer or designated representative. Unless otherwise provided, all materials as described above shall become the property of the Contractor and removed from the site and disposed of at a permitted disposal site.

Burning materials at the site shall conform to Standard Contract Document Section 01550, "Public Safety and Convenience".

B. Excavation

1. Excavation shall be done in accordance with the lines and depths indicated on the Drawings or as established by the Engineer or designated representative. Unless otherwise indicated on the Drawings or permitted by the Engineer or designated representative no excavation shall be made outside a vertical plane 3 feet (0.9 meter) from the footing lines and parallel thereto.

   When structures are installed in streets, highways or other paved areas, the pavement and base shall be cut to neat lines. After completion of the excavation and backfilling, the pavement structure shall be restored to the satisfaction of the Engineer or designated representative.

2. Slopes, benching, sheeting, bracing, pumping and bailing shall be provided as necessary to maintain the stability and safety of excavations up to 5 feet (1.5 meters) deep. Excavation protection for excavations deeper than 5 feet (1.5 meters) shall be governed by Standard Specification Item No. 509S, "Excavation Safety Systems".

3. Excavation shall conform to elevations indicated on the Drawing or raised or lowered by written order of the Engineer or designated representative, when such alterations are judged proper. When it is deemed necessary to increase or decrease the plan depth of footings, the alterations in the details of the structure shall be as directed by the Engineer or designated representative. The Engineer or designated representative shall have the right to substitute revised details resulting from consideration of changes in the design conditions.

4. When a structure is to rest on an excavated surface other than rock, special care shall be taken not to disturb the bottom of the excavation and the final excavation to grade shall not be performed until just before the footing is placed. Equipment selected and used by the Contractor for excavation which results in disturbance of what was otherwise stable subgrade material, as shown by laboratory tests, will not be used as a justification for payment for excavating to extra depth or for payment for stabilizing materials which may be ordered by the Engineer or designated representative.

5. Excavated material required to be used for backfill may be deposited by the Contractor in storage piles as indicated on the Drawing or at points convenient for its rehandling during the backfilling operations, subject to the approval of the Engineer or designated representative, who may require that the survey center line of the structure and the transverse or hub line of any unit of the structure be kept free of any obstruction. The Contractor shall adjust any stockpiles, to facilitate surveying and the work of other Contractors working in the immediate proximity, as directed by the Engineer or designated representative.

6. Excavated material required to be wasted shall be disposed of as directed by the Engineer or designated representative, in a manner which will not obstruct the stream or otherwise impair the efficiency or appearance of the structure or other part of the work.

7. For all single and multiple box culverts, pipe culverts, pipe arch culverts and box sewers of all types, where the soil encountered at established footing grade is a quicksand, muck or similar unstable material, the following procedure shall be used unless other methods are indicated:

   a) The depth to which unstable material is removed will be determined by the Engineer or designated representative. It will not exceed 2 feet (0.6 meter) below the footing of culverts that are 2 feet (0.6 meter) or more in height and will not exceed the height of culverts for those less than 2 feet (0.6 meter) high. Excavation shall be carried at least 1 foot (0.3 meter) horizontally beyond the limits of the structure on all sides. All unstable soil removed shall be replaced with suitable stable material, in uniform layers of suitable depth for compaction as directed by the Engineer or designated representative. Each layer shall be wetted, if necessary and compacted by rolling or tamping as required to provide a stable foundation for the structure. Soil, which has sufficient stability to properly sustain the adjacent sections of the roadway embankment, will be considered a suitable foundation material.

   b) When, in the opinion of the Engineer or designated representative, it is not feasible to construct a stable footing as outlined above, the Contractor shall construct it by the use of special materials, such as flexible base, cement stabilized base, cement stabilized rockfill or other material, as directed by the Engineer or designated representative. This work will be paid for as provided in Section 401S.9, " Payment".

8. When the material encountered at footing grade of a culvert is found to be partially rock or incompressible material and partially a compressible soil which is satisfactory for the foundation, the incompressible material shall be removed for a depth of 6 inches (150 mm) below the footing grade and backfilled with a compressible material similar to that used for the rest of the structure.

9. When the material encountered at footing grade of a bridge bent or pier is found to be partially of rock or incompressible material, and partially of a compressible material, the foundation shall not be placed until the Engineer

or designated representative has inspected the footing and authorized such changes found necessary to provide an adequate foundation.

401S.5 Bridge Foundations and Retaining Walls

The material below the bottom of the footing grade shall not be disturbed. Backfill material shall not be used to compensate for excavation that is extended below the proposed footing grade. When excavation is carried below the proposed footing grade, the over excavated area shall be filled with concrete at the time the footing is placed. The additional concrete placement shall be at the Contractor's sole expense.

When required by the Engineer or designated representative, cores shall be taken to determine the character of the supporting material(s). The cores shall be taken when the excavation is nearing completion and shall be an intact sample adequate to judge the character of the founding material. The cores shall be acquired at a minimum depth of 5 feet (1.5 meters) below the proposed footing founding grade.

When the founding stratum is rock or other hard material, all loose material shall be removed and the founding grade cleaned and cut to a firm surface that is level, stepped or serrated as directed by the Engineer or designated representative. All soft seams shall be cleaned and filled with concrete at the time the footing is placed.

When the material at the footing grade of a retaining wall, bridge bent or pier is a mixture of compressible and incompressible material, the foundation shall not be placed until the Engineer or designated representative has inspected the excavation and authorized changes to provide a uniform bearing condition.

401S.6 Cofferdams

The term cofferdams, whenever used in this specification, designates any temporary or removable structure constructed to hold the surrounding earth, water or both, out of the excavation, whether the structure is formed of earth, timber, steel, concrete or a combination of these. It includes earthen dikes, timber cribs, any type of sheet piling, removable steel shells and the like and all necessary bracing and it shall be understood also to include the use of pumping wells or well points for de-watering. The cost of cofferdams, when required, shall be included as a part of the bid price for excavation.

It is the intent of this specification to require that a suitable cofferdam be provided, when necessary, to insure that the foundation may be placed in a dry condition, as to preclude sliding and caving of the walls of the excavation. The cofferdam shall conform with the requirements of Standard Specification Item No. 509S, "Excavation Safety Systems" and shall provide a safe work area with sufficient clearance for the construction, inspection and removal of required forms and, if necessary, sufficient room to allow pumping outside the forms. Where no ground or surface water is encountered, the cofferdam need be sufficient only to protect the workmen and to avoid cave-ins or slides beyond the excavation limits.

Unless otherwise indicated on the Drawings, cofferdams shall be removed by the Contractor after the completion of the substructure without disturbing or marring the structure.

401S.7 De-Watering

Structures shall not be constructed or placed in the presence of water unless otherwise approved by the Engineer or designated representative. Precast members, pipe and concrete shall only be placed on a dry, firm surface. Water shall be removed by bailing, pumping, well-point installation, deep wells, underdrains or other approved method.

When structures are approved for placement in the presence of water, standing water shall be removed in a manner that shall preclude the possibility of the movement of water through or alongside any concrete being placed. Pumping or bailing will not be permitted during the placing of concrete or for a period of at least 36 hours thereafter, unless from a suitable sump separated from the concrete work by a water-tight wall.

Pumping or bailing during placement of seal concrete shall only be allowed to the extent necessary to maintain a static head of water within the cofferdam. De-watering inside a sealed cofferdam shall not commence until the seal has aged a minimum of 36 hours.

When the bottom of an excavation cannot be de-watered to the point that the subgrade is free of mud or it is difficult to keep the reinforcing steel clean a stabilizing material (e.g. flexible base, cement-stabilized-backfill or lean concrete) shall be placed in the bottom of the excavation. When a lean concrete is used, the concrete shall include a minimum of 275 Pounds of cement per cubic yard (163 kilograms of cement per cubic meter) and be placed to a minimum depth of 3 inches (75 mm). Stabilizing material that is placed for the convenience of the Contractor will be at the Contractor's own expense.

401S.8 Backfilling

A. General

As soon as practicable, all portions of excavation not occupied by the permanent structure shall be backfilled. Back-fill material shall be free from stones large enough to interfere with compaction, large or frozen lumps that will not break down readily under compaction, wood or other extraneous material. Backfill material shall be approved by the Engineer or designated representative.

That portion of backfill which will support any portion of completed roadbed, retaining wall or embankment shall be placed in layers not more than 8 inches (200 mm) in depth (loose measurement) and shall be compacted to meet the density requirements of the roadbed, retaining wall, embankment material, or as indicated on the Drawings.

That portion of backfill which will not support any portion of completed roadbed or embankment shall be placed in layers not more than 10 inches (250 mm) in depth (loose measurement) and shall be compacted to a minimum of 95 percent of

maximum density as determined by TxDoT Test Method Tex-114-E and the re-excavated to the proper grade and dimensions.

If the excavation has been made through a hard material resistant to erosion, the backfill around piers and in front of abutments and wings may be ordered by the Engineer or designated representative to be of stone or lean concrete. Unless otherwise indicated on the Drawings, such backfill shall be paid for as extra work.

That portion of the backfill which will support any portion of the roadbed, retaining wall or embankment shall be placed in uniform layers not more than 8 inches (200 mm) in depth (loose measurement) and shall be compacted to a minimum of 95 percent of maximum density, as determined by TxDoT Test Method Tex-114-E and then re-excavated to the proper grade and wetted uniformly to the moisture content required to obtain the specified density and shall be compacted to that density by means of mechanical tampers or rammers, except that the use of rolling equipment of the type generally used in compaction embankments will be permitted on portions which are accessible to such equipment.

All portions of embankment too close to any portion of a structure to permit compaction by the use of the blading and rolling equipment used on adjoining sections of embankment, shall be placed and compacted with mechanical tamps and rammers to avoid damage to the structure.

These provisions require mechanical compaction by means of either rolling equipment or mechanical tampers or rammers, of all backfill and embankment adjoining the barrels and wingwalls or culverts and adjoining all sides of bridge abutments and retaining walls, regardless of whether or not such embankment or backfill is above or below the original surface of the ground and regardless of whether the excavation at structure site was performed conforming to Standard Specification Item No.111S, "Excavation", this item 401S, "Structural Excavation", Standard Specification Item No. 110S, "Street Excavation" or Standard Specification Item No. 120S, "Channel Excavation". Unless otherwise indicated on the Drawings, hand tamping will not be accepted as an alternate for mechanical compaction.

As a general rule, material used in filling or backfilling the portions described in this paragraph shall be an earth, free of any appreciable amount of gravel or stone particles larger than 4 inches (100 mm) in greater dimension and of a gradation that permits thorough compaction. When, in the opinion of the Engineer or designated representative, such material is not readily available, the use of rock or gravel mixed with earth will be permitted, provided that no particles larger than 12 inches (300 mm) or smaller than 6 inches (150 mm) may be used. The percentage of fines shall be sufficient to fill all voids and insure a uniform and thoroughly compacted mass of proper density. When required by the Drawings or by written order of the Engineer or designated representative, cement-stabilized-backfill material shall be used for backfilling.

All portions of fill and backfill described in the preceding paragraph shall be compacted to the same density requirements specified for the adjoining sections of embankment in accordance with the governing specifications. Where no embankment is involved on the project and no relevant specifications are included in the contract, all backfill shall be compacted to a density comparable with the adjacent undisturbed material.

No backfill shall be placed against any abutment or retaining wall until such structure has been in place at least 7 days. No backfill shall be placed adjacent to or over single and multiple boxes until the top slab has attained 500 psi (3450 kPa) flexural strength. Backfill placed around abutments and piers shall be deposited on both sides to approximately the same elevation at the same time.

Care shall be taken to prevent any wedging action of backfill against the structure and the slopes bounding the excavation shall be stepped or serrated to prevent such action. Backfill shall be uniformly placed around bridge foundations.

B. Pipe Culverts

The following requirements shall apply to the backfilling of pipe culverts in addition to the pertinent portions of the general requirements given in the preceding section.

Selected materials from excavation, borrow or other approved material shall be wetted, if required and placed along both sides of the pipe equally, in uniform layers not exceeding 8 inches (200 mm) in depth (loose measurement) and thoroughly compacted so that there shall be a berm of thoroughly compacted material on each side of the pipe. The method and degree of compaction shall be the same as specified above for portions of backfill within the limits of embankment or roadbed.

Filling and/or backfilling shall be continued in this manner to the elevation of the top of the pipe. Special care shall be taken to secure thorough compaction of the material placed under the haunches of the pipe to prevent damage or displacement of the pipe. All fill or backfill below the top of pipe shall be compacted mechanically in the manner and to the density prescribed above, regardless of whether or not such material is placed within the limits of the embankment or roadbed. In the case of pipe placed in trenches, that portion of the backfill above the top of the pipe which supports embankment or the roadbed shall receive mechanical compaction as specified above and the portion which will not support any portion of embankment or roadbed shall be placed in layers not more than 8 inches (200 mm) in depth (loose measurement) and shall be compacted by whatever means the Contractor chooses, to a density comparable with the adjacent, undisturbed material. Embankments above the top of pipe shall be placed conforming to Item No. 132S, "Embankment". During construction adequate cover must be provided to protect the structure from damage.

The Engineer or designated representative may reject backfill material that contains more than 20% by weight of material retained on a 3-in (75 mm) sieve, with large lumps not easily broken down, or that cannot be spread in loose layers. Material excavated by a trenching machine will generally meet the requirements of this Section as long as large stones are not present.

Where pipe extends beyond the toe of slope of the embankment and the depth of cover provided by backfill to the original ground level is less than the minimum required by the specifications for the type of pipe involved, additional material shall be placed and compacted until the minimum cover has been provided.

Whenever excavation is made for installing pipe culverts or box sewers across private property or beyond the limits of the embankment, the top soil removed in

excavating the trench shall be kept separate and replaced as nearly as feasible in its original position and the entire area involved in the construction operations shall be restored to a presentable condition.

C. Cement Stabilized Backfill

When indicated on the Drawings, trenches shall be backfilled to the elevations shown with cement stabilized backfill. The cement-stabilized backfill shall be placed equally along the sides of structures to prevent strain on or displacement of the structure.

Cement stabilized backfill below the spring line of pipe culverts shall be sufficiently plastic to completely fill all voids in the trench. Hand operated tampers may be used if necessary to fill the voids. The pipe shall be held in alignment by jacks or other suitable means to prevent the mortared joints from cracking due to displacement caused by placing the backfill material.

Cement stabilized backfill above the spring line of pipe culverts may be dry enough to be transported without special mixing equipment.

On structures other than pipe culverts, special mixing equipment will not be required to transport the cement stabilized backfill unless otherwise indicated on the Drawings.

D. Controlled Low Strength Material (CLSM)

When indicated on the Drawings the excavation shall be backfilled with CLSM to the elevations shown. The structure shall be prevented from being displaced or “floated out” during the placement of CLSM. The CLSM shall be prevented from entering culverts and drainage structures.

401S.9 Measurement

Unless otherwise indicated on the Drawings, structural excavation for pipe headwalls, inlets, manholes, culvert widening (extensions), bridge abutments and side road and private entrance pipe culverts will not be measured in the field but shall be included in the Plan Quantity unit price bid by the cubic yard (cubic meters: 1 cubic meter is equal to 1.308 cubic yards). Determination of plan quantities for structural excavation shall be made by the method of average end-areas using the following limits to establish templates for measurement.

A. For all structures requiring measurement, except the barrels of pipe culverts, no material outside of vertical planes 1 foot (300 mm) beyond the edges of the footings and parallel thereto will be included.

B. For the barrels of pipe culverts of 42 inches (1.09 meters) or less nominal or equivalent diameter, no material outside of vertical planes 1 foot (300 mm) beyond the horizontal projection of the outside surfaces of the pipe and parallel thereto will be included. For the barrels of pipe culverts more than 42 inches (1.09 meters) in nominal or equivalent diameter, no material outside of vertical planes located 2 feet

(600 mm) beyond the horizontal projection of the outside surfaces of the pipe and parallel thereto will be included.

C. If a cofferdam, as herein defined, is used, the limitations indicated above shall apply just as if no cofferdams were used.

D. Where excavation in addition to that allowed for the footings is required for other portions of the structure, such as for the cap, cross strut or tie beam of a pier or bent or for the superstructure, measurements for such additional excavation will be limited laterally by vertical planes 1 foot (300 mm) beyond the face of the member and parallel thereto and vertically to a depth of 1 foot (300 mm) below the bottom of such member.

E. Except as allowed by the above conditions, no account will be taken of any excavation necessary for placing forms or falsework.

F. Except at side road culverts, all street excavation called for on the contract drawings at all structure sites shall be assumed to be completed before starting the structural excavation and the measurement of structural excavation will include only material below or outside the limits of the completed street excavation. Excavation for side road and private entrance pipe culverts will not be measured for payment but shall be included in the unit price bid for this specification item.

G. On all structures of bridge classification where the contract drawings call for channel excavation at the structure site, it shall be assumed to have been completed before starting the structural excavation and the measurement of structural excavation will include only material below or outside the limits of the completed channel section. The method of measurement for payment will be in accordance with this procedure regardless of the actual construction methods followed.

H. Where excavation diagrams are indicated on the Drawings, they shall take precedence over these provisions.

I. Measurement will not include materials removed below footing grades to compensate for anticipated swellage due to pile driving and it will not include material required to be removed due to swellage beyond the specified limits during pile driving operations.

J. Measurement will not include additional yardage caused by slips, slides, cave-ins, siltings or fillings due to the action of the elements or the carelessness of the Contractor. Water will not be classed as excavated material.

K. Where rock, other incompressible or unstable material is undercut to provide suitable foundation for pipe or box culverts, such material below grade, ordered by the Engineer or designated representative to be removed, will be measured for payment.

L. Except for any required undercut, quantities for "Structural Excavation", as indicated on the Drawings, shall be considered as final quantities and no further measurement will be required, unless the alignment, grades or structure locations

are revised by the Engineer or designated representative during construction. Final determination of quantities for individual structures will be made, if in the opinion of the Engineer or designated representative or upon evidence furnished by the Contractor, substantial variations exist between quantities indicated on the Drawings and actual quantities due to changes in cross sections or apparent errors. Excavation quantities for foundations indicated on the Drawings where cofferdams are required shall be considered as final quantities and no further measurement will be made.

M. For any footing, foundation or other structure unit within the scope of this specification, additional measurement will be made of the volume of excavation involved in the lowering or raising of the elevation of a footing, foundation or structure unit, when such grade change is authorized by the Engineer or designated representative. Measurement will be made by the addition to or the deduction from, the original quantities for the volume of excavation involved in the authorized grade change.

N. Cement stabilized backfill shall be measured by the backfill diagram as indicated on the Drawings. The quantity of "Cement Stabilized Backfill" as indicated on the Drawings shall be considered as final quantities and no further measurement will be required, unless alignment or grade elevations as indicated are revised by the Engineer or designated representative. If such revisions result in an increase or decrease in this quantity, the final quantity will be revised by the amount represented by the changes in alignment or grade elevations.

401S.10 Payment

Payment for all work prescribed under this item and measured as provided above will be made at the unit bid price per cubic yard for the particular class of excavation specified on the Drawings in the amount shown on the Drawings and in the proposal. Payment for revised quantities will be made as specified above and for the removal of unstable and incompressible material as noted below.

Payment for removal and replacement of unstable or incompressible material below the footing grades of culverts and box sewers as indicated above will be made as follows:

When indicated on the Drawings or the Engineer or designated representative directs the use of special materials such as flexible base, concretebase, cement stabilized backfill, controlled low strength material or other special material, payment for excavation below the footing grades shall be made at the unit bid price for "Unclassified Structural Excavation", "Common Structural Excavation" or "Rock Structural Excavation", as the case may be. Payment for furnishing, hauling, placing and compacting the flexible base, concretebase, cement stabilized backfill, controlled low strength material or other special material will be made at the unit bid price for these items in the bid or in accordance with pertinent provisions for extra work.

Where special materials are not required or specified, the removal and replacement of the unstable material will be performed as described above. Payment therefore will be made at a price equal to 200 percent of the unit bid price per cubic yard for "Unclassified

Structural Excavation", "Common Structural Excavation" or "Rock Structural Excavation", as the case may be. The unit bid price shall include full compensation for removing the unstable or incompressible material, for furnishing, hauling, placing and compacting suitable material required to replace it and for all labor, equipment, tools and incidentals necessary to complete the work.

Payment for "Concrete Base", "Cement Stabilized Backfill" and “Controlled Low Strength Material” measured as prescribed above shall be made at the unit bid price per cubic yard. The unit bid price shall include full compensation for furnishing all materials, tools, labor, equipment, sheathing and incidentals required to perform the applicable work prescribed herein.

When the Engineer or designated representative judges it necessary to lower the structure footings to an elevation below the grade indicated on the Drawings, payment for the "Unclassified Structural Excavation", "Common Structural Excavation" or "Rock Structural Excavation" as the case may be, required below plan grade down to and including an elevation 5 feet (1.5 meters) below drawing grade for any individual footing will be made at a unit price equal to 115 percent of the contract unit bid price. Payment for the excavation from an elevation over 5 feet (1.5 meters) below plan grade down to and including an elevation 10 feet (3.05 meters) below plan grade will be made at a unit price equal to 125 percent of the contract unit bid price for "Unclassified Structural Excavation", "Common Structural Excavation" or "Rock Structural Excavation" as the case may be. No increase in unit price will be allowed for other bid items of the contract and no additional compensation will be allowed for any required cofferdam adjustments made necessary by such lowering of footings. These provisions shall not apply to the lowering of culverts, except when the flow line grade is lowered 1 foot (300 mm) or more below plan grade.

In cases where the extra depths required for any footing or footings exceeds 10 feet (3.05 meters), a supplemental agreement shall be made covering the quantities removed from depths in excess of 10 feet (3.05 meters) below plan grade.

No direct payment will be made for filling or backfilling around structures. Payment for the backfilling and compacting of areas, which were removed as structural excavation shall be included in the unit bid prices for the various classes of structural excavation.

At the end of each estimate period, the Engineer or designated representative shall determine the completed portion of the total work under Standard Specification Item No. 401S "Structural Excavation and Backfill" and payment shall be made accordingly.

Filling or backfilling of areas above the natural ground level or above the limits of street excavation or channel excavation sections shall be considered as Standard Specification Item No. 132S, "Embankment" and payment therefore shall be included in the unit prices bid for the various classes of Standard Specification Item No. 110S, "Street Excavation", Standard Specification Item No. 120S, "Channel Excavation" or Standard Specification Item No. 130S, "Borrow".

Where no channel excavation is provided for at culvert sites and where it is necessary to excavate beyond the limits of structural excavation, as herein described in order that the

culvert may function properly, such excavation shall be included with structural excavation as may be indicated on the Drawings.

Payment for all work prescribed under this item shall include full compensation for all excavation and backfill including compaction, all soundings, construction of all cofferdams, all dewatering and for furnishing all materials, labor, equipment, tools, sheathing, bracing, cofferdams, pumps, drills, explosives and incidentals necessary to complete the work, except for specific allowances stated above.

Special materials used or additional excavation made for the Contractor's convenience to expedite the work will not be paid for directly, but shall be included in the unit price bid for this specification item. In addition, if the Contractor's construction methods and equipment creates conditions necessitating usage of special materials or additional excavation, the work and materials will not be paid for directly, but shall be included in the unit price bid for this specification item.

When specified in the contract bid form as separate pay item(s), the item(s) will be paid for at the contract unit price(s) for "Flexible Base", "Lime Stabilized Base" and "Controlled Low Strength Material". The bid prices shall include full compensation for all Work herein, specified, including the disposal of all material not required in the Work, the furnishing of all material, equipment, tools, labor and incidentals necessary to complete the Work.

Payment will be made under one of the following:

Pay Item No. 401S-A:	Unclassified Structural Excavation, Plan Quantity.	Per Cubic Yard.
Pay Item No. 401S-B:	Common Structural Excavation	Per Cubic Yard.
Pay Item No. 401S-C:	Rock Structural Excavation	Per Cubic Yard.
Pay Item No. 401S-D:	Concrete Base	Per Cubic Yard.
Pay Item No. 401S-E:	Cement Stabilized Backfill	Per Cubic Yard.
Pay Item No. 401S-F:	Flexible Base	Per Cubic Yard.
Pay Item No. 401S-G:	Lime Stabilized Base	Per Square Yard.
Pay Item No. 401S-H:	Controlled Low Strength Material	Per Cubic Yard.
Pay Item No. 401S-I:	Cofferdams, type _____	Per Cubic Yard.
Pay Item No. 401S-J:	Dewatering	Per Cubic Yard.

End

SPECIFIC **CROSS REFERENCE MATERIALS**
Standard Specification Item 401S, "Structural Excavation and Backfill"

City of Austin Standard Contract Documents

Designation	Description
Section 00700	General Conditions
Section 01550	Public Safety and Convenience

City of Austin Utilities Criteria Manual

Designation	Description
Section 5.2.0	Permit Information and Format

City of Austin Standard Specification Items

Designation	Description
Item No. 110S	Street Excavation
Item No. 111S	Excavation
Item No. 120S	Channel Excavation
Item No. 130S	Borrow
Item No. 132S	Embankment
Item No. 202S	Hydrated Lime and Lime Slurry
Item No. 203S	Lime Treatment for Materials in Place
Item No. 210S	Flexible Base
Item No. 302S	Aggregates for Surface Treatments

Item No. 402S	Controlled Low Strength Material
Item No. 403S	Concrete for Structures
Item No.509S	Excavation Safety Systems
Item No. 610S	Preservation of Trees and Other Vegetation

Texas Department of Transportation: Departmental Material Specifications

Designation	Description
DMS-4640	Chemical Admixtures for Concrete

American Society for Testing and Materials, ASTM

Designation	Description
ASTM C 33	Specification For Concrete Aggregates

Texas Department of Transportation: Manual of Testing Procedures

Designation	Description
Tex-114-E	Laboratory Compaction Characteristics & Moisture-Density Relationship of Subgrade & Embankment Soil
Tex-120-E	Soil-Cement Testing

RELATED **CROSS REFERENCE MATERIALS**
Standard Specification Item 401S, "Structural Excavation and Backfill"

Texas Department of Transportation: Standard Specifications for Construction and Maintenance of Highways, Streets, and Bridges

Designation	Description

Item 110	Excavation
Item 132	Embankment
Item 400	Excavation and Backfill for Structures
Item 401	Flowable Backfill
Item 402	Trench Excavation Protection
Item 403	Temporary Special Shoring
Item 421	Hydraulic Cement Concrete

Item No. 402S
Controlled Low Strength Material

402S.1 Description

This item governs Controlled Low Strength Material (CLSM) used for trench backfill and for filling abandoned culverts, pipes, other enclosures, and for other uses as indicated on the drawings, Standard Details or as approved by the Engineer or designated representative. CLSM is a low strength, self-compacting, flowable, cementitious material used in lieu of soil backfill. It is intentionally prepared at low strength to allow for future removal using conventional excavation equipment.

The CLSM shall be composed of Portland cement or fly ash, or both, filler aggregate and water. The CLSM, specified for use in filling abandoned culverts, pipes, or other enclosures, shall contain a settlement compensator, in addition to the other ingredients, to minimize settlement of the CLSM within the enclosure.

Normal Set CLSM shall be specified whenever the material will remain uncovered or will not be subjected to traffic or other loads within 24 hours after placement. Fast Set CLSM shall be specified whenever the material will be covered, subjected to traffic or other loads within 24 hours, or needed to expedite construction.

CLSM can be used for permanent subgrade repairs below the base layer, but shall not be used for permanent pavement repairs. For temporary traffic applications, a minimum 2 inch (50 mm) cap composed of Hot Mix-Cold Laid Asphaltic Concrete (TxDoT Standard Specification Item 334) shall be placed on the CLSM.

This specification is applicable for projects or work involving either inch-pound or SI units. Within the text and accompanying tables, the inch-pound units are given preference followed by SI units shown within parentheses.

402S.2 Submittals

The submittal requirements of this specification item include:

A. A mix design submittal including the results of unconfined compressive strength tests, air entrainment (if applicable), flow consistency, hardened unit weight, and timed Ball Drop and corresponding Penetrometer tests.

B. Certifications and test results for the cement fly ash, and admixtures.

C. Particle-size gradation and specific gravity tests on the filler aggregate.

402S.3 Materials

A. Cement.

Portland cement shall conform to ASTM C 150, Type I (General Purpose).

Portland cement manufactured in a cement kiln fueled by hazardous waste shall be considered as an approved product if the production facility is authorized to operate under regulation of the Texas Natural Resource Conservation Commission

(TNRCC) and the U. S. Environmental Protection Agency (EPA). Supplier shall provide current TNRCC and EPA authorizations to operate the facility.

B. Fly Ash

Fly ash shall conform to the requirements of Standard Specification Item No. 405, "Concrete Admixtures" and TxDOT Specification Item 437.

C. Filler Aggregate.

Filler aggregate shall consist of sand, stone screenings, pavement milling cuttings or other granular material that is compatible with the other mixture components. The filler aggregate shall be fine enough to stay in suspension to the extent required for proper flow without segregation, and, in the case of filling of enclosures, for minimal settlement. Filler aggregate shall have a Plasticity Index (TxDOT Test Method Tex-106-E) less than 15 and shall conform to the following gradation:

Sieve Designation US	(SI)	Percent Passing
No. 200	(75μm)	0 - 10

D. Mixing Water.

Mixing water shall conform to the requirements of Standard Specification Item No. 403, "Concrete for Structures".

E. Settlement Compensator

An air entraining admixture with a higher than usual dosage, which meets the requirements of Standard Specification Item No. 405, "Concrete Admixtures", shall be used as a settlement compensator. The settlement compensator may be introduced to the CLSM at the job site by placement of prepackaged admixture in capsules or bags in the mixing drum in accordance with the admixture manufacturer's recommendations.

402S.4 Mix Design

The proportioning of CLSM shall be the responsibility of the Contractor. The Contractor shall furnish a mix design conforming to the requirements herein, for review and approval by the Engineer or designated representative. The mix design shall be prepared by a qualified commercial laboratory and then reviewed and signed by a registered Professional Engineer licensed in the State of Texas.

The Mix Design submittal must include:

A. Test results for unconfined compressive strength, air entrainment (if applicable), flow consistency, hardened unit weight, and timed Ball Drop (ASTM C-360) and corresponding Penetrometer tests (with a concrete pocket penetrometer),

B. Certifications and test results for the cement, fly ash, and admixtures, and

C. Results of particle-size gradation and specific gravity tests on the filler aggregate. The submittal shall include Penetrometer tests performed every thirty minutes

until the Ball Drop test shows a 2-inch (50 mm) indentation, as well as the predicted Penetrometer reading that corresponds to a 3-inch (75 mm) Ball Drop indentation. Particle-size gradation shall be determined using a series of sieves that gives no fewer than five uniformly spaced points for graphing the entire range of particle sizes larger than a No. 200 sieve (75-µm).

The Contractor shall perform the work required to substantiate the design at no cost to the City, including all testing. Approved mix designs shall be valid for one year, provided there are no changes in the type, source, or characteristics of the materials during that year.

At the end of one year, the mix design may be submitted for renewal, provided that:

A. field tests of the CLSM during the year have been satisfactory,
B. there have been no changes in type or source of the materials of the mix, and
C. the characteristics of the materials have not changed significantly since the original submittal.

The Contractor shall also submit certifications and test results for the cement, fly ash and admixtures, and particle-size gradation and specific gravity test results for the filler aggregate. The Contractor shall compare results of tests made on the filler aggregate at the end of the year to the results of tests reported in the original submittal. Gradation changes less than ten percent in percent passing any sieve and specific gravity changes less than five percent shall not be considered significant.

402S.5 Strength

The CLSM mix designs shall meet the unconfined compressive strength requirements outlined in the table below. The compression tests shall be conducted in accordance with TxDOT Method Tex-418-A, using approved unbonded caps on specimens with four-inch (100 mm) diameter and eight-inch (200 mm) height [or three-inch (75 mm) diameter by six-inch (150 mm) high specimens if a smaller capacity loading device gives more accurate results].

Unconfined Compressive Strength, psi (mPa)		
Age	Normal Set CLSM	Fast Set CLSM
3 hours	—	35 (0.24) minimum
24 hours	35 (0.24) minimum	—
28 days	300 (2.1) maximum	300 (2.1) maximum

402S.6 Flow Consistency

Flow consistency shall be established in tests involving the use of a six-inch (150 mm) length by three-inch (75 mm) diameter open-ended straight tubing made of steel, plastic or other non-absorbent material that is non-reactive with cement or fly ash. The tube shall be placed with one end on a horizontal flat surface and held in a vertical position. The tube shall then be filled to the top with CLSM. The top surface shall be struck off with a suitable straight edge and any spillage shall be removed from the base of the tube. Within five seconds thereafter the tube shall be raised carefully, using a steady

upward lift with no lateral or torsional motion. The entire test, from the start of filling until removal of the tube, shall be completed within 1½ minutes without interruption.

After removal of the tube, the spread of the CLSM shall be measured immediately along two diameters that are perpendicular to one another. The average of those two measurements is defined as the flow consistency of the mix. The flow consistency of the CLSM shall be considered satisfactory if a circular-type spread of the mix occurs without segregation and a flow consistency (average diameter of spread) of 8 inches (200 mm) or more is achieved.

402S.7 Air Entrainment

Air entraining admixture shall be added as a settlement compensator, whenever the CLSM will be used to fill an enclosure (Section 402S-1). The dosage shall be sufficient to result in an air content of 15 to 25 percent (as determined by TxDOT Method Tex-416-A) at the time of placement of the CLSM.

402S.8 Field Strength Tests

Ball Drop or Penetrometer tests shall be used to determine, when the CLSM has developed sufficient strength to be covered or subjected to traffic or other loads as approved by the Engineer or designated representative.

The Ball Drop test shall be performed according to the latest version of ASTM C-360. An indentation diameter of three inches (75 mm) or less, and the absence of a sheen or any visible surface water in the indentation area shall indicate that the CLSM has achieved the desired strength. Because trench width and depth may affect the test results, the Contractor may perform this test on a control sample of CLSM in a two-foot (600 mm) square by six-inch (150 mm) deep container.

Penetrometer tests using a hand-held, spring reaction-type device commonly called a concrete pocket penetrometer, shall be performed on the surface of the CLMS. A Penetrometer reading, equal to or greater than the value established in the mix design (Section 402S.4) for a Ball Drop test indentation of 3-inches (75 mm), shall indicate that the CLSM has achieved the desired strength.

402S.9 Construction Methods

A. General

The height of free fall placement of the CLSM shall not exceed four feet (1.2 meters). Since CLSM is considered to be self-compacting, a vibrator shall not be allowed. The CLSM shall not be covered with any overlying materials or subjected to traffic or other loads until the Ball Drop test or the Penetrometer test shows acceptable results (Section 402S.8) or until the CLSM has been in place a minimum of 24 hours for Normal Set CLSM and a minimum of 3 hours for Fast Set CLSM. Curing of the CLSM will not be required.

B. Utility Line Backfill

After the utility pipe has been placed and the proper bedding material placed in accordance with the details on the drawings, the trench may be immediately backfilled with the CLSM to the subgrade level shown on the drawings, Standard Details 1100S-6A, B, C & D, 430S-4, 511S-13A and 511S-13B or as directed by the Engineer or designated representative.

C. Culvert Backfill

Care shall be taken to prevent movement of the structure. If the pipe or structure moves either horizontally or vertically, the CLSM and the structure shall be immediately removed and the pipe or structure re-laid to proper line and grade.

D. Other Backfill

CLSM may be used for backfill material in lieu of soil as shown on the drawings, Standard Details or as approved by the Engineer or designated representative.

E. Filling Abandoned Culverts, Pipe, or other Enclosures

The CLSM shall be placed in a manner that allows all air or water, or both, to be displaced readily as the CLSM fills the enclosure.

402S.10 Acceptance Testing During Construction

The Engineer or designated representative may perform flow consistency, air entrainment, and unconfined compressive strength tests to determine if the CLSM meets the specification requirements. The number and frequency of acceptance tests will be determined by the Engineer or designated representative.

402S.11 Measurement and Payment

The work and materials presented herein will generally not be paid for directly, but shall be included in the unit price bid for the item of construction in which this item is used.

When specified in the contract bid form as a separate pay item, the item will be paid for at the contract unit bid price(s) for "Controlled Low Strength Material". The bid prices shall include full compensation for all Work herein specified, including the furnishing of all materials, equipment, tools, labor and incidentals necessary to complete the Work.

Payment will be made under the following:

Pay Item No. 402S-A: Controlled Low Strength Material Per Cubic Yard.

End

SPECIFIC CROSS REFERENCE MATERIALS
Standard Specification Item 402S, “Controlled Low Strength Material”

City of Austin Standard Details

Designation	Description
430S-4	Concrete Backfill Under Curb & Gutter
506S-14	Control or Mini Manhole
511S-13A	Water Valve Box Adjustment to Grade W/ Full Depth Concrete
511S-13B	Water Valve Box Adjustment to Grade W/ Concrete and H.M.A.C.

1100S-6A	Narrow Excavation Next to C&G - Trench Width 0.3 M (12") & Less
1100S-6B	Narrow Excavations - Trench Width 0.3 M (12") & Less
1100S-6C	Excavation Next to C&G - Trench Width Greater than 0.3 M (12")
1100S-6D	Excavations - Trench Width Greater than 0.3 M (12")

City of Austin Standard Specification Items

Designation	Description
Item No 403S	Concrete for Structures
Item No 405S	Concrete Admixtures

Texas Department of Transportation: Standard Specifications for Construction and Maintenance of Highways, Streets, and Bridges

Designation	Description
Item No. 334	Hot Mix-Cold Laid Asphaltic Concrete Pavement
Item No. 420	Concrete Structures
Item No. 421	Portland Cement Concrete
Item No. 437	Concrete Admixtures

RELATED CROSS REFERENCE MATERIALS
Standard Specification Item 402S, “Controlled Low Strength Material”

Texas Department of Transportation: Manual of Testing Procedures

Designation	Description
Tex-106-E	Method Of Calculating the Plasticity Index of Soils
Tex-416-A	Air Content of Freshly Mixed Concrete By The Pressure Method
Tex-418-A	Compressive Strength of Cylindrical Concrete

American Society for Testing and Materials (ASTM)

Designation	Description
ASTM C 150	Portland Cement
ASTM C 360	Ball Penetration in Fresh Portland Cement Concrete
ASTM C 403	Time of Setting of Concrete Mixtures by Penetration Resistance

City of Austin Standard Specification Items

Designation	Description
Item No. 504S	Adjusting Structures
Item No. 506S	Manholes
Item No. 508S	Miscellaneous Structures and Appurtenances
Item No. 510	Pipe

Item No. 403S
Concrete for Structures

403S.1 Description

This item shall govern quality, storage, handling, proportioning and mixing of materials for hydraulic cement concrete construction of buildings, bridges, culverts, slabs, prestressed concrete and incidental appurtenances.

This specification is applicable for projects or work involving either inch-pound or SI units. Within the text, the inch pound units are given preference followed by SI units shown within parentheses.

403S.2 Submittals

The submittal requirements of this specification item may include:

Mix design option(s) of the class of concrete required on the project,

The supplier of the concrete mix design(s) and type of mixing equipment, and

Type of admixtures to be used with the concrete mixes.

403S.3 Materials

Concrete shall be composed of hydraulic cement or hydraulic cement and supplementary cementing materials, water, aggregates (fine and coarse), and admixtures proportioned and mixed as hereinafter provided to achieve specified results.

A. Cementitious Materials

Hydraulic cement shall conform to ASTM C 150, Type I (General Purpose), Type II (General Purpose with Moderate Sulfate Resistance) and Type III (High Early Strength). Type I shall be used when none is specified or indicated on the drawings. Type I and Type III cements shall not be used when a Type II cement is specified or indicated on the drawings. Type III cement may be used in lieu of a Type I cement, when the anticipated air temperature for the succeeding 12 hours will not exceed 60oF (15.6oC). A Type III cement shall only be used in precast concrete or when otherwise specified or allowed. All cement shall be of the same type and from the same source for a monolithic placement.

Unless otherwise specified the cementitious material content shall be limited to no more than 700 lbs. per cubic yard (417 kg per cubic meter). When supplementary cementing materials are used, cement is defined as “cement plus supplementary cementing material.” Supplementary cementing materials include fly ash (DMS 4610), ultra-fine fly ash (DMS-4610), ground granulated blast furnace slag grade 100 or 120 (DMS-4620), silica fume (DMS-4630) and metakaolin (DMS-4635).

Supplementary cementing materials shall not be used when white hydraulic cement is specified.

Class C flyash shall not be used in sulfate-resistant concrete.

Hydraulic cement manufactured in a cement kiln fueled by hazardous waste shall be considered as an approved product if the production facility is authorized to operate under regulation of the Texas Commission on Environmental Quality (TCEQ) and the U. S. Environmental Protection Agency (EPA). Supplier shall provide current TNRCC and EPA authorizations to operate the facility.

When sulfate-resistant concrete is required for a project, mix design options 1, 2, 3 or 4 presented in Section 403S.8, "Mix Design Options" shall be used to develop appropriate mix design utilizing Type I/II, II, V, IP or IS cement.

B. Mixing Water

Water for use in concrete and for curing shall be potable water free of oils, acids, organic matter or other deleterious substances and shall not contain more than 1,000 parts per million of chlorides as Cl or sulfates as SO4.

Water from the City of Austin will not require testing. Contractor may request approval of water from other sources. Contractor shall arrange for samples to be taken from the source and tested at the Contractor's expense. When water from other sources is proposed, test reports shall be provided that indicates compliance with Table 1 before use.

Table 1: Chemical Limits for Mix Water		
Contaminant	Test Method	Maximum Concentration (ppm)
Chloride (CL) Prestressed concrete Bridge decks & superstructure All other concrete	ASTM D-512	 500 500 1,000
Sulfate (SO4)	ASTM D-516	1,000
Alkalies (NA2O + 0.658 K2O)	ASTM D-4191 & D-4192	600
Total Solids	AASHTO T-26	50,000

Water that has an adverse effect on the air-entraining agent or any other chemical admixture or on strength or time of set of the concrete shall not be used. Water used in white Portland cement concrete shall be free from iron and other impurities, which may cause staining, or discoloration.

C. Coarse Aggregate

Coarse aggregate shall consist of durable particles of crushed or uncrushed gravel, crushed blast furnace slag, crushed stone or combinations thereof; free from frozen material or injurious amounts of salt, alkali, vegetable matter or other objectionable material either free or as an adherent coating. When white hydraulic

cement is specified, the coarse aggregates used in the concrete shall be light colored. Quality shall be reasonably uniform throughout.

The coarse aggregate from each source shall not contain more than 0.25 percent by weight of clay lumps, nor more than 1.0 percent by weight of shale nor more than 5 percent by weight of laminated and/or friable particles when tested in accordance with TXDOT Test Method TEX-413-A. The coarse aggregate from each source shall have a wear of not more than 40 percent when tested in accordance with TXDOT Test Method TEX-410-A.

Unless otherwise indicated on the drawings, the coarse aggregate from each source shall be subjected to 5 cycles of the soundness test conforming to TXDOT Test Method TEX-411-A. The loss shall not be greater than 12 percent when sodium sulfate is used or 18 percent when magnesium sulfate is used.

Coarse aggregate shall be washed. The Loss by Decantation (TXDOT Test Method TEX-406-A), plus allowable weight of clay lumps, shall not exceed 1 percent or the value indicated on the drawings or in the project manual, whichever is less. If material finer than the # 200 (75 micrometer) sieve is definitely established to be dust of fracture of aggregates made primarily from crushing of stone, essentially free from clay or shale as established by Part III of TXDOT Test Method TEX-406-A, the percent may be increased to 1.5. When crushed limestone coarse aggregate is used in concrete pavements, the decant may exceed 1% but not more than 3% if the material finer than the # 200 (75 micrometer) sieve is determined to be at least 67% calcium carbonate in accordance with TxDoT Test Method Tex-406-A, Part III.

The coarse aggregate factor may not be more than 0.82; however, when voids in the coarse aggregate exceed 48 percent of the total rodded volume, the coarse aggregate factor shall not exceed 0.85. The coarse aggregate factor may not be less than 0.68 except for a Class I machine extruded mix that shall not have a coarse aggregate factor lower than 0.61.

When exposed aggregate surfaces are required, the coarse aggregate shall consist of particles with at least 40 percent crushed faces. Uncrushed gravel, polished aggregates and clear resilient coatings are not acceptable for exposed aggregate finishes.

When tested by approved methods, the coarse aggregate including combinations of aggregates when used, shall conform to the grading requirements shown in Table 2.

Table 2: Coarse Aggregate Gradation Chart (Percent Passing)

Grade	Nom. Size	2-1/2" (62.5 mm)	2" (50 mm)	1 ½" (37.5 mm)	1" (25 mm)	3/4" (19 mm)	1/2" (12.5 mm)	3/8" (9.5 mm)	No. 4 (4.75 mm)	No. 8 (2.36 mm)
1	2" (50 mm)	100	80-100	50-85		20-40			0-5	
2 (467)*	1 1/2" (37.5 mm)		100	95-100		35-70		10-30	0-5	
3	1" (50 mm)		100	95-100		60-90	25-60		0-5	

4 (57)*	1” (50 mm)			100	95-100		25-60		0-10	0-5
5 (67)*	3/4” (19 mm)				100	90-100		20-55	0-10	0-5
6 (7)*	½" (12.5 mm)					100	90-100	40-70	0-15	0-5
7	3/8" (9.5 mm)						100	70-95	0-25	
8	3/8" (9.5 mm)						100	95-100	20-65	0-10

Notes:

1. Recycled crushed concrete fine aggregate shall be limited to a maximum of 20% of the fine aggregate

2. The use of recycled crushed hydraulic cement concrete as a coarse aggregate shall be limited to Concrete Classes A, B and D (see Table 5).

D. Fine Aggregate

Fine aggregate shall be washed and consist of clean, hard, durable and uncoated particles of natural or manufactured sand or a combination thereof, with or without a mineral filler. When white hydraulic cement is specified, the fine aggregates used in the concrete shall be light colored. Quality shall be reasonably uniform throughout It shall be free from frozen material or injurious amounts of salt, alkali, vegetable matter or other objectionable material and it shall not contain more than 0.5 percent by weight of clay lumps in accordance with TEX-413-A. When subjected to color test for organic impurities per TXDOT Test Method TEX-408-A, it shall not show a color darker than standard.

Unless indicated otherwise on the drawings the acid insoluble residue of fine aggregate used in slab concrete subject to direct traffic shall not be less than 60 percent by weight (mass) when tested conforming to TXDOT Test Method TEX-612-J.

Unless indicated otherwise on the Drawings, fine aggregate shall be blended, when necessary, to meet the acid insoluble residue requirement.

When blending the following equation shall be used:

Acid Insoluble (%) = {(A1)(P1)+(A2)(P2)}/100

Where:

A1 = acid insoluble (%) of aggregate 1,

A2 = acid insoluble (%) of aggregate 2,

P1 = % by weight of A1 of the fine aggregate blend, and

P2 = % by weight of A2 of the fine aggregate blend.

When tested in accordance with TxDoT Test Method Tex-401-A, the fine aggregate, including mineral filler and combinations of aggregates, when used, shall conform to the grading requirements shown in Table 3.

Table 3: Fine Aggregate Gradation Chart1 (Grade 1 - Percent Passing)							
3/8 (9.5 mm)	No. 4 (4.75 mm)	No. 8 (2.36 mm)	No. 16 (1.18 mm)	No. 30 (600 µm)	No. 50 (300 µm)	No. 100 (150 µm)	No. 200 (75 µm)
100	95-100	80-100	50-85	25-65	10-351	0-10	0-32

Notes:

1. Recycled crushed concrete fine aggregate shall be limited to a maximum of 20% of the fine aggregate.

2. The use of recycled crushed hydraulic cement concrete as a fine aggregate shall be limited to Concrete Classes A, B and D (see Table 5).

3. 6 to 35 when sand equivalent value is greater than 85.

4. 0 to 6 for manufactured sand.

   Sand equivalent per TXDOT Test Method TEX-203-F shall not be less than 80 nor less than otherwise indicated on the drawings, whichever is greater.

   The fineness modulus will be determined by adding the percentages by weight retained on sieve Nos. 4, 8, 16, 30, 50 and 100 (4.75 mm, 2.36 mm, 1.18mm, 600 µm, 300 µm, and 150 µm) and dividing the sum of the six sieves by 100. For all classes of concrete except K (see Table 5), the fineness modulus shall be between 2.30 and 3.10. For Class K concrete, the fineness modulus shall be between 2.40 and 2.90, unless indicated otherwise on the Drawings.

E. Mineral Filler

Mineral filler shall consist of stone dust, clean crushed sand or other approved inert material. When tested in accordance with TxDoT Test Method Tex-401-A, it shall conform to the following gradation:

Passing the No. 30 (600 µm) Sieve 100 percent

Passing the No. 200 (75 µm) Sieve 65 to 100 percent

F. Mortar and Grout

Unless otherwise specified, indicated on the drawings or approved by the Engineer or designated representative mortar and grout shall consist of 1 part hydraulic cement, 2 parts finely graded sand and enough water to make the mixture plastic. When required to prevent color difference, white cement shall be added to produce color required. When required by the Engineer or designated representative, approved latex adhesive may be added to the mortar. Mortar shall be provided with a consistency such that the mortar can be easily handled and

spread by trowel. Grout shall be provided of a consistency that will flow into and completely fill all voids.

G. Admixtures

All chemical admixtures including water reducing, placticizers and air entrainment shall conform to TxDoT DMS-4640, “Chemical Admixtures for Concrete”. Calcium chloride-based admixtures shall not be approved. Admixtures shall be included in the prequalified concrete admixtures list maintained by TxDot’s Construction Division. High-range water-reducing admixtures (TxDoT Type F or G) and accelerating admixtures (TxDoT Type C or E) shall not be used in bridge deck concrete.

H. Air Entrainment

Unless indicated otherwise on the drawings, all concrete classes with the exception of Class B shall be air;entained in accordance with Table 8. If the air content is more than 1-1/2 percentage points below or 3 percentage points above the required air, the load of concrete will be rejected. If the air content is more than 1-1/2 but less than 3 percentage points above the required air, the concrete may be accepted based on strength test results.

403S.4 Storage of Materials

A. Cement, Supplementary Cementing Materials and Mineral Filler

All cement, supplementary cementing materials and mineral filler shall be stored in separate and well ventilated, weatherproof buildings or approved bins, which will protect the material from dampness or absorption of moisture. Storage facilities shall be easily accessible and each shipment of packaged cement shall be kept separated to provide for identification and inspection. The Engineer or designated representative may permit small quantities of sacked cement to be stored in the open for a maximum of 48 hours on a raised platform and under waterproof covering.

B. Aggregates

The method of handling and storing concrete aggregates shall prevent contamination with foreign materials. If the aggregates are stored on the ground, the sites for the stockpiles shall be clear of all vegetation and shall be level. Aggregates shall be stockpiled in sizes to facilitate blending. If the aggregate is not stockpiled on a hard, non-contaminant base, the bottom 6-inch (150 mm) layer of the stockpile shall not be used without recleaning the aggregate.

When conditions require the use of 2 or more grades of coarse aggregates, separate stockpiles shall be maintained to prevent intermixing. Where space is limited, stockpiles shall be separated by walls or other appropriate barriers.

Aggregate shall be stockpiled and protected from the weather a minimum of 24 hours prior to use to minimize free moisture content. When stockpiles are too large to protect from the weather, accurate and continuous means acceptable to

the Engineer or designated representative shall be provided to monitor aggregate temperature and moisture. Aggregates shall be stockpiled and handled such that segregation and contamination are minimized.

The stockpiles shall be sprinkled to control moisture and temperature as necessary. A reasonably uniform moisture content shall be maintained in aggregate stockpiles.

C. Admixtures

Admixtures shall be stored in accordance with manufacturer's recommendations and shall be protected against freezing.

D. Hot Weather Concrete Mixes

Ice may be used during hot weather concrete placement (Section 13 of Standard Specification Item No. 410S, "Concrete Structures") to lower the concrete temperature; however, the Contractor shall furnish a mix design acceptable to the Engineer or designated representative for class of concrete specified. The addition of ice shall not exceed 50% of the total mix water weight.

403S.5 Measurement of Materials

Water shall be accurately metered. Fine and coarse aggregates, mineral filler, bulk cement and fly ash shall be weighed separately. Allowances shall be made in the water volume and aggregate weights during batching for moisture content of aggregates and admixtures. Volumetric and weight measuring devices shall be acceptable to the Engineer or designated representative. Measurement of materials in non-volumetric and volumetric mixers shall conform to Section 421.4.D of TxDot Specification Item 421, "Hydraulic Cement Concrete".

Batch weighing of sacked cement is not required; however, bags, individually and entire shipments, may not vary by more than 3 percent from the specified weight of 94 pounds (42.6 kilograms) per bag. The average bag weight of a shipment shall be determined by weighing 50 bags taken at random.

403S.6 Mix Design

The Contractor shall furnish a mix design acceptable to the Engineer or designated representative for the class of concrete required in accordance with Table 5. The mix shall be designed by a qualified commercial laboratory and signed/sealed by a registered Professional Engineer, licensed in the state of Texas to conform with requirements contained herein, to ACI 211.1 or TXDOT Bulletin C-11 (and supplements thereto). The maximum water-to-cementitious material ratio identified in Table 5 for specific classes of concrete shall not be exceeded.

A higher-strength class of concrete with equal or lower water-to-cementituous-material ratio may be substituted for the specified class of concrete.

The mix design shall be over-designed in accordance with Table 5 in order to account for production variability and to ensure minimum compressive strength requirements are met.

Allowable mix design options are presented in Section 403S.8.

The Contractor shall perform, at the Contractor's expense, the work required to substantiate the design, including testing of strength specimens. Complete concrete design data shall be submitted to the Engineer or designated representative for approval. The mix design will be valid for a period of one (1) year provided that there are no changes to the component materials.

When there are changes in aggregates or in type, brand or source of cement, supplementary cementing material or chemical admixtures, the mix shall be evaluated as n new mix design. A change in vendor does not necessarily constitute a change in materials or source. When only the brand or source of cement is changed and there is a prior record of satisfactory performance of the cement with the ingredients, the submittal of new trial batches may be waived by the Engineer or designated representative.

At the end of one (1) year, a previously approved mix may be resubmitted for approval if it can be shown that no substantial change in the component materials has occurred and that test results confirming the adequacy of the mix designs have been acquired during the previous year. The resubmittal analysis must be reviewed, signed and sealed by a registered Professional Engineer, licensed in the state of Texas. This resubmittal shall include a reanalysis of specific gravity, absorption, fineness modulus, sand equivalent, soundness, wear and unit weights of the aggregates. Provided that the fineness modulus did not deviate by more than 0.20 or that the re-proportioned total mixing water, aggregate and cement (or cement plus fly ash) are within 1, 2, and 3 percent, respectively, of pre-approved quantities, a one-year extension on the approval of the mix may be granted by the Engineer or designated representative. Updated cement, fly ash, and admixture certifications shall accompany the resubmittal.

Approved admixtures that are included in the prequalified concrete admixtures list maintained by TxDot's Construction Division may be used with all classes of concrete at the option of the Contractor provided that specific requirements of the governing concrete structure specification are met. Water reducing and retarding agents shall be required for hot weather, large mass, and continuous slab placements. Air entraining agents may be used in all mixes but must be used in the classes indicated on Table 5. Unless approved by the Engineer or designated representative, mix designs shall not exceed air contents for extreme exposure conditions as recommended by ACI 211.1 for the various aggregate grades.

403S.7 Consistency and Quality of Concrete

Concrete shall be workable, cohesive, possess satisfactory finishing qualities and of stiffest consistency that can be placed and vibrated into a homogeneous mass within slump requirements specified in Table 4 without the development of segregation or

honeycombing. No concrete will be permitted with a slump in excess of the maximums shown unless water-reducing admixtures have been previously approved. Concrete that exceeds the maximum acceptable placement slump at time of delivery will be rejected. Slump values shall be conducted in accordance with TXDOT Test Method TEX-415-A.

Consistency and quality of concrete should allow efficient placement and completion of finishing operations before initial set. Re-tempering (i.e. addition of water and reworking concrete after initial set) shall not be allowed. When field conditions are such that additional moisture is needed for final concrete surface finishing operation, the required water shall be applied to surface by fog spray only and shall be held to a minimum. Excessive bleeding shall be avoided and in no case will it be permissible to expedite finishing and drying by sprinkling the surface with cement powder.

Table 4: Slump Requirements

	Slump1, inches (mm)	
Type of Construction	Maximum	Minimum
Cased Drilled Shafts	4 (100)	3 (75)
Reinforced Foundation Caissons and Footings	3 (75)	1 (25)
Reinforced Footings and Substructure Walls	3 (75)	1 (25)
Uncased Drilled Shafts	6 (150)	5 (125)
Thin-walled Sections; 9 inches (225 mm) or less	6 ½ (165)	4 (100)
Prestressed Concrete Members1	6 ½ (165)	4 (100)
Precast Drainage Structures	6 (150)	4 (100)
Wall Sections over 9 inches (225 mm)	5 (125)	3 (75)
Reinforced Building Slabs, Beams, Columns and Walls	4 (100)	1 (25)
Bridge Decks	4 (100)	2 (50)
Pavements, Fixed-form	6 ½ (165)	4 (100)
Pavements, Slip-form	3 (75)	1-½ (37.5)
Sidewalks, Driveways and Slabs on Ground	4 (100)	2 (50)
Curb & Gutter, Hand-vibrated	3 (75)	1 (25)
Curb & Gutter, Hand-tamped or spaded	4 (100)	2 (50)
Curb & Gutter, Slip-form/extrusion machine	2 (50)	½ (12.5)
Heavy Mass Construction	2 (50)	1 (25)
High Strength Concrete	4 (100)	3 (75)
Riprap and Other Miscellaneous Concrete	6 (150)	1 (25)
Under Water or Seal Concrete	8 ½ (213)	6 (150)

1. Slump values when a high range water reducer (HRWR) is not used.

2. When a high range water reducer (HRWR) is used, maximum acceptable placement slump will be 9 in (225 mm)

During progress of the work, the Engineer or designated representative shall cast test cylinders as a check on compressive strength of concrete actually placed. The Engineer or designated representative may also perform slump tests, entrained air tests and temperature checks to ensure compliance with specifications.

Proportioning of all material components shall be checked prior to discharging. Excluding mortar material for pre-coating of the mixer drum [see section 403S.8.B and adjustment for moisture content of admixtures and aggregates, material components shall fall within the range of + 1% for water, + 2% for aggregates, + 3% for cement, +2% for fly ash and within manufacturer recommended dosage rates for admixtures except that air entrainment shall be within + 1-1/2 percentage points of the mix design requirements.

Unless otherwise specified or indicated on the drawings, concrete mix temperature shall not exceed 90°F (32oC) except in mixes with high range water reducers where a maximum mix temperature of 100°F (38oC) will be allowed. Cooling an otherwise acceptable mix by addition of water or ice during agitation will not be allowed.

Test cylinders will be required for small placements such as manholes, inlets, culverts, wing walls, etc. The Engineer or designated representative may vary the number of tests to a minimum of 1 for each 25 cubic yards (1 for each 19 cubic meters) placed over a several day period.

Test cylinders shall be required for each monolithic placement of bridge decks or superstructures, top slabs of direct traffic culverts, cased drilled shafts, structural beams and as otherwise directed by Engineer or designated representative for design strength confirmation or early form removal. Test cylinders made for early form removal or for consideration of use of structure will be at Contractor's expense, except when required by Engineer or designated representative.

A strength test shall be defined as the average breaking strength of 2 cylinders. A minimum of four test cylinders shall be prepared; two each to be tested at 7 and 28 days. Specimens will be tested conforming to TXDOT Test Method TEX-418-A. If required strength or consistency of class of concrete being produced cannot be secured with minimum cementitious material specified or without exceeding maximum water/cementitious material ratio, Contractor will be required to furnish different aggregates, use a water reducing agent, an air entraining agent or increase the cement content in order to provide concrete meeting these specifications.

Slump tests will be performed in accordance with TxDoT Test Method Tex-415-A. Entrained air tests will be performed in accordance with TxDoT Test Method Tex 416

Test specimens shall be cured using the same methods and under the same conditions as the concrete represented. Design strength cylinders shall be cured conforming to TXDOT Bulletin C-11 (and supplements thereto).

When control of concrete quality is by 28-day compressive tests, job control testing will be by 7 day compressive strength tests. The minimum strength requirement for seven (7) day test will be 70 percent of the specified minimum 28-day compressive strength. If the required 7-day strength is not secured with the quantity of cement specified in Table 4, changes in the mix design shall be made and resubmitted for approval. For an occasional failure of the seven-day compressive test, the concrete may be tested at 28 days for final evaluation.

Table 5: Classes of Concrete						
Class	Cement Sks Per CY	Minimum Strength, psi (MPa)		Maximum W/C Ratio1	Coarse Aggr. Grade 2,3,4	Air Entrain.
		28 Days	7 Days			
A	5.0 (280 kg/m3)	3000 (20.6)	2100 (14.5)	0.6	1,2,3,4, 8	Yes
B	4.0 (225 kg/m^3)	2000 (13.8)	1400 (9.7)	0.6	2,3,4,5,6,7	No
C5	6.0 (335 kg/m^3)	3600(24.8)	2520 (17.4)	0.45	1,2,3,4,5,6	Yes
D	4.5 (252 kg/m^3)	2500 (17.2)	1750 (12.1)	0.6	2,3,4,5,6,7	No
H5	6.0 (335 kg/m^3)	As indicated	As Indicated	0.45	3,4,5,6	Yes
I	5.5 (308 kg/m^3)	3500 (24.1)	2450 (16.9)	0.45	2,3,4,5	Yes
J	2.0 (112 kg/m^3)	800 (5.5)	560 (3.9)	N/A	2,3,4,5	No
S5	6.0 (335 kg/m^3)	4000 (27.6)	2800 (19.3)	0.45	2,3,4,5	Yes

Notes:

1. Maximum water-cement or water-cementitious ratio by weight

2 Unless otherwise allowed, Grade 1 coarse aggregate shall only be used in massive foundations with 4-in (100-mm) minimum clear spacing between reinforcing steel bars.

3. Grade 1 coarse aggregate grading shall not be used in drilled shafts.

4. Unless otherwise allowed, Grade 8 coarse aggregate shall be used in extruded curbs.

5. Structural concrete classes.

6. When Type II cement is used in Class C, S or A concrete, the 7-day compressive strength requirement will be 2310 psi (15.9 MPa) for Class C, 2570 psi (17.7 MPa) for Class S and 1925 psi (13.3 MPa) for Class A minimum.

Table 6: Over Design Required to Meet Compressive Strength Requirements$_1$					
Number Of Tests $_{2,3}$	Standard Deviation, psi (MPa)				
	300 (2.06)	400 (2.75)	500 (3.44)	600 (4.13)	700 (4.82)

15	470 (3.24)	620 (4.27)	850 (5.85)	1,120 (7.71)	1,390 (9.57)
20	430 (2.96)	580 (3.99)	760 (5.23)	1,010 (6.95)	1,260 (8.67)
30 or more	400 (2.75)	530 (3.65)	670 (4.61)	900 (6.20)	1,130 (7.78)

Notes:

1. When designing the mix, add the tabulated amounts to the minimum design strength in Table 5.Maximum water-cement or water-cementitious ratio by weight

2. Number of tests of a concrete mixture used to estimate the standard deviation of a concrete production facility. Test of another mix within 1,000 psi (6.88 MPa) of the specified strength may be used.

3. If less than 15 prior tests are available, the overdesign should be 1,000 psi (6.88 MPa) for specified strength less than 3,000 psi (20.65 MPa), 1,200 psi (8.26 MPa) for specified strengths from 3,000 to 5,000 psi (20.65 to 34.42 MPa) and 1,400 psi (9.64 MPa) for specified strengths greater than 5,000 psi (34.42 MPa).

Table 7: Expected Usage of Concrete Classes

Class	General Usage
A	Inlets, manholes, curb, gutter, curb & gutter, concrete retards, sidewalks, driveways, backup walls and anchors
B	Riprap, small roadside signs and anchors
C5	Drilled shafts, bridge substructure, bridge railing, culverts except top slab of direct traffic culverts, headwalls, wing walls, approach slabs, and cast-in-place concrete traffic barrier
D	Riprap
H5	Prestressed concrete beams, boxes, piling and precast concrete traffic barrier
J	Utility trench repair
S5	Bridge slabs and top slabs of direct traffic culverts

Table 8: Air Entrainment[1]

Nominal Maximum Aggregate Size In (mm)	% Air Entrainment	
	Moderate Exposure	Severe Exposure
3/8 (9.5)- Grades 7 & 8	6	7-1/2
1/2 (12.5)- Grades 6	5-1/2	7
3/4 (19)- Grades 5	5	6
1 (25)- Grades 4	4-1/2	6
1-1/2 (37.5)- Grades 2 & 3	4-1/2	5-1/2

2 (50)- Grades 2	4	5

1. For specified concrete strengths above 5,000 psi (34.42 MPa) a reduction of 1 percentage point is allowed.

403S.8 Mix Design Options

For the structural concretes identified in Table 5 (Classes C, H and S) and any other class of concrete designed using more than 520 lbs. of cementitious material per cubic yard (310 kgs per cubic meter), one of the mix design options presented below shall be used.

For the non-structural concretes identified in Table 5 (Classes A, B, D and I) and any other class of concrete designed using less than 520 lbs. of cementitious material per cubic yard (310 kgs per cubic meter), one of the mix design options presented below will be used, except that Class C fly ash may be used instead of Class F fly ash for Options 1, 3 and 4 unless a sulfate-resistant concrete is required.

A. Option 1: Twenty (20) to thirty-five (35) percent of the cement may be replaced with Class F fly ash.

B. Option 2: Thirty-five (35) to fifty (50) percent of the cement may be replaced with ground granulated blast furnace slag.

C. Option 3: Thirty-five (35) to fifty (50) percent of the cement may be replaced with a combination of Class F fly ash, ground granulated blast furnace slag or silica fume. The combination may not include more than thirty-five (35) percent fly ash and no more than ten (10) percent silica fume.

D. Option 4: Type IP or Type IS will be used and up to ten (10) percent of the cement may be replaced with Class F fly ash, ground granulated blast-furnace slag or silica fume.

E. Option 5: Thirty-five (35) to fifty (50) percent of the cement may be replaced with a combination of Class C fly ash and at least six (6) percent of silica fume, ultra fine fly ash or metakaolin. The combination may not include more than thirty-five (35) percent fly ash and no more than ten (10) percent silica fume.

F. Option 6: A lithium nitrate admixture will be added at a minimum dosage of 0.55 gal. Of thirty (30) percent lithium nitrate solution per pound of alkalis present in the hydraulic cement.

G. Option 7: When hydraulic cement only is used in the design, the total alkali contribution from the cement in the concrete does not exceed 4.0 lbs. Per cubic yard, when calculated as follows:

alkali (lbs. per CY) = .01 (lbs cement/CY) (% Na_2O equivalent in cement)

where (% Na_2O equivalent in cement) is assumed to be the maximum cement alkali content reported on the cement mill certificate.

H. Option 8: When there are deviations from Options 1 through 7, the following shall be performed:

1. Conduct tests on both coarse and fine aggregate separately in accordance with ASTM C-1260, using 440 g of the proposed cementitious in the same proportions of hydraulic cement to supplementary cementing material to be used in the mix.

2. Prior to use of the mix, a certified test report signed and sealed by a Professional Engineer, licensed in the state of Texas shall be submitted that demonstrates that ASTM C 1260 test results for each aggregate do not exceed 0.10 percent expansion.

403S.9 Mixing and Mixing Equipment

All equipment, tools and machinery used for hauling materials and performing any part of the work shall be maintained in such condition to insure completion of the work without excessive delays for repairs and replacement. Mixing shall be done in a mixer of approved type and size that will produce uniform distribution of material throughout the mass and shall be capable of producing concrete meeting requirements of ASTM C 94, Ready-mixed Concrete and these specifications. Mixing equipment shall be capable of producing sufficient concrete to provide required quantities. Entire contents of the drum shall be discharged before any materials are placed therein for a succeeding batch. Improperly mixed concrete shall not be placed in a structure. For all mixers an adequate water supply and an accurate method of measuring the water shall be provided.

The mixer may be batched by either volumetric or weight sensing equipment and shall be equipped with a suitable timing device that will lock the discharging mechanism and signal when specified time of mixing has elapsed.

A. Proportioning and Mixing Equipment

For all miscellaneous concrete placements, a mobile, continuous, volumetric mixer or a volumetric or weight batch mixer of the rotating paddle type may be used.

When approved by Engineer or designated representative in writing or when specified for use in other items, these mixers may be used for other types of concrete construction, including structural concrete, if the number of mixers furnished will supply the amount of concrete required for the particular operation in question.

These mixers shall be designed to receive all the concrete ingredients, including admixtures, required by the mix design in a continuous uniform rate and mix them to the required consistency before discharging.

For continuous volumetric mixers, the materials delivered during a revolution of the driving mechanism or in a selected interval, will be considered a batch and the proportion of each ingredient will be calculated in the same manner as for a batch type plant.

Mixing time shall conform to recommendations of manufacturer of mixer unless otherwise directed by Engineer or designated representative.

B. Ready-mixed Concrete

Use of ready-mixed concrete will be permitted provided the batching plant and mixer trucks meet quality requirements specified herein. When ready-mixed concrete is used, additional mortar (1 sack cement, 3 parts sand and sufficient water) shall be added to each batch to coat the mixer drum. Ready-mixed concrete, batching plant and mixer truck operation shall include the following:

1. A ticket system will be used that includes a copy for the Inspector. Ticket will have machine stamped time/date of concrete batch, a mix design designation, weight of cement, fly ash, sand and aggregates; exact nomenclature and written quantities of admixtures and water. Any item missing or incomplete on ticket may be cause for rejection of concrete.

2. Sufficient trucks will be available to support continuous placements. The Contractor will satisfy the Engineer or designated representative that adequate standby trucks are available to support monolithic concrete placement requirements.

3. A portion of mixing water required by the mix design to produce the specified slump may be withheld and added at the job site, but only with permission of the Engineer or designated representative and under the Inspector's observation. When water is added under these conditions, the concrete batch will be thoroughly mixed before any slump or strength samples are taken. Additional cement shall not be added at the job site to otherwise unacceptable mixes.

4. A metal plate(s) shall be attached in a prominent place on each truck mixer plainly showing the various uses for which it was designed. The data shall include the drum's speed of rotation for mixing and for agitating and the capacity for complete mixing and/or agitating only. A copy of the manufacturer's design, showing dimensions of blades, shall be available for inspection at the plant at all times. Accumulations of hardened concrete shall be removed to the satisfaction of the Engineer or designated representative.

5. The loading of the transit mixers shall not exceed capacity as shown on the manufacturer's plate attached to the mixer or 63 percent of the drum volume, whichever is the lesser volume. The loading of transit mixers to the extent of causing spill-out enroute to delivery will not be acceptable. Consistent spillage will be cause for disqualification of a supplier.

6. Excess concrete remaining in the drum after delivery and wash water after delivery shall not be dumped on the project site unless approval of the dump location is first secured from the Engineer or designated representative.

C. Volumetric Batching

Use of volumetric batched concrete will be permitted provided the batching and continuous mixing operations conform to ASTM C 685, “Concrete Made By Volumetric Batching and Continuous Mixing”. This type concrete shall be made from materials continuously batched by volume, mixed in a continuous mixer and delivered to the site in a freshly mixed and unhardened state. Tests and criteria for batching accuracy and mixing efficiency shall be as specified in ASTM C 685.

A ticket system will be used that includes a copy for the Inspector. The ticket will have machine stamped time/date of concrete batch, a mix design designation, weight of cement, fly ash, sand and aggregates; exact nomenclature and written quantities of admixtures and water. Any item missing or incomplete on ticket may be cause for rejection of concrete.

Each batching or mixing unit, or both, shall carry in a prominent place a metal plate or plates on which are plainly marked the gross volume of the unit in terms of mixed concrete, discharge speed and the weight-calibrated constant of the machine in terms of a revolution counter or other output indicator. The mixer shall produce a thoroughly mixed and uniform concrete.

The batcher-mixer unit shall contain in separate compartments all the necessary ingredients needed for the manufacture of concrete. The unit shall be equipped with calibrated proportioning devices to vary the mix proportions and it shall produce concrete as required by the Work and ASTM C 685.

D. Truck-mixed Concrete

The concrete shall be mixed in a truck mixer from 70 to 100 revolutions at the mixing speed designated by the manufacturer that will produce a uniform concrete mix. The concrete shall be delivered to the project in a thoroughly mixed and uniform mass and shall be discharged with a satisfactory degree of uniformity. Additional mixing at the job site, at the mixing speed designated by the manufacturer, may be allowed by the Engineer or designated representative as long as the concrete is discharged before the drum has revolved a total of 300 revolutions after the introduction of the mixing water to the cement and the aggregates.

Re-tempering or adding concrete chemical admixtures is only permitted at the job site when concrete is delivered in a truck mixer. Water shall not be added after introduction of mixing water at the batch plant except on arrival at the job site with approval of the Engineer or designated representative, in order to adjust the slump of the concrete. When this water is added, the mix design water-cementitious-material ratio shall not be exceeded. The drum or blades shall be turned at least 30 additional revolutions at mixing speed to ensure thorough and uniform mixing of the concrete. Water or chemical admixtures shall not be added to the batch after any concrete has been discharged.

When the concrete contains silica fume, mixing times and batching operations shall be adjusted as necessary to ensure that the material is completely and uniformly dispersed in the mix. The dispersion of the silica fume within the mix shall be verified in trial batches.

E. Hand-mixed Concrete

Hand mixing of concrete may be permitted for small placements or in case of an emergency and then only on authorization of the Engineer or designated representative. Hand-mixed batches shall not exceed a 4 cubic foot (0.113 cubic meters) batch in volume. Material volume ratios shall not be leaner than 1 part cement, 2 parts large aggregate, 1 part fine aggregate and enough water to produce a consistent mix with a slump not to exceed 4 inches (100 mm). Admixtures shall not be used unless specifically approved by the Engineer or designated representative.

403S.10 Excavation, Placing of Concrete, Finishing, Curing and Backfill

Excavation, placing of concrete, finishing, curing and backfill shall conform to Standard Specification Item No. 401S, "Structural Excavation and Backfill", Standard Specification Item No. 410S, "Concrete Structures" and Standard Specification Item No. 411S, "Surface Finishes for Concrete".

403S.11 Measurement

Where measurement of concrete for a structure is not provided by another governing pay item, measurement shall be made under this specification in accordance with the following.

The quantities of concrete of the various classifications which constitute the completed and accepted structure or structures in place will be measured by the cubic yard (cubic meters:1 cubic meter is equal to 1.308 cubic yards), each, square yard (square meter: 1 square yard equals 0.836 square meters) or linear foot as indicated in the Contract Documents. Measurement will be as follows:

A. General

1. Measurement based on dimensions shall be for the completed structure as measured in place. However, field-measured dimensions shall not exceed those indicated on the drawings or as may have been directed by the Engineer or designated representative in writing.

2. No deductions shall be made for chamfers less than 2 inches (50 mm) in depth, embedded portions of structural steel, reinforcing steel, nuts, bolts, conduits less than 5 inches (125 mm) in diameter, pre/post tensioning tendons, keys, water stops, weep holes and expansion joints 2 inches (50 mm) or less in width.

3. No measurement shall be made for concrete keys between adjoining beams or prestressed concrete planks.

4. No measurement shall be made for fill concrete between the ends or adjoining prestressed concrete planks/box beams at bent caps or between the ends of prestressed concrete planks/box beams and abutment end walls.

5. No measurement shall be made for inlet and junction box invert concrete.

6. No measurement shall be made for any additional concrete required above the normal slab thickness for camber or crown.

B. Plan Quantity. For those items measured for plan quantity payment, adequate calculations have been made. If no adjustment is required by Article 403S.12, additional measurements or calculations will not be required or made.

C. Measured in Place. For those items not measured for Plan Quantity payment, surement will be made in place, subject to the requirements of Article 403S.10.A.1 above.

403S.12 Payment

The work performed and materials furnished as prescribed by this item and measured in accordance with the applicable provisions of "Measurement" above will be paid for as follows.

The quantity to be paid for will be that quantity indicated in the contract documents and/or shown on the drawings, regardless of errors in calculations, except as may be modified by the following.

Plan Quantities will be adjusted:

A. When a complete structure element has been erroneously included or omitted from the drawings, the quantity shown on the drawings for that element will be added to or deducted from the plan quantity and included for payment. A complete structure element will be the smallest portion of a total structure for which a quantity is included on the drawings. Quantities revised in this manner will not be subject to the provisions of the "General Conditions", Article 11.

B. When the plan quantity for a complete structure element is in error by 5 percent or more, a recalculation will be made and the corrected quantity included for payment. Quantities revised in this manner will not be subject to the provisions of the "General Conditions", Article 11

C. When quantities are revised by a change in design, the "plan quantity" will be increased or decreased by the amount involved in the design change. Quantities revised in this manner will be subject to the provisions of the "General Conditions", Article 11.

The party to the contract requesting the adjustment shall present to the other, a copy of the description and location, together with calculations of the quantity for the structure element involved. When this quantity is certified correct by the Engineer or designated representative, it will become the revised plan quantity.

Payment for increased or decreased costs due to a change in design on those items measured as "Cubic Yard", "Each", "Square Foot", "Square Yard" or "Linear Foot" will be determined by Change Order. Quantities revised in this manner will be subject to the provisions of the "General Conditions", Article 11.

The unit prices bid for the various classes of concrete shown shall include full compensation for furnishing, hauling, and mixing all concrete material; placing, finishing and curing all concrete; all grouting, pointing and finishing; furnishing and placing drains; furnishing and placing metal flashing strips; furnishing and placing expansion joint material required by this item; and for all forms and false work, labor, tools, equipment and incidentals necessary to complete the work.

Pay Item No. 403S-CY:	(Structure or Structural Component) -	Per Cubic Yard.
Pay Item No. 403S-EA:	(Structure or Structural Component) -	Per Each.
Pay Item No. 403S-SY:	(Structure or Structural Component) -	Per Square Yard.
Pay Item No. 403S-LF:	(Structure or Structural Component) -	Per Lineal Foot.

End

SPECIFIC CROSS REFERENCE MATERIALS
Standard Specification Item 403S, "Concrete For Structures"

City of Austin Standard Specification Items

Designation	Description
Item No. 401S	Structural Excavation and Backfill
Item No. 410S	Concrete Structures
Item No. 411S	Surface Finishes for Concrete

Texas Department of Transportation: Departmental Material Specifications

Designation	Description
DMS-4640	Chemical Admixtures for Concrete
DMS-4610	Fly Ash
DMS-4620	Ground Granulated Blast-Furnace Slag
DMS-4630	Silica Fume
DMS-4635	Metakaolin

American Association of State Highway & Transportation Officials,
AASHTO Standard Method of Test for

Designation	Description
Method T 26	Quality of Water to be Used in Concrete

American Concrete Institute, ACI

Designation	Description
ACI 211.1	Standard Practice for Selecting Proportions for Normal, Heavyweight, and Mass Concrete

American Society for Testing and Materials, ASTM

Designation	Description
ASTM C 94	Specification For Ready-Mixed Concrete
ASTM C 150	Specification For Portland Cement
ASTM C 685	Concrete Made By Volumetric Batching and Continuous Mixing
ASTM C-1260	Standard Test Method for Potential Alkali Reactivity of Aggregates
ASTM D-512	Test Methods for Chloride Ion in Water
ASTM D-516	Test Methods for Sulfate Ion in Water
ASTM D-4191	Test Method for Sodium in Water by Atomic Absorption
ASTM D-4192	Test Method for Potassium Water by Atomic Absorption

Texas Department of Transportation: Manual of Testing Procedures

Designation	Description
TEX-203-F	Sand Equivalent Test
TEX-401-A	Sieve Analysis of Fine and Coarse Aggregate
TEX-406-A	Mineral Finer than 75 µm (No. 200) Sieve in Mineral Aggregates (Decantation Test for Concrete Aggregates)
TEX-408-A	Organic Impurities in Fine Aggregate for Concrete
TEX-410-A	Abrasion of Coarse Aggregate Using The Los Angeles Machine

TEX-411-A	Soundness of Aggregate by Use of Sodium Sulfate or Magnesium Sulfate
TEX-413-A	Determination of Deleterious Materials in Mineral Aggregate
TEX-415-A	Slump of Portland Cement Concrete
TEX-416-A	Air Content of Freshly-Mixed Concrete by the Pressure Method
TEX-418-A	Compressive Strength of Cylindrical Concrete Specimens
TEX-612-J	Acid Insoluble Residue

SPECIFIC CROSS REFERENCE MATERIALS (Continued)
Standard Specification Item 403S, "Concrete For Structures"

Texas Department of Transportation: Publications

Designation	Description
Bulletin C-11	Construction Bulletin

RELATED CROSS REFERENCE MATERIALS
Standard Specification Item 403S, "Concrete For Structures"

Texas Department of Transportation: Standard Specifications for Construction and Maintenance of Highways, Streets, and Bridges

Designation	Description
Item 360	Concrete Pavement
Item 420	Concrete Structures
Item 421	Hydraulic Cement Concrete
Item 427	Surface Finishes for Concrete
Item 431	Pneumatically Placed Concrete

Item 520 Weighing and Measuring Equipment

Texas Department of Transportation: Departmental Material Specifications

Designation	Description
DMS-4650	Hydraulic Cement Concrete Curing Materials and Evaporation Retardants”
DMS-6100	Epoxy and Adhesives
DMS 8900	Fly Ash

Item No. 406S
Reinforcing Steel

406S.1 Description

This item shall govern furnishing and placement of reinforcing steel, deformed and smooth, of the size and quantity indicated on the drawings and in accordance with these specifications.

This specification is applicable for projects or work involving either inch-pound or SI units. Within the text and accompanying tables, the inch-pound units are given preference followed by SI units shown within parentheses.

406S.2 Submittals

The submittal requirements of this specification item may include:

A. Evidence that the steel reinforcement producer is included on the TxDoT list of approved producing mills

B. Listing of the size, grade, type and quantity of reinforcing steel proposed for the project.

C. If welding of reinforcing steel is proposed, evidence that carbon equivalent (C.E.) of the proposed steel is at least 0.55% with a report of chemical analysis showing the percentages of elements necessary to establish C.E.

D. If epoxy coated steel is proposed, evidence that the steel reinforcement producer is included on the TxDoT list of approved epoxy coating applicators

E. If epoxy coated steel is proposed, written certification that the epoxy-coated reinforcing steel meets the requirements of this Item with a copy of the manufacturer's control tests.

F. When mechanical splices are proposed, the types of couplers proposed for use.

406S.3 Materials

A. Approved Mills

Prior to furnishing reinforcing steel, the producing mills must be included on the list of approved producing mills that is maintained by the Construction Division of the State of Texas Department of Transportation

B. Deformed Bars and Wire Reinforcement

Unless indicated otherwise on the drawings, Bar reinforcement shall be Grade 60 and deformed. Reinforcing steel must conform to one of the following:

ASTM A615/ 615M, Grades 40 or 60 (300 or 420)

ASTM A996/ 996M, Type A, Grades 40 or 60 (300 or 420)

ASTM A996/996M, Type R, Grade 60 (420), permitted in concrete pavement only (furnished as straight bars only without bends. Bend tests are not required)

ASTM A706/706M

In cases where the provisions of this item are in conflict with the provisions of the ASTM Designation to which reference is made, the provisions of this item shall govern.

The nominal size, area and weight (mass) of reinforcing steel bars covered by these specifications are as follows:

Bar Size Number 1/8th ins (mm)	Nominal Diameter, inches (mm)	Nominal Area, Sq. ins. (mm2)	Weight/Linear Foot Lbs. (kg)
2 (6)	0.250 (6.6)	0.05 (32)	0.167 (.075)
3 (10)	0.375 (9.5)	0.11 (71)	0.376 (.171)
4 (13)	0.500 (12.5)	0.20 (127)	0.668 (.303)
5 (16)	0.625 (15.5)	0.31 (198)	1.043 (.473)
6 (19)	0.750 (19.0)	0.44 (285)	1.502 (.681)
7 (22)	0.875 (22.0)	0.60 (388)	2.044 (.927)
8 (25)	1.000 (25.5)	0.79 (507)	2.670 (2.211)
9 (29)	1.128 (28.5)	1.00 (641)	3.400 (1.542)
10 (32)	1.270 (32.0)	1.27 (792)	4.303 (1.952)
11 (36)	1.410 (36.0)	1.56 (958)	5.313 (2.410)
14 (43)	1.693 (43.0)	2.25 (1552)	7.65 (3.470)

18 (57)	2.257 (57.5)	4.00 (2565)	13.60 (6.169)

Smooth, round bars shall be designated by size number through a No. 4. Smooth bars above No. 4 shall be designated by diameter in inches.

C. Smooth Bar and Spiral Reinforcement

Smooth bars and dowels for concrete pavement must have a minimum yield strength of 60 ksi (414 MPa) and meet ASTM A615/615M. Smooth bars that are greater in diameter than a No. 3 (10 mm) designation shall conform to ASTM A615 or meet the physical requirements of ASTM A36.

Spiral reinforcement shall be either smooth or deformed bars or wire of the minimum size or gauge indicated on the drawings. Bars for spiral reinforcement shall comply with ASTM A615 Grade 40(300), ASTM A996, Type A, Grade 40 (300); or ASTM A675, Grade 80(550), meeting dimensional requirements of ASTM A615. Smooth wire shall comply with ASTM A82, and deformed wire shall comply with ASTM A496.

D. Weldable Reinforcing Steel

Reinforcing steel to be welded must comply with ASTM A706 or have a carbon equivalent (C.E.) of at most 0.55%. A report of chemical analysis showing the percentages of elements necessary to establish C.E. is required for reinforcing steel that does not meet ASTM A706 to be structurally welded. No tack welding will be allowed. All welding shall conform to the requirements of AWS D1.1/D1.1M.

The requirements above do not apply to the following miscellaneous welding applications:

Splicing reinforcing steel to extend bars in the bottom of a drilled shaft;

Attaching chairs to the reinforcing steel cage of a drilled shaft;

Armor joints and their supports;

Screed rail and form hanger supports where permitted on steel units;

Reinforcing steel to R-bars for lateral stability between prestressed beams, spirals, or bands of reinforcing bars in drilled shaft cages;

Permanent bridge deck forms;

Steel added in railing when slip-form construction is used; and

Other similar miscellaneous members that have no load carrying capacity in the completed structure.

E. Welded Wire Fabric

Wire shall conform to the requirements of the Standard Specifications for Cold-Drawn Steel Wire for Concrete Reinforcement, ASTM A 82 or A 496. Wire fabric, when used as reinforcement, shall conform to ASTM A 185 or A 497.

When wire is ordered by size numbers, the following relation between size number, diameter in inches and area shall apply unless otherwise indicated on the drawings:

Size, W Number 1/100 in^2 (mm2)	Nominal Diameter inch (mm)	Nominal Area, sq. inches (mm^2)
31 (200)	0.628 (16.0)	0.310 (200)
30 (194)	0.618 (15.7)	0.300 (194)
28 (181)	0.597 (15.2)	0.280 (181)
26 (168)	0.575 (14.6)	0.260 (168)
24 (155)	0.553 (14.0)	0.240 (155)
22 (142)	0.529 (13.4)	0.220 (142)
20 (129)	0.505 (12.8)	0.200 (129)
18 (116)	0.479 (12.2)	0.180 (116)
16 (103)	0.451 (11.5)	0.160 (103)
14 (90)	0.422 (10.7)	0.140 (90)
12 (77)	0.391 (9.9)	0.120 (77)
10 (65)	0.357 (9.1)	0.100 (65)
8 (52)	0.319 (8.1)	0.080 (52)
7 (45)	0.299 (7.6)	0.070 (45)
6 (39)	0.276 (7.0)	0.060 (39)
5.5 (35)	0.265 (6.7)	0.055 (35)
5 (32)	0.252 (6.4)	0.050 (32)
4.5 (29)	0.239 (6.1)	0.045 (29)

4 (26)	0.226 (5.7)	0.040 (26)
3.5 (23)	0.211 (5.4)	0.035 (23)
3 (19)	0.195 (5.0)	0.030 (19)
2.5 (16)	0.178 (4.5)	0.025 (16)
2 (13)	0.160 (4.1)	0.020 (13)
1.5 (9)	0.138 (3.5)	0.015 (9.7)
1.2 (8)	0.124 (3.1)	0.012 (7.7)
1 (6)	0.113 (2.9)	0.010 (6.5)
0.5 (3)	0.080 (2.0)	0.005 (3.2)

Where deformed wire is required, the size number shall be preceded by D and for smooth wire the prefix W shall be shown.

Welded wire fabric shall be designated as follows: 6 x 12 – W16 x W8, which indicates a 6 in. (150 mm) longitudinal wire spacing and 12-in (300 mm) transverse wire spacing with smooth No. 16 (103) wire longitudinally and smooth no. 8 (52) wire transversely.

F. Epoxy Coating

Epoxy coating shall be required as indicated on the drawings. Prior to furnishing epoxy-coated reinforcing steel, the epoxy applicator must be included on the list of approved applicators that is maintained by the Construction Division of the State of Texas Department of Transportation.

The reinforcing steel shall be epoxy coated in accordance with the following.

Epoxy Coating Requirements for Reinforcing Steel

Material	Specification
Bar	ASTM A775 or A934
Wire or Fabric	ASTM A884 Class A or B
Mechanical Coupler	As indicated on the drawings

Hardware	As indicated on the drawings

The epoxy coating material and coating repair material shall comply with TxDoT's DMS-8130, "Epoxy Powder Coating for Reinforcing Steel". The applicator shall not patch more than ¼ inch total length in any foot (20 mm total length in any meter) at the applicator's plant.

The epoxy-coated reinforcing steel shall be sampled and tested in accordance with TxDoT Test Method Tex-739-I, "Sampling and Testing Epoxy Coated Reinforcing Steel".

The identification of all reinforcing steel shall be maintained throughout the epoxy coating and fabrication and until delivery to the project site.

Written certification that the epoxy-coated reinforcing steel meets the requirements of this Item shall be provided along with a copy of the manufacturer's control tests.

G. Mechanical Couplers

When mechanical splices in reinforcing steel bars are indicated on the drawings, the following types of couplers may be used:

Sleeve-filler

Sleeve-threaded

Sleeve-swaged, or

Sleeve-wedge.

H. Chairs and Supports

Chairs and Supports shall be steel, precast mortar or concrete blocks cast in molds meeting the approval of the Engineer or designated representative of sufficient strength to position the reinforcement as indicated on the drawings when supporting the dead load of the reinforcement, the weight of the workers placing concrete and the weight of the concrete bearing on the steel. Chairs shall be plastic coated when indicated on the drawings.

Chair Types and Applicable Uses	
Structural or Architectural Elements (columns, beams, walls, slabs) exposed to weather, not subjected to sand blasting, water blasting or grinding.	Galvanized steel or steel chairs with plastic coated feet.

Structural or Architectural Elements exposed to weather and subject to sand blasting, water blasting or grinding.	Stainless steel chairs.
Structural or Architectural Elements not exposed to weather or corrosive conditions.	Uncoated steel chairs
Slabs and grade beams cast on grade.	Steel chairs with a base with 9 inch² (58 cm^2) minimum area or sufficient area to prevent the chair from sinking into fill or subgrade. Precast mortar or concrete blocks meeting the requirements of this item may be used.

406S.4 Bending

The reinforcement shall be bent cold, true to the shapes indicated on the drawings. Bending shall preferably be done in the shop. Irregularities in bending shall be cause for rejection. Improperly fabricated, damaged or broken bars shall be replaced at no additional expense to the City. Damaged or broken bars embedded in a previous concrete placement shall be repaired using a method approved by the Engineer or designated representative.

Unless otherwise indicated on the drawings, the inside diameter of bar bends, in terms of the nominal bar diameter (d), shall be as follows:

Bends of 90 degrees and greater in stirrups, ties and other secondary bars that enclose another bar in the bend.

Bar Number in 1/8th inches (mm)	Diameter
3, 4, 5 (10, 13, 16)	4d
6, 7, 8	6d

All bends in main bars and in secondary bars not covered above.

Bar Number in 1/8th inches (mm)	Diameter
3 thru 8 (10 thru 25)	6d
9, 10, 11 (29, 32, 36)	8d
14, 18 (43, 57)	10d

406S.5 Tolerances

Fabricating tolerances for bars shall not be greater than shown on Standard (Detail) 406S-1.

406S.6 Storing

Steel reinforcement shall be stored above the surface of the ground upon platforms, skids or other supports and shall be protected as far as practicable from mechanical injury and surface deterioration caused by exposure to conditions producing rust. When placed in the work, reinforcement shall be free from dirt, paint, grease, oil or other foreign materials. Reinforcement shall be free from injurious defects such as cracks and laminations. Rust, surface seams, surface irregularities or mill scale will not be cause for rejection, provided the minimum dimensions, cross sectional area and tensile properties of a hand wire brushed specimen meets the physical requirements for the size and grade of steel indicated on the drawings.

406S.7 Splices

Splicing of bars, except when indicated on the drawings or specified herein, will not be permitted without written approval of the Engineer or designated representative. No substitution of bars will be allowed without the approval of the Engineer or designated representative. Any splicing of substituted bars shall conform to the requirements in the Table below.

Splices not indicated on the drawings will be permitted in slabs not more than 15 inches (380 mm) in thickness, columns, walls and parapets.

Splices will not be permitted in bars 30 feet (9.1 meters) or less in plan length unless otherwise approved. For bars exceeding 30 feet (9.1 meters) in plan length, the distance center to center of splices shall not be less than 30 feet (9.1 meters) minus 1 splice length, with no more than 1 individual bar length less than 10 feet (3 meters). Splices not indicated on the drawings, but permitted hereby, shall conform to the Table

below. The specified concrete cover shall be maintained at such splices and the bars placed in contact and securely tied together.

Minimum Lap Requirements		
Bar Number in 1/8th inches (mm)	Uncoated Lap Length	Coated Lap Length
3 (10)	1 foot 4 inches (0.4 meters)	2 foot 0 inches (0.610 meters)
4 (13)	1 foot 9 inches (0.533 meters)	2 foot 8 inches (0.813 meters)
5 (16)	2 foot 2 inches (0.660 meters)	3 feet 3 inches (0.991meters)
6 (19)	2 foot 7 inches (0.787 meters)	3 feet 11 inches (1.194 meters)
7 (22)	3 feet 5 inches (1.041 meters)	5 feet 2 inches (1.575 meters)
No. 8 (25)	4 feet 6 inches (1.372 meters)	6 feet 9 inches (2.057 meters)
No. 9 (29)	5 feet 8 inches (1.727 meters)	8 feet 6 inches (2.591 meters)
No. 10 (32)	7 feet 3 inches (2.210 meters)	10 feet 11 inches (3.327 meters)
No. 11 (36)	8 feet 11 inches (2.718 meters)	13 feet 5 inches (4.089 meters)

Spiral steel shall be lapped a minimum of 1 turn. Bar No. 14 and No. 18 may not be lapped.

Welded wire fabric shall be spliced using a lap length that includes an overlap of at least 2 cross wires plus 2 inches (50 mm) on each sheet or roll.

Splices using bars that develop equivalent strength and are lapped in accordance with the table above are permitted.

Welding of reinforcing bars may be used only where indicated on the drawings or as permitted herein. All welding operations, processes, equipment, materials, quality of work and inspection shall conform to the requirements indicated on the drawings. All

splices shall be of such dimension and character as to develop the full strength of the bar being spliced.

End preparation for butt-welding reinforcing bars shall be done in the field, except Bar No. 6 and larger shall be done in the shop. Delivered bars shall be of sufficient length to permit this practice.

For box culvert extensions with less than 1 foot (0.3 meters) of fill, the existing longitudinal bars shall have a lap with the new bars as shown in the table above. For box culvert extensions with more than 1 foot (0.3 meters) of fill, a minimum lap of 12 inches (300 mm) will be required.

Unless otherwise indicated on the drawings, dowel bars transferring tensile stresses shall have a minimum embedment equal to the minimum lap requirements shown in the table above. Shear transfer dowels shall have a minimum embedment of 12 inches (300 mm).

406S.8 Placement

Reinforcement shall be placed as near as possible in the position indicated on the drawings. Unless otherwise indicated on the drawings, dimensions shown for reinforcement are to the centers of the bars. In the plane of the steel parallel to the nearest surface of concrete, bars shall not vary from plan placement by more than 1/12 of the spacing between bars. In the plane of the steel perpendicular to the nearest surface of concrete, bars shall not vary from plan placement by more than 1/4 inch (6 mm). Cover of concrete to the nearest surface of steel shall be as follows:

	Minimum Cover, Inches (mm)
(a) Concrete cast against and permanently exposed to earth	3 (76 mm)
(b) Concrete exposed to earth or weather:	
Bar No. 6 (19) through No. 18 bars (57)	2 (51 mm)
Bar No. 5 (16), W31 (W200) or D31 (D200) wire and smaller	1 ½ (38 mm)
(c) Concrete not exposed to weather or in contact with ground:	

Slabs, walls, joists:	
Bar No. 14 (43) and 18 (57)	1 ½ (38mm)
Bar No. 11 (36) and smaller	1 (25 mm)
Beams, columns:	
Primary reinforcement, ties, stirrups, spirals	1 ½ (38 mm)
Shells, folded plate members:	
Bar No. 6 (19) and larger	1 (25 mm)
Bar No. 5 (16), W31 (W200) or D31 (D200) wire, and smaller	1 (25 mm)

Vertical stirrups shall always pass around the main tension members and be attached securely thereto.

The reinforcing steel shall be located accurately in the forms and held firmly in place before and during concrete placement by means of bar supports that are adequate in strength and number to prevent displacement and to keep the steel at the required distance from the form surface. Bars shall be supported by means of approved galvanized metal spacers, metal spacers with plastic coated tips, stainless steel spacers, plastic spacers or approved precast mortar or concrete blocks when supports are in contact with removable or stay-in-place forms. Bright basic bar supports shall be used to support reinforcing steel placed in slab overlays on concrete panels or on existing concrete slabs. Bar supports in contact with soil or subgrade shall be approved.

For bar supports with plastic tips, the plastic protection must be at least 3/32 in. (2.4 mm) thick and extend upward on the wire to a point at least ½ in. (12.5 mm) above the formwork.

For approval of plastic spacers on a project, representative samples of the plastic shall show no visible indications of deterioration after immersion in a 5 percent solution of sodium hydroxide for 120 hours.

All accessories such as tie wires, bar chairs, supports, or clips used with epoxy-coated reinforcement shall be of steel, fully coated with epoxy or plastic. When approved by the Engineer or designated representative, plastic supports may also be used with epoxy-coated reinforcement.

All reinforcing steel shall be tied at all intersections, except that where spacing is less than 1 foot (300 mm) in each direction, alternate intersections only need be tied. For reinforcing steel cages for other structural members, the steel shall be tied at enough intersections to provide a rigid cage of steel. Mats of wire fabric shall overlap each other 1 full space as a minimum to maintain a uniform strength and shall be tied at the ends and edges.

Where prefabricated deformed wire mats are specified or if the Contractor requests, welded wire fabric may be substituted for a comparable area of steel reinforcing bar plan, subject to the approval of the Engineer or designated representative.

Mortar or concrete blocks shall be cast to uniform dimensions with adequate bearing area. A suitable tie wire shall be provided in each block, to be used for anchoring to the steel. Except in unusual cases and when specifically authorized by the Engineer, the size of the surface to be placed adjacent to the forms shall not exceed 2 1/2 inches (63.5 mm) square or the equivalent thereof in cases where circular or rectangular areas are provided. Blocks shall be cast accurately to the thickness required and the surface to be placed adjacent to the forms shall be a true plane, free of surface imperfections. The blocks shall be cured by covering them with wet burlap or mats for a period of 72 hours. Mortar for blocks should contain approximately 1 part hydraulic cement to three parts sand. Concrete for blocks should contain 850 pounds of hydraulic cement per cubic yard (500 kilograms per cubic meter) of concrete

Individual bar supports shall be placed in rows at 4-ft (1.22 meters) maximum spacing in each direction. Continuous type bar supports shall be placed at 4-ft (1.22 meters) maximum spacing. Continuous bar supports shall be used with permanent metal deck forms.

The exposure of the ends of longitudinals, stirrups and spacers used to position the reinforcement in concrete pipe and in precast box culverts or storm drains is not a cause for rejection.

Reinforcing steel for bridge slabs, top slabs of direct traffic culverts, and top slabs of prestressed box beams at all intersections, except tie only alternate intersections where spacing is less than 1 ft. (300 mm) in each direction.

For steel reinforcing cages for other structural members, reinforcement shall be supported and tied in such a manner that a sufficiently rigid cage of steel is provided. Fasten mats of wire fabric securely at the ends and edges. If the cage is not adequately supported to resist settlement or floating upward of the steel, overturning of truss bars or movement in any direction during concrete placement, permission to continue concrete placement will be withheld until corrective measures are taken. Sufficient measurements shall be made during concrete placement to insure compliance with the above.

No concrete shall be deposited until the Engineer or designated representative has reviewed the placement of the reinforcing steel and all mortar, mud, dirt, etc, shall be cleaned from the reinforcement, forms, workers' boots and tools. Do not place concrete until authorized by the Engineer or designated representative

406S.9 Handling, Placement and Repair of Epoxy-coated Reinforcement Steel

A. Handling

Systems for handling coated-reinforcement with padded contact areas shall be provided. Handling bands shall be padded to prevent damage to the coating. Bundles of coated reinforcement shall be lifted with a strongback, spreader bar, multiple supports or a platform bridge. The bundled reinforcement shall be carefully transported and stored on protective cribbing. The coated reinforcement should not be dropped or drug during handling.

B. Construction Methods

Coated reinforcement shall not be flame-cut but shall be sawn or shear-cut only when approved. Cut ends shall be coated as specified in Section C, “Repair of Coating”.

Coated reinforcement steel shall not be welded or mechanically coupled except where specifically indicated on the drawings. When welding or coupling is indicated on the drawing, the epoxy coating shall be removed at least 6 in. (150 mm) beyond the weld limits before welding and 2 in. (50 mm) beyond the limits of the mechanical coupler before assembly. After the welding or coupling operation is completed the steel shall be cleaned of oil, grease, moisture, dirt, welding contamination (slag or acid residue) and rust to a near-white finish. The existing epoxy coating shall be examined for damage and any damaged or loose epoxy shall be removed to expose sound epoxy coating.

After cleaning the coated-steel, the splice area shall be coated with epoxy repair material to a thickness of 7 to 17 mils (0.18 to 0.43 mm) after curing. A second application of the repair material shall be applied to the bar and coupler interface to ensure complete sealing of the joint.

C. Repair of Coating

The material used for coating repair shall comply with the requirements of this Item and ASTM D3963/D3963M, “Specification for Fabrication and Jobsite Handling of Epoxy-coated Reinforcing Steel Bars”. Repairs shall be made in accordance with procedures recommended by the manufacturer of the epoxy coating powder. For areas to be patched, a minimum coating thickness as required for the original coating shall be applied. All visible damage to the coating shall be repaired.

Sawed and sheared ends, cuts, breaks and other damage shall be promptly repaired before additional oxidation occurs. The areas to be repaired shall be cleaned to ensure that they free from surface contaminants. Repairs shall be made in the shop or in the field as required.

406S.10 Measurement

The measurement of quantities of reinforcement furnished and placed will be based on the calculated weight of the steel actually placed as indicated on the drawings, with no allowance made for added bar lengths for splices requested by the Contractor nor for

extra steel used when bars larger than those indicated on the drawings are used or for a higher grade of steel that is substituted with the permission of the Engineer or designated representative. Tie wires and supporting devices will not be included in the calculated weights. The calculated weight of bar reinforcement will be determined using the theoretical bar weight set forth in this item.

Measurement required by a change in design will be computed as described above for the actual steel required to complete the work.

406S.11 Payment

Reinforcing steel will generally not be paid for directly, but shall be included in the unit price bid for the items of construction in which the reinforcing steel is used.

When specified in the contract bid form as a separate pay item, this item shall be paid for at the contract unit price bid per pound of "Reinforcing Steel". The unit bid price shall include full compensation for all work specified herein including furnishing, bending, fabricating, welding and placing reinforcement, for all clips, blocks, metal spacers, ties, chairs, wire or other materials used for fastening reinforcement in place and for all tools, labor, equipment and incidentals necessary to complete the work.

Payment, when included as a contract pay item, will be made under:

Pay Item No. 406S-RC:	Reinforcing Steel -	Per Pound.
Pay Item No. 406S-ERC:	Epoxy-Coated Reinforcing Steel -	Per Pound.

END

SPECIFIC CROSS REFERENCE MATERIALS
Standard Specification Item 406S, "Reinforcing Steel"

American Society for Testing and Materials, ASTM

Designation	Description
ASTM A 36/A 36M	Carbon Structural Steel
ASTM A 82	Steel Wire, Plain, for Concrete Reinforcement
ASTM A 185	Steel Welded Wire Fabric, Plain, for Concrete Reinforcement
ASTM A 496	Steel Wire, Deformed, for Concrete Reinforcement
ASTM A 497	Steel Welded Wire Fabric, Deformed, for Concrete Reinforcement
ASTM A 615/A 615M	Deformed and Plain Billet-steel Bars for Concrete Reinforcement
ASTM A 675/A 675M	Steel Bars, Carbon, Hot-Wrought, Special Quality, Mechanical Properties
ASTM A 706/A 706M	Low- Alloy Steel Deformed and Plain Bars for Concrete Reinforcement
ASTM A 775/A 775M	Epoxy-Coated Reinforcing Steel Bars
ASTM A 884/A 884M	Epoxy-Coated Steel Wire and Welded Wire Fabric For Reinforcement
ASTM A 934/A 934M	Epoxy-Coated Prefabricated Reinforcing Steel Bars
ASTM A 996/A 996M	Rail-Steel and Axle-Steel Deformed Bars for Concrete Reinforcement
ASTM D3963/D3963M	Fabrication and Jobsite Handling of Epoxy-coated Reinforcing Steel Bars

Texas Department of Transportation: Manual of Testing Procedures

Designation	Description
Tex-739-I	Sampling and Testing Epoxy Coated Reinforcing Steel

City of Austin Standard (Details)

Designation	Description
Standard 406S-1	Reinforced Steel Tolerances

Texas Department of Transportation: Departmental Material Specifications

Designation	Description
DMS 8130	Epoxy Powder Coating for Reinforcing Steel

American Welding Society

Designation	Description
AWS D1.1/D1.1M	Structural Welding Code

RELATED CROSS REFERENCE MATERIALS
Standard Specification Item 406S, "Reinforcing Steel"

City of Austin Standard Specification Items

Designation	Description
Item No. 360	Concrete Pavement
Item No. 403S	Concrete for Structures
Item No. 410S	Concrete Structures
Item No. 414S	Concrete Retaining Walls

Item No. 420S	Drilled Shaft Foundations
Item No. 830S	Traffic Signal Controller Foundation
Item No. 831S	Traffic Signal Drilled Shaft Foundation

Texas Department of Transportation: Standard Specifications for Construction and Maintenance of Highways, Streets, and Bridges

Designation	Description
Item No. 360	Concrete Pavement
Item No. 420	Concrete Structures
Item No. 421	Hydraulic Cement Concrete
Item No. 422	Reinforced Concrete Slab
Item No. 423	Retaining Walls
Item No. 440	Reinforcing Steel

Item 407S
Fibrous Concrete

407S.1 Description

This item shall govern furnishing and placing of concrete reinforced with fibers in accordance with this specification Item and with details as shown on the Drawings.

407S.2 Submittal Requirements

The submittal requirements of this specification item include:

A. Concrete Type, Supplier and Design.

B. Fiber Type, Supplier and product properties.

C. Proposed proportioning of material, including adjustment for slump requirements.

D. Fiber documentation of compliance with applicable building codes, this specification item, and ASTM C 1116/ C 1116 M-08.

407S.3 Materials

A. Concrete

All concrete shall conform to the requirements of Standard Specification Item Number 403S, "Concrete for Structures".

The concrete shall be Class A concrete unless otherwise shown on the drawings or indicated otherwise in the Pay item of this document.

Since the slump of a fiber-reinforced concrete is less than the slump of an otherwise identical concrete without fiber and since the magnitude of difference depends upon the amount and type of fibers, trial mixtures representing the amount and type of fibers to be used for the work shall be prepared and tested to insure that the specified slump requirements are met.

B. Reinforcement

Reinforcement shall be in accordance with ASTM C 1116/C1116 M-08. Fibers shall conform to section 4.1.2 Type 2 Glass Fiber Reinforced Concrete, or 4.1.3 Type 3 Synthetic Fiber-Reinforced Concrete, or 4.1.4 Natural Fiber Reinforced Concrete. Unless otherwise shown on the drawings, each cubic yard of concrete shall contain no less than 1 1/2 pounds of fibers (0.9 kg per cubic meter). The fibers shall be added to the concrete mix at the time the mix is batched.

Reinforcement shall be 100% virgin polypropylene fibrillated fibers specially manufactured for use as concrete reinforcement and meeting the requirements of ASTM C-1116 (Fiber-Reinforced Concrete and Shotcrete). The fibrous material shall not contain reprocessed olefin. Each container of fibrous material shall bear the manufacturer's name and/or trademark and the net weight (mass) of fibrous material in the package.

The fiber manufacturer shall provide documentation of a minimum of 5 year performance history of the fiber and confirm compliance with applicable building codes, this specification item and ASTM C-1116.

The specific gravity of the fibrous material shall be 0.91 plus or minus .05. The tensile strength shall be 80 to 110 ksi (550 to 750 MPa). The lengths of the fibrous material shall be 1/2, 3/4, 1 1/2 and 2 inches (12.7, 19, 38 and 51 mm) in length.

Unless otherwise shown on the drawings, each cubic yard of concrete shall contain no less than 1 1/2 pounds of fibrous material (0.9 kg per cubic meter). The fibrous material shall be added to the concrete mix at the time the mix is batched.

407S.4 Excavation, Placing of Concrete, Finishing, Curing and Backfill

All excavation, placing of concrete, finishing, curing and backfilling shall be in accordance with Standard Specification Item Number 401S, "Structural Excavation and Backfill", and Standard Specification Item Number 410S, "Concrete Structures".

407S.5 Measurement

The quantities of concrete of the various classes which constitute the completed and accepted work in place will be measured per cubic yard, square foot or linear foot as indicated in the Project Manual. Measurement will be as follows:

A. Plan Quantity. For those items measured for plan quantity payment, adequate calculations have been made. No additional measurements or calculations will be made.

B. Measured in Place. For those items not measured for Plan Quantity payment, measurement will be made in place. However, field measured dimensions shall not exceed those indicated on the drawings or as may have been directed by the Engineer or designated representative in writing.

407S.6 Payment

The work performed and materials furnished as prescribed by this item and measured as provided under "Measurement" will be paid for at the unit bid price for Fibrous Concrete of the class specified. The unit bid price shall include full compensation for furnishing, hauling and mixing all materials; placing, finishing and curing all concrete; and for all forms, labor, tools, equipment and incidentals necessary to complete the work.

Pay Item No. 407S.CY:	Fibrous Concrete, (Class _____)	Per Cubic Yard.
Pay Item No. 407S.SF:	Fibrous Concrete, (Class _____)	Per Square Foot.
Pay Item No. 407S.LF	Fibrous Concrete, (Class _____)	Per Lineal Foot.

END

SPECIFIC CROSS REFERENCE MATERIALS
Specification Item 407S "Fibrous Concrete"

City of Austin Standard Specifications

Designation	Description
Item 401S	Structural Excavation and Backfill
Item 403S	Concrete for Structures
Item 410S	Concrete Structures

American Society for Testing and Materials, ASTM

Designation	Description
ASTM C-1116	Specification For Fiber-Reinforced Concrete and Shotcrete

RELATED CROSS REFERENCE MATERIALS
Specification Item 407S "Fibrous Concrete"

American Association of State Highway & Transportation Officials, AASHTO

Designation	Description
Method T 26	Quality of Water to be Used in Concrete

American Concrete Institute, ACI

Designation	Description
ACI 211.1	Standard Practice for Selecting Proportions for Normal, Heavyweight, and Mass Concrete

American Society for Testing and Materials, ASTM

Designation	Description
ASTM C 94	Specification For Ready-Mixed Concrete
ASTM C 150	Specification For Portland Cement

Texas Department of Transportation: Manual of Testing Procedures

Designation	Description
TEX-203-F	Sand Equivalent Test
Tex-401-A	Sieve Analysis of Fine and Coarse Aggregate
TEX-406-A	Mineral Finer than 75 µm (No. 200) Sieve in Mineral Aggregates (Decantation Test for Concrete Aggregates)
TEX-408-A	Organic Impurities in Fine Aggregate for Concrete
TEX-410-A	Abrasion of Coarse Aggregate Using The Los Angeles Machine
TEX-411-A	Soundness of Aggregate by Use of Sodium Sulfate or Magnesium Sulfate
TEX-413-A	Determination of Deleterious Materials in Mineral Aggregate
TEX-415-A	Slump of Portland Cement Concrete
TEX-418-A	Compressive Strength of Cylindrical Concrete Specimens
TEX-612-J	Acid Insoluble Residue

Texas Department of Transportation: Publications

Designation	Description
Bulletin C-11	Construction Bulletin

Texas Department of Transportation: Standard Specifications for Construction and Maintenance of Highways, Streets, and Bridges

Designation	Description
Item 421	Hydraulic Cement Concrete
Item 427	Surface Finishes for Concrete
Item 431	Pneumatically Placed Concrete

Texas Department of Transportation: Departmental Material Specifications

Designation	Description
DMS-4640	Chemical Admixtures for Concrete
DMS-4650	Hydraulic Cement Concrete Curing Materials and Evaporation Retardants”
DMS-6310	Joint Materials and Fillers

Item No. 410S
Concrete Structures

410S.1 Description

This item shall govern the construction of all types of structures involving the use of structural concrete, except where the requirements are waived or revised by other governing specifications.

All concrete structures shall be constructed in accordance with the design requirements and details indicated on the drawings, in conformity with the pertinent provisions of the items contracted for, the incidental items referred to and in conformity with the requirements herein.

This specification is applicable for projects or work involving either inch-pound or SI units. Within the text and accompanying tables, the inch-pound units are given preference followed by SI units shown within parentheses.

410S.2 Submittals

The submittal requirements of this specification item may include:

Appropriate mix designs for class of concrete for each type of structure or unit;

Appropriate mortar and grout mix designs;

Product name, description, technical information and supplier of any acrylic-polymer latex admixture;

Type, supplier and certified test results for expansion joint materials;

Type of waterstop and confirmation that the product conforms to TxDoT DMS-6160;

Type and manufacturer of proposed evaporation retardant and confirmation that it meets the requirements of test results for TxDoT DMS-4650;

Type and manufacturer of proposed chemical admixtures and confirmation that it meets the requirements of test results for TxDoT DMS-4640;

Type and manufacturer of proposed curing admixtures and confirmation that it meets the requirements of test results for TxDoT DMS-4640;

Type and manufacturer of proposed chemical admixtures and confirmation that it meets the requirements of test results for TxDoT DMS-4640;

Type and manufacturer of proposed epoxy and/or adhesives and confirmation that it meets the requirements of test results for TxDoT DMS-6100;

Reinforcing steel shall conform to Standard Specification Item No. 406S, “Reinforcing Steel”.

Contractors formwork plan for placing and consolidating concrete around wall penetrations and at locations designated as having congested reinforcing steel.

410S.3 Materials

A. Concrete

Concrete shall conform to Item No. 403S, "Concrete for Structures".

The class of concrete for each type of structure or unit shall be as indicated on the drawings or by pertinent governing specifications.

B. Grout or Mortar

When required or shown on the drawings, mortar and grout consisting of 1 part hydraulic cement and 2 parts sand with sufficient water to provide the desired consistency shall be provided. Mortar shall be provided with a consistency that can be handled easily and spread by a trowel. Grout shall be provided with a consistency that will flow into and completely fill all voids.

C. Latex

When required an acrylic-polymer latex admixture (acrylic resin emulsion in accordance with TxDoT DMS-4640, "Chemical Admixtures for Concrete") suitable for producing polymer-modified concrete or mortar shall be provided. The latex shall not be allowed to freeze.

The following information shall be submitted for latex:

Name and information of company contact personnel,

Product name and polymer description, and

The latex shall meet the following requirements.

Table 1: LATEX ADDITIVE REQUIREMENTS

Property	Value
Total Solids, minimum, percent	47
PH	9.0 to 11.0
Brookfield viscosity (# 1 spindle @ 10 rpm), mPas, maximum	60
Butadiene Content, percent	30 to 40
Freeze-thaw stability, 2 cycles. maximum	0.1

Specification targets and production tolerances shall also be provided for the following properties.

1. viscosity (including test method and temperature reference),
2. percent solids,
3. pH,
4. specific gravity, and
5. styrene/butadiene ratio.

D. Reinforcing Steel

Reinforcing steel shall conform to Standard Specification Item No. 406S, "Reinforcing Steel".

E. Expansion Joint Material

The expansion joint material shall conform to the requirements of TxDoT DMS-6310, "Joint Materials and Fillers".

1. Preformed Fiber Sheets

   Unless otherwise indicated on the drawings preformed bituminous fiber material shall be provided. The preformed fiber material shall conform to the dimensions indicated on the drawings. Preformed fiber sheets shall meet the requirements of ASTM D-1751, "Preformed Expansion Joint Filler for Concrete Paving and Structural Construction (Nonextruding and Resilient Bituminous Types). The requirements related to bitumen content, density and water absorption shall not apply to nonbituminous materials.

2. Joint Sealing Material

   Unless otherwise indicated on the drawings a Class 4, 5 or 7 low-modulus silicone sealant shall be provided that conforms to the requirements of TxDoT DMS-6310, "Joint Sealants and Fillers".

3. Timber Boards

   Timber boards shall be made from redwood or cypress and must be free from sapwood, knots, clustered bird's eye, checks and splits. When oven dried at 230°F (110°C) to a constant weight (mass), the density of the board shall be between 20 and 35 lbs. Per cubic foot (between 320 and 560 kgs per cubic meter)

4. Asphalt Board

   Asphalt Board shall conform to the dimensions indicated on the drawings and shall meet the description, general requirements and distortion testing of ASTM D-994, "Preformed Expansion Joint Filler for Concrete (bituminous Type)".

5. Rebonded Neoprene Filler Sheet

   Rebonded neoprene filler shall consist of ground closed cell neoprene particles, rebonded and molded into sheets of uniform thickness of the dimensions indicated on the drawings. These sheets shall meet the requirements of ASTM D-1752, Type I.

   The manufacturer shall furnish the Engineer or designated representative with certified test results as to the compliance with the above requirements.

F. Waterstop

Unless otherwise indicated on the drawings, rubber waterstops or Polyvinyl Chloride (PVC) waterstops that conform to TxDoT DMS-6160, "Waterstops, Nylon Reinforced Neoprene Sheet, and Elastomeric Pads" shall be provided.

G. Evaporation Retardants

Evaporation retardants shall conform to the requirements of TxDoT DMS-4650, "Hydraulic Cement Concrete Curing Materials and Evaporation Retardants". The evaporation retardant must be a commercially available monomolecular film compound. The evaporation retardant shall have no adverse effect on the cement hydration process or the concrete and shall reduce surface moisture evaporation from the concrete when performing concrete operations in direct sun, wind, high temperatures, or low relative humidity. The producer of the evaporation retardant shall certify that it meets these specified requirements.

H. Curing Materials

1. Liquid Membrane Forming compounds

Liquid Membrane Forming compounds shall conform to the requirements of TxDoT DMS-4650, "Hydraulic Cement Concrete Curing Materials and Evaporation Retardants". The compound shall be applied to damp concrete as a fine mist through atomizing nozzles at a wet film thickness of 8 to 9 mils (200 to 230 µm). The liquid membrane-forming compound must not react deleteriously with concrete or its components. It must produce a firm, continuous, uniform moisture-impermeable film that is free of pinholes, cracks, or other film defects. It must also exhibit satisfactory adhesion.

The consistency must be such that the compound can be applied satisfactorily by conventional or airless spray at atmospheric and material temperatures above 40°F (5°C) without thinning. When applied at the manufacturer's recommended thickness, not less than 8 mils (200 µm) wet, to vertical surfaces of damp concrete, the compound must not run off or appreciably sag. The liquid membrane-forming compound must not disintegrate, check, peel, or crack during the required curing period. It must not peel or pick up under traffic, and must disappear from the surface of the cured concrete by gradual disintegration.

2. Cotton Mats

Cotton mats shall consist of a filling material of cotton "bat" or "bats" [at least 12 oz. Per square yard (400 grams per square meter)] completely covered with unsized cloth [at least 6 oz. Per square yard (200 grams per square meter)] stitched longitudinally with continuous parallel rows of stitching spaced at less than 4 in. (100 mm), or tuft both longitudinally and transversely at intervals less than 3 in. (75 mm).

The cotton mats shall be free from tears and in good general condition. A flap at least 6 in. (150 mm) wide with two (2) thicknesses of the covering that extends along one side of the mat shall be provided.

3. Polyethylene Sheeting

The polyethylene sheeting shall be at least 4 mils thick (0.1 mm) and free from visible defects. Clear or opaque white sheeting shall be provided when the ambient temperature during curing exceeds 60°F (15°C) or when applicable to control temperature during mass pours.

4. Burlap-Polyethylene Mats

The burlap-polyethylene mats shall be made from burlap impregnated on 1 side with a film of opaque white-pigmented polyethylene, free from visible defects. The laminated mats shall have at least 1 layer of an impervious material such as polyethylene, vinyl plastic, or other acceptable material (either as a solid sheet or impregnated into another fabric) and shall be free of visible defects.

I. Chemical Admixtures

Chemical admixtures including water reducing, placticizers and air entrainment shall conform to TxDoT DMS-4640, "Chemical Admixtures for Concrete" Calcium chloride

shall not be used. Admixtures shall be included in the prequalified concrete admixtures list maintained by TxDot's Construction Division.

J. City of Austin Survey Monuments

The Public Works Department may furnish permanent survey monuments to be cast in concrete as indicated on the drawings or as directed by the Engineer or designated representative.

K. Epoxy

Unless indicated otherwise on the drawings, epoxy materials shall conform to TxDoT DMS-6100, "Epoxy and Adhesives".

410S.4 General Requirements

Before starting work, the Contractor shall inform the Engineer or designated representative fully of the construction methods the Contractor proposes to use, the adequacy of which shall be subject to the review by the Engineer or designated representative. Drawings for forms and falsework for piers and superstructure spans over 20 feet (6 meters) long, bracing systems for girders when the overhang exceeds 3 ft. 6 in. (1 meter) and for all bridge widening details shall be submitted to the Engineer or designated representative for review, if requested. Similar drawings shall be submitted for other units of the structure, if requested by the Engineer or designated representative. The drawings shall be prepared on standard 22 inch by 36-inch (550mm by 900 mm) sheets and shall show all essential details of the proposed forms, falsework and bracing to permit a structural analysis. Four sets of such drawings will be required.

Concurrence on the part of the Engineer or designated representative in any proposed construction methods, approval of equipment or of form and falsework drawings does not relieve the Contractor of the responsibility for the safety or correctness of the Contractor's methods, adequacy of equipment or from carrying out the work in full accordance with the contract.

Unless otherwise indicated on the drawings, the requirements in the succeeding paragraphs shall govern the time sequence in which construction operations may be carried on and for the opening of completed structures to traffic:

Superstructure members, forms, falsework or erection equipment shall not be placed on the substructure before the concrete therein has attained a 3000 psi (20.7 MPa) compressive strength.

Storage of materials on completed portions of a structure will not be permitted until all curing requirements for those particular portions have been met.

No forms shall be erected on concrete footings supported by piling or drilled shafts until the concrete therein has attained a minimum compressive strength of 2500 psi (17.2 MPa). Such work may begin on spread footings after the therein has aged at least 2 curing days. Concrete may be placed as soon as the forms and reinforcing steel are approved by the Engineer or designated representative.

The support of tie beam and/or forms by falsework placed on previously placed tie beams is permissible provided such beams have attained 3000 psi (20.7 MPa) compressive

strength, curing requirements are completed and the beams are properly supported to eliminate stresses not provided for in the design.

Bridges and direct traffic culverts shall not be opened to construction traffic or to the traveling public until authorized by the Engineer or designated representative in accordance with the following:

Authorization may be given after the last slab concrete has been in place at least 14 days for light construction traffic not to exceed a 3/4-ton (0.68 Mg) vehicle.

Authorization to place embankments to allow normal construction traffic and when necessary to the traveling public, may be given after the last slab concrete has been in place 30 days or when the minimum compressive strength (f_c') has reached the 28 day strength conforming to Item No. 403S, "Concrete for Structures" or as indicated on the drawings.

410S.5 Drains

Weep holes and roadway drains shall be installed and constructed as indicated on the drawings.

410S.6 Expansion Joints

Joints and devices shall be used to provide for expansion and contraction of concrete slabs and shall be constructed as indicated on the drawings.

The bearing area under the expansion ends of concrete slabs and slab and girder spans shall be given a steel trowel finish and finished to the exact grades required on the drawings. The material used to separate expansion surfaces shall be as indicated on the drawings and placed so that concrete or mortar cannot be subsequently worked around or under it. The bridging of concrete or mortar around expansion joint material in bearings and expansion joints shall be prevented.

Concrete adjacent to armor joints and finger joints shall be placed carefully to avoid defective anchorage and porous or honeycombed concrete in such areas.

All open joints and joints to be filled with expansion joint material shall be constructed using forms adaptable to loosening or early removal. To avoid expansion or contraction damage to the adjacent concrete, these forms shall be loosened as soon as possible after final concrete set to permit free movement of the span without requiring full form removal.

Preformed fiber joint material or other material indicated shall be used in the vertical joints of the roadway slab, curb, median or sidewalk. The top 1-inch (25 mm) thereof shall be filled with joint sealing material, as specified herein. The sealer shall be installed in accordance with Standard Specification Item No. 413S, “Cleaning and/or Sealing Joints and Cracks (PC Concrete)” and the manufacturer’s recommendations.

Prior to placing the sealing material, the vertical faces of the joint shall be cleaned of all laitance by sandblasting or by mechanical routing. Cracked or spalled edges shall be repaired. The joint shall be blown clean of all foreign material and sealed.

Where preformed fiber joint material is used, it shall be anchored to the concrete on one side of the joint by light wire or nails to prevent the material from falling out.

Finished joints shall conform to the drawing details with the concrete sections completely separated by the specified opening or joint material.

Soon after form removal and where necessary after surface finishing, all projecting concrete shall be removed along exposed edges to secure full effectiveness of the expansion joints.

410S.7 Construction Joints

The joint formed by placing plastic concrete in direct contact with concrete that has attained its initial set shall be deemed a construction joint. The term monolithic placement shall be interpreted to mean that the manner and sequence of concrete placing shall not create construction joints.

Construction joints shall be of the type and at the locations indicated on the drawings. Additional joints will not be permitted without written authorization from the Engineer or designated representative and when authorized, shall have details equivalent to those indicated for joints in similar locations.

Unless otherwise provided, construction joints shall be square and normal to the forms. Bulkheads shall be provided in the forms for all joints, except when horizontal. All vertical construction joints shall be chamfered. All horizontal construction joints shall be routed or grooved.

Construction joints requiring the use of joint sealing material shall be as indicated on the drawings or as directed by the Engineer or designated representative. The material will be indicated on the drawings without reference to joint type.

A concrete placement terminating at a horizontal construction joint shall have the top surface roughened thoroughly as soon as practicable after initial set is attained. The surfaces at bulkheads shall be roughened as soon as the forms are removed.

The hardened concrete surface shall be thoroughly cleaned of all loose material, laitance, dirt or foreign matter and saturated with water so it is moist when placing fresh concrete against it. Remove all free water and moisten the surface before concrete or bonding grout is placed against it. Forms shall be drawn tight against the existing concrete and the joint surface flushed with grout just prior to placing the fresh concrete.

The joint surface shall be coated with bonding mortar, grout, epoxy or other material as indicated on the drawings or other items. A Type V epoxy shall be provided in accordance with TxDoT DMS-6100, “Epoxies and Adhesives” for bonding fresh concrete to hardened concrete. The epoxy shall be placed on a clean dry surface and the fresh concrete shall be placed while the epoxy is still tacky. Bonding mortar or grout shall be placed on a surface that is saturated surface dry and the concrete shall be placed before the bonding mortar or grout dries. Other bonding agents shall be placed in accordance with the manufacturer’s recommendations.

410S.8 Foundation and Substructure

Excavation for foundations and substructure shall conform to Standard Specification Item No. 401S, "Structural Excavation and Backfill".

Concrete for foundation seals, unless otherwise indicated on the drawings, shall be Class C Concrete with a coarse aggregate grade of 2, 3, 4 or 5 and placed in accordance with the requirements herein. The top of the completed seal shall not vary from plan grade or the grade established by the Engineer or designated representative.

Where a concrete seal is indicated on the Drawings, the design will be based on the normal water elevation as indicated on the Drawings. If the foundation concrete can be placed in the dry at the time of construction, the seal will not be required. If additional seal is necessary for the conditions existing during the time of construction, its thickness shall be increased as deemed necessary by the Contractor and at the Contractor's expense. If the conditions existing at the time of construction require a seal for placing the foundation concrete in the dry and none is indicated on the Drawings, the Contractor shall place an adequate seal at the Contractor's expense.

The seal shall be allowed to set for at least 36 hours before the caisson or cofferdam is dewatered, after which the top of the seal shall be cleaned of all laitance or other soft material and all high spots exceeding the above limitation shall be cut off and removed.

410S.9 Falsework

The Contractor is totally responsible for all falsework. The Contractor shall design and construct it to safely carry the maximum anticipated loads and to provide the necessary rigidity. Details of falsework construction shall be subject to review by the Engineer or designated representative, but Engineer's review shall in no way relieve the Contractor of responsibility of the adequacy and safety of the falsework design.

All timber used in falsework centering shall be sound, in good condition and free from defects which will impair its strength. When wedges are used to adjust falsework to desired elevations, they shall be used in pairs to insure even bearing.

Sills or grillages shall be large enough to support the superimposed load without settlement and unless founded on solid rock, shale or other hard materials, precautions shall be taken to prevent yielding of the supporting material.

Falsework, which cannot be founded on a satisfactory spread footing, shall be placed on piling driven to a bearing capacity sufficient to support the superimposed load without settlement. The safe bearing capacity of piling shall be determined by test loads or by such other methods that may be required or acceptable to the Engineer or designated representative.

In general, each falsework bent shall be capped transversely by a member of proper size. A short cap section forming a T-head may be substituted to permit the removal of portions of the forms without disturbing the falsework. Caps shall be securely fastened to each pile or column in the bent and set at the proper elevation to produce, in conjunction with the use of approved wedges or jacks, permanent camber indicated on the Drawings, plus a construction camber covering allowance for deformation of the forms and falsework. The use of wedges to compensate for incorrectly cut bearing surfaces will not be permitted.

Each falsework bent shall be securely braced to provide the stiffness required with the bracing securely fastened to each pile or column it crosses.

In setting falsework for arches, allowances shall be made for settlement of falsework, deflection of the arch and permanent camber. Provision shall be made by suitable wedges, sand jacks or other acceptable devices for the controlled lowering of falsework when the arch is swung. Falsework may be required to be placed on jacks to provide for settlement correction during concrete placement.

When the falsework is no longer required, it shall be removed. Falsework piling shall be pulled or cut off not less than 2 feet (0.6 meter) below finished ground level. Falsework and piling in a stream, lake or bay shall be completely removed to a point specified by the Engineer or designated representative to prevent any obstruction to the waterway.

410S.10 Forms

Forms for precast prestressed concrete members and for prestressed piling shall be constructed conforming to Item No. 425S, "Prestressed Concrete Structures".

A. General

Except where otherwise indicated on the drawings, forms may be of either timber or metal.

Forms for round columns exposed to view shall be of steel, except that other materials will be allowed with written permission of the Engineer or designated representative.

Forming plans shall be submitted for approval by the Engineer or designated representative. Forms shall be designed for the pressure exerted by a liquid weighing 150 pounds per cubic foot (2.4 Mega grams per cubic meter). The rate of placing the concrete shall be taken into consideration in determining the depth of the equivalent liquid. For job-fabricated forms an additional live load of 50 pounds per square foot (1.675 MPa) shall be allowed on horizontal surfaces. The maximum unit stresses shall not exceed 125 percent of the allowable stresses used by the Engineer or designated representative for the design of structures.

Formwork for wall and/or column pours equal or exceeding 8 feet (2.44 meters) shall be designed in accordance with ACI 347, “Guide to Formwork for Concrete” and sealed by a Registered Civil Engineer Licensed in the State of Texas, who is experienced in formwork design.

Commercially produced structural units used in formwork shall not exceed the manufacturer's maximum allowable working load for moment, shear or end reaction. The maximum working load shall include a live load of 35 pounds per square foot (1.175 MPa) of horizontal form surface and sufficient details and data shall be submitted for use in checking formwork details for approval.

Forms shall be practically mortar-tight, rigidly braced and strong enough to prevent bulging between supports and maintained to the proper line and grade during concrete placement. Forms shall be maintained in a manner that will prevent warping and shrinkage.

Deflections due to cast-in-place slab concrete and railing shown in the dead load deflection diagram shall be taken into account in the setting of slab forms.

All forms and footing areas shall be cleaned of any extraneous matter before placing concrete.

Permission to place concrete will not be given until all of such work is complete to the satisfaction of the Engineer or designated representative.

If, at any stage of the work, the forms show signs of bulging or sagging, the portion of the concrete causing such condition shall be removed immediately, if necessary and the forms shall be reset and securely braced against further movement.

B. Timber Forms

Lumber for forms shall be properly seasoned, of good quality and free from imperfections, which would affect its strength or impair the finished surface of the concrete. The lumber used for facing or sheathing shall be finished on at least 1 side and 2 edges and shall be sized to uniform thickness.

Form or form lumber that will be reused shall be maintained clean and in good condition. Lumber that is split, warped, bulged, or marred or that has defects that will produce inferior forms shall not be used but shall be removed from the work.

Form lining will be required for all formed surfaces, except for the inside of culvert barrels, inlets, manholes and box girders, the bottom of bridge decks between beams or girders, surfaces that are subsequently covered by backfill material or are completely enclosed and any surface formed by a single finished board. Lining will not be required when plywood forms are used.

Form lining shall be of an approved type such as masonite or plywood. Thin membrane sheeting such as polyethylene sheets shall not be used for form lining.

Forms may be constructed of plywood not less than ¾ inch (19 mm) in thickness, with no form lining required. The grain of the face plies on plywood forms shall be placed parallel to the span between the supporting studs or joists.

Plywood used for forming surfaces, which remain exposed, shall be equal to that specified as B-B Plyform Class I or Class II Exterior of the U.S. Department of Commerce Voluntary Product Standard, PS 1.

Studs and joists shall be spaced so that the facing form material remains in true alignment under the imposed loads.

Wales shall be spaced close enough to hold forms securely to the designated lines and scabbed at least 4 feet (1.22 meters) on each side of joints to provide continuity. A row of wales shall be placed near the bottom of each placement.

Facing material shall be placed with parallel and square joints and securely fastened to supporting studs.

Forms for surfaces receiving only an ordinary finish and exposed to view shall be placed with the form panels symmetrical, i.e., long dimensions set in the same direction. Horizontal joints shall be continuous.

Molding specified for chamfer strips or other uses shall be made of materials of a grade that will not split when nailed and which can be maintained to a true line without warping. Wood molding shall be mill cut and dressed on all faces. Unless indicated otherwise on the drawings, forms shall be filleted at all sharp corners and edges with triangular chamfer strips measuring 3/4 inch (19 mm) on the sides.

Forms for railings and ornamental work shall be constructed to standards equivalent to first class millwork. All moldings, panel work and bevel strips shall be straight and true with neatly mitered joints designed so the finish work is true, sharp and clean cut. All forms shall be constructed to permit their removal without marring or damaging the concrete. The forms may be given a slight draft to permit ease of removal.

Metal form ties of an approved type or a satisfactory substitute shall be used to hold forms in place and shall be of a type that permits ease of removal of the metal as hereinafter specified.

All metal appliances used inside of forms for alignment purposes shall be removed to a depth of at least 1/2 inch (13 mm) from the concrete surface. They shall be made so the metal may be removed without undue chipping or spalling and when removed, shall leave a smooth opening in the concrete surface. Burning off of rods, bolts or ties will not be permitted.

Any wire ties used shall be cut back at least 1/2 inch (13 mm) from the face of the concrete and properly patched.

Devices holding metal ties in place shall be capable of developing the strength of the tie and adjustable to allow for proper alignment.

Metal and wooden spreaders, which are separate from the forms, shall be removed entirely as the concrete is being placed.

Adequate clean-out openings shall be provided for narrow walls and other locations where access to the bottom of the forms is not readily attainable.

Prior to placing concrete, the facing of all forms shall be treated with oil or other bond breaking coating of such composition that it will not discolor or otherwise injuriously affect the concrete surface. Care shall be exercised to prevent coating of the reinforcing steel.

C. Metal Forms

The foregoing requirements for timber forms as regards design, mortar-tightness, filleted corners, beveled projections, bracing, alignment, removal, reuse and wetting shall also apply to metal forms, except that these will not require lining, unless specifically indicated on the drawings.

The thickness of form metal shall be as required to maintain the true shape without warping or bulging. All bolt and rivet heads on the facing sides shall be countersunk. Clamps, pins or other connecting devices shall be designed to hold the forms rigidly together and to allow removal without injury to the concrete. Metal forms, which do not present a smooth surface or line up properly, shall not be used. Metal shall be kept free from rust, grease or other foreign materials.

D. Form Supports for Overhang Slabs

Form supports which transmit a horizontal force to a steel girder or beam or to a prestressed concrete beam will be permitted, but shall not be used unless a structural analysis has been made of the affect on the girder or beam and approval is granted by the Engineer or designated representative.

In normal or skewed spans with standard overhangs not exceeding 3 feet, 1 1/2 inches (0.95 meter), beam bracing as shown in the drawings shall be used.

Spans in which the overhang width exceeds 3 feet, 1 1/2 inches (0.95 meter) will require additional support for the outside beams to resist torsion. Details of the Contractor's proposed method of providing additional support shall be included with the slab forming plans submitted to the Engineer or designated representative for review and approval.

Holes in steel members for support of overhang brackets may be punched or drilled full size or may be torch cut to 1/4 inch (6 mm) under size and reamed full size. In no case shall the holes be burned full size. The hole shall be left open unless indicated to be filled with a button head bolt. They shall never be filled by welding.

410S.11 Placing Reinforcement

Reinforcement in concrete structures shall be placed carefully and accurately and rigidly supported as provided in Standard Specification Item No. 406S, "Reinforcing Steel". Reinforcing steel supports shall not be welded to I-beams or girders or stirrups of prestressed concrete beams.

410S.12 Placing Concrete

A. General

Concrete shall not be placed when impending weather conditions would impair the quality of the finished work. If conditions of wind, humidity and temperature are such that concrete cannot be placed without the potential for shrinkage cracking, the concrete should be placed in early morning, at night or on a schedule with more favorable weather. When mixing, placing and finishing concrete is scheduled during non-daylight hours; the entire placement site should be illuminated to the satisfaction of the Engineer or designated representative.

If changes in weather conditions require protective measures after work starts, adequate shelter shall be provided to protect the concrete against damage from rainfall or from freezing temperatures as outlined in this Item. Operations during rainfall shall only be continued if approved by the Engineer or designated representative. Aggregate stockpiles shall be covered to the extent necessary to control the moisture conditions in the aggregates.

Slab concrete shall be mixed in a plant located off the structure. Carting or wheeling concrete batches over completed slabs will not be permitted until they have aged at least 4 full curing days or timber planking placed on top of the slab for the carts to

traverse along. Carts shall be equipped with pneumatic tires. Curing operations shall not be interrupted for the purpose of wheeling concrete over finished slabs.

Exposed concrete surfaces, while still plastic, shall be stamped with an impression having the Contractor's name, the month and year. The stamp shall be of an approved design.

At least 1 day of curing shall be allowed after the concrete has achieved initial set before placing strain on projecting reinforcement to prevent damage to the concrete.

The storing of reinforcing or structural steel on completed roadway slabs generally shall be avoided and when permitted, shall be limited to quantities and distribution that will not induce excessive stresses.

B. Preparation of Surfaces

All forms, prestressed concrete panels, T-beams and concrete box beams on which concrete will be placed shall be thoroughly wetted before the placement of concrete. Puddles of excess water shall be removed before placing the concrete. The various surfaces shall be in a moist, saturated surface dry condition when concrete is placed on or against them.

The subgrade or foundation shall be moist before placing concrete for bridge approach slabs or other concrete placed on grade. If dry the subgrade shall be lightly sprinkled.

C. Placing Temperature

The minimum temperature of all concrete at the time of placement shall not be less than 50°F (10°C). The maximum temperature of any concrete, unless otherwise indicated on the drawings, shall not exceed 95°F (35°C) when placed. The maximum temperature of cast-in-place concrete in bridge superstructures, diaphragms, parapets, concrete portions of railing, curbs and sidewalks and direct traffic box culverts shall not exceed 85°F (30°C) when placed. Other portions of structures, when indicated on the drawings, shall require the temperature control specified.

For continuous placement of the deck on continuous steel units, the initial set of the concrete shall be retarded sufficiently to insure that it remains plastic in not less than 3 spans immediately preceding the one being placed. For simple spans, retardation shall be required only if necessary to complete finishing operations.

The consistency of the concrete as placed should allow the completion of all finishing operations without the addition of water to the surface. When conditions are such that additional moisture is needed for finishing, the required water shall be applied to the surface by fog spray only and shall be held to a minimum amount. Fog spray for this purpose may be applied with hand operated fogging equipment.

The height of free fall of concrete shall be limited to 5 feet (1.575 meters) to prevent segregation.

D. Transporting Time

The maximum time interval between the addition of cement to the batch and the placing of concrete in the forms shall not exceed the following:

Table 2: Allowable Transportation Times

Air or ConcreteTemperature whichever is higher	Maximum Time w/o Retarder	Maximum Time with Retarder	
		*Specific Applications	All others
Non-agitated Concrete			
35°F to 79°F (2°C to 26°C)	45 minutes	45 minutes	45 minutes
Over 80°F (Over 25°C)	30 minutes	45 minutes	45 minutes
Agitated Concrete			
90°F (32°C) or above	45 minutes	75 minutes	105 minutes
75°F to 89°F (24°C to 32°C)	60 minutes	90 minutes	120 minutes
35°F to 74°F (2°C to 23°C)	90 minutes	120 minutes	150 minutes

* Specific applications include Bridge decks, cased drilled shafts and slabs of direct traffic culverts

The use of an approved retarding agent in the concrete will permit the extension of each of the above temperature-time maximums by 30 minutes for bridge decks, top slabs of direct traffic culverts and cased drilled shafts and 1 hour for all other concrete except that the maximum time shall not exceed 45 minutes for non-agitated concrete.

E. Handling and Placing

The Contractor shall give the Engineer or designated representative sufficient advance notice before placing concrete in any unit of the structure to permit the review of forms, reinforcing steel placement and other preparations. Concrete shall not be placed in any unit prior to the completion of formwork and placement of reinforcement therein.

The sequence for placing concrete shall be as indicated on the drawings or as required herein. The placing shall be regulated so the pressures caused by the plastic concrete shall not exceed the loads used in the form design.

The method of handling, placing and consolidation of concrete shall minimize segregation and displacement of the reinforcement and produce a uniformly dense and compact mass. Concrete shall not have a free fall of more than 5 feet (1.5 meters), except in the case of drilled shafts, thin wall sections such as in culverts, or as allowed by other Items. Any hardened concrete spatter ahead of the plastic concrete shall be removed.

Each part of the forms shall be filled by depositing concrete as near its final position as possible. The coarse aggregate shall be worked back from the face and the concrete forced under and around the reinforcement bars without displacing them. Depositing large quantities at one point and running or working it along the forms will not be allowed.

Concrete shall be deposited in the forms in layers of suitable depth but not more than 36 inches (0.9 meter) in thickness, unless otherwise directed by the Engineer or designated representative.

Cold joints in a monolithic placement shall be avoided. The sequence of successive layers or adjacent portions of concrete shall be such that they can be vibrated into a homogeneous mass with the previously placed concrete without a cold joint. Not more than 1 hour (1 ½ hours if a normal dosage of retarding admixture is used) shall elapse between adjacent or successive placements of concrete. Unauthorized construction joints shall be avoided by placing all concrete between the authorized joints in one continuous operation.

An approved retarding agent shall be used to control stress cracks and/or authorized cold joints in mass placements where differential settlement and/or setting time may induce stress cracking, such as on false work, in deep girder stems, etc.

Openings in forms shall be provided, if needed, for the removal of laitance or foreign matter of any kind.

All forms shall be wetted thoroughly before the concrete is placed therein.

F. Consolidation

All concrete shall be carefully consolidated and the mortar flushed to the form surfaces by continuous working with immersion type vibrators. Vibrators which operate by attachment to forms or reinforcement will not be permitted, except on steel forms. At least 1 standby vibrator shall be provided for emergency use in addition to the ones required for placement. For lightweight concrete, vibrators of the high frequency type, which produce a minimum of 7000 impulses per minute, will be required.

The concrete shall be vibrated immediately after deposition. Prior to the beginning of work, a systematic spacing of the points of vibration shall be established to insure complete consolidation and thorough working of the concrete around the reinforcement, embedded fixtures and into the corners and angles of the forms. Immersion type vibrators shall be inserted vertically, at points 18 to 30 inches (450 to 750 mm) apart and slowly withdrawn. The vibrator may only be inserted in a sloping or horizontal position in shallow slabs. The entire depth of each lift shall be vibrated, allowing the vibrator to penetrate several inches (several cms) into the preceding lift. The vibrator shall not be used to move the concrete to other locations. In addition the vibrator shall not be dragged through the concrete. Concrete along construction joints shall be thoroughly consolidated by operating the vibrator along and close to but not against the joint surface. The vibration shall continue until thorough consolidation and complete embedment of reinforcement and fixtures is produced, but not long enough to cause segregation. Vibration may be supplemented by hand spading or rodding, if necessary, to insure the flushing of mortar to the surface of all forms.

G. Finishing

From the time of initial strike off until final finish is completed and required interim curing is in place, the unformed surfaces of slab concrete in bridge decks and top slab of direct traffic culverts and concrete slabs, shall be kept damp, not wet, to offset the effects of rapid evaporation of mixing water from the concrete due to wind,

temperature, low humidity or combinations thereof. Fogging equipment capable of applying water in the form of a fine fog mist, not a spray, will be required. Fogging will be applied at the times and in the manner directed by the Engineer or designated representative.

Fogging equipment may be either water pumped under high pressure or a combination of air and water, either system in combination with a proper atomizing nozzle. The equipment shall be sufficiently portable for use in the direction of any prevailing winds. The equipment shall be adapted for intermittent use to prevent excessive wetting of the surfaces.

Upon completion of the final finish, interim curing will be required for slab concrete in bridge decks and top slabs of direct traffic culverts as follows:

(1) Required water curing shall begin as soon as it can be done without damaging the concrete finish.

(2) Unless otherwise indicated on the Drawings, Type 1-D membrane curing compound that conforms to TxDoT DMS-4650, "Hydraulic Cement Concrete Curing Materials and Evaporation Retardants" shall be applied to the slab surface.

H. Installation of Dowels and Anchor Bolts

Dowels and anchor bolts shall be installed by casting them in place or by grouting with grout, epoxy, or epoxy mortar unless indicated otherwise on the drawings.

Holes for grouting shall be formed or drilled. Holes for anchor bolts shall be drilled to accommodate the bolt embedment required on the drawings. Holes for dowels shall be made at least 12 in. (300 mm) deep unless indicated otherwise on the drawings. When grout or epoxy mortar is specified the diameter of the hole shall be at least twice the dowel or bolt diameter but shall not exceed the dowel or bolt diameter plus 1 ½ in (38 mm). When epoxy is specified the hole diameter should be 1/16 to ¼ in. (1.6 to 6.35 mm) greater than the dowel or bolt diameter.

Holes for anchor bolts in piers, abutments, bents or pedestals may be drilled or formed by the insertion of oiled wooden plugs or metal sleeves in the plastic concrete. Formed holes shall be large enough to permit horizontal adjustments of the bolts. The bolts shall be carefully set in mortar. In lieu of the above, anchor bolts may be set to exact locations when the concrete is placed.

The holes shall be thoroughly cleaned of all loose material, oil, grease or other bond-breaking substance and blow them clean with filtered compressed air. When an epoxy type material is used the holes shall be in a surface dry condition. When hydraulic cement grout is used the holes shall be in a surface moist condition. The void space between the hole and the dowel or bolt shall be completely filled with grouting material. The requirements for cleaning outlined in the product specification for prepackaged systems shall be followed exactly.

The following should be used as a guide in selection of an appropriate grout, mortar, epoxy or epoxy grout.

Table 3: Guide for Selection of Epoxy, Epoxy Mortar, Grout and Epoxy Grout

Material Type	Recommendation
Epoxy, Epoxy Mortar or other prepackaged Mortar	As Approved
Cast-in-place or Grouted system	1 part hydraulic cement, 2 parts sand and sufficient water for desired consistency
Neat Epoxy	Type III epoxy per TxDoT DMS-6100, "Epoxies and Adhesives"
Epoxy Grout	Type III epoxy per TxDoT DMS-6100, "Epoxies and Adhesives"
Provide grout, epoxy or epoxy mortar as the binding agent unless otherwise indicated on the drawings	

410S.13 Placing Concrete in Cold Weather

A. General

The Contractor is responsible for the protection of concrete placed under any and all weather conditions and is responsible for producing concrete equal in quality to that placed under normal conditions. Permission given by the Engineer or designated representative to allow placement of the concrete during cold weather does not relieve the Contractor of the responsibility for producing concrete equal in quality to that placed under normal conditions. Concrete placed under adverse weather conditions that proves to be unsatisfactory shall be removed and replaced at Contractor' expense.

B. Cast-in-Place Concrete

Concrete may be placed when the ambient temperature is not less than 35°F (2°C) in the shade and rising or above 40°F (4°C). Concrete shall not be placed when the ambient temperature in the shade is below 40°F (4°C) and falling unless approved by the Engineer or designated representative. Concrete shall not be placed in contact with any material coated with frost or having a temperature less than 32°F (0°C).

Aggregates shall be free from ice, frost and frozen lumps. When required, in order to produce the minimum specified concrete temperature; the aggregate and/or the water shall be heated uniformly, in accordance with the following:

The water temperature shall not exceed 180°F(82°C) and/or the aggregate temperature shall not exceed 150°F(66°C). The heating apparatus shall heat the mass of aggregate uniformly. The temperature of the mixture of aggregates and water shall be between 50°F(10°C) and 85°F(29°C) before introduction of the cement.

All concrete shall be effectively protected as follows:

1. The temperature of slab concrete of all unformed surfaces shall be maintained at 50°F(10°C) or above for a period of 72 hours from time of placement and above 40°F(4°C) for an additional 72 hours.
2. The temperature at the surface of all concrete in bents, piers, culvert walls, retaining walls, parapets, wingwalls, bottom of slabs and other similar forms shall

be maintained at 40°F(4°C) or above for a period of 72 hours from time of placement.

3. The temperature of all concrete, including the bottom slabs of culverts placed on or in the ground, shall be maintained above 32°F(0°C) for a period of 72 hours from time of placement.

Protection shall consist of providing additional covering, insulated forms or other means and if necessary, supplementing such covering with artificial heating. Avoid applying heat directly to concrete surfaces. Curing shall be provided during this period until all requirements for curing have been satisfied.

When impending weather conditions indicate the possibility of the need for such temperature protection, all necessary heating and covering material shall be on hand ready for use before permission is granted to begin placement.

Sufficient extra test specimens will be made and cured with the placement to ascertain the condition of the concrete as placed prior to form removal and acceptance.

C. Precast Concrete

A fabricating plant for precast products which has adequate protection from cold weather in the form of permanent or portable framework and covering, which protects the concrete when placed the forms and is equipped with approved steam curing facilities may place concrete under any low temperature conditions provided:

1. The framework and covering are placed and heat is provided for the concrete and the forms within 1 hour after the concrete is placed. This shall not be construed to be 1 hour after the last concrete is placed, but that no concrete shall remain unprotected longer than 1 hour.
2. Steam heat shall keep the air surrounding the concrete between 50°F (10°C) and 85°F(29°C) for a minimum of 3 hours prior to beginning the temperature rise, which is required for steam curing.

410S.14 Placing Concrete in Hot Weather

When the temperature of the air is above 85ºF (29°C), an approved retarding agent will be required in all exposed concrete, concrete used in superstructures, top slabs of direct traffic culverts and all cased drilled shafts regardless of temperatures. Concrete mix temperatures shall not exceed 90ºF (32°C) except for mixes that include high range water reducers where a maximum mix temperature of 100ºF (38°C) will be allowed.

If the concrete mix temperature is expected to exceed 90ºF (32°C) (or 100ºF (38°C) in mixes with high range water reducers) ice may be utilized to lower the concrete mix temperature. Ice may be added to the concrete mix as a portion by weight of the mix water. However the addition of ice shall not exceed 50% of the total mix water weight.

When weather conditions are such that the addition of ice at 50% of the mix water is not sufficient to reduce the concrete mix temperature to an acceptable temperature, concrete work shall not be allowed.

When ice is to be used in hot weather concrete placement, the Contractor shall furnish a mix design (Section 4.4 of Standard Specification Item 360S, “Concrete Pavement” and Section 6 of Standard Specification Item No. 403S, “Concrete for Structures”) acceptable to the Engineer or designated representative for class of concrete specified on the drawings.

410S.15 Placing Concrete in Water

Concrete shall be deposited in water only when indicated on the drawings or with written permission of the Engineer or designated representative. The forms, cofferdams or caissons shall be sufficiently tight to prevent any water current passing through the space in which the concrete is being deposited. Pumping will not be permitted during the concrete placing nor until it has set for at least 36 hours.

The concrete shall be placed with a tremie, pump or other approved method and shall not be permitted to fall freely through the water nor shall it be disturbed after it has been placed. Its surface shall be kept approximately level during placement.

The tremie shall be supported or the pump operated so that it can be easily moved horizontally to cover all the work area and vertically to control the concrete flow. The lower end of the tremie or pump hose shall be submerged in the concrete at all times.

The placing operations shall be continuous until the work is complete.

For concrete to be placed under water, the concrete mix shall be designed in accordance with Standard Specification Item No. 403S, “Concrete For Structures” with a minimum cement content of 650 lb. Per cubic yard (10.4 Mg per cubic meter). An anti-wash admixture may be included in the mix design as necessary to produce a satisfactory finished product.

410S.16 Placing Concrete in Superstructure

A. General

Unless otherwise indicated on the drawings, simple span roadway slabs shall be placed without transverse construction joints by using a mechanical longitudinal screed or a self-propelled transverse finishing machine or a mechanical longitudinal screed. For small placements or unusual conditions such as narrow widening, variable cross-slopes, or transitions, manually operated screeding equipment may be used if approved by the Engineer or designated representative.

B. Transverse Screeding

Unless otherwise indicated on the drawings, slabs on continuous units shall be placed in one continuous operation without transverse construction joints using a longitudinal screed or a self-propelled transverse finishing machine. Rails for transverse finishing machines supported from the beams or girders shall be installed so they may be removed without damage to the slab. Bond between removable supports and the concrete shall be prevented in a manner acceptable to the Engineer or designated representative. Rail support parts, which remain embedded in the slab, shall not project above the upper mat of reinforcing steel. Rail or screed supports attached to I-beams or girders shall be subject to "General Requirements" stated above. Unless indicated

otherwise on the drawings, the minimum rate of concrete placement is 30 lineal feet (9.144 lineal meters) of bridge slab per hour. The concrete shall be deposited parallel to the skew of the bridge so that all girders are loaded uniformly along their length. Slab concrete shall be deposited between the exterior beam and the adjacent beam before placing concrete in the overhang portion of the slab. Personnel and equipment shall be furnished that is capable of placing, finishing and curing the slab at an acceptable rate to ensure compliance with this Item. Concrete shall be placed in transverse strips. On profile grades greater than 1.5 %, placement shall be started at the lower end.

C. Longitudinal Screeding

The screed shall be adequately supported on a header or rail system sufficiently stable to withstand the longitudinal or lateral thrust of the equipment. Unless otherwise indicated on the drawings, temporary intermediate headers will be permitted for placements exceeding 50 feet (15.24 meters) in length for the longitudinal screed, provided the rate of placement is rapid enough to prevent a cold joint and these headers are designed for early removal to permit satisfactory consolidation and finish of the concrete at their locations. The slab concrete shall be deposited between the exterior beam and the adjacent beam before placing concrete in the overhang portion of the slab.

For longitudinal screeding, concrete shall be placed in longitudinal strips starting at a point in the center of the segment adjacent to one side, except as provided herein and the strip completed by placing uniformly in both directions toward the ends except that for spans on a grade of 1.5 percent or more, placing shall start at the lower end. The width of strips shall be such that the concrete therein will remain plastic until the adjacent strip is placed. Where monolithic curb construction is specified, the concrete shall be placed therein in proper sequence to be monolithic with the adjacent longitudinal strips of the slabs.

D. Placements on Continuous Steel Units

Unless otherwise indicated on the drawings, slabs on continuous steel units shall be placed in a single continuous operation without transverse construction joints using a mechanical longitudinal screed or a self-propelled transverse finishing machine. The initial set of the concrete shall be retarded sufficiently to ensure that concrete remains plastic in at least 3 spans immediately preceding the slab being placed. Construction joints shall be used, when required for slab placements on steel beams or girders, as shown on the drawings. When staged placement of a slab is specified in the drawings, it shall be necessary to ensure that the previously placed concrete attains a compressive strength of 3000 psi (20.7 MPa) before placing the next stage concrete. Multiple stages may be placed in a single day if approved by the Engineer or designated representative. When drawings permit staged concrete placement without specifying a particular order of placement, a placing sequence that will not overstress any of the supporting members shall be submitted for the approval of the Engineer or designated representative.

E. Slab and Girder Units

Unless indicated otherwise on the drawings, girders, slab and curbs of slab and girder spans shall be placed monolithically. Concrete girders shall be filled first, and the slab concrete placed within the time limits specified in this Item. If a transverse screed is

used, the concrete shall be placed in the stem for a short distance and then the concrete placed in transverse strips. If a longitudinal screed is used, the concrete shall be placed in the outside girder stem first beginning at the low end or side, and then continue the concrete placed in longitudinal strips.

410S.17 Placing Concrete in Concrete Arches

Concrete shall be placed in arch rings so the loading is kept symmetrical on the falsework. The arch rings and ribs shall be placed in one continuous operation unless otherwise indicated on the drawings or permitted by the Engineer or designated representative. The spandrel walls or columns and the beams shall not be placed until the arch is swung. Floor slab, railing, parapet walls, etc., shall not be placed until all spandrels are complete. Slab placement shall be symmetrical about the transverse centerline so the loading of the arch is kept approximately symmetrical.

The placing sequence shall be as indicated on the drawings.

410S.18 Placing Concrete in Box Culverts

In general, construction joints will be permitted only where indicated on the drawings.

Where the top slab and walls are placed monolithically in culverts more than 4 feet (1.22 meters) in clear height, an interval of not less than 1 nor more than 2 hours shall elapse before placing the top slab to allow for settlement and shrinkage in the concrete wall.

The base slab shall be trowel finished accurately at the proper time to provide a smooth uniform surface. Top slabs, which carry traffic, shall be finished as specified for roadway slabs in "Finish of Roadway Slabs", below. Top slabs of fill type culverts shall be given a reasonably smooth float finish.

410S.19 Placing Concrete in Foundations and Substructure

Concrete shall not be placed in footings until the depth and character of the foundation has been inspected by the Engineer or designated representative and permission has been given to proceed.

Placing of concrete footings upon seal courses will be permitted after the caissons or cofferdams are free from water and the seal course cleaned. Any necessary pumping or bailing during the concrete placement shall be done from a suitable sump located outside the forms.

All temporary wales or braces inside cofferdams or caissons shall be constructed or adjusted as the work proceeds to prevent unauthorized construction joints in footings or shafts.

When footings can be placed in a dry excavation without the use of cofferdams or caissons, forms may be omitted if desired by the Contractor and approved by the Engineer or designated representative and the entire excavation filled with concrete to the elevation of the top of footing.

Concrete in columns shall be placed monolithically unless otherwise indicated on the drawings. Columns and caps and/or tie beams supported thereon may be placed in the same operation or separately. To allow for settlement and shrinkage of the column concrete, it shall be placed o the lower level of the cap or tie beam and placement delayed for not less than 1 hour nor more than 2 before proceeding with the cap or tie beam placement.

410S.20 Treatment and Finishing of Horizontal Surfaces Except Bridge Slabs

All unformed upper surfaces shall be struck off to grade and finished. The use of mortar topping for surfaces under this classification will not be permitted.

After the concrete has been struck off, the surface shall be floated with a suitable float. Bridge sidewalks shall be given a wood float or broom finish or may be striped with a brush as specified by the Engineer or designated representative.

The tops of caps and piers between bearing areas shall be sloped slightly from the center toward the edge and the tops of abutments and transition bents sloped from the back wall to the edge, as directed by the Engineer or designated representative, so that water will drain from the surface. The concrete shall be given a smooth trowel finish. Bearing areas for steel units shall be constructed in such a manner to have a full and even bearing upon the concrete. When the concrete is placed below grade, bearing areas may be raised to grade on beds of Portland cement mortar consisting of 1 part cement, 2 parts sand and a minimum amount of water.

Bearing seat buildups or pedestals for concrete units shall be cast integrally with the cap or with a construction joint. The construction joint area under the bearing shall have the surface roughened thoroughly as soon as practical after initial set is obtained. The bearing seat buildups shall be placed using a latex based grout, an epoxy grout, or an approved proprietary bearing mortar, mixed in accordance with the manufacturer's recommendation. Pedestals shall be placed using Class C concrete, reinforced as indicated on the drawings.

The bearing area under the expansion end of concrete slabs and slab and girder spans shall be given a steel-trowel finish to the exact grades required on the drawings. Bearing areas under elastomeric bearing pads or nonreinforced bearing seat buildups shall be given a textured wood float finish. The bearing area shall not vary from a level plane more than 1/16 in. (1.6 mm) in all directions.

410S.21 Finish of Bridge Slabs

In all roadway slab-finishing operations, camber for specified vertical curvature and transverse slopes shall be provided.

For concrete flat slab and concrete slab and girder spans cast in place on falsework, an additional amount of camber shall be provided to offset the initial and final deflections of the span indicated in the drawings. For concrete slab and girder spans using pan forms, a camber of approximately 3/8 in. for 30 ft. (9.5 mm for 9.14 meter) spans and ½ in. for 40 ft. (12.7 mm for 12.19 meter) spans shall be provided to offset initial and final deflections unless otherwise directed by the Engineer or designated representative. When dead load deflection requirements for concrete flat slab and concrete slab and girder spans not using

pan forms is not indicated on the drawings, the additional amount of camber shall be 1/8 inch per 10 foot (3.2 mm per 3 meter) of span length but not to exceed 1/2 inch (12.7 mm).

Bridge slabs supported on prestressed concrete beams, steel beams or girders shall receive no additional camber, except that for slabs without vertical curvature, the longitudinal camber shall be approximately 1/4 inch (6.35 mm).

Work bridges or other suitable facilities shall be provided from which to perform all finishing operations and to provide access, if necessary, for the Engineer or designated representative to check measurements for slab thickness and reinforcement cover.

As soon as the concrete has been placed and vibrated in a section of sufficient width to permit working, the surface shall be struck off, leveled and screeded, carrying a slight excess of concrete ahead of the screed to insure filling of all low spots. The screed shall be designed rigid enough to hold true to shape and shall have sufficient adjustments to provide for the required camber. A vibrating screed shall be used in all slabs more than 20 feet (6.1 meters) in width. A vibrating screed may be used if heavy enough to prevent undue distortion. The screeds shall be provided with a metal edge.

Longitudinal screeds shall be moved across the concrete with a saw like motion while their ends rest on headers or templates set true to the roadway grade or on the adjacent finished slab. The transverse screeds shall be moved longitudinally approximately 1/5 of the drum length for each complete out-and-back pass of the carriage.

The surface of the concrete shall be screeded a sufficient number of times and at such intervals to produce a uniform surface, true to grade and free of voids. If necessary, the screeded surface shall be worked to a smooth finish with a long handled wood or metal float of the proper size or hand floated from bridges over the slab. Floating may not be necessary if the pan float attached to a transverse screed produces an acceptable finish. Overworking the concrete surface and overuse of finish water shall be avoided.

The Contractor shall perform in the presence of the Engineer or designated representative sufficient checks with a long handled 16-foot (5 meter) straightedge on the plastic concrete to insure that the final surface will be within the specified tolerances. The check shall be made with the straightedge parallel to the centerline. Each pass thereof shall lap half of the preceding pass. All high spots shall be removed and all depressions over 1/16 inch (1.6 mm) in depth shall be filled with fresh concrete and floated. The checking and floating shall be continued until the surface is true to grade and free of depressions, high spots, voids or rough spots.

Screed-rail support holes shall be filled with concrete and finished to match the top of the slab.

The concrete surface shall be finished to a uniform texture using a carpet drag, burlap drag or broom finish. The surface shall be finished to a smooth sandy texture without blemishes, marks or scratches deeper than 1/16 inch (1.6 mm). The surface texturing shall be applied using a work bridge or platform immediately after completing the straightedge checks. The carpet or burlap drag shall be drug longitudinally along the concrete surface, adjusting the surface contact area or pressure to provide a satisfactory coarsely textured surface. A broom finish may be performed using a fine bristle broom transversely.

The concrete surface shall be coated immediately after the carpet or burlay drag, or broom finish with a single application of evaporation retardant at a rate recommended by the

manufacturer. The time between the texturing at any location and subsequent application of evaporation retardant shall not exceed 10 minutes. The evaporation retardant may be applied using the same workbridge used for surface texturing. The concrete surface shall not be worked once the evaporation retardant has been applied.

Interim and final curing shall be applied in accordance with Section P410S.23, "Curing Concrete".

The Contractor is responsible for the ride quality of the finished bridge slab. The Engineer or designated representative will use a 10-ft. (3.05 meter) straightedge to verify ride quality [1/8 in. or less in 10 ft (3.2 mm or less in 3.05 meters)] and to determine locations where corrections are needed. If the Engineer or designated representative determines that the ride quality is unacceptable, then the Contractor shall submit to the Engineer or designated representative for approval a plan to produce a ride of acceptable quality. All corrections for ride-quality shall be made before saw-cutting grooves.

At the option of the Contractor or when indicated on the drawings, the hardened concrete surface of bridge slabs, bridge approach slabs and direct-traffic culverts shall be given its final texture by saw grooving to meet the above requirements after completion of the required curing period. Grooves shall be cut perpendicular to the structure centerline. The grooves shall be cut continuously across the slab to within 18 in. (450 mm) of the barrier rail, curb or median divider. At skewed metal expansion joints in bridge slabs, groove cutting shall be adjusted by using narrow-width cutting heads so that all grooves end within 6 in. (150 mm) of the joint, measured perpendicular to the centerline of the metal joint. There should not be any ungrooved surface wider than 6 in. (150 mm) adjacent to either side of the joint. The minimum distance to the first groove, measured perpendicular to the edge of the concrete joint or from the junction between the concrete and the metal leg of the joint shall be 1 in. (25 mm), Grooves shall be continuously cut across construction joints or other joints in the concrete that are less than ½ in. (13 mm) wide. The same procedure described above shall be used where barrier rails, curbs or median dividers are not parallel to the structure centerline in order to maintain the 18-in. (450-mm) maximum dimension from the end of the grooves to the gutter line. The grooves shall be cut continuously across formed concrete joints.

When the plans require that a concrete overlay be placed on the slab (new construction) or on prestressed concrete box beams or other precast elements, a carpet drag, burlap drag or broom finish shall be given to all concrete surfaces to be overlaid. Saw grooving is not necessary in this case. An average texture depth for the finish of approximately 0.035 in. (0.9 mm) shall be provided with no individual test falling below 0.020 in. (0.5 mm), unless otherwise indicated on the drawings, when tested in accordance with TxDoT's Tex-436-A, "Measurement of Texture Depth by the Sand Patch Method". If the texture depth falls below what is specified, the finishing procedure shall be revised to produce the desired texture.

When the drawings require an asphalt seal with or without overlay on the slab (new construction), on prestressed concrete box beams or on other precast elements, all concrete surfaces to be covered shall be given a lightly textured broom or carpet drag finish, similar to a sidewalk finish having an average texture depth of approximately 0.025 inch (0.635 mm), when tested in accordance with TxDoT's Tex-436-A, ".

410S.22 Placing Survey Monuments

The Contractor shall obtain City Survey Monuments, for a fee of 10 dollars, from the Department of Public Works, Construction Inspection Division. Monuments shall be embedded in freshly poured concrete at locations indicated on the drawings and accessible to survey equipment at the completion of the project. The monuments shall be installed flush with the adjacent concrete.

410S.23 Curing Concrete

The Contractor shall inform the Engineer or designated representative fully of the methods and procedures proposed for curing, shall provide the proper equipment and material in adequate amounts and shall have the proposed method, equipment and material approved by the Engineer or designated representative prior to placing concrete.

Inadequate curing and/or facilities therefore shall be cause for the Engineer or designated representative to notify the Contractor, in writing, that the work is unsatisfactory and the concrete will have to be removed and replaced.

All concrete shall be cured for a period of 4 curing days except as noted herein. A curing day is a calendar day when the temperature, taken in the shade away from artificial heat is above 50°F (10°C) for at least 19 hours or on colder days if the temperature of all surfaces of the concrete is maintained above 40°F (4°C) for the entire 24 hours. The required curing shall begin when all concrete has attained its initial set. TxDoT's Tex-440-A, "Initial Time-of-Set of Fresh Concrete" may be used to establish when the concrete has attained its initial set.

Table 4: Exceptions to 4-Day Curing

Description	Type of Cement	Required Curing Days
Upper Surfaces of Bridge Slabs, Top Slabs of Direct Traffic Culverts and Concrete Overlays	I or II	8
	II or I/II	10
	All types with supplementary cementing materials	10
Concrete Piling buildups		6

For upper surfaces of bridge slabs, bridge support slabs, median and sidewalk slabs and culvert top slabs constructed using Class S Concrete (Standard Specification Item No. 403S, "Concrete for Structures") interim curing using a Type 1-D curing compound shall be applied as soon as possible after application of the evaporation retardant and after the water sheen has disappeared, but no more than 45 minutes after application of the evaporation retardant. Membrane interim curing shall be applied using a work bridge or other approved apparatus to ensure a uniform application. Final curing with water cure in accordance with this section shall start as soon as possible without damaging the surface finish. Water curing shall be maintained for the duration noted in the table above. Polyethylene sheeting, burlap-polyethylene blankets, laminated mats or insulating curing mats shall be placed in direct contact with the slab when the ambient temperature is

expected to drop below 40°F (4°C) during the first 72 hours of the curing period. The curing materials will be weighed down with dry mats to maintain direct contact with the concrete and to provide insulation against cold weather. Supplemental heating or insulation may be required in cold and wet weather if the insulating cotton mats become wet or if the concrete temperature drops below the specified curing temperature. Application of heat directly to concrete surfaces shall be avoided.

For the top surface of any concrete unit upon which concrete is to be placed and bonded at a later date (i.e. stub walls, risers, etc.), only water-cure in accordance with this Section shall be used.

All other concrete shall be cured as specified in pertinent Items.

The following methods are permitted for curing concrete subject to the restrictions of this Item .

A. Form Curing

When forms are left in intimate contact with the concrete, other curing methods will not be required except for exposed surfaces and for cold weather protection.

When forms are striped before the 4-day minimum curing time has elapsed, curing shall continue by an approved method.

B. Water Curing

All exposed surfaces of the concrete shall be kept wet continuously for the required curing time. The water used for curing shall meet the requirements for concrete mixing water as indicated in Item No. 403S, "Concrete for Structures". Seawater will not be permitted. Water, which stains or leaves an unsightly residue, shall not be used.

1. Wet Mats

Wet cotton mats placed in direct contact with the slab shall be maintained for the required curing time. If needed damp burlap blankets made from 9-ounce (255 gm) stock may be placed on the damp concrete surface for temporary protection prior to the application of the cotton mats, which may be placed dry and wetted down after placement.

The mats shall be weighted down adequately to provide continuous contact with all concrete surfaces where possible. The surfaces of the concrete shall be kept wet for the required curing time. Surfaces, which cannot be cured by contact, shall be enclosed with mats, anchored positively to the forms or to the ground, so that outside air cannot enter the enclosure. Sufficient moisture shall be provided inside the enclosure to keep all surfaces of the concrete wet.

2. Water Spray

This method shall consist of overlapping sprays or sprinklers that keep all unformed surfaces continuously wet.

3. Ponding

This method requires the covering of the surfaces with a minimum of 2 inches (50 mm) of clean granular material, kept wet at all times or a minimum of 1 inch (25

mm) depth of water. Satisfactory provisions shall be made to provide a dam to retain the water or saturated granular material.

C. Membrane Curing

Unless otherwise indicated on the drawings, either Type 1-D or Type 2 membrane curing compound may be used where permitted except that Type 1-D (Resin Base Only) will be permitted for slab concrete in bridge decks and top slabs of direct traffic culverts and all other surfaces that require a higher grade of surface finish. For substructure concrete, only one Type of curing compound will be permitted on any one structure.

TABLE 5

	REQUIRED		PERMITTED	
STRUCTURE UNIT DESCRIPTION	**Water for Complete Curing**	**Membrane for Interim Curing**	**Water for Complete Curing**	**Membrane for Complete Curing**
1. Upper surfaces of Bridge Roadway, Median and Side walk Slabs, Top Slabs of Direct Traffic, and Culverts.	X	X (resin base)		
2. Top Surface of any Concrete Unit upon which Concrete is to be placed and bonded at a later interval (Stub Walls, Risers, etc.). Other Super-structure Concrete (curbs, wing-walls, Parapet Walls, etc.).	X		*X	*X
3. Top Surface of Precast and/or Pre-stressed Piling.	X	X		
4. All Substructure Concrete Culverts. Box Sewers, Inlets, Manholes, Retaining Walls, Riprap.			*X	*X

* Polyethylene Sheeting, Burlap-Polyethylene Mats or Laminated Mats in close intimate contact with the concrete surfaces, will be considered equivalent to water or membrane curing for items under 4.

The membrane curing shall be applied just after free moisture has disappeared in a single, uniform coating at the rate of coverage recommended by the manufacturer and as approved by the Engineer or designated representative, but not less than 1 gallon per 180 square feet (1 liter per 4.4 square meters) of area. Tests for acceptance shall be at this specified rate.

Membrane curing shall not be applied to dry surfaces, but shall be applied just after free moisture has disappeared. Formed surfaces and surfaces which have given a first rub shall be dampened and shall be moist at the time of application of the membrane.

When membrane is used for complete curing, the film shall remain unbroken for the minimum curing period specified. Membrane, which is damaged, shall be corrected immediately by reapplication of membrane. Polyethylene sheeting, burlap-polyethylene mats or laminated mats in close intimate contact with the concrete surfaces, will be considered equivalent to membrane curing. Unless otherwise indicated on the drawing,

the choice of membrane type shall be at the option of the Contractor, except that the Engineer or designated representative may require the same curing method for like portions of a single structure.

410S.24 Removal of Forms and Falsework

Unless otherwise indicated on the drawing, forms for vertical surfaces may be removed when the concrete has aged 12 hours after initial set, provided it can be done without damage to the concrete. Forms for mass concrete placements shall be maintained in place for 4-days following concrete placement. Mass placements are defined as concrete placements with a least dimension greater than equal to 5 ft. (1.575 meters), or those designated as such on the drawings.

Forms for inside curb faces may be removed in approximately 3 hours provided it can be done without damage to the curb.

Unless indicated otherwise on the drawings weight supporting forms and falsework spanning more than 1 ft. (300 mm) for structures, bridge components and culvert slabs shall remain in place until the concrete has attained a minimum compressive strength of 2500 psi (17.25 MPa). Forms for other structural components may be removed as specified by the Engineer or designated representative.

Inside forms (walls and top slabs) for inlets, box culverts and sewers may be removed after the concrete has attained a minimum compressive strength of 1800 psi (12.4 MPa), provided an overhead support system, approved by the Engineer or designated representative, is used to transfer the weight (mass) of the top slab to the walls of the box culvert or sewer before the support provided by the forms is removed.

If all test cylinders made for the purpose of form removal have been broken without attaining the required strength, forms shall remain in place for a total of 14 curing days.

The above provisions relative to form removal shall apply only to forms or parts thereof which are constructed to permit removal without disturbing forms or falsework required to be left in place for a longer period on other portions of the structure.

Remove all metal appliances used inside forms for alignment shall be removed to a depth of at least ½ in. (13 mm) from the concrete surface. The appliances shall be manufactured to allow the removal without undue chipping or spalling of the concrete, and so that it leaves a smooth opening in the concrete surface when removed. Rods, bolts and ties shall not be burned-off.

Backfilling against walls of Type I or Type II cement shall not take place for a minimum of 7 days. Backfilling against walls of Type III cement shall not take place until the cylinder compressive strength has reached 3000 psi (20.7 MPa) or the wall has cured for 5 days.

All forms and falsework shall be removed unless indicated otherwise on the drawings.

410S.25 Defective Work

Any defective work discovered after the forms have been removed shall be repaired as soon as possible in accordance with "Finishing Exposed Surfaces", below.

If the surface of the concrete is bulged, uneven or shows excess honeycombing or form marks, which in the opinion of the Engineer or designated representative, cannot be repaired satisfactorily, the entire section shall be removed and replaced at the expense of the Contractor.

410S.26 Finishing Exposed Surfaces

A. Ordinary Surface Finish

An Ordinary Surface Finish shall be applied to all concrete surfaces either as a final finish or preparatory to a higher grade or class of finish. Higher grades and classes of finish shall conform to Item No. 411S, "Surface Finishes for Concrete". Where neither a grade or class of finish is specified, an Ordinary Surface Finish only, will be required.

Ordinary Surface Finish shall be provided as follows:

1. After formal removal, all porous, honeycombed areas and spalled areas shall be corrected by chipping away all loose or broken material to sound concrete.
2. Featheredges shall be eliminated by saw-cutting and chipping spalled areas to a depth at least ½ in. (13 mm) deep perpendicular to the surface. Shallow cavities shall be repaired using a latex adhesive grout, cement mortar or epoxy grout approved by the Engineer or designated representative. If judged repairable by the Engineer or designated representative, large defective areas shall be corrected using concrete or other material approved by the Engineer or designated representative.
3. Holes and spalls caused by removal of form ties, etc., shall be cleaned and filled with latex adhesive grout, cement mortar or epoxy grout approved by the Engineer or designated representative. Only the holes shall be filled. The patch shall not be blended with the surrounding concrete. On surfaces to receive a rub finish in accordance with Standard Specification Item No. 411S, “Surface Finishes for Concrete” the exposed parts of metal chairs shall be chipped out to a depth of 1/2 inch (13 mm) and the surface repaired.
4. All fins, runs, drips or mortar that will be exposed shall be removed from surfaces. Form marks and chamfer edges shall be smoothed by grinding and/or dry rubbing.
5. Grease, oil, dirt, curing compound, etc., shall be removed from surfaces requiring a higher grade of finish. Discolorations resulting from spillage or splashing of asphalt, paint or other similar material shall be removed.
6. Repairs shall be dense, well bonded and properly cured and when made on surfaces, which remain exposed and do not require a higher finish, shall be finished to blend with the surrounding concrete.

Unless otherwise indicated on the drawings Ordinary Surface Finish shall be the final finish for the following exposed surfaces:

1. inside and top of inlets,
2. inside and top of manholes,
3. inside of sewer appurtenances,
4. inside of culvert barrels,

5. bottom of bridge decks between beams or girders,
6. vertical and bottom surfaces of interior concrete beams or girders.

B. Rubbed Finish

In general, the following areas shall require a rubbed finish and shall receive a first and second rubbing:

1. The top, exterior and roadway facia of curbs and parapet walls.
2. All concrete surfaces of railing.
3. The exterior vertical facia of slab spans, rigid frames, arches and box girders.
4. The outside and bottom surfaces of facia beams or girders (except precast concrete beams).
5. The underside of overhanging slabs to the point of juncture of the supporting beams.
6. All vertical surfaces of piers, columns, bent caps, abutments, wing walls and retaining walls which are exposed to view after all backfill and embankments is placed.
7. Exposed formed surfaces of inlet and outlet structures on culverts, transition structures, headwalls and inlets.
8. Such other surfaces specified elsewhere to receive a rubbed finish and such additional surfaces required by the Engineer or designated representative to receive a rubbed finish.

After removal of forms and as soon as the mortar used in pointing has set sufficiently, surfaces to be rubbed shall be wet with a brush and given a first surface rubbing with a medium coarse carborundum stone. This rubbing shall be done before the concrete has cured more than 48 hours.

The second rubbing shall present a cleaned uniform appearance free from drip marks and discoloration. It shall be given with a No.30 carborundum stone or an abrasive of equal quality.

If the Contractor elects to use epoxy paint in lieu of the second rubbings the Contractor may do so upon approval of the Engineer or designated representative.

C. Special Surface Finishes

Striated, exposed aggregate and other special surface finishes shall conform to Standard Specification Item No. 411S, "Surface Finishes for Concrete" and/or with the requirements indicated on the drawings.

410S.27 Measurement and Payment

No direct measurement or payment will be made for the work to be done or the equipment to be furnished under this item, but shall be included in the unit price bid for the item of construction in which this item is used.

End

SPECIFIC CROSS REFERENCE MATERIALS
Standard Specification Item 410S, "Concrete Structures"

City of Austin Standard Specification Items

Designation	Description
Item No. 360S	Concrete Pavement
Item No. 401S	Structural Excavation and Backfill
Item No. 403S	Concrete for Structures
Item No. 406S	Reinforcing Steel
Item No. 411S	Surface Finishes for Concrete
Item No. 413S	Cleaning and/or Sealing Joints and Cracks (PC Concrete)
Item No. 425S	Prestressed Concrete Structures

U.S. Department of Commerce Voluntary Product Standard, PS 1

American Concrete Institute

Designation	Description
ACI 347	Guide to Formwork for Concrete

American Society for Testing and Materials (ASTM)

Designation	Description
ASTM D-994	Preformed Expansion Joint Filler for Concrete (bituminous Type)
ASTM D-1751	Prefprmed Expansion Joint Filler for Concrete Paving and Structural Construction (Nonextruding and Resilient Bituminous Types)
ASTM D-1752	Prefprmed Sponge Rubber and Cork Expansion Joint Fillers for Concrete Paving and Structural Construction

Texas Department of Transportation: Departmental Material Specifications

Designation	Description
DMS-4640	Chemical Admixtures for Concrete
DMS-4650	Hydraulic Cement Concrete Curing Materials and Evaporation Retardants"
DMS-6100	Epoxy and Adhesives
DMS-6160	Waterstops, Nylon Reinforced Neoprene Sheet, and Elastomeric Pads
DMS-6310	Joint Materials and Fillers

Texas Department of Transportation: Manual of Testing Procedures

Designation	Description
Tex-436-A	Measurement of Texture Depth by the Sand Patch Method
Tex-440-A	Initial Time-of-Set of Fresh Concrete

RELATED CROSS REFERENCE MATERIALS
Standard Specification Item 410S, "Concrete Structures"

American Society for Testing and Materials, ASTM

Designation	Description
A 36/A 36M	Carbon Structural Steel
A 82	Steel Wire, Plain, for Concrete Reinforcement
A 185	Steel Welded Wire Fabric, Plain, for Concrete Reinforcement
A 496	Steel Wire, Deformed, for Concrete Reinforcement
A 497	Steel Welded Wire Fabric, Deformed, for Concrete Reinforcement

A 615/A 615M	Deformed and Plain Billet-steel Bars for Concrete Reinforcement
A 675/A 675M	Steel Bars, Carbon, Hot-Wrought, Special Quality, Mechanical Properties
A 706/A 706M	Low- Alloy Steel Deformed and Plain Bars for Concrete Reinforcement
A 775/A 775M	Epoxy-Coated Reinforcing Steel Bars
A 884/A 884M	Epoxy-Coated Steel Wire and Welded Wire Fabric For Reinforcement
A 934/A 934M	Epoxy-Coated Prefabricated Reinforcing Steel Bars
A 996/A 996M	Rail-Steel and Axle-Steel Deformed Bars for Concrete Reinforcement
D3963/D3963M	Fabrication and Jobsite Handling of Epoxy-coated Reinforcing Steel Bars

Texas Department of Transportation: Manual of Testing Procedures

Designation	Description
Tex-739-I	Sampling and Testing Epoxy Coated Reinforcing Steel

City of Austin Standard (Details)

Designation	Description
Standard 406S-1	Reinforced Steel Tolerances

Texas Department of Transportation: Departmental Material Specifications

Designation	Description
DMS 8130	Epoxy Powder Coating for Reinforcing Steel

City of Austin Standard Specification Items

Designation	Description
Item No. 404S	Pneumatically Placed Concrete
Item No. 407S	Fibrous Concrete
Item No. 414S	Concrete Retaining Walls
Item No. 420S	Drilled Shaft Foundations

Texas Department of Transportation: Standard Specifications for Construction and Maintenance of Highways, Streets, and Bridges

Designation	Description
Item No. 360	Concrete Pavement
Item No. 420	Concrete Structures
Item No. 421	Hydraulic Cement Concrete
Item No. 422	Reinforced Concrete Slab
Item No. 423	Retaining Walls
Item No. 440	Reinforcing Steels

430S.1 Description

This item shall govern Portland Cement (p.c.) concrete curb, p.c. concrete curb and gutter with reinforcing steel or p.c. concrete laydown curb as required, that is constructed in accordance with this specification on an approved subgrade and base in conformity with Standard Detail Series 430S and the lines, grades, section indicated on the Drawings or as established by the Engineer or designated representative.

This specification is applicable for projects or work involving either inch-pound or SI units. Within the text, the inch-pound units are given preference followed by SI units shown within parentheses.

430S.2 Submittals

The submittal requirements of this specification item include:

A. Class A p.c. concrete mix design,

B. Type of Installation (i.e. P.C. Concrete Curb and Gutter or P.C. Concrete Curb or P.C. Concrete Laydown Curb) and construction details (i.e. base, reinforcing steel, joints, curing membrane),

C. Identification of the type, source, mixture, Pure Live Seed (PLS) and rate of application of the seeding.

430S.3 Materials

A. Concrete

The Portland cement (p.c.) concrete shall conform to Class A Concrete, Section 403S.7 (Table 4) of Standard Specification Item No. 403S, "Concrete for Structures" or Sections 360S.4 and 360S.6 of Standard Specification Item No. 360S, "Concrete Pavement" when curb and gutter is to be constructed integral with the pavement.

B. Reinforcing Steel

Reinforcing steel shall conform to Standard Specification Item No. 406S, "Reinforcing Steel".

C. Expansion Joint Materials

Expansion joint materials shall conform to Standard Specification Item No. 408S, "Expansion Joint Materials".

D. Membrane Curing Compound

Membrane curing compound shall conform to Standard Specification Item No. 409S, "Membrane Curing".

E. Flexible Base

Aggregate shall conform to Standard Specification Item No. 210S, "Flexible Base".

430S.4 Construction Methods

A. Subgrade and Base Preparation

Subgrade for curb and gutter shall be excavated and prepared to depth and width requirements indicated on the Drawings, including a minimum of 12 inches (300 mm) behind the curb, unless a greater width is indicated on the Drawings. The subgrade shall be shaped to the line, grades, cross section and dimensions indicated on the Drawings. A minimum of 4 inches (100 mm) of flexible base shall be spread, wetted and thoroughly compacted under curb and gutter as specified in Standard Specification Item No. 210S, "Flexible Base". If dry, the base shall be sprinkled lightly with water before p.c. concrete is deposited thereon.

B. C & G Forms

Forms shall be of metal, well-seasoned wood or other approved material. The length of the forms shall be a minimum of 10 feet (3 meters). Flexible or curved forms shall be used for curves of 100-foot (30 meter) radius or less. Wood forms for straight sections shall be not less than 2 inches (50 mm) in thickness. Forms shall be a section, that is satisfactory to the Engineer or designated representative, of the depth required and clean, straight, free from warp and, if required, oiled with a light form oil. All forms shall be securely staked to line and grade and maintained in a true position during the placement of p.c. concrete.

C. Reinforcing Steel

The reinforcing steel, if required, shall be placed as shown on the typical section of the Drawings. Care shall be exercised to keep all steel in its proper location during p.c. concrete placement.

D. Joints

Joints shall be of the type and spacing shown on the Drawings. Expansion joint material, 3/4 inch (19 mm) in thickness, shall be provided at intervals not to exceed 40 feet (12 meters) and shall extend the full width and depth of the p.c. concrete. Weakened plane joints shall be made 3/4 inch (19 mm) deep at 10-foot (3 meters) intervals. All joint headers shall be braced perpendicular and at right angles to the curb.

Two round smooth dowel bars, 1/2 inch (12.5 mm) in diameter and 24 inches (600 mm) in length, shall be installed at each expansion joint. Sixteen inches (400 mm) of one end of each dowel shall be thoroughly coated with hot oil, asphalt or red lead, so that it will not bond to the concrete. The dowels shall be installed with a dowel sleeve on the coated end as indicated on the Drawings or equivalent method as directed by the Engineer or designated representative.

E. P.C. Concrete Placement and Form Removal

Concrete shall be placed in the forms and properly consolidated. Within 1 hour after p.c. concrete placement, a thin coating, that is no more than 1/2 inch (12.5 mm) nor less than 1/4 inch (6.25 mm) thick of finish mortar, composed of 1 part Portland Cement to 2 parts fine aggregate, shall be worked into the exposed faces of the curb and gutter by means of a "mule". After the p.c. concrete has become sufficiently set, the exposed edges shall be rounded by the use of an edging tool to the radii indicated on Standard Detail 430S-1. The entire exposed surface of the curb and gutter shall be floated to a uniform smooth surface, and then finished with

a camel hairbrush to a gritty texture. The forms shall remain in place a minimum of 24 hours unless approved otherwise by the Engineer or designated representative.

After removal of the forms, any minor honeycombed surfaces shall be plastered with a mortar mix as described above. Excessively honeycombed curb and gutter, as determined by the Engineer or designated representative, shall be completely removed and replaced when directed.

F. Curing

Immediately after finishing the curb, concrete shall be protected by a membrane curing conforming to Standard Specification Item No. 409S, "Membrane Curing".

After a minimum of 3 days curing and before placement of the final lift of the base course, the curb shall be backfilled to the full height of the p.c. concrete, tamped and sloped as directed by the Engineer or designated representative. The upper 4 inches (100-mm) of backfill shall be of clean topsoil that conforms to Standard Specification Item No. 130S, "Borrow" and is free of stones and debris.

G. Seeding in Turf Areas

When turf is to be established, preparation of the seedbed shall conform to Item No. 604S, "Seeding for Erosion Control".

430S.5 Measurement

Accepted work as prescribed by this item will be measured by the lineal foot (lineal meter: 1 lineal meter equals 3.281 lineal feet) of p.c. concrete curb and gutter, p.c. concrete curb and/or p.c. concrete laydown curb, complete in place.

430S.6 Payment

The work performed as prescribed by this item will be paid for at the unit bid price per lineal foot for "P.C. Concrete Curb and Gutter" or P.C. Concrete Curb. The price shall include full compensation for all work as set forth and described under payment Method A and/or B.

A. Method A (Pay Item No. 430S-A)

This payment method shall include all the work performed for "P.C. Concrete Curb and Gutter" complete, at the unit bid price. The unit bid price shall include full compensation for excavation, preparation of the subgrade, furnishing and placing all concrete and base material, reinforcing steel, dowels, expansion joint material, curing material, backfill and for all other materials, manipulations, labor, tools, equipment and incidentals necessary to complete the work.

B. Method B (Pay Item No. 430S-B)

This payment method includes all the work performed for "P.C. Concrete Curb and Gutter", complete, at the unit bid price. The unit bid price shall include full compensation for fine grading, furnishing and placing concrete and reinforcing steel, dowels, expansion joint material, curing material, backfill and for all other materials, manipulations, labor, tools, equipment and incidentals necessary to complete the work.

C. Method C (Pay Item No. 430S-C)

This payment method includes all the work performed for " P.C. Concrete Curb" complete, at the unit bid price. The unit bid price shall include full compensation for excavation, furnishing and placing all concrete and base material, reinforcing steel, dowels, expansion joint material, curing material, backfill and for all other materials, manipulations, labor, tools, equipment and incidentals necessary to complete the work.

D. Method D (Pay Item No. 430S-D)

This payment method includes all the work performed for "P.C. Concrete Curb" complete, at the unit bid price. The unit bid price shall include full compensation for fine grading, furnishing and placing concrete and reinforcing steel, dowels, expansion joint material, curing material, backfill and for other materials, manipulations, labor, tools, equipment and incidentals necessary to complete the work.

E. Method E (Pay Item No. 430S-E)

This payment method shall include all the work performed for "P.C. Concrete Laydown Curb" complete, at the unit bid price. The unit bid price shall include full compensation for excavation, preparation of the subgrade, furnishing and placing all concrete and base material, reinforcing steel, dowels, expansion joint material, curing material, backfill and for all other materials, manipulations, labor, tools, equipment and incidentals necessary to complete the work

F. Method F (Pay Item No. 430S-F)

This payment method includes all the work performed for "P.C. Concrete Laydown Curb" complete, at the unit bid price. The unit bid price shall include full compensation for fine grading, furnishing and placing concrete and reinforcing steel, dowels, expansion joint material, curing material, backfill and for other materials, manipulations, labor, tools, equipment and incidentals necessary to complete the work.

Payment will be made under one of the following:

Pay Item No. 430S-A:	P.C. Concrete Curb and Gutter (Excavation)	Per Lineal Foot.
Pay Item No. 430S-B:	P.C. Concrete Curb and Gutter (Fine Grading)	Per Lineal Foot.
Pay Item No. 430S-C:	P.C. Concrete Curb (Excavation)	Per Lineal Foot.
Pay Item No. 430S-D:	P.C. Concrete Curb (Fine Grading)	Per Lineal Foot.
Pay Item No. 430S-E:	P.C. Concrete Laydown Curb (Excavation)	Per Lineal Foot.
Pay Item No. 430S-F:	P.C. Concrete Laydown Curb (Fine Grading)	Per Lineal Foot.

End

SPECIFIC CROSS REFERENCE MATERIALS
Specification Item No. 430S, “P.C. Concrete Curb and Gutter”

City of Austin Standard Specifications

Designation	*Description*

Item No 130S	Borrow
Item No 210S	Flexible Base
Item No. 360S	Concrete Pavement
Section 360S.4 of Item 360S	Proportioning of Concrete
Section 360S.6 of Item 360S	Concrete Mixing and Placing
Item No. 403S	Concrete for Structures
Section 403S.7 of Item No. 403S	(Table 4)
Item No. 406S	Reinforcing Steel
Item No. 408S	Expansion Joint Materials
Item No. 409S	Membrane Curing
Item No. 604S	Seeding for Erosion Control

City of Austin Standard Details

Designation	*Description*
430S-1	Curb and Gutter Section
430S-3	Curb Expansion Joint Dowel Detail
430S-4	Concrete Backfill Under Curb & Gutter
430S-5	Reinforcing Bar Detail at Existing Curb and Gutter

RELATED CROSS REFERENCE MATERIALS
Specification Item No. 430S, “P.C. Concrete Curb and Gutter”

City of Austin Standard Specifications

Designation	*Description*
Item No. 301S	Asphalts, Oils and Emulsions
Item No. 302S	Aggregates for Surface Treatments
Item No. 340S	Hot Mix Asphaltic Concrete Pavement
Item No. 431S	Machine Laid PCC Curb and Gutters
Item No. 433S	P.C. Concrete Driveways
Item No. 434S	P.C. Concrete Medians and Islands
Item No. 436S	P.C. Concrete Valley Gutters
Item No. 606S	Fertilizer

Item No. 432S
Portland Cement Concrete Sidewalks

432S.1 Description

This item shall govern the construction of Portland cement concrete sidewalks (Standard Detail No. 432S-1), as herein specified, on an approved subgrade and in conformance with the lines, grades and details indicated on the Drawings or as established by the Engineer or designated representative.

This specification is applicable for projects or work involving either inch-pound or SI units. Within the text inch-pound units are given preference followed by SI units shown within parentheses.

432S.2 Submittals

The submittal requirements of this specification item include:

A. Class A portland cement (p.c). concrete mix design,

B. Type of Installation (i.e. Type I, Type II, etc.) and construction details (i.e. cushion layer, base, reinforcing steel, joints, curing membrane),

C. Identification of the type, source, mixture, Pure Live Seed (PLS) and rate of application of the seeding.

D. Number, manufacturer, model, construction, finish and installation details of streetscape appurtenances of bicycle racks, benches, chairs, trash receptacles, streetlights, tree wells and above grade tree planters [for sidewalks, 12 feet (3.66 meters) or wider].

432S.3 Materials

A. Portland Cement Concrete

Portland cement concrete shall be Class A conforming to Specification Item No. 403S, "Concrete for Structures" or Specification Item No. 407S, "Fibrous Concrete".

B. Reinforcement

Reinforcement shall conform to Specification Item No. 406S, "Reinforcing Steel" or Specification Item No. 407S, "Fibrous Concrete".

C. Expansion Joint Materials

Expansion joint materials shall conform to Specification Item No. 408S, "Expansion Joint Materials".

D. Membrane Curing Compound

Membrane curing compound shall conform to Specification Item No. 409S, "Membrane Curing".

432S.4 Construction Methods

The subgrade shall be excavated in accordance with Specification Item No. 111S, “Excavation”, prepared in accordance with Specification Item No. 201S, “Subgrade Preparation”, shaped to the lines, grades and cross section as indicated on the Drawings or as directed by the Engineer or designated representative and thoroughly compacted in accordance with Specification Item No. 201S. A granular cushion of a minimum thickness of 2 inches (50 mm) but maximum thickness of 5 inches (125 mm), composed of crusher screenings, gravel and sand, crushed rock or coarse sand,

shall be spread, wetted thoroughly, tamped and leveled. The granular cushion shall be moist at the time the Portland cement concrete is placed.

If the subgrade is undercut by more than 4 inches (100 mm) or the elevation of the natural ground is more than 4 inches (100 mm) below "top of subgrade", then a necessary backfill/embankment layer of an approved material shall be placed and compacted with a mechanical tamper. Hand tamping will not be permitted.

Where the subgrade is rock or gravel, 70 percent of which is rock; the 2-inch (50 mm) cushion need not be used. The Engineer or designated representative will determine if the subgrade meets the above requirements.

Sidewalk forms shall be constructed of metal or well-seasoned wood not less than 2 inches (50 mm) in thickness, with a section satisfactory to the Engineer or designated representative. The forms shall be clean, straight, and free from warp with a depth equal to the thickness of the finished work. All forms shall be securely staked to line and grade and maintained in a true position during the deposition of Portland cement concrete. Before p.c. concrete is placed, the forms shall be thoroughly oiled with a light form oil.

Expansion joint material 3/4 inch (19 mm) thick, shall be provided where the new construction abuts an existing structure, sidewalk or driveway. Similar expansion material shall be placed around all obstructions protruding through the sidewalk. The expansion joint material shall be placed vertically and shall extend the full depth of the p.c. concrete. Maximum spacing of expansion joints shall be 40 feet (12 meters) as indicated on the Drawings or as directed by the Engineer or designated representative. Weakened plane joints shall be spaced at 5 feet (1.5 meters) on center. Normal dimensions of the weakened plane joints shall be 1/4 inch wide and 3/4 inch deep (6 mm wide and 19 mm deep). All joints shall be constructed perpendicular (90 degrees) to the centerline of walk and shall match any previously placed concrete joints. For sidewalks with widths exceeding 6 feet (1.83 meters) longitudinal weakened-plane tooled joints shall be provided as indicated on the Drawings or as directed by the Engineer or designated representative.

Reinforcement for sidewalks shall consist either of polypropylene fibrillated fibers or 6” x 6” x W1.4 x W1.4 (150mm x 150mm x MW9 x MW9) welded wire fabric or one layer #3 (10M) reinforcing bars, placed no more than 18 inches (450 mm) on center both directions. All reinforcement shall be accurately placed at slab mid-depth, equidistant from the top and bottom of the p.c. concrete and held firmly in place by means of bar supports of adequate strength and number that will prevent displacement and keep the steel at its proper position during the placement of the p.c concrete. In no instance shall the steel be placed directly on the subgrade or sand cushion layer.

Prior to placement of the concrete, the reinforcement installation shall be inspected by the Engineer or designated representative to insure conformance with the drawings, specifications and this item. In addition care shall be exercised to keep all steel in its proper position during placement of the p.c. concrete. If during placement of the concrete, the reinforcement is observed to loose bar support, float upward or move in any direction, the placement shall be stopped until corrective action is taken.

Splices in wire fabric shall overlap sufficiently to allow two pairs of transverse wires to be tied together and no splice of less than 6 inches (150 mm) will be permitted. Splices in the #3 (10M) bars shall have a minimum lap of 12 inches (300 mm).

Where driveways cross sidewalks, additional reinforcing shall be placed in the sidewalk as indicated on the Drawings.

Portland cement concrete shall be placed in the forms and spaded, tamped and thoroughly consolidated until it covers the entire surface with a monolithic finish. The top surface shall be floated and troweled to a uniform smooth surface; then finished with a broom or wood float to a gritty texture unless indicated otherwise on the Drawings or as directed by the Engineer or designated representative. The outer edges and joints shall be rounded with approved tools to a

1/4-inch (6 mm) radius. Care will be exercised to prevent loss of dummy joints or rounded edges when applying the brush finish.

Portland cement concrete sidewalk ramps shall be formed to produce a finished surface with detectable warnings (Standard Detail 432S-2A) in accordance with the requirements of the American Disabilities Act and Texas Accessibility Standards (TAS), including Sections 4.29.2 and A4.29.2. The p.c. concrete sidewalk ramps shall be constructed in accordance with appropriate City of Austin Standard Details (Standard Details 432S-3, 432S-3A through 432S-3H, 432S-5, 432S-5A, 432S-5B, etc.).

Detectable warning for the ramps shall consist of raised truncated domes with a diameter of nominal 0.9 inch (23 mm), a height of nominal 0.2 inch (5 mm) and center-to-center spacing of nominal 2.35 inches (60 mm) and shall contrast visually with adjoining surfaces, either light on dark or dark-on-light. The material used to provide contrast shall be an integral part of the walking surface.

When indicated on the Drawings or as directed by the Engineer or designated representative, the construction of the sidewalk ramp shall include the installation of interlocking concrete paving units (Standard Specification Item No. 480S, "Concrete Paving Units"). The concrete paving units shall be constructed in accordance in accordance with Standard Specification Item No. 485S, "Concrete Paving Units for Sidewalk Ramps) and appropriate City of Austin Standard Details (Standard Details 432S-2A, 432S-3, 432S-3A through 432S-3H, 432S-5, 432S-5A and 432S-5B).

At the proper time after finishing, the surface shall be protected by a membrane, compound curing agent or by wetted cotton or burlap mats, conforming to Item No.409S, "Membrane Curing". The sides of the p.c. concrete shall be cured in the forms. If the forms are removed during the curing process, the curing shall be continued by the placement of fill against the exposed concrete edges or by other procedures conforming to Item No. 410S, "Concrete Structures". The top 4 inches (100 mm) of fill shall be clean topsoil conforming to Item No. 604S, "Seeding for Erosion Control".

Existing sidewalk that is scheduled for removal and replacement shall be removed and the underlying material shaped to the lines, grades and cross section as indicated in the drawings or as directed by the Engineer or designated representative. The removal and/or relocation of obstructions, including but not limited to signs, trash cans and benches on concrete pads, abandoned manholes, sprinkler control valves and landscaping, shall be performed, as indicated on the drawings, in a manner acceptable to the Engineer or designated representative. Removal and/or relocation of obstructions will be considered incidental work to this item and will not be paid for directly.

Existing PVC pipe drains in and behind curb shall be removed and replaced as required in new sidewalk and/or curb and gutter. In areas of proposed sidewalk construction, where curb and gutter is to remain in place, existing PVC pipe shall be cut far enough behind the back of curb to allow sufficient room for joint fittings to connect to new or salvaged PVC pipe.

The Contractor shall be responsible for removing and replacing mailboxes that are located in the construction area, while assuring that mail delivery will not be interrupted as a result of the construction activities. Mailboxes shall not be laid on the ground.

All necessary excavation, filling and grading of the slopes adjacent to the completed concrete sidewalks will be considered incidental work pertaining to this item and will not be paid for directly. The adjacent excavation and grading of the slopes shall be done in a manner acceptable to the Engineer or designated representative.

432S.5 Streetscape Furniture Installation Requirements

A. General General

Bicycle racks, benches and chairs, trash receptacles, tree wells and above grade tree wells and planters shall only be installed in sidewalks that are 12 feet (3.66 meters) or wider. When installation is indicated on the Drawings or directed by the Engineer or designated representative, these items shall be permanently installed as indicated in Standard Details 710S-4 and 710S-5; 432S-9B; 432S-7C, and 432S-7F; and 432S-8B. Above grade tree wells shall be installed in conformance with Standard Detail 432S-7E, while above grade tree planters shall be installed in conformance with Standard Detail Nos. 432S-7D and 432S-7G.

B. Location Requirements

1. Benches.

   Benches shall be placed either perpendicular to the curb with the center of the bench on line with trees and light poles and facing toward the building entry, or parallel to the building and within 6” (150 mm) of the building wall, facing out to the street.

   Bench siting shall be in conformance with Standard Detail No. 432S-9C in 12’ (3.6 M) or wider sidewalks and Standard Detail No. 432S-9D in sidewalks of width between 12’ (3.6 M) and 18’ (5.4 M).

2. Bike Racks.

   Bike racks are to be placed perpendicular to the curb with the centerline of the rack on line with trees and light poles.

   Bike rack siting shall be in conformance with Standard Detail No. 710S-6A in 12’ (3.6 M) or wider sidewalks and Standard Detail No. 710S-6B in sidewalks of width between 12’ (3.6 M) and 18’ (5.4 M).

3. Trash Receptacles.

   Trash receptacles shall either be placed along the curb, with the center line of the receptacle on line with the trees and light poles, or shall be located at the building entry in alignment with the structural bay system of the building. If located at the entry there shall be no more than 1 foot (300 mm) clearance between the receptacle and the building wall.

   Trash receptacle siting adjacent to curb ramps within an intersection shall be in conformance with Standard Detail No. 432S-8C in 12’ (3.6 M) or wider sidewalks.

P432S.6 Pedestrian Railing

When a pedestrian railing installation is required along sidewalks for pedestrian protection as indicated on the Drawings or directed by the Engineer or designated representative, this type of pedestrian railing shall be permanently installed in conformance with one of the following designated Standard Details: 707S-1, 707S-2, 707S-3 or 707S-4.

When a pedestrian railing installation is required along portions of sidewalks identified as ‘ramps’ for ADA accessibility purposes as indicated on the Drawings or directed by the Engineer or designated representative, this type of pedestrian railing shall be permanently installed in conformance with one of the following designated Standard Details: 707S-2, 707S-3 or 707S-4.

432S.7 Measurement

Accepted work performed as prescribed by this item will be measured by the square foot (square meter: 1 square meter is equal to 10.764 square feet) of surface area of "Concrete Sidewalk".

Accepted work performed as prescribed by "Sidewalk Ramps" will be measured per each for the type of ramp indicated on the Drawings.

Accepted work performed as prescribed by "Streetscape Appurtenances" will be measured per each for the type of appurtenance indicated on the Drawings.

Accepted work performed as prescribed by "Pedestrian Railing" will be measured per lineal foot of the type of railing indicated on the Drawings.

432S.8 Payment

The work performed as prescribed by this item for concrete sidewalk will be paid for at the unit bid price per square foot for "Concrete Sidewalk" and/or "Sidewalks Reconstruction"; per each for "Concrete Sidewalk Ramps" and "Streetscape Appurtenances" or per lineal foot for "Pedestrian Railing".

The unit bid price for new sidewalk shall include full compensation for excavating and/or removal and/or relocating obstructions, vegetating adjacent areas disturbed by sidewalk construction, preparing the subgrade; for furnishing and placing all materials including cushion material, all reinforcement, bar supports, joints, expansion joint materials, and for any other materials, manipulations, labor, tools, equipment, finishing, curing and incidentals necessary to complete the work.

The unit bid price for sidewalk reconstruction shall include full compensation for excavating and/or removal of existing sidewalk and other obstructions, relocating obstructions, replacing PVC drain pipe, re-vegetating adjacent areas disturbed by sidewalk construction, preparing the subgrade; for furnishing and placing all materials including cushion material, all reinforcement, bar supports, joints, expansion joint materials, and for any other materials, manipulations, labor, tools, equipment, finishing, curing and incidentals necessary to complete the work.

The unit bid price for ramps shall include full compensation for preparing the subgrade when not included as a separate item; for furnishing and placing all materials, manipulation, labor, tools, equipment and incidentals necessary to complete the work. All necessary excavation, filling and grading of the slopes adjacent to the completed concrete paver units will be included in the unit price bid for the item of construction in which this item is used, unless included as a separate pay item in the Contract bid form.

The unit bid price for streetscape appurtenances shall include full compensation for the individual item (i.e. bench, chair, bicycle rack, trash receptacle, street light or above grade tree planter), as well as the removal of existing sidewalk, preparation of footings, furnishing and placing all materials, manipulation and finishing, labor, tools, equipment and incidentals necessary to complete the work.

The unit bid price for pedestrian railing shall include full compensation for the complete installation of the specific pedestrian railing including but not limited to preparation of footings or curb, furnishing and placing all materials, manipulation and finishing, labor, tools, equipment and incidentals necessary to complete the work.

Payment will be made under one of the following:

New Sidewalks

Pay Item 432S-4:	New P.C. Concrete Sidewalks, 4 Inch thickness	Per Square Foot.
Pay Item 432S-5:	New P.C. Concrete Sidewalks, 5 Inch thickness	Per Square Foot.
Pay Item 432S-6:	New P.C. Concrete Sidewalks, 6 Inch thickness	Per Square Foot.
Pay Item 432S-7:	New P.C. Concrete Sidewalks, 7 Inch thickness	Per Square Foot.

Sidewalks Reconstruction

Pay Item 432SR-4:	Reconstruct Concrete Sidewalks to 4 Inch thickness, including removal of existing sidewalk	Per Square Foot.
Pay Item 432SR-5:	Reconstruct Concrete Sidewalks to 5 Inch thickness, including removal of existing sidewalk	Per Square Foot.
Pay Item 432SR-6:	Reconstruct Concrete Sidewalks to 6 Inch thickness, including removal of existing sidewalk	Per Square Foot.
Pay Item 432SR-7:	Reconstruct Concrete Sidewalks to 7 Inch thickness, including removal of existing sidewalk	Per Square Foot.

Ramps

Pay Item 432S - RP-1:	P.C. Sidewalk Curb Ramp with Pavers (Type I)	Per Each.
Pay Item 432S-RP-1A:	P.C. Sidewalk Curb Ramp with Pavers (Type IA)	Per Each.
Pay Item 432S-RP-1B:	P.C. Sidewalk Curb Ramp with Pavers (Type IB)	Per Each.

Streetscape Appurtenances

Pay Item 432S-SAC-1	Streetscape Bench (____ inches in length)	Per Each.
Pay Item 432S-SAC-2	Streetscape Chair	Per Each.
Pay Item 432S-SAC-3	Streetscape Bicycle Rack	Per Each.
Pay Item 432S-SAC-4	Streetscape Trash Receptacle	Per Each.
Pay Item 432S-SAC-5	Streetscape Street Light	Per Each.
Pay Item 432S-SAC-7C	Streetscape Tree Well for Concrete Sidewalks	Per Each.
Pay Item 432S-SAC-7D	Streetscape Above Grade Tree Planters with Bench	Per Each.
Pay Item 432S-SAC-7E	Streetscape Above Grade Tree Well with Seat	Per Each.
Pay Item 432S-SAC-7F	Streetscape Tree Well without Grate	Per Each.
Pay Item 432S-SAC-7G	Streetscape Above Grade Galvanized Steel Tree Planters	Per Each

Pedestrian Railing

Pay Item 432S-PRC-1	Pedestrian Railing (Standard 707S-1)	Per LF.
Pay Item 432S-PRC-2	Pedestrian ADA Railing – Option 1 (Standard 707S-2)	Per LF.
Pay Item 432S-PRC-3	Pedestrian ADA Railing – Option 2 (Standard 707S-3)	Per LF.
Pay Item 432S-PRC-4	Pedestrian ADA Railing – Option 3 (Standard 707S-4)	Per LF.

End

SPECIFIC CROSS REFERENCE MATERIALS
Specification 432S, “P. C. Concrete Sidewalks”

City of Austin Standard Specifications

Designation	Description
Item No. 111S	Excavation
Item No. 201S	Subgrade Preparation
Item No. 403S	Concrete for Structures
Item No. 406S	Reinforcing Steel
Item No. 407S	Fibrous Concrete
Item No. 408S	Expansion Joint Materials
Item No. 409S	Membrane Curing
Item No. 410S	Concrete Structures
Item No. 480S	Concrete Paving Unit
Item No. 485S	Concrete Paving Units for Sidewalk Ramps
Item No. 604S	Seeding for Erosion Control

City of Austin Standard Details

Designation	Description
432S-1	Sidewalk
432S-2A	Detectable Warning-Paver
432S-3	Type I Curb Ramps-Full Intersection
432S-3A	Type I Curb Ramps-T Intersection
432S-3B	Type IA/IB Curb Ramps-Full Intersection
432S-3C	Type IA/IB Curb Ramps-T Intersection
432S-3D	Combined Curb Ramps-Full Intersection
432S-3E	Combined Curb Ramps-T Intersection
432S-3F	Combined Sidewalk Curb Ramp with Pavers
432S-3G	Combined Sidewalk Curb Ramp with Pavers within Limited ROW
432S-3H	Type I Curb Ramps within PC/PT of Curb and Gutter
432S-5	Type I Sidewalk Curb Ramp
432S-5A	Type IA Sidewalk Curb Ramp
432S-7C	Tree Well for New Trees Planted Within Concrete Sidewalk 3.6 M (12') or Greater
432S-7D	Above Grade Tree Planters
432S-7E	Above Grade Tree Well with Bench
432S-7F	Tree Well Without Grate
432S-7G	Above Grade Galvanized Steel Tree Planters
432S-8B	Trash Receptacle Installation in Concrete Sidewalk
432A-8C	Furnishing Location in 12' (3.6 M) or greater Trash Receptacle Siting
432S-9B	Bench/Chair Installation in Sidewalks
432S-9C	Furnishing Location in 12' (3.6 M) or greater Sidewalks-Bench Siting
432S-9D	Furnishing Location in Greater than 12' (3.6 M) or Less than 18' (5.4 M) Sidewalks-Bench Siting
707S-1	Pedestrian Railing
707S-2	Pedestrian ADA Railing – Option 1
707S-3	Pedestrian ADA Railing – Option 2
707S-4	Pedestrian ADA Railing – Option 3
710S-4	Bicycle Rack Installation in Concrete Sidewalks (Alternate 1)
710S-5	Bicycle Rack Installation in Concrete Sidewalks (Alternate 2)

710S-6A	Furnishing Location in 12' (3.6 M) or greater Sidewalks-Bicycle Rack Siting
710S-6B	Furnishing Location in Greater than 12' (3.6 M) or Less than 18' (5.4 M) Sidewalks-Bicycle Rack Siting

American Disabilities Act, Federal Register; Volume 56, No. 144; July 26, 1991
ADA Accessibility Guidelines For Building And Facilities

Designation	Description
Section 4.29	Detectable Warnings on Walking Surfaces
Section A4.29.2	Detectable Warnings on Walking Surfaces

Architectural Barriers; Texas Civil Statutes, Article 9102; June 14, 1995
Texas Accessibility Standards (TAS)

Designation	Description
Section 4.29	Detectable Warnings on Walking Surfaces
Section A4.29.2	Detectable Warnings on Walking Surfaces

RELATED CROSS REFERENCE MATERIALS

City of Austin Standard Contract Documents

Designation	Description
00700	General Conditions
01500	Temporary Facilities
01550	Public Safety and Convenience

City of Austin Utilities Criteria Manual

Designation	Description
Section 5.2.3	Utility Adjustments For Roadway Construction Projects

City of Austin Standard Specifications

Designation	Description
Item No. 102S	Clearing and Grubbing
Item No. 104S	Removing Portland Cement Concrete
Item No. 110S	Street Excavation
Item No. 132S	Embankment
Item No. 203S	Lime Treatment for Materials In Place
Item No. 204S	Portland Cement Treatment for Materials In Place
Item No. 230S	Rolling (Flat Wheel)
Item No. 232S	Rolling (Pneumatic Tire)
Item No. 234S	Rolling (Tamping)
Item No. 236S	Rolling (Proof)
Item No. 360S	Concrete Pavement
Item No. 402S	Controlled Low Strength Material
Item No. 404S	Pneumatically Placed Concrete
Item No. 405S	Concrete Admixtures
Item No. 411S	Surface Finishes for Concrete

433S.1 Description

This item shall govern construction of Portland Cement (p.c.) concrete driveways, as herein specified, on an approved subgrade, in conformity with the lines, grades and cross section indicated on the Drawings, identified in Standard Detail Series 433S, or as established by the Engineer or designated representative.

This specification is applicable for projects or work involving either inch-pound or SI units. Within the text, the inch-pound units are given preference followed by SI units shown within parentheses.

433S.2 Submittals

The submittal requirements of this specification item include:

A. Class A and/or Item 360S p.c. concrete mix design,

B. Type of Installation (i.e. Type I, Flared Type I, Type II, etc.) and construction details (i.e. cushion layer, base, reinforcing steel, joints, curing membrane),

C. Identification of the type, source, mixture, Pure Live Seed (PLS) and rate of application of the seeding.

433S.3 Materials

A. Concrete

The Portland Cement Concrete for a Type I driveway (Standards 433S-1 and 433S-1A shall conform to Class A, Section 403S.7 (Table 4) of Standard Specification Item No. 403S, "Concrete for Structures." The Portland Cement Concrete for a Type II driveway (Standard 433S-2) shall conform to a normal concrete mix design for concrete pavement, Section 360S.4(2) of Standard Specification Item No. 360S, "Concrete Pavement".

B. Reinforcing Steel

Reinforcing steel and welded wire fabric shall conform to Standard Specification Item No. 406S, "Reinforcing Steel".

C. Expansion Joint Materials

Expansion joint materials shall conform to Standard Specification Item No. 408S, "Expansion Joint Materials".

D. Membrane Curing Compound

Membrane curing compound shall conform to Standard Specification Item No. 409S, "Membrane Curing".

E. Cushion Layer

The Cushion layer shall consist of crusher screenings, gravel or coarse sand.

433S.4 Construction Methods

All forms and forming, placement of reinforcement, placement of concrete, form removal, finishing and curing shall conform to Standard Specification Item No. 410S, "Concrete Structures".

A. Subgrade Preparation

The subgrade shall be excavated, prepared and shaped to the lines, grades and cross sections indicated on the Drawings or as directed by the Engineer or designated representative. The subgrade shall be thoroughly compacted in accordance with Standard Specification Item No. 201S, "Subgrade Preparation". A 2-inch (50-mm) minimum compacted thickness cushion shall be spread, wetted thoroughly, tamped and leveled. The cushion shall be moist at the time the p.c. concrete is placed.

If the subgrade is undercut or natural ground is located below the top of subgrade, the necessary backfill material shall conform with Standard Specification Item 130S, "Borrow" and shall be compacted with a mechanical tamper. Hand tamping will not be permitted.

Where the subgrade material consists of gravel or includes 70 percent of rock, the 2-inch (50-mm) cushion layer may not be required. The Engineer or designated representative will determine if the subgrade meets the above requirements.

B. Forms

Forms shall be of metal, well-seasoned wood or other approved material of a section satisfactory to the Engineer or designated representative. Wood forms shall not be less than 2 inches (50 mm) nominal thickness for straight runs and 1-inch (25-mm) nominal thickness for curved runs. Forms shall be a section satisfactory to the Engineer or designated representative and clean, straight, free from warp and of a depth equal to the thickness of the finished work.

All forms shall be securely staked to line and grade and maintained in a true position during the placement of p.c. concrete.

C. Joints

Joints shall be of the type and spacing shown on the Drawings. Expansion joint material, 3/4 inch (19 mm) thick, shall be provided where the new construction abuts the existing sidewalks or driveways or as directed by the Engineer or designated representative. The expansion joint material shall be placed vertically and shall extend the full depth of the p.c. concrete. Similar expansion material shall be placed around all obstructions protruding through the driveway. Weakened plane joints shall be located on 10-foot (3-meter) centers or as directed by the Engineer or designated representative. Normal dimensions of the weakened plane groove joints shall be 1/4-inch (6.25-mm) wide and 3/4 inch (19 mm) deep.

D. Reinforcement

Reinforcement for Type I driveways shall consist of 1 layer of 6 x 6 by W 1.4 x W 1.4 (150 x 150 by MW9 x MW9) wire fabric or No. 3 (10 M) bars placed not more than 18 inches (450 mm) on center, both directions. Reinforcement for Type II driveways shall consist of 1 layer of layer of No. 4 (13M) bars placed no more than 18 inches (450 mm) on center, both directions.

All reinforcements shall be accurately placed equidistant from the top and bottom of the p.c. concrete slab and held firmly in place by means of bar supports of adequate strength and number that will prevent displacement and keep the steel at its proper position. In no instance shall the steel be placed directly on the subgrade or sand cushion layer.

Prior to placement of the concrete, the reinforcement installation shall be inspected by the Engineer or designated representative to insure conformance with the drawings, specifications and this item. In addition, care shall be exercised to keep all steel in its proper position during the placement of p.c. concrete. If during placement of the concrete, the reinforcement is observed to loose bar support, float upward or move in any direction, the placement shall be stopped until corrective action is taken.

Splices in wire fabric shall overlap sufficiently to allow two pairs of transverse wires to be tied together and no splice of less than 6 inches (150 mm) will be permitted. Splices in the No. 3 (10 M) and No. 4 (13M) bars shall have a minimum lap of 12 inches (300 mm).

E. P.C. Concrete Placement and Finishing

The p.c. concrete shall be placed in the forms and spaced, tamped and thoroughly compacted until it entirely covers the surface and has a monolithic finish. The top surface shall be floated and troweled to a uniform smooth surface, then finished with a broom or wood float to a gritty texture unless otherwise indicated on the Drawings. The outer edges and joints shall be rounded with approved tools to a 1/4-inch (6.3 mm) radius. Care shall be exercised to prevent loss of dummy joints or rounded edges when applying the broom finish.

F. Curing

At the proper time after finishing, the surface shall be protected by a membrane compound curing agent in conformance with Standard Specification Item No. 409S, "Membrane Curing" or by wetting cotton or burlap mats. Either method shall be subject to approval by the Engineer or designated representative.

Traffic shall be barricaded from using the driveway for a minimum of 4 days after initial placing and may be opened to traffic only with approval of the Engineer or designated representative.

G. Incidental Work

All necessary excavation, filling and grading of the slopes, adjacent to the completed pcc driveways, will be considered incidental work pertaining to this item and will not be paid for directly.

The adjacent excavation and grading of the slopes shall be done with topsoil conforming to Standard Specification Item No. 130S, "Borrow". When turf is to be established, the preparation of the seedbed shall conform to Standard Specification Item No. 604S, "Seeding for Erosion Control", in a manner acceptable to the Engineer or designated representative.

433S.5 Measurement

Accepted work performed as prescribed by this item will be measured by the square foot (square meters: 1 square meter equals 10.764 square feet) of surface area of the specific type of p.c. concrete driveway.

433S.6 Payment

The work performed as prescribed by this item will be paid for at the unit bid price per square foot for "Concrete Driveways". The unit bid price shall include full compensation for preparation of the subgrade; furnishing and placing all materials, including cushion layer, all reinforcing steel, bar supports and expansion joint materials; and any other materials, manipulations, labor, tools, equipment and incidentals necessary to complete the work.

Payment will be made under:

Pay Item No. 433S-A:	Type I P.C. Concrete Driveway	Per Square Foot.
Pay Item No. 433S-B:	Flared Type I P.C. Concrete Driveway	Per Square Foot.
Pay Item No. 433S-C:	Type II P.C. Concrete Driveway	Per Square Foot.

End

SPECIFIC CROSS REFERENCE MATERIALS
Specification Item No. 433S, "P.C. Concrete Driveways"

City of Austin Standard Specifications

Designation	Description
Item No. 130S	Borrow
Item No. 201S	Subgrade Preparation
Item No. 360S	Concrete Pavement
Item No. 403S	Concrete for Structures, Section 403S.7
Item No. 403S	Concrete for Structures, Table 4: Classes of Concrete
Item No. 406S	Reinforcing Steel
Item No. 408S	Expansion Joint Materials
Item No. 409S	Membrane Curing
Item No. 410S	Concrete Structures
Item No. 604S	Seeding for Erosion Control

City of Austin Standard Details

Designation	Description
No. 433S-1	Type I Driveway (1 & 2 Family Residential Use Only)
No. 433S-1A	Flared Type I Driveway (1 & 2 Family Residential Use Only)
No. 433S-2	Type II Driveway

RELATED CROSS REFERENCE MATERIALS
Specification Item No. 433S, "P.C. Concrete Driveways"

City of Austin Standard Specifications

Designation	Description
Item No. 430S	P.C. Concrete Curb and Gutter
Item No. 431S	Machine Laid PCC Curb and Gutter
Item No. 432S	Concrete Sidewalks
Item No. 434S	P.C. Concrete Medians and Islands
Item No. 436S	P.C. Concrete Valley Gutters
Item No. 470S	Curb Cuts for Sidewalk Ramps and Driveways
Item No. 606S	Fertilizer

Item No. 470S
Curb Cuts for Sidewalk Ramps and Driveways

470S.1 Description

This item shall govern horizontal and vertical curb saw cuts, which are undertaken on existing or newly placed Portland cement concrete curb, in order to accommodate the construction of new concrete sidewalk ramps and/or driveways at the locations indicated on the Drawings or as directed by the Engineer or designated representative. The curb cutting operation shall be conducted from the street side of the existing or newly placed curb.

This specification is optional and is applicable for projects or work involving either inch-pound or SI units. Within the text inch-pound units are given preference followed by SI units shown within parentheses.

470S.2 Submittals

The submittal requirements of this specification item include:

A. Manufacturer and model number of saw to be used for curb cuts.

B. Documentation that the saw that is to be used on the project is designated specifically to curb cuts.

470S.3 Materials

A diamond-blade-cutting saw shall be utilized for all required curb sawing/cutting. The saw shall be capable of cutting existing or newly placed curb material into the shape of a ramp and/or driveway; leaving a smooth, accurate top face. The saw shall be specifically designed for this purpose and shall be approved by the Engineer or designated representative prior to the start of any curb cut work.

A diamond-grinding wheel shall be used for rounding the sawed concrete edges.

470S.4 Construction Methods

The curb shall be sawn in accordance with City of Austin Standard Detail 470S-1 or as directed by the Engineer or designated representative. The sawing shall be made along neat lines and shall result in smooth edges and top faces. The length of curb face, which must be removed in order to conform to the proposed sidewalk ramp or driveway, shall be sawn full depth at the bottom of the curb face using a diamond saw blade.

The saw cutting of the curb face shall be initiated at an elevation ½ inch (12.5 millimeters) above the existing gutter and extended at an angle of ¾ inch per foot (63 mm per meter) upwards and away from the gutter pan to conform with the new sidewalk ramp or driveway grade. End cuts shall be sawn full depth on an angle so that the saw cut face provides a dimension of 55 to 60 inches (1.4 to 1.5 meters) for ADA ramps and 30 inches (750mm) for driveways (Standard Detail No. 470S-1). The corners of the tops of the end cuts shall be ground using a diamond-grinding wheel to a radius of ¼ inch (6 mm).

Special care shall be taken to insure that there is no disturbance or damage to the existing roadway pavement, sidewalk pavement or curbs scheduled to remain. Any

damage to remaining pavements, sidewalks and/or curb due to the Contractor's operations shall be repaired at the Contractor's sole cost and expense.

The work under this specification item shall also include the disposal of all concrete curb materials removed during the curb cutting operation. Disposal shall conform to the requirements of City of Austin Standard Specification Item No. 401S, "Structural Excavation and Backfill".

470S.5 Measurement

Accepted work as prescribed by this item shall include the removal and disposal of all sawn material and shall be measured by the number of lineal feet (lineal meters: 1 meter is equal to 3.281 feet) of sawcutting from top of curb cut at beginning to top of curb cut at ending for each proposed sidewalk ramp location that are completed in accordance with the Drawings, Standard Detail or as directed by the Engineer or designated representative.

470S.6 Payment

The work performed as prescribed by this item will be paid for at the unit bid price per lineal foot of "Curb Cuts" for sidewalk ramps and driveways. The bid price shall include full compensation for the cost of all labor, materials and equipment necessary to complete the Work, the removal and disposal of the curb cut, and the cost of any repairs necessitated from damage produced during the Contractor's operations.

Pay Item No. 470S-D: Curb Cuts for Driveways ---------- Per Lineal Foot.

Pay Item No. 470S-R: Curb Cuts for Sidewalk Ramps ------ Per Lineal Foot.

End

SPECIFIC CROSS REFERENCE MATERIALS
Specification 470S, "Curb Cuts For Sidewalk Ramps and Driveways"

City of Austin Technical Specifications

Designation	Description
Item No. 401S	Structural Excavation and Backfill

City of Austin Standard Details

Designation	Description
470S-1	Typical Curb Cuts for Sidewalk Ramps

RELATED CROSS REFERENCE MATERIALS
Specification 470S, "Curb Cuts For Sidewalk Ramps and Driveways"

City of Austin Technical Specifications

Designation	Description
Item No. 104S	Removing Concrete
Item No. 110S	Street Excavation
Item No. 340S	Hot Mix Asphaltic Concrete Pavement
Item No. 360	Concrete Pavement
Item No. 370S	Concrete Pavers

Item No. 375S	Concrete Pavers for Sidewalk Ramps
Item No. 403S	Concrete for Structures
Item No. 410S	Concrete Structures
Item No. 430S	Concrete Curb and Gutter
Item No. 431S	Machine Laid Curb and Gutter
Item No. 432S	Concrete Sidewalks
Item No. 433S	Concrete Driveways

RELATED CROSS REFERENCE MATERIALS - Continued
Specification 470S, "Curb Cuts For Sidewalk Ramps and Driveways"

City of Austin Technical Specifications

Designation	Description
Item No. 434S	Concrete Median and Islands
Item No. 602S	Sodding for Erosion Control
Item No. 604S	Seeding for Erosion Control
Item No. 610S	Preservation of Trees and Other Vegetation

City of Austin Standard Details

Designation	Description
430S-1	Curb and Gutter Section
430S-3	Curb Expansion Joint Dowel Detail
430S-4	Concrete Backfill Under Curb & Gutter
432S-1	Sidewalk
432S-3	Intersection Curb Ramps
432S-3A	Curb Ramps at T-Type Intersections
432S-3B	Intersection Curb Ramps with Returned Curb
432S-3C	Curb Ramps with Returned Curb at T Intersections
432S-3D	Combined Curb Ramps
432S-3E	Combined Curb Ramp at T type Intersection
432S-3F	Combined Sidewalk Curb Ramp with Pavers
432S-5	Sidewalk Curb Ramp With Pavers (type I)
432S-5A	Sidewalk Curb Ramp With Pavers (type IA)
432S-5B	Sidewalk Curb Ramp With Pavers (type IB)
432S-6	Concrete Stamp
433S-1	Type I Driveway
433S-2	Type II Driveway
610S-1	Tree Protection Fence Locations

Texas Department of Transportation:
Standard Specifications for Construction and Maintenance of Highways, Streets, and Bridges

Designation	Description
Item No. 104	Removing Concrete
Item No. 420	Concrete Structures

Item No. 503S
Frames, Grates, Rings and Covers

503S.1 Description

This item shall govern furnishing and installation of frames, grates, rings and covers for inlets, manholes and other structures indicated on the Drawings.

This specification is applicable for projects or work involving either inch-pound or SI units. Within the text, the inch-pound units are given preference followed by SI units shown within parentheses.

503S.2 Submittals

The submittal requirements of this specification item include manufacturer, model number, description, painting requirements and characteristics of frames, grates, rings, covers, height adjustment insert and nuts and bolts required for completion of the work.

503S.3 Materials

The Contractor shall submit descriptive information and evidence that the materials and equipment the Contractor proposes for incorporation in the Work is the kind and quality that satisfies the specified functions and quality. The City of Austin Water and Wastewater Utility Standard Products Lists (SPLs) form a part of these Specifications. Contractors may, when appropriate, elect to use products from the SPLs; however, submittal to the Engineer or designated representative is still required. If the Contractor elects to use any materials from these lists, each product shall be completely and clearly identified by its corresponding SPL number when making the product submittal.

The purpose of the SPLs is to expedite the review by the Engineer or designated representative and, if necessary, the City of Austin Water and Wastewater Utility Standard Products Committee of Contractor product submittals. The SPL's should not be interpreted as being a pre-approved list of products necessarily meeting the requirements for a given construction Project. Items contained in the SPL cannot be substituted for items that are shown on the Drawings, called for in the specifications, or specified in the Bidding Requirements, Contract Forms and Conditions of Contract, unless approved by the Engineer or designated representative in conjunction with the Water and Wastewater Utility Standard Products Committee. The Standard Product List current at the time of plan approval will govern.

A. Welded Steel

Welded steel grates and frames shall conform to the number; size, dimensions and details indicated on the Drawings and shall be welded into an assembly in accordance with those details. Steel shall conform to the requirements of ASTM A 36/A 36M, "Specification for Structural Steel".

B. Castings

Castings, whether Carbon-Steel, Gray Cast Iron or Ductile Iron shall conform to the shape and dimensions indicated on the Drawings and shall be clean substantial castings, free from sand or blowholes or other defects. Surfaces of the castings shall be free from burnt on sand and shall be reasonably smooth. Runners, risers, fins and other cast on pieces shall be removed from the castings and such areas ground smooth. Bearing surfaces between manhole rings and covers or grates and frames shall be cast or machined with such precision that uniform bearing shall be provided throughout the perimeter area of contact. Pairs of machined castings shall be matchmarked to facilitate subsequent identification at installation with the exception of water and wastewater manhole and valve castings. These manhole and valve castings shall be fabricated with such draft, tolerances, bolt hole spacing, etc., that all rings and covers of a particular type or class are interchangeable and match-marking will not be required.

Steel castings shall conform to ASTM A 27/27M, “Specifications for Steel Castings, Carbon, for General Application”. Grade 70-36 (480-250) shall be furnished unless otherwise specified on the Drawings.

Cast iron castings shall conform to ASTM A 48, “Specification for Gray Iron Castings”, Class 30.

Ductile Iron castings shall conform to ASTM A 536, “Specification for Ductile Iron Castings”. Grade 60-40-18 (415-275-125) shall be used unless otherwise indicated on the Drawings.

C. Manhole Cover Riser Rings

Height-adjustment inserts for wastewater manhole rings, which are used for raising standard manhole covers, shall be those models listed in Water and Wastewater Standard Products List item QPL WW-330.

D. Nuts and Bolts

Nuts and bolts shall be hex head 5/8” x 2.5” (16 mm x 63.5 mm) #11 National Coarse Thread, Type 316 stainless steel. For bolted manhole covers, a thin film of an approved "Anti-freeze" compound, approved by the Engineer or designated representative, shall be applied to all bolts.

E. Mortar

Unless otherwise specified or approved by the Engineer or designated representative, the mortar for bedding castings shall consist of one (1) part Portland cement and three (3) parts sand and sufficient water to provide the desired consistency. The gradation of the fine aggregate shall meet the requirements for Grade No. 1, Item No. 403, "Concrete for Structures".

503S.4 Construction Methods

Frames, grates, rings and covers shall be constructed of the specified materials in accordance with the details indicated on the Drawings or in the City of Austin Standard

Details. The Frames, grates, rings and covers shall be placed carefully to the lines or grades indicated on the Drawings or as directed by the Engineer or designated representative.

All welding shall conform to the requirements of the ANSI/AWS Structural Welding Code D1.1. Welded frames, grates, rings and covers shall be given 1 coat of a commercial grade red lead oil paint and 2 coats of commercial grade aluminum paint. All coats shall be a minimum of 1.5 mils (0.4 mm), dry.

Painting of gray iron castings will not be required, except when used in conjunction with structural steel shapes.

503S.5 Measurement and Payment

Frames, grates, rings and covers will not be measured and payment for furnishing all materials, tools, equipment, labor and incidentals to complete the Work will be included in the Bid Items which constitute the complete structures.

End

SPECIFIED Cross Reference Materials
Standard Specification Item Number 503S, "Frames, Grates, Rings and Covers"

City of Austin Standard Specifications

Designation	Description
Item No. 403S	Concrete for Structures

City of Austin Water and Wastewater Standard Products List

Designation	Description
QPL WW-330	Manhole Cover Riser Rings for raising City of Austin Standard Manhole Covers

American Society for Testing Materials (ASTM)

Designation	Description
A36/A36M	Specification for Structural Steel
A27/A27M	Specification for Steel Castings, Carbon, for General Application
A48	Specification for Gray Iron Castings
A536	Specification for Ductile Iron Castings

ANSI/AWS

Designation	Description
Code D 1.1	Structural Welding Code

RELATED Cross Reference Materials
Standard Specification Item Number 503S, "Frames, Grates, Rings and Covers"

City of Austin Standard Specifications

Designation	Description
Item No. 504S	Adjusting Structures
Item No. 510	Pipe

City of Austin Standard Details

Designation	Description
No. 503S-1	457mm (18") Cover and Frame
No. 503S-2S	Storm Sewer Manhole Ring and 610 mm (24") Cover
No. 503S-2W	Sanitary Sewer Manhole Ring and 610 mm (24") Cover
No. 503S-3S	Bolted Storm Sewer Manhole Ring and 610 mm (24") Cover
No. 503S-3W	Bolted Sanitary Sewer Manhole Ring and 610 mm (24") Cover
No. 503S-4S	Storm Sewer Manhole Ring and 813 mm (32") Cover
No. 503S-4W	Sanitary Sewer Manhole Ring and 813 mm (32") Cover
No. 503S-5S	Bolted Storm Sewer Manhole Ring and 813 mm (32") Cover
No. 503S-5W	Watertight Manhole Ring and 813 mm (32") Cover
No. 506S-2	Major Manhole Adjustment
No. 506S-11	Storm Sewer Manhole Details

TxDOT Specifications

Designation	Description
Item 421	Portland Cement Concrete

Item No. 504S
Adjusting Structures

504S.1 Description

This item shall govern the removal and replacement of surfacing, furnishing of materials, adjusting and/or repositioning existing structures, valve boxes, pull boxes, survey monument boxes and water meters in accordance with these specifications to the locations or elevations indicated on the Drawings or as directed by the Engineer or designated representative. This item shall also govern any pumping, bailing and drainage required to complete the Work and Standard Specification Item No. 509S, "Excavation Safety Systems" for trench walls when indicated on the Drawings.

This specification is applicable for projects or work involving either inch-pound or SI units. Within the text the inch-pound units are given preference followed by SI units shown within parentheses

504S.2 Submittals

The submittal requirements of this specification item include:

A. Aggregate type, gradations and physical characteristics for the Portland cement concrete mix.

B. Proposed proportioning of materials for the mortar mix.

C. Type structures and proposed adjustment technique (lowering, raising, lateral displacement).

D. Type structure, repair technique and materials to be furnished (new replacement or reuse of existing) Type of mixing plant and associated equipage including chart indicating the calibration of each cold bin

504S.3 Materials

Precast reinforced concrete rings and castings in good condition, which are removed from the structures to be adjusted, may be reused with the written approval of the Engineer or designated representative. Additional materials required shall conform to the details indicated on the Drawings.

A. Portland Cement Concrete

The Portland cement concrete shall be Class A conforming to Standard Specification Item No. 403S, "Concrete for Structures".

B. Mortar

Unless otherwise specified or approved by the Engineer or designated representative, the mortar for bedding castings shall consist of one (1) part Portland cement and three (3) parts sand, by volume based on dry materials. Sufficient water will be added to provide the desired consistency. The gradation of the fine aggregate shall meet the requirements for "Fine Aggregate" as given in Standard Specification Item No. 403S, "Concrete for Structures".

504S.4 Construction Methods

All adjustments shall be completed prior to the placement of the final surface.

Pull box and valve box components scheduled for reuse shall be carefully removed and the contact areas shall be cleaned of all mortar, concrete, grease and sealing compounds. Any items broken in the process of removal and cleaning shall be replaced in kind by the Contractor at its own expense.

If the adjustment involves slight lowering or raising a valve box or survey monument box, the outside shell of a slip or screw casing shall be excavated to its full length and adjusted to the proposed grade. Pipe castings shall be excavated to the depth required to cut from or weld a section to the casing as may be needed to adjust the ring to the proposed elevation. The ring shall be welded to the casing prior to pouring concrete around the casing.

If the adjustment involves a vertical (lowering or raising) or a horizontal reassignment of a water meter and the property owner's cut off valve, this work shall be completed in accordance with Standard Installation Details included in the City of Austin Standard Details Series (501S-1, 504S-3, 511S-13A, 511S-13B, etc.).

After the adjustments have been completed and cured, structures within the paved area shall be paved as indicated on the Drawings.

504S.5 Measurement

The work performed and materials furnished as prescribed by this item as indicated shall be measured per each.

504S.6 Payment

The work performed, materials furnished and measures as provided above, will be paid by the unit bid price per each. The price shall include full compensation for furnishing all materials, handling, placing, labor, tools, equipment and incidentals necessary to complete the work.

Payment will be made under one of the following:

Pay Item No. 504S-1WM:	Adjusting Water Meters -	Per Each
Pay Item No. 504S-1RM:	Repositioning & Adjusting Water Meters -	Per Each
Pay Item No. 504S-3G:	Adjusting Gas Valve Boxes to Grade -	Per Each
Pay Item No. 504S-3S:	Adjusting Survey Monument Boxes to Grade -	Per Each
Pay Item No. 504S-3W:	Adjusting Water Valve Boxes to Grade -	Per Each
Pay Item No. 504S-4PB:	Adjusting Pull Boxes to Grade -	Per Each

End

SPECIFIC CROSS REFERENCE MATERIALS
Specification 504S, "Adjusting Structures"

City of Austin Standard Specifications

Designation	Description
Item No. 403S	Concrete for Structures
Item No. 509S	Excavation Safety Systems

City of Austin Standard Details

Designation	Description
No. 501S-1	Encasement Detail W/ Casing Spacers
No. 504S-3	Gas Valve Casing Adjustment
No. 511S-13A	Water Valve Box Adjustment to Grade w/ Full Depth Concrete
No. 511S-13B	Water Valve Box Adjustment to Grade w/ Concrete and HMAC

RELATED CROSS REFERENCE MATERIALS
Specification 504S, "Adjusting Structures"

City of Austin Standard Specifications

Designation	Description
Item No. 501S	Jacking or Boring
Item No. 503S	Frames, Grates, Rings and Covers
Item No. 505S	Concrete Encasement and Encasement Pipe
Item No. 507S	Bulkheads
Item No. 508S	Miscellaneous Structures and Appurtenances
Item No. 511S	Water Valves

City of Austin Standard Details

Designation	Description
No. 1100S-1	Casting Adjustment
No. 725S-1	Monument, Type A Survey Identification Marker
No. 725S-2	Monument, Type B Survey Identification Marker
No. 725S-3	Monument, Type C Survey Identification Marker
No. 725S-7	Survey Identification Marker Non-Traffic Construction Detail
No. 725S-10	Survey Identification Marker Roadway Construction Detail
No. 725S-11	Adjustable Valve Box For Survey Monument

Texas Department of Transportation: Standard Specifications for Construction and Maintenance of Highways, Streets, and Bridges

Designation	Description
Item No.421	Portland Cement Concrete

Item No. 505S
Concrete Encasement and Encasement Pipe

505S.1 Description

This item shall govern the furnishing of materials and the methods of constructing a Portland cement concrete encasement or encasement pipe in a trench.

This specification is applicable for projects or work involving either inch-pound or SI units. Within the text and accompanying tables, the inch-pound units are given preference followed by SI units shown within parentheses.

505S.2 Submittals

The submittal requirements of this specification item include:

A. Type, of pipe, construction methods and sequence,

B. Aggregate types, gradations and physical characteristics for the Portland cement concrete mix,

C. Proposed proportioning of materials for the mortar mix.

505S.3 Materials

A. Portland Cement Concrete

The Portland cement concrete shall conform to Class D Concrete, Item No. 403S, "Concrete for Structures".

B. Pipe

Portland Cement concrete pipe shall conform to ASTM C-76, Class III or better.

Corrugated Metal Pipe (CMP) shall conform to Section 510.2 (8) (o) of the City of Austin Standard Specification Item No. 510, "Pipe".

Steel Pipe shall conform to ASTM A134 with a minimum thickness of 3/8 inch (9.5 mm) for pipe with a diameter of 16 inches (400 mm) and greater.

C. Grout

Grout shall consist of not less than 6 sacks Portland cement per cubic yard (335 kilograms Portland cement per cubic meter) and clean washed sand mixed with water. The grout shall have a consistency such that the grout will flow into and completely fill all voids. If allowed by the Engineer or designated representative, an air entraining admixture may be added to facilitate placement.

505S.4 Construction Methods

When indicated on the Drawings or acceptable to Engineer or designated representative, concrete encasement shall be placed to protect the pipe. Pipe or bedding shall not be placed where:

(a) the top of the pipe would have less than 30 inches (750 mm) of cover from finish grade,

(b) the ground water invades the trench, or

(c) the trench bottom is of unstable material.

If either of these conditions is encountered, the Engineer or designated representative shall be notified and may direct the Contractor to:

(a) encase the pipe with concrete,

(b) change pipe material, or

(c) use a higher strength class of pipe.

Concrete encasement shall extend from 6 inches (150 mm) below to 6 inches (150 mm) above the outer projections of the pipe over the entire width of the trench in accordance with the City of Austin Standard Detail 501S-1," Encasement Detail w/ Casing Spacers".

The ends of the encasement pipe shall be bulkheaded (Standard Specification Item No. 507S) with concrete blocks, bricks or stones, dry-stacked without mortar, sufficient to prevent the intrusion of trench backfill material into the encasement, but fitted loosely enough to facilitate the escape of water from the encasement should carrier pipe leakage or failure occur.

505S. 5 Measurement

Concrete encasement will be measured by the lineal foot (meter: 1 meter equals 3.281 feet), for size of pipe being encased, complete in place. The measurement will be made between ends of the encasement, along the central axis as installed.

Encasement pipe installed by open cut will be measured by size of encasement installed, complete in place. The measurement will be made between the ends of the pipe, along the central axis as installed.

505S.6 Payment

Work performed and materials furnished as prescribed by this item will be included in a unit price bid item from Standard Specification Item No. 510, "Pipe" unless included as a separate pay item in the contract.

When included for payment, it shall be measured as provided under "Measurement" and will be paid at the unit bid price per lineal foot for "Concrete Encasement" or "Encasement Pipe" of the size indicated on the Drawings. The unit bid price shall include full compensation for furnishing all materials, pipe for all preparation, hauling, installation and for all labor, tools, equipment and incidentals necessary to complete the work, including bench excavation and disposal of surplus material.

Payment, when included as a contract Pay Item, will be made under one of the following:

Pay Item No. 505*S*-A:	Concrete Encasement for ___ Dia. Pipe -	Per Lineal Foot.
Pay Item No. 505*S*-B:	Encasement Pipe ___ Dia., Type ___, -	Per Lineal Foot.

End

SPECIFIC Cross Reference Materials
Standard Specification Item No. 505S, “Encasement and Encasement Pipe"

City of Austin Standard Specification Items

Designation	Description
Item 403S	Concrete For Structures
Item 507S	Bulkheads
Item 510	Pipe
Section 510.2(8)(o)	Corrugated Metal Pipe (CMP)

City of Austin Standard Details

Designation	Description
Detail 501S-1	Encasement Detail w/ Casing Spacers

American Society for Testing and Materials (ASTM)

Designation	Description
A-134	Specification for Pipe, Steel, Electric-Fusion (Arc)-Welded (Sizes NPS 16 and Over)
C-76/C-76M	Specification for Reinforced Concrete Culvert, Storm Drain, and Sewer Pipe

RELATED Cross Reference Materials
Standard Specification Item No. 505S, “Encasement and Encasement Pipe"

TxDOT Specifications

Designation	Description
Item 421	Portland Cement Concrete
Section 421.9	Quality of Concrete
Section 421.2(8)	Mortar and Grout

City of Austin Standard Specification Items

Designation	Description
Item No. 501S	Jacking or Boring Pipe
Item No. 506	Manholes
Section 510.2(8)(c)	Concrete pipe
Section 510.2(8)(m)	Steel Pipe
Item No. 593S	Concrete Retards

Item No. 506
Manholes

506.1 Description

This item governs construction of pre-cast and cast-in-place wastewater manholes, storm water manholes, storm water junction boxes and cast-in-place wastewater junction boxes, complete in place, including excavation, installation, backfilling and surface restoration; required items including rings, covers, coatings, and appurtenances; and incidental work such as pumping and drainage necessary to complete the work. Contractor-performed acceptance testing is required for wastewater manholes.

506.2 Qualifications

Applicators of coatings to the interior surfaces of wastewater manholes, as specified in 506S.4.R and 506S.5.J, shall be listed on Standard Products List WW-511.

506.3 Project Submittals

A. Products and Materials

The Contractor shall submit descriptive information and evidence that the materials the Contractor proposes for incorporation in the Work are of the kind and quality that satisfy the requirements in the Contract Documents. The City of Austin Water Utility Standard Products Lists are considered a part of the Specifications for the Work. The Contractor shall use products from the SPLs for all water and wastewater construction unless alternative products are shown on the Drawings; called for in the specifications; or specified in the Bidding Requirements, Contract Forms and Conditions of the Contract.

The products included in the Standard Products Lists current at the time of plan approval shall govern; unless a specific product or products on the lists have subsequently been removed from those SPLs because of quality or performance issues. Products and materials that are not covered by SPLs shall meet the requirements in the contract documents.

Submittals for the products and materials covered by this specification shall include manufacturer catalog sheets, technical data sheets, shop drawings, product or material test results, requirements listed below, and any other information needed to adequately describe the product or material. For products covered by SPLs, the submittal shall include a copy of the applicable SPL with the proposed product identified. An SPL by itself is not considered an adequate submittal.

The submittal requirements of this specification item include:

1. For pre-cast manholes and junction boxes: shop drawings for each structure showing, at a minimum, the Project and Contractor's name: manufacturer's name and plant location; applicable specifications; list of materials (such as adjusting rings, boots, gaskets, and pre-cast sections) by type and quantity; elevation view showing diameter or size, ring and cover size and elevation, ring type (bolted or unbolted, flared top or flared bottom) wall thickness,

elevations of transitions from large diameter sections to smaller diameter sections, base width and thickness, total depth, size of openings, reinforcement, and length of each pre-cast section; structure identification number and station location; pipe line identification; pipe material and size; pipe flowline elevations; plan view showing azimuthal orientation (based on 360 degrees clockwise) of the pipes relative to the outflow pipe; technical data sheets covering pipe-to-manhole or pipe-to-junction box connectors, and gaskets

2. For cast-in-place manholes and junction boxes: formwork drawings sealed by a registered Professional Engineer licensed in the State of Texas with documented experience in formwork design for wall pours that exceed 4 feet in height and slabs that are not ground supported

3. For hydraulic cement concrete; mix components and proportions, material sources, materials test results

4. For mortar: mix components and proportions, material sources, materials test results

5. For non-shrink grout: technical data sheet indicating ASTM type and containing instructions on surface preparation, mixing, placing, and curing procedures

6. For wastewater manhole coatings and linings: technical data sheets that include instructions on surface preparation, mixing, placing, and curing procedures

B. Acceptance Test Records

Submittal of acceptance test records is required for wastewater manholes and shall include as a minimum the following items:

Name of the manhole manufacturer

Interior surface coating type and application method

Model and manufacturer of vacuum tester

Date tested/date re-tested

Indication of whether test passed or failed and statement of corrective action taken if test failed

Test Method Used

Location/station of manhole

Type of base: Precast/cast-in-place

Type of repairs made to the joints

The test records shall also be included as part of the Project records turned in with the acceptance package.

506.4 Materials

A. Concrete

All cast-in-place concrete shall conform to City of Austin Standard Specification Item No. 403S, "Concrete for Structures." Cast in place concrete shall be Class A or as specified on the Drawings. Concrete used in precast concrete manhole base sections, riser sections and appurtenances shall conform to the requirements of Texas Department of Transportation Item 421, Hydraulic Cement Concrete. Concrete for backfill of over-excavated areas shall be City of Austin Class A, or Class J (City of Austin Standard Specification Item 403S, Concrete For Structures) or Controlled Low Strength Material (City of Austin Standard Specification Item 402S) as indicated on the Drawings.

B. Mortar

Mortar shall be composed of one part Portland cement, one part masonry cement (or 1/4 part hydrated lime), and sand equal to 2-1/2 to 3 times the sum of the volumes of the cements and lime used. The sand shall meet the requirements for "Fine Aggregate" as given in Standard Specification Item No. 403S "Concrete For Structures." Mortar shall not be used for any purpose on the inside of wastewater manholes.

C. Grout

Grout shall be the non-shrink type conforming to ASTM C 1107, Packaged, Dry, Hydraulic Cement Grout (Nonshrink), Grade C. Grout shall be used as packaged, with the mixed ingredients requiring only the addition of water.

D. Reinforcement

The reinforcing steel shall conform to the requirements of Standard Specification Item No. 406S, "Reinforcing Steel." Secondary, non-structural steel in cast-in-place stormwater manholes may be replaced by collated fibrillated polypropylene fibers, if approved by the Engineer or designated representative.

E. Brick

The brick for ring adjustment courses and for stormwater manholes shall be of first quality, sound, hard burned, perfectly shaped brick conforming to the requirements of ASTM C 62, Grade SW, or concrete brick meeting the requirements of ASTM C 55, Grade N-1.

F. Rings and Covers

Rings and covers shall conform to the requirements of City of Austin Standard Specification Item No. 503S, "Frames, Grates, Rings and Covers."

1. Replacement Rings and Covers, 24 in Diameter Lids

   This ring and cover shall be used for the replacement of broken rings and covers, minor manhole adjustment, or as otherwise directed by the Engineer or designated representative.

2. Rings and Covers, 32 in. Diameter Lids

This ring and cover shall be used for all new manhole construction, except as otherwise directed by the Engineer or designated representative.

G. Bulkheads

Bulkheads shall meet the requirements of City of Austin Standard Specification Item No. 507S "Bulkheads."

H. Precast Base Sections, Riser Sections, Flat-top Slabs and Cones

Precast concrete base sections, riser sections, flat-top slabs, and cones shall conform to the requirements of ASTM C 478. The width of the invert shall be specifically sized for the connecting pipes. Inverts shall be "U" shaped channels. The channel depth at the point where a pipe connects to the manhole wall, for pipes 24 inches in diameter and smaller, shall be a minimum of three fourths of the diameter of the pipe, with the top of the channel being a smooth transition between the inlet and outlet pipe connection points. For manholes connecting to pipes larger than 24 inches in diameter, the channel depth at the point where a pipe connects to the manhole wall shall be at least equal to the full pipe diameter. Changes in flow direction in the inverts of manholes shall be made by constructing smooth, long-radius sweeps to minimize splashing, turbulence, and eddies. The manhole invert grade shall 1) be a continuation of the inlet and outlet pipe grades carried through to the centerline of the manhole, or 2) have a minimum slope of 2.5 percent between the inlet and outlet pipe inverts, or 3) have a minimum difference of 0.10 feet between the inlet and outlet pipe inverts, whichever provides the maximum difference in invert elevation between the inlet and outlet pipes. In all cases, the bottom(s) of the channel(s) shall provide a smooth transition between the inlet and outlet pipes. Where wastewater lines enter a manhole above the flowline of the outlet, the invert shall be filleted to prevent splashing and solids deposition.

Joints for wastewater base sections, riser sections, and cones shall conform to the requirements of ASTM C 443. Additionally, joint dimensions for 48-inch inside diameter wastewater manhole sections and cones shall comply with City of Austin Standard No. 506S-13, "Wedge Seal Joint Detail, Precast Manhole Section." Joint dimensions for wastewater manhole sections and cones larger than 48-inch inside diameter shall comply with City of Austin Standard No. 506S-12, " O-Ring Joint Detail Precast Manhole Section" or City of Austin Standard No. 506S-13, "Wedge Seal Joint Detail, Precast Manhole Section". Precast bases for 48 inch inside diameter manholes shall have preformed inverts. Inserts acceptable to the Engineer or designated representative shall be embedded in the concrete wall of the manhole sections to facilitate handling; however, through-wall holes for lifting will not be permitted.

I. Precast Junction Boxes

Precast junction boxes shall be allowed only where indicated on the Drawings or acceptable to the Engineer or designated representative.

J. Pipe-to-Manhole and Pipe-to-Junction-Box Connectors

Resilient connectors, ring waterstops, and seals at connections of wastewater pipes to pre-cast and cast-in-place manholes and junction boxes shall be watertight, flexible, resilient and non-corrosive, conforming to ASTM C 923.

Metallic mechanical devices for securing the connectors, ring waterstops, and seals in place shall be Type 304 stainless steel.

K. Precast Flat-Slab Transition/Junction Box Lids

Precast slab transitions and lids shall be designed to safely resist pressures resulting from loads which might result from any combination of forces imposed by an HS-20 loading as defined by the American Association of State Highway and Transportation Officials (AASHTO). The joints of precast slab transitions and of lids for wastewater applications shall conform to the requirements of ASTM C443.

L. Precast-Prefabricated Tee Manholes

Tee manholes shall be allowed only where indicated on the Drawings or as directed by the Engineer or designated representative. The main pipe section shall conform to the requirements of City of Austin Standard Specification Item No. 510, "Pipe." The vertical manhole portion (tee) above the main pipe shall conform to the requirements of the precast components.

The manhole tee shall have a minimum inside diameter of 48 inches and shall rise vertically centered or tangent to the main pipe, as indicated on the Drawings or as directed by the Engineer or designated representative. An access hole less than 48-inches in diameter shall be cut into the main pipe to allow a ledge for support of access ladders. Unless otherwise specified on the Drawings, the main pipe portion of the tee manhole shall be included in the unit price bid for the unit tee manhole price.

M. Precast Grade Rings

Rings shall be reinforced Class A concrete

1. Precast Grade Rings, 24-1/2 inches Inside Diameter

   This adjustment ring shall be used only for adjusting existing manholes with 24 inch diameter lids and for Wastewater Access Device. Inside to outside diameter dimension of ring shall be 6 inches with a thickness of 3 inches to 6 inches.

2. Precast Grade Rings, 35 inches Inside Diameter

   This adjustment ring shall be used for all new manhole construction with 32 inch diameter lids. Inside to outside diameter dimension of ring shall be 6 inches with a thickness of 2 inches to 6 inches.

N. High Density Polyethylene Grade Rings

Plastic grade (adjusting) rings shall be injection molded from high density polyethylene identified according to ASTM D4976. Reprocessable and recyclable ethylene plastic materials are allowed. Manufacturers of HDPE adjusting rings shall be listed on SPL WW-703.

O. Controlled Low Strength Material

Controlled low strength material (CLSM) shall meet Standard Specification Item 402S, Controlled Low Strength Material.

P. Cement Stabilized Sand

Cement stabilized sand for bedding or backfilling shall contain 2 bags of Portland cement per cubic yard. The sand shall meet the requirements for "Fine Aggregate" in Standard Specification Item 403S, Concrete for Structures.

Q. Waterproofing Joint Materials

O-rings and wedge seals for the joints of all wastewater manholes, and for stormwater manholes when indicated on the Drawings, shall conform to the requirements of ASTM C443. Cold applied preformed plastic gaskets for stormwater manholes shall be as specified in City of Austin Standard Specification Item No. 510, “Pipe.” Plastic seals wrapped around manholes at joints, and hydrophillic waterstops installed in joints, shall be listed on SPL WW-146A. PVC waterstops installed in joints and waterproofing compounds applied to the exterior surfaces of manholes and junction boxes shall be as specified in the Contract Documents.

R. Interior Surface Coatings for Wastewater Manholes

Interior surface coatings for wastewater manholes shall be either: as specified on the Drawings, as designated in writing by the Engineer or designated representative, or as included on SPL WW-511, which lists acceptable products, uses and applicators.

S. Structural Lining Systems for Wastewater Manholes

Structural lining systems for wastewater manholes shall be either: as specified on the Drawings, as designated in writing by the Engineer or designated representative, or as included on SPL WW-511A.

506.5 Construction

A. General

A minimum horizontal separation of 12 inches shall be maintained between adjacent pipes inside and outside a manhole or junction box. Pipe ends within the base section or junction box walls shall not be relied upon to support overlying manhole dead and live load weights. All wastewater branch connections to new or existing mains shall be made at manholes, with the branch pipe crown installed at an elevation no lower than the elevation of the effluent pipe crown. Changes in flow direction in the inverts shall be made by constructing smooth, long-radius sweeps to minimize splashing, turbulence, and eddies. Where wastewater lines enter the manhole up to 24 inches above the flowline of the outlet, the invert shall be sloped upward in a U-shaped channel three-fourths of the diameter of the incoming pipe to receive the flow, thus preventing splashing or solids deposition. A drop pipe shall be provided for a wastewater pipe entering a manhole whenever the invert cannot be constructed to prevent splashing and solids deposition. Construction of extensions to existing systems shall require placement of bulkheads at locations indicated or directed by the Engineer or designated representative.

Unless otherwise indicated on the Drawings, stormwater manholes shall have eccentric cones and wastewater manholes shall have concentric cones, except on manholes over large mains where an eccentric cone shall be situated to provide access to an invert ledge. Eccentric cones may be used where conflicts with other

utilities dictate. Flat-slab tops may be used only where clearance problems are encountered or where specified on the Drawings. Cast-in-place wastewater junction boxes shall be allowed only where indicated on the Drawings or where accepted by the Engineer or designated representative.

B. Foundation Support

Manholes shall be founded at the established elevations on uniformly stable subgrade. Unstable subgrade shall be over-excavated a minimum of 12 inches and replaced with a material acceptable to the Engineer or designated representative. Precast base units shall be founded and leveled on a 6 inch thick layer of coarse aggregate bedding. A pipe section with a prefabricated tee manhole and half the length of the adjoining pipe sections on each side shall be founded on a minimum of 6 inch thick layer of unreinforced Class A concrete (City of Austin Standard Specification Item No. 403S, “Concrete For Structures”). The cast-in-place concrete cradle shall be placed against undisturbed trench walls up to the pipe’s springline.

C. Cast-in-Place Concrete

Structural concrete work shall conform to Standard Specification Item No. 410S, Concrete for Structures. Forms shall be used for all slabs that are not ground supported and for all vertical surfaces above the foundation level. Formwork shall be designed according to American Concrete Institute ACI 347, Guide to Formwork for Concrete. Outside forms on vertical surfaces may be omitted where concrete can be cast against the surrounding earthen material that can be trimmed to a smooth vertical face.

D. Manhole Bases

Pre-cast bases shall conform to requirements in 506.4.H.

Cast-in-place bases shall have a minimum thickness of 12 inches at the invert flowline. The widths of all manhole inverts shall be specifically sized for the connecting pipes. Inverts shall be “U” shaped channels. The channel depth at the point where a pipe connects to the manhole wall, for pipes 24 inches in diameter and smaller, shall be a minimum of three-fourths of the pipe diameter, with the top of the channel being a smooth transition between the inlet and outlet pipe connection points. For manholes connecting to pipes greater than 24 inches in diameter, the channel depth at the point where a pipe connects to the manhole wall shall be equal to the full pipe diameter. The manhole invert grade shall

1) be a continuation of the inlet and outlet pipe grades carried through to the centerline of the manhole, or
2) have a minimum slope of 2.5 percent between the inlet and outlet pipe inverts, or
3) have a minimum difference of 0.10 feet between the inlet and outlet pipe inverts,

whichever provides the maximum difference in invert elevation between the inlet and outlet pipes. In all cases, the bottom(s) of the channel(s) shall provide a smooth transition between the inlet and outlet pipes. Changes in flow direction in the inverts of manholes shall be made by constructing smooth, large-radius sweeps to prevent splashing, turbulence, and eddies. The lowermost riser section

may be set in the Portland cement concrete, while still plastic, after which the base shall be cured a minimum of 24 hours prior to proceeding with construction of the manhole up to 12 feet in depth. The base shall be cured an additional 24 hours prior to continuing construction above the 12-foot level.

Wastewater manholes having cast-in-place bases may be constructed over existing wastewater pipes and the top half of the pipe removed to facilitate invert construction, except where the existing pipe is PVC, in which case, the entire pipe shall be removed from inside the manhole. The manhole floor shall rise outwardly from the springline elevation of the pipe, approximately one inch for each 12 inch of run (8 percent slope). The floors of stormwater manholes, also, shall rise outwardly from the springline elevation of the pipe, approximately one inch for each 12 inches of run (8 percent slope).

Wastewater manholes with lines larger than 18 inches shall require pre-cast bases; manholes constructed over in-service mains however, may be built on cast-in-place bases if the flow cannot be interrupted.

E. Pipe Connections to Manholes and Junctions Boxes

Wastewater pipe connections to manholes and junction boxes shall be made using flexible, resilient, and non-corrosive watertight boot connectors or ring waterstops acceptable to the Engineer and conforming to the requirements of ASTM C-923. Any voids in the annular space between the pipe and boot connector or ring waterstop and the inside of the manhole wall shall be filled with non-shrink grout to prevent solids collection.

F. Pipe Connections to Existing Manholes and Junction Boxes

Wastewater pipe connections to existing manholes and junction boxes shall be made by removing the wall section by coring or alternative method approved by the Engineer or designated representative; installing flexible, resilient, and non-corrosive boot connectors or ring waterstops acceptable to the Engineer or designated representative and conforming to the requirements of ASTM C-923; filling any voids in the annular space between the pipe and boot connector or ring waterstop and the inside of the manhole or junction box wall with non-shrink grout; rebuilding the invert to conform to Section 506S.5.D; rehabilitating the interior walls with structural lining material listed on SPL WW-511A, and coating the interior of the manhole with material listed on SPL WW-511.

G. Waterproofing

PVC waterstops, hydrophillic waterstops, joint wrapping, and waterproofing compounds shall be installed as specified. Material wrapped around manholes at joints shall be listed on SPL WW-146A regardless of whether installation of the material is required by the Contract for waterproofing or is volunteered by the Contractor for ensuring acceptance of the manhole joints.

H. Backfilling

Backfilling of manholes shall conform to the density requirements of City of Austin Standard Specification Item No.510, Pipe. Manhole construction in roadways may be staged to facilitate pavement base construction. Manholes constructed to interim elevations to facilitate interim construction shall be covered with steel plates

that conform to the requirements of City of Austin Standard 804S-4, sheets 5, 6 and 7, Steel Plating. Steel plates on wastewater manholes shall be set in mortar to minimize inflow of storm water runoff. Manholes shall be completed to finish elevation prior to placement of the roadway's finish surface except on pavement reconstruction projects, where castings may be adjusted after paving is completed. The excavation for completion of manhole construction shall be backfilled in accordance with City of Austin Standards for Trench Repair.

I. Height Adjustment of Manholes

1. General

All adjustments shall be completed prior to the placement of the final roadway surface except on pavement reconstruction projects, where castings may be adjusted after paving is completed.

Brick shall not be used in making height adjustments to wastewater manholes. Mortar shall not be used for any purpose on the inside of wastewater manholes.

Manhole components to be reused shall be carefully removed and the contact areas shall be cleaned of all mortar, concrete, grease and sealing compounds. Any items broken in the process of removal and cleaning shall be replaced in kind by the Contractor at its expense.

If the adjustment involves lowering the top of a manhole, a sufficient depth of pre-cast concrete rings or brick courses shall be removed to permit reconstruction. Existing mortar shall be cleaned from the top surface remaining in place and from all brick or concrete rings to be reused and the manhole rebuilt to the required elevation. The manhole ring and cover shall then be installed with the top surface conforming to the proposed grade.

If the adjustment involves raising the elevation of the top of the manhole in accordance with Minor Manhole Height Adjustment," the top of brick or concrete ring shall be cleaned and built up vertically to the new elevation, using new or salvaged concrete rings or bricks and the ring and cover installed with the top surface conforming to the proposed grade.

After rings and covers are set to grade, the inside and outside of the precast concrete grade rings shall be wiped with non-shrink grout to form a durable surface and water-tight joints. The grouted surface shall be smooth and even with the manhole cone section. Grout shall not be placed when the atmospheric temperature is at or below 40F. If a sudden drop in temperature below 40F occurs or tempartures below 40F are predicted, the grouted surfaces shall be protected against freezing for at least 24 hours.

2. Minor Manhole Height Adjustment (New and Existing Manholes)

Minor manhole height adjustments shall be performed as indicated on City of Austin Standard 506S-4, "Minor Manhole Height Adjustment", and shall consist of adding precast reinforced concrete rings to adjust new and existing manholes to final grade. Brick shall not be used in making height adjustments to wastewater manholes.

If the adjustment involves raising the elevation of the top of the manhole, the top of brick or concrete ring shall be cleaned and built up vertically to the new elevation, using new or salvaged concrete rings or bricks and the ring and cover installed with the top surface conforming to the proposed grade.

For new manhole construction, the maximum allowable throat or chimney height, including the depth of the ring casting, shall be limited to 21 inches of vertical face on the interior surface. For adjustments of existing manholes that fall within the limits of overlay and street reconstruction projects, the maximum vertical allowable height, including the depth of the ring casting, shall be limited to 27 inches of vertical face on the interior surface. All other existing manholes shall have a maximum allowable throat or chimney height adjustment, including the depth of the ring casting, of 12 inches of vertical face on the interior surface. Any adjustment that will exceed these requirements shall be accomplished as indicated on City of Austin Standard 506S-2, Major Manhole Height Adjustment and as described below. Manholes not located in paved areas shall have bolted covers. Manholes located within paved areas (street right of way only) shall be standard non-bolted unless otherwise noted on the drawings.

3. Major Manhole Height Adjustment (Existing Manholes Only)

Any adjustment that exceeds the requirements of Minor Manhole Adjustments, shall be accomplished as indicated on City of Austin Standard 506S-2, Major Manhole Height Adjustment, and shall consist of any combination of removing the concrete rings, and/or the manhole cone section, and/or the straight riser section of the manhole in order to bring the manhole to final grade. Major manhole adjustments shall apply only to existing manholes. Manholes not located in paved areas shall have bolted covers. Manholes located within paved areas (street right of way only) shall be standard non-bolted unless otherwise noted on the drawings.

J. Interior Coatings of Wastewater Manholes and Junction Boxes

The interior surfaces of all Portland cement concrete wastewater manholes and junction boxes shall be coated with products specified either on the Drawings, designated in writing by the Engineer or representative, or listed on SPL WW-511. Product selection shall conform to usage described in that SPL. Surface preparation shall follow the product manufacturer's recommended procedures contained in technical data sheets unless otherwise specified in the contract documents. The Contractor shall measure the coating thickness according to ASTM D 6132, Nondestructive Measurement of Dry Film Thickness of Applied Organic Coatings Over Concrete Using an Ultrasonic Gage. Thickness measures shall be made at locations designated by the Engineer or designated representative. All thickness measurements shall be witnessed by the Engineer or designated representative.

K. Structural Linings of Existing Wastewater Manholes

The interior surfaces of existing wastewater manholes and junction boxes at locations shown in the Drawings or as designated by the Engineer shall be strengthened by application of structural lining systems either as specified on the Drawings, directed in writing by the Engineer or designated representative, or listed

on SPL WW-511A. Selection of products for coating the interior of existing manholes shall be based on the condition of the manholes. Surface preparation shall follow the product manufacturer's recommended procedures contained in technical data sheets unless otherwise specified in the contract documents.

L. Abandonment of Existing Manholes

Manholes designated on the Drawings for abandonment, shall be removed to a level not less than four feet below grade. Two-foot long sections of the inlet and outlet pipes shall be cut and removed on the outside of the manhole, the ends of the remaining pipe and the pipe sections penetrating the manhole wall shall be securely plugged, and the structure filled with material in accordance with Standard 506S-15 or as directed by the Engineer or designated representative.

506.6 Acceptance Testing of Wastewater Manholes

Manholes shall be tested separately and independently of the wastewater lines.

A. Test by the Vacuum Method

A vacuum test shall be performed by the Contractor prior to backfilling those manholes that fall within the right-of-way that require detouring of vehicular traffic. A second vacuum test will not be required after backfilling and compaction is complete unless there is evidence that the manhole has been damaged or disturbed subsequent to the initial vacuum test.

For manhole installations which do not require detouring of vehicular traffic, the vacuum method is recommended and may be used by the Contractor prior to backfilling the manhole to insure proper installation so that defects may be located and repaired; however, a vacuum test shall be performed after backfilling, and compaction are complete. Testing after backfill and compaction are complete will be the basis for acceptance of the manhole.

1. Equipment

   a) The manhole vacuum tester shall be a device approved for use by the Engineer or designated representative.

   b) Pipe sealing plugs shall have a load resisting capacity equal to or greater than that required for the size of the connected pipe to be sealed.

2. Procedures - applicable to new 48-inch diameter manholes

   a) Manhole section interiors shall be carefully inspected; units found to have through-wall lift holes, or any penetration of the interior surface by inserts provided to facilitate handling, will not be accepted. Coating shall be applied after the testing unless coating is applied before installation or unless it is applied at the factory. All lift holes and exterior joints shall be plugged with an acceptable non-shrink grout. No grout shall be placed in horizontal joints. Tests shall be performed before grouting the invert or around pipe penetrations and before coating the interior surfaces of the manhole or junction box.

b) After cleaning the interior surfaces of the manhole, the Contractor shall place and inflate pneumatic plugs in all of the connecting pipes to isolate the manhole; sealing pressure within the plugs shall be as recommended by the plug manufacturer. Plugs and the ends of pipes connected by flexible boots shall be blocked to prevent their movement during the vacuum test.

c) The vacuum test head shall be placed on the top of the cone section or, inside of the top of the manhole cone section, and the compression seal band inflated to the pressure recommended by its manufacturer. The vacuum pump shall be connected to the outlet port with the valve open. When a vacuum of 10 inches of mercury (-5 psig) has been attained, the valve shall be closed and the time noted. Tampering with the test equipment will not be allowed.

d) The manhole shall have passed the test if the vacuum does not drop below 9 inches of mercury (-4.5 psig) within 3 minutes of the time the valve was closed. The actual vacuum shall be recorded at the end of the 3 minutes during which the valve was closed.

e) When the standard vacuum test cannot be performed because of design or material constraints (examples: T-Type manholes, T-Lock Liners, or other reasons acceptable to the Engineer or designated representative), testing of individual joints shall be performed as directed by the Engineer or designated representative.

B. Test by the Exfiltration Method

At the discretion of the Engineer or designated representative, the Contractor may substitute the Exfiltration Method of testing for the Vacuum test described in Section 506.6. A. above. This method may only be used when ground water is not present. If ground water is present a Vacuum Test shall be used unless otherwise directed by the Engineer or designated representative. All backfilling and compaction shall be completed prior to the commencement of testing.

The procedures for the test shall include the following:

1. Manhole section interiors shall be carefully inspected; units found to have through-wall lift holes, or any penetration of the interior surface by inserts provided to facilitate handling, will not be accepted. Coating shall be applied after the testing unless coating is applied before field assembly, or at the factory. All lift holes and exterior joints shall be plugged with an acceptable non-shrink grout. No grout shall be placed in horizontal joints. Tests shall be performed before grouting the invert or around pipe penetrations and before coating the interior surfaces of the manhole or junction box.

2. After cleaning the interior surface of the manhole, the Contractor shall place and inflate pneumatic plugs in all of the connecting pipes to isolate the manhole; sealing pressure within the plugs shall be as recommended by the plug manufacturer.

3. Concrete manholes shall be filled with water or otherwise thoroughly wetted for a period of 24 hours prior to testing.

4. At the start of the test, the manhole shall be filled to the top with water. The test time shall be 1 hour. The Construction Inspector must be present for observation during the entire time of the test. Permissible loss of water in the 1-hour test time is 0.025 gallons per diameter foot, per foot of manhole depth. For a 4-foot diameter manhole, this quantity converts to a maximum permissible drop in the water level (from the top of the manhole cone) of 0.1 inches per foot of manhole depth or 1.0 inches for a 10-foot deep manhole.

C. Failure to Pass the Test – Records of Tests

If the manhole fails to pass the initial test method as described in (A) Test by the Vacuum Method and, if allowed, (B) Test by the Exfiltration Method, or if visible groundwater leakage into the manhole is observed, the Contractor shall locate the leak, if necessary by disassembly of the manhole. The Contractor shall check the gaskets and replace them if necessary. The Contractor may re-lubricate the joints and re-assemble the manhole, or the Contractor may install an acceptable exterior joint sealing product (see City of Austin Standard Products List Item SPL WW-146A) on all joints and then retest the manhole. If any manhole fails the vacuum and/or exfiltration test twice, the Contractor shall consider replacing that manhole. If the Contractor chooses to attempt to repair that manhole, the manhole must be retested until it passes. In no case shall cold applied preformed plastic gaskets be used for repair. Records of all manhole testing shall be made available to the Engineer or designated representative at the close of each working day, or as otherwise directed by the Engineer or designated representative. Any damaged or visually defective products, or any products out of acceptable tolerance shall be removed from the site.

D. Inspection

The Engineer or designated representative shall make a visual inspection of each manhole after it has passed the testing requirements and is considered to be in its final condition. The inspection shall determine the completeness of the manhole; any defects shall be corrected to the satisfaction of Engineer or designated representative.

506.7 Measurement

A "Junction Box" and "Box Manholes" will be measured by each structure of the indicated size regardless of depth.

A "Standard Pre-cast Manhole with Pre-cast Base", "Standard Pre-cast Manhole with Cast-in-Place (CIP) Base", “Special Manhole", "Drop Manhole with Pre-cast Base", "Drop Manhole with Cast-in-Place (CIP) Base”, "Centered Tee Manhole", or "Tangent Tee Manhole" will be measured by each structure of the indicated size for the first 8 feet of depth.

An "Extra Depth Manhole" will be measured by linear vertical foot of Standard Pre-cast Manhole with Pre-cast Base, Standard Pre-cast Manhole with CIP Base, Drop Manhole with Pre-cast Base, Drop Manhole with CIP Base, Special Manhole, Centered Tee Manhole, or Tangent Tee Manhole of the indicated size in excess of eight feet of depth.

Manhole depth will be measured from the invert flow line to the finished surface elevation.

"Minor Manhole Height Adjustment" and "Major Manhole Height Adjustment" will be measured by each unit for the indicated size. Only existing manholes will be measured for minor or major manhole height adjustment.

"Connection to Existing Manhole or Junction Box" will be measured per each for the indicated type of structure and location.

"Structural Lining" will be measured by the linear vertical foot for the indicated structure.

New manholes constructed to interim elevations to facilitate stage construction shall be measured as one unit regardless of the number of interim elevations constructed. All labor, materials and other expenses necessary for the stage construction shall be included in the unit price bid for the completed unit. Cost of abandonment of existing manholes shall be included in the unit price bid for the completed unit, unless Pay Item No. 506 AB is indicated on the Drawings and identified in Standard Contract Bid Form 00300U.

506.8 Payment

Payment for completed junction boxes and manholes of the type indicated on the Drawings shall be made at the appropriate unit bid price. The unit bid price shall include all labor, equipment, materials, (including but not limited to frames and grates, rings and covers, adjusting rings, cone sections, riser sections, gaskets, drop piping and fittings, bases, pipe-to-manhole connectors, concrete, reinforcing steel, non-shrink grout, mortar, joint wrap where specified, and, for wastewater manholes, interior coatings), time and incidentals necessary to complete the work.

Payment for a "Junction Box" and "Box Manhole" will be made at the unit price bid for the indicated size, complete in place.

Payment for the first 8 feet of a "Standard Pre-cast Manhole with Pre-cast Base", "Standard Pre-cast Manhole with Cast-in-Place (CIP) Base", "Special Manhole", "Drop Manhole with Pre-cast Base", "Drop Manhole with Cast-in-Place (CIP) Base","Centered Tee Manhole", or "Tangent Tee Manhole" will be made at the unit price bid for the indicated type and size, complete in place.

Payment for that portion of a Standard Pre-cast Manhole with Pre-cast Base, Standard Pre-cast Manhole with CIP Base, Drop Manhole with Pre-cast Base, Drop Manhole with CIP Base, Special Manhole, Centered Tee Manhole, or Tangent Tee Manhole in excess of 8 feet in depth will be made at the unit price bid for "Extra Depth Manhole" of the indicated type and size, complete in place.

Payment for "Minor Manhole Height Adjustment" and "Major Manhole Height Adjustment" will be made at the unit bid price, complete in place.

Payment for "Structural Lining" will be made at the unit price per linear vertical foot, which will include surface preparation, environmental adjustments, lining application, and curing, as required.

Payment for "Connection to Existing Manhole or Junction Box" shall be made at the unit price per connection and will include removing the wall section by coring or alternative method approved by the Engineer or designated representative, rehabilitating the interior walls, rebuilding the invert, and preparing and coating the interior surfaces of the structure.

When indicated in the Drawings, abandonment of existing manholes shall be made at the unit price for abandonment.

The intended use of each item shall be designated by a two-letter code (Wastewater = WW; Stormwater = SW) in the spaces provided after the pay item number:

Pay Item No. 506S M__:	Standard Pre-cast Manhole w/Pre-cast Base, ___ Dia.	Per Each.
Pay Item No. 506S M1__:	Standard Pre-Cast Manhole w/CIP Base, ___ Dia.	Per Each.
Pay Item No. 506S S__:	Special Manhole, ___ Dia.	Per Each.
Pay Item No. 506S D__:	Drop Manhole w/Pre-cast Base, ___ Dia.	Per Each.
Pay Item No. 506S D1__:	Drop Manhole w/CIP Base, ___ Dia.	Per Each.
Pay Item No. 506S C__:	Centered Tee Manhole, __ Dia. x ___ Dia.	Per Each.
Pay Item No. 506S T__:	Tangent Tee Manhole, ___ Dia. x ___ Dia.	Per Each.
Pay Item No. 506S J__:	Junction Box, ___ Ft. x ___ Ft.	Per Each.
Pay Item No. 506S B__:	Box Manhole ___ Ft. x ___ Ft.	Per Each.
Pay Item No. 506S 2__:	Major Manhole Height Adjustment, ___ Dia.	Per Each.
Pay Item No. 506S 4__:	Minor Manhole Height Adjustment, ___ Dia.	Per Each.
Pay Item No. 506S AB__:	Abandonment of existing Manholes:	Per Each.
Pay Item No. 506S EDM__	Extra Depth of Manhole, ___ Dia.	Per Linear Vert. Foot.
Pay Item No. 506S SL__:	Structural Lining of _____:	Per Linear Vert. Foot.
Pay Item No. 506S CN__:	Connection to Existing _____:	Per Each.

End

***SPECIFIC* CROSS REFERENCE MATERIALS**
Standard Specification Item No. 506, "Manholes"

City of Austin Standard Specifications

Designation	Description
Item 403S	Concrete For Structures
Item 406S	Reinforcing Steel
Item 402S	Controlled Low Strength Material
Item 410S	Concrete Structures
Item 503S	Frames, Grates, Rings and Covers
Item 504S	Adjusting Structures
Item 507S	Bulkheads
Item 510	Pipe

Texas Department of Transportation Standard Specifications
For Construction and Maintenance of Highways, Streets and Bridges

Designation	Description
Item 421	Hydraulic Cement Concrete

City of Austin Utilities Criteria Manual

Designation	Description
Section 2.8.0	Abandonment of Facilities
Subsection 2.8.2	Manholes

City of Austin Water Utility Documents

Designation	Description
SPL WW-146A	Manhole Seals, Plastic, Watertight
SPL WW-511	Lining System for Wastewater Manholes
SPL WW-511A	Structural Lining System for Wastewater Manholes
SPL WW-703	Adjusting (grade) rings for manhole chimney sections

City of Austin Standard

Designation	Description
506S-2	Major Manhole Height Adjustment
506S-4	Minor Manhole Height Adjustment
506S-15	Abandoned Manhole
506S-12	O-Ring Joint Detail, Precast Manhole Section
506S-13	Wedge Seal Joint Detail, Precast Manhole Section Adjustment
506S-15	Abandoned Manhole
804S-4, 5, 6 and 7 of 9	Steel Plating

City of Austin Standard Contract

Designation	Description
00300U	Bid Form (Unit Prices)

American Society for Testing and Materials (ASTM)

Designation	Description
ASTM C 55	Specification for Concrete Building Brick
ASTM C 62	Specification for Building Brick Solid Masonry Units Made from Clay of Shale
ASTM C478/C478M	Standard Specification for Precast Concrete Manhole
ASTM C443/C443M	Specification for Joints for Circular Concrete Sewer and Culvert Pipe, Using Rubber Gaskets
ASTM C923/C923M	Specification for Resilient Connectors Between Reinforced Concrete Manhole Structures Pipes
ASTM C1107	Specification for Packaged Dry, Hydraulic-Cement Grout (Nonshrink)
ASTM D6132	Specification for Polyethylene Plastics Molding and Extrusion Materials
D4976	Test Method for Nondestructive Measurement of Dry Film Thickness of Applied Organic Coating Over Concrete Using an Ultrasonic Gage

American Concrete Institute

Designation	Description

Item 347	Guide to Formwork for Concrete

***RELATED* CROSS REFERENCE MATERIALS**
Standard Specification Item No. 506, "Manholes"

City of Austin Utilities Criteria Manual

Designation	Description
Section 2	Water and Wastewater Design Criteria

City of Austin Standards

Designation	Description
1100S-1	Casting Adjustments
503S-4S	Storm Sewer Manhole Ring and 32" Cover
503S-4W	Sanitary Sewer Manhole Ring and 32" Cover
503S-5S	Bolted Storm Sewer Manhole Ring and 32" Cover
503S-5W	Watertight Manhole Ring and 32" Cover (W&WW)
506S-1	Manhole Invert Plan
506S-5	Typical Box Manhole 30" and Larger Pipe
506S-7	Precast Manhole with Drop Inlet on Cast in Place Foundation
506S-8	Precast Manhole with Drop Inlet on Precast Base
506S-9	Precast Manhole On Cast-In-Place Foundation
506S-10	Wastewater Manhole on Precast Base
506S-11	Storm Sewer Manhole Details

American Association of State Highway and Transportation Officials (AASHTO)

Designation	Description
M306	Standard Specifications for Drainage Structure Castings

Item No. 507S
Bulkheads

507S.1 Description

This item shall govern furnishing and installing plywood or end caps as a temporary utility plug at locations indicated on the Drawings or as directed by the Engineer or designated representative. The work will be placed in conjunction with installation of a pipe where a continuation of the utility system will be performed later.

This specification is applicable for projects or work involving either inch-pound or SI units. Within the text, the inch-pound units are given preference followed by SI units shown within parentheses.

507S.2 Submittals

The submittal requirements of this specification item include the type (wood, plastic, rubber, etc.) and application (pipe characteristics and location) of bulkheads.

507S.3 Material

Plywood shall be construction grade, 3/4 inch (19 mm) thick and need not be new or treated. End caps may be plastic, vitrified clay pipe, rubber or concrete.

507S.4 Construction Methods

After installation of the utility requiring temporary bulkheading, an end cap or a section of plywood, having dimensions at least 6 inches (150 mm) in excess of the outside pipe diameter shall be attached to the exposed bell or spigot and backfilled immediately after installation. Care shall be exercised to prevent the backfill material from entering the pipe.

Bulkheads used with staged construction shall be sound, reasonably free of knots and warps and have a 3 inch (75 mm) nominal thickness.

507S.5 Measurement and Payment

Bulkheading will not be measured and paid for separately but shall be included in the unit price bid for the item of construction in which this item is used.

END

RELATED Cross Reference Materials
Standard Specification Item No. 507S, "Bulkheads"

City of Austin Utilities Criteria Manual

Designation	Description
Section 2	Water and Wastewater Design Criteria

City of Austin Standard Specification

Designation	Description
Item No. 506	Manholes
Item No. 510	Pipe

City of Austin Standard Details

Designation	Description
506S-1	Manhole Invert Plan
506S-5	Typical Box Manhole 750 mm (30”) and Larger Pipe
506S-7	Precast Manhole with Drop Inlet
506S-8	Precast Manhole with Drop Inlet on Precast Base
506S-9	Precast Manhole On Cast-In-Place Foundation
506S-10	Wastewater Manhole on Precast Base
506S-11	Storm Sewer Manhole Details

509S.1 Description

This item shall govern the designing, furnishing, installing, maintaining and removing or abandoning of temporary Excavation Safety Systems consisting of trench shields, aluminum hydraulic shoring, timber shoring, trench jacks, tieback or braced sheeting, tieback slurry walls, soil nailing, rock bolting, tieback or braced soldier piles and lagging, and other systems for protecting workers in excavations. This item shall also govern the designing and constructing of sloping and benching systems for protecting workers in excavations.

At a minimum, the Excavation Safety Systems shall conform to United States Department of Labor Rules 29 CFR, Occupational Safety and Health Administration, Part 1926 Safety and Health Regulations for Construction, Subpart P, Excavation (hereinafter called OSHA).

This specification is applicable for projects or work involving either inch-pound or SI units. Within the text, the inch-pound units are given preference followed by SI units shown within parentheses.

509S.2 Definitions

"Competent Person" shall mean one who is capable of identifying existing and predictable hazards in the surroundings, or working conditions which are unsanitary, hazardous, or dangerous to employees, and who has authorization to take prompt corrective measures to eliminate them. The competent person shall be capable of interpreting the manufacturer's data sheets and interpreting and implementing the Excavation Safety System Plan.

An "Excavation" shall mean any cut, cavity, trench, or depression in an earth surface, formed by earth removed by the Contractor. The Contractor shall provide an Excavation Safety System for all excavations except when 1) the excavation is in stable rock as determined by the Texas-licensed Professional Engineer who prepared the Contractor's Excavation Safety System Plan or 2) the excavation is less than 5 feet (1.52 m) in depth and examination of the ground by the Contractor's competent person provides no indication of a potential cave-in.

"Trench" (trench excavation) shall mean any narrow excavation (in relation to its length) made below the surface of the ground. In general, the depth shall be greater than the width, but the width of a trench (measured at the bottom) shall not be greater than 15 feet (4.56 m). Excavation Safety Systems for such trenches shall be defined as "Trench Excavation Safety Protective Systems".

If the Contractor installs or constructs forms or other structures in an excavation such that the dimension measured from the forms or structures to the sides of the excavation is reduced to 15 feet (4.6 m) or less (measured at the bottom of the excavation), those excavations shall also be defined as a Trench if workers must enter it. Excavation Safety Systems for such trenches shall also be defined as "Trench Excavation Safety Protective Systems".

509S.3 Excavation Safety System Submittals

A. The Notice to Proceed with construction may be issued by the Owner before the Contractor has submitted the necessary Excavation Safety Plan(s); however, excavation shall not proceed until the Owner has received the Contractor's Excavation Safety Plan(s) for the Project.

B. Prior to Starting Excavation

Prior to starting any Excavation, the Contractor shall submit to the Owner:

1. A certificate indicating that the Contractor's Competent Person(s) has completed training in an excavation safety program based on OSHA regulations within the past 5 years.
2. Manufacturer's tabulated data or other tabulated data for Excavation Safety Systems consisting of pre-engineered protective systems such as trench shields, aluminum hydraulic shoring, timber shoring, pneumatic shoring, or trench jacks, or benching or sloping or other protective systems that are not designed specifically for the Project.

   Manufacturer's tabulated data shall meet the requirements in OSHA and shall describe the specific equipment to be used on the Project. Tabulated data must bear the seal of the licensed professional engineer who approved the data. Manufacturer's tabulated data shall be an attachment to the Contractor's Excavation Safety System Plan described below.

509S.4 Excavation Safety System Plan

The Contractor shall prepare an Excavation Safety System Plan (hereafter called the "Plan") specifically for the Project. The Contractor shall retain a Texas-licensed Professional Engineer to prepare the Plan. On City-funded projects, the Contractor must follow qualifications-based procedures to procure the required Professional Engineering services, according to Chapter 2254 of the Texas Government Code.

The Contractor shall be responsible for obtaining geotechnical information necessary for design of the Excavation Safety System. If geotechnical information for design of the Project has been acquired by the Owner or designated representative, it shall be provided to the Contractor for information purposes subject to the provisions of City of Austin Standard Contract Section 00220, "Geotechnical Data."

A. The Plan for Excavation Safety Systems consisting of pre-engineered protective systems such as trench shields, aluminum hydraulic shoring, timber shoring, pneumatic shoring, or trench jacks, or benching or sloping or other protective systems that are not designed specifically for the Project shall include:

   1. Detailed Drawings of the Excavation Safety System(s) that will provide worker protection conforming to OSHA. The Drawings shall note the required load carrying capacity, dimensions, materials, and other physical properties or characteristics in sufficient detail to describe thoroughly and completely the Excavation Safety System(s).
   2. Drawings, notes, or tables clearly detailing the specific areas of the Project in which each Excavation Safety System shall be used, the permissible size of the excavation, the length of time that the excavation shall remain open, the means of egress from the excavation, the location of material storage sites in relation to the excavation, the methods for placing/compacting bedding/backfill within the safety of the system, any excavation safety equipment restrictions and subsequent removal of the system.
   3. Recommendations and limitations for using the Excavation Safety Systems.
   4. A Certificate of Insurance of the Excavation Safety System Engineer's Professional Liability Insurance coverage. For City-funded projects, coverage meeting the requirements of Standard Contact Documents Section 00810 shall be provided. For privately funded projects the coverage shall be at least $1,000,000.

B. The Plan for Excavation Safety Systems consisting of tieback or braced sheeting, tieback or braced soldier piles and lagging, slurry walls, soil nailing, rock bolting or other protective systems that are designed specifically for the Project shall include:

1. Detailed Drawings of the Excavation Safety System(s) that will provide worker protection conforming to OSHA. The Drawings shall note the design assumptions, design criteria, factors of safety, applicable codes, dimensions, components, types of materials, and other physical properties or characteristics in sufficient detail to describe thoroughly and completely the Excavation Safety System(s).
2. Detailed technical specifications for the Excavation Safety System addressing the properties of the materials, construction means and methods, quality control and quality assurance testing, performance monitoring, and monitoring of adjacent features, as appropriate.
3. Drawings that clearly detail the specific areas of the Project in which each type of system shall be used and showing the plan and elevation (vertical profile) views.
4. Drawings, notes or tables clearly detailing the length of time that the excavation shall remain open, the means of egress from the excavation, the location of material storage sites in relation to the excavation, the methods for placing/compacting bedding/backfill within the safety of the system, any excavation safety equipment restrictions and subsequent removal or abandonment of the system or parts thereof.
5. Recommendations and limitations for using the Excavation Safety Systems.
6. A Certificate of Insurance of the Excavation Safety System Engineer's Professional Liability Insurance coverage. For City-funded projects, coverage meeting the requirements of Standard Contract Documents Section 00810 shall be provided. For privately funded projects the coverage shall be at least $1,000,000.

509S.5 Excavation Safety System Submittal Review

Review of the Excavation Safety System submittal conducted by the Owner or designated representative shall only relate to conformance with the requirements herein. The Owner's failure to note exceptions to the submittal shall not relieve the Contractor of any or all responsibility or liability for the adequacy of the Excavation Safety System. The Contractor shall remain solely and completely responsible for all Excavation Safety Systems and for the associated means, methods, procedures, and materials.

509S.6 Contractor’s Responsibility

The Contractor shall be responsible for implementing the Excavation Safety System Plan and for confirming that the Excavation Safety System(s) used on the Project meets the requirements of the Plan.

The Contractor’s Competent Person(s) shall be on the Project whenever workers are in an excavation meeting the definitions of a Trench given in 509S.2.

509S.7 Construction Methods

The Contractor's Competent Person(s) shall maintain a copy of appropriate OSHA regulations onsite and shall implement OSHA excavation safety regulations at the work site. The Contractor shall perform all excavation in a safe manner and shall maintain the Excavation Safety Systems to prevent death or injury to personnel or damage to structures, utilities or property in or near excavation.

If evidence of possible cave-ins or earthen slides is apparent or an installed Excavation Safety System is damaged, the Contractor shall immediately cease work in the excavation, evacuate

personnel from any potentially hazardous areas and notify the Owner. Personnel shall not be allowed to re-enter the excavation until necessary repairs or replacements are completed and are inspected and approved by the Contractor's Competent Person(s). Repair and replacement of damaged Excavation Safety System shall be at the Contractor's sole expense.

509S.8 Changed Conditions

When changed conditions require modifications to the Excavation Safety System, the Contractor shall provide to the Owner or designated representative a new design or an alternate Excavation Safety System Plan that is proposed by the Contractor's Excavation Safety System Engineer to address the changed conditions. Copies of the new design or alternate system shall be provided to the Owner or designated representative in accordance with the requirements of section 509S.3, "Excavation Safety System Plan Submittals". A copy of the most current Excavation Safety System Plan shall be maintained on site and made available to inspection and enforcement officials at all times.

Any changes to the Excavation Safety System Plan that are initiated by the Contractor for operational efficiency or as a result of changed conditions, that could be reasonably anticipated, will not be cause for contract time extension or cost adjustment. When changes to the Excavation Safety System Plan are necessitated by severe and uncharacteristic natural conditions or other conditions not reasonably within the control of the Contractor, the Contractor may make a written request to the Owner for a Change Order to address the anticipated work. The Contractor shall notify the Owner in writing within 24 hours of the occurrence of changed conditions that the Contractor anticipates the submittal of a claim for additional compensation. Under 'Changed Conditions" the work deemed immediately necessary by the Contractor to protect the safety of workers and public, equipment or materials may only be accomplished until the Owner or designated representative has a reasonable opportunity to investigate the Contractor's written request for a Change Order and respond in writing to the request.

509S.9 Measurement

Trench Excavation Safety Protective Systems will only be measured and paid for those trenches that workers would reasonably be expected to enter.

Trench Excavation Safety Protective Systems for Trenches excavated to a final width (measured at the bottom of the excavation) not exceeding 15 feet (4.56 m) shall be measured by the linear foot (meter: 1 meter equals 3.281 feet) through manholes, bore pits, receiving pits, and other appurtenances along the centerline of the trench. This method of measurement shall apply to any and all protective systems, including but not limited to tieback or braced sheeting, tieback or braced soldier piles and lagging, slurry walls, soil nails, rock bolts, shoring, trench boxes, and sloping or benching as used to provide a Trench Excavation Safety Protective System in accordance with the Excavation Safety System Plan.

Trench Excavation Safety Protective Systems for Trenches created by installation or construction of forms or other structures in an excavation whose width is greater than 15 feet (4.56 m) such that the dimension measured from the forms or structures to the sides of the excavation is reduced to 15 feet (4.56 m) or less (measured at the bottom of the excavation) shall be measured by the linear foot along the centerline of the Trench. Where forms or structures create multiple Trenches in one excavation, each Trench shall be measured separately. This method of measurement shall apply to any and all protective systems, including but not limited to tieback or braced sheeting, tieback or braced soldier piles and lagging, slurry walls, soil nails, rock bolts, shoring, trench boxes, and sloping or benching as used to provide a Trench Excavation Safety Protective System in accordance with the Excavation Safety System Plan.

509S.10 Payment

Payment for Trench Excavation Safety Protective Systems, measured as prescribed above, will be made at unit bid price per centerline linear foot of Trench. The unit bid price shall include full compensation for designing, furnishing, installing the system; for dewatering, and for maintaining, replacing, repairing and removing the Trench Excavation Safety Protective System and for sloping, special clearing, and excavation necessary to safely implement the Excavation Safety System Plan. No payment will be made for Trench Excavation Safety Protective Systems made necessary by the Contractor's selection of an optional design or sequence of work that creates the need for the Trench Excavation Safety Protective System.

Payment will be made under the following:

Pay Item No. 509S-1: Trench Excavation Safety Protective Systems, (all depths) Per Linear Foot.

END

SPECIFIC Cross Reference Materials
Standard Specification Item No. 509S, "Excavation Safety Systems"

City of Austin Standard Contract Documents

Designation	Description
Section 00020	Invitation for Bids
Section 00220	Geotechnical Data
Section 00650	Certificate of Insurance
Section 00700, Article 6.11	Safety and Protection
Section 810	Supplemental General Conditions

29 CFR, Occupational Safety and Health Administration, Part 1926 Safety and Health Regulations for Construction, Subpart P, Excavation
Texas Health and Safety Code Title 9 Chapter 756 Subchapter C
Texas Government Code Chapter 2254

RELATED Cross Reference Materials
Standard Specification Item No. 509S, "Excavation Safety Systems"

Texas Department of Transportation Standard Specifications
For Construction and Maintenance of Highways, Streets, and Bridges

Designation	Description
Item 104	Removing Concrete
Item 110	Excavation
Item 402	Trench Excavation Protection

City of Austin Standard Specification Items

Designation	Description
Item No. 101S	Preparing Right of Way
Item No. 102S	Clearing and Grubbing
Item No. 110S	Street Excavation
Item No. 111S	Excavation
Item No. 130S	Borrow

Item No. 132S	Embankment
Item No. 201S	Subgrade Preparation
Item No. 402S	Controlled Low Strength Material
Item No. 501S	Jacking or Boring Pipe
Item No. 503S	Frames, Grates, Rings and Covers
Item No. 504S	Adjusting Structures
Item No. 505S	Concrete Encasement and Encasement Pipe
Item No. 506	Manholes
Item No. 507S	Bulkheads
Item No. 510	Pipe
Item No. 511S	Water Valves
Item No. 593S	Concrete Retards
Item No. 594S	Gabions and Revet Mattresses

510.1 Description

This item governs the furnishing and installing of all pipe and/or materials for constructing pipe mains, sewers, laterals, stubs, inlet leads, service connections and culverts, including all applicable Work such as excavating, bedding, jointing, backfilling materials, tests, concrete trench cap, concrete cap and encasement, etc., prescribed under this item in accordance with the provisions of the Edwards Aquifer Protection Ordinance, when applicable, and City of Austin Utility Criteria Manual, Section 5, "Working in Public Rights-of-Way". The pipe shall be of the sizes, types, class and dimensions indicated or as designated by the E/A and shall include all joints or connections to new or existing mains, pipes, sewers, manholes, inlets, structures, etc., as may be required to complete the Work in accordance with specifications and published standard practices of the trade associations for the material specified and to the lines and grades indicated. This item shall include any pumping, bailing, and drainage when indicated or applicable. Unless otherwise provided, this item shall consist of the removal and disposition of trees, stumps and other obstructions, old structures or portions thereof such as house foundations, old sewers, masonry or concrete walls, the plugging of the ends of abandoned piped utilities cut and left in place and the restoration of existing utilities damaged in the process of excavation, cutting and restoration of pavement and base courses, the furnishing and placing of select bedding, backfilling and cement or lime stabilized backfill, the hauling and disposition of surplus materials, bridging of trenches and other provisions for maintenance of traffic or access as indicated.

510.2 Materials

The Contractor shall submit descriptive information and evidence that the materials and equipment the Contractor proposes for incorporation into the Work are of the kind and quality that satisfies the specified functions and quality. Austin Water Utility Standard Products Lists (SPL) form a part of the Specifications. Contractors may, when appropriate, elect to use products from the SPL; however, submittal to the E/A is still required. Should the Contractor elect to use any materials from these lists, each product shall be completely and clearly identified by its corresponding SPL number when making the product submittal. This will expedite the review process in which the E/A, and, if necessary, the Austin Water Utility Standard Products Committee, decides whether the products meet the Contract requirements and the specific use foreseen by the E/A in the design of this engineered Project. The purpose of the SPL's is to expedite review, by the E/A and, if necessary, the Austin Water Utility Standard Products Committee, of Contractor product submittals. The SPL's shall not be considered as being a pre-approved list of products necessarily meeting the requirements of the Project. Items contained in the SPL cannot be substituted for items shown on the Drawings, or called for in the specifications, or specified in the Bidding Requirements, Contract Forms and Conditions of Contract, unless approved by the E/A in conjunction with the Austin Water Utility Standard Products Committee. The Standard Product List current at the time of plan approval will govern.

(1) Concrete

Concrete shall conform to Item No. 403S, "Concrete for Structures".

(2) Coarse Aggregate

Coarse aggregate shall conform to Item No. 403S, "Concrete for Structures" or one of the following:

(a) Pipe Bedding Stone

Pipe bedding stone shall be clean gravel, crushed gravel or crushed limestone, free of mud, clay, vegetation or other debris, conforming to ASTM C 33 for stone quality. Size gradation shall conform to ASTM C-33 No. 57 or No. 67 or the following Table:

SIEVE SIZE	% RETAINED BY WEIGHT
1-1/2"	0
1"	0-10
1/2"	40-85
#4	90-100
#8	95-100

(b) Foundation Rock

Foundation rock shall be well graded coarse aggregate ranging in size from 2 to 8 inches.

(c) Flexible Base

Flexible base shall conform to Item No. 210S, "Flexible Base".

(3) Fine Aggregate

(a) Concrete and Mortar Sand

Fine aggregate shall conform to Item No. 403S, "Concrete for Structures".

(b) Bedding Sand

Sand for use as pipe bedding shall be clean, granular and homogeneous material composed mainly of mineral matter, free of mud, silt, clay lumps or clods, vegetation or debris. The material removed by decantation TxDOT Test Method Tex-406-A, plus the weight of any clay lumps, shall not exceed 4.5 percent by weight.

The resistivity shall not be less than 3000 ohms-cm as determined by TxDOT Test Method Tex-129-E. Size gradation of sand for bedding shall be as follows:

GRADATION TABLE	
SIEVE SIZE	% RETAINED BY WEIGHT
1/4"	0
#60	75-100
#100	95-100

(c) Stone Screenings

Stone screenings shall be free of mud, clay, vegetation or other debris, and shall conform to the following Table:

SIEVE SIZE	% PASSING
3/8"	100
No. 4	95 to 100
No. 8	80 to 100
No. 16	50 to 85
No. 30	25 to 60
No. 50	10 to 30
No. 100	2 to 10

All screenings shall be the result of a rock crushing operation.

(4) Controlled Low Strength Material

Controlled Low Strength Material (CLSM) shall conform to Item 402S, "Controlled Low Strength Material.

(5) Pea Gravel

Pea gravel bedding shall be clean washed material, hard and insoluble in water, free of mud, clay, silt, vegetation or other debris. Stone quality shall meet ASTM C 33. Size gradation shall be as follows:

SIEVE SIZE	% RETAINED BY WEIGHT
3/4"	0
1/2"	0-25
1/4"	90-100

(6) Select Backfill or Borrow

This material shall consist of borrow or suitable material excavated from the trench. It shall be free of stones or rocks over 8 inches and shall have a plasticity index of less than 20. The moisture content at the time of compaction shall be within 2

percent of optimum as determined by TxDOT Test Method Tex-114-E. Sandy loam borrow will not be allowed unless shown on the Drawings or authorized by the E/A.

All suitable materials from excavation operations not required for backfilling the trench may be placed in embankments, if applicable. All unsuitable materials that cannot be made suitable shall be considered surplus excavated materials as described in 510.3(13). The Contractor may, if approved by the engineer, modify unsuitable materials to make them suitable for use. Modification may include drying, removal or crushing of over-size material, and lime or cement treatment.

(7) Cement Stabilized Backfill

When indicated or directed by the E/A, all backfill shall be with cement-stabilized backfill rather than the usual materials. Unless otherwise indicated, cement stabilized backfill material shall consist of a mixture of the dry constituents described for Class J Concrete. The cement and aggregates shall be thoroughly dry mixed with no water added to the mixture except as may be directed by the E/A.

(8) Pipe

General

Fire line leads and fire hydrant leads shall be ductile iron. Domestic water services shall not be supplied from fire service leads, unless the domestic and fire connections are on separately valved branches with an approved backflow prevention device in the fire service branch. All wastewater force mains shall be constructed of ductile iron pipe Pressure Class 250 minimum for pipe greater than 12-inch size and Pressure Class 350 for pipe 12-inch size and smaller. Wastewater pipe shall be in accordance with Austin Water Utility's Standard Products List SPL WW-534 and shall have a corrosion resistant interior lining acceptable to the Owner.

All water pipe within utility easements on private property shall be Ductile Iron Pipe, Pressure Class 350 minimum for pipe 12-inch size and smaller and Pressure Class 250 minimum for pipe greater than 12-inch size wrapped as indicated. For sizes over 24 inches, Concrete Pressure Pipe, steel cylinder type, conforming to the requirements of AWWA C-301 will be acceptable.

There may be no service connections to Concrete Pressure Pipe installed in utility easements on private property. Approved service clamps or saddles shall be used when tapping ductile iron pipe 12 inch size and smaller. All service tubing (3/4 inch thru 2 inches) installed in utility easements on private property shall be 150 psi annealed seamless Type K copper tubing with no sweat or soldered joints.

All reclaimed water mains shall be constructed of ductile iron pipe, Pressure Class 350 minimum for pipe 12-inch size and smaller and Pressure Class 250 for pipe greater than 12-inch size. For mains 12-inch size and smaller, PVC pipe, conforming to the requirements of AWWA C-900, DR 14 shall be acceptable. Reclaimed water pipe shall be manufactured purple, painted purple, or wrapped in purple polyethylene film wrap.

Manufacturers of concrete pipe and pipe larger than 24-inch diameter shall have a quality control program consisting of one or more of the following:

1) a quality management system certified by the American National Standards Institute (ANSI) or National Sanitation Foundation (NSF) to comply with ISO 9001:2000,

2) a quality management system certified by the QCast Program following the requirements of the ACPA Plant Certification Manual,

3) a quality management system certified by the National Precast Concrete Association

4) a quality control program approved by the OWNER prior to submittal of bids for the PROJECT, or

5) an independent, third party quality control testing and inspection firm for testing and inspecting pipe produced for the PROJECT and approved by the OWNER prior to submittal of bids for the PROJECT.

All such quality control programs shall be paid for by the manufacturer. It is the intent of this requirement that the manufacturer will document all appropriate tests and inspections with sampling and inspection criteria, frequency of testing and inspection, date of testing and inspection and date on which every piece was manufactured. Required testing and inspection, including that by an independent, third party, shall be performed full-time during production of pipe for the PROJECT. When requested by the OWNER, the manufacturer will provide copies of test data and results and inspection reports with the shipment of pipe for the PROJECT. Test data and results and inspection reports shall be traceable to specific pipe lots or pieces. Owner approval of the manufacturer’s quality control program will expire after three years, at which time the manufacturer must present a current quality control program for approval in order to retain listing on the applicable SPL. Owner approval of the Concrete Pipe manufacturer’s quality control program will expire after three years, at which time the manufacturer must present a current quality control program for approval.

The quality of materials, the process of manufacture and the finished pipe shall be subject to inspection and approval by the E/A at the pipe manufacturing plant and at the project site prior to and during installation. Plant inspections shall be conducted at the discretion of the City Representative. Only manufacturers having a quality control program of the type described above will be considered as approved providers of concrete pipe and pipe products as listed in the Standard Products List (SPL).

All water distribution pipe and fittings shall be listed in the Fire Protection Equipment Directory published by the Underwriter's Laboratories, Inc., or shall be Factory Mutual approved for fire service. All water pipe and related products shall be registered by the National Sanitation Foundation as having been certified to meet NSF/ANSI Standard 61.

(a) Reserved

(b) Iron Pipe

Iron pipe shall be ductile iron pipe meeting all requirements of standards as follows:

-For push-on and mechanical joint pipe: AWWA C-151

-For flanged pipe: AWWA C-115

Barrels shall have a nominal thickness required by Table 1 of AWWA C-115, which thickness corresponds to Special Class 53 in sizes through 54 inch, and Class 350 in 60 and 64-inch sizes. Flanges shall be ductile iron (gray iron is not acceptable); they shall be as shown in ANSI/AWWA C115/A21.15 and shall conform to dimensions shown in Table 2 and Figure 1 of AWWA C115. These flanges are the same in all respects as flanges shown in ANSI/AWWA C110/A21.10 for fittings and are standard for all flanges used with pipe, valve, and equipment units in the City of Austin water distribution and wastewater force main systems. Flanges shall be fabricated and attached to the pipe barrels by U.S. fabricators using flanges and pipe barrels of U.S. manufacture. If fabrication is to be by other than the pipe barrel manufacturer, a complete product submittal and approval by the Austin Water Utility will be required. Additionally, such fabricator shall furnish certification that each fabricated joint has been satisfactorily tested hydrostatically at a minimum pressure of 300 psi.

-Linings and Coating:

Interior surfaces of all iron potable or reclaimed water pipe shall be cement-mortar lined and seal coated as required by AWWA C104. Interior surfaces of all iron wastewater line and force main pipe shall be coated with a non-corrosive lining material as indicated on Austin Water Utility's Standard Products List SPL WW-534. Pipe exteriors shall be coated as required by the applicable pipe specification. The type and brand of interior lining shall be clearly marked on the outside of the pipe and fittings. Except as authorized by the E/A, only one type and brand of pipe lining shall be used on a given project.

Except as described above for flanged pipe (Thickness Class 53) and where not otherwise indicated, ductile iron pipe shall be minimum Class 250 as defined by ANSI/AWWA C150/A21.50-current; all ductile iron pipe and flanges shall meet the following minimum physical requirements:

Grade 60-42-10:

-Minimum tensile strength: 60,000 psi (414 mPa).

-Minimum yield strength: 42,000 psi (290 mPa).

-Minimum elongation: 10 percent.

The flanges for AWWA C115 pipe may be also be made from:

Grade 70-50-05:

-Minimum tensile strength: 70,000 psi (483 map).

-Minimum yield strength: 50,000 psi (345 mPa).

-Minimum elongation: 5 percent.

1. Ductile Iron Fittings:

Fittings shall be push-on, flanged or mechanical joint as indicated or approved and shall meet all requirements of standards as follows:

-Sizes 4 inch through 24 inch: AWWA C-110 or AWWA C-153

-Sizes larger than 24 inch: AWWA C-110.

-Lining and Coating:

Interior surfaces or all iron potable/reclaimed water pipe fittings shall be lined with cement- mortar and seal coated as required by AWWA C104. Interior surfaces of all iron wastewater and force main fittings shall be coated with a non-corrosive lining material acceptable to Owner. Fitting exteriors shall be coated as required by the applicable pipe specification.

2. Joint Materials

Gaskets for mechanical joints shall conform to ANSI/AWWA A21.11/C-111.

Joining of slip joint iron pipe shall, without exception, be accomplished with the natural or synthetic rubber gaskets of the manufacturer of that particular pipe being used. A joint lubricant shall be used and applicable recommendations of the manufacturer shall be followed.

Gaskets for flanged joints shall be continuous full face gaskets, of 1/8 inch minimum thickness of natural or synthetic rubber, cloth-reinforced rubber or neoprene material, preferably of deformed cross section design and shall meet all applicable requirements of ANSI/AWWA A21.11/C-111 for gaskets. They shall be manufactured by, or satisfy all recommendations of, the manufacturer of the pipe/fittings being used and be fabricated for use with Class 125 ANSI B16.1 flanges.

Tee-head bolts, nuts and washers for mechanical joints shall be high strength, low alloy, corrosion resistant steel stock equal to "COR-TEN A" having UNC Class 2 rolled threads or alloyed ductile iron conforming to ASTM A 536; either shall be fabricated in accordance with ANSI/AWWA A21.11/C-111.

Hex head bolts and nuts shall satisfy the chemical and mechanical requirements of ASTM A449 SAE Grade 5 plain, and shall be fabricated in accordance with ASTM B 18.2 with UNC Class 2 rolled threads.

Either Tee-Head or Hex-Head bolts, nuts and washers as required, shall be protected with bonded fluoro-polymer corrosion resistant coating where specifically required by the E/A.

All threaded fasteners shall be marked with a readily visible symbol cast, forged or stamped on each nut and bolt, which will identify the fastener material and grade. The producer and the supplier shall provide adequate literature to facilitate such identification; painted markings are not acceptable.

3. Polyethylene Film Wrap

All iron pipe, fittings and accessories shall be wrapped with standard 8 mil (minimum) low density polyethylene film or 4-mil (minimum) cross laminated high-density polyethylene conforming to AWWA C-105, with all edges overlapped and taped securely with duct tape to provide a continuous wrap to prevent contact between the piping and the surrounding backfill. Repair all punctures of the polyethylene, including those caused in the placement of bedding aggregates, with duct tape to restore the continuous protective wrap before backfilling. Polyethylene film wrap for reclaimed water pipe shall be purple.

4. Marking

Each pipe joint and fitting shall be marked as required by the applicable AWWA specification. This includes in all cases: Manufacturer's identification, Country where cast, year of casting, and "DUCTILE" or "DI". Barrels of flanged pipe shall show thickness class; others shall show pressure class. The flanges of pipe sections shall be stamped with the fabricators identification; fittings shall show pressure rating, the nominal diameter of openings and the number of degrees for bends. Painted markings are not acceptable.

5 Warning Tape

Warning tape for identifying restrained joint pipe and fittings shall be yellow and shall have black lettering at least 2 inches high that reads "Restrained Joint / Junta de Restriccion" at intervals not exceeding 24 inches. The warning tape shall be polypropylene having a minimum thickness of 2 mils, a minimum width of 3 inches, and adhesive backing on the side opposite the lettering.

(c) Concrete

1. General

Pipe shall conform to ASTM C 76 for Circular Pipe. Concrete pipe smaller than 12 inches in diameter shall conform to ASTM C 14, Extra

Strength. All pipe shall be machine made or cast by a process which will provide uniform placement of the concrete in the form and compaction by mechanical devices, which will assure a dense concrete. Concrete shall be mixed in a central batch plant or other approved batching facility from which the quality and uniformity of the concrete can be assured. Transit mixed concrete shall not be acceptable for use in precast pipe. The pipe shall be Class III or the class indicated. Storm sewer pipe shall be of the tongue and groove or 0-ring joint design. Wastewater pipe shall be of the 0-ring joint design; it shall be acceptably lined for corrosion protection.

2. Marking

Each joint of pipe shall be marked with the pipe class, the date of manufacture, the manufacturer's name or trade mark, diameter of pipe and orientation, if required.

Pipe marking shall be waterproof and conform to ASTM C 76.

3. Minimum Age for Shipment

Pipe shall be considered ready for shipment when it conforms to the tests specified in ASTM C 76.

4. Joint Materials

When constructing storm sewers, the Contractor shall have the option of making joints with either of the following materials:

a. Mortar

Mortar for joints shall meet the requirements set forth below in "Mortar".

b. Cold Applied Preformed Plastic Gaskets

Cold Applied Plastic Gaskets shall be suitable for sealing joints of tongue and groove concrete pipe. The gasket sealing the joint shall be produced from blends of refined hydrocarbon resins and plasticizing compounds reinforced with inert mineral filler and shall contain no solvents, irritating fumes or obnoxious odors. The gasket joint sealer shall not depend on oxidizing, evaporating or chemical action for its adhesive or cohesive strength and shall be supplied in extruded rope form of suitable cross section. The size of the plastic gasket joint sealer shall be in accordance with the manufacturer's recommendations and sufficient to obtain squeeze-out around the joint. The gasket joint sealer shall be protected by a suitable removable wrapper that may be removed longitudinally without disturbing the joint sealer to facilitate application.

The chemical composition of the gasket joint sealing compound as shipped shall meet the following requirements:

Composition (% by weight)	Test Method	Typical Analysis
Bitumen (petroleum plastic content)	ASTM D 4	50-70
Ash-inert Mineral Water	Tex-526-C	30-50
Volatile Matter (at 325 F)	Tex-506-C	2.0 Maximum

The gasket joint sealing compound when immersed for 30 days at ambient room temperature separately in 5 percent solution of caustic potash, a mixture of 5 percent hydrochloric acid, a 5 percent solution of sulfuric acid and a saturated H2S solution shall show no visible deterioration.

The physical properties of the gasket joint sealing compound as shipped shall meet the following requirements:

Property	Test Method	Typical Analysis	
		Minimum	Maximum
Specific Gravity at 77 F	ASTM D 71	1.20	1.35
Ductility at 77F (cm) Minimum	Tex-503-C	5.0	
Softening point	Tex-505-C	275 F	
Penetration:			
32 F (300 g) 60 sec	Tex-502-C	75	
77 F (150 g) 5 sec	Tex-502-C	50	120
115 F (150 g) 5 sec	Tex-502-C		150
Flashpoint C.O.C. F	Tex-504-C	600 F	
Fire Point C.O.C. F	Tex-504-C	625 F	

When constructing wastewater lines, the Contractor shall use 0-ring gasket joints conforming to ASTM C 443. Just before making a joint, the ends of the pipe shall be clean, dry, free of blisters or foreign matter and shall be wire brushed. For O-ring joints, the gasket and the inside surface of the bell shall be lubricated with a light film of soft vegetable soap compound to facilitate assembly of the joint. The rubber O-ring gasket shall be stretched uniformly in the joint. Wedge seal type ("Forsheda" pre-lubricated) gaskets may be used if joint details submitted are approved; installation of such gaskets shall be in strict accordance with the manufacturer's recommendations, and shall be the sole element depended upon to make the joint flexible and watertight.

In wastewater lines no horizontal or vertical angles in the alignment of pipes shall be permitted unless indicated. The spigot

shall be centered in the bell, the pipe pushed uniformly home and brought into true alignment. Bedding material shall be placed and tamped against pipe to secure the joint.

5. Bends

When horizontal or vertical angles in the alignment of storm sewers are indicated, the bend or angle shall be constructed by cutting on a bias one or both pipes as may be required for the alignment indicated. The pipe cut shall be sufficiently long to allow exposing the reinforcement, which shall be bent, welded and incorporated into the pipe bend and reinforced concrete collar to maintain the structural integrity. The collar shall be 6 inches minimum, reinforced with #4 bars on a 1 foot center both directions. Builder's hardware cloth may be used on the outside of the joint to aid in holding cementing materials in place. Plywood, fiberboard or other materials placed on the inside of the pipe as formwork shall be removed as soon as the joint materials have obtained initial set, after which the inside surface of the pipe joint shall be finished smooth and true to the line and grade established. The Contractor may use prefabricated bends meeting the specification requirements in lieu of field fabricated bends. All bends shall be watertight, have a smooth flow line and be equal or greater in strength to the adjacent pipe.

Horizontal or vertical changes in alignment in wastewater lines shall be accomplished by use of manholes. With the E/A's approval, horizontal changes in alignment may be made by the "Joint Deflection" method. Joint deflection is limited by regulations of the Texas Commission on Environmental Quality (TCEQ) to 80 percent of the maximum recommended by the manufacturer; such deflection may not exceed 5 degrees at any joint. Changes in alignment using pipe flexure shall not be allowed.

6. Sulfide and Corrosion Control

All concrete pipe used for wastewater installations shall be protected from sulfide and corrosion damage by using limestone aggregate.

(d) Concrete Steel Cylinder (CSC) Pipe

1. General Requirements

The Contractor shall submit to the E/A for approval along with other required data a tabulated layout schedule with reference to the stationing and grade lines to be used.

The manufacturer shall furnish all fittings and special pieces required for closures, bends, branches, manholes, air valves, blow offs and connections to main line valves and other fittings as indicated.

Each pipe length, fitting and special joint shall have plainly marked on the bell end of the pipe, the head condition for which it is designed. In addition, marking shall be required to indicate the location of each pipe

length or special joint in the line and such markings will be referenced to the layout schedules and drawings and submitted for approval.

Concrete steel cylinder fittings shall be tested as required by the applicable AWWA Standards.

2. Design and Inspection

Where not otherwise indicated, concrete steel cylinder pipe shall be Class 150, designed to withstand a vacuum of not less than 28 feet of water. Valve reducers, tees and outlets from a pipe run shall be designed and fabricated so that all stresses are carried by the steel forming the fitting or outlet.

Concrete steel cylinder pipe shall meet one of the following specifications:

AWWA C-301 - Any Size

AWWA C-303 - 24-inch maximum size

All pipe flanges shall conform to AWWA C-207, requirements for standard steel flanges of pressure classes corresponding to the pipe class.

Pipe to be installed in a tunnel or encasement shall be manufactured with 1 inch thick by 24-inch wide skid bands of mechanically impacted mortar in addition to the normal coating.

All concrete steel cylinder fittings shall be constructed of steel plate of adequate strength to withstand both internal pressure and external loading. Rod reinforcing shall not be used to figure the required steel area. The fittings shall have a concrete lining and 1 inch minimum coating of cement mortar, except that centrifugally spun lining need not be reinforced.

Minimum lining thickness shall be 1/2 inch for 16-inch pipe and 3/4 inch for sizes larger than 16-inch pipe. Where it is impractical to place such concrete protection on interior surfaces of small outlets, 2 coats of "Bitumastic Tank Solution" shall be applied.

No fitting shall be made by cutting of standard pipe, except that outlets of less than 75 percent of the pipe diameter may be placed in a standard pipe. Beveled spigots may be placed on standard pipe.

3. Joint Materials

Joints shall be of the rubber gasket type conforming to the applicable standards. The inside and outside recesses between the bell and spigot shall be completely filled with Cement Grout in accordance with the pipe manufacturer's recommendations. Grout materials for jointing such pipe, unless otherwise indicated, shall be as described herein.

(e) Reserved

(f) Polyethylene Tubing

1. General

All polyethylene (PE) tubing shall be high density, high molecular weight plastic tubing meeting ASTM D 2737; it shall be pressure rated at 200 psi working pressure and must bear the National Sanitation Foundation seal of approval for potable water service. Pipe manufacturers shall be listed on SPL WW-65.

2. Materials

Polyethylene plastics shall be Designation PE3408 (Grade P34 with hydrostatic design stress of 800 psi).

3. Markings

Permanent marking on the tubing shall include the following at intervals of not more than 5 feet:

Nominal tubing size.

Type of plastic material, i.e., PE 3408.

Dimension Ratio (DR) and pressure rating in psi for water at 73.4 F (e.g., SDR-9, 200 psi).

ASTM D 2737 designation.

Manufacturer's name or trademark, code and seal of approval (NSF mark) of the National Sanitation Foundation.

Polyethylene tubing for reclaimed service lines shall be purple.

4. Tube Size

PE tubing shall be standard copper tube size outside diameter, with Standard Dimension Ratio (SDR) of 9.

(g) Copper Tubing

All copper service tubing shall be annealed seamless Type K water tube meeting ASTM B88 and rated at 150 psi working pressure. The tubing shall be homogenous throughout and free from cracks, holes, crimping, foreign inclusions or other defects. It shall be uniform in density and other physical properties. Copper tubing for reclaimed water shall be wrapped in purple polyethylene film wrap. Pipe manufacturers shall be listed on SPL WW-613.

(h) Service Connection Fittings

All fittings used in customer service connection - tapping mains, connecting meters, etc. - must be currently listed on the applicable Water and Wastewater Standard Products List (SPL WW-68), or called for in the City of Austin Standard Details (520 - series).

(i) Brass Goods

All brass valves, couplings, bends, connections, nipples and miscellaneous brass pipe fittings and accessories used in meter connections, service lines, air release piping assemblies, and wherever needed in the water distribution system, shall conform to the City of Austin Standards, Austin Water Utility Standard Products Lists, and AWWA C-800, except as herein modified or supplemented.

Unless otherwise noted, the goods described herein shall be fabricated of standard Red Brass (Waterworks Brass) meeting ASTM B62 or B584, alloy 83600, consisting of 85 percent copper and 5 percent each of tin, lead and zinc.

Exposed threads shall be covered with plastic caps or sheeting to protect the threads.

Brass goods of each type and class shall be compatible with other fittings in common usage for similar purposes. Where not otherwise indicated, all such materials shall meet the following requirements:

Inlet threads of corporation valves shall be AWWA iron pipe (IP) thread (male); outlets of service saddles shall be tapped with AWWA IP thread (female). AWWA IP threads shall conform to ANSI/ASME B1.20.1 as required by AWWA C800 for “General Purpose (Inch) Pipe Threads”. For 3/4” and 1” sizes only, corporation valve inlet threads, and the internal threads of saddles may be the AWWA taper thread conforming to AWWA C800 Figure 1 and Table 6. External threads of corporation valve inlet must be compatible with internal threads of the service saddle.

Connections of all new tubing, and of tubing repairs wherever possible, shall be by compression fittings. Compression connections shall be designed to provide a seal and to retain the tubing, without slippage, at a working water pressure of 150 psig.

Flanges shall conform to ANSI B16.1, Class 125, as to dimensions, drillings, etc. Copper tubing, when used, shall be Type K tubing having dimensions and weights given in Table A.1 of AWWA C800.

Brass pipe shall conform to the weights and dimensions for Extra Strong pipe given in Table A.2 of AWWA C800.

All fittings shall be suitable for use at hydrostatic working pressures up to 150 psig (hydrostatic testing of installed systems is at 200 psig).

(j) Reserved

(k) Polyvinyl Chloride Potable/Reclaimed Water Pipe

1. General

All polyvinyl chloride (PVC) potable/reclaimed water pipe shall be of the rigid (UNPLASTICIZED) type and must bear the National Sanitation Foundation seal of approval for potable water pipe. Each joint of pipe shall consist of single continuous extrusion; bells or other components attached by solvent welding are not acceptable. Pipe shall be pressure rated at 200 psi (SDR-14).

Pipe shall have push-on, rubber gasket joints of the bell and spigot type with thickened integral bells with rubber gasket joints. The wall thickness of each pipe bell and joint coupling must be greater than the standard pipe barrel thickness. Clearance must be provided in every gasket joint for both lateral pipe deflection and for linear expansion and contraction. Concrete thrust blocking shall be placed behind bends and tees. Concrete support cradles or blocking shall be required for support of all fire hydrants, valves and AWWA C110 fittings; such support shall be provided for AWWA C153 fittings when required by the E/A.

2. Applicable Specifications

Except as modified or supplemented herein, PVC pipe shall meet the following standards:

AWWA C-900, SDR 14 for PVC Pressure Pipe, in 4, 6, 8 and 12 inch nominal sizes, having Cast Iron Pipe size outside diameters.

Fittings used with PVC Pressure pipe shall be AWWA C-110 or AWWA C-153 compact ductile iron fittings.

All pipe 4 inches and larger must be approved Underwriter's Laboratories for use in buried water supply and fire protection systems.

3. Material Requirements

All pipe and fittings shall be made from clean, virgin, NSF certified, Class 12454B PVC. Clean reworked materials generated from the manufacturers own production may be used within the current limits of the referenced AWWA C-900.

4. Marking

PVC for reclaimed piping shall be purple or wrapped in purple polyethylene film wrap.

Permanent marking on each joint of pipe shall include the following at intervals of not more than 5 feet:

Nominal pipe size and OD base (e.g., 4 CIPS).

Type of plastic material (e.g., PVC 12454B).

Standard Dimension Ratio and the pressure rating in psi for water at 73 F (e.g., SDR 14, 200 psi).

AWWA designation with which the pipe complies (e.g., AWWA C-900).

Manufacturer's name or code and the National Sanitation Foundation (NSF) mark.

5. Tracer Tape

Inductive Tracer Detection Tape shall be placed directly above the centerline of all non-metallic pipe a minimum of 12 inches below subgrade or, in areas outside the limits of pavement, a minimum of 18 inches below finished grade. The tracer tape shall be encased in a protective, inert, plastic jacket and color coded according to American Public Works Association Uniform Color Code. Except for minimum depth of cover, the tracer tape shall be placed according to manufacturer’s recommendations. Manufacturers must be listed on SPL WW-597.

(l) Polyvinyl Chloride (PVC) Pipe (Nonpressure) and Fittings

1. General

PVC sewer and wastewater pipe and fittings 6 through 15 inch diameter shall conform to ASTM D 3034. Pipe shall have minimum cell classification of 12364 or 12454. Fittings shall have cell classification of 12454 or 13343. Pipe stiffness shall be at least 115 psi as determined by ASTM D 2412. Pipe manufacturers shall be on SPL WW-227, and fitting manufacturers shall be on SPL WW-227B.

PVC sewer and wastewater pipe and fittings 18 through 27 inch diameter shall conform to ASTM F 679. Pipe shall have minimum cell classification of 12364 or 12454. Pipe stiffness shall be at least 72 psi as determined by ASTM D 2412. Pipe manufacturers shall be on SPL WW-227A, and fitting manufacturers shall be on SPL WW-227B.

2. Joints

PVC pipe and fitting shall have elastomeric gasket joints conforming to ASTM D 3212. Gaskets shall conform to ASTM F 477.

3. Pipe Markings

Pipe meeting ASTM D 3034 shall have permanent marking on the pipe that includes the following at intervals of not more than 5 feet:

Manufacturer's name and/or trademark and code.

Nominal pipe size.

PVC cell classification per ASTM D 1784

The legend “SDR-_ _ PVC Sewer Pipe” (SDR 26, 23.5. or less is required)

The designation “ASTM D 3034”

Pipe meeting ASTM F 679 shall have permanent marking that includes the following at intervals of not more than 5 feet:

Manufacturer’s name or trademark and code

Nominal pipe size

PVC cell classification per ASTM D 1784

Pipe stiffness designation “PS _ _ PVC Sewer Pipe” (PS of at least 72 is required

The designation “ASTM F 679”

4. Fitting Markings

Fittings meeting ASTM D 3034 shall have permanent marking that includes the following:

Manufacturer's name or trademark,

Nominal size

The material designation "PVC"

The designation, "ASTM D 3034"

Fittings meeting ASTM F 679 shall have permanent marking that includes the following:

Manufacturer’s name or trademark and code

Nominal size

The material designation “PVC”

The designation “ASTM F 679”

5. Tracer Tape

Inductive Tracer Detection Tape shall be placed directly above the centerline of all non-metallic pipe a minimum of 12 inches below subgrade or, in areas outside the limits of pavement, a minimum of 18 inches below finished grade. The tracer tape shall be encased in a protective, inert, plastic jacket and color coded according to American Public Works Association Uniform Color Code. Except for minimum depth of cover, the tracer tape shall be placed according to

manufacturer's recommendations. Manufacturers must be listed on SPL WW-597.

(m) Steel Pipe

1. Standard Weight

ASTM A 53, Schedule 40.

2. Extra Heavy Weight

Seamless ASTM A 53, Schedule 80.

3. Encasement Pipe

a. For direct-bury installations, pipe shall conform to ASTM A134 with minimum thickness of 3/8 inch (9.5 mm).

b. For jacked installations, pipe shall conform to requirements on drawings.

4. Fittings

Nipples and fittings extra strong Federal Specification WW-N 351 or WW-P 521.

5. Coatings

Black or galvanized as indicated.

(n) Welded Steel Pipe and Fittings for Water-Pipe

1. General Reference Standards Specification.

Specifications of the American Water Works Association (AWWA) listed below shall apply to this Section.

C-200 Steel Water Pipe 6 inches and larger.

C-205 Cement-Mortar Protective Lining and Coating for Steel Water Pipe, 4 inches and larger, Shop Applied.

C-206 Field Welding of Steel Water Pipe.

C-207 Steel Pipe Flanges for Waterworks Services, Sizes 4 inches through 144 inches.

C-208 Dimensions for Steel Water Pipe Fittings.

C-602 Cement-Mortar Lining of Water Pipelines, 4 inches and larger in Place.

2. Submittals

Furnish Shop Drawings, product data, design calculations and test reports as described below:

a. Certified copies of mill tests confirming the type of materials used in steel plates, mill pipe flanges and bolts and nuts to show compliance with the requirements of the applicable standards.

b. Complete and dimensional working drawings of all pipe layouts. Shop Drawings shall include the grade of material, size, wall thickness of the pipe and fittings, type and location of fittings and the type and limits of the lining and coating systems of the pipe and fittings.

c. Product data to show compliance of all couplings, supports, fittings, coatings and related items.

3. Job Conditions

a. The internal design pressure of all steel pipe and fittings shall be as indicated.

b. The interior of all steel pipe for potable water, 4 inches and larger, shall be cement-mortar lined.

4. Manufacturing

a. Description

Pipe shall comply with AWWA C-200.

(1) Circumferential deflection of all pipe in-place shall not exceed 2.0 percent of pipe diameter.

(2) Diameter

Nominal pipe diameter shall be the inside diameter of lining or pipe barrel, unless otherwise designated in Job Conditions.

b. Wall Thickness

(1) Steel pipe wall thickness shall be designed for the internal and external loads specified in this section. The cylinder thickness needed to resist internal pressure shall be based on an allowable stress in the steel equal to 1/2 the minimum yield stress of the material used.

5. Fittings

a. Welded

Fabricated steel fittings shall be of the same material as pipe and shall comply with AWWA C-208.

6. Flanges

   a. Flanges shall comply with the requirements of AWWA C-207, Class D or Class E. The class shall be based on operating conditions and mating flanges of valves and equipment.

   b. Gaskets shall be cloth-inserted rubber, 1/8 inch thick.

   c. Flanges shall be flat faced with a serrated finish.

7. Pipe Joints

   a. Lap Joints for Field Welding

      (1) Lap joints for field welding shall conform to AWWA C-206. This item applies only to pipes 72 inches in diameter and larger.

      (2) The bell ends shall be formed by pressing on a hydraulic expander or a plug die. After forming, the minimum radius of curvature of the bell end at any point shall not be less than 15 times the thickness of the steel shell. Bell ends shall be formed in a manner to avoid impairment of the physical properties of the steel shell. Joints shall permit a lap at least 1 1/2 inches when assembled. The longitudinal or spiral weld on the inside of the bell end and the outside of the spigot end on each section of pipe shall be ground flush with the plate surface. The inside edge of the bell and the outside edge of the spigot shall be scarfed or lightly ground to remove the sharp edges or burrs.

   b. Bell and Spigot Joints with O-Ring Gasket

      (1) Bell and spigot joints with rubber gasket shall conform to AWWA C-200.

      (2) The bell and spigot ends shall be so designed that when the joint is assembled, it will be self-centered and the gasket will be confined to an annular space in such manner that movement of the pipe or hydrostatic pressure cannot displace it. Compression of the gasket when the joint is completed shall not be dependent upon water pressure in the pipe and shall be adequate to ensure a watertight seal when subjected to the specified conditions of service. Bell and spigot ends shall be welded on preformed shapes. The bell and spigot ends shall conform to the reviewed Shop Drawings.

8. Interior and Exterior Protective Surface Coatings

   a. Exterior Surface to be mortar coated shall conform to AWWA C-205 for shop application and AWWA C-602 for field application.

Pipe materials shall be the product of an organization, which has had not less than 5 years successful experience manufacturing pipe materials, and the design and manufacture of the pipe, including all materials, shall be the product of one company.

b. All surfaces except as noted in c and d below shall receive shop application of mortar lining and coating.

c. Field Welded Joints. After installation, clean, line and coat unlined or uncoated ends adjacent to welded field joints, including the weld proper, as specified for pipe adjacent to the weld. Potable water only shall be used in the preparation of any cement, mortar, or grout lining.

d. Machined Surfaces. Shop coat machined surfaces with a rust preventative compound. After jointing surfaces, remaining exposed surfaces shall be coated per a) and b) above.

(o) Corrugated Metal Pipe

1. General

Pipe shall be corrugated continuous lock or welded seam helically corrugated pipe. Corrugated metal pipe may be galvanized steel, aluminized steel or aluminum conforming to the following:

Galvanized Steel	AASHTO M 218
Aluminized Steel	AASHTO M 274
Aluminum	AASHTO M 197

Where reference is made herein to gage of metal, the reference is to U.S. Standard Gage for uncoated sheets. Tables in AASHTO M 218 and AASHTO M 274 list thickness for coated sheets in inches. The Tables in AASHTO M 197 list thickness in inches for clad aluminum sheets.

Sampling and testing of metal sheets and coils used for corrugated metal pipe shall be in accordance with TXDOT Test Method Tex-708-I.

Damaged spelter coating shall be repaired by thoroughly wire brushing the damaged area and removing all loose, cracked or weld-burned spelter coating. The cleaned area shall be painted with a zinc dust-zinc oxide paint conforming to Federal Specifications TT-P 641b. Damaged pipe shall be rejected and removed from the project.

Damaged aluminized coating shall be repaired in accordance with the manufacturer's recommendations.

The following information shall be clearly marked on each section of pipe:

Thickness and corrugations

Trade Mark of the manufacturer

Specification compliance

2. Fabrication

a. Steel Pipe

Galvanized or aluminized steel pipe shall be full circle or arch pipe conforming to AASHTO M 36, Type I or Type II as indicated.

It may be fabricated with circumferential corrugations; lap joint construction with riveted or spot welded seams or it may be fabricated with helical corrugations with continuous helical lock seam or ultra high frequency resistance butt-welded seams.

b. Aluminum Pipe

Pipe shall conform to AASHTO M 196, Type I, circular pipe or Type II, pipe arch as indicated. It may be fabricated with circumferential corrugations; lap joint construction with riveted or spot welded seams or it may be fabricated with helical corrugations with a continuous helical lock seam.

Portions of aluminum pipe that are to be in contact with high chloride concrete or metal other than aluminum, shall be insulated from these materials by a coating of bituminous material. The coating applied to the pipe or pipe arch to provide insulation between the aluminum and other material shall extend a minimum distance of 1 foot beyond the area of contact.

3. Selection of Gages

The pipe diameter, permissible corrugations and required gauges for circular pipe shall be as indicated on the drawings.

For pipe arch, the span, rise, gage, corrugation size and coating thickness shall be as shown on the drawings. A tolerance of plus or minus 1 inch or 2 percent of equivalent circular diameter, whichever is greater, will be permissible in span and rise, with all dimensions measured from the inside crests of the corrugations.

4. Joint Material

Except as otherwise indicated, coupling bands and other hardware for galvanized or aluminized steel pipe shall conform to AASHTO M 36 for steel pipe and AASHTO M 196 for aluminum pipe. Field joints for each type of corrugated metal pipe shall maintain pipe alignment during construction and prevent infiltration of soil material during the life of the installation.

Coupling bands shall be not more than 3 nominal sheet thickness lighter than the thickness of the pipe to be connected and in no case lighter than 0.052 inch for steel or 0.048 inch for aluminum.

Coupling bands shall be made of the same base metal and coating (metallic or otherwise) as the pipe.

Coupling bands shall lap equally on each of the pipes being connected to form a tightly closed joint after installation.

Pipes furnished with circumferential corrugations shall be field jointed with corrugated locking bands. This includes pipe with helical corrugations, which has reformed circumferential corrugations on the ends. The locking bands shall securely fit into at least one full circumferential corrugation on each of the pipe ends being coupled. The minimum width of the corrugated locking bands shall be as shown below for the corrugation which corresponds to the end circumferential corrugations on the pipes being joined:

10 1/2 inches wide for 2 2/3 inches x 1/2-inch corrugations.

12 inches wide for 3 inches x 1 inch or 5 inches x 1-inch corrugations.

Helical pipe without circumferential end corrugations will be permitted only when it is necessary to join a new pipe to an existing pipe, which was installed with no circumferential end corrugations. In this event pipe furnished with helical corrugations at the ends shall be field jointed with either helically corrugated bands or with bands with projections or dimples. The minimum width of helically corrugated bands shall conform to the following:

12 inches wide for pipe diameters up to and including 72 inches.

14 inches wide for 1 inch deep helical end corrugations.

Bands with projections shall have circumferential rows of projections with one projection for each corrugation. The width of bands with projections shall be not less than the following:

12 inches wide for pipe diameters up to and including 72 inches.

The bands shall have 2 circumferential rows of projections.

16 1/4 inches wide for pipe diameters of 78 inches and greater.

The bands shall have 4 circumferential rows of projections.

Unless otherwise indicated, all bolts for coupling bands shall be 1/2-inch diameter. Bands 12 inches wide or less shall have a minimum of 2 bolts and bands greater than 12 inches wide shall have a minimum of 3 bolts.

Galvanized bolts may be hot dip galvanized conforming to AASHTO M 232, mechanically galvanized to provide the same requirements as AASHTO M 232 or electro-galvanized per ASTM A 164 Type RS.

5. Additional Coatings or Linings

a. Bituminous Coated

Bituminous Coated pipe or pipe arch shall be as indicated both as to base metal and fabrication and in addition shall be coated inside and out with a bituminous coating which shall meet the performance requirements set forth herein. The bituminous coating shall be 99.5 percent soluble in carbon bisulphide. The pipe shall be uniformly coated inside and out to a minimum thickness of 0.05 inch, measured on the crests of the corrugations.

The bituminous coating shall adhere to the metal tenaciously, shall not chip off in handling and shall protect the pipe from deterioration as evidenced by samples prepared from the coating material successfully meeting the Shock Test and Flow Test in accordance with Test Method Tex-522-C.

b. Paved Invert

Where a Paved Invert is indicated, the pipe or pipe arch, in addition to the fully coated treatment described above, shall receive additional bituminous material of the same specification as above, applied to the bottom quarter of the circumference to form a smooth pavement with a minimum thickness of 1/8 inch above the crests of the corrugations.

c. Cement Lined

(1) General

Except as modified herein, pipe shall conform to AASHTO M 36 for lock seam or welded helically corrugated steel pipe. Pipe shall be of full circle and shall be fabricated with two annular corrugations for purposes of joining pipes together with band couplers. Lock seams shall develop the seam strength as required in Table 3 of AASHTO M 36. Concrete lining shall conform to the following:

Composition

Concrete for the lining shall be composed of cement, fine aggregate and water that are well mixed and of such consistency as to produce a dense, homogeneous, non-segregated lining.

Cement

Portland Cement shall conform to AASHTO M 85.

Aggregate

Aggregates shall conform to AASHTO M 6 except that the requirements for gradation and uniformity of gradation shall not apply.

Mixture

The aggregates shall be sized, graded, proportioned and thoroughly mixed with such proportions of cement and water as will produce a homogenous concrete mixture of such quality that the pipe will conform to the design requirements indicated. In no case, however, shall the proportions of Portland Cement, blended cement or Portland Cement plus pozzolanic admixture be less than 470 lb/cu. yd of concrete.

Thickness

The lining shall have a minimum thickness of 1/8 inch above the crest of the corrugations.

Lining Procedures

The lining shall be plant applied by a machine traveling through a stationary pipe. The rate of travel of the machine and the rate of concrete placement shall be mechanically regulated so as to produce a homogenous nonsegregated lining throughout.

Surface Finish

The lining machine shall also mechanically trowel the concrete lining as the unit moves through the pipe.

Certification

Furnish manufacturer's standard certification of compliance upon request of the purchaser.

Joints

Pipe shall be joined together with coupling bands made from steel sheets to an indicated thickness of 0.064 inch (12 ga.). Coupling bands shall be formed with two corrugations that are spaced to provide seating in the third corrugation of each pipe end without creating more than 1/2 inch ± annular space between pipe ends when joined together.

Bands shall be drawn together by two 1/2 inch galvanized bolts through the use of a bar and strap suitably welded to the band.

When O-ring gaskets are indicated they shall be placed in the first corrugation of each pipe and shall be compressed by tightening the coupling band. Rubber O-ring gaskets shall conform to Section 5.9, ASTM C 361.

(2) Causes for Rejection

Pipe shall be subject to rejection on account of failure to conform to any of the indications. Individual sections of pipe may be rejected because of any of the following:

Damaged ends, where such damage would prevent making satisfactory joint.

Defects that indicate poor quality of work and could not be easily repaired in the field.

Severe dents or bends in the metal itself.

If concrete lining is broken out, pipe may be rejected or at the discretion of the E/A, repaired in the field in accordance with the manufacturer's recommendation.

Hairline cracks or contraction cracks in the concrete lining are to be expected and does not constitute cause for rejection.

d. Fiber Bonded

Where fiber bonded pipe is indicated, the pipe or pipe arch shall be formed from sheets whose base metal shall be as indicated. In addition, the sheets shall have been coated with a layer of fibers, applied in sheet form by pressing them into a molten metallic bonding. If a paved invert is indicated it shall be in accordance with the procedure outlined above. The test for spelter coating above is waived for fiber bonded pipe.

6. Slotted Drain Storm Sewers

The pipes for the slotted drain and slotted drain outfall shall be helically corrugated, lock seam or welded seam pipe. Materials and fabrication shall be in accordance with the above. The metal thickness shall be a minimum 16 gage.

The chimney assemblies shall be constructed of 3/16 inch welded plate or machine formed 14 gage galvanized steel sheets. The height of the chimney required shall be as indicated. Metal for the welded plate slot

shall meet the requirements of ASTM A 36 and the completed plate slot shall be galvanized after fabrication in accordance with ASTM A 123.

Weld areas and the heat affected zones where the slot is welded to the corrugated pipe shall be thoroughly cleaned and painted with a good quality asphalt base aluminum paint.

7. Mortar

Mortar shall be composed of 1 part Type I Portland Cement and 2 parts clean, sharp mortar sand suitably graded for the purpose and conforming in other respects to the provisions for fine aggregate of Item No. 403, "Concrete for Structures". Hydrated lime or lime putty may be added to the mix, but in no case shall it exceed 10 percent by weight of the total dry mix.

510.3 Construction Methods

(1) General

Prior to commencing this Work, all erosion control and tree protection measures required shall be in place and all utilities located and protected as set forth in "General Conditions". Clearing the site shall conform to Item No. 102S, "Clearing and Grubbing". Maintenance of environmental quality protection shall comply with all requirements of "General Conditions" and Item No. 601S, "Salvaging and Placing Topsoil".

The Contractor shall Work such that a reasonable minimum of disturbance to existing utilities will result. Particular care shall be exercised to avoid the cutting or breakage of all existing utilities. If at any time the Contractor’s operations damage the utilities in place, the Contractor shall immediately notify the owner of the utility to make the necessary repairs. When active wastewater sewer lines are cut in the trenching operations, temporary flumes shall be provided across the trench while open and the lines shall be restored when the backfilling has progressed to the original bedding lines of the sewer so cut.

The Contractor shall inform utility owners sufficiently in advance of the Contractor's operations to enable such utility owners to reroute, provide temporary detours or to make other adjustments to utility lines in order that the Contractor may Work with a minimum of delay and expense. The Contractor shall cooperate with all utility owners concerned in effecting any utility adjustments necessary and shall not hold the City liable for any expense due to delay or additional Work because of conflicts arising from existing utilities.

The Contractor shall do all trenching in accordance with the provisions and the directions of the E/A as to the amount of trench left unfilled at any time. All excavation and backfilling shall be accomplished as indicated and in compliance with State Statutes.

Where excavation for a pipe line is required in an existing City street, a street cut permit is required and control of traffic shall be as indicated in accordance with the Texas Manual on Uniform Traffic Control Devices.

Wherever existing utility branch connections, sewers, drains, conduits, ducts, pipes or structures present obstructions to the grade and alignment of the pipe, they shall be permanently supported, removed, relocated or reconstructed by the Contractor through cooperation with the owner of the utility, structure or obstruction involved. In those instances where their relocation or reconstruction is impractical, a deviation from line and grade will be ordered by the E/A and the change shall be made in the manner directed.

Adequate temporary support, protection and maintenance of all underground and surface utility structures, drains, sewers and other obstructions encountered in the progress of the Work shall be furnished by, and at the expense of, the Contractor and as approved by the E/A.

Where traffic must cross open trenches, the Contractor shall provide suitable bridges in conformance with Standard 804S-4. Adequate provisions shall be made for the flow of sewers; drains and watercourses encountered during construction and any structures, which may have been disturbed, shall be satisfactorily restored upon completion of Work.

When rainfall or runoff is occurring or is forecast by the U.S. Weather Service, the Contractor shall not perform or attempt any excavation or other earth moving Work in or near the flood plain of any stream or watercourse or on slopes subject to erosion or runoff, unless given specific approval by the E/A. When such conditions delay the Work, an extension of time for working day contracts will be allowed in accordance with "General Conditions".

(2) Water Line/New Wastewater Line Separation

Separation between water, reclaimed water, and wastewater lines shall be provided as shown in the Drawings.

Crossings of water, reclaimed water, and wastewater lines shall conform to details in the Drawings.

Wastewater manholes within 9 feet of water and reclaimed water lines shall be made watertight according to details in the Drawings.

(3) Utility and Storm Sewer Crossings

When the Contractor installs a pipe that crosses under a utility or storm sewer structure and the top of the pipe is within 18 inches of the bottom of the structure, the pipe shall be backfilled as shown in the Drawings. When the Contractor installs a pipe that crosses under a utility or storm sewer structure that is not shown in the Drawings, the pipe shall be backfilled as directed by the Engineer. Payment for backfilling pipe at utility or storm sewer structures not shown in the Drawings shall be by Change Order.

(4) Trench Excavation

Excavation in a paved street shall be preceded by saw cutting completely through any asphaltic cement concrete or portland cement concrete surface, base, or subbase to the underlying subgrade. This requirement shall not apply to excavations made with trenching machines that use a rotating continuous belt or chain for cutting and removing of material.

Underground piped utilities shall be constructed in an open cut in accordance with Federal regulations, applicable State Statutes conforming to Item No. 509S, "Excavation Safety Systems" and with a trench width and depth described below. When pipe is to be constructed in fill above the natural ground, Contractor shall construct embankment to an elevation not less than one foot above the top of the pipe, after which trench is excavated. Required vertical sides shall be sheeted and braced as indicated to maintain the sides of the required vertical excavation throughout the construction period. Adequacy of the design of sheeting and bracing shall be the responsibility of the Contractor's design professional. The Contractor shall be responsible for installation as indicated. After the pipe has been laid and the backfill placed and compacted to 12 inches above the top of the pipe, any sheeting, shoring and bracing required may be removed with special care to insure that the pipe is not disturbed. As each piece of sheeting is removed, the space left by its removal must be thoroughly filled and compacted with suitable material and provisions made to prevent the sides of the trench from caving until the backfill has been completed. Any sheeting left in place will not be paid for and shall be included in the unit price bid for pipe.

(5) Trench Width

Trenches for water, reclaimed, and wastewater lines shall have a clear width on each side beyond the outside surfaces of the pipe bell or coupling of not less than 6 inches nor more than 12 inches.

Trenches for Storm Sewers up to 42 inches shall have a width of 1 foot on each side beyond the outside surfaces of the pipe. Pipes more than 42 inches shall have a trench width not to exceed 18 inches on each side beyond the outside surfaces of the pipe.

If the trench width within the pipe zone exceeds this maximum, the entire pipe zone shall be refilled with approved backfill material, thoroughly compacted to a minimum of 95 percent of maximum density as determined by TxDOT Test Method Tex-114-E and then re-excavated to the proper grade and dimensions. Excavation along curves and bends shall be so oriented that the trench and pipe are approximately centered on the centerline of the curve, using short lengths of pipe and/or bend fittings if necessary.

For all utilities to be constructed in fill above natural ground, the embankment shall first be constructed to an elevation not less than 1 foot above the top of the utility after which excavation for the utility shall be made.

(6) Trench Depth and Depth of Cover

All pipe and in-line appurtenances shall be laid to the grades indicated. The depth of cover shall be measured from the established finish grade, natural ground

surface, subgrade for staged construction, street or other permanent surface to the top or uppermost projection of the pipe.

(a) Where not otherwise indicated, all potable/reclaimed water piping shall be laid to the following minimum depths:

1. Potable/reclaimed water piping installed in undisturbed ground in easements of undeveloped areas, which are not within existing or planned streets, roads or other traffic areas shall be laid with at least 36 inches of cover.

2. Potable/reclaimed water piping installed in existing streets, roads or other traffic areas shall be laid with at least 48 inches of cover below finish grade.

3. Unless approved by the E/A, installation of potable/reclaimed water piping in proposed new streets will not be permitted until paving and drainage plans have been approved and the roadway traffic areas excavated to the specified or standard paving subgrade, with all parkways and sidewalk areas graded according to any applicable provisions of the drainage plans or sloped upward from the curb line to the right of way line at a minimum slope of 1/4 inch per foot. Piping and appurtenances installed in such proposed streets shall be laid with at least 36 inches of cover below the actual subgrade.

(b) Where not otherwise indicated, all wastewater piping shall be laid to the following minimum depths:

1. Wastewater piping installed in natural ground in easements or other undeveloped areas, which are not within existing or planned streets, roads or other traffic areas shall be laid with at least 42 inches of cover.

2. Wastewater piping installed in existing streets, roads or other traffic areas shall be laid with at least 66 inches of cover.

3. Wastewater piping installed in such proposed streets shall be laid with at least 48 inches of cover below the actual subgrade.

(7) Classification of Excavation

Excavation will not be considered or paid for as a separate item of Work, so excavated material will not be classified as to type or measured as to quantity. Full payment for all excavation required for the construction shall be included in the various unit or lump sum Contract prices for the various items of Work installed, complete in place. No extra compensation, special treatment or other consideration will be allowed due to rock, pavement, caving, sheeting and bracing, falling or rising water, working under and in the proximity of trees or any other handicaps to excavation.

(8) Dewatering Excavation

Underground piped utilities shall not be constructed or the pipe laid in the presence of water. All water shall be removed from the excavation prior to the pipe placing operation to insure a dry firm granular bed on which to place the underground piped utilities and shall be maintained in such unwatered condition until all concrete and mortar is set. Removal of water may be accomplished by bailing, pumping or by a well-point installation as conditions warrant.

In the event that the excavation cannot be dewatered to the point where the pipe bedding is free of mud, a seal shall be used in the bottom of the excavation. Such seal shall consist of Class B concrete, conforming to Item No. 403, "Concrete for Structures", with a minimum depth of 3 inches.

(9) Trench Conditions

Before attempting to lay pipe, all water, slush, debris, loose material, etc., encountered in the trench must be pumped or bailed out and the trench must be kept clean and dry while the pipe is laid and backfilled. Where needed, sump pits shall be dug adjoining the trench and pumped as necessary to keep the excavation dewatered.

Backfilling shall closely follow pipe laying so that no pipe is left exposed and unattended after initial assembly. All open ends, outlets or other openings in the pipe shall be protected from damage and shall be properly plugged and blocked watertight to prevent the entrance of trench water, dirt, etc. The interior of the pipeline shall at all times be kept clean, dry and unobstructed.

Where the soil encountered at established footing grade is a quicksand, saturated or unstable material, the following procedure shall be used unless other methods are indicated:

All unstable soils shall be removed to a depth of a minimum 2 feet below bottom of piped utility or as required to stabilize the trench foundation. Such excavation shall be carried out for the entire trench width.

All unstable soil so removed shall be replaced with a concrete seal, foundation rock or coarse aggregate materials placed across the entire trench width in uniform layers not to exceed 6 inches, loose measure and compacted by mechanical tamping or other means which shall provide a stable foundation for the utility.

Forms, sheathing and bracing, pumping, additional excavation and backfill required in unstable trench conditions shall be included in the unit price bid for pipe.

(10) Blasting

All blasting shall conform to the provisions of the "General Conditions" and/or "Public Safety and Convenience".

(11) Removing Old Structures

When out of service masonry structures or foundations are encountered in the excavation, such obstructions shall be removed for the full width of the trench and to a depth of 1 foot below the bottom of the trench. When abandoned inlets or

manholes are encountered and no plan provision is made for adjustment or connection to the new sewers, such manholes and inlets within the construction limits shall be removed completely to a depth 1 foot below the bottom of the trench. In each instance, the bottom of the trench shall be restored to grade by backfilling and compacting by the methods provided above. Where the trench cuts through storm or wastewater sewers which are known to be abandoned, these sewers shall be cut flush with the sides of the trench and blocked with a concrete plug in a manner satisfactory to the E/A. When old structures are encountered, which are not visible from the existing surface and are still in service, they shall be protected and adjusted as required to the finished grade.

(12) Lines and Grades

Grades, lines and levels shall conform to the General Conditions and/or "Grades, Lines and Levels". Any damage to the above by the Contractor shall be re-established at the Contractor's expense. The Contractor shall furnish copies of all field notes and "cut sheets" to the City.

The location of the lines and grades indicated may be changed only by direction of the E/A. It is understood that the Contractor will be paid for Work actually performed on the basis of the unit Contract prices and that the Contractor shall make no claim for damages or loss of anticipated profits due to the change of location or grade.

All necessary batter boards or electronic devices for controlling the Work shall be furnished by, and at the expense of, the Contractor. Batter boards shall be of adequate size material and shall be supported substantially. The boards and all location stakes must be protected from possible damage or change of location. The Contractor shall furnish good, sound twilled lines for use in achieving lines and grades and the necessary plummets and graduated poles.

The Contractor shall submit to the Engineer at least six copies of a detailed pipe laying schedule for review and approval. The laying schedule shall list all types of pipe, fittings, valves, hydrants, flanged outlets, and other appurtenances required for construction. The Contractor shall submit the laying schedule at least 30 days in advance of construction on the project. The Engineer will forward review comments to the Contractor for revisions. The Contractor shall make revisions and forward to the Engineer for review. Prior to start of construction on the Project, the Engineer will send a reviewed final laying schedule marked for construction to the Contractor. Should the Contractor's procedures not produce a finished pipe placed to grade and alignment, the pipe shall be removed and relayed and the Contractors procedures modified to the satisfaction of the E/A. No additional compensation shall be paid for the removal and relaying of pipe required above.

(13) Surplus Excavated Materials

Excess material or material which cannot be made suitable for use in embankments will be declared surplus by the E/A and shall become the property of the Contractor to dispose of off site at a permitted fill site, without liability to the City or any individual. Such surplus material shall be removed from the Work site promptly following the completion of the portion of the utility involved.

(14) Pipe Bedding Envelope

Pipe shall be installed in a continuous bedding envelope of the type shown on the drawings or as described herein. The envelope shall extend the full trench width, to a depth of 6 inches below the pipe and shall rise at least to the spring line of storm water pipe and to 12 inches above water, reclaimed, and wastewater pipe.

(a) Standard Bedding Materials

USE / PIPE MATERIAL	Cement Stabilized Backfill	Natural or Mf'd Sand	Pea Gravel	PIPE BEDDING STONE			
				Uncrushed Gravel	Crushed Gravel	Crushed Stone	Stone Screenings
WATER and RECLAIMED WATER							
Welded Steel	X					X	
Service Tubing 3/4" to 2-1/2"		X	X				X
WATER and RECLAIMED WATER (Ductile Iron)							
Up to 15 Inch ID		X	X	X			X
Larger Than 15 Inch ID			X	X			
WATER and RECLAIMED WATER (PVC only) and WASTEWATER							
Up to 15 Inch ID		X	X	X	X	X	X
Larger Than 15 Inch ID			X	X	X	X	
STORMWATER							
Concrete		X	X	X	X	X	X
Metal		X	X	X			X

(b) General requirements and limitations governing bedding selection.

1. Crushed gravel or crushed stone shall not be used with polyethylene tubing or polyethylene film wrap.

2. Uncrushed gravel may be used with polyethylene film wrap in trenches up to 6 feet deep and in deeper trenches where ample trench width, a tremmie, or conditions will allow controlled placement of the gravel without damaging the polyethylene wrap.

3. Bedding shall be placed in lifts not exceeding 8 inches loose thickness and compacted thoroughly to provide uniform support for the pipe barrel and to fill all voids around the pipe.

4. Pea Gravel or bedding stone shall be used in blasted trenches.

(c) Requirements to prevent particle migration.

Bedding material shall be compatible with the materials in the trench bottom, walls and backfill so that particle migration from, into or through the bedding is minimized. The E/A may require one or more of the following measures to minimize particle migration: use of impervious cut-off collars; selected bedding materials, such as pea gravel or bedding stone mixed with sand; filter fabric envelopment of the bedding; cement stabilized backfill; or other approved materials or methods. Measures to minimize particle migration will be shown on the Drawings or designated by the E/A, and, unless provisions for payment are provided in the contract documents, the cost of these measures shall be agreed by change order. The following limitations shall apply.

1. Sand, alone, shall not be used in watercourses, in trenches where groundwater is present, or in trenches with grades greater than 5 percent.

2. Pea gravel or bedding stone, alone, shall not be used in the street right-of-way within 5 feet of subgrade elevation in trenches that are 3 feet or wider.

3. each gravel or bedding stone, alone, shall not be used where the trench bottom, sides, or backfill is composed of non-cementitious, silty or sandy soils having plasticity indices less than 20, as determined by the E/A.

(15) Laying Pipe

No pipe shall be installed in the trench until excavation has been completed, the bottom of the trench graded and the trench completed as indicated.

Laying of corrugated metal pipes on the prepared foundation shall be started at the outlet end with the separate sections firmly joined together, with outside laps of circumferential joints pointing upstream and with longitudinal laps on the sides. Any metal in joints, which is not protected by galvanizing, shall be coated with suitable asphaltum paint. Proper facilities shall be provided for hoisting and lowering the sections of pipe into the trench without damaging the pipe or disturbing the prepared foundation and the sides of the trench. Any pipe which is not in alignment or which shows any undue settlement after laying or damage shall be taken up and re-laid without extra compensation.

Multiple installations of corrugated pipe or arches shall be laid with the centerlines of individual barrels parallel. When not otherwise indicated, clear distances of 2 feet between outer surfaces of adjacent pipes shall be maintained.

No debris shall remain in the drainways or drainage structures.

All recommendations of the manufacturer shall be carefully observed during handling and installation of each material. Unless otherwise indicated, all materials shall be delivered to the project by the manufacturer or agent and unloaded as

directed by the Contractor. Each piece shall be placed facing the proper direction near to where it will be installed.

The interior of all pipe, fittings and other accessories shall be kept free from dirt and foreign matter at all times and stored in a manner that will protect them from damage. Stockpiled materials shall be stacked so as to minimize entrance of foreign matter.

The interior of all pipeline components shall be clean, dry and unobstructed when installed.

Piping materials shall not be skidded or rolled against other pipe, etc. and under no circumstances shall pipe, fittings or other accessories be dropped or jolted.

During handling and placement, materials shall be carefully observed and inspected and any damaged, defective or unsound materials shall be marked, rejected and removed from the job site. Minor damage shall be marked and repaired in a manner satisfactory to the E/A. Joints, which have been placed, but not joined, backfilled, etc., shall be protected in a manner satisfactory to the E/A.

(16) Assembling of Pipe

Angular spacing of all joints shall meet the manufacturer's recommendations for the pipe and accessories being used. Side outlets shall be rotated so that the operating stems of valves shall be vertical when the valves are installed. Pressure pipe shall be laid with bell ends facing the direction of pipe installation. Pipe end bells shall be placed upgrade for all wastewater lines.

Orientation marks, when applicable, shall be in their proper position before pipe is seated.

Before joining any pipe, all foreign matter, lumps, blisters, excess coal tar coating, oil or grease shall be removed from the ends of each pipe and the pipe ends shall then be wire brushed and wiped clean and dry. Pipe ends shall be kept clean until joints are made.

Every precaution shall be taken to prevent foreign material from entering the pipe during installation. No debris, tools, clothing or other materials shall be placed in the pipe.

(17) Joints

(a) Mortar (Storm Drain joints only)

Pipe ends shall be clean, free of asphalt or other contaminants, which will inhibit the bond of the mortar to the pipe. The pipe ends shall be moistened immediately prior to placing the mortar in the joint.

(b) Cold Applied Preformed Plastic Gaskets (Storm Drain joints only)

The pipe ends shall be clean and the joint material applied to the dry pipe. In cold weather, the joint material shall be heated to facilitate the seal of the joint.

(c) O-Ring and Push-on Joints

Just before making a joint the ends of the pipe shall be clean, dry, free of any foreign matter, lump blisters, excessive coal tar coating and grease or oil and shall be wire brushed. The gasket and the inside surface of the bell shall be lubricated with a light film of soft vegetable soap compound (Flax Soap) to facilitate telescoping the joints. The rubber gasket if not factory installed shall be stretched uniformly as it is placed in the spigot groove to insure a uniform volume of rubber around the circumference of the groove. The spigot shall be centered in the bell, the pipe pushed home uniformly and brought into true alignment. Bedding material shall be placed and tamped against pipe to secure the joint. Care should be taken to prevent dirt or foreign matter from entering the joint space.

(d) Bolted Joints

All flanged, mechanical or other bolted joints shall be joined with nuts and bolts and be coated as indicated above in Iron Pipe.

(18) Pressure Pipe Laying

(a) Grout for Concrete Steel Cylinder Pipe (CSC) and Welded Steel Pipe

Aggregate, cement, etc., shall be as indicated in "Mortar" herein. Potable water shall be used in the preparation of any cement, mortar, or grout lining.

Grout shall be poured into the recess between the bell and spigot on the outside of the pipe and contained by a joint wrapper ("diaper") recommended by the pipe manufacturer. The wrapper shall have a minimum width of 7 inches for 30 inch and smaller and 9 inches for larger pipe, secured to the pipe by "Band Iron" steel straps. The grout shall be poured in one continuous operation in such manner that after shrinkage and curing the joint recess shall be completely filled.

Mortar for the inside recess shall be of the consistency of plaster. The inside recess between the bell and spigot shall be filled with mortar after the pipe joint on either side of the recess has been backfilled and well tamped with no less than one pipe joint installed ahead of the pipe forming the recess. The mortar shall completely fill the recess and shall be trowelled and packed into place and finished off smooth with the inside of the pipe.

The Contractor shall inspect the joint after the mortar has set and make repairs of any pockets, cracks or other defects caused by shrinkage to the satisfaction of the E/A. The inside surface shall be cleared of any mortar droppings, cement, water, slurry, etc., before they have become set and shall be cleared of any other foreign matter. The inside surface of the pipe shall be left clean and smooth.

Pipe shall be handled at all times with wide non abrasive slings, belts or other equipment designed to prevent damage to the coating and all such equipment shall be kept in such repair that its continued use is not injurious to the coating. The use of tongs, bare pinch-bars, chain slings, rope slings

without canvas covers, canvas or composition belt slings with protruding rivets, pipe hooks without proper padding or any other handling equipment, which the E/A deems to be injurious to the coating, shall not be permitted. The spacing of pipe supports required to handle the pipe shall be adequate to prevent cracking or damage to the cement mortar lining.

(19) Placing Pipe in Tunnels

Piping installed as a carrier pipe in a tunnel, encasement pipe, etc., shall have uniform alignment, grade, bearing and conform to the reviewed Shop Drawings. All necessary casing spacers, bedding material, grout cradle or paving, bracing, blocking, etc., as stipulated by the Contract or as may be required to provide and maintain the required pipe alignment and grade, shall be provided by the Contractor at no cost except as provided by the Bid Items. This shall include casing spacers acceptable to the Owner attached to the carrier pipe in accordance with the manufacturer's recommendations. The insertion pushing forces shall not exceed the pipe manufacturer's recommendation. Such carrier piping shall have flexible bolted or gasketed push-on joints or Concrete Steel Cylinder pipe installed as follows:

(a) 21 Inch Pipe and Smaller

Prior to placing the pipe in the tunnel, the inside joint recess at the bell shall be buttered with cement mortar.

After the joint is engaged, the excess mortar shall be smoothed by pulling a tight fitting swab through the joint. Cement mortar protection shall then be placed in the normal manner to the exterior of the joint and allowed to harden sufficiently to avoid dislodgment during installation. If time is of the essence, a quick setting compound may be used.

(b) 24 Inch Pipe and Larger

Each length of pipe shall be pushed into the tunnel as single units. A flexible mastic sealer shall be applied to the exterior of the joint prior to joint engagement. The surfaces receiving the mastic sealer shall be cleaned and primed in accordance with the manufacturer's recommendation. Sufficient quantities of the mastic sealer shall be applied to assure complete protection of all steel in the joint area. The interior of the joint shall be filled with cement mortar in the normal manner after the pipe is in its final position within the tunnel.

(20) Temporary Pipe Plugs, Caps, Bulkheads and Trench Caps

Temporary plugs, caps or plywood bulkheads shall be installed to close all openings of the pipe and fittings when pipeline construction is not in progress.

All temporary end plugs or caps shall be secured to the pipe as provided under Item No. 507, "Bulkheads".

Trench caps shall be reinforced Class D concrete as indicated.

(21) Corrosion Control

(a) Protective Covering

Unless otherwise indicated, all flanges, nuts, bolts, threaded outlets and all other iron or steel components buried and in contact with earth or backfill shall be wrapped with 8-mil (minimum) polyethylene film meeting ANSI/AWWA C-105 to provide a continuous wrap.

(22) Pipe Anchorage, Support and Protection

Pressure pipeline tees, plugs, caps and bends exceeding 22-1/2 degrees; other bends as directed shall be securely anchored by suitable concrete thrust blocking or by approved metal harness. Unless otherwise indicated, on 24 inch or larger piping, all bends greater than 11 1/4 degrees shall be anchored as described herein.

Storm sewers on steep grades shall be lugged as indicated.

(a) Concrete Thrust Blocking

Concrete for use as reaction or thrust blocking shall be Class B conforming to Item No. 403, "Concrete for Structures".

Concrete blocking shall be placed between solid ground and the fitting to be anchored. The area of bearing on the pipe and on the ground shall be as indicated or directed by the E/A. The blocking shall, unless otherwise indicated, be so placed that the pipe, fittings and joints will be accessible for repair.

The trench shall be excavated at least 6 inches outside the outermost projections of the pipe or appurtenance and the trench walls shaped or undercut according to the detail Drawings or as required to provide adequate space and bearing area for the concrete.

The pipe and fittings shall be adequately weighted and laterally braced to prevent floating, shifting or straining of the pipeline while the concrete is being placed and taking initial set. The Contractor shall be solely responsible for the sufficiency of such restraints.

(b) Metal Thrust Restraint

Fabricated thrust restraint systems such as those described below may be approved for use instead of concrete blocking. To obtain approval, the project Drawings must include sufficient drawings, notes, schedules, etc., to assure that the proposed restraints as installed will be adequate to prevent undesirable movement of the piping components. Such restraint systems may only be used where and as specifically detailed and scheduled on approved Project Drawings.

1. Thrust Harness

A metal thrust harness of tie rods, pipe clamps or lugs, turnbuckles, etc., may be approved. All carbon steel components of such systems, including nuts and washers, shall be hot-dip galvanized; all other members shall be cast ductile iron. After installation, the entire assembly shall be wrapped with 8-mil polyethylene film, overlapped and taped in place with duct tape to form a continuous protective wrap.

2. Restrained Joints

Piping or fitting systems utilizing integral mechanically restrained joints may be approved. All components of such systems shall be standard manufactured products fabricated from cast ductile iron, hot-dip galvanized steel, brass or other corrosion resistant materials and the entire assembly shall be protected with a continuous film wrap as described for 1. above. Manufacturers of pipe with restrained joints integral to the pipe shall be listed on SPL WW-27F. All pipe and fitting systems with restrained joints shall be identified by applying an adhesive-backed warning tape to the top of the pipe and for the full length of the pipe, regardless of the type of pipe. For plastic pipes the warning tape shall be applied directly to the top of the pipe. For metal pipes and fittings the warning tape shall be applied to the top of the polyethylene film wrap. The warning tape shall conform to 510.2(8)(b)5.

Location, configuration and description of such products shall be specifically detailed on the Drawings. (Add-on attachments such as retainer glands, all-thread rods, etc., are not acceptable.)

(c) Concrete Encasement, Cradles, Caps and Seals

When trench foundation is excessively wet or unstable or installation of water or wastewater pipe will result in less than 30 inches of cover, Contractor shall notify E/A. E/A may require Contractor to install a concrete seal, cradle, cap, encasement or other appropriate action.

All concrete cap, etc., shall be continuous and begin and end within 6 inches of pipe joints. Concrete cap, cradle and encasement shall conform to City of Austin Standard No. 510S-1, “Concrete Trench Cap”. The pipe shall be well secured to prevent shifting or flotation while the concrete is being placed.

(d) Anchorage Bulkheads

Concrete bulkheads keyed into the undisturbed earth shall be placed as indicated to support and anchor the pipe and/or backfill against end thrust, slippage on slopes, etc. Concrete material and placement shall be Class A, Item No. 403, "Concrete for Structures".

(e) Trench Caps, Concrete Rip-Rap and Shaped Retards

Where called for by the Contract or as directed by the E/A, concrete trench caps, concrete rip-rap and/or shaped retards shall be placed as detailed by the Drawings as protection against erosion. Concrete material and placement shall be Class B, Item No. 403, "Concrete for Structures".

(23) Wastewater Connections

(a) Connections to Mains 12 Inches and Smaller

All branch connections of new main lines shall be made by use of manholes.

Service stubs shall be installed as indicated. Minimum grade shall be 1 percent downward to main and minimum cover shall be 4 1/2 feet at the curb. Standard plugs shall be installed in the dead end before backfilling.

Where a service connection to a main 12 inches or smaller is indicated, a wye, tee or double wye shall be installed.

Where a service connection to a main 15 inches or larger is indicated, a field tap may be made with the pipes installed crown to crown. The tap should be made conforming to the pipe manufacturer's recommendations with the E/A's approval.

Where not otherwise indicated, (wastewater) service connections shall be installed so that the outlet is at an angle of not more than 45 degrees above horizontal at the main line.

(b) Connections to the Existing System

Unless otherwise specified by the E/A, all connections made to existing mains shall be made at manholes with the crown of the inlet pipe installed at the same elevation as the crown of the existing pipe. Service stubs installed on the existing system shall be installed by use of tapping saddles unless otherwise approved by the E/A. Extreme care shall be exercised to prevent material from depositing in the existing pipe as the taps are being made.

When connections to existing mains are made, a temporary plug approved by the E/A must be installed downstream in the manhole to prevent water and debris from entering the existing system before Final Completion. These plugs shall be removed after the castings are adjusted to finish grade or prior to Final Completion.

(c) Connecting Existing Services to New Mains

Where wastewater services currently exist and are being replaced from the main to the property line, those services shall be physically located at the property line prior to installing any new mains into which the services will be connected. Where wastewater services currently exist but are not being replaced to the property line, those services shall be physically located at the point of connection between the new and existing pipes prior to installing any new mains into which the services will be connected.

(24) Potable or Reclaimed Water System Connections

All necessary connections of new piping or accessories to the existing potable or reclaimed water system shall be made by, and at the expense of, the Contractor. To minimize any inconvenience from outages, the Contractor shall schedule all

such connections in advance and such schedule must be approved by the E/A before beginning any Work.

(a) Shutoffs

The City will make all shutoffs on existing potable or reclaimed water mains. The Contractor shall be required to notify the E/A's field representative on the job at least 72 hours prior to the desired time for any shutoff. The E/A's field representative will notify any affected utility customers at least 48 hours prior to the shutoff. The Water Utility will make the shutoff after ensuring that all appropriate measures have been taken to protect the potable or reclaimed water system, customers and employees.

The City will operate all valves to fill existing mains. Where a newly constructed main has not been placed in service and has only one connection to the potable or reclaimed system, the Contractor may operate one valve to fill the main after approval has been obtained from the Water Utility. The operation of the valve is to be conducted under the immediate supervision of the E/A's field representative.

Water for the Work shall be metered and furnished by the Contractor in accordance with Section 01500 of the Standard Contract Documents.

(b) Wet Connections to Existing Water Potable or Reclaimed System

The Contractor shall make all wet connections called for by the Contract or required to complete the Work. Two connections to an existing line performed during the same shutout, at the same time and at a distance less than 50 linear feet apart, will be considered one wet connection. Two connections to an existing line performed during the same shutout, at the same time and at a distance equal to, or greater than 50 linear feet will be considered two wet connections. A wet connection shall include draining and cutting into existing piping and connecting a new pipeline or other extension into the existing pressure piping, forming an addition to the potable or reclaimed water transmission and distribution network.

The Contract price for wet connections shall be full payment for all necessary shutoffs, excavation, removing plugs and fittings, pumping water to drain the lines, cutting in new fittings, blocking and anchoring piping, bedding and backfilling, placing the lines and service and all site cleanup.

No water containing detectable amounts of chlorine may be drained, released or discharged until specific planning and appropriate preparations to handle, dilute and dispose of such chlorinated water are approved in advance by the City and the disposal operations will be witnessed by an authorized representative from the City.

(c) Pressure Taps to Existing Potable or Reclaimed Water System

The Contractor shall make all pressure taps called for by the Contract Documents or required to complete the Work. A pressure tap shall consist of connecting new piping to the existing potable or reclaimed water system by

drilling into the existing pipe while it is carrying water under normal pressure without taking the existing piping out of service.

Unless otherwise provided by the Contract, the Contractor shall, at the Contractor's expense, perform all necessary excavation, furnish and install the tapping sleeve, valve and accessories, provide the tapping machine, drill the tap and shall block, anchor and backfill the piping, valve and all accessories, place the new piping in service and perform all site cleanup. When the City makes the tap, City forces are not obligated or expected to perform any Work except to provide tapping machine and drill the actual hole. If City crews are to make the tap, fiscal arrangements must be made in advance at the Taps Office, Waller Creek Center, 625 East 10th Street.

If a private Contractor makes the tap, an Austin Water Utility Inspector must be present. "Size on size" taps will not be permitted, unless made by use of an approved full circle gasket tapping sleeve. Concrete blocking shall be placed behind and under all tap sleeves 24 hours prior to making the wet tap.

(d) Service Connections

Service connection taps into PVC or AC pipe or into CI or DI pipe 12 inches or smaller shall be made using either a service clamp or saddle or a tapping sleeve as recommended by the pipe manufacturer and as approved by the E/A. Direct tapping of these pipes will not be permitted.

All potable or reclaimed water service connections shall be installed so that the outlet is at an angle of not more than 45 degrees above horizontal at the main line.

Precautions should be taken to ensure that the tapping saddle or sleeve is placed on the pipe straight to prevent any binding or deformation of the PVC pipe. The mounting chain or U-bolt strap must be tight.

Tapping shall be performed with a sharp shell type cutter so designed that it will smoothly penetrate heavy walled PVC DR14 and 200 psi AC and will retain and extract the coupon from the pipe.

(25) Backfilling

(a) General

Special emphasis is placed upon the need to obtain uniform density throughout the backfill material. The maximum lift of backfill shall be determined by the compaction equipment selected and in no case shall it exceed 18 inches, loose measurement.

No heavy equipment, which might damage pipe, will be allowed over the pipe until sufficient cover has been placed and compacted. All internal pipe bracing installed or recommended by the manufacturer shall be kept in place until the pipe bedding and trench backfill have been completed over the braced pipe section. Testing of the completed backfill in streets and under and around structures shall meet the specified density requirements. Initial

testing shall not be at Contractor's expense and shall conform to the "General Conditions."

(b) General Corrugated Metal Pipe

After the corrugated metal pipe structure has been completely assembled on the proper line and grade and headwalls constructed where indicated; selected material free from rocks over 8 inches in size from excavation or borrow, as approved by the E/A, shall be placed along both sides of the completed structures equally, in uniform layers not exceeding 6 inches in depth (loose measurement), sprinkled if required and thoroughly compacted between adjacent structures and between the structures and the sides of the trench.

Backfill material shall be compacted to the same density requirements as indicated for the adjoining sections of embankment in accordance with the governing specifications thereof. Above the 3/4 point of the structure, the fill shall be placed uniformly on each side of the pipe in layers not to exceed 12 inches, loose measure.

Prior to adding each new layer of loose backfill material, until a minimum of 12 inches of cover is obtained over the crown of the pipe, an inspection will be made of the inside periphery of the corrugated metal structure to determine if any floating, local or unequal deformation has occurred as a result of improper construction methods.

(c) Backfill Materials

The E/A may approve any of the following well graded materials:

1. Select trench material
2. Sand
3. Crushed rock cuttings
4. Rock cuttings
5. Foundation Rock
6. Blasted material with fines and rock
7. Cement stabilized material
8. Borrow

Within the 100-year flood plain, sand will not be permitted for backfilling. The E/A will approve the topsoil for areas to be seeded or sodded.

(d) Backfill in Street Right of Way

Placement of backfill under existing or future pavement structures and within 2 feet of any structures shall be compacted to the required density using any

method, type and size of equipment, which will give the required compaction without damaging the pipe or bedding. Placement of backfill greater than 2 feet beyond structures in Right of Way shall be conform to (g) below. The depth of layers, prior to compaction, shall depend upon the type of sprinkling and compacting equipment used and the test results thereby obtained. Prior to and in conjunction with the compaction operation, each layer shall be brought to the moisture content necessary to obtain the required density and shall be kept level to insure uniform compaction over the entire layer. Testing for density shall be in accordance with Test Method Tex-114-E and Test Method Tex-115-E.

Each layer of backfill must provide the density as required herein. Swelling soils (soils with plasticity index of 20 or more) shall be sprinkled as required to provide not less than optimum moisture nor more than 2 percent over optimum moisture content and compacted to the extent necessary to provide not less than 95 percent nor more than 102 percent of the density as determined in accordance with Test Method Tex-114-E. Non-swelling soils (soils with plasticity index less than 20) shall be sprinkled as required and compacted to the extent necessary to provide not less than 95 percent of the density as determined in accordance with Test Method Tex-114-E.

After each layer of backfill is complete, tests may be made by the E/A. If the material fails to meet the density indicated, the course shall be reworked as necessary to obtain the indicated compaction and the compaction method shall be altered on subsequent Work to obtain indicated density.

At any time, the E/A may order proof rolling to test the uniformity of compaction of the backfill layers. All irregularities, depressions, weak or soft spots that develop shall be corrected immediately by the Contractor.

Should the backfill, due to any reason, lose the required stability, density or finish before the pavement structure is placed, it shall be recompacted and refinished at the sole expense of the Contractor. Excessive loss of moisture in the subgrade shall be prevented by sprinkling, sealing or covering with a subsequent backfill layer or granular material. Excessive loss of moisture shall be construed to exist when the subgrade soil moisture content is more than 4 percent below the optimum of compaction ratio density. Backfill shall be placed from the top of the bedding material to the existing grade, base course, subgrade or as indicated. The remainder of the street backfill shall be Flexible Base, Concrete or Hot Mix Asphalt Concrete as indicated or to replaced in kind to the surface removed to construct the pipe.

(e) Backfill in County Street or State Highway Right of Way

All Work within the right of way shall meet the requirements of (d) above, as a minimum and shall meet the requirements of the permit issued by the County when their requirements are more stringent. Prior to the start of construction, the Contractor shall be responsible for contacting the appropriate TxDOT office or County Commissioner's Precinct Office and following the operating procedures in effect for utility cut permits and pavement repair under their jurisdiction. Approval for all completed Work in the State or County right of

way shall be obtained from the appropriate Official prior to final payment by the Owner.

(f) Backfill in Railroad Right of Way

All Work within the railroad right of way shall meet the requirements of (d) above, as a minimum and shall meet the requirements of the permit issued by the Railroad Owner when their requirements are more stringent. Approval for all completed Work in the railroad right of way shall be obtained from the Railroad prior to Final Completion.

(g) Backfill in Easements

Where not otherwise indicated, Contractor may select whatever methods and procedures may be necessary to restore entire Work area to a safe, useful and geologically stable condition with a minimum density of 85 percent or a density superior to that prior to construction.

In and near flood plain of all streams and watercourses, under or adjacent to utilities, structures, etc. all backfill shall be compacted to a density of not less than 95 percent conforming to TxDOT Test Method Tex-114-E, unless otherwise directed by E/A.

All soil areas disturbed by construction shall be covered with top soil and seeded conforming to Item No. 604, "Seeding for Erosion Control". All turf, drainways and drainage structures shall be constructed or replaced to their original condition or better. No debris shall remain in the drainways or drainage structures.

(h) Temporary Trench Repair/Surfacing

If details of temporary trench repair/surfacing are not provided in the contract documents, the Contractor shall submit for approval of the E/A (1) a plan for temporary trench repair for areas that will be open to traffic but will be excavated later for full depth repair, and (2) a proposed method for covering trenches to maintain access to properties. The temporary surfacing shall afford a smooth riding surface and shall be maintained by the Contractor the entire time the temporary surface is in place.

(i) Permanent Trench Repair

The Contractor shall install permanent trench repairs conforming to details in the drawings.

(26) Quality Testing for Installed Pipe

(a) Wastewater Pipe Acceptance Testing

After wastewater pipe has been backfilled, the Contractor shall perform infiltration tests, exfiltration tests, or low pressure air tests as determined by the E/A. In addition. the Contractor shall perform deflection tests and shall assist OWNER’S personnel, as directed, in performing pipeline settlement

tests. The Contractor shall be responsible for making appropriate repairs to those element that do not pass any of these tests.

(b) Exfiltration Test

Water for the Work shall be metered and furnished by the Contractor in accordance with Section 01500 of the Standard Contract Documents.

Exfiltration testing shall be performed by the Contractor when determined by the E/A to be the appropriate test method. Exfiltration testing shall conform to requirements of the Texas Commission on Environmental Quality given in the Texas Administrative Code Title 30 Part 1 Chapter 317 Rule §317.2.

(c) Infiltration Test

Infiltration testing shall be performed by the Contractor when determined by the E/A to be the appropriate test method. Infiltration testing shall conform to requirements of the Texas Commission on Environmental Quality given in the Texas Administrative Code Title 30 Part 1 Chapter 317 Rule §317.2.

(d) Pipeline Settlement Test

During the infiltration test or after the exfiltration test, the pipe will be TV inspected for possible settlement. When air testing has been used, water shall be flowed into the pipe to permit meaningful observations. Any pipe settlement which causes excessive ponding of water in the pipe shall be cause for rejection. Excessive ponding shall be defined as a golf ball (1-5/8" dia.) submerged at any point along the line.

(e) Low Pressure Air Test of Gravity Flow Wastewater Lines

1. General

Wastewater lines up to 24-inch diameter shall be air tested between manholes. Wastewater lines 30-inch in diameter shall be air tested between manholes or at pipe joints. Wastewater lines 36-inch diameter and larger shall be air tested at joints. Backfilling to grade shall be completed before the test and all laterals and stubs shall be capped or plugged by the Contractor so as not to allow air losses, which could cause an erroneous test result. Manholes shall be plugged so they are isolated from the pipe and cannot be included in the test.

All plugs used to close the sewer for the air test shall be capable of resisting the internal pressures and must be securely braced. Place all air testing equipment above ground and allow no one to enter a manhole or trench where a plugged sewer is under pressure. Release all pressure before the plugs are removed. The testing equipment used must include a pressure relief device designed to relieve pressure in the sewer under test at 10 psi or less and must allow continuous monitoring of the test pressures in order to avoid excessive pressure. Use care to avoid the flooding of the air inlet by infiltrated ground water. (Inject the

air at the upper plug if possible.) Use only qualified personnel to conduct the test.

2. Ground Water

Since the presence of ground water will affect the test results, test holes shall be dug to the pipe zone at intervals of not more than 100 feet and the average height of ground water above the pipe (if any) shall be determined before starting the test.

3. Test Procedure

The E/A may, at any time, require a calibration check of the instrumentation used. Use a pressure gauge having minimum divisions of 0.10 psi and an accuracy of 0.0625 psi. (One ounce per square inch.) All air used shall pass through a single control panel. Clean the sewer to be tested and remove all debris where indicated. Wet the sewer prior to testing. The average backpressure of any ground water shall be determined (0.433 psi) for each foot of average water depth (if any) above the sewer.

Add air slowly to the section of sewer being tested until the internal air pressure is raised to 3.5 psig greater than the average backpressure of any ground water that may submerge the pipe. After the internal test pressure is reached, allow at least 2 minutes for the air temperature to stabilize, adding only the amount of air required to maintain pressure. After the temperature stabilization period, disconnect the air supply. Determine and record the time in seconds that is required for the internal air pressure to drop from 3.5 psig to 2.5 psig greater than the average backpressure of any ground water that may submerge the pipe.

For pipe less than 36-inch diameter, compare the time recorded with the time computed using the following equation:

$T = (0.0850 \times D \times K) \div Q$, where

T = time for pressure to drop 1.0 pounds per square inch gauge in seconds;

$K = 0.000419 \times D \times L$, but not less than 1.0

D = nominal inside diameter, in inches, as marked on the pipe;

L = length of line of same pipe size in feet; and

Q = rate of loss, 0.0015 cubic feet per minute per square foot of internal surface area (ft3/min/ft sq) shall be used.

Because a K value of less than 1.0 shall not be used, there are minimum test times for each pipe diameter as shown in the following table:

Table For Low Pressure Air Testing of Pipe

Pipe Diameter (inches)	Minimum Time (seconds)	Minimum Time applies to All Pipes Shorter than (feet)	Time for Longer Pipes (seconds)
8	454	298	1.520 × L
10 (See Note 1)	567	239	2.374 × L
12	680	199	3.419 × L
15	850	159	5.342 × L
18	1020	133	7.693 × L
21	1190	114	10.471 × L
24	1360	100	13.676 × L
30	1700	80	21.369 × L

Note 1. 10 inch diameter pipe to be used only by Austin Water Utility maintenance personnel.

Any drop in pressure, from 3.5 psig to 2.5 psig (adjusted for groundwater level), in a time less than that required by the above equation or table shall be cause for rejection. When the line tested includes more than one size pipe, the minimum time shall be that given for the largest size pipe included.

Lines that are 36 inches or larger inside diameter must be air tested at each joint. Lines that are 30-inch diameter may be air tested at each joint. The minimum time allowable for the pressure to drop from 3.5 pounds per square inch to 2.5 pounds per square inch gauge during a joint test, regardless of pipe size, shall be twenty (20) seconds. A drop in pressure from 3.5 psig to 2.5 psig (adjusted for groundwater level) in less than twenty seconds shall be cause for rejection.

Manholes must be tested separately and independently. All manholes must be hydrostatically tested with a maximum loss allowance of 0.025 gallon per foot diameter per foot of head per hour.

When lines are air tested, manholes are to be tested separately by exfiltration or vacuum method (see Standard Specification Item No. 506S, “Manholes”).

(f) Deflection Test

Deflection tests shall be performed by the Contractor on all flexible and semi-rigid wastewater pipes. The tests shall be conducted after the final backfill has been in place at least 30 days. Testing for in-place deflection shall be with a pipe mandrel at 95% of the inside diameter of the pipe. A second test of flexible and semi-rigid wastewater pipes 18 inch size and larger, also with a pipe mandrel sized at 95% of the inside diameter of the pipe, shall be conducted by the Contractor 30 days before the warranty expires on the Contractor’s Work.

Contractor shall submit proposed pipe mandrels to the E/A or the E/A’s designated representative for concurrence prior to testing the line.

Test(s) must be performed without mechanical pulling devices and must be witnessed by the E/A or the E/A's designated representative.

Any deficiencies noted shall be corrected by the Contractor and the test(s) shall be redone.

(27) Pressure Pipe Hydrostatic Testing

After the pipe has been installed and backfilled and all service laterals, fire hydrants and other appurtenances installed and connected, a pressure test, followed by a leakage test, will be conducted by the City. The City will furnish the pump and gauges for the tests. The Contractor shall be present and shall furnish all necessary assistance for conducting the tests. The specified test pressures will be based on the elevation of the lowest point of the line or section under test. Before applying the specified test pressure, all air shall be expelled from the pipe. If permanent air vents are not located at all high points, the Contractor shall install corporation cocks at such points.

All drain hydrant and fire hydrant leads, with the main 6-inch gate valve open and the hydrant valve seats closed and nozzle caps removed, shall be included in the test.

(a) Pressure Test

The entire project or each valved section shall be tested, at a constant pressure of 200 psi for a sufficient period (approximately 10 minutes) to discover defective materials or substandard work. The Contractor assumes all risks associated with testing against valves. Repairs shall be made by the Contractor to correct any defective materials or substandard work. The Contractor shall pre-test new lines before requesting pressure tests by City Forces. The Contractor shall have new lines pressurized to a minimum of 100 psi, on the date of testing, prior to arrival of City Forces.

(b) Leakage Test

A leakage test will follow the pressure test and will be conducted on the entire project or each valved section. The Contractor assumes all risks associated with testing against valves. The leakage test shall be conducted at 150 psi for at least 2 hours. The test pressure shall not vary by more than ±5 psi for the duration of the test.

(1) Allowable Leakage

Leakage shall be defined as the quantity of water that must be supplied into any test section of pipe to maintain the specified leakage test pressure after the air in the pipeline has been expelled and the pipe has been filled with water.

No pipe installation will be accepted if leakage exceeds the amount given by the following formula:

$$\text{Allowable leakage (gal / hr)} = [L \times D] \div 10{,}875$$

Where L = length of pipe tested, in feet

D = nominal pipe diameter, in inches, as marked on the pipe

(2) Location and Correction of Leakage

If such testing discloses leakage in excess of this specified allowable, the Contractor, at the Contractor's expense, shall locate and correct all defects in the pipeline until the leakage is within the indicated allowance.

All visible leakage in pipe shall also be corrected by Contractor at the Contractor's expense.

(28) Service Charges for Testing

Initial testing performed by City forces for the Contractor will be at the City's expense. Retesting, by City forces, of Contractor's work that fails initial testing will be at the Contractor's expense. The City's charge for retests will be $265.00, plus $50.00 for each hour over four hours. On City-funded projects, the charges incurred by the City for retesting will be deducted from funds due the Contractor. On non-City-funded projects, the charges incurred by the City for retesting will be billed to the Contractor. The City will withhold acceptance of the Contractor's work until the Contractor has paid the City for the retesting costs.

(29) Disinfection of Potable Water Lines

(a) Preventing Contamination

The Contractor shall protect all piping materials from contamination during storage, handling and installation. Prior to disinfection, the pipeline interior shall be clean, dry and unobstructed. All openings in the pipeline shall be closed with watertight plugs when pipe laying is stopped at the close of the day's work.

(b) Cleaning

Prior to disinfection the Contractor shall clean the pipeline to remove foreign matter. For pipelines 16" in diameter or smaller, cleaning shall consist of flushing the pipeline. For pipelines greater than 16" in diameter, cleaning shall be performed by operating hydrants and blow-offs located at low points in the pipeline, or by mechanical means (sweeping or pigging. Water for the Work shall be metered and furnished by the Contractor in accordance with Section 01500 of the Standard Contract Documents.

(c) Procedure and Dosage

The Contractor, at its expense, will supply the test gauges and the Sodium Hypochlorite conforming to ANSI/AWWA B300, which contains approximately 5 percent to fifteen percent available chlorine, and will submit for approval a written plan for the disinfection process. Calcium Hypochlorite conforming to ANSI/AWWA B300, which contains approximately 65 percent available

chlorine by weight, may be used in granular form or in 5 g tablets for 16" diameter or smaller lines, if it is included as part of the written plan of disinfection that is approved by the City of Austin. The Contractor, at its expense, shall provide all other equipment, supplies and the necessary labor to perform the disinfection under the general supervision of the City.

One connection to the existing system will be allowed with a valve arranged to prevent the strong disinfecting dosage from flowing back into the existing water supply piping. The valve shall be kept closed and locked in a valve box with the lid painted red. No other connection shall be made until the disinfection of the new line is complete and the water samples have met the established criteria. The valve shall remain closed at all times except when filling or flushing the line and must be staffed during these operations. Backflow prevention in the form of a reduced pressure backflow assembly must be provided if the valve is left unattended. The new pipeline shall be filled completely with disinfecting solution by feeding the concentrated chlorine and approved water from the existing system uniformly into the new piping in such proportions that every part of the line has a minimum concentration of 50 mg/liter available chlorine.

The disinfecting solution shall be retained in the piping for at least 24 hours and all valves, hydrants, services, stubs, etc. shall be operated so as to disinfect all their parts. After this retention period, the water shall contain no less than 25 mg/liter chlorine throughout the treated section of the pipeline.

For pipelines larger than 16" in diameter, the Contractor may use the AWWA C-651 "Slug Method" for disinfecting the pipeline. Chlorine shall be fed at a constant rate and at a sufficient concentration at one end of the pipeline to develop a slug of chlorinated water having not less than 100 mg/liter of free chlorine. The Contractor shall move the slug through the main so that all interior surfaces are exposed to the slug for at least three (3) hours. The chlorine concentration in the slug shall be measured as it moves through the pipeline. If the chlorine concentration drops below 50 mg/liter, the Contractor shall stop the slug and feed additional chlorine to the head of the slug to restore the chlorine concentration to at least 100 mg/liter before proceeding. As the slug flows past fittings and valves, related valves and hydrants shall be operated so as to disinfect appurtenances and pipe branches.

Unless otherwise indicated, all quantities specified herein refer to measurements required by the testing procedures included in the current edition of "Standard Methods". The chlorine concentration at each step in the disinfection procedure shall be verified by chlorine residual determinations.

(d) Final Flushing

The heavily chlorinated water shall then be carefully flushed from the potable water line until the chlorine concentration is no higher than the residual generally prevailing in the existing distribution system. Proper planning and appropriate preparations in handling, diluting, if necessary, and disposing of this strong chlorine solution is necessary to insure that there is no injury or damage to the public, the water system or the environment. The plans and preparations of the Contractor must be approved by the City before flushing

of the line may begin. Additionally the flushing must be witnessed by an authorized representative of the City.

Approval for discharge of the diluted chlorine water or heavily chlorinated water into the wastewater system must be obtained from the Austin Water Utility. The line flushing operations shall be regulated by the Contractor so as not to overload the wastewater system or cause damage to the odor feed systems at the lift stations. The City shall designate its own representative to oversee the work.

Daily notice of line discharging must be reported to the Austin Water Utility Dispatch office.

(e) Bacteriological Testing

After final flushing of the strong disinfecting solution, two (2) sets of water samples from the line, that are taken at least twenty-four (24) hours apart, will be tested for bacteriological quality by the City and must be found free of coliform organisms before the pipeline may be placed in service. Each set shall consist of one (1) sample that is drawn from the end of the main and additional samples that are collected at intervals of not more than 1000 feet along the pipeline. All stubs shall be tested before connections are made to existing systems.

The Contractor, at its expense, shall install sufficient sampling taps at proper locations along the pipeline. Each sampling tap shall consist of a standard corporation cock installed in the line and extended with a copper tubing gooseneck assembly. After samples have been collected, the gooseneck assembly may be removed and retained for future use.

Samples for bacteriological analysis will only be collected from suitable sampling taps in sterile bottles treated with sodium thiosulfate. Samples shall not be drawn from hoses or unregulated sources. The City, at its expense, will furnish the sterile sample bottles and may, at its discretion, collect the test samples with City personnel.

If the initial disinfection fails to produce acceptable sample test results, the disinfection procedure shall be repeated at the Contractor’s expense. Before the piping may be placed in service, two (2) consecutive sets of acceptable test results must be obtained.

An acceptable test sample is one in which: (1) the chlorine level is similar to the level of the existing distribution system; (2) there is no free chlorine and (3) total coliform organisms are absent. An invalid sample is one, which has excessive free chlorine, silt or non-coliform growth as defined in the current issue of the "Standards Methods.” If unacceptable sample results are obtained for any pipe, the Contractor may, with the concurrence of the Inspector, for one time only flush the lines and then collect a second series of test samples for testing by the City. After this flushing sequence is completed, any pipe with one or more failed samples must be disinfected again in accordance with the approved disinfection procedure followed by appropriate sampling and testing of the water.

The City of Austin Water Quality Laboratory will notify the assigned City of Austin Inspector in writing of all test results. The Inspector will subsequently notify the Contractor of all test results. The Water Quality Laboratory will not release test results directly to the Contractor.

(30) Cleanup and Restoration

It shall be the Contractor's responsibility to keep the construction site neat, clean and orderly at all times. Cleanup shall be vigorous and continuous to minimize traffic hazards or obstructions along the streets and to driveways. Trenching, backfill, pavement repair (as necessary), and cleanup shall be coordinated as directed by the City. The E/A will regulate the amount of open ditch and may halt additional trenching if cleanup is not adequate to allow for orderly traffic flow and access.

Materials at the site shall be stored in a neat and orderly manner so as not to obstruct pedestrian or vehicular traffic. All damaged material shall be removed from the construction site immediately and disposed of in a proper manner. All surplus excavated materials shall become the property of the Contractor for disposal at the Contractor’s expense. After trenching, the Contractor shall immediately remove all excavated materials unsuitable for or in excess of, backfill requirements. Immediately following the pipe laying Work as it progresses, the Contractor shall backfill, grade and compact all excavations as provided elsewhere. The backfill placed at that time shall meet all compaction test requirements. The Contractor shall immediately clean up and remove all unused soil, waste and debris and restore all surfaces and improvements to a condition equal or superior to that before construction began and to an appearance which complements the surroundings. The Contractor shall grade and dress the top 6 inches of earth surfaces with soil or other material similar and equal to the surrounding, fill and smooth any visible tracks or ruts, replace and re-establish all damaged or disturbed turf or other vegetation and otherwise make every effort to encourage the return of the entire surface and all improvements to a pleasant appearance and useful condition appropriate and complementary to the surroundings and equal or similar to that before construction began.

Placement of the final lift of permanent pavement, if a pavement is required, shall begin immediately after all testing of each segment of piping is satisfactorily completed.

510.4 Measurement

Pipe will be measured by the linear foot for the various types, sizes and classes. Parallel lines will be measured individually.

Where a line ties into an existing system, the length of the new line will be measured from the visible end of the existing system at the completed joint. Unless otherwise indicated, the length of water, reclaimed, and wastewater lines will be measured along pipe horizontal centerline stationing through fittings, valves, manholes, and other appurtenances.

Ductile iron fittings, whether standard mechanical joint or integral factory restrained joint type, will be measured by the ton and paid for in accordance with the schedule in Standard Products List WW-27C. Bolts, glands and gaskets will not be measured for payment. Steel cylinder concrete pipe fittings and welded steel pipe fittings will not be measured separately and are included in the unit price for the respective pipe bid items.

Factory restrained joint pipe meeting the requirements of Standard Products List WW-27F will be measured by the linear foot. The estimated quantity on the bid form is only for restrained joint pipe having integral mechanically restrained joints.

Connecting a new water, wastewater, or reclaimed water service to an existing, comparable type of private service will be measured by each connection. Service pipe from the main to the service connection will be measured by the linear foot.

The Contractor shall be responsible for removing and treating ground water flowing into a trench up to a baseline flow rate of 350 gpm of sustained flow for each mainline open trench (no more that 300 linear feet open trench per work zone segment is allowed at one time). This baseline flow rate is not a prediction of ground water conditions to be expected on the Project. Rather, it establishes contract terms regarding the quantity of ground water for which the contractor is responsible without extra or separate compensation. The flow rate must exceed 350 gpm continuously for at least 4 consecutive hours to be considered sustained flow. It is expected that trench dewatering for this baseline rate may be accomplished with a single 3-inch trash-type pump per open trench; however, measured flow rate, not pump size, type or characteristics shall be used to determine if the baseline rate has been exceeded. Flow rate shall be determined by measurements made at the discharge point of the water treatment facilities. Surface storm water flowing into a trench shall be the Contractor's responsibility to remove and treat without compensation, regardless of inflow rate or volume.

Adjustment of elevations during construction resulting in changes in flow line elevations of plus or minus two feet or less will not be considered for credit or additional compensation and no measurement for payment will be made.

Stormwater pipe will be measured along the slope of the pipe. Where drainage pipe ties into inlets, headwalls, catch basins, manholes, junction boxes or other structures that length of pipe tying into the structure wall will be included for measurement but no other portion of the structure length or width will be so included.

Excavation and backfill, when included as pipe installation will not be measured as such but shall be included in the unit price bid for constructing pipe and measured as pipe complete in place including excavation and backfill.

When pay items are provided for the other components of the system, measurement will be made as addressed hereunder.

510.5 Payment

Payment for pipe, measured as prescribed above, will be made at the unit price bid per linear foot for the various sizes of pipe, of the materials and type indicated, unless unstable material is encountered or trench excavation and backfill is bid as a separate item.

The concrete seal, foundation rock or coarse aggregate when used as directed in unstable material will be paid for at the unit price bid per cubic yard, which shall be full payment for all excavation and removal of unsuitable material and furnishing, placing and compacting the foundation rock, coarse aggregate or other approved material all complete in place.

Excavation and backfill, when included as a separate pay item, will be paid for by Pay Item No. 510-E or 510-F.

No separate payment will be made for dewatering a trench with ground water inflow of less than the baseline rate of 350 gpm of sustained flow as described above. Dewatering of those trenches shall be included in the contract unit price of the Pipe pay item. Payment for dewatering a trench with ground water inflow exceeding 350 gpm of sustained flow shall be agreed by change order. Dewatering of bore pits shall be included in the contract unit price for Bore Entry Pit or Exit Pit regardless of inflow rate or volume unless specified otherwise in the bid item for Bore Entry Pit or Exit Pit.

(1) Pipe

Payment for pipe, measured as prescribed above, will be made at the unit price bid per linear foot complete-in-place as designed and represented in the Drawings and other Contract documents. Restrained joint pipe meeting the requirements of Standard Products List WW-27F will be paid for separately at the unit price bid per linear foot. Unless otherwise provided herein, as separate pay item(s), the bid price per linear foot of pipe shall include the following:

clearing

constructing any necessary embankment

excavation

disposal of surplus or unusable excavated material

furnishing, hauling and placing pipe

field constructed joints, collars, temporary plugs, caps or bulkheads

all necessary lugs, rods or braces

pipe coatings and protection

connections to existing systems or structures, concrete blocking and thrust blocks and restrained joints

preparing, shaping, pumping for dewatering, and shoring of trenches

bedding materials

backfill materials

hauling, placing and preparing bedding materials

particle migration measures

hauling, moving, placing and compacting backfill materials

temporary pavement repairs and maintenance

temporary and permanent removal and replacement of pavement, curb, drainage structures, driveways, sidewalks and any other improvements damaged or removed during construction

cleanup

vertical stack on deep wastewater services

all other incidentals necessary to complete the pipe installation as indicated.

pipe joint restraint devices, where specified or allowed, meeting Standard Products Lists WW-27A or WW-27G .

No separate payment will be made for thrust restraint measures.

Steel cylinder concrete pipe fittings and welded steel pipe fittings will not be paid for separately. These will be including in the unit price bid for the bid item Pipe.

(2) Concrete Cradles and Seals

When called for in the Bid, concrete cradles and seals will be paid for at the unit Contract price bid per linear foot for the size of pipe specified, complete in place.

(3) Concrete Retards

When called for in the Bid, Concrete retards will be paid under Item No. 593S, “Concrete Retards".

(4) Boring or Jacking

When called for in the Bid, boring or jacking will be paid under Item 501S, "Jacking or Boring Pipe”.

(5) Wet Connections to Water Mains

When called for in the bid, wet connections will be paid at the unit price bid per each, complete in place, according to the size of the main that is in service and shall be full compensation for all Work required to make the connection and place

the pipe in service. (See subsection 510.3 'Construction Methods' part (24) (b) 'Wet Connections to Existing Water System').

(6) Fittings

Ductile iron fittings, furnished in accordance with these specifications, will be paid for at the unit price bid per ton, complete in place, according to the schedule of weights in Standard Products List WW-27C. Bolts, glands, and gaskets will not be paid for separately and shall be included in the contract unit price for fittings.

(7) Concrete Trench Cap and Encasement

Where the distance between the top of the concrete encasement and the top of the trench cap is less than 36 inches, the concrete cap and encasement shall be poured as one unit and paid for under this bid item at the Contract price bid per linear foot. When the distance above is greater than 36 inches or when the trench cap is placed separately, the trench cap shall be paid for as a separate item, per linear foot, complete in place.

(8) Cement-Stabilized Backfill

Cement-stabilized backfill will be paid for at the unit price bid per linear foot and shall be full payment to the Contractor for furnishing and installing the required material, mixed, placed and cured complete in place.

(9) Concrete Encasement

When called for in the Bid, Concrete Pipe Encasement will be paid under Item No. 505S, "Encasement and Encasement Pipe".

(10) Pressure Taps

Pressure taps will be paid for at the unit price bid, complete in place, according to the size tap made and the size main tapped and shall be full payment for furnishing all necessary materials, including tapping sleeve and valve, making the tap, testing and placing the connection in service.

(11) Excavation Safety Systems

When called for in Bid, Trench Safety Systems shall conform to Item No. 509S, "Excavation Safety Systems".

(12) Connecting a New Water, Wastewater, or Reclaimed Water Service to an existing, comparable type of private service will be paid for at the unit price bid, complete in place, according to the size of new service and size of existing private service, and shall be full payment for furnishing and installing all necessary materials, such as cleanouts, pipe, couplings, and fittings, and including excavation and backfill.

Payment, when included as a Contract pay item, will be made under one of the following:

Pay Item No. 510-AR __Dia.	Pipe, __Dia. _____Type (all depths), including Excavation and Backfill	Per Linear Foot.
Pay Item No. 510-ARRJ-__Dia.:	Factory Restrained Joint Pipe, __Dia. Class____ Ductile Iron, (all depths) including Excavation and Backfill	Per Linear Foot.
Pay Item No. 510-BR___x___Dia.:	Connecting New_____Service to Existing Private Service (____Dia. New Service to ____Dia. Private Service)	Per Each.
Pay Item No. 510 - CR:	Pipe Excavation, ____Ft. Width	Per Linear Foot.
Pay Item No. 510 - DR:	Pipe Trench Backfill, ____Ft. Width	Per Linear Foot.
Pay Item No. 510 - ER:	Concrete Seal or Cradle, ____Dia. Pipe	Per Linear Foot.
Pay Item No. 510 - FR:	Concrete Trench Cap, ____Ft. Width	Per Linear Foot.
Pay Item No. 510 - GR:	Concrete Cap and Encasement, ____Dia. Pipe	Per Linear Foot.
Pay Item No. 510 - HR:	Cement Stabilized Backfill, ___Dia. Pipe	Per Linear Foot.
Pay Item No. 510 - IR___x___Dia.:	Pressure Taps, ___ Dia. X ___ Dia.	Per Each.
Pay Item No. 510 - JR___x___Dia.:	Wet Connections, ___ Dia. x ___ Dia.	Per Each.
Pay Item No. 510 - KR:	Ductile Iron Fittings	Per Ton.
Pay Item No. 510-ASD___Dia.:	Pipe, __Dia. Type (all depths), including Excavation and Backfill	Per Linear Foot.
Pay Item No. 510-CSD:	Pipe Excavation, ____Ft. Width	Per Linear Foot.
Pay Item No. 510-DSD:	Pipe Trench Backfill, ____Ft. Width	Per Linear Foot.
Pay Item No. 510-ESD:	Concrete Seal or Cradle, ____Dia. Pipe	Per Linear Foot.
Pay Item No. 510-FSD:	Concrete Trench Cap, ____Ft. Width	Per Linear Foot.
Pay Item No. 510-GSD	Concrete Cap and Encasement, __Dia. Pipe	Per Linear Foot.
Pay Item No. 510-HSD:	Cement Stabilized Backfill, ___Dia. Pipe	Per Linear Foot.
Pay Item No. 510-AW___Dia.:	Pipe, __Dia. Type (all depths), including Excavation and Backfill	Per Linear Foot.
Pay Item No. 510-AWRJ___Dia.:	Factory Restrained Joint Pipe, ___Dia., Class____ Ductile Iron, (all depths) including Excavation and Backfill	Per Linear Foot.

Pay Item No. 510-BW___x___Dia.:	Connecting New_____Service to Existing Private Service (____Dia. New Service to ____Dia. Private Service)	Per Each.
Pay Item No. 510-CW:	Pipe Excavation, ____Ft. Width	Per Linear Foot.
Pay Item No. 510-DW:	Pipe Trench Backfill, ____Ft. Width	Per Linear Foot.
Pay Item No. 510-EW:	Concrete Seal or Cradle, ____Dia. Pipe	Per Linear Foot.
Pay Item No. 510-FW:	Concrete Trench Cap, ____Ft. Width	Per Linear Foot.
Pay Item No. 510-GW:	Concrete Cap and Encasement, __Dia. Pipe	Per Linear Foot.
Pay Item No. 510-HW:	Cement Stabilized Backfill, ___Dia. Pipe	Per Linear Foot.
Pay Item No. 510-IW___x___Dia.	Pressure Taps, ___ Dia. X ___ Dia.	Per Each.
Pay Item No. 510-JW___x___Dia.:	Wet Connections, ___ Dia. x ___ Dia.	Per Each.
Pay Item No. 510-KW:	Ductile Iron Fittings	Per Ton.
Pay Item No. 510-AWW___Dia.:	Pipe, __Dia. ___Type (all depths), including Excavation and Backfill	Per Linear Foot.
Pay Item No. 510-AWWRJ___Dia.	Factory Restrained Joint Pipe, ___Dia., Class Ductile Iron, (all depths) including Excavation and Backfill	Per Linear Foot.
Pay Item No. 510-BWW___x___Dia.:	Connecting New_____Service to Existing Private Service (____Dia. New Service to ____Dia. Private Service)	Per Each.
Pay Item No. 510-CWW:	Pipe Excavation, ____Ft. Width	Per Linear Foot.
Pay Item No. 510-DWW:	Pipe Trench Backfill, ____Ft. Width	Per Linear Foot.
Pay Item No. 510-EWW:	Concrete Seal or Cradle, ____Dia. Pipe	Per Linear Foot.
Pay Item No. 510-FWW:	Concrete Trench Cap, ____Ft. Width	Per Linear Foot.
Pay Item No. 510-GWW:	Concrete Cap and Encasement, _Dia. Pipe	Per Linear Foot.
Pay Item No. 510-HWW:	Cement Stabilized Backfill, ___Dia. Pipe	Per Linear Foot.
Pay Item No. 510-KWW:	Ductile Iron Fittings	Per Ton.

An “R” after the pay item indicates the use for reclaimed water.

An “SD” after the pay item indicates the use for storm drain.

A "W" after the pay item indicates the use for water.

A "WW" after the pay item indicates the use for wastewater.

End

Applicable References:

Standard Specifications Manual: Item Nos. Ref: 102S, 210S, 402S, 403S, 501S, 505S, 506, 507S, 509S, 593S, 601S, 604S

Standards Manual: Standard Detail Nos. 510S-1, (520 - series).

Design Criteria Manuals: Utilities Criteria Manual, Section 5.

511S.1 Description

This item shall govern the valves furnished and installed as indicated on the Drawings. Unless otherwise indicated on the Drawings, all valves 4 inches (102 mm) and larger shall be AWWA-type valves of suitable design and fully equipped for service buried in the earth, without need for further modification and shall be wrapped with 8-mil (0.2 mm) polyethylene film with all edges and laps securely taped to provide a continuous wrap. For reclaimed water piping, the polyethylene film shall be purple. Where not indicated, the Contractor may use valves with any type end-joint allowed for fittings of the pipe class being used. Unless otherwise indicated on the Drawings, all valve stems shall be adjusted to situate the operating nut not more than 24 inches (0.6 meters) below the proposed ground or paving surface of the finished project. Laydown valves shall not be used unless indicated otherwise on the Drawings by call out. Standard details shall not be an indicator of options.

This specification is applicable for projects or work involving either inch-pounds or SI units. Within the text, inch-pound units are given preference followed by SI units shown within parentheses.

511S.2 Materials

The Contractor shall submit descriptive information and evidence that the materials and equipment the Contractor proposes for incorporation in the Work is of the kind and quality that satisfies the specified functions and quality. The City of Austin Water and Wastewater Utility Standard Products Lists (SPL) are considered to form a part of these Specifications. Contractors may, when appropriate, elect to use products from the SPL; however, submittal to the Engineer/Architect (E/A) is still required. If the Contractor elects to use any materials from these lists, each product shall be completely and clearly identified by its corresponding SPL number when making the product submittal. This will expedite the review process in which the E/A, and, if necessary, the Water and Wastewater Utility Standard Products Committee, decide whether the products meet the Contract requirements and the specific use foreseen by the E/A in the design of this engineered Project.

The SPL's should not be interpreted as being a pre-approved list of products necessarily meeting the requirements for a given construction Project. Items contained in the SPL cannot be substituted for items shown on the Drawings, or called for in the specifications, or specified in the Bidding Requirements, Contract Forms and Conditions of Contract, unless approved by the E/A in conjunction with the Water and Wastewater Utility Standard Products Committee. The Standard Product List current at the time of plan approval will govern.

A) Samples, Inspection and Testing Requirements:

All tests and inspections called for by the applicable standards shall be performed by the manufacturer. Upon request, results of these tests shall be made available to the purchaser.

B) Other Requirements:

Each submittal shall be accompanied by:

1) Complete data covering:

a). the operator, including type and size, model number, etc.,

b). the name and address of the manufacturer's nearest service facility,

c). the number of turns to fully open or close the valve.

2) Detailed instructions for calibrating the limit stops for open and closed positions, and

3) Any other information that may be necessary to operate and maintain the operator.

4) Complete dimensional data and installation instructions for the valve assembly as it is to be installed, including the operator.

5) Complete replacement parts lists and drawings, identifying every part for both the valve and operator.

511S.3 Valves

A) Iron-Body Gate Valves

Resilient-seated gate valves for potable or reclaimed service, including tapping valves, shall conform to AWWA C-509 and Standard Products List item WW-282.

Reduced-wall, resilient-seated gate valves for potable or reclaimed service, including tapping valves, shall conform to AWWA C-515 and Standard Products List item WW-700,

Metal-seated gate valves for potable or reclaimed service, including tapping valves, shall conform to AWWA C-500 and Standard Products List item WW-132.

1) Stem Seals: All valves shall have approved O-ring type stem seals. At least two O-rings shall be in contact with the valve stem where it penetrates the valve body.

2) Operation: All valves shall have non-rising stems with a 2" (50 mm) square operating nut, or with a spoke type handwheel when so ordered, turning clockwise to close.

3) Gearing: Gate valves in 24 inch (610 mm) and larger sizes shall be geared and, when necessary for proper bury depth and cover, shall be the horizontal bevel-geared type enclosed in a lubricated gear case.

4) Bypass: Unless otherwise indicated on the Drawings, 16 inch (406 mm) and larger metal-seated gate valves shall be equipped with a bypass of the non-rising stem type which meets the same AWWA standard required for the main valve.

5) Valve Ends: Valve ends shall be push-on, flanged or mechanical joint, as indicated or approved.

   Tapping valves shall have inlet flanges conforming to MSS SP-60, with boltholes drilled per ANSI B16.1 Class 125. Seat rings and body casting shall be over-sized as required to accommodate full size cutters; the outlet end shall be constructed and drilled to allow the drilling machine adapter to be attached directly to the valve.

6) Gear Case: All geared valves shall have enclosed gear cases of the extended type, attached to the valve bonnet in a manner that makes it possible to replace the stem seal without disassembly and without disturbing the gears, bearing or gear lubricant. Gear cases shall be designed and fabricated with an opening to atmosphere so that leakage past the stem seal does not enter the gear case.

7) Valve Body: Double disc gate valves in 16 inch (406 mm) and larger sizes installed in the horizontal position shall have bronze rollers, tracks, scrapers, etc. For reclaimed water valves, the body shall be manufactured in purple, factory painted purple, or field painted purple.

B) Butterfly Valves:

Unless otherwise indicated, all valves shall conform to the current "AWWA" Standard C-504, "Rubber-Seated Butterfly Valves", Class 150B, except as modified or supplemented herein.

1) Functional Requirements

a). Valves shall be the short body design and shall have flanged connections on both ends unless otherwise called for.

b). Valves shall be of such design that the valve discs will not vibrate or flutter when operated in a throttled position. Valve discs shall be secured to the shafts by means of keys or pins so arranged that the valve discs can be readily removed without damage thereto. All keys and pins used in securing valve discs to shafts shall be stainless steel or monel. Valve discs shall be stainless steel or ductile iron, ASTM A 536, Grade 65-45-12 (448-310-12); seating edge shall be stainless steel or other corrosion resistant material.

c). Valve shafts shall be constructed of wrought stainless steel or monel. The ends of the shaft shall be permanently marked to indicate the position of the disc on the shaft.

d). All buried valves shall have approved manufacturer's O-ring type or split V type "Chevron" shaft seals. When O-ring seals are used, there shall be at least two O-rings in contact with the valve shaft where it penetrates the valve body.

On 24 inch (635 mm) and larger valves, the seat shall be completely replaceable and/or adjustable with common hand tools without disassembling the valve from the pipeline.

Rubber seats located on the valve disc shall be mechanically secured with stainless steel retainer rings and fasteners.

e). Unless otherwise indicated, valves shall be provided with manual operators with vertical stems and 2 inches (50 mm) square operating nut turning clockwise to close and equipped with a valve disc position indicator. All keys or pins shall be stainless steel or monel. Buried valves shall have the valve stems extended or adjusted to locate the top of the operating nut no more than 24 inches (0.6 meter) below finish grade.

f). Unless otherwise indicated, motorized butterfly valves shall be equipped with 230/460 volt, 3-phase reversing motor operators, extended as required to locate the center line of the operator shaft approximately 4 feet to 4 feet, 6 inches (1.2 to 1.4 meters) above finish grade. Operators shall be equipped with cast iron or malleable iron manual override hand wheel with a valve position indicator, local push button controls, lighted status/position indicator, torque and travel limit switches and all switches, relays and controls (except external power and signal wiring) necessary for both local and remote operation.

2) Performance Requirements

a). Unless otherwise indicated, valve operators shall be sized to seat, unseat, open and close the valve with 150 psi (1 megapascal) shutoff pressure differential across the disk and allow a flow velocity of 16 feet (4.9 meters) per second past the disc in either direction.

b). Motorized valve motors shall be capable of producing at least 140 percent of the torque required to operate the valves under conditions of maximum non-shock shutoff pressure without exceeding a permissible temperature rise of 131^0F over

104^0F ambient (55 degrees Celsius over 40 degrees Celsius ambient); they shall have a duty rating of not less than 15 minutes and shall be capable of operating the valve through 4 1/2 cycles against full unbalanced pressure without exceeding the permissible temperature rise. Motors shall be suitable for operating the valve under maximum differential pressure when voltage to motor terminals is 80 percent of nominal voltage. Motor bearings shall be permanently lubricated and sealed.

C) Ball Valves:

Ball valves shall be brass, bronze, stainless steel or PVC as indicated on the Drawings or Details or as approved by the Engineer or designated representative.

D) Air-Vacuum Release Valves

1) Valves shall be combination air-release, air-vacuum units having small and large orifice units contained and operating within a single body or assembled unit.

The small orifice system shall automatically release small volumes of air while the pipe is operating under normal conditions. The large air-vacuum orifice system shall automatically exhaust large volumes of air while the pipe is being filled and shall permit immediate re-entry of air while being drained.

Valves shall be rated for at least 150 psi (1 megapascal) {maximum} normal service pressure.

2) Material Requirements

Valve exterior bodies and covers shall be cast iron or reinforced nylon.

Internal bushings, hinge pins, float guide and retaining screws, pins, etc., shall be stainless steel, bronze, nylon or Buna-N rubber.

Orifice seats shall be Buna-N rubber.

Floats shall be stainless steel, nylon or Buna-N rubber, rated at 1000 psi (6.9 megapascals).

Unless otherwise indicated, these valves shall be as included in the Standard Products List (SPL WW-367 for water, WW-462 for wastewater force mains).

E) Fire Hydrants

All fire hydrants shall be Dry Barrel, Traffic Model (break-away), Post Type having Compression Type Main Valves with 5 1/4" (133 mm) opening, closing with line pressure. Approved models are listed on SPL WW-3 of the Water and Wastewater Utility Standard Products List.

1) Applicable Specifications

AWWA C-502 current: "AWWA Standard for Dry-Barrel Fire Hydrants".

NFPA 1963: "National (American) Standard Fire Hose Coupling Screw Thread" and City of Austin 4 inch (102 mm) Fire Hose Connection Standard (Available upon request from the Austin Water Utility's Standards Committee Chairperson at 972-0204).

ANSI A-21.11 current: "American National Standard for Rubber Gasket Joints for Cast Iron and Ductile Iron Pressure Pipe and Fittings".

2) Functional Requirements

Design Working Pressure shall be 200 psi (1.38 megapascals) and a test pressure of 400 psi (2.76 megapascals).

Inlet shall be side connection hub end for mechanical joint (ANSI A-21.11-current). Shoe shall be rigidly designed to prevent breakage.

Lower Barrel shall be rigid to assure above ground break at traffic feature. Bury length of hydrant shall be four (4) feet (1.2 meters) minimum, five (5) feet (1.5 meters) maximum (hydrant lead pipe may be elbowed up from main using restrained joints; flanged joints in lead pipes are not allowed). Flange type connections between hydrant shoe, barrel sections and bonnet shall have minimum of 6 corrosion resistant bolts.

Hydrant Main Valve shall be 5 1/4 inch (133 mm) I.D. Valve stem design shall meet requirements of AWWA C502, with Operating Nut turning clockwise to close. Operating Nut shall be pentagonal, 1 1/2 inch (38 mm) point to flat at base, and 1 7/16 inches (36.5 mm) at top and 1 inch (25 mm) minimum height. Seat ring shall be bronze (bronze to bronze threading), and shall be removable with lightweight stem wrench. Valve mechanisms shall be flushed with each operation of valve; there shall be a minimum of two (2) drain ports.

Traffic Feature shall have replaceable breakaway ferrous metal stem coupling held to stem by readily removable type 302 or 304 stainless steel fastenings. Breakaway flange or frangible lugs shall be designed to assure aboveground break. Breakaway or frangible bolts will not be acceptable.

Outlet Nozzles shall be located approximately 18 inches (450 mm) above ground. Each hydrant shall have two (2) 2 1/2 inch (63.5 mm) nozzles 180 degrees apart with National (American) Standard Fire Hose Coupling Screw Thread NFPA 1963 and one (1) 4 inch (102 mm) pumper nozzle with City of Austin standard thread–six (6) threads per inch (25 mm) "Higbee" cut, 4.8590 inch (123.4 mm) O.D., 4.6425 inch (117.9 mm) root diameter. Nozzles shall be threaded or cam-locked, O-ring sealed, and shall have type 302 or 304 stainless steel locking devices. Nozzle caps (without chains) and cap gaskets shall be furnished on the hydrant. The cap nut shall have the same configuration as the operating nut.

Hydrants shall be Dry-Top Construction, factory lubricated oil or grease with the lubricant plug readily accessible. The system shall be described for City approval.

A blue Type II-B-B reflectorized pavement marker, conforming to Standard Specification Item No. 863S, shall be placed 2 to 3 feet (0.6 to 0.9 meters) offset from the centerline of paved streets, on the side of and in line with, all newly installed fire hydrants.

Hydrant shall have double O-ring seals in a bronze stem sheath housing to assure separation of lubricant from water and shall have a weather cap or seal, or both, as approved by the Owner, to provide complete weather protection.

3) Material Requirements

All below ground bolts shall be corrosion resistant. The hydrant valve shall be Neoprene, 90-durometer minimum. The seat ring, drain ring, operating nut and nozzles shall be bronze, AWWA C-502 current, containing not over 16 percent zinc. Break-away stem coupling shall be of ferrous material; its retaining pins, bolts, nuts, etc. of type 302 or 304 stainless steel.

Coatings shall be durable and applied to clean surfaces. Exterior surfaces above ground shall receive a coating of the type and color specified in the applicable version of City of Austin SPL WW-3. The coating shall be applied according to coating manufacturer's

specifications. Other exposed ferrous metal shall receive asphalt-based varnish, or approved equal, applied according to the coating manufacturer's specifications.

F) Pressure/Flow Control Valves:

All control valves to regulate pressure, flow, etc., in City lines shall be models listed in the City of Austin Water and Wastewater Standard Products List (SPL).

G) Drain Valves:

Drain valve materials and installation shall conform to City of Austin Standard Detail No. 511S-9A.

H) Valve Stem Extensions:

Valve stem extensions shall consist of a single piece of the required length with a socket on one end and a nut on the other.

511S.4 Construction Methods

A) Setting Valves, Drains and Air Releases

Unless otherwise indicated, main line valves, drain valves and piping, air and vacuum release assemblies and other miscellaneous accessories shall be set and jointed in the manner described for cleaning, laying, and jointing pipe.

Unless otherwise indicated, valves shall be set at the locations shown on the Drawings and such that their location does not confict with other appurtenances such as curb ramps. Valves shall be installed so that the tops of operating stems will be at the proper elevation required for the piping at the location indicated above. Valve boxes and valve stem casings shall be firmly supported and maintained, centered and aligned plumb over the valve or operating stem, with the top of the box or casing installed flush with the finished ground or pavement in existing streets, and installed with the top of the box or casing approximately 6 inches (150 mm) below the standard street subgrade in streets which are excavated for paving construction or where such excavation is scheduled or elsewhere as directed by the Engineer or designated representative.

Drainage branches or air blowoffs shall not be connected to any sanitary sewer or submerged in any stream or be installed in any other manner that will permit back siphonage into the distribution system (see City of Austin "Standard Detail Drawings- Series 500/500S"). Every drain line and every air release line shall have a full sized independent gate valve flanged directly to the main. Flap-valves, shear gates, etc., will not be accepted.

B) Setting Fire Hydrants:

Fire hydrants shall be located in a manner to provide accessibility and in such a manner that the possibility of damage from vehicles or conflict with pedestrian travel_will be minimized. Unless otherwise directed, the setting of any hydrant shall conform to the following:

Hydrants between curb and sidewalk on public streets shall be installed as shown on Standard 511S-17, with outermost point of large nozzle cap 6" to 18" (150 mm to 450 mm) behind back of curb. Where walk abuts curb, and in other public areas or in commercial areas, dimension from gutter face of curb to outermost part of any nozzle cap shall be not less than 3 feet (0.9 meters), nor more than 6 feet (1.8 meters), except that no part of a hydrant or its nozzle caps shall be within 6 inches (150 mm) of any sidewalk or pedestrian ramp. Any fire hydrant placed near a street corner shall be no less than 20 feet (6 meters) from the curb line

point of tangency. Fire hydrants shall not be installed within nine feet (2.75 meters) vertically or horizontally of any sanitary sewer line regardless of construction.

All hydrants shall stand plumb; those near curbs shall have the 4-inch (102 mm) nozzle facing the curb and perpendicular to it. The hydrant bury mark shall be located at ground or other finish grade; nozzles of all new hydrants shall be approximately 18 inches (450 mm) above grade. Lower barrel length shall not exceed 5 feet (1.5 meters). Barrel extensions are not permitted unless approved by the Engineer or designated representative. Each hydrant shall be connected to the main by 6-inch (152 mm) ductile iron pipe; a 6-inch (152 mm) gate valve shall be installed in the line for individual shutoff of each new hydrant.

Below each hydrant, a drainage pit 2 feet (0.6 meter) in diameter and 2 feet (0.6 meter) deep shall be excavated and filled with compacted coarse gravel or broken stone mixed with coarse sand under and around the bowl of the hydrant, except where thrust blocking is located (City of Austin Specification Item 510 and Standard Detail 510-6 and to a level 6 inches (150 mm) above the hydrant drain opening.

The hydrant drainage pit shall not be connected to a sanitary sewer. The drain gravel shall be covered with filter fabric to prevent blockage of voids in the gravel by migration of backfill material. The bowl of each hydrant shall be well braced against unexcavated earth at the end of the trench with concrete thrust blocking (taking care not to obstruct the hydrant drain holes), or the hydrant shall be tied to the pipe with approved metal harness rods and clamps. The fire line shall be provided with joint restraint from the main line to the fire hydrant. Hydrants shall be thoroughly cleaned of dirt or foreign matter before setting.

Fire hydrants on mains under construction shall be securely wrapped with a poly wrap bag or envelope taped into place. When the mains are accepted and placed in service the bag shall be removed.

C) Pressure Taps: Refer to Section 510.3 (24) of Standard Specification Item Number 510, "Pipe".

D) Plugging Dead Ends

Standard plugs shall be inserted into the bells of all dead ends of pipes, tees or crosses and spigot ends shall be capped. All end plugs or caps shall be secured to the pipe conforming to Section 510.3 (22) of Standard Specification Item Number 510, "Pipe".

E) Protective Covering:

Unless otherwise indicated, all flanges, nuts, bolts, threaded outlets and all other steel component shall be coal tar coated and shall be wrapped with standard minimum 8-mil (0.2 mm) low density polyethylene film or a minimum 4-mil (0.1 mm) cross laminated high-density polyethylene meeting ANSI/AWWA Specification C-105-current, with all edges and laps taped securely to provide a continuous and watertight wrap. Repair all punctures of the polyethylene, including those caused in the placement of bedding aggregates, with duct tape to restore the continuous protective wrap before backfilling. For reclaimed water piping, the polyethylene shall be purple.

F) Valve Box, Casing and Cover:

Stems of all buried valves shall be protected by valve box assemblies. Valve box castings shall conform to ASTM A 48, Class 30B. Testing shall be verified by the manufacturer at the time of shipment. Each casting shall have cast upon it a distinct mark identifying the manufacturer and the country of origin. Valve boxes and covers for potable water shall be round. Valve boxes and covers for reclaimed water piping shall be square and shall have “Reclaimed Water” indicated on the lid.

G) Drain Valve Installations:

Refer to City of Austin Standards 511S-9A.

H) Air Release Assemblies:

Refer to City of Austin Standards 511S-1A, 511S-1B, 511S-2A, 511S-2B, 511S-3A and 511S-3B.

I) Pressure/Flow Control Valves:

Assemblies shall be installed as indicated.

J) Connections to Existing System:

Refer to Item No. 510, "Pipe" for connections to the existing system.

K) Shutoffs:

Refer to Item No. 510, "Pipe" for shutoffs.

511S.5 Measurement

All types of valves will be measured per each. Fire hydrants and drain valve assemblies will be measured per each. Fire Hydrant barrel extensions will be measured per vertical foot (meter: 1 meter equals 3.28 feet). Pressure/Flow control valve assemblies and both manual and automatic air release assemblies will be measured per each. Reflectorized pavement markers for identifying the location of newly installed fire hydrants shall be measured per each, as per Standard Specification Item No. 863S.7.

Bury depths exceeding 5.5 feet (1.68 meters) are defined as Additional Bury Depths. Additional bury depths will only be measured if indicated on the Drawings and identified in the Standard Contract Bid Form 00300U; otherwise, the unit bid price for each completed unit includes all depths.

511S.6 Payment

Payment shall include full compensation, in accordance with the pay item established in the bid, for excavation, furnishing, hauling and placing valves, drain valve assemblies, fire hydrants and barrel extensions including anchorage and all incidental materials and work; preparing, shaping, dewatering, bedding, placing and compacting backfill materials and for all other incidentals necessary to complete the installation, as indicated in the Drawings, complete in place.
Payment for iron fittings and for wet connections is covered in Section 510.6 of Standard Specification Item 510, “Pipe".

Payment for excavation safety systems is covered in Section 509S.10 of Standard Specification Item 509S, Excavation Safety Systems.

A) Valves: Valves will be paid for at the unit bid price for the size and type valve installed, including valve stem casing and cover, excavation and backfill, setting, adjusting to grade, anchoring in place, and other appurtenances necessary for proper operation.

B) Fire Hydrants: Fire Hydrants installation shall be paid for at the unit bid price, which includes all necessary labor and materials to set, adjust to grade and anchor the hydrant body, barrel extensions, concrete block, gravel drain, and other appurtenances necessary for proper operation; but shall not include pipe and valve between the main line and fire hydrant base.

C) Pressure or Flow Control Valve Assemblies: Pressure control and flow control valve assemblies will be paid for at the unit bid price, including box or vault, setting, adjusting to grade, anchoring in place,

adjusting the control device to the required conditions, providing other appurtenances necessary for proper operation, and placing in operation.

D) Drain Valve Assemblies: Drain valve installation shall be paid for at the unit bid price , which includes all necessary labor and materials to set, adjust to grade and anchor the bends, vertical piping, blind flange, joint restraint devices, concrete blocking, concrete pad, and other appurtenances necessary for proper operation; but shall not include pipe and valve between the main line and drain valve buried bend.

E) Manual Air Release Assemblies: Manual air release installations will be paid for at the unit bid price and shall include valves, fittings, pipe, tapping the main, box and cover, and other appurtenances necessary for proper operation.

F) Automatic Combination Air/Vacuum Release Valve Assembly: Automatic air-vacuum release assemblies will be paid for at the unit bid price and will include the main line tap or outlet, all pipe, valves, fittings, box or vault and cover, and other appurtenances necessary for proper operation.

G) Additional Bury Depth: Additional bury depth will be paid for at the unit bid price, which will include all work necessary to install units with bury depths exceeding 5.5 feet (1.68 meters).

H) Fire Hydrant Barrel Extensions: Hydrant barrel extensions will be paid for at the unit bid price which will include necessary hardware and rod extensions.

I) Reflectorized Pavement Markers: Pavement markers will be paid for at the unit bid price, which will include necessary surface preparation and adhesive, as per Standard Specification Item No. 863S.8.

Payment, when included as a contract pay item, will be made under one of the following:

Pay Item No. 511S-A:	Valves, _____ Type, _____Diameter	Per Each.
Pay Item No. 511S-B:	Fire Hydrants (See Standard No. 511S-17)	Per Each.
Pay Item No. 511S- C:	Pressure or Flow Control Valve Assemblies	Per Each.
Pay Item No. 511S- D:	Drain Valve Assemblies (See Standard No. 511S-9A)	Per Each.
Pay Item No. 511S- E:	Manual Air Release Assemblies, ____Diameter	Per Each.
Pay Item No. 511S- F:	Automatic Combination Air/Vacuum Release Valve Assembly, _____ Diameter.	Per Each.
Pay Item No. 511S- G:	Additional Bury Depth	Per Vertical Foot.
Pay Item No. 511S-H:	Fire Hydrant Barrel Extensions	Per Vertical Foot

END

SPECIFIC CROSS REFERENCE MATERIALS
Specification 511S, "Water Valves"

City of Austin Standard Specification Items

Designation	Description
Item No. 510	Pipe
Section-510.3 (22)	Pipe Anchorage, Support and Protection
Section-510.3(24)	Water System Connections

City of Austin Standard Details

Designation	Description
511S-1A	25 mm (1") – 76 mm (2") Vented Air Release Valve Installation (Type I)
511S-1B	25 mm (1") – 76 mm (2") Non-Vented Air Release Valve Installation (Type I)
511S-2A	Type II - 76 mm (3") or Larger Vented Air/Vacuum Valve Installation

511S-2B	Type II - 76 mm (3”) or Larger Non-Vented Air/Vacuum Valve Installation
511S-3A	Type III - 76mm (3”) or Larger Vented Air/Vacuum Valve Installation
511S-3B	Type III-76mm (3”) or Larger Non-Vented Air/Vacuum Valve Installation
511S-9A	Drain Valve Assembly
511S-17	Standard Fire Hydrant Installation

SPECIFIC CROSS REFERENCE MATERIALS (Continued)
Specification 511S, “Water Valves”

City of Austin W/WW Standard Products

Designation	Description
WW-3	Standard Products List for Fire Hydrants
WW-132	Standard Products List for Metal-Seated Gate Valves, AWWA C-500
WW-282	Standard Products List for Resilient-Seated Gate Valves, AWWA C-509
WW-367	Standard Products List for Air Release Valves for Water
WW-462	Standard Products List for Air Release/Vacuum Relief Valves for Wastewater
WW-700	Standard Products List for Resilient-Seated Gate Valves, AWWA C-515

ANSI/AWWA Standards

Designation	Description
A-21.11	American National Standard for Rubber Gasket Joints for Cast Iron and Ductile Iron Pressure Pipe and Fittings
C-105	American National Standard for Polyethylene Encasement for Ductile-Iron Pipe
C-500	Metal-Seated Gate Valves for Water Supply Service
C-502	Dry-Barrel Fire Hydrants
C-504	Rubber-Seated Butterfly Valves
C-509	Resilient Seated Gate Valves for Water and Sewerage Systems
C-515	Reduced-Wall, Resilient-Seated Gate Valves For Water Supply Service

ASTM Standards

Designation	Description
ASTM A48/A48M	Specification for Gray Iron Castings
ASTM A 536	Specification for Ductile Iron Castings

National Fire Protection Association (NFPA)

1963	National (American) Standard Fire Hose Coupling Screw Thread

RELATED CROSS REFERENCE MATERIALS
Specification 511S, “Water Valves”

City of Austin Standard Specification Items

Designation	Description
Item No. 501S	Jacking or Boring Pipe
Item No. 503S	Frames, Grates, Rings and Covers
Item No. 505S	Concrete Encasement and Encasement Pipe
Item No. 506S	Manholes
Item No. 507S	Bulkheads
Item No. 508S	Miscellaneous Structures and Appurtenances
Item No. 509S	Excavation Safety Systems

Item No. 551
Pipe Underdrains

551.1 Description

This item shall consist of pipe underdrains embedded in filter material, constructed at such places as indicated and in accordance with lines and grades established by Engineer. This item shall also consist of any pumping, bailing, drainage and Item No. 509S, "Excavation Safety Systems" for trench walls, when indicated.

551.2 Materials

(1) Pipe

The following materials will be permitted as alternates unless type is indicated. Size indicated shall be inside diameter. Pipe shall meet the following requirements:

Type 1 Vitrified Clay or Concrete Pipe

Pipe may be either thoroughly and perfectly burned or glazed vitrified clay or non-reinforced concrete conforming to ASTM C 14. Vitrified clay pipe shall be of first quality hub and spigot style, sound, without warps or cracks or other imperfections and shall be sufficiently tough so that it may be cut with a chisel and hammer.

Type 2 Clay Drain Tile

Standard clay drain tile shall conform to specifications of AASHTO M 179.

Type 3 Concrete Drain Tile

Butt end concrete drain tile shall conform to ASTM C 412. Tongue and groove concrete drain tile shall conform to ASTM C 118.

Type 4 Porous Concrete Pipe

Porous concrete pipe shall conform to AASHTO M 176.

Type 5 Perforated Clay Pipe

Perforated clay pipe shall conform to specifications for standard strength perforated clay pipe of AASHTO M 65 except that extra strength clay pipe may be substituted for standard strength clay pipe.

Type 6 Perforated Corrugated Metal Pipe

Perforated helically corrugated metal pipe shall be fabricated from corrugated galvanized sheets and shall conform to AASHTO M 36 or corrugated aluminum alloy sheets and shall comply with AASHTO M 196.

Type 7 Perforated Corrugated Metal Pipe (Bituminous Coated)

Pipe shall conform in all particulars to requirements specified above for perforated corrugated metal pipe. Steel pipe shall be uniformly coated inside and out with a bituminous coating to a minimum thickness of 0.05 inch.

Bituminous material used to coat pipe shall meet the following requirements when tested in accordance with TxDOT Test Method Tex-522-C:

Solubility, % by wt. in	
Trichloroethylene	99.5 minimum
Brittleness Test	Pass
Flow, inches	0.25 maximum

Type 8 Perforated Concrete Pipe

Perforated concrete pipe shall conform to ASTM C 444, “Standard Strength Perforated Nonreinforced Concrete Underdrain Pipe”, except that “Extra Strength Perforated Nonreinforced Concrete Underdrain Pipe” may be substituted for standard strength pipe.

Type 9 ABS Perforated Pipe

ABS pipe shall be extruded and fittings molded from virgin ABS plastic material conforming to ASTM D 1788, Type 4, except that minimum heat deflection temperature is 180°F. Contractor shall furnish certified test reports as evidence that material used for project meets ASTM requirements. Dimensions of ABS pipe shall be as shown in Table I. Fittings shall conform to manufacturer's standard for particular size of pipe required.

TABLE I

Nominal Size, Inches	Inside Diameter Inches, Minimum	Thickness of Barrel Inches, Minimum
4	3.82	0.19
6	5.70	0.28

Perforations shall conform to requirements for Type 5 pipe underdrains. Crushing strength of ASB pipe shall meet or exceed minimum values in Table II when tested in accordance with flat-plate loading method as outlined in ASTM Designation: D 2412.

TABLE II

Nominal Size, Inch	Minimum Strength, lb. Inch
4	179
6	604

Pipe shall withstand at least 35 percent vertical deflection without rupture of pipe wall and stiffness shall equal or exceed valves at 5 percent deflection. Vertical deflection shall be computed as follows:

$$\text{Percent Deflection} = \frac{\text{Reduction Vert. I.D.}}{\text{Nominal I.D.}} \times 100$$

Ends of ABS pipe, couplings and fittings shall be perpendicular or square to longitudinal axis of main body within a maximum angle of 3 degrees. Outer and inner surface of pipe shall be free from blisters, voids and discontinuities.

Type 10 Preformed Corrugated Polyethylene Plastic Tubing

Tubing shall comply with AASHTO M 252.

Type 11 Perforated Polyvinyl Chloride Pipe

Pipe shall be Schedule 40 and conform to ASTM D 1785. Unless otherwise specified, the perforated pipe shall have two rows of holes 13 mm (1/2 in.) in diameter on 125-mm (5 in.) centers, with allowable tolerances of ± 1 mm (1/16 in.) on the diameter and + 6, -0 mm (+1/4, -0 in.) on the spacing, and the rows shall be parallel to the axis of the pipe and 120 ± 5° apart.

(2) Filter Material

(a) Aggregate

Filter material for use in backfilling trenches under, around and over underdrains shall consist of hard, durable, clean, washed gravel or crushed stone, ranging in size from 5/8 to 1 inch and shall be free from organic matter, clay balls or other deleterious matter.

(b) Geotextile

Geotextile shall conform to Item No. 620S, "Filter Fabric".

551.3 Construction Methods

Excavation of each trench shall begin at its outlet and proceed toward its upper end. Trench must not be excavated below proposed grade line and shall be located as indicated or as directed by Engineer and true to line and grade. Trench shall be dressed with a tile hoe or shovel in such manner that will facilitate placement of underdrain. Closed joints shall be coupled with bands, solvent weld couplings or integral joints. Perforated ABS pipe shall be jointed by couplers or solvent welding according to manufacturer's recommendation. No tar paper strips shall be used.

Approved plugs shall be placed in upper ends of pipes and exposed ends of underdrains shall be covered with 1/2 inch galvanized hardware cloth and filter fabric.

When indicated, concrete riprap or headwalls of dimensions indicated shall be constructed at outlet ends of pipe underdrains. Concrete materials and proportions shall conform to requirements specified for Class B Concrete conforming to Item No. 403S, "Concrete for Structures".

When perforated metal pipe is used and trench is founded in pervious material, a thin layer of tamped impervious material shall be placed on bottom of trench as indicated or as directed by Engineer. Sections shall be jointed with band couplers.

When clay or concrete pipe is used and trench is founded in pervious material, a bottom course of specified filter material shall be placed and tamped to a uniform depth of 2 inches.

Pipe shall then be firmly embedded in filter material, hub upgrade and spigot firmly centered into adjacent hub end or in the case of butt end type drains with an open joint of approximately 3/8 inch. Open joints shall then be covered with approved 2 ply tar paper strips not less than 6 inches in width and of sufficient length to permit ends being turned outward and laid flat on bottom course of filter material of each side for a distance of 3 inches. When trench is founded in impervious material, the 2 inch bottom course of filter material shall be omitted, pipe laid directly in trench and filter material placed in trench to a depth of 2 inches on each side of pipe. Two ply tar paper strips shall then be placed as specified above.

551.4 Measurement

Work and accepted materials for "Pipe Underdrains" shall be measured by the linear foot of pipe measured along slope and shall include clearing, excavation, filter material, filter fabric, pipe, length of elbows, wyes, tees and other branches and backfill.

551.5 Payment

Work performed and materials furnished as prescribed by this item and measured as provided under "Measurement" will be paid for at the unit price bid per linear foot of "Pipe Underdrains" of type and size specified, which price shall be full compensation for furnishing and placing materials, for underdrain excavation and backfill, for filter materials, for plugs and screens and for labor, tools, equipment and incidentals necessary to complete the work.

Any riprap, headwalls or Trench Safety System indicated will be measured and paid for in accordance with provisions of Item No. 403S, "Concrete for Structures", Item No. 410, "Concrete Structures", Item No. 509S, "Excavation Safety Systems" and Item No. 591S, "Riprap for Slope Protection".

Payment will be made under:

Pay Item No. 551:	Pipe Underdrains, ____In. -	Per Linear Foot.

End

Ref: 403S, 410, 509S, 591S, 620S

Item No. 601S
Salvaging and Placing Topsoil

601S.1 Description

This item shall govern the removal, storage and placement of approved topsoil to the depths and area shown on the Drawings or as directed by the Engineer or designated representative.

This specification is applicable for projects or work involving either inch-pound or SI units. Within the text and accompanying tables, the inch-pound units are given preference followed by SI units shown within parentheses.

601S.2 Submittals

The submittal requirements of this specification item shall include the test results and soil classification necessary for approval of material as suitable topsoil.

601S.3 Materials

A. Topsoil

1. The topsoil shall be composed of 4 parts of soil mixed with 1 part compost, by volume. The compost shall meet TxDOT Specification Item 161. The soil shall be locally available native soil that meets the following specifications:

   Shall be free of trash, weeds, deleterious materials, rocks and debris.

   100% shall pass through a 1.5-inch (38-mm) screen.

   Soil to be a loamy material that meets the requirements of the table below in a accordance with the USDA textural triangle. Soil known locally as “red death” is not an allowable soil. Textural composition shall meet the following criteria:

Textural Class	Minimum	Maximum
Clay	5%	50%
Silt	10%	50%
Sand	15%	67%

- An owner/engineer may propose use of onsite salvaged topsoil which does not meet the soil texture class required above by providing a soil analysis and a written statement from a qualified professional in soils, landscape architecture, or agronomy indicating the onsite topsoil will provide an

equivalent growth media and specifying what, if any, soil amendments are required.

- Soil amendments shall be worked into the existing onsite topsoil with a disc or tiller to create a well-blended material.

2. All disturbed areas to be revegetated are required to provide a minimum of six (6) inches of topsoil. The topsoil shall be able to support the growth of planting (Standard Specification Item No. 608S), seeding (Standard Specification Item No. 604S), sodding (Standard Specification Item No. 602S) and native grassland seeding and planting (Standard Specification Item No. 609S).

B. Water

Water shall be furnished by the Contractor and shall be clean and free from industrial wastes and other objectionable matter.

601S.4 Sources

The topsoil may be obtained from the right-of-way at sites of proposed excavation or embankment when shown on the Drawings or identified by the Engineer or designated representative. The approximate quantity of acceptable topsoil to be salvaged from the project will be shown on the Drawings. The topsoil may also be obtained from approved sources, which are located outside the right-of-way and have been secured by the Contractor.

601S.5 Construction Methods

Precautions will be maintained at all times to protect all trees in the area of construction. Where removal of trees is indicated on the Drawings, they shall be marked as directed by the Engineer or designated representative.

Construction equipment shall not be operated nor construction materials stockpiled under the canopies of trees, unless otherwise indicated on the Drawings and/or specified in the Contract Documents. Topsoil materials shall not be placed within the drip line of trees until tree wells are constructed that conform to Item No. 610S, "Preservation of Trees and Other Vegetation " and Standard Details 591S-1 and 610S-6. The source and stockpile areas shall be kept drained, insofar as practicable, during the period of topsoil removal

The existing topsoil shall be removed from the area indicated on the Drawings, stockpiled in a windrow along the right of way or spread over an area that is ready for topsoil application in accordance with the Drawings or as directed by the Engineer or designated representative.

Trash, wood, brush, stumps, rocks over 1 1/2 inches (37.5 mm) in size and other objectionable material encountered shall be removed and disposed of as directed by the Engineer or designated representative prior to beginning of work required by this item.

Grass and other herbaceous plant materials may remain. Large clumps shall be broken up.

After the grading has been completed to the required alignment, grades and cross-sections and prior to the spreading of the salvaged topsoil, any clay or tight soil surfaces shall be scarified by plowing furrows approximately 4 inches (100 mm) deep along horizontal slope lines at 2 foot (600 mm) vertical intervals. The spreading of the salvaged topsoil shall be undertaken as soon as the grading has been completed. The topsoil shall be spread so as to form a cover of uniform thickness indicated. After the topsoil has been placed and shaped, it shall be sprinkled and rolled to provide a suitable seed bed.

601S.6 Measurement and Payment

Salvaging, removal and/or placing topsoil materials will not be measured for payment, but shall be included in the unit price bid for the item of construction in which these activities are used.

End

SPECIFIC CROSS REFERENCE MATERIALS
Specification 601S, "Salvaging and Placing Topsoil"

City of Austin Standard Specification Items

Designation	Description
Item No. 602S	Sodding for Erosion Control
Item No. 604S	Seeding for Erosion Control
Item No. 608S	Planting
Item No. 609S	Native Grassland Seeding and Planting For Erosion Control
Item No. 610S	Preservation of Trees and Other Vegetation

City of Austin Standard Details

Designation	Description
591S-1	Dry Stack Rock Wall
610S-6	Typical Tree Well Applications

RELATED CROSS REFERENCE MATERIALS
Specification 601S, "Salvaging and Placing Topsoil"

City of Austin Standard Specification Items

Designation	Description
Item No. 102S	Clearing and Grubbing

Item No. 104S	Removing Concrete
Item No. 110S	Street Excavation
Item No. 111S	Excavation
Item No. 120S	Channel Excavation
Item No. 132S	Embankment
Item No. 606S	Fertilizer

City of Austin Standard Details

Designation	Description
610S-1	Tree Protection Fence Locations
610S-2	Tree Protection Fence, Type B Chainlink
610S-3	Tree Protection Fence, Type B Wood
610S-4	Tree Protection Fence, Modified Type A
610S-5	Tree Protection Fence, Modified Type B

Texas Department of Transportation: Standard Specifications for Construction and Maintenance of Highways, Streets, and Bridges

Designation	Description
Item No. 100	Preparing Right of Way
Item No. 110	Excavation
Item No. 160	Furnishing and Placing Topsoil
Item No. 164	Seeding for Erosion Control
Item No. 204	Sprinkling

Texas Department of Transportation: Manual of Testing Procedures

Designation	Description
Tex-103-E	Determination of Moisture Content of Soil Materials
Tex-104-E	Determination of Liquid Limit of Soils
Tex-105-E	Determination of Plastic Limit of Soils
Tex-106-E	Method of Calculating the Plasticity Index of Soils

Item No. 602S
Sodding for Erosion Control

602S.1 Description

This item shall govern planting of Bermuda grass; St. Augustine or other acceptable grass sod at locations indicated on the Drawings or as directed by the Engineer or designated representative in accordance with this Standard Specification Item.

This specification is applicable for projects or work involving either inch-pound or SI units. Within the text and accompanying tables, the inch-pound units are given preference followed by SI units shown within parentheses.

602S.2 Submittals

The submittal requirements for this specification item shall include the identification of the type and source of sodding, the type of mulch, type of tacking agent and type and rate of application of fertilizer.

602S.3 Materials

A. Block and Mulch Sod

The sod shall consist of live, growing Bermuda Grass, St. Augustine grass, when shown on the Drawings, or other acceptable grass sod indicated on the Drawings secured from sources that are approved by the Engineer or designated representative. Bermuda Grass sod, St. Augustine sod or other grass sod as shown on the Drawings shall have a healthy, virile root system of dense, thickly matted roots throughout the soil of the sod for a minimum thickness of 1 inch (25 millimeters). The thickness measure does not include grass. The sod shall be cut in rectangular pieces with its shortest side not less than 12 inches (300 mm). The Contractor shall not use sod from areas where the grass is thinned out nor where the grass roots have been dried out by exposure to the air and sun to such an extent as to damage its ability to grow when transplanted.

The sod shall be substantially free from noxious weeds, Johnson grass or other grasses and shall not contain any matter deleterious to its growth or which might affect its subsistence or hardiness when transplanted. Unless the area has been closely pastured, it shall be closely mowed and raked to remove all weeds and long standing stems. Sources from which sod is to be secured shall be approved by the Engineer or designated representative.

Care shall be taken at all times to retain the native soil of the roots of the sod during the process of excavating, hauling and planting. Sod material shall be kept moist from the time it is dug until it is planted. The sod existing at the source shall be watered to the extent required by the Engineer or designated representative prior to excavating.

B. Fertilizer

Fertilizer and the rate of application shall conform to the requirements of Standard Specification Item No. 606S, "Fertilizer".

C. Mulch

Straw mulch shall be oat, wheat or rice straw. Hay mulch may be substituted for straw mulch and shall be Prairie Grass; Bermuda grass or other hay approved by the Engineer or designated representative. The hay or straw mulch shall be free of Johnson grass or other noxious weeds and foreign materials. It shall be kept in a dry condition and shall not be molded or rotted.

D. Water

Water shall be furnished by the Contractor and shall be clean and free of industrial wastes and other substances harmful to the growth of sod or to the area irrigated.

E. Tacking Agents

Tacking agents for straw or hay mulch shall be as shown on the Drawings.

602S.4 Planting Season

All planting shall be done between April and November except as specifically authorized in writing by the Engineer or designated representative.

602S.5 Construction Methods

A. General

After the designated areas have been completed to the lines, grade and cross sections indicated on the Drawings, the surface shall be worked to a depth of not less than 4 inches (100 mm) with a disc, tiller or other equipment approved by the Engineer or designated representative. Fertilizer nutrients shall be applied and tilled. Areas that become crusted shall be reworked to an acceptable condition before sodding. Sodding of the type specified shall conform to the requirements of this Specification Item. The Contractor shall give continuous care to the sodded area until the sod is accepted.

B. Placement

The sod shall be placed on the prepared surface with the edges in close contact and alternate courses staggered. In ditches the sod shall be placed with the longer dimension perpendicular to the flow of water in the ditch. On slopes, starting at the bottom of the slope, the sod shall be placed with the longer dimension parallel to the contours of the ground. The exposed edges of sod shall be buried flush with the adjacent soil. On slopes exceeding 3:1 or where the sod may be displaced, the sod shall be pegged with not less than 4 stakes or ground staples per square yard (square meter) with at least 1 stake or ground staple for each piece of sod.

Pegs shall be of wood lath or similar material, pointed and driven with the flat side against the slope, 6 inches (150 mm) into the ground, leaving approximately 1/2 inch (12.5 mm) of the top above the ground. Ground staples shall not be less than

13 inches (330 mm) in length and shall be constructed of No. 11 gage (3 mm) wire that is bent to form a "U" approximately 1 inch (25 mm) in width.

C. Watering

Immediately after the area is sodded, it shall be watered with a minimum of 5 gallons of water per square yard (22.5 liters per square meter) and at 10 day intervals as needed and as directed by the Engineer or designated representative. Subsequent to the initial application water shall be applied at a minimum rate of 3 gallons per square yard (13.5 liters per square meter), as required on the Drawings or as directed by the Engineer or designated representative until final acceptance by the City or until the grass uniformly reaches a height of 2 1/2 inches (62.5 mm).

Availability of water from the Austin Water Utility will be limited as stated under the Water Conservation Standard, City of Austin Land Development Code Chapter 6-2, Article II, " Water Use Management Plan Established".

The use of potable water will be restricted as stated in City of Austin Land Development Code Sections 6-4-73, 6-4-54, 6-4-63, 6-4-64, 6-4-65, 6-4-81, 6-4-92, 15-9-37(D) and 15-9-101(B).

D. Finishing

Where applicable, the shoulders, slopes and ditches shall be smoothed after planting has been completed and shaped to conform to the desired cross sections shown on the Drawings. Any excess soil from planting operations shall be spread uniformly over adjacent areas or disposed of as directed by the Engineer or designated representative so that the completed surfaces will present a neat appearance. All sodded areas shall be rolled after the initial watering application, when sufficiently dry.

602S.6 Block Sodding

At locations indicated on the Drawings or where directed by the Engineer or designated representative, sod blocks shall be carefully placed on the prepared areas. The fertilizer shall then be applied in accordance with the applicable provisions of Item No. 606S, "Fertilizer" and thoroughly watered. When sufficiently dry, the sodded area shall be rolled or tamped to form a thoroughly compacted, solid mat. Any voids left in the block sodding shall be filled with additional sod and tamped. Surfaces of block sod which, in the opinion of the Engineer or designated representative may slide due to the height and slope of the surface or nature of the soil, shall be pegged with wooden pegs driven through the sod blocks into firm earth sufficiently close to hold the block sod firmly in place. Edges along curbs and drives, walkways, etc., shall be carefully trimmed and maintained until the sodding is accepted.

602S.7 Mulch Sodding

The sod source shall be disked in 2 directions cutting the sod thoroughly to a depth of not less than 4 inches (100 mm). Sod material shall be excavated to a depth of not more than 2 inches (50 mm) below the existing root system, being careful to avoid having soil containing no grass roots. The disked sod may be windrowed or otherwise

handled in a manner satisfactory to the Engineer or designated representative. The material shall be rejected if not kept in a moist condition.

Prior to placement of mulch sod, the cut slopes shall be scarified by plowing furrows 4 inches (100 mm) to 6 inches (150 mm) deep along horizontal slope lines at 2 foot (600 mm) vertical intervals. Excavated material from the furrows shall not protrude more than 3 inches (75 mm) above the original surface of the cut. Fertilizer shall be distributed uniformly over the area in accordance with the applicable provisions of Item No. 606S, "Fertilizer". The sod shall then be deposited upon the prepared area and spread uniformly to the thickness indicated on the Drawings.

Any section that is not true to lines and cross sections shall be remedied by the addition of sod material or by reshaping the material to meet the requirements of "Finishing"[Section 602S.5 (4)]. After the sod material has been spread and shaped, it shall be thoroughly wetted and compacted with a corrugated roller of the "Cultipacker" type. All rolling of slope areas shall be on the contour.

602S.8 Measurement

Work and acceptable material for "Sodding for Erosion Control" will be measured by the square yard (square meter: 1 square meter is equal to 1.196 square yards) complete in place with a minimum of 95 percent growth with a 2 1/2 inch (62.5 mm) stand of grass.

602S.9 Payment

The work performed and materials furnished and measured as provided under "Measurement" will be paid for at the unit bid price for Bermuda Block Sodding", "St. Augustine Block Sodding", "Bermuda Mulch Sodding" or "Other Approved Grass Sodding". The prices shall each represent full compensation for completion of the work including all water applications, rolling, pegging and fertilizer as indicated on the Drawings.

Payment will be made under one of the following:

Pay Item No. 602S-A:	Bermuda Block Sodding -	Per Square Yard.
Pay Item No. 602S-B:	St. Augustine Block Sodding -	Per Square Yard.
Pay Item No. 602S-C:	Bermuda Mulch Sodding -	Per Square Yard.
Pay Item No. 602S-D*:*	Grass Sodding -	Per Square Yard.

End

SPECIFIC CROSS REFERENCE MATERIALS
Specification 602S, “Sodding for Erosion Control”

City of Austin Land Development Code

Designation	*Description*
Chapter 4-2, Article II	Emergency and Peak Day Water Use Management

City of Austin Standard Specification Items

Designation	*Description*
Item No. 606S	Fertilizer

City of Austin Land Development Code

Designation	*Description*
Section 6-4-52	Water Use Management Plan Established
Section 6-4-53	Applicability
Section 6-4-54	Compliance Required
Section 6-4-63	Permanent Water Use Restrictions
Section 6-4-64	Water Conservation Stage One Regulations
Section 6-4-65	Water Conservation Stage Two Regulations
Section 6-4-81	Variance
Section 6-4-92	Penalty
Section 15-9-37(D)	Customer's Responsibilities
Section 15-9-101(B)	Basis for Termination of Service

RELATED CROSS REFERENCE MATERIALS
Specification 602S, "Sodding for Erosion Control"

City of Austin Standard Specification Items

Designation	*Description*
Item No. 110S	Street Excavation
Item No. 111S	Excavation
Item No. 120S	Channel Excavation
Item No. 132S	Embankment
Item No. 601S	Salvaging and Placing Topsoil
Item No. 604S	Seeding for Erosion Control
Item No. 608S	Planting
Item No. 610S	Preservation of Trees and Other Vegetation

Texas Department of Transportation: Standard Specifications for Construction and Maintenance of Highways, Streets, and Bridges

Designation	*Description*
Item No. 100	Preparing Right of Way
Item No. 110	Excavation
Item No. 160	Furnishing and Placing Topsoil
Item No. 162	Sodding for Erosion Control
Item No. 164	Seeding for Erosion Control
Item No. 166	Fertilizer
Item No. 168	Vegetative Watering
Item No. 204	Sprinkling

Item No. 604S
Seeding for Erosion Control

604S.1 Description

This item shall govern the preparation of a seed bed to the lines and grades indicated on the Drawings, sowing of seeds, fertilizing, mulching with straw, cellulose fiber wood chips, recycled paper mulch and other management practices along and across such areas as indicated in the Drawings or as directed by the Engineer or designated representative.

This specification is applicable for projects or work involving either inch-pound or SI units. Within the text, inch-pound units are given preference with SI units shown within parentheses.

604S.2 Submittals

The submittal requirements for this specification item shall include:

A. Identification of the type, source, mixture, PLS and rate of application of the seed.

B. type of mulch.

C. type of tacking agent.

D. type and rate of application of fertilizer.

604S.3. Materials

A. Seed. All seed must meet the requirements of the Texas Seed Law including the labeling requirements for showing pure live seed (PLS), name and type of seed. The seed furnished shall be of the previous season's crop and the date of analysis shown on each bag shall be within nine months of the time of delivery to the project. Each variety of seed shall be furnished and delivered in separate bags or containers. A sample of each variety of seed shall be furnished for analysis and testing when directed by the Engineer or designated representative.

   The amount of seed planted per acre (hectare) shall be of the type specified in sections 604S.5 and 604S.6.

B. Water. Water shall be clean and free of industrial wastes and other substances harmful to the growth of grass or the area irrigated.

C. Top soil. Top soil shall conform to Standard Specification Item No. 601S.3(A).

D. Fertilizer. The fertilizer shall conform to Standard Specification Item No. 606S, "Fertilizer".

E. Straw Mulch or Hay Mulch. Straw Mulch shall be oat, wheat or rice straw. Hay mulch shall be prairie grass, Bermuda grass, or other hay approved by the

Engineer or designated representative. The straw or hay shall be free of Johnson grass or other noxious weeds and foreign materials. It shall be kept in a dry condition and shall not be molded or rotted.

F. Tacking Agents. The tacking agent shall be a biodegradable tacking agent, approved by the Engineer or designated representative.

G. Cellulose Fiber Mulch (Natural Wood). Cellulose Fiber Mulch shall be natural cellulose fiber mulch produced from grinding clean whole wood chips. The mulch shall be designed for use in conventional mechanical planting, hydraulic planting of seed or hydraulic mulching of grass seed, either alone or with fertilizers and other additives. The mulch shall be such, that when applied, the material shall form a strong, moisture-retaining mat without the need of an asphalt binder.

H Recycled Paper Mulch. Recycled paper mulch shall be specifically manufactured from post-consumer paper and shall contain a minimum of 85% recycled paper content by weight, shall contain no more than 15% moisture and 1.6% ash, and shall contain no growth inhibiting material or weed seeds. The recycled paper mulch shall be mixed with grass seed and fertilizer for hydro-seeding/mulching, erosion control, and a binder over straw mulch. The mulch, when applied, shall form a strong, moisture-retaining mat of a green color without the need of an asphalt binder.

604S.4 Construction Methods

A. Preparing Seed Bed. After the designated areas have been rough graded to the lines, grades and typical sections indicated in the Drawings or as provided for in other items of this contract and for any other soil area disturbed by the construction, a suitable seedbed shall be prepared. The seedbed shall consist of a minimum of either 6 inches (150 millimeters) of approved topsoil or 6 inches (150 millimeters) of approved salvaged topsoil, cultivated and rolled sufficiently to reduce the soil to a state of good tilth, when the soil particles on the surface are small enough and lie closely enough together to prevent the seed from being covered too deeply for optimum germination. The optimum depth for seeding shall be 1/4 inch (6 millimeters). Water shall be gently applied as required to prepare the seedbed prior to the planting operation either by broadcast seeding or hydraulic planting. Seeding shall be performed in accordance with the requirements hereinafter described.

B. Watering. All watering shall comply with City Ordinances. Broadcast seeded areas shall immediately be watered with a minimum of 5 gallons of water per square yard (22.5 liters of water per square meter) or as needed and in the manner and quantity as directed by the Engineer or designated representative. Hydraulic seeded areas and native grass seeded areas shall be watered commencing after the tackifier has dried with a minimum of 5 gallons of water per square yard (22.5 liters of water per square meter) or as needed to keep the seedbed in a wet condition favorable for the growth of grass.

Watering applications shall constantly maintain the seedbed in a wet condition favorable for the growth of grass. Watering shall continue until the grass is uniformly 1 1/2 inches (40 mm) in height and accepted by the Engineer or

designated representative. Watering can be postponed immediately after a 1/2 inch (12.5 mm) or greater rainfall on the site but shall be resumed before the soil dries out.

Availability of water from the Austin Water Utility will be limited as stated under the Water Conservation Standard, City of Austin Land Development Code Chapter 6-2, Article II, “Water Use Management Plan Established”.

The use of potable water will be restricted as stated in City of Austin Land Development Code Sections 6-4-73, 6-4-54, 6-4-63, 6-4-64, 6-4-65, 6-4-81, 6-4-92, 15-9-37(D) and 15-9-101(B).

604S.5 Non-Native Seeding

A. Method A - Broadcast Seeding. The seed or seed mixture in the quantity specified shall be uniformly distributed over the prepared seed bed areas indicated on the Drawings or where directed by the Engineer or designated representative. If the sowing of seed is by hand, rather than by mechanical methods, the seed shall be sown in two directions at right angles to each other. If mechanical equipment is used, all varieties of seed, as well as fertilizer, may be distributed at the same time, provided that each component is uniformly applied at the specified rate. After planting, the planted area shall be rolled with a corrugated roller of the "Cultipacker" type. All rolling of the slope areas shall be on the contour.

Seed Mixture and Rate of Application for Broadcast Seeding:

<u>From September 15 to March 1</u>, seeding shall be with a cool season cover crop (see Table 4) at a rate of 1.5 pounds per 1000 square feet (0.75 kilograms per 100 square meters). Cool season cover crops are not permanent erosion control. The cool season cover crops shall be mowed (scalped) to a height of less than one (1) inch after March 1, and the area shall be re-seeded in accordance with the seeding rate for March 1 to September 15, below.

<u>From March 1 to September 15</u>, seeding shall be with hulled Bermuda Grass at a rate of 2 pounds per 1000 square feet (1.0 kilograms per 100 square meters) with a PLS = 0.83. Fertilizer shall be applied and shall conform to Item No. 606S, "Fertilizer". Bermuda grass is a warm season grass and is therefore considered permanent erosion control once established.

B. Method B - Hydraulic Planting. The seedbed shall be prepared as specified above and hydraulic planting equipment, which is capable of placing all materials in a single operation, shall be used.

<u>March 1 to September 15</u>

Hydraulic planting mixture and minimum rate of application pounds per 1000 square feet (kilograms per 100 square meters):

Hulled Bermuda Seed (PLS=0.83)	Fiber Mulch		Soil Tackifier
	Cellulose	Wood	
1 Lbs/1000 ft2 (0.5kgs/100 m2)	45.9 Lbs/1000 ft2 (22.5kgs/100 m2)		1.4 Lbs/1000 ft2 (0.7kgs/100 m2)
		57.4 Lbs/1000 ft2 (28.0kgs/100 m2)	1.5 Lbs/1000 ft2 (0.75kgs/100 m2)

September 15 to March 1

Use 1.5 pounds per 1000 square feet (0.75 kilograms per 100 square meters) of cool season cover crop (see Table 4). Cool season cover crops are not permanent erosion control. The cool season cover crops shall be mowed to a height of less than one (1) inch after March 1, and the area shall be re-seeded in accordance with the seeding rate for March 1 to September 15, above.

604S.6 Native Grass Seeding

The seedbed shall be prepared as specified above. The seed mixture and the rate of application shall be as follows:

Table 2: Native Grasses

Common Name	Botanical Name	Application rates	
		Lbs/1000 feet^2	kg/ 100 meter^2
Indiangrass	Sorghastrum nutans	0.15	0.075
Sideoats grama	Bouteloua curtipendula	0.2	0.10
Green sprangletop	Leptochloa dubia	0.15	0.075
Buffalo Grass	Buchloe dactyloides	0.25	0.125
Little Bluestem	Schizachyrium scoparium	0.2	0.10
Blue Grama Grass	Bouteloua gracilis	0.15	0.075
Canada Wild Rye	Elymus canadensis	0.2	0.10
Eastern gamagrass	Tripsacum dactyloides	0.25	0.125
Purple Three-Awn	Aristida purpurea	0.15	0.075
Switchgrass	Panicum virgatum	0.1	0.05
Bushy Bluestem	Andropogon glomeratus	0.1	0.05
Big Bluestem	Andropogon gerardii	0.1	0.05
Total Grass Seeding Rate		2.0	1.0

Table 3: Native Wildflowers

Common Name	Botanical Name	Application rates

		Lbs/1000 feet 2	kg/ 100 meter2
Black-Eyed Susan	Rudbeckia hirta	0.05	0.025
Bundleflower	Desmanthus illinoensis	0.05	0.025
Scarlet Sage	Salvia coccinea	0.10	0.05
Pink Evening Primrose	Oenethera speciosa	0.05	0.025
Phlox	Phlox Drummondii	0.05	0.025
Coreopsis	Coreopsis tinctoria	0.05	0.025
Greenthread	Thelesperma filifolium	0.05	0.025
Purple Prairie Clover	Petalostemum purpurea	0.05	0.025
Cutleaf Daisy	Engelmannia pinnatifida	0.05	0.025
Partridge Pea	Cassia fasciculata	0.1	0.05
Indian Blanket	Gaillardia pulchella	0.1	0.05
Bluebonnet	Lupinus texensis	0.15	0.075
Mexican Hat	Ratibida columnaris	0.05	0.025
Maximilian Sunflower	Helianthus maximiliani	0.1	0.05
Total Wildflower Seeding Rate		1.0	0.5
Total Warm Season Seeding Rate (Grass & Wildflowers)		3.0	1.5

Table 4: Cool Season Cover Crop			
Common Name	Botanical Name	Application rates	
		Lbs/1000 feet 2	kg/ 100 meter2
Wheat	Triticum aestivum	0.5	0.25
Oats	Avena sativa	0.5	0.25
Cereal Rye Grain	Secale cereale	0.5	0.25
Total Cool Season Cover Crop Seeding Rate		1.5	0.75
Total Cool Season Seeding Rate (Grass, Wildflowers, & Cover Crop)		4.5	2.25

Species substitution as necessary due to availability shall be approved by the Engineer or designated representative. Watering and fertilizer application shall follow procedures outlined above or as otherwise specified on the Drawings.

Seed shall be applied by broadcast, hydromulch, blown compost, or drill method and shall be distributed evenly over the topsoil areas. Mulching shall immediately follow seed application for broadcast and hydromulch applications.

<u>September 15 to March 1</u>

Add 1.5 pounds per 1000 square feet (0.75 kilograms per 100 square meters) of cool season cover crop (see Table 4) to grass and wildflower mixture.

604S.7 Mulch

A. Straw Mulch.

Straw mulch shall be spread uniformly over the area indicated or as designated by the Engineer or designated representative at the rate of 2 to 2 1/2 tons of straw per acre (4.5 to 5.6 megagrams of straw per hectare). The actual rate of application will be designated by the Engineer or designated representative. Straw may be hand or machine placed and adequately secured.

B. Fiber Mulch.

Cellulose and wood fiber mulch shall be spread uniformly over the area indicated or as designated by the Engineer or designated representative at the rate of 45 to 80 lbs. per 1000 square feet (22.5 to 40 kilograms per 100 square meters).

C. Recycled Paper Mulch.

Recycled paper mulch shall be spread over the area indicated on the Drawings or as designated by the Engineer or designated representative at a rate that will provide 100% coverage.

D. Shredded Brush Mulch.

Small brush or tree limbs except Juniper, which have been shredded, may be used for mulching Native Grass seeding.

604S.8 Measurement

Work and acceptable material for "Seeding for Erosion Control" will be measured by the square yard (meter: 1 meter equals 1.196 square yards) or by the acre (hectare: 1 hectare equals 2.471 acres), complete in place, with a minimum of 95 percent coverage for the non-native mix, and 95 percent coverage for the native mix. Bare areas shall not exceed 16 square feet (1.5 square meters), and the height of vegetation shall stand at a minimum of 1 1/2 inch (40 millimeters). Bare areas shall be re-prepared and reseeded as required to develop an acceptable stand of grass.

604S.9 Payment

The work performed and materials furnished and measured will be paid for at the unit bid price for "Seeding for Erosion Control" of the method specified on the Drawings and type of mulch. The unit bid price shall include full compensation for furnishing all materials, including all topsoil, water, seed, tackifier, fertilizer or mulch and for performing all operations necessary to complete the work.

All fertilizer will be measured and paid for conforming to Item No. 606S, "Fertilizer".

Payment will be made under one of the following:

Pay Item No. 604S-A:	Non-Native Seeding for Erosion Control Method, _____ Mulch	Per Square Yard
Pay Item No. 604S-B:	Non-Native Seeding for Erosion Control Method, _____ Mulch	Per Acre
Pay Item No. 604S-C:	Native Seeding for Erosion Control Method, _____ Mulch	Per Square Yard
Pay Item No. 604S-D:	Native Seeding for Erosion Control Method, _____ Mulch	Per Acre
Pay Item No. 604S-E:	Mulch, _____	Per Square Yard
Pay Item No. 604S-F:	Mulch, _____	Per Acre

End

SPECIFIC CROSS REFERENCE MATERIALS
Specification Item 604S "Seeding for Erosion Control"

City of Austin Technical Specifications

Designation	**Description**
Item No. 130S	Borrow
Item No. 606S	Fertilizer

City of Austin Land Development Code

Designation	**Description**
Section 6-4-52	Water Use Management Plan Established
Section 6-4-53	Applicability
Section 6-4-54	Compliance Required
Section 6-4-63	Permanent Water Use Restrictions
Section 6-4-64	Water Conservation Stage One Regulations
Section 6-4-65	Water Conservation Stage Two Regulations
Section 6-4-81	Variance
Section 6-4-92	Penalty
Section 15-9-37(D)	Customer's Responsibilities
Section 15-9-101(B)	Basis for Termination of Service

RELATED CROSS REFERENCE MATERIALS
Specification Item 604S "Seeding for Erosion Control"

City of Austin Technical Specifications

Designation	Description
Item No. 601S	Salvaging and Placing Topsoil
Item No. 602S	Sodding for Erosion Control
Item No. 605S	Soil Retention Blanket
Item No. 607S	Slope Stabilization
Item No. 608S	Planting

City of Austin Standards (Details)

Designation	Description
627S-1	Grass Lined Swale
633S-1	Landgrading

Texas Department of Transportation: Standard Specifications for Construction and Maintenance of Highways, Streets, and Bridges

Designation	Description
Item No. 160	Furnishing and Placing Topsoil
Item No. 162	Sodding for Erosion Control
Item No. 164	Seeding for Erosion Control
Item No. 166	Fertilizer
Item No. 168	Vegetative Watering
Item No. 169	Soil Retention Blanket
Item No. 180	Wildflower Seeding
Item No. 192	Roadside Planting and Establishment

Item No. 605S
Soil Retention Blanket

605S.1 Description

This item shall govern the provision and placement of wood, straw or coconut fiber mat, synthetic mat, paper mat, jute mesh or other material as a soil retention blanket for erosion control on slopes or ditches or short-term or long-term protection of seeded or sodded areas indicated on the Drawings or as specified by the Engineer or designated representative.

This specification is applicable for projects or work involving either inch-pound or SI units. Within the text, inch-pound units are given preference with SI units shown within parentheses.

605S.2 Submittals

The submittal requirements for this specification item shall include the soil retention blanket material type and sample, evidence that the material is listed on TxDoT/TTI Approved Products List, one (1) full set of Manufacturer's literature and installation recommendations, and any special details necessary for the proposed application.

605S.3 Materials

A. Soil Retention Blankets

All soil retention blankets must be listed on TxDoT Approved Products List or approved by the Engineer or designated representative.

The soil retention blanket shall be one (1) of the following classes and types as shown on the Drawings:

1. Class 1. "Slope Protection"
   - (a) Type A. Slopes 1:3 or flatter - Clay soils
   - (b) Type B. Slopes 1:3 or flatter - Sandy soils
   - (c) Type C Slopes steeper than 1:3 - Clay soils
   - (d) Type D Slopes steeper than 1:3 - Sandy soils
2. Class 2. "Flexible Channel Liner"
   - (a) Type E Short-term duration (Up to 2 years)
     Shear Stress (t_d) < 1 pound per square foot [psf] (48 Pa)
   - (b) Type F Short-term duration (Up to 2 years)
     Shear Stress (t_d) 1 to 2 psf (48 to 96 Pa)
   - (c) Type G Long-term duration (Longer than 2 years)
     Shear Stress (t_d) >2 to <5 psf (>96 to <239 Pa)
   - (d) Type H Long-term duration (Longer than 2 years)
     Shear Stress (t_d) ≥ 5 psf (≥ 239 Pa)

B. Fasteners

The fasteners shall conform to the recommendations of the manufacturer for the selected soil retention blanket.

605S.4 Construction Methods

A. General

The soil retention blanket shall conform to the class and type shown on the Drawings. The Contractor has the option of selecting an approved soil retention blanket conforming to the class and type shown on the Drawings which is included on the Approved Products List published by TxDoT/TTI Hydraulics and Erosion Control Laboratory.

B. Site Preparation:

Prior to placement of the soil retention blanket, the seedbed area to be covered shall be relatively free of all clods and rocks over 1 1/2 inches (37.5 mm) in maximum dimension and all sticks or other foreign matter that will prevent close contact of the preparation mat with the soil surface. The area shall be smooth and free of ruts and other depressions. If the prepared seedbed becomes crusted or eroded as a result of rain or if any eroded places, ruts or depressions exist for any reason, the Contractor shall be required to rework the soil until it is smooth and to reseed or resod the area at the Contractor's own expense. After the area has been properly prepared, the blanket shall be laid out flat, even and smooth, without stretching or crimping the material.

C. Installation

The Soil Retention Blanket, whether installed as slope protection or as flexible channel liner in accordance with the TxDoT/TTI Approved Products List, shall be placed within 24 hours after seeding (Standard Specification Item No. 604S), sodding (Standard Specification Item No. 602S) or native grassland seeding and planting (Standard Specification Item No. 609S) erosion control operations have been completed, or as approved by the Engineer or designated representative. The soil retention blanket shall be installed and anchored in accordance with the Manufacturer's recommendations. The Contractor shall contact the Engineer or designated representative three (3) days prior to the installation of the soil retention blanket to allow for inspection of the installation by City of Austin personnel.

605S.5 Measurement

This work and acceptable material for "Soil Retention Blanket" will be measured by the square yard (square meter: 1 square meter is equal to 1.196 square yards) of surface area covered, complete in place.

605S.6 Payment

The work performed and materials furnished in accordance with this Item and measured as provided under "Measurement" will be paid for at the unit bid price for "Soil Retention Blanket" of the class shown on the Drawings or approved by the Engineer or designated representative. The unit price shall include full compensation for furnishing all materials, labor, tools, equipment and incidentals necessary to complete the work. Anchors, checks, terminal and wire staples will not be paid for directly, but will be included in the unit price bid for this specification item.

Payment will be made under the following:

Pay Item No. 605S-A: Soil Retention Blanket Class__; Type __- Per Square Yard.

End

SPECIFIC CROSS REFERENCE MATERIALS
Specification 605S, "Soil Retention Blanket"

City of Austin Standard Specification Items

Designation	Description
Item No. 602S	Sodding for Erosion Control
Item No. 604S	Seeding for Erosion Control
Item No. 609S	Native Grassland Seeding and Planting for Erosion Control

RELATED CROSS REFERENCE MATERIALS

City of Austin Standard Specification Items

Designation	Description
Item No. 101S	Preparing Right of Way
Item No. 102S	Clearing and Grubbing
Item No. 111S	Excavation
Item No. 120S	Channel Excavation
Item No. 132S	Embankment
Item No. 606S	Fertilizer
Item No. 608S	Planting
Item No. 610S	Preservation of Trees and Other Vegetation

Texas Department of Transportation: Standard Specifications for Construction and Maintenance of Highways, Streets, and Bridges

Designation	Description
Item No. 100	Preparing Right of Way
Item No. 110	Excavation
Item No. 132	Embankment
Item No. 158	Specialized Excavation Work
Item No. 160	Furnishing and Placing Topsoil
Item No. 162	Sodding for Erosion Control
Item No. 164	Seeding for Erosion Control
Item No. 166	Fertilizer
Item No. 168	Vegetative Watering
Item No. 169	Soil Retention Blanket
Item No. 204	Sprinkling

Item No. 609S
Native Grassland Seeding and Planting for Erosion Control

609S.1 Description

This item shall govern the preparation of a seeding and planting area to the lines and grades indicated on the Drawings. This may include seedbed preparation, sowing of seeds, planting of rooted plants, watering, hydromulch, compost and other management practices, as indicated in the Drawings or as directed by the Engineer or designated representative.

This specification is applicable for projects or work involving either inch-pound or SI units. Within the text, inch-pound units are given preference with SI units shown within parentheses.

609S.2 Submittals

The submittal requirements for this specification item shall include:

A. Identification of the species, source, mixture and rate of application of the seeding.

B. Type of mulch or compost.

C. Watering frequency and amount.

D. Type of management practices.

609S.3. Materials

A. The seed furnished shall be of the previous season's crop and the date of analysis shown on each bag shall be within twelve months of the time of delivery to the project. Each variety of seed shall be furnished and delivered in separate bags or containers. A sample of each variety of seed shall be furnished for analysis and testing when directed by the Engineer or designated representative.

   The amount of seed planted per 1000 square feet (93 square meters) shall be of the type specified in section 609S.5.

B. Water shall be clean and free of industrial wastes and other substances harmful to the growth of grass in the area irrigated.

C. Topsoil see Standard Specification Item No. 601S.3(A)

D. A least toxic, integrated pest management (IPM) approach shall be used to control weeds. A written request for approval of weed control product(s) and/or materials shall be submitted to the City of Austin IPM program coordinator (499-2550) for approval.

E. Rooted plants must be healthy and free of pests. The root system should be well established and in proportion to the top growth.

609S.4 Construction Methods

A. General.

The Contractor shall limit preparation to areas that will be immediately seeded. All noxious weeds shall be eliminated by application of a herbicide and/or by physical removal (by the roots) prior to and/or during the seeding operation. The following list of plants are considered noxious weeds:

Table 1: Weed List

Weed Type	Botanical Name	Common Name
Herb	Ambrosia spp.	Ragweed
Grass	Bothriochloa ischaemum	K.R. Bluestem
Grass	Bromus unioloides	Rescue Grass
Herb	Cenchrus spp.	Sandbur
Herb	Cnidoscolus texanus	Bull Nettle
Herb	Convolvulus spp.	Bindweed
Grass	Cynodon dactylon	Bermudagrass*
Herb	Cyperus esculentus	Yellow Nutsedge (Nut-grass)
Herb	Cyperus rotundus	Purple Nutsedge (Nut-grass)
Grass	Digitaria spp.	Crab Grass
Herb	Medicago sp.	Bur-Clover
Grass	Paspalum dilatatum	Dallis Grass
Grass	Sorghum halapense	Johnson Grass
Herb	Torilis arvensis	Beggar's-tick
Vine	Toxicodendron radicans	Poison Ivy
Herb	Urtica spp.	Stinging Nettle

B. Seed Bed Preparation.

After the designated areas have been rough graded, a suitable seedbed shall be prepared. In areas where cut or fill is required, a minimum of 6 inches (150 mm) of topsoil (see Section 609S.3.C) shall be placed or existing soil (that is not infested with weeds or weed rootstock) stockpiled over the entire planting area.

In areas with no soil disturbance, the weeds shall be eliminated and a minimum of 2 inches (50 mm) of topsoil, if none currently exists, shall be placed. An even seedbed shall be prepared with limited irregularities, lumps or soil clods and the surface shall be raked to facilitate seed to soil contact.

C. Watering.

All watering shall comply with City of Austin Land Development Code requirements. Seeded areas shall immediately be watered with a minimum

of 5 gallons of water per square yard (22.5 liters of water per square meter) or as needed and in the manner and quantity as directed by the Engineer or designated representative.

Watering applications shall insure that the seedbed is maintained in a moist condition favorable for the growth of grass. Watering shall continue until minimum coverage is achieved and accepted by the Engineer or designated representative. Watering may be postponed immediately after a 1/2 inch (12.5 mm) or greater rainfall on the site but shall be resumed before the soil dries out.

Availability of water from the Austin Water Utility will be limited as stated under the Water Conservation Standard, City of Austin Land Development Code Chapter 6-2, Article II, "Water Use Management Plan Established".

The use of potable water will be restricted as stated in City of Austin Land Development Code Sections 6-4-73, 6-4-54, 6-4-63, 6-4-64, 6-4-65, 6-4-81, 6-4-92, 15-9-37(D) and 15-9-101(B).

609S.5 Native Grassland Seeding and Planting

All areas require both seed and rooted plants. Seeding and planting shall be performed in accordance with the requirements hereinafter described. The optimum depth for seeding shall be from 1/16 inch (1 1/2 millimeters) to 1/8 inch (3 millimeters). Seed shall be applied by a method that achieves consistent distribution and proper seed to soil contact (i.e. hand broadcasting, hydromulch, or drill method). Mulching is not required.

Species substitution, when necessary due to availability, shall be approved by the Engineer or designated representative. Only native species adapted for the designated environmental conditions shall be allowed as substitutes. Shorter growing natives such as Buffalograss should be sodded around manholes or other structures requiring higher visibility for access.

If the native grassland is being installed during the cool season (November 1 to February 15), the cool season cover crop species (as listed) shall be included in the mix.

The seed and rooted plant mixtures shall be applied in accordance with appropriate ‘growing environments’ (Upland Full Sun–Table 2, Upland Shade-Dappled-Table 3 and Facultative Moderate to High Moisture–Table 4).

Table 2. Upland Species, Full Sun Areas

Common Name	Comments	Botanical Name	Seed application rate lbs/1000 sq. ft. (kg/100 sq. m.)	Rooted Plants Size & Spacing
Buffalo Grass	grass	Buchloe dactyloides	0.3 (0.15)	1 - 16" x 24" piece of sod @ 10' (3m) ctrs.
Blue Grama	grass	Bouteloua gracilis	0.2 (0.1)	Not required
Green Srangletop	grass	Leptochloa dubia	0.4 (0.2)	
Indian Grass	grass	Sorghastrum nutans	0.2 (0.1)	1 gal @ 10 ft.' (3m) ctrs.
Little Bluestem	grass	Schizachyrium scoparium	0.2 (0.1)	
Prairie Wild Rye	grass	Elymus canadensis	0.2 (0.1)	Not required
Purple Threeawn	grass	Aristida purpurea	0.2 (0.1)	
Sideoats Grama	grass	Bouteloua curtipendula	0.3 (0.15)	
Bluebonnet	wildflower	Lupinus texensis	0.4 (0.2)	Not required
Clover (Purple Prairie)	wildflower	Petalostemum purpurea	0.1 (0.05)	Not required
Coreopsis (Plains)	wildflower	Coreopsis tinctoria	0.05 (0.025)	Not required
Goldenrod	wildflower	Solidago altissima	0.02 (0.01)	Not required
Greenthread	wildflower	Thelesperma filifolium	0.075 (0.037)	Not required
Indian Blanket	wildflower	Gaillardia pulchella	0.15 (0.075)	Not required
Lemon Mint	wildflower	Monarda citriodora	0.06 (0.03)	Not required
Mexican Hat	wildflower	Ratibida columnaris	0.05 (0.025)	Not required
Pink Evening Primrose	wildflower	Oenethera speciosa	0.02 (0.01)	Not required
Sunflower (Common)	wildflower	Helianthus annus	0.075 (0.037)	Not required
Cereal rye grain*	cool season cover crop	Elymus	0.5 (0.25)	Not required
Oats*	cool season cover crop	Avena sativa	0.2 (0.10)	Not required
Wheat*	cool season cover crop	Triticum aestivum	0.3 (0.15)	Not required
TOTAL**			Winter: 4.0 (2.0) Summer 3.0 (1.5)	Rooted species mixed equally @ 10 ft. (3 m) ctrs.

* Plant only between Oct. 1 and Jan. 31. Non-persistent winter cover crop for erosion control.

** Any unavailable species can be substituted with the same quantity of another species from this list or another species approved by the Engineer or designated representative.

Table 3. Upland Species, Shade-Dappled Light Areas

Common Name	Comments	Botanical Name	Seed Application Rate lbs/1000 sq. ft. (kg/100 sq. m.)	Rooted Plants Size & Spacing
Meadow Sedge*	sedge	Carex perdentata	No seed required	1 gal. @ 10' (3m) ctrs.
Inland Seaoats**	grass	Chasmanthium latifolium	0.5 (0.25)	
Prairie Wild Rye	grass	Elymus canadensis	0.75 (0.37)	Not required
Sideoats Grama	grass	Bouteloua curtipendula	0.75 (0.37)	1 gal. @ 10' (3m) ctrs.
Purple Coneflower	wildflower	Echinacea purpurea	0.1 (0.05)	Not required
Coreopsis (Lanceleaf)	wildflower	Coreopsis lanceolata	0.1 (0.05)	Not required
Sage (Scarlet)	wildflower	Salvia coccinea	0.1 (0.05)	Not required
Drummond Phlox	wildflower	Phlox Drummondii	0.1 (0.05)	Not required
Black-Eyed Susan	wildflower	Rudbeckia hirta	0.03 (0.015)	Not required
Cutleaf Daisy	wildflower	Engelmannia pinnatifida	0.2 (0.10)	Not required
Tall Aster	wildflower	Aster praealtus	0.02 (0.01)	Not required
Illinois bundleflower	wildflower	Desmanthus illinoiensis	0.15 (0.075)	Not required
Standing cypress	wildflower	Ipomopsis rubra	0.1 (0.05)	Not required
Winecup	wildflower	Callirhoe involucrata	0.1 (0.05)	Not required
Cereal rye grain***	cool season cover crop	Secale cereale	0.5 (0.25)	Not required
Oats***	cool season cover crop	Avena sativa	0.2 (0.1)	Not required
Wheat***	cool season cover crop	Triticum aestivum	0.3 (0.15)	Not required
TOTAL****			Winter: 4.0 (2.0) Summer: 3.0 (1.5)	Rooted species mixed equally @ 10' (3m) ctrs.

* If unavailable replace with other shade and drought-tolerant sedge species.
** If unavailable replace with Prairie Wild Rye.
*** Plant only between Oct. 1 and Jan. 31. Non-persistent winter cover crop for erosion control.

**** Any unavailable species can be substituted with the same quantity of another species from this list or another species approved by the Engineer or designated representative.

Table 4. Facultative Species, Moderate – High Moisture Areas

Common Name	Comments	Botanical Name	Seed application rate lbs/1000 sq. ft. (kg/100 sq. m.)	Rooted Plants Size & Spacing
Big Bluestem	grass	Andropogon gerardii	0.2 (0.1)	1 gal. @ 10' (3m) ctrs
Big Muhly (Lindhiemers)	grass	Muhlenbergia lindheimeri	0.2 (0.1)	
Bushy Bluestem	grass	Andropogon glomeratus	0.2 (0.1)	
Eastern Gama Grass	grass	Tripsacum dactyloides	0.3 (0.15)	
Indian Grass	grass	Sorghastrum nutans	0.2 (0.1)	
Inland Seaoats	grass	Chasmanthium latifolium	0.3 (0.15)	
Prairie Wild Rye	grass	Elymus canadensis	0.3 (0.15)	Not required
Sand Lovegrass	grass	Eragrostis trichodes	0.2 (0.1)	
Switchgrass	grass	Panicum virgatum	0.1 (0.05)	1 gal. @ 10' (3m) ctrs
Black-Eyed Susan	wildflower	Rudbeckia hirta	0.06 (0.03)	Not required
Bundleflower (Illinois)	wildflower	Desmanthus illinoiensis	0.35 (0.17)	Not required
Clover (Purple Prairie)	wildflower	Petalostemum purpurea	0.1 (0.05)	Not required
Coneflower (Clasping)	wildflower	Rudbeckia amplexicaulis	0.06 (0.03)	Not required
Coreopsis (Plains)	wildflower	Coreopsis tinctoria	0.05 (0.025)	Not required
Goldenrod	wildflower	Solidago altissima	0.03 (0.015)	Not required
Lazy Daisy	wildflower	Aphanostephus sp.	0.03 (0.015)	Not required
Lemon Mint	wildflower	Monarda citriodora	0.07 (0.035)	Not required
Sunflower (Common)	wildflower	Helianthus annuus	0.15 (0.075)	Not required
Sunflower (Maximilian)	wildflower	Helianthus maximiliani	0.1 (0.05)	Not required
Cereal rye grain*	cool season cover crop	Secale cereale	0.5 (0.25)	Not required

Oats*	cool season cover crop	Avena sativa	0.2 (0.10)	Not required
Wheat*	cool season cover crop	Triticum aestivum	0.3 (0.15)	
TOTAL**			winter: 4.0 (2.0) summer: 3.0 (1.5)	Rooted species mixed equally @ 10' (3m) ctrs.

* Plant only between Oct. 1 and Jan. 31. Non-persistent winter cover crop for erosion control.

** Any unavailable species can be substituted with the same quantity of another species from this list or another species approved by the Engineer or designated representative.

609S.6 Management Practices

Weeds, as defined in the Weed List (Table 1), shall be controlled in the most efficient manner possible. The timing of weed control may occur prior to soil disturbance, just before the installation of seed, and/or during the period of grassland establishment. Weed control shall be introduced at one or all of these times, so that the greatest control is achieved. The preferred method of control is to remove weeds, either by physical or mechanical means, when the site is conducive (e.g. when the ground is moist) to this approach.

The entire root system of perennial weeds shall be removed to prevent re-sprouting. Weeds may be controlled with an approved contact, systemic herbicide, provided the product is used with appropriate care and is applied in accordance with label instructions and the following guidelines:

1. Herbicide shall not be applied when the wind is greater than 8 mph (12.9 kph),
2. Herbicide shall not be applied when rainfall is expected within 24 hours,
3. Herbicide shall not contact surface water, i.e. creeks, rivers, and lakes,
4. Herbicide shall not contact desirable vegetation (a wicking method shall be used, if necessary, to accurately contact target weed only during application).

The Engineer or designated representative shall be consulted to determine appropriate weed control management when weeds are located in an environmentally sensitive location (e.g. near water or adjacent to a critical environmental feature).

609S.7 Measurement

Work and acceptable material for "Native Grasslands for Erosion Control" will be measured by the square yard (square meter: 1 square meter equals 1.196 square yards) or by the acre (hectare: 1 hectare equals 2.471 acres), complete in place, with a minimum of 95 percent coverage with no bare areas exceeding 16 square feet (1.5

square meters) and a 1 1/2 inch (40 millimeters) stand of grass. Bare areas shall be reprepared and reseeded as required by the Engineer or designated representative in order to develop an acceptable stand of grass.

609S.8 Payment

The work performed and materials furnished and measured will be paid for at the unit bid price for "Native Grasslands For Erosion Control" of the method specified on the Drawings.

The unit bid price shall include full compensation for furnishing all materials, including all topsoil, water, seed, or fertilizer or mulch and for performing all operations necessary to complete the work.

Payment will be made under one or more of the following pay items:

Pay Item No. 609S-A:	Topsoil and Seedbed Preparation	Per Square Yard.
Pay Item No. 609S-B:	Topsoil and Seedbed Preparation	Per Acre.
Pay Item No. 609S-C:	Native Grassland Seeding and Planting	Per Square Yard.
Pay Item No. 609S-D:	Native Grassland Seeding and Planting	Per Acre.
Pay Item No. 609S-E:	Watering	Per Square Yard
Pay Item No. 609S-F:	Watering	Per Acre
Pay Item No. 609S-G:	Management Practices	Per Square Yard
Pay Item No. 609S-H:	Management Practices	Per Acre

End

***SPECIFIC* CROSS REFERENCE MATERIALS**
Specification Item 609S "Native Grassland Seeding and Planting for Erosion Control"

City of Austin Standard Specifications

Designation	Description
Item No. 130S	Borrow
Item No. 606S	Fertilizer

City of Austin Land Development Code

Designation	Description
Section 6-4-52	Water Use Management Plan Established
Section 6-4-53	Applicability
Section 6-4-54	Compliance Required
Section 6-4-63	Permanent Water Use Restrictions
Section 6-4-64	Water Conservation Stage One Regulations
Section 6-4-65	Water Conservation Stage Two Regulations
Section 6-4-81	Variance
Section 6-4-92	Penalty
Section 15-9-37(D)	Customer's Responsibilities
Section 15-9-101(B)	Basis for Termination of Service

***RELATED* CROSS REFERENCE MATERIALS**
Specification Item 609S "Native Grassland Seeding and Planting for Erosion Control"

City of Austin Standard Specifications

Designation	Description
Item No. 601S	Salvaging and Placing Topsoil
Item No. 602S	Sodding for Erosion Control
Item No. 604S	Seeding (Non-Native) for Erosion Control
Item No. 605S	Soil Retention Blanket
Item No. 607S	Slope Stabilization
Item No. 608S	Planting

City of Austin Standards (Details)

Standard No.	Description
627S-1	Grass Lined Swale
62S7-2	Grass Lined Swale W/ Stone Center
633S-1	Landgrading

Texas Department of Transportation: Standard Specifications for Construction and Maintenance of Highways, Streets, and Bridges

Designation	Description
Item No. 160	Furnishing and Placing Topsoil
Item No. 162	Sodding for Erosion Control
Item No. 164	Seeding for Erosion Control
Item No. 166	Fertilizer
Item No. 168	Vegetative Watering
Item No. 169	Soil Retention Blanket
Item No. 180	Wildflower Seeding
Item No. 192	Roadside Planting and Establishment

ITEM NO. 642S
SILT FENCE

642S.1 Description

This item shall govern the provision and placement of a silt fence fabric fence (Environmental Criteria Manual Section 1.4.5.G) including maintenance of the fence, removal of accumulated silt, removal of the silt fence and re-vegetation of disturbed areas upon completion of the project.

This specification is applicable for projects or work involving either inch-pound or SI units. Within the text, the inch-pound units are given preference followed by SI units shown within parentheses.

642S.2 Submittals

The submittal requirements for this specification item shall include:

A. Source, manufacturer, characteristics and test data for the silt fence fabric,

B. Manufacturer, characteristics and test data for the posts and wire fence.

C. Re-vegetation program, including:

1. Identification of the type, source, mixture, Pure Live Seed (PLS) and rate of application of the seeding.
2. Type of mulch.
3. Type of tacking agent.
4. Type and rate of application of fertilizer.

642S.3 Materials

A. Fabric

1. General:

   The silt fence fabric shall be of nonwoven polypropylene, polyethylene or polyamide thermoplastic fibers with non-raveling edges. The silt fence fabric shall be non-biodegradable, inert to most soil chemicals, ultraviolet resistant, unaffected by moisture or other weather conditions, and permeable to water while retaining sediment. The silt fence fabric shall be supplied in rolls a minimum of 36 inches (0.9 meter) wide.

2. Physical Requirements:

   The fabric shall meet the requirements presented in Table 1, when sampled and tested in accordance with the methods indicated herein, on Standard Detail No. 642S-1 and/or on the Drawings.

B. Posts:

Posts shall be steel Tee or Y-posts, not less than 4 feet (1.22 meters) in length with a minimum weight of 1.25 pounds per foot (1.86 kilograms per meter) with a minimum Brinell Hardness of 143. Hangers shall be adequate to secure fence and fabric to posts. Posts and anchor plates shall conform to ASTM A-702. Caps are required (*not specifying discretionary criteria).

C. Wire Fence:

Wire fence shall be welded wire fabric 2 in. x 4 in. 12.5 SWG, wire diameter 0.099 in (±0.005 in.), and shall conform to Standard Specification Item No. 406, "Reinforcing Steel".

TABLE 1. Silt Fence Fabric Requirements

Physical Properties	Method	Requirements
Fabric Weight in ounces per square yard (grams/square meter)	TEX-616-J[1]	5.0 minimum (150 minimum)
Equivalent Sieve Opening Size: US Standard (SI Standard sieve size)	CW-02215[2]	40 to 100 (425 to 150 □m)
Mullen Burst Strength: lbs. per sq. inch (psi) megaPascal (mPa)	ASTM D-3786[3]	280 minimum (1.9 minimum)
Ultraviolet Resistance; % Strength Retention	ASTM D-1682[4]	70 minimum

[1] TxDoT Test Method Tex-616-J, "Testing of Construction Fabrics".
[2] US Army Corps of Engineers Civil Works Construction Guide Specification CW-02215, "Plastic Filter Fabric".
[3] ASTM D-3786, " Test Method for Hydraulic Bursting Strength of Knitting Goods and Nonwoven Fabrics: Diaphragm Bursting Strength Tester Method".
[4] ASTM D-1682, " Test Methods for Breaking Load and Elongation of Textile Fabrics ".

642S.4 Construction Methods

The silt fence fabric shall be securely attached to the posts and the wire support fence with the bottom 12 inches (300 mm) of the material buried in a trench a minimum of 6 inches (150 mm) deep and 6 inches (150 mm) wide to prevent sediment from passing under the fence. When the silt fence is constructed on impervious material, a 12-inch (300-mm) flap of fabric shall be extended upstream from the bottom of the silt fence and weighted to limit particulate loss. No horizontal joints will be allowed in the silt fence fabric. Vertical joints shall be overlapped a minimum of 12 inches (300 mm) with the ends sewn or otherwise securely tied.

The silt fence shall be a minimum of 24 inches (0.6 meter) high. Posts shall be embedded a minimum of 12 inches (300 mm) in the ground, placed a maximum of 8 feet (2.4 meters) apart and set on a slight angle toward the anticipated runoff source. When

directed by the Engineer or designated representative, posts shall be set at specified intervals to support concentrated loads.

* Per OSHA §1926.701, 'all protruding reinforcing steel, onto and into which employees could fall, shall be guarded to eliminate the hazard of impalement'. Caps must be large enough to dissipate the forces of impact to prevent impalement from a reasonably foreseeable fall distance. It should be noted that the use of impalement protection caps is but one method of protection; covers or wooden troughs can be another means of meeting the guarding requirement. For City of Austin purposes, this also applies to t-posts and wooden stakes.

The silt fence shall be repaired, replaced, and/or relocated when necessary or as directed by the Engineer or designated representative. Accumulated silt shall be removed when it reaches a depth of 6 inches (150 mm).

642S. 5 Measurement

The work performed and the materials furnished under this item will be measured by the lineal foot of "Silt Fence", complete in place.

642S.6 Payment

The work performed and materials furnished and measured as provided under "Measurement" will be paid for at the unit bid price per lineal foot of "Silt Fence". The price shall include full compensation for furnishing, hauling and placing all materials, labor, tools, equipment and incidentals necessary to complete the work including inspecting, repairing, replacing and relocating the fence, removal of silt and removal and disposal of all materials at the completion of construction in and re-vegetation of disturbed areas.

Payment will be made under:

Pay Item No. 642S:	Silt Fence for Erosion Control	Per Lineal Foot.

END

SPECIFIC CROSS REFERENCE MATERIALS
Specification 642S, "Silt Fence"

City of Austin Environmental Criteria Manual

Designation	Description
Section 1.4.5.G	Silt Fence

City of Austin Standard Details

Designation	Description
Number 642S-1	Silt Fence

City of Austin Technical Specifications

Designation	Description
Item No. 406	Reinforcing Steel

American Society For Testing and Materials (ASTM)

Designation	Description
A-702	Specification for Steel Fence Posts and Assemblies, Hot Wrought
D-1682	Test Methods for Breaking Load and Elongation of Textile Fabrics
D-3786	Test Method for Hydraulic Bursting Strength of Knitting Goods and Nonwoven Fabrics: Diaphragm Bursting Strength Tester Method

Texas Department of Transportation Manual of Testing Procedures

Designation	Description
Tex-616-J	Testing of Construction Fabrics

U.S. Army Corps of Engineers

Designation	Description
CW-02215	Civil Works Construction Guide Specification "Plastic Filter Fabric"

RELATED CROSS REFERENCE MATERIALS
Specification 642S, "Silt Fence"

City of Austin Environmental Criteria Manual

Designation	Description
Table 1-1.3	Recommended Design Values For Functional Controls
Table 1-2	Maximum Water Depth At The Barrier

City of Austin Standard Specifications

Designation	Description
Item No. 101S	Preparing Right of Way
Item No. 102S	Clearing and Grubbing
Item No. 111S	Excavation
Item No. 120S	Channel Excavation
Item No. 401S	Structural Excavation and Backfill
Item No. 610S	Preservation of Trees and Other Vegetation

Item No. 700S
Mobilization

700S.1 Description

This item shall govern the mobilization of personnel, equipment and materials at the work site for other contract items that will be performed by the Contractor. Mobilization shall include, but not be limited to the movement of equipment, personnel, material, supplies, etc. to the Work site; the installation of temporary facilities (when not paid for separately) and the establishment of office and other necessary facilities prior to the initiation of the Work. The cost of the Payment Bond and Performance Bond on the Work that is delayed due to circumstances beyond Contractor's control, a closed construction season or for the convenience of the City of Austin will be considered part of the mobilization item under this Contract.

700S.2 Measurement.

Measurement of the Specification Item, "Mobilization", as specified herein as "Total Mobilization Payment", will be by the "Lump Sum", as the Work progresses.

700S.3 Payment.

The adjusted contract amount as used below is defined as the original contract amount less the lump sum bid for Mobilization and any payments for materials or equipment not yet incorporated in the Work. The Contractor shall submit a lump sum amount for Payment Item No. 700S-TM, "Total Mobilization Payment".

"Initial Mobilization Payout" as used below is defined as:

1. 8% of the original contract amount for projects with an original contract amount of $ 0.5 million or less; or
2. 4% of the original contract amount for projects with an original contract amount greater than $ 0.5 million.

In those instances where the "Initial Mobilization Payout", as defined above, exceeds the "Total Mobilization Payment" lump sum bid item (i.e. Payment Item No. 700S-TM), the "Total Mobilization Payment" shall be used as the "Initial Mobilization Payout". In no instance shall the "Initial Mobilization Payout" exceed the "Total Mobilization Payment" bid item.

Partial payments of the "Initial Mobilization Payout" shall be as follows:

A. Upon presentation of a paid invoice for the Payment Bond, Performance Bond and/or required insurance, the Contractor will be paid that cost from the amount bid for "Total Mobilization Payment".

B. The Mobilization of tunnel boring machines, batch plants or other similar facilities, along with supporting materials and equipment, to the work site or to the vicinity of the Work site will be considered as partial Mobilization under this contract. The Contractor shall provide a certified statement of the Contractor's

expenditure for the Mobilization and setup of the facility and supporting equipment. Upon approval by the Engineer or designated representative, the certified expenditure will be paid from the amount bid for the Specification Item, “Total Mobilization Payment”. In no case shall the combined amount for all of these facilities be more than 10 percent of the Mobilization “Total Mobilization Payment" lump sum bid or one (1) percent of the total contract amount, whichever is less.

C. When one (1) percent of the adjusted contract amount is earned, 50 percent of the "Initial Mobilization Payout” will be paid. Previous payments under this item will be deducted from this amount.

D. When five (5) percent of the adjusted contract amount is earned, seventy-five (75) of the "Initial Mobilization Payout” will be paid. Previous payments under this item will be deducted from this amount.

E. When ten (10) percent of the adjusted contract amount is earned, one hundred (100) percent of the "Initial Mobilization Payout” will be paid. Previous payments under this item will be deducted from this amount.

F. Payment for the remainder of Pay Item No. 700S-TM, “Total Mobilization Payment” will be made upon receipt of the final pay estimate.

Payment will be made under:

Pay Item No. 700S-TM: **"**Total Mobilization Payment" Lump Sum

END

RELATED CROSS REFERENCE MATERIALS
Specification 700S, “MOBILIZATION”

City of Austin Standard Contract Documents

Designation	Description
00020	Invitation for Bids
00100	Instructions To Bidders
00300	Bid Form
00425	Insurance Cost Form
00500	Agreement
00610	Performance Bond
00620	Bid Bond
00650	Certificate of Insurance
00700	General Conditions
00810	Supplemental General Conditions
00820	Modifications to Bidding Requirements & Contract Forms
01010	Summary of Work
01300	Submittals
01500	Temporary Facilities
01550	Public Safety and Convenience
01700	Contract Closeout
01710	Final Cleaning

Item 703
Fencing for Excavations

703.1 Description

This item to consist of temporary safety fencing supported on posts and constructed of materials as indicated and removed when excavation is backfilled.

703.2 Materials

(1) Fabric

(a) Fabric to be 4 feet in width, made of high density polyethylene resin, extruded and stretched to provide a highly visible international orange, non-fading fence which will remain flexible from -60 F to 200 F, and be inert to most chemicals and acid. Pattern may vary from diamond to circular with a minimum weight per foot of 0.4 lbs./Ft., a 4 foot width minimum tensile yield strength (Horiz.) of 2000 psi, ultimate tensile strength of 2680 psi (Horiz.) and a maximum opening no greater than 2 inches.

(2) Metal Posts

Steel pipe, tee posts, U posts or 2" x 4' timber posts, 5-1/2 feet in length minimum, spaced no more than 8 feet on centers. Fabric to be secured to post by bands or wire ties.

703.3 Construction Methods

Prior to commencing construction suitable “Barricades, signs and traffic handling” devices to be installed to protect workers and public. Safety fencing to be erected to lines and grades indicated. Excavations within 750 ft. of schools or day care centers require special attention by Contractor to secure entry while work is in progress. Fence to be installed prior to excavation and maintained until excavation is backfilled. Fence to be placed a minimum of 4 feet from edge of excavation. Posts to be driven in ground a minimum of 18 inches. At completion of each day's work, safety fencing to be pulled taut, and entry secured. When safety fence is no longer needed, Contractor to remove fence and posts and patch any damage to surfaces.

703.4 Measurement

Safety fencing to be measured by linear foot of fence measured along ground; gates will not be measured separately.

703.5 Payment

Work performed and materials furnished as prescribed by this item, measured as provided under "Measurement", to be paid for at the unit price bid for "Safety Fencing" which price to be full compensation for furnishing, installing and removing safety fencing and gates, including posts, bands or ties, and for manipulations, labor, tools, equipment and incidentals necessary to complete the work, removal and patching damaged surfaces.

Payment will be made under:

Pay Item 703:	Safety Fencing	Per Linear Foot

END

Item No. 802S
Project Signs

802S.1 Description

This item shall govern furnishing, fabricating, erecting, maintaining and removing Project Signs on Capital Improvement Projects (C.I.P.), Bond Program Projects and for project identification at other construction sites, when required on the Drawings. The C.I.P. signs shall be constructed in accordance with Standards 802S-1, 802S-1A, 802S-2, 802S-2A, 802S-2B and 804S-5 or as indicated on the Drawings.

This specification is applicable for projects or work involving either inch-pound or SI units. Within the text, the inch-pound units are given preference followed by SI units shown within parentheses.

802S.2 Materials

A. Sign Face

Sign face shall be manufactured on standard exterior waterproof plywood sheets or other suitable material approved by the Engineer or designated representative. Unless indicated otherwise on the Standard Details or Drawings, the thickness of the plywood sheet shall be a minimum of ¾ inches (19 mm).

B. Posts

Lumber posts, of the size indicated on the Standard Details or on the Drawings, shall be pressure treated with pentachlorophenol.

C. Paint

Exterior oil base paint, colors as indicated on the Standard Details or on the Drawings.

D. Decals for Capital Improvement Projects and Bond Program Projects

City seal shall be in color using the 4 color process. Electronic images, in EPS format, are available from the Public Works Website (http://www.ci.austin.tx.us/publicworks/techspecs.htm) for downloading.

802S.3 Installation

The signs shall be erected at each major entrance to the project for maximum public identification and exposure. At locations where construction is confined to a specific area, the installed sign size shall be 4 x 8 foot (1.2 x 2.4 meter). At locations where C.I.P. roadway construction is in progress, such as a street paving or construction of a sidewalk, the sign shall be 2 x 3 foot (0.2 x 0.8 meter). Signs for Bond Program Projects shall be 3 x 4 foot (0.9 x 1.2 meters).

The signs shall be posted on portable wood frames or stanchions and will be located in the proximity of the work area as construction progresses. All lumber shall be painted with 2 coats of paint as indicated herein, on the Standard Details or in the Drawings.

In special cases the size of the sign may be changed to meet special requirements, but general proportions shall be maintained.

It shall be the responsibility of the Contractor to maintain and relocate signs, if necessary during the progression of the project. Care shall be exercised to assure that placement of the signs does not interfere with or cause sight obstruction to vehicular and pedestrian traffic.

For projects located on a street with curb and gutter, signs shall be installed no closer than 2 feet (0.6 meter) from the face of curb on the street.

For projects located on a street without curb and gutter, signs shall be installed no closer than 6 feet (1.8 meters) from the edge of street pavement.

The Contractor may install, at the Contractor's own expense, company signs to identify the Contractor, architectural firm, etc. Signs are to be securely attached to the posts at locations indicated on the Drawings and shall not be larger than 18 x 36 inches (0.45 x 0.90 meter).

802S.4 Measurement

The CIP contract and/or Bond Program, signs shall be measured by either lump sum or per each.

802S.5 Payment

The work performed and the materials furnished as prescribed by this item shall be paid for by lump sum or per each price bid only. The 'lump sum' bid or 'per each' price bid shall include full compensation for all work performed and all materials furnished in constructing, transporting, maintaining and removing the signs as specified on the Drawings and as directed by the Engineer or designated representative.

Payment will be made under one of the following:

Pay Item No. 802S-A C.I.P.: C.I.P. Project Signs	Lump Sum.
Pay Item No. 802S-B C.I.P.: C.I.P. Project Sign	Per Each.
Pay Item No. 802S-A BOND: Bond Project Signs	Lump Sum.
Pay Item No. 802S-B BOND: Bond Project Sign	Per Each.

End

SPECIFIC CROSS REFERENCE MATERIALS
Specification Item No. 802S, "Project Signs"

City of Austin Standard Details

Designation	Description
Item No. 802S-1	2.4 m x 1.2 m (8'x4') C. I. P. Building Project Sign
Item No. 802S-1A	2.4 m x 1.2 m (8'x4')Bond Program Building Project Sign
Item No. 802S-2	600 mm x 900 mm (24" x 36")C. I. P. Movable Sign Type II
Item No. 802S-2A	600 mm x 900 mm (24" x 36")Joint C. I. P. Movable Sign Type II
Item No. 802S-2B	900 mm x1.2 m (36" x 48") Bond Program Project Movable Sign Type II
Item No. 804S-5	Typical CMTA / C.I.P. Sign Locations

803S.1 Description

This item shall govern for providing, installing, moving, replacing, maintaining, cleaning and removing upon completion of the work, all temporary or permanent street closure barricades, signs, cones, lights or other devices required to handle the traffic in conformance with the current edition of the Texas Manual of Uniform Traffic Control Devices for Street and Highways and as indicated on the Drawings or directed by the Engineer or designated representative.

Constructing A Detour, if required, shall conform to Standard Specification Item No. 801S, " Constructing A Detour". Capital Improvement Project Signs shall conform to Standard Specification Item No. 802S, " Project Signs".

This item shall also include the installation of all required safety fencing as described in the latest adopted version of Standard Detail 804S-4.

This specification is applicable for projects or work involving either inch-pound or SI units. Within the text, the inch-pound units are given preference followed by SI units shown within parentheses.

803S.2 Submittals

The submittal requirements of this specification item include:

A. Type of Barricade and proposed materials and Construction of the barricade,

B. Test results for Retro-Reflective sheeting.

803S.3 Materials

All barricades, signs, cones, lights and other types of devices to handle traffic, as indicated on the Drawings or directed by the Engineer or designated representative, shall conform to details shown on the Drawings or those indicated in the Texas Manual on Uniform Traffic Control Devices (TMUTCD).

803S.4 Construction Methods

Prior to commencement of construction, suitable "Barricades, Signs and Traffic Handling" devices shall be installed to protect the workers and the public.

The Contractor shall be responsible for the installation of all markers, signs and barricades in accordance with the Drawings and in conformance with the Texas Manual on Uniform Traffic Control Devices (TMUTCD) and/or as indicated on the Drawings or directed by the Engineer or designated representative. If, in the opinion of the Engineer or designated representative, additional markers, signs or barricades are needed in the interest of safety, the Contractor will install such as are required or as directed by the Engineer or designated representative. All changes and/or revisions to the detour/traffic control plan shall be approved by the Engineer or designated representative.

Lumber shall be painted with 2 coats of paint as indicated on the Drawings.

803S.5 Maintenance

It shall be the Contractor's responsibility to maintain, clean, move and replace if necessary, barricades, signs and traffic handling devices during the time required for construction of the project. Permanent barricades shall be constructed as required after the completion of the street by drilling holes to place the posts and concrete foundations. Foundation concrete shall be cured before the rails are attached. When no longer needed, all temporary Barricades, Signs and Traffic Handling Devices shall be removed and the area restored to its original condition or as directed by the Engineer or designated representative.

803S.6 Measurement

The work performed and material furnished as prescribed by this item, City of Austin Standard Details, details included on the Drawings or indicated in the TMUTCD shall be measured as follows:

A. Pavement Markings.

   All pavement marking required for proper installation of the designated Traffic Control Plans and Details, as well as required removal of existing pavement marking, shall be measured and paid for under Standard Specification Item No. 870S, “Work Zone Pavement Markings” and Standard Specification Item No. 874S, “Eliminating Existing Pavement Markings”.

B. Barricades, Signs and Traffic Handling.

   All work performed and material furnished as prescribed by this item, City of Austin Standard Details, details shown on the Drawings or indicated in the TMUTCD, that are not included in the above paragraph, shall be measured by the number of calendar days, working days or months of actual service.

   Traffic control for the project will be measured and paid for once per contract defined time period, i.e. either per Calendar Day, Working day or Month at the contract rate, regardless of the number of set-ups, locations or streets under construction.

C. Safety Fencing

   Safety fencing will be measured by the lineal foot.

803S.7 Payment

The work performed and materials furnished as prescribed by this item, measured as provided under section “803S.6 Measurement” shall be paid for at the contract unit price for barricades, signs and traffic handling. This unit price shall include full compensation for furnishing, placement and removal of all materials and for all labor, tools, equipment, and incidentals necessary to complete the work.

Payment will be made under:

Pay Item No. 803S -CD:	Barricades, Signs, and Traffic Handling	Per Calendar Day.
Pay Item No. 803S-WD:	Barricades, Signs, and Traffic Handling	Per Working Day.
Pay Item No. 803S-MO:	Barricades, Signs, and Traffic Handling	Per Month.
Pay Item No. 803S-SF:	Safety Fence	Per Lineal Foot.

End

SPECIFIC CROSS REFERENCE MATERIALS
Specification Item No. 803S, "Barricades, Signs and Traffic Handling"

City of Austin Standard Specifications

Designation	Description
Item No. 801S	Constructing A Detour
Item No. 802S	Project Signs
Item No. 870S	Work Zone Pavement Markings
Item No. 874S	Eliminating Existing Pavement Markings and Markers

Texas Technical Documents:

Designation	Description
(TMUTCD)	Texas Manual on Uniform Traffic Control Devices

RELATED CROSS REFERENCE MATERIALS
Specification Item No. 803S, "Barricades, Signs and Traffic Handling"

City of Austin Standard Specifications

Designation	Description
Item No. 403S	Concrete for Structures
Item No. 860S	Pavement Marking Paint (Reflectorized)
Item No. 863S	Reflectorized Pavement Markers
Item No. 864S	Abbreviated Pavement Markings
Item No. 867S	Epoxy Adhesive
Item No. 871S	Reflectorized Pavement Markings
Item No. 875S	Pavement Surface Preparation For Markings

City of Austin Standard Details

Designation	Description
803S-1	Street-End Barricades

Texas Department of Transportation: Standard Specifications for Construction and Maintenance of Highways, Streets, and Bridges

Designation	Description
Item No. 502	Barricades, Signs and Traffic Handling
Item No. 508	Constructing Detours
Item No. 510	One-Way Traffic Control
Item No. 512	Portable Concrete Traffic Barrier
Item No. 514	Permanent Concrete Traffic Barrier
Item No. 662	Work Zone Pavement Markings
Item No. 666	Reflectorized Pavement Markings
Item No. 667	Prefabricated Pavement Markings
Item No. 672	Raised Pavement Markers
Item No. 677	Eliminating Existing Pavement Markings and Markers
Item No. 678	Pavement Surface Preparation For Markings

Item No. 824S
Traffic Signs

824S.1 Description

This item shall govern furnishing and placement of Traffic Signs including excavation, posts, hardware and signs.

This specification is applicable for projects or work involving either inch-pound or SI units. Within the text, the inch-pound units are given preference followed by SI units shown within parentheses.

824S.2 Submittals

The submittal requirements of this specification item include:

A. Identification of the types of materials proposed for traffic sign, i.e. faces, posts, clamps, etc.,

B. Results of any State or Federal tests (reflectance, diffuse day color, specific intensity brightness, Weather-O-meter, etc.) performed on their products,

824S.3 Materials

The following ASTM Standards and documents, of the issue in effect on the date of Invitation for Bid, form a part of this specification to the extent herein.

A. ASTM B 209 Specification for Aluminum and Aluminum Alloy Sheet and Plate

B. ASTM D 523 Standard Method for Test for Specular Gloss

C. ASTM D 4956 Standard Specification for Retroreflective Sheeting for Traffic Control

D. ASTM E 284 Standard Definition of Terms Relating to Appearance of Materials

E. ASTM E 308 Computing the Colors of Objects by Using the CIE System

F. ASTM E 810 Standard Test Method for Coefficient of Retroreflection of Retroreflective Sheeting

G. ASTM E 1164 Standard Practice for Obtaining Spectrophotometric Data for Object-Color Evaluation

H. CIE Publication Number 39-2, Recommendation for Surface Colors for Visual Signaling

I. FP-92 Standard Specifications for Construction of Roads and Bridges on Federal Highway Project

J. Substrate. This shall be aluminum alloy 5052-H38 or 6061-T-6 and otherwise in conformance with ASTM B-209.

1. Metal working. The aluminum shall be free of burrs and pits on both sides, including edges and holes, and shall be made ready for applications of the sheeting.

The aluminum shall be new and corrosion-free with holes drilled or punched, corners rounded to the radii shown in the standard detail sheet, and all edges smoothed prior to application of sheeting.

2. Size. The dimensions of substrate applications for regulatory, warning, and guide signs shall be as specified by the Engineer and as shown on the plans.

K. Background, Legends, Symbols, and Colors. These shall be in accordance with the Standard Highway Sign Designs (SHSD) for Texas and with the Texas Manual of Uniform Traffic Control Devices (TMUTCD).

1. Retroreflective Materials. Retroreflective materials shall comply with Texas Department of Transportation Departmental Materials Specification 8300, Sign Face Materials. The materials requirements for Reflective Sheeting must meet all the requirements of ASTM D 4956.

   a. Retroreflective Sheeting. Type III (High Intensity Prismatic): The materials as listed in these specifications shall comply with Texas Department of Transportation Departmental Materials Specification 8300, Sign Face Materials. The materials requirements for Reflective Sheeting must meet all the requirements of ASTM D 4956. Colors shall be as specified in specifications for Standard Highway Sign Colors (FHWA, HTO-21).

   b. Retroreflective Sheeting. Type IX (Fluorescent yellow green): The materials shall comply with ASTM 4956. Designed to provide higher nighttime sign brightness in the legibility distance and brightness at high entrance angles. The minimum fluorescence luminance factor (YF) for new sheeting shall be 35%.

2. Electronically Cuttable Film. Electronically cuttable film shall consist of flexible, transparent, durable acrylic colored films coated with a transparent pressure sensitive adhesive protected by a clear removable liner. These films are designed to be applied to retroreflective materials for the creation of traffic control signs and devices by either cutting by knife over roll (sprocket fed or friction fed) and flat bed electronic cutting machines. The films shall be available in standard traffic colors, be dimensionally stable, and be designed to optimally cut, weed, lift, and transfer. Use of electronic cuttable films will not require the release of any volatile organic compounds.

   When electronic cuttable film is applied to retroreflective sheeting, the resulting color of the composite sheeting will conform to Texas Department of Transportation Departmental Materials Specification 8300, Sign Face Materials. The materials requirements for Reflective Sheeting must meet all the requirements of ASTM D 4956.

   Only signage utilizing electronically cuttable film will be allowed. Silk screened sign faces will not be accepted.

   a. Color Test. Conformance to color requirements shall be determined by instrumental method in accordance with ASTM E 1164 on sheeting applied to aluminum test panels. The values shall be determined on a HunterLab Labscan 6000 0/45 Spectrocolorimeter with option CMR 559 [or approved equal 0/45 (45/0) instrument

with circumferential viewing (illumination)].

Computations shall be done in accordance with ASTM E 308 for the 2º observer.

b. Coefficient of Retroreflection R^. When electronic cuttable film is applied to retroreflective sheeting, the composite will conform to the percentage retained of the minimum coefficient of retroreflection specified by the using agency and the manufacturer for the retroreflective sheeting when the retroreflective sheeting is screen processed. The coefficient of retroreflection shall be determined in accordance with ASTM E 810. Coefficients of retroreflection R^ shall be specified in units of candelas as per foot candle per square foot (candelas per lux per square meter). The observation angles shall be 0.2 and 0.5 degrees unless otherwise specified. The entrance angles shall be -4 and 30 degrees unless otherwise specified. The electronic cuttable film shall have and 85º specular gloss of not less than 50 when tested in accordance with ASTM D 523.

c. Processing and Cuttability. The electronic cuttable film shall permit cutting, weeding, masking with transfer tape, lifting, and application to retroreflective sheeting when used in accordance with manufacturer's recommendations at temperatures between 65º and 95º F and relative humidifies between 30% and 70%. The film shall lay flat with minimal edge curl and be dimensionally stable.

d. Adhesive Liner. The protective liner attached to the adhesive shall be removable by peeling without soaking in water or other solutions, without breaking, tearing, or removing any adhesive from the electronic cuttable film. The liner shall have a controlled release from the adhesive coated film sufficient to allow cutting without the film popping off from the liner while still allowing the liner to easily be peeled from the film.

e. Film. Film with punched edges for use on sprocket fed knife over roll cutters shall be edge scored and weeded to remove film in the punched area as a means of eliminating adhesive build up on the sprockets.

f. Resistance to Accelerated Outdoor Weathering. When electronic cuttable film is applied to retroreflective sheeting, the surface of the film shall be weather resistant and show no appreciable cracking, blistering, crazing, or dimensional change after 2 years unprotected outdoor exposure, facing the equator and inclined 45º from the vertical. Following weather exposure, panels shall be washed in a 5% HCI solution for 45 seconds, rinsed thoroughly with clean water, blotted dry with a soft cloth and brought to equilibrium at standard conditions.

After cleaning, the coefficient of retroreflection shall not be less than the value specified by the using agency for the retroreflective sheeting when the retroreflective sheeting is screen processed. Show no appreciable evidence of cracking, scaling, pitting, blistering, edge lifting or curling or more than 1/32 inch shrinkage or expansion. Show good color fastness or better when tested. The electronic cuttable film shall not be removable from the retroreflective sheeting without damage.

3. Application Methods. The method of application of sheeting, letters, numbers, and symbols shall be precisely as prescribed in writing by the manufacturer.

a. Legend Spacing and Layout. Spacing and layout for all traffic control signs shall

conform to the Texas SHSD.

L. Sign Posts. Steel post shall conform to the standard specification for hot rolled carbon sheet steel, structural quality, ASTM designation A570, Grade 50. Average minimum yield strength after cold forming is 60,000 psi. The cross section of the post shall be square tube formed steel, carefully rolled to size and shall be welded directly in the comer by high frequency resistance welding or equivalent process and externally scarified to agree with corner radii. Sign posts shall be hot dipped galvanized conforming to ASTM A653, G90.

1. Sizes. Perforated sign posts, anchors and sleeves shall be of the following size:

Size	USS Gauge	Weight
1 ¾" X 1 ¾ "	14	1.71
2" X 2"	12	2.42

On square tubing, holes shall be on centerline of each side in true alignment and opposite each other directly and diagonally. The length of each post shall have a permissible length tolerance of ± ¼".

The finished posts shall be straight and have a smooth, uniform finish. It shall be possible to telescope all consecutive sizes of square tubes freely and for not less than ten feet of their length without the necessity of matching any particular face to any other face. All holes and ends shall be free from burrs and ends shall be cut square.

a. Tolerance on Outside Sizes

Nominal Outside Dimension	Outside Tolerances at Corners
1 ¾" X 1 ¾ "	±0.008"
2" X 2"	±0.008"

Note: Measurement from outside dimensions shall be made at least 2 inches from the end of the tube.

Permissible variation in wall thickness is +0.011", -0.005".

Convexity and concavity shall be measured in the center of the flat sides, tolerance in ±0.010", determined at the corner.

b. Squareness of Sides and Twist Permissible in 3" Length.

Nominal Outside Dimension	Squareness Tolerance	Twist
1 ¾" X 1 ¾ "	±0.010"	0.062"
2" X 2"	±0.012"	0.062"

Permissible variation in straightness is 1/16 of an inch in 3 feet. The standard outside corner radius shall be 5/32 of an inch ±1/64 inch.

2. Installation. The square end of the post shall not be modified or pointed.

   a. Mount Base. When sign post installation is required over building basements, bridges and cavities, a galvanized cast iron surface mount coupler shall be used. The square post surface mount base must be a NCHRP 350-Compliant breakaway system for use with 1 ¾ - inch square post.

   b. Hardware. All ground mounted signs shall be attached to posts using 3/8" aluminum drive rivets. Stainless steel banding material, brackets and clips will be used for signs installed on light standards or mast arms.

   c. Construction.
      1. Concrete specifications: Insert a 2” square x 30” 12 gauge into concrete with 1-2 inches exposed above ground. Make sure the anchor assembly is level. Attach the sign to the 1 ¾” square 14 gauge post (length varies with installation) at a minimum height of seven feet using drive rivets and nylon washers. Insert the post 6-8 inches into the anchor assembly. Bolt the signpost to the anchor assembly using a corner bolt and flange nut.

      2. Soil specifications: Drive a 2” square x 30” 12 gauge omni-directional anchor sleeve into soil with 1-2 inches exposed above ground. Make sure the anchor assembly is level. Attach the sign to the 1 ¾” square x 14 gauge post (length varies with installation) at a minimum height of seven feet using drive rivets and nylon washers. Insert the post 6-8 inches into the anchor assembly. Bolt the signpost to the anchor assembly using a corner bolt and flange nut.

M. Maker's Mark Decals. Each sign shall be permanently marked on the lower right corner of the back side with the month and year of installation, and name of manufacturer.

Table 1
Minimum Coefficient of Retroreflectivity
[0.2º observation angle and -4º entrance angle]

Type III Sheeting: 10 Year Life Span	
Sheeting Color	**Candelas per Foot-Candle per Sq. Ft.**
White	250
Yellow	170
Green	45
Red	45
Blue	20
Brown	12

Table 2
Minimum Coefficient of Retroreflectivity
[0.2º observation angle and -4º entrance angle]

Type IX Sheeting: 7 Year Life Span	
Sheeting Color	Candelas per Foot-Candle per Sq. Ft.
Fluorescent Yellow Green	300

824S.4 Equipment
Provide machinery, tools, and equipment necessary for proper execution of the work.

824S.5 Construction:
Construction shall be high quality with no visible defects in the finished product. Fabrication shall be in accordance with these specifications. Street name signs shall always be supplied and installed at each project intersection whether signs previously existed at the location or not.

A. Unsignalized Intersection. At unsignalized intersections, ground-mounted street name signs of 9 inch height with 6 inch letters and 3 inch suffix and block numbers are required. Lettering on street name signs must be in upper/lower case letters.

B. Signalized Intersection.

1. Ground Mounted Street Signs
   If a signalized intersection has either mast arms or span- wire on which overhead street name signs can be attached, no ground mounted streets name signs are required at that intersection.

2. Overhead Street Signs
   Signs shall be strapped to the mast arm or span wire. Attachments to mast arms shall be by means of a 3/4 inch stainless steel strap and a stainless steel flared strap bracket.

   a. Letter Heights
      Overhead street name signs shall be 18 inches high. Street name signs must be 8 inch (or larger) upper/lower case letters. The suffix and block numbers shall be at least 4 ½ inches high.

C. Existing Signs.
The removal of existing signs shall be coordinated with the Austin Transportation Department to assure required signage is in place during all construction phases. When existing signs are to be removed, they will be removed from their post by hand and delivered to the Traffic Sign Shop (974 - 4055).

D. No Parking Signs
No Parking signs with horizontal dimensions wider than 15” shall not be used unless specifically authorized in advance by the City. For 24 hour parking restriction see the attached detail for the typical No Parking sign.

824S.6 Measurement

Traffic signs shall be measured as each complete sign constructed and placed as indicated on the Drawings.

824S.7 Payment

The work performed and materials furnished as prescribed by this item will be paid for at the unit bid price for "Traffic Signs" per each complete in place. The unit bid price shall include full compensation for furnishing all materials, completing the excavation, placing p.c. concrete and reinforcing steel, setting posts in p.c. concrete and for all labor, tools, equipment and incidentals necessary to complete the work.

Payment will be made under:

Pay Item No. 824S: Traffic Signs Per Each.

End

SPECIFIC CROSS REFERENCE MATERIALS
Specification Item No. 824S, "Traffic Signs"

City of Austin Standard Specifications

Designation	Description
Item No. 401S	Structural Excavation and Backfill
Item No. 403S	Concrete for Structures
Item No. 406S	Reinforcing Steel
Item No. 410S	Concrete Structures
Item No. 411	Surface Finishes for Concrete
Item No. 722	Paint and Painting

Texas Department of Transportation Manual of Testing Procedures:

Designation	Description
Tex-839-B	Determining Color in Reflective Materials
Tex-842-B	Method for Measuring Retroreflectivity

Texas Department of Transportation; Departmental Materials Specifications

Designation	Description
DMS-8300	Flat Surface Reflective Sheeting

American Society for Testing and Materials (ASTM):

Designation	Description
A-36/A-36M	Specification for Structural Steel
A-307	Specification for Carbon Steel Externally Threaded Standard Fasteners
A-320	Specification for Alloys-Steel Bolting Materials For Low-Temperature Service
A-513	Specification for Electric Resistance-Welded Carbon and Alloy Steel Mechanical Tubing
B-26	Specification for Aluminum-Alloy Sand Castings
B-108/B-108M	Specification for Aluminum-Alloy Permanent Mold Castings
B-221/B-221M	Specification for Aluminum-Alloy Extended Bars, Rods, Wire, Shapes, and Tubes
D-523	Test Method for Specular Gloss

SPECIFIC CROSS REFERENCE MATERIALS- Continued
Specification Item No. 824S, "Traffic Signs"

American Society for Testing and Materials (ASTM):

Designation	Description

D 822	Recommended Practice for Operating Light- and Water-Exposure Apparatus (Carbon-Arc Type) for Testing Paint, Varnish, Lacquer, and Related Products
D 828	Test Method for Tensile Breaking Strength of Paper and Paperboard
E 97	45-degree, 0-degree Directional Reflectance Factor of Opaque Specimens by Broad-Band Filter Reflectometry
G 23	Recommended Practice for Operating Light- and Water-Exposure Apparatus (Carbon-Arc Type) for Exposure of Nonmetallic Materials

Other Specifications
Federal Specification A-G-90
Federal Test Method 8801
Federal Specification O-G-93 (stick only)
Federal Specification TT-P-64lb.

RELATED CROSS REFERENCE MATERIALS
Specification Item No. 824S, "Traffic Signs

Texas Department of Transportation Technical Documents:

Designation	Description
(TMUTCD)	Texas Manual on Uniform Traffic Control Devices

City of Austin Standard Details

Designation	Description
824S-1	Standard Street-End Markers

Texas Department of Transportation: Standard Specifications for Construction and Maintenance of Highways, Streets, and Bridges

Designation	Description
Item No. 445	Galvanizing
Item No. 636	Aluminum Signs (Type A)
Item No. 637	Aluminum Signs (Type G)
Item No. 642	Aluminum Signs (Type O)
Item No. 646	Small Roadside Sign Supports
Item No. 647	Large Roadside Sign Supports
Item No. 656	Foundations for Signs, Traffic Signals and Roadway Illumination Assemblies

Texas Department of Transportation: Departmental Materials Specifications

Designation	Description
DMS-7110	Aluminum Sign Blanks
DMS-7120	Sign Hardware
DMS-8310	Flexible Roll-up Reflective Signs
DMS-8320	Vinyl, Non-reflective Decal Sheeting

SPECIAL PROVISION
To the Measurement and Payment Section of the
City of Austin Standard Technical Specifications

For this Project all adopted and/or referenced City of Austin Standard Technical Specification Items are hereby amended with respect to the clauses cited below. No other clauses or requirements of these Items are waived or changed hereby.

In all adopted and/or referenced City of Austin Standard Specifications, in the Sections titled "Measurement and Payment", delete all text in its entirety and replace with the following paragraph:

"All work items installed, provided, constructed, etc. under this specification shall not be paid for separately but shall be considered subsidiary to the lump sum bid price for the project. No separate pay will be provided for any work governed by this specification. The cost of all work materials, labor, overhead, insurance, equipment, etc. necessary to finish the work complete in place shall be included in the lump sum bid price for the project."

End

SPECIAL PROVISION
To Standard Specification Item 401S
Structural Excavation and Backfill
09-26-2012 Version

For this project, City of Austin Standard Technical Specification Item 401S, "Structural Excavation and Backfill", is hereby amended with respect to the paragraphs cited below. No other paragraphs or requirements of this City of Austin standard specification are changed or waived.

1. **Section 401S.1 Description,** Add the following to the end of this section. Excavation work on this project is "Unclassified Structural Excavation" which shall include the removal of all materials encountered regardless of their nature or the manner in which they are removed.

2. **Section 401S.2 Submittals,** Add the following to the end of this section.

   Supplier and certified test results for materials proposed for use as a structural backfill against the new clearwell structures; provide samples of proposed backfill material to the testing laboratory at least 7 days prior to installation to permit time for specification compliance inspection and approval

   Supplier and certified test results for materials proposed for use as a clay cap over structural backfill; provide samples of proposed clay cap material to the testing laboratory at least 7 days prior to installation to permit time for specification compliance inspection and approval

3. **Section 401S.3 Materials,** Add the following Subparagraphs:

   H. Structural backfill material against the new clearwell structures

      Backfill shall be crushed limestone base material meeting the requirements of the Texas Department of Transportation (TxDOT) 2004 Standard Specification for Construction and Maintenance of Highways, Streets, and Bridges, Item 247, Type A, Grade 3 or better

   I. Clay Cap Material

      The clay cap material shall have at least 50-percent particles passing the number 200 sieve, a liquid limit of at least 40-percent and a plasticity index of at least 20.

4. **Section 401S.4 Construction Methods,** Under Section B Excavation, delete Subparagraph 1 and replace with the following:

   1. Excavation shall be done in accordance with the lines and depths indicated on the Drawings or as established by the Engineer or designated representative. Unless otherwise indicated on the drawings or permitted by the Engineer or designated representative, no excavation shall be made outside a vertical plane 5 feet from the footing lines and parallel thereto.

5. **Section 401S.4 Construction Methods,** Under Section B Excavation, delete Subparagraph 5

6. **Section 401S.4 Construction Methods,** Under Section B Excavation, delete Subparagraph 6 and replace with the following:

   6. Processing of excavated material will not be permitted on the job site. Contractor shall use excavation techniques to generate excavated spoils that can be trucked offsite. Excavated material is to be disposed-of in accordance with the contract requirements. Excess materials shall be disposed-of offsite at no additional cost to the owner

7. **Section 401S.4 Construction Methods,** Under Section B Excavation, delete Subparagraph 7 and replace with the following:

   7. Preparation of the subgrade for the mat slab foundations at the Southside Clearwell and the Northwest Clearwell shall be in accordance with the following:

      a) Within the footprint of the structure and for a minimum distance of 5'-0" outside of the footprint, remove all top soil, vegetation, debris, and fill material. Remove enough to ensure that final grading will allow for a 2-inch thick (or thicker) mud slab below the mat slab foundation.

      b) Rework and compact the top 8-inches of the exposed subgrade to 95-percent of maximum density, in accordance with TxDOT Method TEX-113/114-E. The soil moisture content shall be within two percentage points of the optimum moisture content at the time of compaction. Field densities shall be tested in accordance with TxDOT Method TEX-115-E.

      c) All compaction efforts shall be monitored by the project's geotechnical representative.

      d) Water shall not be allowed to accumulate within excavated areas. Should water accumulate, any wet or softened soils shall be removed or reworked if appropriate, and subsequently re-compacted.

      e) After the prepared subgrade has passed the density tests, pour a concrete mud slab over the entire area to provide a dry, level, and flat surface for support of concrete formwork and reinforcing steel. The mud slab shall have a minimum thickness of 2-inches and may be thicker to compensate for irregularities in the prepared subgrade surface.

      f) Any required horizontal runs of piping or electrical conduit shall be buried in the subgrade below the mat foundation slab. Embedment of such items within the slab shall not be permitted.

8. **Section 401S.4 Construction Methods,** Under Section B Excavation, delete Subparagraphs 8 and 9.

9. **Section 401S.5 Bridge Foundations and Retaining Walls**, Delete this section in its entirety.

10. **Section 401S.6 Cofferdams**, Delete this section in its entirety.

11. **Section 401S.8 Backfilling**, Delete section and replace with the following:

    A. General

       1. As soon as practical, all portions of the excavation not occupied by the permanent structure shall be backfilled with the specified material. Damp-proofing or waterproofing required on below-grade walls shall be in place prior to commencement of backfilling.

2. Backfill materials shall be placed in horizontal loose lifts not exceeding 8-inches in thickness. Each lift shall be compacted to a minimum of 95-percent of the maximum dry density based on TxDOT Method Tex-113-E. The moisture content shall be between the optimum moisture content and 2-percent wet of the optimum moisture content at the time of compaction. Field densities shall be checked in accordance with TxDOT Method TEX-115-E.

3. Structural backfill shall be placed at all below-grade walls in a wedge-shape with a maximum rise-to-run ratio of 1 (V):1 (H). See structural section drawings for specific graphical representations and definitions of this described backfill wedge shape.

4. Over-compaction of the backfill shall be avoided to avoid an increase of lateral earth pressures on below-grade walls. Compaction conducted within 4-feet of the walls shall be performed with a manually-propelled compactor (weighing less than 500 pounds) to reduce lateral pressures applied to the walls. Backfill material in this zone shall be placed in 6-inch loose lifts and compacted as described above.

5. Except where overlain with permanent paving above, cap all structural backfill with an 18-inch layer of clay material. The clay cap layer shall be placed in three approximately equal compacted lifts at 95-percent of the maximum dry density and wet of optimum moisture, as determined by TxDOT Method TEX-114-E. The clay cap shall extend 24-inches over natural soils, beyond the limits of the backfill material. Filter fabric shall be placed between the clay cap and the backfill material. The clay cap shall be overlain by at least 24-inches of root zone/vegetative support soil.

B. Backfill against below-grade walls

Do not begin placing backfill against below-grade walls until the level laterally supporting the top of the wall has been poured and that floor's concrete has attained its full design compressive strength.

C. Backfill against below-grade vault walls

Do not begin placing backfill against the walls of below-grade vaults until the walls have been in place at least 7 days and the concrete has attained its full design compressive strength.

D. Bedding and Backfill at floor drain trenches located below structural foundation

1. Bedding material at utility trenches shall extend 6-inches below and 12-inches above the utilities in question. The bedding shall be course aggregate and shall be placed in loose lifts not to exceed 8-inches. The bedding shall be compacted thoroughly to provide uniform support for the utilities and shall fill all voids around the pipe.

2. Utility trenches shall be backfilled with material meeting the requirements for qualified backfill. Backfill material shall be placed in loose lifts not exceeding 8-inches and uniformly compacted as described in this specification. Alternatively, trenches may be backfilled with CLSM.

End

SPECIAL PROVISION
To Standard Specification Item 403S
Concrete for Structures
09-26-2012 Version

For this project, City of Austin Standard Technical Specification Item 403S, "Concrete for Structures", is hereby amended with respect to the paragraphs cited below. No other paragraphs or requirements of this City of Austin standard specification are changed or waived.

1. **Section 403S.2 Submittals**, Delete section and replace with the following:

   The submittal requirements of this specification item shall include the following:

   A. Mix Design option(s) for each class of concrete required for the project

   B. The supplier of the concrete mix design(s) and type of mixing equipment

   C. Product information and material certificates for the cementitious materials and admixtures to be used with each concrete mix

   D. Material Test Reports indicating compliance of the aggregate materials with the requirements of this specification

   E. Concrete Test Cylinder Laboratory Reports

      1. Conduct tests as per test procedures ASTM C31 and C39 for Compression Test.

      2. When Portland cement concrete (other than high-early-strength concrete) is used, test minimum of two standard 6-inch by 12-inch cylinders at 7 days and minimum of two 6-inch by 12-inch cylinders at 28 days for each 50 yards of concrete placed, for each day's placement, or for each structure, whichever results in more cylinders.

      3. When high-early-strength concrete is used, test a minimum of two standard 6-inch by 12-inch cylinders at 3 days and minimum of two 6-inch by 12-inch cylinders at 7 days for each 50 cubic yards of concrete placed, for each day's placement, or for each structure, whichever results in more cylinders. Minimum strengths normally required at 7 and 28 days will be required at 3 and 7 days, respectively.

      4. Submit written results to Engineer and Contractor no later than four days after tests are performed; verbal results – pass or fail - within two days.

      5. Failure to Meet Specifications:

         a) Concrete failing to meet specifications will be rejected.
         b) Should a 7-day (normal cement) or 3-day (high-early cement) test fail to meet established strength requirements, extended curing, or resumed curing, may be required.
         c) CONTRACTOR to strengthen structures, or replace portions thereof, which fail to meet established strength requirements, at CONTRACTOR's expense.
         d) Test cores, when required, to be in accordance with procedures of ASTM C42, at no additional cost to OWNER.

F. Concrete Shrinkage Mix Design and Testing

1. The CONTRACTOR shall only use a mix design for construction that has first met the trial batch testing requirements.

2. Before placing any concrete, a testing laboratory selected by the ENGINEER shall prepare a trial batch of each class of structural concrete, based on the preliminary concrete mixes submitted by the CONTRACTOR. During the trial batch, the aggregate proportions may be adjusted by the testing laboratory using the two coarse aggregate size ranges to obtain the required properties. If one size range produces an acceptable mix, a second size range need not be used. Such adjustments will be considered refinements to the mix design and will not be the basis for extra compensation to the CONTRACTOR. Concrete shall conform to the requirements of this Section, whether the aggregate proportions are from the CONTRACTOR's preliminary mix design, or whether the proportions have been adjusted during the trial batch process. The trial batch shall be prepared using the aggregates, cement, and admixture proposed for the project. The trial batch materials shall be of a quantity such that the testing laboratory can obtain 3 drying shrinkage, and 6 compression test specimens from each batch.

3. The maximum concrete shrinkage for specimens cast in the laboratory from the trial batch, as measured at 21-day drying age or at 28-day drying age shall be 0.036 percent or 0.042 percent, respectively. Standard deviation will not be considered. The CONTRACTOR shall only use a mix design for construction that has first met the trial batch shrinkage requirements. Shrinkage limitations apply only to structural concrete.

4. The maximum concrete shrinkage for specimens cast in the field shall not exceed the trial batch minimum shrinkage requirement by more than 25 percent.

5. If the required shrinkage limitation is not met during construction, the CONTRACTOR shall take any or all of the following actions to reestablish compliance. These actions may include changing the source of aggregates, cement, and/or admixtures; reducing water/cement ratio; washing of coarse and/or fine aggregate or reduce fines; increasing the number of construction joints; modifying the curing requirements; or other actions designed to minimize shrinkage or the effects of shrinkage.

6. Drying shrinkage tests shall be performed for the trial batches in 1.06E.4.b., on the first placement of each class of structural concrete, and once every 4 months during construction to insure continued compliance with these specifications.

7. Drying shrinkage specimens shall be 4-inch by 4-inch by 11-inch prisms with an effective gauge length of 10 inches; fabricated, cured, dried, and measured in accordance with ASTM C 157 – Test Method for Length Change of Hardened Hydraulic Cement Mortar and Concrete, modified as follows:

   a) Specimens shall be removed from molds at an age of 23 hours plus or minus 1 hour after trial batching, shall be placed immediately in water at 70 degrees Fahrenheit plus or minus 3 degrees Fahrenheit for at least 30 minutes, and shall be measured within 30 minutes thereafter to determine original length and then submerged in saturated lime water at 73 degrees Fahrenheit plus or minus 3 degrees Fahrenheit.
   b) Measurement to determine expansion expressed as a percentage of original length shall be made at age 7 days. This length at age 7 days shall be the base length for drying shrinkage calculations ("0" days drying age).

c) Specimens then shall be stored immediately in a humidity controlled room maintained at 73 degrees Fahrenheit plus or minus 3 degrees Fahrenheit and 50 percent plus or minus 4 percent relative humidity for the remainder of the test.

d) Measurements to determine shrinkage expressed as percentage of base length shall be made and reported separately for 7, 14, 21, and 28 days of drying after 7 days of moist curing.

8. The drying shrinkage deformation of each specimen shall be computed as the difference between the base length (at "0" days drying age) and the length after drying at each test age. The average drying shrinkage deformation of the specimens shall be computed to the nearest 0.0001 inch at each test age. If the drying shrinkage of any specimen departs from the average of that test age from more than 0.0004 inch, the results obtained from that specimen shall be disregarded. Results of the shrinkage test shall be reported to the nearest 0.001 percent of shrinkage. Compression test specimens shall be taken in each case from the same concrete used for preparing drying shrinkage specimens. These tests shall be considered a part of the normal compression tests for the project.

2. **Section 403S.3 Materials,** Add the following new paragraph after Subparagraph G. Electrical Ductbank Concrete shall be Class 'A' per Section 403S " Concrete for Structures". A red admixture shall be added to the concrete a rate of 12 pounds per cubic yard of concrete and per the requirements of Section 403S. Red admixture shall meet the requirements of ASTM C-979-82. Red admixture shall be as manufactured by ChemSystems, Inc. series HBS #120 Conduit Red, or approved equal. Also, refer to conduit/duct bank reinforcement and concrete encasement details shown on the Plans.

3. **Section 403S.4 Storage of Materials,** Delete the reference to "Section 13" in Subparagraph D and replace it with a reference to "Section 14".

4. **Section 403S.6 Mix Design,** In the Subparagraph beginning with "The mix design …", delete the words "Table 5" and insert the words " Table 6".

5. **Section 403S.7 Consistency and Quality of Concrete,** In the Subparagraph beginning with "When control of concrete quality…", delete the reference to "Table 4" and replace with a reference to "Table 5".

6. **Section 403S.7, Table 5: Classes of Concrete,** Add the following class of concrete:

Class	Cement Sks Per CY	Minimum Strength, psi (Mpa)		Maximum W/C Ratio 1	Coarse Aggr. Grade 2,3,4	Air Entrain.
		28 Days	7 Days			
K_w	6.0 (335 kg/m^3)	5000 (34.5)	3500 (24.1)	0.40	2,3,4,5	Yes

7. **Section 403S.7, Table 5: Classes of Concrete,** Add the following notes below the Table 5:

   7. Class K_w concrete shall contain a HRWR admixture.

   8. Class K_w concrete shall contain Class F fly ash to replace 20 - 25 percent of the cement, by weight.

8. **Section 403S.7, Table 7: Expected Uses of Concrete Classes,** Add the following class of concrete to the existing table:

Class	General Usage
K_w	Concrete elements in environmental (liquid containing) structures

9. **Section 403S.7,** Add the following table to the end of this section:

Location	Concrete Class (Min. 28 Day Strength)	Course Agg Grade (Max. nom. size)	Slump Range	HRWR Req'd
Mud Slabs	Class B (2000 psi)	Grade 4 (1")	2" to 5"	No
Clearwell Mat Foundation Slabs	Class K_w (5000 psi)	Grade 2 (1 1/2")	6" to 8"	Yes
Clearwell Walls and Columns	Class K_w (5000 psi)	Grade 2 (1 1/2")	6" to 8"	Yes
Clearwell Roof Slabs	Class K_w (5000 psi)	Grade 2 (1 1/2")	6" to 8"	Yes
Blower Bldg Floor Slab Sodium Bisulfite Slab	Class S (4000 psi)	Grade 2 (1 1/2")	2" to 5"	No
Housekeeping Pads Pump Pads	Class C (3600 psi)	Grade 4 (1")	2" to 5"	No
Grout Topping	Class B (2000 psi)	Grade 4 (1")	2" to 5"	No

Notes:

1. HRWR = High Range Water Reducing Admixture

2. The grout topping applied to the floor of the new clearwells shall be reinforced with fibrillated polypropylene fibers complying with CoA Specification Item 407S (Fibrous Concrete) and ASTM C1116, Type III.

End

SPECIAL PROVISION
To Standard Specification Item 406S
Reinforcing Steel
09-26-2012 Version

For this project, City of Austin Standard Technical Specification Item 406S, "Reinforcing Steel", is hereby amended with respect to the paragraphs cited below. No other paragraphs or requirements of this City of Austin standard specification are changed or waived.

1. **Section 406S.2 Submittals**, Delete Subparagraph B and insert the following:

   B. Shop Drawings for Reinforcing Steel shall detail fabrication, bending, and placement. Include bar sizes, lengths, material, grade, bar schedules, stirrup spacing, bent bar diagrams, bar arrangement, splices and laps, mechanical connections, tie spacing, hoop spacing, and supports for concrete reinforcement.

2. **Section 406S.3 Materials**, Delete the line in Subparagraph B that states "ASTM A615/615M, Grades 40 or 60 (300 or 420)" and insert the following:

   ASTM A615/615M, Grade 60 (420)

3. **Section 406S.3 Materials**, Delete the line in Subparagraph B that states "ASTM A996/996M, Type A, Grades 40 or 60 (300 or 420)" and insert the following:

   ASTM A996/996M, Type A, Grade 60 (420)

4. **Section 406S.3 Materials**, Delete the line in Subparagraph C that states "Smooth bars that are greater in diameter than a No. 3 (10 mm) designation shall conform to ASTM A615 or meet the physical requirements of ASTM A36."

5. **Section 406S.3 Materials**, Add the following to Subparagraph G:

   Mechanical couplers shall develop at least 125-percent of the specified yield strength of the bar, in tension or compression, as applicable.

6. **Section 406S.3 Materials**, Delete Subparagraph H and its associated table and insert the following:

   H. Chairs and Supports

   All accessories shall be in accordance with the CRSI's "Manual of Standard Practice," latest edition. Bar supports for concrete surfaces exposed to weather, water, soil, or high humidity shall be fabricated from stainless steel or plastic. For concrete surface applications that are not exposed to weather or corrosive conditions, provide bar supports manufactured from steel wire with plastic coated feet. For slab-on-grade reinforcing, provide bar supports manufactured from hot-dip galvanized steel, stainless steel, plastic, or precast concrete blocks of equal or greater compressive strength as the concrete being poured.

7. **Section 406S.5 Tolerances**, Insert the following additional text at the end of the paragraph:

   Fabricate reinforcing according to CRSI's "Manual of Standard Practice", latest edition.

8. **Section 406S.7 Splices**, Delete entire section, including the “Minimum Lap Requirements” table, and insert the following:

   Splicing of steel reinforcing bars, except when indicated specifically on the drawings, will not be permitted without written approval of the Engineer or designated representative. No substitution of bars will be permitted without approval of the Engineer or designated representative. Lap splices shall be placed in direct contact and securely tied together.

   Welding of reinforcing bars shall not be permitted, unless specified or approved by the Engineer.

9. **Specific Cross Reference Materials**, insert the following reference:

   Concrete Reinforcing Steel Institute, CRSI

Designation	Description
MSP-1	Manual of Standard Practice

End

SPECIAL PROVISION
To Standard Specification Item 410S
Concrete Structures
09-26-2012 Version

For this project, City of Austin Standard Technical Specification Item 410S, "Concrete Structures", is hereby amended with respect to the paragraphs cited below. No other paragraphs or requirements of this City of Austin standard specification are changed or waived.

1. **Section 410S.2 Submittals**, Delete the Subparagraph beginning with "Contractor's formwork plan…", and replace with the following:

   Prior to any construction, submit Monolith Drawings, in part or full, as directed by the Engineer. Drawings, in either two dimensions or isometric, shall clearly identify, locate, and dimension the following:

   a. Construction, contraction, and expansion joints.
   b. Embedded items.
   c. All concrete penetrations.
   d. Key elevations.
   e. Electrical conduit.
   f. All other items passing through concrete.

2. **Section 410S.3 Materials**, Delete text in Subparagraph F. Waterstop and replace with the following:

   All waterstops shall be manufactured from Polyvinyl Chloride (PVC) and shall conform to TxDOT DMS-6160, 'Waterstops, Nylon-Reinforced Neoprene Sheet, and Elastomeric Pads". PVC material shall meet the Corps of Engineers Specification CE CRD-C572. The PVC waterstop shall be extruded from an elastomeric plastic material of which the basic resin is prime virgin polyvinyl chloride. The PVC shall not contain scrapped or reclaimed material or pigment.

   PVC waterstops shall have ribbed, flat profiles without center bulbs. Dimensions shall be 6-inches long by 3/8-inch thick, non-tapered. PVC waterstops shall have hog rings or grommets spaced at 12-inches on center along the length of the waterstop.

   Provide factory made waterstop fabrications for all changes of direction, intersections, and transitions leaving only straight butt joint splices for the field. Provide Teflon coated thermostatically controlled waterstop splicing irons for field butt splices.

3. **Section 410S.3 Materials**, Delete Subparagraph J. City of Austin Survey Monuments.

4. **Section 410S.4 General Requirements**, Add the following subparagraph to the end of the section:

   Sequence of Pouring Operations: When construction requires the placement of concrete in successive pours, Contractor is to submit sketch and schedule for pouring sequence. Schedule and sequence is to allow a minimum of two days (48 hours) curing of adjacent concrete on all sides prior to placing new concrete in contact with previously placed concrete.

5. **Section 410S.5 Drains**, Delete this section.

6. **Section 410S.6 Expansion Joints**, Delete this section.

7. **Section 410S.7 Construction Joints**, Delete the subparagraph beginning with “The joint surface shall be coated with…”.

8. **Section 410S.8 Foundation and Substructure**, Delete course aggregate grades 2 and 3 in the subparagraph beginning with “Concrete for foundation seals…”

9. **Section 410S.8 Foundation and Substructure**, In the subparagraph beginning with “Where a concrete seal…”, delete the sentence “If the foundation concrete can be placed in the dry at the time of construction, the seal will not be required.” Replace with the following sentence:

   Concrete seal slabs shall be used where they are shown on the drawings, regardless of the presence or lack of water at the time of construction.

10. **Section 410S.8 Foundation and Substructure**, Delete the subparagraph beginning with “The seal shall…”.

11. **Section 410S.9 Falsework**, Delete the five subparagraphs beginning with the following sentences:

    - “Falsework, which cannot…”
    - “In general, each…”
    - “Each falsework bent…”
    - “In setting falsework…”
    - “When the falsework…”

12. **Section 410S.10 Forms**, Modify Subparagraph B Timber Forms as follows:

    - In the subparagraph beginning with “Metal form ties…”, add the following:

      Tapered form ties are acceptable for use.

    - In the subparagraph beginning with “All metal appliances…” and the subparagraph beginning with “Any wire ties…”, change the depth to which metal appliances and wire ties shall be removed from 1/2 inch (13 mm) to 2 inches (52 mm).

13. **Section 410S.10 Forms**, Delete Subparagraph D. Form Supports for Overhang Slabs.

14. **Section 410S.11 Placing Reinforcement,** Revise the title of this section to “**Placing Reinforcement and Waterstops**” and add the following subparagraph:

    Install waterstops in construction joints and at other joints indicated to form a continuous diaphragm. Install in longest lengths practicable. Center waterstops in joints and secure in the correct position using hog rings or grommets and tie wire. Field butt splices shall be heat fused welded using a Teflon-coated, thermostatically controlled waterstop splicing iron. The heat shall be sufficient to melt, but not char the plastic. Follow the manufacturer’s written recommendations. Lapping of waterstop, use of adhesives, or solvents shall not be permitted.

15. **Section 410S.12 Placing Concrete**, In subparagraph A. General, delete the entire paragraph beginning with “Exposed concrete surfaces, while…”.

16. **Section 410S.12 Placing Concrete**, In Subparagraph C. Placing Temperature, delete the paragraph that paragraph that states “The height of freefall of concrete shall be limited to 5 feet (1.575 meters) to prevent segregation”. This subject is addressed elsewhere in the specification.

17. **Section 410S.12 Placing Concrete**, In subparagraph E. Handling and Placing, add the following:

    Tremies shall be used for placing concrete in walls greater than 10-inches thick.

18. **Section 410S.12 Placing Concrete**, Delete Subparagraph G. Finishing.

19. **Section 410S.14: Placing Concrete in Hot Weather**, Add the following Subparagraph:

    Reinforcing steel, steel beam flanges, and other surfaces in contact with concrete shall be cooled to below 85°F by means of water spray or other approved methods.

20. **Section 410S.16 Placing Concrete in Superstructure**, Delete this section in its entirety.

21. **Section 410S.17 Placing Concrete in Concrete Arches**, Delete this section in its entirety.

22. **Section 410S.18 Placing Concrete in Box Culverts**, Delete this section in its entirety.

23. **Section 410S.19 Placing Concrete in Foundations and Substructure**, Delete the two subparagraphs beginning with the following sentences:

    - "Placing of concrete footings…"
    - "All temporary wales…"

24. **Section 410S.20 Treatment and Finishing of Horizontal Surfaces Except Bridge Slabs**, Delete this section in its entirety.

25. **Section 410S.21 Finish of Bridge Slabs**, Delete this section in its entirety.

26. **Section 410S.22 Placing Survey Monuments**, Delete this section in its entirety.

27. **Section 410S.23 Curing Concrete**, In the subparagraph beginning with "All concrete shall…", delete "4 curing days" and replace with "7 curing days".

28. **Section 410S.24 Removal of Forms and Falsework**, Delete the text in this section in its entirety and replace with the following:

    A. Unless otherwise indicated on the drawings, forms for vertical surfaces shall not be removed until the concrete has cumulatively cured for at least 48 hours after initial set, provided it can be done without damage to the concrete. This provision applies to the sides of beams, walls, and columns.

    B. Forms for beam soffits, joists, slabs, and other similar structural elements must remain in place for at least 7 days or until the concrete has achieved at least 75-percent of its 28-day design compressive strength.

    C. If all concrete cylinders made for the purpose of form removal have been tested without attaining the required strength, forms shall remain in place for a minimum of 14 curing days.

    D. Remove all metal appliances used inside of forms for alignment to a depth of at least 2 inches from the concrete surface. The appliances shall be manufactured to allow their removal without undue chipping or spalling of the concrete. Appliances shall leave a smooth opening in the concrete surface when removed. Rods, bolts, and ties shall not be burned-off.

29. **Section 410S.26 Finishing Exposed Surfaces**, To Subparagraph A, Item 3, add the following sentences:

    Prior to filling the holes created by tapered form ties, install tight-fitting waterproof plugs in each hole to seal the voids. Plugs shall be sized to fit and function within the middle third of the wall. After installing plugs, fill the holes with non-shrink grout at both sides of the wall.

30. **Section 410S.26 Finishing Exposed Surfaces**, Delete Subparagraph B. Rubbed Finish and replace with the following:

    B. Painted Finish

    1. All vertical surfaces of concrete that are exposed to view after all backfill and embankments are in place shall receive a painted finish. This includes all piers, columns, basement walls and retaining walls.

    2. This finish shall receive the same treatment as specified for an Ordinary Surface Finish. In addition, fill all depressions and holes 1/16-inch deep or larger with mortar.

    3. Prior to filling depressions and holes, expose all holes at the surface of the concrete. To do this, brush, sandblast, or water blast surfaces with a 3000 psi pressure washer.

    4. Thoroughly wet surfaces and commence filling of pits, holes, and depressions while the surfaces are still damp.
    5. Perform filling by rubbing mortar over the entire area with clean burlap, sponges, rubber floats, or trowels.

    6. Do not let any of the new material remain on the wall surface, except that filling the pits, holes, and depressions.

    7. Wipe the surfaces clean and moist cure.

    8. Top coat concrete with a spray color coating made from the following ingredients:

        a) 1 quart Portland cement
        b) 1 quart white Portland cement (proportion as needed to match concrete color)
        c) 1 pint lime
        d) 2 quarts liquid latex or white casing glue
        e) 6 quarts water

    9. First, mix the water and the latex. Add lime and cement and mix again. Let stand for 5 to 10 minutes and re-mix. Strain through a paint screen into the sprayer and coat the entire surface in two light coats, letting the first dry before applying the second coat.

31. **Section 410S.26 Finishing Exposed Surfaces**, Add the following subparagraph:

    D. Floor Finishes

    1. Floor finishes shall comply with ACI 302.1R recommendations for screeding, restraightening, and finishing operations for concrete surfaces. Do not wet concrete surfaces.

    2. Apply a float finish to surfaces to receive a trowel finish. Consolidate the surface with power-driven floats or by hand floating if area is small or inaccessible to power-driven floats. Re-

straighten, cut-down high spots, and fill low spots. Repeat float passes and re-straighten until surface is left with a uniform, smooth, granular texture.

3. Apply a trowel finish to surfaces indicated, exposed to view, or to be covered with resilient flooring, carpet, ceramic or quarry tile over a cleavage membrane, paint, or other thin-film-finish coating system. After applying a float finish, apply a first troweling and consolidate concrete by hand or power-driven trowel. Continue troweling passes and re-straighten until surface is free of trowel marks and uniform in texture and appearance. Grind smooth any surface defects that would telegraph through applied coatings or floorings. Finish and measure surface so gap at any point between concrete surface and an unleveled, free-standing, 10-foot-long straightedge resting on two high spots and placed anywhere on the surface does not exceed 1/8-inch.

4. Apply a broom finish to exterior concrete platforms, steps, ramps, and elsewhere as indicated. Immediately after float finishing, slightly roughen trafficked surface by brooming with a fiber-bristle broom perpendicular to main traffic route. Coordinate required final finish with Architect before application.

32. **Specific Cross Reference Materials**, insert the following reference:

American Concrete Institute, ACI

Designation	Description
ACI 302.1R	Guide for Concrete Floor and Slab Construction

End

Special Specifications

Section 02050

DEMOLITION AND SALVAGE

PART 1 - GENERAL

1-1. SCOPE. This section covers the demolition of existing structures, piping, equipment, and sitework and the salvage of existing materials and equipment as indicated on the Drawings.

1-2. GENERAL. Contractor shall be responsible for all work under this section. Contractor shall provide 30 *days* written notice prior to beginning demolition activities.

All structures and facilities of the existing Walnut Creek WWTP which are not to be removed must remain in continuous operation during the work. Demolition and salvage work shall create minimum interference with Owner's operations and minimum inconvenience to Owner. Contractor shall provide protection and safety of all roadways, sidewalks, and all accessible areas during demolition activities.

Blasting will not be permitted.

PART 2 - PRODUCTS

Not used.

PART 3 - EXECUTION

3-1. DEMOLITION. Removal of equipment or facilities shall include removal of all accessories, piping, wiring, supports, associated electrical starters and devices, baseplates and frames, and all other appurtenances, unless otherwise directed. Existing materials and equipment removed, and not indicated to be reused as a part of the Work, shall become Contractor's property unless otherwise specified, and shall be removed from the Site. If Contractor choses to dispose of any items to be removed, it is the responsibility of the Contractor to acquire and pay for any necessary permits.

Contractor shall conduct demolition activities in a manner that prevents damage to existing facilities which are indicated to remain and shall provide all necessary protection for existing facilities. Any remaining facilities damaged during demolition shall be repaired by Contractor to a condition equal to or better than the original condition.

When demolition is complete, all debris shall be removed from the Site and the Site graded to the lines and grades indicated on the Drawings.

All demolition work indicated on Drawings shall be performed, even if it is not stated in this Section.

3-1.01. Structure Demolition. The following structures at the Walnut Creek WWTP shall be demolished, and the debris shall be removed from the jobsite.

Various amounts of concrete, as indicated on the Drawings.

3-1.02. Piping and Equipment Demolition. The following piping and equipment shall be removed and shall become the property of Contractor. All such items shall be promptly removed from the jobsite.

Existing filter media, underdrains, and troughs in Filters 1-4

Existing troughs in Filters 5-10

Existing Surface Wash piping in Filter Building 1 and Filters 1-4

Existing Air Scour piping in Filter Building 2

Miscellaneous portions of pipe throughout filter gallery and associated accessories, as indicated on the Drawings

Existing 72” Effluent Line near Southside Clearwell

Two existing Backwash Pumps, including pump pads and accessories

Three existing Non-potable Water Pumps, including pump pads and accessories

Existing Non-potable Water piping inside Filter Building 1, as indicated on the Drawings

Existing Non-potable Water pressure sustaining valve

Existing Non-potable Water strainer

Existing 66” Effluent Line near Northwest Clearwell

Abandoned 6” Heating Main in yard running along south wall of Northwest Clearwell

Abandoned 36” Filter wash water line at southeast corner of Southside Clearwell

Existing 8” Clearwell Drain near Southside Clearwell

Existing 3” Potable Water line near Southside Clearwell

Existing 4” Chlorine Solution line near Southside Clearwell

Existing 16” Non-potable water site piping near Southside Clearwell

Existing 8” Fire Line near Southside Clearwell

Existing 16” Drain piping near Northwest Clearwell

Existing filter building HVAC system and ductwork

Existing HVAC hot water system and heat pumps

Existing water heater and floor drain

New (temporary) 72” steel pipe through the Southside Clearwell common outlet channel

3-1.03. Sitework Demolition. Sitework demolition shall include the following:

Removal of concrete drives, pavement, sidewalks, curb, and slabs on grade within the limits indicated on the Drawings.

Removal of asphaltic concrete pavement within the limits indicated on the Drawings.

Removal of the manhole tops, risers, and rings and covers for the manholes indicated on the Drawings.

Removal of access hatches indicated on the Drawings.

Removal of any excess soil from excavations indicated on the Drawings.

3-1.04. Miscellaneous Demolition. Additional demolition shall include the following:

Trailers, as indicated to be removed on the Drawings.

3-2. SALVAGE.

3-2.01. Items To Be Salvaged by Owner. Owner will perform some salvage work. Contractor shall coordinate its operations with Owner to facilitate the work and to avoid damage to items to be salvaged by Owner. Items that will be salvaged by Owner shall be as follows:

Item	Location
PLC devices and I/O modules	Filter control consoles

3-2.02. Items To Be Salvaged by Contractor. Removed and salvaged equipment or facilities shall include removal and salvage of all accessories, piping, wiring, supports, associated electrical starters and devices, baseplates and frames, and all other appurtenances, unless otherwise directed.

Existing materials and equipment removed, and not reused as a part of the work, shall become Contractor's property unless otherwise specified, and shall be removed from the jobsite.

The following items shall remain Owner's property and shall be delivered to Owner by Contractor in good condition at the delivery points indicated:

Item	Location	Delivery Point
All 54” Butterfly Valves	Filter Gallery	As directed by plant staff.
All 36” Butterfly Valves	Filter Gallery	As directed by plant staff.
All 30” Butterfly Valves	Filter Gallery	As directed by plant staff.
All 24” Butterfly Valves	Filter Gallery	As directed by plant staff.
All 20” Butterfly Valves	Filter Gallery	As directed by plant staff.
All 18” Butterfly Valves	Filter Gallery	As directed by plant staff.
All 12” Butterfly Valves	Filter Gallery	As directed by plant staff.
All Electrical Valve Actuators	Filter Gallery	As directed by plant staff.
All Pressure Transmitters	Filter Gallery	As directed by plant staff.
All Lever Transmitters	Filter Basins	As directed by plant staff.
480V Motor Control Center “MCC-FCC1”	Filter Building 1	As directed by plant staff.
480V Motor Control Center “MCC-FCC2”	Filter Building 1	As directed by plant staff.
480V Motor Control Center “MCC-FCC3”	Filter Building 2	As directed by plant staff.
480/277V Power Panel “HA”	Filter Building 1	As directed by plant staff.

480/277V Power Panel “HB”	Filter Building 1	As directed by plant staff.
480/277V Power Panel “HC”	Filter Building 2	As directed by plant staff.
480/277V Power Panel “HD”	Filter Building 2	As directed by plant staff.
480/277V Power Panel “HE”	Filter Building 2	As directed by plant staff.
208/120V Transformer “TLP2”	Filter Building 2	As directed by plant staff.
Lighting Panel “CS01-LP-2”	Filter Building 1	As directed by plant staff.

Contractor shall carefully remove, in a manner to prevent damage, all materials and equipment specified herein or indicated to be salvaged and to remain the property of Owner. Contractor shall store and protect salvaged items specified or indicated to be reused in the work. Any items damaged in removal, storage, or handling through carelessness or improper procedures shall be replaced by Contractor in kind or with new items.

Contractor may, at his option, furnish and install new items instead of those specified or indicated to be salvaged and reused, in which case such removed items will become Contractor's property.

End of Section

Section 02202

TRENCHING AND BACKFILLING

PART 1 - GENERAL

1-1. SCOPE. This section covers clearing, grubbing, and preparation of the site; removal and disposal of all debris; excavation and trenching; tunneled (trenchless construction) crossings; the handling, storage, transportation, and disposal of all excavated material; all necessary sheeting, shoring, and protection work; preparation of subgrades; pumping and dewatering as necessary; protection of adjacent property; backfilling; pipe embedment; surfacing and grading; and other appurtenant work.

1-2. GENERAL. With reference to the terms and conditions of the construction standards for excavations set forth in OSHA "Safety and Health Regulations for Construction", Chapter XVII of Title 29, CFR, Part 1926, Contractor shall employ a competent person and, when necessary based on the regulations, a licensed or registered professional engineer, to act upon all pertinent matters of the work of this section.

1-3. SUBMITTALS. Drawings, specifications, and data covering the proposed materials shall be submitted in accordance with the Submittals section.

At least 30 days before starting construction on the sheeting and shoring, and in accordance with the OSHA requirements identified above, the Contractor shall ensure that the sheeting and shoring design engineer shall complete and submit to Engineer the Protection System Design Certificate (Figure 2-02202) and the Contractor shall use the sheeting and shoring design. If required by the OSHA requirements identified above or to protect existing facilities, the Contractor shall submit a separate certificate for each unique design. If required for protection of existing facilities or as required by the OSHA regulations identified above, the certificate(s) shall be signed and sealed by the registered professional engineer that designed the protection system.

1-3.01. Filter Fabric Data. Complete descriptive and engineering data for the fabric shall be submitted. Data submitted shall include:

A 12 inch square [300 mm] sample of fabric.

Manufacturer's descriptive product data.

Installation instructions.

1-3.02. Embedment and Backfill Materials. Complete test results covering tests performed by an independent commercial testing laboratory retained by the

Contractor for all materials described in the Materials Testing section shall be submitted.

1-4. BASIS FOR PAYMENT.

1-4.01. Trench Sheeting. No additional payment above the Contract Price will be made for trench sheeting left in place.

1-5. INSURANCE. Professional liability insurance shall be provided as specified in the Supplementary Conditions section.

PART 2 - PRODUCTS

2-1. MATERIALS.

2-1.01. Filter Fabric. The fabric shall be provided in rolls wrapped with covering for protection from mud, dirt, dust, and debris.

2-1.01.01. Filter Fabric Type A. Filter fabric Type A shall be provided for installation at locations indicated on the Drawings and as specified herein. Filter Fabric Type A shall be a nonwoven fabric consisting of only continuous chains of polymeric filaments or yarns of polyester formed into a stable network by needle punching. The fabric shall be inert to commonly encountered chemicals; shall be resistant to mildew, rot, ultraviolet light, insects, and rodents; and shall have the indicated properties:

Property	Test Method	Unit	Minimum Average Roll Value *
Fabric Weight	ASTM D3776	oz/yd2 [g/m2]	5.7 [193]
Grab Strength	ASTM D4632	lb [N]	155 [689]
Grab Elongation	ASTM D4632	percent	50
Mullen Burst Strength	ASTM D3786	psi [MPa]	190 [1.3]
Apparent Opening Size	CW-02215	U.S. Standard Sieve Size	70 [212 µm]

* Minimum average roll value in weakest principal direction.

2-1.01.02. Filter Fabric Type B. Filter fabric Type B shall be provided for installation at locations indicated on the Drawings and as specified herein. Filter fabric Type B shall be a nonwoven fabric consisting of only continuous chains of polymeric filaments or yarns of polyester formed into a stable network by needle punching. The fabric shall be inert to commonly encountered chemicals; shall be

resistant to mildew, rot, ultraviolet light, insects, and rodents; and shall have the indicated properties:

Property	Test Method	Unit	Minimum Average Roll Value *
Fabric Weight	ASTM D3776	oz/yd2 [g/m2]	8.0 [270]
Grab Strength	ASTM D4632	lb [N]	215 [955]
Grab Elongation	ASTM D4632	percent	50
Mullen Burst Strength	ASTM D3786	psi [MPa]	375 [2.6]
Apparent Opening Size	CW-02215	U.S. Standard Sieve Size	70 [212 µm]

* Minimum average roll value in weakest principal direction.

2-1.02. Polyethylene Film. Polyethylene film beneath concrete slabs or slab base course material shall be Product Standard PS17, 6 mil [150 mm] minimum thickness.

2-1.03. Tunnel Materials.

2-1.03.01. Tunnel Liner Plates. Not used.

2-1.03.02. Smooth Steel Pipe. Not used.

2-1.03.03. Wood Skids and Blocking. Not used.

2-1.03.04. Casing Insulators. Not used.

2-1.03.05. Stabilized Sand Fill. Not used.

2-1.03.06. End Closure. Not used.

2-1.04. Backfill Materials.

2-1.04.01. Job Excavated Material. Job excavated material may be used for either uncompacted or compacted trench backfill when the job excavated material is finely divided and free from debris, organic material, cinders, corrosive material, and stones larger than 3 inches [75 mm] in greatest dimension. Masses of moist, stiff clay shall not be used.

2-1.04.02. Inundated Sand Fill. Sand fill shall be clean, with not more than 25 percent retained on a No. 4 [4.75 mm] sieve and not more than 7 percent

passing a No. 200 [75 µm] sieve, and shall have an effective size between 0.10 and 0.30 mm.

2-1.04.03. Graded Gravel Fill. Graded gravel for compacted trench backfill shall conform to the following gradation:

Sieve Size	Percent Passing by Weight
1 inch [25 mm]	100
3/4 inch [19 mm]	85 – 100
3/8 inch [9.5 mm]	50 – 80
No. 4 [4.75 mm]	35 – 60
No. 40 [425 µm]	15 – 30
No. 200 [75 µm]	5 – 10

The gravel mixture shall contain no clay lumps or organic matter. The fraction passing the No. 4 [4.75 mm] sieve shall have a liquid limit not greater than 25 and a plasticity index not greater than 5.

2-1.04.04. Granular Fill. Granular fill material shall be crushed rock or gravel. Granular fill shall be free from dust, clay, and trash; shall be hard, durable, and non-friable; and shall be graded 3/4 inch to No. 4 [19 to 4.75 mm] as defined in ASTM C33 for No. 67 coarse aggregate. Granular fill shall meet the quality requirements for ASTM C33 coarse aggregate.

2-1.05. Controlled Low Strength Material (CLSM) Fill. CLSM shall conform to Standard Specification Item No. 402S, "Controlled Low Strength Material" and shall be approved by the Engineer or designated representative.

2-1.06. Pipe Embedment Material. Pipe embedment material shall be placed as indicated in Figure 1-02202 .

2-1.06.01. Granular Embedment. Granular embedment shall consist of crushed rock and crushed gravel or pea gravel, meeting the quality and gradation requirements of coarse aggregate size number 7 (13 to 4.75 mm) of ASTM C33.

2-1.06.02. Hand Placed Embedment. Hand placed embedment shall be finely divided job excavated or imported material, free from organic materials, debris, and stones.

2-1.06.03. Compacted Embedment. Compacted embedment shall be finely divided job excavated material free from debris, organic material, and stones. Graded gravel may be substituted for compacted embedment. Granular

embedment may be substituted for all or part of the compacted embedment at the option of the Contractor.

2-2. MATERIALS TESTING.

2-2.01. Preliminary Review of Materials. As stipulated in the Quality Control section, all tests required for preliminary review of materials shall be made by an acceptable independent testing laboratory at the expense of Contractor. Two initial gradation tests shall be made for each type of embedment, fill, backfill, or other material, and one additional gradation test shall be made for each additional 500 tons [450 Mg] of each material delivered to the site. In addition, one set of initial Atterberg Limits test shall be made for each fill materials containing more than 20 percent by weight passing the No. 200 sieve [75 :m]. One additional Atterberg Limits test shall be made for each additional 500 tons [450 Mg] of each material delivered to the site.

2-2.02. Field Testing Expense. All moisture-density (Proctor) tests and relative density tests on the materials, all in-place field density tests, and any other tests deemed necessary for the project shall be made by an independent testing laboratory at the expense of Owner. Contractor shall provide access to the materials and work area and shall assist the laboratory as needed in obtaining representative samples.

2-2.03. Required Tests. For planning purposes, the following guidelines shall be used for frequency of field tests. Additional tests shall be performed as necessary for job conditions and number of failed tests.

a. Two moisture density (Proctor) tests in accordance with ASTM D698 (or, when required, ASTM D1557), or two relative density tests in accordance with ASTM D4253 and D4254 for each type of general fill, designated fill, backfill, or other material proposed.
b. In-place field density and moisture tests (ASTM D2922 and ASTM D3017) at intervals of 1000 feet [300 m] maximum along the trench.
c. One in-place field density and moisture test (ASTM D2922 and ASTM D3017) for every 200 cubic yards [153 m^3] of backfill.
d. One in-place density and moisture test (ASTM D2922 and ASTM D3017) whenever there is a suspicion of a change in the quality of moisture control or effectiveness of compaction.

e. Additional gradation, Proctor, and relative density tests whenever the source or quality of material changes.
f. Testing of CLSM shall be as follows:
   Compressive Strength. For every 200 cubic yards [153 cubic meters] of CLSM placed, fill four 6 by 12 inch [150 by 300 mm] plastic cylinder molds to overflowing and then tap sides lightly. Cure

cylinders in the molds covered until time of testing, at least 14 days. Strip the cylinders carefully using a knife to cut away the plastic mold. Cap the cylinders with high strength gypsum plaster or other capping process that will not break these low strength materials. Test cylinders in accordance with ASTM C39. Two cylinders shall be tested at 7 days and the other two cylinders shall be tested at 56 days.

Flow of Fill. Once each day that CLSM is placed, test the fill material in accordance with ASTM C939 for the efflux time. Wet screening may be required to remove coarse particles.

Unit Weight and Yield. Once each day that CLSM is placed, determine unit weight and yield in accordance with ASTM C138.

Air Content. Once each day that CLSM is placed, determine air content in accordance with ASTM C231.

Penetration Resistance. Once each day that CLSM is placed, determine early bearing strength in accordance with ASTM C403 penetration procedure.

PART 3 - EXECUTION

3-1. CLEARING. All clearing shall be performed as necessary for access, stringing of pipeline materials, and construction of the pipeline and appurtenant structures.

3-2. EXCAVATION. Excavations shall provide adequate working space and clearances for the work to be performed therein and for installation and removal of concrete forms. In no case shall excavation faces be undercut for extended footings.

Subgrade surfaces shall be clean and free of loose material of any kind when concrete is placed thereon.

Except where exterior surfaces are specified to be damp-proofed, monolithic concrete manholes and other concrete structures or parts thereof, which do not have footings that extend beyond the outside face of exterior walls, may be placed directly against excavation faces without the use of outer forms, provided that such faces are stable and also provided that a layer of polyethylene film is placed between the earth and the concrete.

Excavations for manholes and similar structures constructed of masonry units shall have such horizontal dimensions that not less than 6 inches [150 mm] clearance is provided for outside plastering.

3-2.01. Classification of Excavated Materials. No classification of excavated materials will be made for payment purposes. Excavation and trenching work shall include the removal and subsequent handling of all materials excavated or otherwise removed in performance of the work, regardless of the type, character, composition, or condition thereof.

3-2.02. Preservation of Trees. No trees shall be removed outside excavated or filled areas, unless their removal is authorized by Owner. Trees left standing shall be adequately protected from permanent damage by construction operations.

3-2.03. Blasting. Blasting or other use of explosives for excavation will not be permitted.

3-2.04. Dewatering. Dewatering equipment shall be provided to remove and dispose of all surface water and groundwater entering excavations, trenches, or other parts of the work. Each excavation shall be kept dry during subgrade preparation and continually thereafter until the structure or tunnel to be built, or the pipe to be installed therein, is completed to the extent that no damage from hydrostatic pressure, flotation, or other cause will result.

All excavations for concrete structures or trenches which extend down to or below groundwater shall be dewatered by lowering and keeping the groundwater level to the minimum depth of 24 inches [600 mm], beneath such excavations. The specified dewatering depth shall be maintained below the prevailing bottom of excavation at all times.

Surface water shall be diverted or otherwise prevented from entering excavations or trenches to the greatest extent possible without causing damage to adjacent property.

Contractor shall be responsible for the condition of any pipe or conduit which he may use for drainage purposes, and all such pipe or conduit shall be left clean and free of sediment.

Contractor shall obtain from the appropriate agencies and authorities, the dewatering and stormwater discharge permits required to remove and dispose of groundwater, surface water, and any other water used in Contractor's operations. The permits shall be obtained prior to start of construction.

3-2.05. Sheeting and Shoring. Except where banks are cut back on a stable slope, excavations for structures and trenches shall be supported with steel sheet piling and shoring as necessary to prevent caving or sliding.

Sheet piling or other excavation support systems shall be installed as necessary to limit the extent of excavations for deeper structures and to protect adjacent structures and facilities from damage due to excavation and subsequent construction. Contractor shall assume complete responsibility for, and shall install adequate protection systems for prevention of damage to existing facilities.

Sheeting, shoring and excavation support systems shall be designed by a professional engineer registered in the state where the project is located.

Trench sheeting may be removed if the pipe strength is sufficient to carry trench loads based on trench width to the back of sheeting. Trench sheeting shall not be pulled after backfilling. Where trench sheeting is left in place, it shall not be braced against the pipe, but shall be supported in a manner which will preclude concentrated loads or horizontal thrusts on the pipe. Cross braces installed above the pipe to support sheeting may be removed after pipe embedment has been completed. Trench sheeting shall be removed unless otherwise permitted by Engineer. Trench sheeting will not be removed, if in the opinion of Engineer, removal of the sheeting will cause damage to the facility it is protecting. If left in place, the sheeting shall cut off 12 inches below finished grade. The design of the support system shall be such as to permit complete removal while maintaining safety and stability at all times.

A movable trench support may be used, provided care is exercised in placing and moving the trench box or support bracing to prevent movement of the pipe or disturbance of the pipe bedding and backfill. Any voids left in the trench wall or embedment material by support removal shall be carefully filled with granular embedment material compacted as specified herein.

3-2.06. Stabilization. Sub-grades for concrete structures and trench bottoms shall be firm, dense, and thoroughly compacted and consolidated; shall be free from mud and muck; and shall be sufficiently stable to remain firm and intact under the feet of the workers.

Sub-grades for concrete structures or trench bottoms which are otherwise solid, but which become mucky on top due to construction operations, shall be reinforced with crushed rock or gravel as specified for granular fills. The stabilizing material shall be placed in a manner that no voids remain in the granular fill. All excess granular fill with unfilled void space shall be removed. The finished elevation of stabilized sub-grades shall not be above sub-grade elevations indicated on the Drawings.

3-3. TRENCH EXCAVATION. No more trench shall be opened in advance of pipe laying than is necessary to expedite the work. One block or 400 feet [120 m], whichever is the shorter, shall be the maximum length of open trench on any line under construction.

Except where tunneling is indicated on the Drawings, is specified, or is permitted by Engineer, all trench excavation shall be open cut from the surface.

Prior to excavation, Contractor shall contact local underground alert hotlines, “Dig Safe” and/or individual utility owners for marking underground utilities. Once utilities are marked, Contractor shall hand dig or pothole to expose the existing utilities. A survey shall be made of the utility size, material, location, and elevation prior to trench excavation and information shall be recorded on the record Drawings maintained by the Contractor.

3-3.01. Alignment, Grade, and Minimum Cover. The alignment and grade or elevation of each pipeline shall be fixed and determined from offset stakes. Vertical and horizontal alignment of pipes, and the maximum joint deflection used in connection therewith, shall be in conformity with requirements of the section covering installation of pipe.

Where pipe grades or elevations are not definitely fixed by the Drawings, trenches shall be excavated to a depth sufficient to provide a minimum depth of backfill cover over the top of the pipe of 48 inches over pipes below paved and graded streets and, of 48 inches over pipes in other locations. Greater pipe cover depths may be necessary on vertical curves or to provide adequate clearance beneath existing pipes, conduits, drains, drainage structures, or other obstructions encountered at normal pipe grades. Measurement of pipe cover depth shall be made vertically from the outside top of pipe to finished ground or pavement surface elevation, except where future surface elevations are indicated on the Drawings.

3-3.02. Maximum Trench Widths. Not used.

3-3.03. Minimum Trench Widths. Except when maximum trench width is required for certain conduits, trenches shall be excavated to the minimum trench widths indicated in the following table. Trenches shall be excavated to a width which will provide adequate working space and sidewall clearances for proper pipe installation, jointing, and embedment.

Nominal Pipe Size	Minimum Trench Width	Clearance
Less than 27 in [700 mm]	Pipe OD plus 24 in [600 mm]	12 in [300 mm]
27 in through 60 in [700 mm through 1,500 mm]	Pipe OD plus nominal pipe size	ID/2
Greater than 60 in [1,500 mm]	Pipe OD plus 70 in [1800 mm]	30 in [750 mm]

Clearance = Minimum sidewall clearance
OD = Outside diameter (or span) of conduit
ID = Inside diameter (or span) of conduit.

Specified minimum sidewall clearances are not minimum average clearances but are minimum clear distances which will be required to the trench excavation or the trench protective system.

Cutting trench banks on slopes to reduce earth load to prevent sliding and caving shall be used only in areas where the increased trench width will not interfere with surface features or encroach on right-of-way limits.

3-3.04. Mechanical Excavation. The use of mechanical equipment will not be permitted in locations where its operation would cause damage to trees, buildings, culverts, or other existing property, utilities, or structures above or below ground. In all such locations, hand excavating methods shall be used.

Mechanical equipment used for trench excavation shall be of a type, design, and construction, and shall be so operated, that the rough trench excavation bottom elevation can be controlled, and that trench alignment is such that pipe, when accurately laid to specified alignment, will be centered in the trench with adequate sidewall clearance. Undercutting the trench sidewall to obtain sidewall clearance will not be permitted.

In locations where maximum trench widths are required for designated rigid conduits, mechanical equipment shall be operated so that uniform trench widths and vertical sidewalls are obtained at least from an elevation 12 inches [300 mm] above the top of the installed pipe to the bottom of the trench.

3-3.05. Cutting Concrete Surface Construction. Cuts in concrete pavement and concrete base pavements shall be no larger than necessary to provide adequate working space for proper installation of pipe and appurtenances. Cutting shall be started with a concrete saw in a manner which will provide a clean groove at least 1-1/2 inches [40 mm] deep along each side of the trench and along the perimeter of cuts for structures.

Concrete pavement and concrete base pavement over trenches excavated for pipelines shall be removed so that a shoulder not less than 6 inches [150 mm] in width at any point is left between the cut edge of the pavement and the top edge of the trench. Trench width at the bottom shall not be greater than at the top and no undercutting will be permitted. Pavement cuts shall be made to and between straight or accurately marked curved lines which, unless otherwise required, shall be parallel to the center line of the trench.

Pavement removal for connections to existing lines or structures shall not exceed the extent necessary for the installation.

Where the trench parallels the length of concrete walks, and the trench location is all or partially under the walk, the entire walk shall be removed and replaced. Where the trench crosses drives, walks, curbs, or other surface construction, the surface construction shall be removed and subsequently replaced between existing joints or between saw cuts as specified for pavement.

3-3.06. Excavation Below Pipe Sub-grade. Except where otherwise required, pipe trenches shall be excavated below the underside of the pipe, as indicated on Figure 1-02202, to provide for the installation of granular embedment.

Bell holes shall provide adequate clearance for tools and methods used for installing pipe. No part of any bell or coupling shall be in contact with the trench bottom, trench walls, or granular embedment when the pipe is jointed.

3-3.07. Artificial Foundations in Trenches. Whenever unsuitable or unstable soil conditions are encountered, Contractor shall notify Engineer immediately. When authorized by the Engineer , trenches shall be excavated below grade and the trench bottom shall be brought to grade with suitable material. In such cases, adjustments will be made in the Contract Price in accordance with the provisions of the General Conditions.

3-3.08. Over-Excavation. Over-excavation carried below the grade, unless authorized by the Engineer, shall be backfilled to the required grade with material acceptable to the Engineer and compacted to the satisfaction of the Engineer, at no additional cost to the Owner.

3-4. PIPE EMBEDMENT. Embedment materials both below and above the bottom of the pipe, classes of embedment to be used, and placement and compaction of embedment materials shall conform to the requirements indicated on Figure 1-02202 and to the following supplementary requirements.

Embedment material shall contain no cinders, clay lumps, or other material which may cause pipe corrosion.

3-4.01. Embedment Classes.

a. Class A Arch Encasement. When arch encasement is indicated on the Drawings, Class A arch encasement shall be used at all locations so indicated.
When arch encasement is not indicated on the Drawings, Class A arch encasement is not required unless improper trenching or unexpected trench conditions require its use as determined by Engineer.
Concrete and reinforcing steel for Class A arch encasement shall conform to the requirements of the Cast-in-Place Concrete and Concrete Reinforcement sections.

b. Class B Embedment. Class B bedding shall be used for all steel, ductile iron, bar-wrapped concrete, and vitrified clay pipelines, and for all other pipelines not otherwise specified.

c. Class B Special Embedment. Class B special embedment shall be used for HDPE, PVC, ABS, FRP, GRP, steel or stainless steel pipe where the process fluid design maximum temperature is 140° F [60° C] or higher such as for pressurized air service, and when recommended by the pipe manufacturer.

d. Class C Embedment. Class C embedment shall be used for all reinforced concrete and prestressed concrete pipelines.

3-4.02. Embedment for Ductile Iron, Steel, FRP, and PVC Pipelines. Granular embedment for ductile iron, coal tar coated steel, FRP, and PVC pipelines shall be pea gravel, crushed rock or crushed gravel with rounded or subrounded particles. Crushed rock or gravel with sharp edges which could cause significant scratching or abrasion of the pipe or damage to the polyethylene tube protection shall not be used unless otherwise approved by Engineer and all damage is repaired to the satisfaction of Engineer.

Inundated sand may be used for granular embedment in locations where the use of water will cause no damage to adjacent property and where it can be placed and properly compacted without damage to the pipe.

Inundated sand for granular embedment shall be deposited in, or placed simultaneously with the application of water so that the sand is inundated during compaction. During placement, the sand shall be compacted with a mechanical probe type vibrator. Water shall be allowed to escape or shall be removed during vibration, and no ponding shall be allowed to take place. Inundated sand shall be compacted to 70 percent relative density as determined by ASTM D4253 and D4254. If the required density cannot be achieved, placement and compaction methods shall be altered.

3-4.03. Placement and Compaction.

3-4.03.01. Granular Embedment. Granular embedment material shall be spread and the surface graded to provide a uniform and continuous support beneath the pipe at all points between bell holes or pipe joints. It will be permissible to slightly disturb the finished subgrade surface by withdrawal of pipe slings or other lifting tackle.

After each pipe has been graded, aligned, and placed in final position on the bedding material, and shoved home, sufficient pipe embedment material shall be deposited and compacted under and around each side of the pipe and back of the bell or end thereof by shovel slicing or other suitable methods to hold the pipe in proper position and alignment during subsequent pipe jointing and embedment operations.

Placing and compaction of embedment material shall not damage the pipe coating or polyethylene encasement. Embedment material shall not be dumped directly on the pipe or polyethylene encasement unless a suitable temporary isolation layer such as a 60 mil HDPE sheeting, is used to cover the pipe and polyethylene encasement.

Embedment material shall be deposited and compacted uniformly and simultaneously on each side of the pipe to prevent lateral displacement. Granular embedment shall be placed in layers not more than 6 inches (150 mm) deep and compacted as specified.

Each lift of granular embedment material shall be vibrated with a mechanical probe type vibrator or shovel sliced during placement to ensure that all spaces beneath the pipe are filled. Granular embedment shall be placed in maximum lift thickness of 6 inches [150 mm] and compacted. Each lift of embedment material shall be compacted with three passes (round trip) of a platform type vibrating compactor and to at least 70 percent relative density as determined by ASTM D4253 and D4254.

Where indicated on the Drawings or where silt, fine sand, or soft clay soils are encountered below groundwater, migration of soil into the embedment material shall be prevented by installing filter fabric Type A, or by using graded gravel in place of granular embedment. Filter fabric shall be placed on the trench surfaces so that it completely surrounds the embedment material. Joints shall be lapped 12 inches [300 mm].

Unless otherwise indicated on the Drawings, where pipes pass through water-containing embankments, granular embedment material shall be omitted and the trench bottom shall be graded to provide uniform and continuous support for the pipe. The pipe shall be embedded in embankment material contaning no rocks

or stones. The embedment material shall be compacted to the same density as the existing embankment or to at least 95 percent relative compaction in accordance with ASTM D698, whichever is higher.

3-4.03.02. Compacted Embedment. Compacted embedment shall be placed in uniform layers not more than 8 inches (203 mm) thick and compacted to not less than 95% maximum density as determined by ASTM D698.

Where Class C embedment is required, compacted embedment shall be placed to the top of the pipe in all areas where compacted trench backfill is specified and around restrained pipe sections. Placing and compaction of embedment shall not damage the pipe or coating.

3-4.03.03. Hand Placed Embedment. Hand placed embedment shall be placed by hand shovels or using methods that prevent dropping the material for more than 24 inches above the pipe. Hand placed embedment shall be lightly tamped using hand equipment. Care shall be taken so as to not damage the pipe or coating.

3-4.04. Groundwater Barrier. Continuity of embedment material shall be interrupted by low permeability groundwater barriers to impede passage of water through the embedment. Groundwater barriers for sewer lines that contain manholes with cast-in-place bases shall be compacted soil around each manhole, extending through any granular material beneath the manhole, and meeting ASTM D2487 soil classification GC, SC, CL, or ML-CL and shall be compacted to at least 95 percent of maximum density with moisture content within 2 percent of the optimum moisture content (ASTM D698). Material may be finely divided, suitable job excavated material, free from stones, organic matter, and debris.

Groundwater barriers for sewer lines that contain manholes with precast (developed) bases and for all other pipelines shall be soil plugs of 3 feet [1 m] in width, extending the full depth and width of granular material, and spaced not more than 400 feet [120 m] apart. The soil plugs shall be constructed from soil meeting ASTM D2487 classification GC, SC, CL, or ML, and compacted to 95 percent of maximum density at near the optimum moisture content (ASTM D698).

3-5. TRENCH BACKFILL. All trench backfill above pipe embedment shall conform to the following requirements.

A layer of backfill material not more than 8 inches [200 mm] deep may be placed over concrete arch encasement or concrete thrust blocking after the concrete has reached its initial set, to aid curing. No additional backfill shall be placed over arch encasement or blocking until the concrete has been in place for at least 3 days.

3-5.01. Compacted Backfill. Compacted backfill will be required for the full depth of the trench above the embedment in the following locations:

Where beneath pavements, surfacings, driveways, curbs, gutters, walks, or other surface construction or structures.

Where in street, road, or highway shoulders.

In established lawn areas.

The top portion of backfill beneath established lawn areas shall be finished with at least 12 inches [300 mm] of topsoil corresponding to, or better than that which is underlying adjoining lawn areas.

Trench backfill material shall be suitable job excavated material unless otherwise indicated and shall be as specified herein.

3-5.01.01. Job Excavated Material. Job excavated materials shall be placed in uniform layers not exceeding 8 inches [200 mm] in uncompacted thickness. Each layer of material shall have the best possible moisture content for satisfactory compaction. The material in each layer shall be wetted or dried as needed and thoroughly mixed to ensure uniform moisture content and adequate compaction. Increased layer thickness may be permitted for noncohesive material if Contractor demonstrates to the satisfaction of Engineer that the specified compacted density will be obtained. The method of compaction and the equipment used shall be appropriate for the material to be compacted and shall not transmit damaging shocks to the pipe. Job excavated material shall be compacted to 95 percent of maximum density at a moisture content within 2 percent of the optimum moisture content as determined by ASTM D698 or ASTM D1557when that test is appropriate, or to 70 percent relative density as determined by ASTM D4253 and D4254 when those tests are appropriate.

3-5.01.02. Inundated Sand. Sand shall be deposited in, or placed simultaneously with the application of, water so that the sand is inundated during compaction. During placement, the sand shall be compacted with a mechanical probe type vibrator. Water shall be allowed to escape or shall be removed during vibration and no ponding shall be allowed to take place. Inundated sand shall be compacted to 70 percent relative density as determined by ASTM D4253 and D4254. If the required relative density cannot be achieved, use of inundated sand shall be discontinued.

3-5.01.03. Graded Gravel. Gravel backfill shall be deposited in uniform layers not exceeding 12 inches [300 mm] in uncompacted thickness. The backfill shall be compacted with a suitable vibratory roller or platform vibrator to at least 70 percent relative density as determined by ASTM D4253 and D4254.

Groundwater barriers specified under pipe embedment shall extend to the top of the graded gravel backfill.

3-5.02. Ordinary Backfill. Compaction of trench backfill above pipe embedment in locations other than those specified will not be required except to the extent necessary to prevent future settlement. Contractor shall be responsible for backfill settlement as specified.

Ordinary earth backfill material to be placed above embedments shall be free of brush, roots more than 2 inches [50 mm] in diameter, debris, cinders, and any corrosive material, but may contain rubble and detritus from rock excavation, stones, and boulders in certain portions of the trench depth.

Backfill material above embedments shall be placed by methods which will not impose excessive concentrated or unbalanced loads, shock, or impact on installed pipe, and which will not result in displacement of the pipe.

Compact masses of stiff clay or other consolidated material more than 1 cubic foot [0.03 m^3] in volume shall not be permitted to fall more than 5 feet [1.5 m] into the trench, unless cushioned by at least 2 feet [600 mm] of loose backfill above pipe embedment.

No trench backfill material containing rocks or rock excavation detritus shall be placed in the upper 18 inches [450 mm] of the trench, nor shall any stone larger than 8 inches [200 mm] in its greatest dimension be placed within 3 feet [900 mm] of the top of pipe. Large stones may be placed in the remainder of the trench backfill only if well separated and so arranged that no interference with backfill settlement will result.

3-5.03. Water-Settled Earth Backfill. Settlement or consolidation of trench backfill using water jetting or ponding shall not be performed.

3-5.04. Structure Backfill. Backfill around manholes and small concrete vaults shall meet the requirements specified for compacted trench backfillstructure backfill specified in the Excavation and Fill for Structures section.

3-5.05. Controlled Low Strength Material (CLSM). CLSM shall not be placed on frozen ground. Batching, mixing, and placing of CLSM may be started when weather conditions are favorable and when the temperature is at least 34°F [1°C] and rising. At time of placement, CLSM shall have a temperature of at least 40°F [4°C]. Mixing and placing shall stop when the temperature is 38°F [3°C] and falling. Each filling stage shall be as continuous an operation as is practicable.

CLSM shall be discharged from the mixer by an acceptable procedure into the area to be filled. CLSM shall be placed to limits indicated on the Drawings. Mixing CLSM with in-situ soil shall be avoided.

When CLSM is placed as backfill against structures, the fill shall be placed in lifts of 2 to 3 feet [0.6 to 1 meter] and the next lift shall not be placed until the previous lift has taken initial set and at least 16 hours have elapsed from the end of placement. Lift thickness shall be reduced as necessary to prevent floatation of the structure.

When CLSM is placed over culverts or pipelines, they shall be anchored to prevent flotation during the placement of CLSM.

3-6. TUNNEL EXCAVATION. Not used.

3-7. DRAINAGE MAINTENANCE. Trenches across roadways, driveways, walks, or other trafficways adjacent to drainage ditches or watercourses shall not be backfilled prior to completion of backfilling the trench on the upstream side of the trafficway, to prevent impounding water after the pipe has been laid. Bridges and other temporary structures required to maintain traffic across such unfilled trenches shall be constructed and maintained by Contractor. Backfilling shall be done so that water will not accumulate in unfilled or partially filled trenches. All material deposited in roadway ditches or other watercourses crossed by the line of trench shall be removed immediately after backfilling is completed, and the original section, grades, and contours of ditches or watercourses shall be restored. Surface drainage shall not be obstructed longer than necessary.

3-8. PROTECTION OF TRENCH BACKFILL IN DRAINAGE COURSES. Where trenches are constructed in ditches or other watercourses, backfill shall be protected from surface erosion. Where the grade of the ditch exceeds 1 percent, or as otherwise required, ditch checks shall be installed. Unless otherwise indicated on the Drawings, ditch checks shall be concrete. Ditch checks shall extend at least 2 feet [600 mm] below the original ditch or watercourse bottom for the full bottom width and at least 18 inches [450 mm] into the side slopes, and shall be at least 12 inches [300 mm] thick.

3-9. FINAL GRADING AND PLACEMENT OF TOPSOIL. After other outside work has been finished, and backfilling and embankments completed and settled, all areas which are to be graded shall be brought to grade at the indicated elevations, slopes, and contours. All cuts, fills, embankments, and other areas which have been disturbed or damaged by construction operations shall be surfaced with topsoil to a depth of at least 4 inches [100 mm]. Topsoil shall be of a quality at least equal to the existing topsoil in adjacent areas, free from trash, stones, and debris, and well suited to support plant growth. Topsoil required to provide the minimum thickness shall be imported and placed at no additional cost to the Owner.

Use of graders or other power equipment will be permitted for final grading and dressing of slopes, provided the result is uniform and equivalent to manual

methods. All surfaces shall be graded to secure effective drainage. Unless otherwise indicated, a slope of at least 1 percent shall be provided.

Final grades and surfaces shall be smooth, even, and free from clods and stones, weeds, brush, and other debris.

3-10. DISPOSAL OF EXCESS EXCAVATED MATERIALS. Disposal of excess material from trench excavations on plant and major facility construction sites shall be accomplished as specified in the Excavation and Fill for Structures section of the Specifications for the major construction.

Disposal of excess material from other trench excavation sites shall be as follows. Except as otherwise permitted, all excess excavated materials shall be disposed of away from the site.

Broken concrete and other debris resulting from pavement or sidewalk removal, excavated rock in excess of the amount permitted to be installed in trench backfill, debris encountered in excavation work, and other similar waste materials shall be disposed of away from the site.

Excess earth from excavations located in unimproved property may be distributed directly over the pipe trench and within the pipeline right-of-way to a maximum depth of 6 inches [150 mm] above the original ground surface elevation at and across the trench and sloping uniformly each way. Material thus wasted shall be carefully finished with a drag, blade machine, or other suitable tool to a smooth, uniform surface without obstructing drainage at any point. Wasting of excess excavated material in the above manner will not be permitted where the line of trench crosses or is within a railroad, public road, or highway right-of-way. The disposal of waste and excess excavated materials, including hauling, handling, grading, and surfacing, shall be a subsidiary obligation of Contractor and no separate payment will be made therefore.

3-11. RESODDING. All established lawn areas cut by the line of trench or damaged during the work shall be re-sodded, after completion of construction, to the complete satisfaction of the property owner and Owner. All sod used shall be the same type as removed or damaged, shall be best quality, and, when placed, shall be live fresh growing grass with at least 1-1/2 inches [40 mm] of soil adhering to the roots.

All sod shall be procured from areas where soil is fertile and contains a high percentage of loamy topsoil and from areas that have been grazed or mowed sufficiently to form a dense turf.

Sod shall be transplanted within 24 hours from the time it is harvested, unless stacked at its destination in a suitable manner. All sod in stacks shall be kept

moist and protected from exposure to the sun and from freezing. In no event shall more than 1 week elapse between cutting and planting.

Before placing sod, all shaping and dressing of the areas shall have been completed. After shaping and dressing, commercial fertilizer of a type acceptable to Owner shall be applied uniformly in the manner and amounts recommended by the manufacturer, and harrowed lightly. Sodding shall follow immediately.

All sodding shall be done during the period from March 15 to October 1, unless written permission is given by Owner to extend the planting season.

3-12. SETTLEMENT. Contractor shall be responsible for all settlement of trench backfill which may occur within the correction period stipulated in the General Conditions.

Contractor shall make, or cause to be made, all repairs or replacements made necessary by settlement within 30 days after notice from Engineer or Owner.

End of Section

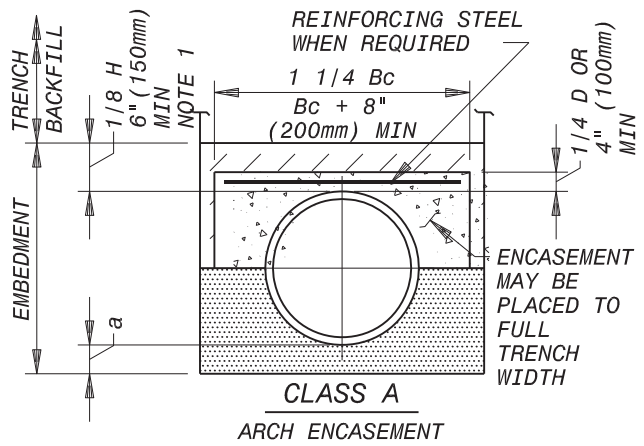

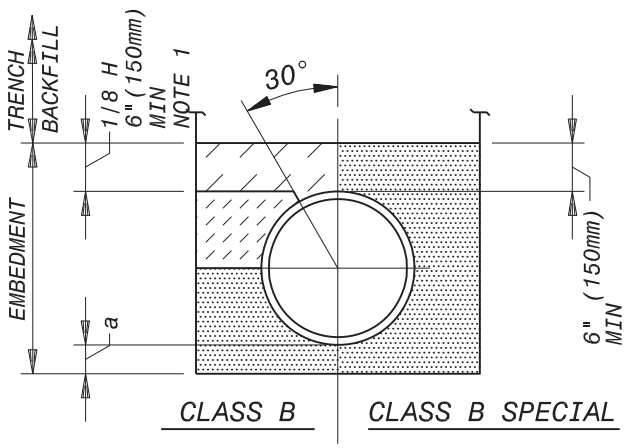

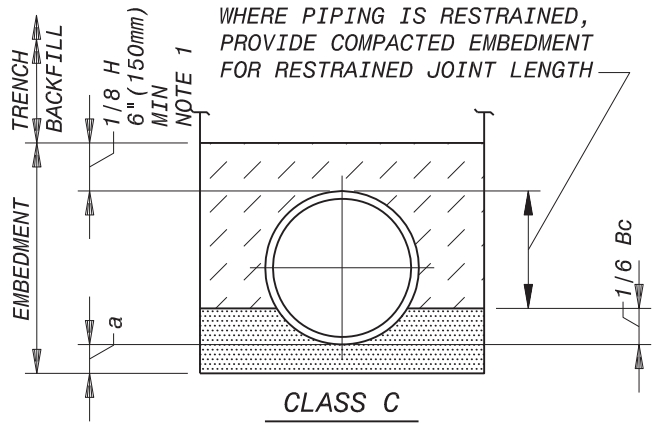

TABLE OF EMBEDMENT DEPTHS BELOW PIPE

D	a MIN SOIL		a MIN ROCK	
	in	mm	in	mm
27"(675 mm) & SMALLER	3	75	6	150
30"(750 mm) TO 60"(1500 mm)	4	100	9	225
66"(1650 mm) & LARGER	6	150	12	300

NOTES:

1. EMBEDMENT ABOVE THE TOP OF THE PIPE SHALL BE AN UNCOMPACTED LAYER FOR ALL INSTALLATIONS.
2. REFER TO SPECIFICATIONS FOR GEOTECHNICAL FABRIC OR SPECIAL EMBEDMENT REQUIREMENTS FOR TRENCHES IN FINE SOILS EXTENDING BELOW GROUNDWATER LEVEL.
3. TRENCH OUTLINES DO NOT INDICATE ACTUAL TRENCH EXCAVATION SHAPE, SOIL CONDITIONS, OR PRESENCE OF SHEETING LEFT IN PLACE. EMBEDMENT MATERIAL SHALL EXTEND THE FULL WIDTH OF THE ACTUAL TRENCH EXCAVATION.
4. FOR RESTRAINED JOINT PIPE LENGTH WITH CLASS C EMBEDMENT THE BACKFILL ABOVE THE GRANULAR EMBEDMENT AND BELOW THE TOP OF THE PIPE SHALL BE COMPACTED EMBEDMENT.

LEGEND

Bc OUTSIDE DIAMETER OF PIPE
H COVER ABOVE TOP OF PIPE
D NOMINAL PIPE SIZE
a EMBEDMENT BELOW PIPE (SEE TABLE)

HAND PLACED EMBEDMENT *

COMPACTED EMBEDMENT *

GRANULAR EMBEDMENT

CONCRETE

* OR GRANULAR EMBEDMENT

EMBEDMENTS FOR CONDUITS

BLACK & VEATCH	TRENCHING AND BACKFILLING	FIG 1-02202

PROTECTIVE SYSTEM
DESIGN CERTIFICATE

I, the undersigned professional engineer registered in the state where the Project is located, hereby certify that the protection system for _____(trench location) has been designed by me, is appropriate for the (trench location) as represented to me, and is in compliance with the Contract Documents.

Name: _____ State of Registration: _____

Signature: _____ P.E. Number _____

Date: _____

_____
(Seal)

FIGURE 2-02202

Section 02704

PIPELINE PRESSURE AND LEAKAGE TESTING

PART 1 - GENERAL

1-1. SCOPE. This section covers field hydrostatic pressure and leakage testing of piping. The term "piping" shall be used in this section to refer to piping systems, pipelines, or sections thereof.

Testing of other piping is covered in the Pipeline Schedule. Cleaning and disinfection of piping is covered in the Pipe section.

1-2. GENERAL. Contractor shall coordinate pressure and leakage testing with adjacent work as necessary to preclude work interferences or duplication of effort and to expedite the overall progress of the work.

Contractor shall provide all necessary piping, piping connections, temporary valves, backflow preventers, and all other items of equipment or facilities necessary to complete the pressure and leakage testing.

In all cases where it is necessary to interrupt service, permission of Owner shall be obtained at least two days before the service will be interrupted. In all cases where it is necessary to interrupt service to water customers, permission of the Owner shall be obtained and each customer affected shall be notified of the proposed service interruption and its possible duration in accordance with the Project Requirements section.

Contractor shall notify federal, state, and local regulatory agencies to determine if any special procedures or permits are required for disposal of water used for pressure and leakage testing and to identify acceptable locations for disposal of the water. All requirements and costs associated with notifications and obtaining any discharge permit or approvals shall be responsibility of Contractor.

Engineer or Engineer's representative shall be present during testing and shall be notified of the time and place of testing at least 3 days prior to commencement of testing. All testing shall be performed to the satisfaction of Engineer, and in accordance with all governing standards and regulations.

1-2.01. Testing Schedule and Procedure. A testing schedule and procedure shall be submitted to Engineer for review and acceptance not less than 21 days prior to commencement of testing. The schedule and procedure shall include, but not be limited to the following information for each pipe section to be tested:

limits of each pipe test section;
proposed time and sequence;
physical locations and set positions of all valves;
locations of temporary bulkheads, stops, caps, restraints, supports, and other temporary equipment needed;
manner of filling and source of water;
method and location of metering volumes;
method and location of gauging pressures; and
method and location of disposal of test water.

1-2.02. Special Testing Requirements. Special testing requirements include the following:

Unless otherwise specified or acceptable to Engineer, the general sequence of work for each pipeline, or valved or bulkheaded section thereof, shall be as follows:

Initial cleaning and flushing of pipeline.
Filling pipeline.
Hydrostatic pressure and leakage testing.
Disinfection.

Unless otherwise acceptable, during testing of the pipeline, all valves, except for auxiliary hydrant valve(s), shall be in the open position.All auxiliary hydrant valve(s) shall be closed during pressure testing so that the test pressure is not applied to the hydrant valve(s).

Unless otherwise acceptable, temporary bulkheads shall be provided during testing so that the test pressure is not applied to existing or new valves and hydrants, or to existing water lines, or to any portion of water lines installed under this Contract that have already been put into service.

Unless otherwise acceptable, a temporary pressure gauge shall be installed at each end of the limits of the pipeline to be tested.

Unless otherwise acceptable, tests shall be conducted before connections are made to existing water lines, or to any portion of water lines installed under this Contract that have already been put into service.

Unless otherwise acceptable, upon completion of testing and disinfection, connections made to existing water lines or to any portion of water lines installed under this Contract that have already been put into service, and any other portion of the pipeline not subject to the pressure test, shall be visually inspected for leakage after placing the water line into service and before backfilling the connection.

If testing is permitted against a valve, the maximum differential test pressure across the valve seat (gate) in the closed position shall not exceed the drip-tight rated pressure of the valve.

1-2.03. Water. Water for testing shall be furnished as stipulated in the Temporary Facilities section. As a conservation measure, the water shall be collected for reuse in subsequent testing. Unless otherwise permitted, the water shall be kept out of the remainder of the piping. Following completion of testing, the water shall be disposed of in accordance with the requirements of regulatory agencies and in a manner acceptable to Engineer.

PART 2 - PRODUCTS

2-1. TEST EQUIPMENT. All necessary connections between the piping to be tested and the water source, together with pumping equipment, water meter, pressure gauges, backflow prevention, and all other equipment, materials, and facilities required to perform the specified tests, shall be provided. All required blind flanges, valves, bulkheads, bracing, blocking, and other sectionalizing devices shall also be provided. All temporary sectionalizing devices shall be removed upon completion of testing. Vents shall be provided in test bulkheads where necessary to expel air from the piping to be tested.

Test pressure shall be applied by means of a force pump sized to produce and maintain the required pressure without interruption during the test.

Water meters and pressure gauges shall be accurately calibrated and shall be subject to review and acceptance by Engineer.

Permanent or temporary gauge connections shall be installed at each location where test gauges are connected to the piping during the required test. Drilling and tapping of pipe walls will not be permitted. Upon successful completion of testing, each permanent gauge connection shall be fitted with an isolation valve and a permanent gauge, and each temporary gauge connection, if used, shall be fitted with a permanent sealed plug or cap acceptable to the Engineer.

Permanent or temporary fill and vent connections shall be installed as needed for the required test. Drilling and tapping of pipe walls will not be permitted. Upon successful completion of testing, each permanent fill and vent connection shall be fitted with the permanent fill or vent piping, and each temporary fill and vent connection, if used, shall be fitted with a permanent sealed plug or cap acceptable to the Engineer.

PART 3 - EXECUTION

3-1. FILLING AND VENTING. Before filling the piping with water, care shall be taken to ensure that all air release valves and other venting devices are properly installed and operating properly. Hand-operated vent valves shall not be closed until an uninterrupted stream of water is flowing from each valve. The rate of filling the piping with water must not exceed the venting capacity of the installed air vent valves and devices.

3-2. BLOCKING AND BACKFILLING. Piping shall be adequately blocked, anchored, and supported before the test pressure is applied. All piping may be tested after backfilling.

3-3. PRESSURE TESTING. After the piping to be tested has been filled with water, the test pressure shall be applied and maintained without interruption within plus or minus 5 psi [35 kPa] of test pressure for 2 hours plus any additional time required for Engineer to examine all piping being tested and for Contractor to locate any defective joints and pipe materials. The test pressure shall be in accordance with the requirements specified for pipeline or plant piping.

3-3.01. Pipeline Test Pressure. Not used.

3-3.02. Plant Piping Test Pressure. Piping shall be subjected to the test pressure as indicated in the Plant Piping Test Pressure Schedule.

3-4. PLANT PIPING LEAKAGE TESTING. All plant piping shall be watertight and free from leaks. Each leak which is discovered within the correction period stipulated in the General Conditions shall be repaired by and at the expense of Contractor.

Only the new sections of plant piping installed by the Contractor are required to be leakage tested. If necessary, the blind flange on the tee between the Backwash Supply and Filter Effluent Pipeline may be removed to install temporary plugs for testing.

3-5. PIPELINE LEAKAGE TESTING. The pipeline piping shall be subjected to a leakage test. Leakage testing may be conducted concurrently with pressure testing. The duration of the leakage test shall be 2 hours plus the additional time required for Engineer to make an accurate determination of leakage.

3-5.01. Leakage Test Pressure. The hydrostatic pressure maintained during the leakage test shall be equal to the pressure specified for pressure testing of the piping and shall be maintained within plus or minus 5 psi [35 kPa] during the entire time that leakage measurements are being performed.

3-5.02. Leakage Measurement. Measurement of leakage shall not be attempted until all trapped air has been vented, absorption of water by the pipe wall or lining has stabilized, and a constant test pressure has been established. After the pressure has stabilized, piping leakage shall be measured with a suitable water meter installed in the pressure piping on the discharge side of the force pump.

3-5.03. Allowable Leakage. The term "leakage", as used herein, refers to the total amount of makeup water which must be added into the piping during the test to maintain the test pressure.

No piping will be accepted if and while it exhibits a leakage rate in excess of that determined by the indicated formulas:

$Q = 0.00676\ DLN$ (using inch-pound units), for piping with Gasketed joints.

$Q = 0.00135\ DLN$ (using inch-pound units), for piping with 20% Gasketed joints and the rest fused or welded joints.

$Q = 0.000676\ DLN$ (using inch-pound units), for piping with 10% Gasketed joints and the rest fused or welded joints.

Where

Q = allowable leakage in gallons per hour

D = nominal diameter of pipe in inches

L = length of section tested in thousand feet

N = square root of weighted average test pressure in pounds per square inch

$Q = 1.26 \times 10^{-6}\ DLN$ (using SI units), for piping with Gasketed joints.

$Q = 2.52 \times 10^{-7}\ DLN$ (using SI units), for piping with 20% Gasketed joints and rest fused or welded joints.

$Q = 1.26 \times 10^{-7}\ DLN$ (using SI units), for piping with 10% Gasketed joints and rest fused or welded joints.

Where

Q = allowable leakage in liters per hour

D = nominal diameter of pipe in millimeters

L = length of section tested in meters

N = square root of weighted average test pressure in kilopascals

The weighted average test pressure shall be equivalent to the arithmetic difference between the specified test pressure plane elevation in feet [meters] and the average elevation of the pipeline in feet [meters], multiplied by 0.433 to obtain psi [9.81 to obtain kPa]. The weighted average elevation of the pipeline shall be calculated by (1) breaking the pipeline into sections at each significant change in slope and multiplying the average elevation of each section by the length of each section, (2) then summing the products, and (3) dividing the sum by the total length of the pipeline.

Whenever the piping to be tested contains pipe of different diameters, the allowable leakage shall be calculated separately for each diameter and the corresponding length of piping. The resulting allowable leakage rates shall be added to obtain the total allowable leakage for the entire piping.

All joints in piping shall be free from visible leaks during the leakage test. Each leak which is discovered within the correction period stipulated in the General Conditions shall be repaired by and at the expense of Contractor regardless of the amount that the total leakage may have been below the specified allowable leakage rate during the leakage test.

If the leakage test indicates a higher than allowable leakage rate, Contractor shall locate and repair leaking joints and other defective work and repeat the test until the leakage rate is less than the allowable rate.

End of Section

Schedule 02704-S02

Plant Piping Test Pressure Schedule

Piping Designation	Location	Test Pressure psig
30” Backwash Supply	Filter Gallery	100
20” Filter Effluent	Filter Gallery	10
8-16” Non-Potable Water	Filter Gallery/Clearwell	120
8-12” Clearwell Drain	Yard/Southside Clearwell	10
48” Filter Effluent	Yard/Northwest Clearwell	25
66” Filter Effluent	Yard/Northwest Clearwell	25
72” Filter Effluent	Yard/Southside Clearwell	25

Section 04200

MASONRY

PART 1 - GENERAL

1-1. SCOPE. This section covers the furnishing and installing of building masonry.

1-2. GENERAL. Building masonry shall be constructed of units of the types, dimensions, arrangements, and coursing indicated on the Drawings and specified herein, complete with all materials, accessories, and appurtenances indicated and specified.

All work shall be in accordance with ACI 530.1 except as modified herein.

All block shall be manufactured at plants that are within a 500 mile radius of the plant site.

1-3. DELIVERY, STORAGE, AND HANDLING. Shipping shall be in accordance with the Product Delivery Requirements section. Handling and storage shall be in accordance with the Product Storage and Handling Requirements section.

All masonry units shall be handled in a manner which will prevent soiling, chipping, or damage of any kind. Broken, discolored, chipped, or otherwise damaged facing units will be rejected and shall be replaced with undamaged units.

Masonry units shall be stored on pallets, shall be protected against contamination and staining, and shall be kept covered and dry at all times. Lime and cement shall be stored under cover in a dry place.

Sand shall be stored so that the inclusion of foreign materials is prevented. Whenever sand is piled directly on the ground, the surface beneath the sand shall be smooth, well drained, and free from dust, mud, and debris. The bottom 6 inches of each pile shall not be used in mortar.

Insulation shall be stored under cover in a dry place, and shall be protected from the weather at all times.

1-4. SUBMITTALS. Before masonry construction is begun, the following drawings, data, specimens, and samples shall be submitted in accordance with the Submittals section. Additional data shall be submitted as needed. If the

source of a material is changed during the course of the work, the tests and reports required for preliminary review of that material shall be resubmitted.

Recycled Content: Documentation indicating percentages by weight of post-consumer and pre-consumer recycled content. Include statement indicating costs for each product having recycled content.

Regional Materials: Documentation indicating location and distance from project of material manufacturer and point of extraction, harvest or recovery for each regional material and the fraction by weight that is considered regional.

Specimens and color selection kits for all masonry units which will be used in the Work, showing range of colors, textures, finishes, and dimensions.

Samples of all masonry units, limestone, and mortar. At least two samples of each type of unit required shall be submitted.

Color selection sample kits for integral mortar colors.

One sample, at least 6 inches long, of each type of nonmasonry joint material required.

Control joint locations in the CMU wall.

Shop drawings or manufacturers' literature showing details of anchors, ties, and metal accessories to be used in masonry construction.

Bar lists and drawings for the fabrication and placement of reinforcement with sufficient elevations and sections to adequately detail and label all reinforcement.

Setting drawings covering cut stone.

Cold and hot weather construction procedures.

Certificates for the following materials used in masonry construction, indicating compliance with the standards herein.

Masonry units.

Mortar and grout materials, including manufacturer data for any admixture, mortar coloring, or other product added to the grout or mortar.

Reinforcement.

Anchors, ties, fasteners, and metal accessories.

For each mortar mix, submit mix designs indicating type and proportions of ingredients in compliance with the proportion specification of ASTM C270.

For each grout mix, submit one of the following:

Mix designs indicating type and proportions of ingredients in compliance with the proportion by volume requirements of ASTM C476.

Mix designs indicating type and proportions of ingredients in compliance with the specified compressive strength method of ASTM C476.

Cut stone units shall be identified by suitable numbers or symbols on both the drawings and the units.

1-5. COLOR SELECTION AND SAMPLE PANELS. Colors of masonry units, colored mortar, and limestone will be selected from manufacturer's data and samples after the award of the contract.

1-5.01. Limestone. The colors, textures, and patterns will be selected from samples submitted. Sufficient samples shall be submitted as needed to make a proper selection. Stone samples shall be at least 4 inches wide by 8 inches long. Samples shall show the full variation of colors and textures proposed.

1-5.02. Mortar Coloring. Integral mortar color will be selected from sample kits submitted. After general color selections have been made, mortar samples shall be prepared for color selection. As many samples as are necessary to make a proper selection shall be prepared. Preliminary color selections shall be used in constructing the sample panels. Mortar colors shall not be final until the sample panels have been accepted.

1-5.03. Sample Panels. Before the installation of any masonry materials, sample panels shall be constructed at the Site incorporating each type of masonry material. Sample panels shall be as detailed on the Drawings.

Sufficient number of sample panels shall be constructed to show each type of exterior and interior wall configuration and bonding patterns indicated on the Drawings. Unless otherwise indicated or detailed on the Drawings, sample panels shall be 6'-8" long by 4'-0" high. Sample panels shall show the proposed color range, texture, bonding patterns, mortar joints, mortar color, and workmanship for masonry materials. Each panel shall be of the thickness indicated on the Drawings for building walls of similar construction. The panels shall be representative of each typical exterior and interior masonry wall construction indicated on the Drawings complete with, as applicable, masonry units, bonding patterns, joint reinforcement, wall ties, wall insulation, vertical steel, a typical bond beam, mortar color, mortar tooling, weeps, and flashings. Each sample panel shall include a typical control joint complete with filler strips and caulking as indicated on the Drawings. The sample panels shall not be incorporated into the work. No masonry work shall progress until Engineer has accepted the sample panels. The panels shall then become the standard of comparison for all masonry work built of the same materials. The panels shall not be destroyed or moved until all masonry work is completed.

At least one exterior wall panel shall include an intersecting interior wall constructed as detailed on the Drawings.

Sample panels shall include masonry waterproofing or stain, exterior insulation and finish system over masonry backup, and masonry veneer over non-masonry backup, as applicable for each wall. Non-masonry backup construction shall include framing, sheathing, wall ties, insulation, and flashing as applicable.

1-6. COMPRESSIVE STRENGTH DETERMINATION. The compressive strength of masonry shall be determined by the unit strength method specified in ACI 530.1.

The design compressive strength of masonry, f'_m, for this project is ***1500*** psi.

Masonry construction shall not begin until Engineer has reviewed the applicable submittals for strength of masonry units, grout, and mortar.

PART 2 - PRODUCTS

2-1. MATERIALS. All acceptable masonry products are indicated below. Products necessary for the work are as specified or as indicated on the Drawings. Sizes of masonry units are nominal, the actual size being slightly smaller to allow for mortar joints.

Concrete block	ASTM C90, 8 inch x 16 inch face dimensions, sizes with special shapes as indicated on the Drawings; with integral moisture-proofing admixture; W.R. Grace & Co. "Dry-Block" or approved equal; lightweight or standard weight aggregate conforming to ASTM C331 or ASTM C33, respectively.
	Recycled Content: Provide units with a post-consumer recycled content of 30 percent.
	Regional Materials: Provide units that have been manufactured within 500 miles of project site from aggregates and cement that have been extracted, harvested or recovered within 500 miles of the project site.
Regular type	Standard gray color, sizes, special shapes, and face pattern as indicated on the Drawings; with integral moisture-proofing admixture; W.R. Grace & Co. "Dry-Block" or approved equal; Standard weight aggregate units. New Holland "Standard Gray CMU EcoBlox" or approved equal.
Stone	
Rubble Limestone	Hard, tough, durable, ledge limestone with natural parallel flat beds, with no triangular or lens-shaped stones, and free from soft or spongy pieces.
Bonding pattern	Match existing Administration Building for random pattern.
Finish	Match existing Administration Building for face finish and color range.
Sand	Natural sand in accordance with ASTM C144. Gradation shall be adjusted as indicated below.
For Stone Mortar	Gradation in accordance with ASTM C144 except that 95 percent shall be passing the No. 16 sieve.

For Pointing Mortar	Gradation in accordance with ASTM C144 except that 95 percent shall be passing the No. 50 sieve.
Portland Cement	ASTM C150, Type I.
White Cement	Atlas White, Medusa White, or Trinity White.
Hydrated Lime	ASTM C207, Type S.
Quicklime	ASTM C5, pulverized.
Lime Putty	Quicklime, thoroughly slaked and stored for one day; kept moist until used.
Integral Mortar Color	ASTM C979, mineral pigments, natural or synthetic iron oxides, sun fast and water resistant, free of fillers and extenders. Soloman Grind-Chem Service, Inc. "A", "H", or "X" series.
Integral Mortar Waterproofing	Aluminum stearate, ammonium stearate, or calcium stearate, 2 percent of weight of cement; W. R. Grace "Dry Block Mortar Admixture", A. C. Horn "Hydratite", Sonneborn "Hydrocide", or approved equal.
Grout	ASTM C476, conventional coarse grout.
Portland Cement	ASTM C150, Type I.
Sand	ASTM C404, natural sand.
Pea Gravel	ASTM C404.
Water	Clean and free from deleterious substances.
Prepared Joint Filler	ANSI A118.6 Sanded tile grout. Laticrete Series 500 joint filler, Bonsal "Sanded Grout" or Bostik "Hydroment Joint Filler".
Joint Reinforcement	Dur-O-Wall or Hohmann and Barnard; fabricated from cold drawn steel wire, ASTM A951; stainless steel, ASTM A580 Type 304; type as indicated on the Drawings with prefabricated corners and tees.

Stone Facing Type	Truss type, heavy-duty weight, with extended tabs, 3/8 inch vertical rods, and 3 x4-1/2 x 3/16 inch wire ties; Hohmann & Barnard "Tie-HVR-195V" Extra Heavy anchor system.
Anchors and Ties	
Masonry Veneer to Masonry Wall Backup	Metal ties; Dur-O-Wall, Heckman, or Hohmann & Barnard; stainless steel, ASTM A580 Type 304.
Box Type Ties	3/16 inch wire, 2 inch by length required, with welded or lapped ends without drip.
Mesh Type Ties	1/2 inch mesh, 16 gage. Size as necessary.
Z Shape Ties	3/16 inch wire, 2 inch returns, length as necessary.
Corrugated Ties	16 gage, 7/8 x 7 inch minimum length.
Adjustable Ties	3/16 inch wire rectangular double eye and pintle adjustable tie, size as necessary.
Stone Copings	Cramp anchors; stainless steel, ASTM A580 Type 304, 1/4 x 1-1/4 inches, at least 6 inches long, with bent-up ends.
Cut Stone Veneer	Stone anchors; stainless steel, ASTM A580 Type 304, 1/4 x 1-1/4 inches, length as necessary.
Reinforcing Steel	ASTM A615, Grade 60, deformed.
Rebar Positioner	9 gage wire, sized for block thickness, single or double bar type, galvanized ASTM A153, Class B-2.
Rigid Insulation	ASTM C578, Type X; extruded closed-cell polystyrene foamboard, Dow Styrofoam "Cavitymate". "R" value of 5.0 minimum at 75°Fmean temperature and water vapor transmission factor of 1.1 perm-in., thickness as indicated on the Drawings.
Insulation Adhesive	Rubber-based mastic adhesive as recommended by the insulation manufacturer.

Veneer Control and Expansion Joint Material	ASTM D1056, Class 2A1, closed-cell neoprene with pressure-sensitive adhesive back; Dur-O-Wall "Rapid Soft-Joint" or Hohmann & Barnard "#NS Closed Cell Neoprene Sponge".
Structural Wall Preformed Control Joint Material	
Non-Fire Rated Walls	ASTM D2287, PVC, Dur-O-Wall PVC control joint materials or or Hohmann & Barnard “VS Series”.
Detergent Masonry Cleaner	ProSoCo "Vana-Trol" or National Chem-Search "DC-6", unless otherwise recommended by the masonry unit manufacturer and accepted by Engineer.
Wicks	Molded PVC type weephole for vertical mortar joint; Hohmann & Bernard "343".

Wall flashings are covered in the Sheet Metal section.

2-2. MORTAR. The use of masonry cement, mortar cement, or premixed ingredients will not be acceptable.

2-2.01. Masonry Mortar. Masonry mortar shall be qualified in accordance with the proportion specifications of ASTM C270.

Integral waterproofing shall be added to each mortar mixture.

White cement shall be substituted for Portland cement for cut stone mortar.

2-2.02. Integral Mortar Color. Integral mortar coloring shall be added to the mortar for masonry as specified herein. All other joints shall be standard gray mortar. Each mortar color shall be of consistent color throughout the Project.

Where indicated on the Drawings, latex modified joint grout for false joints in scored concrete masonry units shall be colored to match mortar color.

2-3. GROUT. Grout shall be proportioned in accordance with ASTM C476, either by volume in accordance with Table 1 or by the specified compressive strength method. Only enough water shall be added to produce a mixture which is flowable, but which will not show an excess of water when placed. Unless otherwise specified, grout shall have a slump ranging from 8 to 11 inches.

PART 3 - EXECUTION

3-1. MORTAR.

3-1.01. Mixing. The method of measurement of all mortar ingredients shall be accurate and shall ensure definite and uniform proportions. All mortar ingredients shall be mixed on site. Mortar shall be machine mixed for at least 5 minutes and shall be used within 90 minutes after mixing. Mortar left when work is stopped shall be discarded. Remixing of mortar more than 90 minutes old with additional water, cement, or other materials will not be acceptable.

The integral mortar color manufacturer's mixing instructions and proportions shall be strictly adhered to. Following the addition of integral mortar color, the mortar shall be mixed in a powered mixer until a uniform color is obtained, but not less than 5 minutes.

3-1.02. Jointing.

3-1.02.01. General. Concrete Unit masonry shall be laid in straight, level, uniform courses, with mortar joints of uniform width. Head joints shall approximately equal the horizontal joints in width.

Joints in masonry surfaces which are to be covered or not exposed shall be struck flush.

All exterior and exposed interior mortar joints,
joints in walls which are to be covered, and joints which are to be raked, shall be tooled to a smooth uniform surface and shall be finished free of voids using a rounded tool. Mortar joints specified to be caulked shall be raked to a depth of 1/2 inch. Tooling of joints shall be regulated so that the mortar for each wall space has a uniform appearance.

The filling of masonry joints shall mean that the entire space between abutting surfaces of units is full, and that the body of the mortar is forced against and into the porous surface of each unit.

3-1.02.02. Concrete Block. Abutting surfaces of head joints shall be completely and solidly cemented together with mortar.

Solid masonry units, starter courses for hollow units with vertical cells, hollow units with horizontal cells, and all units in masonry columns or pilasters shall be laid on a full bed of mortar.

All hollow masonry units with vertical cells (above the starter course) shall be laid with face shell mortar bedding. In partially grouted walls, web joints of all cores

which will be subsequently filled with grout fill shall be fully mortared. In fully grouted walls, web joints are not required to be mortared. All collar joints in multiwythe masonry walls, except cavity walls, shall be completely filled.

3-1.02.03. Stone. Vertical joints in stone copings and sills shall have a uniform width of 3/8 inch. Vertical joints, except designated control joints, shall be mortared full and raked to a depth of 1/2 inch for caulking. Control joints shall be filled with expansion gaskets. Expansion gaskets shall be shaped to fit the stone profile when set back 1/4 inch from exposed faces, leaving an open joint 3/8 inch wide and 1/4 inch deep for caulking.

All voids shall be slushed full and all joints shall be completely filled.

Joints in fieldstone masonry shall be slightly raked and finished with a flat tool.

3-2. BONDING AND REINFORCING.

3-2.01. Bonding. Except where otherwise indicated on the Drawings, all concrete block shall be laid in running bond. Special bonding patterns shall be as indicated on the Drawings. Stone shall be laid in the pattern indicated on the Drawings.

3-2.02. Joint Reinforcing. Joints in horizontal masonry units shall be reinforced as specified, unless otherwise indicated on the Drawings.

The width of joint reinforcement (side rod to side rod) shall be approximately 2 inches less than the nominal overall thickness of the wall in which it is placed. All joint reinforcement shall be fully embedded in mortar and shall be covered with at least 5/8 inch of mortar on the exterior face

Joint reinforcing shall be discontinuous at control and expansion joints. The ends of sections of joint reinforcement shall be lapped at least 8 inches with the next section. At corners and intersections, prefabricated corner and tee reinforcing pieces shall be used.

3-2.02.01. Concrete Block. Mortar joints in concrete block shall be reinforced with continuous ladder type joint reinforcement spaced not more than 16 inches apart vertically. The joint reinforcement shall have one longitudinal rod at each face shell of the masonry units.

Cavity wall mortar joints shall be reinforced by means of continuous standard weight ladder type joint reinforcement spaced at 16 inches vertically. The reinforcement shall bridge the gap between the wythes of masonry.

Concrete block masonry faced with stone shall have joint reinforcement spaced 16 inches apart vertically for single-faced walls and 8 inches apart vertically for double-faced walls. Vertical rods spaced 16 inches apart horizontally shall be inserted and wire-tied into the extended tabs of the joint reinforcement. Facing stones shall be anchored to the backup masonry with individual metal ties placed at each vertical rod of the backup wall reinforcement and spaced not more than 12 inches apart vertically.

Stone shall be well bonded with broken joints. Through-bond stone shall occupy at least 20 percent of the wall area and shall have a maximum spacing of 3 feet vertically and horizontally.

Except where a top bond beam is indicated on the Drawings, the top three courses of all masonry walls, including backup, shall have continuous joint reinforcement placed in each joint (8 inch on centers). Openings in masonry walls shall have joint reinforcement placed in the two courses immediately above lintels and in the two courses immediately below all sills. Joint reinforcement shall extend 24 inches past openings on each side.

3-2.03. Masonry Anchorage. Masonry anchorage to an abutting structure or to backup construction shall be as specified herein, unless indicated otherwise on the Drawings.

Veneer facings for masonry block shall be tied to the backup substrate. At a minimum, one anchored metal tie shall be provided for each 1.77 square feet of veneer. Maximum spacing shall be 16 inches in both the horizontal and vertical direction. At openings larger than 16 inches in either direction, additional ties shall be provided within 12 inches 300 mm of the opening, and spaced at not more than 3’-0” around the perimeter of the opening.

Corner coping stones shall be anchored to adjacent stones with cramp anchors extending across the joints.

3-2.04. Reinforcing Steel. Concrete block bond beam units shall be installed and reinforced as indicated on the Drawings. Bond beam units shall be filled with grout fill as specified herein. Reinforcing steel shall be continuous around corners. At expansion joints, all bond beam reinforcing shall be discontinuous. At control joints, all bond beam reinforcing shall be continuous through the joint.

Vertically reinforced concrete block cores shall be provided as indicated on the Drawings. Reinforcing shall be accurately placed and securely tied to prevent shifting during core filling. Bar positioners shall be used for alignment. Positioners shall be placed in the bottom and top courses of walls and at not more than 4 feet centers between. Mortar fins which project into cores more than

1/2 inch, and all loose mortar and debris, shall be removed before filling the cores. Cores shall be filled with grout fill as specified herein.

3-2.05. Grout. Unless otherwise acceptable to Engineer, grout shall be placed in lifts not to exceed 5 feet. Lifts exceeding 12 inches in height shall be consolidated by mechanical vibration and reconsolidated after initial water loss and settlement. Bond beam grout shall not be mechanically vibrated. Grout shall be placed in reinforced block cores, bond beams, lintels, and in other locations indicated on the Drawings. If the cells beneath a bond beam are not required to be grouted, wire mesh material may be used in the joint to retain the grout.

3-3. LAYING MASONRY UNITS. All masonry units shall be free from dust, dirt, and surface moisture when laid. Concrete blocks and glazed blocks shall be dry when laid.

All masonry shall be laid to a line. Walls shall be plumb and straight and in level courses. At no time shall any part of masonry construction project more than 8 feet above adjacent work. When work is suspended, the tops of exterior masonry walls shall be covered and protected from the weather.

Care shall be taken in corner construction and at jambs to maintain uniformity of appearance and to ensure that only whole, undamaged units are used. All patterned masonry units shall have special corner units installed at exposed corners to maintain consistency of patterns. Masonry units shall be selected and laid so that the exposed face of each unit is free of broken corners, chipped edges, or other defects which would be detrimental to the appearance of the wall surface.

Masonry units laid in running bond shall be so constructed that vertical joints in alternate courses lie in the same vertical lines, midway between the vertical joints in adjacent courses to provide a regular and uniform joint pattern. All custom scored units shall be aligned as detailed on the Drawings.

Masonry units shall be saw-cut to provide openings and to accommodate embedded items. Anchors shall be securely embedded in mortar. Door frames shall be maintained plumb and true. A caulking space shall be provided between exterior door frames and masonry in accordance with the details indicated on the Drawings. The jambs of built-in hollow metal door frames shall be completely filled with grout fill.

Lintels shall be provided over all openings wider than the length of a masonry unit. Lintels shall be of the types and sizes indicated on the Drawings, and shall be acceptable to Engineer. Lintels longer than 3 feet shall bear on solid masonry

units or on grout-filled cells of hollow units at least one masonry course in height, unless otherwise indicated on the Drawings.

All embedded items shall be set and securely anchored in the masonry work as indicated on the Drawings or as acceptable to Engineer. Joints between masonry and embedded items shall be pointed.

Multi-wythe cavity walls shall be carefully constructed to the dimensions indicated on the Drawings. On the cavity face of both the veneer and concrete block, all mortar extruded from the joints shall be struck off flush with the masonry surface. The cavity shall be kept free of mortar droppings.

Where indicated on the Drawings, rigid insulation shall be installed in the cavity between the veneer material and concrete block. The rigid insulation shall be installed in horizontal blocks sized to fit neatly between joint reinforcement, with joints butted as closely as possible. The insulation shall be secured to the face of the backup masonry with mastic adhesive applied as recommended by the manufacturer and shall be kept from contact with the facing veneer.

The entire back surfaces of all stone abutting other masonry, and concrete block masonry to be faced with stone, shall be dampened and plastered with mortar to a thickness of at least 1/2 inch immediately before the backing or facing stone is laid. Mortar shall not be splashed on exposed stone surfaces, and any spills or drippings shall be immediately removed with a sponge and clear water.

Stones showing pronounced cleavage shall be laid on natural beds. Each stone shall be lowered carefully into its proper place in a well-prepared bed of mortar and brought to a solid bed so that it will bear evenly and not only on the front edge. Each stone shall be laid plumb, level, and true to line and bond. Stones for corners and openings shall be carefully selected for squared faces. Edges of stones at jambs shall be field cut as needed to secure a clean, plumb opening.

3-4. THROUGH-WALL FLASHINGS. Through wall flashing shall be installed where and as indicated on the Drawings. Flashings in horizontal joints shall be in the bottom of the joints, and the stainless steel drip shall extend past the face of the wall unless otherwise indicated on the Drawings. Flashings shall drain toward the exterior surface of the wall. Lap joints shall be caulked and termination bars shall be screwed and caulked as per manufacturer's recommendations. The manufacturer's installation instructions shall be followed.

Flashings over lintels and sills shall extend 8 inches past each jamb and shall have end dams. Joints in wall flashings shall overlap and shall be caulked as per manufacturer's recommendations.

3-5. EXPANSION AND CONTROL JOINTS. Expansion and control joints in masonry walls and veneer shall be constructed as indicated on the Drawings. Joint material shall be placed tightly in the wall as construction proceeds.

3-6. ANCHORS, INSERTS, AND OTHER PENETRATIONS. All necessary ties, anchors, bolts, inserts, bucks, flashings, sleeves for piping, conduits of every kind, window and door frames, and other work shall be accurately set and securely held in the masonry work as indicated on the Drawings or in a manner acceptable to Engineer. Sleeves shall be provided where small piping passes through the masonry.

3-7. LOW TEMPERATURES. When the temperature of the surrounding air is below 40°F, the cold weather construction procedures of ACI 530.1 shall be followed except as modified below.

a. In addition to the weather protection specified for ordinary conditions, masonry materials shall also be kept from contact with snow, ice, or dampness of any kind.

b. The temperature of the mixed mortar shall be between 70 and 120°F. Mixing water shall be warm, but not above 165°F. If necessary, sand shall be heated also. Mortar mixing equipment shall be heated before it is used. The use of salt or calcium chloride is not acceptable.

c. Masonry units shall be above freezing when laid. If the outdoor temperature is below 30°F. units shall be heated to at least 40°F. If the temperature is below 0°F, units shall be heated to at least 60°F. Heating shall be done so that the units are not damaged.

d. Masonry shall be kept warm for at least 72 hours after laying. The air temperature at the masonry surface shall be kept between 45°F and 90°F, using heating methods that will not unduly dry out or otherwise damage the masonry. Masonry surfaces inside enclosures shall not be exposed to carbon dioxide gases emitted from heaters. Heat shall be applied to both sides of the wall, with provisions for proper circulation of air. The masonry shall be suitably housed or covered.

3-8. HIGH TEMPERATURES. When the ambient air temperature exceeds 100°F, or exceeds 90°F with a wind velocity greater than 8 mph, the hot weather construction procedures of ACI 530.1 shall be followed.

3-9. FINISH TUCK POINTING. On completion of the work, all exposed masonry shall be pointed where necessary and all voids and holes in the mortar shall be

filled to match adjacent joint surfaces. Defective joints shall be cut out and repointed with mortar. Care shall be taken to produce a uniform overall appearance. Spottiness due to variations in either materials or workmanship will not be acceptable.

3-10. PROTECTION FROM DAMAGE. Masonry and all embedded or built-in items shall be carefully protected from damage. Masonry walls discolored by paint, mortar, or concrete shall be rebuilt with new materials.

Where concrete is placed adjacent to or on top of previously constructed masonry, the masonry shall be adequately protected against damage and against splashing of concrete paste.

3-11. CLEANING. Following finish pointing, all exposed masonry surfaces shall be cleaned to remove all surface stains and smears. If stains and smears cannot be removed by the specified methods, Contractor may propose alternative methods or cleaning products. These alternatives shall be acceptable to Engineer before they are used.

Mortar smears and other stains shall be removed from stone block by scrubbing with soap and water and, where necessary, using a cleaning compound recommended by the masonry unit manufacturer. On stone, clean fine sand may be used as a scouring agent where necessary.

Mortar smears or droppings on concrete blocks shall be removed with a steel trowel after they have hardened to the extent that removal will not cause additional smearing. Any remaining mortar shall be removed to the extent possible by rubbing with a small piece of block. All surfaces shall then be thoroughly brushed.

3-12. FIELD CONTROL TESTING. Field control tests will be performed by Contractor or a testing laboratory. Contractor shall provide testing personnel with access to all material stockpiles and shall provide the services of one or more employees as necessary to assist with the collection of samples. Contractor shall provide material samples in sufficient quantity to conduct the specified tests.

As stipulated in the Quality Control section, tests required during the progress of work will be made at the expense of Contractor.

The frequency specified for each field control test is approximate and subject to change as determined by Engineer.

3-12.01. Concrete Masonry Units. Concrete masonry units from worksite stockpiles will be tested once per 5,000 square feet of wall. Sampling and testing will be in accordance with ASTM C140.

3-12.02. Grout. Grout will be field sampled during placement and will be tested once per 5,000 square feet of wall. Sampling and testing will be in accordance with ASTM C1019. Compressive strength tests shall be conducted at 28 days after sample collection.

End of Section

Section 04210

CAST STONE

PART 1 - GENERAL

1-1. SCOPE. This section covers the furnishing and installation of all accent items indicated on the Drawings to be of cast stone.

1-2. GENERAL. Cast stone units shall be furnished in the shapes and sizes indicated on the Drawings and shall be complete with required reinforcing, plant hardware, embedments, and accessories.

Erection drawings, Contractor's hardware, and erection hardware shall be furnished to the Contractor at the proper time for inclusion in the structure on which the cast stone will be installed.

Joint treatment materials are specified in the Joint Sealants section.

1-3. GOVERNING STANDARDS. The following standards apply to materials and work specified herein.

ACI 301	"Specifications for Structural Concrete for Buildings, Chapter 13, Architectural Concrete"
ACI 318	American Concrete Institute, "Building Code Requirements for Reinforced Concrete"
PCI MNL	"Manual for Quality Control for Plants and Production 117 of Architectural Precast Concrete Products"
AWS D1.0	"Code for Welding in Building Construction"
AWS D1.4	"Structural Welding Code - Reinforcing Steel"

1-4. SUBMITTALS. Complete data and drawings covering design, fabrication and installation of cast stone units shall be submitted in accordance with the Submittals section. Drawings shall indicate unit dimensions, anchorage, inserts and methods, reinforcing, flashing, setting details including profiles, cross-sections, exposed faces, arrangement of joints, and annotation of stone types and their location.

A tentative concrete mix shall be designed, tested, and submitted for review by the Engineer.

Samples for the type of finish required shall be submitted in accordance with the submittals section for review of texture, pattern, and color, prior to commencement of manufacture. Samples shall be 12 inches by 12 inches in size and of appropriate thickness. Several samples may be required until the desired finish is obtained.

1-4.01. Sample Units. When the finish samples are acceptable to the Engineer, full size castings of a corner parapet accent cast stone shall be prepared for review. The castings shall consist of the types, size, and configuration of units indicated on the Drawings to be incorporated into the work. The castings shall be constructed of the materials and methods planned for use during construction complete with the accepted finish, proposed concrete mix, aggregates, reinforcing, embedments, and installation hardware.

Units shall be incorporated into the masonry sample panel specified in Section 04200, Masonry.

The sample units shall be accepted by the Engineer prior to beginning any cast stone or masonry work. The samples shall remain on the site and shall be held to be representative of the work for the entire job.

1-5. PRODUCT DELIVERY, STORAGE, AND HANDLING. The cast stone concrete units shall be lifted and supported during manufacture, storage, transportation, and erection only at the lifting or supporting points indicated on the shop drawings.

The units shall be handled, stored, and transported in a position consistent with their shape and design in order to avoid excessive stresses or damage.

Nonstaining resilient spacers shall be used between units for both transportation and storage.

Cast stone shall not be stored in direct contact with the ground and shall be covered to protect it from water and soiling.

Cast stone units shall be delivered to the jobsite completely finished and free of dirt, stains, or damage.

1-6. MANUFACTURER'S QUALIFICATIONS. The manufacturer of the cast stone units shall submit evidence of the following:

a. Present capability and experience in the manufacture of the type of units required for this project.

b. Adequate facilities to fabricate the required units in the allotted construction period.

c. Proof of quality workmanship through references to comparable installations or plant capability certification by PCI according to PCI MNL 117, "Manual for Quality Control for Plants and Production of Architectural Precast Concrete Products".

d. Business operation as a manufacturer of cast stone products for not less than 5 years.

PART 2 - PRODUCTS

2-1. MATERIALS. Materials used in the manufacture and erection of the cast stone units shall be as follows:

Portland Cement	ASTM C150, Type I or III, white.
Fine Aggregate	Clean and graded natural sand, ASTM C33.
Coarse Aggregate	Graded and washed natural gravels, or crushed, graded stone such as granite, quartz, limestone or durable stone meeting ASTM C33 except that gradation may vary to achieve desired finish and texture.
Admixtures	
Plasticizer	ASTM C494, Type A; Grace "WRDA-HC" or Master Builders "MBHC-N".
Air-Entraining Agent	ASTM C260; Grace "Darex AEA", Master Builders "MB-VR", or Sika Chemical "AER".

Color Pigment	ASTM C979; Chem-Masters "Chem-Tint", G.B. Smith "Cement Colors", or as recommended by the precast manufacturer.
Water	Clean and free from deleterious substances; potable.
Reinforcing Steel	ASTM A615, Grade 40, galvanized.
Welded Wire Fabric	ASTM A185, hot-dip galvanized.
Steel Plates and Shapes	ASTM A36, hot-dip galvanized.
Anchoring Devices	Stainless steel, Type 302 or 304; configurations as indicated on the Drawings.
Bolts and Nuts	Stainless steel, 18-8, ASTM A167.
Inserts	Ferrule type, stainless steel; Hohmann-Barnard "No. HD".
Shims	Plastic; Korlath.
Expansion Gaskets	PVC or polyethylene foam with pressure sensitive back, factory cut to profile; Grace "Servicised 5401 Foam Filler" or Williams "Everlastic Type U".

PART 3 - EXECUTION

3-1. FABRICATION.

3-1.01. Forms. Forms shall be rigid, adequately braced, and free from dents, gouges, or other irregularities which would impair the quality, appearance, or performance of the members for dry tamped cast stone.

3-1.02. Concrete Mix. The concrete mix shall be proportioned to produce a concrete with a compressive strength of 6,000 psi at 28 days. Water content shall be kept to a minimum, consistent with the strength and durability requirements. Air content shall be 6 percent, plus or minus 1 percent.

3-1.03. Reinforcement and Anchoring Hardware. Reinforcing steel shall have a minimum cover of 3/4 inch and shall be accurately located as indicated on the shop drawings.

Anchors, dowels, and devices shall be installed as recommended by the stone manufacturer and shown on the shop drawings. Cast-in-place steel anchors, plates, and similar items shall be hot-dip galvanized and shall have sufficient anchorage and embedment for design requirements. Stone anchoring devices, inserts, bolts, and nuts shall be stainless steel. Erection hardware such as steel clips, angles, and plates shall be hot-dip galvanized and where welding is required, the welded area shall be cleaned and painted with zinc-rich paint as specified in the Protective Coatings section. All welding, including tack welds, shall be made in accordance with applicable provisions of the American Welding Society.

The manufacturer's submittals shall state the limitations for field cutting or modification.

3-1.04. Surface Finish. The exterior exposed faces of all cast stone units shall exhibit a typically fine-grained texture similar to natural stone. Units indicated on the Drawings shall be integrally pigmented prior to installation. Color of cast stone will be selected from manufacturer’s data and samples after the award of the contract.

3-1.05. Testing. Testing shall be performed in accordance with ASTM C31, ASTM C39, and ASTM C642. Test results shall be determined by the average of three specimens per test. At least two cylinders from each set shall be compression tested at the age of 28 days. All aggregates used shall also be sampled and tested for conformance.

All testing shall be performed by an independent testing laboratory acceptable to the Engineer. Reports shall be distributed directly by the testing laboratory to the Owner, the Engineer, and the Contractor. All costs for and in connection with such tests shall be borne by the Contractor.

3-1.06. Tolerances. Tolerances for cast stone panels shall be as recommended in PCI MNL 117, except as modified herein.

Cast stone units will be rejected for any of the following conditions:

a. Length variation in excess of 1/8 inch (1/16 inch - each end) of adjacent units or 1/4 inch maximum between longest and shortest units.

b. Edges not straight and parallel.

c. Warp between adjacent units which cannot be controlled by the fastening system between the units.

d. Unsatisfactory surface finish.

e. Fractures, cracks, chips, or spalls which cannot be repaired to the satisfaction of the Engineer.

f. Irregularities resulting from damaged forms.

g. Improperly placed accessories or boxouts.

3-1.07. Curing. Concrete shall be cured by continuous surface saturation or inundation, exposure to steam or saturated air in a tightly closed room or chamber, or other method acceptable to the Engineer. Moist curing shall be maintained for at least 7 days when Type I cement is used, or 48 hours when Type III cement is used. The minimum steam-curing period shall be 18 hours for either type of cement. Members shall be air cured in the fabricator's yard until they attain an age of at least 30 days.

3-2. INSTALLATION.

3-2.01. Inspection. Before erection of the cast stone units, the Contractor shall inspect the structure and verify that all anchorage inserts, brackets, plates, and other support items not within tolerances have been corrected. Field conditions shall be determined by actual measurement.

3-2.02. Erection. Cast stone units shall be set plumb, square, and true within the allowable tolerances listed in PCI MNL 117. All cast stone units shall be set accurately by experienced masons and in accordance with setting drawings. Unless otherwise indicated, every unit shall be set in a full bed of mortar with all vertical joints flushed full. Mortar shall be omitted from joints designated as control joints. All anchors and dowels shall be firmly placed and all anchor holes filled with mortar. Temporary support and bracing shall be provided as required to maintain position, stability, and alignment until units are permanently connected and shimmed.

All welding shall be done by welders who have valid certificates issued under the qualification procedures of the American Welding Society. Care shall be exercised in welding to avoid overheating and cracking the cast stone adjacent to the anchorage plates or shapes. Any panel damaged during welding shall be removed and replaced with a new undamaged panel at no additional cost to the Owner.

All cast stone units indicated to be set in masonry walls shall be wet when set with mortar. All units not thoroughly wet shall be drenched with clear water just prior to setting.

All stone shall be protected from splashing mortar or damage by other trades. All mortar and other material shall be immediately removed from the exposed faces of each stone.

All anchors, dowels, and devices shall be furnished as indicated on the Drawings.

3-2.03. Control Joints. All control joints in horizontal watertable sill units shall have a uniform width of 1/2 inch and shall be filled with expansion gaskets. Expansion gaskets shall be shaped to fit the profile when set back 1/2 inch from exposed faces, leaving an open joint 1/2 inch wide and 1/2 inch deep for caulking.

3-2.04. Flashing at Copings. Follow manufacturer's recommended instructions in maintaining a complete and water proof seal. Provide means to control moisture in the walls in order to avoid crazing, efflorescence and spalling. The flashing method shall avoid ponding effects which may allow the stone to deteriorate when the parapet is subjected to freezing and thawing. Allow the coping to wick and drain while maintaining the masonry bond with the wall.

3-3. CLEANING. After all installation procedures, including joint treatment, are completed, all exposed cast stone shall be washed and rinsed in accordance with the cast stone manufacturer's recommendations.

End of Section

Section 05120

STRUCTURAL STEEL FOR BLOWER BUILDING

PART 1 - GENERAL

1.1 SUMMARY

A. Section Includes:

1. Structural steel.
2. Grout.

1.2 DEFINITIONS

A. Structural Steel: Elements of the structural frame indicated on Drawings and as described in AISC 303, "Code of Standard Practice for Steel Buildings and Bridges."

1.3 ACTION SUBMITTALS

A. Product Data: For each type of product.

B. Shop Drawings: Show fabrication of structural-steel components.

1.4 INFORMATIONAL SUBMITTALS

A. Qualification Data: For installer and fabricator.

B. Welding certificates.

C. Mill test reports for structural steel, including chemical and physical properties.

D. Source quality-control reports.

1.5 QUALITY ASSURANCE

A. Welding Qualifications: Qualify procedures and personnel according to AWS D1.1/D1.1M, "Structural Welding Code - Steel."

B. Comply with applicable provisions of the following specifications and documents:

1. AISC 303.
2. AISC 360.
3. RCSC's "Specification for Structural Joints Using ASTM A 325 or A 490 Bolts."

PART 2 - PRODUCTS

2.1 STRUCTURAL-STEEL MATERIALS

A. W-Shapes: ASTM A 992/A 992M.

B. Channels, Angles, M-Shapes, S-Shapes: ASTM A 36/A 36M.

C. Plate and Bar: ASTM A 36/A 36M.

D. Cold-Formed Hollow Structural Sections: ASTM A 500/A 500M, Grade B, structural tubing.

E. Steel Pipe: ASTM A 53/A 53M, Type E or Type S, Grade B.

F. Welding Electrodes: Comply with AWS requirements.

2.2 BOLTS, CONNECTORS, AND ANCHORS

A. High-Strength Bolts, Nuts, and Washers: ASTM A 325, Type 1, heavy-hex steel structural bolts; ASTM A 563, Grade C, heavy-hex carbon-steel nuts; and ASTM F 436, Type 1, hardened carbon-steel washers; all with plain finish.

B. Shear Connectors: ASTM A 108, Grades 1015 through 1020, headed-stud type, cold-finished carbon steel; AWS D1.1/D1.1M, Type B.

C. Headed Anchor Rods: ASTM F 1554, Grade 36, straight.

1. Finish: Hot-dip zinc coating, ASTM A 153/A 153M, Class C.

D. Threaded Rods: ASTM A 36/A 36M.

1. Finish: Hot-dip zinc coating, ASTM A 153/A 153M, Class C.

2.3 PRIMER

A. Primer: Fabricator's standard lead- and chromate-free, nonasphaltic, rust-inhibiting primer complying with MPI#79 and compatible with topcoat.

2.4 GROUT

A. Nonmetallic, Shrinkage-Resistant Grout: ASTM C 1107/C 1107M, factory-packaged, nonmetallic aggregate grout, noncorrosive and nonstaining, mixed with water to consistency suitable for application and a 30-minute working time.

2.5 FABRICATION

A. Structural Steel: Fabricate and assemble in shop to greatest extent possible. Fabricate according to AISC 303, "Code of Standard Practice for Steel Buildings and Bridges," and to AISC 360.

B. Shear Connectors: Prepare steel surfaces as recommended by manufacturer of shear connectors. Use automatic end welding of headed-stud shear connectors according to AWS D1.1/D1.1M and manufacturer's written instructions.

2.6 SHOP CONNECTIONS

A. High-Strength Bolts: Shop install high-strength bolts according to RCSC's "Specification for Structural Joints Using ASTM A 325 or A 490 Bolts" for type of bolt and type of joint specified.

   1. Joint Type: Snug tightened.

B. Weld Connections: Comply with AWS D1.1/D1.1M for tolerances, appearances, welding procedure specifications, weld quality, and methods used in correcting welding work.

2.7 SHOP PRIMING

A. Shop prime steel surfaces except the following:

   1. Surfaces embedded in concrete or mortar. Extend priming of partially embedded members to a depth of 2 inches.

2. Surfaces to be field welded.
3. Surfaces to receive sprayed fire-resistive materials (applied fireproofing).
4. Galvanized surfaces.

B. Surface Preparation: Clean surfaces to be painted. Remove loose rust and mill scale and spatter, slag, or flux deposits. Prepare surfaces according to the following specifications and standards:

1. SSPC-SP 2, "Hand Tool Cleaning."
2. SSPC-SP 3, "Power Tool Cleaning."

C. Priming: Immediately after surface preparation, apply primer according to manufacturer's written instructions and at rate recommended by SSPC to provide a minimum dry film thickness of 1.5 mils. Use priming methods that result in full coverage of joints, corners, edges, and exposed surfaces.

PART 3 - EXECUTION

3.1 EXAMINATION

A. Verify, with certified steel erector present, elevations of concrete- and masonry-bearing surfaces and locations of anchor rods, bearing plates, and other embedments for compliance with requirements.

B. Proceed with installation only after unsatisfactory conditions have been corrected.

3.2 ERECTION

A. Set structural steel accurately in locations and to elevations indicated and according to AISC 303 and AISC 360.

B. Base plates, Bearing Plates and Leveling Plates: Clean concrete- and masonry-bearing surfaces of bond-reducing materials, and roughen surfaces prior to setting plates. Clean bottom surface of plates.

1. Set plates for structural members on wedges, shims, or setting nuts as required.
2. Weld plate washers to top of base plate.

3. Snug-tighten anchor rods after supported members have been positioned and plumbed. Do not remove wedges or shims but, if protruding, cut off flush with edge of plate before packing with grout.
4. Promptly pack grout solidly between bearing surfaces and plates so no voids remain. Neatly finish exposed surfaces; protect grout and allow to cure. Comply with manufacturer's written installation instructions for shrinkage-resistant grouts.

C. Maintain erection tolerances of structural steel within AISC 303, "Code of Standard Practice for Steel Buildings and Bridges."

3.3 FIELD CONNECTIONS

A. High-Strength Bolts: Install high-strength bolts according to RCSC's "Specification for Structural Joints Using ASTM A 325 or A 490 Bolts" for type of bolt and type of joint specified.

1. Joint Type: Snug tightened.

B. Weld Connections: Comply with AWS D1.1/D1.1M for tolerances, appearances, welding procedure specifications, weld quality, and methods used in correcting welding work.

1. Comply with AISC 303 and AISC 360 for bearing, alignment, adequacy of temporary connections, and removal of paint on surfaces adjacent to field welds.

3.4 FIELD QUALITY CONTROL

A. Special Inspections: Owner will engage a qualified special inspector to perform the following special inspections:

1. Verify structural-steel materials and inspect steel frame joint details.
2. Verify weld materials and inspect welds.
3. Verify connection materials and inspect high-strength bolted connections.

B. Testing Agency: Owner will engage a qualified testing agency to perform tests and inspections.

C. Bolted Connections: Inspect bolted connections according to RCSC's "Specification for Structural Joints Using ASTM A 325 or A 490 Bolts."

D. Welded Connections: Visually inspect field welds according to AWS D1.1/D1.1M.

1. In addition to visual inspection, test and inspect field welds according to AWS D1.1/D1.1M and the following inspection procedures, at testing agency's option:

   a. Liquid Penetrant Inspection: ASTM E 165.
   b. Magnetic Particle Inspection: ASTM E 709; performed on root pass and on finished weld. Cracks or zones of incomplete fusion or penetration are not accepted.
   c. Ultrasonic Inspection: ASTM E 164.
   d. Radiographic Inspection: ASTM E 94.

END OF SECTION

Section 05310

STEEL DECK FOR BLOWER BUILDING

PART 1 - GENERAL

1.1 SUMMARY

A. Section Includes:

1. Roof deck.

1.2 ACTION SUBMITTALS

A. Product Data: For each type of deck, accessory, and product indicated.

B. Shop Drawings:

1. Include layout and types of deck panels, anchorage details, reinforcing channels, pans, cut deck openings, special jointing, accessories, and attachments to other construction.

1.3 INFORMATIONAL SUBMITTALS

A. Welding certificates.

B. Product certificates.

C. Evaluation reports.

1.4 QUALITY ASSURANCE

A. Welding Qualifications: Qualify procedures and personnel according to AWS D1.3, "Structural Welding Code - Sheet Steel."

1.5 DELIVERY, STORAGE, AND HANDLING

A. Protect steel deck from corrosion, deformation, and other damage during delivery, storage, and handling.

B. Stack steel deck on platforms or pallets and slope to provide drainage. Protect with a waterproof covering and ventilate to avoid condensation.

PART 2 - PRODUCTS

2.1 PERFORMANCE REQUIREMENTS

A. AISI Specifications: Comply with calculated structural characteristics of steel deck according to AISI's "North American Specification for the Design of Cold-Formed Steel Structural Members."

2.2 ROOF DECK

A. Manufacturers: Subject to compliance with requirements, available manufacturers offering products that may be incorporated into the Work include, but are not limited to the following:

1. CMC Joist & Deck
2. Consolidated Systems, Inc.; Metal Dek Group
3. Nucor Corp.; Vulcraft Group
4. Verco Manufacturing Co.
5. Wheeling Corrugating Company; Div. of Wheeling-Pittsburgh Steel Corporation

B. Roof Deck: Fabricate panels, without top-flange stiffening grooves, to comply with "SDI Specifications and Commentary for Steel Roof Deck," in SDI Publication No. 31, and with the following:

1. Galvanized-Steel Sheet: ASTM A 653/A 653M, Structural Steel (SS), Grade 33, G60 zinc coating.
2. Deck Profile: Type IR, intermediate rib.
3. Profile Depth: 1-1/2 inches.
4. Design Uncoated-Steel Thickness: 0.0358 inch.
5. Span Condition: Triple span or more.
6. Side Laps: Overlapped.

2.3 ACCESSORIES

A. General: Provide manufacturer's standard accessory materials for deck that comply with requirements indicated.

B. Mechanical Fasteners: Corrosion-resistant, low-velocity, power-actuated or pneumatically driven carbon-steel fasteners; or self-drilling, self-threading screws.

C. Side-Lap Fasteners: Corrosion-resistant, hexagonal washer head; self-drilling, carbon-steel screws, No. 10 minimum diameter.

D. Flexible Closure Strips: Vulcanized, closed-cell, synthetic rubber.

E. Miscellaneous Sheet Metal Deck Accessories: Steel sheet, minimum yield strength of 33,000 psi, not less than 0.0359-inch design uncoated thickness, of same material and finish as deck; of profile indicated or required for application.

F. Galvanizing Repair Paint: ASTM A 780.

PART 3 - EXECUTION

3.1 EXAMINATION

A. Examine supporting frame and field conditions for compliance with requirements for installation tolerances and other conditions affecting performance.

B. Proceed with installation only after unsatisfactory conditions have been corrected.

3.2 INSTALLATION, GENERAL

A. Install deck panels and accessories according to applicable specifications and commentary in SDI Publication No. 31, manufacturer's written instructions, and requirements in this Section.

B. Place deck panels on supporting frame and adjust to final position with ends accurately aligned and bearing on supporting frame before being permanently fastened. Do not stretch or contract side-lap interlocks.

C. Place deck panels flat and square and fasten to supporting frame without warp or deflection.

D. Cut and neatly fit deck panels and accessories around openings and other work projecting through or adjacent to deck.

E. Provide additional reinforcement and closure pieces at openings as required for strength, continuity of deck, and support of other work.

F. Comply with AWS requirements and procedures for manual shielded metal arc welding, appearance and quality of welds, and methods used for correcting welding work.

G. Mechanical fasteners may be used in lieu of welding to fasten deck. Locate mechanical fasteners and install according to deck manufacturer's written instructions.

H. Miscellaneous Roof-Deck Accessories: Install ridge and valley plates, finish strips, end closures, and reinforcing channels according to deck manufacturer's written instructions. Weld or mechanically fasten to substrate to provide a complete deck installation.

1. Weld cover plates at changes in direction of roof-deck panels unless otherwise indicated.

3.3 ROOF DECK INSTALLATION

A. Fasten roof-deck panels to steel supporting members by arc spot (puddle) welds of the surface diameter indicated or arc seam welds with an equal perimeter that is not less than 1-1/2 inches long, and as follows:

1. Weld Diameter: 5/8 inch, nominal.
2. Weld Spacing: Weld edge and interior ribs of deck units with a minimum of two welds per deck unit at each support. Space welds 12 inches apart in the field of roof and 6 inches apart in roof corners and perimeter, based on roof-area definitions in FMG Loss Prevention Data Sheet 1-28.

B. Side-Lap and Perimeter Edge Fastening: Fasten side laps and perimeter edges of panels between supports, at intervals not exceeding the lesser of 1/2 of the span or 18 inches, and as follows:

1. Mechanically fasten with self-drilling, No. 10 diameter or larger, carbon-steel screws.
2. Fasten with a minimum of 1-1/2-inch-long welds.

C. End Bearing: Install deck ends over supporting frame with a minimum end bearing of 1-1/2 inches, with end joints as follows:

1. End Joints: Lapped 2 inches minimum or butted at Contractor's option.

D. Miscellaneous Roof-Deck Accessories: Install ridge and valley plates, finish strips, end closures, and reinforcing channels according to deck manufacturer's written instructions. Weld or mechanically fasten to substrate to provide a complete deck installation.

1. Weld cover plates at changes in direction of roof-deck panels unless otherwise indicated.

3.4 FIELD QUALITY CONTROL

A. Testing Agency: Owner will engage a qualified testing agency to perform tests and inspections.

B. Field welds will be subject to inspection. Testing agency will report inspection results promptly and in writing to Contractor and Engineer.

C. Remove and replace work that does not comply with specified requirements.

D. Additional inspecting, at Contractor's expense, will be performed to determine compliance of corrected work with specified requirements.

3.5 PROTECTION

A. Galvanizing Repairs: Prepare and repair damaged galvanized coatings on both surfaces of deck with galvanized repair paint according to ASTM A 780 and manufacturer's written instructions.

END OF SECTION

Section 05520

HANDRAILING, GUARDRAILING, AND LADDERS

PART 1 - GENERAL

1-1. SCOPE. This section covers the design, fabrication and installation of handrailing, guardrailing, and ladders fabricated from metal or fiberglass shapes. Ornamental railing systems, metal stairs, concrete and masonry anchorage systems, and structural and miscellaneous metals are covered in other sections.

1-2. GENERAL. Fabricated items which are indicated on the Drawings but not mentioned specifically herein shall be fabricated in accordance with the applicable requirements of this section.

1-3. SUBMITTALS. Complete data, detailed drawings, and setting or erection drawings covering all materials shall be submitted in accordance with the Submittals section (01300). Each separate piece shall be marked. Drawings and submittals shall be sealed by a professional engineer registered in the state of the project.

Data shall be submitted to certify that all railings and ladders meet all applicable requirements of the codes as specified herein and the Specifications and Drawings. Engineer may request copies of all supporting calculations.

1-3.01. Samples. Samples shall be submitted to indicate finishes. Samples of each type of fitting required to complete the installation shall also be submitted.

1-3.02. Colors. Where color selections are required, color charts shall be submitted showing the full range of available colors. Procedures for selecting colors shall be as indicated in the Submittals section (01300).

1-4. DELIVERY, STORAGE, AND HANDLING. Shipping shall be in accordance with the Product Delivery Requirements section (01612). Handling and storage shall be in accordance with the Handling and Storage Requirements section (01614).

PART 2 - PRODUCTS

2-1. GENERAL. Railing systems and ladders shall be designed and fabricated by companies normally engaged in the manufacture of such systems. Railing products of like materials shall be from a single supplier and the installed systems shall have a uniform appearance throughout the project. Ladders may be from another supplier. Unless indicated otherwise on the Drawings, ladders in

proximity with guardrailing shall be of the same material, style, and finish as the guardrailing.

For metal railing systems, at Contractor's option, handrailing and guardrailing shall be either shop fabricated welded systems or prefabricated nonwelded systems designed for field assembly. Welded railing systems shall be fabricated from pipe and accessories by metal fabricators experienced in designing and fabricating welded railing.

2-2. PERFORMANCE AND DESIGN REQUIREMENTS.

2-2.01. Railing System Design Criteria. All railing systems shall be designed and fabricated in compliance with the most stringent requirements of the applicable local building code, OSHA 29 CFR Part 1926 Subpart R, and all other pertinent OSHA regulations and local safety regulations. Handrails for handicapped accessible areas, if required, shall comply with the requirements of the local building code, ANSI 117.1 Uniform Federal Accessibility Standards, and the accessibility standards of the Americans with Disabilities Act. In case of conflicting requirements the more stringent requirements shall be applicable.

At a minimum, guardrailing and handrailing shall be designed to withstand a uniform load of 50 lbs per foot [729 N/m] applied in any direction at the top, and a concentrated load of 200 lbs [889 N] applied in any direction at any point along the top. The uniform load and the concentrated load need not be assumed to act concurrently. The design load shall be transferred through the entire railing system and its support to the structure.

Intermediate rails, including balusters on picket-type systems, shall be designed to withstand a horizontally applied normal load of 50 lb on an area not to exceed 12 inches by 12 inches including openings and space between rails. The load shall be located so as to produce the maximum effects. Reactions due to this loading are not required to be superimposed with the loads specified for the top rail and handrail in the preceding paragraph.

An allowable stress increase of 1/3 shall not be incorporated into the design of any part of the railing system.

Maximum spacing for railing posts shall be 6 feet [1.8 m].

2-2.02. Steel Rails. Not used.

2-2.03. Aluminum Rails. Handrails and guardrails shall be fabricated from 1-1/2 inch [39 mm] ID aluminum pipe. Pickets shall be fabricated from 3/4 inch [19 mm] ID aluminum pipe.

2-2.04. Fiberglass Rails. Not used.

2-2.05. Kickplate. Kickplates shall be 4 inches [100 mm] high and shall be fabricated from similar materials as the railing. Kickplates shall clear the walking surface by 1/4 inch [6 mm].

2-2.06. Fasteners. Unless noted otherwise, all fasteners shall be stainless steel. Where galvanized bolts are indicated on the Drawings or specified, the use of zinc-plated bolts will not be acceptable. Metal railings shall be fastened to fittings with through bolts or flush set screws; glued or pop riveted connections are not permitted. Fastener details shall be indicated on the submittal drawings.

2-2.07. Guarding of Openings. Openings in railing shall be guarded by self-closing gates in accordance with OSHA 1910.23.

2-2.08. Removable Guardrail. Removable guardrail sections shall be designed so that each section has at least two, but not more than three posts.

2-2.09. Expansion Control. Guardrailing in outdoor locations shall have slip joints at least every 60 feet [18.2 m] and at all concrete expansion joints to permit expansion and contraction. The gap at each slip joint shall be not less than 1/4 inch [6 mm].

2-2.10. Mounting to Structure. Handrailing and guardrailing shall be mounted to structures as indicated on the Drawings. If mounting details are not indicated, railing posts shall be surface mounted with base flanges or side mount brackets secured to concrete by stainless steel adhesive anchors. Bolt sizes and pattern shall be as needed for the mounting device.

2-2.11. Ladders. Not used.

2-3. ACCEPTABLE MANUFACTURERS. Metal railing shall be Moultrie "Wesrail", Universal "Uni-Rail", Thompson "TUF Rail System", Julius Blum & Co "Connectorail", or equal.

Fiberglass rail and ladder shall be Fibergrate Composite Structures "Dynarail", Strongwell "Safrail", or equal.

Metal ladders shall be Alaco "Series 500", Thompson "TUFLadder", or equal.

2-4. MATERIALS.

Aluminum Systems

Pipe	Aluminum ASTM B429, Alloy 6061-T6, Schedule 40 minimum thickness.

Shapes and Plates	Aluminum ASTM B308, Alloy 6061-T6 for Shapes. ASTM B209, Alloy 6061-T6 for Plates.
Fittings, Welded	Angles, offsets, tees, ells, crosses, caps for aluminum, ASTM B429, Alloy 6063-T6, Schedule 40 minimum thickness.
Fittings, Non-welded	Manufacturer's standard component fittings, extruded sections, ASTM B221, Alloy 6063-T5 or T6.
Assembly Bolts, Nuts, Washers, and Fasteners	Stainless steel.
Stainless Steel Systems	
Pipe	ASTM A312, Grade TP316L, Schedule 40 minimum thickness.
Plates	ASTM A240, Type 316L.
Fittings, Welded	Angles, offsets, tees, ells, crosses caps for stainless pipes shall be made with formed, stainless steel welding ells and welding connectors.
Non-welded	Manufacturer standard component fittings, stainless steel.
Assembly Bolts, Nuts, Washers, and Fasteners	Stainless steel.
Galvanized Steel Systems	
Pipe	ASTM A 500 Grade B, Schedule 40 minimum thickness, galvanized after fabrication.
Plates	ASTM A36. Galvanized.
Fittings, Welded	Angles, offsets, tees, ells, crosses, and caps shall be made with formed, welding ells and welding connectors. Material to match railings. Galvanized.
Fittings, Non-Welded	Manufacturer standard component fittings, material to match railings. Galvanized.
Assembly Bolts, Nuts, Washers, and Fasteners	Stainless steel.

Painted Steel Systems	
Pipe	ASTM A 500 Grade B, Schedule 40 minimum thickness, prime painted.
Plates	ASTM A36. Prime painted.
Fittings, Welded	Angles, offsets, tees, ells, crosses, caps shall be made with formed, welding ells and welding connectors, material to matching railings. Prime painted.
Fittings, Non-welded	Manufacturer standard component fittings, materials to match railings. Prime painted.
Assembly Bolts, Nuts, Washers, and Fasteners	Manufacturer's standard.
Steel Pipe Sleeves	
Outer Sleeves	Black steel pipe, Schedule 40. Hot-dip galvanized after fabrication.
Removable Post Inner Sleeves	PVC tube, Schedule 40.
Plastic Pipe Sleeves	PVC tube, Schedule 40.
Post Setting Cement	Minwax "Super Por-Rok Cement" or BASF Set Products Division "Set 45".
Ladder Fall Prevention Devices	OHSA approved fall prevention device with harness.
Anchor Bolts to Prime Painted Steel	ASTM High Strength bolts, nuts, and washers in accordance with the Structural and Miscellaneous Metals section (05990).
Anchor Bolts to Concrete or Masonry	Stainless steel adhesive anchors in accordance with the Anchorage in Concrete and Masonry section (05550).
Shop Coatings	
Universal Primer	Ameron "Amercoat 385 Epoxy", Carboline "Rustbond", or Tnemec "Series 27 F.C. Typoxy."
Red Oxide Primer	SSPC 15, Type 1, or Fed Spec TT-P-636.
Epoxy Enamel	Gray; Ameron "Amerlock 400 High-Solids Epoxy Coating", Carboline "Carboguard

	891", or Tnemec "Series N140 Pota-Pox Plus".
Asphalt Varnish	Fed Spec TT-C-494.
Anodic Finish	AA-M10C22A41, clear unless otherwise required.
Galvanizing	ASTM A123, A153, A385.

2-5. FABRICATION. Unless otherwise indicated on the Drawings, all railings provided under this section shall be of the same type and design.

2-5.01. Welded Metal Railings. Not used.

2-5.02. Fiberglass Railings. Not used.

2-5.03. Guarding of Openings. Openings in railing shall be guarded by self closing gates. Self closing gates shall be fabricated of the same materials with the same finish as the guardrailing. The closure device shall be Manufacturer's standard.

2-5.04. Sleeves. Sleeves for fixed handrail posts shall be fabricated from Schedule 40 PVC pipe or from Schedule 40 black steel pipe hot-dip galvanized after fabrication. Sleeves shall provide at least 1/4 inch [6 mm] clearance all around each post and shall be 5 inches [125 mm] long unless otherwise indicated on the Drawings.

Sleeves for removable posts shall have an outer and inner sleeve. The outer sleeve shall be fabricated from Schedule 40 black steel pipe and shall be hot-dip galvanized after fabrication. The inner sleeve shall be Schedule 40 PVC pipe.

2-5.05. Ladders. Not used.

2-6. COATING.

2-6.01. Ungalvanized Steel. Not used.

2-6.02. Aluminum. All surfaces of aluminum which will be in contact with concrete shall be coated with epoxy enamel. All surfaces of aluminum which will be in contact with dissimilar metals shall have a 15 mil thick sheet of oriented polyester film placed between the two surfaces.

All aluminum railings shall be provided with a clear anodic finish.

2-6.03. Stainless Steel. Not used.

2-6.04. Fiberglass. Not used.

2-6.05. Other Surfaces. Shop coating of galvanized steel or stainless steel surfaces will not be required.

PART 3 - EXECUTION

3-1. INSTALLATION. When railings and ladders are assembled, all posts shall be plumb and longitudinal members shall be parallel with each other and with the floor surface or slope of stairs. In any section or run of railing, the center lines of all members shall be in true alignment, positioned in the same vertical plane. All posts in fixed handrail sections and all ladders shall be rigidly attached to the supporting structure. After installation, railings and ladders shall be checked for final alignment, using a tightly drawn wire for reference. The maximum misalignment tolerance for railings shall be 1/8 inch in 12 feet [3 mm in 3.6 m]. Bent, deformed, or otherwise damaged installations shall be replaced.

Cut or drilled fiberglass pieces shall be sealed with catalyzed resin in accordance with the fiberglass manufacture's recommendations.

3-1.01. Attachment to Concrete. Posts shall be attached to concrete structures as indicated on the Drawings. Base flanges and side-mount brackets shall be installed with minimal disturbance to the reinforcing steel. Bolts shall be stainless steel adhesive anchors as specified in the Anchorage in Concrete and Masonry section (05550).
Sleeves shall be rigidly supported in accurate alignment in the forms and shall be positioned vertically so that the top of each sleeve is approximately 1/2 inch [12.7 mm] below the finished concrete surface. The position of all sleeves shall be carefully measured before railings are fabricated. When the railing is set, the posts shall be wedged in accurate alignment, and the annular space between the posts and sleeves shall be filled with post setting cement to the top of the steel sleeve. Filling of the remaining space with sealant, as indicated on the Drawings, is covered in the Joint Sealants section (07900).

3-1.02. Attachment to Steel or Aluminum. Attachments to steel or aluminum shapes shall be made with flanges or with other special attachments or anchorages as detailed on the Drawings.

3-1.03. Removable Attachments. For removable guardrail sections in embedded sleeves, inner sleeves shall be set in outer sleeves in the same manner as specified herein for the setting of fixed posts. Particular care shall be taken to ensure that the inner sleeves are accurately spaced and plumbed, so that the handrail sections, when set in position, will stand in proper alignment and will be removable without binding.

Removable guardrail sections with base flanges or side mount brackets shall be secured in the bases with removable screws.

3-1.04. Wall Mounted Handrailing. Suitable wall brackets shall be provided where shown or required. Wall brackets shall be securely anchored to walls with stainless steel adhesive anchors as specified in the Anchorage in Concrete and Masonry section (05550). Expansion anchors shall not be used unless specifically indicated on the Drawings.

3-1.05. Connections. Welding connectors and splice locks shall be installed in accordance with the manufacturer's recommendations. Other methods of making connections and changes in alignment will be considered, provided complete information covering the proposed method is submitted to Engineer for review.

End of Section

Section 05550

ANCHORAGE IN CONCRETE AND MASONRY

PART 1 - GENERAL

1-1. SCOPE. This section covers the procurement and installation of anchors in concrete and masonry. It includes cast-in-place anchor bolts and anchor rods, adhesive anchors for both threaded rods and reinforcing bars, expansion anchors, and undercut anchors.

1-2. GENERAL. Unless otherwise specified or indicated on the Drawings all anchors shall be cast-in-place anchor bolts or anchor rods, with forged heads or embedded nuts and washers. Unless otherwise indicated, anchors in concrete shall have a diameter of at least 3/4 inch [19 mm], and anchors in masonry shall have a diameter of at least 1/2 inch [12.7 mm].

Unless otherwise indicated on the Drawings, anchors used in the following locations and applications shall be of the indicated materials. Anchors in other locations and applications shall be as indicated on the Drawings.

Cast-In-Place Anchor Bolts and Anchor Rods

Submerged locations	Stainless steel.
Locations subject to splashing	Stainless steel.
Buried locations	Stainless steel.
Anchorage of structural steel columns	Galvanized steel.
Other exterior locations	Galvanized steel.
Other interior locations	Carbon steel.

Adhesive, Expansion, and Undercut Anchors

Submerged locations	Stainless steel.
Locations subject to splashing	Stainless steel.
Buried locations	Stainless steel.
Anchorage of structural steel columns	Stainless steel.

Other exterior locations	Stainless steel.
Other interior locations	Carbon steel.

Adhesive, expansion, and undercut anchors may be used instead of cast-in-place anchors only where specifically indicated or permitted on the Drawings or with the specific acceptance by Engineer.

1-3. SUBMITTALS. Data, catalog cuts, and International Code Council Evaluation Service (ICC-ES) reports indicating the manufacturer and types of adhesive anchors, expansion anchors, and undercut anchors to be supplied shall be submitted in accordance with the Submittals section (01300).

If Contractor requests use of products other than those indicated herein, calculations prepared by a registered professional engineer using methods and procedures required by the building code may be required as part of the submittal package.

1-4. DELIVERY, STORAGE, AND HANDLING. Materials shall be handled, transported, and delivered in a manner which will prevent damage or corrosion. Damaged materials shall be promptly replaced. Materials shall be shipped and stored in original manufacturer's packaging.

PART 2 - PRODUCTS

2-1. MATERIALS. Unless otherwise indicated on the drawings, materials shall be as indicated below.

Cast-In-Place Anchor Bolts and Anchor Rods

Carbon steel	ASTM F1554, Grade 36 with compatible nuts.
Galvanized steel	ASTM F1554, Grade 36 with compatible nuts; hot-dip galvanized, ASTM F2329.
Stainless steel	Bolts, ASTM F593, Alloy Group 1 or 2; nuts, ASTM F594, Alloy Group 1 or 2.
Flat Washers	ANSI B18.22.1; of the same material as anchor bolts and nuts.

Expansion Anchors in Concrete	Products shall be single component anchors tested in accordance with ICC AC193, and shall have an ICC ES report in compliance with the applicable building code. The anchors shall be approved for use in cracked concrete, and for resisting seismic forces. Hilti "Kwik-Bolt TZ", Powers Fasteners “Power-Stud+SD2”, Simpson “Strongbolt 2”.
Expansion Anchors in Grouted Masonry	Products shall be single component anchors tested in accordance with ICC AC01, and shall have an ICC ES report in compliance with the applicable building code. Hilti “Kwik-Bolt 3”, Simpson “Wedge-All”, Powers Fasteners “Power-Stud+ SD1”.
Undercut Anchors in Concrete	Products shall be tested in accordance with ICC AC193, and shall have an ICC ES report in compliance with the applicable building code. Hilti “HDA Undercut Anchor”, Powers Fasteners “Atomic+ Undercut Anchor”, Simpson “Torq-Cut Anchor”.
Adhesive Anchors in Concrete	Products shall be tested in accordance with ICC AC308, and shall have an ICC ES report in compliance with the applicable building code. The anchors shall be approved for use in cracked concrete, and for resisting seismic forces.
Threaded Rods and Nuts	As recommended by the adhesive manufacturer; materials as indicated on the Drawings or in this specification.
Reinforcing Bars	ASTM A615, Grade 60, deformed.
Reinforcing Bars, weldable	ASTM A706, Grade 60, deformed.
Adhesive	Hilti “HIT-HY 200", Powers Fasteners “PE1000+”, Simpson “Set-XP”.

Adhesive Anchors in Grouted Masonry	Products shall be tested in accordance with ICC AC58, and shall have an ICC ES report in compliance with the applicable building code.
Threaded Rods and Nuts	As recommended by the adhesive manufacturer; materials as indicated on the Drawings or in this specification.
Adhesive	Hilti "HIT HY 150 MAX", Simpson “SET Epoxy”.
Adhesive Anchors in Hollow Masonry	Products shall be tested in accordance with ICC AC58, and shall have an ICC ES report in compliance with the applicable building code.
Threaded Rods and Nuts	As recommended by the adhesive manufacturer; materials as indicated on the Drawings or in this specification.
Adhesive	Simpson “SET Epoxy”.
Screen Tubes	As recommended by the manufacturer.
Adhesive Anchors in Unreinforced Brick Masonry	Products shall be tested in accordance with ICC AC60, and shall have an ICC ES report in compliance with the applicable building code.
Threaded Rods and Nuts	As recommended by the adhesive manufacturer; materials as indicated on the Drawings or in this specification.
Adhesive	Hilti “HIT HY 70”, Simpson “SET Epoxy”.
Screen Tubes	As recommended by the manufacturer.

2-2. ANCHORS.

2-2.01. Cast-in-Place Anchor Bolts and Anchor Rods. Cast-in-place anchor bolts and anchor rods shall be delivered in time to permit setting before the structural concrete is placed. Anchor sleeves shall not be used unless acceptable to Engineer. Unless installed in sleeves, anchor bolts and anchor rods shall be provided with sufficient threads to permit a nut to be installed on the

concrete side of the concrete form or the supporting template. Two nuts, a jam nut, and a washer shall be furnished for cast-in-place anchor bolts and anchor rods indicated on the Drawings to have locknuts; two nuts and a washer shall be furnished for cast-in-place anchor bolts and anchor rods without locknuts.

2-2.02. Adhesive, Expansion, and Undercut Anchors. When adhesive, expansion, or undercut anchors are indicated on the Drawings, only acceptable systems shall be used. Acceptable systems shall include only those systems and products specified or specifically indicated by product name on the Drawings. Alternative anchoring systems may be used only when specifically accepted by Engineer.

Unless otherwise required, single nuts and washers shall be furnished for adhesive anchors, expansion anchors, and undercut anchors. Adhesive anchors shall be free of coatings that would weaken the bond with the adhesive.

Adhesive anchors in hollow CMU masonry and unreinforced brick masonry shall utilize screen tubes as recommended by the manufacturer.

PART 3 - EXECUTION

3-1. GENERAL. Anti-seize thread lubricant shall be liberally applied to projecting, threaded portions of stainless steel anchors immediately before tightening of the nuts.

3-1.01. Compliance With Manufacturer's Instructions. Post-installed anchors shall be installed in accordance with the manufacturer's printed installation instructions and all applicable requirements of the ICC-ES report for the specific anchor system. If conflicts are found between the Drawings, the manufacturer's printed installation instructions, and the ICC-ES report installation requirements, Contractor shall notify Engineer for resolution.

3-1.02. Special Inspection. Not used.

3-2. CAST-IN-PLACE ANCHOR BOLTS AND ANCHOR RODS. Cast-in-place anchor bolts and anchor rods shall be carefully positioned with templates and secured in the forms prior to placing concrete. Contractor shall verify that anchorage devices are positioned in accordance with the Drawings and with applicable equipment or structure submittal drawings.

Threads, bolts, and nuts spattered with concrete during placement shall be cleaned prior to final installation of the bolts and nuts.

Sleeves shall be filled with non-shrink grout.

3-3. ADHESIVE ANCHORS. Adhesive shall be statically mixed in the field during application. All proportioning and mixing of the components shall be in accordance with the manufacturer's recommendations.

Anchors or bars shall be installed in holes hammer drilled into hardened concrete or masonry. Diameter of holes shall be 1/16 inch [1.5 mm] larger than the outside diameter of the rod or bar unless recommended otherwise by the anchor system manufacturer. Holes shall be prepared by removing all dust and debris using procedures recommended by the adhesive manufacturer.

Adhesive anchors and holes shall be clean, dry, and free of grease and other foreign matter at the time of installation. The adhesive shall be placed and the rods or bars shall be set in accordance with the recommendations of the manufacturer. Care shall be taken to ensure that all spaces and cavities are filled with adhesive, without voids.

Reinforcing bars anchored into concrete shall be embedded to a depth that will develop the full tensile strength of the bar, unless indicated otherwise on the Drawings.

Adhesive anchors in concrete shall be installed under the following conditions.

Minimum Age of Concrete Prior to Anchor Installation	21 days.
Concrete Temperature Range	Maximum short-term temperature 162 F [72 C], maximum long-term temperature 110 F [43 C]
Moisture Condition	Dry concrete.
Type of Lightweight Concrete	N/A
Hole Drilling and Preparation	Hammer drill only.

Installation of adhesive anchors into concrete that are either horizontal or upwardly inclined shall be performed only by personnel certified by the ACI/CRSI Adhesive Anchor Installation Certification Program.

3-4. EXPANSION AND UNDERCUT ANCHORS. Expansion and undercut anchors shall be installed using all procedures and accessory devices recommended by the anchor manufacturer.

End of Section

Section 05990

STRUCTURAL AND MISCELLANEOUS METALS

PART 1 - GENERAL

1-1. SCOPE. This section covers the fabrication and erection of structural and miscellaneous metal items not covered in other sections. The following products shall be provided:

Filter Wash Water Troughs	
Number of filters.	10
Number of troughs per filter.	6 (filters 1-4), 8 (filters 5-10)
Stop Plates and Grooves.	
Size and quantity.	See Drawings
Weir Plates and Media Retention Baffles.	
Size and quantity.	See Drawings

Except as otherwise specified or indicated on the Drawings, all work shall conform to the applicable provisions of the AISC "Steel Construction Manual" (13th edition) with the exception of the "Code of Standard Practice for Steel Buildings and Bridges"; and the Aluminum Association "Specification for Aluminum Structures".

Special inspection during the fabrication and erection of structural steel, if required by the local building code, is addressed in the Quality Control section (01400).

Both inch-pound (English) and SI (metric) units of measurement are specified herein; the values expressed in inch-pound units shall govern.

1-2. SUBMITTALS. Complete data, fabrication drawings, and setting or erection drawings covering all structural and miscellaneous metal items shall be submitted in accordance with the Submittals Procedures section (01300).

All bolted connections and welds shall be properly identified on the shop drawings. Welding procedures, welding procedure qualification records and welder qualifications shall be submitted.

Submittals for high strength bolts, tension control bolts and load indicator washers shall include statements from the bolt and washer manufacturers

certifying satisfactory compliance with the governing standards and the specified tests.

1-3. DELIVERY, STORAGE, AND HANDLING. Materials shall be handled, transported, and delivered in a manner which will prevent bends, dents, significant coating damage, or corrosion. Damaged materials shall be promptly replaced. Structural and miscellaneous metal work shall be stored on blocking so that no metal touches the ground and water cannot collect thereon. The material shall be protected against bending under its own weight or superimposed loads.

Bolting materials shall be stored indoors. Weld rod shall be stored in accordance with the supplier's instructions and AWS D1.1.

1-4. FABRICATOR QUALIFICATION. All fabricating plants providing structural steel shall be qualified fabricators who participate in the AISC Certification program and are designated an AISC Certified Plant, Category STD.

Plant certification is not required for fabrication of miscellaneous metal which does not meet the AISC definition for structural steel found in the AISC "Steel Construction Manual" (13th edition), Part 16.

PART 2 - PRODUCTS

2-1. GENERAL. All structural steel shall be detailed and fabricated to facilitate compliance with OSHA 29 CFR Part 1926 subpart R and all other pertinent OSHA and local safety regulations.

All field connection materials shall be furnished.

2-2. MATERIALS.

Steel

Shapes (W, WT)	ASTM A992.
Shapes (S, M, HP, C)	ASTM A36 or ASTM A572 Grade 50.
Other Shapes (angles)	ASTM A36.
Plates and Bars	ASTM A36.
Sheets	ASTM A1008 CS Type B or A1011 CS Type B.

Pipe	ASTM A53, Type E or S, Grade B (F_y = 35 ksi).
Round Structural Tubing	ASTM A500, Grade B (F_y = 42 ksi).
Square and Rectangular Structural Tubing	ASTM A500, Grade B (F_y = 46 ksi).
Checkered Plate	ASTM A786, carbon steel, skid resistant pattern as standard with the manufacturer; Inland “4-way Floor Plate” or U.S. Steel “Multigrip Floor Plate”.
Bolts and Nuts	
Bolts, High Strength	ASTM A325, Type 1; tested in accordance with Article 9.2 thereof.
Bolts, Tension Control Type (Twist off)	ASTM F1852. Equivalent to ASTM A325.
Bolts, unfinished	ASTM A307.
Nuts, Heavy-Hex	ASTM A563, grade and finish compatible with bolts.
Nuts, Self-Locking	Prevailing torque type; IFI-100, Grade A.
Washers	
Flat, Hardened	ASTM F436, Type 1.
Lock	ANSI/ASME B18.21.1, helical spring type.
Beveled	ASTM F436.
Load Indicator	ASTM F959, compressible-washer-type direct tension indicator; type compatible with bolts tested in accordance with Article 10.2 of ASTM F959.

Threaded Rods (Including Hanger Rods for Pipe Supports)	ASTM A36. Threaded rods shall have sufficient threading to permit the maximum adjustment available. Continuously threaded rod is not acceptable for rods over 12 inches [300 mm] in length.
Forged Steel Clevises and Turnbuckles	AISI C-1035.
Forged Steel Eyebolts and Eyenuts	AISI C-1030, ANSI B 18.15 Type 2 shoulder pattern unless otherwise required.
Forged Steel Sleeve Nuts	AISI C-1018, Grade 2.
Stainless Steel	
Shapes	ASTM A1069 or A276, Type 316L.
Plates	ASTM A240, Type 316L.
Pipe	ASTM A312, Grade TP316L.
Tube	ASTM A269, Grade TP316L.
Checkered Plate	ASTM A793, Type 316L, raised pattern A.
Bolts	ASTM F593, Alloy Group 1 or 2, minimum yield strength of 45 ksi.
Nuts	ASTM F594, Alloy Group shall match that of the bolts. Nuts shall have a minimum proof stress equal to or greater than the minimum full-size tensile strength of the bolts.
Washers	
Flat	ANSI/ASME B18.22.1, Type 316.
Lock	ANSI/ASME B18.21.1, helical spring type, Type 316.
Threaded Rods (Including Hanger Rods for Pipe Supports)	ASTM A593, Alloy Group 1 or 2, minimum yield strength of 45 ksi.

Cast Iron	ASTM A48, Class 35B or better.
Aluminum	
Sheet and Plate	ASTM B209, Alloy 6061-T6.
Rolled Sections	ASTM B308, Alloy 6061-T6. All members shall be Aluminum Association standard shapes.
Rod and Bar (Rolled or Drawn)	ASTM B211, Alloy 6061-T6 or 2017-T4.
Extrusions	ASTM B221, Alloy 6063-T5 or T6.
Pipe	ASTM B429, Alloy 6061-T6.
Rivets	ASTM B316, Alloy 6061-T6.
Bolts, Aluminum	ASTM F468, Alloy 2024-T4.
Nuts, Aluminum	ASTM F467, Alloy 6061-T6.
Washers, Aluminum	
Flat	ANSI/ASME B18.22.1, Type 6061 T-6.
Lock	ANSI/ASME B18.21.1, helical spring type, Type 6061-T6.
Castings	ASTM B26 or B85.
Checkered Plate	ASTM B632, Type 6061-T6.
Brass or Bronze	
Plate and Strip	ASTM B36.
Casting	ASTM B61 or B584.
Bolts and Nuts	IFI-104, Grade 462 or 464.
Washers	
Flat	ANSI/ASME B18.22.1.

Lock	ANSI/ASME B18.21.1, helical spring type.
Silicon Bronze	
Sheet and Plate	ASTM B96, American Brass "Everdur 1010".
Castings	ASTM B584, American Brass "Everdur 1000".
Bolts and Nuts	IFI-104, Grade 655.
Washers	
Flat	ANSI B18.22.1.
Lock	ANSI/ASME B18.21.1, helical spring type.
Weld Metal (Steel Connections)	ANSI/AWS D1.1, Table 3.1, filler metal with minimum 70 ksi [482 MPa] tensile strength unless otherwise required.
Welded Headed Studs, Concrete Anchors, and Shear Connectors	ASTM A108 with a minimum 50,000 psi [344 MPa] yield strength and minimum 60,000 psi [413 MPa] tensile strength. TRW/Nelson or equal.
Deformed Bar Anchors (DBA)	ASTM A496 with a minimum 70,000 psi [482 MPa] yield strength and minimum 80,000 psi [551 MPa] tensile strength. TRW/Nelson division or equal.
Rails	
Crane	ASTM A1.
Railroad	ASTM A1.
Bird Screen	2 mesh [12 mm square openings], brass or copper wire cloth, min wire dia 0.063 inch [1.6 mm].

Body Solder	Flux-core wire, ASTM B32, Alloy Grade 20B.
Shop Coatings	
Universal Primer	As indicated in protective coatings section (722S).
Epoxy Enamel	As indicated in protective coatings section (722S).
Galvanizing	ASTM A123, A153, A385, and F2329 as applicable.

2-3. FABRICATIONS. The following fabrications shall be constructed as indicated on the Drawings and as specified herein.

2-3.01. Stairs. Stairs shall be fabricated to the dimensions, arrangements and sizes indicated on the Drawings. Stairs shall be true to line and slope, shall be rigidly supported, and shall be braced and tightened to prevent movement. All treads shall be level and in perfect alignment and spacing. Handrails shall be in alignment and rigidly connected.

After installation, stairs shall be rigid and shall not sway noticeably or deflect under foot traffic. If necessary to prevent noticeable movement, additional supports or bracing shall be provided.

2-3.01.01. Stair Design. Stairs shall be designed by the stair supplier in general accordance with details indicated on the Drawings. The design shall comply with all applicable provisions of the local building code, ANSI A117.1, and OSHA as applicable. The drawings shall be sealed by a professional engineer registered in the state of the project. If requested, calculations shall be submitted to Engineer.

The completed fabrications shall support a uniform live load of 100 lbs per square foot [5 kPa] and a concentrated load of 300 lbs [1.3 kN] applied at the center of the span. Individual treads and platforms shall be designed to support a uniform live load of 100 lbs per square foot [5 kPa] or a 300 lb [1.3 kN] concentrated live load applied on an area of 4 square inches [2580 mm^2]. Vertical deflections under full live load shall be limited to span/240. Stairs and landings shall be braced or otherwise designed to avoid noticeable sidesway.

The stair design and details shall be coordinated with the handrailing and guardrailing supplied. Stair members shall be adequate to accept loads from the rail posts based upon the criteria in the Handrailing, Guardrailing, and Ladders section (05520).

Connections between the stair members and the supporting structure shall be adequate to transfer all loadings, and shall be designed in accordance with all applicable provisions of the AISC manual and ACI 318 Appendix D. The number and type of connections shall comply, at a minimum, with the Drawings. All necessary brackets, bolts, and anchors shall be provided.

2-3.01.02. Nosings. All stair treads shall have non-skid nosings, either fabricated integrally with the tread or attached with stainless steel bolts and self-locking nuts.

2-3.01.03. Grating Stairs. Treads shall be fabricated from grating material in accordance with the grating section.

2-3.01.04. Pan Type Stairs. Risers and subtreads shall be fabricated from 12 USS gage [2.66 mm] steel and subplatforms from 10 USS gage [3.42 mm] steel. Fill depth shall be 2 inches [50 mm] for treads and 3 inches [75 mm] for platforms. Each riser shall have an integral non-slip nosing and a formed sanitary cove, located so that the toe of the cove will be at the surface of the concrete fill or applied finish.

2-3.01.05. Cast Aluminum Stairs. Risers and subtreads shall be fabricated from cast aluminum as indicated on the details on the Drawings.

2-3.02. Checkered Floor Plates. Checkered floor plates shall be painted steel unless specifically designated on the Drawings as galvanized steel, stainless steel or aluminum. Shop welded stiffeners or grating backup shall be provided as indicated on the Drawings. Stiffeners and grating backup shall be of the same material as the checkered plate.

Checkered floor plates which are indicated to be removable shall be detailed and fabricated in sections which weigh no more than 150 lb (667 N), and shall be provided with lifting holes to facilitate removal. Warped or bent plates shall be straightened so they will lie perfectly flat.

Checkered floor plates shall be secured to structural shapes or grating using 3/8 inch [9 mm] stainless steel slotted flathead machine screws at 12 inch [300 mm] centers, Lindapter “Floor-Fast” stepped locking fasteners or as indicated on the Drawings. Connection devices shall not protrude above the plate surface. Access holes shall be provided in the plate if required to allow access to grating hold-down devices beneath the plate.

2-3.03. Stop Plates and Grooves. Stop plates shall be fabricated with the edges accurately finished. Plates shall be provided with suitable lifting handles and angle stiffeners as indicated on the Drawings. Each stop plate shall be permanently marked to identify its intended location.

Stop plate grooves shall be cast iron Neenah “Series R-7501” with all interior surfaces machined.

Stop plate grooves shall be installed plumb and straight within a tolerance of 3/32 inch [2.3 mm] and with the opposite sides and bottom aligned in a single plane to prevent binding of the stop plate. If necessary to meet this requirement, a space shall be boxed out for guides, and the guides grouted in place later. Stop plates shall be set in place as needed for testing and startup procedures.

2-3.04. Basin Effluent Launders. Basin effluent launders shall be fabricated in accordance with the details indicated on the Drawings. Effluent launder sections shall be fabricated by bending a single plate or by welding flat plates. If welding is used, welds shall be continuous. All joints in effluent launders shall be watertight. Orifices shall be accurately drilled at the spacing and of the size indicated on the Drawings. Weir plates on effluent launders shall be vertically adjustable at least 2 inches [50 mm].

All surfaces of the effluent launders shall be cleaned and finished in accordance with the Protective Coatings section (722S) of the Specifications. Launderer weir plates, supports, and bracing shall be fabricated and finished from the same material used for the launderers.

Weir plates shall not be installed until after field painting of the effluent launders has been completed. Before installation of the weir plates, contact surfaces between weir plates and launders shall be given a heavy coat of sealant as specified in the caulking section (07900).

2-3.05. Basin Weir Plates. Basin weir plates shall be fabricated to dimensions indicated on the Drawings, with top surface cut to shape. The top edge of each weir plate shall be straight within 1/8 inch [3 mm]. Particular care shall be taken in cutting operations. Burrs or irregularities on cut edges shall be removed by grinding. Carbon steel weir plates shall be hot dip galvanized after fabrication. Before installation, surfaces in contact with concrete shall be given a heavy coating of sealant as specified in the caulking section (07900). Weir plates shall be adjusted after installation to provide uniform overflow rate at all points.

2-3.06. Scum Baffles. Scum baffles shall be fabricated in accordance with the details indicated on the Drawings. Carbon steel scum baffles, scum baffle supports, and bracing shall be hot-dip galvanized after fabrication.

2-3.07. Metering Weirs. Metering weir plates shall be fabricated to the dimensions indicated on the Drawings. Top edges and sides shall be machined and shall have sharp corners. Carbon steel metering weir plates shall be hot-dip galvanized after fabrication.

2-3.08. Bar Screens. Bar screens shall be fabricated from bars and shapes in accordance with the details indicated on the Drawings. Carbon steel bar screens shall be hot-dip galvanized after fabrication.

2-3.09. Lime Troughs. Troughs shall be provided to convey lime slurry as indicated on the Drawings. The location and length of drop pipes from the end of the troughs into the basins shall be coordinated with the basin equipment manufacturer. The troughs shall be sloped uniformly as indicated and shall be adequately supported.

2-3.10. Runway Beams. Steel beams used as underhung crane or hoist runways shall be straight and level. The upper surface of the lower flange of each beam shall be smooth, with all projections ground off. Joints shall be close-fitting and free from unevenness. The beams shall be rigidly supported in exact alignment. A section of each runway beam shall not be installed until after the crane or hoist has been installed.

Stops as recommended by the crane or hoist manufacturer shall be bolted in place on each end of each runway beam to limit the travel of the crane or hoist. Stops shall be so located that the crane or hoist does not come into contact with any part of the structure or piping. If the crane or hoist is required to be powered, at the power feed end of the runway the stops shall be designed so that the cable trolleys will pass beneath the stops. The stops shall be so located that there is sufficient room on the runway for storage of the cable trolleys beyond the stops. Secondary stops shall be provided for the cable trolleys.

2-3.11. Crane Rails. Rails on which a traveling, top running crane is to travel shall be furnished complete with clamps or hook bolts, splice plates, stops, anchor bolts and nuts, and other accessories necessary to complete the installation indicated on the Drawings. Crane rails shall be installed level and in accurate alignment and shall form a continuous, smooth track.

2-3.12. Structural Steel Bolted Connections. Bolt holes shall have a diameter nominally 1/16 inch [1.5 mm] larger than the nominal bolt diameter. Bolt holes for one ply of vertical diagonal bracing connections may be oversized to a diameter nominally 3/16 inch [5 mm] larger than the nominal bolt diameter.

2-3.13 Filter Wash Water Troughs. Wash water troughs with media retention baffles shall be provided for existing filters. The number of filters and the number of troughs per filter shall be as indicated on the Drawings.

Wash water trough sections shall be stainless steel fabricated by bending a single plate or by welding flat plates. If welding is used, welds shall be continuous. All joints in wash water troughs shall be watertight. Weir plates on effluent launders shall be vertically adjustable at least 2 inches [50 mm].

All surfaces of the wash water troughs shall be cleaned and finished in accordance with the Protective Coatings section (722S) of the Specifications. Trough weir plates, supports, and bracing shall be fabricated and finished from the same material used for the troughs.

Weir plates shall not be installed until after field painting of the effluent launders has been completed. Before installation of the weir plates, contact surfaces between weir plates and launders shall be given a heavy coat of sealant as specified in the caulking section (07900).

2-3.13.01 Design Conditions. Each trough shall be designed for the following conditions.
Filters 1-4:

Flow per trough.	10	cfs
Minimum cross sectional area.	756	in^2
Overall length.	30	ft
Maximum upward or downward deflection.	.15	in

Filters 5-10:

Flow per trough.	7	cfs
Minimum cross sectional area.	576	in^2
Overall length.	17	ft
Maximum upward or downward deflection.	.15	in

The filter wash water troughs shall be "U" shaped and shall be reinforced to withstand all applied water loadings.

Upward deflection shall be determined with the trough empty and the filter box filled with water to where overflowing begins. Downward deflection shall be determined with the trough filled with water and the filter box empty.

2-3.13.02 Proof-of-Design Test. .Before the wash water troughs are manufactured, the design shall be verified by a test conducted on a representative trough. The tested trough need not have been manufactured for this project but shall have been made from materials of the same type and quality and shall be of the same size and design. The trough shall be subjected to loads equivalent to 1-1/2 times the design loads and shall not be permanently deformed.

2-3.14 Weir Plates And Media Retention Baffles. Weir plates, media retention baffles, and support brackets shall be stainless steel, manufactured by the wash water trough manufacturer, or approved equal. Weir plates, media retention baffles, and support brackets shall be 1/4 inch [6 mm] thick and shall be

fabricated to the shape indicated on the Drawings. The top edge of each plate shall be straight within 1/32 inch [0.8 mm].

Each weir plate and media retention baffle shall be designed so that at least 2 inches [50 mm] of horizontal and vertical adjustment is provided. Splice plates, or equivalent, shall be provided to secure the ends of the weir plates. Splice plates, or equivalent, shall be designed to accommodate expansion and contraction.

Contractor shall coordinate the weir plates, media retention baffles, and support brackets with all perimeter guardrails, guardrail support brackets, launder covers, and launder cover support brackets that are supplied by others.

2-4. SHOP COATING. All structural and miscellaneous metal items shall be shop coated as specified herein. The requirements for field painting are covered in the protective coatings section (722S).

Contact surfaces of structural steel slip critical bolted connections shall not be shop coated. Contact surfaces of structural steel bearing type bolted connections may be shop coated.

2-4.01. Cleaning. Surfaces shall be dry and of proper temperature when coated, and shall be free of grease, oil, dirt, dust, grit, rust, loose mill scale, weld flux, slag, weld spatter, and other objectionable substances. Articles to be galvanized shall be pickled before galvanizing. All other ferrous metal surfaces shall be cleaned by solvent, high-speed power wire brushing or by blasting to the extent recommended by the paint manufacturer and as required in the protective coatings section (722S).

2-4.02. Edge Grinding. Sharp projections of cut or sheared edges of ferrous metals which will be submerged in operation, except for items specified to be hot-dip galvanized, shall be ground to a radius as needed to ensure satisfactory paint adherence and as required in the protective coatings section (722S).

2-4.03. Prime Painted Steel. Unless otherwise specified or indicated on the Drawings, all ungalvanized structural and miscellaneous steel shall be given a universal prime coat in the shop after fabrication. The dry film thickness of the universal primer shall be at least 5 mils [125 µm]. Steel surfaces shall be prime-coated as soon as practicable after cleaning. Steel shall not be moved or handled until the shop coat is dry and hard.

2-4.04. Galvanizing. Steel materials required to be galvanized are indicated on the Drawings. All galvanizing shall be done by the hot-dip process after fabrication. An approved zinc-rich paint shall be used to touch up minor coating damage. Materials with significant coating damage shall be regalvanized or replaced.

Bolts, nuts, and washers shall be galvanized when connected materials are galvanized or where indicated on the Drawings. The use of zinc-plated bolts will not be acceptable.

2-4.05. Stainless Steel. Unless otherwise specified, all items fabricated from stainless steel shall be thoroughly cleaned and degreased after fabrication. Pickling or a light blast cleaning shall produce a modest etch and remove all embedded iron and heat tint. Surfaces shall be subjected to a 24 hour water test or a ferroxyl test to detect the presence of residual embedded iron and shall be retreated as needed to remove all traces of iron contamination. Surfaces shall be adequately protected during shipping and handling to prevent contact with iron or steel objects or surfaces.

2-4.06. Aluminum. All surfaces of aluminum which will be in contact with concrete, mortar, or dissimilar metals shall be given a coat of epoxy enamel.

2-4.07. Castings. Shop coating of miscellaneous iron castings will not be required.

2-4.08. Other Surfaces. Painting of zinc coated steel or bronze surfaces will not be required.

PART 3 - EXECUTION

3-1. STRUCTURAL STEEL ERECTION. Structural steel shall be erected so that individual pieces are plumb, level, and aligned within a tolerance of 1:500. The elevations of the top of floor and roof members shall be within 1/16 inch [1.5 mm] of the elevations indicated on the Drawings. The faces of girts and other supporting members for rigid wall panels shall be in vertical planes within a maximum variation of 1/8 inch [3 mm].

All members and parts, as erected, shall be free of warps, local deformations, and unauthorized bends. All parts shall be assembled accurately as indicated on the Drawings. Light drifting will be permitted to draw parts together, but drifting to match unfair holes will not be permitted. Any enlargement of holes necessary to make connections in the field shall be done by reaming with twist drills and only with the approval of Engineer. Enlarging holes by burning will not be permitted.

Baseplates shall be set level in exact position and grouted in place.

All materials shall be erected in compliance with OSHA 29 CFR, Part 1926, Subpart R, and with all other applicable OSHA and local safety regulations.

3-1.01. Inspection and Testing. Special inspection will be performed in accordance with the applicable building code. The erector shall provide access

as needed to facilitate all inspections and shall provide timely notification during erection when inspection milestones are approaching.

3-2. STRUCTURAL STEEL BOLTED CONNECTIONS. Unless otherwise indicated on the Drawings, bolted connections for structural steel, as defined in the AISC manual, shall be made with ASTM A325 high strength bolts conforming to the "Specification for Structural Joints Using ASTM A325 or A490 Bolts" as approved by the Research Council on Structural Connections. The method of installation, pretensioning procedures, bolting equipment and tools shall likewise conform to the above referenced standard.

When assembled, all joint surfaces, including those adjacent to the bolt heads, nuts, or washers, shall be free of loose mill scale, dirt, burrs, oil, and other foreign material that would prevent solid seating of the parts.

Beveled washers shall be used when the bearing faces of bolted parts have a slope of 1:20 or greater with respect to a plane perpendicular to the bolt axis. Bolt length shall be increased as needed to accommodate the beveled washers.

If oversized holes are provided in an outer ply, a hardened flat washer shall be installed over each hole during bolting. Load indicator washers shall not be substituted for hardened flat washers required for oversized holes.

Tightening of each connection assembly shall progress systematically from the most rigid part of the joint toward the free edges until all have been sufficiently rotated or the load indicator washers on all bolts have been closed to the average gap stipulated by the load indicator washer manufacturer.

Bolts in all structural steel connections, both bearing and slip critical, shall be fully pretensioned in accordance with the AISC standards unless specifically noted otherwise on the Drawings. The calibrated wrench method of pretensioning bolts will not be acceptable. Acceptable pretensioning methods are as follows:

Connection Type	Acceptable Pretensioning Method
Bearing	Turn of the nut method and load-indicator washers are acceptable. Tension control (twist-off) type bolts may be used only if approved by Engineer.
Slip-Critical	Load indicator washers.

3-2.01. Turn of the Nut Method. The bolt, nut, and material shall be match marked. A wax lumber marker or paint shall be used to clearly mark the assembly.

3-2.02. Load-Indicator Washers. Load indicator washers shall be installed in accordance with the manufacturer's recommendations, as supplemented herein.

To facilitate proper tightening of fastener assemblies with load indicator washers, a hardened flat washer shall be installed under the turned element (bolt head or nut) and between the turned element and the load indicator washer protrusions, in all cases. Whenever possible, the load indicator washer shall be installed on the head end of the bolt. If the bolt head will not be visible for inspection of the indicator washer after installation, or if the bolt head must be turned to tighten the assembly, the load indicator washer may be installed on the nut end of the bolt.

3-2.03. Tension Control (Twist-off) Bolts. Patented tension control bolts shall be of equivalent size and strength to the indicated high strength bolts, and shall be installed in strict accordance with the manufacturer's instructions. Load-indicator washers are not required on tension control bolts.

3-3. MISCELLANEOUS STEEL BOLTED CONNECTIONS. Connections for miscellaneous steel fabrications not included in the AISC definition of structural steel may be made with unfinished bolts unless indicated otherwise on the Drawings. Unless otherwise indicated on the Drawings all unfinished bolts shall be snug tight.

3-4. STRUCTURAL, STAINLESS, AND MISCELLANEOUS STEEL WELDING. Welding and related operations shall conform to applicable provisions of AWS D1.1 for steel and AWS D1.6 for stainless steel. All welding shall be performed in accordance with written procedures, using only those joint details which have prequalified status. All welding shall be performed by welders qualified in accordance with the American Welding Society.

All welds shall be visually inspected in accordance with AWS procedures.

Welds not dimensioned on the Drawings shall be sized to develop the full strength of the least strength component of the connection.

Where structural or miscellaneous steel connections are welded, all butt and miter welds shall be continuous and, where exposed to view, shall be ground smooth. Intermittent welds shall have an effective length of at least 2 inches [50 mm] and shall be spaced not more than 6 inches [150 mm] apart.

Surfaces to be welded and surfaces within 2 inches [50 mm] of a weld shall be free from loose or thick scale, slag, rust, moisture, grease, paint and other foreign materials that would prevent proper welding or release objectionable fumes.

Only shielded metal arc, gas metal arc, flux cored arc, submerged arc, and gas tungsten arc welding are permitted. For flux cored arc welding, only E70xx one (1) or five (5) wire electrodes with supplemental gas shielding shall be permitted. Use of electroslag or electrogas welding processes or the short-circuiting transfer mode of the gas metal arc process will not be acceptable.

Field welded connections shall not be substituted for field bolted connections indicated on the Drawings.

Deformed bar anchors, headed studs, concrete anchors and shear connectors shall be welded with an automatic stud welding gun per the manufacturer's recommendation. Hand welding will not be acceptable.

3-5. STRUCTURAL AND MISCELLANEOUS ALUMINUM. Unless otherwise noted, all work shall conform to applicable provisions of the Aluminum Association "Specification for Aluminum Structures".

3-5.01. Connections. Connections not specifically detailed on the Drawings shall develop the full strength of the least strength member of the connections. Bolted connections shall be all-bolted bearing type, equipped with a helical spring lock washer under the stationary element (bolt head or nut) and a flat washer under the turned element. All bolts shall be fully tightened. Bolts and nuts for structural aluminum connections shall be stainless steel. Bolts and nuts for nonstructural miscellaneous aluminum assemblies shall be stainless steel or aluminum. A sufficient number of bolts shall be provided in each connection to develop the shear strength of the member.

Welded connections shall be made in accordance with the American Welding Society D1.2, Structural Welding Code - Aluminum. All welding shall be performed by welders qualified in accordance with American Welding Society. Welds shall be free of porosity, cracks, holes, and flux. Welded connections shall not be substituted for bolted connections without prior approval of Engineer.

3-5.02. Erection. Structural aluminum shall be erected so that individual pieces are plumb, level, and aligned within a tolerance of 1:500. The elevation of horizontal members shall be within 1/16 inch [1.5 mm] of the elevation indicated on the Drawings.

Baseplates shall be set level in exact position and grouted in place.

End of Section

Section 06100

ROUGH CARPENTRY

PART 1 - GENERAL

1-1. SCOPE. This section covers miscellaneous items required by the Drawings to be of wood construction. Rough carpentry shall include:

a. Wood nailers and blocking.

b. Fasteners.

c. Exterior sheathing.

1-2. SUBMITTALS. Drawings and data for rough carpentry and field fabricated items will not be required.

1-3. PROTECTION AND STORAGE. Lumber shall be protected and kept under cover, both in transit and at jobsite. Lumber shall be carefully stacked on suitable supports in a manner which will ensure proper ventilation and drainage.

All lumber shall be delivered to the jobsite bearing grade stamps of the Western Wood Products Association or Southern Pine Inspection Bureau. All lumber shall be segregated by grades. Extreme care shall be exercised in unloading the lumber to prevent damage, splitting, or breaking of materials.

All plywood shall be identified according to species, grade, and glue type by the stamp of the American Plywood Association.

PART 2 - PRODUCTS

2-1. MATERIALS.

Lumber	American Standard Lumber conforming to PS20, moisture content 19 percent or less; sized dry.

Pressure Treated	Southern pine, pressure treated with waterborne preservative (alkaline copper quaternary ammonium) in accordance with AWPA C1 and AWPA P5.
Exterior Sheathing - Plywood	
General Purpose	PS1, waterproof, formaldehyde-free resin-bonded, exterior type; APA Group 1, Grade Ext-BB, or better unless otherwise specified.
Bolts and Nuts	ASTM A307, galvanized ASTM A153, Type NS, or zinc-plated ASTM B633, SC-4.
Wood Screws	18-8 stainless steel or brass.
Self-tapping Steel Screws	Length and size as required by code.
Nails	Galvanized or aluminum coated.

PART 3 - EXECUTION

3-1. ROUGH CARPENTRY. Rough carpentry shall include lumber work generally, except finish work.

The Contractor shall install all blocking and nailers as indicated on the Drawings or required to complete a finished building. In addition, nailers, blocking, and other backing required for other work and trades shall be installed.

At all times during execution of this portion of the Contract, sufficient workmen and supervisors shall be present who are thoroughly familiar with rough carpentry construction and the materials and techniques specified or indicated on the Drawings.

All rough carpentry shall produce joints true, tight, and well nailed, with all members assembled in accordance with the Drawings and with all pertinent codes and regulations.

Individual pieces of lumber shall be selected so that obvious defects will not interfere with the placement of bolts, proper nailing or making of joints. All pieces with defects that render them unusable shall be discarded. Individual pieces of lumber that are too small to use in fabricating the Work with minimum joints shall be discarded.

Whether or not lumber has been installed, it may be rejected by the Engineer for excessive splits, warp, twist, bow, crook, mildew, or fungus, as well as for improper cutting and fitting.

Carpentry work shall be set to required levels and lines, with members plumb and true.

Carpentry shall be securely attached to substrates by anchoring and fastening as indicated and as required for strength and by recognized standards.

The premises shall be kept in a neat, safe, and orderly condition at all times during the execution of this portion of the Work and shall be free from accumulation of sawdust, cut ends, and other debris.

Connections between members shall be tight. Washers shall be provided under all bolt heads and nuts in contact with lumber. Installation of fasteners shall not cause splitting of wood.

Lumber in contact with concrete, masonry, earth, or water; and all wood nailers shall be pressure treated unless otherwise specified.

Nailers shall be provided where indicated on the Drawings. The nailers shall be continuous and shall be installed level and straight. Each section of nailer shall be secured by at least two anchor bolts.

End of Section

Section 06600

FIBERGLASS REINFORCED PLASTIC FABRICATIONS

PART 1 - GENERAL

1-1. SCOPE. This section covers the furnishing and installation of fiberglass reinforced plastic fabrications. The following products shall be provided:

Filter Wash Water Troughs	
Number of filters.	10
Number of troughs per filter.	6 (filters 1-4), 8 (filters 5-10)
Weir Plates and Media Retention Baffles	
Size and quantity.	See Drawings

1-2. GENERAL. The items furnished under this section shall be the products of a manufacturer regularly involved in the design, fabrication, and supply of fiberglass reinforced plastic fabrications of the type specified in this section and which has a record of successful service for at least 5 years.

1-3. SUBMITTALS. Complete drawings, details, and specifications covering the fiberglass reinforced plastic fabrications shall be submitted in accordance with the Submittals section (01300).

PART 2 - PRODUCTS

2-1. BASIC MATERIALS.

Plastic Laminate	Polyester or other suitable plastic reinforced with fiberglass.
Tensile Strength at Break	12,000 psi [83 MPa] minimum, ASTM D638.
Flexural Strength	19,000 psi [131 MPa] minimum, ASTM D790.
Tangent Modulus of Elasticity	900,000 psi [6.2 GPa] minimum, ASTM D790.
Barcol Hardness	35, ASTM D2583.
Finished Thickness	Within ± 10 percent of nominal.
Fasteners	AISI 18-8 Type 316 stainless steel, unless otherwise indicated.

All materials and components of fiberglass fabrications for use in potable water facilities shall be NSF 61 certified. All surfaces of plastic laminate shall be sealed with a resin layer at least 5 mils [100 µm] thick. Field-cut surfaces shall be recoated with resin obtained from the fabricator.

Ultraviolet absorber shall be added to the resin used in the fabrication of products specified for installation in exposed exterior locations.

2-2. FILTER WASH WATER TROUGHS. Washwater troughs shall be provided for existing filters. The number of filters and the number of troughs per filter shall be as indicated on the Drawings.

Washwater troughs shall be laminated of fiberglass reinforced polyester resin and the inside surface of each trough shall have a smooth gel coat finish with no exposed glass fibers. Troughs shall be fabricated in accordance with AWWA standard for contact molded FRP Washwater Troughs ANSI/AWWA F101-07. Wash water troughs shall be as manufactured by Roberts Filter Group, Suez North America (Infilco Degremont, Inc.), Warminster or approved equal.

2-2.01. Design Conditions. Each trough shall be designed for the following conditions.

Filters 1-4:

Flow per trough.	10	cfs
Minimum cross sectional area.	756	in^2
Overall length.	30	ft
Maximum calculated stress in laminate.	3000	psi
Maximum upward or downward deflection.	0.15	in
Minimum wall thickness.	3/16	in

Filters 5-10:

Flow per trough.	7	cfs
Minimum cross sectional area.	576	in^2
Overall length.	17	ft
Maximum calculated stress in laminate.	3000	psi
Maximum upward or downward deflection.	0.15	in
Minimum wall thickness.	3/16	in

The filter wash water troughs shall be "U" shaped and shall be reinforced to withstand all applied water loadings.

Upward deflection shall be determined with the trough empty and the filter box filled with water to where overflowing begins. Downward deflection shall be determined with the trough filled with water and the filter box empty.

2-2.02. Proof-of-Design Test. Before the washwater troughs are manufactured, the design shall be verified by a test conducted on a representative trough. The tested trough need not have been manufactured for this project but shall have been made from materials of the same type and quality and shall be of the same size and design. The trough shall be subjected to loads equivalent to 1-1/2 times the design loads and shall not be permanently deformed.

2-2.03. Construction. Reinforcing members shall be completely encased in plastic. A flange 2 inches [50 mm] wide by 1/2 inch [12.7 mm] thick shall be provided to key into the gullet wall at the outlet end of each trough. The blind end of each trough shall be closed with plastic laminate at least 3/8 inch [9 mm] thick and reinforced for fastening to the concrete wall by bolts through the end. Bolts shall be not smaller than 3/4 inch [19 mm]. Mounting holes shall be slotted to provide vertical adjustment of at least 3/4 inch [19 mm], and washers and 1/4 inch (6 mm) thick flat backing bars shall be provided to cover the holes.

Plastic laminate, rigid PVC, or stainless steel spacers shall be provided at intervals of not more than 3 feet [900 mm] along each trough to maintain a uniform width over its entire length.

2-2.04. Color. Troughs shall be furnished in the manufacturer's standard color.

2-3. STOP PLATES AND GROOVES. Not used.

2-4. WEIR PLATES AND MEDIA RETENTION BAFFLES. Weir plates, media retention baffles, and support brackets shall be molded style as manufactured by Roberts Filter Group, Suez North America (Infilco Degremont, Inc.), Warminster or approved equal. Weir plates, media retention baffles, and support brackets shall be 1/4 inch [6 mm] thick and shall be fabricated to the shape indicated on the Drawings. The top surface shall be molded to shape and the top edge of each plate shall be straight within 1/32 inch [0.8 mm]. Molded surfaces shall be resin rich, free of voids, porosity, exposed glass, cracks or crazes.

Each weir plate and media retention baffle shall be designed so that at least 2 inches [50 mm] of horizontal and vertical adjustment is provided. Fiberglass splice plates shall be provided to secure the ends of the weir plates. Splice plates shall be designed to accommodate expansion and contraction.

Weir plates, media retention baffles, and support brackets shall be fabricated in accordance with ANSI/AWWA F102-07.

Contractor shall coordinate the weir plates, media retention baffles, and support brackets with all perimeter guardrails, guardrail support brackets, launder covers, and launder cover support brackets that are supplied by others.

2-5. BASIN LAUNDER COVERS. Not used.

2-6. ODOR CONTROL COVERS. Not used.

2-7. PARSHALL FLUME LINER. Not used.

2-8. METERING FLUME LINER. Not used.

2-9. STOP LOGS AND GUIDES. Not used.

PART 3 - EXECUTION

3-1. INSTALLATION.

3-1.01. Filter Wash Water Troughs. Troughs shall be installed in strict accordance with the recommendations of the trough manufacturer. The troughs shall be adjusted or trimmed so that the top edges of each trough are at the same elevation and are straight and level within 1/16 inch [1.5 mm] when the filter box is filled with water to the top of the troughs.

3-1.02. Stop Plate Grooves. Not used.

3-1.03. Weir Plates. Surfaces in contact with concrete shall be given a heavy coating of sealant as specified in the Joint Sealants section (07900) before installation. Weir plates shall be adjusted after installation to provide uniform overflow rate at all points.

3-1.04. Basin Launder Cover. Not used.

3-1.05. Odor Control Covers. Not used.

3-1.06. Parshall Flume Liner. Not used.

3-1.07 Metering Flume Liner. Not used.

End of Section

Section 07200

THERMAL INSULATION

PART 1 - GENERAL

1-1. SCOPE. This section covers thermal insulation and associated items not covered in other sections.

Rigid insulation for masonry cavity walls is covered in the Building Masonry section. Insulation to be installed under the single-ply roofing is specified in the EPDM Roofing, Fully Adhered section. Mechanical ductwork insulation is specified in the Mechanical Insulation section. Piping insulation is specified in the Miscellaneous Piping and Accessories Installation section.

1-2. GENERAL. Thermal insulation shall be furnished and installed as specified herein and as indicated on the Drawings. Thermal insulation shall be batt type. Safing insulation shall be furnished and installed as specified herein and as indicated on the Drawings.

1-3. SUBMITTALS. Complete specifications covering the materials furnished shall be submitted in accordance with the Submittals section.

A sample of each type of thermal insulation shall be submitted in accordance with the Submittals section, and such samples will be held to be representative of the properties and characteristics of the finally installed insulation.

Documentation indicating percentages by weight of post-consumer recycled content, including documentation indicating location and distance from project of material manufacturer and point of extraction, harvest or recovery for each raw material shall be submitted.

Provide printed statement of VOC content and chemical components for insulation installed inside the weatherproofing barrier.

1-4. STORAGE AND HANDLING. All materials shall be delivered in the original unopened packages bearing the name of the manufacturer and the brand. Insulation shall be stored under cover in a dry place, and shall be protected from the weather at all times. Good fire safety practices shall be observed at all times during storage and installation.

PART 2 - PRODUCTS

2-1. MATERIALS. Materials to be used shall conform to the following:

Batt Type Insulation

Standard	ASTM C665, mineral or glass fiber, Type II, Class C (nonreflective membrane, one face), 9 inch thick with R value of 30, formaldehyde-free; Owens-Corning, Manville or equal.

2-2. LOCATION FOR INSTALLATION.

2-2.01. Standard Batt Insulation. Standard batt insulation shall be installed above suspended acoustical ceiling areas at the locations indicated on the Drawings.

PART 3 - EXECUTION

3-1. INSTALLATION OF BATT INSULATION.

3-1.01. Ceilings. Batt type insulation shall be installed where indicated on the Drawings. Insulation shall be laid in as large a batt as practical for the specific location. Nonreflective membrane covering shall be installed on the inside (warm) face of the assembly. The insulation shall be secured in place to prevent sagging or slipping within the assembly.

End of Section

Section 07532

SINGLE-PLY ROOFING, FULLY ADHERED

PART 1 - GENERAL

1-1. SCOPE. This section covers the furnishing and installing of a fully adhered, single-ply membrane roof system complete with adhesives, fasteners, flashings, insulation, and accessories.

1-2. GENERAL. Except as otherwise indicated on the Drawings, all roof decks shall be covered with insulated, fully adhered single-ply membrane roofing system as indicated. The finished roof shall be watertight under all conditions of weather and service except physical damage due to unforeseen causes.

The roof system shall meet UL rating Class A and wind uplift FM classification 1-90. The roofing system shall meet Energy Star requirements for reflectivity and emissivity.

Unless indicated otherwise, a complete total system warranty covering all elements of the roofing system shall be furnished with this work. A warranty which covers only the membrane will not be acceptable.

1-3. SUBMITTALS. Complete specifications and data covering the roofing systems and materials furnished under this section shall be submitted in accordance with the Submittals section (01300).

Drawings shall be submitted showing outline of roof area and roof size, locations and types of roof penetrations, perimeter and penetration details, splice details, special details as needed, and installation instructions.

Drawings shall be submitted showing the insulation manufacturer's recommended layout for each area of tapered insulation and crickets, when such systems are indicated on the Drawings.

Samples of the roofing membrane, insulation, and fasteners shall be submitted. Test data for pullout resistance for fastening systems shall be provided.

Data shall be submitted showing compliance with UL requirements for the Class rating and the Factory Mutual wind uplift classification as indicated.

Provide documentation that the roofing material meets Energy Star requirements for reflectivity and emissivity meets or exceeds 0.9 when tested in accordance with ASTM 408.

Evidence shall be submitted which shows the roofing system installer to be an authorized applicator of the system furnished.

1-4. SUBCONTRACTOR'S QUALIFICATIONS. Unless indicated otherwise on the Drawings, work under this section shall be done by a qualified roofing subcontractor who has been in business for at least 5 years. The roofing subcontractor shall be currently operating under the franchise of the roofing membrane manufacturer. The work shall be inspected by a representative of the membrane manufacturer to verify that materials and methods of application are in accordance with the recommendations of the manufacturer and with these specifications.

1-5. DELIVERY, STORAGE, AND HANDLING. Shipping shall be in accordance with the Shipping section (01612). Handling and storage shall be in accordance with the Product Storage and Handling (01614).

Materials shall be delivered in original, unopened containers labeled with the manufacturer's name, brand name, installation instructions, and identification of various items. All materials for the roofing system shall be stored and handled in accordance with the recommendations of the manufacturer.

1-6. WARRANTY. Unless otherwise indicated, the manufacturer of the roofing membrane shall furnish to Owner, through the roofing subcontractor, a nonprorated, no dollar limit, total roof system warranty covering the workmanship and application of the roofing system including membranes, insulation, fasteners, vapor retarder, and flashings for a period of 25 years from the date of acceptance.

The warranty shall provide for the repair of the total roofing system including repairs to membrane, flashings, counterflashings, insulation, barrier and cover boards, if required, fasteners, vapor retarder, adhesives and sealants resulting from all leaks in the membrane and base flashings that may occur due to defective materials, improper workmanship, and normal weather conditions. Unless otherwise indicated, the warranty shall include general wind uplift protection to 90 mph peak gusts. The warranty shall also provide limited coverage for hail damage.

In addition, the manufacturer shall also provide a separate material warranty covering the membrane for not less than 25 years against premature deterioration because of weathering.

PART 2 - PRODUCTS

2-1. MATERIALS. Unless noted otherwise, all materials used in construction of the roof system shall be furnished by the same manufacturer. Materials shall be manufactured by firms of national reputation.

In order to indicate type, quality, and features required, this specification is based on Carlisle "Sure-Seal" fully adhered system. Equivalent roofing systems manufactured by other manufacturers may also be acceptable provided the requirements of these specifications are met.

Materials shall conform to the following:

Adhesives	As recommended by roofing membrane manufacturer.
Roofing and Flashing, Membrane, white	EPDM non-reinforced compounded elastomer; white color; ASTM D4637; Type I, Class SR, Grade 1, Carlisle "Sure-White Membrane", 90 mil thickness.
Formable Flashing Material, white	Uncured EPDM flashing membrane, 0.060 inch thick. Carlisle " Sure-White Elastoform Flashing Membrane".
Bonding Adhesive	As recommended by roofing membrane manufacturer.
Splicing Cement	As recommended by roofing membrane manufacturer.
Lap Sealant	As recommended by roofing membrane manufacturer.
In-Seam Sealant	As recommended by roofing membrane manufacturer.
Securement Strips	Membrane manufacturers reinforced universal securement strip; Carlisle "RUSS" system.
Fasteners	Membrane manufacturer's standard.
Water Cutoff Mastic	Membrane manufacturer's standard.
Night Sealant	Membrane manufacturer's standard.

Seam Fastening Plate	Membrane manufacturer's standard.
Molded Pipe Flashing	Membrane manufacturer's standard.
Pourable Sealer	Membrane manufacturer's standard.
Roof Barrier Board	ASTM C1177, 5/8 inch , glass mat gypsum roof board; Georgia Pacific "Dens-Deck Fireguard".
Insulation	
Polyisocyanurate	Polyisocyanurate foam with both sides faced with glass fiber felts; ASTM C1289, Type II; Apache "Pyrox", GAF "Isotherm", Schuller/NRG "E-NRGY-Y 2" or as recommended by the membrane manufacturer. Provide insulation thickness required for “R” value of 30.
Tapered	Thickness and slope as indicated on the Drawings.
Cricket System	Insulation manufacturer's standard factory pre-cut cricket system, pattern as indicated on the Drawings.
Cover Board	Fiberglass mat gypsum roof board with non-asphaltic coating; 1/2 inch thick; Georgia-Pacific Gypsum “DensDeck Prime”, or approved equal and as recommended by the membrane manufacturer.
Roof Walkways	"Sure-Seal" walkway pads, 30 inches by 30 inches by 3/8 inch thick ; as manufactured by Carlisle.
Mechanical Fasteners	

Metal Deck Applications	Corrosion resistant type for metal deck specified, Factory Mutual approved for roof insulation used, and for fire and wind resistance requirements specified; Carlisle "HP Fastener".

Unless otherwise specified, counterflashings and similar metal components are covered in the Sheet Metal section (07600).

PART 3 - EXECUTION

3-1. INSPECTION. The roofing membrane manufacturer's representative and the roofing subcontractor shall conduct all required inspections and shall submit to the roofing manufacturer all required drawings, details, and completed questionnaires for obtaining the specified warranty.

3-2. PREPARATION OF ROOF SURFACES. Roof surfaces shall be cleaned and inspected before any roofing materials are applied. All drainage fixtures shall be set at the proper elevation to permit free flow of water.

The roof surfaces to be covered shall be smooth, hard, dry, and free from high spots, depressions, and frost or effects of frost. Roof surfaces shall be swept clean and free from dust, loosened cement scale, and debris. Roof surfaces shall be examined for openings, holes, or crevices which might allow adhesives or sealants to drip or flow through the deck or between the deck and vertical projections. Such openings shall be filled or covered before any roofing materials are applied.

3-3. APPLICATION OF ROOFING

3-3.01. System. The materials for the roofing systems shall be as specified herein. The roofing system assemblies shall conform to the following systems as indicated on the Drawings.

Metal Deck (without vapor retarder)

Flat Structural Deck/Tapered Insulation:

1 layer of roof barrier board.

Polystyrene Insulation, tapered.

1 layer of Cover board.

Crickets, where required.

Roof Membrane.

Walkway Pads, where required.

3-3.02. Nailers. Nailers shall be as specified in the Rough Carpentry section (06100). Nailers shall be secured as specified by the roofing membrane manufacturer and as specified by FM Bulletin 1-49. Wood nailers shall be installed at the locations specified herein, as indicated on the Drawings, and as recommended by the membrane manufacturer.

3-3.03. Barrier Board. Where polystyrene insulation is applied over metal deck, barrier board shall be installed prior to installation of the insulation. Barrier board shall be installed with approved fasteners in accordance with Factory Mutual and manufacturer recommendations. Barrier board shall be installed in maximum lengths with edge joints parallel to and on deck ribs. End joints shall be staggered.

3-3.04. Insulation. Insulation shall be dry when installed. No more insulation shall be installed than can be covered with roofing membrane before the end of the day's work or before the onset of inclement weather.

Unless otherwise specified, insulation shall be laid over the substrate, with joints no wider than 1/4 inch . Joints wider than 1/4 inch shall be filled with the same insulation.

Insulation boards shall be laid with joints staggered between parallel courses and, if required, between layers. Abutting edges of boards shall be laid in moderate contact, not forced into place. At vertical surfaces, insulation shall be cut neatly to provide a clearance of not more than 1/4 inch .

Insulation boards for tapered systems shall be positioned in accordance with the manufacturer's layout to produce roof slopes and drainage patterns as indicated on the Drawings. The installed thickness of insulation shall be as indicated on the Drawings.

Crickets to provide positive roof drainage as indicated on the Drawings, shall be installed as indicated on the Drawings and per the manufacturer's instructions.

All insulation over metal roof decks shall be anchored to the deck with mechanical fasteners in accordance with FM Bulletin 1-28 and the FM Approval Guide. Installation of the mechanical fasteners shall be in accordance with the manufacturer's recommendations.

When high wind uplift is required, anchorage of insulation boards and cover boards shall be provided complete with all necessary anchors, special anchors, and appurtenances to meet the performance and warranty requirements.

3-3.05. Cover Board. Cover boards shall be installed over all insulation. Cover boards shall be attached as recommended by the membrane manufacturer for the wind design specified.

3-3.06. Membrane. The roofing membrane shall be positioned over the installed insulation without stretching. Membrane shall be allowed to relax for approximately 1/2 hour prior to bonding.

Sheets of membrane shall be positioned to provide a 3 inch minimum edge lap with adjacent sheets. Adhesive shall be applied to the membrane and the underlying substrate to securely bond the membrane to the board according to the manufacturers recommendations. Membrane shall be rolled to eliminate wrinkles, pockets, or voids. Joints in the membrane shall be cleaned and permanently joined at the overlap with splicing cement and in-seam sealant as recommended by the membrane manufacturer. Where white membrane is required, special care shall be taken to minimize staining and damage to the exposed membrane surfaces by the sealants.

At the end of each day or whenever application of roofing is interrupted, temporary water cutoffs shall be installed at loose edges as recommended by the membrane manufacturer. When work is resumed, the sheet shall be pulled free and trimmed to remove membrane where sealant was previously applied.

3-3.07. Securing Perimeter Membrane. Sheets of membrane shall be secured at the perimeter of each roof level, curb, and parapet wall, where required, using fastening strips or reinforced universal securement strips mechanically fastened through the membrane and insulation into the wood blocking or structural substrate as recommended by the membrane manufacturer.

3-3.08. Flashing. Perimeter, wall, roof edge, parapet, and curb flashings, where required, of EPDM membranes shall be provided and installed as recommended by the membrane manufacturer. The splices between the flashing and the membrane roof sheet shall be sealed with lap sealant before flashing is bonded to the vertical surfaces with bonding adhesive. All pipe, conduits, or other roof penetrations shall be flashed with molded pipe flashings and the manufacturer's recommended water cutoff mastic. Formable uncured EPDM flashing membrane shall be limited to inside/outside corners and other unusual projections and shapes.

3-3.09. Walkways. Roof walkways shall be installed where indicated on the Drawings and in accordance with the membrane manufacturer's recommendations.

3.3.10. Cleanup. Following installation of roofing materials, the roof surface shall be cleaned of all construction materials, traffic grime, accumulated dirt,

excess sealants, and other debris. The membrane surface shall be cleaned as recommended by the membrane manufacturer.

End of Section

Section 07600

SHEET METAL

PART 1 - GENERAL

1-1. SCOPE. This section covers sheet metal for flashings and moisture protection. The following sheet metal items are covered in other sections:

a. Ductwork, louvers, and other sheet metal for the heating, ventilating, and air conditioning system.

b. Steel roof deck.

1-2. GENERAL. Installation of wall flashings shall be as indicated on the Drawings and as specified.

Flashing members to be built into masonry or concrete shall be delivered at the proper time for incorporation into the work.

When installing sheet metal items, care shall be taken to avoid marring and improper bending. All components shall be stored in clean, dry storage areas. Contact with corrosive or staining materials shall be prevented. All damaged sections shall be replaced and only undamaged units shall be installed.

1-3. SUBMITTALS. Complete specifications, data, and catalog cuts or drawings covering the items furnished under this section shall be submitted in accordance with the Submittals section (01300).

1-4. HANDLING AND STORAGE. Adequate protection shall be provided during shipment, site storage, and installation to prevent damage to materials or finished work.

PART 2 - PRODUCTS

2-1. MATERIALS.

Galvanized Steel	ASTM A366 or A569; hot-dip galvanized in accordance with ASTM A525, G90 minimum.
Sheet Aluminum	ASTM B209, Alloy 3003-H14, mill finish.

Extruded Aluminum	ASTM B221, Alloy 6053 or 6063.
Stainless Steel	ASTM A167, Type 302 or 304, AISI 2B finish unless otherwise specified.
Solder	ASTM B32, Alloy Grade 50A (50-50).
Soldering Flux	
For Stainless Steel	Zinc chloride type, Fed Spec 0-F-506, Type II.
For Other Metals	Acid type, Fed Spec O-F-506, Type I, Form A.
Fasteners	Same metal as sheet metal being fastened.
Plastic Cement	Asphalt roof cement, asbestos free; ASTM D4586, Type 1.
Acrylic Sealant	Pecora "Unicrylic" or Tremco "Mono".

2-2. FLASHINGS. All exposed or contacting flashings shall be of the same material.

2-2.01. Types

Through-Wall Flashing	Stainless steel, 32 gage, dead soft, fully annealed; ribbed; Architectural Steel “Rib –Bond”, Cheney “3-Way Saw-tooth Flashing”, or Keystone “Interlocking Type”
Counterflashings	Stainless steel, 26 gage; Architectural Steel, Cheney, or Keystone, with wall flat and hook dam for masonry wall installation, with vertical receivers for surface-mounted installation, or with snap lock for reglet installation as indicated.
Reglets	Stainless steel, 26 gage, designed to retain counterflashing by snap action or

	friction fit; Architectural Steel "Friction Reglet", Cheney "Type A", or Keystone "Simplex".
Miscellaneous Hidden Flashings	Stainless steel, 26 gage.
Miscellaneous Exposed Flashing	Prefinished metal flashing, 22 gage steel.

2-3. CONFIGURATIONS.

2-3.01. Through-wall flashing. Through-wall flashings shall be provided as indicated on the drawings. Flashings under copings shall be continuous. Flashings over lintels and sills shall extend 8 inches past each jamb and shall have ends turned up ¼ inch. Joints in wall flashings shall overlap and shall be interlocked.

Where multiple bends are required for through-wall installation, as indicated on the drawings, flashings may be provided in single-bend sections with vertical legs overlapped to drain to the outside face of the wall.

2-3.02. Counterflashings. Counterflashings shall be provided, at the locations indicated on the drawings, to overlap roof membrane base flashings and fit into flashing reglets or receivers. Counterflashings shall be fabricated in sections not exceeding 10 feet in length; sections shall overlap at least 3 inches and shall form a slip joint, but shall not be interlocked. End joints between counterflashing sections shall be offset from underlying joints between reglet or receiver sections. Corners in counterflashings shall be closed watertight as specified herein.

2-3.03. Reglets. Reglets shall be provided at all locations indicated on the drawings to receive counterflashings as shown. Reglets shall be fabricated in lengths not to exceed 10 feet and shall overlap at least 3 inches.

2-3.04. Miscellaneous Metal Flashings. Metal flashings shall be provided for vents, sleeves, and similar projections through the roof.

PART 3 - EXECUTION

3-1. INSTALLATION.

3-1.01. Watertight Joints. Joints in sheet metal work shall be closed watertight unless slip joints are specifically required. Watertight joints shall be mechanically interlocked and then thoroughly soldered for metals other than aluminum. Joints in aluminum or between aluminum and other metals shall be sealed with acrylic sealant.

All joints shall be wiped clean of flux after soldering. Acid flux shall be neutralized by washing the joints with sodium bicarbonate.

3-1.02. Through-Wall Flashings. Installation of through-wall flashings shall be as indicated in the masonry section (04200). Through-wall flashing shall be composed of an upper and a lower piece. The upper piece does not need to have a saw-tooth profile.

3-1.03. Counterflashings. Counterflashings shall be installed after membrane base flashings have been completed. Counterflashings shall be fitted into reglets or receivers and securely locked in place in accordance with the manufacturer's recommendations.

3-1.04. Reglets. Reglets to be set in concrete to receive counterflashings shall be nailed into the forms in accordance with the manufacturer's recommendations, with care being taken to maintain precise alignment of abutting sections. After the forms are stripped, the temporary form filler strip shall be removed from the reglet and the form securing nails shall be clipped flush.

3-1.05 Miscellaneous Metal Flashings. Metal flashings shall be installed as indicated on the Drawings.

3-2. PROTECTION. Adequate protection shall be provided during shipment, site storage, and installation, to prevent damage to materials or finished work.

Aluminum to be placed in contact with concrete, mortar, or dissimilar metals shall be given a heavy coat of coal tar epoxy.

End of Section

Section 07700

ROOF SPECIALTIES AND ACCESSORIES

PART 1 - GENERAL

1-1. SCOPE. This section covers miscellaneous roof accessories.

1-2. GENERAL. Roof accessories shall be provided and installed at the locations indicated on the Drawings. Fasteners as required for mounting the accessories shall be provided.

1-3. SUBMITTALS.

A. General Submittals:

1. Complete specifications, detailed drawings, and setting and erection drawings covering roof accessories shall be submitted in accordance with the Submittals section (01300).

PART 2 - PRODUCTS

2-1. ROOF HATCH. The metal roof scuttles indicated on the Drawings shall be Type "E-50S" as manufactured by the Bilco Company, or equal. Hatch size shall be 36 inches by 30 inches. Cover shall be .090 aluminum with 4 inch beaded flange, neatly welded. Cover shall have a heavy extruded EPDM rubber gasket which is bonded to the cover interior to ensure a continuous seal when compressed to the top surface of the curb. Insulation shall be polyisocyanurate 2 inch thick, fully covered and protected by an aluminum metal liner.

Curb shall be 12 inches in height and .090 aluminum. It shall be formed with a 4-1/2 inch flange with holes provided for securing to the roof deck. Curb shall be equipped with an integral metal capflashing of the same gage and material as the curb, full welded at the corners for absolute weathertightness. Insulation on the exterior of the curb shall be polyisocyanurate of 2” thickness with an R-value of 12.

Each scuttle shall be completely assembled with heavy stainless steel pintle hinges, compression spring operators enclosed in telescopic tubes, positive spring latch with turn handles and padlock hasps inside and outside, and neoprene draft seal. Cover shall be equipped with an automatic hold-open arm complete with red vinyl grip handle to permit easy one hand release. All hardware shall be stainless steel. Cover shall be reinforced to support a

minimum live load of 40 psf with a maximum deflection of 1/150th of the span or 20 psf wind uplift. Manufacturer shall guarantee proper operation and against defects in material or workmanship for a period of five years.

Product shall contain a minimum recycled content of 30% pre-consumer and 10% post consumer materials.

2-2. ROOF HATCH RAILING SYSTEM. A roof hatch railing system shall be installed at new roof hatch as indicated on the Drawings. The system shall be Bil-Guard Hatch Railing System as manufacturer by the Bilco Company and sized for the hatch provided. Posts and rails shall be pultruded from a fire retardant, fiberglass-reinforced polymer (FRP). FRP material shall have a molded-in, high visibility, safety yellow color and treated with a UV inhibitor. Mounting brackets shall be fabricated from 1/4" thick hot dip galvanized steel. Gate hinges and post guides shall be constructed of 6063-T5 aluminum with torsion rod of type 302 stainless steel. All fasteners shall be type 316 stainless steel. Hatch rail system shall satisfy the requirements of OSHA 29 CFR 1910.23 and meet OSHA strength requirements with a safety factor of two. Manufacturer shall provide a 25-year warranty against defects in material and workmanship.

2-3. SAFETY POST. A safety post shall be installed on the fixed ladder below each roof hatch. The post shall be manufactured of high strength steel with telescoping tubular section that locks automatically when fully extended. Upward and downward movement shall be controlled by a stainless steel spring balancing mechanism. Unit shall be model "LU-1" "LadderUp" safety post as manufactured by the Bilco Company, or equal. Unit shall be completely assembled with fasteners for securing to one of the ladder rails in accordance with the manufacturer's instructions.

2-4. METAL CURBS. Prefabricated metal curbs shall be provided for roof perimeters as indicated on the Drawings. Metal curbs shall be as manufactured by the Pate Company, Broadview, Illinois; Custom Curb, Inc., Chattanooga, Tennessee; or Uni-Curb, Inc., Chicago, Illinois. The curbs shall be constructed of 14 gauge galvanized steel according to the details indicated on the Drawings. Metal curbs shall have continuous welded corner seams and factory installed wood nailers.

Metal curbs for shall be securely fastened to the roof deck. Curbs shall be shop painted with a universal primer. Product shall contain a minimum recycled content of 30% pre-consumer and 10% post consumer materials.

PART 3 - EXECUTION

3-1. INSTALLATION. All products provided under this section shall be installed in accordance with the manufacturers' instructions. Unless otherwise noted, all anchors shall be noncorrosive type.

All installations interfacing with roofing membrane, metal roofing, and sheet metal flashings shall be coordinated with those sections.

End of Section

Section 07900

JOINT SEALANTS

PART 1 - GENERAL

1-1. SCOPE. This section covers caulking and sealing.

1-2. GENERAL. The terms "caulking" and "sealing", as used on the Drawings and in these Specifications, are synonymous. Both terms indicate the materials specified herein. Oil-base caulking shall not be used on this Project.

1-3. APPROVALS. All caulking shall meet the requirements of the standards specified herein. All caulking and sealing to be used in contact with potable water shall meet the requirements of ANSI/NSF Standard 61.

1-4. SUBMITTALS. Specifications and data covering the materials proposed for use, together with samples or color cards showing the manufacturer's full line of sealant colors, shall be submitted in accordance with the Submittals section (01300).

PART 2 - PRODUCTS

2-1. MATERIALS.

Thiokol Sealants (Polysulfides)	Fed Spec TT-S-00227E, Class A or ASTM 920, Type M; polysulfide rubber, two component.
Nonsag	
Nonsubmerged Service	Pecora "Synthacalk GC-2+"; Sonneborn "Sonolastic Polysulfide Sealant"; Polymeric Systems “PSI-350”.
Self-Leveling, Nonsubmerged	A. C. Horn "Hornflex Traffic Grade"; Polymeric Systems “PSI-350”.
Urethane Sealants (Polyurethanes)	Fed Spec TT-S-00227E, Class A, Type 2 and ASTM C920, Type M, Grade NS, two component.

Nonsag	
Nonsubmerged Service	Bostik "Chem-Calk 500"; Tremco "Vulkem 227"; Pecora "Dynatrol II"; Tremco "DYmeric 240"; Sika “Sikaflex-2cNS”.
Self-Leveling, Nonsubmerged Service	Bostik "Chem-Calk 550"; Tremco "Vulkem 245"; Pecora "Urexpan NR-200"; Polymeric Systems “ RC-2SL"; Tremco "THC-900".
Acrylic Sealant	Fed Spec TT-S-230; ASTM C834. Bostik “Chem-Calk 600”; Pecora “ AC20”; Tremco “Mono 555”.
Primer	As recommended by the sealant manufacturer.
Backup Material	Polyethylene or polyurethane foam as recommended by the sealant manufacturer; Dow "Ethafoam SB" or Plateau "Denver Foam".
Bondbreaker Tape	Adhesive-backed polyethylene tape as recommended by the sealant manufacturer.

2-2. COLORS. Colors of sealants shall be as selected by Engineer from the manufacturer's standard line of colors. Different colors may be required for different locations.

2-3. LOCATIONS TO BE CAULKED.

2-3.01. With Thiokol or Urethane Sealant (Nonsag) - Submerged Service. Not used.

2-3.02. With Thiokol or Urethane Sealant (Nonsag) - Nonsubmerged Service.

Entire perimeter of frames for fiberglass reinforced plastic doors and frames.

Other locations where caulking is indicated on the Drawings, specified in other sections, or required for weatherproofing.

2-3.03. With Thiokol or Urethane Sealant (Self-Leveling).

Horizontal joints in walks or drives.

Horizontal joints in traffic-bearing decks and slabs.

2-3.04. With Acrylic Sealant.

Watertight joints in sheet metal work.

2-3.05. With Silicone Sealant. Not used.

PART 3 - EXECUTION

3-1. JOINT PREPARATION. All surfaces to receive sealant shall be clean, dry, and free from dust, grease, oil, or wax. Concrete surfaces which have been contaminated by form oil, paint, or other foreign matter which would impair the bond of the sealant to the substrate shall be cleaned by sandblasting. All surfaces shall be wiped with a clean cloth saturated with xylol or other suitable solvent, and shall be primed before the sealant is applied.

Unless otherwise recommended by the sealant manufacturer and permitted by the Engineer, the depth of sealant in a joint shall be equal to the width of the joint, but not more than 1/2 inch. Backup material shall be provided as necessary to control the depth of sealant and shall be of suitable size so that, when compressed 25 to 50 percent, the space will be filled. Backup material shall be rolled or pressed into place in accordance with the manufacturer's installation instructions, avoiding puncturing and lengthwise stretching. If depth of the joint does not permit use of backup material, bondbreaker tape shall be placed at the bottom of the joint to prevent three-sided adhesion.

3-2. SEALING. Sealing work shall be done before any field painting work is started. The air temperature and the temperature of the sealed surfaces shall be above 50°F when sealing work is performed.

Upon completion of the sealing work, each sealed joint shall have a smooth, even, tooled finish, flush with the edges of the sealing recess, and all adjacent surfaces shall be clean. Sealant shall not lap onto adjacent surfaces. Any sealant so applied as to prevent the painting of adjacent surfaces to a clean line, or with an excess of material outside the joint and feathered onto surfaces, shall be removed and the joint resealed.

End of Section

Section 08110

STEEL DOORS AND FRAMES

PART 1 - GENERAL

1-1. SCOPE. This section covers the furnishing and installation of hollow metal doors and frames. Unless otherwise indicated or specified, all steel doors shall be flush type.

Structural steel door frames and finish hardware are covered in the Structural and Miscellaneous Metals section and the Finish Hardware section, respectively.

1-2. GENERAL. Doors, frames, and appurtenances shall be furnished and installed as specified herein and in accordance with the details and arrangements indicated on the Drawings.

Doors, frames, and appurtenances furnished under this section shall be fabricated and assembled and erected, in full conformity with Drawings, specifications, engineering data, instructions, and recommendations of the manufacturer unless exceptions are noted by Engineer.

1-3. SUBMITTALS.

A. General Submittals:

1. Complete detail drawings of all items specified herein shall be submitted in accordance with the Submittals section. Drawings shall show elevations of each door type; details of each frame type; location or identification of each item; typical and special details of construction; methods of assembling sections; location and installation requirements for hardware; size, shape, and thickness of materials; joints; connections; and finish.

1-4. DELIVERY, STORAGE, AND HANDLING. Shipping shall be in accordance with the Product Deliver Requirements section. Handling and storage shall be in accordance with the Product Storage and Handling Requirements section.

Materials shall be handled, transported, and delivered in a manner which will prevent bends, dents, scratches, or damages of any kind. Damaged materials shall be promptly replaced.

PART 2 - PRODUCTS

2-1. PERFORMANCE AND DESIGN CRITERIA.

2-1.01. Governing Standard. Except as modified or supplemented herein, all steel doors and frames shall conform to the requirements of ANSI/SDI 100, Level 2, Model 2.

2-1.02. Metal Thicknesses. Metal thicknesses and gages of steel sheet metal specified herein are the minimum required. Gages refer to US Standard gage.

2-1.03. Nomenclature. The nomenclature used herein conforms to ANSI/SDI A250.8.

2-2. ACCEPTABLE PRODUCTS. Internally reinforced doors and accompanying frames shall be equivalent to the following or approved equal:

The Ceco Corporation "Trio" with minimum 58% recycled steel content.

Curries Manufacturing Company "Series 777" with minimum 58% recycled steel content.

2-3. MATERIALS. Materials used in the manufacture of steel doors and frames shall be as follows:

Doors and Frame	ASTM A1008/A1008M or A1011/A1011M, stretcher leveled, commercial quality sheet steel with smooth, clean surface;galvanized, per ASTM A653/A653M with G90 minimum coating.
Internal Reinforcing	ASTM A1008/A1008M, cold-rolled steel.
Fillers for Internally Reinforced Doors	Injected polyurethane foam, CFC and HCFC free.
Anchoring Devices	Zinc-plated where exposed; zinc-plated or galvanized where concealed; non-corrosive.
Expansion Anchors	As specified in the Anchorage in Concrete and Masonry section.
Tape Sealant	PVC or neoprene closed-cell foam, black, 1/2 inch wide by 1/4 inch thick strip with pressure-sensitive adhesive back; Williams "Everlastic NN-1" or approved equal.

2-4. FRAMES. Frames for doors and interior glazed panels shall be formed of steel to the sizes, 14 gage, and shapes required.

2-4.01. Workmanship. The finished work shall be strong, rigid, neat, and free from defects. Molded members shall be fabricated straight and true, with corner joints well formed, and with fastenings concealed where practicable.

2-4.02. Joints. Joints for frames shall be mitered or butted and continuously welded on the reverse side to produce rigid joints which are invisible on the face of the frame. Frame bottoms shall be held rigidly in position by spreader bars to maintain proper alignment during shipment and erection.

2-4.03. Hardware Provisions. Frames shall be prepared at the factory for the specified hardware. Frames shall be mortised, reinforced, drilled, and tapped for mortised hardware, and shall be reinforced for surface-applied hardware. Cover boxes shall be provided in back of all hardware cutouts. Frames for all doors except weatherstripped doors shall be punched to receive silencers, three holes on the lock side of single door frames and one hole for each leaf in heads of double door frames. Lock strikes shall be set out and adjusted to provide clearance for silencers.

Concealed metal reinforcements shall be provided for hardware in at least the following thicknesses:

Hinge reinforcement	10 gage
Strike reinforcement	14 gage
Closer reinforcement	12 gage
Other reinforcement	14 gage

2-4.04. Wall and Floor Anchors. Metal anchors of the sizes and shapes required for the adjoining type of wall construction shall be provided. Jamb anchors shall be fabricated from steel, of at least the same thickness as the frames. Anchors shall be located near the top and bottom of each frame and at intermediate points spaced not more than 32 inches apart.

For frames set in hardened concrete or existing masonry walls, anchorage shall be provided as indicated on the Drawings.

Door frames shall be provided with a 16 gage thick base clip at each jamb for floor anchorage. Clips shall be sized and drilled for at least two 3/8 inch diameter anchoring devices. Where floor fill occurs at a door opening, the bottom of the frame shall terminate at the indicated finished floor level and shall be supported by adjustable extension clip angles anchored to the structural slab.

2-4.05. Stops and Beads. Metal glazing beads shall be furnished with hollow metal frames at transoms, sidelights, interior glazed panels, and other locations where glazed frames are indicated on the Drawings. Glazing stops shall be formed as an integral part of the frames, and the frames shall be prepared to receive the glazing beads. Where frames are exposed to weather, the integral stops shall be located on the exterior side of the frames. Beads having a molded shape shall be mitered at corners. Rectangular beads may be either mitered or butted at corners.

2-5. DOORS. Doors indicated on the Drawings as hollow metal, including doors with glazed and louvered openings, shall be as specified herein. Doors shall be prepared to receive the hardware specified in the Finish Hardware section.

2-5.01. Workmanship. Doors shall be rigid, neat in appearance, and free from defects. Molded members for glazed doors shall be formed straight and true, with joints coped or mitered, well formed, and in true alignment. All welded joints on exposed surfaces shall be dressed smooth so that they are invisible after finishing.

2-5.02. Sizes and Clearances. Doors shall be of 1-3/4 inchthickness, and type indicated on the Drawings, of the sizes and design indicated. Clearances for doors shall be 1/8 inch at jambs and heads, 1/4 inch at meeting stiles of pairs of doors, and 3/4 inch at bottom, unless otherwise indicated.

2-5.03. Construction. Doors shall have 18 gage thick seamless outer sheets. Side edges of doors shall be flush and closed watertight. All seams shall be continuously welded and ground smooth. Doors shall be prepared at the factory for hardware, for glazing, and for louvers as indicated on the Drawings. Door edges shall be beveled or rounded.

Flush internally reinforced doors shall have fillers placed in the spaces between reinforcing members and shall be reinforced by 22 gage thick or thicker vertical steel stiffeners installed on 6 inch centers and welded to face sheets.

2-5.04. Hardware Provisions. Doors shall be mortised, reinforced, drilled, and tapped for mortised hardware. Reinforcing units shall be provided for locksets. Reinforcing plates shall be provided for mortised and surface-applied hardware in at least the following thicknesses:

Hinge reinforcement	10 gage
Surface-applied closers and hold-open arms	12 gage
Other reinforcement	14 gage

The locations of hardware items shall be in accordance with DHI "Recommended Locations for Builders' Hardware for Standard Steel Doors and Frames".

2-5.05. Stops and Beads. Metal glazing beads shall be furnished with hollow metal doors where glazed doors are indicated on the Drawings. Glazing stops may be formed as an integral part of the doors, or separate glazing beads provided for both sides of the glass. Doors shall be prepared to receive the glazing beads. Beads shall be snapped into place, or shall be fastened with oval-head machine screws spaced at 9 inch centers maximum. Beads having a molded shape shall be mitered at corners. Rectangular beads may be either mitered or butted at corners.

2-5.06. Louvers. Louvers shall be stationary, sightproof, fixed slat or fixed grid type, with a minimum of 60 percent of free air area.

2-6. SHOP FINISH. A primer shall be applied to all surfaces of ferrous metal furnished under this section. Metal surfaces shall be cleaned and given a phosphate or equivalent treatment to ensure maximum corrosion protection and paint adherence. A dip or spray coat of synthetic resin, rust-inhibitive metallic oxide, or rust-inhibitive zinc chromate primer shall be applied to all surfaces, then baked or oven-dried. Finished surfaces shall be smooth and free from irregularities.

PART 3 - EXECUTION

3-1. INSTALLATION. Frames shall be set in position, plumbed, aligned, and braced securely until permanent anchors are set. Frames shall be anchored to floors with expansion anchors or as indicated on the Drawings. Jamb anchors shall be built into walls and secured to adjoining construction. Spreader bars shall remain in place until frames have been built into the walls.

3-1.01. Glazing Beads. Glazing beads, when provided, shall be fastened to frames with oval-head machine screws spaced at 9 inch maximum centers.

End of Section

Section 08115

FIBERGLASS REINFORCED PLASTIC DOORS AND FRAMES

PART 1 - GENERAL

1-1. SCOPE. This section covers fiberglass reinforced plastic doors and frames. Unless otherwise indicated or specified, all doors shall be flush type.

Finish Hardware is covered in the Finish Hardware section.

1-2. GENERAL. Doors, frames, and appurtenances shall be furnished and installed as specified herein and in accordance with the details and arrangements indicated on the Drawings.

Doors shall be either polyurethane core or end grain balsa wood cores.

Subject to the requirements specified herein, FRP doors with rigid block polyurethane core shall be equivalent to Chem-Pruf Door Co. "Chem-Pruf Door System" and FRP doors with balsa wood core shall be equivalent to Corrim Company "Fiberglass Doors".

1-3. SUBMITTALS. Complete detail drawings of all items specified herein shall be submitted in accordance with the Submittals section. Drawings shall show elevations of each door type; details of each frame type; location or identification of each item; typical and special details of construction; methods of assembling sections; location and installation requirements for hardware; size, shape, and thickness of materials; joints; connections; and finish.

1-4. WARRANTY. Fiberglass reinforced plastic doors and frames shall be guaranteed for 25 years against failure due to corrosion from the environments indicated on the Drawings. Fiberglass reinforced plastic doors and frames shall also be guaranteed for 2 years against failure due to materials and workmanship, including warp exceeding 3/8” in the plane of the door itself, separation or de-lamination, and expansion of the core. The manufacturer’s printed tolerances and the industry tolerances and variations are excluded from the material guarantee.

PART 2 - PRODUCTS

2-1. MATERIALS. Materials used in the manufacture and installation of FRP doors and frames shall be as follows:

Doors	Fiberglass reinforced plastic face sheets, 0.125 inch minimum thickness, with manufacturer's standard 10 year warranty.
Internal Reinforcing	Manufacturer's standard.
Urethane Core	1-1/2 inch thick rigid block laminated to exterior panels.
Balsa Wood Core	1-1/2 inch thick rigid end grain balsa wood bonded to exterior panels.
Frame	Solid, all-fiberglass frame with molded-in color.
Resin	Premium grade polyester for extreme corrosion resistance, minimum 40 percent fiberglass by weight.
Anchoring Devices	Stainless steel where exposed; zinc plated or galvanized where concealed.
Expansion Anchors	As specified in the anchor bolts and expansion anchors section (05550).

2-1.01. Shop Finish. A color impregnated gel coat finish of 25 mils minimum thickness shall be applied to all door and frame surfaces. The finished surfaces shall be smooth and free from irregularities. Match the color of the existing hollow metal doors with a standard or custom color to be selected after the award of the contract. A minimum of 10 shades of brown shall be available for selection.

2-2. FRAMES. Frames for doors and interior windows shall be formed of fiberglass reinforced plastic shapes with molded-in color shall be a minimum 3/16 inch in thickness for the profile indicated on the Drawings, with approximately 2 inch face as indicated on the Drawings. The frame face shall be sized according to the actual size and width of the opening provided. Resins for frames shall match those used for doors.

2-2.01. Workmanship. The finished work shall be strong and rigid, neat in appearance, and free from defects. Molded members shall be fabricated straight and true, with corner joints well formed, and with fastenings concealed where practicable.

2-2.02. Joints. Joints for frames shall be mitered or butted and continuously sealed on the reverse side to produce rigid joints which are invisible on the face of the frame. Frame bottoms shall be held rigidly in position by spreader bars to maintain proper alignment during shipment and erection.

2-2.03. Hardware Provisions. Frames shall be prepared at the factory for the specified hardware. Frames shall be mortised, reinforced, drilled, and tapped for mortised hardware, and shall be reinforced for surface-applied hardware. Cover boxes shall be provided in back of all hardware cutouts.

Fiberglass reinforced plastic frames shall have concealed reinforcements for hardware according to manufacturer's standards.

2-2.04. Wall and Floor Anchors. Metal anchors shall be of the sizes and shapes required for the type of adjoining wall construction. Jamb anchors shall be located near the top and bottom of each frame and at intermediate points not to exceed 32 inch spacing.

2-3. DOORS. Doors indicated on the Drawings as flush fiberglass reinforced plastic, including doors with glazed openings, shall be as specified herein. Doors shall be prepared to receive the hardware specified in the Finish Hardware section (08700).

2-3.01. Workmanship. Doors shall be rigid, neat in appearance, and free from defects. Molded members for glazed doors shall be formed straight and true, with joints coped or mitered, well formed, and in true alignment. All joints on exposed surfaces shall be smooth so that they are invisible after finishing.

2-3.02. Sizes and Clearances. Doors shall be 1-3/4 inches thick, full flush type, of the sizes and design indicated. Clearances for doors shall be 1/8 inch at jambs and heads, 1/4 inch at meeting stiles of pairs of doors, and 3/4 inch at bottom unless otherwise indicated or specified.

2-3.03. Construction. Doors shall be constructed with at least 0.125 inch fiberglass reinforced plastic outer sheets. Side edges of doors shall be flush and closed watertight. All seams shall be continuously sealed. Doors shall be prepared at the factory for hardware and for glazing as indicated on the Drawings and as specified. Door edges shall be beveled or rounded.

Internally reinforced doors shall have solid polymer reinforcement at all joints and all hardware locations.

Solid polyurethane core or balsa wood core shall be laminated to the exterior panels. Balsa wood core shall have a minimum density of 8.5 lbs per cubic foot.

Outswinging exterior doors shall be finished flush at the top, with all seams and joints closed watertight as specified for side edges.

2-3.04. Hardware Provisions. Doors shall be mortised, reinforced, drilled, and tapped for mortised hardware. Reinforcing units shall be provided for locksets. Reinforcing plates shall be provided for mortised and surface-applied hardware according to manufacturer's standards.

The location of hardware items shall be in accordance with DHI "Recommended Locations for Builders' Hardware for Standard Steel Doors and Frames".

2-3.05. Glazing Moldings. Polymer moldings shall be furnished with FRP doors and windows where glazed doors are indicated on the drawings and according to door manufacturer's standards.

Where doors are exposed to weather, all seams and joints on all sides of the glass panel shall be closed watertight.

2-3.06. Astragals. The meeting edges of all exterior double doors shall be provided with astragals. Astragals shall be applied to the active leaf. The astragal shall be constructed of gel coated steel to match color of door or brushed stainless steel.

PART 3 - EXECUTION

3-1. INSTALLATION. Frames shall be set in position, plumbed, aligned, and braced securely until permanent anchors are set.

Frames set in existing construction or new concrete walls shall be anchored to walls with expansion anchors or as required by frame manufacturer.

End of Section

Section 08305

FLOOR ACCESS DOORS AND HATCHES

PART 1 - GENERAL

1-1. SCOPE. This section covers the fabrication and installation of cast-in-place, off-street, floor access doors and hatches. Roof hatches are specified in the Roof Specialties and Accessories section. Manhole frames and covers are specified in the Sewer Manholes section.

Fabricated items which are indicated on the Drawings but not mentioned specifically herein shall be fabricated in accordance with the applicable requirements of this section.

1-2. GENERAL. Equipment furnished under this section shall be fabricated and assembled in full conformity with Drawings, Specifications, engineering data, instructions, and recommendations of the equipment manufacturer, unless exceptions are noted by Engineer.

Equipment shall be furnished complete with all components and accessories required for proper operation, and any additional materials or construction required by the manufacturer's design.

1-2.01. General Equipment Stipulations. The General Equipment Stipulations shall apply to all equipment furnished under this section. If requirements in this specification differ from those in the General Equipment Stipulations, the requirements specified herein shall take precedence.

1-2.02. Seismic Design Requirements. Seismic design requirements for products specified herein shall be as indicated in the Meteorological and Seismic Design Criteria section.

1-3. SUBMITTALS.

1-3.01. Drawings and Data. Complete assembly and installation drawings, together with detailed specifications, capacities, and data covering material used, and accessories forming a part of the equipment furnished, shall be submitted in accordance with the Submittals section.

For fire rated access doors and hatches, the manufacturer shall submit a test report certifying the specified performance.

Submit confirmation of compliance with the requirements of the Meteorological and Seismic Design Criteria section.

1-4. DELIVERY, STORAGE, AND HANDLING. Shipping shall be in accordance with the Product Delivery Requirements section. Handling and storage shall be in accordance with the Product Storage and Handling Requirements section.

1-5. WARRANTY. The manufacturer shall guarantee against defects in material or workmanship for a warranty period of not less than 5 years.

PART 2 - PRODUCTS

2-1. GENERAL. Access doors and hatches shall be fabricated in conformity with dimensions, arrangements, sizes, and weights or thicknesses specified herein and as indicated on the Drawings.

All members and parts shall be free of warps, local deformations, and unauthorized bends. Holes and other provisions for field connections shall be accurately located and shop checked so that proper fit will result when the units are assembled in the field. All field connection materials shall be furnished.

2-2. ACCEPTABLE MANUFACTURERS. Access doors and hatches shall be as manufacturerd by Halliday Products, Bilco Company, or Dur-Red Products.

2-3. DESIGN REQUIREMENTS. Door leaves shall be 1/4 inch [6 mm] minimum thickness plate material with pattern as indicated on the Drawings. Leaves in hatches not subject to vehicular loading shall be designed to withstand a minimum live load of 300 pounds per square foot, or as indicated on the Drawings, with a maximum deflection of 1/150th of the span. Leaves shall pivot so that the cover does not protrude above the channel frame.

Door and hatch frames shall be provided with anchorage devices into the concrete slab. Where required for drainage, channel frames shall be 1/4 inch [6 mm] thick with a cross sectional area large enough to allow adequate water drainage. A 1-1/2 inch [38 mm] drainage coupling shall be located in the channel frame. The frame shall be designed to empty through the coupling. Frames shall have a neoprene door cushion unless a specific door model without a cushion is specified.

Hatches shall be supplied with lifting operators and hold-open devices. All doors, except fire rated doors, shall automatically lock in the vertical position by means of a hold-open arm with release handle. A snap lock with a gasketed cover plug and removable turn handle shall be provided. The operators shall provide for smooth, easy and controlled door operation throughout the entire arc of opening and closing. Operation shall not be affected by temperature.

Fall protection grating panels shall be provided on doors and hatches as indicated on the Drawings. The panels shall be aluminum or fiberglass grating

panels designed to support a 300 psf loading. Panels shall be hinged along one edge and provided with a positive latch to maintain unit in an upright position. Provision for locking the panel in place shall be provided. All hardware shall be of non-corroding material.

Fire rated access doors and hatches shall be UL listed for a 2 hour fire rating when exposed to fire from the underside. In the closed position, the temperature on the unexposed surface of the door assembly shall not exceed 325°F [162°C] during the 2 hour period. Fire rated door leaves shall have a fillable pan to receive concrete. They shall be provided with lifting operators and hold open devices as specified for other hatches. In addition, fire rated doors shall be equipped with a self-contained, pneumatic, automatic closing system which will close and latch the door leaves when the temperature exceeds 165°F [74°C].

2-4. MATERIALS. Floor access doors and hatches are indicated on the Drawings. Unless otherwise specified, materials, appurtenances, and finishes shall be the manufacturer's standard for each type of door and hatch indicated on the Drawings. Doors and hatches shall be odor resistant and/or fire rated only if specifically indicated on the Drawings.

If floor access doors and hatches are shown on the Drawings but not identified by manufacturer’s name and product number, Contractor shall request clarification from Engineer prior to ordering and shipping the equipment. For purposes of bidding the work, unidentified floor access doors and hatches shall be assumed to be aluminum with a drained channel frame, suitable for a live load of at least 150 psf [7.2 kPa].

2-5. FINISHES. Aluminum access doors and hatches shall be given a mill finish.

All aluminum surfaces in contact with concrete or mortar shall be given a heavy coat of epoxy enamel unless specified otherwise.

Steel doors shall be prime painted with manufacturer's standard primer or shall be hot-dip galvanized as indicated on the Drawings.

PART 3 - EXECUTION

3-1. INSTALLATION. Materials shall be erected and installed in conformity with the dimensions and arrangements specified or indicated on the Drawings and as recommended by the manufacturer. Product finishes damaged during erection shall be repaired as recommended by the manufacturer. Hatch frames with drainage couplings shall be connected to the appropriate drainage system.

End of Section

Section 08331

OVERHEAD COILING ALUMINUM DOORS

PART 1 - GENERAL

1-1. SCOPE. This section covers the furnishing and installation of insulated rolling aluminum doors. Doors shall be overhead coiling type, of the sizes indicated on the Drawings, complete with necessary guides, hoods, hardware, fastenings, mechanisms, and accessories as specified or as indicated on the Drawings.

Motor operated doors shall be installed complete and in proper operating condition in the openings indicated on the Drawings. Electrical conduit and wiring from the power source to the door control equipment, to motors, and to disconnect switches will be furnished and installed under the electrical sections.

1-2. GENERAL. Equipment furnished under this section shall be fabricated, assembled, and installed in full conformity with Drawings, specifications, engineering data, instructions, and recommendations of the equipment manufacturer, unless exceptions are noted by Engineer.

Details of doors, guides, hoods, and accessories shall be as indicated on the Drawings and as specified herein. Doors shall be the product of a manufacturer who is regularly engaged in manufacturing the items specified.

1-2.01. General Equipment Stipulations. The General Equipment Stipulations section (01610) shall apply to all equipment furnished under this section. If requirements in this specification differ from those in the General Equipment Stipulations section (01610), the requirements specified herein shall take precedence.

1-2.02. Power Supply. Power supply to electric operators will be 480 volts, 60 Hz, 3 phase, unless otherwise indicated on the Drawings.

1-2.03. Metal Thicknesses. Metal thicknesses and gages of sheet metal specified herein are the minimum required. Gages refer to American or B&S gage.

1-3. SUBMITTALS. Complete detail and installation drawings shall be submitted in accordance with the Submittals section. Drawings shall indicate construction details, clearance requirements, metal thicknesses, finish, counter balancing, and method of anchoring, locations of guides, motors, switches, controls, power requirements, and wiring diagrams.

1-3.01. Operation and Maintenance Manuals. Operation and maintenance manuals shall be submitted in accordance with the Submittals section (01300).

1-4. DELIVERY, STORAGE AND HANDLING. Shipping shall be in accordance with the Product Delivery Requirements section (01612). Handling and storage shall be in accordance with the Product Storage and Handling Requirements section (01614).

Doors shall be protected from damage during transportation, at the Site, and during construction. Damaged items will be rejected and shall be replaced.

1-5. WARRANTY. All door components furnished under this section shall be free from defects in workmanship, design, and materials, and performance and shall be guaranteed for the entire warranty period. Any door component failing during the warranty period shall be repaired or replaced by the manufacturer at no cost.

The doors furnished under this section shall be provided with a two (2)-year limited warranty. The warranty shall cover against defects in workmanship and material covering parts and labor. The warranty shall begin on the date of Substantial Completion.

PART 2 - PRODUCTS

2-1. ACCEPTABLE MANUFACTURERS. Rolling aluminum doors shall be of the types, models, and operation specified herein and indicated on the Drawings.

2-1.01. Uninsulated Rolling Doors. Not used.

2-1.02. Insulated Rolling Doors. Insulated rolling doors shall be Cornell “Thermiser Model ESD20”, Overhead "Stormtite Insulated Series 625", or approved equal.

2-2. MATERIALS. Materials used in rolling aluminum doors shall be as follows:

Curtain and Hood	Aluminum; Sheet - ASTM B209, Alloy 5005-H154; Extrusions - ASTM B221, Alloy 6063-T5. Rubber or vinyl hood weather seal or baffle. Rubber or vinyl lintel weather seal or brush.
End Locks	Manufacturer's standard.
Bottom Bar and Guides	Aluminum angles or channels at least

	3/16 inch thick.
Bottom Weather Seal	Rubber or vinyl.
Guide Weather Seal	Rubber or vinyl. Provide on interior and exterior of door.
Roller Shaft	Steel pipe or tubing.
Roller Ends	Cast iron, ASTM A48.
Spring	Oil-tempered steel.
Brackets and Gearing	Cast iron or steel.
Operating Chain	Steel; hot-dip galvanized, ASTM A153 and A385; or zinc plated, ASTM B633, SC4.
Slat Insulation	Polyurethane, foamed in place.
Anchor Bolts	As specified in the Anchorage in Concrete and Masonry section (05550).

2-3. ROLLING DOOR FABRICATION.

2-3.01. Mounting. Doors shall be fabricated for installation on the face of the wall, with the hood mounted above the opening as indicated on the Drawings.

2-3.02. Uninsulated Door Curtain. Not used.

2-3.03. Insulated Door Curtain. The curtain for insulated doors shall be formed of interlocking insulated slats and shall be designed to resist a 25 psf wind pressure. The curtain shall roll up on a drum supported at the head of the opening and shall be balanced by helical springs. Slats shall be 3/4 inch thick, formed of an outside face and inside face of .050 inches aluminum totally enclosing foamed-in-place polyurethane insulation.

The ends of each slat in the insulated curtain shall be equipped with a combination end lock and wind lock. Combination end locks shall have a flat surface engaging a seal of metal or of other suitable material mounted on or in the guides, in a manner which will provide an effective seal against wind and water.

Each insulated curtain shall be provided with a bottom bar attached in a manner to suit sill construction. Each exterior insulated door shall be furnished with a replaceable, compressible weather seal fastened to the bottom bar.

2-3.04. Vision Panels. Not used.

2-3.05. Guides. Guides shall form a pocket of sufficient depth to retain the curtain in place under the specified maximum wind pressure. Guides shall be attached to adjacent construction with 3/8 inch non-corroding bolts spaced at not more than thirty (30) inches and near each end. Weather seals shall be provided on the interior and exterior.

2.3.06. Roller Shaft. The roller shaft shall be designed so that deflection does not exceed 0.03 inch per foot of span. Ends of the roller shall be closed with plugs machined to fit and fastened with pins or screws. Welding will not be acceptable. The counterbalancing spring installed inside the roller shall be capable of producing sufficient torque to permit easy operation of the curtain from any position. The spring tension shall be adjustable from outside the bracket without removing the hood, except for manual push-up doors, which may have the spring adjusting device inside the hood.

2-3.07. Brackets. Brackets shall close the ends of roller-shaft housing and shall support the hood. Ends of the roller shaft shall be journaled into bracket hubs. The shaft shall be fitted with self-lubricating, sintered bronze bearings or double sealed, grease lubricated ball bearings.

2-3.08. Hood. The hood shall be fabricated of at least 20 gage (0.032 inch) aluminum, shall be formed to fit the contours of the brackets, and shall be reinforced with rods, rolled beads, or a stiffening flange at top and bottom edges. Hoods at openings larger than twelve (12) feet wide shall be fitted with intermediate supporting brackets. A flexible weather baffle, mounted internally, shall be provided to prevent airflow around the coil, and provisions shall be included in the design of the hood to prevent the ingress of birds. In addition, a lintel weather seal or brush shall be provided.

2-3.09. Locking Device. Manual push-up doors shall be fitted with a chain or bar type locking device designed to receive a padlock. For chain operated doors, provisions shall be made to secure the chain against travel by means of a padlock. Padlocks are covered under the finish hardware section (08700).

2-3.10. Door Operation. Doors indicated on the Drawings to be motor operated shall be provided with electric motor operators and auxiliary chain gear operation.

2-3.11. Finish. Curtain slats, hood, and bottom rails shall be given an anodic finish conforming to Aluminum Association (AA) requirements in the shop. Color will be selected from the manufacturer's standards. All other exposed metal parts of the door and accessories, except bearings and chains, shall be shop-primed.

Galvanizing shall comply with ASTM A653 for commercial steel sheets and ASTM A123 for assembled steel products. Galvanized surfaces shall be phosphatized before painting.

2-4. ELECTRIC MOTOR OPERATORS. Electric motor operators shall be of a type recommended by the door manufacturer and shall be complete with an electric motor, reduction gearing, magnetic brake, brackets, push-button controls, limit switches, magnetic reversing starters, and other accessories required for proper operation. Each operator shall be designed so that the motor may be removed without disturbing the limit switch adjustment and without affecting the emergency auxiliary operators. Provisions shall be made for immediate manual operation of the door in case of electric power failure. The emergency operating mechanism shall be arranged to be activated and deactivated from the floor, and its use shall not affect the adjustment of the limit switches. Whenever the mechanism is engaged, the motor shall be disconnected from the manual operating mechanism. Electric motor operators shall be wall-mounted near the head of the door, unless indicated on the Drawings.

2-4.01. Motors. Motors shall be of sufficient horsepower to move doors in either direction from any position at a rate between 0.5 foot and 1 foot per second when operating under full wind load conditions. Motors shall be rated 460 volts, 60 Hz, 3 phase.

2-4.02. Control System. Each door shall be equipped with an automatic control system arranged to control the opening, closing, and stopping of curtain travel, and to automatically reverse closing travel when the lower edge of the door curtain meets an obstruction. The control system shall be mounted in a NEMA Type 4X enclosure, or as indicated on the Drawings.

2-4.03. Motor Controller. The motor controller shall be a full voltage, reversing, magnetic type, with 480 volt, 60 Hz, 3 phase contactors; automatically reset thermal overload relays; 120 volt ac operating coils; and 480 to 120 volt dry-type control transformer complete with one secondary lead fused and the other secondary lead grounded. Starters shall not be smaller than NEMA Size 1.

Reversing starters shall be mechanically interlocked so that only one set of contacts can be closed at any one time.

Three (3) thermal overload relays, rated to protect the motor from damage due to overload, shall be furnished with each motor starter. The motor controller enclosure shall be sized and arranged to house the control power transformer and fuses, relays if required, and a marked terminal block on which all control wiring from all devices shall be terminated. The terminal block shall be located for easy installation and maintenance. All control wiring shall be 14 AWG or larger.

2-4.04. Control Switches. Remote control switches shall be located on the interior or exterior of the openings as indicated on the Drawings. Each switch control station shall be of the three-button, momentary contact type, with the buttons marked "Open", "Close", and "Stop". When the door is in motion and the "Stop" button is pressed, the door shall stop instantly and remain in the stopped position until the "Open" or "Close" button is pushed. Push buttons shall be of the fully guarded type to prevent accidental operation.

2-4.05. Safety Device. Each motor operated door shall be equipped with safety edges complying with UL 325, Usage Class III. The primary and secondary entrapment protection devices provided shall be a combination of Type A, Type B1, or Type B2 per UL 325. All safety edges shall be monitored. Entrapment protection requiring a constant pressure actuating device to operate the door motor will not be acceptable, nor will entrapment protection that requires continuous actuation of an audible alarm during door operation.

Upon sensing an obstruction, the door operator shall respond as prescribed in UL 325. The safety device shall be connected with the "closed" limit switch to prevent opening a closed door by tripping the safety device. The safety device shall not serve as a substitute for a limit switch. Type S cable equipped with a spring-loaded automatic take-up reel, or an equivalent device, shall be provided between the safety device and the fixed cable supports.

2-4.06. Electrical Work. All manual or automatic control devices necessary for proper operation of the doors shall be provided. Motors and accessories shall be prewired at the factory to the extent practicable, with connections brought to terminal strips in the controller enclosure.

PART 3 - EXECUTION

3-1. INSTALLATION. Doors shall be installed in accordance with details, drawings, and manufacturer's directions. All anchors and inserts for guides, brackets, motors, controls, switches, and other devices shall be accurately located. After installation, doors shall be free from warp, twist, or distortion, and shall be lubricated and properly adjusted to operate freely and smoothly.

3-2. CLEANING. After installation, factory finished metal surfaces shall be thoroughly cleaned and touched-up as recommended by the manufacturer. Abrasive, caustic, or acid cleaning agents shall not be used.

End of Section

Section 08700

FINISH HARDWARE

PART 1 - GENERAL

1-1. SCOPE. This section covers finish hardware for fiberglass reinforced plastic doors which must be keyed to match existing door locks.

1-2. GENERAL.

1-2.01. Templates. Each hardware manufacturer shall deliver to the door and frame manufacturer a template for each item of mortised and surface-applied hardware. Each template shall be labeled with the manufacturer's name, hardware item, opening number, and location on the door or frame where the item is to be installed.

1-2.02. Packaging. Each item of hardware shall be packaged separately in an individual container complete with screws, keys, special wrenches, instructions, and installation templates necessary for accurately locating, setting, adjusting, and attaching the hardware. Each container shall be marked with the number of the opening to which the hardware item is to be applied.

1-2.03. Protection. Special care shall be taken to protect finished surfaces of hardware during installation. Hardware on which the finish has been damaged prior to final acceptance of the work shall be replaced with new hardware at no additional cost to the Owner.

1-2.04. Adjustment. Each supplier of finish hardware shall provide the services of a trained and experienced hardware consultant to service and adjust installed hardware.

1-3. SUBMITTALS. A complete schedule of finish hardware shall be submitted in accordance with the Submittals section (01300). The schedule shall indicate each item of hardware required for each opening, manufacturer's name, manufacturer's number or symbol, and finish.

PART 2 - PRODUCTS

2-1. ACCEPTABLE MANUFACTURERS. The catalog numbers which appear in the Hardware Schedule identify products of the first-named of the manufacturers

listed herein for each hardware item. Equivalent products of the other manufacturers listed herein will also be acceptable.

Butts	McKinney (MC), Hager, Stanley.
Exit devices	Von Duprin (VD), Yale (YA) or Corbin Russwin
Closers	LCN, Sargent, or Dorma
Thresholds, cast abrasive	Wooster (WO), American Abrasive, or Stubbs.
Kickplates and Latch Guard	Rockwood (RO), Baldwin or Quality.
Drip caps, extruded	Pemko (PE), Reese, Zero
Weatherstripping	Reese (RE), Zero or Pemko

2-1.01. Finish. The required finish shall be as indicated by the catalog number listed in the Hardware Schedule herein. Exterior surfaces of door closers shall be finish painted with shop-applied powder coated finish, plated finishes, or special coatings as indicated in the Hardware Schedule. Machine screws, bolts, and other exposed attachments shall be finished to match hardware.

2-1.02. Keying. All cylinder locks shall be keyed in groups to match the existing key system already established. All cylinders shall be furnished with interchangeable cores After the finish hardware submittals have been accepted by the Engineer, the Owner will meet with the Contractor and the hardware consultant to determine the keying groups. All locks in each group shall be keyed alike and each group shall be keyed differently. Two "Do Not Duplicate" keys shall be provided with each lock.

2-1.03. Security System. Power through hinges and electric strikes provided herein shall be compatible with the security system purchased under separate contract by the Owner.

PART 3 - EXECUTION

3-1. INSTALLATION. Hardware shall be accurately fitted, securely applied, carefully adjusted, and lubricated in accordance with the manufacturer's instructions.

3-1.01. Location. Unless otherwise directed by the Engineer, the locations of hardware items shall be in accordance with DHI "Recommended Locations for Builders' Hardware for Standard Steel Doors and Frames".

3-1.02. Thresholds. The ends of thresholds shall be notched to fit the applicable door frame profile. Thresholds shall be field drilled to receive flush bolts where required. Thresholds shall be anchored to concrete by means of 5/16 inch diameter stainless steel flat head countersunk machine screws and expansion anchors spaced at 8 inch centers. Thresholds shall be set in asphalt roofing cement conforming to ASTM D4586, Type II.

3-2. HARDWARE SCHEDULE. Hardware shall be furnished in accordance with the following groups. Hardware is listed in groups. A complete set of hardware is listed for each group. Each door will have a hardware group designated in the door schedule on the drawings.

Hardware Schedule

GROUP NO. SET #1
Doors: 101

No. Req'd	Item	Catalog No.		Manufacturer
4	Hinges	T4A3386 4-1/2 x 4-1/2	32D	MC
1	Panic Device	9875F-992L-17	630	VD
1	Closer	4010N US26D		LCN
1	Kick Plates	K1050 10" x 34"	US32D	RO
1	Latch Protector	320		RO
1 set	Weatherstrip			RE
	Head/Jamb	DS70		
	Sill	323		
1	Raindrip	346 C		PE
1	Threshold	115 ALUMOGRIT 4" x 1/2" x Door Width		WO

End of Section

Section 08800

GLASS AND GLAZING

PART 1 - GENERAL

1-1. SCOPE. This section covers glass and glazing for windows, doors, and other openings having glass as indicated on the Drawings and as stipulated herein.

The following items of work are covered under other sections:

Neoprene and vinyl gaskets for glazing aluminum assemblies.

1-2. GENERAL. Except as modified or supplemented herein, all glazing shall be in accordance with the recommendations of the Flat Glass Marketing Association (FGMA).

Tempered glass and laminated glass shall conform to the requirements for glazing materials for Category II products in accordance with the Safety Standard for Architectural Glazing Materials, 16 CFR 1201, January 6, 1977, as amended.

Insulating glass units shall bear the certification labels of the Insulating Glass Certification Council (IGCC).

1-3. SUBMITTALS. Complete specifications and data covering the items furnished under this section shall be submitted in accordance with the Submittals section.

1-4. LABELS. All glass shall be delivered to the work bearing the original manufacturer's labels. These labels shall not be removed until just prior to the final window cleaning.

PART 2 - PRODUCTS

2-1. MATERIALS. Materials shall conform to the following:

Insulating Glass	
Tinted	ASTM E774, Class A; 1 inch thick, outboard lite made from 1/4 inch heat strengthened float glass with low emissivity coated glass on #2 surface; inboard lite made from 1/4 inch clear heat strengthened float glass; laminated glass where required for safety glazing, PPG Industries "Solarban 70XL Starphire", Viracon or Pilkington.
Tempered Glass	Float, fully tempered, ANSI Z97.1 or ASTM C1048.
Clear	1/4 inch; PPG "Herculite", United Glass Corporation "Tuf-flex", or equal.
Laminated Glass	1/4 inch nominal thickness, ANSI Z97.1; ASTM C1172; two 1/8 inch thick sheets of float glass with vinyl interlayer, Guardian Industries, Viracon or equal.
Glazing Compound	ASTM C669.
Extruded Tape	Pecora "B-44 Extru-Seal", Protective Treatments "PTI 606", Tremco "440 Tape", or equal.
Acrylic Sealant	Pecora "Unicrylic", Tremco "Mono" or equal.
Setting Blocks	Soft lead or neoprene.
Spacers	Cork and rubber; Rhopac "Adhesive Backed Spacer Blocks".
Glazing Clips	Spring wire.

PART 3 - EXECUTION

3-1. GLAZING. All glass sizes shall be obtained from measurements of the work at the site or from the manufacturer of the sash, doors, or frames in which the glass is to be set. In all cases, however, the Contractor shall be responsible for the correctness of the size of the glass. Locations for each type of glass shall be as indicated or scheduled on the Drawings.

3-1.01. Aesthetic and Thermal Properties. All insulated glass shall be coated on one or more surfaces to provide performance values specified by the interpane designations. Color of the base glass shall be as specified. Only one general color of tinted insulated glass will be used.

Exact color of the tinted glass and surface coatings required to obtain the required aesthetic effect shall be selected by the Engineer from the manufacturer's shades of the color and coatings specified. Samples and data shall be submitted as required by the Submittals section.

3-1.02. Doors and Frames. Glass in fiberglass reinforced plastic and/or hollow metal doors and frames shall be set in glazing compound and held in place with the glazing stops and beads provided. Spacers held 1/4 inch below sight line shall be provided between the glass and the tops or beads if required to position the glass. Each glass panel shall be cushioned so that it is free from strain or binding due to uneven pressure at the stops. At exterior doors, removable beads shall be bedded in glazing compound. Glazing compound shall be finished smooth and shall slope uniformly from the face of the glass to the edge of the stop or the bead.

3-1.03. Aluminum Assemblies. Glass in aluminum assemblies employing extruded gasket glazing shall be set with the gaskets and stops supplied by the manufacturer of such assemblies and in accordance with the manufacturer's instructions.

3-1.04. Other Glass. All other glass shall be set as required by the glazing facilities provided and the glass embedment requirements.

3-2. LABELS. All glass shall be delivered to the work bearing the original manufacturer's labels. These labels shall not be removed until just prior to the final window cleaning.

3-3. PROTECTION AND CLEANING. All glass shall be protected against breakage during the construction period, and all broken or cracked glass shall be replaced at the time of completion of the work.

All glass shall be cleaned just before final inspection, and all stains and defects shall be removed. Care must be exercised to remove paint, labels, and glazing compound without scratching or marring the surface of the glass or metal work.

End of Section

Section 09510

SUSPENDED ACOUSTICAL CEILINGS

PART 1 - GENERAL

1-1. SCOPE. This section covers lay-in acoustical panel ceilings with exposed grid suspension systems to be furnished and installed at the locations indicated on the Drawings.

1-2. GENERAL. The ceiling work shall be coordinated with other building, electrical, heating, ventilating, air conditioning, and plumbing work.

Provide acoustical panels with recycled content such that post-consumer recycled content plus one-half of pre-consumer recycled content constitutes a minimum of 35 percent by weight.

Provide products made from steel sheet with average recycled content such that post-consumer recycled content plus one-half of pre-consumer recycled content constitutes a minimum of 25 percent by weight.

Sheet metal and wire gages set forth herein are minimums and refer to US Standard gage.

1-3. SUBMITTALS. Complete specifications, data, and catalog cuts or drawings covering the items furnished under this section and installation drawings showing suspension and erection details shall be submitted in accordance with the Submittals section.

Submit documentation indicating percentages by weight of post-consumer and pre-consumer recycled content; include printed statement of VOC content and chemical components.

1-4. EXTRA PANELS. One unopened carton of each type of new acoustical panels shall be furnished to the Owner.

PART 2 - PRODUCTS

2-1. MATERIALS. Materials shall conform to the following:

Acoustical Panels, Tegular	ASTM E1264, Type III, Form 1, Class A, square edge; United States Gypsum "Acoustone Glacier" or Celotex "Celotone Safetone-Colortone", texture-tone design
Size, Nominal	24 inches by 24 inches by 3/4 inch, tegular edge
Finish	Integral color (not paint); to be selected from manufacturer's standard colors
Recycled content	25 per cent, minimum.
NRC	0.65 minimum.
Exposed Grid Suspension System	ASTM C635, intermediate duty classification; Chicago Metallic "1200 Series" or Donn "DX" exposed tee system complete with main runner tees, main cross tees, intermediate cross tees, and hemmed edge moldings with standard prefabricated corner units for internal and external corners. All exposed metal shall have factory-applied, baked enamel finish. Color and finish shall be selected from manufacturer's standards.
Hangers	12 gage galvanized steel wire.
Powder-Actuated Anchors	Fed Spec GGG-D-777.
Masonry Nails	Hardened steel, 9 gage.
Wallboard Screws	ASTM C1002, Type S, self-tapping
Exposed Grid Suspension System, seismic locations	ASTM C635, heavy duty classification; Chicago Metallic "1200 Series", Armstrong “Prelude XL”, or USG-Donn "DX" exposed tee

	system complete with main runner tees, main cross tees, intermediate cross tees, and hemmed edge moldings with standard prefabricated corner units for internal and external corners. All exposed metal shall have factory-applied, baked enamel finish. Color and finish shall be selected from manufacturer's standards.
Struts	Manufacturer’s standard compression struts designed to accommodate lateral forces.
Clips	Manufacturer’s standard seismic clip designed and spaced to secure acoustical panels in place.
Wall angle	Manufacturer’s standard 1” x 2”, minimum.

PART 3 - EXECUTION

3-1. INSTALLATION. Suspended acoustical ceilings shall be installed in accordance with the manufacturer's recommendations. Installation of suspension systems shall conform to the requirements of ASTM C636. Each area shall be permanently enclosed before ceiling work is started.
Suspended acoustical ceilings of the types indicated shall be installed in the locations indicated on the Drawings.

The suspension systems shall be designed to support the ceiling, lighting fixtures, grilles, diffusers, and other required items without sagging. In each area, the suspension system shall be installed and leveled before acoustical panels or light fixtures are installed. Each grid system shall be leveled to within 1/8 inch in 12 feet. Unless otherwise indicated on the Drawings, the layout for each suspended acoustical ceiling shall be symmetrical about the center lines of the space with equal borders on opposite sides, and shall be square and parallel to the enclosing walls.

All necessary bracing, wires, clips, or other supports shall be required and installed as indicated in Standard 25-2 for Seismic Zone 2B.

3-1.01. Hangers. Hanger spacing shall not exceed 48 inches, with additional hangers placed at each corner of each recessed light fixture and framed opening. Hangers shall be securely anchored to overhead construction as follows:

a. To Steel Framing. Hangers shall be anchored by tying to the steel framing members. If the spacing of steel members exceeds the specified spacing of hangers, suitable additional framing members shall be provided and securely attached to the building's steel framing members.

b. To Concrete Ceiling. Hangers shall be supported from either powder actuated anchors or expansion anchors secured into the concrete ceiling slab. Hanger spacing shall not exceed 4'-0". Additional hangers shall be provided where required to support tee sections at openings, and penetrations through the ceiling system.

c. To Precast Hollow Core Concrete. Hangers shall be anchored by clips placed between the slab sections before grouting as indicated on the Drawings. Anchoring into soffits of prestressed concrete roof slabs with expansion anchors or powder-actuated anchors will not be permitted.

d. To Precast Concrete Tee Beams. Hangers shall be anchored by expansion anchors or powder-actuated anchors into the sides of the tee stem. Expansion anchors or powder-actuated anchors in tension will not be permitted.

Hangers shall be tied through holes in the vertical leg of main runner tees.

3-1.02. Main Runner Tees. Main runner tees shall be spaced 48 inches apart, supported with hanger wires not more than 48 inches apart. Main runner tees shall be placed with lines parallel to the bordering walls. Locations and methods of splicing shall be as recommended by the manufacturer.

3-1.03. Cross Tees. Main cross tees shall be spaced 24 inches apart, fitted between main runner tees, and clipped thereto as recommended by the manufacturer. Each line of main cross tees shall be straightened and aligned, and lines shall be perpendicular to main runner tees and parallel to each other.

Intermediate cross tees shall be spaced 24 inches apart, fitted between cross tees, and clipped thereto as recommended by the manufacturer. Each line of intermediate cross tees shall be straightened and aligned, and lines shall be perpendicular to main cross tees and parallel to each other resulting in a 24 inch by 24 inch grid.

3-1.04. Special Framing. Additional members shall be installed as required to frame for and support all light fixtures, diffusers, grilles, and similar items.

3-1.05. Edge Molding. Edge molding shall be installed at all walls around the entire perimeter of each ceiling area and around all columns. At masonry walls, edge molding shall be anchored in place by masonry nails or powder-actuated anchors. At gypsum wallboard partitions and walls, edge molding shall be anchored to metal studs using wallboard screws. Prefabricated corner units shall be installed at all internal and external corners. Hemmed edges of moldings shall be field notched for a flush fit at the exact point where tees connect.

3-1.06. Acoustical Panels. Acoustical panels shall be neatly cut to fit the spaces, with each panel supported on all sides by main runners, cross runners, or edge moldings. No visible gaps, openings, split edges, or cracked panels will be acceptable. All panel units shall be installed with any apparent grain running in the same direction.

3-2. SEISMIC RESTRAINT SYSTEMS. The ceiling support systems for seismic locations shall be provided with horizontal and vertical (uplift) seismic restraint systems conforming to applicable code requirements and approved by local authority having jurisdiction. Locations and spacings shall conform to the latest edition of IBC, Section 803 and any other applicable code requirements.

3-2.01. Horizontal Restraint. Horizontal restraints shall be provided in the form of four, No. 12 gage diagonal bracing wires, secured to the main ceiling support members, within 2 inches of intersections with secondary supports. Bracing wires shall be splayed at 90 degrees from each other at an angle not exceeding 45 degrees from the plane of the ceiling. These horizontal restraint points shall be placed not more than 12 feet on center in both directions with the first point no more than 4 feet from each bounding wall. Restraint wire attachment to the supporting structure shall be adequate for the loads imposed. Side wall ties shall be provided where necessary.

3-2.02. Vertical Restraint. Vertical restraints shall be provided to resist seismic uplift movements. Restraints shall be telescoping, compressive posts or vertical metal struts attached to the main ceiling support members and secured to the underside of the structure above, in conformance with code requirements. Vertical restraints shall be located at each horizontal restraint and at additional locations as may be required for code conformance.

3-2. CLEANING. Following completion of erection work, dirty or discolored exposed surfaces of the suspension system and panels shall be cleaned and left free of all defects. Any item which is damaged or which cannot be properly cleaned shall be removed and replaced with new materials.

End of Section

Section 09660

RESILIENT FLOORING

1-1. SCOPE. This section covers the furnishing and installation of resilient floor coverings including:

Vinyl composition tile
Rubber base

The requirements of this section shall apply to the buildings or facilities indicated on the Drawings. The type of floor covering and base to be provided in each room or space shall be as listed and as indicated on the Drawings.

1-2. SUBMITTALS.

A. General Submittals:

1. Complete specifications, color samples, and installation procedures for resilient flooring products shall be submitted in accordance with the Submittals section.

2. After colors have been selected, samples of resilient floor covering materials shall be submitted to the Engineer. Tile and rubber mat samples shall be full thickness, and each sample shall be marked on the back with identifying color, shade, pattern, thickness, and manufacturer's name. Samples of cove base, and reducing strip shall be submitted in 6 inch lengths.

3. Prior to installation of flooring, submit written certification by flooring manufacturer and adhesive manufacturer that condition of sub-floor is acceptable.

1-3. COLOR SELECTION. Colors of resilient floor covering products will be selected by Engineer from the manufacturer's complete line of color groupings. When required, flooring products and base products shall have color match capabilities. Patterns including accent bands, accent tiles, or other accent features shall be as indicated on the Drawings. Procedures for selecting colors shall be as indicated in the submittals section.

After colors have been selected, samples of resilient floor covering materials shall be submitted to Owner. Tile samples shall be full thickness, and each sample shall be marked on the back with identifying color, shade, pattern,

thickness, and manufacturer's name. Samples of rubber stair tread, cove base, stair base, and reducing strip shall be submitted in 6 inch lengths.

1-4. DELIVERY, STORAGE, AND HANDLING. Shipping shall be in accordance with the Product Delivery Requirements section. Handling and storage shall be in accordance with the Product Storage and Handling Requirements section.

Materials shall be delivered to the Site in the original unopened containers clearly marked with manufacturer's brand and name. Materials shall be handled carefully and stored in weatherproof enclosures. Materials shall be stored at not less than 70°F for 48 hours before installation.

1-5. EXTRA TILE. One additional full box of each required type of tile in each color selected shall be furnished to Owner.

PART 2 - PRODUCTS

2-1. PERFORMANCE AND DESIGN CRITERIA.

2-1.01. Fire Test Performance Requirements. Tile and base materials shall comply with NFPA 101, Class 1 material requirements for floors and Class A requirements for walls.

Resilient flooring shall comply with the following fire test performance criteria as determined by an independent testing laboratory acceptable to authorities having jurisdiction.

Critical Radiant Flux (CRF)	Not less than 0.45 watts per sq. cm., ASTM E 648.
Flame Spread	Not more than 75 ASTM E 84.
Smoke Developed	Not more than 450, ASTM E 84.
Smoke Density	Not more than 450, ASTM E 662.

2-1.02. Warranty. Resilient flooring products shall be provided with a warranty as specified.

2-2. MATERIALS. The materials, products, and accessories furnished shall be as follows:

Vinyl Composition Tile	ASTM F 1066, Composition 1, Class 1, solid color.
Products	Azrock, Flexco, Armstrong or equal. .

Size	12 inches square.
Thickness (gage)	1/8 inch .
Color selection criteria	Multiple colors per room.
Warranty requirements	Manufacturer's standard.
Rubber Base	Fed Spec SS-W-40a, Type I, Style A or B, 0.125 inch thick.
Products	Burke "Burkebase", Flexico "Rubber Wall Base", Johnsonite "Wall Base, "Roppe "Rubber Cove Base" or equal.
Style	Cove base.
Height	4 inches
Color selection criteria	Standard color groups.
Warranty requirements	Manufacturer's standard.
Reducing Strip	Same material as floor covering, formed into a tapered strip.
Adhesives	Provide only products having lower volatile organic compound (VOC) content than required by the more stringent of the South Coast Air Quality Management District Rule No. 1168 and the Bay Area Air Quality Management District Regulation 8, Rule 51; and as recommended by manufacturer of resilient flooring material.
Floor Leveling Material	Factory prepared, self leveling polymer modified cement underlayment, cured compressive strength 5500 psi minimum; W.R. Bonsal Co. "Self leveling underlayment", or as recommended by the flooring manufacturer.
Protective Paper	Fed Spec UU-B-790, Type I, Grade B, Style 4; laminated paper with nonstaining adhesive; Fortifiber Corp. "Seekure", or as recommended by the flooring manufacturer.

PART 3 - EXECUTION

3-1. GENERAL. Preparations and installation of floor coverings shall comply with the requirements of ASTM F 710 and the requirements indicated herein. In case of conflict, the most stringent requirements shall apply.

3-2. SURFACE PREPARATION. Installation of floor coverings shall not begin until the subfloor is completely dry and, insofar as practicable, the work of all other trades has been completed. Before laying floor coverings, the floor surface shall be thoroughly cleaned of all dirt, dust, plaster, oil, grease, paint, and other foreign substances. All holes, hollow spaces, and other imperfections in the surfaces to be covered with resilient floor covering shall be filled with floor leveling material. Ridges, bumps, and high spots shall be ground down smooth. The leveling material shall cure for 24 hours before the floor covering is installed.

The floor shall be dry and shall be maintained at a minimum temperature of 70°F for 48 hours before, during laying, and for 10 days after the floor covering is laid.

3-3. APPLICATION. Floor coverings shall be thoroughly and continuously cemented to the floor with adhesive applied in a thin film and spread evenly with a notched steel trowel or other suitable application tool.

3-3.01. Tile Installation and Pattern. Tile pattern shall be "checkerboard" fashion with any apparent grain reversed in each adjacent tile unless otherwise indicated on the Drawings. Multiple color patterns and accent bands shall be as indicated on the Drawings.

Unless otherwise required by pattern shown, tile shall be laid starting at the center of each room, working toward the walls, with the run of tile laid out so that opposite edge tiles are the same width. Except where otherwise indicated on the Drawings, all lines shall be kept straight and parallel or at right angles with room lines, straightness being checked at frequent intervals. Edge tile shall be scribed to the wall, cut, and fitted in place after the field tile has been applied. Care shall be taken to make all tile joints flush, so as to present a smooth, continuous even surface, free from gaps or irregularities, with all joints tight, and each unit firmly and tightly cemented.

3-3.02. Sheet Vinyl Installation. Not used.

3-3.03. Stair Treads and Landing Tile Installation. Not used.

3-3.04. Installation of Bases. Bases shall not be installed until the surfaces against which they are to be applied are dry and clean. Bases shall be set in accordance with the manufacturer's directions and continuously cemented in place. All internal corners shall be mitered, and all external corners and exposed

ends shall have premolded sections. All joints and angles shall be neat and tight. Each base, throughout its entire length, shall have top and bottom edges in firm contact with walls and floors.

Wall base shall be applied to all walls, columns, pilasters, casework where indicated, and other permanent fixtures in rooms or areas scheduled for base installation.

3-3.05. Trim and Edging Installation. Where floor coverings of different thicknesses abut, a tapered layer of floor leveling underlayment shall be installed under the thinner floor covering so that the top surfaces of abutting materials are at the same elevation.

Except at doorways where metal thresholds are specified under the finish hardware section, reducing strips shall be installed at exposed edges of floor covering where the elevation of the floor covering is higher than the adjacent floor surface.

3-4. PROTECTION AND FINAL CLEANING. Resilient floor coverings shall be protected from damage until acceptance by Owner. Traffic shall be prohibited from the newly installed floors for 48 hours after installation. Areas that are subject to traffic or over which materials or equipment are to be moved shall be temporarily covered with durable nonstaining protective paper.

Just before final inspection, the entire surface shall be thoroughly cleaned, waxed, and polished with heavy polishing machines or as recommended by the flooring manufacturer. Chemicals and waxes used in cleaning and dressing floor surfaces shall be suited to the type of floor covering.

End of Section

Section 09810

POLYURETHANE COATING FOR STEEL PIPE

PART 1 - GENERAL

1.01 SCOPE OF WORK

A. This Section covers the materials, installation, and testing of a prefabricated, polyurethane coating system for steel pipe, fittings and specials, complete, and a heat-shrinkable cross-linked polyolefin coating for field joints, complete. Except as described in this Section, the coating system shall be in accordance with ANSI/AWWA C222 for pipe, fittings and specials, and ANSI/AWWA C216 for field joints.

1.02 SUBMITTALS

A. To be submitted in conjunction with Section 15062 –Steel Pipe.

B. Affidavits of Compliance. The CONTRACTOR shall submit the pipe manufacturer's and polyurethane coating manufacturer's certification that all work performed under this Section complies with the requirements of this Section and the appropriate ANSI/AWWA standards.

C. Shop Drawings. The CONTRACTOR shall furnish submittals in accordance with Section 01300-Submittals and ANSI/AWWA C222. The following submittals are required:

1. Coating Material. The CONTRACTOR shall submit polyurethane material which indicates the manufacturer, product numbers, and manufacturer's recommended dry film thickness.

2. Material Information. The CONTRACTOR shall submit technical data sheets which itemize technical, performance and testing information that indicates compliance with this Section.

3. Samples. Samples of the material shall be submitted for testing by the OWNER. Each sample shall be clearly identified with catalog number, size, color, and other

information required for testing.

D. Polyurethane Coating Protection Procedures. The CONTRACTOR and polyurethane coating manufacturer shall submit the proposed methods to protect the polyurethane coating during all phases of pipe handling, shipping, storage, and installation and shall certify that the proposed methods will be sufficient to assure the integrity of the polyurethane coating.

E. Test Reports. The CONTRACTOR shall submit coating system test reports required by paragraph 1.04.B of this Section. Shop test reports shall be submitted prior to the start of any shop coating work.

1.03 QUALITY CONTROL AND ASSURANCE

A. General. The CONTRACTOR shall provide to the OWNER a minimum of 14 days advance notice of the start of any shop coating work and a minimum of 7 days advance notice for field coating work. Unless the OWNER has granted prior approval, all coating work shall be performed in the presence of the OWNER.

B. Inspection. The CONTRACTOR shall retain the services of trained technicians to test the polyurethane coating system in the shop and field and prepare reports to be provided to the OWNER. As a minimum, the tests shall include holiday detection and polyurethane coating film thickness.

C. Polyurethane Coating Manufacturer's Representative. The CONTRACTOR shall require the polyurethane coating material manufacturer to furnish a qualified factory technical representative to visit the pipe coating shop for technical support at the beginning of the polyurethane coating operation and as may be necessary to resolve shop or field problems.

D. Shop Tests.

1. A cure test shall be performed in accordance with the manufacturer's recommendations.

2. The polyurethane coating shall be electrically tested for coating flaws with a holiday detector accepted by the OWNER. Holidays detected shall be immediately repaired and retested.

3. Adhesion testing shall be done in accordance with ASTM

D4541 on two cured pipe sections from each shift, as described in ANSI/AWWA C222.

E. Field Tests.

1. Immediately before the coated pipe is lowered into the trench and immediately before pipe fittings or specials are installed, the CONTRACTOR shall provide a visual and holiday inspection of the entire coating, paying special attention to the underside of the pipe, fitting, or special.

2. When polyurethane coating is applied in the field, the requirements for shop testing of polyurethane shall also apply. All field coatings shall have complete holiday detection and repair of defects (such as but not limited to blisters, punctures, abrasions, etc.).

3. Heat shrink sleeves shall have complete holiday detection and repair of defects.

PART 2 - PRODUCTS

2.01 MATERIALS

A. Polyurethane. Pipe, fittings, and specials shall be provided with a polyurethane coating conforming to ANSI/AWWA C222 and as described below:

1. The surface coating shall be 100% solids polyurethane.

2. Minimum required dry film thickness shall be 30 mils or to meet the manufacturer's recommendation, whichever is greater.

3. The coating materials shall be one of the following, subject to review and acceptance of submitted product performance reports: Futura Coatings "Protec II", Chemline "Chemthane 2265", or Carboline.

B. Heat-Shrinkable Polyolefin Wrap or Sleeve. Field joints shall be coated with a heat-shrinkable polyolefin coating that is compatible with the originally applied coating material. Heat-shrinkable coating shall conform to ANSI/AWWA C216 and as described below:

1. Primer, as recommended by the heat-shrinkable coating

manufacturer.

2. Cross-linked polyolefin sheeting precoated with adhesive, type and recovery as recommended by the heat-shrinkable coating manufacturer for each type of joint.

3. Finished coating thickness shall be not less than 80 mils.

4. Heat shrink sleeves shall be as manufactured by Canusa, Raychem-Covalence or approved equal.

C. Inspection Devices. The CONTRACTOR shall furnish inspection devices that are calibrated and in good working condition for the detection of holidays and measurement of tape coating film thicknesses. These inspection devices shall be purchased by the CONTRACTOR and provided to OWNER for acceptance prior to any delivery of pipe. Detection of holidays shall be made by electrical holiday detectors capable of at least a 12,000 volt output.

PART 3 - EXECUTION

3.01 GENERAL

A. Storage of Materials. Materials shall be stored within the temperature ranges recommended by the polyurethane coating manufacturer, using heated or cooled storage areas if necessary. Polyurethane shall be stored in a dry area at a minimum temperature of 70 degrees F.

B. Coating materials shall be applied in accordance with this Section, the product application instructions of the polyurethane coating manufacturer, and the field technical support instructions from the manufacturer. The requirements of the applicable ANSI/AWWA standard shall apply as a minimum in the absence of more stringent or more specific requirements of the polyurethane coating manufacturer.

3.02 WELD SURFACE PREPARATION

A. To provide for an effective, long-term bond between the polyurethane coating and the substrate, the following pipe weld surface preparation shall be provided.

1. Weld surfaces with a reinforcement greater than 1/32-inch and all longitudinal and coil splice welds shall be

ground to provide a smooth surface with a reinforcement not exceeding 1/32-inch. The resulting weld surface shall have a cross-section shape that is free of discontinuities, abrupt changes in curvature, with no ridges or valleys that may promote bridging or disbondment of the polyurethane from the substrate.

2. Welds that have been prepared with a reinforcement not exceeding 1/32-inch and a cross-section slope that is free of discontinuities, abrupt changes in curvature, with no ridges or valleys that may promote bridging or disbondment of the polyurethane from the substrate require no additional preparation.

3.03 PIPE SURFACE PREPARATION

A. Surfaces to be coated shall be detergent cleaned prior to abrasive blasting in accordance with the Society for Protective Coatings (SSPC) SP5, White Metal Blast, 3.00 mil profile, minimum, or as required by the manufacturer, whichever is greater.

B. All burrs, sharp edges, and weld splatter shall be removed prior to abrasive blasting.

C. Abrasive blasting shall be performed using sand, metallurgical slag, or a combination of steel grit and shot to produce a surface in conformance with SSPC-SP6. Steel grit shall comprise at least 60 percent of the working mix of abrasive, if a centrifugal wheel abrasive blaster is used. The prepared surface shall have a surface profile not exceeding 2 mils.

D. Abrasive blasting shall be done when the substrate surface is at least 5 degrees F above the dew point.

E. Polyurethane application shall be done during the same working day and as the abrasive blasting for each pipe section. Polyurethane shall be applied prior to the formation of any rust bloom or contamination. Areas that show signs of rust bloom or contamination must be re-blasted prior to applying the coating.

3.04 PIPE END PREPARATION

A. Coating holdbacks at the pipe ends shall be as required by the Contractor to permit the making of field joints without damaging

the interior or exterior coating, with the cuts parallel to the pipe ends.

B. Spiral or longitudinal pipe welds within two feet of the pipe ends shall be ground flush prior to abrasive blast cleaning.

C. Pipe ends that will be connected with sleeve-type couplings shall be epoxy coated for immersion service as specified in Section 15062-Steel Pipe. The holdbacks shall be greater than 6 inches at couplings to provide clearance between the coupling and polyurethane.

3.05 POLYURETHANE COATING APPLICATION

A. The polyurethane coating shall be applied according to ANSI/AWWA C222 and the manufacturer's instructions.

B. Polyurethane may be applied in a one-coat operation or in multiple coats, depending on the manufacturer's instructions.

C. Overcoating of an existing coating with the same polyurethane formula shall be permitted. If the original coat has exceed the manufacturer's maximum recoat time it must be brush-blasted in accordance with SSPC-SP 7 to achieve proper intercoat adhesion.

3.06 HEAT-SHRINKABLE COATING APPLICATION TO PIPE JOINTS

A. As specified in ANSI/AWWA C216 and as described below:

1. Clean and prepare surfaces. Field pipe joints shall be prepared as required by paragraph 3.03 Pipe Surface Preparation, except that shop blasted surfaces that have been coated with storage primer may be power tool cleaned instead of abrasive blast cleaned. The power tool cleaning shall be done in accordance with SSPC-SP3. Pipe ends not effectively protected with a storage primer shall be abrasive blasted to SSPC-SP6.

2. Fit coating material to area as recommended by the polyurethane coating manufacturer based on type and recovery of material.

3. Shrink the coating material to tightly conform to pipe joint and overlap shop coating using the polyurethane coating manufacturer's recommended heat sources and methods.

B. Finish coatings with wrinkles, gaps, holes, or burns shall be completely removed and replaced until acceptable coverage is achieved.

C. Provide heat application indicators to ensure proper amount of heat is used.

3.07 HOLIDAY AND POLYURETHANE COATING THICKNESS TESTING

A. Just prior to installation, pipe, fittings and specials shall be tested using the specified electrical flaw detector. Field coatings and heat shrink sleeves also shall be tested using the specified electrical flaw detector. Tests shall be made using a voltage of 6,000 to 7,000 volts.

B. The polyurethane coating film thickness shall be verified by measuring the dry film thickness. Dry film thickness shall be measured in accordance with SSPC-PA 2.

C. The results of the holiday and polyurethane coating thickness tests shall be documented in the coating system test reports, which shall be submitted to the OWNER as required by paragraph 1.03 Submittals.

3.08 REPAIR OF POLYURETHANE COATING

A. General. Repair areas where polyurethane coating is visually damaged or where electrical holiday testing indicates defects. Repairs to holidays or other coating damage shall be in accordance with ANSI/AWWA C222 or manufacturer's instructions, as applicable.

B. Training. The application of the coating shall be completed and supervised by individuals who have been trained and certified by the manufacturer in the application of coating being applied.

C. Repair Limit. Polyurethane coating repair on each individual section of pipe, after final installation, shall not exceed 2.0 percent of the total pipe surface area or a total of 5 repairs, whichever is less. The repaired surface area for fittings shall not exceed 1.5 percent of the total surface area after final installation. The OWNER reserves the right to reject any pipe or fittings exceeding these requirements.

D. Repair Procedure.

1. Clean and prepare pipe surface, remove damaged coating, and apply polyurethane in accordance with polyurethane coating manufacturer's written instructions.

2. Repair coating material must be compatible with the original coating material. If repair material other than polyurethane is used, it must be approved by the OWNER.

3. Thickness of repair coatings shall equal or exceed thickness of factory applied coatings, but shall not exceed the maximum thickness recommended by the manufacturer.

4. All damaged areas need to be locally repaired.

5. Completed polyurethane repair shall adhere tightly to factory coating and present smooth appearance.

6. Field coatings shall have complete holiday detection and repair of defects.

E. Following repair of the damaged area, if the holiday test indicates a holiday still exists, the pipe section shall be replaced.

F. When the area tested shows no holiday, a temporary notation (initials of the individual performing the test and dates of testing) shall be applied to the area indicating the test is satisfactory and a test report shall be created documenting that the area tested shows no holiday.

3.09 STORAGE AND SHIPMENT

A. Pipe shall be square-stacked on padded supports or racks. Lifting equipment shall be padded and wide fabric slings shall be used. To the extent possible, the coated pipe shall be handled from the holdback ends. Lifting and handling padding shall be recommended by the polyurethane coating manufacturer.

B. Tie down devices (straps, bandings, etc.) shall be padded where in contact with the pipe polyurethane coating.

End of Section

Section 09880

CORROSION PROTECTION LINING SYSTEMS

PART 1 - GENERAL

1-1. SCOPE. This section covers furnishing and installation of corrosion protection systems to be applied to floors and walls at the chemical storage facilities as specified herein and as indicated on the Drawings. This section covers concrete surface preparation, furnishing and application of a corrosion protection system suitable for each set of specified service conditions, the engineering field services to be provided by the material manufacturer, and any appurtenances that are required to provide a completed corrosion protection system.

1-2. QUALITY ASSURANCE.

1-2.01. Manufacturer's Field Services. The applicator of the protection system shall contact the corrosion protection system material manufacturer during the bidding phase of the project and shall include in the cost of this work and the estimated cost of the manufacturers engineering field services as specified.

The field services provided by the material manufacturer shall include review of the project before surface preparation; approving the applicator, the materials, and the procedure to be used; observation and approval of the surface preparation; and observing the application. Where specified herein, the manufacturer shall also provide the adhesion testing to determine compliance with the specified minimum pull-off adhesion strength. The field representative of the protection system material manufacturer shall submit, through Contractor, written approvals of the proposed protection system materials, application procedures, applicator, and surface preparation. The field representative shall be an employee of the material manufacturer.

Contractor shall notify the material manufacturer and Engineer at least 10 days prior to anticipated date of placement of the protection system.

1-2.02. Applicator. The protection system applicator shall submit a satisfactory experience record including references for previous application of the specified protection system to concrete structures of similar design and complexity. The material manufacturer shall approve the applicator in writing.

1-3. SUBMITTALS. Complete specifications and data on the protection system, application instructions and procedures, and material manufacturer's approvals of the protection system furnished under this section shall be submitted in accordance with the Submittals section (01300). The protection system

manufacturer shall provide certification for each component of the protection system that will provide corrosion resistance for the specified service conditions. The material manufacturer after application of the protection system shall certify that the protection system is free of pinholes and holidays.

1-4. DELIVERY, STORAGE, AND HANDLING. The material shall be delivered to the jobsite in original unopened containers with labels intact. Protection system components shall be stored indoors in an appropriate location and environment in accordance with the manufacturer's recommendations and shall be protected against freezing.

Shipping shall be in accordance with the Product Delivery Requirements section (01612). Handling and storage shall be in accordance with the Product Storage and Handling Requirements section (01614).

1-5. WARRANTY. Material manufacturer shall warrant the chemical resistance of each corrosion protection system for a period of three years from the date of Substantial Completion when exposed to the customer's normal operating conditions as stated in the specification. This warranty shall not cover wear and tear such as abrasion resistance or mechanical abuse.

PART 2 - PRODUCTS

2-1. PERFORMANCE AND DESIGN REQUIREMENTS.

2-1.01. General Service Conditions. The linings shall provide splash and spill protection for 72 hours from the chemicals as specified herein.

Surfaces to be coated are concrete .

2-2. MATERIALS. Materials shall be suitable for the specified service conditions. Products composing the corrosion protection system shall be chemically resistant to the chemicals, concentrations, temperatures, exposure times, and other relevant service conditions. In many cases, repair materials, primers, flexible basecoats, and other ancillary products that will be protected by a corrosion resistant and/or wear resistant layer of the protection system and may not be required to meet these criteria provided the overall protection system complies with the performance criteria. Each product of the protection system that complies with the performance requirements shall be certified as such by the protection system manufacturer. When recommended by the lining manufacturer, a vapor barrier shall be included as part of the corrosion protection system at no additional cost.

Each corrosion protection system specified is manufactured by Dudick, Inc. Acceptable alternative manufacturers that have a corrosion protection system

that will satisfy the specified service conditions and may be furnished subject to review and acceptance by Engineer, are Carboline, Ceilcote/International Co., KCC Corrosion Control Co. Ltd, PolySpec Corporation, and Sherwin-Williams Control Tech Corrosion Protection Systems without exception. Other manufacturers and their corrosion protection systems will not be acceptable.

2-2.01. Epoxy Protection Systems.

2-2.01.01. Service Conditions for Epoxy Protection Systems.

Chemicals to be contained at the maximum chemical temperature of 120°F that are corrosive to concrete:

Sodium bisulfite; 38% conc.

Epoxy protection systems will be exposed to sunlight, UV, and outdoor atmosphere.

2-2.01.02. System Requirements for Epoxy Protection Systems.

Type of lining system.	Coating, non-reinforced.
Location(s) where coating corrosion protection system is required:	Sodium Bisulfite Feed System

2-2.01.03. Epoxy Coating Protection System. When an epoxy coating lining system is required, the epoxy corrosion protection system shall be a two-component, 100 percent solids, solvent-free, epoxy resin, silica filled, high-build protective and waterproofing coating, Dudick "Protecto-Coat 300 Improved". All resins in this system shall be 100 percent solids with at least two components. The concrete surface primer shall be a conductive, amine cured epoxy resin, Dudick "Primer 67C". The finish coats shall be amine cured epoxy resin.

2-2.01.04. Epoxy Flexible Lining Protection System. Not used.

2-2.02. Vinyl Ester Protection Systems. Not used.

2-2.04. Novolac Vinyl Ester Protection Systems. Not used.

2-2.05. Novolac Epoxy Protection Systems. Not used.

2-2.06. Epoxy Filler Compound. Epoxy filler compound for concrete surfaces shall be a two-component, 100 percent solids epoxy filler or as recommended by the corrosion protection system material manufacturer.

2-2.07. Corrosion Resistant Caulking/Sealant. Chemical resistant caulking/sealant shall be suitable for the specified service conditions and shall be as recommended, in writing, by the protection system material manufacturer.

2-2.08 Reinforced Epoxy Resin Topping Systems. Not used.

2-2.09 Reinforced Vinyl Ester Resin Topping Systems. Not used.

2-2.10 Reinforced Vinyl Ester with Graphite Resin Topping Systems. Not used.

2-2.11 Reinforced Novolac Vinyl Ester Resin Topping Systems. Not used.

2-2.12 Reinforced Novolac Epoxy Resin Topping Systems. Not used.

PART 3 - EXECUTION

3-1. GENERAL. All details, methods, and procedures of mixing, surface preparation, bonding, application, finishing, curing, and protection of the protection system shall be in strict accordance with the recommendations of the material manufacturer. The applicator shall comply with the recommendations of the material manufacturer's engineering field representative.

3-2. SURFACE PREPARATION. All surfaces shall be free of objectionable substances and shall meet the manufacturer’s recommendations for surface preparation. If the lining material manufacturer recommends any other surface preparation, it shall be brought to Engineer's attention and may be incorporated into the work if acceptable to Engineer.

All surfaces shall be dry when coated or lined, and shall be free from dirt, dust, sand, mud, oil, grease, rust, mill scale, and other objectionable substances. Oil and grease shall be completely removed as recommended by the material manufacturer before mechanical cleaning is started.

3-2.01. Concrete Surfaces. Concrete surfaces shall be prepared in accordance with SSPC-SP13/NACE 6. Concrete surfaces shall be prepared until they are acceptable to the lining material manufacturer. Surfaces shall be free of cracks, pits, projections, or other imperfections that would interfere with the formation of a smooth, unbroken coating film.

If any repairs to existing concrete are required, they shall be made as part of the surface preparation in accordance with the Concrete Repair section.

New concrete shall be cured for at least 28 days before lining is applied and shall be ready to receive the lining as determined by the material manufacturer.

Concrete surfaces shall be tested for capillary moisture in the concrete in accordance with ASTM D4263. There shall be no capillary moisture migration after 24 hours as determined by the test method. If the manufacturer recommends using the calcium chloride test method to test for capillary moisture migration in the concrete and the test results exceed 3 pounds per 24 hours per 1,000 square feet or more stringent conditions recommended by the lining manufacturer, the corrosion protection system shall include a vapor barrier that is recommended by the protection system manufacturer.

Adhesion testing shall be conducted as specified herein after the concrete surface has been prepared and approved by the lining material manufacturer. Adhesion strength test results shall exceed 400 psi or a higher value if recommended by material manufacturer.

All concrete surfaces to be lined shall be cleaned in accordance with ASTM D4258 and abrasive blasted in accordance with ASTM D4259. Before the lining is applied, the surfaces shall be thoroughly washed or cleaned by air blasting to remove all dust and residue. The Contractor shall repair all concrete surfaces that have spalls, voids, and cracks and shall remove all fins and other surface projections to produce a flush surface for application of the protection system.

Surface profile shall be at least 4 mils for a coating protection system and at least 22 mils for a lining protection system , but shall not be less than 25 percent of the dry film thickness specified for the corrosion protection system or 40-60 grit sandpaper unless recommended otherwise by the material manufacturer.

Concrete surfaces, including those with bug holes less than 1 inch in any dimension, shall be prepared using an epoxy concrete filler or as recommended by the material manufacturer and acceptable to Engineer.

3-2.02. Metal Surfaces. Not used.

3-3. MIXING AND THINNING. Materials shall be thoroughly mixed each time any is withdrawn from the container, and the containers shall be kept tightly closed except while the material is being withdrawn.

Protection system components shall be mixed to proper consistency and viscosity in accordance with the manufacturer's recommendations. Thinning will not be permitted. No adulterant, unauthorized thinner, or other material not included in the formulation, shall be added to the protection system components for any purpose

3-4. APPLICATION. Corrosion protection system shall be applied in accordance with the manufacturer's recommendations and in a neat manner, with finished surfaces free of runs, sags, ridges, laps, and brush marks. In no case shall the

wet film thickness of applied protection system be less than the thickness recommended by the material manufacturer.

Grit shall be broadcast into first finish lining coat to produce an anti-skid surface.

Each coat shall be applied over the previous coat in accordance with the recommendations of the material manufacturer. Each coat shall be applied in a manner that will produce an even film of uniform and proper thickness. In no case shall coating be applied at a rate of coverage which is greater than the maximum rate recommended by the material manufacturer.

Recoating shall be applied in accordance with manufacturer's recommendations.

Alternate coats shall be of contrasting colors to facilitate in obtaining complete coverage. The first coat shall be a dark color.

Protection system showing checks, blisters, excessive sags, teardrops, or fat edges will not be acceptable and shall be entirely removed and the surface recoated. The protection system shall be free of pinholes and holidays.

Protection system shall be applied when surface temperature is at least 50°F and at least 5°F above dew point, and relative humidity is 85 percent or lower. Protection system shall not be applied in direct sunlight or when the temperature of the concrete is rising. Preferably the protection system shall be applied when the temperature of the concrete is dropping.

When applying high build protection system with a roller or brush and where a dry film thickness of at least 4 mils per coat is required, two or more coats shall be applied to achieve the recommended dry film thickness equal to a spray applied coating.

3-4.01. Epoxy Protection Systems.

3-4.01.01. Epoxy Coating Protection System. Epoxy coating corrosion protection system shall be applied in three or more coats. The system shall consist of one prime coat and two or more finish coats. The prime coat shall be at least 6 mils wet film thickness (WFT). Each finish coat shall be 6-8 mils dry film thickness (DFT). The protection system shall have a total thickness of at least 20 mils DFT.

3-4.01.02. Epoxy Flexible Lining Protection System. Not used.

3-4.02. Vinyl Ester Protection Systems. Not used.

3-4.02.01. Vinyl Ester Coating Protection System. Not used.

3-4.02.02. Vinyl Ester Rigid Lining Protection System. Not used.

3-4.02.03. Vinyl Ester Flexible Lining Protection System. Not used.

3-4.03. Vinyl Ester With Graphite Filler Protection Systems. Not used.

3-4.03.01. Vinyl Ester With Graphite Filler Coating System. Not used.

3-4.03.02. Vinyl Ester With Graphite Filler Rigid Lining System. Not used.

3-4.03.03. Vinyl Ester With Graphite Filler Flexible Lining System. Not used.

3-4.04. Novolac Vinyl Ester Protection Systems. Not used.

3-4.05. Novolac Epoxy Protection Systems. Not used.

3-4.06. Corrosion Resistant Caulking/Sealant. Corrosion resistant caulking/sealant shall be used at any penetration in the lining, such as at anchorage of pipe supports and chemical storage tanks.

3-4.07 Topping System. Not used.

3-5. FIELD QUALITY CONTROL. The surfaces shall be cleaned and prepared as needed to properly conduct the visual inspection, spark testing, and adhesion testing. All inspection and testing shall be witnessed by Engineer. Repairs shall be acceptable to Engineer.

3-5.01. Visual Inspection. The surface of the liner shall be visually inspected for areas showing poor adhesion, air inclusion, or other imperfections in the lining that prevent a complete seal of the surfaces.

3-5.02. Spark Testing. All detected holidays and pinholes shall be marked and repaired as recommended by the material manufacturer.

3-5.02.01. Concrete Surfaces. After the linings are applied, the material manufacturer shall spark-test all lined concrete surfaces using a high-voltage electrical spark tester in accordance with ASTM D4787 and set at the recommended voltage, or as a minimum at 100 volts per mil of liner thickness. Before beginning the spark testing the material manufacturer shall verify the testing equipment is working properly. The electrode movement shall be continuous and shall proceed in a systematic manner that will cover 100 percent of the lining surface. A carbon fiber brush shall be used on the sensor electrode.

3-5.02.02. Metal Surfaces. Not used.

3-6. PROTECTION. Care shall be taken to prevent coating from being dropped or spilled on adjacent surfaces, buildings, structures, or facilities. All surfaces so damaged shall be cleaned, repaired, replaced, or painted as acceptable to Engineer.

End of Section

Section 09920

ARCHITECTURAL PAINTING

PART 1 - GENERAL

1-1. SCOPE. This section covers architectural field painting of surfaces for appearance, including surface preparation, protection of surfaces, and other appurtenant work. Regardless of the number of coats previously applied, at least two field coats, in addition to any shop or field prime coats, shall be applied to all surfaces unless otherwise specified.

1-2. GENERAL. Cleaning, surface preparation, coating application, and thickness shall be as specified herein and shall meet or exceed the coating manufacturer's recommendations. When the manufacturer's minimum recommendations exceed the specified requirements, Contractor shall comply with the manufacturer's minimum recommendations. When equivalent products are acceptable to Engineer, Contractor shall comply with this Specification and the coating manufacturer's recommendations.

1-2.01. Governing Standards. All cleaning, surface preparation, coating application, thickness, testing, and coating materials (where available) shall be in accordance with the referenced standards of the following American Water Works Association (AWWA), American National Standard Institute (ANSI), NACE International (NACE), SSPC: The Society for Protective Coating (SSPC), NSF International (NSF), and ASTM requirements.

1-3. SUBMITTALS. Contractor shall submit color cards for all coatings proposed for use, together with complete descriptive specifications and the completed Coating System Data Sheets, to Engineer for review and color selection. Requests for review submitted directly to Engineer by coating suppliers will not be considered.

The manufacturer's standard colors will be acceptable for all coatings.

1-4. QUALITY ASSURANCE.

1-4.01. Coating System Data Sheet Certifications. The coating applicator and coating manufacturer shall review and approve in writing the proposed coating manufacturer's written recommendations for the proposed coating system and the intended service. Any variations from the Specifications or the coating manufacturers published recommendations shall be submitted in writing and approved by the coating manufacturer. The coating manufacturer shall observe the surface preparation, mixing, and application of the coating systems and

submit a written report of what has been observed and any additional recommendations.

1-5. DELIVERY AND STORAGE. All coating products shall be received and stored in accordance with the coating manufacturer's recommendations.

PART 2 - PRODUCTS

2-1. ACCEPTABLE MANUFACTURERS.

2-1.01. Alternative Manufacturers. In addition to the coatings listed herein, equivalent coatings of the following manufacturers will also be acceptable:

ICI Devoe	MAB
Sherwin-Williams	Rust-Oleum
PPG	

2-1.02. Equivalent Coatings. Whenever a coating is specified by the name of a proprietary product or of a particular manufacturer or vendor, the specified coating shall be understood as establishing the type and quality of coating desired. Other manufacturers' coatings will be accepted, provided that sufficient information is submitted to enable Engineer to determine that the proposed coatings are equivalent to those named. Information on proposed coatings shall be submitted for review in accordance with the Submittals section (01300). Requests for review of equivalency will be accepted only from Contractor, and will be considered only after the Contract has been awarded.

2-2. MATERIALS. All coatings shall be delivered to the job in original unopened containers with labels intact. Coatings shall be stored indoors and shall be protected against freezing. No adulterant, unauthorized thinner, or other material not included in the coating formulation shall be added to the coating for any purpose.

All coatings shall conform to the air quality regulations applicable at the location of use. Coating materials which cannot be guaranteed by the manufacturer to conform, whether or not specified by product designation, shall not be used.

The coatings specified have been selected on the basis of the manufacturer's statement that the VOC content of the product is 2.8 pounds per gallon or less in the thinned condition, unless otherwise indicated herein; however, it shall be Contractor’s responsibility to use only coating materials that are in compliance with the requirements of all regulatory agencies and the Construction Indoor Air Quality Section (01510). Local regulations may permit some coatings to have a higher VOC concentration than specified herein.

The coatings specified may meet the VOC limits in the unthinned (as shipped) condition, but may exceed the limits if thinned according to the manufacturer's recommendations. Under these conditions, the coatings shall not be thinned beyond the 2.8 pounds per gallon limit, and if the product cannot be thinned to suit the application method or temperature requirements, another manufacturer's coating shall be used, subject to acceptance by Engineer. Some of the architectural coatings specified contain VOCs in excess of 2.8 pounds per gallon; however, the coatings may be acceptable if supplied in containers of 1 quart or less.

Contractor shall be responsible for ensuring the compatibility of field coatings with each other or with the coatings on shop coated or previously coated surfaces. Coatings used in successive field coats shall be produced by the same manufacturer. Coatings used in the first field coat over shop coated or previously coated surfaces shall cause no wrinkling, lifting, or other damage to underlying coats.

2-2.01. Primers.

Universal Primer	PPG Amercoat "Amercoat 385 Epoxy", Carboline "Carboguard 888 Primer", Sherwin Williams "Macropoxy 646", or Tnemec "Series 27 F.C. Typoxy ".
Epoxy Concrete Block Filler	PPG Amercoat "Amerlock 400BF Epoxy Block Filler", Plasite "9029 Filler", Sherwin Williams "Kem Cati-coat HS", or Tnemec "54-660".

2-2.02. Intermediate and Finish Coatings.

Epoxy Enamel	PPG Amercoat "Amercoat 385 Epoxy", Carboline "Carboguard 890",Tnemec "Series N69 Hi-Build Epoxoline II", or Sherwin Williams "Macropoxy 646".
Aliphatic Polyurethane	PPG Amercoat "Amercoat 450 HS", Carboline "Carbothane 134HG", Tnemec "Series 1074 Endura-Shield" or Sherwin Williams "Acrolon 218HS".

Latex Emulsion	Acrylic containing at least 50 percent by weight nonvolatile solids.
Flat	Carboline "Carbocrylic 600 ", Sherwin-Williams "Weather Perfect Acrylic Latex Series B-36", or Tnemec "Series 6 Tneme-Cryl".
Satin Gloss	Ameron "Amerguard 220 Acrylic Enamel Satin", Carboline "Carbocrylic 3350", Sherwin-Williams "Metalatex Semi-Gloss Enamel Series B-42", or Tnemec "Series 7 Tneme-Cryl SG".

PART 3 - EXECUTION

3-1. SURFACE PREPARATION. All surfaces to be coated shall be clean and dry and shall meet the recommendations of the coating manufacturer for surface preparation. Freshly coated surfaces shall be protected from dust and other contaminants. Oil and grease shall be completely removed by use of solvents or detergents before mechanical cleaning is started. The gloss of previously coated surfaces shall be dulled if necessary for proper adhesion of topcoats.

Surfaces shall be free of cracks, pits, projections, or other imperfections that would interfere with the formation of a smooth, unbroken coating film, except for concrete block construction where a rough surface is an inherent characteristic.

When applying touchup coating or repairing previously coated surfaces, the surfaces to be coated shall be cleaned as recommended by the coating manufacturer and the edges shall be sanded or wire brushed and feathered or otherwise smoothed so that they will not be noticeable after they are coated. All coatings made brittle or otherwise damaged by heat of welding shall be completely removed.

3-1.01. Galvanized Surfaces. Galvanized surfaces shall be prepared for coating in conformity with the instructions of the manufacturer of the epoxy enamel. Any chemical treatment of galvanized surfaces shall be followed by thorough rinsing with clean water.

3-1.02. Ferrous Metal Surfaces. Ungalvanized ferrous metal surfaces shall be prepared for coating by cleaning using one or more of the following methods as specified: solvents (SSPC-SP1); blasting (SSPC-SP5, -SP6, -SP7, or -SP10); power tools (SSPC-SP3); or hand tools (SSPC-SP2). Oil and grease shall be

completely removed in accordance with SSPC-SP1 before beginning any other cleaning method. Surfaces of welds shall be scraped and ground as necessary to remove all slag and weld spatter. Tools which produce excessive roughness shall not be used.

All ferrous metal surfaces which are specified to be coated with epoxy enamel shall have all welds ground smooth and blended and sharp edges ground smooth, if not previously prepared in the shop.

The cleaning methods and profiles specified herein are minimums, and if the requirements printed in the coating manufacturer's data sheets exceed the limits specified, the value printed on the data sheets shall become the minimum requirement.

3-1.02.01. Ferrous Metal Surfaces - Nonimmersion Service. Ferrous metal surfaces, including fabricated equipment, in nonimmersion service shall be cleaned to the degree recommended by the coating manufacturer for surfaces to be coated with epoxy enamel, except galvanized surfaces. Blast cleaning to at least SSPC-SP6 shall be used where recommended by the coating manufacturer, and may be used elsewhere at the option of Contractor, provided that no dust is permitted to settle on adjacent wet coating. Surface profile shall be at least 15 percent of the dry film thickness specified for the coating system.

3-1.03. Concrete Surfaces. All concrete surfaces shall be free of objectionable substances and shall meet the coating manufacturer's recommendations for surface preparation. Any other surface preparation recommended by the coating material manufacturer shall be brought to Engineer 's attention and may be incorporated into the work if acceptable to Engineer.

All concrete surfaces shall be dry when coated and free from dirt, dust, sand, mud, oil, grease, and other objectionable substances. Oil and grease shall be completely removed by use of solvents or detergents before mechanical cleaning is started.

New concrete shall have cured for at least 28 days before coating is applied as recommended by the material manufacturer. Concrete surfaces shall be tested for capillary moisture in accordance with ASTM D4263. There shall be no capillary moisture when coatings are applied on concrete.

All surfaces to be coated shall be cleaned in accordance with ASTM D4258 and abraded in accordance with ASTM D4259. Prior to application of the coating, the surfaces shall be thoroughly washed or cleaned by air blasting to remove all dust and residue. Spalled areas, voids, and cracks shall be repaired in accordance with the concrete section (410S and SP410S) and as acceptable to Engineer.

Fins and other surface projections shall be removed to provide a flush surface before application of coating.

Except where indicated otherwise, the concrete surfaces, including those with bug holes less than 1 inch in any dimension, shall be prepared when required and as recommended by the manufacturer, using an epoxy concrete block filler.

3-1.04. Concrete Block Surfaces. Voids and openings in concrete block surfaces shall be pointed. Interior surfaces to be coated with latex coating shall not be filled. All exposed exterior surfaces and surfaces to be coated with epoxy enamel, including the joints, shall be filled so that a continuous unbroken coating film is obtained.

3-1.05. Hardware. Hardware items such as bolts, screws, washers, springs, and grease fittings need not be cleaned prior to coating if there is no evidence of dirt, corrosion, or foreign material.

3-2. MIXING AND THINNING. Coating shall be thoroughly mixed each time any is withdrawn from the container. Coating containers shall be kept tightly closed except while coating is being withdrawn.

Coating shall be factory mixed to proper consistency and viscosity for hot weather application without thinning. Thinning will be permitted only as necessary to obtain recommended coverage at lower application temperatures. In no case shall the wet film thickness of applied coating be reduced, by addition of coating thinner or otherwise, below the thickness recommended by the coating manufacturer. Thinning shall be done in compliance with all applicable air quality regulations.

3-3. APPLICATION. Coating shall be applied in a neat manner that will produce an even film of uniform and proper thickness, with finished surfaces free of runs, sags, ridges, laps, and brush marks. Each coat shall be thoroughly dry and hard before the next coat is applied. In no case shall coating be applied at a rate of coverage greater than the maximum rate recommended by the coating manufacturer.

Coating failures will not be accepted and shall be entirely removed and the surface recoated. Failures include but are not limited to sags, checking, cracking, teardrops, fat edges, or delaminations.

3-3.01. Priming. Edges, corners, crevices, welds, and bolts shall be given a brush coat of primer before application of the primer coat. Special attention shall be given to filling all crevices with coating.

Abraded and otherwise damaged portions of shop-applied coating shall be cleaned and recoated as recommended by the manufacturer of the finish coating. Welded seams and other uncoated surfaces, heads and nuts of field-installed bolts, and surfaces where coating has been damaged by heat shall be given a brush coat of the specified primer. Before the specified spot or touchup coating of metal surfaces, edges, corners, crevices, welds, and bolts in the area of the spot or touchup coating shall be given a brush coat of primer. This patch, spot, or touchup coating shall be completed, and the paint film shall be dry and hard, before additional coating is applied.

3-3.02. Latex Coating. Latex coating shall be applied by brushing or rolling; spraying will not be permitted. Latex coating shall not be thinned excessively.

3-3.03. Epoxy Enamel. Epoxy enamel shall be applied in accordance with the coating manufacturer's recommendations, including temperature limitations and protection from sunlight until topcoated.
Coatings shall not be applied to concrete surfaces in direct sunlight or when the temperature of the concrete is rising. Preferably the coating shall be applied when the temperature of the concrete is dropping.

When applying high build epoxy coatings with a roller or brush and where a dry film thickness of at least 4 - 6 mils per coat is required, two or more coats shall be applied to achieve the recommended dry film thickness equal to a spray applied coating.

3-3.04. Film Thickness. The total coating film thickness, including prime coat (if any), intermediate coats, and finish coat, shall be not less than the following:

Type of Coating	Minimum Dry Film Thickness
Latex	3 mils
Epoxy enamel	
Surfaces with first coat of epoxy enamel and final coat of aliphatic polyurethane	7 mils
Other surfaces (two coats)	10 mils
All other finishes	5 mils

3-3.05. Weather Conditions. Coatings shall not be applied, except under shelter, during wet, damp, or foggy weather, or when windblown dust, dirt, debris, or insects will collect on freshly applied coating. Coatings shall not be applied at temperatures lower than the minimum temperature recommended by the coating

manufacturer, or to metal surfaces such as tanks or pipe containing cold water, regardless of the air temperature, when metal conditions are likely to cause condensation. When necessary for proper application, a temporary enclosure shall be erected and kept heated until the coating has fully cured.

3-4. REPAIRING FACTORY FINISHED SURFACES. Factory finished surfaces damaged prior to acceptance by Owner shall be spot primed and recoated with materials equivalent to the original coatings. If, in the opinion of Engineer, spot repair of the damaged area is not satisfactory, the entire surface or item shall be recoated.

3-5. PROTECTION OF SURFACES. Throughout the work Contractor shall use drop cloths, masking tape, and other suitable measures to protect adjacent surfaces. Contractor shall be responsible for correcting and repairing any damage resulting from its or its subcontractors' operations. Coatings spilled or spattered on adjacent surfaces which are not being coated at the time shall be immediately removed. Exposed concrete or masonry not specified to be coated which is damaged by coatings shall be either removed and rebuilt or, where authorized by Owner, coated with two coats of masonry coating.

3-6. FIELD PRIMING SCHEDULE. In general, surfaces of steel, cast iron, and equipment are specified to be shop primed. Any such surfaces which have not been shop primed shall be field primed. Damaged or failed shop coatings which have been determined unsuitable by Engineer shall be removed and the surfaces shall be field primed. Galvanized, aluminum, stainless steel, wood, and insulated surfaces shall be field primed. Primers used for field priming, unless otherwise required for repair of shop primers, shall be:

Surface To Be Primed	Material
Steel and cast iron, surfaces to be coated with Epoxy enamel	Same as finish coats
Galvanized	Epoxy enamel
Insulated piping	As recommended by manufacturer of finish coats
Concrete, surfaces to be coated with epoxy enamel	Epoxy concrete block filler
Concrete block to be coated with epoxy enamel	Epoxy concrete block filler

Surfaces specified to be field coated with clear finish coats need not be primed. Unless otherwise recommended by the coating manufacturer or specified herein,

priming will not be required on concrete concrete block, or gypsum wallboard surfaces specified to be coated with latex coating, nor on metal surfaces specified to be coated with epoxy enamel coatings. Concrete surfaces to be coated with epoxy enamel shall be filled with epoxy concrete block filler so that a continuous film is obtained, except where indicated otherwise.

3-7. COATING SCHEDULE. The following schedule lists coatings for intermediate and finish coats. All exposed surfaces, including sides and edges, shall be coated.

3-7.01. Metal Surfaces.

Surface To Be Coated	Material
Structural and miscellaneous steel exposed to view inside buildings. (Galvanized surfaces are not to be coated unless otherwise specified.)	Epoxy enamel (one finish coat)
Structural and miscellaneous steel in the Pre-Manufactured Metal Building including the primary and secondary structural steel framing members, the roof purlins and wind girts (all provided with shop primer by PMMB supplier).	Epoxy enamel (one finish coat); verify that product is compatible with shop primer finish provided by Pre-Manufactured Metal Building supplier.
Ductwork exposed to view inside buildings, after proper priming.	
Adjacent to ceilings.	Flat latex emulsion
Adjacent to walls.	Satin gloss latex emulsion
Heating and air conditioning units, convector covers, electrical equipment cabinets, and similar items and equipment (unless factory finished) exposed to view	
Intermediate coat.	Universal primer
Finish coat.	Aliphatic polyurethane

Electrical conduit exposed to view inside buildings (except banks of conduits in multiple layers hung from ceilings), including fittings, boxes, supports, and accessories, after proper priming.

Adjacent to ceilings	Flat latex emulsion
Adjacent to walls.	Satin gloss latex emulsion

3-7.02. Concrete and Masonry Surfaces.

All concrete and concrete block (except floors and surfaces scheduled to receive other coatings) which are exposed to view in interior locations (two coats).

Concrete block where scheduled.	Satin gloss latex emulsion
Ceilings and Overhead construction.	Flat latex emulsion
Concrete block where scheduled.	Epoxy enamel

3-7.03. Miscellaneous Surfaces.

Gypsum wallboard surfaces (two coats).

Walls.	Satin gloss latex emulsion
Ceilings.	Flat latex emulsion
Insulated piping (except aluminum jacketed insulation).	Satin gloss latex emulsion

3-7.04. Surfaces Not To Be Coated. Unless otherwise specified, the following surfaces shall be left uncoated:

Exposed aluminum, except ductwork.

Polished or finished stainless steel. Unfinished stainless steel, except flashings and counterflashings, shall be coated.

Nickel or chromium.

Galvanized surfaces, except piping, conduit, ductwork, and other items specifically noted.

Piping concealed in inaccessible plumbing chases and above suspended ceilings.

Rubber and plastics.

Acoustical panel ceilings.

Exterior concrete.

Surfaces specified to be factory finished.

End of Section

Section 09940

PROTECTIVE COATINGS

PART 1 - GENERAL

1-1. SCOPE. This section covers field applied protective coatings, including surface preparation, protection of surfaces, inspection, and other appurtenant work for equipment and surfaces designated to be coated with heavy-duty maintenance coatings. Regardless of the number of coats previously applied, at least two field coats in addition to any shop coats or field prime coats shall be applied to all surfaces unless otherwise specified.

1-2. GENERAL. Cleaning, surface preparation, coating application, and thickness shall be as specified herein and shall meet or exceed the coating manufacturer's recommendations. When the manufacturer's minimum recommendations exceed the specified requirements, Contractor shall comply with the manufacturer's minimum recommendations. When equivalent products are acceptable to Engineer, Contractor shall comply with this Specification and the coating manufacturer's recommendations.

1-2.01. Governing Standards. All cleaning, surface preparation, coating application, thickness, testing, and coating materials (where available) shall be in accordance with the referenced standards of the following AWWA, ANSI, NACE, SSPC, NSF, and ASTM.

1-2.02. Delivery and Storage. All coating products shall be received and stored in accordance with the coating manufacturer's recommendations.

1-2.03. Coatings, Painting, and Linings Covered in Other Sections.

Architectural painting.
Corrosion protection lining systems.

1-3. SUBMITTALS. Contractor shall submit color cards for all coatings proposed for use, together with complete descriptive specifications, manufacturer's product data sheet and the completed Coating System Data Sheets, to Engineer for review and color selection. Each product data sheet shall include application temperature limits including recoat time requirements for the ambient conditions at the site, including temperatures up to 130°F [54°C]. Requests for review submitted directly to Engineer by coating suppliers will not be considered.

When the proposed products will be in contact with treated or raw water in potable water treatment facilities, Contractor shall submit certifications that the proposed systems are in compliance with ANSI/NSF 61.

Contractor shall submit a Coating System Data Sheet for each separately identified surface in the Metal Surfaces Coating Schedule, Concrete and Masonry Surfaces Coating Schedule, and the Miscellaneous Surfaces Coating Schedule that will be used in the Project, using the appropriate Coating System Data Sheet forms (Figures 1-09940 and 2-09940) at the end of this section. Each field coating system shall be acceptable to the coating material manufacturer.

Coating System Data Sheets shall be assigned a unique number with a prefix letter based on the following:

Prefix	Surfaces	Fig.09940
A	Iron and steel (coated entirely in field)	1
A	Iron and steel (shop primed)	2
C	Concrete and concrete block	1
E	Equipment - submerged	1
E	Equipment – nonsubmerged	2
F	Nonferrous metal	1
G	Galvanized	1
H	High temperature	1
P	PVC and FRP	1

Each coating system that will be applied entirely in the field shall be assigned only a prefix letter and no suffix letter. Fig.1-09940 shall be submitted for each surface coated entirely in the field.

Each shop-applied coating system that includes one or more field applied coats shall be assigned both a prefix letter and suffix letter “F”. Fig.2-09940 shall be submitted for each surface having a shop applied coating and one or more field applied finish coats.

A separate Coating System Data Sheet shall be developed and submitted for each surface scheduled to be coated or variation or change in a coating system. The number identifying the surface and coating system shall be of the form $A1_1$ or $A1_2$-F. The subscript number shall be assigned by the Contractor so that each surface and coating system combination is uniquely identified. For example:

$A1_1$-F may be assigned to “Epoxy – one coat to metal curbs for skylights and power roof ventilators that have been shop primed.”

$A2_1$ may be assigned to “Epoxy – two coats to non-galvanized structural and miscellaneous steel exposed to view inside buildings.”

$C2_1$ may be assigned to “Epoxy – two coats to all concrete and concrete block in corrosive area (Except floors and surfaces scheduled to receive other coatings) which are exposed to view.”

$C2_2$ may be assigned to “Epoxy – two coats to walls, floors, and curbed areas, adjacent to corrosive chemical storage and feed equipment as indicated on the Drawings.”

For the epoxy and for aliphatic polyurethane, a total of not more than 15 custom colors (excluding deeptone or high-level colors) may be required. The manufacturer's standard colors will be acceptable for all other coatings.

1-4. QUALITY ASSURANCE.

1-4.01. Coating System Data Sheet Certifications. The coating applicator and coating manufacturer shall review and approve in writing the coating manufacturer's written recommendations for the coating system and the intended service. Any variations from the Specifications or the coating manufacturers published recommendations shall be submitted in writing and approved by the coating manufacturer.

1-4.02. Special Interior Coating Systems. Not used.

PART 2 - PRODUCTS

2-1. ACCEPTABLE MANUFACTURERS.

2-1.01. Alternative Manufacturers. In addition to the coatings listed herein, equivalent products of other manufacturers that distribute globally will also be acceptable.

2-1.02. Equivalent Coatings. Whenever a coating is specified by the name of a proprietary product or of a particular manufacturer or vendor, it shall be understood as establishing the desired type and quality of coating. Other manufacturers' coatings will be accepted, provided that sufficient information is submitted to enable Engineer to determine that the proposed coatings are equivalent to those named. Information on proposed coatings shall be submitted for review in accordance with the Submittals Procedures section. Requests for

review of equivalency will be accepted only from Contractor, and will comply with Section 00700 Paragraph 6.2.4.

2-2. MATERIALS. All coatings shall be delivered to the job in original, unopened containers, with labels intact. Coatings shall be stored indoors and shall be protected against freezing. No adulterant, unauthorized thinner, or other material not included in the coating formulation shall be added to the coating for any purpose.

All coatings shall conform to the air quality regulations applicable at the location of use. Coating materials that cannot be guaranteed by the manufacturer to conform, whether or not specified by product designation, shall not be used.

With the exception of heat resistant coatings, the coatings specified have been selected on the basis of the manufacturer's statement that the VOC content of the product is 2.8 lbs per gallon [335 g/L]or less; however, it shall be the Contractor's responsibility to use only coating materials that are in compliance with the requirements of all regulatory agencies. Local regulations may require some coatings to have a lower VOC content than specified herein. The coatings specified may meet the VOC limits in the unthinned (as shipped) condition, but may exceed the limits if thinned according to the manufacturer's recommendations. In such case, the coatings shall not be thinned beyond the 2.8 lbs per gallon [335 g/L] limit, and if the product cannot be thinned to suit the application method or temperature limits, another manufacturer's coating shall be used, subject to acceptance by Engineer.

Contractor shall be responsible for ensuring the compatibility of field coatings with each other or with any previously applied coatings. Coatings used in successive field coats shall be produced by the same manufacturer. The first field coat over shop coated or previously coated surfaces shall cause no wrinkling, lifting, or other damage to underlying coats.

All intermediate and finish coating materials that will be in contact with wastewater atmosphere shall be guaranteed by the manufacturer to be fumeproof and suitable for wastewater plant atmosphere that contains hydrogen sulfide. Coatings that cannot be so guaranteed shall not be used. Lead-free, chromium-free, and mercury-free coatings shall be used.

2-2.01 Primers.

Universal Primer (tie coat)	PPG Amercoat "Amercoat 385 Epoxy", Carboline "Rustbond", ICI Devoe "Devran 224HS", Tnemec "Series 27 F.C. Typoxy", or

	Sherwin-Williams "Dura Plate 235".
Zinc Primer	PPG Amercoat "Dimetate 9 Series", Carboline "Carbo Zinc II Series", ICI Devoe "Catha-Coat 304V", or Sherwin-Williams "Zinc Clad II Series".

2-2.02. Fillers and Surfacers.

Epoxy Concrete Block Filler	PPG Amercoat "Amerlock 400BF Epoxy Block Filler", Carboline "Sanitile 600", ICI Devoe "Truglaze 4015", Tnemec "Series 54-562", or Sherwin-Williams "Kem Cati-Coat HS".
Epoxy Concrete Filler and Surfacer	Tnemec "Series 218 MortarClad", PPG Amercoat "NuKlad 114A", Carboline "Carboguard 510", or Sherwin-Williams "Steel Seam FT910".

2-2.03. Intermediate and Finish Coatings.

Epoxy	
Concrete Floors	PPG Amercoat "Amerlock 400", Carboline "Carboguard 890", ICI Devoe "Devran 224HS", Tnemec "Series N69 Hi-Build Epoxoline II", or Sherwin-Williams "Armorseal 1000HS"; nonskid.
Ferrous Metal Surfaces and Masonry or Concrete Surfaces Other Than Floors	PPG Amercoat "Amercoat 385 Epoxy", Carboline "Carboguard 890", ICI Devoe Devran "224HS", Tnemec "Series N69 Hi-Build Epoxoline II", or Sherwin-Williams "Dura Plate 235".
Flake-Filled Epoxy	Carboline "Plasite 4500/4500S", Sherwin-Williams "Sher-Glass FF", .

Aliphatic Polyurethane	PPG Amercoat "Amercoat 450H", Carboline "Carbothane 134HG", ICI Devoe "Devthane 379H" Tnemec "Series 1074 Endura-Shield II", or Sherwin-Williams "Acrolon 218HS".
Coal Tar Epoxy	High-build coal tar epoxy; PPG Amercoat "Amercoat 78HB Coal Tar Epoxy", Carboline "Bitumastic 300 M", Tnemec "46H-413 Hi-Build Tneme-Tar", or Sherwin-Williams "Hi-Mil Sher-Tar Epoxy".
Medium Consistency Coal Tar	Carboline "Bitumastic 50" or Tnemec "46-465 H.B. Tnemecol".
Vinyl Ester	Tnemec "Series 120 Vinester" Carboline "Plasite 4110" or Sherwin-Williams "Magnalux 304FF".
Heat-Resistant	Suitable for temperatures up to 400°F [207°C]; PPG Amercoat "Amerlock 400", Carboline "Thermaline 450", Tnemec "43-36 Chrome Aluminum", or Sherwin-Williams "Silver-Brite Aluminum".
High Heat-Resistant	Suitable for temperatures up to 1000°F [537°C]; PPG Amercoat "Amercoat 878", Carboline "Thermaline 4700 VOC", or Sherwin-Williams "Silver-Brite Hi-Heat Silicone Aluminum".

PART 3 - EXECUTION

3-1. SURFACE PREPARATION. All surfaces to be coated shall be clean and dry and shall meet the recommendations of the coating manufacturer for surface preparation. Freshly coated surfaces shall be protected from dust and other contaminants. Oil and grease shall be completely removed by use of solvents or detergents before mechanical cleaning is started. The gloss on previously coated surfaces shall be dulled if necessary for proper adhesion of topcoats.

Surfaces shall be free of cracks, pits, projections, or other imperfections that would interfere with the formation of a smooth, unbroken coating film, except for concrete block construction where a rough surface is an inherent characteristic.

When applying touchup coating or repairing previously coated surfaces, the surfaces to be coated shall be cleaned as recommended by the coating manufacturer, and the edges of the repaired area shall be feathered by sanding or wire brushing to produce a smooth transition that will not be noticeable after the coating is applied. All coatings made brittle or otherwise damaged by heat of welding shall be completely removed.

3-1.01. Galvanized Surfaces. Galvanized surfaces shall be prepared for coating according to the instructions of the manufacturer of the epoxy. Any chemical treatment of galvanized surfaces shall be followed by thorough rinsing with clean water.

3-1.02. Ferrous Metal Surfaces. Ungalvanized ferrous metal surfaces shall be prepared for coating by using one or more of the following cleaning procedures specified here-in: solvents (SSPC-SP1); abrasive blasting (SSPC-SP5, -SP10, -SP6, or -SP7) power tools (SSPC-SP3 or -SP11); or hand tools (SSPC-SP2). Oil and grease shall be completely removed in accordance with SSPC-SP1 before beginning any other cleaning method. Surfaces of welds shall be scraped and ground as necessary to remove all slag and weld spatter. Tools which produce excessive roughness shall not be used.

All components of equipment that can be properly prepared and coated after installation shall be installed prior to surface preparation. Components that will be inaccessible after installation shall have the surfaces prepared and coated before installation. Motors, drive trains, and bearings shall be protected during surface preparation in accordance with the equipment manufacturer's recommendations.

All cut or sheared edges shall be ground smooth to a 1/8 inch [3 mm] minimum radius for all material 1/4 inch [6 mm] thickness and larger. For material thickness less than 1/4 inch [6 mm] all cut or sheared edges shall be ground smooth to a radius equal to 1/2 the material thickness. Grinding of rolled edges on standard shapes with a minimum radius of the 1/16 inch [1.5 mm] will not be required.

All ferrous metal surfaces shall have all welds ground smooth and free of all defects in accordance with NACE Standard SP0178, Appendix C, Designation C and sharp edges ground smooth, if not previously prepared in the shop. Instead of blending of the weld with the base metal as required by the NACE standard, it will be acceptable to furnish a welded joint that has a smooth transition of the weld to the base metal. All welds shall be ground smooth to ensure satisfactory adhesion of paint.

The cleaning methods and surface profiles specified herein are minimums, and if the requirements printed in the coating manufacturer's data sheets exceed the

limits specified, the value printed on the data sheets shall become the minimum requirement.

3-1.02.01. Ferrous Metal Surfaces – Non-immersion Service. Ferrous metal surfaces, including fabricated equipment, in non-immersion service shall be cleaned to the degree recommended by the coating manufacturer for surfaces to be coated with coal tar epoxy, epoxy, and heat-resistant coatings, except galvanized surfaces. Surface preparation of ferrous metal surfaces in non-immersion service shall consist of abrasive blast cleaning to SSPC-SP6, and the first application of coating shall be performed on the same day. If more surface area is prepared than can be coated in one day, the uncoated area shall be blast cleaned again to the satisfaction of Engineer. Surface profile shall be as recommended by coating manufacturer, but not less than 2.0 mils [50 µm].

3-1.02.02. Ferrous Metal Surfaces - Immersion Service. Surface preparation of ferrous metal surfaces in immersion service shall consist of abrasive blast cleaning to at least SSPC-SP10 and the first application of coating shall be performed on the same day. If more surface area is prepared than can be coated in one day, the uncoated area shall be blast cleaned again to the satisfaction of Engineer. Surface profile shall be as recommended by coating manufacturer, but not less than 3.5 mils [88 µm].

3-1.03. Concrete Surfaces. All concrete surfaces shall be free of objectionable substances and shall meet the coating manufacturer's recommendations for surface preparation. Concrete surfaces shall be prepared in accordance with SSPC-SP13/NACE 6. Any other surface preparation recommended by the coating material manufacturer shall be brought to Engineer's attention and may be incorporated into the work if acceptable to Engineer.

All concrete surfaces shall be dry when coated and free from dirt, dust, sand, mud, oil, grease, and other objectionable substances. Oil and grease shall be completely removed by use of solvents or detergents before mechanical cleaning is started.

New concrete shall have cured for at least 4 weeks before coating is applied as recommended by the material manufacturer. Concrete surfaces shall be tested for capillary moisture in accordance with ASTM D4263. There shall be no capillary moisture when coatings are applied on concrete.

All surfaces to be coated shall be cleaned in accordance with ASTM D4258 and abraded in accordance with ASTM D4259. Surface profile shall be at least 25 percent of the dry film thickness specified for the coating system. Prior to application of the coating, the surfaces shall be thoroughly washed or cleaned by air blasting to remove all dust and residue. Spalled areas, voids, and cracks shall be repaired in accordance with the Concrete section and as acceptable to

the Engineer. Fins and other surface projections shall be removed to provide a flush surface before application of coating.

Except where epoxy is applied as damp-proofing, the concrete surfaces, including those with bug holes less than 1 inch [25 mm] in any dimension, shall be prepared as recommended by the manufacturer, using an epoxy concrete filler and surfacer. Where coating with a vinyl ester the concrete filler and surfacer shall be as recommended by the manufacturer to be compatible with vinyl ester.

For existing concrete surfaces to be coated, remove any coating previously applied prior to preparing the surface for the new coating.

3-1.04. Concrete Block Surfaces. Voids and openings in concrete block surfaces shall be pointed. All exposed exterior surfaces and surfaces to be coated with epoxy, including the joints, shall be filled so that a continuous unbroken coating film is obtained.

3-1.05. Copper Tubing. All flux residue shall be removed from joints in copper tubing. Immediately before coating is started, tubing shall be wiped with a clean rag soaked in xylol.

3-1.06. Plastic Surfaces. All wax and oil shall be removed from plastic surfaces that are to be coated, including PVC and FRP, by wiping with a solvent compatible with the specified coating.

3-1.07. Hardware. Hardware items such as bolts, screws, washers, springs, and grease fittings need not be cleaned prior to coating if there is no evidence of dirt, corrosion, or foreign material.

3-1.08. Aluminum. When a coating system is required, remove all oil or deleterious substance with neutral detergent or emulsion cleaner or blast lightly with fine abrasive.

3-1.09. Stainless Steel. When a coating system is required, surface preparation shall conform to the coating manufacturer's recommendations.

3-2. MIXING AND THINNING. Coating shall be thoroughly mixed each time any is withdrawn from the container. Coating containers shall be kept tightly closed except while coating is being withdrawn.

Coating shall be factory mixed to proper consistency and viscosity for hot weather application without thinning. Thinning will be permitted only as necessary to obtain recommended coverage at lower application temperatures. In no case shall the wet film thickness of applied coating be reduced, by addition of coating thinner or otherwise, below the thickness recommended by the coating

manufacturer. Thinning shall be done in compliance with all applicable air quality regulations.

3-3. APPLICATION. Coating shall be applied in a neat manner that will produce an even film of uniform and proper thickness, with finished surfaces free of runs, sags, ridges, laps, and brush marks. Each coat shall be thoroughly dry and hard before the next coat is applied. Each coat shall be a different color, if available. In no case shall coating be applied at a rate of coverage greater than the maximum rate recommended by the coating manufacturer.

Coating failures will not be accepted and shall be entirely removed down to the substrate and the surface recoated. Failures include but are not limited to sags, checking, cracking, teardrops, fat edges, fisheyes, or delamination.

3-3.01. Priming. Edges, corners, crevices, welds, and bolts shall be given a brush coat (stripe coat) of primer before application of the primer coat. The stripe coat shall be applied by a brush and worked in both directions. Special attention shall be given to filling all crevices with coating. When using zinc primers the stripe coat shall follow the initial prime coat.

Abraded and otherwise damaged portions of shop-applied coating shall be cleaned and recoated as recommended by the manufacturer of the finish coating. Welded seams and other uncoated surfaces, heads and nuts of field-installed bolts, and surfaces where coating has been damaged by heat shall be given a brush coat of the specified primer. Before the specified spot or touchup coating of metal surfaces, edges, corners, crevices, welds, and bolts in the area of the spot or touchup coating shall be given a brush coat of primer. This patch, spot, or touchup coating shall be completed, and the paint film shall be dry and hard, before additional coating is applied.

3-3.02. Epoxy. When used, epoxy shall be applied in accordance with the coating manufacturer's recommendations, including temperature limitations and protection from sunlight until top-coated.

When concrete is to be coated, coatings shall not be applied to concrete surfaces in direct sunlight or when the temperature of the concrete is rising. Preferably the coating shall be applied when the temperature of the concrete is dropping.

When applying high build epoxy coatings with a roller or brush and where a dry film thickness of at least 4-6 mils [100-150 µm] per coat is required, two or more coats shall be applied to achieve the recommended dry film thickness equal to a spray applied coating.

3-3.03. Coal Tar Epoxy. When used, the application of coal tar epoxy, including time limits for recoating, shall conform to the recommendations of the coating manufacturer.

When concrete is to be coated, coatings shall not be applied to concrete surfaces in direct sunlight or when the temperature of the concrete is rising. Preferably the coating shall be applied when the temperature of the concrete is dropping.

3-3.04. Vinyl Ester. When used, the application of vinyl ester coating system, including time limits for recoating and temperature requirements of the materials, shall conform to the recommendations of the coating manufacturer.

3-3.05. Film Thickness. The total coating film thickness including intermediate coats and finish coat, shall be not less than the following:

Type of Coating	Minimum Dry Film Thickness
Medium consistency coal tar	20 mils [500 µm].
Coal tar epoxy (two coats)	20 mils [500 µm].
Epoxy	
Floors (two coats)	10 mils [250 µm].
Surfaces with first coat of epoxy and final coat of aliphatic polyurethane	7 mils [175 µm] (5 mils [125 µm] DFT for epoxy plus 2 mils [50 µm] DFT for aliphatic polyurethane).
Surfaces with first and second coat of epoxy and final coat of aliphatic polyurethane	12 mils [300 µm] (10 mils [250 µm] DFT for epoxy plus 2 mils [50 µm] DFT for aliphatic polyurethane).
Other surfaces (two coats)	10 mils [250 µm].
Immersion service (three coats)	15 mils [375 µm].
Flake-filled epoxy (two coats)	30 mils [750 µm].
Vinyl ester	30 mils [750 µm].
Zinc, epoxy, polyurethane	
Surfaces with first coat of zinc, intermediate coat of epoxy, and final coat of aliphatic polyurethane	10 mils [250 µm], 3 mils [75 µm] zinc, 5 mils [125 µm] epoxy, plus 2 mils [50 µm] for aliphatic polyurethane.
Heat-resistant (silicone)	3 mils [75 µm].
High heat-resistant (silicone)	3 mils [75 µm].
Other (one coat)	5 mils [125 µm].
Other (two coats)	10 mils [250 µm].

3-3.06. Weather Conditions. Coatings shall not be applied, except under shelter, during wet, damp, or foggy weather, or when windblown dust, dirt, debris, or insects will collect on freshly applied coating.

Coatings shall not be applied at temperatures lower than the minimum temperature recommended by the coating manufacturer, or to metal surfaces such as tanks or pipe containing cold water, regardless of the air temperature, when metal conditions are likely to cause condensation. When necessary for

proper application, a temporary enclosure shall be erected and kept heated until the coating has fully cured.

Coatings shall not be applied at temperatures higher than the maximum temperature recommended by the coating manufacturer. Where coatings are applied during periods of elevated ambient temperatures, Contractor and the coatings manufacturer shall be jointly responsible to ensure that proper application is performed including adherence to all re-coat window requirements. Precautions shall be taken to reduce the temperature of the surface application, especially for metal, at elevated temperatures above 100°F [38°C] including shading application area from direct sunlight, applying coating in the evening or at night, and ventilating the area to reduce the humidity and temperature,

Vinyl ester coating materials, when required, shall be maintained during transportation, storage, mixing, and application at the temperature required by the coating manufacturer, 35°F [2°C] to 90°F [32°C].

3-4. REPAIRING FACTORY FINISHED SURFACES. Factory finished surfaces damaged prior to acceptance by Owner shall be spot primed and recoated with materials equivalent to the original coatings. If, in the opinion of Engineer, spot repair of the damaged area is not satisfactory, the entire surface or item shall be recoated.

3-5. PROTECTION OF SURFACES. Throughout the work Contractor shall use drop cloths, masking tape, and other suitable measures to protect adjacent surfaces. Contractor shall be responsible for correcting and repairing any damage resulting from its or its subcontractors' operations. Coatings spilled or spattered on adjacent surfaces which are not being coated at the time shall be immediately removed. Exposed concrete or masonry not specified to be coated which is damaged by coatings shall be either removed and rebuilt or, where authorized by Owner, coated with two coats of masonry coating.

3-6. FIELD QUALITY CONTROL. The following inspection and testing shall be performed: surface profile, visual inspection, spark testing,adhesion testing, and wet and dry film thickness testing. All inspection and testing shall be witnessed by Engineer.

3-6.01. Surface Profile Testing. The surface profile for ferrous metal surfaces shall be measured for compliance with the specified minimum profile. The surface profile for concrete shall comply with SSPC 13/NACE 6 Table 1 for severe service.

3-6.02. Visual Inspection. The surface of the protective coatings shall be visually inspected.

3.6.03. Film Thickness. Coating film thickness shall be verified by measuring the film thickness of each coat as it is applied and the dry film thickness of the entire system. Wet film thickness shall be measured with a gauge that will measure the wet film thickness within an accuracy of ±0.5 mil [12.5 μm]. Dry film thickness shall be measured in accordance with SSPC-PA 2.

3-6.04. Spark Testing. Coatings shall be spark tested by the coating manufacturer using an acceptable electrical spark tester set at the recommended voltage. Engineer shall observe the spark testing and shall verify the testing equipment is working properly before the spark testing of the coating is started. The electrode movement shall be continuous and shall proceed in a systematic manner that will cover 110 percent of the coated surface.

Spark testing for coatings on metal shall be done in accordance with ASTM D5162. Spark testing for coating on concrete shall be done in accordance with ASTM D4787.

All detected holidays and pinholes shall be marked and repaired as recommended by the coating material manufacturer.

3-6.05. Adhesion Testing. An adhesion test shall be conducted on a properly prepared and coated steel or concrete surface that is acceptable to the coating material manufacturer and Engineer. The test area shall be at least 2 square feet [0.2 m^2] or larger to allow a minimum of three tests to be conducted. The test area shall be coated with the specified system and cured as recommended by the coating material manufacturer. Pull-off strength adhesion tests of the coating shall be conducted by the coating material manufacturer in accordance with ASTM D4541 for metal surfaces and ASTM D7234 for concrete surfaces. Elcometer or other tensile adhesion tester acceptable to the Engineer shall be used. At least three adhesion tests shall be conducted and the results averaged. Adhesion strength shall equal or exceed the minimum adhesion strength recommended by the coating material manufacturer and shall exceed the tensile strength of the concrete.

If the coating fails the adhesion test, the cause of the failure shall be determined and corrected before reconducting the test.

3-7. FIELD PRIMING SCHEDULE. In general, steel and cast iron surfaces of equipment are specified to be shop primed. Any such surfaces which have not been shop primed shall be field primed. Damaged or failed shop coatings which have been determined unsuitable by Engineer shall be removed and the surfaces shall be field coated, including prime coat (if any). Galvanized, aluminum, stainless steel, and insulated surfaces shall be field primed. Primers used for field priming, unless otherwise required for repair of shop primers, shall be:

Surface To Be Primed	Material
Equipment, surfaces to be coated with	
Aliphatic polyurethane	Universal primer.
Epoxy	Same as finish coats.
Coal tar coating	Same as finish coats.
Vinyl ester	Same as finish coats.
Steel and cast iron, surfaces to be coated with	
Epoxy	Same as finish coats or inorganic zinc.
Coal tar coating	Same as finish coats.
Aluminum	Epoxy.
Galvanized	Epoxy.
Copper	Epoxy.
Stainless steel	Epoxy.
Plastic surfaces, including PVC and FRP	Same as finish coats.
Insulated piping	As recommended by manufacturer of finish coats.
Concrete, surfaces to be coated with epoxy	
For damp-proofing	Epoxy.
For all other surfaces	Epoxy concrete filler and surfacer.
Concrete block exposed in exterior locations	Epoxy concrete block filler.
Concrete block to be coated with epoxy	Epoxy concrete block filler.

Unless otherwise recommended by the coating manufacturer or specified herein, priming will not be required on concrete, or concrete block, nor on metal surfaces specified to be coated with coal tar epoxy, and heat-resistant coatings. Concrete surfaces to be coated with epoxy shall be filled with epoxy concrete filler and surfacer so that a continuous film is obtained, except where concrete is damp-proofed with epoxy.

3-8. FINISH COATING SYSTEMS. The following schedule lists coatings systems and coating surface designations. See Article1-3 for a definition of the surface designations.

No.	Finish Coating Systems	Coating Surface Designation						
		A	C	E	F	G	H	P
1.	Epoxy – One coat	x			x	x		
2.	Epoxy – Two coats	x	x	x	x	x		x
3.	Epoxy / NSF – Two coats		x	x				
4.	Epoxy – Three coats	x	x	x				
5.	Epoxy / NSF – Three coats	x	x	x				
6.	Epoxy – First coat Aliphatic polyurethane – Finish coat	x	x	x	x	x		x
7.	Epoxy – First and second coat Aliphatic polyurethane – Finish coat	x	x	x	x	x		
8.	Universal primer – First coat Aliphatic polyurethane – Finish coat	x		x				
9.	Medium consistency coal tar – Two coats	x	x	x				
10.	Coal tar epoxy – Two coats	x	x	x				
11.	Vinyl ester – Two coats	x	x	x				
12.	Heat resistant – Two coats						x	
13.	High heat resistant – Two coats						x	
14.	Zinc primer – First coat Epoxy – Intermediate coat Aliphatic polyurethane – Final coat	x		x				
15.	Flake-filled epoxy	x		x				

3-8.01. Surfaces Not To Be Coated. Unless otherwise specified, the following surfaces shall be left uncoated:

Exposed aluminum, except ductwork.
Polished or finished stainless steel. Unfinished stainless steel, except flashings and counter flashings, shall be coated.
Nickel or chromium.
Galvanized surfaces, except piping, conduit, ductwork, and other items specifically noted.
Rubber and plastics, except as specified.
Exterior concrete.

FRP wastewater troughs.
Surfaces specified to be factory finished.

3-8.02. Shop Finishing. Items to be shop finished include the following. Shop finishing shall be in accordance with the coating manufacturer's recommendations.

a. All slide gates.
b. All conveyors.
c. Other surfaces where blast cleaning cannot be or is not recommended to be performed in the field.
d. Other items as otherwise specified.

3-8.03. Field Coating. Items to be field coated include the following. Field coating shall be in accordance with the field priming schedule, the coating schedule, and the manufacturer's recommendations.

a. Exterior surface of the sludge hopper.
b. Surfaces not indicated to be shop finished and surfaces where blast cleaning can be performed in the field.
c. All interior ferrous metal surfaces except stainless steel on the digester cover.
d. Other items as otherwise specified.

3-9. METAL SURFACES COATING SCHEDULE.

Surface To Be Coated	Finish Coating System
Non-galvanized and galvanized structural and miscellaneous steel exposed to view or to the elements in exterior locations.	A7 A14
Non-galvanized and galvanized structural and miscellaneous steel exposed to view inside buildings.	A2
Unless otherwise specified, handrails, steel floor plates, doors, door frames .	A8
Unless otherwise specified, pumps, motors, speed reducers, and other machines and equipment exposed to view.	E8
Actuator surfaces for sluice gates, slide gates, control weirs, unless factory finished.	Outdoor – E7E8 , Indoor – E6E8
Metal curbs for skylights and power roof ventilators.	A1

Surface To Be Coated	Finish Coating System
Elevator guiderails and structural steel in hoistway	A2
Heating and air conditioning units, convector covers, electrical equipment cabinets, and similar Items and equipment (unless factory finished) exposed to view.	E8
Surfaces of cranes and hoists exposed to view indoors.	E2E8
Surfaces of cranes and hoists exposed to the elements outdoors.	E7
Steel yard lighting poles exposed to view or to the elements.	A8
Cast Iron and steel piping inside buildings, including piping to be insulated, valves, fittings, flanges, bolts, supports, and accessories, and galvanized surfaces after proper priming.	A2
Cast Iron and steel piping in immersion service including inside buildings, including valves, fittings, flanges, bolts, supports, and accessories, and galvanized surfaces after proper priming.	A4
Cast Iron and steel piping above grade exposed to the elements and to view outdoors, including piping to be insulated, valves, fittings, flanges, bolts, supports, and accessories, and galvanized surfaces after proper priming.	A7 A14
Copper pipe and tubing, including fittings and valves.	F1F2
Copper pipe and tubing, including fittings and valves exposed to view in exterior locations.	F7
Basin launders, troughs, weir plates, and accessories.	A4

Surface To Be Coated	Finish Coating System
All metal surfaces, unless otherwise specified, which will be submerged or buried, all or in part, including valves, and scum baffles, and cast iron slide gates, but excluding piping laid in the ground.	E4A10
Miscellaneous castings, including manhole rings and covers, and manhole steps. (One coat, if not shop coated.)	E2A10E3
Cast iron and steel piping in manholes, wetwells, grit basin, aeration basin, and similar locations, including valves fittings, flanges, bolts, supports, and accessories.	A4A10E5
All metal harness anchorage for buried piping.	A10
Exterior surfaces of extension hoppers and accessories for chemical feeders.	Outdoor – E7 Indoor – E2
Supports and miscellaneous metal for equipment handling corrosive chemicals.	Outdoor – A7 Indoor – A2
Aluminum in contact with concrete.	F1
Boiler breeching and other surfaces which will be hot during operation.	H13
Pneumatic conveyor piping.	H12
Vacuum pump discharge piping.	H12
Engine exhaust piping.	H12
Aluminum and galvanized ductwork and conduit indoors.	F2 or G2
Aluminum and galvanized ductwork and conduit exposed to elements outdoors.	F7 or G7
Aluminum materials exposed to the elements outdoors.	F7
Tilting weirs.	E4

3-10. CONCRETE AND MASONRY SURFACES COATING SCHEDULE.

Surface To Be Coated	Finish Coating System
All concrete and concrete block in corrosive area (Except floors and surfaces scheduled to receive other coatings) which are exposed to view.	Indoor –C2 Outdoor –C7
Interior surfaces of filter wash water flumes.	C5
Concrete block surfaces in carbon handling rooms and janitors closets.	C2
Where indicated on the Drawings, walls, floors, and curbed areas, adjacent to corrosive chemical storage and feed equipment.	C2
All walls in contact with liquid where the opposite face forms a part of an interior room or dry pit.	C4
All interior surfaces of walls in a clearwell, including underside of roof slabs. All interior surfaces of Southside Clearwell to be coated between El. 433.33 and El. 458.00. All interior surfaces of Northwest Clearwell to be coated between El. 432.00 and El. 460.00.	C4
Filters 1-4: Interior walls of filter boxes, full height above floor and including underside and edges of walkways. All interior surfaces of Filters 1-4 to be coated between El. 443.75 and El. 446.50.	C4
Filters 5-10: All new concrete installed inside filter boxes	C4

3-11. MISCELLANEOUS SURFACES COATING SCHEDULE.

Plastic Surfaces, including PVC and FRP.	Outdoor – P6 Indoor – P2
Piping Insulation	Outdoor – P6 Indoor – P2

3-12. PIPING IDENTIFICATION SCHEDULE. Exposed piping and piping in accessible chases shall be identified with lettering or tags designating the service of each piping system, marked with flow directional arrows, and color coded.

Piping scheduled to be color coded shall be completely coated with the indicated colors, except surfaces specified to remain uncoated shall include sufficiently long segments of the specified color to accommodate the lettering and arrows. All other piping shall be coated to match adjacent surfaces, unless otherwise directed by Engineer.

3-12.01. Location. Lettering and flow direction arrows shall be provided on pipe near the equipment served, adjacent to valves, on both sides of wall and floor penetrations, at each branch or tee, and at least every 50 feet [15 m] in straight runs of pipe. If, in the opinion of Engineer, this requirement will result in an excessive number of labels or arrows, the number required shall be reduced as directed.

3-12.02. Metal Tags. Where the outside diameter of pipe or pipe covering is 5/8 inch [15 mm] or smaller, aluminum or stainless steel tags shall be provided instead of lettering. Tags shall be stamped as specified and shall be fastened to the pipe with suitable chains. Pipe identified with tags shall be color coded as specified.

3-12.03. Lettering. Lettering shall be painted or stenciled on piping or shall be applied as snap-on markers. Snap-on markers shall be plastic sleeves, Brady "Bradysnap-On B-915", Seton "Setmark", or equal. Letter size shall be as follows:

Outside Diameter of Pipe or Covering	Minimum Height of Letters
5/8 inch [15 mm] and smaller	Metal tags -1/4 inch [6 mm]
3/4 to 4 inches [20 to 100 mm]	3/4 inch [20 mm]
5 inches [125 mm] and larger	2 inches [50 mm]

3-12.04. Color Coding and Lettering. All piping for the following services shall be color coded. Bands shall be 6 inches [150 mm] wide spaced along the pipe at 5 foot [1.5 m] intervals. For services not listed, the color coding and lettering shall be as directed by the Engineer.

Piping Identification		
Service	**Color of Pipe**	**Color of Letters**
Activated Silica (solution)	Light brown with blue bands	White
Alum (solution)	Orange	Black
Ammonia	White	Black
Ash	Dark gray with green bands	White
Backwash waste	Light brown	White
Carbon	Black	White
Carbon Dioxide (liquid or gas)	Yellow with gray bands	Black
Carbon Dioxide (solution)	Yellow with black bands	Black
Chilled Water (supply or return)	Dark blue with red bands	White
Chlorine (gas, liquid, or vent)	Yellow	Black
Chlorine (solution)	Yellow	Black
Chlorine Dioxide	Yellow with violet bands	Black
Combustion Air	Dark green yellow bands	White
Compressed Air	Dark green	Black
Condensate	Light gray with brown bands	Black
Condenser Water (supply or return)	Dark blue with white bands	White
Digester Gas	Red with black bands	Black
Distilled Water	Light Blue with white bands	Red
Drain	Dark gray	White
Electrolyte	Aluminum with red bands	Black
Emergency Gas Treatment System – Indoors	Yellow with black bands	Black
Emergency Gas Treatment System – Outdoors	White	Black
Ferric Chloride	Orange	Black

Piping Identification		
Service	**Color of Pipe**	**Color of Letters**
Filtrate	Dark gray with red bands	White
Fire Protection Water	Red	White
Fluoride	Light blue with red bands	Black
Fuel Oil	Black	White
Gasoline	Black with red bands	White
Grease	Black with yellow bands	White
Grey Water	Purple	Black[1]
Grit	Light grey with black bands	White
Heated Sludge	Light brown with yellow bands	White
Heating Water (supply or return)	Light gray with black bands	Black
Hydrofluosilicic Acid	Yellow with blue bands	Black
Instrument Air	Light green with dark green bands	Black
Laboratory Special Gases	Match adjacent surface	Black
Laboratory Vacuum	Dark green with light green bands	Red
Lime Sludge	Light brown with white bands	White
Lime Slurry	Light green	Black
Liquid Alum	Yellow with orange bands	Black
Low Pressure Air (aeration supply)	Light green with orange bands	Black
Natural Gas Or Propane Gas	Yellow with red bands	Black
Nonpotable Water (downstream of backflow preventer)	Purple	Black[2]
Odor Control – Indoors	Dark green with light brown bands	White
Odor Control – Outdoors	White	Black
Oil – Hydraulic	Black with white bands	White

Piping Identification		
Service	**Color of Pipe**	**Color of Letters**
Other Hydrocarbons (identify)	Black	White
Ozone	Yellow with orange bands	Black
Plant Effuent Water	Purple	Black[3]
Plumbing Vents	Dark gray	White
Polymer	Orange with green bands	Black
Polyphosphate	Light green with red bands	Black
Potable Water (hot or cold)	Dark blue	White[4]
Potassium Permanganate	Violet	Black
Raw Water	Olive green	White
Refrigerant	Yellow with white bands	Black
Sample	Light gray with green bands	Black
Scum	Dark brown	White
Service Water	Dark blue with red bands	White
Settled Sewage	Light gray with brown bands	Black
Settled Sewage Service Water	Dark blue with orange bands	White
Settled Water	Aqua	Black
Sewage	Dark gray	Black
Sludge	Dark brown	White
Soda Ash (solution)	Light green with orange bands	Black
Sodium Chlorite	Orange with red bands	Black
Sodium Hydroxide (caustic)	Yellow with green bands	Black
Sodium Silica (solution)	Light brown with orange bands	White
Steam	Light gray with orange bands	Black
Steam Vent	Light gray with red bands	Black
Sulfur Dioxide	Light green with yellow bands	Black
Sulfur Dioxide (solution)	Orange with blue bands	Black
Vacuum Pump Discharge	Aluminum	Black

Notes:

1. Lettering shall read, “CAUTION: NONPOTABLE WATER, DO NOT DRINK.”.
2. Lettering shall be on a yellow background and shall read, “CAUTION: NONPOTABLE WATER, DO NOT DRINK.”. Each outlet on the nonpotable water line shall be similarly labeled.
3. Lettering shall read, “CAUTION: RECLAIMED WATER, DO NOT DRINK”.
4. Lettering shall be on a light green background.

Electrical conduit shall be coated to match adjacent ceiling or wall surfaces as directed by Engineer. Vent lines shall be coated to match surfaces they adjoin.

In addition, special coating of the following items will be required:

Item	Color
Valve handwheels and levers	Red
Hoist hooks and blocks	Yellow and black stripes

Numerals at least 2 inches [50 mm] high shall be painted on or adjacent to all accessible valves, pumps, flowmeters, and other items of equipment which are identified on the Drawings or in the Specifications by number.

End of Section

SURFACE DESCRIPTION	SYSTEM NO. -

SURFACE PREPARATION DESCRIPTION
☐ Solvent SSPC-SP1
☐ Ferrous Metal Nonimmersion SSPC-SP6
☐ Ferrous Metal Immersion
☐ SSPC-SP10
☐ SSPC-SP-5
☐ Other

COATING	DFT mils [µm]	MANUFACTURER AND PRODUCT
First Coat (Primer)		
Second Coat		
Third Coat		
Total System		Not less than minimum thickness specified.

Notes: (Attached if needed.)

Project:		
Coatings Manufacturer:		Initials _____
Painting Applicator:		Initials _____
BLACK & VEATCH	COATING SYSTEM DATA SHEET	Fig 1-09940

SHOP PRIMED SURFACE DESCRIPTION	SYSTEM NO. -	-F

SURFACE PREPARATION DESCRIPTION
☐ Solvent SSPC-SP1 ☐ Other:

COATING	DFT mils [µm]	MANUFACTURER AND PRODUCT
Shop (Primer)		(Identify Product/Type)
Touchup		
Intermediate Coat		
Finish Coat		
Total System		Not less than minimum thickness specified.

Notes: (Attached if needed.)

Project:		
Coatings Manufacturer:		Initials _____
Painting Applicator:		Initials _____
BLACK & VEATCH	COATING SYSTEM DATA SHEET	Fig 2-09940

Section 10200

LOUVERS

PART 1 - GENERAL

1-1. SCOPE. This section covers the furnishing and installation of stationary type weather louvers. Control dampers are covered in other sections.

1-2. GENERAL. Louvers shall be furnished and installed as specified herein and in accordance with the details, louver schedule, or arrangements indicated on the Drawings.

Louvers shall be of the sizes required for opening sizes indicated on the Drawings. Actual opening sizes for louvers scheduled for insertion within existing construction shall be field verified. Actual louver sizes shall allow for shim and caulk space.

1-3. SUBMITTALS. Complete specifications and detailed drawings covering arrangement, dimensions, hardware, accessories, and details of construction and installation of the louvers shall be submitted in accordance with the Submittals section (01300).

1-4. COLOR SELECTION. Colors of louvers will be selected from the manufacturer's full line of colors by Engineer. Custom colors shall be furnished. Procedures for selecting colors shall be as indicated in the Submittals Procedures section (01300).

1-5. DELIVERY, STORAGE, AND HANDLING. Shipping shall be in accordance with the Product Delivery Requirements section (01612). Handling and storage shall be in accordance with the Product Storage and Handling Requirements section (01614).

Materials shall be handled, transported, and delivered in a manner which will prevent bends, dents, scratches, or damages of any kind. Damaged materials shall be promptly replaced. Materials shall be stored off the ground and protected from the weather.

PART 2 - PRODUCTS

2-1. PERFORMANCE AND DESIGN CRITERIA.

2-1.01. Governing Standard. Except as modified or supplemented herein, all stationary louvers shall be certified to meet the performance criteria specified and outlined by AMCA Standard 500.

2-1.02. Finishes. Louvers shall have a Kynar paint finish.

70% Kynar paint finishes shall meet the AAMA specification 2605-11 with 1.2 mils total dry film thickness.

2-1.03. Construction. Louvers shall be of aluminum construction and shall be the product of one manufacturer. Louvers shall be furnished complete with all hardware and appurtenances necessary for a satisfactory installation. The louvers shall have extended sills as shown on the Drawings.

Stationary type weather louvers shall be architectural style continuous blades with concealed mullions.

2-1.04. Performance Requirements.

2-1.04.01. Stationary Type. The velocity at which the beginning point of water penetration occurs for stationary type weather louvers shall be at least 790 fpm . The minimum free area for a 48 inches x 48 inches louver shall be 54 percent. The maximum static pressure loss at 600 fpm shall be 0.08 inches wc.

2-2. ACCEPTABLE PRODUCTS.

2-2.01. Stationary Type Weather Louvers. Subject to the requirements specified herein, stationary type weather louvers shall be equivalent to the following:

Ruskin "ELF-375XH”

Arrow United Industries "EA-410”

American Warming and Ventilating "LE-49"

2-2.02. Accessories. Stationary type louvers and acoustical louvers Acoustical louvers shall have aluminum removable bird screens.

2-3. MATERIALS.

Aluminum Extrusions	ASTM B221, Alloy 6063-T5, minimum 0.125 inch thick.
Bird Screen	0.05 inch expanded, 0.50 inch flattened bird screen.

PART 3 - EXECUTION

3-1. GENERAL. Products shall be installed in accordance with this section, the manufacturer's instructions, and as indicated on the Drawings.

Complete specifications and detailed drawings covering arrangement, dimensions, hardware, accessories, and details of construction and installation of the louvers and vents will be made available to the louver and vent installer.

3-2. INSTALLATION. The louvers shall be installed with anchors suitable for the adjacent material and shall be caulked as specified in the Joint Sealants section (07900). When required, bird screens shall be installed on the louvers.

Where aluminum work is to be attached to steel supporting members or other dissimilar metal, the aluminum shall be kept from direct contact with such metals by a heavy coat of epoxy enamel in accordance with the Architectural Painting section (09920). Aluminum surfaces which will be in contact with concrete or masonry when installed shall be given a heavy coat of epoxy enamel. All paint shall be dry and hard when the coated parts are installed.

End of Section

Section 10990

MISCELLANEOUS SPECIALTIES

PART 1 - GENERAL

1-1. SCOPE. This section covers the miscellaneous items of work not covered in other sections.

1-2. GENERAL. Miscellaneous specialties shall be furnished and installed as specified herein and in accordance with the details, arrangements, and dimensions indicated on the Drawings. Where not specifically indicated or specified, fasteners, gaskets, and other accessories shall be provided as required and as recommended by the manufacturer of the specific item.

1-3. SUBMITTALS. Complete specifications, detailed drawings, and setting or erection drawings covering miscellaneous specialties shall be submitted in accordance with the Submittals section (01300).

PART 2 - PRODUCTS

2-1. PORTABLE FIRE EXTINGUISHERS.

2-1.01. Multipurpose Dry Chemical Fire Extinguisher. Portable fire extinguishers of the all-purpose, nitrogen-pressured, dry chemical type shall be provided as scheduled herein. The fire extinguishers shall be UL-approved for Class A, B, and C fires and shall have a 20 pound capacity, such as Potter-Roemer "Model 3020" or acceptable equal with UL rating of 20A:120B:C. Finish of shell shall be red.

2-1.03. Fire Extinguisher Schedule. Wall-mounted fire extinguishers shall be mounted on suitable wall brackets at the specific locations designated by the Engineer.

The following fire extinguishers shall be provided:

Location	Quantity	Mounting
101 Blower Room (Multipurpose)	1	Wall (Near Door 101)

2-2. SPLASH BLOCKS. Precast reinforced concrete splash blocks shall be provided at the locations indicated on the Drawings. Final location of all Splash Blocks to be coordinated with Engineer.

The blocks shall be approximately 16 inches wide by 30 inches long by 5 inches high, with curbs on three sides. The splash portion shall be sloped from not less than 1 inch depth at the inlet end to not less than 2 inches at the outlet end. The block shall be reinforced with not less than WWF4X4-W4XW4 welded wire fabric.

2-3. MEDIA MOVER. One media mover hopper shall be provided for future use by plant staff in order to place media from bulk bags into the filters. Media mover shall be Model 200 MED-MVR Media Mover Jet Hopper, as manufactured by Flo Trend Systems, Inc. of Houston, TX. The Media Mover provided shall be equipped to operate with a water source at a minimum flow of 50 gpm and operating pressure of 30 psi.

The hopper shall have a volume of one cubic yard and be made of A-36 carbon steel plate with 10-gague walls. The unit shall have dimensions not to exceed 53" W x 53" D x 72¾" H and a maximum empty weight of 900 pounds. It shall be mounted on a skid that can be lifted by a fork lift. The unit shall have one carbon steel 3" Eductor with 3" npt inlet, 3" npt outlet and pressure gauge. Inlet fitting will have four (4) ½" outlets with ball valve and hoses that are attached to nozzles in the body of the hopper. Both inlet and outlet will have aluminum cam-lock fittings. Removable UHMW nozzle and venture will be installed in the Eductor body. The Eductor shall be attached to the bottom of the hopper with a 3" polypropylene ball valve. Interior and exterior surfaces shall be coated per manufacturer's recommendations and all exposed sharp edges and corners shall be rounded.

Media Mover unit to be inspected and water tested for leaks prior to shipping. Operation and Maintenance Manual shall be provided.

2-4. Clear Type Sight Level Gauge. One sight level gauge shall be installed on the existing south clearwell to replace an existing sight level, as indicated on the drawings. A chemical-resistant valve and gauge tube assembly shall be mounted on the clearwell wall. The gauge tube shall be fabricated of 1 inch diameter clear PVC, polycarbonate, or borosilicate glass each lined with clear PFA Teflon, as specified. An epoxy coated steel shield which does not obstruct the gauge shall be provided the full length of the gauge. A graduation strip shall be mounted adjacent to or integral with the sight level gauge. The strip shall run the full length of the level gauge and shall be graduated in feet using 1 inch high black lettering over a range from 0.5 feet to 8.0 feet. The gauge tube assembly shall be Jogler Inc. Model LS, or equal.

PART 3 - EXECUTION

3-1. INSTALLATION. All products herein shall be installed as recommended by the manufacturer and as indicated on the Drawings. All moving parts shall be properly lubricated and adjusted as required for proper operation.

Coordinate placement of Media Mover with plant staff.

End of Section

Section 11060

EQUIPMENT INSTALLATION

PART 1 - GENERAL

1-1. SCOPE. This section covers general installation requirements of new equipment units that have been purchased by Contractor as part of this Work including pre-negotiated equipment within these contract documents. Equipment specific installation requirements are covered in the equipment sections.

Equipment from the pre-negotiated equipment specifications to be installed by the Contractor shall include, but not be limited to all equipment provided by the Filter Control System Supplier (FCSS). The procured equipment shall include the filter consoles and master control panels, valves and actuators, instruments, analyzers, accessories, and appurtenances for a complete operational system. More detailed information on the equipment provided by the FCSS can be found in Section 11465.

Contractor shall be responsible for installing all equipment, wires, and cables provided by the FCSS. Contractor shall also be responsible for installing all instrumentation, control, and electrical ductbank and conduit, and installation of all cables, and terminating all wires to the appropriate devices.

1-2. GENERAL. Equipment installed under this section shall be erected and placed in proper operating condition in full conformity with Drawings, Specifications, engineering data, instructions, and recommendations of the equipment manufacturer, unless exceptions are noted by Engineer.

When pumping units are being installed, hydraulic considerations and definition of terms shall be as set forth in the Hydraulic Institute Standards.

Any equipment identified as being provided by others will be furnished complete for installation by Contractor. Technical specifications under which the equipment will be purchased are available.

Any existing equipment which is removed and salvaged for reinstallation shall be handled as indicated in the Project RequirementsDemolition and Salvage Section (02050).

1-2.01. Coordination. When manufacturer's field services are provided by the equipment manufacturer, Contractor shall coordinate the services with the equipment manufacturer. Contractor shall give Engineer written notice at least 30 days prior to the need for manufacturer's field services furnished by others.

Submittals for equipment furnished by others under each procurement contract will be furnished to Contractor upon completion of review by Engineer. Contractor shall review equipment submittals and coordinate with the requirements of the Work and the Contract Documents. Contractor accepts sole responsibility for determining and verifying all quantities, dimensions, and field construction criteria.

Flanged connections to equipment including the bolts, nuts, and gaskets are covered in the appropriate pipe specification section.

1-3. DELIVERY, STORAGE, AND HANDLING.

1-3.01. Storage. Upon delivery, all equipment and materials shall immediately be stored and protected by Contractor in accordance with the Product Storage and Handling Requirements Section (01614) until installed in the Work. Equipment shall be protected by Contractor against damage and exposure from the elements. At no time shall the equipment be stored on or come into contact with the ground, grass, or any other type of vegetation. Contractor shall keep the equipment dry at all times. All filter control system equipment shall be stored indoors.

PART 2 - PRODUCTS

2-1. MATERIALS. Materials shall be as follows:

Grout	As specified in the Joint Sealants Section (07900).
Anti-Seize thread lubricant for SS bolts	As specified in the Anchorage in Concrete and Masonry Section (05550).

PART 3 - EXECUTION

3-1. INSTALLATION.

3-1.01 General. All Equipment shown on the drawings and/or listed in the specifications shall be installed by the Contractor.

Equipment shall not be installed or operated except by, or with the guidance of, qualified personnel having the knowledge and experience necessary to obtain proper results as specified in the Facility Startup/Commissioning Section (01650).

Each equipment unit shall be leveled, aligned, and shimmed into position. Installation procedures shall be as recommended by the equipment manufacturer and as required herein. Shimming between machined surfaces will not be permitted.

Unless otherwise indicated or specified, all equipment shall be installed on concrete bases at least 6 inches high. Baseplates shall be anchored o the concrete base with required anchor bolts. For Equipment with grouted bases, the space beneath shall be filled with grout as specified in the Joint Sealants Section (07900). The equipment base shall be grouted after initial fitting and alignment.

Anti-seize thread lubricant shall be liberally applied to the threaded portion of all stainless steel bolts during assembly.

When specified in the equipment sections, the equipment manufacturer will provide installation supervision and installation checks. For installation supervision, the manufacturer's field representative will observe, instruct, guide, and direct Contractor's erection or installation procedures as specified in the equipment specifications. For installation checks, the manufacturer's field representative will inspect the equipment installation immediately following installation by Contractor, and observe the tests indicated in the Facility Startup/Commissioning Section (01650). The manufacturer's representatives will revisit the site as often as necessary to ensure installation satisfactory to Owner, at Contractors expense, to ensure installation is satisfactory to Owner.

All equipment shall be protected after installation, prior to final acceptance by Owner. Protection provisions shall be as recommended by the manufacturer, and shall include provisions to prevent rust, mechanical damage, and foreign objects entering the equipment.

3-1.02. Pumping Units. Pumping units shall be installed in accordance with the Hydraulic Institute Standards. When installing pumping units, the equipment base shall be grouted after initial fitting and alignment, but before final bolting of connecting piping. Special care shall be taken to maintain alignment of pumping unit components. No Stresses shall be transmitted to the pump flanges. After final alignment and bolting, connections to pumping equipment shall be tested for applied piping stresses by loosening the flange bolts. If any movement or opening of the joints is observed, piping shall be adjusted to proper fit.

Couplings shall be realigned after grouting. Final coupling misalignment shall be within one-half of the coupling manufacture's allowable tolerance.

3-2. STARTUP AND TESTING. Startup requirements, and tests associated with startup shall be as indicated in the Facility Startup/Commissioning Section (01650). Other field tests shall be as indicated in the specific equipment

sections. Startup and tests required shall occur in the order listed in the following paragraphs. Tests shall not begin until any installation supervision and installation checks by the equipment manufacturer have been completed, except where noted below.

3-2.01. Preliminary Field Tests. Preliminary field tests shall be conducted on all equipment by Contractor as indicated in the Facility Startup/Commissioning Section (01650). When an installation check is specified in the equipment sections, the equipment manufacturer's representative will participate in these tests to the extent described in the Facility Startup/Commissioning Section (01650) and in the equipment sections.

3-2.02. Field System Operation Tests. Field system operation tests shall be conducted on all equipment by Contractor as indicated in the Facility Startup/Commissioning Section (01650). When an installation check is specified in the equipment sections, the equipment manufacturer's service personnel will participate in these tests to the extent described in the Facility Startup/Commissioning Section (01650) and in the equipment sections.

3-2.03. Field Demonstration Tests. Field demonstration tests will be conducted by the equipment manufacturer on equipment as indicated and as specified in the equipment sections.

3-2.04. Field Performance Tests & Distribution Tests. Field performance tests or distribution tests will be conducted by the equipment manufacturer on equipment as indicated and as specified in the equipment sections.

3-2.05. Field Baseline Performance Tests. Field baseline performance tests shall be conducted by Contractor on the equipment indicated in the equipment sections, and the tests shall be performed as indicated. When indicated in the equipment sections, the equipment manufacturer will participate in these tests. This test shall not be considered an acceptance test, but rather a test to determine initial performance curves and efficiency just prior to the equipment entering service.

End of Section

Section 11065

COMMON CONTROL PANEL REQUIREMENTS FOR EQUIPMENT

PART 1 – GENERAL

1-1. SCOPE. Furnish and install a functional control panel to operate the control system as specified in the detailed mechanical equipment requirements of this section. Obtain all required control descriptions and data from the detailed mechanical equipment requirements to this Section, the System Description and the control schematic diagrams on the Contract Drawings. Provide control system engineering to produce custom elementary drawings showing interwiring and interlocking with remote devices. All control devices, unless specified otherwise, shall be mounted in the control panel. This section includes control panels supported by equipment Manufacturer's to manually or automatically operate the mechanical equipment.

1-2. REFERENCE STANDARDS. Except as modified or supplemented herein, all work covered by this section shall be performed in accordance with all applicable municipal codes and ordinances, laws, and regulations. In case of a conflict between this section and any state law or local ordinance, the latter shall govern. Where reference is made to one of the following standards, the revision in effect at the time of bid shall apply.

- Institute of Electrical and Electronics Engineers (IEEE).
- National Electrical Manufacturers Association (NEMA).

Where reference is made to one of the above standards, the revision in effect at the time of bid opening shall apply.

1-3. SUBMITTALS. Submit to the Engineer shop drawings and product data, in accordance with Section 01300, the associated Division 11 submittal section. The documents submitted shall contain but not be limited to the following:

- Equipment outline drawings showing elevation, plan and interior views, front panel arrangement, dimensions, weight, shipping splits, conduit entrances and anchor bolt pattern. Indicate all options, special features, ratings and deviations from this Section. Furnish complete Bill of Materials indicating Manufacturer's part numbers.
- Power and control schematics including external connections. Show wire and terminal numbers and color coding.
- Instruction and replacement parts books.
- Certified shop test reports.
- As-built final drawings.

- Field tests and inspection reports.

1-4. QUALITY ASSURANCE. A factory authorized service and parts organization shall be able to respond to any service call for the project within 8 hours. Provide the name and address of the factory authorized service and parts organization nearest to the project location at the time of the bid.

Equipment components and devices shall be UL labeled to the extent possible wherever UL standards exist for such equipment.

The control panel Manufacturer shall demonstrate at least three years of continuous field operating experience in control panel design and fabrication. Submit customer/user list with telephone numbers, addresses and names of customer/user representatives.

1-5. SYSTEM DESCRIPTION. Refer to the detailed mechanical equipment specifications for description of system operation.

1-6. DELIVERY, STORAGE AND HANDLING. Package the control panel for maximum protection during delivery and storage. Store the control panel indoors in a clean, dry, heated storage facility until ready for installation. Do not install the control panel in its final location until the facilities are permanently weather tight. Protect the control panel at all times from exposure to moisture, chemicals, hydrogen sulfide and chlorine gas.

1-7. PROJECT/SITE REQUIREMENTS. The control panel shall consist of a 120 volt control power transformer with two fuses on the primary and one fuse on the secondary. All control components shall be mounted in one common enclosure. When a control panel is used for motor control, the control panel shall have in addition to the aforementioned a main circuit breaker, a combination motor circuit protector (MCP), magnetic starter and overload relay for each motor, Control switches shall be provided to operate each motor either manually or automatically.

1-8. WARRANTY. Manufacturer shall warrant equipment to be free from defects in materials and workmanship for a period no less than the warranty period stated in the associated Division 11 sections.

PART 2 – PRODUCTS

2-1. RATING. The control panel shall operate on a power supply as indicated on drawings. The overall withstand and interrupting rating of the equipment and devices shall not be less than 35000 amperes R.M.S, symmetrical at 480 Volts. All circuit breakers and combination motor starters shall be fully rated for the

above fault current interrupting capacity. Series connected short circuit ratings will not be acceptable.

The complete control panel assembly shall be UL certified or carry a UL listing for Industrial Control Panels.

The control panel shall meet all applicable requirements of the National Electrical Code.

The control panel enclosure shall be in accordance with the electrical area classification indicated on the Contract Drawings.

2-2. COMPONENTS. Specific control devices, control descriptions and other data not specified within are specified under the detailed specification for the mechanical equipment with which the control panel is supplied.

2-2.01. Main Circuit Breaker. Not used.

2-2.02. Motor Starters. Not used.

2-2.03. Control Devices. All operating control devices and instruments shall be securely mounted on the exterior door. All controls shall be clearly labeled to indicate function and shall be in accordance with the electrical area classification indicated on the Electrical Drawings.

2-2.03.01. Indicator Lamps. Indicator lamps shall be heavy duty, 30 mm industrial type oil tight, high-visibility LED, full voltage type. Units shall have screw on plastic lenses and shall have factory engraved legend plates. Unless otherwise specified in each equipment specification lens color shall be green for equipment OFF, red for equipment operating, amber for FAIL and white for power ON/Equipment Stand-by. For all control applications, indicator lamps shall incorporate a push-to-test feature.

2-2.03.02. Selector Switches. Mode selector switches (HAND-OFF-AUTO, LOCAL-OFF-REMOTE, MOTOR SELECTOR, LEAD-LAG, etc.) shall be heavy-duty 30 mm, oil tight, industrial type with contacts rated for 120 VAC at 10 Amps continuous. Units shall have standard size, white field, and legend plates with black markings, as indicated. Operators shall be black knob type. Units shall have the number of positions and contact arrangements, as required. Units shall be single-hole mounting, accommodating panel thicknesses from 1/16-in minimum to 1/4-in maximum.

2-2.03.03. Push Buttons. Push-button, shall be heavy-duty, 30 mm, oil tight industrial type with momentary or maintained contacts as required, rated for 120 VAC at 10 Amps continuous. Units shall have standard size, white field, and

legend plates with black markings, as indicated. Button color shall be red for START and green for STOP. Contact arrangement shall be as required.

2-2.03.04. E-Stop Push Button. E-stop push button shall be red, non-illuminated, mushroom type heavy duty, industrial type with maintained contact, rated for 120 VAC at 10 Amps continuous. Button shall Cutler Hammer HT800 or approved equal.

2-2.03.05. Elapsed Time meter. A six digit, non-resettable elapsed time meter shall be connected to each motor starter.

2-2.03.06. Horn and Beacon Light. A failure alarm with horn and beacon light shall be provided as required by contract document. Silence and reset buttons shall be furnished.

2-2.03.07. Surge Protection Device. The control panel shall be provided with an SPD Unit on the load side of the main circuit breaker. SPD shall be rated 65Ka per mode. SPD shall be provided with over-current disconnecting mean in order to safely remove the SPD while panel is operating.

2-2.03.08. Interposing relays. All interfaces between control panel and remote devices shall be isolated via an interposing relay. Interposing relays shall have contacts rated for 250 VAC, 11 pin tubular octal bases with indicating light, and 10 Amps continuous.

2-2.03.09. Motor Alternator. An alternator shall be provided to sequence motors as required by contract document.

2-2.03.10. Control Relays. Control relays shall have 120-volt coils, 11 pin tubular octal bases with indicating light, and contacts rated for 10 amps. Furnish 1 N.O. and 1 N.C. spare contacts in addition to those required by the control scheme

2-2.03.11. Timing Relays. Timing relays shall have 120 volt coils, 11 pin base, selectable for on delay or off delay functions, and settable for time delays of 0.05 seconds to 999 minutes with 10 amp contact rating. Relays shall be Square D Class 9050 type JCK70 or equal

2-3. ENCLOSURE TYPES. Unless otherwise stated in specific specification section, the control panel specified herein shall be rated NEMA 4X for panels located indoor, NEMA 4X for panels located outdoors. Steel enclosures shall be 12 gauge and constructed with continuously welded seams. The panel door(s) shall have continuous hinge with quarter turn latches and neoprene gasket. Door clamps shall be provided. The enclosures shall be Hoffman Concept or an approved equal.

The enclosure shall incorporate a removable back panel on which control components shall be mounted. Back panel shall be secured to the enclosure with collar studs. The enclosure door shall be interlocked with the main circuit breaker by a door mounted operating mechanism. Back panel shall be tapped to accept all mounting screws. Self-tapping screws shall not be used to mount any components. Print storage pockets shall be provided on the inside of the panel. Overload tables shall be laminated and adhered to the inside of the door.

2-4. NAMEPLATES MARKINGS AND IDENTIFICATION. Provide 2-in by 5-in, nominal, engraved phenolic master nameplate on the control panel fastened with stainless steel type 316 screws or rivets. Nameplate shall be white with black core, 3/8-in high lettering and shall indicate equipment designation as shown on the Drawing.

Provide legend plates or 1-in by 3-in engraved nameplates with 1/4-in lettering for identification of door mounted control devices, pilot lights and meters.

Provide permanent warning signs as follows:

- "Danger- High Voltage- Keep Out" on all doors.
- "Warning- Hazard of Electric Shock - Disconnect Power Before Opening or Working On This Unit" on main power disconnect.
- Arc Flash labels shall be provided for every 480V panel.

2-5. CONDENSATION HEATERS. A strip heater shall be mounted inside the control panel. Heater shall be rated 240V, but operated at 120V, single phase, 150 watts, with rust resisting iron sheath. A control thermostat shall be mounted inside the control Panel. The strip heater terminals shall be guarded by a protective terminal cover. The strip heater shall have a hand heat shield. High temperature connecting lead wire shall be used between the thermostat and the heater terminals. Wire shall be No. 12 AWG stranded, nickel-plated copper with Teflon glass insulation.

2-6. WIRING. All power and control wire shall be flexible 41 strand #14 AWG, 600 Volt insulation type SIS tinned copper, color coded as outlined in Specification 11066 “General wiring methods” and shall be of the sizes required for the current to be carried, but not smaller than No. 14 AWG. All wiring shall be enclosed in PVC wire trough with slotted side openings and removable cover.

All interconnecting wires between panel mounted equipment and external equipment shall be terminated at numbered terminal blocks.

All control panel wiring shall be numbered at both ends with type written heat shrinkable wire markers. The numbers used shall be as specified in Section 11067, Wire Tagging.

2-7. TERMINAL BLOCKS. Terminal blocks shall be 600 Volt rated, rail mounted capable of accepting # 22 to # 8 wires. Terminal blocks shall be Westinghouse type TBA, Allen Bradley 1492 series rated for a minimum of 25 amps or equal. Each terminal block shall have 20 percent spare terminals, but not less than two spare terminals.

Wires shall be terminated to the terminal blocks with crimp type, pre-insulated, ring-tongue lugs. Lugs shall be of the appropriate size for the terminal block screws and for the number and size of the wires terminated.

Provide an AC ground bar bonded to the panel enclosure (if metal) with 20 percent spare terminals.

Provide an intrinsically safe ground terminal bar isolated from the control panel enclosure. Provide 20 percent spare terminals but not less than two spare terminals.

Terminal points for current transformer leads shall be provided with a shorting bar.

2-8 SHOP TEST. Perform Manufacturer's standard production testing and inspection in accordance with NEMA and ANSI standards.

PART 3 – EXECUTION

3-1. INSTALLATION. Repaint any damage to factory applied paint finish using touch-up paint furnished by the control panel Manufacturer. Any work not installed according to the Drawings and this Specification shall be subject to change as directed by the Engineer. No extra compensation will be allowed for making these changes.

3-2. FIELD TESTING. Perform the following as necessary.

- Check mechanical interlocks for proper operation. Make any adjustments required.
- Adjust motor circuit protectors and voltage trip devices to their correct settings.
- Install overload heaters per actual motor nameplate currents.
- Adjust motor circuit protectors for actual motor nameplate currents.
- In the event of an equipment fault, notify the Engineer immediately. After the cause of the fault has been identified and corrected, a joint inspection of the equipment shall be conducted by the Contractor, the Engineer and the control panel Manufacturer's factory service technician. Repair or

replace the equipment as directed by the Engineer prior to placing the equipment back into service.

End of Section

Section 11066

GENERAL WIRING METHODS

PART 1 – GENERAL

1-1. SCOPE (WORK INCLUDED). Furnish and install a functional control panel to operate the control system as specified in the detailed mechanical equipment requirements of this section. Obtain all required control descriptions and data from the detailed mechanical equipment requirements to this Section, the System Description and the control schematic diagrams on the Contract Drawings. Provide control system engineering to produce custom elementary drawings showing interwiring and interlocking with remote devices. All control devices, unless specified otherwise, shall be mounted in the control panel. This section includes control panels supported by equipment Manufacturer's to manually or automatically operate the mechanical equipment.

1-2 REFERENCE STANDARDS. Refer to Section 11067 – Wire Tagging. Conductors of all sizes of wire shall be stranded. The color of the wire shall be selected to conform in all instances to the following table:

CITY OF AUSTIN STANDARD WIRE COLOR CODES

VOLTAGE, 3 PHASE

PHASE	480/277	120/208	120/240
A	BROWN	RED	RED
B	YELLOW	BLACK	ORANGE (High Leg)
C	PURPLE	BLUE	BLACK
G	GREEN	GREEN	GREEN
N	GRAY	WHITE	WHITE

VOLTAGE, 1 PHASE

PHASE	120/240
A	RED
B	BLACK
G	GREEN
N	WHITE

CONTROL PANEL WIRING

AC Controls	Red
Annunciator	Yellow

Contacts	
DC Controls (+)	Blue
DC Controls (-)	Brown
DC (+) Power	Blue
DC (-) Power	Brown
AC Hot	Black
AC Neutral	White
PLC/RTU Contacts	Purple

NOTE: All wiring shall be color coded and tagged according to city wire tagging standard.

PART 2 – PRODUCTS

2-1. GENERAL. Unless noted elsewhere in specifications all power and control wire shall meet the following requirements.

A. Wire shall be 98% conductivity copper, stranded, conductor THWN-2/THHN-2.

B. All control panel wiring shall be flexible 41 strand #14 AWG, 600 volt insulation type SIS tinned copper, color coded as outlined in wiring specification.

C. All wire on this project shall be new, unused, in good condition and shall be delivered in standard coils, packages or reels. If wire used is different than what is specified, samples of wire shall be submitted for the purpose of determining acceptability of the wire. Wire which has been rejected shall not be used again. Such rejected wire shall be removed from the Owner's premises. Decisions as to the quality of the wire furnished and the acceptance of such wire shall be made by the Owner or his representative.

D. No power conductors smaller than No. 12 wire shall be used except for control and alarm wiring where No. 14 wire shall be used as minimum size wire when protected by a 15 amp fuse/ breaker.

E. The contractor may, if he deems it necessary or advisable, use larger sized conductors than those required. In no case shall there be a voltage drop greater than that allowed by the N.E.C.

F. Instrument wiring (4-20 milliamp signal wiring) shall be twisted pair, #16 AWG stranded copper conductor with PVC 600 volt insulation over each

conductor, a tinned copper drain wire, an overall aluminum mylar shield and an outer overall PVC jacket (35 mils).

PART 3 – EXECUTION. The following installation requirements for panel wiring shall be met:

A. Support all conductors in vertical conduits or raceways in the manner set forth in Item 300-19 of the latest revision of the National Electric Code. Do not use lighting fixtures for raceways or circuits other than parallel wiring of fixtures.

B. Do not make any splices or taps in any conductor except where absolutely required for 120 volt circuits feeding lights or receptacles. Such splicing may only take place in splice/junction boxes. Elapsed time meters are the only exception to not using a junction box.

C. Tag all power wiring in all pull boxes, wire ways, motor control center wire ways, panel board wiring gutters, light switch boxes, receptacles, disconnect switches etc. Use flame slip-on type tags, approved for this use, as manufactured by "Brady", or approved equal. See Section 16205, Wire and Cable Tagging Standard for additional requirements.

D. All devices (relays, terminal blocks, etc.) shall be labeled using phenolic labels.

E. All interconnect wiring going from one compartment to another, or between two separate pieces of equipment must terminate at a terminal block on each end, i.e. entering and leaving a compartment or piece of equipment.

F. All wiring passing between cabinets shall be protected by a rubber grommet or approved nipple with bushings.

G All wire terminations shall be made with a mechanical compression type lug or terminal specifically designed to accept stranded wire. Do not terminate by wrapping the wire around the screw.

H. Number 8 AWG and larger wire shall utilize a crimper with a die set to install lugs to the wire.

I. No more than two wires/ lugs per terminal will be allowed unless ring type lugs are used. A maximum of three wires will be permitted if all wires are using ring lugs.

J. All current transformer loops shall utilize ring terminals and shorting terminal boards to avoid open circuiting the secondary of a CT.

K. All wiring run to the front door panel shall have a spiral wrap and ty wrapped to protect wires from being pinched between door and panel. A loop shall be provided to allow door to open freely.

L. All main panel wiring shall be run in a raceway such as Panduit. All wiring run from the Panduit to the devices shall be neatly run and ty wrapped. If Panduit is not practical, wires shall be neatly run and ty wrapped.

M. Equipment grounding wire run in conduit shall have an identifying green covering or green color coding at each end terminations and at junction box or pull box locations along its run length.

N. Where the capacity of a single feeder is so great as to require parallel conductors in more than 1 conduit, each conduit must contain the same number and length of conductors in all phases (legs) of the feeder, including any neutral conductors per the N.E.C.

O. Under no circumstance shall circuits above 600 volts and those below 600 volts be pulled in the same conduit.

P. Separate low level circuits (such as phone line) from noisy and power circuits by a minimum distance of 1 foot.

Q. Bolted connections for electrical conductors, without non-corrosive surfaces, shall be thoroughly cleaned and tinned or covered with a light film of commercial paste to prevent oxidation. Acceptable manufacturers are Noalox or approved equal.

R. Where mechanical assistance is used for pulling conductors, a wire pulling compound, Polywater, or equal, having inert qualities that do not harm the wire insulation or covering shall be free from grease, filings or foreign matter before conductors are pulled.

S. Wiring shall be tagged with Brady Wire Markers, or equal, at panel boards, and all termination points with numbers conforming to the City of Austin Wire and Cable Tagging Standard.

T. Lighting and receptacle wiring may use silicone filled spring type wire connectors in approved locations. This applies to lighting and receptacle circuits only.

U. In no case shall 24 volt DC circuits and AC circuits be pulled in the same conduit or raceway.

End of Section

Section 11067

WIRE TAGGING

PART 1 – GENERAL

1-1. SCOPE. The purpose of this specification is to establish a wire tagging method to use on electrical, control and instrumentation systems for the Austin Water Utility.

PART 2 – PRODUCT

2-1. WIRE TAGGING. In general, all wiring shall be tagged at all termination points and at all major access points in the electrical raceways. A termination point is defined as any point or junction where a wire or cable is physically connected. This includes terminal blocks and device terminals. A major access point to a raceway is defined as any enclosure; box or space designed for wire pulling or inspection and includes pull boxes, manholes, and junction boxes.

Wire tags shall show both origination and destination information to allow for a wire to be traced from point to point in the field. Information regarding its origination shall be shown in parenthesis.

2-1.01. Single Conductor Wire Tagging. The following is the format to use for single conductor wire tags. Tag information to the left refers to the termination point. Tag information in parenthesis refers to point of origination.

XXXX XX (XXXX-XXXX-XXXXX / XXXX XX)

Device Terminal Identifier No. (Equipment Tag No.*/Device Terminal Identifier No.)

* For wiring within a piece of equipment, control panel, junction box, etc., the Equipment Tag No. is not required, only the Device Identifier and Terminal Number from the point of origination.

Example:

- For a wire connected from Terminal block 1 terminal 23 to relay CR1 terminal 9, the correct tag would be TB1-23(CR1-9) at the terminal block and CR1-9(TB1-23) at the relay.

2-1.02. Device Identifier. The Device Identifier uniquely identifies a device within a piece of equipment. Examples are: TB1, for terminal block number 1 and CR02, for control relay # 02. For existing equipment, refer to existing device tags

or labels and/or equipment documentation. For missing tags or new equipment, refer to the standards developed by EIC Division.

2-1.03. Terminal Number. The Terminal Number along with the Device Identifier, identify which specific point in the equipment the wire must be terminated to. Refer to manufacturer's labeling or record drawings for device terminal numbers.

2-1.04. Equipment Tag Number. The Equipment Tag Number is the physical tag attached to the equipment. For existing equipment, please refer to the Facility in question. For new or missing equipment tags, refer to the EIC Division Standards for tagging standards.

Example:

- Refer to the back of this document for examples on wire tagging within a piece of equipment and between two pieces of equipment.

2-1.05. Device Identifier and Terminal Number. The device identifier and terminal number is the same as in a single wire tag above and it describes what device and terminal number the wire is to be terminated to.

2-2. Tag Specifications. Wire tags shall be yellow heat shrink type "Raychem" or Owner approved equal with the tag numbers typed with an indelible marking process. Character size shall be a minimum of 1/8" in height. Hand written tags will not be acceptable. Tags shall not be heat shrunk unless specifically authorized by owner.

PART 3 – EXECUTION

3-1. GENERAL. For deviations from this wire tagging specification, or for cases not covered by these specifications, submit the proposed tagging system to the Electrical Instrumentation and Controls Division staff for approval prior to use.

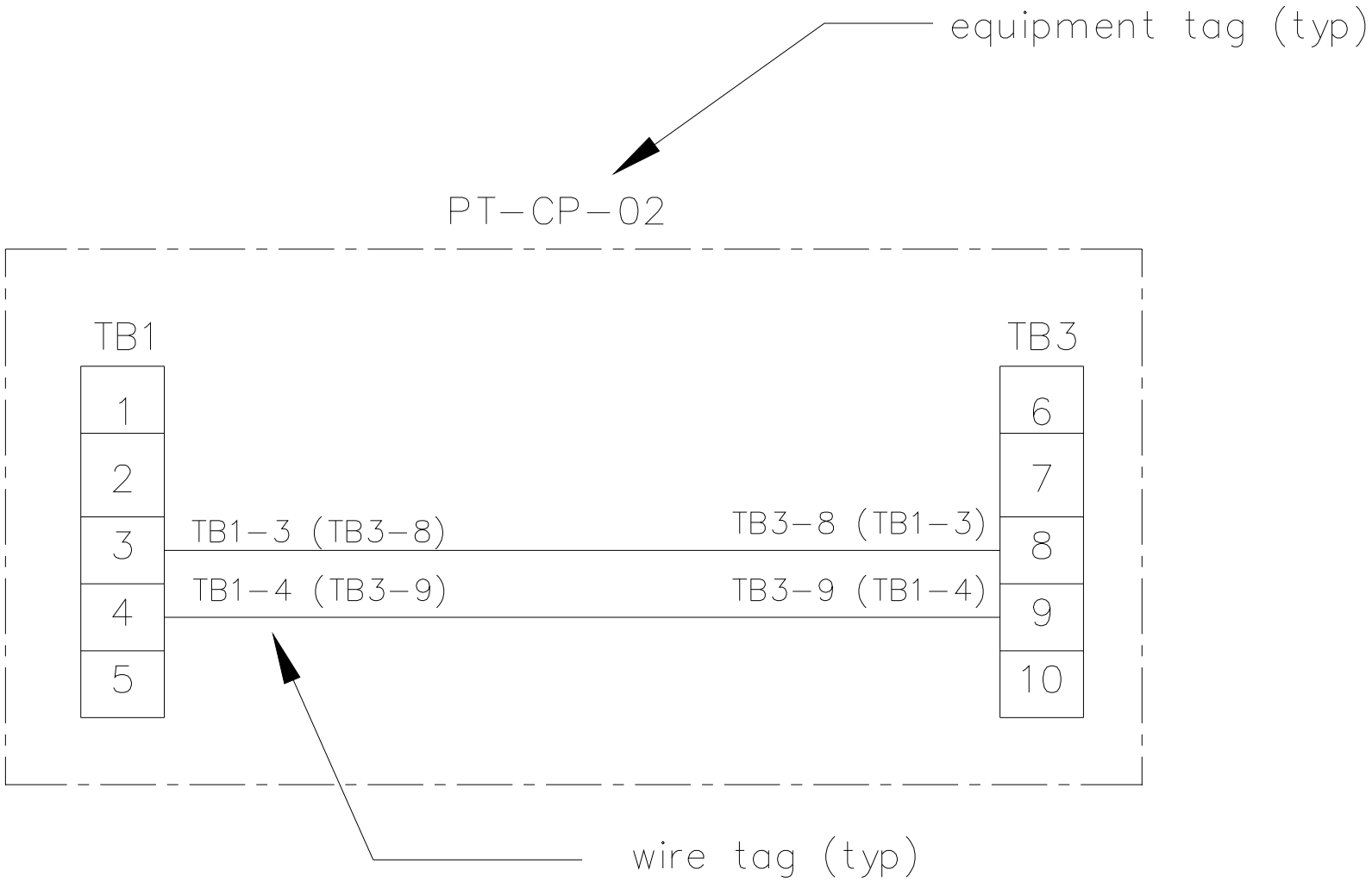

EXAMPLE # 1

Identification of a Single Conductor within a piece of equipment

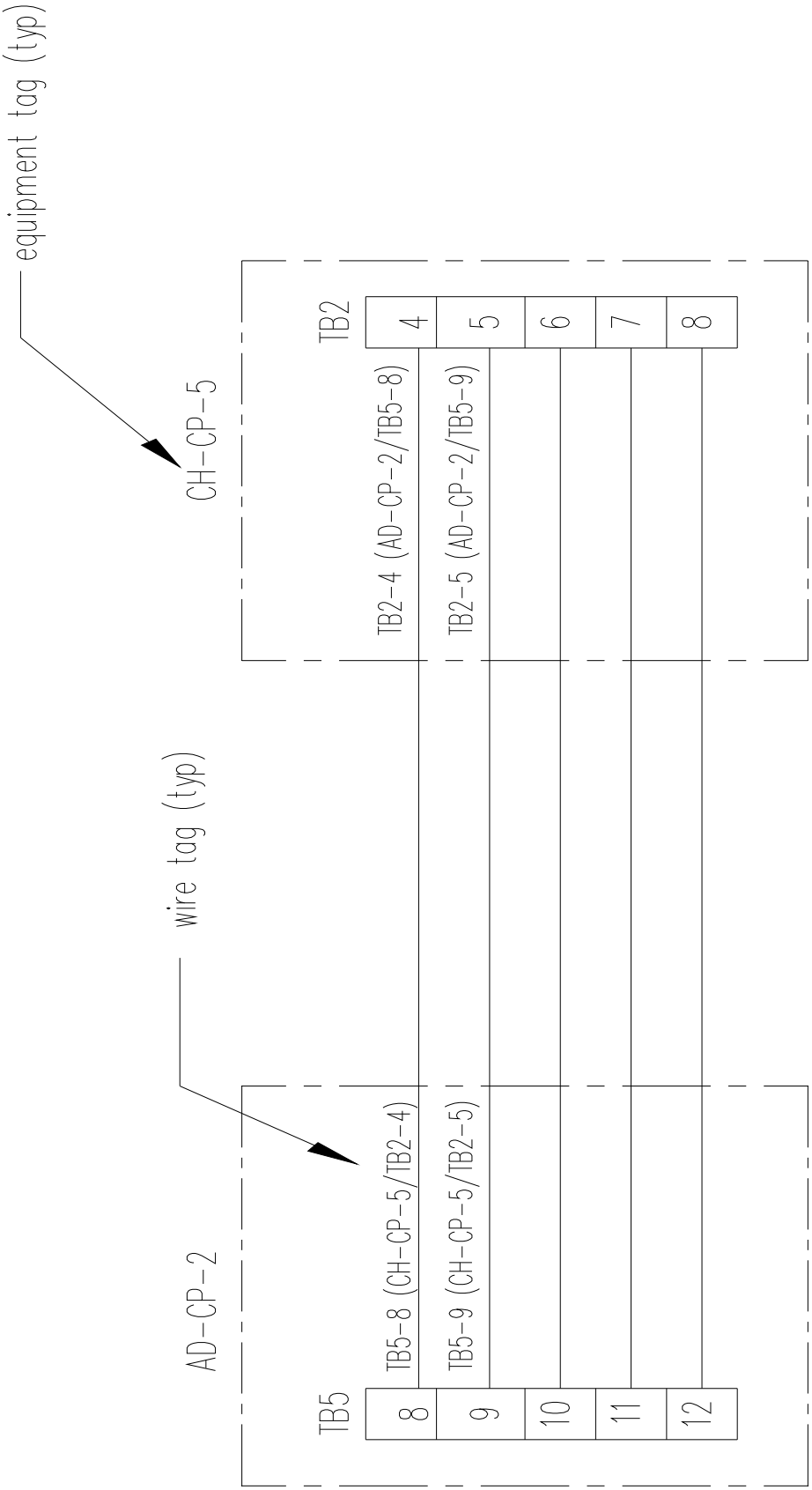

EXAMPLE # 2

Identification of a Single Conductor that interconnects two pieces of equipment

End of Section

Section 11068

PACKAGED SYSTEMS PLC PROGRAMMING CRITERIA

PART 1 – GENERAL

1-1. SCOPE. PLC Hardware to be used by packaged equipment Filter Control System Supplier (FCSS) shall be as specified in the contract bid specifications. As a minimum, the processor used to interface to the Owner's SCADA system shall support the Schneider Electric Unity Pro programming software.

FCSS shall use latest version of Schneider Electric Unity Pro programming software, unless otherwise directed by Owner.

PART 2 – PROGRAM ORGANIZATION AND STRUCTURE

2-1. PROGRAM. The overall program shall be broken down into meaningful sections of code related to the operations of the equipment. As a minimum, include the following program sections:

2-1.01. Communications. All registers that are being written to or being read from the FCSS package system PLC from the Owner's SCADA equipment shall be grouped into one section of the program. Register addresses used for interfacing to Owner's SCADA system shall be placed in a contiguous block of registers to facilitate read and write operations.

2-1.02. Section Control. If code includes variables to enable/disable sections of code.

2-1.03. Process Control. If the process is complex and/or the section is very large, this section should be further broken down into permissive section(s), alarming section(s) and control section(s).

2-1.04. Input/Output (I/O) Processing. This section includes data manipulation of physical inputs and outputs such as analog scaling, totalizing, etc.

2-1.05. PLC Time Synchronization and Heartbeat. This section shows the registers that are to be used to synchronize the PLC's clock with the Owner's SCADA system and to determine whether the FCSS PLC logic is executing (heartbeat) to be monitored by the Owner's SCADA system.

2-2. SOFTWARE TAGGING CONVENTION. FCSS is to follow the Owner's software tagging convention for all tags being read from or written into by the Owner's SCADA system. If the FCSS elects to use their own software tagging

convention in their programs that control the equipment within their own package system, then the PLC(s) that is used to interface with the Owner's SCADA system needs to include a set of registers that will be labeled with the Owner's software tagging convention and be "mapped" to the corresponding set of registers that are used by the FCSS software program. The mapping of these registers is to be clearly labeled in the program and indicated on the Field I/O spreadsheet to be provided at the end of the job.

All program sections are to be clearly labeled with text that describes what the section of code does. As a minimum, include the key wording for each section as described above.

Provide comment lines within the sections of code to describe what the various parts of the section do, especially for those areas where the function is performing is not evident or is complex to follow.

All software tags in the program are to follow a structured naming convention and be clearly labeled with meaningful text descriptions to make it easy to understand what the tag represents and what function it is performing in the program.

Ensure that none of the programs developed have security controls enabled, i.e. password protection on DFB's, restrictions on uploading or editing program, etc.

PART 3 – PROGRAM DETAILS

3-1. PROGRAMMING LANGUAGES. FCSS is to use IEC programming languages supported by Unity Pro, and in general adopt the following guidelines.

- Use Derived Function Blocks (DFB) language as much as practical to standardize on process control functions.

- Use Structured Text (ST) language for Calculations and I/O Mapping routines.

- Use IEC Ladder Logic (LL) and Function Blocks (FB) for control logic and to include in DFB's.

3-2. PROGRAMMING STANDARDS. Standardize the program sections and program elements (DFB, ST, etc.) as much as possible into modular and/or functional pieces of code for repetitive and often use sections of code to simplify the program and minimize its size.

FCSS is to set up a Custom Library for standard program elements like DFB's and FB's.

Use Topological (Unity Pro) Addressing on both Quantum and M340 PLCs for registers associated with physical I/O, i.e. %I1.3.2 and %Q1.4.3, instead of State Ram addressing (%M) since State Ram addressing convention does not reference the physical I/O location, but topological addressing does.

Use eBool variables if there may be a reason to keep track of previous values (history) or there is a need to look at a leading or falling edge in the signal.

Avoid using IEC BMDI function blocks on any of the PLC programs since Unity Pro is not able to search for registers contained within the range of that block.

Use IO Scanner for communication between PLC's where possible to facilitate the set-up and troubleshooting of registers that are being moved from one PLC to another.

Code should be designed to avoid using force bits for the logic to execute properly. Inadvertent un-forcing of bits will cause the program behave unexpectedly.

Do not initialize %MW values during a cold start or a program download. Doing so can cause stored values such as runtime to be over written. Ensure this option is unchecked in the programming software if the option is available.

PART 4 – DOCUMENTATION AND DELIVERABLES

4-1. OPERATION AND MAINTENANCE MANUAL. As part of their Operations and Maintenance Manual, FCSS is to include, but not be limited to the following:

Control Narratives that include:

- The various control modes of operation; i.e. remote automatic, remote manual, local automatic, local manual, maintenance mode, etc.

- Identification of and description of all permissive and shutdown signals that are required to operate the equipment or that will shut the equipment down.

- Identification of all set points and process variables that are Operator adjustable with a description of what they do and how they affect the operation of the equipment.

4-1.01. Required Spreadsheets. Field I/O and Host Pack and Peer to Peer spreadsheets (provided by Owner) to document the various software tags associated with the package equipment.

Instrument Index spreadsheet showing all instrumentation on their package equipment and calibration information including, but not limited to; instrument tag name, input range, units, control loop description, scaling, trip set points, etc.

FCSS is to provide a copy of all program files installed in the production system and source files of all documentation listed above.

4-2. FIELD I/O LIST DESCRIPTIONS NOTES.

4-2.01. General. The Field Input/Output (I/O) lists only inputs or output connected to process control equipment and devices, i.e. instrument, electrical equipment, etc.. It does not include logical inputs or outputs that are generated as part of the RTU/PLC program to do data manipulation, or data that is passed on to another controller or Host computer.

All inputs and outputs associated with a PLC/RTU, i.e. physical and logical points, are shown on the Host Pack list if they are being transmitted/received by a Host computer, or are shown in the Peer to Peer Data Communications List, if the values are being shared with another peer device.

4-2.02. Field I/O List Descriptions.

- RACK NAME - The rack name as shown on the contract drawings. Note this name is for cross-reference only. The actual drop, and rack number used in the software configuration will be as specified in the DROP, and RACK column of the Field I/O List.

- FIELD DEVICE TAG - The name of the end device, in accordance with the INFOR (maintenance management system) naming convention and tagged in the field and/or on the contract drawings. This field is used as a cross-reference to the Host Pack table.

- DESCRIPTION - The description of the signal. This description shall be used consistently throughout the application software.

- CARD/MODULE TYPE - The Modicon model number located in the corresponding slot.

- POINT TYPE - The point type indicates AI, AO, DI, or DO for analog input, analog output, discrete input, or discrete output, respectively.

- DROP, RACK/BASE - The drop and rack number associated with the chassis. These fields define the required drop, rack assignment for the configuration of each chassis associated with the processor.

- SLOT - This field defines the physical location of the module within a given chassis.

- I/O POINT - This field defines the specific point on the module.

- CARD/MODULE TERMINALS - Physical wiring termination points on the I/O card/module.

- FIELD I/O ADDR. - The software register address where the I/O module places the data for the point. This field is used as a cross-reference to the Host Pack table.

- BIT NO. - The bit within the register address where the I/O module places the data for the point, as required. This field is used as a cross-reference to the Host Pack table.

- EGU LOW - The value of the signal at 4 mA in the specified engineering units. This information is only applicable to analog signals.

- EGU HIGH - The value of the signal at 20 mA in the specified engineering units. This information is only applicable to analog signals.

- EGU - The engineering units for the analog signal. This information is only applicable to analog signals.

- SCALED IN PLC? - Defines whether or not the analog value is scaled in the PLC, or if scaling occurs at the top end. This information is only applicable to analog signals.

- RAW LOW - The value of the signal at 4 mA in counts as written to the PLC register by the I/O module. This information is only applicable to analog signals.

- RAW HIGH - The value of the signal at 20 mA in counts as written to the PLC register by the I/O module. This information is only applicable to analog signals.

- SIGNAL TYPE - Electrical characteristics of the signal, i.e. 4-20 mA, 1-5 VDC, etc.

- TERMINAL BLOCK - The name of the block of terminals where field wiring is terminated.

- TERMINAL NO'S - The terminal numbers within the terminal block where the field wiring is terminated.

- LOOP DIAG. - The number of the drawing where a loop drawing is shown for the signal loop. These could either be loop-specific drawings, or typical loop drawings.

- P&ID No. - The number of the P&ID drawing where the I/O point is shown on the drawings.

- NOTES - Miscellaneous notes to further describe the signal. This field contains information such as square root (SQRT) for analog inputs, analog alarm setpoints, shelf states for discrete inputs, etc.

4-3. HOSTPACK FIELD DESCRIPTIONS NOTES.

4-3.01. General. Physical Inputs and Outputs (I/O) refer to connections to instruments and/or device/equipment including: motor status contacts, valve position switches, pump start/stop commands, etc.

There are two different tagging standards for physical I/O points, depending on whether they are instruments or signals coming from or going to equipment/devices other than instruments.

Instrument tags follow the ISA standards and are somewhat different from the other physical I/O points, i.e. equipment and devices, in that those tags include not only an equipment code, like the instruments, but it also includes a Function Descriptor Code that is up to four characters long. Since a piece of equipment/device may have multiple I/O points connected to it (such as a motor starter) the Function Descriptor Code ensures uniqueness and clarifies the function performed by the specific I/O.

Software TagNames assigned to a PLC/RTU program are identical to the physical I/O points, i.e. Instrument Tags and Equipment/Device Tags.

Software TagNames that are generated by a controller or a host computer that are not tied directly to a physical I/O point, follow the same convention as the equipment and instrument tags, except a suffix is added to the end of the physical tag to indicate the origination/destination of that software tag, i.e. whether the point is logically created in the PLC/RTU or Host program and were it is sending its information to.

4-3.02. Host SCADA Configuration Information. Host SCADA Configuration Information – the fields in this section relate to configuration of alarming and general point information for use in the PMCS SCADA Host database.

- HOST NODE NAME(S) - The computer name of PMCS SCADA Servers which will be polling the PLC, including OIUs.

- HOST TAGNAME - The tagname used in the PMCS host software to reference the input point.

- DB TYPE - The database point type used in the OIU and PMCS database definition for the point. See Table 4-3 in the System Integration Design Guide for a list of available database point types.

- HOST DESCRIPTION - A description of the signal. The description field is limited to 40 characters.

- ACTIVE STATE (1) - The definition of the energized state for a discrete point.

- INACTIVE STATE (0) - The definition of the de-energized state for a discrete point.

- ALARM STATE – Defines if either the Active or Inactive states will be used to generate an alarm a discrete point.

- LOLO ALARM - The setpoint for the low low alarm limit for an analog point.

- LO ALARM - The setpoint for the low alarm limit for an analog point.

- HI ALARM - The setpoint for the high alarm limit for an analog point.

- HIHI ALARM - The setpoint for the high high alarm limit for an analog point.

- ALARM PRIORITY - The alarm priority. The alarm priority shall be defined as L, M, or H for low priority alarm, medium priority alarm, or high priority alarm, respectively. If the point does not require alarming, then this field shall be blank for the point. If multiple analog alarm setpoints are defined, alarm priorities shall be indicated for each alarm type.

4-3.03. PLC Host Read/Write Area. The fields in this section define the interface between the host database and the PLC/RTU.

- HOST I/O ADDR - The register address in the PLC which the host will read to get the current value of the point.

- HOST BIT NO - The bit within the register address in the PLC which the host will read to get the current value of the point.

- HOST PLC DATA TYPE - The data type of the signal in the PLC register. This defines how the PMCS interprets the data in the PLC register(s). Options for this field are based on the data types used in the PLC/RTU.

- PLC SOFTWARE TAGNAME - The name of the register(s) that the PMCS host will read to current value of the point, as defined in the PLC/RTU software.

4-3.04. PLC Intermediate Area. The fields in this section identify any intermediate registers used in the PLC/RTU to perform calculations or process the input signals from the I/O module.

- INT I/O ADDR - The register address in the PLC where the intermediate data value is stored.

- INT BIT NO - The bit within the register address in the PLC where the intermediate data value is stored.

- INT DATA TYPE - The data type of the signal in the intermediate PLC register. Options for this field are based on the data types used in the PLC/RTU.

- PLC SOFTWARE TAGNAME - The name of the register(s) in the PLC where the intermediate data value is stored, as defined in the PLC/RTU software.

4-3.05. Field Interface Area. The fields in this section identify information about the field devices and register locations written to by the I/O modules.

- PEER DEVICE – Indicates whether or not the point is transmitted from another PLC, as opposed to being acquired from local I/O.

- FIELD DEVICE TAG - The name of the end device, in accordance with the INFOR (maintenance management system) naming convention and tagged in the field and/or on the contract drawings. This field is used as a cross-reference to the Field I/O List table.

- POINT TYPE - The point type indicates AI, AO, DI, or DO for analog input, analog output, discrete input, or discrete output, respectively.

- FIELD I/O ADDR. - The software register address where the I/O module places the data for the point. This field is used as a cross-reference to the Field I/O List table.

- FIELD BIT NO. - The bit within the register address where the I/O module places the data for the point, as required. This field is used as a cross-reference to the Field I/O List table.

4-3.06. Other Fields.

- PLC/RTU EQUIPMENT TAG - The name of the PLC or RTU device, in accordance with the INFOR (maintenance management system) naming convention and tagged in the field and/or on the contract drawings. This field is used as a cross-reference to the Field I/O List table.

- NOTES – Miscellaneous notes specific to the database point.

4-4. PEER TO PEER DATA COMMUNICATIONS DESCRIPTIONS NOTES.

4-4.01. General. The Peer to Peer Data Communications list is intended to only show data (inputs or outputs) that is shared between two peer devices such as PLC/RTU controllers. The list does not include any other physical I/O points connected to the associated PLC/RTU or data points that are transmitted to or received from a Host computer.

For physical I/O points connected to a specific PLC/RTU, refer to the Field Input/Output (I/O) list.

For data points that are associated with a particular PLC/RTU that are transmitted to or received from a Host computer, please refer to the HostPack list.

- PLC SOFTWARE TAGNAME - The name of the register(s) that the PMCS host will read to current value of the point, as defined in the PLC/RTU software.

- DESCRIPTION - A description of the signal. The description field is limited to 40 characters.

- HOST PLC DATA TYPE - The data type of the signal in the PLC register. This defines how the PMCS interprets the data in the PLC register(s). Options for this field are based on the data types used in the PLC/RTU.

- ORIGINATION EQUIPMENT TAG - The name of the PLC or RTU device where the point data is coming from (source of the data), in accordance with the INFOR (maintenance management system) naming convention and tagged in the field and/or on the contract drawings. This field is used as a cross-reference to the Field I/O List table, Host Pack table, or other Peer to Peer tables.

- ORIGINATION I/O ADDR - The register address in the source PLC which the destination peer device will read to get the current value of the point. This field is used as a cross-reference to the Field I/O List table, Host Pack table, or other Peer to Peer tables.

- ORIG BIT NO - The bit within the register address in the source PLC which the destination peer device will read to get the current value of the point. This field is used as a cross-reference to the Field I/O List table, Host Pack table, or other Peer to Peer tables.

- DESTINATION EQUIPMENT TAG - The name of the PLC or RTU device where the point data is being written to (consumer of the data), in accordance with the INFOR (maintenance management system) naming convention and tagged in the field and/or on the contract drawings. This field is used as a cross-reference to the Field I/O List table, Host Pack table, or other Peer to Peer tables.

- DESTINATION I/O ADDR - The register address in the consumer PLC which the source peer device will write to provide the current value of the point. This field is used as a cross-reference to the Field I/O List table, Host Pack table, or other Peer to Peer tables.

- DEST BIT NO - The bit within the register address in the consumer PLC which the source peer device will write to provide the current value of the point. This field is used as a cross-reference to the Field I/O List table, Host Pack table, or other Peer to Peer tables.

- HOST INTERFACE? - Indicates whether the destination device passes the data to the PMCS host, or whether the data will be passed along to another peer device.

- BLOCK MOVE TYPE - Indicates the function block or other method used to facilitate the transfer of peer data.

- BLOCK MOVE DEVICE - The name of the PLC/RTU whose program includes the block move command. The Origination device can write the

data to the Destination device, or the Destination device could read the data from the Origination device.

- NETWORK PROTOCOL - The protocol used to transport the peer data.
- NOTES - Miscellaneous notes specific to the database point.

End of Section

Section 11110

HORIZONTAL SPLIT CASE CENTRIFUGAL PUMPS

PART 1 - GENERAL

1-1. SCOPE. This section covers the furnishing of single-stage, horizontal, split case, double suction centrifugal pumping units.

Pump designation.	NPW Pumps
Number of pumps.	2
Pump tag numbers.	NP-001, NP-002
Pump location.	Filter Gallery

Each pumping unit shall be complete with a pump, electric motor, coupling, coupling guard, anchor bolts, and other appurtenances specified or otherwise required for proper operation, all mounted on a common baseplate.

1-2. GENERAL. Equipment furnished under this section shall be fabricated and assembled in full conformity with Drawings, Specifications, engineering data, instructions, and recommendations of the equipment manufacturer, unless exceptions are noted by Engineer. Hydraulic considerations and definition of terms shall be as set forth in the Hydraulic Institute Standards.

1-2.01. General Equipment Stipulations. The General Equipment Stipulations shall apply to all equipment furnished under this section. If requirements in this specification differ from those in the General Equipment Stipulations, the requirements specified herein shall take precedence.

1-2.02. Tagging. Each item of equipment and each part shipped separately shall be tagged and identified with indelible markings for the intended service. Tag number shall be clearly marked on all shipping labels and on the outside of all containers.

1-2.03. Power Supply. Unless otherwise indicated, power supply to the equipment shall be 480 volts, 60 Hz, 3 phase.

1-2.04. Identification. Pumps shall be identified in accordance with the Equipment and Valve Identification Section (01615).

1-3. SUBMITTALS.

1-3.01. Drawings and Data. Complete fabrication and assembly drawings, together with detailed specifications and data covering materials, drive unit, parts, devices, and accessories forming a part of the equipment furnished, shall be submitted in accordance with the Submittals Section (01300). The data and specifications for each unit shall include, but shall not be limited to, the following:

Pumps

Name of manufacturer.
Type and model.
Tag number.
Pump location.
Rotative speed.
Size of suction nozzle.
Size of discharge nozzle.
Net weight of pump only.
Net weight with baseplate and couplings.
Complete performance curves showing capacity versus head, NPSH required, pump efficiency, wire-to-water efficiency, and pump input power.
Data on coupling.
Data on shop painting.

Complete Pumping Unit

Max overall dimensions.
Total weight.
Detailed fabrication drawings are required if the base plate is 8 feet long or longer.
Base and anchor bolt details.

Motors

As specified in the Electrical Motor, Induction, 600V and below Section (15170).

1-3.02. Operation and Maintenance Data and Manuals. Operation and maintenance manuals shall be submitted in accordance with the Submittals Section (01300). The operation and maintenance manuals shall be in addition to any instructions or parts lists packed with or attached to the equipment when delivered.

1-4. QUALITY ASSURANCE.

1-4.01. Balance. All rotating parts shall be accurately machined and shall be in as nearly perfect rotational balance as practicable. Excessive vibration shall be sufficient cause for rejection of the equipment. The mass of the unit and its distribution shall be such that resonance at normal operating speeds is avoided. In any case, the unfiltered vibration velocity, as measured at any point on the

machine including the motor, shall not exceed the maximum vibration limits of the governing standard unless otherwise required.

At any operating speed, the ratio of rotative speed to the critical speed of a unit or its components shall be less than 0.8 or more than 1.3.

1-5. SPARE PARTS AND ACCESSORIES. In addition to the spare parts recommended by the manufacturer, the following spare parts and accessories shall be furnished in substantial wooden boxes with identifying labels and delivered to the vicinity of the project site or the Owner as directed:

Spare Parts	Quantity
Complete sets of pump bearings.	1 set per pump
Mechanical Seals	1 per pump
Complete sets of wearing rings.	1 set per pump
Complete sets of shaft sleeves	1 set per pump
Complete sets of gaskets and seals.	1 set per pump
Flexible coupling.	1 coupling
Bearings and seals of drive motor.	1 set per pump

PART 2 - PRODUCTS

2-1. SERVICE CONDITIONS. The pumping units specified herein shall replace the existing Non-Potable Water Pumps within the filter gallery.

The pumping units shall be suitable for the following service conditions:

Type of environmental exposure.	Indoor
Pumps start and stop against a closed valve.	No
Site elevation.	435 ft MSL

Parts shall be interchangeable between units of similar size and capacity to extent practical.

All equipment furnished shall be designed to meet all specified conditions and to operate satisfactorily at this elevation.

2-2. PERFORMANCE AND DESIGN REQUIREMENTS. Pumping units shall be designed for the operating conditions as follows:

Pump tag numbers.	NP-001	
	NP-002	
Rated head.	182	ft
Capacity at rated head.	1,800	gpm
Operating head range for full speed continuous operation.	165 to 210	ft
Minimum shutoff head.	215	ft
Maximum nominal pump speed.	1,800	rpm
Maximum power required at pump input shaft at any point from minimum operating head to shutoff head.	136	bhp
Efficiency.	75	%
Type of efficiency indicated.	Pump	
Efficiency calculated at.	Rated Head	
Pump designed for reverse rotation.	No	
Minimum NSPHA at rated head.	32	ft
Maximum “A” rated weighted noise at 3 ft .	89	dBA
Maximum unfiltered vibration velocity.	HIS	in/s
Pump rotation as viewed from driven end.	See Drawings	
Minimum pump suction nozzle size.	8	in
Nominal pump discharge nozzle size.	6	in

All specified conditions shall be at rated speed, unless otherwise indicated.

The minimum hydrostatic test pressure shall be 1.5 times shutoff head plus max suction pressure.

Pump performance shall be stable and free from cavitation and noise throughout the specified operating head range at design suction submergences. The design performance shall be based on a wearing ring diametral clearance of not less than 1 mil per inch of wearing ring diameter, or 12 mils total, whichever is greater.

Pumps shall be as manufactured by Goulds, Patterson, Fairbanks Morse, or Flowserve, without exception.

2-3. MATERIALS. Each pump shall be cast iron, bronze fitted, using the following materials:

Casing	Cast iron, ASTM A48.
125 lb flange rating	ANSI/ASME B16.1, Class 125 flat-faced dimensions and drilling.
Casing Wearing Ring	Bronze, ASTM B505-952.
Impeller	Bronze, ASTM B584-836.
Impeller Wearing Ring	Bronze, ASTM B505-932.
Shaft	Alloy steel, AISI 1141.
Shaft Sleeve	Bronze, ASTM B505-954.
Stuffing Box Hardware	Corrosion-resistant metal.
Mechanical Seal	Chesterton, Type 442 split seal.
Bearings	Antifriction.
Baseplate	Cast iron or fabricated steel.
Rust-preventive compound	As recommended by manufacturer.

2-4. PUMP CONSTRUCTION.

2-4.01. Casing. The upper and lower casing halves shall be flange-bolted and doweled together with tapered dowels. The upper half casing flange shall have tapped holes for jacking screws and lifting lugs or eyebolts. Supporting feet, bearing arms, and nozzles shall be either cast integrally with or bolted and doweled to the lower half casing. Pipe tapped openings shall be provided for draining, priming, and venting the casing and for draining stuffing box leakage.

For pumping units driven by 100 hp or larger motors, pump feet shall be provided for bolting and doweling to a baseplate.

2-4.02. Impeller. The impeller shall be a one-piece casting completely machined on all exterior surfaces and statically balanced. The interior water passages shall have uniform sections and smooth surfaces and shall be free from cracks and porosity.

The impeller shall be keyed to the shaft and positively held in the center of the discharge volute.

2-4.03. Shaft and Shaft Sleeves. The shaft shall be completely machined. If the shaft is more than 2-1/2 inches in diameter, it shall be tapered at the coupling end. Deflection at the stuffing box shall not exceed 0.002 inch at any operating head.

The shaft shall be provided with sleeves extending from the impeller through each stuffing box. Each sleeve shall be positively secured to the shaft and shall be sealed to prevent leakage between the shaft and the sleeve. After assembly on the shaft, total runout shall not exceed 0.002 inch.

2-4.04. Wearing Rings. Renewable wearing rings shall be provided in the casing and on the impeller. The casing ring shall be positively locked against rotation in the lower half casing. The impeller ring shall be locked against rotation.

2-4.05. Stuffing Box. The stuffing box for each pumping unit shall contain a single mechanical seal.

The seal shall be a balanced stationary type seal with o-ring secondary seals. When properly mounted, the seal must not fret the pump shaft. The stationary face shall be spring loaded to provide self-aligning due to any seal chamber misalignment. The seal shall be fitted with a machined 316 stainless steel gland with a flush/vent port. The dynamic o-ring shall be designed to move toward a clean surface as the face wears. The seal springs shall be isolated from the pumped fluid. The materials of construction shall be 316 stainless steel hardware, Elgiloy springs, carbon rotating face, reactive bonded silicon carbide stationary face and flurocarbon o-rings.

The mechanical seal shall be provided with a Spiral Trac version N, installation type I, 416 SS material, active throat bushing that upon flooding releases entrapped air, creates fluid exchange in the seal chamber, removes particulate matter from the seal chamber and provides cooling water for the contacting surfaces with and without the use of external seal flush water.

2-4.06. Seal Water Station. Each pumping unit shall be provided with a seal water station Type B, including all piping and accessories as specified in the Seal Water Stations Section (15499).

2-4.07. Bearings. Bearings shall be grease lubricated antifriction type. The outboard bearing shall carry both radial and axial loads imposed by the pump. The inboard bearing shall carry the radial loads imposed by the pump and drive unit.

Antifriction bearings shall have an ABMA L_{10} Life Rating of 40,000 hours at specified operating conditions. The pump shaft speed shall not exceed the limits specified by the bearing manufacturer.

Bearing housings shall be designed to maintain shaft alignment and ensure long bearing and lubricant life. Housings shall have labyrinth type running clearance designed to effectively retain the lubricant and keep out contaminants. Ample clearance for stuffing box maintenance shall be provided between the bearing housings and the stuffing box glands.

2-4.08. Flexible Coupling. The pump coupling shall be sized for continuous operation at full load and at maximum rpm when the misalignment is within the manufacturer's tolerance limit. Coupling design shall permit removal of the pump rotating element without disconnecting the piping, moving the drive unit, or causing axial movement of the coupling halves on the shafts.

Couplings for motors with sleeve type bearings shall have a limited end float feature.

Flexible couplings shall be gear type.

Each pumping unit shall be provided with an OSHA compliant coupling guard.

2-4.09. Equipment Bases. Each unit and its drive assembly shall be supported on a single baseplate of neat design. When the motor weight exceeds 1,000 lbs baseplates shall be provided with adequate openings to facilitate grouting. Other equipment base requirements are specified in the General Equipment Stipulations.

2-5. ACCESSORIES. Each pump shall be provided with lifting eyebolts or lugs, plugged gauge cock connections at the suction and discharge flanges, tapped and plugged openings for casing and bearing housing vents and drains, and appropriate fittings for adding bearing lubricant. Grease lubricated units shall be provided with a means of venting the casing. Oil lubricated units shall be provided with constant level oilers or with sight glasses arranged to indicate operating and static oil levels.

2-5.01. Bearing Temperature Gauge. Not Used

2-5.02. Casing Temperature Switch. Not Used.

2-6. DRIVE UNITS.

2-6.01. Electric Motors. The electric motors shall be designed as specified in Electrical Motor, Induction, 600V and below Section (15170).

2-6.02. Adjustable Frequency Drives. Not Used.

2-7. SHOP TESTS. Each pump shall be tested at the factory for capacity, power requirements, and efficiency at specified rated head, evaluated head, shutoff head, operating head extremes, and at as many other points as necessary for accurate performance curve plotting. All tests and test reports shall be made in conformity with the requirements and recommendations of the Hydraulic Institute Standards. Acceptance testing shall be per Table 14.6.3.4 Grade 1U, with no minus tolerance or margin allowed.

For pumping units 100 horsepower and larger, a certified test report shall be prepared. Five certified copies of a report covering each test shall be prepared by the pump manufacturer and delivered to Engineer not less than 10 days prior to the shipment of the equipment from the factory. The report shall include data and test information as stipulated in the Hydraulic Institute Standards, copies of the test log originals, test reading to curve conversion equations, and certified performance curves. The curves shall include head, pump input power, pump efficiency, and wire-to-water efficiency (when specified), rpm, and shop test NPSH available, plotted against capacity. The curves shall be easily read and plotted to scales consistent with performance requirements, with all test points clearly shown.

PART 3 - EXECUTION

3-1. INSTALLATION. Each pumping unit shall be installed in accordance with the Hydraulic Institute Standards, the Equipment Installation Section (11060), and as specified herein.

The equipment base shall be grouted after initial fitting and alignment, but before final bolting of connecting piping. Special care shall be taken to maintain alignment of pumping unit components. No stresses shall be transmitted to the pump flanges. After final alignment and bolting, connections to pumping equipment shall be tested for applied piping stresses by loosening the flange bolts. If any movement or opening of the joints is observed, piping shall be adjusted to proper fit.

Couplings shall be realigned after grouting. Final coupling misalignment shall be within one-half of the coupling manufacturer's allowable tolerance.

3-2. FIELD QUALITY CONTROL.

3-2.01. Installation Check. An experienced, competent, and authorized representative of the manufacturer shall visit the site of the Work and inspect, check, adjust if necessary, and approve the equipment installation. The representative shall be present when the equipment is placed in operation in accordance with Facility Startup/Commissioning (01650), and shall revisit the job site as often as necessary until all trouble is corrected and the equipment installation and operation are satisfactory in the opinion of Engineer.

The manufacturer's representative shall furnish a written report certifying that the equipment has been properly installed and lubricated; is in accurate alignment; is free from any undue stress imposed by connecting piping or anchor bolts; and has been operated under full load conditions and that it operated satisfactorily. All costs for these services shall be included in the contract price.

3-2.02. Installation Supervision. Installation supervision by the manufacturer is not required.

All costs for these services shall be included in the contract price.

3-3. GENERAL TESTING REQUIREMENTS. Unless otherwise specified in the individual specification sections, all equipment provided shall be tested at the factory as a single fully integrated system. As a minimum, the testing shall include the following:

- Unwitnessed Factory Test (UFT)
- Factory Acceptance Test (FAT)
- Operational Readiness Test (ORT)
- Functional Demonstration Test (FDT)
- 30-Day Site Acceptance Test (SAT)

Each test shall be in the cause and effect format. The person conducting the test shall initiate an input (cause) and, upon the system's or subsystem's producing the correct result (effect), the specific test requirement shall be satisfied.

Manufacturer shall prepare a testing procedure to be approved by Owner and Engineer that shall demonstrate that the system conforms to the specifications. The testing procedure shall be submitted at least 30 days in advance of testing. The testing shall be conducted by the manufacturer and witnessed by Owner and Engineer. Each specific test shall be described and followed by a section for signoff by the appropriate party after its satisfactory completion. Copies of these signoff test procedures, forms and checklists will constitute the required test documentation.

Manufacturer shall notify Owner and Engineer in writing at least 14 days before the proposed testing date. The Engineer reserves the right to test or retest all specified functions whether or not explicitly stated in the prior approved Test Procedures. The Engineer's decision shall be final regarding the acceptability and completeness of all testing.

If the FAT is concluded unsuccessfully, the test shall be repeated. Manufacturer shall reimburse Owner and Engineer for all expenses incurred in connection with attending repeated factory or site testing necessitated by system failure or inadequate preparation.

Manufacturer shall provide all special testing materials and equipment. Wherever possible, perform test using actual process variables, equipment and data. Where it is not practical to test with real process variables, equipment and data, provide suitable means of simulation.

No equipment shall be shipped to the jobsite until the Engineer has received all test results and approved the system as ready for shipment.

The manufacturer shall furnish the services of servicemen, all special calibration and test equipment and labor to perform all required tests for equipment provided by manufacturer.

3-3.01. Correction of Deficiencies. All deficiencies in workmanship and/or items not meeting specified testing requirements shall be corrected to meet specification requirements at no additional cost to the Owner. Testing, as specified herein, shall be repeated after correction of deficiencies is made until the specified requirements are met. This work shall be performed at no additional cost to the Owner.

3-3.02. Unwitnessed Factory Test (UFT). The entire system, except primary elements, final control elements and field mounted transmitters, shall be interconnected and tested to ensure the system operates as specified. All analog and discrete input / output points not interconnected at this time shall be simulated to ensure proper operation of all alarms, monitoring devices / functions and control devices / functions. All panels and assemblies shall be inspected and tested by the manufacturer to verify that they are in conformance with related submittals, specifications and Drawings.

The UFT shall be performed by the manufacturer at their facility within the continental United States of America. Results shall be submitted to the Engineer for approval prior to the start of the FAT.

3-3.03. Factory Acceptance Test (FAT). The FAT shall be performed by the manufacturer at their facility within the continental United States of America. All system tests specified for the UFT shall be repeated. The FAT will be a joint test by the manufacturer, General Contractor, Engineer, Owner and other related subcontractors.

After completing the UFT, the manufacturer shall notify the Owner and General Contractor in writing that the system is ready for the FAT. The Engineer and Owner shall schedule a test date within 10 days of receipt of the “Ready to FAT” letter.

The various tests performed during the FAT shall be designed to demonstrate that all hardware and software fulfill all the requirements of the Specifications and Contract Drawings. The test conditions shall resemble, as closely as possible, the actual installed conditions. Any additional hardware or software that may be required to successfully verify system operation shall be supplied at no additional cost to the Owner. All control panels shall be included in these tests.

All deficiencies identified during these tests shall be corrected and retested prior to completing the FAT as determined by the Engineer/Owner.

All test data and procedures followed during the testing shall be logged and certified copies of the logs shall be provided to the Engineer/Owner.

Travel allowance shall be used for Owner personnel to attend all test that are not at the Owner facilities. All other parties attending these tests are required to pay for their own costs associated with the tests including time, airfare, car rental, hotel expense, meal expense, etc. This includes the Engineer, General Contractor's project engineer and support personnel.

3-3.04. Operational Readiness Test (ORT). Prior to startup and the FDT, the entire system shall be certified, inspected, tested and documented that it is ready for operation. The ORT will be a joint test by the manufacturer, General Contractor, Engineer, FCSS, and other related subcontractors and shall be conducted at the Owners facility.

3-3.04.01. Devices by Other Suppliers. If inter related devices furnished by other suppliers under other contracts, or by Owner, the field supervisor shall use suitable test equipment to introduce simulated signals to and/or measure signals from these devices to locate the sources of trouble or malfunction. Signals from these devices shall be successfully tested prior to the ORT being completed one the malfunctioned device is working properly.

3-3.04.02. Loop/Component Inspections and Tests. The entire system shall be checked for proper installation, calibrated and adjusted on a loop-by-loop and component-by-component basis by the manufacturer to ensure that it is in conformance with related submittals and these Specifications. The General Contractor shall require the manufacturer to maintain Loop Status Reports and Component Calibration Sheets at the jobsite and make them available to the Engineer/Owner at any time. The inspections and tests do not require witnessing. However, the Engineer shall review and initial all Loop Status Sheets and Component Calibration Sheets and spot-check their entries periodically and upon completion of the ORT. Any deficiencies found shall be corrected.

3-3.04.03. Test Report. Upon completion of the network verification, a detailed report shall be prepared by the Analyst and issued to the Owner and Engineer. The report shall include all measurements and testing results, analysis of results, summary of findings, and recommendations for remediation.

3-3.04.04. System ORT Report. The manufacturer shall submit a written report on the results of such tests to the Engineer. Additional documentation shall be furnished as requested by Engineer to establish responsibility for corrective measures. Manufacturer shall verify, in writing, to Engineer or Owner that

manufacturer has successful completed the ORT before beginning the Function Demonstration Test.

3-3.05. Functional Demonstration Test (FDT). Prior to startup and the SAT, the entire installed instrument and control system shall be certified that it is ready for operation. The FDT will be a joint test by the manufacturer, General Contractor, Engineer, Owner and other related subcontractors and shall be conducted at the Owners facility. Once the facility has been started up and is operating, a witnessed FDT shall be performed on the complete system to demonstrate that it is operating and in compliance with these Specifications. Each specified function shall be demonstrated on a paragraph-by-paragraph, loop-by-loop and site-by-site basis. Loop-specific and non-loop-specific tests shall be the same as specified under FDT except that the entire installed system shall be tested and all functionality demonstrated. The system shall operate for 72 continuous hours without failure before the test shall be considered successful. At the end of the FDT the following test shall be demonstrated"

- Communication failure and recovery
- Total power failure and recovery including the UPSs
- Catastrophic failure and recovery of PLC and I/O modules

3-3.06. Site Acceptance Test (SAT). After completion of the ORT and FDT test, the entire system shall be operated for a period of 30 consecutive days, under conditions of full plant process operation, without a single non-field repairable malfunction. The SAT will be a joint test by the manufacturer, General Contractor, Engineer, Owner and other related subcontractors and shall be conducted at the Owners facility. During the test, plant operating, Engineering and manufacturer personnel shall be present as required. While the test is proceeding, the Owner shall have full use of the system. Only certified plant operating personnel shall be allowed to operate equipment associated with the actual water production process.

Any malfunction during the tests shall be analyzed and corrected by the responsible party immediately. The Engineer/Owner will determine whether any such malfunctions are sufficiently serious to warrant a repeat of this test. During the 30 consecutive day test period, any malfunction which cannot be corrected within 24 hours of occurrence by the responsible party, or more than two similar failures of any duration, will be considered a non-field-repairable malfunction. Upon completion of a non-field-repairable malfunction, the test shall be repeated as specified herein. Down times due to power outages or other factors outside the normal protection devices or back-up power supplies provided shall not be considered a non-field-repairable malfunction. Down times due to plant process equipment failures or other factors beyond the control of manufacturer shall not be considered a non-field-repairable malfunction.

3-3.07. Completion of Test. Upon successful completion of the SAT and subsequent review and approval by the Engineer of the complete system final documentation, the system shall be considered substantially complete, and the warranty period shall commence.

3-4. Field Run Testing. Each pump shall be mechanically checked for proper operation. Each alarm and safety shutdown shall be checked by artificially simulating an alarm condition. Defective equipment and controls disclosed by the tests shall be replaced or corrected, and the packages placed in satisfactory operating condition. The following items shall be measured, recorded, and submitted in a field test report:

a. Inlet pressure.
b. Discharge pressure
c. Discharge temperature
d. Pressure and temperature at downstream end of piping system and at any measurement taps provided.
e. Flow measurements at any flowmeters provided.
f. Outdoor ambient temperature.
g. Indoor ambient temperature.
h. Barometric pressure.
i. Vibration.

Test reports shall verify that the specified tests have been performed and shall state results.

3-5. Field Vibration Testing. The Contractor shall field test pumping units after installation to demonstrate satisfactory operation without causing excessive noise, vibration, cavitation, and overheating of bearings.

The field testing shall be performed in presence of experienced field representative of the pump manufacturer, who shall supervise the following tasks and shall certify in writing that equipment and controls have been properly installed, aligned, lubricated, adjusted, and readied for operation:

The field testing shall involve, at a minimum, the following:

1. Startup, check, and operation of the equipment over entire speed range. Vibration testing shall be in accordance with ANSI/HI 9.6.4.

2. Pump performance shall be documented by obtaining concurrent readings, showing motor voltage, amperage, pump suction head, and pump discharge head, for at least four pumping conditions at rated pump speed. Check each power lead to motor for proper current balance.

3. Monitor motor bearing temperatures using the motor bearing temperature RTD's. Maintain running time of at least 20 minutes for this test or longer until the bearing temperature stabilizes, unless liquid volume available is insufficient for complete test.

4. The maximum vibration level measured anywhere on the machine including the motor shall not exceed the values indicted in the governing standard.

5. Electrical and instrumentation testing shall conform to applicable sections of these Specifications.

6. Reed Critical Frequency shall be verified by performing a natural frequency test on each pump with all pumping units off using a full spectrum vibration analyzer monitoring vibration frequency in each of the three major axes. The ratio of rotative speed to the critical speed of a unit or its components shall be less than 0.8 or more than 1.3 at any operating speed.

7. Field testing shall be witnessed by Owner or its representative.

    a. If pumping equipment fails to meet above test requirements, modify and retest in accordance with requirements of these Specifications.

    b. Certify in writing that equipment has been satisfactorily tested, and that final adjustments have been made.

    c. Certification shall include date of final acceptance test as well as listing of persons present during tests and resulting test data in written report.

    d. Perform Work in this article by factory-trained representatives at no additional cost to Owner.

    e. Owner will pay for costs of power and water.

3-6. TRAINING. After acceptance of the installation check by the Engineer, the manufacturer's representative shall provide training for Owner in proper operation, maintenance and troubleshooting of the system provided. Training shall be conducted at the Owner's facility. Training shall include a minimum of two trips to the site, one for training on operation and maintenance of the pumps, and one for training on the pump control system.

3-6.01. Training Costs. All costs associated with the training program shall be the responsibility of manufacturer and shall be included in the contract price. All training will be at Owner's facility; no offsite training will be acceptable.

3-6.02. Lessons. Training lesson plans and other information shall be submitted at least 30 days prior to the start of training. The manufacturer shall provide

training manuals to supplement the training courses. The manuals shall include specific details of equipment supplied and operations specific to the project. The trainer shall make use of teaching aids, manuals, slide/video presentations, etc. After the training services, all training materials shall be delivered to the Owner.

3-6.03. Operator and Maintenance Training. Pump operation and maintenance training shall be at least 12 hours long with at least four hours of classroom training and at least eight hours of hands-on training. Training shall include review of P&IDs, operation, maintenance, and troubleshooting. The manufacturer's representative shall schedule times, which are acceptable to Owner's staff and repeat the training in four different shift and accommodate six Owner personnel each shift. The necessary components shall be operational before training sessions are conducted.

3-6.04. Instrument Training. Training on the calibration, maintenance, troubleshooting, and repair for the instrument devices provided under this section shall be provided in two (2) two-hour training sessions per instrument device, and shall accommodate ten (10) students. Training shall be provided at the Owner's facility. Training shall also be provided for any hand-held or computer-based calibration devices and their associated software.

3-6.05. Control System Maintenance Training. System maintenance training shall be provided to enable Owner's personnel to perform routine and preventive maintenance, troubleshoot, and repair on all hardware furnished with the system. Review of the PLC programming shall be included. Training sessions shall consist of two (2), two-hour sessions and shall accommodate ten (10) students.

End of Section

Section 11115

HORIZONTAL END SUCTION CENTRIFUGAL PUMPS

PART 1 - GENERAL

1-1. SCOPE. This section covers the furnishing of single-stage, horizontal, end suction centrifugal pumping units as required.

Pump designation.	Backwash Pumps
Number of pumps.	2
Pump tag numbers.	BWP-001, BWP-002
Pump location.	Filter Building

Each pumping unit shall be complete with a pump, electric motor, coupling, coupling guard, anchor bolts, and other appurtenances specified or otherwise required for proper operation, all mounted on a common baseplate. Pumps of the close-coupled type, with the impeller attached directly to the motor shaft without pump bearings or flexible couplings, will not be acceptable.

1-2. GENERAL. Equipment furnished under this section shall be fabricated and assembled in full conformity with Drawings, Specifications, engineering data, instructions, and recommendations of the equipment manufacturer, unless exceptions are noted by Engineer. Hydraulic considerations and definition of terms shall be as set forth in the Hydraulic Institute Standards.

1-2.01. General Equipment Stipulations. The General Equipment Stipulations (01610) shall apply to all equipment furnished under this section. If requirements in this specification differ from those in the General Equipment Stipulations, the requirements specified herein shall take precedence.

1-2.02. Tagging. Each item of equipment and each part shipped separately shall be tagged and identified with indelible markings for the intended service. Tag number shall be clearly marked on all shipping labels and on the outside of all containers.

1-2.03. Power Supply. Unless otherwise indicated, power supply to the equipment shall be 4160 volts, 60 Hz, 3-phase.

1-2.04. Identification. Pumps shall be identified in accordance with the Equipment and Valve Identification Section (01610).

1-3. SUBMITTALS.

1-3.01. Drawings and Data. Complete fabrication and assembly drawings, together with detailed specifications and data covering materials, drive unit, parts, devices, and accessories forming a part of the equipment furnished, shall be submitted in accordance with the Submittals Section (01300). The data and specifications for each unit shall include, but shall not be limited to, the following:

Pumps

Name of manufacturer.
Type and model.
Tag number.
Pump location.
Rotative speed.
Size of suction nozzle.
Size of discharge nozzle.
Net weight of pump only.
Net weight with baseplate and coupling.
Complete performance curves showing capacity versus head, NPSH required, pump efficiency, wire-to-water efficiency, and pump input power.
Data of coupling.
Data on shop painting.
Base and anchor bolt details.

Motors

As specified in the Electrical Motor, Induction, 5kV Section (15175).

1-3.02. Operation and Maintenance Data and Manuals. Operation and maintenance manuals shall be submitted in accordance with the Submittals Section (01300). The operation and maintenance manuals shall be in addition to any instruction or parts lists packed with or attached to the equipment when delivered.

1-4. QUALITY ASSURANCE.

1-4.01. Balance. All rotating parts shall be accurately machined and shall be in as nearly perfect rotational balance as practicable. Excessive vibration shall be sufficient cause for rejection of the equipment. The mass of the unit and its distribution shall be such that resonance at normal operating speeds is avoided. In any case, the unfiltered vibration velocity, as measured at any point on the machine including the motor, shall not exceed the maximum vibration limits of the governing standard unless otherwise required.

At any operating speed, the ratio of rotative speed to the critical speed of a unit or its components shall be less than 0.8 or more than 1.3.

1-5. SPARE PARTS. The following spare parts and accessories shall be furnished in substantial wooden boxes with identifying labels and delivered to the vicinity of the project site, as follows:

Spare Parts	Quantity
Mechanical seals	1 per pump
Casing wearing rings	1 per pump
Impeller wearing rings	1 per pump
Sets of bearings	1 set
Sets of bearing seals	1 set
Flexible Coupling	1 coupling

PART 2 - PRODUCTS

2-1. SERVICE CONDITIONS. The pumping units specified herein shall replace the existing pumps that deliver plant effluent water for backwashing the filters.

The pumping units shall be suitable for the following service conditions:

Type of environmental exposure.	Indoor	
Liquid temperature range.	65 to 85	°F
Pumps start and stop against a closed valve.	No	
Site elevation.	434' MSL (in Filter Gallery)	

Parts shall be interchangeable between units of similar size and capacity to extent practical.

All equipment furnished shall be designed to meet all specified conditions and to operate satisfactorily at this elevation.

2-2. PERFORMANCE AND DESIGN REQUIREMENTS. Pumping units shall be designed for the operating conditions as follows:

Pump tag numbers.	BWP-001, BWP-002	
Rated head.	49	ft
Capacity at rated head.	24,850	gpm

Pump tag numbers.	BWP-001, BWP-002	
Operating head range for full speed continuous operation.	40 to 70	ft
Minimum shutoff head.	75	ft
Maximum nominal pump speed.	600	rpm
Maximum power required at pump input shaft at any point from minimum operating head to shutoff head.	390	bhp
Efficiency.	77	%
Type of efficiency indicated.	Wire to water	
Efficiency calculated at.	Rated head	
Pump designed for reverse rotation.	No	
Minimum NPSHA at rated head.	27	ft
Minimum NPSHA at minimum operating head.	33	ft
Minimum ratio of NSPHA to NPSHR.	1.1	
Maximum suction pressure.	1	psi
Maximum “A” rated weighted noise at 3 ft .	89	dBA
Maximum unfiltered vibration velocity.	HIS	in/s
Pump rotation as viewed from driven end.	See Drawings	
Minimum pump suction nozzle size.	30	in
Minimum pump discharge nozzle size.	24	in

All specified conditions shall be at rated speed unless otherwise indicated.

Overall (wire-to-water) efficiency for constant speed pumps shall include losses in the pump and motor.

The minimum hydrostatic test pressure shall be 1.5 times shutoff head plus maximum suction pressure.

Pump performance shall be stable and free from cavitation and noise throughout the specified operating head range at design suction submergences. The design performance shall be based on a wearing ring diametral clearance of not less than 1 mil per inch of wearing ring diameter, or 12 mils total, whichever is greater.

Pumps shall be as manufactured by Goulds, Fairbanks Morse, or Flowserve, without exception.

2-3. MATERIALS. Each pump shall be constructed of the following materials as required.

Frame	Cast iron, ASTM A48.
Casing and Casing Covers	Cast iron, ASTM A48.
Casing Wearing Ring	Martensitic stainless steel, Brinell 400+.
Impeller	Silicon Bronze, ASTM B584-876 or Aluminium Bronze, ASTM B148-952.
Impeller Wearing Ring	Martensitic stainless steel, Brinell 300 to 350.
Shaft	Carbon steel, AISI 1045.
Stuffing Box Hardware	Corrosion-resistant metal.
Mechanical Seal (single)	Chesterton, Type 442 split seal.
Shaft Sleeve (w/mechanical seal)	Stainless steel, AISI 316.
Flexible Coupling	Gear type; All metal, grease filled.
Bearings	Antifriction.
Baseplate	Cast iron or fabricated steel.

2-4. PUMP CONSTRUCTION.

2-4.01. Casing Assembly. The casing assembly and drive connection shall permit the removal of the rotating element without disconnecting the piping. Casing parts shall have registered fit to maintain alignment. The nozzle flanges shall be flat faced, with ANSI/ASME B16.1, Class 125 diameter and drilling.

Pipe-tapped openings shall be provided for draining, priming, and venting the casing. Each of these connections shall be at least 1-inch NPT.

Cast iron casings shall be provided with plugged gauge cock connections on the suction and discharge nozzles.

2-4.02. Impeller. The impeller shall be a one-piece casting. The impeller shall be completely machined on all exterior surfaces. The interior water passages shall have uniform sections and smooth surfaces and shall be free from cracks

and porosity. The impeller shall be securely locked to the shaft so that it will not be loosened by reverse rotation, but shall be easily removable.

Type of impeller.	Enclosed.
Impeller balancing.	Dynamic.
Impeller to shaft attachment.	Keyed.

2-4.03. Shaft and Shaft Sleeves. The shaft shall be completely machined. Deflection at the stuffing box shall not exceed 0.002 inch at any head in the operating range. A suitable splash deflector shall be mounted on the shaft adjacent to the frame bearing housing.

The shaft shall be provided with a replaceable sleeve extending from the impeller through the stuffing box. The sleeve shall be positively secured to the shaft and shall be sealed to prevent leakage between the shaft and the sleeve. After assembly on the shaft, total runout shall not exceed 0.002 inch.

2-4.04. Wearing Rings. Renewable wearing rings shall be provided in the casing and on the impeller. The rings shall be positively locked in place.

2-4.05. Stuffing Box. The stuffing box for each pumping unit shall contain a single mechanical seal.

The seal shall be a balanced stationary type seal with o-ring secondary seals. When properly mounted, the seal must not fret the pump shaft. The stationary face shall be spring loaded to provide self-aligning due to any seal chamber misalignment. The seal shall be fitted with a machined 316 stainless steel gland with a flush/vent port. The dynamic o-ring shall be designed to move toward a clean surface as the face wears. The seal springs shall be isolated from the pumped fluid. The materials of construction shall be 316 stainless steel hardware, Elgiloy springs, carbon rotating face, reactive bonded silicon carbide stationary face and flurocarbon o-rings.

The mechanical seal shall be provided with a Spiral Trac version N, installation type I, 416 SS material, active throat bushing that upon flooding releases entrapped air, creates fluid exchange in the seal chamber, removes particulate matter from the seal chamber and provides cooling water for the contacting surfaces with and without the use of external seal flush water.

2-4.06. Seal Water Station. Each pumping unit shall be provided with a seal water station Type B, including all piping and accessories as specified in the Seal Water Stations Section (15499).

2-4.07. Frame Assembly. The frame assembly shall rigidly support the rotating element with two bearings. The outboard bearing shall carry both axial and

radial pump loads. If wearing clearance is axial, the assembly design shall permit axial adjustment of the rotor without dismantling the pump. Bearing enclosures shall keep out contaminants and retain the lubricant and shall have adequate provisions for adding and draining lubricant.

The frame shall provide ample clearance for stuffing box maintenance.

2-4.08. Bearings. Bearings shall be either oil or grease lubricated, antifriction type. Bearings shall have an ABMA L_{10} Life Rating of 40,000 hours at specified operating conditions. The pump shaft speed shall not exceed the limits specified by the bearing manufacturer.

2-4.09. Equipment Bases. Baseplates for pumps of at least 60 hp shall provide for tapered dowels to maintain alignment of pump and motor. Other requirements for equipment bases are specified in the General Equipment Stipulations.

2-5. ACCESSORIES. Each pump shall be provided with lifting eyebolts or lugs; tapped and plugged openings for casing assembly and bearing housing vents and drains; and appropriate fittings for adding bearing lubricant and seal water. Grease lubricated pumping units shall be provided with a means of venting the casing. Oil lubricated units shall be provided with constant level oilers or with sight glasses arranged to indicate operating and static oil levels.

2-6. DRIVE UNITS. Each pump shall be driven by an electric motor through a flexible coupling. Drive units shall be designed for 24 hour continuous service. Gearmotors shall not be used.

2-6.01. Belt Drives. Not Used.

2-6.02. Couplings. Couplings shall have a horsepower rating 1.25 times the motor nameplate horsepower when the misalignment is within the manufacturer's tolerance limit. Coupling design shall permit removal of the pump rotating element without disconnecting the piping, moving the drive unit, or axial movement of the coupling halves on the shaft. A suitable service factor shall be used when the pump is driven by an internal combustion engine. The coupling shall be gear type.

A coupling guard, compliant with OSHA standards, shall be provided with each pumping unit.

2-6.03. Electric Motors. The electric motors shall be designed as specified in the Electrical Motor, Induction, 5kV Section (15175).

2-6.04. Adjustable Frequency Drives. Not Used.

2-7. SHOP TESTS. Each pump shall be tested at the factory for capacity, power requirements, and efficiency at specified rated head, evaluated head, shutoff head, operating head extremes, and at as many other points as necessary for accurate performance curve plotting. All tests and test reports shall be made in conformity with the requirements and recommendations of the Hydraulic Institute Standards. Acceptance testing shall be per Table 14.6.3.4 Grade 1U, with no minus tolerance or margin allowed.

A certified test report shall be prepared. Five certified copies of a report covering each test shall be prepared by the pump manufacturer and delivered to Engineer not less than 10 days prior to the shipment of the equipment from the factory. The report shall include data and test information as stipulated in the Hydraulic Institute Standards, copies of the test log originals, test reading to curve conversion equations, and certified performance curves. The curves shall include head, pump input power, pump efficiency, and wire-to-water efficiency (when specified), rpm, and shop test NPSH available, plotted against capacity. The curves shall be easily read and plotted to scales consistent with performance requirements, with all test points clearly shown. When the pump is not tested at the rated speed, performance charts shall include both the test speed and the calculated speed curves.

PART 3 - EXECUTION

3-1. INSTALLATION. Each pumping unit shall be installed in accordance with the Hydraulic Institute Standards, the Equipment Installation Section (11060), and as specified herein.

The equipment base shall be grouted after initial fitting and alignment, but before final bolting of connecting piping. Special care shall be taken to maintain alignment of pumping unit components. No stresses shall be transmitted to the pump flanges. After final alignment and bolting, connections to pumping equipment shall be tested for applied piping stresses by loosening the flange bolts. If any movement or opening of the joints is observed, piping shall be adjusted to proper fit.

Couplings shall be realigned after grouting. Final coupling misalignment shall be within one-half of the coupling manufacturer's allowable tolerance.

3-2. FIELD QUALITY CONTROL.

3-2.01. Installation Check. An experienced, competent, and authorized representative of the manufacturer shall visit the site of the Work and inspect, check, adjust if necessary, and approve the equipment installation. The representative shall be present when the equipment is placed in operation in accordance with the Facility Startup/Commissioning Section (01650), and shall

revisit the job site as often as necessary until all trouble is corrected and the equipment installation and operation are satisfactory in the opinion of Engineer.

The manufacturer's representative shall furnish a written report certifying that the equipment has been properly installed and lubricated; is in accurate alignment; is free from any undue stress imposed by connecting piping or anchor bolts; and has been operated under full load conditions and that it operated satisfactorily.

All costs for these services shall be included in the contract price.

3-2. FIELD QUALITY CONTROL.

3-2.01. Installation Check. An experienced, competent, and authorized representative of the manufacturer shall visit the site of the Work and inspect, check, adjust if necessary, and approve the equipment installation. The representative shall be present when the equipment is placed in operation in accordance with Facility Startup/Commissioning (01650), and shall revisit the job site as often as necessary until all trouble is corrected and the equipment installation and operation are satisfactory in the opinion of Engineer.

The manufacturer's representative shall furnish a written report certifying that the equipment has been properly installed and lubricated; is in accurate alignment; is free from any undue stress imposed by connecting piping or anchor bolts; and has been operated under full load conditions and that it operated satisfactorily. All costs for these services shall be included in the contract price.

3-2.02. Installation Supervision. Installation supervision by the manufacturer is not required.

All costs for these services shall be included in the contract price.

3-3. GENERAL TESTING REQUIREMENTS. Unless otherwise specified in the individual specification sections, all equipment provided shall be tested at the factory as a single fully integrated system. As a minimum, the testing shall include the following:

- Unwitnessed Factory Test (UFT)
- Factory Acceptance Test (FAT)
- Operational Readiness Test (ORT)
- Functional Demonstration Test (FDT)
- 30-Day Site Acceptance Test (SAT)

Each test shall be in the cause and effect format. The person conducting the test shall initiate an input (cause) and, upon the system’s or subsystem’s producing the correct result (effect), the specific test requirement shall be satisfied.

Manufacturer shall prepare a testing procedure to be approved by Owner and Engineer that shall demonstrate that the system conforms to the specifications. The testing procedure shall be submitted at least 30 days in advance of testing. The testing shall be conducted by the manufacturer and witnessed by Owner and Engineer. Each specific test shall be described and followed by a section for signoff by the appropriate party after its satisfactory completion. Copies of these signoff test procedures, forms and checklists will constitute the required test documentation.

Manufacturer shall notify Owner and Engineer in writing at least 14 days before the proposed testing date. The Engineer reserves the right to test or retest all specified functions whether or not explicitly stated in the prior approved Test Procedures. The Engineer's decision shall be final regarding the acceptability and completeness of all testing.

If the FAT is concluded unsuccessfully, the test shall be repeated. Manufacturer shall reimburse Owner and Engineer for all expenses incurred in connection with attending repeated factory or site testing necessitated by system failure or inadequate preparation.

Manufacturer shall provide all special testing materials and equipment. Wherever possible, perform test using actual process variables, equipment and data. Where it is not practical to test with real process variables, equipment and data, provide suitable means of simulation.

No equipment shall be shipped to the jobsite until the Engineer has received all test results and approved the system as ready for shipment.

The manufacturer shall furnish the services of servicemen, all special calibration and test equipment and labor to perform all required tests for equipment provided by manufacturer.

3-3.01. Correction of Deficiencies. All deficiencies in workmanship and/or items not meeting specified testing requirements shall be corrected to meet specification requirements at no additional cost to the Owner. Testing, as specified herein, shall be repeated after correction of deficiencies is made until the specified requirements are met. This work shall be performed at no additional cost to the Owner.

3-3.02. Unwitnessed Factory Test (UFT). The entire system, except primary elements, final control elements and field mounted transmitters, shall be interconnected and tested to ensure the system operates as specified. All analog and discrete input / output points not interconnected at this time shall be simulated to ensure proper operation of all alarms, monitoring devices / functions and control devices / functions. All panels and assemblies shall be inspected

and tested by the manufacturer to verify that they are in conformance with related submittals, specifications and Drawings.

The UFT shall be performed by the manufacturer at their facility within the continental United States of America. Results shall be submitted to the Engineer for approval prior to the start of the FAT.

3-3.03. Factory Acceptance Test (FAT). The FAT shall be performed by the manufacturer at their facility within the continental United States of America. All system tests specified for the UFT shall be repeated. The FAT will be a joint test by the manufacturer, General Contractor, Engineer, Owner and other related subcontractors.

After completing the UFT, the manufacturer shall notify the Owner and General Contractor in writing that the system is ready for the FAT. The Engineer and Owner shall schedule a test date within 10 days of receipt of the “Ready to FAT” letter.

The various tests performed during the FAT shall be designed to demonstrate that all hardware and software fulfill all the requirements of the Specifications and Contract Drawings. The test conditions shall resemble, as closely as possible, the actual installed conditions. Any additional hardware or software that may be required to successfully verify system operation shall be supplied at no additional cost to the Owner. All control panels shall be included in these tests.

All deficiencies identified during these tests shall be corrected and retested prior to completing the FAT as determined by the Engineer/Owner.

All test data and procedures followed during the testing shall be logged and certified copies of the logs shall be provided to the Engineer/Owner.

Travel allowance shall be used for Owner personnel to attend all test that are not at the Owner facilities. All other parties attending these tests are required to pay for their own costs associated with the tests including time, airfare, car rental, hotel expense, meal expense, etc. This includes the Engineer, General Contractor’s project engineer and support personnel.

3-3.04. Operational Readiness Test (ORT). Prior to startup and the FDT, the entire system shall be certified, inspected, tested and documented that it is ready for operation. The ORT will be a joint test by the manufacturer, General Contractor, Engineer, FCSS, and other related subcontractors and shall be conducted at the Owners facility.

3-3.04.01. Devices by Other Suppliers. If inter related devices furnished by other suppliers under other contracts, or by Owner, the field supervisor shall use suitable test equipment to introduce simulated signals to and/or measure signals

from these devices to locate the sources of trouble or malfunction. Signals from these devices shall be successfully tested prior to the ORT being completed one the malfunctioned device is working properly.

3-3.04.02. Loop/Component Inspections and Tests. The entire system shall be checked for proper installation, calibrated and adjusted on a loop-by-loop and component-by-component basis by the manufacturer to ensure that it is in conformance with related submittals and these Specifications. The General Contractor shall require the manufacturer to maintain Loop Status Reports and Component Calibration Sheets at the jobsite and make them available to the Engineer/Owner at any time. The inspections and tests do not require witnessing. However, the Engineer shall review and initial all Loop Status Sheets and Component Calibration Sheets and spot-check their entries periodically and upon completion of the ORT. Any deficiencies found shall be corrected.

3-3.04.03. Test Report. Upon completion of the network verification, a detailed report shall be prepared by the Analyst and issued to the Owner and Engineer. The report shall include all measurements and testing results, analysis of results, summary of findings, and recommendations for remediation.

3-3.04.04. System ORT Report. The manufacturer shall submit a written report on the results of such tests to the Engineer. Additional documentation shall be furnished as requested by Engineer to establish responsibility for corrective measures. Manufacturer shall verify, in writing, to Engineer or Owner that manufacturer has successful completed the ORT before beginning the Function Demonstration Test.

3-3.05. Functional Demonstration Test (FDT). Prior to startup and the SAT, the entire installed instrument and control system shall be certified that it is ready for operation. The FDT will be a joint test by the manufacturer, General Contractor, Engineer, Owner and other related subcontractors and shall be conducted at the Owners facility. Once the facility has been started up and is operating, a witnessed FDT shall be performed on the complete system to demonstrate that it is operating and in compliance with these Specifications. Each specified function shall be demonstrated on a paragraph-by-paragraph, loop-by-loop and site-by-site basis. Loop-specific and non-loop-specific tests shall be the same as specified under FDT except that the entire installed system shall be tested and all functionality demonstrated. The system shall operate for 72 continuous hours without failure before the test shall be considered successful. At the end of the FDT the following test shall be demonstrated”

- Communication failure and recovery
- Total power failure and recovery including the UPSs
- Catastrophic failure and recovery of PLC and I/O modules

3-3.06. Site Acceptance Test (SAT). After completion of the ORT and FDT test, the entire system shall be operated for a period of 30 consecutive days, under conditions of full plant process operation, without a single non-field repairable malfunction. The SAT will be a joint test by the manufacturer, General Contractor, Engineer, Owner and other related subcontractors and shall be conducted at the Owners facility. During the test, plant operating, Engineering and manufacturer personnel shall be present as required. While the test is proceeding, the Owner shall have full use of the system. Only certified plant operating personnel shall be allowed to operate equipment associated with the actual water production process.

Any malfunction during the tests shall be analyzed and corrected by the responsible party immediately. The Engineer/Owner will determine whether any such malfunctions are sufficiently serious to warrant a repeat of this test. During the 30 consecutive day test period, any malfunction which cannot be corrected within 24 hours of occurrence by the responsible party, or more than two similar failures of any duration, will be considered a non-field-repairable malfunction. Upon completion of a non-field-repairable malfunction, the test shall be repeated as specified herein. Down times due to power outages or other factors outside the normal protection devices or back-up power supplies provided shall not be considered a non-field-repairable malfunction. Down times due to plant process equipment failures or other factors beyond the control of manufacturer shall not be considered a non-field-repairable malfunction.

3-3.07. Completion of Test. Upon successful completion of the SAT and subsequent review and approval by the Engineer of the complete system final documentation, the system shall be considered substantially complete, and the warranty period shall commence.

3-4. Field Run Testing. Each pump shall be mechanically checked for proper operation. Each alarm and safety shutdown shall be checked by artificially simulating an alarm condition. Defective equipment and controls disclosed by the tests shall be replaced or corrected, and the packages placed in satisfactory operating condition. The following items shall be measured, recorded, and submitted in a field test report:

a. Inlet pressure.
b. Discharge pressure
c. Discharge temperature
d. Pressure and temperature at downstream end of piping system and at any measurement taps provided.
e. Flow measurements at any flowmeters provided.
f. Outdoor ambient temperature.
g. Indoor ambient temperature.
h. Barometric pressure.
i. Vibration.

Test reports shall verify that the specified tests have been performed and shall state results.

3-5. Field Vibration Testing. The Contractor shall field test pumping units after installation to demonstrate satisfactory operation without causing excessive noise, vibration, cavitation, and overheating of bearings.

The field testing shall be performed in presence of experienced field representative of the pump manufacturer, who shall supervise the following tasks and shall certify in writing that equipment and controls have been properly installed, aligned, lubricated, adjusted, and readied for operation:

The field testing shall involve, at a minimum, the following:

1. Startup, check, and operation of the equipment over entire speed range. Vibration testing shall be in accordance with ANSI/HI 9.6.4.

2. Pump performance shall be documented by obtaining concurrent readings, showing motor voltage, amperage, pump suction head, and pump discharge head, for at least four pumping conditions at rated pump speed. Check each power lead to motor for proper current balance.

3. Monitor motor bearing temperatures using the motor bearing temperature RTD's. Maintain running time of at least 20 minutes for this test or longer until the bearing temperature stabilizes, unless liquid volume available is insufficient for complete test.

4. The maximum vibration level measured anywhere on the machine including the motor shall not exceed the values indicted in the governing standard.

5. Electrical and instrumentation testing shall conform to applicable sections of these Specifications.

6. Reed Critical Frequency shall be verified by performing a natural frequency test on each pump with all pumping units off using a full spectrum vibration analyzer monitoring vibration frequency in each of the three major axes. The ratio of rotative speed to the critical speed of a unit or its components shall be less than 0.8 or more than 1.3 at any operating speed.

7. Field testing shall be witnessed by Owner or its representative.

    a. If pumping equipment fails to meet above test requirements, modify and retest in accordance with requirements of these Specifications.

b. Certify in writing that equipment has been satisfactorily tested, and that final adjustments have been made.

c. Certification shall include date of final acceptance test as well as listing of persons present during tests and resulting test data in written report.

d. Perform Work in this article by factory-trained representatives at no additional cost to Owner.

e. Owner will pay for costs of power and water.

3-6. TRAINING. After acceptance of the installation check by the Engineer, the manufacturer's representative shall provide training for Owner in proper operation, maintenance and troubleshooting of the system provided. Training shall be conducted at the Owner's facility. Training shall include a minimum of two trips to the site, one for training on operation and maintenance of the pumps, and one for training on the pump control system.

3-6.01. Training Costs. All costs associated with the training program shall be the responsibility of manufacturer and shall be included in the contract price. All training will be at Owner's facility; no offsite training will be acceptable.

3-6.02. Lessons. Training lesson plans and other information shall be submitted at least 30 days prior to the start of training. The manufacturer shall provide training manuals to supplement the training courses. The manuals shall include specific details of equipment supplied and operations specific to the project. The trainer shall make use of teaching aids, manuals, slide/video presentations, etc. After the training services, all training materials shall be delivered to the Owner.

3-6.03. Operator and Maintenance Training. Pump operation and maintenance training shall be at least 12 hours long with at least four hours of classroom training and at least eight hours of hands-on training. Training shall include review of P&IDs, operation, maintenance, and troubleshooting. The manufacturer's representative shall schedule times, which are acceptable to Owner's staff and repeat the training in four different shift and accommodate six Owner personnel each shift. The necessary components shall be operational before training sessions are conducted.

3-6.04. Instrument Training. Training on the calibration, maintenance, troubleshooting, and repair for the instrument devices provided under this section shall be provided in two (2) two-hour training sessions per instrument device, and shall accommodate ten (10) students. Training shall be provided at the Owner's facility. Training shall also be provided for any hand-held or computer-based calibration devices and their associated software.

3-6.05. Control System Maintenance Training. System maintenance training shall be provided to enable Owner's personnel to perform routine and preventive maintenance, troubleshoot, and repair on all hardware furnished with the system. Review of the PLC programming shall be included. Training sessions shall consist of two (2), two-hour sessions and shall accommodate ten (10) students.

End of Section

Section 11465

FILTER CONTROL SYSTEM

PART 1 - GENERAL

1-1. SCOPE. This section covers the furnishing, installing, testing, and placing into operation a complete Filter Control System (FCS), all related appurtenances, and services, as shown on the Drawings, and specified herein for control of a gravity-flow media filter system. Services shall include but not be limited to inspection of the final installation, commissioning of the system, assistance to the Owner during field acceptance and performance tests, operator training, and warranty.

The equipment shall be furnished through a single Filter Control System Supplier (FCSS) and furnish the complete FCS including all services and equipment specified herein and in other specification sections as listed in Paragraph 1-4 Related Work. Sub-suppliers and/or manufacturers may provide components, and/or services to the FCSS, but the final product shall conform to this specification and shall be the sole responsibility of the FCSS.

Principal items included are:

- Filter System Master Control (FSMC)
- Filter Control Consoles (FCC)
- Filter Control Valves (FCV)
- Filter level transducer
- Head loss pressure transmitter
- Backwash flowmeter
- Effluent flowmeter
- Low range turbidity analyzer
- Preconfigured filter backwash sequencing with integral zero-to-waste PLC program
- Preconfigured filter backwash OIU graphics
- Non-potable water and backwash pump PLC panel
- Integration to existing plant SCADA System
- Integration of Sodium Bisulfite Feed System

Auxiliary and accessory devices that are required for a complete FCS operation and necessary to interface with existing equipment or equipment provided by other suppliers under other sections of these specifications, shall be included whether or not they are shown on the drawings. These devices include but are not limited to, transducers, current isolators, signal conditioners or interposing relays. FCSS shall be responsible for providing PLC communication cable from the Administration building to the Filter control Building, from the filter control

building to the DAF building, and from the DAF building to the Administration building.

All materials, equipment, labor and services required to achieve a fully configured and operational FCS shall be provided by the FCSS. Application software and programming required for the FCS shall be provided by the FCSS. Substitution of functions or type of equipment specified shall not be acceptable, but the FCSS is encouraged to recommend changes in the design that will improve the overall filter control system subject for approval by the Owner and Engineer.

The FCSS shall coordinate the FCS for proper operation with related equipment and materials furnished by other suppliers under other sections of these specifications and with related existing equipment.

The FCSS shall supply all necessary services to demonstrate the FCS functionality during the Factory Acceptance Test (FAT), Operational Readiness Test (ORT), Functional Demonstration Test (FDT), Existing Plant SCADA System Test (PSST), and the Site Acceptance Test (SAT).

All equipment and installations shall be in accordance with Federal, State and Local codes, regulations and laws.

Equipment and related work as indicated on the Drawings, shall be provided by Contractor for a complete and functional installation, and are covered under other sections.

1-1.01. Associated Sections. This section also includes criteria, responsibilities, equipment and services specified in the following sections.

01300	Submittals
11065	Common Control Panel Requirements for Equipment
11066	General Wiring Methods
11067	Wire Tagging
11068	Packaged System PLC Programming Criteria

1-2. GENERAL. The FCS including all equipment and appurtenances, shall be fabricated, assembled, erected, and placed in proper operating condition in full conformity with Drawings and Specifications, and engineering data, instructions, and recommendations of the FCSS, unless exceptions are noted by Engineer.

1-2.01. General Equipment Stipulations. The General Equipment Stipulations shall apply to all equipment furnished under this section. If requirements in this

specification differ from those in the General Equipment Stipulations, the requirements specified herein shall take precedence.

1-2.02. Drawings. Supplementing this section, the Drawings indicate locations and arrangements of equipment and provide diagrams and schematics regarding connection and interaction with other equipment, and may include installation details and block and one-line diagrams showing connections and interfaces with other equipment. The input/output (I/O) lists are attached as an appendix to this section.

Principal components of the instrumentation systems shall be as indicated on the P&ID drawings and instrument device schedule attached to this section.

1-2.03. I/O List. An input/output (I/O) field device signal listing is included as an appendix attached to this section.

1-2.04. Codes, Permits and Agency Approvals. All work performed and all materials used shall be in accordance with the National Electrical Code, and with applicable local regulations and ordinances. Where mandated by codes, panels, assemblies, materials, and equipment shall be listed by Underwriter Laboratories. Contractor shall, as part of their work, arrange for and obtain all necessary permits, inspections, and approvals by the authorities having local jurisdiction of such work. This shall include any third-party inspections and testing of panels and equipment.

1-2.05. Seismic Design Requirements. Seismic design requirements for products specified herein shall be as indicated in the Meteorological and Seismic Design Criteria section.

1-2.06. Power Supply. The power supply to all instrumentation, consoles, and SCADA system panels will be 120 volt, 60 Hz, 1-phase, 3-wire. The power supply for all other equipment, unless otherwise specified, will be 480 volts, 60 Hz, 3-phase, 3-wire. Where control voltage lower than the power supply voltage is required, a suitable control power transformer shall be furnished.

1-2.07. Related Equipment and Materials. Related equipment and materials may include, but will not be limited to, instrumentation, motor controllers, valve actuators, chemical feeders, analytical measuring devices, conduit, cable, and piping as described in other sections or furnished under other contracts.

1-2.08. Device Tag Numbering System. All devices shall be provided with permanent identification tags. The tag numbers shall agree with FCSS equipment drawings and shall be as close as practical to the tag numbers used on the Drawings and device schedules. All field-mounted transmitters and devices shall have stamped stainless steel identification tags. Panel, subpanel,

and rack-mounted devices shall have laminated phenolic identification tags securely fastened to the device. Hand-lettered or tape labels will not be acceptable.

1-3. GENERAL REQUIREMENTS. The drawings and specifications indicate the extent and general arrangement of the systems. If any departures from the Drawings or Specifications are deemed necessary by FCSS, details of such departures and the reasons shall be submitted to Engineer for review with or before the first stage submittal. No departures shall be made without prior written acceptance.

The specifications describe the minimum requirements for hardware and software. Where FCSS standard configuration includes additional items of equipment or software features not specifically described herein, such equipment or features shall be furnished as a part of the system and shall be warranted as specified herein.

1-3.01. Governing Standards. Except as modified or supplemented herein, all work covered by this section shall be performed in accordance with all applicable municipal codes and ordinances, laws, and regulations. In case of a conflict between this section and any state law or local ordinance, the latter shall govern. Where reference is made to one of the following standards, the revision in effect at the time of bid shall apply.

- IEC 61131, Programmable Controllers
- AWWA C-504, Class 150B – Butterfly Valves
- ANSI/AWWA C-542, Electric Motor Actuators For Valves And Slide Gates
- UL 508A, Industrial Control Panels and Equipment
- Instrument Society of America (ISA)
- American National Standards Institute (ANSI)
- National Electrical Manufacturers Association (NEMA)
- National Electric Code (NEC)

1-3.02. Dimensional Restrictions. Layout dimensions will vary between manufacturers and the layout area indicated on the Drawings is based on typical values. The FCSS shall review the Drawings, the manufacturer's layout drawings and installation requirements, and make any modifications requisite for proper installation subject to acceptance by Engineer. At least three feet of clear access space shall be provided in front of all instrumentation and control system components.

1-3.03. Workmanship and Materials. FCSS shall guarantee all equipment against faulty or inadequate design, improper assembly or erection, defective workmanship or materials, and leakage, breakage, or other failure. Materials shall be suitable for service conditions.

All equipment shall be designed, fabricated, and assembled in accordance with recognized and acceptable engineering and shop practice. Individual parts shall be manufactured to standard sizes and thicknesses so that repair parts, furnished at any time, can be installed in the field. Like parts of duplicate units shall be interchangeable. Equipment shall not have been in service at any time prior to delivery, except for testing.

1-3.04. Corrosive Fluids. All parts which are exposed to corrosive conditions shall be made from corrosion resistant materials. FCSS shall submit certification that the instrument manufacturer approves the selection of materials of primary elements that are in contact with the specified process fluid to be inert to the effects of the process fluid.

1-3.05. Appurtenances. Signal converters, signal boosters, amplifiers, special power supplies, special cable, special grounding, and isolation devices shall be furnished as needed for proper performance of the equipment.

1-3.06. Programming Devices. A programming or system-configuring device shall be provided for systems that contain any equipment that requires such a device for routine calibration, maintenance, and troubleshooting. The programming device shall be complete, newly purchased for this project, and shall be in like-new condition when turned over to Owner at completion of startup.

1-4. RELATED WORK. The FCSS shall furnish all materials, labor and services specified in this specification section and related drawings as required to ensure that a complete coordinated filter control system is supplied. Divisions requiring coordination shall include, but not be limited to, the following:

- Division 1 – General Requirements
- Division 11 – Equipment
- Division 15 – Mechanical
- Division 16 – Electrical

1-5. SUBMITTALS.

1-5.01. Drawings and Data. Complete dimensional, assembly and installation drawings, wiring and schematic diagrams; and details, specifications, and data covering the materials used and the parts, devices and accessories forming a part of the system furnished, shall be submitted in accordance with the Section 01300 – Submittals. Submittal data shall be grouped and submitted in three separate stages. The submittal for each stage shall be substantially complete. Individual drawings and data sheets submitted at random intervals will not be accepted for review. Equipment tag numbers or identification used on the drawings shall be referenced where applicable.

1-5.01.01. First Stage Submittal. The first stage submittal shall include the following items.

a. A detailed list of any exceptions, functional differences, or discrepancies between the system proposed by FCSS and this specification.

b. Product catalog cut sheets on all hardware and software items, clearly marked to show the model number, optional features used, and intended service of each device.

c. A brief, concise description of the proposed system, including major hardware and software components and personnel training.

d. A block diagram or schematic drawing showing the principal items of equipment furnished, including model numbers, and their interrelationships.

e. Drawings showing floor and wall space or desktop area requirements for all equipment items, including allowances for door swings and maintenance access.

f. Environmental and power requirements, including heat release information for each equipment item.

g. Standard field termination drawings for all process input/output equipment, showing typical terminations for each type of point available in the system.

h. A copy of the proposed software licenses for all software associated with the system.

i. Outline for training classes.

j. Confirmation of compliance with the requirements of the Meteorological and Seismic Design Criteria section.

j. Additional Requirements identified in other Division sections.

1-5.01.02. Second Stage Submittal. Before any equipment is released for shipment to the site and before factory testing is scheduled, the following data shall be submitted until no exceptions are noted.

At FCSS's option, the first and second stage submittals may be combined.

a. Detailed narrative on the filtration system operation.

b. Detailed functional descriptions of all software program modules specified and furnished as part of FCSS's standard system. The descriptions shall be identified with the applicable specification paragraph.

c. Complete panel fabrication drawings and details of panel wiring, piping, and painting. Panel and subpanel drawings shall be to scale and shall include overall dimensions, metal thickness, door swing, mounting details, weight, and front of panel arrangement to show general appearance, with spacing and mounting height of instruments and control devices. Bill of material complete with manufacture, model or part number, and quantity shall be provided.

d. PLC loop diagrams, electrical schematics, wiring and installation drawings for all interconnecting wiring between components of the system and between related equipment and the equipment furnished under this section. Wiring diagrams shall show complete circuits and indicate all connections. If panel terminal designations, inter-device connections, device features and options, or other features are modified during the fabrication or factory testing, revised drawings shall be submitted before shipment of the equipment to the site.

e. Fiber termination diagrams to show all fiber terminations at fiber patch panels and final termination at equipment. Fiber termination diagrams shall show individual fiber type (single or multimode), fiber core/cladding dimensions, fiber colors, circuit identifications, and type of terminator.

f. Review of drawings submitted prior to the final determination of related equipment shall not relieve FCSS from supplying systems in full compliance with the specific requirements of the related equipment.

g. Input/output listings showing point names, numbers, and addresses. Input/output identification numbers from the contract documents shall be cross-referenced in this submittal.

h. Flow chart, logic diagram, or sequential chart for the complete filter operations including but not limited to the backwash, air scour, filter drawdown, etc.

h. Detailed testing plans, testing procedures, and testing check sheets and forms for all test specified and herein.

i. Proposed lesson plans or outlines for all training courses specified herein, including schedule, instructors' qualifications and experience, and recommended prerequisites shall be submitted at least 30 days prior to the start of training.

j. Standard system engineering and user manuals describing the use of the system and application programming techniques for creating reports, graphics, database, historical records, and adding new process I/O nodes to the system.

k. Additional Requirements identified in other Division sections within the contract documents.

1-5.01.03. Third Stage Submittal. Before the commencement of any field acceptance testing complete system documentation for the complete FCS shall be furnished by the FCSS in the form of Operation and Maintenance Manuals shall be submitted.

a. Operation and Maintenance Manuals shall include complete instruction books, user manuals, or operational procedures for each item of equipment and software furnished.

b. O&M manuals shall have all the instrumentation installation and calibrations sheets filled out and signed.

c. Manuals shall contain all illustrations, detailed drawings, wiring diagrams and instructions necessary for installing, operating and maintaining the equipment.

d. Where instruction booklets cover more than one specific model or range of device, product data sheets shall be included which indicate the device model number and other special features.

e. A complete set of "as-built" wiring, fabrication, and interconnection drawings shall be included with the manuals.

f. The operation and maintenance manual submittal shall include an electronic copy of the filter programmable logic controller and operator unit interface application program, provided on DVD.

g. If field-wiring modifications are made after these drawings are submitted, the affected drawings shall be revised and resubmitted.

h. All test reports and testing check sheets specified herein shall be submitted in the O&M manuals, including but not limited to testing procedure results and check sheets, the Ethernet Network Test Reports, fiber optic OTDR-testing, and Ethernet cable test.

1-6. COORDINATION. The FCS shall be furnished by the FCSS who shall coordinate the items of equipment, appurtenant systems, interconnecting piping, and controls to ensure the compatibility and proper operation of all items.

The FCSS shall prepare system drawings, panel layouts, and other data required for complete system description and installation. The FCSS shall verify that each system component is compatible with all other components of the system, that all valve sizes are appropriate, and that all devices necessary for a properly functioning filtration system have been provided. The FCSS shall prepare interconnecting diagrams.

Contractor’s review of drawings submitted prior to the final determination of related equipment shall not relieve Contractor from installing a system in full compliance with the specific requirements of the related equipment.

The FCSS shall coordinate with the Owner and Engineer and other suppliers concerning interface requirements to Plant SCADA, blower systems, backwash systems, air scour systems, and other related filter support systems.

The FCSS shall coordinate all required testing and training with the Owner and Engineer in a timely manner.

The FCSS shall coordinate the project schedule with the Contractor to integrate the FCSS work into the overall project schedule. FCSS shall coordinate filter avilablity with the construction sequencing plan. The FCSS shall also coordinate with the owner when filter control is available to change over to City operations.

1-7. FCS QUALIFICATIONS. The FCS shall be a pre-packaged, currently developed modularized filter control system that incorporates the zero-to-waste filter backwash optimization system. The program shall not require unique integration, configuration, or programming services. The complete FCS including all services and equipment specified herein shall be furnished by a single Supplier who is fully experienced, reputable and qualified in the design, construction and operation of actuated filter control systems.

- Maintains a fully equipped office / production facility with at least 15 full-time employees capable of fabricating, configuring, installing, troubleshooting and testing the system specified herein.

- Employs personnel who have successfully completed manufacturer's training courses on the configuration and implementation of the specific equipment specified in this project.

- Employs qualified technicians capable of troubleshooting and repairing the specified system that can respond to the job site within 24 hours.

- Has been in the water / wastewater industry performing the type of work specified for at least the last ten (10) years.

- Has completed work of similar or greater complexity on at least five (5) projects within the last five (5) years. Detailed project descriptions for a minimum of five (5) projects including contact information for the associated consultants, general contractors, and owners.

1-7.01. Acceptable Manufactures. The FCS shall be manufactured by Filter Magic ® or Owner approved equal.

1-8. FCSS QUALIFICATIONS. The FCSS shall be regularly engaged in the design and installation of pre-packaged Filter Control Systems and their associated subsystems as they apply to the municipal water or wastewater

industry. The FCSS shall be an organization that complies with all of the following criteria:

- Maintains a fully equipped office / production facility with at least 15 full-time employees capable of fabricating, configuring, installing, calibrating, troubleshooting and testing the system specified herein.

- Employs personnel who have successfully completed manufacturer's training courses on the configuration and implementation of the specific equipment specified in this project.

- Employs qualified technicians capable of troubleshooting and repairing the specified controls that can respond to the job site within 24 hours.

- Has been in the water / wastewater industry performing the type of work specified for at least the last ten (10) years.

- Has completed work of similar or greater complexity on at least five (5) projects within the last five (5) years. Detailed project descriptions for a minimum of five (5) projects including contact information for the associated consultants, general contractors, and owners.

1-8.01. Acceptable Filter Control System Supplier. The FCSS shall be Industrial Control Systems, Inc. or Owner approved equal.

1-9. INSTRUMENT DESIGN CRITERIA. Each device shall be a pre-assembled, packaged unit. Upon delivery to the work site, each device or system shall be ready for installation with only minor piping and electrical connections required by Contractor.

Primary elements shall derive any required power from the transmitter, unless otherwise indicated.

The instruments shall be installed to measure, monitor, or display the specified process at the ranges and service conditions indicated on the Drawings or as indicated in the Instrument Device Schedule. The instruments shall be installed at the locations indicated on the Drawings or in the Instrument Device Schedule.

Where possible, each flowmeter instrument shall be factory wet flow calibrated to the full scale flow range of the sensors, and each pressure and level instrument shall be calibrated to the calibration ranges indicated on the Drawings or in the Instrument Device Schedule. Transmitters or similar measurement instruments shall be calibrated using National Institute of Standards and Technology (NIST) approved bench calibration procedures, when such procedures exist for the instrument type. Calibration and configuration data shall be stored digitally in

each device, including the instrument tag designation indicated on the Drawings or Instrument Device Schedule.

1-10. SPARE PARTS. The following spare parts where applicable, shall be provided and delivered to the Owner as directed. FCSS shall provide at a minimum at least 1 of each device listed.

Spare Parts	Quantity
PLC Processor module	20% of project aggregate
PLC Power supply module	20% of project aggregate
PLC I/O modules	20% of project aggregate of each type used
PLC Communication modules	20% of project aggregate
PLC Racks	20% of project aggregate
Ethernet Switches	20% of project aggregate of each type
Loop power supply	20% of project aggregate
Level transducer	20% of project aggregate
Pressure transmitter	20% of project aggregate

Spare parts shall be individually packaged with labels indicating the contents of each package. Spare parts shall be packed in a manner suitable for long-term storage and shall be protected against corrosion, humidity and temperature.

1-10.01. Packaging. All spare parts shall be delivered to Owner before final acceptance of the system. Packaging of spare parts shall provide protection against dust and moisture and shall be suitable for storage. Circuit boards and other electronic parts shall be enclosed in anti-static material. All packages shall be clearly marked with the manufacturer's name, part number or other identification, date of manufacture, and approximate shelf life.

1-10.02. Replacement. FCSS may utilize spare parts and supplies during system installation, de-bugging, startup, or training, but shall restore all such materials and supplies to the specified quantities before final acceptance of the systems.

1-11. PREPARATION FOR SHIPMENT. All electronic equipment and instruments shall be suitably packaged to facilitate handling and to protect against damage during transit and storage. All equipment shall be boxed, crated, or otherwise completely enclosed and protected during shipment, handling, and

storage. All equipment shall be protected from exposure to the elements, shall be kept dry at all times, and shall not be exposed to adverse ambient conditions.

Painted surfaces shall be protected against impact, abrasion, discoloration, and other damage. Painted surfaces that are damaged prior to acceptance of equipment shall be repainted to the satisfaction of Engineer.

Each shipment shall include an appropriate shipping list that indicates the contents of the package, including the specific instrument tags. The shipping list shall be accessible without exposing the instruments to the atmosphere. The shipping list shall also contain any cautionary notes regarding storage of the instruments, including requirements to protect the instrument from static discharge, desensitizing chemicals (solvents, paints, etc.), or ambient atmospheric conditions.

Individual instruments shall be appropriately tagged or labeled to positively identify the device. All identification shall be visible without the need to unpack the instrument from its protective packaging.

Instrument shipment and storage requirements shall be coordinated with Engineer or Owner prior to shipment. FCSS shall provide adequate storage and be ready to accept the shipment before shipping any equipment to the site. Additional shipping and storage requirements shall be as detailed in the individual instrument specifications.

Components which are shipped loose due to transportation limitations shall be assembled and disassembled by the manufacturer prior to shipment to assure that all components fit together and are adequately supported.

1-12. DELIVERY, STORAGE, AND HANDLING. Provide delivery, storage and handling requirements as specified below:

1-12.01. Shipping Precautions. After completion of shop assembly, factory test and approval, all equipment, cabinets, panels, consoles shall be packed in protective crates and enclosed in heavy duty polyethylene envelopes or secured sheeting to provide complete protection from damage, dust and moisture. The equipment shall then be skid-mounted for final transport. Boxed weights shall be shown on shipping tags together with instructions for unloading, transporting, storing and handling at jobsite.

None of the control equipment shall be shipped to the jobsite until the storage room located at the jobsite or the final installation location at the jobsite is environmentally suitable.

1-12.02. Identification. Each component shall be tagged to identify its location, tag number and function in the system. Identification shall be prominently displayed on the outside of the package.

Each piece of equipment supplied shall have a permanent stainless steel or other non-corrosive material tag firmly attached and permanently and indelibly marked with the instrument tag number, as given in the Drawings.

1-12.03. Storage. Equipment shall not be stored outside. Equipment including in-line equipment shall be stored in dry permanent shelters and adequately protected against mechanical damage. If any equipment is damaged, the Contractor at his own cost and expense shall repair such damage.

1-13. WARRANTY. The FCSS shall be responsible for the warranty of the complete FCS and all related appurtenances specified herein, unless otherwise stated, including but not limited to all PLC devices, valves, actuators, and instruments, shall have a comprehensive written warranty policy for five (5) years from date of substantial completion of the final filter. Upon notice of a FCS failure, the FCSS shall have a qualified engineer or technician respond to the event within twenty-four (24) hours to troubleshoot the problem by phone. In the event that the problem is not resolved by these means, then the engineer or technician will respond to the job site within seventy-two (72) hours of the failure.

PART 2 - PRODUCTS

2-1. GENERAL REQUIREMENTS. All equipment furnished under each section referenced in SCOPE is a part of this section and shall be selected by FCSS for its superior quality and intended performance. Equipment and materials used shall be subject to review. The FCSS shall be responsible for providing all equipment, devices and appurtenances within this specification.

2-1.01. Standard Products. The systems furnished shall be standard products. Where two or more units of the same type of equipment are supplied, they shall be the products of the same manufacturer; however, all components of the systems furnished hereunder need not be the products of one manufacturer unless specified herein.

To the extent possible, instruments used for similar types of functions and services shall be of the same brand and model line. Similar components of different instruments shall be the products of the same manufacturer to facilitate maintenance and stocking of repair parts. Whenever possible, identical units shall be furnished.

FCS provided equipment and instrumentation shall meet the following minimum requirements pertaining to characteristics of the application:

a. All equipment shall be of the manufacturer's latest design and established standards for the water and wastewater industry.

b. Materials and equipment used shall be UL approved wherever such approved equipment and materials are available.

c. All electronic instrumentation shall be of the solid-state type and shall utilize linear transmission signals of 4 to 20 mA DC.

d. Equipment installed in a hazardous area shall meet Class, Group and Division as shown on the Drawings to comply with the National Electric Code.

e. All indicators and recorder readouts shall be linear in process units, unless otherwise noted.

f. All transmitters shall be provided with either integral indicators or remote mounted indicators in process units, accurate to two percent (2%).

g. Electronic equipment shall be of the manufacturer's latest design, utilizing printed circuitry and suitably coated to prevent contamination by dust, moisture or fungus. Solid-state components shall be conservatively rated for their purpose to assure optimum long-term performance and dependability over ambient atmosphere fluctuations and 0 to 95 % relative humidity.

h. All equipment, cabinets, consoles and devices furnished hereunder shall be heavy-duty type, designed for continuous industrial service. The system shall contain products of a single manufacturer, insofar as possible, and shall consist of equipment models, which are currently in production. All equipment provided shall be modular construction and shall be capable of field expansion.

i. Field-mounted equipment and system components shall be designed for installation in dusty, humid and slightly corrosive service conditions.

j. All electronic and digital equipment shall be provided with radio frequency interference protections and shall be FCC approved.

2-1.02. Performance and Design Requirements. The design of the systems furnished hereunder shall utilize concepts, techniques and features that provide maximum reliability and ease of maintenance and repair. The systems shall include board-level devices such as light emitting diodes or other indicators to

facilitate quick diagnosis and repair. Diagnostic software shall be furnished to facilitate system-level troubleshooting.

Where redundant hardware is provided, the system shall be capable of performing all specified functions, without reconfiguring hardware or software, with only one device of each category in service.

All equipment shall be designed and constructed so that in the event of a power interruption, the equipment specified hereunder shall resume normal operation without manual resetting when power is restored.

2-1.02.01. Factory Assembly. Equipment shall be shipped completely factory assembled, except where its physical size, arrangement, configuration, or shipping and handling limitations make the shipment of completely assembled units impracticable.

2-1.02.02. Expandability. The filter consoles shall be exclusive to filter equipment only. The Filter Master Control Panel will have the capability to be expanded as follows:

Future Requirement	Quantity
I/O points	25%

2-1.03. Power Supply and Instrumentation Signal. Power supply to all control system equipment will be 120 volts, 60 Hz, single phase. The Contractor shall be responsible for distribution of power among enclosures, consoles, peripherals, and other components of the system from the power supply receptacles and junction boxes indicated on the Drawings. Power distribution hardware shall include cables and branch circuit overcurrent protection installed in accordance with specification Section 11065 – Common Control Panel Requirements for Equipment.

Unless otherwise indicated, power supply to the instrumentation will be unregulated 120 volts ac. Unless otherwise indicated, all transmitted electronic analog instrument signals shall be 4-20 mA dc and shall be linear with the measured variable. Where equipment requires voltage regulation, constant voltage transformers shall be supplied. All regulators and power supplies required for compliance with the above shall be provided between power supply and interconnected instrument loop.

2-1.03.01. Facility Distribution System. Equipment not indicated to be powered from an uninterruptible power source shall be suitable for being supplied from the facility distribution system and shall be capable of withstanding voltage variations of ±10 percent and harmonics up to the limits of IEEE 519 without affecting operation. FCSS shall provide voltage conditioning or filtering equipment if necessary to meet the requirements specified.

2-1.03.02. Power Supplies. Power supplies for voltages other than those listed above shall be an integral part of the equipment furnished. Internal power supplies shall be regulated, current limiting, and self-protected. Power supplies shall be SOLA or Owner approved equal.

2-1.03.03. Surge Withstand. All equipment shall meet all surge withstand capability tests as defined in ANSI C37.90 without damage to the equipment.

2-1.03.04. Uninterruptible Power Supply. An uninterruptible power supply (UPS) shall be furnished hereunder to power the equipment indicated on the Drawings. FCSS shall be responsible for coordinating the size of the UPS unit with the equipment furnished hereunder, and shall advise Engineer if a unit of higher capacity is necessary.

2-1.04. Service Conditions and Environmental Requirements. The equipment provided for the instrumentation and control system shall be suitable for the service conditions specified in the attached equipment sections.

All equipment shall be designed and selected to operate without degradation in performance throughout the environmental extremes specified. Equipment shall be designed to prevent the generation of electromagnetic and radio frequency interference and shall be in compliance with FCC Rules and Regulations, Part 15, for Class A computing devices.

2-1.04.01. Deleterious Effects. All system equipment will be installed in areas without anti-static floor construction and without any provisions for control of particulates or corrosive gases other than ordinary office-type HVAC filtering. FCSS shall furnish any additional air cleaning equipment, anti-static chair pads, or other protective measures necessary for proper operation of the system.

All input/output hardware shall meet or exceed, without false operation, all requirements of NEMA ICS-1-109.60, Electrical Noise Tests.

2-1.04.02. Lightning / Surge Protection. Lightning/surge protection shall be provided to protect the electronic instrumentation, control, and SCADA system from induced surges propagating along the signal and power supply lines. The protection systems shall be such that the protective level shall not interfere with normal operation, but shall be lower than the instrument surge withstand level, and be maintenance free and self-restoring.

2-1.04.02.01. Grounding. All major components of the system shall be properly grounded with a low resistance ground connection. Ground wires for all surge protectors shall be connected to true earth ground, and where practical, each ground wire run individually and insulated from each other.

2-1.04.02.02. Surge Suppressors. Surge suppressors shall be mounted within the instrument enclosure or in a separate NEMA 4 junction box coupled to the enclosure. Surge suppressors shall meet IEEE C-62-31 Standards. Surge and lightning suppressors shall be non-faulting, non-interrupting, and shall protect against line-to-line and line-to-ground surges. Devices shall be solid-state metal oxide varistor (MOV) or silicon junction type; all contact points shall be copper with nickel plating; with a transient response time of less than 50 nanoseconds. Surge protective devices shall be applied for the following:

a. All 120 VAC power connections to RTUs, PLCs, DCUs, instruments and control room equipment. Surge arresters shall be Transtector "ACP-100-HW Series", Power Integrity Corporation “ZTA Series”, Phoenix Contact “Mains PlugTrab”, or MCG Surge Protection “400 Series”.

b. All analog signal circuits where any part of the circuit is outside of the building envelope. Circuits shall be protected at the control system end of the circuit. Surge protection devices shall not impede or interfere with the use of smart transmitter calibration/communication. Protection devices in control panels shall be Moore Industries, 24 VDC powered isolator or Owner approved equal.

c. All metallic pair (twisted and untwisted) conductor local area network and data highway termination points, where any part of the data highway cable is routed outside of the building envelope. Single-port protective devices shall be Phoenix Contact “PlugTrab Series”, Transtector “FSP” Series”, or Telematic “NP Series.”

d. All serial, PLC data highway, and remote I/O network termination points where any part of the circuit is routed outside of the building envelope. Surge protection devices shall be Transtector “DRDC Series” (RS-232); Transtector “FSP Series” (RS-422), Phoenix Contact “PlugTrab Series” or Citel “E280 Series”.

2-1.05. Software Documentation. FCSS shall furnish complete documentation on all software supplied with the systems specified herein. Operating systems, compilers, assemblers, and utility and diagnostic programs that are standard commercial products of third parties need not be included in the optical media backup. Software documentation shall consist of the following principal items.

a. One backup set of any integrated circuit or solid-state memory-based plug-in firmware used.

b. Two complete back-up copies of system and application software, in executable format on DVDs.

c. Three sets of user reference manuals for all standard system and

application software.

d. One set of user reference manuals for all operating system software.

e. Three sets of printed as-built reference documentation for any special software provided specifically for this contract.

f. For each licensed software product, all documentation provided by the product manufacturer shall be provided. This includes all reference manuals and any other documents that were provided by the manufacturer. One set of this documentation shall be supplied for each and every piece of equipment provided. Multiple pieces of similar equipment or software require multiple copies of this documentation.

2-1.06. Software License. All software programs supplied as a standard part of FCSS products for this project shall be licensed to Owner for use on the system specified herein. Such license shall not restrict Owner from using the software on the system provided hereunder or its replacement. Owner shall have the right to make modifications to, and copies of the software for use on the system provided. Specific requirements of FCSS software license are subject to review and approval by Owner and Engineer.

2-1.07. Installation Test Equipment. All necessary testing equipment for calibration and checking of system components shall be provided by FCSS. FCSS shall also furnish calibration and maintenance records for all testing and calibration equipment used on the site if requested by Engineer.

2-1.08. Programming Devices. The following programming devices, shall be provided for the instruments specified in this section. If a single programming device is capable to be used for multiple device types only one programming device shall be provided to the owner. Programming device will be provided along with any programming software for the device.

Instruments Requiring Programming Devices	Quantity of Programming Devices
Flow instruments	1
Pressure and level instruments	1
Analytical instruments	1

2-1.09. Programming Software. If is required to perform programming, configuration, or calibration functions the following programming software shall be provided for the instruments specified in this section If a single programming software is capable to be used for multiple device types only one programming software shall be provided to the owner.

Instruments Requiring Programming Software	Number of Copies of Programming Software
Flow instruments	1
Pressure and level instruments	1
Analytical instruments	1
Operator Interface Unit	1

2-2. PANEL DESIGN AND FABRICATION FEATURES. The blower control panels shall meet all requirement in the following specifications:

- 11065 – Common Control Panel Requirements for Equipment
- 11066 – General Wiring Methods
- 11067 – Wire Tagging

The control panel furnished shall conform to the requirements of NEMA ICS-6. Panels shall be rated NEMA Type 4X and shall be constructed from stainless steel. Unless indicated otherwise on the Drawings, the following paragraphs describe general fabrication specifications for the Filter Master Control Panel and Filter Control Consoles.

2-2.01. Filter Master Control Panel. The Filter Master Control Panel (FMCP) shall be provided with a filter system master controller (PLC) to monitor and control the common functions of the filter backwash system including the air scour blower system and the backwash pump system. The FMCP shall also control the backwash queue for the FCS.

The FMCP wall mounted enclosure shall be as indicated on the drawings and shall be NEMA 4X fabricated from USS 12 gage, or heavier stainless steel. Cabinets shall be equipped with full size gasketed doors with hinges and a chromium-plated or stainless steel three-point latch. The cabinet shall have a hasp for accommodating a padlock.

The FMCP enclosure shall house the FMCP PLC, multi-port Ethernet / fiber-optic switch, fiber-optic patch panel, power supplies, field terminations and other appurtenances as necessary for a complete filter master control system. The FMCP shall be constructed and certified in accordance with UL508A standards.

All wall-mounted cabinets shall meet the requirements of the panel fabrication paragraph of this section.

2-2.02. Filter Control Consoles. Each Filter Control console (FCC) shall be provided as a single filter control system housed in single console. The FCS

shall be expandable from a minimum of ten filters to an unlimited number of filters.

The FCC console enclosure shall be as shown on drawings and shall be NEMA 4X stainless steel with hinged and latched top and front access door. Console shall provide a rigid and freestanding structure of sufficient strength to support all equipment, withstand handling and shipment, and maintain alignment. All exposed welds, seams, or edges shall be ground smooth. Edges shall be slightly rounded.

Each FCC enclosure shall house the FCS OIU, PLC, multi-port Ethernet switch, power supplies, field terminations and other appurtenances as necessary for a complete filter control system. The FCC shall be constructed and certified in accordance with UL508A standards.

2-2.03. Non-Potable Water & Backwash Pump PLC Panel. The non-potable water and backwash pump PLC panel shall be provided as a single control panel housing two separate PLCs. Each PLC shall be wired and programmed to monitor and control a non-potable water pump and one backwash pump.

The non-potable water and backwash pump PLC panel shall be a floor mounted enclosure with location as indicated on the drawings and shall be NEMA 4X fabricated from USS 12 gage, or heavier stainless steel. Cabinets shall be equipped with full size gasketed doors with hinges and a chromium-plated or stainless steel three-point latch. The cabinet shall have a hasp for accommodating a padlock.

The non-potable water and backwash pump PLC panel shall house the PLC, multi-port Ethernet switch, power supplies, field terminations and other appurtenances as necessary for a complete control system. The panel shall be constructed and certified in accordance with UL508A standards.

2-3.02. Mounting. Consoles shall be designed for mounting directly on a raised concrete curb, with conduit entrance through a floor slab opening under the console. If required, Contractor shall provide heavy channel iron bases, flanges up, so that they may be anchored to the floor.

2-2.03. Power Entrance. The power entrance to each panel shall be provided with a surge protection device. Refer to the Section 2-1.04.03.02, Surge Suppressors, within this specification for surge suppression requirements.

2-2.04. Factory Test. Panels shall be factory tested electrically and pneumatically by the panel fabricator before shipment.

2-3. PROGRAMABLE LOGIC CONTROLLERS. All equipment furnished under this section shall be expressly selected by FCSS for its superior quality for the

intended purpose and shall comply with the following requirements.

2-3.01. Interchangeability. All programmable logic controller systems shall be products of the same manufacturer and of the same series or product line. Processors, local and remote input/output hardware, communications modules, and specialty modules such as coprocessors and ASCII modules shall be interchangeable among all I/O panels and systems. PLC modules and hardware by other manufacturers will be acceptable only if the PLC manufacturer does not offer suitable modules and hardware for the same functions.

2-3.02. Initial, Spare, and Future Memory (RAM). FCSS shall provide adequate memory for the amount of I/O, control algorithms, and communications in the initial system.

Each programmable logic controller shall include provisions for future expansion and shall have 100 percent spare memory capacity and 100 percent spare data capacity installed. The spare memory capacity shall be documented by submitting to engineer, during factory testing, a statement indicating the amounts of memory of all types being utilized and the total amount available in each system. The statement shall include an estimate of the total program and data memory necessary, including spare memory, based on the I/O hardware for the system, and previous programming experience.

2-3.03. Spare I/O. Each PLC input/output enclosure shall be provided with at least 20 percent spare inputs and outputs of each type. Spare I/O shall be installed, wired, and interfaced properly to the terminal strip. The spare I/O shall be in addition to any I/O installed and reserved for future process signals as may be indicated on the I/O list. In addition, each PLC input/output enclosure shall be capable of accommodating 20 percent of additional input/output capacity of each type as originally assembled, without the need for additional expansion racks, communication adapters, cables, or PLC power supplies.

2-3.04. Expandability. Each PLC processor and associated I/O shall have a future expandability of at least 50 percent of the provided system.

2-3.05. Acceptable Manufacturers. The PLC shall be Schneider Electric Modicon M340 series and shall contain either a preconfigured modular filter master control system program or a modular filter control system program in accordance with IEC 61131 programming standards pre-assembled at the factory. The filter master control system program shall be specific to the filter backwash systems that it will monitor and control. The filter control system program shall be specific filter system that it will monitor and control. The PLCs shall include:

- PLC Rack
  - FMCP: 8 Slots, Model No. BMX XBP 0800

- o FCC: 12 Slots, Model No. BMX XBP 1200
- Power Supply (115 / 240 VAC / 36W) Model No. BMX CPS 3500
- Central Processor (4MB RAM / 8MB Memory/ USB Port / Com Port Modbus Serial / Com Port Ethernet Modbus TCP) Model No. BMX CPS 342020
- Network Option Ethernet (NOE) Card (RJ45 10/100 Ethernet Port) Model No. BMX NOE 0100
- Digital / Analog Input / Output Cards as necessary shall be provided to monitor and control all required functions and as specified in Appendix D – Input / Output List.
- Digital Input Card (16 Inputs / 120VAC) Model No. BMX DAI 1604
- Digital Output Card (8 Isolated Relay Outputs / 24 VDC / 24-240 VAC / 3A) Model No. BMX DRA 0805
- Analog Input Card (4 Isolated Multi-Range Inputs / 4-20 mA / 16 Bit Resolution) Model No. BMX AMI 0410
- Analog Output Card (2 Isolated Multi-Range Outputs / 4-20 mA / 15 Bit Resolution) Model No. BMX AMO 0210
- Terminal Block (20 point, screw terminal) Model No. BMX FTB 2010
- A minimum of 20% spare Digital / Analog Input / Output points shall be provided in the FMCP wired to the field terminal strip.
- PLC Programming and Documentation Software Model No. Modicon Unity Pro XL

All Digital Outputs shall have interposing SPDT general purpose relays with contacts rated for 250 VAC 10A service.

The FMCP shall have a minimum of 20% spare Digital / Analog Input / Output points wired to the field terminal strip.

2-3.05.01. Existing PLCs. The existing PLC (HW2-PLC-02) located in Headworks Building No. 2 Electrical Room shall be expanded for additional I/O from the Sodium Bisulfite feed system. Input/Output modules shall be Schneider Electric Modicon Quantum series. The PLC I/O modules shall include:

- Digital Input Card (16 Inputs / 120VAC) Model No. 140 DAI 540 00
- Analog Input Card (8 Isolated Multi-Range Inputs / 4-20 mA / 16 Bit Resolution) Model No. 140 ACI 030 00
- Analog Output Card (4 Isolated Multi-Range Outputs / 4-20 mA / 15 Bit Resolution) Model No. 140 ACO 020 00

2-3.06. Signal Power Supplies. Regulated dc power supplies shall be provided in each PLC enclosure for analog inputs, digital outputs, digital inputs. Power supplies shall be suitable for an input voltage variation of ±10 percent, and the supply output shall be fused or protected against short-circuiting. Output voltage regulation shall be as required by the instrumentation equipment supplied under

another section.

The loop power supply shall be separate from the power supply circuit for the processor and racks.

The power source for all digital inputs from field devices shall be separately fused for each digital input module. Unless otherwise noted, all field devices will be provided with dry contacts that close to provide an input to the PLC.

Signal power supplies shall be SOLA or Owner approved equal.

2-3.07. Appurtenances. The PLC processor and I/O hardware shall be provided as complete systems, as shown on the block diagram drawings. The PLCs shall include all necessary hardware and software for a complete working system. All special rack or panel mounted power supplies, special interconnecting and programming cables, special grounding hardware, or isolation devices shall be furnished for proper operation of the equipment. Signal converters, signal boosters, amplifiers, special power supplies, special cable, special grounding, intrinsically safe relays and current repeaters, surge suppression devices, and isolation devices shall be furnished and installed for proper operation of the equipment.

2-3.08. PLC Arrangement. The PLCs shall be distributed and arranged as indicated on the Drawings.

2-3.09. Communications. The processor shall be programmed to operate autonomously, regardless of communications status with other units. Each programmable controller shall be furnished complete with communication modules for local and remote input/output hardware communications,

communications with other programmable controllers, and communication with host computers as shown on the block diagram.

2-3.10. Programming. The processor shall be programmable using the IEC 1131 international programming standards and ladder logic programming. IEC 1131 programming shall include the following:

Functional Block Diagram

Sequential Function Chart.

Structured Text.

Ladder Diagram.

Ladder logic programming shall include a minimum of the following capabilities:

Contacts, coils, branching.

Data comparisons.

On-delay and off-delay timers.

Counters with comparators.

Floating point Math and Logical instructions.

PID loop control.

Jumps and Subroutine functions.

Master control relay.

Transitional or one-shot outputs.

Standard and user-defined data tables for digital and analog value storage.

Remote I/O capability.

Fault-mode subroutine.

2-3.11. Programming Capabilities. The processor shall include the following capabilities for programming, debugging of programs, and troubleshooting.

Off-line programming.

On-line programming.

On-line status of coils and registers.

Input/output forcing.

2-3.12. Input/Output Hardware. Input/output hardware shall be arranged as indicated on the Drawings. Programmable logic controller systems shall support the following types of input/output modules.

120 volt ac digital input and output.

4-20 mA dc analog input and output.

All digital input/output hardware shall include isolation against surges of at least 1500 volts. All output hardware connected to inductive loads shall be supplied with surge suppression devices and recommended by the PLC manufacturer to prevent damage to output hardware. Combination input/output modules will be acceptable if they meet the following requirements.

2-3.12.01. Wiring Terminals. All input/output modules shall utilize easily removable plug-in or hinged field wiring terminals to allow removal of modules without disconnecting individual wires.

2-3.12.02. I/O Circuit Power Supply. Outputs for motor driven equipment will typically be powered from the driven equipment. Digital outputs for miscellaneous

equipment shall be powered either from the controlled equipment or the PLC enclosure as indicated on the Drawings or as coordinated with the controlled equipment supplier. Outputs that control process equipment specified under other sections or provided under other contracts shall be fully isolated or shall operate either interposing relays or relay-type digital output modules in the PLC cabinet.

2-3.12.03. Panel Terminations. All PLC input/output signals for field connections shall be terminated through panel enclosure terminal strips. Direct connection of field wiring to the I/O module terminals is not acceptable.

2-3.13. FCC Operator Interface Unit (OIU). An OIU shall be furnished and installed in the top of the console to monitor, control and configure the filter through preconfigured standard user-friendly graphic interface screens. The OIU shall be manufactured by Schneider Electric Magellis Model No. XBTGT7340. OIU screens shall be created using the Vijeo Designer OIU software.

OIU shall provide graphic screens that shall be used by the operators to access all functions and setpoints necessary for comprehensive control. The Manufacturer shall be responsible for developing and configuring the custom graphic displays. Each piece of major process equipment that is monitored and controlled by the control system shall be displayed on the graphic screens. Graphic screens shall be representations of the equipment and piping. The screens must accurately show all devices and equipment that is part of the control loops. The FCSS shall use the configuration standards and conventions to be established by direct coordination with the Owner, which will be discussed in the I&C workshops specified herein, that shall describe and define such items as proposed graphic display process line colors/representations; color standards for “on”, “off”, “opened”, “closed”, and “alarm” conditions; alarm handling conventions; how items will be selected for control; methods for navigation between displays; address usage/naming conventions; and security setup. Proposed displays shall be submitted to the Engineer and Owner for approval.

2-3.14. Communications. Each programmable controller system shall be furnished complete with communication hardware modules for other programmable controllers.

Communication hardware shall be compatible with the cable, data highway, fiber optic, or radio communication media. Ethernet components and cable are specified in other specification sections.

2-3.14.01. Addressability. Each programmable logic controller shall be individually addressable so that only the selected controller responds when queried. IP addressing shall be used. Designation of a controller's network address may be either a software or hardware function.

2-3.14.02. Communications Hardware. FCSS shall provide all necessary communications hardware. Hardware shall be included for, but not be limited to, remote I/O, data highway, host computer, fiber optics, Ethernet and radio.

2-3.14.02.01. PLC to PLC Communications Hardware. Each PLC shall communicate to other PLCs over a data highway communications network. FCSS shall include all rack mounted, enclosure mounted, or desktop mounted communications modules required for a complete working system.

2-3.15. Programming Device Hardware. The programming device shall be a portable laptop computer as specified herein. FCSS shall provide two interconnecting cables, each 5 meters long, to connect the computer to the programmable logic controller. The cables shall be shielded data cable and shall be terminated on both ends with the appropriate connectors. Connectors shall be labeled to identify the connected equipment. After substantial completion of the entire project has been awarded the laptop shall be turned over to the Owner.

2-3.15.01. Special Devices. FCSS shall provide two sets of any special devices (such as null modems, adapter cards, interface converters, etc.) required to establish an operational programming line between the programmable logic controllers and programming device.

2-3.16. Programming Software. FCSS shall furnish one licensed copy of PLC and OIU programming software for the Owner. The software shall be suitable for running on a laptop computer running Windows 7 operating system software. A full legal set of programming software documentation shall accompany each copy of the software. Each copy of the programming software shall include all necessary device drivers and add-on software packages.

2-3.16.01. Standard Product. The programming software shall be personal computer based and a standard product of the PLC manufacturer. The software to program the filter control consoles, master control panel, and the NPW/Backwash pump PLCs shall be Modicon Unity Pro XL. One licensed copy of the Modicon Unity Pro XL software used to program the PLCs shall be turned over to the Owner upon successful startup and commissioning of the system

The software to program the existing PLC in the headworks building for the sodium bisulfite system shall be Concept. FCSS shall verify Concept version number prior to programming.

OIU programming software shall be Vijeo Designer. One licensed copy of the OIU software shall be turned over to the Owner upon substantial completion of the system.

2-3.16.02. Programming Software Features. The programming software shall allow off-line development of all PLC-related programming, including user annotation of the program, and creation and printing of application programs and I/O cross-reference lists. Special programming tasks originally provided by FCSS shall also be included.

On-line features shall include IEC-1311 standards program modification, ladder-logic modification, program language modification, monitoring of real-time ladder-logic execution, monitoring of program execution, monitoring and manipulation of timer and counter preset and present values, monitoring and forcing of physical I/O, and monitoring and manipulation of analog (register) and bit (binary) data table values. PLC and I/O hardware diagnostic and status information shall be accessible using the software in on-line mode.

2-3.17. SCADA System Workstation. The FCSS shall provide one Workstation/View Node to be located in Filter Building No.1as located on the drawings. The workstation shall be comprised of the following configuration:

- Processors - 3rd Gen Intel® Core™ i3-3225 Processor (Dual Core, 3.30GHz, 3MB, w/ HD4000 Graphics)
- Operating System(s) - Windows 7 Professional, No Media, 64-bit, English
- Manufacture – Most current version of the Dell OptiPlex 9010 DT - OptiPlex 9010 Desktop w/ up to 90% Efficient PSU
- Memory - 4GB, NON-ECC, 1600MHZ DDR3,2DIMM
- Removable Media Storage Device - 16X DVD+ and -RW SATA
- Graphics Cards - Intel® Integrated Graphics DP/DP/VGA w/DP-to-DVI Adapter
- Monitors - DELL UltraSharp™ U2212H 21.5 Inch Monitor with Adj Stand, Widescreen, VGA/ DVI/ DP
- Boot Hard Drive - 250GB 3.5 SATA 6Gb/s with 8MB DataBurst Cache™
- Hard Drive Mode - No RAID
- Systems Management Mode - Intel® Standard Manageability
- Energy Efficiency Options - No ESTAR Settings
- Wireless – None
- Keyboard - Dell KB212-B USB 104 Quiet Key Keyboard, English
- Mouse - Dell MS111 USB Optical Mouse
- Setup and Features Information Tech Sheet - No Tech Sheet
- Power Supplies - OptiPlex 9010 Desktop w/ up to 90% Efficient PSU
- Thermals - Heat Sink, Mainstream, Desktop
- Speakers - Internal Dell Business Audio Speaker
- Security Hardware - Chassis Intrusion Switch Option
- Documentation - OptiPlex 9010 Documentation English and French Resource DVD

- Warranty – A five (5) year manufacturer's warranty covering parts and labor and next business day on site support as well as ProSupport and 5 Year CompleteCare Accidental Damage Protection

The Workstation hardware requirements shall be reviewed during the filter control system I&C workshops.

2-3.17.01. SCADA System Workstation Software. The following application software shall be provided for the workstation computer:

- GE Proficy - iFix SCADA Plus software – latest version
- MS Office 2010 Professional (provided by OWNER)
- Anti-Virus - latest version (provided by OWNER)

In an attempt to address possible version compatibility problems, the version of each software package shall be reviewed during the filter control system I&C workshops. The FCSS is responsible for installing and configuration of all necessary application software to provide a full function Workstation/View Node.

2-3.18. Laptop Programming Computer. The CONTRACTOR shall provide one laptop programming computer and it shall be comprised of the following configuration:

- Processors – Minimum of Intel Core i7-2640M Dual Core (2.80GHz,4M cache, Upgradeable to Intel vPro technology)
- Operating System(s) – Microsoft Windows® 7 Professional, 32-bit, with service packs and media
- Manufacture – Most current version of the Dell model Precision Workstation series laptops
- Memory – 4.0GB, DDR3-1333MHz SDRAM, 2 DIMMS
- PCMCIA Adapter – 32 bit Cardbus and 16 bit compatible, accepting 2 full and 2 half Mini-Cards
- Removable Media Storage Device:
  - Optical drive shall be a rewriteable DVD drive of the type 8X DVD+/-RW
- Graphics Card – NVIDIA Quadro 3000M with 2GB GDDR5;
  - The Computer shall have a special function key that enables the video card signal to be sent to the Laptop's LCD display, the VGA output port, or both
- Graphics Display – Integrated laptop display type shall be 15.6" UltraSharp FHD(1920x1080) Wide View Anti-Glare LED-backlit
- Boot Hard Drive – 500GB Solid State Hard Drive
  - The hard drive shall be partitioned with the NTFS file system type
- System Management Mode –
- Energy Efficiency Options – No ESTAR Settings

- Communications –Minimum requirements:
  - Wireless 375 Bluetooth 3.0 module
  - Intel Centrino Ultimate-N 6300 3x3 wireless communication
  - Wireless switch to disable wireless LAN communication
  - Integrated 10/100/1000 BASE-TX Gigabit Ethernet communication with RJ-45 port interface
  - All communication drivers for each communication device shall be installed on the laptop.
- Keyboard - Anti-microbial keyboard with number pad and backlight feature
- Mouse – Integrated dual pointing device:
  - Touchpad pointer AND track stick pointer
  - Multi-touch touchpad with three buttons
- Audio – Minimum requirements:
  - 20-bit stereo-digital to analog and 18-bit stereo analog to digital 16 bit integrated audio card
  - Two (2) integrated stereo speakers
  - Accessible stereo output jack
  - Accessible stereo microphone input jack
- Battery – Accessible and replaceable 9 cell Lithium Ion, 97Wh
  - Inclusive 1 year of battery service, plus 2 years extended battery service for years 2 and 3 of system life
  - Charging unit to fully charge the battery while providing full power to the laptop
  - Charging means shall also be a means of providing power to the laptop in the event that the battery is fully discharged.
- Peripheral Ports – Minimum requirements:
  - Video: 1 – VGA; 1 – DisplayPort; 1 – HDMI
  - Data: 1 - RJ-45 (Ethernet); 2 - USB 3.0; 2 - USB 2.0; 1 - IEEE 1394; 1 - eSATA / USB 2.0;
  - Card reader: 1 - 10-in-1 media card reader (SD, SD-XC, legacy - SD, SDIO, MMC, XD, MS, MS Pro, Mini-MMC, MMC+); 1 - SmartCard reader; 1 - 54mm ExpressCard slot
- Accessories – Minimum requirements:
  - USB Flash Drives – Provide two (2) 16 gigabyte USB 2.0 removable Flash Drive Units
  - Carrying Case – Provide nylon deluxe carrying case sufficiently large to house the laptop unit; case should have additional pouches/pockets for storage of cables, floppy module, CD-R disks, etc.
- Warranty – A five (5) year manufacturer's warranty covering parts and labor and next business day on site support as well as ProSupport and 5 Year CompleteCare Accidental Damage Protection

2-3.18.01. Laptop Programming Computer Software. The following application software shall be provided for the workstation computer:

- Each software installed on the laptop shall be legally licensed to the owner.
- All drivers and lap top maintenance and diagnostic utilities including battery percent charged, estimate of laptop remaining operation time when powered only by the battery source, shall be Windows 7 Professional compatible
- Drivers for the following shall be installed on Windows 7 professional system are:
  - Ethernet card and the Modem
  - Audio card
  - Video card
  - Battery time of operation estimation and battery percent charged
  - Laptop suspend (sleep) mode
- MS Office 2010 Professional (provided by OWNER)
- Anti-Virus - latest version (provided by OWNER)
- Provide the media (CD-ROM) and installation guide for all software, including the operating system and all media for complete system recovery to the laptop system state as initially provided out of the package by the Laptop manufacturer.
- PLC and OIU Software specified herein:
  - Modicon Unity Pro XL and Concept
  - Schneider Electric Vijeo Designer

2-3.19. Handheld Device Programmer. Handheld device programmer shall utilize the HART communication protocol, have full-colored graphical interface, a Lithium-Ion battery, and be able to transfer configuration and calibration settings from computer to the programming device. Handheld device programmer shall be Emerson Process management, Model 475 Field Communicator or Owner approved equal.

2-4. INDUSTRIAL BUTTERFLY VALVES.

2-4.01. Construction. Unless otherwise specified, industrial butterfly valves shall be the rubber-seat, tight-closing type. Valves specified with an electric, air, or hydraulic actuators shall be the lugged wafer style. Valve discs shall seat at 90 degrees with the pipe axis.

Industrial butterfly valves with center lines more than 7’-6” [2.3m] above the floor shall be provided with chain-wheels and operating chains as specified herein.

Flanged end valves shall be of the short-body type. Where mechanical joint ends are specified, in the valve schedule, either mechanical joint or push-on

ends conforming to ANSI/AWWA C111/A21.11 will be acceptable. For buried or submerged service, shaft seals shall be O-ring type.

2-4.02. Valves VBF-3.

VBF-3 Filter Air Scour service	Rating	ANSI Class 150
	Body	ASTM A 351, CF8M, 316 stainless steel
	Trim	
	Seat	RTFE
	Disc	ASTM A351, CF8M, 316 stainless steel
	Stem	17-4 PH stainless steel
	Stem Packing	TFE or PTFE
	Shaft Bearings	Graphite impregnated or PTFE impregnated 316 stainless steel
	End Connection	Lugged wafer, ASME B16.5, Class 150 diameter and drilling
	Temperature Limitations	-20 to 250°F
	Manual Valve Operator	
	6" & smaller	Lever
	8" & larger	Geared Handwheel
	Manufacturer	Keystone K-LOK High Performance Figure 362-159; Pratt Series 400, Figure 402 ABZ Series 400, Figure 402

2-4.03. Length Tolerance. Unless otherwise specified, the actual length of valves shall be within plus or minus 1/16 inch of the specified or theoretical length.

2-4.04. Shop Coatings. All ferrous metal surfaces of valves and accessories, both interior and exterior, shall be shop coated for corrosion protection. The valve manufacturer's standard coating will be acceptable, provided it is functionally equivalent to the specified coating.

Coating Materials	Specification Compliance
Coal Tar Epoxy	High-build coal tar epoxy; Ameron "Amercoat 78HB Coal Tar Epoxy", Carboline "Bitumastic 300 M", Tnemec "46H-413 Hi-Build Tneme-Tar", or Sherwin-Williams "Hi-Mil Sher-Tar Epoxy".

Coating Materials	Specification Compliance
Rust-Preventive Compound	As recommended by the manufacturer.
Universal Primer	As recommended by the manufacturer.

Surfaces To Be Coated	Material
Unfinished Surfaces	
Exterior Surfaces of Valves To Be Buried, Submerged, or Installed in Manholes or Valve Vaults	Asphalt varnish or coal tar epoxy.
Exterior Surfaces of All Other Valves	Universal primer.
Polished or Machined Surfaces	Rust-preventive compound.
Actuators and Accessories	Universal primer.

2-5. AWWA BUTTERFLY VALVES. AWWA butterfly valves shall be by the manufacturers listed below.

DeZurik

Pratt (Mueller)

2-5.01. Materials. Except as modified or supplemented herein, materials used in the manufacture of butterfly valves shall conform to the requirements of the governing standard.

Acceptable shop coatings are listed in the following table.

Coal Tar Epoxy	High-build coal tar epoxy; PPG Amercoat "Amercoat 78HB Coal Tar Epoxy", Carboline "Bitumastic 300 M", Tnemec "46H-413 Hi-Build Tneme-Tar", or Sherwin-Williams "Hi-Mil Sher-Tar Epoxy".
Epoxy	
For Liquid Service other than in potable water facilities	PPG Amercoat “Amercoat 385 Epoxy”, Carboline “Carboguard 890”, Sherwin-Williams "Macropoxy 646" or Tnemec “Series N69 Hi-Build Epoxoline II”.

For Raw or Treated Water Service in potable water facilities (NSF certified)	PPG Amercoat “Amerlockt 400 High Solids Epoxy”, Carboline “Carboguard 891”, Sherwin-Williams "Macropoxy 646NSF" or Tnemec “Series N140 Pota-Pox Plus”.
Rust-Preventive Compound	As recommended by manufacturer.

2-5.02. Valve Construction.

2-5.02.01. Valve Bodies. Valves shall be short-body type unless otherwise specified in the AWWA Butterfly Valve Schedule. The use of a stop or lug cast integrally with or mechanically secured to the body for the purpose of limiting disc travel by means of direct contact or interference with the valve disc (in either the open or closed position) will not be acceptable.

2-5.02.02. Flanges. Flanges shall be finished to true plane surfaces within a tolerance limit of 0.005 inch [125 µm]. The finished face shall be normal to the longitudinal valve axis within a maximum angular variation tolerance of 0.002 inch per foot (0.017 percent) of flange diameter.

2-5.02.03. Mechanical Joint Ends. Mechanical joint ends shall be either mechanical joint or push-on ends conforming to ANSI/AWWA C111/A21.11.

2-5.02.04. Valve Shafts. Valve shafts shall be fabricated of AISI Type 304 or 316 stainless steel. The use of shafts having a hexagonal cross section will not be acceptable. The connection between shaft and disc shall be in accordance with the governing standard.

The connection between the shaft and the disc shall be mechanically secured by means of solid, smooth sided, stainless steel or monel taper pins or dowel pins. Each taper pin or dowel pin shall extend through or shall wedge against the side of the shaft and shall be mechanically secured in place. The use of set screws, knurled or fluted dowel pins, expansion pins, roll pins, tension pins, spring pins, or other devices instead of the pins specified herein will not be acceptable.

2-5.02.05. Valve Seats. Acceptable seating surfaces mating with rubber are AISI Type 304 or 316 stainless steel, monel, or plasma-applied nickel-chrome overlay for all valves; and alloy cast iron for 20 inch [500 mm] and smaller manually operated valves.

Seats shall be located on the valve body. Valve seat configurations which rely on the mating pipe flange to hold the seat in position in the valve body will not be acceptable.

2-5.02.06. Shaft Seals. Shaft seals shall be of the chevron type.

2-5.02.07. Thrust Bearings. Each valve shall be provided with one or more thrust bearings in accordance with the governing standard. Thrust bearings which are directly exposed to line liquid and which consist of a metal bearing surface in rubbing contact with an opposing metal bearing surface will not be acceptable.

2-5.03. Non-Cavitating Butterfly Valves.

For installation as a flow control (modulating) valve on the Backwash Supply header line, butterfly valve BFV-026 shall be supplied as a non-cavitating valve. The valve shall comply with all other requirements for AWWA Butterfly valves, except that it need not be AWWA certified, and the valve shaft, seating, and disc may be modified to meet the requirements for this service. The valve shall be certified by the manufacturer that no damaging cavitation shall occur at the following conditions:

Valve size:	30”
Valve centerline Elevation:	445.5’
Max flowrate:	24,860 gpm
Min flowrate:	9,700 gpm
Max HGL @ valve inlet:	79.07 ft –at min flow 28.82 ft –at max flow
Min HGL @ valve outlet:	12.20 ft –at min flow 26.04 ft –at max flow
Fluid:	Filtered, chlorinated activated sludge wastewater effluent. Temperature range approximately 17-28 C.

2-6. INTELLIGENT ELECTRIC ACTUATORS. Requirements for valve actuators shall be as specified herein and as specified in the Valve and Gate Actuators section.

2-6.01. General. Intelligent electric actuators as listed in the valve and gate schedules shall be provided by the valve or gate manufacturer.

Intelligent electric actuators with torque output requirements of 750 ft-lbs and less for butterfly valves shall be quarter-turn type and shall be Limitorque "QX" or Rotork “IQT Series” without exception.

All other intelligent electric actuators for open-close service shall be multi-turn type and shall be Limitorque "MX or Rotork "IQ Series" without exception.

Intelligent electric actuators for modulating service shall be Limitorque “MX” or Rotork “IQ Series” without exception.

Intelligent electric actuators produced by other manufacturers are not acceptable.

Intelligent electric actuators shall be capable of non-intrusive configuration without requiring removal of any actuator covers. Configuration of actuator functions shall be by use of a hand held infrared linked device, laptop or PDA with compatible wireless communication capability, or by local control switches and 32-character LCD display mounted on the actuator housing. The display language shall be English.

Each intelligent electric actuator shall be furnished complete with a motor, gearing, handwheel, configurable output relays, torque sensors, lubricants, wiring, and terminals. Each actuator shall be constructed as a self-contained unit with a ductile iron or aluminum alloy housing, of a type as indicated in the valve and gate schedules, and shall be integrally assembled on the applicable valve or gate by the valve or gate manufacturer. Housings shall have two O-ring seals, one on the controls compartment and one on the terminal cover.

Actuators shall be designed to cycle the valve or gate from the fully open to the fully closed position or the reverse in approximately 60 seconds or as indicated in the valve and gate schedules.

Actuator motors may be mounted horizontally adjacent to or vertically above the reduction gearing. All gearing shall be oil or grease lubricated.

2-6.02. Motors. Motors shall be totally enclosed, high torque design made expressly for valve and gate actuator service, capable of operating the valve or gate under full differential pressure for two complete strokes or one complete cycle of travel without overheating. Motors shall be designed in accordance with NEMA standards and shall operate successfully at any voltage within 10 percent above or below rated voltage. Motor bearings shall be permanently lubricated. Motors shall be provided with stall, temperature, loss of phase, and reverse phase protection. Actuators shall be capable of indicating phase loss. Modulating actuator motors shall be continuous duty rated.

2-6.03. Power Gearing. Power gearing shall consist of hardened steel spur or helical gears and alloy bronze or hardened steel worm gear, all suitably

lubricated, designed for 100 percent overload, and effectively sealed against entrance of foreign matter. Steel gears shall be hardened to at least 350 Brinell. Planetary or cycloidal gearing, aluminum, mild steel, or nonmetallic gears will not be acceptable. Gearing shall be designed to be self-locking so that actuation of a torque switch or electronic torque protection device by a torque overload condition will not allow the actuator to restart until the torque overload has been eliminated. If a secondary gearbox is required, it shall be designed to withstand the locked rotor torque of the actuator.

2-6.04. Handwheel Mechanism. The handwheel shall not rotate during motor operation. During handwheel operation the motor shall not affect the actuator operation. The actuator shall be responsive to electrical power and control at all times and, when under electrical control, shall instantly disengage the handwheel. The handwheel shall rotate counterclockwise to open the valve. An arrow indicating the opening direction and the word "Open" shall be cast on the handwheel. The force required to operate the handwheel shall not exceed 80 lbs [350 N]. The handwheel shall have a padlockable declutch lever.

2-6.05. Torque Sensing. Torque and thrust loads in both closing and opening directions shall be limited by a torque sensing device. Torque settings shall be adjustable and shall be indicated locally. The adjustment shall permit a variation of 40 to 100 percent of rated torque.

2-6.06. Terminal Facilities. Terminal facilities for connection to motor leads, switches, and control and indication signals shall be provided in a readily accessible terminal compartment. The terminal compartment shall have at least two openings for external electrical conduits, one sized at least 3/4 inch [19 mm] and the other at least 1-1/4 inches [31 mm]. Each terminal compartment shall be large enough to allow easy routing and termination of fifteen 12 AWG [4 mm^2] conductors.

2-6.07. Controls Compartment. Each actuator shall be furnished with a sealed compartment containing a reversing controller, multi tap transformer, electronic controls, and monitoring and protection modules. Reversing controllers shall be both mechanically and electrically interlocked and provided with the necessary direct-operated auxiliary contacts for required interlocking and control. The multi tap transformer shall provide power for all internal circuits, and shall provide 120 VAC supply for remote controls as indicated in the valve and gate schedules, or in the schematics on the Drawings.

Actuators for valves listed for modulating service in the valve schedule shall be provided with a control module for position modulating type service. The control module shall be mounted within the controls compartment. The module shall accept a standard 4-20 mA dc analog input signal with a load impedance of not greater than 400 ohms. The control module shall contain adjustments for span,

zero, gain, and deadband. Non-networked modulating actuators shall have a 4 to 20 mA output signal proportional to valve or gate position.

2-6.08. Local Controls. Each actuator shall have controller devices mounted on the actuator as indicated in the valve and gate schedules.

2-6.09. Remote Indication and Controls. Valve position and actuator status indication shall be provided by four configurable output relay contacts which can be selected to indicate any position of the valve. Relays shall be configurable to the normally open or normally closed states. Relays shall maintain and update position indication during handwheel operation. Contacts shall be rated 5 A, 250 VAC, 30 VDC. When not used for position indication, any of the four configurable relays shall be selectable to signal one of the following:

Valve opening, closing, or moving.
Thermostat tripped, phase loss.
Motor tripped on torque in mid travel, motor stalled.
Remote mode selected.
Local mode selected.

2-6.10. Remote Electric Actuator Control Station. Each actuator shall be furnished with a remote control station as indicated in the valve schedules and on the Drawings. The control station shall include red and green indicating lights for valve position status, and Local-Off-Remote and Open-Close selector switches for control.

Power for the remote control station shall be provided from its respective actuator unit. The remote control station shall be rated NEMA 4X. Each device mounted on the remote control station shall have an engraved label or escutcheon plate indicating its respective function. The remote control station shall have an engraved tag indicating the tag number or description of the respective actuated valve or gate.

2-7. INSTRUMENTS. The following paragraphs provide minimum device requirements. The Drawings or Instrument Device Schedule shall be used to determine any additional instrument options, requirements, or service conditions.

- Interconnection Cable. For instruments where the primary element and transmitter are physically separated, interconnecting cable from the element to the transmitter shall be provided. The cable shall be the type approved by the instrument manufacturer for the intended purpose of interfacing the element to the transmitter. The interconnecting cable shall be provided in the length necessary for installation or a minimum of three meters. Splices shall not be allowed in the installed cable.

- For instruments that require a dedicated programming device for calibration, maintenance, or troubleshooting, one such programming device shall be provided for each Owner facility (quantity required shall be as indicated in the Instrumentation and Control System section). The programming device shall include appropriate operation manuals and shall be included in the training requirements. For systems that allow the programming device functions to be implemented in software, running on a laptop computer, the software shall be provided instead of the programming device.

- Devices indicated as requiring a serial interface shall be provided with all accessories required to properly communicate over the serial link. An appropriate cable shall be provided to allow the transmitter serial interface to be connected to a personal computer. Each device shall be tested to demonstrate that the serial devices can communicate with each device. One licensed copy of the diagnostic/interface software shall be provided for each Owner facility. Software shall be capable of running under the WindowsXP/Windows 7 operating system. If the software furnished performs the same functions as the programming device, specified elsewhere, then the programming device shall not be furnished.

2-7.01. Magnetic Flowmeters, Signal Converters, and Accessories.

2-7.01.01. Magnetic Flowmeter. The magnetic flowmeter shall be a completely obstructionless, in-line flowmeter with no constrictions in the flow of fluid through the meter. The meter shall consist of a metallic tube with flanged ends and with grounding rings or grounding electrodes as required by the application. Flange diameter and bolt drilling pattern shall comply with ANSI/ASME B16.5 for line sizes from one-half inch to 24 inches or AWWA C207 for line sizes larger than 24 inches. Flange class ratings and meter maximum pressure ratings shall be compatible with the adjoining piping. Flangeless wafer insert style meters may be used for pipe sizes up to 6 inches [150 mm], where compatible with adjacent piping flanges. Self-cleaning electrodes shall be provided for all meters used for sludge metering. Electrode and liner materials shall be fully compatible with the process fluid as approved by the Engineer and shall comply with the requirements specified in the instrument device schedules. Each meter shall be factory wet flow calibrated to the sensors full flow capacity, at a facility, which is traceable to NIST or other standard acceptable to Engineer, and a copy of the calibration, report shall be submitted as part of the operation and maintenance manual submittal.

The meter shall be capable of standing empty for extended periods of time without damage to any components.

The meter housing shall be of a splash-proof and drip-proof design, unless indicated on the Drawings or in the Instrument Device Schedule to be submersible. Where required to be submersible, the meter housing shall withstand submergence in 30 feet [9.1 m] of water for 48 hours without damage].

Meters shall be manufactured by ABB, Endress+Hauser, Krohne, or Rosemount.

2-7.01.02. Magnetic Flowmeter Signal Converters. Separately mounted, microprocessor-based signal converters shall be provided for the magnetic flowmeters. The signal converters shall include output damping, self-testing, built-in calibration capability, and an "empty pipe zero" contact input. The overall accuracy of the magnetic flowmeter transmitter and signal converter shall be ±0.5 percent of actual flow rate for full-scale settings of 3 to 30 fps [0.91 to 9.14 m/s]. The meter manufacturer shall furnish the signal cable between the converter and the magnetic flowmeter. Signal cable shall be continuous and not spliced between the meter and the signal converter. The signal converter shall be housed in a corrosion-resistant, weatherproof NEMA Type 4X housing and shall be suitable for operation over an ambient temperature range of -30 to +140°F [-34 to +60°C], and relative humidity of 10 to 100 percent. The converter shall have an analog output of 4-20 mA dc. Where indicate on the Drawings or in the Instrument Device Schedule, the converter shall have a pulse output designed to operate a remote seven-digit totalizer and scaled so that the totalizer will operate for 60 days at 100 percent flow without repeating. Scaling factors shall be field adjustable and shall be selected to provide a totalizer multiplier of a power of 10. Transmitters shall contain a local indicator with a minimum four digit LCD type display, scaled to read in engineering units of flow. Transmitters shall have a keypad to access flowmeter configuration and programming.

Magnetic flowmeter systems shall provide zero flow stability by means of automatic zero adjustment of a DC excited metering circuit. Converters shall be capable of bi-directional flow measurement. Signal converters shall be of the same brand as the magnetic flowmeters.

The signal converter shall have a manually reset six-digit totalizer on the face of the enclosure. The signal converter shall be diagnosed and recalibrated with the use of a hand-held communicator/calibrator device. One device shall be furnished for all converters provided by a single manufacturer.

2-7.02. Thermal Dispersion Flowmeters. Each flowmeter shall utilize a thermal dispersion type, explosion-proof, and stainless steel or Hastelloy C sensing element installed in the process piping. The insertion length of the element shall be approximately one-half of the pipe diameter, and all mounting accessories shall be provided. The sensor shall have a 1 inch [25 mm] MNPT mounting connection, and an isolation valve and packing gland that allows insertion and removal while the piping is under pressure.

The electronic transmitter shall be remotely mounted within 30 feet [9.1 m] of the sensor with interconnecting cable provided. The transmitter shall be of the ac-powered type. The unit shall be housed in a NEMA Type 4 enclosure. The transmitter shall have a 4-20 mA dc analog output and a local indicator with a multi-line LCD display calibrated in engineering units of flow. The transmitter shall also display a totalized flow value and the temperature of the process fluid.

Accuracy of the flowmeter shall be 1 percent of full scale over a 20-to-1 operating range. The flowmeter shall be Fluid Components Incorporated “ST Series”; Kurz Instrument “454 Series”, STI Magnetrol Environmental “Model TA2”; Sierra Instruments, Inc. “640S Series Steel-Mass”, Sage Metering, Inc.; or Thermal Instrument Company “Model 62-8/9500”.

2-7.03. Differential Pressure Transmitters. Transmitter shall be an all solid state electronic two-wire device that does not require a direct power connection to the transmitter. Process fluid shall be isolated from the sensing elements by AISI Type 316 stainless steel, Hastelloy-C, ceramic, or cobalt-chromium-nickel alloy diaphragms, and the transducer may use a silicone oil fluid fill. Transmitters shall be enclosed in a NEMA Type 4X housing and shall be suitable for operation at temperatures from 0° to 180°F [-17° to +82°C], with relative humidity of 5 to 100 percent. All parts shall be cadmium- plated carbon steel, stainless steel, or other corrosion-resistant materials. Vents shall be provided on the sides of the diaphragm housing body. Transmitters shall have positive over-range protection. Accuracy of the transmitters shall be 0.075 percent of span, and the effect on accuracy caused by static pressure changes shall be negligible. Transmitter output shall be 4-20 mA dc without the need for external load adjustment. Transmitters shall not be damaged by reverse polarity. Each transmitter shall be provided with a 316 stainless steel, three-valve manifold and a mounting bracket. Manifolds shall have test ports on the instrument side of the valves and shall be Anderson-Greenwood "M4T".

Transmitters shall be factory calibrated to the required range and provided with the manufacturer's standard hand-held communications/calibration device. One device shall be furnished for all transmitters provided by a single manufacturer.

Transmitters tagged on the Drawings or specified to be the indicating type shall be furnished with LCD type digital indicators.

Transmitters will have a turndown ratio of 30:1.

Transmitters shall be Foxboro "Model IDP10 ", Rosemount “Model 2051” without exception.

2-7.04. Ultrasonic Level Transmitters. Each ultrasonic level transmitter shall be a microprocessor-based electronic unit consisting of a sensor assembly, a signal converter/transmitter, and an interconnecting cable. The sensor shall be

encapsulated in a chemical and corrosion-resistant material such as kynar or CPVC, and shall be suitable for operation over a temperature range of -20° to +150°F [-28° to +66°C] and a relative humidity of 10 to 100 percent. The sensor shall be compatible with the process media being measured. Sensors mounted in areas subject to freezing shall be provided with special transducers or protected against icing by heaters. Sensors mounted in direct sunlight shall be provided with sunshades.

The supplier shall coordinate the sensor mounting requirements and furnish drawings complete with dimensions and elevations. General installation requirements are indicated on the Drawings.

The ultrasonic level transmitter shall have automatic compensation for changes in air temperature at the sensor location. If separate temperature sensing probes are provided, they shall be mounted with or adjacent to the ultrasonic sensor, as recommended by the manufacturer. The transmitter shall have a four-digit LCD display scaled to read in engineering units. Digit height shall be approximately 1/2 inch [12 mm]. The transmitter shall be designed to ignore momentary level spikes, false targets, or momentary loss-of-echo. A loss-of-echo condition shall be indicated on the transmitter unit and shall be available as an alarm contact output. The transmitter output shall be an isolated 4-20 mA dc signal linearly proportional to the measured level range, or where indicated on the Drawings or in the Instrument Device Schedule, shall be characterized to be proportional to the tank volume. Calibration parameters shall be entered through a keypad on the unit and shall be stored in nonvolatile EEPROM memory. Accuracy of the transmitted signal shall be ±0.5 percent of the level range.

A sufficient length of sensor-to-transmitter signal cable shall be furnished with the instrument to locate the sensor 25 to 200 feet [7.6 to 61 m] from the signal converter.

For outdoor installation, the signal converter electronics shall be housed in a weatherproof, corrosion-resistant NEMA Type 4 enclosure suitable for wall or pipestand mounting and for operating temperatures of -5° to +122°F [-20° to +50°C] and a relative humidity of 10 to 100 percent. A thermostatically controlled strip heater shall be provided in the signal converter enclosure.

The signal converter shall be of the ac-powered type. The ultrasonic level transmitter shall be Siemens “HydroRanger 200” or Owner approved equal.

2-2.07. Filter Media Level/Turbidity Combination Analyzers. The filter media level/turbidity combination analyzer shall be comprised of an ultrasonic level sensor and an integral turbidity analyzer. Each ultrasonic filter media level transmitter shall be a microprocessor-based electronic unit consisting of a sensor assembly, a signal converter/transmitter, and an interconnecting cable. The sensor shall be encapsulated in a chemical and corrosion-resistant material such

as kynar or CPVC, and shall be suitable for submerged installations, operating over a temperature range of -20° to +150°F, and a relative humidity of 10 to 100 percent. The sensor shall be compatible with the process media being measured. The integral turbidity analyzer shall utilize a 90 degree scattered light, pulsed LED measurement method. The analyzer shall have a turbidity range of 0-50 NTU and repeatability of 1% at 50 NTUs. Where indicated on the drawings or in the Instrument Device Schedule, the sensor shall be an explosion-proof or intrinsically safe design suitable for use in all hazardous areas. Sensors mounted in areas subject to freezing shall be provided with special transducers or protected against icing by heaters. Sensors mounted in direct sunlight shall be provided with sunshades. The supplier shall coordinate the sensor mounting requirements and furnish drawings complete with dimensions and elevations. General installation requirements are indicated on the drawings.

Each sensor shall be powered by a power supply unit. The power supply unit shall have an operating temperature range of -40° to +140°F and shall have three isolated 4-20 mA dc signals linearly proportional to the measured range. The outputs shall be designated for filter media, filter water level, and turbidity. The power supply unit enclosure shall be polycarbonate and be rated NEMA 4X. If the power supply unit is installed outdoors a sunshade shall be provided.

One filter media level/turbidity combination analyzer controller shall be provided for the purposes of configuring the sensors. The controller shall have a four-digit LCD display scaled to read in engineering units. Digit height shall be approximately 1/2 inch [12 mm]. The transmitter shall be designed to ignore momentary level spikes, false targets, or momentary loss-of-echo. A loss-of-echo condition shall be indicated on the transmitter unit and shall be available as an alarm contact output. The transmitter shall have three isolated 4-20 mA dc outputs with signal linearly proportional to the measured range. Calibration parameters shall be entered through a keypad on the unit and shall be stored in nonvolatile EEPROM memory.

The controller shall contain four independently adjustable level alarm contact outputs. Contacts shall be single-pole, double-throw rated not less than 5 amperes at 120 V ac.

A sufficient length of sensor-to-transmitter signal cable shall be furnished with the instrument to locate the sensor 25 to 200 feet [7.6 to 61 m] from the signal converter.

For indoor installation, the power supply unit and/or controller shall be housed in a NEMA Type 12 enclosure suitable for wall or pipestand mounting and for operating temperatures of +30° to +120°F.

For outdoor installation, the power supply unit shall be installed with a sunshade. The controller shall be housed in a weatherproof, corrosion-resistant NEMA Type

4 enclosure suitable for wall or pipestand mounting and for operating temperatures of -15° to +125°F and a relative humidity of 10 to 100 percent. A thermostatically controlled strip heater shall be provided in the signal converter enclosure.

The signal converter shall be of the ac-powered type. The ultrasonic sludge level transmitter shall be an Entech Design Inc. Echo Smart™ without exception.

2-7.05. Low Range Turbidity Analyzers. Analyzers shall operate with a continuous flow of sample through the sample cell to drain. A strong light beam shall be passed through the sample and the amount of light scattered by the turbidity particles shall be measured. The analyzer shall utilize an US EPA approved method of turbidity analysis.

The sample cell shall utilize a lamp operated below rated voltage to extend operating life and a silicon photocell that detects the reflected light intensity. Sample flow rate shall be approximately 0.2 gpm. The sample cell shall be constructed of all corrosion-resistant materials and shall have an integral bubble trap. Accessories shall be provided to allow for a field calibration check of the analyzer. The secondary calibration standard shall be an optical glass calibration cube that has a known NTU value. One secondary calibration device shall be provided for each four analyzers. A one-year supply of consumables, including a primary standard formazin calibration kit, shall be provided with each analyzer.

The analyzer shall have a master indicator mounted near the sample cell and connected to the sample cell with a special cable. The unit shall have an auto-ranging three or four-digit display that indicates turbidity within a range of 0.001 to 100 nephelometric turbidity units (NTU). The master indicator shall be housed in a NEMA Type 12 moisture-resistant enclosure and shall be of the ac-powered type.

The master indicator shall have a linear 4-20 mA dc output signal that corresponds to a pre-selected turbidity range (typically 0 to 10 NTU).

The turbidity analyzer shall be Hach Chemical Company 1720E.

2-7.06. Pressure Gauges. A pressure gauge shall be furnished and installed in the discharge piping of each blower and a vacuum gauge in the suction piping of each blower at the locations indicated on the drawings.

Pressure gauges shall conform to ANSI B40.1 and shall be of the indicating dial type with C-type phosphor bronze bourdon tube, stainless steel rotary geared movement, phenolic or polypropylene open front turret case, adjustable pointer, stainless steel or phenolic or polypropylene ring, and acrylic plastic or shatterproof glass window. All gauges shall be ANSI Accuracy Grade A.

Gauge dial shall be 4-1/2 inch size with white background and black markings and shall have dual English and metric indication. The English units of measurement shall be pounds per square inch and the metric units shall be kilopascals. The range for each discharge pressure gauge shall be from 0 to 15 psig. The range for each vacuum gauge shall be from 30 inches Hg vacuum to 0. Pointer travel shall be not less than 200 degrees nor more than 270 degrees.

All gauges shall be provided with 1/2 inch NPT connections. Each gauge shall be provided with a threaded end ball type shutoff valve as specified in the Miscellaneous Ball Valves Section (15091).

All gauges shall be installed in the vertical, upright position. Thread sealer, suitable for use with the associated process, shall be used in the assembly of threaded connections. All connections shall be free from leaks. Lines shall be purged of trapped air at gauge locations prior to installation of the gauge or diaphragm seal.

Each gauge shall be provided with all required mounting hardware to securely mount the unit according to the mounting.

Unless otherwise indicated, mounting and installation hardware shall be Type 316L stainless steel.

Pressure gauges shall be Ashcroft "1279 Duragauge", or equal.

2-7.07. Pressure Switch. A differential pressure switch shall be furnished and installed across each filter silencer. The switch shall have an adjustable range from 0 to 10 inches water column vacuum. The pressure switch shall be used for annunciation of high pressure across the filter on the blower control panel.

Each switch shall be diaphragm actuated type, field adjustable, have a trip point repeatability of better than 1 percent of actual pressure, over-range protection to maximum process line pressure, and weatherproof housings. All switches shall be provided with 1/2 inch NPT connections. Each gauge shall be provided with a threaded end ball type shutoff valve as specified in the Miscellaneous Ball Valves Section (15091).

Switch contacts shall be SPDT and shall close for alarm annunciation and the contact rating shall be 10 amperes at 120 volts ac.

All switches shall be installed in the vertical, upright position. Thread sealer, suitable for use with the associated process, shall be used in the assembly of threaded connections. All connections shall be free from leaks. Lines shall be

purged of trapped air at switch locations prior to installation of the switch or diaphragm seal.
Switches shall be manufactured by Static-O-Ring Company, Mercoid Control, Barksdale, or Owner approved equal.

2-8. UNITERRUPPTABLE POWER SUPPLY (UPS). A UPS shall be provided and installed in each filter building to provide a minimum of 20 minutes of backup power to the FCS in the event of normal power failure. Normal power failure shall be monitored by the FMCP and each FCC PLC and shall be displayed as an alarm on the OIU and available to plant SCADA. The UPS shall be provided with a manual bypass switch (make-before-break). All equipment, enclosures, and accessories shall be designed, assembled and connected in accordance with the requirements of these Specifications and the Drawings. Enclosures shall be NEMA Type 1.

2-8.01. System Design Requirements. The UPS system(s) have the following capacity and rated for the following voltages.

Tag number	FB1-UPS-1	FB2-UPS-2
Capacity	10 kW	10 kW
Input voltage at 60 Hz, +10 to -15 percent	120/240 Volt	120/240 Volt
Output voltage at 60 Hz single phase	120/240 Volt	120/240 Volt
Minimum Back up time required (minutes)	20	20

The UPS system(s) shall ratings and features.

Capacity, peak (minimum)	150 percent of continuous power rating for 10 seconds.
Frequency stability, battery mode	+ 0.5 percent.
Harmonic distortion (max)	5 percent.
Efficiency, overall on-line	75 percent minimum.
Operating temperature-humidity	0 to 40°C; 0 to 95 percent relative humidity, non-condensing.
Recharge time (max)	4 hours.

2-8.02. Acceptable Manufacturers. All systems supplied under this contract shall be of the same manufacturer. The uninterruptible power supply systems shall be as manufactured by MGE, Powerware, Liebert, or Owner approved equal.

2-8.03. Terminal Blocks. Wiring for external circuits, including all alarm contacts, shall be brought to grouped terminal blocks located for convenient connection. Provisions shall include suitable marked terminal blocks for connection of No. 12 AWG control wiring and for input/output power conductors as sized on the Drawings. Terminal designations shall agree with manufacturer's wiring diagram.

2-8.04. Battery Charger/Rectifier and Batteries. The battery charger and the rectifier shall have the following characteristics:

a. The rectifier shall convert the incoming ac power to dc power to energize the static inverter.

b. The battery charger shall supply a float current to the batteries to maintain them at a fully charged state while incoming power is being provided. The charging voltage shall be temperature-compensated over the entire operating temperature range to avoid overcharging or undercharging the batteries. The battery charger shall automatically apply an elevated voltage (equalization charge) to the batteries if and as required by the battery manufacturer.

c. The battery shall provide backup power for the UPS when incoming commercial power is not available. The battery cells shall be valve-regulated or gelled-electrolyte lead-acid type. The battery shall be integral to the UPS. Battery shall have capacity to supply the dc power to the UPS while operating at full load for a period of not less than as required at 25°C. The battery shall have an expected life of 5 years and shall carry a one-year warranty.

2-8.05. Static Inverter. The solid-state inverter shall employ silicon-controlled rectifiers (SCRs) and other devices for converting direct current power to essentially sinusoidal alternating current power. The static inverter shall conform to the following characteristics and requirements.

a. Automatic Synchronization: During normal operation, the inverter shall provide power to critical loads. The utility electric system will act as an alternate supply. Inverter equipment shall include stable solid-state devices designed to automatically maintain inverter output in phase with the utility electric system.

b. Overload, Short Circuit, and Load Loss: The inverter shall have

input and output fuses and other equipment necessary to protect

from overload, short circuit, and 100 percent loss of load. Current limiting features shall also be provided.

c. Loss of Supply Voltages: The inverter shall include protective devices to prevent damage resulting from excursion, loss, or restoration of its synchronization voltage and its dc input voltage and any inrush current occurrences associated with such conditions.

2-8.06. Static Transfer Switch. The static transfer switch shall use SCRs and other static devices to automatically transfer loads from the off-line (bypass) to the on-line operating condition and back again. In off-line mode, the static transfer switch shall connect clean filtered power to the load. The primary ac line shall be monitored and the load shall be transferred to the inverter if the voltage drops below 85 percent. During on-line mode operation, any inverter problem shall cause an instantaneous transfer to the bypass mode.

2-8.07. Maintenance Bypass Switch. A maintenance bypass switch shall be provided so maintenance can be performed on the UPS without disrupting control system operation. The bypass switch shall be independent of the UPS electronics. The bypass switch shall be external to the UPS.

2-8.08. Output Receptacle Panel. An output receptacle panel with a variety of NEMA 5, 6, L5, and/or L6 receptacles shall be furnished on the rear of the UPS and connected to the distribution panel furnished under the Electrical section. The FCSS shall coordinate the size, number, and type of the receptacles with the equipment as indicated on the Drawings.

2-8.09. Control, Indication, and Alarm. Controls, indicators and alarms shall be provided as a part of the UPS. Control buttons and LED indicators shall be provided on the UPS panel and shall be permanently labeled.

2-8.09.01. Controls. A dc battery circuit breaker, a mode selector switch, and system "ON" and "OFF" buttons shall be provided.

2-8.09.02. Indication. A digital display for selection and indication of input, output, and battery voltages shall be provided.

LED indicators for inverter ready, frequency, battery voltage, overload, over temperature, and impending shutdown conditions shall be provided.

LED indicators for bypass ready, bypass mode, and on-line mode shall be provided.

2-8.09.03. Remote Alarms. The UPS shall have the following provisions for remote alarms.
2-8.09.03.01. General Alarm. For units 5 kW and larger, a common, isolated, dry, alarm contact rated 3 amperes at 120 volts ac shall be provided with the UPS for indication of general alarm. The contact shall close under any UPS fault condition.

2-8.09.03.02. Power Failure. For units 5 kW and larger, an isolated, dry, alarm contact rated 3 amperes at 120 volts ac shall be provided with the UPS for remote indication of power failure. The contact shall open upon loss of commercial power to the UPS. For units smaller than 5 kW, a relay shall be provided and connected across the incoming power as the means of providing a contact for indication of a power failure condition.

2-8.09.03.03. Battery Replacement/Failure Alarm. For units 5 kW and larger, an isolated, dry, alarm contact rated 3 amperes at 120 volts ac shall be provided with the UPS for remote indication of battery replacement/failure. The contact shall open when battery life has been exceeded or battery has failed. For units smaller than 5 kW, battery replacement/failure shall be part of the general alarm.

2-9. NETWORK SYSTEMS. The network system shall provide communications between the PLCs, operator workstations, and existing plant SCADA system.

Ethernet network hardware shall be provided as specified in location as shown on the Drawings. All specified functionality of provided Ethernet network equipment shall adhere to the IEEE 802 standards. Ethernet Hubs will not be accepted for network systems. Ethernet switches shall be provided to connect multiple network segments together, selectively forwarding traffic between the segments.

2-9.01. SCADA Network Ethernet Switches. Each switch shall include the following functionality:

a. Switch shall support the quantity of 10/100/1000BaseTX ports and 10BaseFL/100BaseFX/1000BaseLX Fiber ports to meet the functionality indicated in this specification and as shown on the Drawings. Switches shall have a minimum of (24) twenty four 10/100/1000Base-T, RJ-45 ports. A minimum of 20% spare ports shall be provided for the installed system.
b. Each switch connection shall automatically sense the network speed of the devices to which it is connected.
c. Stacked switches shall have identical IOS and features set on all units.
d. Path Redundancy: IEEE 802.1w Rapid Spanning Tree Protocol.
e. Prioritization: IEEE 802.1p QoS Support.

f. Support for Optional Redundant Power Supply as required on Drawings.

g. Management: Fully Managed Switch with support for SNMP v.2., and port mirroring.

h. All necessary memory upgrades, software feature sets, and cables needed for proper operation of these switches shall be furnished with each switch.

i. Environmental: Suitable for installation in industrial environments. Operating Temperature Range: 0 to 40C.

Switches shall be Cisco "Catalyst 3750 Series" utilizing Single SFP modules for fiber connections without exception.

2-9.01.01. Support. FCSS shall provide Cisco SMARTnet service for all Cisco switches for a one year contract term. Contract shall be made in the Owner's name. The Owner shall have the option to renew or extend the service contract at the end of contract term.

2-9.01.02. Industrial Device Panel Network Ethernet Switches. Each switch mounted in process areas shall include the following functionality:

a. Ports: Switch shall support the quantity of 10/100BaseTX ports and 100BaseFX fiber ports to meet the functionality indicated on the Drawings, and a minimum of 20% spare auto-negotiating 10/100Base-T, RJ-45 ports. A minimum of four UTP ports shall be provided.

b. Each switch connection shall automatically sense the network speed of the devices to which it is connected.

c. Capable of ring-based media redundancy with 30 ms recovery time.

d. Path Redundancy: IEEE 802.1w Rapid Spanning Tree Protocol.

e. Prioritization: IEEE 802.1p QoS Support.

f. Network Segregation: Port VLAN.

g. Management: SNMPv3 and Browser-based management shall be supported.

h. IGMP snooping supported.

i. LED indication of the link activity for each port.

j. Environmental: Suitable for installation in industrial environments. Operating Temperature Range: 0 to 60C. Optional -40 to 60C rating availability.

k. Redundant 24 VDC power supply inputs

l. Conformal coating option for use in hazardous environments.

m. Mounting: DIN-rail mounted suitable for panel installation.

n. All necessary memory upgrades, software feature sets, and cables needed for proper operation of these switches shall be furnished with each switch.

Switches shall be N-Tron 104TX series without exception.

2-9.01.03. Ethernet Connectors. Ethernet wiring connectors shall be RJ-45 male modular plug connectors.

2-9.01.03.01. Standard RJ45 Connectors. Standard connectors shall be polycarbonate, clear connectors. Connectors shall conform to RJ-45 and ISO 8877 standards. Contacts shall be gold plated with a 0.5A current rating and a -25º to 60º C temperature rating. Connectors shall accept unshielded Cat-5e or Cat-6, AWG 24, solid conductor cable.

2-9.01.03.02. Industrial RJ45 Connectors. Industrial connectors shall be an eight position industrial connector for use in manufacturing environments. Connectors shall meet the TIA/EIA-568-B.2 standard for Cat-5e or Cat-6 requirements. The connector shall incorporate an IP67 rated seal and shall provide protection from dust and temporary immersion in water. A tethered protective cap shall be provided. The connector shall accept a non-shielded Cat-5e or Cat-6 solid twisted pair cable. Connectors shall be Panduit Industrial TX5e, or Owner approved equal.

2-9.01.03.03. Industrial RJ45 Receptacles. Industrial receptacles shall be an eight position industrial, panel mounted pass through receptacle. Receptacles shall meet the TIA/EIA-568-B.2 standard for Cat-5e or Cat-6 requirements. The receptacle shall incorporate an IP67 rated seal and shall provide protection from dust and temporary immersion in water. A tethered protective cap shall be provided. The receptacle shall accept a non-shielded Cat-5e or Cat-6 solid twisted pair cable. Receptacles shall be Panduit Industrial TX5e, or Owner approved equal.

2-10. FIBER OPTIC TERMINATION CABINETS (FOTC). Fiber optic termination cabinets (also commonly referred to as patch panels) shall be furnished to terminate fibers at the Fiber Optic Modules, and any other data highway attached equipment (FB1-FPP-001-I, FB2-FPP-001-I, and BB-FPP-001-I). The cabinets shall meet the following requirements:

a. The termination cabinet shall be the wall rack mounted type, having provisions for terminating multiple fiber optic cables. Splice trays, strain

relief cable attachment points, fiber organizers and bend radius hardware shall be furnished with each termination cabinet.

b. Panel size shall be suited to the number of fibers to be terminated within the cabinet. Bayonet/flanged couplings shall be furnished and mounted for each fiber to be terminated.

c. Fiber terminations shall be spliced to pigtail cables (specified below) having ST connectors for multimode cables and SC connectors for singlemode cables. The pigtails shall be terminated in an orderly method.

Fiber Optic Termination Cabinets shall be OFS Technologies “Fiber Interconnect Unit”, Corning Cable Systems “WCH Series”, or equal.

2-11. NETWORK CABLING. Individual network equipment and related devices shall be coordinated with items provided in the following sections. Contractor shall tag all cabling with source/destination information per 11067.

2-11.01. Ethernet Unshielded Twisted Pair (UTP) Cable. Ethernet cables and connectors shall be provided for a complete and working system, and/or as shown on the Drawings. Cable for Ethernet wiring shall be UTP Cat-5e or Cat-6 cable. Cable shall be Cat-5e for network speeds up to 100 MHz, and Cat-6 for network speeds greater than 100 MHz. Jacket color coding for cables shall be as follows:

a.	Standard Cat-5e PLC Networks.	Blue
b.	Standard Cat-5e Enterprise Networks.	White
c.	Standard Cat-6.	Yellow
d.	Crossover cables.	Red

Cable shall meet the following characteristics:

2-11.01.01. Category 5e UTP Cable. Cat-5e cable shall meet the following requirements:

a. 24 AWG

b. 4 pair solid conductor

c. 100 Ohm impedance

d. 1-100 MHz frequency range

e. Min attenuation 22 dB

f. 100 Ohm impedance

g. Min NEXT 35.3dB/100MHz
h. Min PS-NEXT 32.3dB/100MHz
i. Min ELFEXT 23.8dB/100MHz
j. Min PS-ELFEXT 20.8dB/100MHz
k. Min return loss 20.1 dB/100 MHz
l. Max delay skew 45 ns
m. Max propagation delay 540 ns

Plenum rated cable shall have FEP insulation jacketing and FEP insulation for conductors. Non plenum rated cable shall have PVC insulation jacketing and polyethylene insulation for conductors. Cat-5e cable shall be Belden 1583A (Non-plenum) and 1585A (plenum) or Owner approved equal.

2-11.01.02. Category 6 UTP Cable. Cat-6 cable shall meet the following requirements:

a. 24 AWG
b. 4 pair solid strand FEP Teflon insulation
c. 100 Ohm impedance
d. 1-250 MHz frequency range
e. Min attenuation 19.9 Db
f. 100 Ohm impedance
g. Min NEXT 44.3dB/100MHz
h. Min PS-NEXT 42.3dB/100MHz
i. Min ELFEXT 27.8dB/100MHz
j. Min PS-ELFEXT 24.8dB/100MHz
k. Min return loss 20.1 dB/100 MHz
l. Max delay skew 45 ns
m. Max propagation delay 540 ns

Plenum rated cable shall have FEP insulation jacketing and FEP insulation for conductors. Non plenum rated cable shall have PVC insulation jacketing and polyethylene insulation for conductors. Cat-6 cable shall be Belden 1872 or Owner approved equal.

2-11.01.03. Ethernet Patch Cables. All Ethernet patch cables shall be premade, stranded copper, no exceptions. Ethernet patch cables shall be tested prior to installation. Pre-wired and terminated patch cables with RJ-45 connectors and

lever protecting boot shall be furnished for all connections to computers, network equipment, and controller equipment except where physical conditions (i.e. length over 12 ft. or conduit size) require unterminated wire to be installed. Patch cables shall be Cat-5e for networks speeds up to 100 MHz, and Cat-6 for networks speeds greater than 100 MHz and shall meet the requirements of Cat-5e and Cat-6 cable specified in this section. Straight through cables shall be wired using the T568-B standard for both connectors as shown in Section 3-1.01. Crossover cables shall be wired using the T568-A standard for one connector and the T568-B standard for the opposite end. All Ethernet solid conductor patch cables shall be punched into Ethernet patch panel.

2-11.02. FIBER OPTIC CABLE. All fiber optic, fiber optic hardware and accessories shall be designed, assembled and connected in accordance with the requirements of these specification and drawings. The fiber optic cable must meet all of the requirements of the following paragraphs.

a. The fiber optic cable must meet the following requirements of the National Electrical Code (NEC) Section 770.
b. Riser Applications – Applicable Flame Test UL 1666.
c. Finished cables shall conform to the applicable performance requirements of Table 8-6 and 8-7 in the Insulated Cable Engineers Association, Inc. (ICEA) Standard for Fiber Optic Premises Distribution Cable (ICEA S-83-596).
d. Every fiber in the cable must be usable and meet required specifications.
e. All optical fibers shall be sufficiently free of surface imperfections and inclusions to meet the optical, mechanical, and environmental requirements of this specification.
f. Each optical fiber shall consist of a doped silica core surrounded by a concentric glass cladding. The fiber shall be a matched clad design.
g. All optical fibers shall be proof tested by the fiber manufacturer at a minimum load of 100 kpsi.
h. All optical fibers shall be 100 percent attenuation tested. The attenuation shall be measured at 850 nm, and 1310 nm for multimode fibers. The attenuation shall be measured at 1310 nm and 1550 nm for single-mode fibers. The manufacturer shall store these values for a minimum of 5 years. These values shall be available upon request.
i. The storage temperature range for the cable on the original shipping reel shall be –40°C to +70°C. The operating temperature range shall be –40°C to +70°C. Testing shall be in accordance with FOTP-3.
j. The attenuation specification shall be a maximum attenuation for each fiber at 23 $\pm$ 5°C.
k. Required Fiber Grade: Maximum Fiber Attenuation at 1310 nm shall

be 3.5 dB/km.

l. Optical fibers shall be placed inside a loose buffer tube. The nominal outer diameter of the buffer tube shall be 3.0 mm.
m. The cable shall be a hybrid type containing 24 single mode fibers (12-pair) and 12 pair of multimode. Each buffer tube shall contain up to 12 fibers.
n. The fibers shall not adhere to the inside of the buffer tube.
o. Each fiber shall be distinguishable from others by means of color coding in accordance with TIA/EIA-598-A, “Optical Fiber Cable Color Coding.”
p. The fibers shall be colored with ultraviolet (UV) curable inks.
q. Buffer tubes containing fibers shall also be color coded with distinct and recognizable colors in accordance with TIA/EIA-598-A, “Optical Fiber Cable Color Coding.”
r. In buffer tubes containing multiple fibers, the colors shall be stable during temperature cycling and not subject to fading or smearing onto each other. Colors shall not cause fibers to stick together.
s. The buffer tubes shall be resistant to kinking.
t. The cable jacket color shall be black.
u. Fibers may be included in the cable core to lend symmetry to the cable cross-section where needed. Fibers shall be placed so that they do not interrupt the consecutive positions of the buffer tubes. In dual layer cables, any fillers shall be placed in the inner layer. Fillers shall be nominally 3.0 nm in outer diameter.
v. The jacket shall be continuous, free from pinholes, splits, blisters, or other imperfections. The jacket shall have a consistent, uniform thickness; jackets extruded under high pressure are not acceptable. The jacket shall be smooth, as consistent with the best commercial practice. The jacket shall provide the cable with a tough, flexible, protective coating, able to withstand the stresses expected in normal installation and service.
w. The outer cable jacket shall be marked with the manufacturer’s name or UL file number, date of manufacture, fiber type, flame rating, UL symbol, and sequential length markings every two feet (e.g. “62.5/125 MICRON – TYPE OFNR – (UL) 00001 Feet”). The print color shall be white.
x. The cable shall be all-dielectric.
y. The cable shall be gel-free.
z. Flammability – All cables shall comply with the requirements of the 1996 NEC Article 770. All cables shall pass UL 1666.

Fiber optic cable shall be as manufactured by Corning Cable Systems, Belden, Commscope, TE Connectivity, or Owner approved equal.

2-11.02.01. Singlemode Fiber. Singlemode fiber optic cable shall meet the following requirements:

a. The dispersion unshifted single-mode fiber utilized in the cable specified herein shall conform to the specifications herein.

b. Cladding Diameter: 125.0 + 1.0 μm.

c. Core-to-Cladding Offset: < 0.8 μm.

d. Cladding Non-Circuladty: < 1.0%.

e. Coating Diameter: 245 ± 10 μm.

f. Colored Fiber Diameter: nominal 900 μm.

g. Attenuation Uniformity: No point discontinuity greater than 0. 1 0 dB at either 1310 nm or 1550 nm.

h. Attenuation at the Water Peak: The attenuation at 1383 ± 3 nm shall not exceed 2.1 dB/km.

i. Cutoff Wavelength: The cabled fiber cutoff wavelength(λccf,) shall be < 1260 nm.

j. Mode-Field Diameter: 9.30±0.50 μm at 1310 nm 10.50 ± 1.00 micrometers at 1550 nm.

k. Zero Dispersion Wavelength (λo): 1301.5 nm < λo < 1321.5 nm.

l. Zero Dispersion Slope (So): < 0.092 ps/(nm^2 *km).

m. Fiber Polarization Mode Dispersion (PMD): < 0.5 ps/(sq. km)

2-3.01. Multimode Fiber. Multimode fiber shall be 50/125 μm core diameter cable. 50 μm core diameter multimode fiber optic cable shall meet the following requirements:

a. The multimode fiber utilized in the cable specified herein shall meet EIA/TIA-492AAAA-1989, “Detail Specification for 50 m Core Diameter/125 m Cladding Diameter Class Ia Multimode, Graded Index Optical Waveguide Fibers.”

b. Core diameter: 50 ± 3.0 micrometers.

c. Cladding diameter: 125.0 ± 2.0 micrometers.

d. Core-to-Cladding Offset: ≤ 3.0 micrometers.

e. Cladding non-circularity: ≤ 2.0%. Defined as: [1-(min. cladding dia. + max. cladding dia.)] X 100.

f. Core non-circularity: ≤ 6.0%. Defined as: [1-(min. core dia. + max.

core dia.)] X 100.

g. Coating Diameter: 245 ± 10 micrometers.

h. Graded index.

i. Numerical Aperture: 0.275 ± 0.015.

j. Attenuation Uniformity: There shall be no point discontinuities greater than 0.2 dB at either 850 nm or 1300 nm.

k. Minimum Bandwidth Requirement shall be 500/500 MHz-km at 850/1300 nm.

2-11.03. Fiber optic cable connectors. All optical fibers connected network switches shall be terminated with connectors that are type LC for singlemode cable and compatible with SFP modules on the switch and type SC for connection on the fiber optic patch panel.

2-11.03.01. Ceramic Connectors. All optical fibers connected to the patch panel shall be ceramic connectors shall be provided to terminate each fiber in the cable. Connector style, ST, SC, or other, shall be coordinated with the patch panels and field devices that will interface directly with the cable. Connectors shall be compatible with the supplied cable. Connector loss shall be no greater than 0.3 dB. Loss measurement shall be performed at the time of splicing and documentation shall be furnished for each termination. Connectors shall be Corning Cable Systems Connectors, or Owner approved equal.

2-11.03.02. Fiber Optic Jumper Cables. Fiber optic jumper cables shall be furnished and installed for equipment interfacing and between termination cabinets. The jumpers shall meet the following requirements:

a. The jumpers shall be for singlemode fiber. They shall be tight-buffered and be protected by Kevlar-type strength material.

b. The jumpers shall be supplied with connectors on each end. Connector types (ST, SC, LC, etc.) shall be matched to the equipment provided. Jumpers shall be sized to provide a single connection between the fiber optic hardware being connected.

2-11.04. PLC Communication Media. FCSS shall provide all necessary cabling for the PLC communications network and PLC remote I/O communications network. Communications cables shall meet the requirements of the manufacturers of the PLCs and communications modules. Existing PLCs in the filter buildings, and the DAF building are Square D SY/MAX.

2-11.05. Ethernet Cable Test Equipment . One hand-held network cable tester

that is compatible with the provided network cabling shall be provided. FCSS shall provide the tester calibration certificate and the tester to the Owner/Engineer prior to testing. The cable tester shall check for open pairs, shorted pairs, crossed pairs, reversed pairs and split pairs for faults up to 100 m. Tester shall be Black Box "Model SOHO Plus Tester", Fluke MicroScanner2 Pro, or Owner approved equal.

PART 3 - EXECUTION

3-1. INSTALLATION. The FCS including FSMC, all FCCs, valves, actuators, instrumentation and accessory equipment shall be installed in accordance with the manufacturer's instructions. Following completion of installation and the Operational Readiness Test, one (1) set of the marked up drawings shall be provided to the Engineer; the other set shall be retained by the FCSS for incorporation of the mark-ups into final as-built documentation.

All work shall be executed in full compliance with codes, ordinances, regulations and local rulings. Should any work be performed contrary to said codes, ordinances, regulations or local rulings, the Contractor shall bear full responsibility for such violations and assume all costs arising there from.

All piping to and from field instrumentation shall be provided with necessary unions, test tees, couplings, adaptors and shut-off valves.

The FCSS, acting through the General Contractor, shall coordinate the installation, the placing and location of system components, and their connections to the process equipment panels, cabinets and devices, subject to the Engineer's approval. The General Contractor shall schedule and coordinate his work under this Section with that of the mechanical work specified under applicable Sections of Division 15 and electrical work specified under applicable Sections of Division 16.

3-2. NETWORK INSTALLATION REQUIREMENTS. Networks and network equipment shall be installed and tested in accordance with the following requirements.

3-2.01. Network Configuration. The FCSS shall fully configure all network devices. All device selections shall be fully coordinated with the Owner to ensure compatibility with existing systems and standards.

3-2.01.01. Ethernet Switches. The FCSS shall fully configure all Ethernet switches. The following shall be configured:

a. Unused ports shall be disabled for security purposes.

b. Spanning Tree or other appropriate redundancy scheme shall be configured for all redundant links. Trunking or other bandwidth sharing redundancy schemes shall be utilized where available to minimize switching times, and increase available bandwidth.

c. Management Password Security

3-2.01.02. Network Configuration Report. The FCSS shall provide a configuration report to the Owner detailing all connections, addresses, and port assignments

3-2.01.03. Management Software. Management software shall be fully configured for all network devices provided.

3-2.02. Network Testing. After each network has been installed, a technical representative of FCSS shall test the network and shall provide a written report for each test.

3-2.02.01. Field Testing. After each network has been installed, a technical representative of FCSS shall test the network and shall provide a written report for each test. Specific testing requirements are described in the individual network specification sections.

3-2.02.02. Systems Check. A technical representative of FCSS shall participate in the checkout of network systems.

3-2.02.02.01. Test Equipment. Unless specified otherwise, all test equipment for the calibration and checking of system components shall be provided by FCSS for the duration of the testing work and this test equipment will remain the property of FCSS.

3-2.02.02.02. Ethernet Network Minimum Test Requirements. The following minimum tests are to be performed by the FCSS:

a. Verify Link Integrity Status LED is lit on both sides of each link
b. Verify proper operation and failover of each redundant component and redundant link.
c. Verify alarming of each link failure.
d. Verify bandwidth Usage
e. Perform end-to-end test from RJ-45 connector on each Cat5e and Cat6 cable.

3-2.02.02.03. Ethernet Network Test Reports. Upon completion and testing of the installed Ethernet network, the FCSS shall submit test reports to the Engineer in printed form. Test reports are to show all test results performed by the FCSS for each port and piece of equipment. Date of calibration of the test equipment is also to be provided.

3-2.03. Network Troubleshooting. It is the FCSS responsibility to provide trouble-free and reliable networks. The FCSS shall employ any means necessary to ensure operational networks. The System Supplier shall obtain any needed test equipment, including but not limited to time-domain reflectometers, protocol analyzers and network sniffers, to troubleshoot any problems. The FCSS shall utilize the services of a trained and certified Network Engineer that is regularly involved in troubleshooting network problems, in the event that operational or reliability problems exist. Acceptable certifications include Cisco CCNP, Cisco CCIE, or Network Professional Association Certified Network Professional (CNP).

3-2.04. Cable Installation. The FCSS shall be responsible for the coordination of the installation of all cable furnished hereunder. The System Supplier shall be responsible for the termination of all cable furnished hereunder.

3-2.04.01. Cable Damage. If the cable becomes damaged during installation, the Contractor shall stop work and notify the Engineer immediately. The Owner and Engineer will decide whether to replace the entire reel of cable or to install a splice at the damaged section. If the Owner decides to replace the entire reel of cable, the Contractor shall begin the installation at the last designated splice point. The damaged cable between these points shall be removed, coiled, tagged, and given to the Owner. Installation of new cable to replace damaged cable shall not be a basis of extra payment or contract completion time. In addition to installation of the new cable, the Contractor shall reimburse the Owner for the entire cost of the replacement reel of cable. This cost will be withheld from the contract price. If the Owner decides to install a splice at the damaged point, and the cable is damaged a second time, the entire reel of damaged cable (and all subsequent damaged reels) shall be replaced with new reels at the Contractor's expense.

3-2.04.02. Ethernet Cable Installation. Straight through cables shall be wired using the T568-B standard for both connectors as shown in the table below (connector pin numbers are left to right with the clip down). Crossover cables shall be wired using the T568-A standard for one connector and the T568B standard for the opposite end as shown in the table below.

Connector Pin	568A Wiring Conductor	568B Wiring Conductor
1	White/Green	White/Orange
2	Green	Orange

3 6	White/Orange Orange	White/Green Green
4 5	Blue White/Blue	Blue White/Blue
7 8	White/Brown Brown	White/Brown Brown

3-2.04.03. Fiber Optic Cable Installation. The cable manufacturer shall provide installation procedures and technical support concerning the items contained in this specification. Fiber optic cable installation shall meet the following requirements:

a. All fiber optic cable shall be installed, terminated, and tested by the FCSS or his fiber subcontractor as specified above.

b. In pulling the cable, strain-release, or other tension limiting devices shall be used to limit the pull tension to less than 600 lbs.

c. Minimum bend radius restrictions shall be satisfied both during and after cable installation.

d. Horizontal, unsupported cable runs shall be supported at continuous distances of 5 feet or less.

e. All conduit and cabinet entrances shall be sealed with RTV or other re-enterable sealant material to prevent ingress of water, dust or other foreign materials.

f. Cable routing within occupied office areas shall conform to Federal, State, and local electrical and fire codes.

g. Any non-terminating (field) splices shall be documented as to the physical location and cable meter mark (prior to stripping). Field splices shall be OTDR-tested and documented prior to final cable acceptance testing.

h. Fiber optic cables shall be installed in accordance with NECA 301-2004, Installing And Testing Fiber Optic Cables.

3-3. FIELD QUALITY CONTROL.

3-3.01. Instrumentation & Controls Workshops. The FCSS shall schedule and lead the following I&C Workshops to be held at the Owner's facilities. Contractor shall schedule all meetings three weeks in advance to insure availability of all personnel.

- One 8-hour workshops with the Owner. The workshops shall be conducted prior to commencement of the PLC, OUI, and HMI programming and shall review all of the Owner's programming criteria and

panel and wiring methods. FCSS shall provide programming functional descriptions and sample OUI screens. FCSS shall use this workshop to obtain clarification of configuration work and to coordinate with other equipment suppliers providing equipment connected and controlled through the SCADA network.

- One 8-hour 30% Project Programming Coordination Meeting with Owner and or Owner's Representative, Contractor, and other equipment suppliers providing equipment connected and controlled through the SCADA network. This meeting shall be used to coordinate the filter control system programming, to show progress, demonstrate conformance with configuration standards, and obtain Owner's comments.

- One 8-hour 60% Project Programming Coordination Meeting with Owner and or Owner's Representative, Contractor, and other equipment suppliers providing equipment connected and controlled through the SCADA network. This meeting shall be used to coordinate the filter control system programming, to show progress, demonstrate conformance with configuration standards, and obtain Owner's comments.

- One 8-hour 90% Project Programming Coordination Meeting with Owner and or Owner's Representative, Contractor, and other equipment suppliers providing equipment connected and controlled through the SCADA network. This meeting shall be used to coordinate the filter control system programming, to show progress, demonstrate conformance with configuration standards, and obtain Owner's comments.

3-3.02. Installation Check. An experienced, competent, and authorized representative of the manufacturer shall visit the worksite and inspect, check, adjust if necessary, and approve the equipment installation. In each case, the manufacturer's representative shall be present when the equipment is placed in operation in accordance with Startup Requirements section and shall revisit the jobsite as often as necessary until all trouble is corrected and the equipment installation and operation are satisfactory in the opinion of Engineer. All costs for these services shall be included in the contract price. FCSS shall include a minimum of 10 day(s) and 2 trip(s) to the site.

3-3.03. Installation Supervision. The FCSS shall furnish a qualified field installation supervisor as needed during the equipment installation. FCSS installation supervisor shall observe, instruct, guide, and direct the installing contractor's erection or installation procedures. All costs for these services shall be included in the contract price. FCSS shall include a minimum of 10 day(s) and 2 trip(s) to the site.

3-4. GENERAL TESTING REQUIREMENTS. Unless otherwise specified in the individual specification sections, all equipment provided shall be tested at the factory as a single fully integrated system. As a minimum, the testing shall include the following:

- Fiber Optic Cable Test
- Unwitnessed Factory Test (UFT)
- Factory Acceptance Test (FAT)
- Operational Readiness Test (ORT)
- Functional Demonstration Test (FDT)
- Existing Plant SCADA System Test (PSST)
- 30-Day Site Acceptance Test (SAT)

Each test shall be in the cause and effect format. The person conducting the test shall initiate an input (cause) and, upon the system's or subsystem's producing the correct result (effect), the specific test requirement shall be satisfied.

FCSS shall prepare a testing procedure for each test listed above to be approved by Owner and Engineer that shall demonstrate that the system conforms to the specifications. The testing procedure shall be submitted at least 30 days in advance of testing. The testing shall be conducted by the FCSS and witnessed by Owner and Engineer. Each specific test shall be described and followed by a section for signoff by the appropriate party after its satisfactory completion. Copies of these signoff test procedures, forms and checklists will constitute the required test documentation.

FCSS shall notify Owner and Engineer in writing at least 30 days before the proposed testing date. The Engineer reserves the right to test or retest all specified functions whether or not explicitly stated in the prior approved Test Procedures. The Engineer's decision shall be final regarding the acceptability and completeness of all testing.

If the FAT is concluded unsuccessfully, the test shall be repeated. FCSS shall reimburse Owner and Engineer for all expenses incurred in connection with attending repeated factory or site testing necessitated by system failure or inadequate preparation.

FCSS shall provide all special testing materials and equipment. Wherever possible, perform test using actual process variables, equipment and data. Where it is not practical to test with real process variables, equipment and data, provide suitable means of simulation.

No equipment shall be shipped to the jobsite until the Engineer has received all test results and approved the system as ready for shipment.

The FCSS shall furnish the services of servicemen, all special calibration and test equipment and labor to perform all required tests for equipment provided by FCSS.

3-4.01. Correction of Deficiencies. All deficiencies in workmanship and/or items not meeting specified testing requirements shall be corrected to meet specification requirements at no additional cost to the Owner. Testing, as specified herein, shall be repeated after correction of deficiencies is made until the specified requirements are met. This work shall be performed at no additional cost to the Owner.

3-4.02. Cable Testing. After the network cabling has been installed, each network cable shall be tested.

3-4.02.01. Test Equipment. Unless specified otherwise, all test equipment for the calibration and checking of system components shall be provided by FCSS for the duration of the testing work and this test equipment will remain the property of FCSS.

3-4.02.02. Ethernet UTP Cable Testing. The FCSS shall utilize the previously specified test equipment, and additional tools as needed to validate the Ethernet UTP cable installation. All test equipment shall bear current calibration certification from a certified calibration laboratory, as appropriate. Each cable shall be tested for open pairs, shorted pairs, crossed pairs, reversed pairs and split pairs. A check off sheet shall be utilized, shall be signed by the technician testing the cables, and shall be submitted for approval. Any identified faults shall be corrected at no additional cost.

3-4.02.03. Fiber Optic Cable Testing. Acceptance testing of the data highway (fiber and electronic equipment) shall be conducted as a part of integrated system field testing, as specified elsewhere. Prior to such tests, however, the fiber optic cable shall be tested as specified herein.

The FCSS, or his fiber subcontractor, shall conduct fiber optic cable testing as specified below. All testing following field installation shall be witnessed by the Engineer. The Contractor shall bear the cost for field witnessed testing in accordance with Section 01610, General Equipment Stipulations. A test plan shall be submitted prior to the proposed test dates. The test plan and procedures shall be mutually agreed to prior to conducting the tests.

Each optical fiber of each fiber optic cable shall be OTDR (Optical Time Domain Reflectometer) tested on the reel at the factory, on the reel upon arrival at the jobsite, and after installation and termination. For each fiber, an OTDR (Optical Time Domain Reflectometer) trace soft/hardcopy is required to be provided to the Owner and Engineer. OTDR traces shall be provided for each test (at the factory, on the reel at the job-site, and after installation). A 100 foot launch cable

shall be spliced to each fiber for each fiber OTDR test, to ensure accurate results. This end-to-end trace shall be performed from BOTH ends of the fiber. Also for each fiber, an end-to-end power attenuation (insertion loss) test shall be performed. The attenuation test shall use a stabilized optical source and an optical power meter calibrated to the appropriate operating wavelength (1300 nm).

For each installed fiber, the power attenuation shall not exceed the following, tested from connector to connector at the respective patch panels:

$$(0.0035)L + (0.25)N + 3.0 \text{ dB}$$

Where L = The length of the fiber optic cable in meters and
N = the number of splices in the fiber.

Any fiber optic cables containing one or more fibers not meeting this performance will not be accepted by the Owner, and shall be repaired or replaced at no additional cost.

Each fiber optic jumper cable shall be tested and must exhibit an end-to-end attenuation of less than 2.0 dB at 1300 nm. Any jumper exceeding this level shall be replaced at no additional cost to the owner. Any damaged cable still on the reel shall be returned to the manufacturer for replacement at no additional cost to the Owner.

All fiber cable testing shall be documented on pre-approved test forms. Three (3) copies of all documentation (including OTDR traces) shall be submitted to the Engineer upon successful completion of the testing.

3-4.03. Unwitnessed Factory Test (UFT). The entire system, except primary elements, final control elements and field mounted transmitters, shall be interconnected and tested to ensure the system operates as specified. All analog and discrete input / output points not interconnected at this time shall be simulated to ensure proper operation of all alarms, monitoring devices / functions and control devices / functions. All panels and assemblies shall be inspected and tested by the FCSS to verify that they are in conformance with related submittals, specifications and Drawings.

The UFT shall be performed by the FCSS at their facility within the continental United States of America. Results shall be submitted to the Engineer for approval prior to the start of the FAT.

3-4.04. Factory Acceptance Test (FAT). The FAT shall be performed by the FCSS at their facility within the continental United States of America. All system tests specified for the UFT shall be repeated. The FAT will be a joint test by the FCSS, General Contractor, Engineer, Owner and other related subcontractors.

After completing the UFT, the FCSS shall notify the Owner and General Contractor in writing that the system is ready for the FAT. The Engineer and Owner shall schedule a test date within 10 days of receipt of the “Ready to FAT” letter.

The purpose of the test shall be to verify the functionality, performance and stability of the hardware and software. All basic functions shall be demonstrated, including I/O processing, communications, alarm handling, HMI display functions, alarm logging, report generation, and historical data storage, as well as the specific functions listed herein. The system must operate continuously for 72 hours without failure before the test shall be judged successful. Successful completion of this test, as determined by the Engineer, shall be the basis for approval of the system to be shipped to the jobsite.

The various tests performed during the FAT shall be designed to demonstrate that all hardware and software fulfill all the requirements of the Specifications and Contract Drawings. The test conditions shall resemble, as closely as possible, the actual installed conditions. Any additional hardware or software that may be required to successfully verify system operation shall be supplied at no additional cost to the Owner.

All control panels shall be included in these tests. The rest of the filter consoles will be shipped to the jobsite once the Engineer has inspected and approved them for shipment from the FCSS facility.

All deficiencies identified during these tests shall be corrected and retested prior to completing the FAT as determined by the Engineer/Owner.

All test data and procedures followed during the testing shall be logged and certified copies of the logs shall be provided to the Engineer/Owner.

Travel allowance shall be used for Owner personnel to attend all test that are not at the Owner facilities. All other parties attending these tests are required to pay for their own costs associated with the tests including time, airfare, car rental, hotel expense, meal expense, etc. This includes the Engineer, General Contractor’s project engineer and support personnel.

3-4.04.01. Hardware Test. Processors, processor modules, OIUs, and peripheral devices associated with the system shall be assembled together as they will be installed in the field and shall be tested. The test shall demonstrate proper operation of each hardware device and communications among devices, and shall include verification of all analog and discrete inputs and outputs.

3-4.04.02. Software Test. Software test shall be performed on all PLCs, computers, and OIUs that are provided as part of FCS. All system software

modules specified herein shall be demonstrated. Software test shall include running all diagnostics, debugging routines, and system test routines. The operating system, advanced process control language compiler, and all associated drives shall be fully tested and operable for the system test. Software ”patches” or changes to bypass failed or flawed modules during the test will not be acceptable.

3-4.04.03. PLC Program Emulation. The filter control PLC programming shall be fully tested with a PLC emulation program to completely test and demonstrate the functionality of the filter control system including but not limited to backwash sequence, normal filter operation, filter mode changes, backwash queue, effluent valve flow control, backwash pumps, non-potable plant water pumps, air scour blowers, etc. as part of the factory acceptance test.

3-4.05. Operational Readiness Test (ORT). Prior to startup and the FDT, the entire system shall be certified, inspected, tested and documented that it is ready for operation. The ORT will be a joint test by the FCSS, General Contractor, Engineer and other related subcontractors and shall be conducted at the Owners facility.

3-4.05.01. Devices by Other Suppliers. If interrelated devices furnished by other suppliers under other contracts, or by Owner, such as air scour blower or backwash pumps do not perform properly at the time of system ORT, the field supervisor shall use suitable test equipment to introduce simulated signals to and/or measure signals from these devices to locate the sources of trouble or malfunction. Signals from these devices shall be successfully tested prior to the ORT being completed one the malfunctioned device is working properly.

3-4.05.02. Loop/Component Inspections and Tests. The entire system shall be checked for proper installation, calibrated and adjusted on a loop-by-loop and component-by-component basis by the FCSS to ensure that it is in conformance with related submittals and these Specifications. The General Contractor shall require the FCSS to maintain Loop Status Reports and Component Calibration Sheets at the jobsite and make them available to the Engineer/Owner at any time. The inspections and tests do not require witnessing. However, the Engineer shall review and initial all Loop Status Sheets and Component Calibration Sheets and spot-check their entries periodically and upon completion of the ORT. Any deficiencies found shall be corrected.

3-4.05.03. Control Network Verification. Control network verification includes a comprehensive network analysis that verifies the installation and operation of the control system network (including managed layer 2 Ethernet switches and end devices) in comparison associated industry standards. All fiber-optic, copper, and wireless links shown on the Control System Functional Block Diagram shall be verified by the Contractor.

Control network verifications shall include:

- Inspection of all network cable and device connections for compliance with recommended installation practices
- Inventory of all user-selectable communication parameters for each communication path and/or device
- Current, average, and maximum network utilization, collisions, errors, broadcast
- Documentation of the following for local and remote stations:

    - Node addresses
    - MAC addresses
    - Number of frames sent
    - Number of broadcast frames sent
    - Number of error frames sent
    - Ping response times
    - Node up-time
    - Device detection
    - Connectivity tests

3-4.05.03.01 Test Report. Upon completion of the network verification, a detailed report shall be prepared by the Analyst and issued to the Owner and Engineer. The report shall include all measurements and testing results, analysis of results, summary of findings, and recommendations for remediation.

3-4.05.04. System ORT Report. The FCSS shall submit a written report on the results of such tests to the Engineer. Additional documentation shall be furnished as requested by Engineer to establish responsibility for corrective measures. FCSS shall verify, in writing, to Engineer or Owner that FCSS has successful completed the ORT before beginning the Function Demonstration Test.

3-4.06. Functional Demonstration Test (FDT). Prior to startup and the SAT, the entire installed instrument and control system shall be certified that it is ready for operation. The FDT will be a joint test by the FCSS, General Contractor, Engineer, Owner and other related subcontractors and shall be conducted at the Owners facility. Once the facility has been started up and is operating, a witnessed FDT shall be performed on the complete system to demonstrate that it is operating and in compliance with these Specifications. Each specified function shall be demonstrated on a paragraph-by-paragraph, loop-by-loop and site-by-site basis. Loop-specific and non-loop-specific tests shall be the same as specified under FAT except that the entire installed system shall be tested and all functionality demonstrated. The system shall operate for 72 continuous hours without failure before the test shall be considered successful. At the end of the FDT the following test shall be demonstrated”

- Communication failure and recovery
- Total power failure and recovery including the UPSs
- Catastrophic failure and recovery of an OUI, PLC and I/O modules
- Existing Plant SCADA System Test (PSST)

3-4.07. Existing Plant SCADA System Test (PSST). Changes made to the existing Plant SCADA System shall be tested during the ORT and FDT portion of testing. Testing shall be as outlined in the ORT and FDT section above. Changes include but are not limited to the Filter Control System, complete with all auxiliary equipment and components included in the filter system, and the Sodium Bisulfite feed system. FCSS shall ensure and verify that all existing plant SCADA systems and processes are operating as they were prior to changes made to the system.

3-4.08. Site Acceptance Test (SAT). After completion of the ORT, FDT, and PSST test, the entire system shall be operated for a period of 30 consecutive days, under conditions of full plant process operation, without a single non-field repairable malfunction. The SAT will be a joint test by the FCSS, General Contractor, Engineer, Owner and other related subcontractors and shall be conducted at the Owners facility. During the test, plant operating, Engineering and FCSS personnel shall be present as required. While the test is proceeding, the Owner shall have full use of the system. Only certified plant operating personnel shall be allowed to operate equipment associated with the actual wastewater production process.

Any malfunction during the tests shall be analyzed and corrected by the responsible party immediately. The Engineer/Owner will determine whether any such malfunctions are sufficiently serious to warrant a repeat of this test. During the 30 consecutive day test period, any malfunction which cannot be corrected within 12 hours of occurrence by the responsible party, or more than two similar failures of any duration, will be considered a non-field-repairable malfunction. Upon completion of a non-field-repairable malfunction, the test shall be repeated as specified herein. Down times due to power outages or other factors outside the normal protection devices or back-up power supplies provided shall not be considered a non-field-repairable malfunction. Down times due to plant process equipment failures or other factors beyond the control of FCSS shall not be considered a non-field-repairable malfunction.

3-4.08.01. Completion of Test. Upon successful completion of the SAT and subsequent review and approval by the Engineer of the complete system final documentation, the system shall be considered Substantially Complete, and a five-year warranty period shall commence.

3-5. TRAINING. The FCSS shall furnish the services of a competent and experienced representative having knowledge of proper operation and maintenance of the equipment for training.

After the FDT, the manufacturer's representative shall address operation, maintenance and troubleshooting of the system provided. Training shall be conducted at the Owner's facility. All Technicians, Operators, Engineers and Managers of the Owner shall require training on the system. The courses shall be designed specifically for the type of personnel attending, such as Operators, Engineers, etc. Where practical, the training and instruction shall be directly related to the system being applied. Classroom and "hands on" training shall be coordinated with and at the convenience of the Owner. Multiple classes shall be provided to train Owner personnel on multiple shifts. The cost of training programs for the Owner's personnel shall be included in the Contract price.

The FCSS shall provide training manuals to supplement the training courses. The manuals shall include specific details of equipment supplied and operations specific to the project. The trainer shall make use of teaching aids, manuals, slide/video presentations, etc. After the training services, all training materials shall be delivered to the Owner.

3-5.01. General Training Requirements. In general, FCSS standard training courses may be used to meet the training objectives specified. Where standard courses do not meet these objectives, additional coursework shall be developed. Clock hour requirements for each level of training are shall be as listed. A "clock hour" is defined as one hour of instruction or supervised training exercise. Training hour requirements are the number of hours of training to be provided for each student. Additional training time shall be provided if considered necessary to meet the training objectives.

All training shall be provided and completed at the Owners facility. No off site training will be allowed.

3-5.01.01. Training Costs. All costs associated with the training program shall be the responsibility of FCSS and shall be included in the contract price.

3-5.01.02. Lessons. Training lesson plans and other information for the second stage submittal as defined herein shall be submitted at least 30 days prior to the start of training.

3-5.01.03. Video Recording. All training sessions shall be video recorded by the FCSS for Owner's future use in training other personnel. Video recorded sessions shall be saved to DVD/R media for delivery to Owner. Pre-recorded videos of FCSS standard training programs may be substituted if they cover the same topics and are developed for the same versions of hardware and software. Furnishing videos of standard training programs shall not relieve FCSS from any of the training requirements specified herein.

3-5.02. Field Training. FCSS shall provide training course for Owner's personnel in the operation, configuration, programming, installation and maintenance of the FCS. This training shall be conducted no more than one (1) month before the FDT. Training shall consist of hands-on instruction utilizing the Owner's system. The following training shall be provided, as a minimum:

- Training in standard hardware maintenance
- Specific training for the actual FCS configuration to provide a detailed understanding of how the equipment and components are arranged connected and set up for this Contract
- Test, adjustment, calibration and configuration procedures
- Troubleshooting and diagnostics
- Periodic maintenance

3-5.02.01. Instrument Training. Training on the calibration, maintenance, troubleshooting, and repair for the instrument devices provided under this section shall be provided in two (2) two-hour training sessions per instrument device, and shall accommodate ten (10) students. Training shall be provided at the Owner's facility.

3-5.02.02. Control System Maintenance Training. System maintenance training shall be provided to enable Owner's personnel to perform routine and preventive maintenance, troubleshoot, and repair on all hardware furnished with the system, except equipment provided by the SCADA system workstation computer manufacturer. Maintenance and repair instruction shall assume that Owner's personnel will repair equipment by replacing circuit boards and modules on the filter control PLCs, OIUs and other devices, and shall not include instruction on circuit board level repair.

3-5.02.02.01. Classes. All maintenance training shall be conducted at Owner's facilities. Each session shall consist of two (2), four hour training sessions and shall accommodate ten (10) students.

3-5.02.02.02. Content of Classes. The training shall cover at least the following topics:

a. Preventive, scheduled maintenance for all equipment.
b. Function and normal operation of circuit boards and modules.
c. Diagnosis of hardware failures to the faulted board or module.
d. Removal and replacement of removable circuit boards and modules.
e. Emergency maintenance and restoration procedures.

The maintenance training program shall be developed for personnel who have experience in electronics maintenance and repair and a general knowledge of computer systems, but not necessarily any familiarity with the specific hardware furnished.

3-5.02.03 Operator Training. All operator training shall be conducted at Owner's facilities. Each session shall consist four hours of training for six of the Owner's personnel. Operator training shall be taught with a class in four different shifts and accommodate six Owner personnel each shift.

Owner's personnel will utilize the system for day-to-day monitoring and/or control of the facilities. The training program shall provide operators with sufficient knowledge to move from screen to screen within the system, understand the contents of group and detailed point displays, react to and acknowledge alarms, adjust control setpoints and alarm limits, configure and print shift reports, print preconfigured reports on demand, control equipment connected to the system, and react to and resolve minor system errors.

3-5.02.04. Programmer Training (HMI Software). Programmer training shall be furnished as described in this section.

System programming training shall be provided to enable Owner's and Engineer's personnel to initially configure and later reconfigure the system. Programming tasks shall include addition or modification to the system database; modification or creation of graphic and tabular display and report formats; and creation and modification of historical archiving groups and data reduction algorithms.

3-5.02.04.01 Classes. Programmer training shall be conducted in two sessions. The first session shall consist of four hours of instruction for ten (10) students and shall be conducted at Owner's or Engineer's facilities within 30 days of delivery of the configuration hardware and software. The second session shall consist of four hours of instruction for ten (10) students and shall be conducted at Owner's facility.

3-5.02.04.02. Content of Classes. Programmer training shall include, but shall not be limited to the following topics:

a. Loading of any supplied software into the system.
b. Use of basic operating system commands for file management, system startup, and creation and editing of batch files.
c. Creation and editing of database.
d. Configuration of printed report formats.
e. Creation and editing of tabular and graphic HMI interface display

screens.

f. Diagnostic routines.

g. Creation and modification of control algorithms.

h. Addition of new I/O points and new RTUs, PLCs or DCUs to the system.

i. Historical record retrieval, data reduction, archiving, and disk housekeeping.

j. System backup procedures and reloading from backup.

Programmer training shall be designed for personnel who have a general familiarity with control system operation and high-level application programs, but not necessarily with the specific hardware or software furnished for this project.

3-5.02.04.03. Hardware and Software. The first session of training shall be conducted using hardware and software of the same versions as provided for the system specified. Programmer training for the second session shall be conducted using equipment and software installed at the site.

3-5.02.06. Programmer Training (PLC Software). Programmer training shall be provided for the PLC software furnished. Programmer training shall be provided on at least the following topics.

a. File management and backup procedures.

b. Documentation printing options.

c. Entering I/O and database points.

d. Logic function programming.

e. PID loop programming and tuning.

f. Error recovery and interpretation of errors.

g. Communication protocol set-up and diagnostics.

PLC software programmer training shall be conducted at Owner's or Engineer's facilities within 30 days of delivery of PLC's. The training shall consist of four hours of instruction for ten (10) students.

3-5.02.07. Network Training. FCSS shall provide training on network equipment provided. Network training shall be conducted in one session at Owner's facilities using the hardware and software installed for this project.

a. Course shall provide an overall description of the network and how it operates.

b. A one hour course (for each make/model of switch, router, and firewall) on configuration shall be provided for up to ten (10) people. This instruction shall be aimed at a network administrator's level of understanding, and shall be provided by the individual that configured the devices. The course shall review the configuration settings. Course training material shall be vendor provided equipment manuals.

c. A one hour course on the use of the management software shall be provided for up to ten (10) people. This instruction shall be aimed at a network administrator's level of understanding, and shall be provided by the individual that configured the software. Course training material shall be vendor provided software manuals.

d. Training shall be provided on the use of any Network Test Equipment provided. Course training material shall be vendor provided equipment manuals.

The training shall provide instruction for up to ten (10) Owner-selected students.

End of Section

Section 11465 – Appendix A

FILTER CONTROL SYSTEM
CONTROL NARRATIVES

PART 1 - GENERAL

1-1. SCOPE. This section provides functional descriptions of the PLC and computer software requirements for the Instrumentation and Control System as indicated on the Drawings. These descriptions are intended to provide an overview of the operating concept of the plant process equipment rather than describing in detail every operating feature or interlock.

PART 2 – PRODUCTS

2-1. GENERAL. The descriptions are applicable to the software specified in the Filter Control System section.

PART 3 - EXECUTION

3-1. PLC PROGRAMMING FUNCTIONAL REQUIREMENTS. The following paragraphs describe general configuration tasks that are required for the system PLC(s). These tasks shall be programmed in any applicable PLC. Each PLC may have multiple instances of each of these tasks, or may have no instances of some or all of these tasks. The input/output lists (located in these documents as specified in the Instrumentation and Control System section) and detailed equipment control descriptions (included herein) shall be referenced to determine the requirements for each PLC.

The following paragraphs cover functional requirements of the software, which are generic and may or may not be related to any specific control loop.

3-1.01. Available Process Values. All PLC-generated process alarm, equipment status, and process variable values shall be available at any operator workstation.

3-1.02. Flow Values. Flow values shall be integrated, totalized, and stored in the PLC registers so the values displayed on the HMI computers and on the field processor will be identical.

3-1.03. System Failure. Failure of a PLC shall result in safe shutdown of associated process equipment. Interposing relays shall be provided where

required to assure that equipment will revert to its fail-safe condition. Failure of any PLC or its communication shall be alarmed on the HMI computer.

3-1.04. HMI Computers. The HMI computers shall function as a monitoring system, not as a controller, for the process equipment. The computer shall download set points and other information to the PLCs, and the PLCs shall perform all control algorithms, so a temporary failure of the any HMI computer will not disrupt plant control.

3-1.05. Rack/Module Configuration. The rack and module definitions for each PLC, as well as the PLC communications configuration shall be completely configured to allow proper addressing of all field connected I/O points. This shall include configuration of any remote input/output (RIO) racks.

3-1.06. PLC Database Definition. The PLC database will include both field I/O points and internally generated points required for programming. All field I/O points and internal programming points shall be fully defined according to database naming conventions approved by Owner. As a minimum, each database point shall be provided with a tag name, engineering unit, alarm parameters, and description.

3-1.07. Analog Scaling. Each analog input and output will be appropriately scaled for use in internal PLC programming, monitoring by the HMI computers, or transmission to other PLCs. Requirements for raw count values shall be coordinated with the operator interface software to ensure compatibility.

3-1.08. Equipment Runtimes. For each equipment item whose "run" status is monitored by a PLC, an internal equipment runtime shall be accumulated by the respective PLC. The runtime procedure will monitor the status of the equipment "run" contact and, when the equipment is running, increment a software timer that maintains equipment runtime to within a one-minute resolution. The timer shall stop incrementing, but not reset, when the "run" contact indicates that the equipment is not running. The timer value shall increment an hour counter that maintains an integer value representing the equipment run time in hours. The counter value shall be available for display on the HMI computer. A manual reset of the runtime value shall be available at the HMI computers for personnel at the supervisor level and above.

3-1.09. Change-of-State Alarms. While equipment is controllable from the PLC ("in remote"), discrete output commands shall be compared to their respective process feedback status signal (where available) to verify proper execution. If the feedback status does not match the most recent output command (after an adjustable 2 to 300 second time delay), an alarm message shall be displayed on the HMI computer and the condition shall be logged as an alarm, requiring operator acknowledgment. The alarm shall remain energized until the proper

discrete condition is sensed or until the operator resets the alarm through the HMI computer.

3-1.10. Equipment Availability. In general, equipment with PLC control has been provided with a local selector switch that transfers control to the PLC. The PLC shall monitor the position of this switch to determine if the equipment is available for PLC control. If the equipment is not available, the PLC program shall not attempt to implement remote manual or automatic status changes for the equipment. The PLC program may, however, need to implement special routines if equipment unavailability affects a sequence (as described in the detailed equipment descriptions).

3-1.11. Maintained/Momentary Outputs. The need for maintained or momentary control outputs shall be determined from the input/output listing and the electrical schematics. In general, equipment with only one control output indicated in the I/O list shall be programmed for a maintained control output. Equipment with two (or more) control outputs shall be programmed for momentary outputs. Provisions shall be made, in either case, to remove the active state (start, open, forward, initiate, etc.) control output when an equipment failure is sensed or when the equipment transitions from available to unavailable (local switch change).

3-1.12. Equipment Mode Changes. Unless otherwise indicated in the equipment control descriptions, equipment in automatic mode shall be transitioned to manual mode (and stopped) if the equipment fails or becomes unavailable or if the PLC processor resets.

3-1.13. Manual/Auto Bumpless Transfer. Unless otherwise indicated in the equipment control descriptions, equipment changes from automatic to manual control shall be bumpless. Equipment running or stopped in automatic mode shall remain running or stopped when manual mode is selected.

3-2. OIU/HMI FUNCTIONAL REQUIREMENTS. The following paragraphs describe general configuration tasks that are required for the HMI and related software.

3-2.01. Database. The system database, including field I/O and internal points shall be established according to the database point naming conventions approved by Owner and associated specifications. Database generation for field I/O shall include all required coordination with PLC level addresses
3-2.02. Trend Displays. Trend displays shall be developed to present real-time and historical process data in an X-Y graph format. Real-time trends shall utilize current process values to generate temporary graphs that do not retain data values. Historical trends shall utilize historically collected data and shall access the data files directly for use in the trend display. Historical trends shall allow paging forward and back to the limits of the collected data. The trending

package shall be configured to automatically retrieve historical data from the proper data file to accommodate the paging functions. Content of the trends will be determined after meeting with Owner. A minimum of ten (10) real-time trend displays and ten (10) historical trend displays shall be provided as directed by the Owner.

3-2.03. Alarms. Complete system alarming shall be configured. This shall include configuration of graphical alarm displays, and configuration of audible alarms through the HMI speakers. All process or system alarms shall appear on an alarm summary screen and the alarm banner of each process graphic. Alarms and events shall be color coded on the alarm summary screen, with initial colors based on Owner conventions or the default colors associated with the graphics package. The colors may be adjusted after meeting with Owner. Alarm prioritizing and area assignments (if any) shall be coordinated with Owner at the first configuration meeting.

For LOW or LOW-LOW analog or discrete alarms which do not apply if associated equipment is not operating, provisions shall be made to prevent/Lock generation of the alarm unless the associated equipment is operating. This shall include alarms such as low amperage alarms for pumps that are not running. This may also include low flows or pressures when associated pumps are not operating (this will only apply if periodic operation of the equipment is considered normal).

All alarms/events shall be time stamped when displayed or printed.

Unacknowledged alarms shall not automatically clear from the alarm summary if they return to normal before being acknowledged.

3-2.04. Reporting. System reporting shall be accomplished using the standard operator interface software-reporting package. All necessary report development, including macro development in spreadsheets, shall be supplied to access real-time and historical data for reporting. Historical, monthly facility reports shall be provided.

3-2.05. Historical Data Collection. System data shall be collected for historical archiving and for use in trending and reporting functions. Requirements for data collection shall be as needed to support the trends and reports developed.

3-2.06. Manual Entry of Data. The human machine interface (HMI) computers shall allow manual entry of laboratory data and other variables, which shall then be available for display and use in reports. Operator entered commands from any of the HMI computers shall be logged at all HMI computers.

3-3. EQUIPMENT CONTROL AND CONTROL MODE OVERVIEW. The following paragraphs explain the general format and control modes that are used in the detailed equipment descriptions. These paragraphs apply to the attached, project specific, equipment control descriptions included herein.

3-3.01. General. Appended to this section are the equipment control programming requirements, with requirements for both PLC programming and the minimum operator interface functions. The HMI requirements represent the anticipated display generation requirements and shall be adjusted if the PLC programming warrants adjustment.

3-3.02. Control Modes. There are two general control modes available for the process equipment: 1) remote manual, and 2) remote auto. Remote manual control provides a means for operators to adjust equipment status or setpoint, through the HMI, using manually initiated commands. Remote automatic control provides a means for automatically changing equipment status or setpoint based on measured process parameters, calculated values, or operator setpoints. Some equipment may have more than one remote auto mode.

Descriptions for local control are included in the detailed equipment control descriptions. They are provided primarily for documentation purposes and for information. These controls are hardwired and require no programming effort.

3-4. DETAILED EQUIPMENT CONTROL DESCRIPTIONS. The following paragraphs describe specific function requirements for various software control blocks in the control system. These descriptions are intended to provide an overview of the operational concept for the facilities, rather than describing in detail every operating feature or interlock.

All actuated, full open/full closed valves shall be programmed to indicated valve fail alarm if the valve does not fully open or close upon command within a set time span. Time span will be determined upon the size of the valve.

Each process detailed within the P&ID document drawings shall be depicted on the filter control system OIU screens including but not limited to the following:

- Filter System Summary Screen
- Filter Monitoring and Control Screen
- Filter Backwash Setup Screen
- Filter System Backwash Queue Screen
- Filter System Master Backwash Screen
- Filter Backwash Pumps Screen
- Filter Air Scour Blowers Screen
- Northwest and Southside Clearwells Screen

3-4.01. Filter Control System Narrative. Monitoring and control of the FCS filter control system is through graphic interface screens on the OIU of each FCC. Each filter shall be independent of each other and be capable of having their own unique operating sequence setpoints. These screens include a filter system summary screen, filter monitoring and control screen, filter backwash setup screen, a filter system master backwash screen and a filter system backwash queue screen.

Secure access to the FCS system is through a pushbutton located in the top-right corner of the OIU screen. When selected, a Login / Logout popup screen appears and allows an authorized user to enter their User Name and Password to access the filter control system.

Security is controlled by the Administrator and allows the following security levels and functionality as determined by the Client:

- Administrator (Password Control)
- Supervisor
- Operator
- Guest (View Only)

3-4.01.01. Filter System Summary Screen. Each FCC filter system summary screen includes an animated cross-sectional view of the filter including display of filter modes of operation, flow, level, LOH, turbidity, runtime and the status of all valves.

Access to the Filter Flow Control Popup Screen is thru a pushbutton located in the middle of the animated cross-sectional view of the filter. When selected, the popup screen displays all of the parameters and setpoint values required to control the Effluent Flow of the filter.

Access to the Filter Monitoring and Control Screen is achieved by touching the cross-sectional view of the filter.

Each FCC filter summary screen shall also include a tabular vertical chart shall display the status of all of the filters in the filter system.

- Filter Number
- Filter Status
- Filtering
- Backwashing
- Queued (Filter in queue waiting to backwash)
- Out-Of-Service
- Filter Queue Position (Based on Priority Value)
- Filter Backwash Trigger (Turbidity, LOH, Time)

The Queue Priority Value is the order that a filter is scheduled to be backwashed. Filter priority values are scheduled to be backwashed in numerical order from highest to lowest value at all times.

Access to the Filter System Master Backwash Screen is through a Pushbutton located at the bottom of the screen.

3-4.01.02. Filter Monitoring and Control Screen. The filter monitoring and control screen includes an animated cross-sectional view of a filter including related piping and valves that show all the critical elements of the filter system including data for common filter backwash support systems such as wash water, air scour and wastewater systems. The screen also displays filter modes of operation, flow, level, LOH, turbidity and runtime.

a. Two two-position and one three-position pushbuttons control the filter.

   - Filter System Automatic Backwash Queue (Disable-Enable)
   - Filter Open-Close Valves (Auto-Manual)
   - Filter Effluent ROF Modulating Valve (Auto-Remote, Auto-Local, Manual)

b. The Filter System Automatic Backwash Queue (FSABQ) Pushbutton is located above the filter and enables a filter to be placed into the automatic backwash queue.

c. The Filter Open-Close Valve Pushbutton is a common pushbutton control that is located above the filter and allows automatic or manual control for all open-close filter valves including the Influent, Backwash Supply, Backwash Drain, Air Scour and Effluent ROF Valves. Each valve has an open-close pushbutton located on the screen directly above the related valve that is inhibited in automatic modes of operation and enabled whenever the Filter Open-Close Valve Pushbutton is in manual. Valve status colors that show fully opened or closed valve position (red and green) are determined by the client. Valves in transition are shown in magenta. Valves that fail to move when commanded are shown as a yellow failure alarm with red text.

d. The three-position Filter Effluent ROF Modulating Valve Pushbutton (Auto-Flow, Auto-Level & Manual) is located directly above the valve and allows automatic or manual control of the valve. In addition to this control, this valve has an automatic effluent flow rate (MGD) set point input, manual valve position (%) set point input and valve position indicator (%) located adjacent to the automatic-manual control.

- Automatic-Flow control of this valve is from an effluent flow rate (MGD) set point input in the OIU.
- Automatic-Level control of this valve is from a level range (FT) set point input in the OIU.
- Manual control of this valve is from the manual valve position (%) set point input in the OIU.

Valve status colors that show fully opened or closed valve position (red and green) are determined by the client. Valves in transition are shown in magenta.

e. The two-position Backwash ROF Modulating Valve Pushbutton (Automatic & Manual) is located directly above the valve and allows automatic or manual control of the valve. In addition to this control, this valve has an automatic backwash flow rate (GPM) set point indicator, manual valve position (%) set point input and valve position indicator (%) located adjacent to the automatic-manual control.

- Automatic control of this valve is from the backwash program.
- Manual control of this valve is from the manual valve position (%) set point input in the OIU.

Access to the Filter Backwash Setup Screen, Filter System Backwash Queue Screen and Filter System Summary Screen are through Pushbuttons located at the top of the screen.

Access to the Filter System Master Backwash Screen is through a Pushbutton located at the bottom of the screen.

3-4.01.03. Filter Backwash Setup Screen. The Filter Backwash Setup Screen includes a tabular-style step chart showing each program step in a backwash program. Multiple set point inputs and displays for all critical functions in the backwash program including levels, flows, turbidities and timers are located immediately adjacent to the step that they affect. The screen also displays filter flow, level, LOH, turbidity and runtime.

a. A numerical backwash step indicator is located on the left side of the backwash tabular-style chart and each step is highlighted green when active on the chart. In the event that a failure occurs during a backwash, the step indicator for the failed step flashes and is highlighted in yellow.

b. Immediately adjacent to each step of the backwash is a cryptic description of the actions taken or achieved for that step. For example: Filter Level < = Drain Down Level Setpoint.

c. Immediately adjacent to each step description are the related set points and displays for all critical functions in the backwash including levels, flows, turbidities and timers. Secure access to change the setpoints is password controlled.

d. Filter Backwash Auto-Manual, Initiate and Abort, Check Permissives and Fail Timers Pushbuttons are located at the top of the screen.

e. Filter Backwash Auto-Manual Pushbutton.

- This pushbutton is used to allow a manually initiated backwash through the Filter Backwash Initiate Pushbutton or an automatically initiated backwash through the Filter System Automatic Backwash Queue program.

f. Filter Backwash Initiate Pushbutton

- In the event that a filter is enabled in the FSABQ and the pushbutton is selected, the filter is placed in the queue based on the queue priority system.
- In the event that a filter is disabled from the FSABQ and the pushbutton is selected, the filter backwash program will begin immediately if no other filter is backwashing and all pre-backwash permissives are satisfied.

g. Filter Backwash Abort Pushbutton

- This pushbutton if selected will immediately stop in either manual or automatic modes of operation the filter backwash, close every valve and stop all related backwash equipment.

h. Filter Check Permissives Pushbutton

When selected, a Check Permissives popup screen appears showing all of the parameters and setpoint values required to control the Filter and Backwash modes of operation of the filter. Specific permissives will be determined for each filter system application. Typical permissives include: No other filter backwashing, Backwash tank low level, Wastewater tank high level, Air Scour blower system ready and Backwash water ready.

When a specific permissive condition is selected a popup screen appears that allows the Operator to set the limits for that permissive. Secure access to change the setpoints is password controlled.

i. Filter Backwash Step Fail Timer Pushbutton

When selected, a Backwash Step Fail Timer popup screen appears showing a tabular-style step chart for the backwash program. Each step has a preset time and an accumulated time located immediately adjacent to it. In the event that any step accumulation time exceeds the time allocated to it, the backwash is immediately aborted, every valve is closed and all related backwash equipment is stopped. Secure access to change the timers is password controlled.

j. Filter Backwash Program

The following is a step-by-step description of the anticipated backwash program for this project. The actual program will be determined and confirmed in workshops with the Owner, Consultant and FCSS prior to the FAT and fully tested during the FAT prior to shipment to the jobsite.

Step	Step Description	Duration (Minutes)	Water Flow (GPM/SF)	Air Flow (SCFM/SF)
1	Pre-Backwash Checks Confirmed			
2	Influent Valve Closed			
3	Filter Level < = Drain Down Level	Est. 12		
4	Effluent ROF Valve Closed			
5	Drain Valve Open			
6	Air Scour Valve Open	2-3		3-5
7	Blower Running			
8	Air Scour Timer Complete			
9	Backwash Valve Open			
10	Backwash Pump Running			
11	Backwash Flow > = Low Wash Setpoint - DB	0.5-2	0 to 5-8	3-5
12	Air Scour Stop Level Achieved			
13	Blower Stopped & Air Scour Valve Closed			
14	Low Wash Timer Complete	2-3	5-8	3-5
15	Backwash Flow > = High Wash Setpoint - DB	1-2	5-8 to 21-25	
16	High Wash Timer Complete	5-10	21-25	
17	Backwash Flow < = ETS Low Wash Setpoint - DB	1-2	21-25 to 5-8	
18	ETS Low Wash Timer Complete	3-5	5-8	
19	Drain Valve Closed			
18	Filter Level > = Fill Level Setpoint	0.5-2	5-8 to 0	
19	Backwash Valve & Backwash ROF Valve Closed			
20	Influent Valve Opened			
21	Effluent ROF Valve NOT CLOSED & Modulating			
22	Automatic			
23	Fail			
24	Manual			

Filter Backwash Notes:

- Air Scour is used to break up the anthracite and dislodge particles.

- Air Scour must be turned off before the water level in the filter reaches the trough so that the air does not blow media into the troughs.
- High Backwash rates between 21 and 25 GPM/SF will ensure that the anthracite bed becomes fully fluidized.
- Lowering the Backwash flow rate to 5 to 8 GPM/SF before closing the Backwash Valve allows the anthracite to properly settle and re-stratify.
- Total maximum time for a backwash cycle is estimated to be 41 minutes. Typical backwash cycles will range from 27 minutes to 41 minutes.

Access to the Filter Monitoring and Control Screen and Filter System Summary Screen are through Pushbuttons located at the top of the screen.

3-4.01.04. Filter System Backwash Queue Screen. Access to the Filter Backwash Queue Screen is through the Filter Monitoring and Control Screen.

The Filter System Automatic Backwash Queue (FSABQ) is a fully automatic and configurable filter backwash system that controls the sequencing and order of filters that require backwashing if a filter's FSABQ is enabled.

A tabular vertical chart shall display all of the filters in the queue and their priority value in the order that they are scheduled to be backwashed.

- Filter Number
- Filter Status
    - Filtering
    - Backwashing
    - Queued (Filter in queue waiting to backwash)
    - Out-Of-Service
- Filter Queue Position (Based on Priority Value)
- Filter Backwash Trigger (Turbidity, LOH, Time)

The Queue Priority Value is the order that a filter is scheduled to be backwashed. Filter priority values are scheduled to be backwashed in numerical order from highest to lowest value at all times.

A tabular chart of operator configurable variable set points that queue a filter for a backwash shall be displayed. Secure access to change the setpoints is password controlled.

- High Turbidity
- High LOH
- High Level
- High Runtime

A tabular chart of all operator configurable priority values that order the filters scheduled for backwash in the queue shall be displayed. Each parameter listed below shall be ranked in the order of importance that a filter needs to be backwashed. Operated Initiated backwashes shall have the highest priority. Turbidity, LOH, Level and Runtime are operator configurable. Secure access to change the priority of these parameters is password controlled.

- Operator Initiated
- Turbidity
- LOH
- Level
- Runtime

3-4.01.05. Filter System Master Backwash Screen. The Filter System Master Backwash Screen shall include all of the common functions of the filter backwash system including the backwash, air scour and wastewater systems.

The backwash pump and ROF control system shall be automatically and manually controlled by the FCS through as popup screen.

The air scour system shall be automatically and manually controlled by the FCS through as popup screen.

Access to the Filter System Summary Screen and Filter Monitoring and Control Screen are through Pushbuttons located at the top of the screen.

3-4.01.06. Filter System Remote Monitoring. Remote monitoring for all data in the FCS is available for remote access to plant SCADA through pre-built signal lists in the FCS.

FCS data shall be interfaced / integrated to the existing Plant SCADA system as specified in Appendix C – Input / Output List.

3-4.01.07. Filter System Remote Control. Remote control for all functions in the FCS is available for remote control from plant SCADA through pre-built signal lists in the FCS.

FCS remote controlled functions shall be interfaced / integrated to the existing Plant SCADA system as specified in Appendix C – Input / Output List.

3-4.01.08. Interface / Integration to Existing Plant SCADA. All screens developed and depicted on the filter console OIU screens shall be duplicated and configured on the existing Plant SCADA system. Filter control from the plant SCADA system shall be identical to the functionality of filter control provided at

the individual filter consoles. Filter screens included in the existing plant SCADA system shall include but not be limited to the following:

- Filter System Summary Screen
- Filter Monitoring and Control Screen
- Filter Backwash Setup Screen
- Filter System Backwash Queue Screen
- Filter System Master Backwash Screen
- Filter Backwash Pumps Screen
- Filter Air Scour Blowers Screen
- Northwest and Southside Clearwells Screen

In addition to the filter screens, the following screens along with the appropriate display and controls shall be depicted, configured and programed into the existing plant SCADA system.

- Non-Potable Water System Screen
- Sodium Bisulfite Feed System Screen
- General System Alarms Screen

3-4.01.08.01. Non-Potable Water System.

Associated Equipment
NP-001, NP-002
STR-001
FIT-020, FIT-021

Associated PLC
FB1-PLC-101-I, FB1-PLC-102-I, and FB1-PLC-103-I

Associated P&ID
PID-17

Local Mode
Local control of each pump shall be provided through an ON-OFF-REMOTE (O-O-R) selector switch, located on the pump manufacturer's local control panel. When the O-O-R switch is in the ON position, the pump shall start and run.

Remote Manual Mode
None.

Remote Auto Mode
Remote automatic control shall be provided through the PLC. When the O-O-R selector switch is in the REMOTE position, the duty pump shall start on dropping pressure and stop on rising pressure, based on operator entered pressure

setpoints. Pressure shall be obtained from existing plant water system pressure transmitter. If pressure continues to drop, the standby pump shall start on dropping pressure and stop based on separate operator entered pressure setpoints. Duty and standby pumps shall be alternated after each pump cycle.

Alarms
The PLC shall receive a pump fail signal for motor overload from the pump motor starter.

Status Indications
The HMI shall indicate the following pump status:
Pump Running, Pump In Remote, and Pump Fail.

PLC Powerup
On PLC power up, control of the pump shall be set to remote auto mode.

Power Failure
Control of the pump shall resume with the control mode established prior to the power failure. Pump shall restart after an operator selectable time delay from the time the power is restored.

HMI Requirements
The reclaimed water pumps shall be depicted on the reclaimed water basin and return pump station display. The display layout shall be similar to the P&ID.

3-4.01.08.02. Sodium Bisulfite Feed System.

Associated Equipment
P-201, P-202
FIT-210, FIT-220

Associated PLC
HW2-PLC-02

Associated P&ID
PID-20

Local Mode
Local control of the metering pump shall be provided through an ON-OFF-REMOTE (O-O-R) switch at the metering pump local control panel. When the O-O-R switch is in the ON position the pump shall run. Local stroke length control shall be provided through a separate LOCAL-REMOTE (L-R) switch mounted at the metering pump local control panel. When the L-R switch is in the LOCAL position, stroke length shall be adjusted manually at the pump.

The metering pump shall have hardwired interlocks in all control modes to stop the pump when the high discharge pressure switch trips.

Remote Manual Mode
Remote manual control shall be provided through the PLC. When the O-O-R selector switch at the metering pump local control panel is in the REMOTE position and MANUAL is selected at the HMI, the pump ON/OFF shall be controlled from the HMI using operator manual commands. When the L-R selector switch for stroke length control is in the REMOTE position and MANUAL is selected at the HMI, stroke length shall be manually adjusted from the HMI. A single AUTO/MANUAL selector at the HMI shall select the mode of control for ON/OFF and stroke length.

Remote Auto Mode
None.

Alarms
The PLC shall receive a pump fail signal from the pump motor starter which shall include motor overload and shutdown on high discharge pressure.

Status Indications
The HMI shall indicate the following pump status:
Pump Running, Pump in Local/Remote, Pump Speed, Pump Stroke Length, and Pump Fail.

PLC Powerup
On PLC powerup, control of the pump shall be set to remote manual mode.

Power Failure
Control of the pump shall resume with the control mode established prior to the power failure.

HMI Requirements
The metering pump shall be depicted on the associated sodium bisulfite feed system display. The pump symbol shall be a selectable target which retrieves the respective control overlay display. The overlay display shall contain control targets which allow selection of pump control modes (duty/standby), ON/OFF, speed, and stroke length adjustment.

End of Section

Instrument Device Schedule

	A	B	C	D	E	F	G	H	I	J
1	Tag	Loop Number	Device Type	User Description	Size	Output Range	Output Type	Power Type	Specification	P&ID Drawing
2	AE	001-I	TURBIDITY ANALYZER	FILTER NO. 1 TURBIDITY		0-10 NTU	N/A	N/A	11465	PID-05
3	AIT	001-I	TURBIDIMETER	FILTER NO. 1 TURBIDITY		N/A	4-20mA DC	N/A	11465	PID-05
4	FE	001-I	MAGNETIC FLOWMETER ELEMENT	FILTER NO. 1 DISCHARGE FLOW	20-inch	0-13.5 MGD	N/A	N/A	11465	PID-05
5	FIT	001-I	MAGNETIC FLOWMETER TRANSMITTER	FILTER NO. 1 DISCHARGE FLOW		0-13.5 MGD	4-20mA DC	N/A	11465	PID-05
6	LE	001-I	ULTRASONIC LEVEL TRANSDUCER	FILTER NO. 1 LEVEL		0-10 FT	N/A	N/A	11465	PID-05
7	LIT	001-I	ULTRASONIC LEVEL TRANSMITTER	FILTER NO. 1 LEVEL		0-10 FT	4-20mA DC	N/A	11465	PID-05
8	PDIT	001-I	DIFFERENTIAL PRESSURE TRANSMITTER	FILTER NO. 1 HEAD LOSS		0-10 FT	4-20mA DC	N/A	11465	PID-05
9	AE	002-I	TURBIDITY ANALYZER	FILTER NO. 2 TURBIDITY		0-10 NTU	N/A	N/A	11465	PID-06
10	AIT	002-I	TURBIDIMETER	FILTER NO. 2 TURBIDITY		N/A	4-20mA DC	N/A	11465	PID-06
11	FE	002-I	MAGNETIC FLOWMETER ELEMENT	FILTER NO. 2 DISCHARGE FLOW	20-inch	0-13.5 MGD	N/A	N/A	11465	PID-06
12	FIT	002-I	MAGNETIC FLOWMETER TRANSMITTER	FILTER NO. 2 DISCHARGE FLOW		0-13.5 MGD	4-20mA DC	N/A	11465	PID-06
13	LE	002-I	ULTRASONIC LEVEL TRANSDUCER	FILTER NO. 2 LEVEL		0-10 FT	N/A	N/A	11465	PID-06
14	LIT	002-I	ULTRASONIC LEVEL TRANSMITTER	FILTER NO. 2 LEVEL		0-10 FT	4-20mA DC	N/A	11465	PID-06
15	PDIT	002-I	DIFFERENTIAL PRESSURE TRANSMITTER	FILTER NO. 2 HEAD LOSS		0-10 FT	4-20mA DC	N/A	11465	PID-06
16	AE	003-I	TURBIDITY ANALYZER	FILTER NO. 3 TURBIDITY		0-10 NTU	N/A	N/A	11465	PID-07
17	AIT	003-I	TURBIDIMETER	FILTER NO. 3 TURBIDITY		N/A	4-20mA DC	N/A	11465	PID-07
18	FE	003-I	MAGNETIC FLOWMETER ELEMENT	FILTER NO. 3 DISCHARGE FLOW	20-inch	0-13.5 MGD	N/A	N/A	11465	PID-07
19	FIT	003-I	MAGNETIC FLOWMETER TRANSMITTER	FILTER NO. 3 DISCHARGE FLOW		0-13.5 MGD	4-20mA DC	N/A	11465	PID-07
20	LE	003-I	ULTRASONIC LEVEL TRANSDUCER	FILTER NO. 3 LEVEL		0-10 FT	N/A	N/A	11465	PID-07
21	LIT	003-I	ULTRASONIC LEVEL TRANSMITTER	FILTER NO. 3 LEVEL		0-10 FT	4-20mA DC	N/A	11465	PID-07
22	PDIT	003-I	DIFFERENTIAL PRESSURE TRANSMITTER	FILTER NO. 3 HEAD LOSS		0-10 FT	4-20mA DC	N/A	11465	PID-07
23	AE	004-I	TURBIDITY ANALYZER	FILTER NO. 4 TURBIDITY		0-10 NTU	N/A	N/A	11465	PID-08
24	AIT	004-I	TURBIDIMETER	FILTER NO. 4 TURBIDITY		N/A	4-20mA DC	N/A	11465	PID-08
25	FE	004-I	MAGNETIC FLOWMETER ELEMENT	FILTER NO. 4 DISCHARGE FLOW	20-inch	0-13.5 MGD	N/A	N/A	11465	PID-08
26	FIT	004-I	MAGNETIC FLOWMETER TRANSMITTER	FILTER NO. 4 DISCHARGE FLOW		0-13.5 MGD	4-20mA DC	N/A	11465	PID-08
27	LE	004-I	ULTRASONIC LEVEL TRANSDUCER	FILTER NO. 4 LEVEL		0-10 FT	N/A	N/A	11465	PID-08
28	LIT	004-I	ULTRASONIC LEVEL TRANSMITTER	FILTER NO. 4 LEVEL		0-10 FT	4-20mA DC	N/A	11465	PID-08
29	PDIT	004-I	DIFFERENTIAL PRESSURE TRANSMITTER	FILTER NO. 4 HEAD LOSS		0-10 FT	4-20mA DC	N/A	11465	PID-08
30	AE	005-I	TURBIDITY ANALYZER	FILTER NO. 5 TURBIDITY		0-10 NTU	N/A	N/A	11465	PID-09
31	AIT	005-I	TURBIDIMETER	FILTER NO. 5 TURBIDITY		N/A	4-20mA DC	N/A	11465	PID-09
32	FE	005-I	MAGNETIC FLOWMETER ELEMENT	FILTER NO. 5 DISCHARGE FLOW	20-inch	0-13.5 MGD	N/A	N/A	11465	PID-09
33	FIT	005-I	MAGNETIC FLOWMETER TRANSMITTER	FILTER NO. 5 DISCHARGE FLOW		0-13.5 MGD	4-20mA DC	N/A	11465	PID-09
38	LE	005-I	ULTRASONIC LEVEL TRANSDUCER	FILTER NO. 5 LEVEL		0-10 FT	N/A	N/A	11465	PID-09
39	LIT	005-I	ULTRASONIC LEVEL TRANSMITTER	FILTER NO. 5 LEVEL		0-10 FT	4-20mA DC	N/A	11465	PID-09
40	PDIT	005-I	DIFFERENTIAL PRESSURE TRANSMITTER	FILTER NO. 5 HEAD LOSS		0-10 FT	4-20mA DC	N/A	11465	PID-09
41	AE	006-I	TURBIDITY ANALYZER	FILTER NO. 6 TURBIDITY		0-10 NTU	N/A	N/A	11465	PID-10
42	AIT	006-I	TURBIDIMETER	FILTER NO. 6 TURBIDITY		N/A	4-20mA DC	N/A	11465	PID-10
43	FE	006-I	MAGNETIC FLOWMETER ELEMENT	FILTER NO. 6 DISCHARGE FLOW	20-inch	0-13.5 MGD	N/A	N/A	11465	PID-10
44	FIT	006-I	MAGNETIC FLOWMETER TRANSMITTER	FILTER NO. 6 DISCHARGE FLOW		0-13.5 MGD	4-20mA DC	N/A	11465	PID-10
45	LE	006-I	ULTRASONIC LEVEL TRANSDUCER	FILTER NO. 6 LEVEL		0-10 FT	N/A	N/A	11465	PID-10
46	LIT	006-I	ULTRASONIC LEVEL TRANSMITTER	FILTER NO. 6 LEVEL		0-10 FT	4-20mA DC	N/A	11465	PID-10

Instrument Device Schedule

	A	B	C	D	E	F	G	H	I	J
1	Tag	Loop Number	Device Type	User Description	Size	Output Range	Output Type	Power Type	Specification	P&ID Drawing
47	PDIT	006-I	DIFFERENTIAL PRESSURE TRANSMITTER	FILTER NO. 6 HEAD LOSS		0-10 FT	4-20mA DC	N/A	11465	PID-10
56	AE	007-I	TURBIDITY ANALYZER	FILTER NO. 7 TURBIDITY		0-10 NTU	N/A	N/A	11465	PID-11
57	AIT	007-I	TURBIDIMETER	FILTER NO. 7 TURBIDITY		N/A	4-20mA DC	N/A	11465	PID-11
58	FE	007-I	MAGNETIC FLOWMETER ELEMENT	FILTER NO. 7 DISCHARGE FLOW	20-inch	0-13.5 MGD	N/A	N/A	11465	PID-11
59	FIT	007-I	MAGNETIC FLOWMETER TRANSMITTER	FILTER NO. 7 DISCHARGE FLOW		0-13.5 MGD	4-20mA DC	N/A	11465	PID-11
60	LE	007-I	ULTRASONIC LEVEL TRANSDUCER	FILTER NO. 7 LEVEL		0-10 FT	N/A	N/A	11465	PID-11
61	LIT	007-I	ULTRASONIC LEVEL TRANSMITTER	FILTER NO. 7 LEVEL		0-10 FT	4-20mA DC	N/A	11465	PID-11
62	PDIT	007-I	DIFFERENTIAL PRESSURE TRANSMITTER	FILTER NO. 7 HEAD LOSS		0-10 FT	4-20mA DC	N/A	11465	PID-11
63	AE	008-I	TURBIDITY ANALYZER	FILTER NO. 8 TURBIDITY		0-10 NTU	N/A	N/A	11465	PID-12
64	AIT	008-I	TURBIDIMETER	FILTER NO. 8 TURBIDITY		N/A	4-20mA DC	N/A	11465	PID-12
65	FE	008-I	MAGNETIC FLOWMETER ELEMENT	FILTER NO. 8 DISCHARGE FLOW	20-inch	0-13.5 MGD	N/A	N/A	11465	PID-12
66	FIT	008-I	MAGNETIC FLOWMETER TRANSMITTER	FILTER NO. 8 DISCHARGE FLOW		0-13.5 MGD	4-20mA DC	N/A	11465	PID-12
67	LE	008-I	ULTRASONIC LEVEL TRANSDUCER	FILTER NO. 8 LEVEL		0-10 FT	N/A	N/A	11465	PID-12
68	LIT	008-I	ULTRASONIC LEVEL TRANSMITTER	FILTER NO. 8 LEVEL		0-10 FT	4-20mA DC	N/A	11465	PID-12
69	PDIT	008-I	DIFFERENTIAL PRESSURE TRANSMITTER	FILTER NO. 8 HEAD LOSS		0-10 FT	4-20mA DC	N/A	11465	PID-12
70	AE	009-I	TURBIDITY ANALYZER	FILTER NO. 9 TURBIDITY		0-10 NTU	N/A	N/A	11465	PID-13
71	AIT	009-I	TURBIDIMETER	FILTER NO. 9 TURBIDITY		N/A	4-20mA DC	N/A	11465	PID-13
72	FE	009-I	MAGNETIC FLOWMETER ELEMENT	FILTER NO. 9 DISCHARGE FLOW	20-inch	0-13.5 MGD	N/A	N/A	11465	PID-13
73	FIT	009-I	MAGNETIC FLOWMETER TRANSMITTER	FILTER NO. 9 DISCHARGE FLOW		0-13.5 MGD	4-20mA DC	N/A	11465	PID-13
74	LE	009-I	ULTRASONIC LEVEL TRANSDUCER	FILTER NO. 9 LEVEL		0-10 FT	N/A	N/A	11465	PID-13
75	LIT	009-I	ULTRASONIC LEVEL TRANSMITTER	FILTER NO. 9 LEVEL		0-10 FT	4-20mA DC	N/A	11465	PID-13
76	PDIT	009-I	DIFFERENTIAL PRESSURE TRANSMITTER	FILTER NO. 9 HEAD LOSS		0-10 FT	4-20mA DC	N/A	11465	PID-13
77	AE	010-I	TURBIDITY ANALYZER	FILTER NO. 10 TURBIDITY		0-10 NTU	N/A	N/A	11465	PID-14
78	AIT	010-I	TURBIDIMETER	FILTER NO. 10 TURBIDITY		N/A	4-20mA DC	N/A	11465	PID-14
79	FE	010-I	MAGNETIC FLOWMETER ELEMENT	FILTER NO. 10 DISCHARGE FLOW	20-inch	0-13.5 MGD	N/A	N/A	11465	PID-14
80	FIT	010-I	MAGNETIC FLOWMETER TRANSMITTER	FILTER NO. 10 DISCHARGE FLOW		0-13.5 MGD	4-20mA DC	N/A	11465	PID-14
81	LE	010-I	ULTRASONIC LEVEL TRANSDUCER	FILTER NO. 10 LEVEL		0-10 FT	N/A	N/A	11465	PID-14
82	LIT	010-I	ULTRASONIC LEVEL TRANSMITTER	FILTER NO. 10 LEVEL		0-10 FT	4-20mA DC	N/A	11465	PID-14
83	PDIT	010-I	DIFFERENTIAL PRESSURE TRANSMITTER	FILTER NO. 10 HEAD LOSS		0-10 FT	4-20mA DC	N/A	11465	PID-14
84	FE	110	MAGNETIC FLOWMETER ELEMENT	BACKWASH PUMPS DISCHARGE FLOWRATE	30-inch	0-36 MGD	N/A	N/A	11465	PID-15
85	FIT	110	MAGNETIC FLOWMETER TRANSMITTER	BACKWASH PUMPS DISCHARGE FLOWRATE		0-36 MGD	4-20mA	4-WIRE	11465	PID-15
86	FE	120	MAGNETIC FLOWMETER ELEMENT	BACKWASH PUMPS BYPASS FLOWRATE	10-inch	0-6 MGD	N/A	N/A	11465	PID-15
87	FIT	120	MAGNETIC FLOWMETER TRANSMITTER	BACKWASH PUMPS BYPASS FLOWRATE		0-6 MGD	4-20mA	4-WIRE	11465	PID-15
88	PI	110	PRESSURE GAUGE (DIAPRAGM SEALS AS SHOWN ON DRAWINGS)	BACKWASH PUMP 1 PRESSURE		0 - 150 PSI	N/A	N/A	11465	PID-15
89	PI	120	PRESSURE GAUGE (DIAPRAGM SEALS AS SHOWN ON DRAWINGS)	BACKWASH PUMP 2 PRESSURE		0 - 150 PSI	N/A	N/A	11465	PID-15
90	PSH	110	PRESSURE SWITCH (DIAPRAGM SEALS AS SHOWN ON DRAWINGS)	BACKWASH PUMP 1 PRESSURE		TRIP AT 120 PSI	DRY CONTACT	2-WIRE	11465	PID-15
91	PSH	120	PRESSURE SWITCH (DIAPRAGM SEALS AS SHOWN ON DRAWINGS)	BACKWASH PUMP 2 PRESSURE		TRIP AT 120 PSI	DRY CONTACT	2-WIRE	11465	PID-15

Instrument Device Schedule

	A	B	C	D	E	F	G	H	I	J
1	Tag	Loop Number	Device Type	User Description	Size	Output Range	Output Type	Power Type	Specification	P&ID Drawing
92	PI	001A	PRESSURE GAUGE	AIR SCOUR BLOWER 1 SUCTION PRESSURE		0-20 PSIA		N/A	11610	PID-16
93	PI	001B	PRESSURE GAUGE	AIR SCOUR BLOWER 1 DISCHARGE PRESSURE		0-10 PSIG	N/A	N/A	11610	PID-16
94	PI	002A	PRESSURE GAUGE	AIR SCOUR BLOWER 2 SUCTION PRESSURE		0-20 PSIA	N/A	N/A	11610	PID-16
95	PI	002B	PRESSURE GAUGE	AIR SCOUR BLOWER 2 DISCHARGE PRESSURE		0-10 PSIG	N/A	N/A	11610	PID-16
96	FE	100	THERMAL DISPERSION FLOWMETER ELEMENT	AIR SCOUR DISCHARGE FLOW	14-inch	0-3,810 SCFM	N/A	N/A	11610	PID-16
97	FIT	100	THERMAL DISPERSION FLOWMETER TRANSMITTER	AIR SCOUR DISCHARGE FLOW		0-3,810 SCFM	4-20mA	4-WIRE	11610	PID-16
98	FE	020	MAGNETIC FLOWMETER ELEMENT	NPW PUMPS DISCHARGE FLOW	12-inch	0-1800 GPM	N/A	N/A	11465	PID-17
99	FIT	020	MAGNETIC FLOWMETER TRANSMITTER	NPW PUMPS DISCHARGE FLOW		0-1800 GPM	4-20mA	4-WIRE	11465	PID-17
102	FE	021	MAGNETIC FLOWMETER ELEMENT	NPW PUMP STRAINER BYPASS FLOW	4-inch	0-1100 GPM	N/A	N/A	11465	PID-17
103	FIT	021	MAGNETIC FLOWMETER TRANSMITTER	NPW PUMP STRAINER BYPASS FLOW		0-1100 GPM	4-20mA	4-WIRE	11465	PID-17
104	LE	001-I	ULTRASONIC LEVEL TRANSDUCER	NORTHWEST CLEARWELL LEVEL		0-25 FT	N/A	N/A	11465	PID-18
105	LE	011-I	ULTRASONIC LEVEL TRANSDUCER	SOUTHSIDE CLEARWELL LEVEL		0-25 FT	N/A	N/A	11465	PID-18
106	LIT	001-I	ULTRASONIC LEVEL TRANSMITTER	NORTHWEST CLEARWELL LEVEL		0-25 FT	4-20mA	4-WIRE	11465	PID-18
107	LIT	011-I	ULTRASONIC LEVEL TRANSMITTER	SOUTHSIDE CLEARWELL LEVEL		0-25 FT	4-20mA	4-WIRE	11465	PID-18
108	FE	210	MAGNETIC FLOWMETER ELEMENT	NHS PUMP 1 CHEMICAL FLOW RATE		4.6-40.3 GPH	N/A	N/A	11727	PID-20
109	FIT	210	MAGNETIC FLOWMETER TRANSMITTER	NHS PUMP 1 CHEMICAL FLOW RATE		4.6-40.3 GPH	4-20mA	4-WIRE	11727	PID-20
110	FE	220	MAGNETIC FLOWMETER ELEMENT	NHS PUMP 2 CHEMICAL FLOW RATE		4.6-40.3 GPH	N/A	N/A	11727	PID-20
111	FIT	220	MAGNETIC FLOWMETER TRANSMITTER	NHS PUMP 2 CHEMICAL FLOW RATE		4.6-40.3 GPH	4-20mA	4-WIRE	11727	PID-20
112	PSH	210	PRESSURE SWITCH (DIAPRAGM SEALS AS SHOWN ON DRAWINGS)	NHS PUMP 1 DISCHARGE HIGH PRESSURE		TRIP AT 40 PSI	DRY CONTACT	2-WIRE	11727	PID-20
113	PSH	220	PRESSURE SWITCH (DIAPRAGM SEALS AS SHOWN ON DRAWINGS)	NHS PUMP 2 DISCHARGE HIGH PRESSURE		TRIP AT 40 PSI	DRY CONTACT	2-WIRE	11727	PID-20
114	PI	210	PRESSURE GAUGE (DIAPRAGM SEALS AS SHOWN ON DRAWINGS)	NHS PUMP 1 DISCHARGE PRESSURE		0 - 50 PSI	N/A	N/A	11727	PID-20
115	PI	220	PRESSURE GAUGE (DIAPRAGM SEALS AS SHOWN ON DRAWINGS)	NHS PUMP 2 DISCHARGE PRESSURE		0 - 50 PSI	N/A	N/A	11727	PID-20

Item No.	Type	Description	Field Device	Controller ID or Rem I/O	Signal Type	Calibrated Range	Power	Signal Type	Close State	Power Source	Interp Relay	P&ID Drawing	Remarks
1	AI	FILTER NO. 1 TURBIDITY	AIT-003	PLC-001-I	4-20mA	0-10 NTU	N/A	N/A	N/A			PID-05	
2	AI	FILTER NO. 1 EFFLUENT VALVE POSITION FEEDBACK	BFV-024	PLC-001-I	4-20mA	0-100%	2-WIRE	N/A	N/A			PID-05	
3	AI	FILTER NO. 1 DISCHARGE FLOW	FIT-001-I	PLC-001-I	4-20mA	0-13.5 MGD	N/A	N/A	N/A			PID-05	
4	AI	FILTER NO. 1 LEVEL	LIT-001-I	PLC-001-I	4-20mA	0-10 FT	N/A	N/A	ALARM			PID-05	
5	AI	FILTER NO. 1 HEAD LOSS	PDIT-001-I	PLC-001-I	4-20mA	0-10 FT	N/A	N/A	N/A			PID-05	
6	AO	FILTER NO. 1 EFFLUENT VALVE POSITION	BFV-024	PLC-001-I	4-20mA	0-100%	2-WIRE	N/A	N/A			PID-05	
7	DI	FILTER NO. 1 HIGH HEAD LOSS	PDIT-001-I	PLC-001-I	N/A	N/A	N/A	120 VAC	ALARM			PID-05	
8	DI	FILTER NO. 1 BLOWER DISCHARGE VALVE CLOSED	BFV-016	PLC-001-I	N/A	N/A	N/A	120 VAC	CLOSED			PID-05	
9	DI	FILTER NO. 1 BLOWER DISCHARGE VALVE IN-REMOTE	BFV-016	PLC-001-I	N/A	N/A	N/A	120 VAC	REMOTE			PID-05	
10	DI	FILTER NO. 1 BLOWER DISCHARGE VALVE OPEN	BFV-016	PLC-001-I	N/A	N/A	N/A	120 VAC	OPENED			PID-05	
11	DI	FILTER NO. 1 EFFLUENT VALVE CLOSED	BFV-024	PLC-001-I	N/A	N/A	N/A	120 VAC	CLOSED			PID-05	
12	DI	FILTER NO. 1 EFFLUENT VALVE IN-REMOTE	BFV-024	PLC-001-I	N/A	N/A	N/A	120 VAC	REMOTE			PID-05	
13	DI	FILTER NO. 1 EFFLUENT VALVE OPEN	BFV-024	PLC-001-I	N/A	N/A	N/A	120 VAC	OPENED			PID-05	
14	DI	FILTER NO.1 INFLUENT VALVE CLOSED	BFV-029	PLC-001-I	N/A	N/A	N/A	120 VAC	CLOSED			PID-05	
15	DI	FILTER NO.1 INFLUENT VALVE IN-REMOTE	BFV-029	PLC-001-I	N/A	N/A	N/A	120 VAC	REMOTE			PID-05	
16	DI	FILTER NO.1 INFLUENT VALVE OPEN	BFV-029	PLC-001-I	N/A	N/A	N/A	120 VAC	OPENED			PID-05	
17	DI	FILTER NO. 1 BACKWASH SUPPLY CLOSED	BFV-030	PLC-001-I	N/A	N/A	N/A	120 VAC	CLOSED			PID-05	
18	DI	FILTER NO. 1 BACKWASH SUPPLY IN-REMOTE	BFV-030	PLC-001-I	N/A	N/A	N/A	120 VAC	REMOTE			PID-05	
19	DI	FILTER NO. 1 BACKWASH SUPPLY OPEN	BFV-030	PLC-001-I	N/A	N/A	N/A	120 VAC	OPENED			PID-05	
20	DI	FILTER NO. 1 BACKWASH DRAIN VALVE CLOSED	BFV-033	PLC-001-I	N/A	N/A	N/A	120 VAC	CLOSED			PID-05	
21	DI	FILTER NO. 1 BACKWASH DRAIN VALVE IN-REMOTE	BFV-033	PLC-001-I	N/A	N/A	N/A	120 VAC	REMOTE			PID-05	
22	DI	FILTER NO. 1 BACKWASH DRAIN VALVE OPEN	BFV-033	PLC-001-I	N/A	N/A	N/A	120 VAC	OPENED			PID-05	
23	DO	FILTER NO. 1 BLOWER DISCHARGE VALVE CLOSE	BFV-016	PLC-001-I	N/A	N/A	N/A	120 VAC	CLOSED			PID-05	
24	DO	FILTER NO. 1 BLOWER DISCHARGE VALVE OPEN	BFV-016	PLC-001-I	N/A	N/A	N/A	120 VAC	OPENED			PID-05	
25	DO	FILTER NO. 1 INFLUENT VALVE CLOSE	BFV-029	PLC-001-I	N/A	N/A	N/A	120 VAC	CLOSED			PID-05	
26	DO	FILTER NO. 1 INFLUENT VALVE OPEN	BFV-029	PLC-001-I	N/A	N/A	N/A	120 VAC	OPENED			PID-05	
27	DO	FILTER NO. 1 BACKWASH SUPPLY CLOSE	BFV-030	PLC-001-I	N/A	N/A	N/A	120 VAC	CLOSED			PID-05	
28	DO	FILTER NO. 1 BACKWASH SUPPLY OPEN	BFV-030	PLC-001-I	N/A	N/A	N/A	120 VAC	OPENED			PID-05	
29	DO	FILTER NO. 1 BACKWASH DRAIN VALVE CLOSE	BFV-033	PLC-001-I	N/A	N/A	N/A	120 VAC	CLOSED			PID-05	
30	DO	FILTER NO. 1 BACKWASH DRAIN VALVE OPEN	BFV-033	PLC-001-I	N/A	N/A	N/A	120 VAC	OPENED			PID-05	
31	AI	FILTER NO. 2 TURBIDITY	AIT-004	PLC-002-I	4-20mA	0-10 NTU	N/A	N/A	N/A			PID-06	
32	AI	FILTER NO. 2 EFFLUENT VALVE POSITION FEEDBACK	BFV-025	PLC-002-I	4-20mA	0-100%	2-WIRE	N/A	N/A			PID-06	
33	AI	FILTER NO. 2 DISCHARGE FLOW	FIT-002-I	PLC-002-I	4-20mA	0-13.5 MGD	N/A	N/A	N/A			PID-06	
34	AI	FILTER NO. 2 LEVEL	LIT-002-I	PLC-002-I	4-20mA	0-10 FT	N/A	N/A	ALARM			PID-06	
35	AI	FILTER NO. 2 HEAD LOSS	PDIT-002-I	PLC-002-I	4-20mA	0-10 FT	N/A	N/A	N/A			PID-06	
36	AO	FILTER NO. 2 EFFLUENT VALVE POSITION	BFV-025	PLC-002-I	4-20mA	0-100%	2-WIRE	N/A	N/A			PID-06	
37	DI	FILTER NO. 2 HIGH HEAD LOSS	PDIT-002-I	PLC-002-I	N/A	N/A	N/A	120 VAC	ALARM			PID-06	
38	DI	FILTER NO. 2 BLOWER DISCHARGE VALVE CLOSED	BFV-017	PLC-002-I	N/A	N/A	N/A	120 VAC	CLOSED			PID-06	
39	DI	FILTER NO. 2 BLOWER DISCHARGE VALVE IN-REMOTE	BFV-017	PLC-002-I	N/A	N/A	N/A	120 VAC	REMOTE			PID-06	
40	DI	FILTER NO. 2 BLOWER DISCHARGE VALVE OPEN	BFV-017	PLC-002-I	N/A	N/A	N/A	120 VAC	OPENED			PID-06	
41	DI	FILTER NO. 2 EFFLUENT VALVE CLOSED	BFV-025	PLC-002-I	N/A	N/A	N/A	120 VAC	CLOSED			PID-06	
42	DI	FILTER NO. 2 EFFLUENT VALVE IN-REMOTE	BFV-025	PLC-002-I	N/A	N/A	N/A	120 VAC	REMOTE			PID-06	
43	DI	FILTER NO. 2 EFFLUENT VALVE OPEN	BFV-025	PLC-002-I	N/A	N/A	N/A	120 VAC	OPENED			PID-06	
44	DI	FILTER NO. 2 INFLUENT VALVE CLOSED	BFV-031	PLC-002-I	N/A	N/A	N/A	120 VAC	CLOSED			PID-06	
45	DI	FILTER NO. 2 INFLUENT VALVE IN-REMOTE	BFV-031	PLC-002-I	N/A	N/A	N/A	120 VAC	REMOTE			PID-06	
46	DI	FILTER NO. 2 INFLUENT VALVE OPEN	BFV-031	PLC-002-I	N/A	N/A	N/A	120 VAC	OPENED			PID-06	
47	DI	FILTER NO. 2 BACKWASH SUPPLY CLOSED	BFV-032	PLC-002-I	N/A	N/A	N/A	120 VAC	CLOSED			PID-06	
48	DI	FILTER NO. 2 BACKWASH SUPPLY IN-REMOTE	BFV-032	PLC-002-I	N/A	N/A	N/A	120 VAC	REMOTE			PID-06	
49	DI	FILTER NO. 2 BACKWASH SUPPLY OPEN	BFV-032	PLC-002-I	N/A	N/A	N/A	120 VAC	OPENED			PID-06	
50	DI	FILTER NO. 2 BACKWASH DRAIN VALVE CLOSED	BFV-034	PLC-002-I	N/A	N/A	N/A	120 VAC	CLOSED			PID-06	
51	DI	FILTER NO. 2 BACKWASH DRAIN VALVE IN-REMOTE	BFV-034	PLC-002-I	N/A	N/A	N/A	120 VAC	REMOTE			PID-06	
52	DI	FILTER NO. 2 BACKWASH DRAIN VALVE OPEN	BFV-034	PLC-002-I	N/A	N/A	N/A	120 VAC	OPENED			PID-06	
53	DO	FILTER NO. 2 BLOWER DISCHARGE VALVE CLOSE	BFV-017	PLC-002-I	N/A	N/A	N/A	120 VAC	CLOSED			PID-06	
54	DO	FILTER NO. 2 BLOWER DISCHARGE VALVE OPEN	BFV-017	PLC-002-I	N/A	N/A	N/A	120 VAC	OPENED			PID-06	
55	DO	FILTER NO. 2 INFLUENT VALVE CLOSE	BFV-031	PLC-002-I	N/A	N/A	N/A	120 VAC	CLOSED			PID-06	
56	DO	FILTER NO. 2 INFLUENT VALVE OPEN	BFV-031	PLC-002-I	N/A	N/A	N/A	120 VAC	OPENED			PID-06	
57	DO	FILTER NO. 2 BACKWASH SUPPLY CLOSE	BFV-032	PLC-002-I	N/A	N/A	N/A	120 VAC	CLOSED			PID-06	
58	DO	FILTER NO. 2 BACKWASH SUPPLY OPEN	BFV-032	PLC-002-I	N/A	N/A	N/A	120 VAC	OPENED			PID-06	
59	DO	FILTER NO. 2 BACKWASH DRAIN VALVE CLOSE	BFV-034	PLC-002-I	N/A	N/A	N/A	120 VAC	CLOSED			PID-06	
60	DO	FILTER NO. 2 BACKWASH DRAIN VALVE OPEN	BFV-034	PLC-002-I	N/A	N/A	N/A	120 VAC	OPENED			PID-06	
61	AI	FILTER NO. 3 TURBIDITY	AIT-005	PLC-003-I	4-20mA	0-10 NTU	N/A	N/A	N/A			PID-07	

Item No.	Type	Description	Field Device	Controller ID or Rem I/O	Signal Type	Calibrated Range	Power	Signal Type	Close State	Power Source	Interp Relay	P&ID Drawing	Remarks
62	AI	FILTER NO. 3 EFFLUENT VALVE POSITION FEEDBACK	BFV-035	PLC-003-I	4-20mA	0-100%	2-WIRE	N/A	N/A			PID-07	
63	AI	FILTER NO. 3 DISCHARGE FLOW	FIT-003-I	PLC-003-I	4-20mA	0-13.5 MGD	N/A	N/A	N/A			PID-07	
64	AI	FILTER NO. 3 LEVEL	LIT-003-I	PLC-003-I	4-20mA	0-10 FT	N/A	N/A	ALARM			PID-07	
65	AI	FILTER NO. 3 HEAD LOSS	PDIT-003-I	PLC-003-I	4-20mA	0-10 FT	N/A	N/A	N/A			PID-07	
66	AO	FILTER NO. 3 EFFLUENT VALVE POSITION	BFV-035	PLC-003-I	4-20mA	0-100%	2-WIRE	N/A	N/A			PID-07	
67	DI	FILTER NO. 3 HIGH HEAD LOSS	PDIT-003-I	PLC-003-I	N/A	N/A	N/A	120 VAC	ALARM			PID-07	
68	DI	FILTER NO. 3 BACKWASH SUPPLY OPEN	BFV-020	PLC-003-I	N/A	N/A	N/A	120 VAC	OPENED			PID-07	
69	DI	FILTER NO. 3 BLOWER DISCHARGE VALVE CLOSED	BFV-020	PLC-003-I	N/A	N/A	N/A	120 VAC	CLOSED			PID-07	
70	DI	FILTER NO. 3 BLOWER DISCHARGE VALVE IN-REMOTE	BFV-020	PLC-003-I	N/A	N/A	N/A	120 VAC	REMOTE			PID-07	
71	DI	FILTER NO. 3 BLOWER DISCHARGE VALVE OPEN	BFV-035	PLC-003-I	N/A	N/A	N/A	120 VAC	OPENED			PID-07	
72	DI	FILTER NO. 3 EFFLUENT VALVE CLOSED	BFV-035	PLC-003-I	N/A	N/A	N/A	120 VAC	CLOSED			PID-07	
73	DI	FILTER NO. 3 EFFLUENT VALVE IN-REMOTE	BFV-035	PLC-003-I	N/A	N/A	N/A	120 VAC	REMOTE			PID-07	
74	DI	FILTER NO. 3 EFFLUENT VALVE OPEN	BFV-039	PLC-003-I	N/A	N/A	N/A	120 VAC	OPENED			PID-07	
75	DI	FILTER NO. 3 INFLUENT VALVE CLOSED	BFV-039	PLC-003-I	N/A	N/A	N/A	120 VAC	CLOSED			PID-07	
76	DI	FILTER NO. 3 INFLUENT VALVE OPEN	BFV-039	PLC-003-I	N/A	N/A	N/A	120 VAC	OPENED			PID-07	
77	DI	FILTER NO. 3 BACKWASH DRAIN VALVE OPEN	BFV-040	PLC-003-I	N/A	N/A	N/A	120 VAC	OPENED			PID-07	
78	DI	FILTER NO. 3 BACKWASH SUPPLY CLOSED	BFV-040	PLC-003-I	N/A	N/A	N/A	120 VAC	CLOSED			PID-07	
79	DI	FILTER NO. 3 BACKWASH SUPPLY IN-REMOTE	BFV-040	PLC-003-I	N/A	N/A	N/A	120 VAC	REMOTE			PID-07	
80	DI	FILTER NO. 3 INFLUENT VALVE IN-REMOTE	BFV-043	PLC-003-I	N/A	N/A	N/A	120 VAC	REMOTE			PID-07	
81	DI	FILTER NO. 3 BACKWASH DRAIN VALVE CLOSED	BFV-043	PLC-003-I	N/A	N/A	N/A	120 VAC	CLOSED			PID-07	
82	DI	FILTER NO. 3 BACKWASH DRAIN VALVE IN-REMOTE	BFV-043	PLC-003-I	N/A	N/A	N/A	120 VAC	REMOTE			PID-07	
83	DO	FILTER NO. 3 BLOWER DISCHARGE VALVE CLOSE	BFV-020	PLC-003-I	N/A	N/A	N/A	120 VAC	CLOSED			PID-07	
84	DO	FILTER NO. 3 BLOWER DISCHARGE VALVE OPEN	BFV-020	PLC-003-I	N/A	N/A	N/A	120 VAC	OPENED			PID-07	
85	DO	FILTER NO. 3 INFLUENT VALVE CLOSE	BFV-039	PLC-003-I	N/A	N/A	N/A	120 VAC	CLOSED			PID-07	
86	DO	FILTER NO. 3 INFLUENT VALVE OPEN	BFV-039	PLC-003-I	N/A	N/A	N/A	120 VAC	OPENED			PID-07	
87	DO	FILTER NO. 3 BACKWASH SUPPLY CLOSE	BFV-040	PLC-003-I	N/A	N/A	N/A	120 VAC	CLOSED			PID-07	
88	DO	FILTER NO. 3 BACKWASH SUPPLY OPEN	BFV-040	PLC-003-I	N/A	N/A	N/A	120 VAC	OPENED			PID-07	
89	DO	FILTER NO. 3 BACKWASH DRAIN VALVE CLOSE	BFV-043	PLC-003-I	N/A	N/A	N/A	120 VAC	CLOSED			PID-07	
90	DO	FILTER NO. 3 BACKWASH DRAIN VALVE OPEN	BFV-043	PLC-003-I	N/A	N/A	N/A	120 VAC	OPENED			PID-07	
91	AI	FILTER NO. 4 TURBIDITY	AIT-006	PLC-004-I	4-20mA	0-10 NTU	N/A	N/A	N/A			PID-08	
92	AI	FILTER NO. 4 EFFLUENT VALVE POSITION FEEDBACK	BFV-036	PLC-004-I	4-20mA	0-100%	2-WIRE	N/A	N/A			PID-08	
93	AI	FILTER NO. 4 DISCHARGE FLOW	FIT-004-I	PLC-004-I	4-20mA	0-13.5 MGD	N/A	N/A	N/A			PID-08	
94	AI	FILTER NO. 4 LEVEL	LIT-004-I	PLC-004-I	4-20mA	0-10 FT	N/A	N/A	ALARM			PID-08	
95	AI	FILTER NO. 4 HEAD LOSS	PDIT-004-I	PLC-004-I	4-20mA	0-10 FT	N/A	N/A	N/A			PID-08	
96	AO	FILTER NO. 4 EFFLUENT VALVE POSITION	BFV-036	PLC-004-I	4-20mA	0-100%	2-WIRE	N/A	N/A			PID-08	
97	DI	FILTER NO. 4 HIGH HEAD LOSS	PDIT-004-I	PLC-004-I	N/A	N/A	N/A	120 VAC	ALARM			PID-08	
98	DI	FILTER NO. 4 BLOWER DISCHARGE VALVE CLOSED	BFV-021	PLC-004-I	N/A	N/A	N/A	120 VAC	CLOSED			PID-08	
99	DI	FILTER NO. 4 BLOWER DISCHARGE VALVE IN-REMOTE	BFV-021	PLC-004-I	N/A	N/A	N/A	120 VAC	REMOTE			PID-08	
100	DI	FILTER NO. 4 BLOWER DISCHARGE VALVE OPEN	BFV-021	PLC-004-I	N/A	N/A	N/A	120 VAC	OPENED			PID-08	
101	DI	FILTER NO. 4 EFFLUENT VALVE CLOSED	BFV-036	PLC-004-I	N/A	N/A	N/A	120 VAC	CLOSED			PID-08	
102	DI	FILTER NO. 4 EFFLUENT VALVE IN-REMOTE	BFV-036	PLC-004-I	N/A	N/A	N/A	120 VAC	REMOTE			PID-08	
103	DI	FILTER NO. 4 EFFLUENT VALVE OPEN	BFV-036	PLC-004-I	N/A	N/A	N/A	120 VAC	OPENED			PID-08	
104	DI	FILTER NO. 4 INFLUENT VALVE CLOSED	BFV-041	PLC-004-I	N/A	N/A	N/A	120 VAC	CLOSED			PID-08	
105	DI	FILTER NO. 4 INFLUENT VALVE IN-REMOTE	BFV-041	PLC-004-I	N/A	N/A	N/A	120 VAC	REMOTE			PID-08	
106	DI	FILTER NO. 4 INFLUENT VALVE OPEN	BFV-041	PLC-004-I	N/A	N/A	N/A	120 VAC	OPENED			PID-08	
107	DI	FILTER NO. 4 BACKWASH SUPPLY CLOSED	BFV-042	PLC-004-I	N/A	N/A	N/A	120 VAC	CLOSED			PID-08	
108	DI	FILTER NO. 4 BACKWASH SUPPLY IN-REMOTE	BFV-042	PLC-004-I	N/A	N/A	N/A	120 VAC	REMOTE			PID-08	
109	DI	FILTER NO. 4 BACKWASH SUPPLY OPEN	BFV-042	PLC-004-I	N/A	N/A	N/A	120 VAC	OPENED			PID-08	
110	DI	FILTER NO. 4 BACKWASH DRAIN VALVE CLOSED	BFV-044	PLC-004-I	N/A	N/A	N/A	120 VAC	CLOSED			PID-08	
111	DI	FILTER NO. 4 BACKWASH DRAIN VALVE IN-REMOTE	BFV-044	PLC-004-I	N/A	N/A	N/A	120 VAC	REMOTE			PID-08	
112	DI	FILTER NO. 4 BACKWASH DRAIN VALVE OPEN	BFV-044	PLC-004-I	N/A	N/A	N/A	120 VAC	OPENED			PID-08	
113	DO	FILTER NO. 4 BLOWER DISCHARGE VALVE CLOSE	BFV-021	PLC-004-I	N/A	N/A	N/A	120 VAC	CLOSED			PID-08	
114	DO	FILTER NO. 4 BLOWER DISCHARGE VALVE OPEN	BFV-021	PLC-004-I	N/A	N/A	N/A	120 VAC	OPENED			PID-08	
115	DO	FILTER NO. 4 INFLUENT VALVE CLOSE	BFV-041	PLC-004-I	N/A	N/A	N/A	120 VAC	CLOSED			PID-08	
116	DO	FILTER NO. 4 INFLUENT VALVE OPEN	BFV-041	PLC-004-I	N/A	N/A	N/A	120 VAC	OPENED			PID-08	
117	DO	FILTER NO. 4 BACKWASH SUPPLY CLOSE	BFV-042	PLC-004-I	N/A	N/A	N/A	120 VAC	CLOSED			PID-08	
118	DO	FILTER NO. 4 BACKWASH SUPPLY OPEN	BFV-042	PLC-004-I	N/A	N/A	N/A	120 VAC	OPENED			PID-08	
119	DO	FILTER NO. 4 BACKWASH DRAIN VALVE CLOSE	BFV-044	PLC-004-I	N/A	N/A	N/A	120 VAC	CLOSED			PID-08	
120	DO	FILTER NO. 4 BACKWASH DRAIN VALVE OPEN	BFV-044	PLC-004-I	N/A	N/A	N/A	120 VAC	OPENED			PID-08	
121	AI	FILTER NO. 5 TURBIDITY	AIT-007	PLC-005-I	4-20mA	0-10 NTU	N/A	N/A	N/A			PID-09	
122	AI	FILTER NO. 5 EFFLUENT VALVE POSITION FEEDBACK	BFV-047	PLC-005-I	4-20mA	0-100%	2-WIRE	N/A	N/A			PID-09	

Item No.	Type	Description	Field Device	Controller ID or Rem I/O	Signal Type	Calibrated Range	Power	Signal Type	Close State	Power Source	Interp Relay	P&ID Drawing	Remarks
123	AI	FILTER NO. 5 DISCHARGE FLOW	FIT-005-I	PLC-005-I	4-20mA	0-13.5 MGD	N/A	N/A	N/A			PID-09	
124	AI	FILTER NO. 5 LEVEL	LIT-005-I	PLC-005-I	4-20mA	0-10 FT	N/A	N/A	ALARM			PID-09	
125	AI	FILTER NO. 5 HEAD LOSS	PDIT-005-I	PLC-005-I	4-20mA	0-10 FT	N/A	N/A	N/A			PID-09	
126	AO	FILTER NO. 5 EFFLUENT VALVE POSITION	BFV-047	PLC-005-I	4-20mA	0-100%	2-WIRE	N/A	N/A			PID-09	
127	DI	FILTER NO. 5 HIGH HEAD LOSS	PDIT-005-I	PLC-005-I	N/A	N/A	N/A	120 VAC	ALARM			PID-09	
128	DI	FILTER NO. 5 EFFLUENT VALVE CLOSED	BFV-047	PLC-005-I	N/A	N/A	N/A	120 VAC	CLOSED			PID-09	
129	DI	FILTER NO. 5 EFFLUENT VALVE IN-REMOTE	BFV-047	PLC-005-I	N/A	N/A	N/A	120 VAC	REMOTE			PID-09	
130	DI	FILTER NO. 5 EFFLUENT VALVE OPEN	BFV-047	PLC-005-I	N/A	N/A	N/A	120 VAC	OPENED			PID-09	
131	DI	FILTER NO. 5 BACKWASH SUPPLY CLOSED	BFV-049	PLC-005-I	N/A	N/A	N/A	120 VAC	CLOSED			PID-09	
132	DI	FILTER NO. 5 BACKWASH SUPPLY IN-REMOTE	BFV-049	PLC-005-I	N/A	N/A	N/A	120 VAC	REMOTE			PID-09	
133	DI	FILTER NO. 5 BACKWASH SUPPLY OPEN	BFV-049	PLC-005-I	N/A	N/A	N/A	120 VAC	OPENED			PID-09	
134	DI	FILTER NO. 5 INFLUENT VALVE CLOSED	BFV-051	PLC-005-I	N/A	N/A	N/A	120 VAC	CLOSED			PID-09	
135	DI	FILTER NO. 5 INFLUENT VALVE IN-REMOTE	BFV-051	PLC-005-I	N/A	N/A	N/A	120 VAC	REMOTE			PID-09	
136	DI	FILTER NO. 5 INFLUENT VALVE OPEN	BFV-051	PLC-005-I	N/A	N/A	N/A	120 VAC	OPENED			PID-09	
137	DI	FILTER NO. 5 BLOWER DISCHARGE VALVE CLOSED	BFV-053	PLC-005-I	N/A	N/A	N/A	120 VAC	CLOSED			PID-09	
138	DI	FILTER NO. 5 BLOWER DISCHARGE VALVE IN-REMOTE	BFV-053	PLC-005-I	N/A	N/A	N/A	120 VAC	REMOTE			PID-09	
139	DI	FILTER NO. 5 BLOWER DISCHARGE VALVE OPEN	BFV-053	PLC-005-I	N/A	N/A	N/A	120 VAC	OPENED			PID-09	
140	DI	FILTER NO. 5 BACKWASH DRAIN VALVE CLOSED	BFV-057	PLC-005-I	N/A	N/A	N/A	120 VAC	CLOSED			PID-09	
141	DI	FILTER NO. 5 BACKWASH DRAIN VALVE IN-REMOTE	BFV-057	PLC-005-I	N/A	N/A	N/A	120 VAC	REMOTE			PID-09	
142	DI	FILTER NO. 5 BACKWASH DRAIN VALVE OPEN	BFV-057	PLC-005-I	N/A	N/A	N/A	120 VAC	OPENED			PID-09	
143	DO	FILTER NO. 5 BACKWASH SUPPLY CLOSE	BFV-049	PLC-005-I	N/A	N/A	N/A	120 VAC	CLOSED			PID-09	
144	DO	FILTER NO. 5 BACKWASH SUPPLY OPEN	BFV-049	PLC-005-I	N/A	N/A	N/A	120 VAC	OPENED			PID-09	
145	DO	FILTER NO. 5 INFLUENT VALVE CLOSE	BFV-051	PLC-005-I	N/A	N/A	N/A	120 VAC	CLOSED			PID-09	
146	DO	FILTER NO. 5 INFLUENT VALVE OPEN	BFV-051	PLC-005-I	N/A	N/A	N/A	120 VAC	OPENED			PID-09	
147	DO	FILTER NO. 5 BLOWER DISCHARGE VALVE CLOSE	BFV-053	PLC-005-I	N/A	N/A	N/A	120 VAC	CLOSED			PID-09	
148	DO	FILTER NO. 5 BLOWER DISCHARGE VALVE OPEN	BFV-053	PLC-005-I	N/A	N/A	N/A	120 VAC	OPENED			PID-09	
149	DO	FILTER NO. 5 BACKWASH DRAIN VALVE CLOSE	BFV-057	PLC-005-I	N/A	N/A	N/A	120 VAC	CLOSED			PID-09	
150	DO	FILTER NO. 5 BACKWASH DRAIN VALVE OPEN	BFV-057	PLC-005-I	N/A	N/A	N/A	120 VAC	OPENED			PID-09	
151	AI	FILTER NO. 6 TURBIDITY	AIT-008	PLC-006-I	4-20mA	0-10 NTU	N/A	N/A	N/A			PID-10	
152	AI	FILTER NO. 6 EFFLUENT VALVE POSITION FEEDBACK	BFV-048	PLC-006-I	4-20mA	0-100%	2-WIRE	N/A	N/A			PID-10	
153	AI	FILTER NO. 6 DISCHARGE FLOW	FIT-006-I	PLC-006-I	4-20mA	0-13.5 MGD	N/A	N/A	N/A			PID-10	
154	AI	FILTER NO. 6 LEVEL	LIT-006-I	PLC-006-I	4-20mA	0-10 FT	N/A	N/A	ALARM			PID-10	
155	AI	FILTER NO. 6 HEAD LOSS	PDIT-006-I	PLC-006-I	4-20mA	0-10 FT	N/A	N/A	N/A			PID-10	
156	AO	FILTER NO. 6 EFFLUENT VALVE POSITION	BFV-048	PLC-006-I	4-20mA	0-100%	2-WIRE	N/A	N/A			PID-10	
157	DI	FILTER NO. 6 HIGH HEAD LOSS	PDIT-006-I	PLC-006-I	N/A	N/A	N/A	120 VAC	ALARM			PID-10	
158	DI	FILTER NO. 6 EFFLUENT VALVE CLOSED	BFV-048	PLC-006-I	N/A	N/A	N/A	120 VAC	CLOSED			PID-10	
159	DI	FILTER NO. 6 EFFLUENT VALVE IN-REMOTE	BFV-048	PLC-006-I	N/A	N/A	N/A	120 VAC	REMOTE			PID-10	
160	DI	FILTER NO. 6 EFFLUENT VALVE OPEN	BFV-048	PLC-006-I	N/A	N/A	N/A	120 VAC	OPENED			PID-10	
161	DI	FILTER NO. 6 BACKWASH SUPPLY CLOSED	BFV-050	PLC-006-I	N/A	N/A	N/A	120 VAC	CLOSED			PID-10	
162	DI	FILTER NO. 6 BACKWASH SUPPLY IN-REMOTE	BFV-050	PLC-006-I	N/A	N/A	N/A	120 VAC	REMOTE			PID-10	
163	DI	FILTER NO. 6 BACKWASH SUPPLY OPEN	BFV-050	PLC-006-I	N/A	N/A	N/A	120 VAC	OPENED			PID-10	
164	DI	FILTER NO. 6 INFLUENT VALVE CLOSED	BFV-052	PLC-006-I	N/A	N/A	N/A	120 VAC	CLOSED			PID-10	
165	DI	FILTER NO. 6 INFLUENT VALVE IN-REMOTE	BFV-052	PLC-006-I	N/A	N/A	N/A	120 VAC	REMOTE			PID-10	
166	DI	FILTER NO. 6 INFLUENT VALVE OPEN	BFV-052	PLC-006-I	N/A	N/A	N/A	120 VAC	OPENED			PID-10	
167	DI	FILTER NO. 6 BLOWER DISCHARGE VALVE CLOSED	BFV-054	PLC-006-I	N/A	N/A	N/A	120 VAC	CLOSED			PID-10	
168	DI	FILTER NO. 6 BLOWER DISCHARGE VALVE IN-REMOTE	BFV-054	PLC-006-I	N/A	N/A	N/A	120 VAC	REMOTE			PID-10	
169	DI	FILTER NO. 6 BLOWER DISCHARGE VALVE OPEN	BFV-054	PLC-006-I	N/A	N/A	N/A	120 VAC	OPENED			PID-10	
170	DI	FILTER NO. 6 BACKWASH DRAIN VALVE CLOSED	BFV-058	PLC-006-I	N/A	N/A	N/A	120 VAC	CLOSED			PID-10	
171	DI	FILTER NO. 6 BACKWASH DRAIN VALVE IN-REMOTE	BFV-058	PLC-006-I	N/A	N/A	N/A	120 VAC	REMOTE			PID-10	
172	DI	FILTER NO. 6 BACKWASH DRAIN VALVE OPEN	BFV-058	PLC-006-I	N/A	N/A	N/A	120 VAC	OPENED			PID-10	
173	DO	FILTER NO. 6 BACKWASH SUPPLY CLOSE	BFV-050	PLC-006-I	N/A	N/A	N/A	120 VAC	CLOSED			PID-10	
174	DO	FILTER NO. 6 BACKWASH SUPPLY OPEN	BFV-050	PLC-006-I	N/A	N/A	N/A	120 VAC	OPENED			PID-10	
175	DO	FILTER NO. 6 INFLUENT VALVE CLOSE	BFV-052	PLC-006-I	N/A	N/A	N/A	120 VAC	CLOSED			PID-10	
176	DO	FILTER NO. 6 INFLUENT VALVE OPEN	BFV-052	PLC-006-I	N/A	N/A	N/A	120 VAC	OPENED			PID-10	
177	DO	FILTER NO. 6 BLOWER DISCHARGE VALVE CLOSE	BFV-054	PLC-006-I	N/A	N/A	N/A	120 VAC	CLOSED			PID-10	
178	DO	FILTER NO. 6 BLOWER DISCHARGE VALVE OPEN	BFV-054	PLC-006-I	N/A	N/A	N/A	120 VAC	OPENED			PID-10	
179	DO	FILTER NO. 6 BACKWASH DRAIN VALVE CLOSE	BFV-058	PLC-006-I	N/A	N/A	N/A	120 VAC	CLOSED			PID-10	
180	DO	FILTER NO. 6 BACKWASH DRAIN VALVE OPEN	BFV-058	PLC-006-I	N/A	N/A	N/A	120 VAC	OPENED			PID-10	
181	AI	FILTER NO. 7 TURBIDITY	AIT-009	PLC-007-I	4-20mA	0-10 NTU	N/A	N/A	N/A			PID-11	
182	AI	FILTER NO. 7 EFFLUENT VALVE POSITION FEEDBACK	BFV-059	PLC-007-I	4-20mA	0-100%	2-WIRE	N/A	N/A			PID-11	
183	AI	FILTER NO. 7 DISCHARGE FLOW	FIT-007-I	PLC-007-I	4-20mA	0-13.5 MGD	N/A	N/A	N/A			PID-11	

Item No.	Type	Description	Field Device	Controller ID or Rem I/O	Signal Type	Calibrated Range	Power	Signal Type	Close State	Power Source	Interp Relay	P&ID Drawing	Remarks
184	AI	FILTER NO. 7 LEVEL	LIT-007-I	PLC-007-I	4-20mA	0-10 FT	N/A	N/A	ALARM			PID-11	
185	AI	FILTER NO. 7 HEAD LOSS	PDIT-007-I	PLC-007-I	4-20mA	0-10 FT	N/A	N/A	N/A			PID-11	
186	AO	FILTER NO. 7 EFFLUENT VALVE POSITION	BFV-059	PLC-007-I	4-20mA	0-100%	2-WIRE	N/A	N/A			PID-11	
187	DI	FILTER NO. 7 HIGH HEAD LOSS	PDIT-007-I	PLC-007-I	N/A	N/A	N/A	120 VAC	ALARM			PID-11	
188	DI	FILTER NO. 7 BLOWER DISCHARGE VALVE CLOSED	BFV-065	PLC-007-I	N/A	N/A	N/A	120 VAC	CLOSED			PID-11	
189	DI	FILTER NO. 7 BLOWER DISCHARGE VALVE IN-REMOTE	BFV-065	PLC-007-I	N/A	N/A	N/A	120 VAC	REMOTE			PID-11	
190	DI	FILTER NO. 7 BLOWER DISCHARGE VALVE OPEN	BFV-065	PLC-007-I	N/A	N/A	N/A	120 VAC	OPENED			PID-11	
191	DI	FILTER NO. 7 EFFLUENT VALVE CLOSED	BFV-059	PLC-007-I	N/A	N/A	N/A	120 VAC	CLOSED			PID-11	
192	DI	FILTER NO. 7 EFFLUENT VALVE IN-REMOTE	BFV-059	PLC-007-I	N/A	N/A	N/A	120 VAC	REMOTE			PID-11	
193	DI	FILTER NO. 7 EFFLUENT VALVE OPEN	BFV-059	PLC-007-I	N/A	N/A	N/A	120 VAC	OPENED			PID-11	
194	DI	FILTER NO. 7 BACKWASH SUPPLY CLOSED	BFV-061	PLC-007-I	N/A	N/A	N/A	120 VAC	CLOSED			PID-11	
195	DI	FILTER NO. 7 BACKWASH SUPPLY IN-REMOTE	BFV-061	PLC-007-I	N/A	N/A	N/A	120 VAC	REMOTE			PID-11	
196	DI	FILTER NO. 7 BACKWASH SUPPLY OPEN	BFV-061	PLC-007-I	N/A	N/A	N/A	120 VAC	OPENED			PID-11	
197	DI	FILTER NO. 7 INFLUENT VALVE CLOSED	BFV-063	PLC-007-I	N/A	N/A	N/A	120 VAC	CLOSED			PID-11	
198	DI	FILTER NO. 7 INFLUENT VALVE IN-REMOTE	BFV-063	PLC-007-I	N/A	N/A	N/A	120 VAC	REMOTE			PID-11	
199	DI	FILTER NO. 7 INFLUENT VALVE OPEN	BFV-063	PLC-007-I	N/A	N/A	N/A	120 VAC	OPENED			PID-11	
200	DI	FILTER NO. 7 BACKWASH DRAIN VALVE CLOSED	BFV-069	PLC-007-I	N/A	N/A	N/A	120 VAC	CLOSED			PID-11	
201	DI	FILTER NO. 7 BACKWASH DRAIN VALVE IN-REMOTE	BFV-069	PLC-007-I	N/A	N/A	N/A	120 VAC	REMOTE			PID-11	
202	DI	FILTER NO. 7 BACKWASH DRAIN VALVE OPEN	BFV-069	PLC-007-I	N/A	N/A	N/A	120 VAC	OPENED			PID-11	
203	DO	FILTER NO. 7 BLOWER DISCHARGE VALVE CLOSE	BFV-065	PLC-007-I	N/A	N/A	N/A	120 VAC	CLOSED			PID-11	
204	DO	FILTER NO. 7 BLOWER DISCHARGE VALVE OPEN	BFV-065	PLC-007-I	N/A	N/A	N/A	120 VAC	OPENED			PID-11	
205	DO	FILTER NO. 7 BACKWASH SUPPLY CLOSE	BFV-061	PLC-007-I	N/A	N/A	N/A	120 VAC	CLOSED			PID-11	
206	DO	FILTER NO. 7 BACKWASH SUPPLY OPEN	BFV-061	PLC-007-I	N/A	N/A	N/A	120 VAC	OPENED			PID-11	
207	DO	FILTER NO. 7 INFLUENT VALVE CLOSE	BFV-063	PLC-007-I	N/A	N/A	N/A	120 VAC	CLOSED			PID-11	
208	DO	FILTER NO. 7 INFLUENT VALVE OPEN	BFV-063	PLC-007-I	N/A	N/A	N/A	120 VAC	OPENED			PID-11	
209	DO	FILTER NO. 7 BACKWASH DRAIN VALVE CLOSE	BFV-069	PLC-007-I	N/A	N/A	N/A	120 VAC	CLOSED			PID-11	
210	DO	FILTER NO. 7 BACKWASH DRAIN VALVE OPEN	BFV-069	PLC-007-I	N/A	N/A	N/A	120 VAC	OPENED			PID-11	
211	AI	FILTER NO. 8 TURBIDITY	AIT-010	PLC-008-I	4-20mA	0-10 NTU	N/A	N/A	N/A			PID-12	
212	AI	FILTER NO. 8 EFFLUENT VALVE POSITION FEEDBACK	BFV-060	PLC-008-I	4-20mA	0-100%	2-WIRE	N/A	N/A			PID-12	
213	AI	FILTER NO. 8 DISCHARGE FLOW	FIT-008-I	PLC-008-I	4-20mA	0-13.5 MGD	N/A	N/A	N/A			PID-12	
214	AI	FILTER NO. 8 LEVEL	LIT-008-I	PLC-008-I	4-20mA	0-10 FT	N/A	N/A	ALARM			PID-12	
215	AI	FILTER NO. 8 HEAD LOSS	PDIT-008-I	PLC-008-I	4-20mA	0-10 FT	N/A	N/A	N/A			PID-12	
216	AO	FILTER NO. 8 EFFLUENT VALVE POSITION	BFV-060	PLC-008-I	4-20mA	0-100%	2-WIRE	N/A	N/A			PID-12	
217	DI	FILTER NO. 8 HIGH HEAD LOSS	PDIT-008-I	PLC-008-I	N/A	N/A	N/A	120 VAC	ALARM			PID-12	
218	DI	FILTER NO. 8 BLOWER DISCHARGE VALVE CLOSED	BFV-066	PLC-008-I	N/A	N/A	N/A	120 VAC	CLOSED			PID-12	
219	DI	FILTER NO. 8 BLOWER DISCHARGE VALVE IN-REMOTE	BFV-066	PLC-008-I	N/A	N/A	N/A	120 VAC	REMOTE			PID-12	
220	DI	FILTER NO. 8 BLOWER DISCHARGE VALVE OPEN	BFV-066	PLC-008-I	N/A	N/A	N/A	120 VAC	OPENED			PID-12	
221	DI	FILTER NO. 8 EFFLUENT VALVE CLOSED	BFV-060	PLC-008-I	N/A	N/A	N/A	120 VAC	CLOSED			PID-12	
222	DI	FILTER NO. 8 EFFLUENT VALVE IN-REMOTE	BFV-060	PLC-008-I	N/A	N/A	N/A	120 VAC	REMOTE			PID-12	
223	DI	FILTER NO. 8 EFFLUENT VALVE OPEN	BFV-060	PLC-008-I	N/A	N/A	N/A	120 VAC	OPENED			PID-12	
224	DI	FILTER NO. 8 BACKWASH SUPPLY CLOSED	BFV-062	PLC-008-I	N/A	N/A	N/A	120 VAC	CLOSED			PID-12	
225	DI	FILTER NO. 8 BACKWASH SUPPLY IN-REMOTE	BFV-062	PLC-008-I	N/A	N/A	N/A	120 VAC	REMOTE			PID-12	
226	DI	FILTER NO. 8 BACKWASH SUPPLY OPEN	BFV-062	PLC-008-I	N/A	N/A	N/A	120 VAC	OPENED			PID-12	
227	DI	FILTER NO. 8 INFLUENT VALVE CLOSED	BFV-064	PLC-008-I	N/A	N/A	N/A	120 VAC	CLOSED			PID-12	
228	DI	FILTER NO. 8 INFLUENT VALVE IN-REMOTE	BFV-064	PLC-008-I	N/A	N/A	N/A	120 VAC	REMOTE			PID-12	
229	DI	FILTER NO. 8 INFLUENT VALVE OPEN	BFV-064	PLC-008-I	N/A	N/A	N/A	120 VAC	OPENED			PID-12	
230	DI	FILTER NO. 8 BACKWASH DRAIN VALVE CLOSED	BFV-070	PLC-008-I	N/A	N/A	N/A	120 VAC	CLOSED			PID-12	
231	DI	FILTER NO. 8 BACKWASH DRAIN VALVE IN-REMOTE	BFV-070	PLC-008-I	N/A	N/A	N/A	120 VAC	REMOTE			PID-12	
232	DI	FILTER NO. 8 BACKWASH DRAIN VALVE OPEN	BFV-070	PLC-008-I	N/A	N/A	N/A	120 VAC	OPENED			PID-12	
233	DO	FILTER NO. 8 BLOWER DISCHARGE VALVE CLOSE	BFV-066	PLC-008-I	N/A	N/A	N/A	120 VAC	CLOSED			PID-12	
234	DO	FILTER NO. 8 BLOWER DISCHARGE VALVE OPEN	BFV-066	PLC-008-I	N/A	N/A	N/A	120 VAC	OPENED			PID-12	
235	DO	FILTER NO. 8 BACKWASH SUPPLY CLOSE	BFV-062	PLC-008-I	N/A	N/A	N/A	120 VAC	CLOSED			PID-12	
236	DO	FILTER NO. 8 BACKWASH SUPPLY OPEN	BFV-062	PLC-008-I	N/A	N/A	N/A	120 VAC	OPENED			PID-12	
237	DO	FILTER NO. 8 INFLUENT VALVE CLOSE	BFV-064	PLC-008-I	N/A	N/A	N/A	120 VAC	CLOSED			PID-12	
238	DO	FILTER NO. 8 INFLUENT VALVE OPEN	BFV-064	PLC-008-I	N/A	N/A	N/A	120 VAC	OPENED			PID-12	
239	DO	FILTER NO. 8 BACKWASH DRAIN VALVE CLOSE	BFV-070	PLC-008-I	N/A	N/A	N/A	120 VAC	CLOSED			PID-12	
240	DO	FILTER NO. 8 BACKWASH DRAIN VALVE OPEN	BFV-070	PLC-008-I	N/A	N/A	N/A	120 VAC	OPENED			PID-12	
241	AI	FILTER NO. 9 TURBIDITY	AIT-011	PLC-009-I	4-20mA	0-10 NTU	N/A	N/A	N/A			PID-13	
242	AI	FILTER NO. 9 EFFLUENT VALVE POSITION FEEDBACK	BFV-071	PLC-009-I	4-20mA	0-100%	2-WIRE	N/A	N/A			PID-13	
243	AI	FILTER NO. 9 DISCHARGE FLOW	FIT-009-I	PLC-009-I	4-20mA	0-13.5 MGD	N/A	N/A	N/A			PID-13	
244	AI	FILTER NO. 9 LEVEL	LIT-009-I	PLC-009-I	4-20mA	0-10 FT	N/A	N/A	ALARM			PID-13	

Item No.	Type	Description	Field Device	Controller ID or Rem I/O	Signal Type	Calibrated Range	Power	Signal Type	Close State	Power Source	Interp Relay	P&ID Drawing	Remarks
245	AI	FILTER NO. 9 HEAD LOSS	PDIT-009-I	PLC-009-I	4-20mA	0-10 FT	N/A	N/A	N/A			PID-13	
246	AO	FILTER NO. 9 EFFLUENT VALVE POSITION	BFV-071	PLC-009-I	4-20mA	0-100%	2-WIRE	N/A	N/A			PID-13	
247	DI	FILTER NO. 9 HIGH HEAD LOSS	PDIT-009-I	PLC-009-I	N/A	N/A	N/A	120 VAC	ALARM			PID-13	
248	DI	FILTER NO. 9 BLOWER DISCHARGE VALVE CLOSED	BFV-077	PLC-009-I	N/A	N/A	N/A	120 VAC	CLOSED			PID-13	
249	DI	FILTER NO. 9 BLOWER DISCHARGE VALVE IN-REMOTE	BFV-077	PLC-009-I	N/A	N/A	N/A	120 VAC	REMOTE			PID-13	
250	DI	FILTER NO. 9 BLOWER DISCHARGE VALVE OPEN	BFV-077	PLC-009-I	N/A	N/A	N/A	120 VAC	OPENED			PID-13	
251	DI	FILTER NO. 9 EFFLUENT VALVE CLOSED	BFV-071	PLC-009-I	N/A	N/A	N/A	120 VAC	CLOSED			PID-13	
252	DI	FILTER NO. 9 EFFLUENT VALVE IN-REMOTE	BFV-071	PLC-009-I	N/A	N/A	N/A	120 VAC	REMOTE			PID-13	
253	DI	FILTER NO. 9 EFFLUENT VALVE OPEN	BFV-071	PLC-009-I	N/A	N/A	N/A	120 VAC	OPENED			PID-13	
254	DI	FILTER NO. 9 BACKWASH SUPPLY CLOSED	BFV-073	PLC-009-I	N/A	N/A	N/A	120 VAC	CLOSED			PID-13	
255	DI	FILTER NO. 9 BACKWASH SUPPLY IN-REMOTE	BFV-073	PLC-009-I	N/A	N/A	N/A	120 VAC	REMOTE			PID-13	
256	DI	FILTER NO. 9 BACKWASH SUPPLY OPEN	BFV-073	PLC-009-I	N/A	N/A	N/A	120 VAC	OPENED			PID-13	
257	DI	FILTER NO. 9 INFLUENT VALVE CLOSED	BFV-075	PLC-009-I	N/A	N/A	N/A	120 VAC	CLOSED			PID-13	
258	DI	FILTER NO. 9 INFLUENT VALVE IN-REMOTE	BFV-075	PLC-009-I	N/A	N/A	N/A	120 VAC	REMOTE			PID-13	
259	DI	FILTER NO. 9 INFLUENT VALVE OPEN	BFV-075	PLC-009-I	N/A	N/A	N/A	120 VAC	OPENED			PID-13	
260	DI	FILTER NO. 9 BACKWASH DRAIN VALVE CLOSED	BFV-082	PLC-009-I	N/A	N/A	N/A	120 VAC	CLOSED			PID-13	
261	DI	FILTER NO. 9 BACKWASH DRAIN VALVE IN-REMOTE	BFV-082	PLC-009-I	N/A	N/A	N/A	120 VAC	REMOTE			PID-13	
262	DI	FILTER NO. 9 BACKWASH DRAIN VALVE OPEN	BFV-082	PLC-009-I	N/A	N/A	N/A	120 VAC	OPENED			PID-13	
263	DO	FILTER NO. 9 BLOWER DISCHARGE VALVE CLOSE	BFV-077	PLC-009-I	N/A	N/A	N/A	120 VAC	CLOSED			PID-13	
264	DO	FILTER NO. 9 BLOWER DISCHARGE VALVE OPEN	BFV-077	PLC-009-I	N/A	N/A	N/A	120 VAC	OPENED			PID-13	
265	DO	FILTER NO. 9 BACKWASH SUPPLY CLOSE	BFV-073	PLC-009-I	N/A	N/A	N/A	120 VAC	CLOSED			PID-13	
266	DO	FILTER NO. 9 BACKWASH SUPPLY OPEN	BFV-073	PLC-009-I	N/A	N/A	N/A	120 VAC	OPENED			PID-13	
267	DO	FILTER NO. 9 INFLUENT VALVE CLOSE	BFV-075	PLC-009-I	N/A	N/A	N/A	120 VAC	CLOSED			PID-13	
268	DO	FILTER NO. 9 INFLUENT VALVE OPEN	BFV-075	PLC-009-I	N/A	N/A	N/A	120 VAC	OPENED			PID-13	
269	DO	FILTER NO. 9 BACKWASH DRAIN VALVE CLOSE	BFV-082	PLC-009-I	N/A	N/A	N/A	120 VAC	CLOSED			PID-13	
270	DO	FILTER NO. 9 BACKWASH DRAIN VALVE OPEN	BFV-082	PLC-009-I	N/A	N/A	N/A	120 VAC	OPENED			PID-13	
271	AI	FILTER NO. 10 TURBIDITY	AIT-012	PLC-010-I	4-20mA	0-10 NTU	N/A	N/A	N/A			PID-14	
272	AI	FILTER NO. 10 EFFLUENT VALVE POSITION FEEDBACK	BFV-072	PLC-010-I	4-20mA	0-100%	2-WIRE	N/A	N/A			PID-14	
273	AI	FILTER NO. 10 DISCHARGE FLOW	FIT-010-I	PLC-010-I	4-20mA	0-13.5 MGD	N/A	N/A	N/A			PID-14	
274	AI	FILTER NO. 10 LEVEL	LIT-010-I	PLC-010-I	4-20mA	0-10 FT	N/A	N/A	ALARM			PID-14	
275	AI	FILTER NO. 10 HEAD LOSS	PDIT-010-I	PLC-010-I	4-20mA	0-10 FT	N/A	N/A	N/A			PID-14	
276	AO	FILTER NO. 10 EFFLUENT VALVE POSITION	BFV-072	PLC-010-I	4-20mA	0-100%	2-WIRE	N/A	N/A			PID-14	
277	DI	FILTER NO. 10 HIGH HEAD LOSS	PDIT-010-I	PLC-010-I	N/A	N/A	N/A	120 VAC	ALARM			PID-14	
278	DI	FILTER NO. 10 BLOWER DISCHARGE VALVE CLOSED	BFV-078	PLC-010-I	N/A	N/A	N/A	120 VAC	CLOSED			PID-14	
279	DI	FILTER NO. 10 BLOWER DISCHARGE VALVE IN-REMOTE	BFV-078	PLC-010-I	N/A	N/A	N/A	120 VAC	REMOTE			PID-14	
280	DI	FILTER NO. 10 BLOWER DISCHARGE VALVE OPEN	BFV-078	PLC-010-I	N/A	N/A	N/A	120 VAC	OPENED			PID-14	
281	DI	FILTER NO. 10 EFFLUENT VALVE CLOSED	BFV-072	PLC-010-I	N/A	N/A	N/A	120 VAC	CLOSED			PID-14	
282	DI	FILTER NO. 10 EFFLUENT VALVE IN-REMOTE	BFV-072	PLC-010-I	N/A	N/A	N/A	120 VAC	REMOTE			PID-14	
283	DI	FILTER NO. 10 EFFLUENT VALVE OPEN	BFV-072	PLC-010-I	N/A	N/A	N/A	120 VAC	OPENED			PID-14	
284	DI	FILTER NO. 10 BACKWASH SUPPLY CLOSED	BFV-074	PLC-010-I	N/A	N/A	N/A	120 VAC	CLOSED			PID-14	
285	DI	FILTER NO. 10 BACKWASH SUPPLY IN-REMOTE	BFV-074	PLC-010-I	N/A	N/A	N/A	120 VAC	REMOTE			PID-14	
286	DI	FILTER NO. 10 BACKWASH SUPPLY OPEN	BFV-074	PLC-010-I	N/A	N/A	N/A	120 VAC	OPENED			PID-14	
287	DI	FILTER NO. 10 INFLUENT VALVE CLOSED	BFV-076	PLC-010-I	N/A	N/A	N/A	120 VAC	CLOSED			PID-14	
288	DI	FILTER NO. 10 INFLUENT VALVE IN-REMOTE	BFV-076	PLC-010-I	N/A	N/A	N/A	120 VAC	REMOTE			PID-14	
289	DI	FILTER NO. 10 INFLUENT VALVE OPEN	BFV-076	PLC-010-I	N/A	N/A	N/A	120 VAC	OPENED			PID-14	
290	DI	FILTER NO. 10 BACKWASH DRAIN VALVE CLOSED	BFV-083	PLC-010-I	N/A	N/A	N/A	120 VAC	CLOSED			PID-14	
291	DI	FILTER NO. 10 BACKWASH DRAIN VALVE IN-REMOTE	BFV-083	PLC-010-I	N/A	N/A	N/A	120 VAC	REMOTE			PID-14	
292	DI	FILTER NO. 10 BACKWASH DRAIN VALVE OPEN	BFV-083	PLC-010-I	N/A	N/A	N/A	120 VAC	OPENED			PID-14	
293	DO	FILTER NO. 10 BLOWER DISCHARGE VALVE CLOSE	BFV-078	PLC-010-I	N/A	N/A	N/A	120 VAC	CLOSED			PID-14	
294	DO	FILTER NO. 10 BLOWER DISCHARGE VALVE OPEN	BFV-078	PLC-010-I	N/A	N/A	N/A	120 VAC	OPENED			PID-14	
295	DO	FILTER NO. 10 BACKWASH SUPPLY CLOSE	BFV-074	PLC-010-I	N/A	N/A	N/A	120 VAC	CLOSED			PID-14	
296	DO	FILTER NO. 10 BACKWASH SUPPLY OPEN	BFV-074	PLC-010-I	N/A	N/A	N/A	120 VAC	OPENED			PID-14	
297	DO	FILTER NO. 10 INFLUENT VALVE CLOSE	BFV-076	PLC-010-I	N/A	N/A	N/A	120 VAC	CLOSED			PID-14	
298	DO	FILTER NO. 10 INFLUENT VALVE OPEN	BFV-076	PLC-010-I	N/A	N/A	N/A	120 VAC	OPENED			PID-14	
299	DO	FILTER NO. 10 BACKWASH DRAIN VALVE CLOSE	BFV-083	PLC-010-I	N/A	N/A	N/A	120 VAC	CLOSED			PID-14	
300	DO	FILTER NO. 10 BACKWASH DRAIN VALVE OPEN	BFV-083	PLC-010-I	N/A	N/A	N/A	120 VAC	OPENED			PID-14	
301	AI	BACKWASH PUMP 1 DISCHARGE VALVE POSITION FEEDBACK	BFV-022	PLC-102-I	4-20mA	0-100%	2-WIRE	N/A	N/A			PID-15	
302	AI	BACKWASH PUMP 2 DISCHARGE VALVE POSITION FEEDBACK	BFV-011	PLC-103-I	4-20mA	0-100%	2-WIRE	N/A	N/A			PID-15	
303	AI	BACKWASH RATE OF FLOW VALVE POSITION FEEDBACK	BFV-026	PLC-101-I	4-20mA	0-100%	2-WIRE	N/A	N/A			PID-15	
304	AI	BACKWASH FILTER BYPASS VALVE POSITION FEEDBACK	BFV-110	PLC-101-I	4-20mA	0-100%	2-WIRE	N/A	N/A			PID-15	
305	AI	BACKWASH FLOWRATE	FIT-110	PLC-101-I	4-20mA	0-36 MGD	4-WIRE	N/A	N/A			PID-15	

Item No.	Type	Description	Field Device	Controller ID or Rem I/O	Signal Type	Calibrated Range	Power	Signal Type	Close State	Power Source	Interp Relay	P&ID Drawing	Remarks
306	AI	BACKWASH BYPASS FLOWRATE	FIT-120	PLC-101-I	4-20mA	0-6 MGD	4-WIRE	N/A	N/A			PID-15	
307	AO	BACKWASH PUMP 1 DISCHARGE VALVE POSITION	BFV-022	PLC-102-I	4-20mA	0-100%	2-WIRE	N/A	N/A			PID-15	
308	AO	BACKWASH PUMP 2 DISCHARGE VALVE POSITION	BFV-011	PLC-103-I	4-20mA	0-100%	2-WIRE	N/A	N/A			PID-15	
309	AO	BACKWASH RATE OF FLOW VALVE POSITION	BFV-026	PLC-101-I	4-20mA	0-100%	2-WIRE	N/A	N/A			PID-15	
310	AO	BACKWASH FILTER BYPASS VALVE POSITION	BFV-110	PLC-101-I	4-20mA	0-100%	2-WIRE	N/A	N/A			PID-15	
311	DI	BACKWASH PUMP 1 DISCHARGE VALVE CLOSED	BFV-022	PLC-102-I	N/A	N/A	N/A	120 VAC	CLOSED			PID-15	
312	DI	BACKWASH PUMP 1 DISCHARGE VALVE IN-REMOTE	BFV-022	PLC-102-I	N/A	N/A	N/A	120 VAC	REMOTE			PID-15	
313	DI	BACKWASH PUMP 1 DISCHARGE VALVE OPEN	BFV-022	PLC-102-I	N/A	N/A	N/A	120 VAC	OPENED			PID-15	
314	DI	BACKWASH PUMP 2 DISCHARGE VALVE CLOSED	BFV-011	PLC-103-I	N/A	N/A	N/A	120 VAC	CLOSED			PID-15	
315	DI	BACKWASH PUMP 2 DISCHARGE VALVE IN-REMOTE	BFV-011	PLC-103-I	N/A	N/A	N/A	120 VAC	REMOTE			PID-15	
316	DI	BACKWASH PUMP 2 DISCHARGE VALVE OPEN	BFV-011	PLC-103-I	N/A	N/A	N/A	120 VAC	OPENED			PID-15	
317	DI	BACKWASH RATE OF FLOW VALVE CLOSED	BFV-026	PLC-101-I	N/A	N/A	N/A	120 VAC	CLOSED			PID-15	
318	DI	BACKWASH RATE OF FLOW VALVE IN-REMOTE	BFV-026	PLC-101-I	N/A	N/A	N/A	120 VAC	REMOTE			PID-15	
319	DI	BACKWASH RATE OF FLOW VALVE OPEN	BFV-026	PLC-101-I	N/A	N/A	N/A	120 VAC	OPENED			PID-15	
320	DI	BACKWASH FILTER BYPASS VALVE CLOSED	BFV-110	PLC-101-I	N/A	N/A	N/A	120 VAC	CLOSED			PID-15	
321	DI	BACKWASH FILTER BYPASS VALVE IN-REMOTE	BFV-110	PLC-101-I	N/A	N/A	N/A	120 VAC	REMOTE			PID-15	
322	DI	BACKWASH FILTER BYPASS VALVE OPEN	BFV-110	PLC-101-I	N/A	N/A	N/A	120 VAC	OPENED			PID-15	
323	DI	FILTER BACKWASH PUMP 1 FAIL	BWP-001	PLC-102-I	N/A	N/A	N/A	120 VAC	ALARM			PID-15	
324	DI	FILTER BACKWASH PUMP 1 IN-REMOTE	BWP-001	PLC-102-I	N/A	N/A	N/A	120 VAC	REMOTE			PID-15	
325	DI	FILTER BACKWASH PUMP 1 PRESSURE HIGH	BWP-001	PLC-102-I	DRY CONTACT	TRIP AT 120 PSI	N/A	N/A	N/A			PID-15	
326	DI	FILTER BACKWASH PUMP 1 RUNNING	BWP-001	PLC-102-I	N/A	N/A	N/A	120 VAC	RUNNING			PID-15	
327	DI	FILTER BACKWASH PUMP 2 PRESSURE HIGH	BWP-002	PLC-103-I	DRY CONTACT	TRIP AT 120 PSI	N/A	N/A	N/A			PID-15	
328	DI	FILTER BACKWASH PUMP 2 FAIL	BWP-002	PLC-103-I	N/A	N/A	N/A	120 VAC	ALARM			PID-15	
329	DI	FILTER BACKWASH PUMP 2 IN-REMOTE	BWP-002	PLC-103-I	N/A	N/A	N/A	120 VAC	REMOTE			PID-15	
330	DI	FILTER BACKWASH PUMP 2 RUNNING	BWP-002	PLC-103-I	N/A	N/A	N/A	120 VAC	RUNNING			PID-15	
331	DO	BACKWASH DISCHARGE VALVE CLOSE	BFV-026	PLC-101-I	N/A	N/A	N/A	120 VAC	CLOSED			PID-15	
332	DO	BACKWASH DISCHARGE VALVE OPEN	BFV-026	PLC-101-I	N/A	N/A	N/A	120 VAC	OPENED			PID-15	
333	DO	FILTER BACKWASH PUMP 1 RUN	BWP-001	PLC-103-I	N/A	N/A	N/A	120 VAC	RUNNING			PID-15	
334	DO	FILTER BACKWASH PUMP 2 RUN	BWP-002	PLC-103-I	N/A	N/A	N/A	120 VAC	RUNNING			PID-15	
335	AI	AIR SCOUR BLOWER NO. 1 INLET VALVE POSITION FEEDBACK	BFV-123	PLC-201-1	4-20mA	0-100%	2-WIRE	N/A	N/A			PID-16	
336	AI	AIR SCOUR BLOWER NO. 2 INLET VALVE POSITION FEEDBACK	BFV-143	PLC-202-1	4-20mA	0-100%	2-WIRE	N/A	N/A			PID-16	
337	AI	AIR SCOUR BLOWERS DISCHARGE FLOW	FIT-100	PLC-201-1	4-20mA	0-3,810 SCFM	4-WIRE	N/A	N/A			PID-16	
338	AO	AIR SCOUR BLOWER NO. 1 INLET VALVE POSITION	BFV-123	PLC-201-1	4-20mA	0-100%	2-WIRE	N/A	N/A			PID-16	
339	AO	AIR SCOUR BLOWER NO. 2 INLET VALVE POSITION	BFV-143	PLC-202-1	4-20mA	0-100%	2-WIRE	N/A	N/A			PID-16	
340	DI	BLOWER BUILDING UPS BATTERY FAIL ALARM	UPS	PLC-201-1	N/A	N/A	N/A	120 VAC	ALARM			PID-16	
341	DI	BLOWER BUILDING UPS GENERAL ALARM	UPS	PLC-201-1	N/A	N/A	N/A	120 VAC	ALARM			PID-16	
342	DI	BLOWER BUILDING UPS POWER FAILURE	UPS	PLC-201-1	N/A	N/A	N/A	120 VAC	ALARM			PID-16	
343	DI	AIR SCOUR BLOWER NO. 1 HIGH TEMP SHUTDOWN	BL-001	PLC-201-1	N/A	N/A	N/A	120 VAC	CLOSED			PID-16	
344	DI	AIR SCOUR BLOWER NO. 2 HIGH TEMP SHUTDOWN	BL-002	PLC-202-1	N/A	N/A	N/A	120 VAC	CLOSED			PID-16	
345	DI	AIR SCOUR BLOWER NO. 1 HIGH TEMP	BL-001	PLC-201-1	N/A	N/A	N/A	120 VAC	CLOSED			PID-16	
346	DI	AIR SCOUR BLOWER NO. 2 HIGH TEMP	BL-002	PLC-202-1	N/A	N/A	N/A	120 VAC	CLOSED			PID-16	
347	DI	AIR SCOUR BLOWER NO. 1 STARTUP/SHUTDOWN SEQUENCE	BL-001	PLC-201-1	N/A	N/A	N/A	120 VAC	CLOSED			PID-16	
348	DI	AIR SCOUR BLOWER NO. 2 STARTUP/SHUTDOWN SEQUENCE	BL-002	PLC-202-1	N/A	N/A	N/A	120 VAC	CLOSED			PID-16	
349	DI	AIR SCOUR BLOWER NO. 2 INLET VALVE CLOSED	BFV-123	PLC-202-1	N/A	N/A	N/A	120 VAC	CLOSED			PID-16	
350	DI	AIR SCOUR BLOWER NO. 2 INLET VALVE OPEN	BFV-123	PLC-202-1	N/A	N/A	N/A	120 VAC	OPENED			PID-16	
351	DI	AIR SCOUR BLOWER NO. 1 BLOW-OFF VALVE CLOSED	BFV-129	PLC-201-1	N/A	N/A	N/A	120 VAC	CLOSED			PID-16	
352	DI	AIR SCOUR BLOWER NO. 1 BLOW-OFF VALVE OPEN	BFV-129	PLC-201-1	N/A	N/A	N/A	120 VAC	OPENED			PID-16	
353	DI	AIR SCOUR BLOWER NO. 2 BLOW-OFF VALVE CLOSED	BFV-149	PLC-202-1	N/A	N/A	N/A	120 VAC	CLOSED			PID-16	
354	DI	AIR SCOUR BLOWER NO. 2 BLOW-OFF VALVE OPEN	BFV-149	PLC-202-1	N/A	N/A	N/A	120 VAC	OPENED			PID-16	
355	DI	AIR SCOUR BLOWER NO. 1 COMMON WARNING	BL-001	PLC-201-1	N/A	N/A	N/A	120 VAC	ALARM			PID-16	
356	DI	AIR SCOUR BLOWER NO. 1 DIFFERENTIAL PRESSURE HIGH	BL-001	PLC-201-1	N/A	N/A	N/A	120 VAC	ALARM			PID-16	
357	DI	AIR SCOUR BLOWER NO. 1 FAIL	BL-001	PLC-201-1	N/A	N/A	N/A	120 VAC	REMOTE			PID-16	
358	DI	AIR SCOUR BLOWER NO. 1 IN REMOTE	BL-001	PLC-201-1	N/A	N/A	N/A	120 VAC	ALARM			PID-16	
359	DI	AIR SCOUR BLOWER NO. 1 INLET VALVE CLOSED	BL-001	PLC-201-1	N/A	N/A	N/A	120 VAC	CLOSED			PID-16	
360	DI	AIR SCOUR BLOWER NO. 1 INLET VALVE OPEN	BL-001	PLC-201-1	N/A	N/A	N/A	120 VAC	OPENED			PID-16	
361	DI	AIR SCOUR BLOWER NO. 1 MOTOR AMPS	BL-001	PLC-201-1	N/A	N/A	N/A	120 VAC	ALARM			PID-16	
362	DI	AIR SCOUR BLOWER NO. 1 OVERLOAD SHUTDOWN	BL-001	PLC-201-1	N/A	N/A	N/A	120 VAC	ALARM			PID-16	
363	DI	AIR SCOUR BLOWER NO. 1 OVERLOAD WARNING	BL-001	PLC-201-1	N/A	N/A	N/A	120 VAC	RUNNING			PID-16	
364	DI	AIR SCOUR BLOWER NO. 1 RUNNING	BL-001	PLC-201-1	N/A	N/A	N/A	120 VAC	SHUTDOWN			PID-16	
365	DI	AIR SCOUR BLOWER NO. 1 SURGE SHUTDOWN	BL-001	PLC-201-1	N/A	N/A	N/A	120 VAC	ALARM			PID-16	
366	DI	AIR SCOUR BLOWER NO. 1 SURGE WARNING	BL-001	PLC-201-1	N/A	N/A	N/A	120 VAC	SHUTDOWN			PID-16	

Item No.	Type	Description	Field Device	Controller ID or Rem I/O	Signal Type	Calibrated Range	Power	Signal Type	Close State	Power Source	Interp Relay	P&ID Drawing	Remarks
367	DI	AIR SCOUR BLOWER NO. 1 VIBRATION SHUTDOWN	BL-001	PLC-201-1	N/A	N/A	N/A	120 VAC	ALARM			PID-16	
368	DI	AIR SCOUR BLOWER NO. 2 COMMON WARNING	BL-002	PLC-202-1	N/A	N/A	N/A	120 VAC	ALARM			PID-16	
369	DI	AIR SCOUR BLOWER NO. 2 FAIL	BL-002	PLC-202-1	N/A	N/A	N/A	120 VAC	ALARM			PID-16	
370	DI	AIR SCOUR BLOWER NO. 2 IN REMOTE	BL-002	PLC-202-1	N/A	N/A	N/A	120 VAC	REMOTE			PID-16	
371	DI	AIR SCOUR BLOWER NO. 2 MOTOR AMPS	BL-002	PLC-202-1	N/A	N/A	N/A	120 VAC	ALARM			PID-16	
372	DI	AIR SCOUR BLOWER NO. 2 OVERLOAD SHUTDOWN	BL-002	PLC-202-1	N/A	N/A	N/A	120 VAC	ALARM			PID-16	
373	DI	AIR SCOUR BLOWER NO. 2 OVERLOAD WARNING	BL-002	PLC-202-1	N/A	N/A	N/A	120 VAC	ALARM			PID-16	
374	DI	AIR SCOUR BLOWER NO. 2 RUNNING	BL-002	PLC-202-1	N/A	N/A	N/A	120 VAC	RUNNING			PID-16	
375	DI	AIR SCOUR BLOWER NO. 2 SURGE SHUTDOWN	BL-002	PLC-202-1	N/A	N/A	N/A	120 VAC	SHUTDOWN			PID-16	
376	DI	AIR SCOUR BLOWER NO. 2 SURGE WARNING	BL-002	PLC-202-1	N/A	N/A	N/A	120 VAC	ALARM			PID-16	
377	DI	AIR SCOUR BLOWER NO. 2 VIBRATION SHUTDOWN	BL-002	PLC-202-1	N/A	N/A	N/A	120 VAC	SHUTDOWN			PID-16	
378	DI	AIR SCOUR BLOWER NO. 2 VIBRATION WARNING	BL-002	PLC-202-1	N/A	N/A	N/A	120 VAC	ALARM			PID-16	
379	DI	AIR SCOUR BLOWER NO.2 DIFFERENTIAL PRESSURE HIGH	BL-002	PLC-202-1	N/A	N/A	N/A	120 VAC	ALARM			PID-16	
380	DI	AIR SCOUR BLOWER NO. 1 VIBRATION WARNING	BL-001	PLC-201-1	N/A	N/A	N/A	120 VAC	ALARM			PID-16	
381	DO	AIR SCOUR BLOWER NO. 1 START COMMAND	BL-001	BB-PLC-201-I	N/A	N/A	N/A	120 VAC	START			PID-16	
382	DO	AIR SCOUR BLOWER NO. 1 STOP COMMAND	BL-001	BB-PLC-201-I	N/A	N/A	N/A	120 VAC	STOP			PID-16	
383	DO	AIR SCOUR BLOWER NO. 2 START COMMAND	BL-002	BB-PLC-202-I	N/A	N/A	N/A	120 VAC	START			PID-16	
384	DO	AIR SCOUR BLOWER NO. 2 STOP COMMAND	BL-002	BB-PLC-202-I	N/A	N/A	N/A	120 VAC	STOP			PID-16	
385	AI	NPW PUMPS DISCHARGE FLOW	FIT-020	PLC-101-I	4-20mA	0-1800 GPM	4-WIRE	N/A	N/A			PID-17	
386	AI	NPW STRAINER BYPASS FLOW	FIT-021	PLC-101-I	4-20mA	0-1100 GPM	4-WIRE	N/A	N/A			PID-17	
387	DI	FILTER BUILDING 1 BATTERY FAIL ALARM	UPS	PLC-101-I	N/A	N/A	N/A	120 VAC	ALARM			PID-17	
388	DI	FILTER BUILDING 1 UPS POWER FAILURE	UPS	PLC-101-I	N/A	N/A	N/A	120 VAC	ALARM			PID-17	
389	DI	FILTER BUILDING 1 UPS GENERAL ALARM	UPS	PLC-101-I	N/A	N/A	N/A	120 VAC	ALARM			PID-17	
390	DI	FILTER BUILDING 2 BATTERY FAIL ALARM	UPS	PLC-101-I	N/A	N/A	N/A	120 VAC	ALARM			PID-17	
391	DI	FILTER BUILDING 2 UPS POWER FAILURE	UPS	PLC-101-I	N/A	N/A	N/A	120 VAC	ALARM			PID-17	
392	DI	FILTER BUILDING 2 UPS GENERAL ALARM	UPS	PLC-101-I	N/A	N/A	N/A	120 VAC	ALARM			PID-17	
393	DI	NPW STRAINER POWER ON	NP-001	PLC-101-I	N/A	N/A	N/A	120 VAC	ALARM			PID-17	
394	DI	NPW STRAINER CYCLE ON	NP-001	PLC-101-I	N/A	N/A	N/A	120 VAC	ALARM			PID-17	
395	DI	NPW STRAINER FAULT	NP-001	PLC-101-I	N/A	N/A	N/A	120 VAC	ALARM			PID-17	
396	DI	NPW PUMP 1 FAIL	NP-001	PLC-102-I	N/A	N/A	N/A	120 VAC	ALARM			PID-17	
397	DI	NPW PUMP 1 IN REMOTE	NP-001	PLC-102-I	N/A	N/A	N/A	120 VAC	REMOTE			PID-17	
398	DI	NPW PUMP 1 RUNNING	NP-001	PLC-102-I	N/A	N/A	N/A	120 VAC	RUNNING			PID-17	
399	DI	NPW PUMP 2 FAIL	NP-002	PLC-103-I	N/A	N/A	N/A	120 VAC	ALARM			PID-17	
400	DI	NPW PUMP 2 IN REMOTE	NP-002	PLC-103-I	N/A	N/A	N/A	120 VAC	REMOTE			PID-17	
401	DI	NPW PUMP 2 RUNNING	NP-002	PLC-103-I	N/A	N/A	N/A	120 VAC	RUNNING			PID-17	
402	DO	NPW PUMP 1 RUN	NP-001	PLC-102-I	N/A	N/A	N/A	120 VAC	RUNNING			PID-17	
403	DO	NPW PUMP 2 RUN	NP-002	PLC-103-I	N/A	N/A	N/A	120 VAC	RUNNING			PID-17	
404	AI	NW CLEARWELL LEVEL	LIT-001	PLC-101-I	4-20mA	25 FT	4-WIRE	N/A	N/A			PID-18	
405	AI	SS CLEARWELL LEVEL	LIT-011	PLC-101-I	4-20mA	25 FT	4-WIRE	N/A	N/A			PID-18	
406	DI	NW CLEARWELL LOW LEVEL	LIT-001	PLC-101-I	N/A	N/A	N/A	ALARM	PLC			PID-18	
407	DI	SS CLEARWELL LOW LEVEL	LIT-011	PLC-101-I	N/A	N/A	N/A	ALARM	PLC			PID-18	
408	DI	LIQUID RING VACUUM PUMPS FAIL	VP-001/VP-002	PLC-102-I	N/A	N/A	N/A	ALARM	PLC			PID-19	
409	AI	NHS PUMPS STROKE SPEED INDICATION	P-201/P-202	H2-PLC-02D	4-20mA	0-100%	N/A	N/A	N/A			PID-20	
410	AI	NHS PUMPS STROKE LENGTH INDICATION	P-201/P-203	H2-PLC-02D	4-20mA	0-100%	N/A	N/A	N/A			PID-20	
411	AI	NHS PUMP 1 CHEMICAL FLOW RATE	FIT-210	H2-PLC-02D	4-20mA	4.6-40.3 GPH	N/A	N/A	N/A			PID-20	
412	AI	NHS PUMP 2 CHEMICAL FLOW RATE	FIT-220	H2-PLC-02D	4-20mA	4.6-40.3 GPH	N/A	N/A	N/A			PID-20	
413	AO	NHS PUMPS STROKE SPEED SETPOINT	P-201/P-202	H2-PLC-02D	4-20mA	0-100%	N/A	N/A	N/A			PID-20	
414	AO	NHS PUMPS STROKE LENGTH SETPOINT	P-201/P-202	H2-PLC-02D	4-20mA	0-100%	N/A	N/A	N/A			PID-20	
415	DI	NHS SYSTEM EYEWASH ACTIVATED	FS-001	H2-PLC-02D	N/A	N/A	N/A	120 VAC	ALARM			PID-20	
416	DI	NHS PUMPS FAIL	P-201/P-202	H2-PLC-02D	N/A	N/A	N/A	120 VAC	CLOSED			PID-20	
417	DI	NHS PUMPS IN-REMOTE	P-201/P-202	H2-PLC-02D	N/A	N/A	N/A	120 VAC	REMOTE			PID-20	
418	DI	NHS PUMPS RUNNING	P-201/P-202	H2-PLC-02D	N/A	N/A	N/A	120 VAC	OPENED			PID-20	
419	DI	NHS PUMPS HIGH DISCHARGE PRESSURE	PSH-210/PSH-220	H2-PLC-02D	N/A	N/A	N/A	120 VAC	ALARM			PID-20	
420	DO	NHS PUMPS RUN COMMAND	P-201/P-202	H2-PLC-02C	N/A	N/A	N/A	120 VAC	RUN			PID-20	

Section 11610

MULTISTAGE CENTRIFUGAL BLOWERS

PART 1 - GENERAL

1-1. SCOPE. This section covers the furnishing and installation of electric motor driven, multistage, centrifugal blowers to be installed as indicated on the drawings, and as required herein.

Blower designation.	Air Scour Blowers
Number of blowers.	2
Blower tag numbers.	BL-001, BL-002
Blower location.	Blower Room

Each blower shall be complete with electric drive motor, flexible shaft coupling, coupling guard, base, vibration isolator base pads, controls, spare parts, and all other accessories or appurtenances indicated on the drawings, specified herein or otherwise needed for proper operation.

Piping, pipe supports, valves, and accessories that are not an integral part of the equipment or specified herein are covered in other sections.

1-1.01. Associated Sections. This section also includes criteria, responsibilities, equipment and services specified in the following sections.

01300	Submittals
01615	Equipment and Valve Identification
11065	Panels, Consoles, and Appurtenances
11066	General Wiring Methods
11067	Wire Tagging
11068	Packaged System PLC Programming Criteria
15170	Electric Motor, Induction, 600 Volt and Below
16120	480 Volt Motor Control Centers

1-2. GENERAL.

1-2.01. Coordination. Equipment furnished under this section shall be fabricated and assembled in full conformity with drawings, specifications, engineering data,

instructions, and recommendations furnished by the equipment manufacturer unless exceptions are noted by Engineer.

Where two or more units of the same class of equipment are required, they shall be the product of a single manufacturer; however, all the component parts of the system need not be the products of one manufacturer.

The blower unit shall be a current standard product of the blower manufacturer and shall be a packaged type unit, fully shop assembled by the blower manufacturer. All accessory items shall be furnished by the blower manufacturer.

Contractor shall be responsible for coordinating the blowers with the equipment specified in the Filter Underdrains and Media Section (13220). Contractor shall be responsible for any changes required in the blower design resulting from changes in the filter design, including media losses or pressure losses through the submerged piping system, underdrains, orifices or nozzles.

Unless exceptions are noted by Engineer, the equipment arrangement and piping may be modified in accordance with the recommendations of the equipment manufacturer to suit the equipment furnished. All needed modifications shall be reviewed by Engineer and shall be performed by Contractor at no additional cost to Owner.

1-2.02. General Equipment Stipulations. The General Equipment Stipulations shall apply to all equipment furnished under this section. If requirements in this specification differ from those in the General Equipment Stipulations, the requirements specified herein shall take precedence.

1-2.03. Governing Standards. Except as modified or supplemented herein, all work covered by this section shall be performed in accordance with all applicable municipal codes and ordinances, laws, and regulations which pertain to such work. In case of a conflict between these specifications and any state law or local ordinance, the latter shall govern.

All work shall comply with Underwriters' Laboratories (UL) safety requirements.

1-2.04. Power Supply. The power supply to all instrumentation and control panels will be 120 volt, 60 Hz, 1-phase, 3-wire. The power supply for all other equipment, unless otherwise specified, will be 480 volts, 60 Hz, 3-phase. Where control voltage lower than the power supply voltage is required, a suitable control power transformer shall be furnished.

1-2.07. Related Equipment and Materials. Related equipment and materials may include, but will not be limited to, instrumentation, motor controllers, valve

actuators, chemical feeders, analytical measuring devices, conduit, cable, and piping as described in other sections or furnished under other contracts.

1-2.05. Device Tag Numbering System. Each item of equipment and each part shipped separately shall be tagged and identified with indelible markings for the intended service. Tag number shall be clearly marked on all shipping labels and on the outside of all containers. The Tag number shall agree with Instrument Device schedule and with the supplier's equipment drawing. All field mounted transmitters and devices shall have stamped stainless steel identification tag. Panel, subpanel, and rack-mounted devices shall have laminated phenolic identification tags securely fastened to the device. Hand-lettered or tape labels will not be acceptable.

1-2.06. Identification. Blowers and accessories shall be identified in accordance with the Equipment and Valve Identification Section (01615).

1-3. SUBMITTALS.

1-3.01. Drawings and Data. Complete assembly and installation drawings, wiring and schematic diagrams, together with detailed specifications and data covering materials used, parts, devices and other accessories forming a part of the equipment furnished, shall be submitted in accordance with the Submittals Section (01300). Device tag numbers indicated on the contract drawings shall be referenced on the wiring and schematic diagrams where applicable. The data and specifications for each unit shall include, but not be limited to the following:

Package

Letter from factory confirming blower package is fully shop assembled and will meet the performance requirements specified herein.

Statement from Contractor verifying that the maximum air pressure drop through the filter and underdrain manufacturer's equipment is as specified in the Filter Underdrains and Media Section (13220); that the design capacity is an acceptable air flow for low water level and high water level.

Blowers

Name of manufacturer.
Type and model.
Number of stages.
Full rotative speed at rated condition.
Critical speed of the rotor.
Type of bearings, AFBMA L_{10} life rating, and lubrication.
Connection sizes.
Maximum air temperature at discharge flange.
Maximum allowable forces and moments on blower inlet and

discharge flanges.
Net weight of blower.
Net weight of heaviest single component requiring removal for maintenance.
Overall dimensions.
Complete performance curves showing discharge pressure versus capacity, and bhp at minimum and maximum ambient air temperatures and at standard conditions. Curves for inlet airflow in cfm and scfm units.
Blower inertia and speed-torque characteristics for blower operation with fully open inlet valve as well as minimally open inlet valve.
Shop painting data.
Anchor bolt location details.
Vibration isolator base pads.
Maximum free field noise level at 3 feet.
Impeller combination, including model number and quantity of each.

Motors

As specified in Section 15170, “Electrical Motor, Induction, 600 Volt and below”.

Controls

Blower control panel layout including interior and exterior views.
Accessory device data including catalog cut sheets on all control components.
Wiring diagram.

Accessories

Name of manufacturer.
Equipment data.

Certified Shop Test Reports

Performance curves including summer and winter inlet air flow curves in cfm and scfm units.
Test data.
Sample calculations.

1-3.02. Instrumentation and Controls. The submittal shall include the following for instrumentation and controls.

a. Product catalog cut sheets on all hardware and software items, clearly marked to show the model number, optional features used, and intended service of each device.

b. Detailed narrative on the blower system operation.

c. Detailed functional descriptions of all software program modules specified and furnished as part of manufacture's standard system. The descriptions shall be identified with the applicable specification paragraph.

d. Environmental and power requirements, including heat release information for each equipment item.

e. Complete panel fabrication drawings and details of panel wiring, piping, and painting. Panel and subpanel drawings shall be to scale and shall include overall dimensions, metal thickness, door swing, mounting details, weight, and front of panel arrangement to show general appearance, with spacing and mounting height of instruments and control devices. Bill of material complete with manufacture, model or part number, and quantity shall be provided.

f. PLC loop diagrams, electrical schematics, wiring and installation drawings for all interconnecting wiring between components of the system and between related equipment and the equipment furnished under this section. Wiring diagrams shall show complete circuits and indicate all connections. If panel terminal designations, inter-device connections, device features and options, or other features are modified during the fabrication or factory testing, revised drawings shall be submitted before shipment of the equipment to the site.

g. Standard field termination drawings for all process input/output equipment, showing typical terminations for each type of point available in the system.

h. Fiber termination diagrams to show all fiber terminations at fiber patch panels and final termination at equipment. Fiber termination diagrams shall show individual fiber type (single or multimode), fiber core/cladding dimensions, fiber colors, circuit identifications, and type of terminator.

i. Contractor and blower equipment supplier/programmer shall complete all AWU Programming tables provided under other sections. Lists include Field I/O, Hostpack, and Peer-to-Peer spreadsheets. One set shall be field out for each PLC.

j. A copy of the proposed software licenses for all software associated with the system.

k. Detailed testing plans and testing check sheets for all test specified herein.

l. Proposed lesson plans or outlines for all training courses specified herein, including schedule, instructors' qualifications and experience, and recommended prerequisites shall be submitted at least 30 days prior to the start of training.

m. Standard system engineering and user manuals describing the use of the system and application programming techniques for creating reports, graphics, database, historical records, and adding new process I/O nodes to the system.

n. Additional Requirements identified in other Division sections within the contract documents.

1-3.03. Test Reports. Six certified copies of the test report complete with performance curves, data, and all calculations shall be submitted in accordance with the Submittals Section (01300). The test reports shall be delivered to the Engineer at least 10 days prior to the shipment of the blowers from the manufacturer.

1-3.04. Operation and Maintenance Manuals. Operation and maintenance manuals shall be submitted in accordance with the Submittals Section (01300). The operation and maintenance manuals shall be in addition to any instructions or parts lists packed with or attached to the equipment when delivered.

Operation and Maintenance Manuals shall be submitted before the commencement of any field acceptance testing.

a. Operation and Maintenance Manuals shall include complete instruction books, user manuals, or operational procedures for each item of equipment and software furnished.

b. O&M manuals shall have all the instrumentation installation and calibrations sheets filled out and signed.

b. Manuals shall contain all illustrations, detailed drawings, wiring diagrams and instructions necessary for installing, operating and maintaining the equipment.

c. Where instruction booklets cover more than one specific model or range of device, product data sheets shall be included which indicate the device model number and other special features.

d. A complete set of "as-built" wiring, fabrication, and interconnection drawings shall be included with the manuals.

e. The operation and maintenance manual submittal shall include an electronic copy of the filter programmable logic controller and operator unit interface application program, provided on DVD.

f. If field-wiring modifications are made after these drawings are submitted, the affected drawings shall be revised and resubmitted.

1-4. SPARE PARTS. The following spare parts and accessories shall be furnished in substantial wooden boxes with identifying labels and delivered to the vicinity of the project site or the Owner as directed:

Spare Parts	Quantity
Number of bearings and seals per blower.	1
Sets of gaskets (for bearing replacement) per blower.	1
Number of filter sets per blower.	3
PLC Processor module	1 min or 20%
PLC Power supply module	1 min or 20%
PLC I/O modules	1 min or 20% of each type used
PLC Communication modules	1 min or 20%
Ethernet Switches	1 min or 20%
Loop power supply	1 min or 20%

1-5. WARRANTY. The blower system specified herein, unless otherwise stated, shall have a comprehensive written warranty policy for one (1) year from date of substantial completion of the blower system. Upon notice of a blower system failure, the manufacture shall have a qualified engineer or technician respond to the event within twenty-four (24) hours to troubleshoot the problem by phone. In the event that the problem is not resolved by these means, then the engineer or technician will respond to the job site within seventy-two (72) hours of the failure.

PART 2 - PRODUCTS

2-1. SERVICE CONDITIONS. Each blower will be used to supply air for backwashing water media filters.

The blowers shall be suitable for the following service conditions:

Barometric pressure.	14.5	psia
Indoor ambient air temperature range.	60 to 120	°F
Design maximum inlet air temperature.	110	°F
Design minimum inlet air temperature.	25	°F
Design relative humidity at maximum design temperature.	60	%
Design relative humidity at minimum design temperature.	10	%

Parts shall be interchangeable between units of similar size and capacity to extent practical.

All equipment furnished shall be designed to meet all specified conditions and to operate satisfactorily at this elevation.

2-2. PERFORMANCE AND DESIGN REQUIREMENTS. Blower units shall be designed for the operating conditions as follows:

Blowers

Blower tag numbers.	BL-001, BL-002	
Operation.	Parallel	
Drive configuration.	Intake end	
Intake configuration	Vertical upward	
Discharge configuration.	Vertical upward	
Inlet pressure at the blower suction flange.	14.20	psia
Minimum rated discharge pressure at design capacity.	5.5	psig
Minimum secondary discharge pressure at design capacity.	4.9	psig
Minimum surge pressure at maximum inlet air temperature.	6.0	psig
Minimum design capacity at rated discharge pressure, maximum inlet air temperature and relative humidity.	4,470	inlet cfm
Corresponding mass flow capacity. [1]	3,810	scfm
Minimum percent of design capacity without surging at full speed.	65	%

Maximum rotative speed of blowers.	3,550	rpm
Maximum rotative speed of motor.	3600	rpm
Maximum unfiltered vibration displacement (peak-to-peak), as measured at any point on the machine.	1.25	mils
Minimum ratio of critical speed to the rotative speed at any speed.	1.2	
Maximum power required at rated discharge pressure, minimum inlet air temperature and relative humidity, with throttled inlet with mass flow equivalent to specified minimum design capacity.	166	bhp
Drive motor rating	200	hp

Intake Filter Silencer

Equipment tag numbers.	F-001, F-002	
Type.	Cartridge	
Maximum initial pressure drop.	2	in wc
Maximum face velocity at housing entrance.	400	ft/min
Particle arrestance (removal percentage/size).	98% for 10 micron and larger particles	
Sound attenuation.		
Octave band 63.	10	dB
Octave band 125.	14	dB
Octave band 250.	17	dB

Octave band 500.	20	dB
Octave band 1000.	24	dB
Octave band 2000.	21	dB
Octave band 4000.	21	dB
Octave band 8000.	21	dB

Blow-off Silencer

Type.	Vent	
Sound attenuation.		
Octave band 63.	8	dB
Octave band 125.	10	dB
Octave band 250.	14	dB
Octave band 500.	19	dB
Octave band 1000.	30	dB
Octave band 2000.	33	dB
Octave band 4000.	30	dB
Octave band 8000.	28	dB

Discharge Flexible Connection

Discharge configuration	Top	
Number of arches.	3	
Lateral movement capability.	5	in
Axial movement capability.	8.75	in
Lateral spring rates.	484	lb/in
Axial spring rates.	597	lb/in
Maximum face-to-face length.	28	in
Temperature rating.	300	°F

1. The “corresponding mass flow capacity” shall be used for determining the minimum percent of design capacity without surging at full speed, i.e. the required turndown shall be met with the scfm flow rate throughout the specified temperature range. Protection controls shall not prevent the blower from achieving the required turndown.

Blower performance curves shall be matched. Each performance curve shall be sloped so that the discharge pressure is continuously decreasing with increasing flow.

2-3. ACCEPTABLE MANUFACTURERS. Blowers shall be manufactured by Continental, Gardner Denver, or Spencer without exception.

2-4. MATERIALS.

Casings	Cast iron with legs and lifting eyes.
Casing Tie Rods	Steel.
Casing Seals – Air	Carbon ring or labyrinth.
Baffles	Stainless steel or chrome-plated steel.
Shaft	High carbon steel.
Vibration Isolator Base Pads	Rubber, cork, or rubber-cork.

2-5. CONSTRUCTION.

2-5.01. Casing. Casings shall be made in sections with joints between sections accurately machined. Sections shall be held together by means of tie rods.

Seals shall be provided where the blower shaft passes through the ends of the casing. Suitable seals shall also be provided to prevent bearing contamination and to prevent loss of bearing lubricant.

Suction and discharge nozzles shall be flanged. Flanges shall be flat faced with diameter and drilling conforming to ANSI B16.1, Class 125.

Casings shall be supported by suitable feet integrally cast as a part of the casing. Suitable lifting lugs shall be provided for ease of handling and installation.

2-5.02. Impellers. Impellers may be of either fabricated or cast construction. Fabricated impellers shall be made of aluminum or steel and shall be riveted to cast hubs. Cast impellers shall be accurately formed and machined on all exterior surfaces. Each impeller shall have uniform sections, smooth surfaces, shall be free from cracks and porosity, and shall be dynamically balanced.

2-5.03. Shaft. Each shaft shall be of solid design and shall be fully machined or ground to size and polished. Each shaft shall be of ample size to transmit the maximum applied power and to carry all applied radial loads without excessive deflection.

2-5.04. Bearings. Each rotor assembly shall be supported at each end by one or more antifriction bearings. Shaft speed shall not exceed the bearing manufacturer's limitations. Bearings shall be mounted in housings outboard of the casing heads. Bearing housings shall be arranged to permit inspection and replacement of the bearings without disconnecting the piping or disassembling the blower. Bearings shall have an AFBMA L_{10} Life Rating of 100,000 hours at specified operating conditions and shall be oil lubricated.

2-5.05. Baseplate. Each blower and drive motor assembly shall be mounted on a common fabricated steel baseplate. The baseplate shall be constructed from structural members and shall be designed to limit deflection, to L/360 where L is the longer dimension of the base. The base shall be arranged so that all equipment bolted to it can be removed without access to the underside. All seams and contact edges between shapes and plates shall be continuously welded and ground smooth.

2-5.06. Base Pads. Each blower shall be provided with vibration isolator base pads as specified herein.

2-6. ACCESSORIES.

2-6.01. Intake Filter Silencers. Each blower shall be provided with an intake filter silencer installed in the suction piping as indicated on the drawings. Each filter silencer shall be of all-welded steel construction with prime painted exterior, replaceable, hydrophobic, Hi-Flow synthetic filter element, and flanged outlet connection with diameter and drilling conforming to ANSI B16.1, Class 125. Filter silencer shall be top mount with flange on top and supported from the intake pipe as shown on the drawings. Filter silencers shall be suitable for continuous weather exposure in exterior locations. Filter silencers shall be installed such that the outside air inlet of the filter unit shall be a minimum of 5.5 feet above the adjacent grade. Filter silencer shall be Endustra ‘TM09’, without exception.

2-6.02. Blowoff Silencer. A common blowoff silencer shall be provided. The blowoff silencer shall be installed in the piping as indicated on the drawings. Silencer shall be vent type. Packing for the blowoff silencer shall be suitable for continuous operation at 275 F. Silencer shall be designed to prevent packing blowout at a velocity of 15,000 fpm. The silencer shall be of all-welded steel construction with prime painted exterior surfaces and flanged connections with diameter and drilling conforming to ANSI B16.1, Class 125. A 1” NPT drain with isolation valve shall be provided.

Blowoff silencer shall be sized and oriented as indicated on the drawings. Silencer shall be provided with four support legs for floor mounting as shown on the drawings.

Blowoff silencer shall be Stoddard or Universal vent type, or approved equal.

2-6.03. Flexible Connections. An elastomeric, arched type flexible connection shall be provided in the suction and discharge piping adjacent to each blower as specified herein and indicated on the drawings.

Each flexible connection shall be sized to allow piping movement without exceeding the blower manufacturer's force allowance at the blower flange. Minimum piping movements allowed for each discharge flexible connection shall be as specified herein. The number of arches shall be as specified herein or as needed to meet the specified spring rates and movement capabilities. The inlet connection shall be suitable for 7 psi vacuum service and the discharge connection shall be suitable for a pressure of 15 psig and temperature rating of 300 F. Suction flexible connectors shall be single arch, Mercer “Type 450”, or Owner approved equal. Discharge flexible connectors shall be Mercer “Type 450” with “Type 500” retaining rings and Kevlar reinforcement, or Owner approved equal, with the number of arches, spring rate, and movement as indicated herein.

2-6.04. Pressure Gauges. A pressure gauge shall be furnished and installed in the discharge piping of each blower and a vacuum gauge in the suction piping of each blower at the locations indicated on the drawings.

Pressure gauges shall conform to ANSI B40.1 and shall be of the indicating dial type with C-type phosphor bronze bourdon tube, stainless steel rotary geared movement, phenolic or polypropylene open front turret case, adjustable pointer, stainless steel or phenolic or polypropylene ring, and acrylic plastic or shatterproof glass window. All gauges shall be ANSI Accuracy Grade A.

Gauge dial shall be 4-1/2 inch size with white background and black markings and shall have dual English and metric indication. The English units of measurement shall be pounds per square inch and the metric units shall be kilopascals. The range for each discharge pressure gauge shall be from 0 to 15 psig. The range for each vacuum gauge shall be from 30 inches Hg vacuum to 0. Pointer travel shall be not less than 200 degrees nor more than 270 degrees.

All gauges shall be provided with 1/2 inch NPT connections. Each gauge shall be provided with a threaded end ball type shutoff valve as specified in the Miscellaneous Ball Valves Section (15091).

All gauges shall be installed in the vertical, upright position. Thread sealer, suitable for use with the associated process, shall be used in the assembly of threaded connections. All connections shall be free from leaks. Lines shall be purged of trapped air at gauge locations prior to installation of the gauge or diaphragm seal.

Each gauge shall be provided with all required mounting hardware to securely mount the unit according to the mounting.

Unless otherwise indicated, mounting and installation hardware shall be Type 316L stainless steel.

Pressure gauges shall be Ashcroft "1279 Duragauge", or equal.

2-6.05. Pressure Switch. A differential pressure switch shall be furnished and installed across each filter silencer. The switch shall have an adjustable range from 0 to 10 inches water column vacuum. The pressure switch shall be used for annunciation of high pressure across the filter on the blower control panel.

Each switch shall be diaphragm actuated type, field adjustable, have a trip point repeatability of better than 1 percent of actual pressure, over-range protection to maximum process line pressure, and weatherproof housings. All switches shall be provided with 1/2 inch NPT connections. Each gauge shall be provided with a threaded end ball type shutoff valve as specified in the Miscellaneous Ball Valves Section (15091).

Switch contacts shall be SPDT and shall close for alarm annunciation and the contact rating shall be 10 amperes at 120 volts ac.

All switches shall be installed in the vertical, upright position. Thread sealer, suitable for use with the associated process, shall be used in the assembly of threaded connections. All connections shall be free from leaks. Lines shall be purged of trapped air at switch locations prior to installation of the switch or diaphragm seal.

Switches shall be manufactured by Static-O-Ring Company, Mercoid Control, Barksdale, or Owner approved equal.

2-6.06. Draft Gauge. A draft gauge having a range from 0 to 10 inches water column shall be installed across each air filter or air filter silencer.

The gauge shall have minimum 3-1/2 inch dial, pressure taps, and fittings for 1/4 inch metal tubing, vent valves, mounting brackets, and an adjustable signal flag.

The draft gauge shall be "Dwyer 2000 Series Magnehelic Differential Pressure Gages" manufactured by Dwyer Instruments, Inc. or Owner approved equal.

2-6.07. Resistance Temperature Detectors and Transmitters. Resistance temperature detectors (RTD) and transmitters shall be provided by the blower manufacturer. An RTD shall be installed in the inlet pipe to each blower and used for automatic temperature compensation of the surge trip point. In addition,

RTD's shall be used for blower bearing temperature protection. Blowers shall be equipped with RTDs on the inboard and outboard bearing housings of the blower.

Each resistance temperature detector shall be a nominal 100 ohm, three or four wire, hermetically sealed, platinum resistance element. The sensing element shall be enclosed in an AISI Type 316 stainless steel outer sheath. Accuracy shall be ± 1°F [±0.6°C] over the specified operating range.

Each temperature detector shall be provided with a thermowell. Unless otherwise indicated in the Drawings, thermowells shall be weld mount style. Thermowell materials shall be AISI Type 316 stainless steel. The approximate process insertion length of the thermowell shall be as indicated on the Drawings. The temperature element shall be spring-loaded in the thermowell. Appropriate temperature head hardware shall be provided with the assembly.

Each transmitter shall be an all solid state electronic two-wire device that does not require a direct power connection to the transmitter. The transmitter shall be designed for a resistance temperature detector input and shall have a 4-20 mA dc.

The transmitter shall be of the sensor lead wire compensated type with linearized output to provide an accuracy of ± 0.2 percent of temperature span. The transmitter shall be housed in a weatherproof enclosure designed for mounting directly on or near the thermowell. Shielded lead wire shall be provided as needed between the transmitter and the temperature detector. Each transmitter shall be coordinated with the sensor and thermowell. Transmitters shall be manufactured by Foxboro "RTT20/25", ABB Model TH202/TF202, or Rosemount "644/3144".

Transmitters shall be factory calibrated to the required range and provided with the manufacturer's standard hand-held communications/calibration device. One device shall be furnished for all transmitters provided by a single manufacturer.

Transmitters tagged on the Drawings or specified to be the indicating type shall be furnished with LCD type digital indicators.

Gauge dial shall be minimum 4-1/2 inch [114mm] size, with white background and black markings. The units of measurement shall be indicated on the dial face. Subdivisions of the scale shall conform to the requirements of the governing standard. Pointer travel shall be not less than 200 degrees or more than 270 degrees of arc.

All temperature gauges shall measure in degrees in both Fahrenheit and Celsius indication. All gauges shall have a range of 50/500°F and 10/260°C. The units

of measurement shall be indicated on the dial face. Gauge accuracy shall be 1 percent of scale range.

All gauges shall be installed in the vertical, upright position. Stem-mounted gauges shall be provided with 1/2 inch [12 mm] NPT connections. Stem mounted gauges shall have an adjustable viewing angle to allow the gauge to be positioned for optimum viewing. Thread sealer, suitable for use with the associated process, shall be used in the assembly of threaded connections. All connections shall be free from leaks. Lines shall be purged of trapped air at gauge locations prior to installation.

Each gauge shall be provided with a thermowell. Thermowells shall be weld mount style. Thermowell materials shall be compatible with the process fluid. Where the process fluid is not defined, thermowells shall be AISI Type 316 stainless steel.

Each gauge shall be provided with all required mounting hardware to securely mount the unit according to the mounting requirements indicated on the Drawings or the Instrument Device Schedule.

Unless otherwise indicated, mounting and installation hardware shall be AISI Type 316L stainless steel.

Temperature gauges shall be Ashcroft “EL Series, Code 60”, or equal.

2-6.08. Valves and Actuators. Blower inlet butterfly valves and blow-off butterfly valve shall be furnished by the blower manufacturer, and shall be as specified in the Industrial Butterfly Valves (15092) and the Valve and Gate Actuators Section (15180).

2-7. BALANCE. All rotating parts shall be accurately machined and shall be in as nearly perfect rotational balance as practicable. Excessive vibrations shall be sufficient cause for rejection of the equipment. The mass of the unit and its distribution shall be such that resonance at normal operating speeds is avoided.

2-8. DRIVE UNITS. Each blower shall be driven by an electric motor through a flexible coupling. Drive units shall be designed for 24 hour continuous service.

2-8.01. Flexible Coupling. Each coupling shall have a horsepower rating of not less than 1.25 times the motor nameplate horsepower when the misalignment is within the coupling manufacturer's tolerance limit.

For motors 150 hp and smaller, the coupling shall be flexible element type, as manufactured by Rexnord. For motors 200 hp and larger, the coupling shall be all metal, flexible disc, spacer type, as manufactured by Kopflex or Thomas.

2-8.02. Electric Motors. Electric motors shall be in accordance with the requirements of Section 15170, “Electrical Motor, Induction, 600 Volt and Below”. Motors shall be designed for an ambient temperature of 50°C.

Each motor terminal box shall be sized to accommodate the installation of a current transformer specified herein, and all incoming power and control cable as indicated on the drawings.

2-9. CONTROLS.

2-9.01. Adjustable Frequency Drives. Not Used.

2-9.02. Blower Motor Starters. Blower motor starters will be provided under Section 16120, 480 Volt Motor Control Centers. Motor starters will provide to the blower control panel one normally open dry motor run contact. The contact will close when the blower motor is started and will open when the blower motor is stopped. A maximum of 2 motor starts per hour will be required.

2-9.03. Valve Actuators. Valve actuators will be provided under the Valve and Gate Actuators Section (15180). The valve actuators will be provided with limit switches if open/close type or an analog 4-20 mA position feedback signal if modulating type for annunciation of valve position on the blower control panel.

2-9.04. Blower Control Panel. Each blower shall be provided with a control panel. The panel shall contain all PLC's, relays, timers, devices, indicators, control switches, etc., required to start, stop, and shutdown its respective blower. It shall contain all necessary controls to open and close the associated inlet and blowoff valve. Blower system equipment controls shall be through physical switches and pushbuttons. Operator Interface Units (OIU)s shall not be used.

The control panel shall be mounted separately from the blower, and shall be located as shown on the Contract drawings. The control panel shall be powered from a single point, 120Vac, single phase, 60 Hz, electrical feed that terminates on a dedicated main circuit breaker inside of the control panel. Panel shall be provided with padlockable external disconnect operating mechanism for operating the main circuit breaker. Size, furnish and install branch circuit breakers in the control panel to serve respective blower inlet valve actuators. The control panel shall contain control power transformers to derive and distribute the needed control power at the necessary voltages for the control panel. Other components installed in or on each control panel shall be rated for 120 volt ac.

Control panel operation and layout shall be as recommended by the equipment manufacturer with the following provisions.

The panel shall be provided with a LOCAL/REMOTE selector switch. In local control mode the blower, blow-off valve, and inlet valve shall each be controlled separately using panel mounted pushbuttons, and the following control features shall be furnished.

2-9.04.01. Blower. One start and one stop momentary dry contact output shall be available for use by the blower motor starter. In the local control mode, the start contact shall close when the blower start pushbutton is pushed; and the stop contact shall close when the stop pushbutton is pushed. In the remote control mode, the blower control panel shall be capable of receiving a momentary start and stop dry contact inputs for the blower. Based on the remote contact inputs, the blower control panel shall transmit the start/stop commands to the blower starter utilizing the same momentary start and stop contacts specified above.

Each blower shall be equipped with an Emergency Shutdown pushbutton. When the emergency button is pressed the blower shall immediately initiate the shutdown sequence.

2-9.04.02. Blower Equipment Indication. All alarm conditions that result in blower shutdown shall require a manual reset from the blower control panel. All remote annunciation contacts alarming a shutdown condition shall stay in the alarm state until manually reset.
The control panel shall be furnished with at least the following indicating lights.

- Control power on (white) indicating light.
- Blower run (red) and blower off (green) indicating lights.
- Inlet valve open (red) and closed (green) indicating lights.
- Blowoff valve open (red) and closed (green) indicating lights.
- Approach surge (amber) and surge (red) indicating lights.
- Approach overload (amber) and overload (red) indicating lights.
- Blower bearing high temperature warning (amber) and blower bearing high temperature shutdown (red).
- Blower bearing vibration warning (amber) and blower bearing vibration shutdown (red).
- High intake filter differential pressure alarm (red).
- Startup/shutdown sequence failure alarm (red).

For each indicating light specified, a control relay with normally open dry contacts rated 5 amperes at 120 volt ac shall be provided. These contacts shall be an input to PLC for remote indication of the same condition via communication link. Common warning and shutdown alarm dry contacts shall also be provided. The common warning and shutdown conditions shall include surge, overload, and sequence failure. Contacts shall close for remote indication.

An inlet valve position indicator shall be provided on each control panel. The indicator shall display valve position in percent from a fully closed position to a fully open position. The indicator shall utilize an input analog 4-20 mA signal from the valve actuator. The indicator shall be capable of retransmitting the valve position signal to a remote location. The retransmitted signal format shall be 4-20 mA.

2-9.04.03. Air Flow Indication System. Each blower control panel shall be provided with a factory calibrated air flow indicating system consisting of a current transformer, one or more ammeters, required ammeter relays, and any other required appurtenances. The current transformer shall have a 600 volt insulation rating and shall be connected in one phase of the motor supply circuit to indicate on the ammeter the rate of air discharge according to the measured motor load current.

The current transformer shall be wired to shorting type terminal blocks in the motor terminal box.

Ammeters shall be flush mounted on the blower control panel. Ammeters shall have a scale with indicating units calibrated in both motor amps and air flow (scfm), and with the surge point, rated point, and motor overload point indicated. The accuracy of the meter indication shall be within 5 percent of the actual blower discharge rate over a range of 55 percent to 90 percent of the meter scale. Each ammeter shall be calibrated to the performance curve of the blower it serves. Each ammeter shall have 4 separately adjustable setpoints: approach surge and approach overload, surge shutdown and overload shutdown.

Ammeter surge trip points shall be automatically compensated for changes in ambient air temperature.

Ammeter relays shall be provided with separately adjustable alarm contacts for annunciation of blower alarm and safety shutdown conditions. Each contact shall be rated 5 amperes at 120 volt ac. Blower controls shall not indicate an alarm condition during startup or shutdown of the blower. Annunciation and safety shutdown setpoints shall be set at the factory and shall be field adjustable. Air flow annunciation and safety shutdown contacts shall be furnished as required.

The air flow indicating system shall be applicable in both local and remote control and shall generate an alarm condition on approach surge or approach overload, and shall close the stop contact to the blower starter on a surge or overload condition. When in remote control if the incoming signal to open the inlet valve attempts to drive the blower into a surge or overload condition the blower control panel shall stop the valve from opening any further and the panel shall generate approach surge or overload alarm contacts, and in addition generate an alarm contact indicating that the remote set point signal was abandoned.

2-9.04.04 Modulating Inlet Valve Control. Each blower inlet valve shall be controlled to meet the operator adjustable air flow set point within the specified air flow range based on motor amps. In the event that flow set point causes an "approach overload" condition or "approach surge" condition, the blower control panel shall override the air flow set point and attempt to drive the valve to a safe position. The blower manufacturer shall be responsible for providing a successfully operating inlet valve control system and determining the motor amps that indicate "approach surge" or "approach overload" conditions.

2-9.04.05. Vibration Detection Systems. Solid state vibration detection systems shall be furnished and installed to monitor vibration in each blower bearing. Vibration detection systems shall include vibration switches and equipment mounted vibration sensors. Each system shall include the following features: built-in time delay that is field adjustable; no false triggering; calibrated dial for setting limits; solid state relays for alarm (High) and shutdown (High-High) including normally open and normally closed contacts for each condition rated 5 amperes continuous at 120 volt ac; remote mounted vibration sensor; provision for self-test and calibration; sensitivity of the system unaffected by rotational speed of equipment.

Vibration detection alarm and shutdown shall be triggered by either velocity or displacement as recommended by the equipment manufacturer.

Vibration switches shall be mounted in the blower control panel, and the vibration sensors shall be mounted on the driven equipment as recommended by the manufacturer. Cable between the sensor and the switch shall be provided by the equipment manufacturer.

The vibration detection systems shall be applicable in both local and remote control and shall generate an alarm condition on vibration warning, and shall close the stop contact to the blower on excessive vibration. Alarm and shutdown conditions shall be as recommended by the blower manufacturer.

The vibration detection system shall be rated for a 120 volt ac supply voltage and shall be derived from the blower control panel. Vibration detection system shall be manufactured by PMC Beta or Owner approved equal.

2-9.04.06 Panel Fabrication Requirements. The blower control panels shall meet all requirement in the following specifications:

- 11065 – Common Control Panel Requirements for Equipment
- 11066 – General Wiring Methods
- 11067 – Wire Tagging

The control panel furnished shall conform to the requirements of NEMA ICS-6. Panels shall be rated NEMA Type 4 and shall be constructed from stainless steel.

The power entrance to each panel shall be provided with a surge protection device. Surge protectors shall be nominal 120 volts ac with a nominal clamping voltage of 200 volts. Surge protectors shall be of nonfaulting and noninterrupting design, with a response time not to exceed 5 nanoseconds. Surge protectors shall be manufactured by Innovative Technology, Power Integrity Corporation, or Transtector.

2-9.04.07. Uninterruptible Power Supply. An uninterruptible power supply (UPS) shall be furnished hereunder to power the blower control panel. Manufacture shall be responsible for coordinating the size of the UPS unit with the equipment furnished hereunder, and shall advise Engineer if a unit of higher capacity is necessary.

2-9.05. Panel Factory Test. Before shipment, the panels shall be electrically tested by the manufacturer.

2-9.06. Sequence of Operation. The blower sequence of operation shall be as indicated below:

Startup Sequence:

1. Open blowoff valve.
2. Verify inlet valve is closed and blowoff valve is open.
3. Energize blower motor.
4. Open inlet valve. Allow it to reach 40 percent open before beginning to close blowoff valve. Close blowoff valve.
5. Modulate inlet valve to reach desired operating point.

Shutdown Sequence:

1. De-energize blower motor.
2. Open blowoff valve.
3. Close inlet valve after a time delay for motor coast down.
4. Close blowoff valve.

2-10. PROGRAMABLE LOGIC CONTROLLERS. All equipment furnished under this section shall be expressly selected. for its superior quality for the intended purpose and shall comply with the following requirements.

2-10.01. Interchangeability. All programmable logic controller systems shall be products of the same manufacturer and of the same series or product line. Processors, local and remote input/output hardware, communications modules,

and specialty modules such as coprocessors and ASCII modules shall be interchangeable among all I/O panels and systems. PLC modules and hardware by other manufacturers will be acceptable only if the PLC manufacturer does not offer suitable modules and hardware for the same functions.

2-10.02. Initial, Spare, and Future Memory (RAM). Manufacturer shall provide adequate memory for the amount of I/O, control algorithms, and communications in the initial system.

Each programmable logic controller shall include provisions for future expansion and shall have 100 percent spare memory capacity and 100 percent spare data capacity installed. The spare memory capacity shall be documented by submitting to engineer, during factory testing, a statement indicating the amounts of memory of all types being utilized and the total amount available in each system. The statement shall include an estimate of the total program and data memory necessary, including spare memory, based on the I/O hardware for the system, and previous programming experience.

2-10.03. Spare I/O. Each PLC input/output enclosure shall be provided with at least 20 percent spare inputs and outputs of each type. Spare I/O shall be installed, wired, and interfaced properly to the terminal strip. The spare I/O shall be in addition to any I/O installed and reserved for future process signals as may be indicated on the I/O list. In addition, each PLC input/output enclosure shall be capable of accommodating 20 percent of additional input/output capacity of each type as originally assembled, without the need for additional expansion racks, communication adapters, cables, or PLC power supplies.

2-10.04. Expandability. Each PLC processor and associated I/O shall have a future expandability of at least 50 percent of the provided system.

2-10.05. Acceptable Manufacturers. The PLC shall be Schneider Electric Modicon M340 series and shall contain either a preconfigured modular blower control system program or a modular blower control system program in accordance with IEC 61131 programming standards pre-assembled at the factory. The PLCs shall include:

- PLC Rack: 8 Slots, Model No. BMX XBP 0800
- Power Supply (115 / 240 VAC / 36W) Model No. BMX CPS 3500
- Central Processor (4MB RAM / 8MB Memory/ USB Port / Com Port Modbus Serial / Com Port Ethernet Modbus TCP) Model No. BMX CPS 342020
- Network Option Ethernet (NOE) Card (RJ45 10/100 Ethernet Port) Model No. BMX NOE 0100
- Digital / Analog, Input / Output Cards as necessary shall be provided to monitor and control all required functions of the blower system.

- Digital Input Card (16 Inputs / 120VAC) Model No. BMX DAI 1604
- Digital Output Card (8 Isolated Relay Outputs / 24 VDC / 24-240 VAC / 3A) Model No. BMX DRA 0805
- Analog Input Card (4 Isolated Multi-Range Inputs / 4-20 mA / 16 Bit Resolution) Model No. BMX AMI 0410
- Analog Output Card (2 Isolated Multi-Range Outputs / 4-20 mA / 15 Bit Resolution) Model No. BMX AMO 0210
- Terminal Block (20 point, screw terminal) Model No. BMX FTB 2010
- RTD Module: Model No. BMX ART 0414 No Equal
- PLC Programming and Documentation Software Model No. Modicon Unity Pro XL

All Digital Outputs shall have interposing SPDT general purpose relays with contacts rated for 250 VAC 10A service.

The blower control PLC shall have a minimum of 20% spare Digital / Analog Input / Output points wired to the field terminal strip.

2-10.06. Signal Power Supplies. Regulated dc power supplies shall be provided in each PLC enclosure for analog inputs, digital outputs, and digital inputs. Power supplies shall be suitable for an input voltage variation of ±10 percent, and the supply output shall be fused or protected against short-circuiting. Output voltage regulation shall be as required by the instrumentation equipment supplied under another section.

The loop power supply shall be separate from the power supply circuit for the processor and racks.

The power source for all digital inputs from field devices shall be separately fused for each digital input module. Unless otherwise noted, all field devices will be provided with dry contacts that close to provide an input to the PLC.

2-10.07. Appurtenances. The PLC processor and I/O hardware shall be provided as complete systems, as shown on the block diagram drawings. The PLCs shall include all necessary hardware and software for a complete working system. All special rack or panel mounted power supplies, special interconnecting and programming cables, special grounding hardware, or isolation devices shall be furnished for proper operation of the equipment. Signal converters, signal boosters, amplifiers, special power supplies, special cable, special grounding, intrinsically safe relays and current repeaters, surge suppression devices, and isolation devices shall be furnished and installed for proper operation of the equipment.

2-10.08. PLC Arrangement. The PLCs shall be distributed and arranged as indicated on the Drawings.

2-10. 09. Communications. The processor shall be programmed to operate autonomously, regardless of communications status with other units. Each programmable controller shall be furnished complete with communication modules for local and remote input/output hardware communications, communications with other programmable controllers, and communication with host computers as shown on the block diagram.

2-10.10. Programming. The processor shall be programmable using the IEC 1131 international programming standards and ladder logic programming. IEC 1131 programming shall include the following:

Functional Block Diagram

Sequential Function Chart.

Structured Text.

Ladder Diagram.

Ladder logic programming shall include a minimum of the following capabilities:

Contacts, coils, branching.

Data comparisons.

On-delay and off-delay timers.

Counters with comparators.

Floating point Math and Logical instructions.

PID loop control.

Jumps and Subroutine functions.

Master control relay.

Transitional or one-shot outputs.

Standard and user-defined data tables for digital and analog value storage.

Remote I/O capability.

Fault-mode subroutine.

2-10.11 Programming Capabilities. The processor shall include the following capabilities for programming, debugging of programs, and troubleshooting.

Off-line programming.

On-line programming.

On-line status of coils and registers.

Input/output forcing.

2-10.12 Input/output Hardware Input/output hardware shall be arranged as indicated on the Drawings. Programmable logic controller systems shall support the following types of input/output modules.

120 volt ac digital input and output.

4-20 mA dc analog input and output.

All digital input/output hardware shall include isolation against surges of at least 1500 volts. All output hardware connected to inductive loads shall be supplied with surge suppression devices and recommended by the PLC manufacturer to prevent damage to output hardware. Combination input/output modules will be acceptable if they meet the following requirements.

2-10.12.01 Wiring Terminals. All input/output modules shall utilize easily removable plug-in or hinged field wiring terminals to allow removal of modules without disconnecting individual wires.

2-10.12.02 I/O Circuit Power Supply. Outputs for motor driven equipment will typically be powered from the driven equipment. Digital outputs for miscellaneous equipment shall be powered either from the controlled equipment or the PLC enclosure as indicated on the Drawings or as coordinated with the controlled equipment supplier. Outputs that control process equipment specified under other sections or provided under other contracts shall be fully isolated or shall operate either interposing relays or relay-type digital output modules in the PLC cabinet.

2-10.12.03 Panel Terminations. All PLC input/output signals for field connections shall be terminated through panel enclosure terminal strips. Direct connection of field wiring to the I/O module terminals is not acceptable.

2-10.13 Communications. Each programmable controller system shall be furnished complete with communication hardware modules for other programmable controllers.

Communication hardware shall be compatible with the cable, data highway, fiber optic, or radio communication media.

2-10.13.01 Addressability. Each programmable logic controller shall be individually addressable so that only the selected controller responds when queried. IP addressing shall be used. Designation of a controller's network address may be either a software or hardware function.

2-10.13.02 Communications Hardware. Manufacturer shall provide all necessary communications hardware. Hardware shall be included for, but not be limited to, remote I/O, data highway, host computer, fiber optics, Ethernet and radio.

2-10.13.02.01 PLC to PLC Communications Hardware. Each PLC shall communicate to other PLCs over a data highway communications network. Manufacturer shall include all rack mounted, enclosure mounted, or desktop mounted communications modules required for a complete working system.

2-10.14 Programming Device Hardware. The programming device shall be a portable notebook computer. Manufacturer shall provide two interconnecting cables, each 5 meters long, to connect the computer to the programmable logic controller. The cables shall be shielded data cable and shall be terminated on both ends with the appropriate connectors. Connectors shall be labeled to identify the connected equipment.

2-10.14.01 Special Devices. Manufacturer shall provide two sets of any special devices (such as null modems, adapter cards, interface converters, etc.) required to establish an operational programming line between the programmable logic controllers and programming device.

2-10.15 PROGRAMMING SOFTWARE. Manufacturer shall transfer PLC programming software license to the Owner to be included in their group license. The software shall be suitable for running on a laptop computer running Windows 7 operating system software. A full legal set of programming software documentation shall accompany each copy of the software. Each copy of the programming software shall include all necessary device drivers and add-on software packages.

2-10.15.01 Standard Product. The programming software shall be personal computer based and a standard product of the PLC manufacturer. The software shall be Modicon Unity Pro XL.

2-10.15.02 Programming Software Features. The programming software shall allow off-line development of all PLC-related programming, including user annotation of the program, and creation and printing of application programs and I/O cross-reference lists. Special programming tasks originally provided by manufacturer shall also be included.

On-line features shall include IEC-1311 standards program modification, ladder-logic modification, program language modification, monitoring of real-time ladder-logic execution, monitoring of program execution, monitoring and manipulation of timer and counter preset and present values, monitoring and forcing of physical I/O, and monitoring and manipulation of analog (register) and bit (binary) data

table values. PLC and I/O hardware diagnostic and status information shall be accessible using the software in on-line mode.

2-11. NETWORK SYSTEMS. The network system shall provide communications between the PLCs and filter control system.

Ethernet network hardware shall be provided as specified in location as shown on the Drawings. All specified functionality of provided Ethernet network equipment shall adhere to the IEEE 802 standards. Ethernet Hubs will not be accepted for network systems. Ethernet switches shall be provided to connect multiple network segments together, selectively forwarding traffic between the segments.

2-11.01. SCADA Network Ethernet Switches. Each switch shall include the following functionality:

a. Switch shall support the quantity of 10/100/1000BaseTX ports and 10BaseFL/100BaseFX/1000BaseLX Fiber ports to meet the functionality indicated in this specification and as shown on the Drawings. Switches shall have a minimum of (24) twenty four 10/100/1000Base-T, RJ-45 ports. A minimum of 20% spare ports shall be provided for the installed system.
b. Each switch connection shall automatically sense the network speed of the devices to which it is connected.
c. Path Redundancy: IEEE 802.1w Rapid Spanning Tree Protocol.
d. Prioritization: IEEE 802.1p QoS Support.
e. Support for Optional Redundant Power Supply as required on Drawings.
f. Management: Fully Managed Switch with support for SNMP v.2., and port mirroring.
g. All necessary memory upgrades, software feature sets, and cables needed for proper operation of these switches shall be furnished with each switch.
h. Environmental: Suitable for installation in industrial environments. Operating Temperature Range: 0 to 40C.

Switches shall be Cisco “Catalyst 3750 Series” utilizing Single SFP modules for fiber connections without exception.

2-11.01.01. Support. Manufacture shall provide Cisco SMARTnet service for all Cisco switches for a one year contract term. Contract shall be made in the Owner’s name. the Owner shall have the option to renew or extend the service contract at the end of contract term.

2-11.02. Industrial Device Panel Network Ethernet Switches. Each switch mounted in process areas shall include the following functionality:

a. Ports: Switch shall support the quantity of 10/100BaseTX ports and 100BaseFX fiber ports to meet the functionality indicated on the Drawings, and a minimum of 20% spare auto-negotiating 10/100Base-T, RJ-45 ports. A minimum of four UTP ports shall be provided.
b. Each switch connection shall automatically sense the network speed of the devices to which it is connected.
c. Capable of ring-based media redundancy with 30 ms recovery time.
d. Path Redundancy: IEEE 802.1w Rapid Spanning Tree Protocol.
e. Prioritization: IEEE 802.1p QoS Support.
f. Network Segregation: Port VLAN.
g. Management: SNMPv3 and Browser-based management shall be supported.
h. IGMP snooping supported.
i. LED indication of the link activity for each port.
j. Environmental: Suitable for installation in industrial environments. Operating Temperature Range: 0 to 60C. Optional -40 to 60C rating availability.
k. Redundant 24 VDC power supply inputs
l. Conformal coating option for use in hazardous environments.
m. Mounting: DIN-rail mounted suitable for panel installation.
n. All necessary memory upgrades, software feature sets, and cables needed for proper operation of these switches shall be furnished with each switch.

Switches shall be N-Tron 104TX series without exception.

2-11.02.01. Ethernet Connectors. Ethernet wiring connectors shall be RJ-45 male modular plug connectors.

2-11.02.02. Standard RJ45 Connectors. Standard connectors shall be polycarbonate, clear connectors. Connectors shall conform to RJ-45 and ISO 8877 standards. Contacts shall be gold plated with a 0.5A current rating and a -25º to 60º C temperature rating. Connectors shall accept unshielded Cat-5e or Cat-6, AWG 24, solid conductor cable.

2-11.02.03. Industrial RJ45 Connectors. Industrial connectors shall be an eight position industrial connector for use in manufacturing environments. Connectors shall meet the TIA/EIA-568-B.2 standard for Cat-5e or Cat-6 requirements. The connector shall incorporate an IP67 rated seal and shall provide protection from dust and temporary immersion in water. A tethered protective cap shall be provided. The connector shall accept a non-shielded Cat-5e or Cat-6 solid twisted pair cable. Connectors shall be Panduit Industrial TX5e, or equal.

2-11.03. Fiber Optic Termination Cabinets (FOTC). Fiber optic termination cabinets (also commonly referred to as patch panels) shall be furnished to terminate fibers at the Fiber Optic Modules, and any other data highway attached equipment. The cabinets shall meet the following requirements:

a. The termination cabinet shall be the wall rack mounted type, having provisions for terminating multiple fiber optic cables. Splice trays, strain relief cable attachment points, fiber organizers and bend radius hardware shall be furnished with each termination cabinet.
b. Panel size shall be suited to the number of fibers to be terminated within the cabinet. Bayonet/flanged couplings shall be furnished and mounted for each fiber to be terminated.
c. Fiber terminations shall be spliced to pigtail cables (specified below) having ST connectors for multimode cables and SC connectors for singlemode cables. The pigtails shall be terminated in an orderly method.

Fiber Optic Termination Cabinets shall be OFS Technologies “Fiber Interconnect Unit”, Corning Cable Systems “WCH Series”, or equal.

2-11.04 Network Cabling. Individual network equipment and related devices shall be coordinated with items provided in the following sections.

2-11.04.01. Ethernet Unshielded Twisted Pair (UTP) Cable. Ethernet cables and connectors shall be provided for a complete and working system, and/or as shown on the Drawings. Cable for Ethernet wiring shall be UTP Cat-5e or Cat-6 cable. Cable shall be Cat-5e for network speeds up to 100 MHz, and Cat-6 for network speeds greater than 100 MHz. Jacket color coding for cables shall be as follows:

a.	Standard Cat-5e PLC Networks.	Blue
b.	Standard Cat-5e Enterprise Networks.	White
c.	Standard Cat-6.	Yellow
d.	Crossover cables.	Red

Cable shall meet the following characteristics:

2-11.04.01.01. Category 5e UTP Cable. Cat-5e cable shall meet the following requirements:

a. 24 AWG
b. 4 pair solid conductor
c. 100 Ohm impedance
d. 1-100 MHz frequency range
e. Min attenuation 22 dB
f. 100 Ohm impedance
g. Min NEXT 35.3dB/100MHz
h. Min PS-NEXT 32.3dB/100MHz
i. Min ELFEXT 23.8dB/100MHz
j. Min PS-ELFEXT 20.8dB/100MHz
k. Min return loss 20.1 dB/100 MHz
l. Max delay skew 45 ns
m. Max propagation delay 540 ns

Plenum rated cable shall have FEP insulation jacketing and FEP insulation for conductors. Non plenum rated cable shall have PVC insulation jacketing and polyethylene insulation for conductors. Cat-5e cable shall be Belden 1583A (Non-plenum) and 1585A (plenum) or Owner approved equal.

2-11.04.01.02. Category 6 UTP Cable. Cat-6 cable shall meet the following requirements:

a. 24 AWG
b. 4 pair solid strand FEP Teflon insulation
c. 100 Ohm impedance
d. 1-250 MHz frequency range
e. Min attenuation 19.9 db
f. 100 Ohm impedance
g. Min NEXT 44.3dB/100MHz
h. Min PS-NEXT 42.3dB/100MHz
i. Min ELFEXT 27.8dB/100MHz
j. Min PS-ELFEXT 24.8dB/100MHz

k. Min return loss 20.1 dB/100 MHz

l. Max delay skew 45 ns

m. Max propagation delay 540 ns

Plenum rated cable shall have FEP insulation jacketing and FEP insulation for conductors. Non plenum rated cable shall have PVC insulation jacketing and polyethylene insulation for conductors. Cat-6 cable shall be Belden 1872 or Owner approved equal.

2-11.04.02. Ethernet Patch Cables. Pre-wired and terminated patch cables with RJ-45 connectors and lever protecting boot shall be furnished for all connections to computers, network equipment, and controller equipment except where physical conditions (i.e. length over 12 ft. or conduit size) require unterminated wire to be installed. Patch cables shall be Cat-5e for networks speeds up to 100 MHz, and Cat-6 for networks speeds greater than 100 MHz and shall meet the requirements of Cat-5e and Cat-6 cable specified in this section. Straight through cables shall be wired using the T568-B standard for both connectors as shown in Section 3-1.01. Crossover cables shall be wired using the T568-A standard for one connector and the T568-B standard for the opposite end. All Ethernet solid conductor patch cables shall be punched into Ethernet patch panel.

2-11.04.03 PLC Communication Media. Manufacturer shall provide all necessary cabling for the PLC communications network. Communications cables shall meet the requirements of the manufacturers of the PLCs and communications modules

2-12. UNITERRUPPTABLE POWER SUPPLY (UPS). A UPS shall be provided and installed for the blower system PLC to provide a minimum of 20 minutes of backup power in the event of normal power failure. Normal power failure shall be monitored by each blower PLC and shall be displayed as an alarm on the OIU and available to plant SCADA. The UPS shall be provided with a manual bypass switch (make-before-break). All equipment, enclosures, and accessories shall be designed, assembled and connected in accordance with the requirements of these Specifications and the Drawings. Enclosures shall be NEMA Type 1.

2-12.01. System Design Requirements. The UPS system(s) have the following capacity and rated for the following voltages.

Tag number	BB-UPS-1
Capacity	5 kW
Input voltage at 60 Hz, +10 to -15 percent	120/240 Volt

Output voltage at 60 Hz single phase	120/240 Volt
Minimum Back up time required (minutes)	20

The UPS system(s) shall ratings and features.

Capacity, peak (minimum)	150 percent of continuous power rating for 10 seconds.
Frequency stability, battery mode	+ 0.5 percent.
Harmonic distortion (max)	5 percent.
Efficiency, overall on-line	75 percent minimum.
Operating temperature-humidity	0 to 40°C; 0 to 95 percent relative humidity, non-condensing.
Recharge time (max)	4 hours.

2-12.02. Acceptable Manufacturers. All systems supplied under this contract shall be of the same manufacturer. The uninterruptible power supply systems shall be as manufactured by MGE, Powerware, Liebert, or Owner approved equal.

2-12.03. Terminal Blocks. Wiring for external circuits, including all alarm contacts, shall be brought to grouped terminal blocks located for convenient connection. Provisions shall include suitable marked terminal blocks for connection of No. 12 AWG control wiring and for input/output power conductors as sized on the Drawings. Terminal designations shall agree with manufacturer's wiring diagram.

2-12.04. Battery Charger/Rectifier and Batteries. The battery charger and the rectifier shall have the following characteristics:

a. The rectifier shall convert the incoming ac power to dc power to energize the static inverter.

b. The battery charger shall supply a float current to the batteries to maintain them at a fully charged state while incoming power is being provided. The charging voltage shall be temperature-compensated over the entire operating temperature range to avoid overcharging or undercharging the batteries. The battery charger shall automatically apply an elevated voltage (equalization charge) to the batteries if and as required by the battery manufacturer.

c. The battery shall provide backup power for the UPS when

incoming commercial power is not available. The battery cells shall be valve-regulated or gelled-electrolyte lead-acid type. The battery shall be integral to the UPS. Battery shall have capacity to supply the dc power to the UPS while operating at full load for a period of not less than as required at 25°C. The battery shall have an expected life of 5 years and shall carry a one-year warranty.

2-12.05. Static Inverter. The solid-state inverter shall employ silicon-controlled rectifiers (SCRs) and other devices for converting direct current power to essentially sinusoidal alternating current power. The static inverter shall conform to the following characteristics and requirements.

a. Automatic Synchronization: During normal operation, the inverter shall provide power to critical loads. The utility electric system will act as an alternate supply. Inverter equipment shall include stable solid-state devices designed to automatically maintain inverter output in phase with the utility electric system.

b. Overload, Short Circuit, and Load Loss: The inverter shall have input and output fuses and other equipment necessary to protect

from overload, short circuit, and 100 percent loss of load. Current limiting features shall also be provided.

c. Loss of Supply Voltages: The inverter shall include protective devices to prevent damage resulting from excursion, loss, or restoration of its synchronization voltage and its dc input voltage and any inrush current occurrences associated with such conditions.

2-12.06. Static Transfer Switch. The static transfer switch shall use SCRs and other static devices to automatically transfer loads from the off-line (bypass) to the on-line operating condition and back again. In off-line mode, the static transfer switch shall connect clean filtered power to the load. The primary ac line shall be monitored and the load shall be transferred to the inverter if the voltage drops below 85 percent. During on-line mode operation, any inverter problem shall cause an instantaneous transfer to the bypass mode.

2-12.07. Maintenance Bypass Switch. A maintenance bypass switch shall be provided so maintenance can be performed on the UPS without disrupting control system operation. The bypass switch shall be independent of the UPS electronics. The bypass switch shall be external to the UPS.

2-12.08. Output Receptacle Panel. An output receptacle panel with a variety of NEMA 5, 6, L5, and/or L6 receptacles shall be furnished on the rear of the UPS and connected to the distribution panel furnished under the Electrical section.

The FCSS shall coordinate the size, number, and type of the receptacles with the equipment as indicated on the Drawings.

2-12.09. Control, Indication, and Alarm. Controls, indicators and alarms shall be provided as a part of the UPS. Control buttons and LED indicators shall be provided on the UPS panel and shall be permanently labeled.

2-12.09.01. Controls. A dc battery circuit breaker, a mode selector switch, and system "ON" and "OFF" buttons shall be provided.

2-12.09.02. Indication. A digital display for selection and indication of input, output, and battery voltages shall be provided.

LED indicators for inverter ready, frequency, battery voltage, overload, over temperature, and impending shutdown conditions shall be provided.

LED indicators for bypass ready, bypass mode, and on-line mode shall be provided.

2-12.09.03. Remote Alarms. The UPS shall have the following provisions for remote alarms.

2-12.09.03.01. General Alarm. For units 5 kW and larger, a common, isolated, dry, alarm contact rated 3 amperes at 120 volts ac shall be provided with the UPS for indication of general alarm. The contact shall close under any UPS fault condition.

2-12.09.03.02. Power Failure. For units 5 kW and larger, an isolated, dry, alarm contact rated 3 amperes at 120 volts ac shall be provided with the UPS for remote indication of power failure. The contact shall open upon loss of commercial power to the UPS. For units smaller than 5 kW, a relay shall be provided and connected across the incoming power as the means of providing a contact for indication of a power failure condition.

2-12.09.03.03. Battery Replacement/Failure Alarm. For units 5 kW and larger, an isolated, dry, alarm contact rated 3 amperes at 120 volts ac shall be provided with the UPS for remote indication of battery replacement/failure. The contact shall open when battery life has been exceeded or battery has failed. For units smaller than 5 kW, battery replacement/failure shall be part of the general alarm.

2-13. SHOP TEST. Blowers shall be shop tested over the capacity range from surge to 120 percent rated flow or to a flow adequate to verify winter unthrottled brake horsepower, whichever is more stringent.

2-13.01. Rotor Balancing. Rotor assemblies shall be dynamically balanced. Rotor balancing reports shall be delivered to the Engineer at least 10 days prior to the shipment of the blowers from the manufacturer.

2-13.02. Operational Test. Each blower shall be shop tested for vibration and pressure developed.

2-13.03. ASME PTC-10. All blowers shall be shop tested for capacity, power requirements, and efficiency at the rated capacity and at as many other capacities as necessary for accurate performance curve plotting. The tests shall be performed in accordance with ASME PTC-10 Test Code for Centrifugal Compressors and Exhausters. A torque meter shall be used for performance test power measurements. Calculations shall be performed to correct test data to the specified site conditions. Corrected data shall be used to plot performance curves. Curves shall include inlet cfm versus discharge pressure, inlet cfm versus brake horsepower. Curves shall be plotted for both summer and winter inlet air temperature and relative humidity conditions specified. The blower serial number shall be indicated on the corresponding performance curve. The impeller combination shall be indicated on each curve.

No minus tolerance on discharge pressure shall be allowed. Flow and brake horsepower shall be guaranteed ± 4 percent or to the manufacturer's standard tolerance, whichever is more stringent. In no case shall the brake horsepower indicated by shop tests and corrected to specified site conditions exceed the motor nameplate rating.

Test reports shall be complete with performance curves, data, and all calculations.

If any unit fails to operate properly or fails to meet the specified conditions or requirements during shop testing, the equipment manufacturer shall modify the blower and perform additional tests at the equipment manufacturer’s expense.

PART 3 - EXECUTION

3-1. INSTALLATION.

3-1.01 Blower Installation. Each blower unit shall be installed in accordance with Equipment Installation Section (11060) and as specified herein.

Unless otherwise indicated or specified, the blower unit shall be installed on concrete bases at least 6 inches high. Vibration isolation pads shall be installed between the blower unit baseplate and the concrete base.

Anchor bolt threads shall be dislocated (stripped) as needed to prevent tightening of anchor bolts beyond "finger tight".

The exposed finish shall be inspected after completing system installation, including pipe connections, fittings, valves, and specialties. Burrs, dirt, and construction debris shall be removed and damaged finishes, including chips, scratches, and abrasions shall be repaired.

3-1.02 Network Installation Requirements. Network equipment shall be installed and tested in accordance with the following requirements.

The manufacturer shall fully configure all network devices including PLC and Ethernet switches, all device selections shall be fully coordinated with the Owner to ensure compatibility with existing systems and standards.

The following shall be configured on Ethernet switches:

a. Unused ports shall be disabled for security purposes.

b. Spanning Tree or other appropriate redundancy scheme shall be configured for all redundant links. Trunking or other bandwidth sharing redundancy schemes shall be utilized where available to minimize switching times, and increase available bandwidth.

c. Management Password Security

d. Quality of Service, with any traffic to/from PLCs getting priority over all other traffic.

3-1.02.01 Systems Check. A technical representative of manufacturer shall participate in the checkout of the blower network equipment.

3-2. FIELD QUALITY CONTROL.

3-2.01. Instrumentation & Controls Workshops. The manufacture shall attend the following I&C Workshops to be held at the Owner's facilities. Contractor shall schedule all meetings three weeks in advance to insure availability of all personnel.

- One 8-hour workshops with the Owner. The workshops shall be conducted prior to commencement of the PLC, OUI, and HMI programming and shall review all of the Owner's programming criteria and panel and wiring methods. Manufacture shall provide programming functional descriptions. Manufacture shall use this workshop to obtain clarification of configuration work and to coordinate with other equipment suppliers providing equipment connected and controlled through the SCADA network.

- One 8-hour 30% Project Programming Coordination Meeting with Owner and or Owner's Representative, Contractor, and other equipment suppliers providing equipment connected and controlled through the SCADA network. This meeting shall be used to coordinate the blower control system programming, to show progress, demonstrate conformance with configuration standards, and obtain Owner's comments.

- One 8-hour 60% Project Programming Coordination Meeting with Owner and or Owner's Representative, Contractor, and other equipment suppliers providing equipment connected and controlled through the SCADA network. This meeting shall be used to coordinate the blower control system programming, to show progress, demonstrate conformance with configuration standards, and obtain Owner's comments.

- One 8-hour 90% Project Programming Coordination Meeting with Owner and or Owner's Representative, Contractor, and other equipment suppliers providing equipment connected and controlled through the SCADA network. This meeting shall be used to coordinate the blower control system programming, to show progress, demonstrate conformance with configuration standards, and obtain Owner's comments.

3-2.02. Installation Check. An experienced, competent, and authorized representative of the manufacturer shall visit the site of the Work and inspect, check, adjust if necessary, and approve the equipment installation. The representative shall be present when the equipment is placed in operation in accordance with the Facility Startup/Commissioning Section (01650), and shall revisit the job site as often as necessary until all trouble is corrected and the equipment installation and operation are satisfactory in the opinion of Engineer.

The manufacturer's representative shall furnish a written report certifying that the equipment has been properly installed and lubricated; is in accurate alignment; is free from any undue stress imposed by connecting piping or anchor bolts; and has been operated under full load conditions and that it operated satisfactorily.

The manufacturer's representative shall verify:

a. Each blower inlet valve is properly installed and adjusted for desired air flow control.
b. Each blower discharge isolation valve is fully open.
c. Each check valve is properly installed.
d. Piping is installed such that excessive force is not being exerted on the blower flanges.

All costs for these services shall be included in the contract price.

3-2.03. Installation Supervision. Installation supervision by the manufacturer is not required.

3-3. GENERAL TESTING REQUIREMENTS. Unless otherwise specified in the individual specification sections, all equipment provided shall be tested at the factory as a single fully integrated system. As a minimum, the testing shall include the following:

- Unwitnessed Factory Test (UFT)
- Factory Acceptance Test (FAT)
- Operational Readiness Test (ORT)
- Functional Demonstration Test (FDT)
- 30-Day Site Acceptance Test (SAT)

Each test shall be in the cause and effect format. The person conducting the test shall initiate an input (cause) and, upon the system's or subsystem's producing the correct result (effect), the specific test requirement shall be satisfied.

Manufacturer shall prepare attesting procedure to be approved by Owner and Engineer that shall demonstrate that the system conforms to the specifications. The testing procedure shall be submitted at least 30 days in advance of testing. The testing shall be conducted by the manufacturer and witnessed by Owner and Engineer. Each specific test shall be described and followed by a section for signoff by the appropriate party after its satisfactory completion. Copies of these signoff test procedures, forms and checklists will constitute the required test documentation.

Manufacturer shall notify Owner and Engineer in writing at least 14 days before the proposed testing date. The Engineer reserves the right to test or retest all specified functions whether or not explicitly stated in the prior approved Test Procedures. The Engineer's decision shall be final regarding the acceptability and completeness of all testing.

If the FAT is concluded unsuccessfully, the test shall be repeated. Manufacturer shall reimburse Owner and Engineer for all expenses incurred in connection with attending repeated factory or site testing necessitated by system failure or inadequate preparation.

Manufacturer shall provide all special testing materials and equipment. Wherever possible, perform test using actual process variables, equipment and data. Where it is not practical to test with real process variables, equipment and data, provide suitable means of simulation.

No equipment shall be shipped to the jobsite until the Engineer has received all test results and approved the system as ready for shipment.

The manufacturer shall furnish the services of servicemen, all special calibration and test equipment and labor to perform all required tests for equipment provided by manufacturer.

3-3.01. Correction of Deficiencies. All deficiencies in workmanship and/or items not meeting specified testing requirements shall be corrected to meet specification requirements at no additional cost to the Owner. Testing, as specified herein, shall be repeated after correction of deficiencies is made until the specified requirements are met. This work shall be performed at no additional cost to the Owner.

3-3.02. Unwitnessed Factory Test (UFT). The entire system, except primary elements, final control elements and field mounted transmitters, shall be interconnected and tested to ensure the system operates as specified. All analog and discrete input / output points not interconnected at this time shall be simulated to ensure proper operation of all alarms, monitoring devices / functions and control devices / functions. All panels and assemblies shall be inspected and tested by the manufacturer to verify that they are in conformance with related submittals, specifications and Drawings.

The UFT shall be performed by the manufacturer at their facility within the continental United States of America. Results shall be submitted to the Engineer for approval prior to the start of the FAT.

3-3.03. Factory Acceptance Test (FAT). The FAT shall be performed by the manufacturer at their facility within the continental United States of America. All system tests specified for the UFT shall be repeated. The FAT will be a joint test by the manufacturer, General Contractor, Engineer, Owner and other related subcontractors.

After completing the UFT, the manufacturer shall notify the Owner and General Contractor in writing that the system is ready for the FAT. The Engineer and Owner shall schedule a test date within 10 days of receipt of the “Ready to FAT” letter.

The various tests performed during the FAT shall be designed to demonstrate that all hardware and software fulfill all the requirements of the Specifications and Contract Drawings. The test conditions shall resemble, as closely as possible, the actual installed conditions. Any additional hardware or software that may be required to successfully verify system operation shall be supplied at no additional cost to the Owner. All control panels shall be included in these tests.

All deficiencies identified during these tests shall be corrected and retested prior to completing the FAT as determined by the Engineer/Owner.

All test data and procedures followed during the testing shall be logged and certified copies of the logs shall be provided to the Engineer/Owner.

All parties attending these tests are required to pay for their own costs associated with the tests including time, airfare, car rental, hotel expense, meal expense, etc. This includes the Owner, Engineer, General Contractor's project engineer and support personnel.

3-3.04. Operational Readiness Test (ORT). Prior to startup and the FDT, the entire system shall be certified, inspected, tested and documented that it is ready for operation. The ORT will be a joint test by the manufacturer, General Contractor, Engineer, FCSS, and other related subcontractors and shall be conducted at the Owners facility.

3-3.04.01. Devices by Other Suppliers. If inter related devices furnished by other suppliers under other contracts, or by Owner, the field supervisor shall use suitable test equipment to introduce simulated signals to and/or measure signals from these devices to locate the sources of trouble or malfunction. Signals from these devices shall be successfully tested prior to the ORT being completed one the malfunctioned device is working properly.

3-3.04.02. Loop/Component Inspections and Tests. The entire system shall be checked for proper installation, calibrated and adjusted on a loop-by-loop and component-by-component basis by the manufacturer to ensure that it is in conformance with related submittals and these Specifications. The General Contractor shall require the manufacturer to maintain Loop Status Reports and Component Calibration Sheets at the jobsite and make them available to the Engineer/Owner at any time. The inspections and tests do not require witnessing. However, the Engineer shall review and initial all Loop Status Sheets and Component Calibration Sheets and spot-check their entries periodically and upon completion of the ORT. Any deficiencies found shall be corrected.

3-3.04.03. Test Report. Upon completion of the network verification, a detailed report shall be prepared by the Analyst and issued to the Owner and Engineer. The report shall include all measurements and testing results, analysis of results, summary of findings, and recommendations for remediation.

3-3.04.04. System ORT Report. The manufacturer shall submit a written report on the results of such tests to the Engineer. Additional documentation shall be furnished as requested by Engineer to establish responsibility for corrective measures. Manufacturer shall verify, in writing, to Engineer or Owner that manufacturer has successful completed the ORT before beginning the Function Demonstration Test.

3-3.05. Functional Demonstration Test (FDT). Prior to startup and the SAT, the entire installed instrument and control system shall be certified that it is ready for

operation. The FDT will be a joint test by the manufacturer, General Contractor, Engineer, Owner and other related subcontractors and shall be conducted at the Owners facility. Once the facility has been started up and is operating, a witnessed FDT shall be performed on the complete system to demonstrate that it is operating and in compliance with these Specifications. Each specified function shall be demonstrated on a paragraph-by-paragraph, loop-by-loop and site-by-site basis. Loop-specific and non-loop-specific tests shall be the same as specified under FDT except that the entire installed system shall be tested and all functionality demonstrated. The system shall operate for 72 continuous hours without failure before the test shall be considered successful. At the end of the FDT the following test shall be demonstrated"

- Communication failure and recovery
- Total power failure and recovery including the UPSs
- Catastrophic failure and recovery of PLC and I/O modules

3-3.06. Site Acceptance Test (SAT). After completion of the ORT and FDT test, the entire system shall be operated for a period of 30 consecutive days, under conditions of full plant process operation, without a single non-field repairable malfunction. The SAT will be a joint test by the manufacturer, General Contractor, Engineer, Owner and other related subcontractors and shall be conducted at the Owners facility. During the test, plant operating, Engineering and manufacturer personnel shall be present as required. While the test is proceeding, the Owner shall have full use of the system. Only certified plant operating personnel shall be allowed to operate equipment associated with the actual water production process.

Any malfunction during the tests shall be analyzed and corrected by the responsible party immediately. The Engineer/Owner will determine whether any such malfunctions are sufficiently serious to warrant a repeat of this test. During the 30 consecutive day test period, any malfunction which cannot be corrected within 24 hours of occurrence by the responsible party, or more than two similar failures of any duration, will be considered a non-field-repairable malfunction. Upon completion of a non-field-repairable malfunction, the test shall be repeated as specified herein. Down times due to power outages or other factors outside the normal protection devices or back-up power supplies provided shall not be considered a non-field-repairable malfunction. Down times due to plant process equipment failures or other factors beyond the control of manufacturer shall not be considered a non-field-repairable malfunction.

3-3.07. Completion of Test. Upon successful completion of the SAT and subsequent review and approval by the Engineer of the complete system final documentation, the system shall be considered substantially complete, and the warranty period shall commence.

3-4. Field Run Testing. Each Blower shall be mechanically checked for proper operation. Each alarm and safety shutdown shall be checked by artificially simulating an alarm condition. Defective equipment and controls disclosed by the tests shall be replaced or corrected, and the packages placed in satisfactory operating condition. The following items shall be measured, recorded, and submitted in a field test report:

a. Inlet pressure, each blower.
b. Discharge pressure, each blower.
c. Discharge temperature, each blower.
d. Differential pressure across each filter or filter silencer.
e. Pressure and temperature at downstream end of piping system and at any measurement taps provided.
f. Flow measurements at any flowmeters provided.

g. Outdoor ambient temperature.
h. Indoor ambient temperature.
i. Barometric pressure.
j. Vibration.

Test reports shall verify that the specified tests have been performed and shall state results.

3-4.01. Field Vibration Test. Field vibration acceptance testing shall be conducted on the blowers to ensure that the equipment meets the vibration limits specified herein. The vibration acceptance testing shall be conducted by an independent testing laboratory retained by the Contractor. The testing laboratory shall provide a certified vibration analysis expert to conduct the testing and shall submit certification credentials. Vibration testing shall be performed after installation, grouting (if required), alignment, and inspection by the manufacturer's field services representative. The manufacturer's field services representative shall certify that the equipment is ready for continuous service prior to vibration testing. The Contractor shall provide written notification to the Owner, Engineer, and equipment manufacturer's representative when the equipment is ready for vibration acceptance testing. The Owner, Engineer, and manufacturer's field services representative shall reserve the right to be present during the tests.

A resonance bump test shall be performed after the equipment is installed to determine the resonant frequencies of each installed drive. A coast-down and startup test shall also be performed on the coupled equipment to determine machine critical speeds and resonance zones. The mass of the unit and its distribution shall be such that resonance at normal operating speeds is avoided.

With the exception of the resonance bump test and startup test, vibration tests shall be performed after the equipment has run loaded for at least 60 minutes and reached a stable operating temperature.

A vibration transducer appropriate for the application shall be used. The data shall be collected in the three major planes and shall be measured in units of displacement (mils peak to peak). The frequency range analyzed for overall and Fast Fourier Transform (FFT) shall be from 0 to 2000 Hz with special emphasis on the low end of the range for low speed equipment.

The vibration analyzer shall be capable of providing a vibration signature showing vibration versus frequency.

Vibration measured at any point on the equipment shall not exceed the following limits:

Overall unfiltered vibration limit, mils peak to peak – 1.25 mils (0.24 inches/sec).
Filtered vibration limit at any specific frequency above the minimum specified operating speed, mils peak to peak – 1 mils (0.192 inches/sec).

At any operating speed, the ratio of rotative speed to the critical speed of a unit or its components shall be less than 0.8.

The Contractor shall submit a vibration test report following each test. The test report shall include a summary of the vibration readings in all 3 planes at the frequencies and conditions specified herein. Paper printouts shall be submitted. Resonance bump test results, startup and coast-down results, and uncoupled motor vibration test results if performed, shall be included. Four (4) certified copies of the vibration test data for each test performed shall be furnished.

Should the field vibration test results exceed the limits specified herein or recommended by the manufacturer, whichever is more stringent, the Contractor shall correct the deficiencies within thirty (30) days. After corrections have been completed, the vibration testing shall be re-run and the results resubmitted to the Engineer for review. Corrections shall continue to be made and tests repeated until satisfactory operation is demonstrated and vibration meets the specified limits. Vibration in any equipment which the Engineer judges to be excessive or damaging shall be cause for rejection.

Uncoupled motor vibration tests need not be performed unless the coupled equipment does not meet the specified vibration limits and excessive motor vibration is suspected. Uncoupled motor vibration shall be measured in units of velocity (inches/second peak) and shall not exceed the following limits:

Overall vibration limit, inches/second peak	0.05
At rated speed, inches/second peak	0.04

At twice rated speed, inches/second peak 0.02
At any harmonic speed, inches/second peak 0.02

3-5. TRAINING. After acceptance of the installation check by the Engineer, the manufacturer's representative shall provide training for Owner in proper operation, maintenance and troubleshooting of the system provided. Training shall be conducted at the Owner's facility. Training shall include a minimum of two trips to the site, one for training on operation and maintenance of the blowers, and one for training on the blower control system.

3-5.01. Training Costs. All costs associated with the training program shall be the responsibility of manufacturer and shall be included in the contract price. All training will be at Owner's facility; no offsite training will be acceptable.

3-5.02. Lessons. Training lesson plans and other information shall be submitted at least 30 days prior to the start of training. The manufacturer shall provide training manuals to supplement the training courses. The manuals shall include specific details of equipment supplied and operations specific to the project. The trainer shall make use of teaching aids, manuals, slide/video presentations, etc. After the training services, all training materials shall be delivered to the Owner.

3-5.03. Operator and Maintenance Training. Blower operation and maintenance training shall be at least 12 hours long with at least four hours of classroom training and at least eight hours of hands-on training. Training shall include review of P&IDs, operation, maintenance, and troubleshooting. The manufacturer's representative shall schedule times, which are acceptable to Owner's staff and repeat the training in four different shift and accommodate six Owner personnel each shift. The necessary components shall be operational before training sessions are conducted.

3-5.04. Instrument Training. Training on the calibration, maintenance, troubleshooting, and repair for the instrument devices provided under this section shall be provided in two (2) two-hour training sessions per instrument device, and shall accommodate ten (10) students. Training shall be provided at the Owner's facility. Training shall also be provided for any hand-held or computer-based calibration devices and their associated software.

3-5.05. Control System Maintenance Training. System maintenance training shall be provided to enable Owner's personnel to perform routine and preventive maintenance, troubleshoot, and repair on all hardware furnished with the system. Review of the PLC programming shall be included. Training sessions shall consist of two (2), two-hour sessions and shall accommodate ten (10) students.

End of Section

Section 11640

VACUUM PUMP SYSTEM

PART 1 - GENERAL

1-1. SCOPE. This section covers one liquid ring vacuum pump system to be installed indoors as indicated on the drawings and as required.

The vacuum pump system shall include two vacuum pumps and motors rebuilt by the manufacturer, and all new accessories and appurtenances specified, indicated on the drawings, or otherwise required for a complete, properly operating installation.

Piping and valves not a part of the equipment system, are covered in other sections.

1-1.01. Associated Sections. This section also includes criteria, responsibilities, equipment and services specified in the following sections.

01300	Submittals
01615	Equipment and Valve Identification
11065	Panels, Consoles, and Appurtenances
11066	General Wiring Methods
11067	Wire Tagging
11068	Packaged System PLC Programming Criteria

1-2. GENERAL.

1-2.01. Coordination. Equipment provided under this section shall be fabricated, assembled, erected, and placed in proper operating condition in full conformity with drawings, specifications, engineering data, instructions, and recommendations of the equipment manufacturer unless exceptions are noted by the Company.

Components of the vacuum pump system shall be the latest standard product of manufacturers regularly engaged in the production of equipment of this type.

All components of the vacuum equipment system shall be shop assembled. The arrangement shall be as indicated on the drawings, and shall permit access from all three sides of the system for maintenance of components.

1-2.02 General Equipment Stipulations. The General Equipment Stipulations shall apply to all equipment furnished under this section.

1-2.03. Governing Standards. Except as modified or supplemented herein, all work covered by this section shall be performed in accordance with all applicable municipal codes and ordinances, laws, and regulations which pertain to such work. In case of a conflict between these specifications and any state law or local ordinance, the latter shall govern.

All work shall comply with Underwriters' Laboratories (UL) safety requirements.

1-2.04. Power Supply. Power supply to the vacuum pumps shall be 480 volts, 60 Hz, 3 phase.

1-2.05. Device Tag Numbering System. Each item of equipment and each part shipped separately shall be tagged and identified with indelible markings for the intended service. Tag number shall be clearly marked on all shipping labels and on the outside of all containers. The Tag number shall agree with Instrument Device schedule and with the supplier's equipment drawing. All field mounted transmitters and devices shall have stamped stainless steel identification tag. Panel, subpanel, and rack-mounted devices shall have laminated phenolic identification tags securely fastened to the device. Hand-lettered or tape labels will not be acceptable.

1-2.06. Identification. Equipment and accessories shall be identified in accordance with the Equipment and Valve Identification Section (01615).

1-3. SUBMITTALS.

1-3.01. DRAWINGS AND DATA. Complete assembly and installation drawings, together with detailed specifications and data covering all equipment, materials, and accessories furnished, shall be submitted in accordance with the Submittal Section (01300). Electrical schematics, wiring diagrams, and panel layout drawings for vacuum pump controls shall be included. The data and specifications shall include, but not be limited to, the following:

Package Drawing

Overall system plan drawing.

Number, size, and location of anchor bolts.

Pumps

Name of manufacturer.

Type and model.

Rotative speed.

Critical speed of the rotor.

Type of bearings, AFBMA L10 life rating, and lubrication.

Connection sizes.

Net weight of pump.

Net weight of heaviest single component requiring removal for maintenance

Overall dimensions.

Complete performance curves showing vacuum versus capacity, and bhp at seal water temperature.

Anchor bolt details.

Noise level.

Max and average seal ring water temperature.

Max and average seal ring water pressure.

Shop test procedure, sample data sheets, and test plan drawing.

Certified shop test reports and rotor balance reports.

Vacuum safety valve setting.

Motors

Full load, 3/4, 1/2 load amperes, efficiency, and power factor.

Name of manufacturer.

Type and model.

Bearing type and lubrication.

Horsepower rating and service factor.

Temperature rating, insulation rating.

Full load rotative speed.

Net weight.

Controls

Control panel layout including interior and exterior views.

Accessory device data including catalog cut sheets on all control components.

Wiring diagram.

Accessories

Name of manufacturer.

Equipment data indicating overall dimensions, connection sizes, weights, pressure drops and materials of construction.

1-3.02. Operation and Maintenance Data and Manuals. Adequate operation and maintenance information shall be supplied. Operation and maintenance manuals shall be submitted with the submittals section.

Operation and maintenance manuals shall include the following:

a. Equipment function, normal operating characteristics, and limiting conditions.

b. Assembly, installation, alignment, adjustment, and checking instructions.

c. Operating instructions for startup, routine and normal operation, regulation and control, shutdown, and emergency conditions.

d. Lubrication and maintenance instructions.

e. Guide to troubleshooting.

f. Parts list and predicted life of parts subject to wear.

g. Outline, cross-section, and assembly drawings; engineering data; and wiring diagrams.

h. Test data and performance curves, where applicable.

The operation and maintenance manuals shall be in addition to any instructions or parts lists packed with or attached to the equipment when delivered.

1-4. DELIVERY, STORAGE, AND HANDLING.

1-4.01. Preparation for Shipment. All equipment shall be suitably packaged to facilitate handling and to protect against damage during transit and storage. All equipment shall be boxed, crated, or otherwise completely enclosed and protected during shipment, handling, and storage. All equipment shall be protected from exposure to the elements and shall be kept dry at all times.

Painted and coated surfaces shall be protected against impact, abrasion, discoloration, and other damage. Painted and coated surfaces which are damaged prior to acceptance of equipment shall be repainted to the satisfaction of the Company.

Grease and lubricating oil shall be applied to all bearings and similar items.

1-4.02. Shipping. Before shipping each item of equipment shall be tagged or marked as identified in the delivery schedule or on the Shop Drawings. Complete packing lists and bills of material shall be included with each shipment.

Handling and storage shall be in accordance with the Product Storage and Handling section (01614).

1-5. Anchor Bolts. All anchor bolts, nuts, and washers shall be hot-dip galvanized and shall comply with the Anchorage in Concrete and Masonry Section (05550).

1-6. Spare Parts. The following spare parts shall be furnished for the vacuum pump:

Part Description	Number Required
Shaft seal assembly	1
Shaft slinger	1
End travel adjustment shims	1 set
Head gasket	1 set
Rotor nut	1
Rotor washer	1

Flange gaskets	1 each size
Seal ring water flow switch	1
Bearings	1 set
Mechanical Seals	1 set

Any additional spare parts recommended by the manufacturer shall also be furnished.

Spare parts shall be suitably packaged in accordance with the General Equipment Stipulations, with labels indicating the contents of each package. Spare parts shall be delivered to the Company as directed.

1-7. Warranty. Vacuum pump warranty shall be a minimum of 1 year from date of startup.

1-8. Nameplates. Nameplates shall include manufacturer, model number, serial number, pump operating speed, horsepower, motor frame size, and rated conditions.

PART 2 - PRODUCTS

2-1. SERVICE CONDITIONS. The vacuum pump equipment shall be used to maintain a vacuum in the siphon system.

2-2. PERFORMANCE AND DESIGN REQUIREMENTS. The vacuum equipment shall be designed for the following operating conditions:

Ambient conditions	
Air temperature, °F	
Indoors	
Max	90
Min	40
Installed elevation above mean sea level, ft	450
Barometric pressure, psia	14.46

Rebuilt Vacuum pumps

Number required 2

Rebuilt Motors for pumps

Number required 2

Vacuum pump performance shall be based on dry, unsaturated air.

2-3. EQUIPMENT CONSTRUCTION.

2-3.01 Vacuum Pumps. The existing Gardner Denver- Nash Vacuum pumps (including the motors) Priming Pump No.1 and Priming Pump No.2, size sc2 with test numbers 97D0349 and 97D0345, shall be sent to Gardner Denver – Nash to be rebuilt. The rebuild shall include new bearings, mechanical seals, fasteners, lip seals, gaskets, shims, slingers, and shaft locknut assemblies and anything else required to restore the pumps to a “like new Condition”. Rotors shall be rebalanced per ISO 1940. Vacuum pumps shall be shop tested in accordance with HEI standards. Once pumps and motors are rebuilt and recertified, they shall be reinstalled back in their existing locations.

2-3.02 Remote Receiver. The vertical receiver shall be of an all welded construction with semi ellipsoidal heads. The receiver shall be sized to match the base dimensions of the old receiver and be sized to fit in the location of the old receiver. The receiver shall be located on the ground near the wall. The receiver shall be designed and constructed in accordance with ASME code for unfired pressure vessels and shall bear the code stamp. Receiver shall be rated for operation under a full vacuum without the use of a safety valve.

The receiver shall be provided with piping connections for an inlet, outlet, drain, pump control, receiver vent, sight glass, high level switch, high-high level switch, and cleanout opening.

Vacuum connections shall be located on the top of the receiver. The high level switch shall be located to indicate when the receiver is ¼ full of water. The high-high level switch shall be located to indicate when the receiver is ½ full of water.

The receiver shall be provided with an automatic drain trap. The automatic drain trap shall be suitable for use with a vacuum system, and shall allow condensate to be drained periodically without affecting the vacuum in the receiver. During the “drain” cycle, the receiver shall be isolated from the trap. Atmospheric air shall be admitted to the trap, and valve shall be open to drain. The trap shall be manufactured by Spirax Sarco, or Owner’s approved equal. The trap shall be a low profile type with cast iron body and cover, an all stainless steel float-

operated, snap-acting mechanism, and bronze inlet and discharge check valves. With a 6” filling head, the trap shall have a minimum capacity of 4 gallons.

The receiver shall be hot-dip galvanized inside and out.

2-3.03. Piping. All new piping shall match the existing piping in elevation and slope away from the receiver.

All interconnecting piping and tubing between components of the equipment system shall be site installed.

System seal water piping shall be ASTM B88 Type L, hard drawn copper tubing with ANSI B16.18 or B16.22 solder-joint fittings. Solder shall be as specified in Section 15020. Seal water piping shall be protected from work hardening due to pump vibration by installing a flexible connection in the piping, or by other methods, as recommended by the vacuum pump manufacturer.

Control and instrument tubing shall be ASTM A269, Type 316 stainless steel tubing with Parker Hannifin "CPI" or Crawford "Swagelok" Type 316 stainless steel compression fittings. Tubing shall be not less than 1/4 inch OD, with a wall thickness of 0.028 inch.

All piping and tubing shall be run in vertical and horizontal planes and shall not contact the baseplate. Piping shall be arranged to ensure that undue stresses from thermal expansion is not transmitted to equipment components. All control and instrument tubing shall be continuously supported. Drainlines from the pump shall be combined downstream from any valves and piped to the edge of the baseplate.

2-4. CONTROLS.

2.4.01. Control Equipment. All control equipment for the vacuum pump system shall be furnished as needed or specified for a complete installation, requiring only field connection of the remote alarm and a single electrical power supply. Equipment shall include a panel main circuit breaker, all control switches, pressure switches, timing relays, auxiliary relays, unloaders, circuit breaker combination magnetic motor starters, and other accessories required for control of the vacuum pump. The starter shall include a motor circuit protector type circuit breaker with external operating handle and a control power transformer with a 120 volt secondary, one secondary lead fused and the other grounded. Starter overloads (one per phase) shall be bimetallic ambient compensated type, matched to motor current and shall be provided with a manual "Reset" push button.

All control equipment for each vacuum pump system shall be housed in a control panel mounted on the system.

All system wiring shall be shop installed to terminal blocks in the control panel. Wiring from the panel to system components shall be completely enclosed in liquid-tight flexible conduit and suitable for outdoor installation.

All pneumatic tubing shall be shop installed to bulkhead fittings at the control panel.

Contractor shall coordinate with the equipment supplier and provide connections for vacuum switches and safety valve.

2-4.02. Control Panel. The control panel shall be as specified in the Associated Sections herein. Internal panel tubing shall be run in horizontal and vertical planes and shall be rigidly supported to withstand handling and shipping without damage. Compression type bulkhead fittings shall be provided through the panel for all connections.

2-4.03. Pump Control. The vacuum pump system shall be furnished with a control system which shall start, stop, load and unload each pump as required. The control system shall unload the pump on shutdown and while coming up to speed during startup.

The vacuum pump shall be provided with a "Jog-Off-Auto" selector switch. The "Jog" switch shall be spring operated to return the pump to off when the operator's hand is removed. Four vacuum switches with separately adjustable settings shall be furnished for loading and unloading the pump, and for low-low and high-high vacuum alarms.

The control system shall start, stop, load and unload the pumps at the receiver vacuum pressures as required.

In the “Auto” position, the system shall start and stop pumps as controlled by the vacuum switches, the minimum run timer, and the prime level switches. The lead pump shall start and/or load at a receiver vacuum of 13.5 inches of hg vacuum, and shall unload at 18.5 inches of hg vacuum. The lag pump shall start and or load at a receiver vacuum of 11.5 inches of hg vacuum and shall unload at a receiver vacuum of 17 inches of hg vacuum. An adjustable minimum run timer shall be provided for each pump, with a range of 0 to 30 minutes. Each timer shall be set for 15 minutes. Each pump shall run until it has operated for a minimum of 15 continuous minutes, is unloaded, and both prime level switches are activated. Normal operations shall be in “auto” mode

The control system shall load and unload the vacuum pump at the receiver pressures of 12 in Hg. vacuum and 18.5 in Hg. vacuum respectively.

2-4.04. Protection Controls. A protection control system shall be provided for the pump. On low seal ring water flow, the control system shall stop the pump.

2-4.05. Miscellaneous Controls. The remote receiver vacuum gauge shall be mounted on a wing projection on top of the control panel. Four vacuum switches to detect vacuum in the remote receiver shall be provided. The high-high vacuum switch and low-low vacuum switch shall activate an alarm at the control panel. The low-vacuum switch shall start the pump and high vacuum switch stop the pump.

Below are the set points for the vacuum switches.

High-high vacuum switch - 20 in Hg vacuum - High-high vacuum alarm set point
High vacuum switch - 19 in Hg vacuum - Pump unload/stop set point
Low vacuum switch - 12 in Hg vacuum - Pump load/start set point
Low-low vacuum switch - 11.5 in Hg vacuum - Low-low vacuum alarm setpoint

Amber indicating lights shall be provided on the control panel for the following alarm conditions:

a. Motor overload, each pump.

b. Low seal ring water flow, each pump.

c. High receiver water level.

d. High-high receiver water level.

e. low receiver vacuum.

Indicating lights shall be heavy-duty, oiltight, semiflush type, with escutcheon plates to identify the malfunction. A mechanical latching relay circuit with a common "Reset" push button shall be provided so that the alarm lights remain on until manually reset. The latching relays shall have a contact rated 10 amperes at 120 volts, which closes on alarm. An alarm light "Test" push button shall also be provided on the front of the control panel to test the lights simultaneously without actuating the remote alarm.

Two normally open contacts, which close under alarm conditions, shall be provided for remote alarm indication. Both contacts shall close when any of the

above alarm conditions occur. Contacts shall be rated 10 amperes at 120 volts, 60 Hz, single phase.

One set of normally open and normally closed auxiliary contacts shall be provided for remote indication of the pump's status. An additional set of auxiliary contacts shall be provided for remote indication of an alarm condition for the pump. In addition, indicating lights shall be provided on the control panel for each pump, red for RUNNING, and green for OFF.

The pump shall be provided with an elapsed time hour meter on the front of the control box.

2-4.06. Seal Ring Water Controls. When the control system indicates that a pump should start, the corresponding solenoid valve in the seal ring water supply line shall open. A flow switch mounted in the seal ring water supply line shall prove that seal ring water flow is established before the pump motor is allowed to start.

The pump manufacturer shall provide a seal ring water supply solenoid valve and Y-strainer for the pump. Solenoid valves shall have brass or bronze body, and shall be suitable for 120 volts, 60 Hz, single phase supply. The Y-strainer shall be brass or bronze.

The pump manufacturer shall provide the seal ring water flow switch for the pump.

The pump manufacturer shall provide a seal ring water flow control valve for the pump. The flow control valve shall be designed to deliver a constant water flow rate to the pump seal ring over a wide pressure drop range, and shall incorporate a variable orifice which varies its effective area inversely to the pressure applied. The flow rate shall be maintained within +/- 15 percent up to pressure drops of 125 psi. The flow control valve shall break up the water discharge pattern to minimize noise, and the size shall be as recommended by the pump manufacturer. The flow control valve shall be as manufactured by Dole, or Owner’s approved equal.

2-5. ACCESSORIES. The vacuum equipment system shall be furnished with the following accessory equipment.

2-5.01. Safety Valves. Safety valves with manual lifting levers shall be installed in the vacuum pump suction pipe and on the receiver as indicated on the drawings. Valves in the pump suction piping shall be capable of protecting the vacuum pumps from cavitation damage. Safety valve for the receiver shall be shipped loose for installation on site by the Contractor.

2-5.02. Vacuum Gauges. Vacuum gauges shall be of the indicating dial type, with C-type phosphor bronze Bourdon tube; stainless steel rotary geared movement; phenolic or polypropylene open front turret case; adjustable pointer; stainless steel, phenolic, or polypropylene ring; and acrylic plastic or shatterproof glass window.

Gauge dial shall be 4-1/2 inch [114 mm] size, with white background and black markings. The units of measurement shall be indicated on the dial face. Subdivisions of the scale shall conform to the requirements of the governing standard. Pointer travel shall be not less than 200 degrees or more than 270 degrees of arc.

Surface-mounted gauges shall be provided with 1/4 inch [6 mm] NPT connections. All stem-mounted gauges shall be provided with 1/2 inch [12 mm] NPT connections. Stem mounted gauges shall have an adjustable viewing angle to allow the gauge to be positioned for optimum viewing.

All vacuum gauges shall measure in inches [mm] water. All gauges shall have a suitable range to give mid-scale readings under normal conditions. Gauge accuracy shall be 0.5 percent of scale range.

Each gauge shall be provided with a threaded end, ball-type gauge valve. Gauge valve materials shall be compatible with the measured process. Where the process is not defined, gauge valves shall have AISI Type 316 stainless steel wetted parts and Teflon seals. Multi-port gauge valves shall have all unused ports plugged. Gauge valve construction shall be as detailed in the Miscellaneous Instruments section.

Gauges shall be installed conforming to the installation details. All gauges shall be installed in the vertical, upright position. Thread sealer, suitable for use with the associated process, shall be used in the assembly of threaded connections. All connections shall be free from leaks. Lines shall be purged of trapped air at gauge locations prior to installation of the gauge or diaphragm seal.

Each gauge shall be provided with all required mounting hardware to securely mount the unit according to the mounting requirements indicated in the Drawings or the Instrument Device Schedule.

Unless otherwise indicated, mounting and installation hardware shall be Type 316L stainless steel.

Vacuum gauges shall be Ashcroft "1279 Duragauge", or owner approved equal.

2-5.03. Separator Silencer. Each vacuum pump shall be provided with a separator silencer mounted in the pump discharge piping on the vacuum pump

skid. Separator silencers shall be designed for full vacuum service for use with liquid seal vacuum pumps. Seal water shall discharge from the bottom of the separator silencer, and air through the top. Separator silencers shall reduce the noise in the discharge piping. Silencers shall be critical grade, constructed of stainless steel or epoxy coated and lined carbon steel, and shall be sized in accordance with the manufacturer's recommendations. Silencers shall be as manufactured by Burgess-Manning, Stoddard or Owner's approved equal.

The minimum sound attenuation for each octave band shall be as follows:

Octave Band	Minimum Attenuation (db)
63	28
125	35
250	37
500	37
1,000	36
2,000	34
4,000	34
8,000	34

2-5.04. Suction Check Valves. A line-mounted check valve shall be provided in the suction piping leading to each vacuum pump. Check valves shall be sized in accordance with the manufacturer's recommendations and shall be suitable for service for liquid ring vacuum pumps.

Check valves shall be swing type, and shall operate without springs.

2-5.05. Shutoff Valves. All shutoff valves shall be ball valves or gate valves as indicated on the drawing.

All ball valves in copper piping shall have bronze bodies, chrome plated or brass balls, and reinforced Teflon seals and seats. Shutoff valves in stainless steel tubing shall have Type 316 stainless steel bodies and balls and reinforced Teflon seals and seats.

All bronze gate valve components in contact with liquid shall contain less than 16 percent zinc. All aluminum bronze components in contact with liquid shall be inhibited against dealuminization in accordance with Section 4.2.3.5.4 of ANSI/AWWA C509 and Section 4.2.3.3.4 of ANSI/AWWA C515. Shutoff valves in stainless steel tubing shall have Type 316 stainless steel bodies.

All valves shown on the drawings, for the vacuum pump system shall be provided by the vacuum pump manufacturer.

2-5.06. Backwash Pump Priming Valves. The four existing backwash pump priming Valves shown on the P&ID shall be replaced with in-kind valves. Sizing of the valves shall be 1-¼" X ½" and shall be installed at the same elevation as the existing valves.

2-5.07. Vacuum Switches. Vacuum switches shall be diaphragm actuated type switches. Switches shall be field adjustable type, with trip point repeatability better than 1 percent of actual vacuum. Switches shall have over-range protection to maximum process line vacuum. Switches mounted inside panels shall have NEMA Type1 housings. All other switches shall have weatherproof housings. Switches shall be differential type where indicated in the Instrument Device Schedule. Switch wetted parts shall be compatible with the process fluid. Where the process is not defined, all wetted parts shall be Teflon-coated or viton and the connection port shall be stainless steel.

Panel-mounted and surface-mounted switches shall be provided with 1/4 inch NPT connections. All stem-mounted switches shall be provided with 1/2 inch NPT connections.

All vacuum switches shall be ranged in inches [mm] of water. Unless otherwise indicated, switches shall have a fixed deadband and shall be auto-reset type. As a minimum, switches shall be SPDT, rated 10 amp [A] at 120 V ac.

Each switch shall be provided with a threaded end, ball-type shutoff valve. Shutoff valve materials shall be compatible with the process fluid. Where the process is not specified, valves shall have AISI Type 316 stainless steel wetted parts and Teflon seals. Multi-port valves shall have all unused ports plugged. Shutoff valve construction shall be as detailed in the Miscellaneous Instruments section.

Switches shall be installed conforming to the installation details. All switches shall be installed in the vertical, upright position. Thread sealer, suitable for use with the associated process, shall be used in the assembly of threaded connections. All connections shall be free from leaks. Lines shall be purged of trapped air at switch locations prior to installation of the switch or diaphragm seal.

Switches shall be manufactured by Ashcroft, Barksdale, Dwyer/Mercoid, ITT/NeoDyn, or S.O.R.

2-5.08. Flexible Connections. The vacuum pump shall be provided with flexible connections in the suction and discharge piping. Flexible connections shall be stainless steel bellows type, designed for 30 inches Hg vacuum and the expected

discharge air temperature. Flexible connections shall be as manufactured by Hyspan, or Owner's approved equal. Flexible connections shall be provided with control rods or enclosed in stainless steel braid to prevent transmitting pressure forces to the piping system.

2-5.09. Conductance Level Switch. Level switches shall utilize a thermal dispersion technology to actuate the switch. Switches shall have an 3/4-inch NPT connection for insertion into the process piping, be housed in a NEMA 4X rated enclosure, wetted components shall be 316 stainless steel, and shall contain at least one non-mercury SPDT contact, rated minimum of 6 amps at 120 volts ac. Level switches shall be installed in the vertical position of the pipe. Switches shall be Magnatrol Thermatel series, Fluid Components International LLC, or Owner approved equal.

2-5.10. Flow Switches. Flow switches shall utilize a vane or paddle type target to actuate the switch. For pipe sizes greater than or equal to 2 inch, switches shall have an NPT connection for insertion into the process piping. For pipe sizes less than 2 inches, the flow switch shall be factory installed in a spool piece, suitable for flange or thread mounting in the process piping. Switch wetted components shall be compatible with the process fluid. Switches shall contain at least one non-mercury SPDT contact, rated 5 amp [A] at 120 volts ac. The switch enclosure shall be a minimum NEMA Type 4 housing. Switches shall be factory calibrated to actuate at the specified flow rates for the given pipe size. All flow switches shall be installed in horizontal piping.

Switches shall be Magnetrol or Owner approved equal.

2-6. DRIVE UNITS.

2-6.01. Motor/Pump Connection Belts and Sheaves. Belts and sheaves shall be of the heavy-duty "V" type with a horsepower rating of at least 1.4 times the motor nameplate horsepower. Belts shall be matched sets.

2-6.02. Safety Guards. All exposed rotating shafts, couplings, sheaves, and belts shall be provided with safety guards in accordance with the General Equipment Stipulations.

2-6.03. Electric motors. The pump shall be provided with an electric drive motor conforming to the requirements of the General Equipment Stipulations. The motor shall be complete with an adjustable baseplate for mounting on the common baseplate. Motors shall be TEFC, premium efficiency type with a service factor of 1.0, and rated 460 volts, 60 Hz, 3 phase. Motor shall be provided with a space heater. Motor space heater shall be rated at 240 VAC and powered at 120 VAC. All conduit shall be liquid tight and suitable for outdoor installation.

2-7. SHOP PAINTING. All components of the vacuum equipment system, including motors shall be shop primed and finish painted prior to shipment to the site.

All iron and steel surfaces, except galvanized surfaces and stainless steel, shall be thoroughly cleaned, sanded, and shop coated with two or more coats of epoxy enamel. Epoxy enamel shall be Ameron "Amercoat 385 Epoxy", Carboline Carboguard “890”, or Tnemec "Series 69 Hi-Build Epoxoline II”.

Galvanized surfaces shall be prepared for coating in accordance with the instructions of the coating manufacturer. Galvanized surfaces shall be coated with two or more finish coats of gloss epoxy enamel.

Stainless steel, nonferrous, and nonmetallic surfaces shall not be painted.

The total paint film thickness, including prime coat and finish coats, shall be not less than 5 mils. The color shall be aluminum, and shall be acceptable to the Company.

One quart of finish paint shall be provided with the equipment system for field touchup painting.

2-8. DYNAMIC BALANCE. All rotating parts shall be accurately machined, and shall be in as nearly perfect rotational balance as practicable to ISO 1940 Standard. Balance reports shall be submitted.

2-9. PERFORMANCE TEST. The vacuum pump shall be shop performance tested. The performance test shall comply with Heat Exchanger Institute Standards. A statement from the manufacturer certifying that the specified shop tests have been performed on each item of equipment, along with the test results shall be submitted to the Engineer for review and acceptance prior to shipment. Performance test results shall include certified performance curves. Performance curves shall include vacuum, driver output and pump input horsepower, and pump speed, plotted against capacity. Test points and pump serial number shall be clearly indicated on each curve.

2-10. SHOP MECHANICAL RUN TEST. Prior to shipment, the pumps shall be operated to check alignment; faulty equipment and controls; proper wiring; leaks in piping, seals, or wells; and proper operation of the safety and operating controls. Defective equipment and controls disclosed by such tests shall be replaced and the system placed in satisfactory operating condition before shipping. A statement from the manufacturer certifying that the specified shop test has been performed shall be submitted to the Engineer prior to shipment.

PART 3 – EXECUTION

3-1. INSTALLATION. The pump system shall be handled and installed in accordance with the manufacturer's recommendations. The base shall be carefully leveled and aligned to fit connecting piping, and to ensure that piping stresses are not transmitted to the equipment.

Upon installation, the entire pumping equipment shall be aligned, operated and adjusted by qualified representatives of the pump, motor and control manufacturers, and under the intended operating conditions, and shall be left in first class, satisfactory, operating conditions, ready for continuous operation.

3-3. GENERAL TESTING REQUIREMENTS. Unless otherwise specified in the individual specification sections, all equipment provided shall be tested at the factory as a single fully integrated system. As a minimum, the testing shall include the following:

- Unwitnessed Factory Test (UFT)
- Factory Acceptance Test (FAT)
- Operational Readiness Test (ORT)
- Functional Demonstration Test (FDT)
- 30-Day Site Acceptance Test (SAT)

Each test shall be in the cause and effect format. The person conducting the test shall initiate an input (cause) and, upon the system's or subsystem's producing the correct result (effect), the specific test requirement shall be satisfied.

Manufacturer shall prepare attesting procedure to be approved by Owner and Engineer that shall demonstrate that the system conforms to the specifications. The testing procedure shall be submitted at least 30 days in advance of testing. The testing shall be conducted by the manufacturer and witnessed by Owner and Engineer. Each specific test shall be described and followed by a section for signoff by the appropriate party after its satisfactory completion. Copies of these signoff test procedures, forms and checklists will constitute the required test documentation.

Manufacturer shall notify Owner and Engineer in writing at least 14 days before the proposed testing date. The Engineer reserves the right to test or retest all specified functions whether or not explicitly stated in the prior approved Test Procedures. The Engineer's decision shall be final regarding the acceptability and completeness of all testing.

If the FAT is concluded unsuccessfully, the test shall be repeated. Manufacturer shall reimburse Owner and Engineer for all expenses incurred in connection with attending repeated factory or site testing necessitated by system failure or

inadequate preparation.

Manufacturer shall provide all special testing materials and equipment. Wherever possible, perform test using actual process variables, equipment and data. Where it is not practical to test with real process variables, equipment and data, provide suitable means of simulation.

No equipment shall be shipped to the jobsite until the Engineer has received all test results and approved the system as ready for shipment.

The manufacturer shall furnish the services of servicemen, all special calibration and test equipment and labor to perform all required tests for equipment provided by manufacturer.

3-3.01. Correction of Deficiencies. All deficiencies in workmanship and/or items not meeting specified testing requirements shall be corrected to meet specification requirements at no additional cost to the Owner. Testing, as specified herein, shall be repeated after correction of deficiencies is made until the specified requirements are met. This work shall be performed at no additional cost to the Owner.

3-3.02. Unwitnessed Factory Test (UFT). The entire system, except primary elements, final control elements and field mounted transmitters, shall be interconnected and tested to ensure the system operates as specified. All analog and discrete input / output points not interconnected at this time shall be simulated to ensure proper operation of all alarms, monitoring devices / functions and control devices / functions. All panels and assemblies shall be inspected and tested by the manufacturer to verify that they are in conformance with related submittals, specifications and Drawings.

The UFT shall be performed by the manufacturer at their facility within the continental United States of America. Results shall be submitted to the Engineer for approval prior to the start of the FAT.

3-3.03. Factory Acceptance Test (FAT). The FAT shall be performed by the manufacturer at their facility within the continental United States of America. All system tests specified for the UFT shall be repeated. The FAT will be a joint test by the manufacturer, General Contractor, Engineer, Owner and other related subcontractors.

After completing the UFT, the manufacturer shall notify the Owner and General Contractor in writing that the system is ready for the FAT. The Engineer and Owner shall schedule a test date within 10 days of receipt of the “Ready to FAT” letter.

The various tests performed during the FAT shall be designed to demonstrate that all hardware and software fulfill all the requirements of the Specifications and Contract Drawings. The test conditions shall resemble, as closely as possible, the actual installed conditions. Any additional hardware or software that may be required to successfully verify system operation shall be supplied at no additional cost to the Owner. All control panels shall be included in these tests.

All deficiencies identified during these tests shall be corrected and retested prior to completing the FAT as determined by the Engineer/Owner.

All test data and procedures followed during the testing shall be logged and certified copies of the logs shall be provided to the Engineer/Owner.

Travel allowance shall be used for Owner personnel to attend all tests that are not at the Owner facilities. All other parties attending these tests are required to pay for their own costs associated with the tests including time, airfare, car rental, hotel expense, meal expense, etc. This includes the Engineer, General Contractor's project engineer and support personnel.

3-3.04. Operational Readiness Test (ORT). Prior to startup and the FDT, the entire system shall be certified, inspected, tested and documented that it is ready for operation. The ORT will be a joint test by the manufacturer, General Contractor, Engineer, FCSS, and other related subcontractors and shall be conducted at the Owners facility.

3-3.04.01. Devices by Other Suppliers. If inter related devices furnished by other suppliers under other contracts, or by Owner, the field supervisor shall use suitable test equipment to introduce simulated signals to and/or measure signals from these devices to locate the sources of trouble or malfunction. Signals from these devices shall be successfully tested prior to the ORT being completed one the malfunctioned device is working properly.

3-3.04.02. Loop/Component Inspections and Tests. The entire system shall be checked for proper installation, calibrated and adjusted on a loop-by-loop and component-by-component basis by the manufacturer to ensure that it is in conformance with related submittals and these Specifications. The General Contractor shall require the manufacturer to maintain Loop Status Reports and Component Calibration Sheets at the jobsite and make them available to the Engineer/Owner at any time. The inspections and tests do not require witnessing. However, the Engineer shall review and initial all Loop Status Sheets and Component Calibration Sheets and spot-check their entries periodically and upon completion of the ORT. Any deficiencies found shall be corrected.

3-3.04.03. Test Report. Upon completion of the network verification, a detailed report shall be prepared by the Analyst and issued to the Owner and Engineer.

The report shall include all measurements and testing results, analysis of results, summary of findings, and recommendations for remediation.

3-3.04.04. System ORT Report. The manufacturer shall submit a written report on the results of such tests to the Engineer. Additional documentation shall be furnished as requested by Engineer to establish responsibility for corrective measures. Manufacturer shall verify, in writing, to Engineer or Owner that manufacturer has successful completed the ORT before beginning the Function Demonstration Test.

3-3.05. Functional Demonstration Test (FDT). Prior to startup and the SAT, the entire installed instrument and control system shall be certified that it is ready for operation. The FDT will be a joint test by the manufacturer, General Contractor, Engineer, Owner and other related subcontractors and shall be conducted at the Owners facility. Once the facility has been started up and is operating, a witnessed FDT shall be performed on the complete system to demonstrate that it is operating and in compliance with these Specifications. Each specified function shall be demonstrated on a paragraph-by-paragraph, loop-by-loop and site-by-site basis. Loop-specific and non-loop-specific tests shall be the same as specified under FDT except that the entire installed system shall be tested and all functionality demonstrated. The system shall operate for 72 continuous hours without failure before the test shall be considered successful. At the end of the FDT the following test shall be demonstrated"

- Communication failure and recovery
- Total power failure and recovery including the UPSs
- Catastrophic failure and recovery of PLC and I/O modules

3-3.06. Site Acceptance Test (SAT). After completion of the ORT and FDT test, the entire system shall be operated for a period of 30 consecutive days, under conditions of full plant process operation, without a single non-field repairable malfunction. The SAT will be a joint test by the manufacturer, General Contractor, Engineer, Owner and other related subcontractors and shall be conducted at the Owners facility. During the test, plant operating, Engineering and manufacturer personnel shall be present as required. While the test is proceeding, the Owner shall have full use of the system. Only certified plant operating personnel shall be allowed to operate equipment associated with the actual water production process.

Any malfunction during the tests shall be analyzed and corrected by the responsible party immediately. The Engineer/Owner will determine whether any such malfunctions are sufficiently serious to warrant a repeat of this test. During the 30 consecutive day test period, any malfunction which cannot be corrected within 24 hours of occurrence by the responsible party, or more than two similar failures of any duration, will be considered a non-field-repairable malfunction.

Upon completion of a non-field-repairable malfunction, the test shall be repeated as specified herein. Down times due to power outages or other factors outside the normal protection devices or back-up power supplies provided shall not be considered a non-field-repairable malfunction. Down times due to plant process equipment failures or other factors beyond the control of manufacturer shall not be considered a non-field-repairable malfunction.

3-3.07. Completion of Test. Upon successful completion of the SAT and subsequent review and approval by the Engineer of the complete system final documentation, the system shall be considered substantially complete, and the warranty period shall commence.

3-4. Field Run Testing. Each pump shall be mechanically checked for proper operation. Each alarm and safety shutdown shall be checked by artificially simulating an alarm condition. Defective equipment and controls disclosed by the tests shall be replaced or corrected, and the packages placed in satisfactory operating condition. The following items shall be measured, recorded, and submitted in a field test report:

a. Inlet pressure, each pump.
b. Discharge pressure, each pump.
c. Discharge temperature, each pump.
d. Differential pressure across each filter or filter silencer.
e. Pressure and temperature at downstream end of piping system and at any measurement taps provided.
f. Flow measurements at any flowmeters provided.
g. Outdoor ambient temperature.
h. Indoor ambient temperature.
i. Barometric pressure.
j. Vibration.

Test reports shall verify that the specified tests have been performed and shall state results.

3-4.01 VIBRATION. Excessive vibration shall be sufficient cause for rejection of the equipment. The mass of the unit and its distribution shall be such that resonance at normal operating speeds is avoided. In any case, the vibration displacement, peak-to-peak, as measured at any point on the machine shall not exceed 3.5 mils.

3-6. TRAINING. After acceptance of the installation check by the Engineer, the manufacturer's representative shall provide training for Owner in proper operation, maintenance and troubleshooting of the system provided. Training shall be conducted at the Owner's facility. Training shall include a minimum of two trips to the site, one for training on operation and maintenance of the pumps,

and one for training on the pump control system.

3-6.01. Training Costs. All costs associated with the training program shall be the responsibility of manufacturer and shall be included in the contract price. All training will be at Owner's facility; no offsite training will be acceptable.

3-6.02. Lessons. Training lesson plans and other information shall be submitted at least 30 days prior to the start of training. The manufacturer shall provide training manuals to supplement the training courses. The manuals shall include specific details of equipment supplied and operations specific to the project. The trainer shall make use of teaching aids, manuals, slide/video presentations, etc. After the training services, all training materials shall be delivered to the Owner.

3-6.03. Operator and Maintenance Training. Pump operation and maintenance training shall be at least 12 hours long with at least four hours of classroom training and at least eight hours of hands-on training. Training shall include review of P&IDs, operation, maintenance, and troubleshooting. The manufacturer's representative shall schedule times, which are acceptable to Owner's staff and repeat the training in four different shift and accommodate six Owner personnel each shift. The necessary components shall be operational before training sessions are conducted.

3-6.04. Instrument Training. Training on the calibration, maintenance, troubleshooting, and repair for the instrument devices provided under this section shall be provided in two (2) two-hour training sessions per instrument device, and shall accommodate ten (10) students. Training shall be provided at the Owner's facility. Training shall also be provided for any hand-held or computer-based calibration devices and their associated software.

3-6.05. Control System Maintenance Training. System maintenance training shall be provided to enable Owner's personnel to perform routine and preventive maintenance, troubleshoot, and repair on all hardware furnished with the system. Review of the PLC programming shall be included. Training sessions shall consist of two (2), two-hour sessions and shall accommodate ten (10) students.

End of Section

Section 11727

LIQUID CHEMICAL FEED SYSTEMS

PART 1 - GENERAL

1-1. SCOPE. This section covers liquid chemical feed equipment and accessories. Principal items to be furnished and installed shall include the following:

Sodium Bisulfite Feed System.

Two metering pumps.One control panel.
One calibration column.
One diffuser.
Two flow meters.

The following items of work and equipment are covered under other sections:

Piping and valves between items of equipment.
Water supply and electric power supply to the equipment.
Drain and vent piping.

1-1.01. Associated Sections. This section also includes criteria, responsibilities, equipment and services specified in the following sections.

01300	Submittals
11065	Common Control Panel Requirements for Equipment
11066	General Wiring Methods
11067	Wire Tagging

1-2. CHEMICAL FEED SYSTEM INTEGRATOR (CFSI). The chemical feed systems shall be designed, coordinated, and supplied by a competent CFSI. The CFSI shall be regularly engaged in the business of designing and assembling liquid chemical feed systems for water treatment or wastewater treatment plant projects. The CFSI shall be responsible for ensuring that a complete functioning system is supplied for each Chemical Feed System. The CFSI shall be responsible for coordinating all equipment, piping, and valves, and appurtenances for each Chemical Feed System.

1-2.01. CFSI Qualifications. The CFSI shall meet all of the following requirements and within 30 days after the Notice of Award, the Contractor shall submit proof of the following qualifications for the intended CFSI:

The CFSI has successfully provided similar work for at least 5 years.

The names of at least three references who are users of similar systems designed, assembled, and furnished by the CFSI.

The CFSI has the required financial capability.

The names of manufacturers whose products will be supplied.

The CFSI maintains a qualified technical staff and design office.

The CFSI has the physical plant and fabricating personnel to complete the work specified.

The CFSI has and will maintain competent service personnel to service the equipment furnished.

1-3. GENERAL. Equipment furnished and installed under this section shall be fabricated, assembled, erected, and placed in proper operating condition in full conformity with drawings, specifications, engineering data, instructions, and recommendations of the equipment manufacturer, unless exceptions are noted by the Engineer.

Each item shall be furnished and installed complete with all mechanical and electrical equipment required for proper operation, all components indicated on the drawings or specified, and all additional materials or construction required by the design of the system.

1-3.01. Coordination. The CFSI shall verify that each system component is compatible and consistent with all other components of the system, that all pipe materials and sizes are appropriate, and that all devices necessary for a properly functioning system have been provided. Devices and appurtenances necessary for a properly functioning system shall be constructed of materials consistent with the piping materials unless otherwise indicated. The CFSI shall assume responsibility for ensuring that Minimum Suction Head and NPSH available is adequate for the supplied pumps.

Similar components of different chemical feed systems shall be from the same manufacturer to facilitate maintenance and stocking of repair parts. Whenever possible, identical units shall be furnished.

Review of drawings submitted prior to the final determination and coordination of related equipment to be provided will not relieve the Contractor from responsibility for supplying systems in full compliance with the specific requirements of the related equipment.

1-3.02. General Equipment Stipulations. The General Equipment Stipulations shall apply to all equipment furnished under this section. Piping on skids shall be constructed consistent with the piping and valve specifications.

1-3.03. Governing Standards. All electrical equipment shall conform to applicable standards of the National Electrical Manufacturers Association and the National Electrical Code.

1-3.04. Power Supply. Unless otherwise specified, the power supply will be 120 volts, 60 Hz, single phase. Where control voltage lower than the power supply voltage is required, a suitable control power transformer shall be furnished. Both power and control equipment shall be insulated for not less than 600 volts even though operating voltages may be lower.

1-3.05. Metal Thicknesses. Metal thicknesses and gauges specified herein are the minimum required. Gauges refer to US Standard gauge.

1-3.06. Nameplates. A nameplate shall be provided and mounted on or adjacent to each piece of chemical feed equipment to identify its function. Nameplates shall be approximately 2-in by 5-in, nominal, engraved phenolic master nameplate on the control panel fastened with stainless steel type 316 screws or rivets. Nameplate shall be white with black core, 3/8-in high lettering Feeder designations on the nameplates shall correspond to those indicated on the drawings.

1-3.07. Spare Parts. A list of recommended spare parts with pricing shall be furnished during the submittal phase.

1-4. SUBMITTALS. Submittals for chemical feed systems shall have the following organization and information as a minimum.

1-4.01. Submittal Organization. The submittal shall be split up into different sections with a separate section for each chemical feed system. Each system section shall be supplied with the following information.

CFSI Name, Contact Name, Phone Number, Address, and email address.

CFSI Contact Name Qualifications and Experience.

Bill of Materials.

System piping and instrumentation diagram (P&ID) with legend.

Equipment and piping layout starting from tote pump suction nozzle to discharge of anti-siphon loop.

Metering pump selections.

Metering pump appurtenances including calibration columns.

Control Panel layout and wiring diagram.

Diffuser selection.

Flow meter selections.

Control narrative.

Spare parts.

1-4.02. Drawings and Data. Complete fabrication, assembly, installation and equipment and piping layout drawings, piping and instrumentation diagrams, and wiring diagrams, together with detailed specifications and data covering materials, parts, devices, and accessories forming a part of the equipment furnished, shall be submitted in accordance with the Submittals Section (01300).

1-4.03. Calibration Graphs. The CFSI shall prepare a calibration graph from field tests for each chemical feed pump. Each graph shall include a family of curves of pump speed/stroke length versus gallons per hour at 25, 50, 75 and 100 percent speed and 10, 25, 50, 75, and 100 percent stroke length. Each graph shall be furnished on hard paper and sealed in clear plastic.

1-4.04. Control Narrative. A narrative description of the proposed metering pump controls, including all control modes, manual and automatic operations, electrical interlocks, alarms, and interfaces to the Plant Control System shall be submitted.

1-4.05. Operation and Maintenance Manuals. Operation and maintenance manuals shall be submitted in accordance with the Submittals Section (01300). The operation and maintenance manuals shall be in addition to any instructions or parts lists packed with or attached to the equipment when delivered.

Operation and Maintenance Manuals shall be submitted before the commencement of any field acceptance testing.

a. Operation and Maintenance Manuals shall include complete instruction books, user manuals, or operational procedures for each item of equipment and software furnished.

   O&M manuals shall have all the instrumentation installation and calibrations sheets filled out and signed.

b. Manuals shall contain all illustrations, detailed drawings, wiring diagrams and instructions necessary for installing, operating and maintaining the equipment.

c. Where instruction booklets cover more than one specific model or range of device, product data sheets shall be included which indicate the device model number and other special features.

d. A complete set of "as-built" wiring, fabrication, and interconnection drawings shall be included with the manuals.

e. The operation and maintenance manual submittal shall include an electronic copy of the filter programmable logic controller and operator unit interface application program, provided on DVD.

f. If field-wiring modifications are made after these drawings are submitted, the affected drawings shall be revised and resubmitted.

PART 2 - PRODUCTS

2-1. CFSI. The chemical feed system shall be coordinated, and supplied by a qualified CFSI who is regularly engaged in the business of designing and assembling liquid chemical feed systems for water treatment or wastewater treatment plant projects.

2-2. CONSTRUCTION. Chemical feed equipment shall be of substantial construction with all parts designed for long life under working conditions including corrosive atmospheres and intermittent or continuous operation. All wearing parts and items requiring adjustment shall be readily accessible. Each unit shall be completely enclosed and dusttight when in operation. All parts which are exposed to corrosive conditions shall be made from corrosion-resistant materials or covered with suitable protective coatings.

2-3. SODIUM BISULFITE FEED SYSTEM. One assembly of feeding equipment shall be furnished and installed to dispense 38% sodium bisulfite to the following feed point:

- Western Effluent Junction Box

2-3.01. Metering Pump Skids. One metering pump skid shall be furnished and installed as indicated on the drawings to dispense 38 percent sodium bisulfite with a specific gravity of 1.31 to the points of application. The skid shall be located in the Sodium Bisulfite Feed Area. The skid shall have two metering pumps on the skid, pipe appurtenances, appropriate valves and piping, calibration columns, and a control panel. The piping requirements, valving, and appurtenances shall be as shown on the piping and instrument diagrams. Each skid shall have a dedicated control panel, and all power and control wiring within

the skid shall be provided by the CFSI such that the skid requires connection of a single primary 120V power circuit.

Skids shall be of substantial construction, shall be constructed of a material resistant to the pumped solution, and shall have unobstructed access to the controls, pump head, and pump check valves. The skid shall have a footprint no larger than 4 1/2' by 3'.

Piping on the skids shall be consistent with Specification 15067 Miscellaneous Plastic Pipe, Tubing, and Accessories. Valves shall be consistent with Specification 15091, Miscellaneous Ball Valves.

2-3.02. Metering Pumps. Two metering pumps shall be furnished and installed as indicated on the drawings to dispense 38 percent sodium bisulfite with a specific gravity of 1.31 to the points of application.

Each pump shall include continuous local and remote electric and local manual mechanically controlled metering of solution under the following conditions and requirements.

Number of pumps	2
Equipment Number	
Capacity control range, percent	0 to 100
Metering range (rated conditions), gph	4.6 to 40.3
Minimum drive motor, hp	1/2
Maximum stroke rate at rated conditions, spm	120
Accuracy, percent of scale over metering range	2
Minimum suction head required, psia	9.5
Nominal discharge pressure, psi	40

Each pump shall be of the positive displacement type using a hydraulic or mechanically actuated diaphragm. The diaphragm shall have an integrally molded O-ring for installation in the pump housings.

Metering pumps shall have an internal drive shaft connected to a motor with support bearings on both ends within the gear case. Each pump shall have one adjustable head.

Inlet and outlet check valves shall be of the single valve type, with valve housing which are removable without disassembly of the pipe fittings.

Materials of construction shall be selected for resistance to the pumped solution, as acceptable to the Engineer.

The rate of metering shall be changed by manually or automatically varying the stroking speed and the stroke length. Minimum flow rate shall be achieved at a stroking length not less than 10 percent and a stroking speed not less than 20 spm.

Each pump liquid end shall be equipped with an automatic stroke length controller set to operate from a remote signal. The input signal shall be 4-20 mA dc, and shall be ungrounded type with an input resistance of not more than 250 ohms.

Motor horsepower for each pump shall be based on the above requirements and on the discharge back pressure required by the pump furnished. Motor shall not be less than the indicated horsepower. Power to the motor shall be provided by an SCR controlled rate controller as specified herein. Power and control wiring from the controller to the motor shall be provided by the pump supplier.

Each pump motor shall be equipped with an electric speed adjustment to operate from an SCR controller. The signal input shall be 4-20 mA dc, and shall be ungrounded differential type with an input resistance of not more than 250 ohms. The controller shall accept either the remote signal or a manual rate control signal at the controller, and vary the dc voltage to the motor, with feedback as required to attain the desired rate. Each controller shall operate from a 120 volt, single phase, 60 Hz power supply, and shall be mounted in a metering pump control panel as described in the Metering Pump Control Panel paragraph.

Each pump shall be furnished with the following accessories. All metering pump suction and discharge appurtenances described below and branch piping to these appurtenances shall be the same sizes as the suction and discharge piping indicated on the P&ID.

One strainer installed in the inlet piping. The strainer shall be transparent PVC bodied Y-pattern with 8-mesh screen and O-ring seals.

One pressure gauge and high pressure switch with isolating diaphragm installed in the discharge piping. The pressure gauge shall be indicating dial type with adjustable pointer and acrylic plastic or shatterproof glass window.

The dial shall be 4-1/2 inches in diameter, with white background and black markings. Pointer travel shall be approximately 270 degrees. The unit of measurement shall be pounds per square inch, and shall be indicated on the dial face. The gauge shall be selected so that gauge readings will be mid-scale under normal operating conditions. The high pressure switch shall be of the diaphragm type, shall have a weatherproof housing, shall have a trip point reliability better than 1 percent of actual pressure, and shall at minimum be SPDT rated at 10 amp at 120 VAC. The isolating diaphragm shall protect the pressure gauge from the chemical solution.

One external pressure relief valve sized to pass the maximum displacement of the pump. The pressure setting shall be as recommended by the pump manufacturer.

One properly sized backpressure valve as recommended by the manufacturer.

One properly sized diaphragm type pulsation dampener in each pump discharge piping arrangement. Each pulsation dampener shall be fabricated of materials resistant to the pumped solution, and shall include an air charging valve and air gauge. The pulsation dampener shall be sized to limit pressure surges to between 5 and 10 percent of mean pressure.

All wiring shall be furnished complete and ready for connection of an external power circuit.

Metering pumps shall be Milton Roy Model “MRoy or MilRoyalG”, Prominent Model “Sigma 2”, Pulsafeeder Model “Pulsa 7120 or Pulsar”, or Underground Solutions Model “Encore 700” without exception.

2-3.03. Diaphragm Metering Pump Controls. For variable speed diaphragm metering pumps, the pump supplier shall provide a local control panel for both pumps. The control panel shall house the SCR drive and control components required for operation of the metering pump as specified herein. The control panel shall be 316 SS NEMA Type 4X enclosure suitable for mounting on the pump skid complete with wiring to the pump motor and other skid mounted devices. All wiring terminals shall be furnished complete and ready for connection to the external power supply, the remote pump controls, and the pump and pump mounted devices. The control panel shall be provided with an engraved nameplate indicating the controlled unit, and nameplates for all major components contained on the panel face and within the control panel.

Control panels for variable speed diaphragm metering pumps shall have an “On-Off-Remote” switch and local speed adjustment on the panel front. When “On” is selected, the pump shall run and speed shall be adjusted using the local controls. When “Remote” is selected, start/stop control shall be by a normally open contact

input to the panel, and speed control shall be by a 4-20 mA input. Indicating lights shall be provided on the panel front for “Running”, “Stopped”, and “Drive Failure”. These indicating lights shall be red, green, and amber respectively. Where a high discharge pressure switch is indicated on the drawings or specified to be provided for the pump, the pump shall shut down on high discharge pressure, and an amber “High Discharge Pressure” indicating light on the panel front shall illuminate. LCD or similar type display functions are acceptable alternatives to indicating lights.
Outputs shall be provided from panels for variable speed diaphragm metering pumps as follows:

In Remote (NO dry contact)
Running (NO dry contact)
Fail (NO dry contact)
Speed (4-20 mA)
Stroke Length (4-20 mA), where electronic stroke length control is provided

The signal controlling the Fail contact shall be generated by the SCR drive. Where high discharge pressure is monitored, the Fail contact shall include these conditions. Manual reset of the failure condition shall be required at the control panel.

Where an electronic stroke length controller is specified, the controller shall be provided with a “Local-Remote” switch. When “Remote” is selected, stroke length adjustment shall be by a 4-20 mA input signal. When “Local” is selected, stroke length control by the 4-20 mA input signal shall be disabled and stroke length shall be adjusted manually. A 4-20 mA output signal proportional to stroke length shall also be provided. The controller and related devices shall have NEMA 4X enclosures.

2-3.04. Calibration Column. One transparent plastic calibrating column shall be furnished and installed on the pump suction piping as indicated on the drawings. The column shall be a 4-inch ID clear PVC or other resistant, rigid, transparent plastic tubing having a vented top cap and 1-inch screwed flow fitting.
Each column shall be graduated in 0.05 gallon increments over a range of 0 to 0.5 gallons, complete with a numeral at each graduation. The bottom of the calibration column shall be located at or below the bottom of elevation of the storage metering pump suction nozzle. The columns shall be Valcom, Inc., "Model 8500", or equal, and shall be mounted on the skid.

2-3.05. Diffuser. One end of pipe type diffuser shall be provided as shown on drawing M-34.

2-3.06. Magnetic Flowmeters. Two magnetic flowmeters shall be furnished and installed on the discharge side of the metering pumps as indicated on the drawings. Each magnetic flowmeter shall be a completely obstructionless, in-line

flowmeter with no constrictions in the flow of fluid through the meter. Each meter shall consist of a metallic tube with flanged ends and with grounding rings or grounding electrodes as required by the application. Flange diameter and bolt drilling pattern shall comply with ANSI/ASME B16.5. Flange class ratings and meter maximum pressure ratings shall be compatible with the adjoining piping. Self-cleaning electrodes shall be provided for all meters used for sludge metering. Electrode and liner materials shall be fully compatible with the process fluid as approved by the Engineer. Stainless steel is not acceptable. Each meter shall be factory wet flow calibrated to the sensors full flow capacity, at a facility, which is traceable to NIST or other standard acceptable to Engineer, and a copy of the calibration report shall be submitted as part of the operation and maintenance manual submittal.

The meter shall be capable of standing empty for extended periods of time without damage to any components.

Each flow meter shall be sized as shown below:

Designation	FE/FIT-AA FE/FIT-CC
Quantity	Two
Capacity, gph	4.6 to 40.3

Each flowmeter shall be sized as recommended by the flowmeter manufacturer.

The meter housing shall be of a splash-proof and drip-proof design.

Meters shall be manufactured by ABB, Endress+Hauser, Krohne, or Rosemount.

2-3.06.01. Magnetic Flow Meter Signal Converter. Integral or separately mounted, microprocessor-based signal converters shall be provided for each magnetic flowmeter. Each signal converter shall include output damping, self-testing, built-in calibration capability, and an "empty pipe zero" contact input. The overall accuracy of the magnetic flowmeter transmitter and signal converter shall be ±0.5 percent of actual flow rate for full-scale settings of 3 to 30 fps. The meter manufacturer shall furnish the signal cable between the converter and the magnetic flowmeter. The signal converter shall be housed in a corrosion-resistant, weatherproof NEMA Type 4X housing and shall be suitable for operation over an ambient temperature range of -30 to +140°F, and relative humidity of 10 to 100 percent. The converter shall have an analog output of 4-20 mA dc. When required, the converter shall also have a pulse output designed to operate a remote totalizer or predetermining counter. Transmitters shall contain a local indicator with a minimum four digit LCD type display, scaled to read in engineering units of flow.

Magnetic flowmeter systems shall provide zero flow stability by means of automatic zero adjustment of a DC excited metering circuit. Signal converters shall be of the same brand as the magnetic flowmeters.

The signal converter shall have a non-reset seven-digit, or a manually reset six-digit, totalizer on the face of the enclosure.

2-4. HEAT-TRACED PIPING. Outdoor exposed piping shall be heat-traced as described herein. Heat tracing shall be sized to maintain pipe temperatures at 40°F with an outdoor ambient temperature of -20°F. Heat tracing shall be of the self-regulating type and shall be suitable for single-phase, 120 volt service. Each run of heat tracing tape shall be provided with a circuit controller, an end-of-line indicating light, junction boxes, mounting accessories, insulation and all other equipment for a complete, properly operating system. Hazardous areas, as indicated on the Drawings and Specifications, shall have heat tracing and associated accessories that are rated for the location. The insulation for all heat tracing shall be as specified in Mechanical Insulation section. Each heat-tracing circuit shall be provided with a microprocessor-based circuit controller to monitor temperature and ground fault current. The controller shall be Chromalox “IntelliTrace Controls Series”, Nelson “CM Series”, Thermon “TC Series”, Tyco Thermal Controls "DigiTrace 910", or equal. On all plastic pipe equipped with heat tracing, a layer of conducting tape shall be installed on the pipe before heating cable installation and then again following installation of the heating cable.

PART 3 - EXECUTION

3-1. SHOP INSPECTION. Each pump skid shall be inspected by the Engineer at the factory prior to being shipped. The CFSI shall inform the Engineer one month prior to shipping such that arrangements can be made to inspect the equipment prior to shipping. The skids shall be set up to pump water during the inspection such that during the inspection the pump and control panel operation can be verified. Engineer reserves the right to reject the equipment and/or skids during the shop inspection including but not limited to incorrect pipe materials, incorrect valve types, incorrect solvent cements, shoddy construction, and equipment malfunction.

3-2. SHIPPING. Prior to being shipped, the skids shall be thoroughly dried. Shipping of the skids shall conform to Section 01612 such that the skids are not damaged in transit.

3-3. INSTALLATION. Equipment and materials furnished under this section shall be installed in proper operating condition in full conformity with Drawings, specifications, and recommendations of the equipment manufacturer, unless

exceptions are noted by the Engineer. All items necessary for a complete operating system shall be installed.

3-3.01. Equipment Bases. Unless otherwise specified or indicated on the Drawings, each item of chemical feed equipment shall be mounted on a concrete base approximately six inches above the floor. If feeders or other components must be supported at higher elevations above the floor, suitable supplementary bases shall be provided.

3-3.02. Installation Check. An experienced, competent, and authorized representative of the CFSI shall visit the site of the Work and inspect, check, adjust if necessary, and approve the equipment installation. The representative shall be present when equipment is placed in operation in accordance with Section 01650 and shall revisit the jobsite as often as necessary until all trouble is corrected and the equipment installation and operation are satisfactory in the opinion of Engineer.

The CFSI's representative shall furnish a written report certifying that the equipment has been properly installed; that gas piping has been properly cleaned; is in accurate alignment; is free from undue stress imposed by connecting piping or anchor bolts; and has been operated at full load conditions and that it operated satisfactorily.

All costs for these services shall be included in the contract price for the number of days and round trips to the site as required.

3-4. CLEANING. At the completion of installation and testing, all equipment, pipes, ductwork, valves, and fittings shall be cleaned of grease, debris, metal cuttings, and sludge. Any stoppage, discoloration, or other damage to parts of the building, its finish, or furnishings shall be repaired at no additional cost to Owner.

3-5. TRAINING. The CFSI shall provide a qualified representative at the jobsite for one day to train the Owner's personnel in operating and maintaining the equipment.

End of Section

Section 13122

METAL BUILDING SYSTEMS

PART 1 - GENERAL

1-1. SCOPE. This section covers the design, fabrication and erection of the following framed pre-engineered metal building(s) and miscellaneous components.

Building Identification	Sodium Bisulfite Pad Canopy
Location	Site
Roof Configuration	Single-slope shed roof; sloped down to South side with gutter on South roof edge.
Roof Slope	1/4" per foot, minimum slope.

Earthwork and concrete are covered in other sections.

1-2. GENERAL. Building components and accessories shall be designed and erected in full conformity with the Drawings, specifications, engineering data, instructions, and recommendations of the building manufacturer unless exceptions are noted by Engineer.

The building dimensions shall be as indicated on the Drawings. The building shall be furnished complete with all primary and secondary structural framing, bracing, connections, roof coverings, flashings, closures, metal trim, fasteners, sealants, caulking, and all other accessories needed for a complete structure, and other miscellaneous components or accessory items when required, as specified or indicated on the Drawings. Framing and connections shall be provided to transfer lateral and vertical loadings from any appurtenant items and secondary framing into the primary structural framing systems.

1-2.01. Coordination. The metal building erector shall coordinate with Engineer and Contractor for the erection and field quality control of the metal building and appurtenances.

1-2.02. Governing Standards. The building design and erection shall comply with the following codes.

2012 International Building Code

The building design shall also comply wholly or in part, as specified herein, with the Metal Building Manufacturers Association (MBMA) "Metal Building Systems Manual". In case of conflicting requirements, the applicable building code shall govern.

Steel construction with hot-rolled structural shapes and plates shall be in accordance with AISC "Specifications for Structural Steel Buildings". Light gauge structural steel members shall be designed and detailed in accordance with AISI "Specifications for the Design of Cold-Formed Steel Structural Members". Welding shall be in accordance with AWS D1.1, Structural Welding Code - Steel.

Building erection shall comply with the applicable provisions of OSHA Standard 29 CFR 1926, Subpart R.

1-2.03. Manufacturer Certification. The building manufacturer shall be certified in accordance with the International Accreditation Service (IAS) metal building inspection program, IAS AC472.

1-3. DELIVERY, STORAGE, AND HANDLING. All factory finished materials shall be protected for shipment in accordance with accepted packaging standards. Minor damage to finishes shall be touched up before installation using color-matched, air-drying paint furnished by the manufacturer. No other finish will be acceptable. Any significantly damaged components shall be replaced at no cost to Owner. Anchor bolts and their accessories shall be delivered in time to avoid delays in placing concrete.

1-4. SUBMITTALS. The following items shall be submitted to Engineer for review prior to fabrication of the building elements. All drawings and data shall be submitted in accordance with the Submittals section.

> Complete drawings and data showing anchor bolts, construction details, lateral thrust details, cross-sections, insulation, roof and wall panels, fasteners, accessories, locations of all openings, and flashing details. Drawings shall be sealed by a professional engineer registered in the state where the building is to be erected.
>
> A letter of design certification listing the design criteria, including design codes, standards, loads, and other design information indicated in this section. Structural calculations shall be submitted only if requested by Engineer during review of submittal package. The letter of design certification and the structural calculations shall be sealed by a professional engineer registered in the state where the building is to be erected.
>
> All loads imposed by the metal building to the foundation.

Documentation of IAS AC472 certification.

Manufacturer's erection information indicating standard recommendations, erection details, and piece markings.

Samples of the manufacturers' available colors.

Complete details, model numbers, finishes, and installation drawings covering pedestrian doors, door hardware, windows, and louvers for all such products to be furnished by pre-engineered metal building manufacturer.

1-5. WARRANTY. After final acceptance, the completed structure shall be warranted by the metal building manufacturer to be completely weathertight under all weather conditions for a period of 10 years. Leaks which occur during the correction period, whether through roofs or materials, shall be repaired at no cost to, and to the satisfaction of, Owner.

PART 2 - PRODUCTS

2-1. ACCEPTABLE MANUFACTURERS. Pre-engineered metal buildings shall be as manufactured by American Buildings Company, Butler Manufacturing, Varco-Pruden Buildings, or equal.

2-2. PERFORMANCE AND DESIGN REQUIREMENTS. Minimum design loadings and requirements shall be in accordance with the applicable building code and as specified. Design data for determining seismic, wind, snow and ice loads shall be as indicated in the Meteorological and Seismic Design Criteria section. Load combinations shall be in accordance with the applicable building code.

The building shall be designed in accordance with the following requirements.

Building identification.	Sodium Bisulfite Pad Canopy
Minimum roof live load.	20 psf
Minimum roof uplift load.	Per building code.
Collateral roof dead load.	5 psf
Maximum permissible deflections.	
Roof Panels	L/60 under the maximum full load condition.

Roof Purlins	Maintain positive drainage under dead plus the greater of (0.5)snow or 5 psf.
Roof Purlins (no ceiling, equipment, or process piping)	L/150 under the greater of roof live or snow.
Main Roof Members (no ceiling, cranes, equipment, or process piping)	L/120 under dead plus live, L/180 under the greater of roof live, snow, or wind.

Notes:

1. Wind load (for purposes of deflection calculations only) shall be 0.7 times the service level components and cladding pressure.

2. The roof live load or snow load shall not be reduced in consideration of the tributary area.

The building design shall account for all dead, live, and impact loads in accordance with the Metal Building Systems Manual.

Unless specifically authorized by Engineer in writing, for steel building design, columns and posts shall be considered "hinged" at their base. The building foundation shall not be required to accept either full or partial moment fixity from steel building columns or posts.

Anchor rods shall be as specified in the Materials paragraph. Anchor rods and related anchorages shall be designed to resist column and brace reactions from loading combinations. The metal building manufacturer shall determine anchor rod diameter, quantity, projection, and arrangement. Each column base plate shall have a minimum of four anchor rods, and the minimum spacing between anchor rods shall be six rod diameters. Anchor rod diameter shall be determined in accordance with ACI 318, Appendix D, assuming that a maximum of two anchor rods transfer shear forces from the columns to the foundation.

If additional shear capacity beyond the shear capacity of the anchor rods is required, a design utilizing shear lugs field welded to an embedded foundation weld plate shall be utilized. No shear lugs or bars on the underside of the base plate will be permitted unless approved by Engineer.

Columns shall be tapered or straight-sidedstraight-sided up to the elevation indicated on the Drawings as indicated on the Drawings.

Metal roof panels shall be Class 90 in accordance with Underwriters' Laboratories "Tests of Wind-Uplift Resistance of Roof Assemblies - UL 580" and shall be listed for Class 90 in Underwriters' Laboratories "Building Materials Directory".

The roof system shall satisfy Factory Mutual requirements for Class 1 Fire and I-90 Windstorm Classification Structural Integrity. Standing seam roof decking shall not be utilized as lateral bracing for roof purlins.

The building roof system shall be tested and certified in accordance with the Corps of Engineers' Guide Specification 07416 (Test Method for Structural Performance of Standing Seam Metal Roof Systems by Uniform Static Air Pressure Difference) and ASTM E1592.

2-3. MATERIALS. Materials for the building shall be new and free from defects, and shall meet the following requirements unless otherwise indicated on the Drawings.

Wide Flange Structural Steel Shapes	ASTM 992, HSS Tubes A500 Grade B; hot-dip galvanized.
All other Frames and Structural Components	Steel, ASTM A36 or A572; hot-dip galvanized.
Structural Bolts	ASTM A325, black, for main framing. ASTM A307, black, for girts and purlins.
Anchor Rods and Nuts	Headed ASTM F1554, Grade 36 with compatible nuts and washers; hot-dip galvanized, ASTM A153 and A385. Heads may be provided by using a nut on a threaded shaft with mechanically deformed threads to prevent nut rotation.
Flat Washers	ANSI B18.22.1; of a material and with coating compatible with anchor bolts and nuts.
Secondary Framing	ASTM A1011 or A1008, cold-formed, with a minimum yield strength of 50 ksi; hot-dip galvanized.
Roof Panels	American "American Standing Seam 360 Roof System", Butler "MR-24 Roof System",Varco-Pruden "SSRRoof System", or equal ,24 gage minimum, 45 ksi minimum yield steel, with concealed clips; hot-dip galvanized finish in accordance with ASTM A653, re is an int

Gutters and Downspouts	Minimum 26 gauge hot-dipped galvanized steel conforming to ASTM A653, G-90 coating with factory applied finish.
Flashing and Trim	Steel with hot-dip galvanized finish in accordance with ASTM A653, G90 minimum..
Exposed Fasteners	Self-tapping, carbon steel screws with AISI Type 302 stainless steel cap and metal-back neoprene washers, or as recommended by building manufacturer; screwheads capped or colored to match panel finish.
Sealant	As recommended by building manufacturer and acceptable to Engineer.
Miscellaneous Accessories	Manufacturers' standard.
Baseplate Grout (if required)	See Grouting section
Touchup Painting	As recommended or as supplied by the building manufacturer for hot-dipped galvanized materials
Finish Painting	As recommended or as supplied by the building manufacturer for hot-dipped galvanized materials

2-4. FABRICATION. All primary framing shall be shop fabricated for bolted field assembly. Secondary framing shall have bolted or welded connections. All members shall be accurately shop punched. All framing members shall have an easily visible identifying mark.

2-4.01. Roof Panels. Roof panels shall be factory roll formed, with a nominal coverage width of 24 inches and with two major corrugations per panel. Panels shall be of maximum length to minimize end laps.

2-4.02. Trim and Flashings. Trim and flashing members shall be fabricated from the same materials and with the same finishes as the materials to which they are attached. Trim members shall be manufacturer's standard profiles for the use intended.

2-4.03. Gutters and Downspouts. As recommended or as supplied by the building manufacturer.

Gutters and downspouts shall be finish coated to match the roof panels.

2-4.04. Anchor Rods. Contractor shall furnish anchor rods. Rod embedment shall be in accordance with the Drawings.

The diameter, quantity, projection, and arrangement of the anchor rods shall be based on information provided by the metal building manufacturer.

2-5. COATINGS. The finish on surfaces of roof panels, flashings, appurtenances, and trim shall be the manufacturer's hot-dipped galvanized finish in accordance with ASTM A653, G90 minimum.

All steel parts which are not specified to be factory finished and which are not zinc coated shall be cleaned and shop primed.

Any surfaces abraded or damaged during fabrication shall be touched up. A suitable quantity of touchup paint shall be provided with the metal building.

Galvanizing shall comply with ASTM A653 for commercial steel sheets and ASTM A123 for assembled steel products.

2-6. WARRANTY. The roof and wall panel coating systems shall be warranted against cracking, fading, peeling, crazing, chipping, or other failure.

PART 3 - EXECUTION

3-1. ERECTION. Building parts shall be plumb and level with a tolerance as recommended by the metal building supplier. Fasteners shall be installed and tightened for all connections. High strength structural bolts shall be tensioned by any method set forth in the AISC Steel Construction Manual, except calibrated wrench. Necessary field welding shall be by certified welders in accordance with AWS D1.1, Structural Welding Code - Steel. Welders' qualifications shall be submitted in accordance with the Submittals section.

A copy of the building manufacturer's erection information shall be kept at the erection site at all times, and shall be available for all building trades.

The metal building erector shall be responsible for verifying prior to starting building erection that the anchor rods are correctly set in the field and the corresponding holes in the baseplates are properly located. If adjustments or corrections are necessary, they shall be submitted to Engineer for review prior to execution, and shall be made at no expense to Owner.

Roof panels, flashings, closures, and other building components shall be installed and sealed to be weathertight. Panels shall be neatly cut and fitted around openings, door and window frames, and other installed accessories. All

joints shall be lapped and sealed. Panels shall be securely fastened to structural framing and to each other.

Any gutters and downspouts shall be rigidly attached to the building. Gutters shall be installed to provide drainage and shall be designed with adequate provisions for expansion and contraction.

Any factory finished surfaces abraded or damaged during erection shall be repaired and the coating system touched up with manufacturer's touchup paint. All welds shall be thoroughly cleaned and prime painted.

Field painting of metal surfaces not finish painted at the factory is covered in the painting section.

3-2. FIELD TESTING. The building shall be leak tested with a garden hose stream prior to acceptance. Any leakage discovered shall be corrected and retested.

3-3. PROTECTION. All portions of the building shall be protected from damage during site storage and erection. Damaged parts shall be replaced with undamaged units unless field repairs are authorized by Engineer.

3-4. CLEANING. After completion of construction all soiled surfaces shall be cleaned in accordance with the manufacturer's instructions.

End of Section

Section 13125

MODULAR BUILDINGS

1. SCOPE. This section covers temporary facilities to be provided at the site during the construction period. This section supersedes the requirements of the second paragraph under 3.1 of Section 01500. The modular building described herein should be provided in lieu of the field office for use by Owner described in Section 01500. Additional requirements for temporary facilities associated with maintaining the plant operations during construction are indicated in the Construction Sequencing Section.

Contractor shall remove all items within the existing trailers indicated by the Owner prior to removal of the existing trailers, shall store them in a secure location until the new modular building is complete, and then shall place them in the new modular building.

Contractor shall provide janitorial services for the modular building at a frequency of at least once per week for the duration of the project.

1.01. Submittals. Complete descriptive data for modular building shall be submitted for review prior to shipment, in accordance with the Submittals Section (01300).

2. OFFICES AT SITE OF WORK.

2.01. Field Office. Contractor shall provide a new suitable field office with at least 2000 square feet of floor space, located at the Site for use by the Owner.

The field office shall consist of the following:

- one modular building with a combined minimum floor space of 2000 square feet
- eight (8) office rooms, 120 square feet each minimum floor space
- a general office area, 300 square feet minimum floor space
- a multi-purpose conference room, 350 square feet minimum floor space
- a storage closet, 25 square feet minimum floor space
- sanitary facilities with two restrooms
- break/kitchen area, 50 square feet minimum floor space

The office shall be provided with two outside entrance doors each having a substantial lock re-keyed by the Owner's vendor according to the Owner's specification. Skirting shall be installed around the entire perimeter of the office, and the office shall be provided with the necessary tie downs. A stable and pre-

approved foundation of a design consistent with best and safe practices shall be installed by the contractor. Lighting shall be provided above each entry door.

Windows for light and ventilation shall be provided in the office. All windows shall be equipped with blinds. Adequate indoor lighting, electrical facilities, and thermostatically controlled heating and air conditioning shall be provided. All exterior walls and floor shall be R-11 insulated. The roof shall be R-22 insulated. All room lighting shall have independent switching for each room. Design and layout of light fixtures shall provide a maintained glare free 100-foot candle light intensity at desk top level.

The HVAC system shall use fan-forced air with thermostatic controls designed to maintain 75˚F constant temperature. Individual room units will not be acceptable.

Contractor shall provide Owner and Engineer confirmation that the field office has been ordered in accordance with the accepted submittal within 60 calendar days following the Notice-To-Proceed. The field office shall be installed and shall be ready to occupy within 120 calendar days following the Notice-To-Proceed and shall be maintained until final acceptance of the Work unless otherwise approved by the Owner. The Owner shall retain ownership of the office after the final acceptance of the work. All services provided by the contractor will become the responsibility of the Owner after final acceptance of the Work.

The Contractor shall complete, in coordination with the Owner, the installation of all utilities to the modular building. The Contractor shall provide all maintenance and upkeep of the field office and equipment. Equipment breakdowns, damages, and leaks shall be repaired promptly by the Contractor.

The field office shall be plumbed for both hot and cold water service. Restrooms shall be located inside the office and shall include a sink with hot and cold water service and a toilet.

2.02. Furnishings and Amenities. The field office shall be furnished and equipped with the following:

- one conference table (48”W x 144”L)
- twelve conference room swivel arm chairs on rollers
- two plan racks with plan hangars
- telephone service: eleven (11) service connections – one for each of the 8 offices, two for the general office area (one phone and one fax) and one for the multi purpose conference room.
- one 12 cubic foot frost-free refrigerator with automatic ice maker
- one microwave
- kitchen area shall be equipped with a minimum of six feet of counter top, sink, and six feet of cupboard

- water: hot and cold in the kitchen sink and restroom lavatories
- sanitary facilities for each restroom: flush type water closet with accessories including wall mirror, paper towel holder, and paper holder
- two fire extinguishers

The electrical system including all fixtures, outlets, and wiring shall be UL approved and meet the latest requirements of the NEC. Each room and office area shall have at least for 110 volt duplex electrical outlets. All circuits shall be protected by circuit breakers. Fuses are not acceptable.

Maintenance of the field office shall be by the Contractor throughout the duration of the project. Maintenance requests not resolved in 48 hours may be resolved by the Owner and the cost of such maintenance backcharged to the Contractor.

The general arrangement of the field office and facilities provided shall be acceptable to Engineer.

Locate the offices as indicated on the Drawings.

End of Section

Section 13220

FILTER UNDERDRAINS AND MEDIA

PART 1 - GENERAL

1-1. SCOPE. This section covers the design, furnishing, and installation of nozzle underdrains and anthracite media for the filters, including all items within each filter cell for collecting filtered water and uniformly distributing backwash air and water for existing Filters 1-4. The media to be added to existing Filters 5-10 shall be as described in this section.

1-2. GENERAL. Each filter shall be constructed and equipped as indicated on the Drawings, as specified, and as required to provide a properly operating filter installation acceptable to the Engineer. All reinforcing steel, anchors, concrete fill, concrete supports, and grout required for installation of the filter underdrains shall be furnished and installed.

1-2.02. Coordination. Installation of the underdrains, air supply equipment, and media shall be coordinated with the installation of related items of filter equipment and materials covered in other sections including air and water piping, valves, air blowers, and filter troughs.

Contractor shall obtain installation details and recommendations from the underdrain manufacturer to install the filter underdrain system, including but not limited to requirements for grouting keys and pockets, dowels, support ledges and piers, and anchorage. These installation details are not indicated on the Drawings and Contractor shall coordinate installation of the underdrains with the supplier.

1-2.03. Manufacturer's Experience. The underdrain manufacturer and the media supplier shall have furnished underdrains and media of the types specified which have been in successful operation for not less than 5 years.

1-2.04. Installation Supervision. Installation of underdrains shall be under the direct supervision and control of a competent and experienced field representative of the underdrain manufacturer and acceptable to the Engineer. The field representative shall remain on-site for the duration of the underdrain and air distribution manifold installation and testing, and shall certify in writing that the installation is correct.

The installation of filter media shall be under the direct supervision and control of a competent and experienced field representative employed by the media supplier and acceptable to the Engineer.

The qualifications and experience record of these field representatives shall be submitted to the Engineer for review along with the initial drawing submittals.

1-3. SUBMITTALS. Complete descriptive data for filter underdrains and filter materials shall be submitted for review prior to shipment, in accordance with the Submittals Section (01300). Information shall include, but shall not be limited to, the following:

Underdrains

- Name of manufacturer.
- Complete specifications and dimensional drawings.
- Installation drawings.
- Certification that the distribution manifold support design has been performed in accordance with criteria specified in the General Equipment Stipulations Section (01610) or indicated on the Drawings.
- Complete test reports and design calculations showing conformity with design flow requirements.
- Pressure drop for air and air/water backwash equipment, through each component of the filter equipment including air header, riser, underdrain, orifice, and media.
- Test procedures.
- Installation procedures.
- Qualifications and experience record of the field representative.

Filter Media Materials

- Name of supplier.
- Specific gravity.
- Sieve analyses for support gravel and anthracite.
- Effective size and uniformity coefficient for support gravel and anthracite.
- Mohs' hardness for anthracite.
- Acid solubility for anthracite.
- Caustic solubility for anthracite.
- Qualifications and experience record of the field representative.

1-4. DELIVERY, STORAGE, AND HANDLING. Shipping shall be in accordance with the Product Delivery Requirements Section (01612). Handling and storage shall be in accordance with the Product Storage and Handling Requirements Section (01614) and as specified herein.

Filter underdrain components shall be handled carefully to prevent damage and shall be stored on platforms clear of the ground. Only sound, undamaged units shall be used in the Work. Any items damaged before final completion of the Work shall be removed and replaced with undamaged units by and at the expense of the Contractor.

Containers for shipping filter media shall be new and unused.

PART 2 - PRODUCTS

2-1. UNDERDRAINS.

2-1.01. Acceptable Manufacturers. The nozzle underdrain system shall be WesTech Engineering, Inc. or Suez North America (Infilco Degremont Inc.), without exception.

2-1.02. Performance and Design Requirements. The entire floor area of filters 1 through 4 shall be equipped with an underdrain. The filter underdrain system shall be a false floor nozzle type. Underdrains shall be designed to support the filter media and all flow and structural design requirements as specified herein, and shall be designed for entry and exit of water into a manifold as indicated on the Drawings.

The underdrains shall be dimensioned as shown on the Drawings. Nozzles shall be placed at spacing of either 6” or 8” on center as determined by the underdrain manufacture.

The filter underdrain system and air diffuser system shall be designed to uniformly collect filtered water and uniformly distribute backwash air and water under the following conditions:

Downflow of filtered water at 8.5 gpm/ft^2.
Upflow of backwash air at 2 – 3.5 scfm/ft^2.
Upflow of backwash air at 2 – 3.5 scfm/ft^2, concurrently with backwash water at 5 – 8 gpm/ft^2.
Low rate upflow of backwash water at 5 – 8 gpm/ft^2.
High rate upflow of backwash water at 21 – 25 gpm/ft^2.
Maximum headloss through underdrain system of 1.7 ft.

During backwash with air, the air temperature at the backwash air inlet to the primary air distribution manifold will be a maximum of 250°F.

There shall be no mounding, lateral displacement or other disturbances to the filter bed caused by non-uniform flows. The average maldistribution of air and water flow during backwash across the filter shall not exceed ±10% and ±5% respectively of the average flow per unit of filter surface area at all specified flow conditions.

2-1.03. Air Distribution Manifold. The air distribution manifold from the connection point inside the filter gullet, including air header, riser pipes, flanges, hangers and supports, and all accessories, shall be furnished by the filter

underdrain manufacturer, ready for field installation with no cutting or alterations required. The quantity and location of supports provided shall be as required by the manufacturer's design, except that the maximum space between supports shall not exceed the spacing specified in the Pipe Support Section (15140). The manifold, support system, and accessories shall be constructed of Type 316 stainless steel. The manifold shall be Schedule 10S.

The maximum allowable air pressure loss, at the design conditions above, through the air piping provided by the filter underdrain manufacturer, the underdrains, gravel, and the media, but excluding water head, shall not exceed 2 psi.

2-1.04. Anchorage and Grout. All anchorage shall be 304 or 316 stainless steel. Grout shall be in accordance with the underdrain manufacturer's recommendation.

2-1.05. Stainless Steel. Stainless steel components shall be cleaned and passivated in accordance with ASTM A380. Passivation shall remove embedded iron and heat tint. After fabrication, passivated surfaces shall be subjected to a 24 hour water wetting and drying test to detect the presence of residual iron. Passivated surfaces where iron is detected or that have been damaged during fabrication shall be repassivated. Stainless steel surfaces shall be protected during fabrication, shipping, handling, and installation to prevent contamination from iron or carbon steel objects or surfaces.

2-2. FILTER GRAVEL AND MEDIA. Filter gravel and media materials shall comply with AWWA B100, except as modified herein. Gradation sizes shall be based on square-hole sieves conforming to ASTM E11.

Filter Gravel	
Specific Gravity	3.80 minimum
Anthracite	
Specific Gravity	1.5 minimum.
Acid Solubility	5 percent maximum.
Hardness, Mohs' Scale	2.7 or greater.
Caustic Solubility	2 percent maximum in 1 percent sodium hydroxide solution at 190°F [88°C].

2.2.01. Media Suppliers. All filter media shall be supplied by one supplier who shall assume responsibility for the quality and compatibility of the media. Media shall be supplied by Leopold, Roberts, Suez North America, Carbon Enterprises Incorporated (CEI), Carbonite Fitler Corp., Unifilt or WesTech Engineering.

2-2.02. Filter Gravel. Total gravel depth shall be 3 inches [76 mm].

Depth of Layer, inches	Retained on Sieve Size	Passing Sieve Size, inches
3	No. 4	3/8”

2-2.03. Filter Sand. Not Used.

2-2.04. Anthracite. Anthracite filter media shall be furnished in a single size range and installed in a single layer 48 inchesmm thick directly over the support gravel. Anthracite shall have the following characteristics:

Effective Size	0.90 to 1.10 mm
Uniformity Coefficient	1.50 maximum.
Passing No. 8 Sieve [2.36 mm]	98 percent minimum.
Passing No. 25 Sieve [0.71 mm]	2 percent maximum

Anthracite shall be of deep pit mine origin and shall not contain dredged or bank material. Anthracite shall be free of extraneous material.

2-3. FILTER WASH WATER TROUGHS. Filter wash water troughs shall be constructed of either stainless steel or fiberglass and provided with media retention baffles. Depending on the material of trough to be supplied, refer to Section 05990 or 06600 for filter wash water trough requirements.

PART 3 - EXECUTION

3-1. INSTALLATION.

3-1.01. Filter Underdrains. Each underdrain system shall be installed so that a uniform backwash is obtained over the entire surface of the filter. Underdrains shall be securely anchored to withstand forces under all operating conditions. Installations shall be in accordance with the recommendations of the underdrain manufacturer, and as specified herein.

Contractor shall thoroughly clean the filter cell and piping connected to the underdrain system. Backwash water and air pipe shall be flushed with water and air respectively, and all dirt and debris within the filter cell shall be removed prior to installation of the underdrain system. The underdrain area and all surfaces that

come into contact with backwash supply water shall be vacuum cleaned before the underdrain concrete is poured and the filter media is installed. Cleanliness of the filter cell and surrounding areas shall be acceptable to the Engineer and underdrain manufacturer. As installation progresses, underdrain sections partially completed shall be protected with heavy building paper, masking tape, or other acceptable means to maintain cleanliness and protect the underdrain from exposure to weather and UV. The paper shall be removed before placing the filter media. Cleanliness shall be maintained through final placement of filter media.

The cast-in-place, concrete structural slab shall be finished to a true and level plane within the tolerance specified by the manufacturer of the filter underdrain. Contractor shall flood the underdrain with water to determine if the leveling requirement has been met. Sections that are not within the specified tolerance shall be removed and replaced with new sections to within level tolerance.

Any portion of the underdrain system, including but not limited to forms and nozzles, that is found to be damaged or defective shall be removed and replaced before the concrete floor is poured.

3-1.02. Air Distribution Manifold. The air distribution manifold shall be installed in accordance with the manufacturer's recommendation.

3-1.03. Filter Media and Gravel. Filter media and gravel placement shall comply with AWWA B100, except as modified herein. Media which becomes dirty or contaminated shall be removed and replaced with clean media.

The bottom layer shall be carefully placed to avoid damage to the filter underdrain system. Each layer shall be completed before starting the layer above. For materials less than 1/2 inch [12.7 mm] in size, workers shall not stand or walk directly on the media, but on boards which will sustain their weight without displacing the media.

Each layer of filter material shall be deposited to a uniform thickness, with the top surface screeded or otherwise brought to a true level plane. Care shall be taken in depositing each layer not to disturb the level surface of the layer beneath. The correct thickness of each layer shall be determined by screeding each layer to a continuous level line on the side of the filter cell. The layer shall then be leveled, with the water surface maintained at the appropriate elevation mark.

Placement of filter material shall be performed so as to avoid staining or damaging surfaces of the filter walls. Surfaces that are stained or damaged shall be repaired to the satisfaction of the Engineer.

3-1.03.01. Washing, Scraping, and Skimming. Flat particles shall be removed from the anthracite by skimming.

Washing and scraping shall comply with the governing standard, except the initial scraping of anthracite shall be a layer approximately 3/8 inches thick.

3-1.03.02. Field Control Tests. Field control tests for filter media materials will be performed in accordance with the procedures and requirements of AWWA B100, by an independent testing laboratory at the expense of the Owner. Media not passing field control testing shall be replaced.

a. Filter Gravel. At least one sieve analysis will be made representing each carload or truckload of each size of gravel. Additional analyses will be made whenever deemed necessary by the Engineer.

b. Anthracite. At least one sieve analysis will be made for each carload or truckload.

3-2. FILTER DISTRIBUTION TESTING. Contractor shall conduct testing and furnish all materials, instrumentation, and personnel required for testing and as specified herein. All testing and rectification work for systems failing testing shall be at the Contractor's expense.

Contractor shall verify that all equipment is properly installed and that the filter, backwash system, and backwash air system is complete prior to performing any tests. A manufacturer's representative shall inspect the underdrain systems prior to testing and supervise all testing.

Contractor shall provide Owner and Engineer three weeks notice of testing and provide a test procedure document for Engineer review and acceptance.

Testing shall be performed on installed underdrain systems with the process blowers supplied under this Contract. Contractor shall correct deficiencies revealed during testing, and shall retest as required to demonstrate deficiencies have been rectified.

All test set-ups, procedures, and instrumentation shall provide data accuracy of ±2 percent.

Contractor shall submit 3 copies of complete test reports for all tests, describing the units tested; the type of test; test set-ups, procedures, and instrumentation; and test flow rates, pressures, levels, and all other data and results as required to demonstrate that all items tested meet specified requirements.

Flow rates used during testing shall be as specified in the Performance and Design Requirements paragraph of this Section.

3-2.01. Visual Distribution Tests. The filter underdrain system in each filter shall be given a visual distribution test to verify flow uniformity. This test shall be performed before filter media and the gravel bed are placed. Testing shall be completed for each Filter 1 – 4.

For the water distribution test, filter cells shall be flooded with clean water to the top of the underdrain nozzles. After all residual air is released, the water flow rate shall be slowly increased to the specified low rate water flow as defined in the Performance and Design Paragraph (2-1.02) of this section, and sustained for 3 minutes while visual observations are made. The test shall be repeated for the high rate water flow as defined in the Performance and Design Paragraph (2-1.02) of this section.

For the air distribution test, the filter cell shall be flooded to approximately 3 to 6 inches above the top of the underdrain. The air flow rate shall be slowly increased to the specified air only rate as defined in the Performance and Design Paragraph (2-1.02) of this section and sustained for 3 minutes while visual observations are made.

When observation for the air only distribution is complete, the air and water flow rates shall be adjusted to the specified flow rates for concurrent air and water backwash as defined in the Performance and Design Paragraph (2-1.02) of this section. The air and water flow shall be sustained for 3 minutes while visual observations are made.

During each test, the water surface shall present a uniformly turbulent appearance, without dead spots or boils. Tests shall be repeated if, in the Engineer's judgment, additional testing is needed to make observations.

3-2.02. Metered Distribution Tests. A metered distribution test shall be performed on a filter underdrain system selected by the Engineer, prior to placement of gravel and/or media and prior to installation of underdrains in any other filter. A metered distribution test shall also be perform on a filter where the Contractor is unable to rectify deficiencies demonstrated by the visual distribution testing. Testing shall be performed in accordance with the underdrain manufacturer's metered distribution testing protocol submitted to the Engineer at least 3 weeks prior to start of testing for review and acceptance.

The Contractor shall install piezometer tubes at 6 points on the underdrain for water distribution testing, and manometer tubes at 6 points for air distribution testing. The locations shall be as directed by the filter underdrain manufacturer's field representative.

The high rate water only test and the air only test shall be performed in a manner similar to that described in the Visual Distribution Tests paragraph above. Air and water flow rates shall be held constant at the specified rates for a minimum

of 4 minutes while the piezometer and manometer tube readings are recorded. Each test shall be repeated 3 times and the results of the tests shall be averaged.

Holes in the underdrain for connection of test instruments shall be plugged with pipe plugs.

Average maldistribution of air and water shall be in accordance with the tolerances specified herein, and calculated as follows using the highest (H) and lowest (L) average readings recorded at the test points.

$$\text{Average maldistribution} = (1 - (L/H)^{1/2}) \times 0.5 \times 100\%$$

The Contractor shall perform metered testing on two other filters of the Engineer's selection if the underdrain system first tested failed to perform within the specified tolerances during the initial test run. Subsequent metered testing of all filters will be required if either of the additional two filters fail testing and does not achieve the Performance and Design requirements stated in this Section.

3-2.03. Final Distribution Tests. All four of Filter Numbers 1-4 and at least two of Filter Numbers 5-10 shall be tested for acceptable flow uniformity following placement and washing and skimming of the filter material. The filter cells to be tested shall be selected by the Engineer.

Final distribution tests shall consist of a backwash cycle as follows:

Start with initial water surface 3-6 inches above the top of the media.

Air backwash at the specified flow rate for 3 minutes.

Turn on water and gradually increase the water flow to the low rate water over a 2 minute period.

Simultaneous air and low rate water backwash at specified flow rates for approximately 3 minutes or until the water level is just below the bottom of the troughs, and turn off the air.

Gradually increase the water flow to the high rate water over a 2 minute period.

High rate water backwash at the specified high flow rate for 10 minutes.

Gradually reduce water flow to low rate water backwash over a 2 minute period.

Water backwash at the specified low flow rate for 5 minutes.

Gradually reduce water flow to zero over a 2 minute period.

All flows and durations shall be adjusted during the test if directed by the Engineer.

At the conclusion of the final distribution test, the water level shall be lowered to the top of the filter media. The top of the media shall be inspected, and shall have no areas deviating more than ±2 inches from the average level plane.

If any filter that is tested fails to pass the test, all filter cells shall be tested.

End of Section

Section 14475

BOOM LIFTS

PART 1 - GENERAL

1-1. SCOPE. This section covers the furnishing and installation of boom lifts as indicated herein.

Equipment designation.	Boom Lift
Number of units.	1
Equipment location.	Filter Gallery

1-2. GENERAL. Equipment and accessories furnished and installed under this section shall be fabricated, assembled, erected, and placed in proper operating condition in full conformity with Drawings, Specifications, engineering data, instructions, and recommendations of the equipment manufacturer unless exceptions are noted by Engineer.

1-2.01. Coordination. Contractor shall verify that each component of the system is compatible with all other parts of the system and that all devices necessary for a properly functioning system have been provided.

1-2.02. General Equipment Stipulations. The General Equipment Stipulations shall apply to all equipment furnished under this section. If requirements in this specification differ from those in the General Equipment Stipulations, the requirements specified herein shall take precedence.

1-2.03. Seismic Design Requirements. Seismic design requirements for products specified herein shall be as indicated in the Meteorological and Seismic Design Criteria section.

1-2.04. Governing Standards. Except as modified or supplemented herein, all work covered by this section shall be performed in accordance with all applicable municipal codes and ordinances, laws, and regulations. In case of a conflict between these Specifications and any state law or local ordinance, the latter shall govern.

All work shall comply with Underwriters' Laboratories (UL) safety requirements.

Equipment furnished under this section shall comply with the applicable requirements of the following:

Occupational Safety and Health Standards of the U.S. Department of Labor.

1-2.05. Power Supply. Power supply to the equipment shall be by a battery furnished as part of the equipment. A battery charger shall be supplied with the equipment.

1-2.06. Labels. The boom lift shall have a conspicuous, easy-to-read label showing manufacturer's name, serial number, and rated capacity capacity of the platform.

1-2.07. Identification. Boom lift shall be identified in accordance with the Equipment and Valve Identification section.

1-3. SUBMITTALS.

1-3.01. Drawings and Data. Complete assembly and installation drawings, together with detailed specifications and data covering materials, parts, devices, accessories forming a part of the equipment furnished, and load test certificates, shall be submitted in accordance with the Submittals section. Device tag numbers indicated on the drawings shall be referenced on the wiring and schematic diagrams where applicable.

1-3.02. Operation and Maintenance Data and Manuals. Operation and maintenance manuals shall be submitted in accordance with the Submittals section. The operation and maintenance manuals shall be in addition to any instructions or parts lists packed with or attached to the equipment when delivered.

1-4. QUALITY ASSURANCE.

1-4.01. Manufacturer's Certification. The manufacturer shall certify that each boom lift provided has been load tested with a load of at least 125 percent of the rated load. A certificate shall be submitted and shall include the name of the project, the serial number on the boom lift, and a description of the test performed. Testing shall be the responsibility of the manufacturer and the certification shall be submitted before the boom lift will be accepted for the Project.

PART 2 - PRODUCTS

2-1. SERVICE CONDITIONS. The boom lift will be used in the Walnut Creek Wastewater Treatment Plant filter galley to access valve and equipment.

All equipment shall be designed to operate under the following service conditions:

Seismic design requirements.	See Meteorological and Seismic Design Criteria section
Type of environmental exposure.	Indoor

2-2. PERFORMANCE AND DESIGN REQUIREMENTS. Each boom lift shall have the arrangement, performance, and design requirements as follows:

Minimum Platform Height.	20	ft
Minimum Horizontal Outreach.	6.5	ft
Minimum Up and Over Height.	16	ft
Rotation/Swing.	140	deg
Minimum Platform Capacity.	450	lbs
Minimum Platform Size.	30 x 29	in
Maximum stowed length.	10	ft
Maximum stowed width.	5	ft
Maximum stowed height.	7	ft

2-3. ACCEPTABLE MANUFACTURERS AND MODEL. Acceptable manufacturers and models for boom lift shall be JGL Industries “T20E”, Genie “GR-26J”, or Snorkel “MB20J”.

Equivalent products of other manufacturers regularly engaged in the production of equipment of this type may be furnished subject to acceptance by Engineer.

2-4. CONSTRUCTION. Boom lift shall be self-supporting. Boom lift shall be able to travel and shall have four non-marking tires. The platform shall be equipped with work lights.

PART 3 - EXECUTION

3-1. INSTALLATION. It shall be the Contractor’s responsibility to place the boom lift in the filter gallery and ensure it is in working order. Contractor to coordinate with Owner for the exact placement inside of the filter gallery.

End of Section

Section 14621

MONORAIL CHAIN HOISTS

PART 1 - GENERAL

1-1. SCOPE. This section covers furnishing and installation of hand-operated chain hoists, trolleys, monorail system, and accessories as indicated herein.

Hoist designation.	Manual Chain Hoists
Number of hoists.	2
Hoist tag numbers.	BB-HSC-001,
	BB-HSC-002
Hoist location.	Blower Building

Each hoist and monorail system shall be furnished and installed in the locations indicated on the Drawings, complete with all hoisting equipment, monorail system and accessories necessary for a complete and properly operating installation.

1-2. GENERAL. Equipment and accessories furnished and installed under this section shall be fabricated, assembled, erected, and placed in proper operating condition in full conformity with drawings, specifications, engineering data, instructions, and recommendations of the equipment manufacturer, unless exceptions are noted by Engineer.

1-2.01. Coordination. Contractor shall verify that each component of the system is compatible with all other parts of the system and that all devices necessary for a properly functioning system have been provided.

Where two or more units of the same class of equipment are required, they shall be the product of a single manufacturer; however, all the component parts of the system need not be the products of one manufacturer.

Where several manufacturers' names have been listed in this section as possible suppliers, only the products of the first manufacturer listed have been checked for size, functions, and features.

The Contractor shall coordinate the final location of the monorails with the blower supplier based on the actual blower equipment supplied. One monorail shall be located over the center of gravity of the blowers, and the other monorail shall be located over the center of gravity of the blower motors.

1-2.02. General Equipment Stipulations. The General Equipment Stipulations shall apply to all equipment furnished under this section. If requirements in this specification differ from those in the General Equipment Stipulations, the requirements specified herein shall take precedence.

1-2.03. Governing Standards. Except as modified or supplemented herein, all work covered by this section shall be performed in accordance with all applicable municipal codes and ordinances, laws, and regulations. In case of a conflict between this section and any state law or local ordinance, the latter shall govern.

Equipment furnished under this section shall comply with the applicable requirements of the following:

Occupational Safety and Health Standards of the U.S. Department of Labor; Subpart N, Materials Handling and Storage.

ANSI/ASME B30.10, "Hooks".

ANSI/ASME B30.11, "Monorails and Underhung Cranes".

ANSI/ASME B30.16, "Overhead Hoists (Underhung)".

ANSI MH27.1, "Specifications for Underhung Cranes and Monorail Systems".

ANSI/ASME HST-2, "Performance Standard for Hand Chain Manually Operated Chain Hoists".

1-2.04. Labels. Each hoist and trolley shall have a conspicuous, easy-to-read label showing manufacturer's name and rated capacity of equipment. The rated capacity of the hoist shall also be shown on the load block.

1-2.05. Identification. Monorail chain hoists shall be identified in accordance with the Equipment and Valve Identification Section (01615).

1-3. SUBMITTALS.

1-3.01. Drawings and Data. Complete outline and installation drawings, together with detailed specifications and data covering materials, parts, devices, accessories forming a part of the equipment furnished, and load test certificates, shall be submitted in accordance with the Submittals Section (01300). Drawings shall be sealed by the Texas licensed professional engineer responsible for the drawing preparation.

1-3.02. Operation and Maintenance Data and Manuals. Operation and maintenance manuals shall be submitted in accordance with the Submittals Section (01300). The operation and maintenance manuals shall be in addition to any instructions or parts lists packed with or attached to the equipment when delivered.

1-4. QUALITY ASSURANCE.

1-4.01. Welding Qualifications. All welding procedures and welding operators shall be qualified by an independent testing laboratory in accordance with the applicable provisions of AWS Standard Qualification Procedures. All procedure and operator qualifications shall be in written form and subject to Engineer's review. Accurate records of operator and procedure qualifications shall be maintained by Contractor and made available to Engineer upon request.

1-4.02. Manufacturer's Certification. The hoist manufacturer shall certify that each hoist provided has been load tested in accordance with ANSI/ASME B30.16 with a load of at least 125 percent of the rated load. A certificate shall be submitted for each hoist supplied and shall include the name of the project, the serial number on the hoist, and a description of the test performed. Testing of each hoist shall be the responsibility of the manufacturer and the certification shall be submitted before the hoist will be accepted for the project.

1-4.03. Contractor's Qualification. Contractor shall submit qualifications to do the work. Each monorail system shall be designed, coordinated, and supplied by a qualified Supplier who is regularly engaged in the business of designing and assembling monorail systems. The supplier shall have furnished equipment of the type and size specified which has been in successful operation for not less than the past 5 years. Contractor shall submit proof of the following qualifications for the intended supplier of each system:

The Supplier has the required financial capability.

The names of manufacturers whose products will be supplied.

The Supplier maintains a qualified technical staff.

The Supplier has the physical plant and fabricating personnel to complete the work specified.

The names of at least three references who are users of similar systems designed, assembled, and furnished by the Supplier.

1-5. Warranty. The monorail chain hoist warranty shall be a minimum of 1 year from date of startup.

PART 2 - PRODUCTS

2-1. SERVICE CONDITIONS. Chain hoists shall be installed in the blower building and used to maintain the blowers and motors.

All equipment shall be designed to operate under the following service conditions:

Type of environmental exposure.	Indoor
Ambient air temperature range.	60 to 104 °F

2-2. PERFORMANCE AND DESIGN REQUIREMENTS. Each hoist, trolley, and monorail system shall conform to the performance and design requirements as follows:

Hoists

Tag number	BB-HSC-001, BB-HSC-002	
Hoisting capacity.	5	tons
Elevation of hook at highest position (min).	471.09	ft
Elevation of hook at lowest position.	458.17	ft
Minimum vertical travel of lifting hook.	13	ft
Maximum distance between bottom of monorail and inside of lifting hook in highest position.	27	in
Maximum chain pull to operate hoist at rated capacity.	80	lbs

Trolleys

Type	Hand geared	
Maximum trolley clearance above bottom of monorail	8	in

Monorails

Type	As designed by supplier	
Operating floor elevation.	458.17	ft
Bottom of monorail elevation.	474.83	ft
Maximum depth of monorail.	8	In

Approximate length of monorail.	23	ft

2-3. ACCEPTABLE MANUFACTURERS. Acceptable manufacturers for chain hoists and trolleys shall be Yale, Budgit, Chester, or approved equal.

Equivalent products of manufacturers regularly producing hoist, trolley, and monorail systems, shall be subject to acceptance by Engineer.

All modifications necessary to accommodate the hoist, trolley, or monorail system shall be subject to acceptance by Engineer and shall be made at no additional cost to Owner.

2-4. HOIST AND TROLLEY. The hoist and trolley arrangement shall be the integral, low headroom type.

2-4.01 Hoists**.** The low headroom hosting assembly shall consist of the necessary gearing, guides, and sheaves, all built integrally with the trolley; a load chain equipped with a load hook; and hand chains. Anti-friction bearings shall be used throughout, and the assembly shall have suitable fittings for proper lubrication.

2-4.01.01. Load Brake. Each hoist shall be equipped with self activating mechanical load brake which will prevent acceleration of the load when lowering and which will sustain the maximum load at any point. Load brakes shall operate in sealed enclosures.

2-4.01.02. Chains. Load chains shall be heat-treated alloy steel, welded link type, heavily zinc plated. Chain containers shall be provided to receive idle load chain. Antifriction bearings shall be used throughout, and the assembly shall have facilities for proper lubrication.

Each hoist shall be furnished with hand chains which shall be welded link type, heavily zinc plated steel, and shall extend to approximately 3 feet above the floor.

2-4.02. Hooks. All hooks shall be slow opening, non-fracturing, forged steel, and shall be provided with a safety latch. The hooks shall be mounted on anti-friction bearings to permit easy turning.

2-4.03. Trolleys Each trolley shall have a rated capacity equal to or greater than the capacity of the corresponding hoist.

Each trolley frame shall be rigid and shall be the underhung type designed for operation on the specified running track, and shall either contain or support the hoist depending on the hoist/trolley arrangement. Each trolley frame shall be provided with lugs or wrap around side plates on both sides of the track.

Trolley wheels shall be of the single flange type, of rolled, forged, or cast steel, with machined universal crowned or tapered treads. Wheel bearings shall be permanently shielded, lifetime-lubricated, anti-friction type, suitable for radial and end thrust loading. Wheel axles shall be of the fixed type, made from high carbon steel, machined and ground to size to receive the wheel bearings. For hand geared type, drive wheels shall have integrally cut spur gear teeth or machine-cut gears pressed on hubs.

Trolleys shall be furnished with operating chains which shall be welded link type, heavily zinc plated steel. Chain-operated drive wheels shall be provided with a swinging chain guide which will permit rapid handling of the chain without fouling or gagging and will also permit reasonable side pull on the chain. Operating chains shall extend to approximately 3 feet above the floor. The maximum chain pull required at rated capacity shall be 80 lbs.

Each trolley shall be constructed to provide necessary clearances at all track joints, splices, and hangers, including all projection on any track opener sections and switches.

2-5. MONORAIL SYSTEMS. The monorail system includes the monorail beams, their connections to the soffits of the roof structure beams, and trolley stops. The monorail systems shall be designed and furnished by the hoist supplier. The monorail systems shall be runway beams as specified in the Miscellaneous Metals Section (05990)

PART 3 - EXECUTION

3-1. ERECTION. Each hoist, trolley and monorail system shall be erected in accordance with the manufacturer’s recommendations by workers who are regularly engaged in hoist and track erection and who are acceptable to the equipment manufacturer.

3-2. FIELD QUALITY CONTROL.

3-2.01. Installation Check. An experienced, competent, and authorized representative of the manufacturer shall visit the site of the Work and inspect, check, adjust if necessary, and approve the equipment installation. The representative shall be present when the equipment is placed in operation in accordance with Facility Startup/Commissioning Section (01650), and shall revisit the job site as often as necessary until all trouble is corrected and the equipment installation and operation are satisfactory in the opinion of Engineer.

The manufacturer's representative shall furnish a written report certifying that the equipment has been properly installed and lubricated; is in accurate alignment; is

free from any undue stress imposed by connecting piping or anchor bolts; and has been operated under full load conditions and that it operated satisfactorily.

All costs for these services shall be included in the contract price.

3-3. FIELD TESTING. After complete assembly and installation, each monorail and hoist shall be subject to an acceptance test. A manufacturer's representative shall be present during all testing. The inspection and testing shall verify that each monorail and hoist has been assembled properly and that all required adjustments have been made.

3-3.01. Acceptance Testing. Each monorail shall be subject to operational and load testing in accordance with ASME B30.16.

Each monorail shall raise, lower, hold in any position, and transport a test load equal to no less than 100 percent or no more than 125 percent of the rated capacity of the monorail, with no detrimental effects. All motions shall be executed satisfactorily. Contractor shall provide the test weights.

The following functions shall be tested:

Hoisting and lowering.

Trolley travel.

Travel limiting devices

Hoisting and lowering tests will be conducted with a load of not less than 100 percent or more than 125% of the nominal or rated load.

The rated load test shall consist of the following operations:

The test load shall be lifted a sufficient distance to ensure that the load is supported by the monorail and held by the hoist brakes.

The test load shall be transported by means of the trolley for the full length of the monorail in one direction with the trolley as close to the extreme right-hand end of the crane as practical and in the other direction with the trolley as close to the extreme left-hand end of the crane as practical

The test load shall be lowered, stopped, and held with the brakes.

Following completion of the tests, each crane shall be inspected by Contractor and the manufacturer's representative, in the presence of Engineer, for misalignment, breakage, and undue wear. All deficiencies shall be corrected by Contractor in a manner acceptable to Engineer.

3-3.02. Test Reports. Field inspection and testing of each crane shall be documented by the crane manufacturer's representative through the Contractor, noting the deficiencies and corrections and certifying that each crane is acceptable for operation. Certification of the inspection shall be submitted to Engineer.

3-4. TRAINING. The manufacturer's representative shall provide training for Owner in proper operation and maintenance of the equipment. The manufacturer's representative shall repeat the training for each shift and schedule times, which are acceptable to Owner's staff (minimum of 2 sessions, 4 hours each). The necessary components shall be operational before training sessions are conducted.

End of Section

Section 15010

VALVE INSTALLATION

PART 1 - GENERAL

1-1. SCOPE. This section covers the installation of new valves and actuators purchased by Contractor as part of this Work or purchased by others under the valve specifications. The equipment to be furnished by others for installation by Contractor is identified in the applicable valve schedules.

Cleaning, disinfection, pressure and leakage testing, insulation, and pipe supports are covered in other sections.

The following specification sections are applicable to valves to be installed:

Title
Angle Valves
Miscellaneous Ball Valves
Industrial Butterfly Valves
Check Valves
Backflow Preventers
Solenoid Valves
Globe Valves
Pinch and Diaphragm Valves
Plug Valves
Pressure Reducing Valves
Miscellaneous Valves
Hydrants and Curb Stops
Basin Valves
AWWA Butterfly Valves
Eccentric Plug Valves
AWWA Ball Valves
Resilient-Seated Gate Valves
Double Disc Gate Valves
Cone Valves
Air Valves
Telescoping Valves
Knife Gate Valves

1-2. GENERAL. Equipment installed under this section shall be erected and placed in proper operating condition in full conformity with Drawings, Specifications, engineering data, instructions, and recommendations of the equipment manufacturer, unless exceptions are noted by Engineer.

Any valves and actuators that are identified as being provided by others will be furnished complete for installation by Contractor. Technical specifications under which the equipment will be purchased are available.

1-2.01. Coordination. When manufacturer's field services or installation check services are provided by the valve manufacturer, Contractor shall coordinate the services with the valve manufacturer. Contractor shall give Engineer written notice at least 30 days prior to the need for manufacturer's field services.

Submittals for equipment that will be furnished by others under each procurement contract will be furnished to Contractor upon completion of review by Engineer. Contractor shall review equipment submittals and coordinate with the requirements of the Work and the Contract Documents. Contractor accepts sole responsibility for determining and verifying all quantities, dimensions, and field construction criteria.

Flanged, push-on, and grooved connections to valves including the bolts, nuts, and gaskets are covered in the appropriate pipe specification section. Valve ends shall match piping.

PART 2 - PRODUCTS

Not Applicable.

PART 3 - EXECUTION

3-1. INSPECTION. All valves and accessories shall be inspected for damage and cleanliness before being installed. Any material damaged or contaminated in handling on the job shall not be used unless it is repaired and re-cleaned to the original requirements by Contractor. Such material shall be segregated from the clean material and shall be inspected and approved by Owner or his representative before its use.

3-2. INSTALLATION.

3-2.01. General. Valves shall be installed with sufficient clearance for proper operation of any external mechanisms, and with sufficient clearance to dismantle the valve for in-place maintenance. Installation shall be in accordance with the valve manufacturer’s recommendations.

Unless otherwise indicated on the Drawings or specified, all valves installed in horizontal runs of pipe having centerline elevations 4 feet 6 inches [1.3 m] or less above the finish floor shall be installed with their operating stems vertical. Valves installed in horizontal runs of piping having centerline elevations between 4 feet

6 inches [1.3 m] and 6 feet 9 inches [2 m] above the finish floor shall be installed with their operating stems horizontal. If adjacent piping prohibits this, the stems and operating handwheel shall be installed above the valve horizontal centerline as close to horizontal as possible. Valves installed in vertical runs of pipe shall have their operating stems oriented to facilitate the most practicable operation, as reviewed by Engineer.

3-2.02. Installation Checks. When specified in the valve sections, the valve manufacturer will provide installation checks. For installation checks, the manufacturer's field representative will inspect the valve installation immediately following installation by Contractor. The manufacturer's representatives will revisit the site as often as necessary to ensure installation satisfactory to Owner.

Contractor shall perform no work related to the installation or operation of materials or equipment furnished by others without direct observation and guidance of the field representative, unless Engineer and manufacturer furnishing such materials concur otherwise.

3-2.03. AWWA Butterfly Valves. Butterfly valves shall be installed with the shaft horizontal unless otherwise necessary for proper operation or as acceptable to Engineer.

Whenever an actuator must be removed to permit installation of a valve, the actuator shall be promptly reinstalled and shall be inspected and readjusted by a representative of the valve manufacturer.

3-2.04. Check Valves.

3-2.04.01. Lift Check Valves. Horizontal lift checks shall be installed in a level horizontal position so that the internal parts rise and fall vertically, unless the valve is spring loaded. Angle pattern lift checks shall be installed in vertical pipe with flow upward from beneath the disc.

3-2.04.02. Swing Check Valves. Install valves oriented for the correct flow direction. Only valves designed for vertical installation shall be installed in vertical piping.

3-2.04.03. Filter Air Scour Service Check Valves. Dual disc wafer check valves installed in the discharge piping of centrifugal blowers shall be positioned with the valve hinge perpendicular to the impeller shaft of the blower so that the flow splits equally on either side of the valve. Shaft shall be vertical for a horizontal valve. Installation shall be in accordance with recommendations of blower and valve manufacturers.

3-2.05. Plug Valves. Not Used.

3-2.05.01. Eccentric Plug Valves. Eccentric plug valves shall be installed with the shaft horizontal and the plug in the upper half of the valve body. Valves in horizontal wastewater, sludge, or scum lines shall be installed with the seat on the upstream end. Valves in all vertical piping shall be installed with the seat at the upper end of the valve.

3-2.05.02. Plug Valves. Not Used.

3-2.06. Resilient Seated Gate Valves. Not Used.

3-2.06.01. Resilient Seated Gate Valves. Valves shall be handled and installed in accordance with the recommendations set forth in the Appendices to ANSI/AWWA C509 and C515 and with the recommendations of the manufacturer.

3-2.06.02. Double Disc Gate Valves. Not Used.

3-2.07. Air Release and Combination Air Valves. Not Used.

3-2.08. Hydrants. Not Used.

3-2.08.01. Yard Hydrants. Not Used.

3-2.08.02. Fire Hydrants. Not Used.

3-2.09. Valve Boxes. Valve boxes shall be set plumb. Each valve box shall be placed directly over the valve it serves, with the top of the box brought flush with the finished grade. After each valve box is placed in proper position, earth fill shall be placed and thoroughly tamped around the box.

3-3. VALVE ACTUATORS. Valve actuators and accessories shall be factory mounted on the valve, calibrated, and tested by the valve or actuator manufacturer.

3-4. FIELD QUALITY CONTROL.

3.4.01. Field Testing. After installation, all valves shall be tested in accordance with the Pipeline Pressure and Leakage Testing Section (02704).

3-4.01.01. Pressure Tests. Pressure testing shall be in accordance with the Pipeline Pressure and Leakage Testing Section (02704).

3-4.01.02. Leakage Tests. All valves shall be free from leaks. Each leak that is discovered within the correction period stipulated in the General Conditions shall be repaired by and at the expense of Contractor. This requirement applies whether pressure testing is required or not.

3-5. ADJUSTING. After installation, the opening and closing time shall be adjusted as needed for each pneumatic, hydraulic and electric actuated valve.

End of Section

Valve Schedule

1.010	1.020	1.021	1.030	1.031	1.035	1.040	1.060	1.070	1.080	1.090	2.010	2.020	3.001	3.010	3.020	4.030	3.040	4.040	4.050	4.080	4.090	8.010	8.020	8.040	8.041	8.05	8.060	9.060
Tag Number	Size	Valve Type (1)	Type of Service(2)	Application	Associated Filter No.	Type of Installation(3)	AWWA Class/Ends(4)	Maximum Non-Shock Shutoff Pressure	Maximum Differential Pressure	Maximum Velocity	Type of Manual Actuator(5)	Limit Switches(6)	Type of Electric Actuator(7)	Type of Housing(8)	Operating Time	Power for Electric Actuator	Actuator Provides 120 VAC For remote controls	Number of Limit Switch Assemblies	Position Transmitter	Control Devices(9)	Remote Control Station (10)	Extensions Stems/Riser (with dirt guards)	Position Indicator for Buried Valve Actuators	Cast Iron Operating Stands	Fabricated Steel Operating Stands	Torque Tubes	Extension bonnet	Associated Specification (11)
	(in)							(psi)	(psi)	(ft/s)					(s)	V/PH												
WC-FB1-BFV-008	36	AWWA	O-C	BWP SUCTION		IP	150B-F		5	10	CW																	15101
WC-FB1-BFV-017	36	AWWA	O-C	BWP SUCTION		IP	150B-F		5	10	CW																	15101
WC-FB1-BFV-005	54	AWWA	O-C	FILTER INFLUENT		IP	150B-F		10	7.8	CW																	15101
WC-FB1-BFV-045	54	AWWA	O-C	FILTER INFLUENT		IP	150B-F		10	7.8	CW																	15101
WC-FB2-BFV-084	54	AWWA	O-C	FILTER INFLUENT		IP	150B-F		10	7.8	CW																	15101
WC-FB1-BFV-046	30	AWWA	O-C	BACKWASH SUPPLY		IP	150B-F		100	12.7	CW																	15101
WC-FB1-BFV-011	30	AWWA	O-C	BWP DISCHARGE		IP	150B-F		100	12.7			IE			480/1	Yes		No	A	CIS	No	No	No	No			11465
WC-FB1-BFV-022	30	AWWA	O-C	BWP DISCHARGE		IP	150B-F		100	12.7			IE			480/2	Yes		No	A	CIS	No	No	No	No			11465
WC-FB1-BFV-029	36	AWWA	O-C	FILTER INFLUENT	1	IP	150B-F		10	3			IE			480/3	Yes		No	A	CIS	No	No	No	No			11465
WC-FB1-BFV-031	36	AWWA	O-C	FILTER INFLUENT	2	IP	150B-F		10	3			IE			480/3	Yes		No	A	CIS	No	No	No	No			11465
WC-FB1-BFV-039	36	AWWA	O-C	FILTER INFLUENT	3	IP	150B-F		10	3			IE			480/3	Yes		No	A	CIS	No	No	No	No			11465
WC-FB1-BFV-041	36	AWWA	O-C	FILTER INFLUENT	4	IP	150B-F		10	3			IE			480/3	Yes		No	A	CIS	No	No	No	No			11465
WC-FB2-BFV-051	36	AWWA	O-C	FILTER INFLUENT	5	IP	150B-F		10	3			IE			480/3	Yes		No	A	CIS	No	No	No	No			11465
WC-FB2-BFV-052	36	AWWA	O-C	FILTER INFLUENT	6	IP	150B-F		10	3			IE			480/3	Yes		No	A	CIS	No	No	No	No			11465
WC-FB2-BFV-063	36	AWWA	O-C	FILTER INFLUENT	7	IP	150B-F		10	3			IE			480/3	Yes		No	A	CIS	No	No	No	No			11465
WC-FB2-BFV-064	36	AWWA	O-C	FILTER INFLUENT	8	IP	150B-F		10	3			IE			480/3	Yes		No	A	CIS	No	No	No	No			11465
WC-FB2-BFV-075	36	AWWA	O-C	FILTER INFLUENT	9	IP	150B-F		10	3			IE			480/3	Yes		No	A	CIS	No	No	No	No			11465
WC-FB2-BFV-076	36	AWWA	O-C	FILTER INFLUENT	10	IP	150B-F		10	3			IE			480/3	Yes		No	A	CIS	No	No	No	No			11465
WC-FB1-BFV-033	36	AWWA	O-C	BACKWASH DRAIN	1	IP	150B-F		10	8.8			IE			480/3	Yes		No	A	CIS	No	No	No	No			11465
WC-FB1-BFV-034	36	AWWA	O-C	BACKWASH DRAIN	2	IP	150B-F		10	8.8			IE			480/3	Yes		No	A	CIS	No	No	No	No			11465
WC-FB1-BFV-043	36	AWWA	O-C	BACKWASH DRAIN	3	IP	150B-F		10	8.8			IE			480/3	Yes		No	A	CIS	No	No	No	No			11465
WC-FB1-BFV-044	36	AWWA	O-C	BACKWASH DRAIN	4	IP	150B-F		10	8.8			IE			480/3	Yes		No	A	CIS	No	No	No	No			11465
WC-FB2-BFV-057	36	AWWA	O-C	BACKWASH DRAIN	5	IP	150B-F		10	8.8			IE			480/3	Yes		No	A	CIS	No	No	No	No			11465
WC-FB2-BFV-058	36	AWWA	O-C	BACKWASH DRAIN	6	IP	150B-F		10	8.8			IE			480/3	Yes		No	A	CIS	No	No	No	No			11465
WC-FB2-BFV-069	36	AWWA	O-C	BACKWASH DRAIN	7	IP	150B-F		10	8.8			IE			480/3	Yes		No	A	CIS	No	No	No	No			11465
WC-FB2-BFV-070	36	AWWA	O-C	BACKWASH DRAIN	8	IP	150B-F		10	8.8			IE			480/3	Yes		No	A	CIS	No	No	No	No			11465
WC-FB2-BFV-082	36	AWWA	O-C	BACKWASH DRAIN	9	IP	150B-F		10	8.8			IE			480/3	Yes		No	A	CIS	No	No	No	No			11465
WC-FB2-BFV-083	36	AWWA	O-C	BACKWASH DRAIN	10	IP	150B-F		10	8.8			IE			480/3	Yes		No	A	CIS	No	No	No	No			11465
WC-FB1-BFV-030	30	AWWA	O-C	BACKWASH SUPPLY	1	IP	150B-F		100	12.7			IE			480/3	Yes		No	A		No	No	No	No			11465
WC-FB1-BFV-032	30	AWWA	O-C	BACKWASH SUPPLY	2	IP	150B-F		100	12.7			IE			480/3	Yes		No	A		No	No	No	No			11465
WC-FB1-BFV-040	30	AWWA	O-C	BACKWASH SUPPLY	3	IP	150B-F		100	12.7			IE			480/3	Yes		No	A		No	No	No	No			11465
WC-FB1-BFV-042	30	AWWA	O-C	BACKWASH SUPPLY	4	IP	150B-F		100	12.7			IE			480/3	Yes		No	A		No	No	No	No			11465
WC-FB2-BFV-049	30	AWWA	O-C	BACKWASH SUPPLY	5	IP	150B-F		100	12.7			IE			480/3	Yes		No	A		No	No	No	No			11465
WC-FB2-BFV-050	30	AWWA	O-C	BACKWASH SUPPLY	6	IP	150B-F		100	12.7			IE			480/3	Yes		No	A		No	No	No	No			11465
WC-FB2-BFV-061	30	AWWA	O-C	BACKWASH SUPPLY	7	IP	150B-F		100	12.7			IE			480/3	Yes		No	A		No	No	No	No			11465
WC-FB2-BFV-062	30	AWWA	O-C	BACKWASH SUPPLY	8	IP	150B-F		100	12.7			IE			480/3	Yes		No	A		No	No	No	No			11465
WC-FB2-BFV-073	30	AWWA	O-C	BACKWASH SUPPLY	9	IP	150B-F		100	12.7			IE			480/3	Yes		No	A		No	No	No	No			11465
WC-FB2-BFV-074	30	AWWA	O-C	BACKWASH SUPPLY	10	IP	150B-F		100	12.7			IE			480/3	Yes		No	A		No	No	No	No			11465
WC-FB1-BFV-024	20	AWWA	M	FILTER EFFLUENT	1	IP	150B-F		8.55	20			IE			480/3	Yes		Yes	A		No	No	No	No			11465
WC-FB1-BFV-025	20	AWWA	M	FILTER EFFLUENT	2	IP	150B-F		8.55	20			IE			480/3	Yes		Yes	A		No	No	No	No			11465
WC-FB1-BFV-035	20	AWWA	M	FILTER EFFLUENT	3	IP	150B-F		8.55	20			IE			480/3	Yes		Yes	A		No	No	No	No			11465
WC-FB1-BFV-036	20	AWWA	M	FILTER EFFLUENT	4	IP	150B-F		8.55	20			IE			480/3	Yes		Yes	A		No	No	No	No			11465

Valve Schedule

1.010	1.020	1.021	1.030	1.031	1.035	1.040	1.060	1.070	1.080	1.090	2.010	2.020	3.001	3.010	3.020	4.030	3.040	4.040	4.050	4.080	4.090	8.010	8.020	8.040	8.041	8.05	8.060	9.060
Tag Number	Size	Valve Type (1)	Type of Service(2)	Application	Associated Filter No.	Type of Installation(3)	AWWA Class/Ends(4)	Maximum Non-Shock Shutoff Pressure	Maximum Differential Pressure	Maximum Velocity	Type of Manual Actuator(5)	Limit Switches(6)	Type of Electric Actuator(7)	Type of Housing(8)	Operating Time	Power for Electric Actuator	Actuator Provides 120 VAC For remote controls	Number of Limit Switch Assemblies	Position Transmitter	Control Devices(9)	Remote Control Station (10)	Extensions Stems/Riser (with dirt guards)	Position Indicator for Buried Valve Actuators	Cast Iron Operating Stands	Fabricated Steel Operating Stands	Torque Tubes	Extension bonnet	Associated Specification (11)
	(in)							(psi)	(psi)	(ft/s)					(s)	V/PH												
WC-FB2-BFV-047	20	AWWA	M	FILTER EFFLUENT	5	IP	150B-F		8.55	20			IE			480/3	Yes		Yes	A		No	No	No	No			11465
WC-FB2-BFV-048	20	AWWA	M	FILTER EFFLUENT	6	IP	150B-F		8.55	20			IE			480/3	Yes		Yes	A		No	No	No	No			11465
WC-FB2-BFV-059	20	AWWA	M	FILTER EFFLUENT	7	IP	150B-F		8.55	20			IE			480/3	Yes		No	A		No	No	No	No			11465
WC-FB2-BFV-060	20	AWWA	M	FILTER EFFLUENT	8	IP	150B-F		8.55	20			IE			480/3	Yes		Yes	A		No	No	No	No			11465
WC-FB2-BFV-071	20	AWWA	M	FILTER EFFLUENT	9	IP	150B-F		8.55	20			IE			480/3	Yes		Yes	A		No	No	No	No			11465
WC-FB2-BFV-072	20	AWWA	M	FILTER EFFLUENT	10	IP	150B-F		8.55	20			IE			480/3	Yes		Yes	A		No	No	No	No			11465
WC-FB1-BFV-026	24	AWWA	M	BACKWASH SUPPLY		IP	150B-F		100	20			IE			480/3	Yes		No	A		No	No	No	No			11465
WC-FB1-BFV-110	10	AWWA	M	BACKWASH BYPASS		IP	150B-F		100	17.5			IE			480/3	Yes		No	A		No	No	No	No			11465
WC-BB-BFV-123*	12*	VBF-3	M	BLOWER 1 INTAKE		IP	W						SE	WP	60	480/3	Yes	4	Yes	C		No	No	No	No	No		11610
WC-BB-BFV-143*	12*	VBF-3	M	BLOWER 2 INTAKE		IP	W						SE	WP	60	480/3	Yes	4	Yes	C		No	No	No	No	No		11610
WC-BB-BFV-131	14	VBF-3	O-C	BLOWER 1 DISCHARGE		IP	W				CW	EOT										No	No	No	No	No		11610
WC-BB-BFV-151	14	VBF-3	O-C	BLOWER 2 DISCHARGE		IP	W				CW	EOT										No	No	No	No	No		11610
WC-BB-BFV-129	10	VBF-3	O-C	BLOWER 1 BLOWOFF		IP	W						SE	WP	60	480/3	Yes	4	No	C		No	No	No	No	No		15092
WC-BB-BFV-149	10	VBF-3	O-C	BLOWER 2 BLOWOFF		IP	W						SE	WP	60	480/3	Yes	4	No	C		No	No	No	No	No		15092
WC-FB1-BFV-091	14	VBF-3	O-C	FILTER AIR SCOUR	1	IP	W						SE	WP	60	480/3	Yes	4	No	C		No	No	No	No	No		11465
WC-FB1-BFV-092	14	VBF-3	O-C	FILTER AIR SCOUR	2	IP	W						SE	WP	60	480/3	Yes	4	No	C		No	No	No	No	No		11465
WC-FB1-BFV-093	14	VBF-3	O-C	FILTER AIR SCOUR	3	IP	W						SE	WP	60	480/3	Yes	4	No	C		No	No	No	No	No		11465
WC-FB1-BFV-094	14	VBF-3	O-C	FILTER AIR SCOUR	4	IP	W						SE	WP	60	480/3	Yes	4	No	C		No	No	No	No	No		11465
WC-FB2-BFV-053	14	VBF-3	O-C	FILTER AIR SCOUR	5	IP	W						SE	WP	60	480/3	Yes	4	No	C		No	No	No	No	No		11465
WC-FB2-BFV-054	14	VBF-3	O-C	FILTER AIR SCOUR	6	IP	W						SE	WP	60	480/3	Yes	4	No	C		No	No	No	No	No		11465
WC-FB2-BFV-065	14	VBF-3	O-C	FILTER AIR SCOUR	7	IP	W						SE	WP	60	480/3	Yes	4	No	C		No	No	No	No	No		11465
WC-FB2-BFV-066	14	VBF-3	O-C	FILTER AIR SCOUR	8	IP	W						SE	WP	60	480/3	Yes	4	No	C		No	No	No	No	No		11465
WC-FB2-BFV-077	14	VBF-3	O-C	FILTER AIR SCOUR	9	IP	W						SE	WP	60	480/3	Yes	4	No	C		No	No	No	No	No		11465
WC-FB2-BFV-078	14	VBF-3	O-C	FILTER AIR SCOUR	10	IP	W						SE	WP	60	480/3	Yes	4	No	C		No	No	No	No	No		11465
WC-BB-CV-130	14	VC-5		BLOWER 1 DISCHARGE		IP	F															No						15093
WC-BB-CV-150	14	VC-5		BLOWER 2 DISCHARGE		IP	F															No						15093
WC-BB-CV-128	14	VC-5		BLOWER 1 BLOWOFF		IP	F															No						15093
WC-BB-CV-148	14	VC-5		BLOWER 2 BLOWOFF		IP	F															No						15093
WC-FB1-PRS-001	4	AWWA		NON-POTABLE WATER		IP	F															No						15099
WC-FB1-BFV-019	12	AWWA		NPW PUMP 1 SUCTION FROM FILTER INFLUENT LINE		IP	F				HW											No	No	No	No	No		15101
WC-FB1-BFV-014	12	AWWA		NPW PUMP 2 SUCTION FROM FILTER INFLUENT LINE		IP	F				HW											No	No	No	No	No		15101
WC-FB1-BFV-020	12	AWWA		NPW PUMP 1 SUCTION FROM CLEARWELL		IP	F				HW											No	No	No	No	No		15101
WC-FB1-BFV-015	12	AWWA		NPW PUMP 2 SUCTION FROM CLEARWELL		IP	F				HW											No	No	No	No	No		15101
WC-FB1-BFV-010	12	AWWA		NPW PUMP 3 SUCTION FROM CLEARWELL		IP	F				HW											No	No	No	No	No		15101
WC-FB1-BFV-023	10	AWWA		NPW PUMP 1 DISCHARGE BFV		IP	F				CW											No	No	No	No	No		15101
WC-FB1-BFV-016	10	AWWA		NPW PUMP 2 DISCHARGE BFV		IP	F				CW											No	No	No	No	No		15101
WC-FB1-CV-003	10	AWWA		NPW PUMP 1 DISCHARGE CHECK VALVE		IP	F															No	No	No	No	No		15093
WC-FB1-CV-002	10	AWWA		NPW PUMP 2 DISCHARGE CHECK VALVE		IP	F															No	No	No	No	No		15093
WC-FB1-BFV-018	12	AWWA		NPW DISCHARGE HEADER NORTH BFV		IP	F				CW											No	No	No	No	No		15101
WC-FB1-BFV-013	12	AWWA		NPW DISCHARGE HEADER CENTER BFV		IP	F				CW											No	No	No	No	No		15101
WC-FB1-BFV-006	12	AWWA		NPW DISCHARGE HEADER SOUTH BFV		IP	F				CW											No	No	No	No	No		15101
WC-FB1-GV-004	6	AWWA		GATE VALVE FOR NPW PRS		IP	F				HW											No	No	No	No	No		15104
WC-FB1-BV-010	6	AWWA		BALL VALVE FOR NPW PRS		IP	F				HW											No	No	No	No	No		15103
WC-FB1-BFV-051	6	AWWA		BFV FOR NPW PRS		IP	F				HW											No	No	No	No	No		15101
WC-FB1-BFV-003	6	AWWA		BFV FOR NPW STRAINER		IP	F																					15101
WC-FB1-BFV-004	6	AWWA		BFV FOR NPW STRAINER		IP	F																					15101
WC-Y-PV-001	8			FILTER CLEARWELL DRAIN		B20	MJ				WN											Yes	Yes					15102
WC-Y-PV-005	12			FILTER CLEARWELL DRAIN		B20	MJ				WN											Yes	Yes					15102
WC-WR-GV-002	16	AWWA		NPW/WRI GATE VALVE		B20	MJ				WN											Yes	Yes					511S
WC-NHS-GV-001	4			PUMP PAD DRAIN LINE GATE VALVE		B4	MJ				WN											Yes	Yes					511S

*Butterfly valve size is shown just for reference. Valve size to match the blower inlet connection size.

Notes:

(1) Valve Type - See associated specififcation for non AWWA Butterfly Valves.

(2) Actuators designated "O-C" are for "Open-Close" service. Actuators designated "M" are for "Modulating" service.

(3) Abbreviations for installation types are as follows:

B4	Buried, depth of 4 feet [1.2 m] or less
B20	Buried, depth greater than 4 feet [1.2 m] but 20 feet [6.1 m] or less
Bxx	Buried, depth greater than 20 feet [6.1 m], actual depth of xx feet
SV20	Submerged or vaulted, depth 20 feet [6.1 m] or less
SVxx	Submerged or vaulted, depth greater than 20 feet [6.1 m], actual depth of xx feet
IP	In plant

(4) Letters define valve ends as follows:

F	Flanged
W	Wafer
MJ	Mechanical joint
S	Single Flange

(5) Abbreviations for actuator types are as follows:

WN	Wrench Nut
LVR	Lever
CW	ChainWheel
HW	HandWheel

(6) Abbreviations for limit switches on manual and cylinder operated valves.

EOT	End of travel (open - close)
PSS	Pump start - stop (two intermediate positions)
ELSCH	See electrical schematics

(7) Abbreviations for electric actuator types are as follows:

SE	Standard Electric
IE	Intelligent Electric
NE	Networked Electric

(8) Abbreviations for electronic or electric actuator housing.

WP	Weatherproof
SUB	Submersible [xx = depth of submergence] (SUBxx)
EXP	Explosion proof

(9) Abbreviations for control devices are as indicated.

Table 1: Control Devices

Abbreviations	Open-Close Push Button	Open-Stop- Close Push Button	Local-Off-Remote	Red and Green Indicator Lights
A	Required		Required	Required
B	Required		Required	
C		Required	Required	Required
D		Required	Required	
E		Required		
F	Required			
G	Required			Required
H		Required		Required

(10) Abbreviation for remote control station types:
CS Control Station without Indicating Lights
CIS Control Station with Indicating Lights

(11) Valves associated with Specification 11465 to be supplied by Filter Control System Supplier.
Valves associated with Specification 11610 to be supplied by blower manufacturer.

END OF SCHEDULE

Section 15020

MISCELLANEOUS PIPING AND ACCESSORIES INSTALLATION

PART 1 - GENERAL

1-1. SCOPE. This section covers the installation of piping and accessories as indicated on the Drawings for the following piping sections:

Section Title
Miscellaneous Piping and Accessories
Stainless Steel Pipe and Alloy Pipe, Tubing, and Accessories
Miscellaneous Steel Pipe, Tubing, and Accessories
Miscellaneous Plastic Pipe, Tubing, and Accessories
Cast Iron Soil Pipe and Accessories
Copper Tubing and Accessories

Contractor shall furnish all necessary jointing materials, coatings, and accessories that are specified herein.

Pipe supports and anchors shall be furnished by Contractor, and are covered in the Pipe Supports Section (15140). Pipe trenching and backfilling are covered in the Trenching and Backfilling Section (02202).

1-2. GENERAL.

1-2.01. Coordination. Materials installed under this section shall be installed in full conformity with Drawings, Specifications, engineering data, instructions, and recommendations of the manufacturer, unless exceptions are noted by Engineer.

1-3. SUBMITTALS.

1-3.01. Drawings and Data. Complete specifications, data, and catalog cuts or drawings shall be submitted in accordance with the Submittals Section (01300). Items requiring submittals shall include, but not be limited to, the following:

Cleaning procedure for metal chlorine piping.

Watertight/dusttight pipe sleeves.

Materials as specified herein.

1-3.02. Welder Certification. Prior to the start of the work, Contractor shall submit a list of the welders he proposes using and the type of welding for which each has been qualified. Copy of certification and identification stamp shall be submitted for each welder. Qualification tests may be waived if evidence of prior qualification is deemed suitable by Engineer.

1-3.03. Spool Drawings. Spool drawings indicating the complete line, showing all welded and assembly items, except for insulation shoes or nonstress-relieved lines, shall be developed and submitted for the following services:

Filter Air Scour

1-4. QUALITY ASSURANCE.

1-4.01. Welding and Brazing Qualifications. All welding and brazing procedures and operators shall be qualified by an independent testing laboratory in accordance with the applicable provisions of Section IX of the ASME Code. All procedure and operator qualifications shall be submitted to the Engineer for review.

1-4.02. Tolerances. These tolerances apply to in-line items and connections for other lines.

The general dimension, such as face-to-face, face or end-to-end, face- or end-to center, and center-to-center shall be 1/8 inch.

The inclination of flange face from true in any direction shall not exceed 3/64 inch per foot [4 mm per meter].

Rotation of flange bolt holes shall not exceed 1/16 inch.

1-5. DELIVERY, STORAGE, AND HANDLING. Shipping shall be in accordance with the Product Delivery Requirements Section (01612). Handling and storage shall be in accordance with the Product Storage and Handling Requirements Section (01614). All materials shall be stored in a sheltered location above the ground, separated by type, and shall be supported to prevent sagging or bending.

Plastic pipe, tubing, and fittings shall be stored between 40°F and 90°F [4°C and 32°C].

1-5.01. Coated Pipe. Handling methods and equipment used shall prevent damage to the protective coating and shall include the use of end hooks, padded calipers, and nylon or similar fabric slings with spreader bars. Bare cables, chains, or metal bars shall not be used. Coated pipe shall be stored off the

ground on wide, padded skids. Plastic-coated pipe shall be covered or otherwise protected from exposure to sunlight.

PART 2 - PRODUCTS

2-1. SERVICE CONDITIONS. Pipe, tubing, and fittings covered herein shall be installed in the services indicated in the various pipe sections.

2-2. MATERIALS.

Threaded Fittings	
Anti-Seize Thread Lubricant	Jet-Lube "Nikal", John Crane "Thred Gard Nickel", Never-Seez "Pure Nickel Special", or Permatex "Nickel Anti-Seize".
Teflon Thread Sealer	Paste type; Hercules "Real-tuff", John Crane "JC-30", or Permatex "Thread Sealant with Teflon".
Teflon Thread Tape	Hercules "Tape Dope" or John Crane "Thread-Tape".
Solvent Welded Fittings	
Solvent cement for PVC Systems	ASTM D2564.
Solvent cement for CPVC Systems	ASTM F493.
Sodium Hypochlorite, Sodium Hydroxide, and Sodium Bisulfite Service	IPS Corporation "Weld-On 724"
Primer for PVC Systems	ASTM F656.
Solder or Brazed Fittings	
Solder	Solid wire, ASTM B32, ANSI/NSF 61 certified, Alloy Grade Sb5, (95-5).
Soldering Flux	Paste type, ASTM B813.
Brazing Filler Metal	AWS A5.8, BCuP-5; Engelhard "Silvaloy 15", Goldsmith "GB-15", or Handy & Harman "Sil-Fos".
Brazing Flux	Paste type, Fed Spec O-F-499, Type B.

Insulating Fittings	
Threaded	Dielectric steel pipe nipple, ASTM A53, Schedule 40, polypropylene lined, zinc plated; Perfection Corp. "Clearflow Fittings".
Flanged	Epco "Dielectric Flange Unions" or Central Plastics "Insulating Flange Unions".
Pipe Insulation	See Mechanical Insulation Section (15250).
Watertight/Dusttight Pipe Sleeves	O-Z Electrical Manufacturing "Thruwall" and "Floor Seals", or Thunderline "Link-Seals"; with rubber sealing elements, nonmetallic pressure plates, and galvanized bolts.
Pipe Sleeve Sealant	Polysulfide or urethane, as specified in the Caulking Section (07900) or as indicated on the Drawings.
Protective Coatings	
Tape Wrap	ANSI/AWWA C209, except single ply tape thickness shall not be less than 30 mils [760 µm]; Protecto Wrap "200" or Tapecoat "CT".
Primer	As recommended by the tape manufacturer.
Coal Tar Epoxy	High-build coal tar epoxy; PPG Amercoat "Amercoat 78HB Coal Tar Epoxy", Carboline "Bitumastic 300 M", Tnemec "46H-413 Hi-Build Tneme-Tar", or Sherwin-Williams "Hi-Mil Sher-Tar Epoxy".

Epoxy for filter air scour piping	Shop or field applied high solids epoxy; suitable for protection at continuous pipe wall temperatures up to 300 F. Coating shall be abrasion resistant. The finished coating shall have a minimum total film thickness of 10 mils. The surface shall be prepared in accordance with SSPC-SP7 as a minimum unless otherwise recommended by the coating manufacturer. The coating shall be Carboline "Thermaline 450", PPG Amercoat "Amerlock 400 with Amercoat 880 Additive", or approved equal. Piping exposed to sunlight/UV shall be top coated with aliphatic polyurethane.
Chlorine Tank Car Unloading Connection	Special flanged hose assembly conforming to materials and details on Drawing No. 135, The Chlorine Institute, Inc.

PART 3 - EXECUTION

3-1. INSPECTION. All piping components shall be inspected for damage and cleanliness before being installed. Any material damaged or contaminated in handling on the job shall not be used unless it is repaired and recleaned to the original requirements by Contractor. Such material shall be segregated from the clean material and shall be inspected and approved by Owner or his representative before its use.

3-2. PREPARATION.

3-2.01. Field Measurement. Pipe shall be cut to measurements taken at the site, not from the Drawings. All necessary provisions shall be made in laying out piping to allow for expansion and contraction. Piping shall not obstruct openings or passageways. Pipes shall be held free of contact with building construction to avoid transmission of noise resulting from expansion.

3-3. INSTALLATION.

3-3.01. General. All instruments and specialty items shall be installed according to the manufacturer's instructions and with sufficient clearance and access for ease of operation and maintenance.

Flat faced wrenches and vises shall be used for copper tubing systems. Pipe wrenches and vises with toothed jaws will damage copper materials and shall not be used. Bends in soft temper tubing shall be shaped with bending tools.

3-3.02. Pipe Sleeves. Piping passing through concrete or masonry shall be installed through sleeves that have been installed before the concrete is placed or when masonry is laid. Pipe sleeves installed through floors with a special finish, such as ceramic or vinyl composition tile, shall be flush with the finished floor surface and shall be provided with nickel or chromium plated floor plates. Unless otherwise indicated on the Drawings, in all other locations where pipes pass through floors, pipe sleeves shall project not less than 1 inch nor more than 2 inches above the floor surface, with the projections uniform within each area. In the case of insulated pipes, the insulation shall extend through pipe sleeves. Where the Drawings indicate future installation of pipe, sleeves fitted with suitable plastic caps or plugs shall be provided.

Holes drilled with a suitable rotary drill will be considered instead of sleeves for piping which passes through interior walls and through floors with a special finish.

Unless otherwise indicated on the Drawings, all pipes passing through walls or slabs which have one side in contact with earth or exposed to the weather shall be sealed watertight with special rubber-gasketed sleeve and joint assemblies, or with sleeves and modular rubber sealing elements.

Piping shall be made dusttight and gastight with special rubber-gasketed sleeve and joint assemblies; with sleeves sealed with modular rubber sealing elements; or by caulking with oakum and polysulfide or urethane sealant

3-3.03. Pipe Joints. Pipe joints shall be carefully and neatly made in accordance with the indicated requirements.

3-3.03.01. Threaded. Pipe threads shall conform to ANSI/ASME B1.20.1, NPT, and shall be fully and cleanly cut with sharp dies. Not more than three threads at each pipe connection shall remain exposed after installation. Ends of pipe shall be reamed after threading and before assembly to remove all burrs. Unless otherwise indicated, threaded joints shall be made up with teflon thread tape, thread sealer, or a suitable joint compound.

Threaded joints in plastic piping shall be made up with teflon thread tape applied to all male threads. Threaded joints in stainless steel piping shall be made up with teflon thread sealer and teflon thread tape applied to all male threads. Threaded joints in steel piping for chlorine service shall be made up with teflon thread tape or litharge and glycerine paste applied to all male threads.

3-3.03.02. Compression. Ends of tubing shall be cut square and all burrs shall be removed. The tubing end shall be fully inserted into the compression fitting and the nut shall be tightened not less than 1-1/4 turns and not more than 1-1/2 turns past fingertight, or as recommended by the fitting manufacturer, to produce a leaktight, torque-free connection.

3-3.03.03. Flared. Not Used.

3-3.03.04. Soldered and Brazed. Not Used.

3-3.03.05. Solvent Welded. Not Used.

3-3.03.06. Epoxy and Adhesive Bonded. Not Used.

3-3.03.07. Heat Fusion Bonded. Not Used.

3-3.03.08. Flanged. Flange bolts shall be tightened sufficiently to slightly compress the gasket and effect a seal, but shall not be torqued less than the minimum value required by the gasket manufacturer. Flange bolts shall not be so tight as to fracture or distort the flanges. A plain washer shall be installed under the head and nut of bolts connecting plastic pipe flanges. Anti-seize thread lubricant shall be applied to the threaded portion of all stainless steel bolts during assembly.

Flange bolt holes shall be oriented as follows, unless otherwise indicated on the spool drawings:

Vertical flange face:	Bolt holes to straddle the vertical centerlines.
Horizontal flange face:	Bolt holes shall be aligned with connecting pipe.

Pipe sealants, thread compounds, or other coatings shall not be applied to flange gaskets unless recommended by the gasket manufacturer for the specified service and approved by Engineer.

Welds at orifice flanges shall have internal surfaces ground smooth to the pipe wall.

Slip-on flanges shall be welded inside and outside. There shall be a distance of approximately 1/16 to 1/8 inch between the edge of the fillet weld and the face of the flange. The seal weld shall be applied so that the flange face shall be free of weld spatter and does not require refacing.

Flat-faced flanges shall be used when mating to Class 125 flanges. Full-face gaskets shall be used with flat-faced flanges and ring gaskets shall be used with raised faced flanges.

Weld neck flanges shall be used with butt-weld fittings. The bore of weld neck flanges shall match the pipe wall thickness.

Insulating joints connecting submerged (buried) piping to exposed piping shall be installed above the maximum water surface elevation and before the first pipe support not having coated anchor bolts or adhesive-bonded concrete anchors. All submerged (buried) metallic piping shall be isolated from the concrete reinforcement. Insulating flanges shall be tested for electrical isolation after installation and bolt-up but prior to introduction of conducting fluid.

3-3.03.09. Welded. Welding shall conform to the specifications and recommendations contained in the "Code for Pressure Piping", ANSI B31.1.

Weld cross-sections shall be equal to or greater than the pipe wall thickness. Welds shall be smooth and continuous and shall have interior projections no greater than 1/16 inch. Backing strips or rings shall not be used except with specific prior review by Engineer as to use, material, and design. Root gap inserts that are completely melted and consumed in the weld bead are acceptable only when reviewed in advance by Engineer.

Stainless steel welding shall be inert gas tungsten arc (TIG) or the direct current, straight polarity, inert gas metal arc process (MIG). Refer to Section 15064 for additional stainless steel welding requirements.

Carbon steel welding shall be made by the shielded metal arc process.

For socket weld joints, fully engage the two pipe ends, then separate them by 1/16 inch prior to welding to all space for shrinkage.

3-3.03.10. Grooved Couplings. Grooves for grooved couplings shall be cut with a specially designed grooving tool. Grooves cut in steel pipe shall conform to flexible grooving dimensions, as set forth in AWWA C606, and shall be clean and sharp without burrs or check marks.

3-3.03.11. Push-on. Not Used.

3-3.03.12. Rubber-Gasketed. Not Used.

3-3.03.13. Other Pipe Joints. Not Used.

3-3.04. Pipe. Pipe shall be installed as specified, as indicated on the Drawings, or, in the absence of detail piping arrangement, in a manner acceptable to Engineer.

Piping shall be installed without springing or forcing the pipe in a manner which would induce stresses in the pipe, valves, or connecting equipment.

Piping shall be supported in conformance with the Pipe Supports Section (15140).

Piping shall be connected to equipment by flanges or unions as specified in the various piping sections. Piping connecting to equipment shall be supported by a pipe support and not by the equipment.

Water, gas, and air supply piping shall be provided with a shutoff valve and union at each fixture or unit of equipment, whether or not indicated on the Drawings, to permit isolation and disconnection of each item without disturbing the remainder of the system. Air supply piping shall be provided with sectionalizing valves and valved air inlet connections as needed for isolation of portions of the system for periodic testing. Gas supply lines to buildings shall be provided with a shutoff valve and union located above grade immediately outside the building. A capped drip leg shall be provided at the bottom of the vertical riser of gas supply piping adjacent to gas-fired appliances.

A union shall be provided within 2 feet of each threaded-end valve unless there are other connections which will permit easy removal of the valve. Unions shall also be provided in piping adjacent to devices or equipment which may require removal in the future and where required by the Drawings or the Specifications.

All air piping shall be graded to points of drainage collection where drip legs and drain valves shall be provided. Air piping shall be sized for the service conditions, with the indicated minimum sizes:

Service	Minimum Size
Air signal	1/4 inch OD
Air supply	1/2 inch OD
Bubbler drop pipes	3/4 inch
Buried piping	3/4 inch

Water supply piping within structures shall be arranged, and facilities provided, for complete drainage. All piping serving metering equipment shall be uniformly graded so that air traps are eliminated and complete venting is provided.

Stuffing box leakage from water sealed pumps shall be piped to the nearest point of drainage collection.

Taps for pressure gauge connections on the suction and discharge of pumping units shall be provided with a nipple and a ball type shutoff valve.

Drilling and tapping of pipe walls for installation of pressure gauges or switches will not be permitted.

In all piping, insulating fittings shall be provided to prevent contact of dissimilar metals, including but not limited to, contact of copper, brass, or bronze pipe, tubing, fittings, valves, or appurtenances, or stainless steel pipe, tubing, fittings, valves, or appurtenances with iron or steel pipe, fittings, valves, or appurtenances. Insulating fittings shall also be provided to prevent contact of copper, brass, or bronze pipe, tubing, fittings, valves or appurtenances with stainless steel pipe, tubing, fittings, valves, or appurtenances.

Branch connections in horizontal runs of steam, air, and gas piping shall be made from the top of the pipe.

Buried PVC piping shall be "snaked" in the trench and shall be kept as cool as possible during installation. PVC pipe shall be kept shaded and shall be covered with backfill immediately after installation.

All chemical piping shall be installed so that lines are readily accessible for cleaning. Tees shall be provided at regular intervals in all chemical piping except chlorine piping, with extra openings plugged, to facilitate cleaning. Teflon thread tape or teflon thread sealer shall be applied to the threads of the plugs so that they can be easily removed. At each point where hose or reinforced plastic tubing is connected to rigid piping, a quick-disconnect coupling shall be provided.

Vent and gas piping for anhydrous ammonia, chlorine and sulfur dioxide gas shall be installed so that liquid traps are avoided. The open end of each vent line shall elbow down and shall be provided with a corrosion-resistant insect screen.

Double-contained chemical feed piping shall be installed according to the manufacturer's recommendations. Joints shall be solvent cemented. Splitting and rewelding of fittings will not be acceptable. Suitable drains and vents shall be provided to permit complete drainage of both the primary and secondary containment piping. Interstitial supporting devices shall be designed to allow continuous drainage in the annular space to the drain ports. Drain fittings shall be designed to allow a valve attachment to be made so that the secondary containment compartment can be readily drained and manually inspected for leaks.

Polyethylene piping shall be installed in accordance with the manufacturer's recommendations. A continuous 12 AWG THHN insulated copper tracer wire shall be placed 6 inches [150 mm] above all portions of the buried pipe, but no more than 18 inches [450 mm] below the ground surface. Where the pipe extends above grade, a 2 foot [0.6 m] length of wire shall be coiled and attached to the pipe.

Piping adjacent to flow sensors shall be installed in accordance with the requirements of the manufacturer of the flow sensor and commonly accepted design practices of the appropriate straight pipe runs both upstream and downstream.

Drains required for operation are shown on the Drawings. However, vents at all high points and drains at all low points in the piping that are required for complete draining for pressure test may not be shown on these Drawings. Contractor shall add such items as found to be necessary during detail piping design and/or piping installation.

3-3.05. Reducers. Eccentric reducers shall be installed flat on the bottom for condensate return.

3-3.06. Valves. Isolation valves provided with equipment and instruments shall be located in a manner which will allow ease of access and removal of the items to be isolated. Prior to soldering or brazing valves, teflon and elastomer seats and seals shall be removed to prevent damage.

3-4. PIPING ASSEMBLY.

3-4.01. General. Contractor shall only use labor that has been qualified by training and experience to capably perform the specified activities required to accomplish the work in a satisfactory manner

Any deviations from the Specifications or piping locations shown on the Drawings require prior review and approval by Engineer.

3-4.02. Buttwelded Piping. The specification and qualification of weld joints and welders for buttwelded piping shall be in accordance with ASME Boiler Pressure Vessel Code, Section IX, Welding and Brazing. Weld procedure specifications (WPS) and procedure qualification reports (PQR) shall be submitted to Engineer for review and validation of joint design, efficiencies and strength before installation begins.

Nondestructive examination (NDE) shall be in accordance with the ASME Boiler and Pressure Vessel Code, Section V, Nondestructive Examination. Cost for NDE shall be paid for by the Contractor as part of the base bid. The minimum level of NDE shall be as follows:

(1) 100 percent visual examination of welds by a qualified examiner (per ASME B31.1), and

(2) Radiographic testing (RT) of 10 percent random sampling of welds.

If the Contractor wants to use alternative techniques or intends to apply alternative methods considered equivalent to those indicated herein, a proposal on such techniques or methods shall be submitted in writing to Engineer for review and approval at least 14 days before intended date of use.

Welding shall not begin until weld joint and welder qualification submittals have been reviewed and approved. NDE shall be performed before the pressure and leakage testing of the piping. Weld acceptance standards shall be in accordance with ASME B31.1, Chapter VI. If a weld fails the NDE, it shall be repaired and the test repeated at no additional cost to the Owner.

3-5. PROTECTIVE COATING. Standard weight steel pipe in buried locations will have exterior surfaces protected with a shop applied plastic coating.

Where specified in the Miscellaneous Steel Pipe, Tubing, and Accessories Section (15064), extra strong steel pipe in buried locations will have exterior surfaces protected with a shop applied plastic coating or a shop applied tape wrap. Where not specified to be shop coated or wrapped in the Miscellaneous Steel Pipe, Tubing and Accessories Section (15064), a tape wrap shall be field applied. The exterior surfaces of all fittings, couplings, specials, and other portions of buried piping not protected with plastic coating shall be tape-wrapped in the field.

All surfaces to be tape-wrapped shall be thoroughly cleaned and primed in accordance with the tape manufacturer's recommendations immediately before wrapping. The tape shall be applied by two-ply (half-lap) wrapping or as needed to provide a total installed tape thickness of at least 60 mils [1.5 mm]. Joints in plastic-coated pipe shall be cleaned, primed, and tape-wrapped after installation.

Joints in galvanized steel piping in underground locations shall be field painted with two coats of coal tar epoxy coating.

3-5.01. Inspection. All shop-applied plastic coatings and tape wrap on pipe or fittings shall be inspected for holidays and other defects after receipt of the pipe or fitting on the job and immediately before installation. All field-applied tape wrap on pipe, joints, fittings, and valves shall be inspected for holidays and other defects following completion of wrapping. Inspection of plastic coatings after installation of the pipe or fitting in the trench shall be made where, in the opinion of Engineer, the coating may have been damaged during installation. Holidays and defects disclosed by inspection shall be repaired in accordance with the recommendations of the coating or tape wrap manufacturer, as applicable.

The inspection shall be made using an electrical holiday detector. The detector and inspection procedures shall conform to the requirements of Section 4.4 of ANSI/AWWA C209.

3-6. PRESSURE AND LEAKAGE TESTING. All specified tests shall be made by and at the expense of Contractor in the presence, and to the satisfaction of Engineer. Each piping system shall be tested for at least 1 hour with no loss of pressure. The Contractor shall coordinate this section with the Pipeline Pressure and Leakage Testing Section (02704). Piping shall be tested at the indicated pressures:

Service	Test Pressure	Test Medium
Water supply	1-1/2 times working pressure but not less than 120 psi [828 kPa]	Water
Gas supply	1-1/2 times working pressure but not less than 60 psi [414 kPa]	Compressed air
Low pressure air (filter air scour)	8.5 psig.	Compressed air with 100 percent of all oil 0.025 micron and larger removed
Liquid chlorine (pressure)	300 psi [2068 kPa]	Zero humidity air or nitrogen
Anhydrous ammonia gas (pressure)	300 psi [2068 kPa]	Zero humidity air or nitrogen
Chlorine gas (pressure)	300 psi [2068 kPa]	Zero humidity air or nitrogen
Sulfur dioxide gas (pressure)	300 psi [2068 kPa]	Zero humidity air or nitrogen
Chlorine gas (vacuum)	15 inches [51 kPa] of mercury vacuum	Atmospheric air
Sulfur dioxide gas (vacuum)	15 inches [51 kPa] of mercury vacuum	Atmospheric air
Vacuum air piping	27 inches [51 kPa] of mercury vacuum	Atmospheric air
Other piping	1-1/2 times working pressure but not less than 50 psi [345 kPa]	Suitable fluid or gas; for distilled water piping, distilled water or filtered oil-free compressed air may be used

Compressed air or pressurized gas shall not be used for testing plastic piping unless specifically recommended by the pipe manufacturer.

Leakage may be determined by loss-of-pressure, soap solution, chemical indicator, or other positive and accurate method acceptable to Engineer. All fixtures, devices, or accessories which are to be connected to the lines and which would be damaged if subjected to the specified test pressure shall be disconnected and the ends of the branch lines plugged or capped as needed during the testing.

After completion of the specified pressure tests, all anhydrous ammonia, chlorine and sulfur dioxide gas piping shall be tested for leakage using the appropriate gas chemical at operating pressures. Piping shall be thoroughly cleaned and dried before admitting gas chemical into the system. Gas chemical shall be slowly admitted to the piping system.

For chlorine gas piping, leakage shall be checked by waving a swab soaked in aqua ammonia solution near each fitting. Ammonia solution shall not be applied directly to the fittings. Formation of white fumes will indicate the presence of leaks. All chlorine gas shall be purged from the line before leaks are repaired.

Unless otherwise required by the applicable codes, drainage and venting systems shall be waterair tested. For water testing, the drainage and venting system shall be filled with water to the level of the highest vent stack. For air testing, the system shall be charged with air to a minimum pressure of 5 psig [35 kPa]. Openings shall be plugged as necessary for either type of test. To be considered free of leaks, the system shall hold the water or air for 30 minutes without any drop in the water level or air pressure.

All necessary testing equipment and materials, including tools, appliances and devices, shall be furnished and all tests shall be made by and at the expense of Contractor. Contractor shall give Engineer 5 working days advanced notice of scheduled testing.

All joints in piping shall be tight and free of leaks. All joints which are found to leak, by observation or during any specified test, shall be repaired, and the tests repeated.

3-6.01. Air Pressure Tests. Pressure tests shall be performed on all air piping systems as specified herein.

Air piping shall be pressure tested in 3 steps. The first step shall be to pressurize the air piping to approximately 1/3 of the final test pressure and held for one hour. Then the pressure in the piping shall be increased to 2/3 of the final test pressure and held for one hour. Finally, piping shall be pressurized to the final test pressure, as specified herein, and again held for one hour. Piping shall hold pressure with minimal leakage to the satisfaction of Engineer before going to the next step.

Contractor shall be responsible for ensuring that all air piping is free of leaks. All joints which are found to be leaking shall be repaired and the test repeated.

3-7. CLEANING. The interior of all pipe, valves, and fittings shall be smooth, clean, and free of blisters, loose mill scale, sand, dirt, and other foreign matter when installed. Before being placed in service, the interior of all lines shall be thoroughly cleaned, to the satisfaction of Engineer.

Metal anhydrous ammonia, chlorine and sulfur dioxide piping shall be cleaned as recommended by the gas chemical feed system supplier. All surfaces which may come into contact with gas chemical shall be thoroughly dry and free of oil or grease before being placed in service. The recommended cleaning procedures shall be submitted for review in accordance with the Submittals Section (01300).

Tin-lined copper tubing for distribution of distilled water shall be flushed and cleaned with distilled water in accordance with the tubing manufacturer's recommendations.

3-8. ACCEPTANCE. Owner reserves the right to have any section of the piping system which he suspects may be faulty cut out of the system by Contractor for inspection and testing. Should the joint prove to be sound, Owner will reimburse Contractor on a time-and-material basis as specified in the Contract. Should the joint prove to be faulty, the destructive test will continue joint by joint in all directions until sound joints are found. Costs for replacement of faulty work and/or materials shall be the responsibility of Contractor.

End of Section

SECTION 15053
COMMON WORK RESULTS FOR HVAC EQUIPMENT

PART 1 - GENERAL

1.01 SUMMARY

A. This Section includes the following:

1. Piping materials and installation instructions common to most piping systems.
2. Dielectric fittings.
3. Mechanical sleeve seals.
4. Sleeves.
5. Escutcheons.
6. Grout.
7. Equipment installation requirements common to equipment sections.
8. Supports and anchorages.

1.02 DEFINITIONS

A. Finished Spaces: Spaces other than mechanical and electrical equipment rooms, furred spaces, pipe and duct chases, unheated spaces immediately below roof, spaces above ceilings, unexcavated spaces, crawlspaces, and tunnels.

B. Exposed, Interior Installations: Exposed to view indoors. Examples include finished occupied spaces and mechanical equipment rooms.

C. Exposed, Exterior Installations: Exposed to view outdoors or subject to outdoor ambient temperatures and weather conditions. Examples include rooftop locations.

D. Concealed, Interior Installations: Concealed from view and protected from physical contact by building occupants. Examples include above ceilings, closets, and chases.

1.03 SUBMITTALS

A. Welding certificates.

1.04 QUALITY ASSURANCE

A. Steel Support Welding: Qualify processes and operators according to AWS D1.1, "Structural Welding Code--Steel."

B. Electrical Characteristics for HVAC Equipment: Equipment of higher electrical characteristics may be furnished provided such proposed equipment is approved in writing and connecting electrical services, circuit breakers, and conduit sizes are appropriately modified. If minimum energy ratings or efficiencies are specified, equipment shall comply with requirements.

PART 2 - PRODUCTS

2.01 PIPE, TUBE, AND FITTINGS

A. Refer to individual Division 15 piping Sections for pipe, tube, and fitting materials and joining methods.

B. Pipe Threads: ASME B1.20.1 for factory-threaded pipe and pipe fittings.

2.02 JOINING MATERIALS

A. Refer to individual Division 15 piping Sections for special joining materials not listed below.

B. Plastic, Pipe-Flange Gasket, Bolts, and Nuts: Type and material recommended by piping system manufacturer, unless otherwise indicated.

C. Solder Filler Metals: ASTM B 32, lead-free alloys. Include water-flushable flux according to ASTM B 813.

D. Brazing Filler Metals: AWS A5.8, BCuP Series or BAg1, unless otherwise indicated.

E. Welding Filler Metals: Comply with AWS D10.12.

2.03 DIELECTRIC FITTINGS

A. Description: Combination fitting of copper alloy and ferrous materials with threaded, solder-joint, plain, or weld-neck end connections that match piping system materials.

B. Insulating Material: Suitable for system fluid, pressure, and temperature.

C. Dielectric Unions: Factory-fabricated, union assembly, for 250-psig minimum working pressure at 180 deg F.

D. Dielectric Couplings: Galvanized-steel coupling with inert and noncorrosive, thermoplastic lining; threaded ends; and 300-psig minimum working pressure at 225 deg F.

E. Dielectric Nipples: Electroplated steel nipple with inert and noncorrosive, thermoplastic lining; plain, threaded, or grooved ends; and 300-psig minimum working pressure at 225 deg F.

2.04 SLEEVES

A. Galvanized-Steel Sheet: 0.0239-inch minimum thickness; round tube closed with welded longitudinal joint.

B. Steel Pipe: ASTM A 53, Type E, Grade B, Schedule 40, galvanized, plain ends.

C. PVC Pipe: ASTM D 1785, Schedule 40.

2.05 ESCUTCHEONS

A. Description: Manufactured wall and ceiling escutcheons and floor plates, with an ID to closely fit around pipe, tube, and insulation of insulated piping and an OD that completely covers opening.

B. One-Piece, Deep-Pattern Type: Deep-drawn, box-shaped brass with polished chrome-plated finish.

C. One-Piece, Cast-Brass Type: With set screw.

1. Finish: Polished chrome-plated.

D. Split-Casting, Cast-Brass Type: With concealed hinge and set screw.

1. Finish: Polished chrome-plated.

2.06 GROUT

A. Description: ASTM C 1107, Grade B, non-shrink and nonmetallic, dry hydraulic-cement grout.

1. Characteristics: Post-hardening, volume-adjusting, non-staining, non-corrosive, non-gaseous, and recommended for interior and exterior applications.

2. Design Mix: 5000-psi, 28-day compressive strength.
3. Packaging: Premixed and factory packaged.

PART 3 - EXECUTION

3.01 PIPING SYSTEMS - COMMON REQUIREMENTS

A. Install piping according to the following requirements and Division 15 Sections specifying piping systems.

B. Drawing plans, schematics, and diagrams indicate general location and arrangement of piping systems. Indicated locations and arrangements were used to size pipe and calculate friction loss, expansion, pump sizing, and other design considerations. Install piping as indicated unless deviations to layout are approved on Coordination Drawings.

C. Install piping in concealed locations, unless otherwise indicated and except in equipment rooms and service areas.

D. Install piping indicated to be exposed and piping in equipment rooms and service areas at right angles or parallel to building walls. Diagonal runs are prohibited unless specifically indicated otherwise.

E. Install piping above accessible ceilings to allow sufficient space for ceiling panel removal.

F. Install piping to permit valve servicing.

G. Install piping at indicated slopes.

H. Install piping free of sags and bends.

I. Install fittings for changes in direction and branch connections.

J. Install piping to allow application of insulation.

K. Select system components with pressure rating equal to or greater than system operating pressure.

L. Install escutcheons for penetrations of walls, ceilings, and floors.

M. Install sleeves for pipes passing through concrete and masonry walls, gypsum-board partitions, and concrete floor and roof slabs.

N. Aboveground, Exterior-Wall Pipe Penetrations: Seal penetrations using sleeves and mechanical sleeve seals. Select sleeve size to allow for 1-inch annular clear space between pipe and sleeve for installing mechanical sleeve seals.

1. Install steel pipe for sleeves smaller than 6 inches in diameter.

O. Fire-Barrier Penetrations: Maintain indicated fire rating of walls, partitions, ceilings, and floors at pipe penetrations. Seal pipe penetrations with firestop materials. Refer to Division 7 Section "Through-Penetration Firestop Systems" for materials.

P. Verify final equipment locations for roughing-in.

Q. Refer to equipment specifications in other Sections of these Specifications for roughing-in requirements.

3.02 PIPING JOINT CONSTRUCTION

A. Join pipe and fittings according to the following requirements and Division 15 Sections specifying piping systems.

B. Ream ends of pipes and tubes and remove burrs. Bevel plain ends of steel pipe.

C. Remove scale, slag, dirt, and debris from inside and outside of pipe and fittings before assembly.

D. Soldered Joints: Apply ASTM B 813, water-flushable flux, unless otherwise indicated, to tube end. Construct joints according to ASTM B 828 or CDA's "Copper Tube Handbook," using lead-free solder alloy complying with ASTM B 32.

E. Brazed Joints: Construct joints according to AWS's "Brazing Handbook," "Pipe and Tube" Chapter, using copper-phosphorus brazing filler metal complying with AWS A5.8.

3.03 PIPING CONNECTIONS

A. Make connections according to the following, unless otherwise indicated:

1. Install unions, in piping NPS 2 and smaller, adjacent to each valve and at final connection to each piece of equipment.

3.04 EQUIPMENT INSTALLATION - COMMON REQUIREMENTS

A. Install equipment to allow maximum possible headroom unless specific mounting heights are not indicated.

B. Install equipment level and plumb, parallel and perpendicular to other building systems and components in exposed interior spaces, unless otherwise indicated.

C. Install HVAC equipment to facilitate service, maintenance, and repair or replacement of components. Connect equipment for ease of disconnecting, with minimum interference to other installations. Extend grease fittings to accessible locations.

D. Install equipment to allow right of way for piping installed at required slope.

3.05 ERECTION OF METAL SUPPORTS AND ANCHORAGES

A. Refer to Division 5 Section "Metal Fabrications" for structural steel.

B. Cut, fit, and place miscellaneous metal supports accurately in location, alignment, and elevation to support and anchor HVAC materials and equipment.

C. Field Welding: Comply with AWS D1.1.

3.06 GROUTING

A. Mix and install grout for HVAC equipment base bearing surfaces, pump and other equipment base plates, and anchors.

B. Clean surfaces that will come into contact with grout.

C. Provide forms as required for placement of grout.

D. Avoid air entrapment during placement of grout.

E. Place grout, completely filling equipment bases.

F. Place grout on concrete bases and provide smooth bearing surface for equipment.

G. Place grout around anchors.

H. Cure placed grout.

END OF SECTION 15053

SECTION 15058

COMMON MOTOR REQUIREMENTS FOR HVAC EQUIPMENT

PART 1 - GENERAL

1.01 SUMMARY

A. Section includes general requirements for single-phase, general-purpose, horizontal, small and medium, squirrel-cage induction motors for use on ac power systems up to 600 V and installed at equipment manufacturer's factory or shipped separately by equipment manufacturer for field installation.

1.02 COORDINATION

A. Coordinate features of motors, installed units, and accessory devices to be compatible with the following:

1. Motor controllers.
2. Torque, speed, and horsepower requirements of the load.
3. Ratings and characteristics of supply circuit and required control sequence.
4. Ambient and environmental conditions of installation location.

1.03 TRAINING

A. No training is required.

1.04 OPERATION AND MAINTENANCE

A. Provide O&M data sheets per Division 1 specifications.

PART 2 - PRODUCTS

2.01 GENERAL MOTOR REQUIREMENTS

A. Comply with requirements in this Section except when stricter requirements are specified in HVAC equipment schedules or Sections.

B. Comply with NEMA MG 1 unless otherwise indicated.

2.02 MOTOR CHARACTERISTICS

A. Duty: Continuous duty at ambient temperature of 40 deg C and at altitude of 3300 feet above sea level.

B. Capacity and Torque Characteristics: Sufficient to start, accelerate, and operate connected loads at designated speeds, at installed altitude and environment, with indicated operating sequence, and without exceeding nameplate ratings or considering service factor.

2.03 SINGLE-PHASE MOTORS

A. Motors larger than 1/20 hp shall be one of the following, to suit starting torque and requirements of specific motor application:

1. Permanent-split capacitor.
2. Split phase.
3. Capacitor start, inductor run.
4. Capacitor start, capacitor run.

B. Multispeed Motors: Variable-torque, permanent-split-capacitor type.

C. Bearings: Prelubricated, antifriction ball bearings or sleeve bearings suitable for radial and thrust loading.

D. Motors 1/20 HP and Smaller: Shaded-pole type.

E. Thermal Protection: Internal protection to automatically open power supply circuit to motor when winding temperature exceeds a safe value calibrated to temperature rating of motor insulation. Thermal-protection device shall automatically reset when motor temperature returns to normal range.

PART 3 - EXECUTION (Not Applicable)

END OF SECTION 15058

SECTION 15059

HANGERS AND SUPPORTS FOR HVAC PIPING AND EQUIPMENT

PART 1 - GENERAL

1.01 SUMMARY

A. Section Includes:

1. Metal pipe hangers and supports.
2. Trapeze pipe hangers.
3. Thermal-hanger shield inserts.
4. Fastener systems.
5. Equipment supports.

1.02 PERFORMANCE REQUIREMENTS

A. Delegated Design: Design trapeze pipe hangers and equipment supports, including comprehensive engineering analysis by a qualified professional engineer, using performance requirements and design criteria indicated.

B. Structural Performance: Hangers and supports for HVAC piping and equipment shall withstand the effects of gravity loads and stresses within limits and under conditions indicated according to ASCE/SEI 7.

1. Design supports for multiple pipes capable of supporting combined weight of supported systems, system contents, and test water.
2. Design equipment supports capable of supporting combined operating weight of supported equipment and connected systems and components.

1.03 SUBMITTALS

A. Product Data: For each type of product indicated.

1.04 TRAINING

A. No training is required.

1.05 OPERATION AND MAINTENANCE

A. Provide O&M data sheets per Division 1 specifications.

PART 2 - PRODUCTS

2.01 METAL PIPE HANGERS AND SUPPORTS

A. Carbon-Steel Pipe Hangers and Supports:

1. Description: MSS SP-58, Types 1 through 58, factory-fabricated components.
2. Galvanized Metallic Coatings: Pre-galvanized or hot dipped.
3. Nonmetallic Coatings: Plastic coating, jacket, or liner.
4. Padded Hangers: Hanger with fiberglass or other pipe insulation pad or cushion to support bearing surface of piping.
5. Hanger Rods: Continuous-thread rod, nuts, and washer made of carbon steel.

2.02 TRAPEZE PIPE HANGERS

A. Description: MSS SP-69, Type 59, shop- or field-fabricated pipe-support assembly made from structural carbon-steel shapes with MSS SP-58 carbon-steel hanger rods, nuts, saddles, and U-bolts.

2.03 THERMAL-HANGER SHIELD INSERTS

A. Insulation-Insert Material for Cold Piping: ASTM C 552, Type II cellular glass with 100-psig or ASTM C 591, Type VI, Grade 1 polyisocyanurate with 125-psig minimum compressive strength and vapor barrier.

B. Insulation-Insert Material for Hot Piping: ASTM C 552, Type II cellular glass with 100-psig or ASTM C 591, Type VI, Grade 1 polyisocyanurate with 125-psig minimum compressive strength.

C. For Trapeze or Clamped Systems: Insert and shield shall cover entire circumference of pipe.

D. For Clevis or Band Hangers: Insert and shield shall cover lower 180 degrees of pipe.

E. Insert Length: Extend 2 inches beyond sheet metal shield for piping operating below ambient air temperature.

2.04 FASTENER SYSTEMS

A. Powder-Actuated Fasteners: Threaded-steel stud, for use in hardened portland cement concrete with pull-out, tension, and shear capacities appropriate for supported loads and building materials where used.

B. Mechanical-Expansion Anchors: Insert-wedge-type, zinc-coated steel anchors, for use in hardened portland cement concrete; with pull-out, tension, and shear capacities appropriate for supported loads and building materials where used.

2.05 EQUIPMENT SUPPORTS

A. Description: Welded, shop- or field-fabricated equipment support made from structural carbon-steel shapes.

2.06 MISCELLANEOUS MATERIALS

A. Structural Steel: ASTM A 36/A 36M, carbon-steel plates, shapes, and bars; black and galvanized.

B. Grout: ASTM C 1107, factory-mixed and -packaged, dry, hydraulic-cement, nonshrink and nonmetallic grout; suitable for interior and exterior applications.

1. Properties: Nonstaining, noncorrosive, and nongaseous.
2. Design Mix: 5000-psi, 28-day compressive strength.

PART 3 - EXECUTION

3.01 HANGER AND SUPPORT INSTALLATION

A. Metal Pipe-Hanger Installation: Comply with MSS SP-69 and MSS SP-89. Install hangers, supports, clamps, and attachments as required to properly support piping from the building structure.

B. Metal Trapeze Pipe-Hanger Installation: Comply with MSS SP-69 and MSS SP-89. Arrange for grouping of parallel runs of horizontal piping, and support together on field-fabricated trapeze pipe hangers.

1. Pipes of Various Sizes: Support together and space trapezes for smallest pipe size or install intermediate supports for smaller diameter pipes as specified for individual pipe hangers.
2. Field fabricate from ASTM A 36/A 36M, carbon-steel shapes selected for loads being supported. Weld steel according to AWS D1.1/D1.1M.

C. Thermal-Hanger Shield Installation: Install in pipe hanger or shield for insulated piping.

D. Fastener System Installation:

1. Install powder-actuated fasteners for use in lightweight concrete or concrete slabs less than 4 inches thick in concrete after concrete is placed and completely cured. Use operators that are licensed by powder-actuated tool manufacturer. Install fasteners according to powder-actuated tool manufacturer's operating manual.
2. Install mechanical-expansion anchors in concrete after concrete is placed and completely cured. Install fasteners according to manufacturer's written instructions.

E. Install hangers and supports complete with necessary attachments, inserts, bolts, rods, nuts, washers, and other accessories.

F. Equipment Support Installation: Fabricate from welded-structural-steel shapes.

G. Install hangers and supports to allow controlled thermal and seismic movement of piping systems, to permit freedom of movement between pipe anchors, and to facilitate action of expansion joints, expansion loops, expansion bends, and similar units.

H. Install lateral bracing with pipe hangers and supports to prevent swaying.

I. Install building attachments within concrete slabs or attach to structural steel. Install additional attachments at concentrated loads, including valves, flanges, and strainers, and larger and at changes in direction of piping. Install concrete inserts before concrete is placed; fasten inserts to forms and install reinforcing bars through openings at top of inserts.

J. Load Distribution: Install hangers and supports so that piping live and dead loads and stresses from movement will not be transmitted to connected equipment.

K. Pipe Slopes: Install hangers and supports to provide indicated pipe slopes and to not exceed maximum pipe deflections allowed by ASME B31.9 for building services piping.

L. Insulated Piping:

1. Attach clamps and spacers to piping.

   a. Piping Operating above Ambient Air Temperature: Clamp may project through insulation.
   b. Piping Operating below Ambient Air Temperature: Use thermal-hanger shield insert with clamp sized to match OD of insert.
   c. Do not exceed pipe stress limits allowed by ASME B31.9 for building services piping.

2. Install MSS SP-58, Type 39, protection saddles if insulation without vapor barrier is indicated. Fill interior voids with insulation that matches adjoining insulation.

   a. Option: Thermal-hanger shield inserts may be used.

3. Install MSS SP-58, Type 40, protective shields on cold piping with vapor barrier. Shields shall span an arc of 180 degrees.

   a. Option: Thermal-hanger shield inserts may be used.

4. Shield Dimensions for Pipe: Not less than the following:

   a. NPS 1/4 to NPS 3-1/2: 12 inches long and 0.048 inch thick.

5. Thermal-Hanger Shields: Install with insulation same thickness as piping insulation.

3.02 EQUIPMENT SUPPORTS

A. Fabricate structural-steel stands to suspend equipment from structure overhead or to support equipment above floor.

B. Grouting: Place grout under supports for equipment and make bearing surface smooth.

C. Provide lateral bracing, to prevent swaying, for equipment supports.

3.03 ADJUSTING

A. Hanger Adjustments: Adjust hangers to distribute loads equally on attachments and to achieve indicated slope of pipe.

B. Trim excess length of continuous-thread hanger and support rods to 1-1/2 inches.

3.04 PAINTING

A. Galvanized Surfaces: Clean welds, bolted connections, and abraded areas and apply galvanizing-repair paint to comply with ASTM A 780.

3.05 HANGER AND SUPPORT SCHEDULE

A. Specific hanger and support requirements are in Sections specifying piping systems and equipment.

B. Comply with MSS SP-69 for pipe-hanger selections and applications that are not specified in piping system Sections.

C. Use hangers and supports with galvanized metallic coatings for piping and equipment that will not have field-applied finish.

D. Use nonmetallic coatings on attachments for electrolytic protection where attachments are in direct contact with copper tubing.

E. Use carbon-steel pipe hangers and supports and metal trapeze pipe hangers and attachments for general service applications.

F. Use thermal-hanger shield inserts for insulated piping and tubing.

G. Horizontal-Piping Hangers and Supports: Unless otherwise indicated and except as specified in piping system Sections, install the following types:

1. Adjustable, Steel Clevis Hangers (MSS Type 1): For suspension of non-insulated or insulated, stationary pipes NPS 1/2 to NPS 30.
2. Carbon- or Alloy-Steel, Double-Bolt Pipe Clamps (MSS Type 3): For suspension of pipes NPS 3/4 to NPS 36, requiring clamp flexibility and up to 4 inches of insulation.
3. Adjustable, Steel Band Hangers (MSS Type 7): For suspension of non-insulated, stationary pipes NPS 1/2 to NPS 8.

H. Vertical-Piping Clamps: Unless otherwise indicated and except as specified in piping system Sections, install the following types:

1. Extension Pipe or Riser Clamps (MSS Type 8): For support of pipe risers NPS 3/4 to NPS 24.
2. Carbon- or Alloy-Steel Riser Clamps (MSS Type 42): For support of pipe risers NPS 3/4 to NPS 24 if longer ends are required for riser clamps.

I. Saddles and Shields: Unless otherwise indicated and except as specified in piping system Sections, install the following types:

1. Steel-Pipe-Covering Protection Saddles (MSS Type 39): To fill interior voids with insulation that matches adjoining insulation.
2. Protection Shields (MSS Type 40): Of length recommended in writing by manufacturer to prevent crushing insulation.
3. Thermal-Hanger Shield Inserts: For supporting insulated pipe.

J. Comply with MSS SP-69 for trapeze pipe-hanger selections and applications that are not specified in piping system Sections.

K. Use powder-actuated fasteners or mechanical-expansion anchors instead of building attachments where required in concrete construction.

END OF SECTION 15062

Section 15060

MISCELLANEOUS PIPING AND PIPE ACCESSORIES

PART 1 - GENERAL

1-1. SCOPE. This section covers the furnishing of miscellaneous piping and pipe accessories. Miscellaneous piping shall be furnished complete with all fittings, flanges, unions, and other accessories specified herein.

1-2. SUBMITTALS.

1-2.01. Drawings and Data. Complete specifications, data and catalog cuts or drawings shall be submitted in accordance with the Submittals section. Submittals are required for all piping, fittings, gaskets, sleeves, and accessories, and shall include the following data:

Name of Manufacturer
Type and model
Construction materials, thickness, and finishes
Pressure and temperature ratings

Contractor shall obtain and submit a written statement from the gasket material manufacturer certifying that the gasket materials are compatible with the joints specified herein and are recommended for the specified field test pressures and service conditions.

1-3. DELIVERY, STORAGE, AND HANDLING. Shipping shall be in accordance with the Product Delivery Requirements section. Handling and storage shall be in accordance with the Product Storage and Handling Requirements section. All materials shall be stored in a sheltered location above the ground, separated by type, and shall be supported to prevent sagging or bending.

PART 2 - PRODUCTS

2-1. MATERIALS. Miscellaneous piping materials shall be as specified herein.

2-1.01. Material Classification BR-1. Not Used.

2-1.02. Material Classification BR-2. Not Used.

2-1.03. Material Classification HS-1.

HS-1 – Hose with Insert Type Couplings Flexible connections in chemical piping. Overflow lines from chlorine feeders and residual analyzers. Chemical transfer. Lime slurry at slakers and slurry pumps. Lime slurry in pump discharge.	Hose Couplings	ID not smaller than nominal size. Boston "Crosslinked Polyethylene Hose" or Gates "Renegade", "Mustang 45 HW" or "Stallion" acid-chemical hose. To be selected for resistance to the service chemical. Rigid PVC or other material suitable for service conditions, with band type stainless steel clamps.

2-1.04. Material Classification HS-2.

HS-2 – Hose with Quick Disconnect Couplings Flexible connections in chemical piping. Overflow lines from chlorine feeders and residual analyzers. Lime slurry. Chemical transfer. Lime slurry at slakers and slurry pumps. Lime slurry in pump discharge.	Hose Couplings	ID not smaller than nominal size. Boston "Crosslinked Polyethylene Hose" or Gates "Renegade", "Mustang 45 HW" or "Stallion" acid-chemical hose. To be selected for resistance to the service chemical. Cam-lock type quick connect/disconnect couplers and adapters as manufactured by OPW or PT.

2-1.05. Material Classification TG-1. Not Used.

2-1.06. Material Classification CRP-1. Not Used.

2-1.07. Accessories. Not Used.

PART 3 - EXECUTION

3-1. INSTALLATION. Materials furnished under this section will be installed in accordance with the Miscellaneous Piping and Accessories Installation section.

End of Section

Section 15061

DUCTILE IRON PIPE

PART 1 - GENERAL

1-1. SCOPE. This section covers the furnishing and installation of ductile iron pipe. Ductile iron pipe shall be furnished complete with all fittings, specials, adapters, closure pieces, blowoffs, outlets, caps and plugs, temporary bulkheads, access manholes, jointing materials, pipe hangers and supports, anchors, blocking, encasement, appurtenances, and accessories specified and indicted on the Drawings, and as required for proper installation and functioning of the piping.

Piping furnished hereunder shall be complete with all joint gaskets, bolts, nuts and other jointing materials required for installation or proper operation of any valves and equipment furnished by under this Contract.

Pipe hangers and supports, pressure and leakage testing, cathodic protection, and cleaning and disinfection are covered in other sections. Pipe trenching, embedment, and backfill are covered in the Trenching and Backfilling Section (510).

1-2. SUBMITTALS. Drawings, details, specifications, and installation schedules covering all ductile iron pipe and accessories shall be submitted in accordance with the Submittals Section (01300). The drawings and data shall include, but shall not be limited to, the following:

Certification by manufacturer for each item furnished in accordance with the ANSI/AWWA Standards.

Restrained joints details.

Certification of gaskets by pipe manufacturer, certifying that gasket material is suitable for test pressures and services intended.

Certification of joint lubricant.

Certification of proof-of-design tests for joints, including restrained joints.

Certification of pipe manufacturer or fabricator and certification of proof-of-design tests for welded-on outlets.

Pipe laying schedule complete with a sequence of laying and an explanation of all abbreviations used in the schedule. For long, straight pipe runs, the pipe laying schedule shall list the pipeline station and either the pipe centerline or invert elevation coordinated with the Drawings at least every 100 feet [30 m].

Two samples of the polyethylene encasement, each sample clearly identified as required by the Governing Standards and test results from an independent third party laboratory of the requirements specified in ANSI/AWWA C105/A21.5.

The method that the Contractor proposes to use for measuring deflection of pipe joints.

Submittal data shall clearly indicate the country of origin of pipe, fittings, flanges, restraining devices, and accessories.

1-3. SHIPPING, HANDLING, AND STORAGE. Shipping shall be in accordance with the Product Delivery Requirements Section (01612). Handling and storage shall be in accordance with the Product Storage and Handling Requirements Section (01614), and as specified herein.

Pipe, fittings, and accessories shall be handled in a manner that will ensure installation in sound, undamaged condition. Equipment, tools, and methods used in handling and installing pipe and fittings shall not damage the pipe and fittings. Hooks inserted in ends of pipe shall have broad, well-padded contact surfaces. Unpadded hooks, wire brushes or other abrasive tools shall not be permitted to come into contact with polyethylene lining if such lining is specified. Contractor-furnished pipe and fittings in which the lining has been damaged shall be replaced by and at the expense of Contractor. With the concurrence of Engineer, small and readily accessible damaged areas may be repaired.

PART 2 - PRODUCTS

2-1. PIPE CLASS. The class of ductile iron pipe shall be as indicated in the following table for those services indicated in the Pipeline Schedule section. The specified class includes service allowance and casting allowance.

Pipe Size		ANSI/AWWA Pressure Class
inches	mm	
20 thru 14	500 thru 350	250
12 and smaller	300 and smaller	350

Pipe wall thickness for grooved and threaded end pipe shall be increased if necessary to comply with the following minimum thickness:

Pipe Size		Minimum Thickness Class	
inches	mm	Threaded Ends (1)	Grooved Ends (2)
4-16	100-400	53	53
18	450	53	54
20	500	53	55
24	600	53	56
30-54	750-1400	53	--
60 & 64	1500-1600	350 (3)	--

(1) Complies with ANSI/AWWA C115/A21.15 for minimum pipe wall thickness for threaded flanges.

(2) Complies with ANSI/AWWA C606 for grooved and shouldered joint ductile iron pipe.

(3) Minimum class for 60 and 64 inch pipe is pressure Class 350.

2-2. MATERIALS.

Pipe	Ductile iron, ANSI/AWWA C151/A21.51, Table 1 or Table 3.
Gaskets – All Joint Types	Synthetic rubber unless otherwise specified; natural rubber will not be acceptable. All gaskets shall be furnished by the pipe manufacturer unless another manufacturer's product is indicated. Pipe manufacturer shall submit certificates of gasket suitability certifying that the gasket materials are compatible with the joints specified, are recommended for the specified field test pressure and service conditions. Gaskets for treated or potable water service shall be certified for chlorinated and chloraminated potable water. Gas and oil-resistant gaskets shall be made of Nitrile (NBR [Acrylonitrile Butadiene]) rubber. The name of the material shall be permanently marked or molded on the gasket. Gaskets shall also be certified as suitable where soils may be contaminated with gas and oil products.

Joint Lubricant	Vegetable-based lubricant recommended by the pipe manufacturer. Petroleum or animal-based lubricants will not be acceptable. Lubricants that will be in contact with treated or potable water shall be certified as being in compliance with ANSI/NSF 61.
Fittings	ANSI/AWWA C110/A21.10 (except shorter laying lengths will be acceptable for U.S. Pipe), or ANSI/AWWA C153/A21.53, minimum working pressure rating as follows, unless indicated otherwise on the Drawings

Fitting Size in. [mm]	Material	Type	Min. Working Pressure Rating, psi [kPa]
4 to 24 [100 to 600]	DI	Mechanical and Push-on joints	350 [2,400]
4 to 24 [100 to 600]	DI	Flanged joints	250 [1,700]
30 to 48 [750 to 1,200]	DI	All joints	250 [1,700]
54 to 64 [1,350 to 1,600]	DI	All joints	150 [1,000]

All fittings shall be ductile iron and suitable for a factory test pressure of rated working pressure plus 100 psi [700 kPa] or 1.5 times rated working pressure, whichever is less, without leakage or damage.

Push-on Joints	ANSI/AWWA C111/A21.11.
Restrained Push-on Joints, gaskets with stainless steel gripping segments, (4 inch through 12 inch) [100 mm through 300 mm]	American “Fast Grip” or "Field Lok 350 Gasket" manufactured by U.S. Pipe and furnished to licensed Tyton® joint manufacturer.

Restrained Push-on Joints, locking wedge type, (4 inch through 24 inch) [100 mm through 600 mm]	EBAA Iron "Megalug" Series 1700; U.S. Pipe “TR Flex Gripper Ring”; Star Pipe Products “StarGrip 3100”; or American “Field Flex Ring”, without exception.
Restrained Push-on Joints, positive locking segments and/or rings, (4 inch through 36 inch) [100 mm through 900 mm]	American "Flex-Ring," or "Lok-Ring"; Clow "Super-Lock"; U.S. Pipe "TR Flex" or “HP Lok”; or Griffin "Snap-Lok."
Restrained Push-on Joints, positive locking segments and/or rings, (42 inch through 60 inch) [1000 mm through 1500 mm]	American "Flex-Ring," or "Lok-Ring"; Clow "Super-Lock"; U.S. Pipe "TR Flex"; or Griffin "Snap-Lok."
Restrained Push-on Joints, positive locking segments and/or rings, (64 inch) [1600 mm]	American "Flex-Ring," or "Lok Ring"; Clow "Super Lock"; or Griffin "Snap Lok."

Flanged Joints	ANSI/AWWA C115/A21.15.
Flanges	
Class 250 (Where identified on the Drawings)	Ductile iron, flat faced, with ANSI/ASME B16.1, Class 250 diameter and drilling.
All Others	Ductile iron, Class 125, ANSI/AWWA C115/A21.15.
Flanges	All flanges shall be suitable for test pressure of 1.5 times rated pressure without leakage or damage.
Blind Flanges	All Blind Flanges heavier than 20 pounds shall have lifting lugs.
Bolts	ASTM A307, chamfered or rounded ends projecting 1/4 to 1/2 inch [6.3 to 12.7 mm] beyond outer face of nut.
Nuts	ASTM A563, hexagonal, ANSI/ASME B18.2.2, heavy semifinished pattern.

Gaskets	ASTM D1330, Grade I rubber, full face type, 1/8 inch [3 mm] thick unless otherwise required by pipe manufacturer and accepted by Engineer. Pipe manufacturer shall submit certification of gaskets furnished as indicated above under Gaskets - All Joint Types.
Mechanical Joints	ANSI/AWWA C111/A21.11., with ductile iron glands.
Restrained Mechanical Joints (factory prepared spigot), (4 inch through 48 inch) [100 mm through 1,200 mm]	American "MJ coupled Joints", or Griffin "Mech-Lok".
Restrained Mechanical Joints, (field cut spigot), (4 inch through 24 inch) [100 mm through 600 mm]	EBAA Iron "Megalug" Series 1100, Sigma “One Lok” SLDE series, or Star Pipe Products “StarGrip 3000” without exception.
Wall Pipes or Castings	Mechanical joint with water stop and tapped holes; single casting or fabricated ductile iron pipe; holes sized in accordance with the details on the Drawings and provided with removable plugs.
Mechanical Joints with Tie Rods	As indicated on the Drawings.
Tie Rods	ASTM A307.
Steel Pipe	ASTM A53, Schedule 40 or 80 as indicated on the Drawings.
Washers	ANSI/ASME B18.22.1, plain steel.
Threaded Connections	ANSI/ASME B1.20.1, NPT; with boss or tapping saddle wherever wall thickness minus the foundry tolerance at the tapped connection is less than that required for 4-thread engagement as set forth in Table A.1, Appendix A, of ANSI/AWWA C151/A21.51.

Mechanical Couplings	
Couplings	Dresser "Style 38"; Smith-Blair "411 Steel Coupling"; or Romac “Style 400” or "Style 501"; without pipe stop.
Gaskets	Oil-resistant synthetic rubber gaskets shall be as recommended by the coupling manufacturer. Pipe manufacturer shall submit certification of gaskets furnished as indicated above under Gaskets - All Joint Types.
Restrained Mechanical Couplings	American Pipe “Restrained Coupling Gland Joint” coordinated with mechanical couplings furnished.
Grooved-End Joints	AWWA C606.
Pipe Ends (rigid joints)	Grooved, with dimensions conforming to AWWA C606, Table 3.
Pipe Ends (flexible joints)	Shouldered, with dimensions conforming to AWWA C606, Table 4.
Couplings (non-shouldered pipe)	Tyco/Grinnell "Figure 772," or Victaulic "Style 31."
Couplings (shouldered pipe)	Victaulic "Style 41" or "Style 44".
Flanged Coupling Adapters	
Restrained (4 inch through 12 inch) [100 mm through 300 mm]. Unless otherwise indicated on the Drawings, flanged coupling adapters shall be restrained.	Smith-Blair "Type 912" or Romac "Style FCA501", with anchor studs of sufficient size and number to withstand test pressures.
Unrestrained (14 inch and larger) [350 mm and larger]	Smith-Blair "Type 913" or Romac "Style FC400".
Dismantling Joints	
Restrained (3 inch and larger) [75 mm and larger] Unless otherwise indicated on the Drawings, dismantling joints shall be restrained.	Romac "DJ400"; Dresser "Style 131 Dismantling Joint" or Viking Johnson. For use in potable water systems, coating to be in accordance with NSF-61.
Tapping Saddles	Ductile iron, with stainless steel straps and synthetic rubber sealing gasket, 250 psi [1,700 kPa] pressure rating.

Watertight/Dusttight Pipe Sleeves	PSI "Thunderline Link-Seal", insulating type with modular rubber sealing elements, nonmetallic pressure plates, and stainless steel bolts and nuts.
Shop Coating and Lining	
Cement Mortar Lining with Seal Coat	ANSI/AWWA C104/A21.4.
Protective Fusion-Bonded	ANSI/AWWA C116/A21.16.
Ceramic Epoxy Lining	Induron "Protecto 401 Ceramic Epoxy".
Glass Lining	Two-coat system applied over blast-cleaned surface; ground and finish coats separately fired; finished lining thickness at least 10 mils [200 µm], Mohs' Hardness 5 to 6 density [2,500 to 3,000 kg/m^3] as determined by ASTM D792; Fast Fabricators, Inc. "MEH 32" or "SG-14".
Universal Primer	Manufacturer's standard. If in contact with treated or potable water, certify as being in compliance with ANSI/NSF 61.
Asphaltic Coating	Manufacturer's standard.
Coal Tar Epoxy	Manufacturer's standard.
Liquid Epoxy	ANSI/AWWA C210, non-coal tar modified, or when in contact with treated or potable water, certify as being in compliance with ANSI/NSF 61.
Anti-Seize Thread Lubricant	Jet-Lube "Nikal", John Crane "Thred Gard Nickel", Bostik/Never-Seez "Pure Nickel Special" or Permatex "Nickel Anti-Seize".
Corrosion Protection	
Polyethylene Encasement	Seamless, ANSI/AWWA C105/A21.5; LLDPE - 8 mil [200 µm] or HDCLPE - 4 mil [100 µm].

Heat-shrinkable Coating and Primer (Shrink Sleeve)	ANIS/AWWA C216, cross-linked polyethylene sheeting precoated with adhesive; minimum 80 mils; type and recovery as recommended by Shrink Sleeve manufacturer; Canusa-CPS or Coralenca Adhesives/Rachem Water Wrap.
Wax Tape and Primer	ANSI/AWWA C217, cold-applied petroleum wax primer and cold-applied petroleum wax tape; Trenton Wax-Tape and Primer.
Medium Consistency Coal Tar	Carboline "Bitumastic 50" or Tnemec "46-465 H.B. Tnemecol."

2-3. SHOP COATING AND LINING. The interior of all pipe and fittings, unless noted otherwise, shall be cement mortar lined and seal coated.

Lining for pipe and fittings for gravity sewers and wastewater facilities services shall be as specified below:

Service	Lining
Gravity sewers	Ceramic epoxy.
All other wastewater piping	Cement mortar.

The exterior surfaces of all pipe and fittings which will be exposed in both interior and exterior locations shall be shop primed. Flange faces shall be coated with a suitable rust-preventive compound. Exterior surfaces of all other pipe and fittings shall be coated with asphaltic coating.

PART 3 - EXECUTION

3-1. INSPECTION. Pipe and fittings shall be carefully examined for cracks and other defects immediately before installation; pipe ends shall be examined with particular care. All defective pipe and fittings shall be removed from the site.

3-2. PROTECTION AND CLEANING. The interior of all pipe and fittings shall be thoroughly cleaned of all foreign material prior to installation and shall be kept clean until the work is completed. Before jointing, all joint contact surfaces shall be wire brushed if necessary and wiped clean.

Precautions shall be taken to prevent foreign material from entering the pipe during installation. Debris, tools, clothing, or other objects shall not be placed in or allowed to enter the pipe.

3-3. CUTTING PIPE. Cutting shall be done in a neat manner, without damage to the pipe or the lining. Cuts shall be smooth, straight, and at right angles to the pipe axis. After cutting, the ends of the pipe shall be dressed with a file or a power grinder to remove all roughness and sharp edges. The cut ends of push-on joint pipe shall be suitably beveled.

All field cutting of existing gray cast iron pipe shall be done with mechanical pipe cutters, except where the use of mechanical cutters would be difficult or impracticable.

Ends of ductile iron pipe shall be cut with a portable guillotine saw, abrasive wheel, saw, milling cutter, or oxyacetylene torch. The use of hydraulic squeeze type cutters will not be acceptable. Field-cut holes for saddles shall be cut with mechanical cutters; oxyacetylene cutting will not be acceptable.

Contractor shall use factory prepared pipe ends unless a field cut is required for connections.

3-4. ALIGNMENT AND GRADE. Buried piping shall be laid to the lines and grades indicated on the Drawings and as specified. Pipelines or runs intended to be straight shall be laid straight. Deflections from a straight line or grade shall not exceed the values stipulated in Table 3 (for full-length push-on joint pipe) or Table 4 (for full-length mechanical joint pipe) of AWWA C600, unless specially designed bells and spigots are provided. Contractor shall submit his proposed methods to measure deflection of deflected joints in accordance with the Submittal Section (01300).

Whenever deflections would exceed the values stipulated in Table 3 or Table 4, either shorter pipe sections or fittings shall be installed where needed to conform to the alignment or grade indicated on the Drawings and as acceptable to the Engineer.

Unless otherwise specified or acceptable to Engineer, laser beam equipment, surveying instruments, or other suitable means shall be used to maintain alignment and grade. At least one elevation reading shall be taken on each length of pipe. If laser beam equipment is used, periodic elevation measurements shall be made with surveying instruments to verify accuracy of grades. If such measurements indicate thermal deflection of the laser beam due to differences between the ground temperature and the air temperature within the pipe, precautions shall be taken to prevent or minimize further thermal deflections.

Additional requirements for alignment and grade are covered in the Summary of Work (01010) and Trenching and Backfilling (02202) sections and on the Drawings.

3-4.01. Tolerances. Each section of pipe shall be laid to the alignment and grade indicated on the Drawings and pipe laying schedule with pipe ends within the following tolerances;

+/- 0.10 foot in grade at any point
+/- 0.20 foot in alignment at any point

In addition, piping shall be visually straight or on a smooth curve between the points of defection or curvature indicated on the Drawings. Stricter tolerances than specified above shall be used as necessary to maintain minimum cover, to maintain required clearances, to make connections to existing pipe, to maintain the correct slope to avoid high or low points along the pipeline other than at locations indicated on the Drawings, or to meet other restrictions as required or directed by the Engineer.

3-5. LAYING PIPE. Not Used..
3-6. FIELD JOINTS. Joints in buried and tunnel locations shall be mechanical or push-on type unless otherwise indicated on the Drawings or where required to connect to existing piping or to valves. Bells on wall castings and wall sleeves shall be mechanical joint type, with tapped holes for tie rods or stud bolts. All other joints shall be flanged unless otherwise indicated on the Drawings.

Certification of joint design shall be provided in accordance with ANSI/AWWA C111/A21.11, Section 4.5, Performance Requirements, as modified herein. The joint test pressure shall be not less than 2 times the working pressure or 1-1/2 times the test pressure of the pipeline, whichever is higher. The same certification and testing shall also be provided for restrained joints. For restrained joints, the piping shall not be blocked to prevent separation and the joint shall not leak or show evidence of failure. It is not necessary that such tests be made on pipe manufactured specifically for this project. Certified reports covering tests made on other pipe of the same size and design as specified herein and manufactured from materials of equivalent type and quality may be accepted as adequate proof of design.

Each joint, including restrained joints, shall be checked by Contractor as recommended by the pipe manufacturer to verify that the joint and the restraints are installed properly. Restrained joints shall be extended after they are assembled to minimize further take-up.

Field closure pieces shall be located away from the bends beyond the length over which joints are to be restrained.

3-7. MECHANICAL JOINTS. Mechanical joints shall be carefully assembled in accordance with the pipe manufacturer's recommendations. If effective sealing is not obtained, the joint shall be disassembled, thoroughly cleaned, and reassembled. Bolts shall be uniformly tightened to the torque values listed in Appendix A of ANSI/AWWA C111/A21.11. Over tightening of bolts to compensate for poor installation practice will not be acceptable.

The holes in mechanical joints with tie rods shall be carefully aligned to permit installation of the tie rods. In flange and mechanical joint pieces, holes in the mechanical joint bells and the flanges shall straddle the top centerline for horizontal piping.

3-8. PUSH-ON JOINTS. The pipe manufacturer's instructions and recommendations for proper jointing procedures shall be followed. All joint surfaces shall be lubricated with a soap solution provided by the pipe manufacturer immediately before the joint is completed. Lubricant shall be suitable for use in potable water, shall be stored in closed containers, and shall be kept clean. Each spigot end shall be suitably beveled to facilitate assembly.

Pipe ends for restrained joint pipe shall be prepared in accordance with the pipe manufacturer's recommendations.

3-9. FLANGED JOINTS. Pipe shall extend completely through screwed-on flanges. The pipe end and flange face shall be finish machined in a single operation. Flange faces shall be flat and perpendicular to the pipe centerline.

When bolting flanged joints, care shall be taken to avoid restraint on the opposite end of the pipe or fitting which would prevent uniform gasket compression or would cause unnecessary stress in the flanges. One flange shall be free to move in any direction while the flange bolts are being tightened. Bolts shall be tightened gradually in a crisscross pattern and at a uniform rate, to ensure uniform compression of the gasket around the entire flange. All flange joint bolting procedures shall be in accordance with the pipe manufacturer's recommendations.

Special care shall be taken when connecting piping to any pumping equipment to ensure that piping stresses are not transmitted to the pump flanges. All connecting piping shall be permanently supported to obtain accurate matching of bolt holes and uniform contact over the entire surface of flanges before any bolts are installed in the flanges.

Pump connection piping shall be free to move parallel to its longitudinal centerline while the bolts are being tightened. Each pump shall be leveled, aligned, and wedged into position which will fit the connecting piping, but shall not be grouted until the initial fitting and alignment of the pipe, so that the pump may be shifted on its foundation if necessary to properly install the connecting

piping. Each pump shall, however, be grouted before final bolting of the connecting piping.

After final alignment and bolting, the pump connections shall be tested for applied piping stresses by loosening the flange bolts which, if the piping is properly installed, should result in no movement of the piping relative to the pump or opening of the pump connection joints. If any movement is observed, the piping shall be loosened and re-aligned as needed and then the flanges bolted back together. The flange bolts shall then be loosened and the process repeated until no movement is observed.

3-10. FLANGED COUPLING ADAPTERS. Flanged coupling adapters shall be provided for restrained couplings 12 inch and smaller where indicated on the Drawings and as specified herein. Flange coupling adapters shall be installed in accordance with the coupling manufacturer's recommendations. After the pipe is in place and bolted tight, the locations of holes for the anchor studs shall be determined and the pipe shall be field-drilled. Holes for anchor studs shall be drilled completely through the pipe wall. Hole diameter shall be not more than 1/8 inch [3 mm] larger than the diameter of the stud projection. Unless indicated on the Drawings, all flange coupling adapters shall be restrained.

Unless indicated otherwise on the Drawings, all flange coupling adapters 12 inch and smaller shall be restrained. Flange coupling adapters 14 inch and larger may only be used in unrestrained pipe applications.

The inner and outer surfaces of couplings, except flange mating surfaces, shall be prepared for coating in accordance with instructions of the coating manufacturer and shall then be coated with liquid epoxy in accordance with ANSI/AWWA C210. The flange mating surfaces shall be cleaned and shop primed with universal primer.

3-11. DISMANTLING JOINTS. Dismantling joints shall be provided for restrained couplings 6 inch and larger piping where indicated on the Drawings and as specified herein. Dismantling joints shall comply with AWWA C219 and shall be restrained flange by flange couplings manufactured as a single unit. Dismantling joints shall be installed in accordance with the coupling manufacturer's recommendations. Unless otherwise indicated on the Drawings, dismantling joints shall be restrained.

The inner and outer surfaces of dismantling joints, except flange mating surfaces, shall be prepared for coating in accordance with instructions of the coating manufacturer and shall then be coated with liquid epoxy in accordance with ANSI/AWWA C210. The flange mating surfaces shall be cleaned and shop primed with universal primer.

3-12. MECHANICAL COUPLINGS. Mechanical couplings shall be installed in accordance with the coupling manufacturer's recommendations. A space of at least 1/4 inch [6 mm], but not more than 1 inch [25 mm], shall be left between the pipe ends. Pipe and coupling surfaces in contact with gaskets shall be clean and free from dirt and other foreign matter during assembly. All assembly bolts shall be uniformly tightened so that the coupling is free from leaks, and all parts of the coupling are square and symmetrical with the pipe. Following installation of the coupling, damaged areas of shop coatings on the pipe and coupling shall be repaired to the satisfaction of Engineer.

All surfaces, including the interior surfaces of the middle rings, shall be prepared for coating in accordance with instructions of the coating manufacturer and shall then be coated with liquid epoxy in accordance with ANSI/AWWA C210.

3-12.01. Restrained Mechanical Couplings. Pipe restraining glands with tie bolts shall be provided to restrain mechanical coupling connections where indicated on the Drawings. The connecting pipe shall be furnished with welded retainer rings as recommended by pipe manufacturer. The pipe manufacturer shall also coordinate the restrained connection with the pressure rating, length, and diameter dimensions of the mechanical coupling being furnished to assure proper clearance is provided for completing the restrained coupling installation.

3-13. GROOVED-END JOINTS. Not Used.

3-14. GAS AND OIL-RESISTANT GASKETS. Gas and oil-resistant gaskets shall be installed where specified, indicated on the Drawings, or directed by Engineer where jointing gaskets may be subject to permeation when piping passes through areas where soil may be contaminated with gas or petroleum (oil) products or organic solvents or their vapors.

3-15. CORROSION PROTECTION.

3-15.01. Polyethylene Encasement. All buried pipe including all straight pipe, bends, tees, adapters, closure pieces, and other fittings or specials, shall be provided with at least one wrap of polyethylene encasement. Other locations where ductile iron pipe and accessories shall be double wrapped with polyethylene encasement shall be as specified herein. Where ductile iron pipe is also embedded or encased in concrete the polyethylene encasement shall be installed around the pipe for 5 feet [1.5 m] extending into each end of the concrete encasement.

All buried flanged valves, mechanical joint couplings with tie rods, mechanical couplings, restrained mechanical couplings and other pipe harness assemblies at valves or structure walls shall be provided with two wraps of polyethylene encasement in addition to other corrosion protection coatings as specified herein.

Polyethylene tube protection shall be installed in accordance with ANSI/AWWA C105/A21.5, Method A. Preparation of the pipe shall include, but shall not be limited to, removal of lumps of clay, mud, cinders, etc., prior to installation.

The terms "polyethylene tube protection" and "polyethylene encasement" are interchangeable and shall have the same meaning in these Contract Documents.

3-15.01.01. Inspection and Testing. Tests for preliminary acceptance of polyethylene encasement materials as required in the submittal paragraph shall be made at the expense of the Contractor.

At the Owner's expense, the Owner may obtain samples from the material supplied in the field and have test conducted of the requirements specified in ANSI/AWWA C105/A21.5 by an independent third-party laboratory,

3-15.02. Mechanical Joint Couplings with Tie Rods. The mechanical joint tie rods, bolt studs, pipe spacers and washers of buried mechanical joint couplings shall be protected by wrapping them with wax tape in accordance with ANSI/AWWA C217. A primer shall be applied prior to applying the wax tape. The application of the wax tape shall be as recommended by the wax tape manufacturer. There shall be no bare or unprotected ferrous metal surfaces.

Following application of the wax tape protection, the entire mechanical joint coupling assembly shall be wrapped with two layers of polyethylene encasement as specified herein. The two wraps of polyethylene encasement shall be lapped a minimum of 12 inches with the polyethylene encasement of the piping on each side of the coupling assembly.

3-15.03. Flanged Valves. The flange bolts and nuts on buried flanged valves shall be protected by wrapping them with wax tape in accordance with ANSI/AWWA C217. A primer shall be applied prior to applying the wax tape. The application of the wax tape shall be as recommended by the wax tape manufacturer. There shall be no bare or unprotected ferrous metal surfaces.

Following application of the wax tape protection, the entire valve, including the bottom housing and the actuator to the wrench nut, shall be wrapped with two layers of polyethylene encasement as specified herein. The two wraps of polyethylene encasement shall be lapped a minimum of 12 inches with the polyethylene encasement of the piping on each side of the valve.

3-15.04. Mechanical Couplings. The tie bolts and nuts on all buried mechanical couplings shall be coated with two coats of medium consistency coal tar.

After the protective coating has been applied to the tie bolts, the entire mechanical coupling shall be encapsulated with a shrink sleeve. The shrink sleeve shall extend a minimum of 6 inches on to the pipe on each side of the

coupling. A primer shall be applied to the piping on each side of the coupling prior to installing the shrink sleeve. The application of the shrink sleeve shall be in accordance with ANSI/AWWA C216 and as recommended by the shrink sleeve manufacturer. There shall be no bare or unprotected ferrous metal surfaces. Following installation of the shrink sleeve, the entire assembly shall be encapsulated with two wraps of polyethylene encasement lapped a minimum of 12 inches with the polyethylene encasement of the piping on each side of the assembly as specified herein.

3-15.05. Restrained Mechanical Couplings. The corrosion protection for the mechanical coupling and its tie bolts and nuts of all buried restrained mechanical coupling assemblies shall be protected with two coats of medium consistency coal tar and shrink sleeve as specified herein for buried mechanical couplings.

The tie rods and bolts of the restraining glands of the coupling assembly shall be protected by wrapping them with wax tap in accordance with ANSI/AWWA C217. A primer shall be applied prior to applying the wax tape. The application of the wax tape shall be as recommended by the wax tape manufacturer. There shall be no bare or unprotected ferrous metal surfaces.

Following the application of the wax tape, the entire restrained mechanical coupling assembly shall be encapsulated with two wraps of polyethylene encasement lapped a minimum of 12 inches with the polyethylene encasement of the piping on each side of the assembly as specified herein.

3-15.06. Other Assemblies. All ferrous metal clamps, tie rods, bolts, and other components of buried joint harnesses, tapping saddles, or pipe reaction anchorages in contact with earth or other fill material and not encased in concrete, shall be protected by wrapping them with wax tape in accordance with ANSI/AWWA C217. A primer shall be applied prior to applying the wax tape. The application of the wax tape shall be as recommended by the wax tape manufacturer. There shall be no bare or unprotected ferrous metal surfaces.

Following the application of the wax tape, the entire assembly shall be encapsulated with two wraps of polyethylene encasement lapped a minimum of 12 inches with the polyethylene encasement of the piping on each side of the assembly as specified herein.

3-15.07. Surfaces Exposed in Manholes and Vaults. Unless otherwise specified, all uncoated surfaces exposed in manholes and vaults shall be cleaned and coated with two coats of medium consistency coal tar. The first coat shall be dry and hard before the second coat is applied. There shall be no unprotected, bare, or uncoated ferrous metal surfaces.

3-15.08. Cathodic Protection Systems. Not Used.

3-16. OUTLETS. Where a 12 inch [300 mm] or smaller branch outlet is indicated and the diameter of the parent pipe is at least twice the diameter of the branch, a tee, a factory welded-on boss, or a tapping saddle will be acceptable.

Where a 4 inch [100 mm] or larger branch outlet is indicated on the Drawings and the diameter of the branch pipe for a given diameter of parent pipe is less than or equal to the maximum diameter listed herein, a factory welded-on outlet fabricated from centrifugally cast ductile iron pipe will be acceptable.

Parent Pipe Diameter Versus Maximum Branch Pipe Diameter for Welded-On Outlets

Parent Pipe Dia inches [mm]	Max Branch Pipe Dia inches [mm]	Parent Pipe Dia inches [mm]	Max Branch Pipe Dia inches [mm]
8 [200]	4 [100]	30 [750]	20 [500]
10 [250]	6 [150]	36 [900]	24 [600]
12 [300]	8 [200]	42 [1050]	30 [750]
14 [350]	8 [200]	48 [1200]	30 [750]
16 [400]	10 [250]	54 [1350]	36 [900]
18 [450]	12 [300]	60 [1500]	36 [900]
20 [500]	14 [350]	64 [1600]	36 [900]
24 [600]	16 [400]		

All 30 inch [750 mm] and smaller branch pipe diameter welded-on outlets shall be rated for a working pressure of 250 psi [1,700 kPa], 36 inch [900 mm] branch diameter welded-on outlets shall be rated for a working pressure of 200 psi [5,000 kPa], and all outlets shall have a minimum factor of safety of 2.0. The pipe manufacturer shall provide test data and certification of proof of design. It is not necessary that these tests be performed on pipe manufactured specifically for this project. Certified reports covering tests made on other pipe of the same size and design as specified herein and manufactured from materials of equivalent type and quality may be accepted as adequate proof of design.

Welded-on outlets may be provided as a radial (tee) outlet, a tangential outlet, or a lateral outlet fabricated at a specific angle to the parent pipe (in 15 degrees [0.262 rad] increments between 45 degrees and 90 degrees [0.785 to 1.570 rad] from the axis of the parent pipe), as indicated on the Drawings. The fillet weld dimensions for welded-on outlets shall be as specified herein. Parent pipe and branch pipe shall meet hydrostatic test requirements in accordance with ANSI/AWWA C151/A21.51, Sec. 5.2, prior to fabrication.

Welded-on Outlet Fillet Weld Dimensions for Specified Outlet Configurations

Radial and Lateral Outlets			Tangential Outlets		
Parent Pipe Dia inches [mm]	Branch Pipe Dia inches [mm]	Weld Fillet Size inches [mm]	Parent Pipe Dia inches [mm]	Branch Pipe Dia inches [mm]	Weld Fillet Size inches [mm]
24 [600] and smaller	24 [600] and smaller	1 x 1 [25 x 25]	8-30 [200-750]	24 [600] and smaller	1-1/4 x 1-1/4 [32 x 32]
30-48 [750-1200]	24 [600] and smaller	1-1/4 x 1-1/4 [32 x 32]	36-54 [900-1350]	24 [600] and smaller	1-1/2 x 1-1/2 [38 x 38]
54-64 [1350-1600]	24 [600] and smaller	2-1/4 x 2-1/2 [57 x 64]	60-64 [1500-1600]	24 [600] and smaller	2-1/2 x 2-1/2 [64 x 64]
42-64 [1050-1600]	30 [750]	2-1/2 x 2-1/2 [64 x 64]	42-54 [1050-1350]	30 [750]	2-1/2 x 2-1/2 [64 x 64]
54-64 [1350-1600]	36 [900]	2-3/4 x 2-3/4 [70 x 70]	60-64 [1500-1600]	30 [750]	2-3/4 x 2-3/4 [70 x 70]

All joints on welded-on branch outlets shall be made in accordance with the latest revision of ANSI/AWWA C111/A21.11 and/or ANSI/AWWA C115/A21.15, as applicable. All outlets shall be fabricated from centrifugally cast ductile iron pipe designed in accordance with ANSI/AWWA C150/A21.50 and manufactured and tested in accordance with ANSI/AWWA C151/A21.51. Ni-Rod FC 55® electrodes manufactured by International Nickel Corporation (or an electrode with equivalent properties) shall be used in the manufacture of the fillet welds. Carbon steel electrodes will not be acceptable. Special Thickness Class 53 pipe shall be used for all branch pipe and parent pipe in 4 to 54 inch [100 to 1350 mm] sizes. Pressure Class 350 pipe shall be used for 60 inch and 64 inch [1,500 and 1,600 mm] parent pipe. After welding, each fabricated outlet shall be subjected to a 15 psi [100 kPa] air test. A soap and water solution shall be applied during the testing procedure to inspect the weld for leakage. Any welds that show air seepage shall be refabricated and retested.

Welded-on outlets shall be fabricated by the pipe manufacturer at its production facilities. Manufacturers of welded-on outlets shall have at least 5 years of satisfactory experience in the manufacture and performance of these products. The manufacturer shall have a documented welding quality assurance system and shall maintain resident quality assurance records based on ANSI/AWS D11.2, the Guide for Welding Iron Castings. The manufacturer shall also maintain appropriate welding procedure specifications (WPS) and procedure qualification (PQR), and welder performance qualification (WPQR) records.

The type of pipe end for the branch outlet shall be as specified or indicated on the Drawings. The maximum size and laying length of the welded-on branch

outlet shall be as recommended by the pipe manufacturer and shall be acceptable to Engineer for the field conditions and the connecting pipe or valve. Pipe embedment material and trench backfill shall be placed and compacted under and around each side of the outlet to hold the pipe in proper position and alignment during the subsequent pipe jointing, embedment, and backfilling.

At locations acceptable to Engineer, drilling and tapping of the pipe wall for 2 inch [50 mm] and smaller pipe connections will also be acceptable, provided that the wall thickness, minus the casting allowance, at the point of connection equals or exceeds the wall thickness required for 4-thread engagement in accordance with Table A.1, Appendix A of ANSI/AWWA C151/A21.51.

3-17. WALL AND FLOOR PIPES Wall and floor pipes shall be installed where ductile iron pipes pass through concrete walls or floors, unless otherwise indicated on the Drawings.

Where a flange and mechanical joint pipe piece is to connect to a mechanical joint wall pipe or casting, the bolt holes in the bell of the wall pipe or casting shall straddle the top centerline of the horizontal pipe or casting and shall align with the bolt holes in the flange and mechanical joint piece. The top centerline shall be marked on the wall pipe or casting at the foundry or fabrication shop.

In vertical piping, the bolt holes of flanged and mechanical joint floor pipes or castings shall be aligned with the bolt holes of the flange or mechanical joint connecting piece. The required centerline alignment and orientation of the floor pipe or casting shall be marked on the floor pipe or casting at the foundry or fabrication shop.

3-18. WALL AND FLOOR SLEEVES. Wall and floor sleeves shall be installed where indicated on the Drawings and shall be installed where ductile iron pipe passes through concrete walls and floors or masonry walls, unless otherwise noted. To minimize sleeve size, piping on either side of the sleeve shall be provided with a screw-on flange, grooved coupling, or mechanical coupling with anchor studs to allow the pipe to pass through the sleeve. Where required, sleeves in masonry walls may be enlarged enough for flange or other joint restraint to pass through the sleeve.

Where specified or indicated on the Drawings, one or two sets of modular casing seals shall be installed at the face of walls to seal against soil or provide a dust or water tight seal. Contractor shall coordinate the diameter of wall or floor sleeves with the modular casing seal manufacturer. When soil may be present at wall sleeves, two sets of modular casing seals shall be installed, one at each face of the wall. Unless otherwise indicated on the Drawings, modular casing seals shall not be used in submerged conditions unless the hydrostatic pressure is less than 20 feet and piping is less than 24 inch size.

3-19. REDUCERS. Reducers shall be eccentric or concentric as indicated on the Drawings. Reducers of eccentric pattern shall be installed with the straight side on top, so that no air traps are formed.

3-20. BLOWOFFS. Not Used.

3-21. ACCESS OPENINGS. Not Used.

3-22. CONNECTIONS WITH EXISTING PIPING. Connections between new work and existing piping shall be made using fittings suitable for the conditions encountered. Each connection with an existing pipe shall be made at a time and under conditions which will least interfere with service to customers, and as authorized by Owner. Facilities shall be provided for proper dewatering and for disposal of all water removed from dewatered lines and excavations without damage to adjacent property.

Special care shall be taken to prevent contamination when dewatering, cutting into, and making connections with existing potable water piping. Trench water, mud, or other contaminating substances shall not be permitted to enter the lines. The interior of all pipe, fittings, and valves installed in such connections shall be thoroughly cleaned and then swabbed with, or dipped in, a 200 mg/L chlorine solution.

3-23. INSULATED FLANGED JOINTS. Not Used.

3-24. CONCRETE ENCASEMENT. Not Used.

3-25. REACTION ANCHORAGE AND BLOCKING. Not Used.

3-26. PRESSURE AND LEAKAGE TESTS. After installation, pipe and fittings shall be subjected to a pressure test and a leakage test in accordance with the Pipeline Pressure and Leakage Testing Section (02704).

All pipe, fittings, valves, pipe joints, and other materials which are found to be defective shall be removed and replaced with new and acceptable materials, and the affected portion of the piping shall be retested by and at the expense of Contractor.

All joints shall be watertight and free from visible leaks. Any visible leak which is discovered within the correction period stipulated in the General Conditions shall be repaired by and at the expense of Contractor.

3-27. CLEANING AND DISINFECTION. The interior of all pipe and fittings shall be thoroughly cleaned before installation and shall be kept clean of any foreign matter until the work has been accepted. All joint contact surfaces shall be kept clean until the joint is completed.

After installation, all potable water pipelines shall be cleaned and disinfected as specified in the Pipe Section (510).

End of Section

Section 15062

STEEL PIPE

PART 1 - GENERAL

1-1. SCOPE. This section covers the furnishing and installation of steel pipe 6 inches [150 mm] in diameter and larger. Steel pipe shall be furnished and installed complete with all fittings, specials, adapters, closure pieces, blowoffs, outlets, caps and plugs, temporary bulkheads, access manholes, jointing materials, pipe hangers and supports, anchors, blocking, encasements, cathodic protection, appurtenances, and accessories specified and indicated on the Drawings, and as required for proper installation and functioning of the piping.

Steel pipe smaller than 6 inches [150 mm] in diameter, light wall steel pipe, miscellaneous small piping, pipe hangers and supports, pressure and leakage tests, and cleaning and disinfection are covered in other sections. Pipe trenching, embedment, and backfill are covered in the Trenching and Backfilling Section (02202).

The size, service, and location of steel pipelines are covered in the Steel Pipe Schedule.

Piping furnished hereunder shall be complete with all joint gaskets, bolts, nuts and other jointing materials required for installation of any valves and equipment, including any valves and equipment furnished by Owner or others for installation under this Contract.

1-2. GOVERNING STANDARDS. Except as modified or supplemented herein, all steel pipe, fittings, and specials shall conform to the applicable requirements of the following standards:

ANSI/AWWA Standards	Title
C200	Steel Water Pipe - 6 In. [150 mm] and Larger
C203	Coal-Tar Protective Coatings and Linings for Steel Water Pipelines - Enamel and Tape - Hot Applied
C205	Cement-Mortar Protective Lining and Coating for Steel Water Pipe - 4 In. (100 mm) and Larger - Shop Applied

C206	Field Welding of Steel Water Pipe
C207	Steel Pipe Flanges for Waterworks Service – Sizes 4 In. through 144 In. [100 mm through 3,600 mm]
C208	Dimensions for Fabricated Steel Water Pipe Fittings.
C209	Cold-Applied Tape Coatings for the Exterior of Special Sections, Connections, and Fittings for Steel Water Pipelines
C210	Liquid-Epoxy Coating Systems for the Interior and Exterior of Steel Water Pipelines
C216	Heat-Shrinkable Cross-Linked Polyolefin Coatings for the Exterior of Special Sections, Connections, and Fittings for Steel Water Pipelines
C217	Petrolatum and Petroleum Wax Tape Coatings for the Exterior of Connections and Fittings for Steel Water Pipelines
C222	Polyurethane Coatings for Interior and Exterior of Steel Pipe and Fittings
C602	Cement Mortar Lining of Water Pipelines in Place – 4 In. [100 mm] and Larger
C604	Installation of Steel Water Pipe – 4 In. (100 mm) and Larger
C606	Grooved and Shouldered Joints
M11	Steel Pipe – A Guide for Design and Installation

<u>ANSI/ASME Standards</u>

B1.1	Unified Inch Screw Threads (UN and UNR Thread Form)
B16.47	Large Diameter Steel Flanges NPS 26 through NPS 60
B18.2.1	Square and Hex Bolts and Screws (Inch Series)

B18.2.2	Square and Hex Nuts (Inch Series)
B36.10	Welded and Seamless Wrought Steel Pipe

1-3. QUALIFICATIONS. Pipe manufacturer shall be ISO-9001 or SPFA certified with 5 years' experience in the manufacture of steel pipe, fittings, coatings, and linings specified. All pipe, fittings, specials, coatings, linings, and appurtenances shall be fabricated at one company facility for quality control purposes, unless otherwise acceptable to the Engineer.

1-3.01. Pipe Manufacturer's Experience and Field Services. All steel pipe, fittings, specials, bolts, gaskets, other jointing materials and appurtenances shall be fabricated, lined, coated, and furnished under the direction and management of one pipe manufacturer. The pipe manufacturer responsibilities, which shall include, at a minimum; coordinating and furnishing all pipe materials, gaskets, bolts, and other jointing materials and pipe appurtenances (except for furnishing coupled joints and other similar products by a specified manufacturer) for a complete piping system that meets the specified pipe test pressure and service conditions; certifying that all pipe, fittings, specials, and other pipe materials, gaskets, and bolts specified herein are being manufactured in full accordance with the Contract Documents; preparing and submitting all submittal information and shop drawings; and making any corrections that may be required to submittal information and shop drawings.

The pipe manufacturer's minimum required experience qualifications shall include manufacture of interior and buried plant piping of similar diameters of at least two water or wastewater plants with joints, linings, and coatings suitable for the same or higher pressure rating, which has performed satisfactorily for the past 5 years.

All steel pipe shall be installed in accordance with the pipe manufacturer's recommendations.

1-4. SUBMITTALS. Drawings, specifications, installation schedules, welding procedures and welder qualifications, and other data showing complete details of the fabrication, construction, weld locations, joint details and certification, and installation of pipe, fittings, specials, and connections, together with complete data covering all materials proposed for use, shall be submitted in accordance with the Submittals Section (01300).

Submittals shall include the ASTM designation for the material from which each class of pipe is fabricated.

Submittals shall pipe laying schedule and marking diagrams compatible with the requirements of AWWA Manual 11 (M-11) which indicate the specific number of each pipe, fitting, and special and the installed location and direction of each pipe fitting, and special. The numbers indicated on the drawings shall correspond with those painted on the pipe.

A written statement from the gasket material manufacturer shall be submitted, certifying that the gasket materials are compatible with the joints specified and are recommended for the specified field test pressure and service conditions.

1-5. SHIPPING, HANDLING, AND STORAGE. Shipping shall be in accordance with the Product Delivery Requirements Section (01612). Handling and storage shall be in accordance with the Product Storage and Handling Section (01614), and as specified herein.

Pipe, fittings, and accessories shall be handled and stored as recommended by the pipe manufacturer and shall be handled in a manner that will ensure installation in sound, undamaged condition. Equipment, tools, and methods used in handling and installing pipe and fittings shall not damage the pipe and fittings. Hooks inserted in ends of and under or around pipe shall have broad, well-padded contact surfaces.

Contractor-furnished pipe and fittings in which the lining has been damaged shall be replaced by and at the expense of Contractor. With the concurrence of Engineer, small and readily accessible damaged areas may be repaired as recommended by the pipe manufacturer.

Contractor shall repair any damage to pipe coatings and linings before the pipe is installed.

PART 2 - PRODUCTS

2-1. BASIS OF DESIGN. Steel pipe, fittings, and specials shall be fabricated type for pipe 16 inches and larger, and may be either fabricated or mill type for pipe 14 inches and smaller. All items shall be to the sizes, dimensions, and shapes indicated on the Drawings or specified herein.

The specified size of fabricated pipe, fittings, and specials shall be the nominal inside diameter, in inches [mm], where 12 inches [300 mm] and smaller, and the actual inside diameter of pipe lining, where 14 inches [350 mm] and larger.

The specified size of mill pipe, fittings, and specials shall be the nominal pipe size as set forth in ANSI/ASME B36.10.

Pipe design shall be performed by the pipe manufacturer. Minimum design criteria shall be as specified.
In addition to the pipe markings required by ANSI/AWWA C200, each pipe section, fitting, and special shall be clearly marked to indicate the service, the wall thickness, and the minimum yield strength of the pipe material.

2-1.01. Pipe Wall Thickness. The wall thickness for internal pressure due to hoop stress shall be determined by the following formula, except that the minimum wall thickness and the maximum diameter to thickness ratio shall be as indicated in the Steel Pipe Schedule. Pipe shall be designed for all conditions indicated in the Steel Pipe Schedule.

$t = (PD)/(2s)$,
where

t = the pipe wall thickness in inches [mm]

s = the allowable fiber stress in psi [Pa], shall not exceed 50 percent of the yield strength of the steel plate at working pressure or 75 percent of the yield strength at the larger of field test pressure or working pressure plus surge pressure.

P = the pipe working pressure or the larger of field test pressure or working pressure plus surge pressure in psi [Pa].

D = the pipe outside diameter, in inches [mm], of straight pipe sections or the larger outside diameter of tapered sections.

The cement mortar lining shall not be used in the pipe wall stiffness calculations.

The pipe wall thickness shall be in accordance with ANSI/AWWA M11, except that all pipe shall have a wall thickness of at least 1/4 inch [6.3mm], and a diameter of wall thickness ratio not to exceed 158. Pipe wall thickness shall be constant for the entire length of pipe section. Pipe wall thickness shall include zero minus tolerance.

Unless otherwise indicated, the working, surge, and test pressures shall be as indicated in the Steel Pipe Schedule.

2-1.02. Fitting Dimensions. The dimensions of steel pipe fittings shall be as indicated on Figures 1-15062(A) and 1-15062(B) and shall be designed by the pipe manufacturer.

2-1.03. Reinforcement of Fittings and Specials. Not Used.

2-1.04. Joints. Acceptable joints of the type indicated on the Drawings and as specified herein shall be provided for all pipe installations in the locations indicated or accepted by Engineer. To facilitate installation, additional field-

welded or mechanically coupled joints may be provided, but shall be kept to a minimum, and their locations shall be acceptable to Engineer. Field-welded joints shall not be used in pipe smaller than 30 inches [750 mm], except in locations where the interior coating can be satisfactorily repaired and inspected.

Each joint, including restrained joints, shall be checked by Contractor as recommended by the pipe manufacturer to verify that the joint and the restraints are installed properly. The pipe manufacturer shall furnish a metal gauge or other tools as required to measure joints.

2-2. MATERIALS.

Pipe, Fittings, and Specials	ANSI/AWWA C200. All steel shall be fully killed, with a maximum carbon content of 0.25 percent, made to a fine austenitic grain size practice, and manufactured from continuous cast steel. Maximum yield strength shall be limited to 42,000 psi [289,600 kPa].
Gaskets – All Joint Types	Synthetic rubber unless otherwise specified; natural rubber will not be acceptable. All gaskets shall be furnished by the pipe manufacturer, unless another manufacturer's product is specified. Pipe manufacturer shall submit certificates of gasket suitability certifying that the gasket materials are compatible with the joints specified and are recommended for the specified field test pressure and service conditions. Gaskets for treated or potable water service shall also be certified for chlorinated and chloraminated potable water.

	Gas and oil-resistant gaskets shall be made of Nitrile (NBR [Acrylonitrile Butadiene]) rubber unless a different gasket material is required by the pipe manufacturer and accepted by the Engineer. The name of the material shall be permanently marked or molded on the gasket. Gaskets shall also be certified as suitable where soils may be contaminated with gas and oil products.
Joint Lubricant	Vegetable-based lubricant recommended by the pipe manufacturer. Petroleum or animal-based lubricants will not be acceptable. Lubricants that will be in contact with treated or potable water shall be certified as being in compliance with ANSI/NSF 61.
Flanged Joints	
Flanges	ANSI/AWWA C207, Class D, slip-on, except where otherwise specified or indicated on the Drawings.
Dimensions and Drilling	ANSI/AWWA C207, as indicated on the Drawings.
Blind Flanges	ANSI/AWWA C207, unless otherwise indicated on the Drawings or specified. All blind flanges heavier than 20 pounds shall have lifting lugs.
Gaskets	ANSI/AWWA C207. Pipe manufacturer shall submit certification of gaskets furnished as indicated above under Gaskets – All Joint Types.
Flange Bolting	
Material	ANSI/AWWA C207, unless otherwise required by the pipe manufacturer including higher strength and accepted by the Engineer.

Type	Bolt and nut; bolt-stud and two nuts permitted for 1 inch [25 mm] and larger.
Bolts and Bolt-Studs	
Length	As required for ends to project 1/4 to 1/2 inch [6 to 12 mm] beyond outer face of nut.
Ends	Chamfered or rounded.
Threading	ANSI/ASME B1.1, coarse thread series, Class 2A fit. Bolt-studs may be threaded full length.
Bolt Head Dimensions	ANSI/ASME B18.2.1; regular pattern for square, heavy pattern for hexagonal.
Nuts	Hexagonal.
Dimensions	ANSI/ASME B18.2.2, heavy, semi-finished pattern.
Threading	ANSI/ASME B1.1, coarse thread series, Class 2B fit.

Coupled Joints

Mechanical Couplings

Gaskets	Gaskets shall be as recommended by the coupling manufacturer. Pipe manufacturer shall submit certification of gaskets furnished as indicated above under Gaskets – All Joint Types.
Full Ring Type	
Reducing	Baker "Series 220", Dresser "Style 62", or Smith-Blair "413" and "415"; without pipe stop.
All Others	Baker "Series 200", Dresser "Style 38", or Smith-Blair "411 Steel Coupling"; without pipe stop. Victaulic Depend-O-Lok, Inc. "ExE Type 1" or "ExE Type 2".

Split Ring Type	Victaulic Company “VBSP Style 230S”, flexible split type, stainless steel, with synthetic rubber O-ring gaskets suitable for wastewater containing chlorine levels up to 5 ppm.
Grooved Couplings	ANSI/AWWA C606; Victaulic "Vic-Ring OGS Coupling –Style 44".
Restrained Joints	
Welded	ANSI/AWWA C200 and C206.
Lugs or Collars	ASTM A283, Grade B or C; or ASTM A36.
Tie Bolts	ASTM A193, Grade B7.
Threading	ANSI/ASME B1.1, Class 2A fit, coarse thread series for 7/8 inch [22 mm] and smaller, and 8-thread series for 1 inch [25 mm] and larger.
Ends	Chamfered or rounded.
Nuts	Hexagonal, ASTM A194, Grade 2H or better.
Threading	As specified for tie bolts, except Class 2B fit.
Dimensions	ANSI/ASME B18.2.2, heavy semifinished pattern.
Flat Washers	Hardened steel, ASTM A325.
Small Branch Connections	
Pipe Nipples	Seamless black steel pipe, ASTM A53, standard weight (Schedule 40).
Welding Fittings	
Threaded Outlets	Bonney Forge "Thredolets" or Flowserve/Vogt "Weld Couplets".
Welded Outlets	Bonney Forge "Weldolets" or Flowserve/Vogt "Weld Couplets".
Coatings and Linings	All materials in contact with treated or potable water shall be certified as being in compliance with ANSI/NSF 61.

Cement Mortar Lining	ANSI/AWWA C205 and C602.
Cement	ASTM C150, Type II.
Sand	ANSI/AWWA C205, Section 4.2.3, except sand for field-applied lining shall pass a No. 16 [1.18 mm] sieve.
Epoxy Bonding Agent	ASTM C881, Type II, moisture insensitive and suitable for service conditions.
Latex Admixture	Euclid "Flex-Con" or Sika "SikaLatex".
Universal Primer	Manufacturer's standard.
Polyurethane Coating	See Section 09810 Polyurethane Coating for Steel Pipe
Watertight/Dusttight Pipe Sleeves	"PSI Thunderline/Link-Seal", insulating type with modular rubber sealing elements, nonmetallic pressure plates, and stainless steel bolts and nuts.
Modular seal for pipe greater than 48"	Link Seal Model LS-600-S, EDPM
Modular seal for 48" pipe	Link Seal Model LS-575-S, EDPM
Anti-Seize Thread Lubricant	Jet-Lube "Nikal", John Crane "Thred Gard Nickel", Bostik/Never-Seez "Pure Nickel Special" or Permatex "Nickel Anti-Seize".
Anchor Bolts	ASTM A307.
Joint Grout and Diapers	ANSI/AWWA C205.

2-3. ENDS OF SECTIONS.

2-3.01. For Field Welding. Ends of pipe, fittings, and specials for joints butt-welded in the field shall have the ends beveled for butt welding in accordance with the governing standards.

2-3.02. For Fitting with Flanges. Ends to be fitted with slip-on flanges shall be prepared to accommodate the flanges in accordance with the governing standards.

2-3.03. For Stab Joints. Stab joints shall be designed so that the gasket will maintain a watertight joint under all conditions of service, including expansion, contraction, and earth settlement. The gasket shall not support the entire weight

of the pipe. Spigot ends shall have a groove to retain the gasket. Pipe ends shall be self-centering without the aid of the gasket.

2-3.04. For Mechanical Couplings. Ends to be joined by mechanical couplings shall be plain end type. Pipe seam welds on ends to be joined by mechanical couplings without pipe stops shall be ground flush to permit slipping the coupling in at least one direction to clear the pipe joint. The welds on ends to be joined by split ring type couplings shall be ground flush to allow uniform contact of the shoulder and pipe wall. Outside diameter and out-of-round tolerances shall be within the limits specified by the coupling manufacturer.

Where retainer rings for split ring mechanical couplings are required to be fixed to the ends of pipe to provide restraint within a mechanical coupling, at least one of the restraint rings shall be welded in place in the field to assure the coupling is installed with the pipe in a fully-extended position.

2-3.05. For Grooved Couplings. Ends to be joined by grooved couplings shall be of the shouldered type, conforming to the governing standard and as recommended by the coupling manufacturer for the size and wall thickness of the pipe, fitting, or special being coupled, and for the maximum test or working pressure to which the couplings will be subjected.

2-3.06. For Flanged Coupling Adapters. Not Used.

2-3.07. For Connection to Dissimilar Pipe Materials. Steel pipe connections to buried or submerged concrete pipe or cast or ductile iron pipe shall be made with insulated flanges.

2-4. SEAMS. Except for seamless mill-type pipe, all piping shall be made from steel plates rolled into cylinders or sections thereof with the longitudinal seams butt-welded, or shall be spirally formed and butt-welded. There shall be not more than two longitudinal seams. Girth seams shall be butt-welded and shall be spaced not closer than 10 feet [3 m] apart except in specials and fittings.

2-5. PIPE LENGTHS. Straight pipe section lengths shall be pipe manufacturer's standard lengths, unless otherwise indicated on the Drawings.

All pipe to be connected with mechanical couplings shall be fabricated so that the space between pipe ends within the couplings will not exceed the amount recommended by the coupling manufacturer, but shall be at least 1/2 inch [12 mm].

2-6. SMALL BRANCH CONNECTIONS. Branch connections 2-1/2 inches [63 mm] and smaller shall be made with welding fittings with threaded outlets. Where the exact outlet size desired is in doubt, but is known to be less than

1 inch [25 mm], a 1 inch [25 mm] outlet shall be provided and reducing bushings used as needed.

Branch connections sized 3 through 12 inches [75 through 300 mm] shall be made with pipe nipples or with welding fittings with welded outlets. Pipe nipples and welding fittings shall be welded to the pipe shell and reinforced as needed to meet design and testing requirements.

Small branch connections shall be so located that they will not interfere with joints, supports, or other details, and shall be provided with caps or plugs to protect the threads during shipping and handling.

2-7. ACCESS MANHOLES. Not Used.

2-8. DRAINS AND VENTS. Pipe used for drain and vent piping shall be ASTM A53, standard weight, black steel pipe. Drain valves shall be hose valves, unless otherwise shown on Drawings. Vent valves shall be resilient seat globe valves. Drain and vent valves shall comply with the requirements of the valves section.

2-9. FLANGED JOINTS. Flange faces of flanged joints shall be normal to the pipe axis. Angular deflection (layback) of the flange faces shall not exceed the allowable set forth in Section 4.3 of ANSI/AWWA C207. All flanges shall be refaced after welding to the pipe, if necessary to prevent distortion of connecting valve bodies from excessive flange bolt tightening and to prevent leakage at the joint.

Pipe lengths and dimensions and drillings of flanges shall be coordinated with the lengths and flanges for valves, pumps, and other equipment to be installed in the piping. All mating flanges shall have the same diameter and drilling and shall be suitable for the pressures to which they will be subjected.

Flanges shall be of the slip-on type, except that welding-neck or slip-on flanges welded to short lengths of pipe shall be used where installation of flanges in the field is permitted or required.

For welding neck flanges, the pipe shall be concentrically reduced as necessary for proper alignment of the pipe wall with the welding neck flange for butt welding. The interior of the weld joint and flange shall be cement lined in the shop as specified in ANSI/AWW C205.

2-10. STAB JOINTS. Contractor shall obtain from the pipe manufacturer and shall submit certification that the pipe joints will withstand pressures equal to those specified, and documentation that joints of the type proposed have performed satisfactorily under similar conditions..

2-11. MECHANICAL COUPLINGS. The middle ring of mechanical couplings shall have a thickness at least equal to the wall thickness specified herein for the size of pipe on which the coupling is to be used. If the coupling manufacturer's standard thickness is less, that thickness may be used unless allowable pressures are exceeded. The length of each middle ring shall be not less than 10 inches [250 mm] for 36 inch [900 mm] and larger pipe and not less than 7 inches [175 mm] for pipe smaller than 36 inches [900 mm].

All surfaces, including the interior surfaces of the middle rings, shall be prepared for coating in accordance with the coating manufacturer's instructions and shall then be coated with liquid epoxy in accordance with ANSI/AWWA C210.

All split ring style couplings shall be designed for not less than 150 psi [1000 kPa] working pressure. Where pressure may exceed 150 psi [1000 kPa], the coupling shall be designed for the required pressure and provided with the coupling manufacturer's "high pressure modification". Use of the FxF Type 1 split ring coupling shall be limited to piping 16 inch [400 mm] and less in diameter. A FxF Type 2 split ring coupling shall be provided for pipe diameter greater than 16 inch [400 mm] size. Where split ring couplings are permitted in buried applications, they shall be FxF Type 2 HP (RC).

2-12. GROOVED COUPLINGS. Grooved couplings shall be sized for proper installation on the pipe ends provided. The couplings shall be restrained or have movement and deflection requirements as required.

After fabrication, all housing clamps forming the coupling shall be cleaned and primed (as specified for the pipe) by the coupling manufacturer.

2-13. FLANGED COUPLING ADAPTERS. Not Used.

2-14. DISMANTLING JOINTS. Not Used.

2-15. RESTRAINED JOINTS. Restrained joints shall be flanged, welded, or harnessed, as specified or as indicated on the Drawings.

Where indicated on the Drawings, mechanically coupled joints shall be restrained with harness bolts and lugs or collars. Joint harnesses shall conform to the details indicated on the Drawings. Lugs or collars shall be shop welded to the pipe and coated as specified for the adjacent pipe.

Split ring style couplings used for restraint shall be shoulder style. Grooved couplings used for restraint shall be rigid type.

2-16. PROTECTIVE COATINGS AND LININGS. All steel pipe, fittings, specials, wall fittings, and accessories shall be lined, coated, or wrapped as specified herein.

2-16.01. Type of Coating and Lining. Surface preparation shall be in accordance with the pipe manufacturer's and coating and lining manufacturer's instructions. Types of protective coating and lining shall be as follows:

Exterior Surfaces in Interior Locations	Shop-applied universal primer. Field painting is covered in the Protective Coatings Section (722S).
Exterior Surfaces Underground, Including those Encased in Concrete	Polyurethane coating, ANSI/AWWA C222. The governing standards shall be as modified in Section 09810 Polyurethane Coating for Steel Pipe.
Exterior Surfaces in Contact with Potable Water or Submerged in Water Treatment Process Waters	**[][**Liquid epoxy, ANSI/AWWA C210.**]**
Interior Surfaces	Cement mortar - shop applied, ANSI/AWWA C205. The governing standards shall be as modified herein.
Pipe Joints	
Couplings	Shop coating as specified for each type of coupling. Field coating as specified for ends of sections.
Ends of Sections	As specified herein.
Machined Surfaces	Rust-preventive compound.

2-16.02. Modifications to the Governing Standards.

2-16.02.01. Coal Tar Enamel Coating. Not Used.

2-16.02.02. Cement Mortar Lining. Unless otherwise acceptable to Engineer, cement mortar lining for all pipe shall be shop applied. Except as modified herein, shop-applied mortar linings shall comply with ANSI/AWWA C205.

Specials. Wire fabric reinforcement shall be used in the lining of fittings and specials in accordance with Section 4 of ANSI/AWWA C205.

Adjacent to Valves. If the specified nominal pipe size is the actual outside diameter, cement mortar lining installed in steel pipe adjacent to butterfly valves shall be tapered so that the lining material will not interfere with the valve disc during valve operation.

2-16.02.03. Shop-Applied Tape Coat. Not Used.

2-16.02.04. Shop-Applied Polyurethane Coating. See Section 09810 Polyurethane Coating for Steel Pipe.

2-17. SHOP INSPECTION AND TESTING. Except as otherwise indicated or acceptable to Engineer, all materials and work shall be inspected and tested by the pipe manufacturer in accordance with ANSI/AWWA C200. All costs in connection with such inspection and testing shall be borne by Contractor.

Copies of all test reports shall be submitted in accordance with the Submittals Section (01300).

Owner reserves the right to sample and test any pipe after delivery and to reject all pipe represented by any sample which fails to comply with the specified requirements.

Steel greater than or equal to 3/16 inch [4.7 mm] thickness used in production manufacturing of pipe and specials shall be tested for notch toughness using Charpy V-Notch tests in accordance with ASTM A370 – Standard Test Methods and Definitions for Mechanical Testing of Steel Products. The test acceptance for full size specimens (10 mm by 10 mm size) shall be 25 foot-pounds [34 J] at a test temperature of 30 degrees F [-1.1 degrees C]. Tests shall include three impact specimens and shall be conducted in the direction transverse to the final direction of rolling. Filler material shall meet the same toughness properties as the base metal. Tests shall be conducted in accordance with ASTM A20 for two coils of each heat.

2-17.01. Owner's Inspection at the Shop. If Owner elects to inspect any work or materials, as permitted under Section 5.1 of ANSI/AWWA C200, all costs in connection with the services of Owner's inspector will be paid for by Owner. Additional weld test specimens shall be furnished to Owner's inspector for testing by an independent testing laboratory whenever, in the judgment of Owner's inspector, a satisfactory weld is not being made. Test specimens shall also be furnished when Owner's inspector desires. The entire cost of obtaining, inspecting, and testing of such additional specimen plates, welds, or materials will be borne by Owner. If any specimen is found not to conform to the specified requirements, the materials represented by the specimen will be rejected. The expense of all subsequent tests due to failure of original specimens to comply with the specifications shall be the responsibility of Contractor.

Work to be performed by Owner's inspector at the fabricating shop will include checking of flange alignment after welding to the pipe and tolerances of stab joints, when applicable.

In addition to making or witnessing all specified tests and submitting any required reports to Engineer and Owner, Owner's inspector will submit written reports to Contractor concerning all materials rejected, noting the reason for each rejection.

Inspection by Owner's inspector, or Owner's option not to provide inspections, shall not relieve Contractor of his responsibility to provide materials and to perform the work in accordance with the Contract Documents.

PART 3 - EXECUTION

3-1. INSPECTION. Pipe and fittings shall be carefully examined for cracks and other defects immediately before installation. Pipe ends shall be examined with particular care. All defective pipe and fittings shall be removed from the Site. Inspection and repair of interior linings and exterior coatings shall be performed by and at the expense of Contractor, after receipt of the pipe, fittings, or specials on the Site and before installation.

3-2. PROTECTION AND CLEANING. The interior of all pipe and fittings shall be thoroughly cleaned of all foreign material prior to installation and shall be kept clean until the work has been accepted. Before jointing, all joint contact surfaces shall be wiped clean.

Precautions shall be taken to prevent foreign material from entering the pipe during installation and until the work has been accepted.

3-3. ALIGNMENT AND GRADE. Buried pipe shall be laid to the lines and grades as specified and indicated on the Drawings. Pipelines or runs intended to be straight shall be laid straight. Curves in stab joint pipe may be formed by opening the joint. Maximum joint openings and deflections shall be as recommended by the pipe manufacturer. In welded pipe, deflections up to 4-1/2 degrees [0.079 rad] may be made by shop-mitering one end of one pipe. Deflections up to 22-1/2 degrees [0.393 rad] may be made by shop-mitering the ends of two adjacent sections of pipe by equal amounts. Deflections greater than 22-1/2 degrees [0.393 rad] shall be made by use of fabricated bends.

Where deflections would exceed the pipe manufacturer's recommendations, either shorter pipe sections or fittings shall be installed where needed to conform to the alignment or grade indicated on the Drawings and as acceptable to the Engineer.

High points which allow air to collect in pipelines will not be permitted unless an air release valve is indicated on the Drawings at that location.

Unless otherwise specified or acceptable to Engineer, laser beam equipment, surveying instruments, or other suitable means shall be used to maintain alignment and grade. At least one elevation reading shall be taken on each length of pipe. If laser beam equipment is used, periodic elevation measurements shall be made with surveying instruments to verify accuracy of

grades. If such measurements indicate thermal deflection of the laser beam due to differences between the ground temperature and the air temperature within the pipe, precautions shall be taken to prevent or minimize further thermal deflections.

Additional requirements for alignment and grade are covered in the Summary of Work (01010) and Trenching and Backfilling (02202) sections and on the Drawings.

3-3.01. Tolerances. Each section of pipe shall be laid to the alignment and grade indicated on the Drawings and pipe laying schedule with pipe ends within the following tolerances;

+/- 0.10 foot in grade at any point
+/- 0.20 foot in alignment at any point

In addition, piping shall be visually straight or on a smooth curve between the points of deflection or curvature indicated on the Drawings. Stricter tolerances than specified above shall be used as necessary to maintain minimum cover, to maintain required clearances, to maintain the correct slope to avoid high or low points along the pipeline other than at locations indicated on the Drawings, or to meet other restrictions as required or directed by the Engineer.

3-4. INSTALLATION.

3-4.01. Buried Piping. Field installation of buried steel water piping shall be in accordance with ANSI/AWWA C604 unless otherwise specified or indicated on the Drawings.

For buried piping, all trenching, embedment, and backfilling shall conform to the trenching and backfilling requirements in the Pipe section and the details indicated on the Drawings.

Whenever pipe laying is stopped, the open end of the pipe shall be sealed with a watertight plug. All water in the trench shall be removed prior to removing the plug.

Pipe embedment and backfilling shall closely follow the installation and jointing of steel pipe in the trench to prevent floatation of the pipe by water and longitudinal movement caused by thermal expansion or contraction of the pipe. Pipe shall be protected from floatation during installation when subjected to groundwater or flood conditions.

Each joint, including restrained joints, shall be checked by Contractor as recommended by the pipe manufacturer to verify that the joint and the restraints are installed properly.

3-4.02. Out-of-Round Pipe. Pipe which deviates from a true circle by more than 1 percent shall be laid with its larger diameter vertical, or by using struts or jacks on continuous head and sill timbers to correct the vertical diameter where permitted by Engineer. Struts or jacks shall be left in place until the joints at each end have been completed and embedment and backfill for the section have been placed to at least 12 inches [300 mm] above the top of the pipe. Final inspection, repair, and checking of interior lining shall be performed after the struts or jacks have been removed.

3-4.03. Pipe Deflection. After completion of backfilling and before acceptance of the Work, all buried pipe larger than 30 inches [750 mm] in diameter shall be tested for excessive deflection by measuring the actual inside vertical diameter. Deflection measurements will be made by Engineer. Unless otherwise accepted by Engineer, deflection shall be measured after each day's work. Any struts or stulls shall be removed prior to measuring deflection. Pipe with diametral deflection exceeding 3 percent of the nominal inside diameter shall be uncovered and the embedment and backfill replaced as needed to prevent excessive deflection. After replacing embedment and backfill, the pipe shall be retested.

3-4.04. Flanged Joints. Flange faces shall be flat and perpendicular to the pipe centerline. The rust-preventive coating on the flange faces shall be soluble and shall be removed before the joint is made.

Care shall be taken in bolting flanged joints to avoid restraint on the opposite end of the pipe or fitting, which would prevent uniform gasket compression or would cause unnecessary stress in the flanges. The pipe or fitting shall be free to move in any direction while the flange bolts are being tightened. Bolts shall be tightened gradually in a crisscross pattern at a uniform rate, to ensure uniform compression of the gasket around the entire flange. All flange joint bolting procedures shall be in accordance with the pipe manufacturer's recommendations.

Care shall be taken when connecting piping to pumping equipment to ensure that piping stresses are not transmitted to the pump flanges. All connecting piping shall be permanently supported to obtain accurate matching of bolt holes and uniform contact over the entire surface of flanges is obtained before any bolts are installed in the flanges.

Pump connection piping shall be free to move parallel to its longitudinal center line while the bolts are being tightened. Each pump shall be leveled, aligned, and wedged into position which will fit the connecting piping, but shall not be grouted until the initial fitting and alignment of the pipe so that the pump may be shifted on its foundation if necessary to properly install the connecting piping. Each pump shall, however, be grouted before final bolting of the connecting piping.

After final alignment and bolting, the pump connections shall be tested for applied piping stresses by loosening the flange bolts which, if the piping is properly installed, should result in no movement of the piping relative to the pump or opening of the pump connection joints. If any movement is observed, the piping shall be loosened and re-aligned as needed and then the flanges bolted back together. The flange bolts then shall be loosened and the process repeated until no movement is observed.

3-4.05. Couplings. Surfaces of pipe ends and couplings in contact with the sealing gasket shall be clean and free from foreign material when the coupling is installed on the pipe. Wrenches used in bolting couplings shall be of a type and size recommended by the coupling manufacturer. All bolts shall be tightened by approximately the same amount, with all parts of the coupling square and symmetrical with the pipe. Following installation, the exterior coating of each coupling shall be touched up or re-primed.

Where restraint is required, Contractor shall verify that tie bolts have been stressed to assure the pipe will not creep when pressurized. When split ring, fixed type couplings are installed, piping shall be in a fully-extended position to engage the restraint rings at the pipe ends.

3-4.06. Insulated Flanged Joints. Not Used.

3-4.07. Stab Joints. Gasket installation and other jointing procedures shall conform to the instructions and recommendations of the pipe manufacturer. All joint surfaces shall be lubricated with heavy vegetable soap solution immediately before making the joint. The lubricant shall be suitable for use in potable water, shall be stored in closed containers, and shall be kept clean. Measurements shall be taken at the joints after installation to ensure that the specified clearances have not been exceeded.

3-4.08. Welded Joints. All welds shall be sound and free from embedded scale or slag, shall have tensile strength across the weld not less than that of the thinner of the connected sections, and shall be watertight. Butt welds shall be used for all welded joints in pipe assemblies and in the fabrication of bends and other specials. Field-welded joints, where permitted, shall be either butt-welded or lap-welded.

Field welding of joints shall conform to ANSI/AWWA C206 and M-11. Single field-welded butt joints with outside backing rings may be used for pipe larger than 30 inches [750 mm] in diameter. Backing rings will not be permitted for 30 inch [750 mm] and smaller pipe. Butt straps shall be welded on both the inside and outside of the pipe and at each end of the pipe and strap to avoid stress multiplication.

Any weld that undercuts the parent metal shall be cut out, filled, and ground smooth.

A field test shall be performed to verify that the interior lining, the exterior coating, and the field applied joint coating are not damaged by the welding at the start of the project. The field test shall be repeated if welding procedures are modified. Provisions shall be made to minimize stresses in welding steel pipe to account for temperature changes and to avoid the accumulation of expansion and contraction during installation as recommended by the pipe manufacturer and in accordance with ANSI/AWWA C604.

If any damage to the interior lining or exterior coating occurs during welding, proper and effective repairs to piping shall be made per the manufacturer's direction following the completion of the field welds.

3-4.08.01. Standard Inspection and Testing. Standard shop inspection and testing shall be in accordance with the shop inspection and testing provisions specified herein.

Field weld test specimens shall be furnished to Engineer for testing by an independent testing laboratory whenever, in the judgment of Engineer, a satisfactory weld is not being made. Test specimens shall also be furnished when Engineer desires. All costs for this testing will be paid by Owner.

3-4.09. Flanged Coupling Adapters. Not Used.

3-4.10. Dismantling Joints. Not Used.

3-4.11. Mechanical Couplings. Mechanical couplings shall be installed in accordance with the coupling manufacturer's recommendations. A space of at least 1/4 inch [6 mm], but not more than 1 inch [25 mm], shall be left between the pipe ends. Pipe and coupling surfaces in contact with gaskets shall be clean and free from dirt and other foreign matter during assembly. All assembly bolts shall be uniformly tightened so that the coupling is free from leaks, and all parts of the coupling are square and symmetrical with the pipe. Following installation of the coupling, damaged areas of shop coatings on the pipe and coupling shall be repaired to the satisfaction of Engineer.

3-4.12. Grooved-End Joints. Grooved-end joints with rigid type grooving shall be installed in accordance with the coupling manufacturer's recommendations. Completed joints shall be rigid and shall allow no angular deflection or longitudinal movement. Except for closure pieces, field grooving of pipe will not be acceptable.

Grooved-end couplings shall not be used in the following applications: chemical services, except lime slurry piping; flammable liquid or flammable gas piping,

compressed air or compressed gas piping operating at pressures above 25 psi [170 kPa]; toxic gas piping; hot liquid with operating temperatures above 120º F [48º C]; or steam piping.

3-5. WALL SLEEVES AND WALL PIPES. Wall sleeves and wall pipes shall be installed as indicated on the Drawings and shall be installed where steel pipe passes through concrete or masonry walls, unless otherwise noted.

Where harness lugs are attached to wall sleeves, the sleeves shall be carefully aligned to permit installation of the tie rods. In flange and mechanical joint wall sleeves and wall pipe, holes in the mechanical joint bells and flanges shall straddle the top (or side for vertical piping) center line. The top (or side) center line shall be marked on each flange and mechanical joint piece at the fabricating shop.

Where specified or indicated on the Drawings for sleeves detailed, one or two sets of modular casing seals shall be installed at the face of walls to seal against soil or provide a dust or water tight seal. Contractor shall coordinate the diameter of wall sleeve with the modular casing seal manufacturer. When soil may be present at wall sleeves, a set of modular casing seals shall be installed at each face of the wall. Modular casing seals shall not be used in submerged conditions unless the hydrostatic pressure is less than 20 feet and piping is less than 24 inch size.

3-6. REDUCERS. Reducers shall be eccentric or concentric as indicated on the Drawings. Reducers of eccentric pattern shall be installed with the straight side on top, so that no air traps are formed.

3-7. BLOWOFFS. Not Used.

3-8. ACCESS MANHOLES. Not Used.

3-9. GAS AND OIL-RESISTANT GASKETS. Not Used.

3-10. PIPE ANCHORS, BLOCKING, CONCRETE ENCASEMENT, HANGERS, AND SUPPORTS. Pipe anchors, blocking, hangers, and supports shall be installed where and as specified and indicated on Drawings and shall be fabricated in accordance with the Pipe Supports Section (15140) and the details indicated on the Drawings, and shall be furnished and installed complete with all concrete bases, anchor bolts and nuts, plates, rods, and other accessories required for proper support of the piping. All piping shall be rigidly supported and anchored so that there is no movement or visible sagging between supports. Where the details must be modified to fit the piping and structures, all such modifications shall be subject to acceptance by Engineer. Unless otherwise permitted, lugs for lateral or longitudinal anchorage shall be shop welded to the pipe.

Concrete reaction anchorage, blocking, encasements, and supports shall be installed as indicated on the Drawings or as permitted by Engineer. Concrete and reinforcing steel for anchorages, blocking, encasements, and supports shall conform to the Cast-in-Place Concrete section. All pipe to be encased shall be suitably supported and blocked in proper position, and shall be anchored to prevent floatation. A pipe joint shall be provided within 12 inches [300 mm] of each end of the concrete encasement.

Reaction blocking, anchorages, or other supports for fittings installed in fills or other unstable ground, installed above grade, or exposed within structures, shall be provided as indicated on the Drawings.

All ferrous metal clamps, rods, bolts, and other components of reaction anchorages or joint harness, subject to submergence or in contact with earth or other fill material and not encased in concrete, shall be protected from corrosion as specified in the Corrosion Protection paragraph of this section.

3-11. PROTECTIVE COATINGS AND LININGS.

3-11.01. Field Coating and Repair. Entry into the pipe or pipeline for application of interior linings to unlined ends shall be from open ends or through access manholes, except as otherwise permitted by Engineer. Pour holes will not be permitted.

Field repair of shop-applied exterior coatings and interior linings shall conform to the following:

For Field-Welded Joints	
Cement Mortar	Hold back coating and lining 4 to 6 inches [100 mm to 150 mm] from joint. Field repair in accordance with Section 4 of ANSI/AWWA C205 as modified herein.
For Flanged Joints	Extend lining to ends of pipe. Field coat buried exterior surfaces as specified in the Corrosion Protection paragraph for flanges.
For Mechanically Coupled Joints	
Cement Mortar	Hold back coating 16 inches [400 mm] from joints; paint exposed surfaces with 2.5 mil [63 µm] dry film thickness of Type B primer in accordance with ANSI/AWWA C203. Lining shall

	extend to end of pipe. Field coat buried exterior surfaces as specified in the Corrosion Protection paragraph for mechanical couplings.
For Grooved Coupled Joints	
Cement Mortar	Hold back coating 6 inches [150 mm] at joints; paint exposed surfaces with 2.5 mil [63 µm] dry film thickness of Type B primer in accordance with ANSI/AWWA C203. Lining shall extend to end of pipe. Field repair exterior surfaces with 20 mil [500 µm] dry film thickness of liquid epoxy in accordance with ANSI/AWWA C210 Epoxy or field repair in accordance with Heat Shrinkage Wrap ANSI/AWWA C216. Type I for pipe joints and Type III for specials, flanges, and valves.

3-11.02. Modifications to the Governing Standards.

3-11.02.01. Field Repair of Shop-Applied Cement Mortar Lining. Field repair of interior joint surfaces shall be done in accordance with Section 4.4.6 of ANSI/AWWA C205, except that an epoxy bonding agent and latex admixture shall be used in conjunction with the sand and cement mortar. The addition of lime or pozzolan will not be permitted.

The exposed steel shall be thoroughly cleaned and all grease shall be removed. A coat of epoxy bonding agent shall be applied over the area to be lined in accordance with the coating manufacturer's recommendations. A soupy mixture of cement and water shall be applied over the epoxy after it becomes tacky. Cement mortar to which the latex admixture has been added shall then be packed into the area to be patched and screeded off level with the adjacent cement mortar lining. The patched area shall be given an initial floating with a wood float, followed by a steel trowel finish.

Defective or damaged shop-applied cement mortar linings shall be removed, the surfaces cleaned, and the lining repaired as specified above for joint repair.

3-11.02.02. Field-Applied Cement Mortar Lining. Except as modified herein, field-applied mortar linings shall comply with ANSI/AWWA C602.

Specials. Wire fabric reinforcement shall be used in the lining of fittings and specials in conformance with Section 4.4.5 of ANSI/AWWA C205.

Field Repair. Defective or damaged field-applied cement mortar linings shall be removed, the surfaces cleaned, and the lining repaired as specified for shop-applied cement mortar linings.

3-12. CORROSION PROTECTION.

3-12.01. Flanged Valves. Not Used.

3-12.02. Mechanical Couplings. The tie bolts and nuts on all buried mechanical couplings shall be coated with two coats of medium consistency coal tar.

After the protective coating has been applied to the tie bolts, the entire coupling assembly, including coupling, tie bolts and nuts and pipe shall be encapsulated with an underlaying sleeve covered by a shrink sleeve. The underlaying sleeve shall extend a minimum of 6 inches onto the pipe beyond each end of the tie rods. The shrink sleeve shall extend a minimum of 6 inches onto the shop coated pipe beyond each end of the underlaying sleeve. A primer shall be applied to the piping on each side assembly prior to installing the shrink sleeve. The application of the shrink sleeve shall be in accordance with ANSI/AWWA C216 and as recommended by the shrink sleeve manufacturer. There shall be no bare or unprotected ferrous metal surfaces.

3-12.03. Restrained Mechanical Couplings. Not Used.

3-12.04. Other Assemblies. All ferrous metal clamps, tie rods, bolts, and other components of buried joint harnesses, or pipe reaction anchorages in contact with earth or other fill material and not encased in concrete, shall be protected by wrapping them with wax tape in accordance with ANSI/AWWA C217. A primer shall be applied prior to applying the wax tape. The application for the wax tape shall be as recommended by the wax tape manufacturer. There shall be no bare or unprotected ferrous metal surfaces.

3-12.05. Surfaces Exposed in Manholes and Vaults. Unless otherwise specified, all uncoated metal surfaces exposed in manholes and vaults shall be cleaned and coated with two coats of medium consistency coal tar. The first coat shall be dry and hard before the second coat is applied. There shall be no unprotected, bare, or uncoated ferrous metal surfaces.

3-13. CONNECTIONS WITH EXISTING PIPING. Connections between new work and existing piping shall be made using fittings suitable for the conditions encountered. Each connection with an existing pipe shall be made at a time and under conditions which will least interfere with service to customers, and as authorized by Owner.

Facilities shall be provided for dewatering and for disposal of the water removed from the dewatered lines and excavations without damage to adjacent property.

3-14. INSTALLATION IN TUNNELS. Not Used.

3-15. PROVISIONS FOR CATHODIC PROTECTION. Not Used.

3-16. PRESSURE AND LEAKAGE TESTS. After installation, pipe and fittings shall be subjected to a pressure test and a leakage test in accordance with the Pipeline Pressure and Leakage Testing Section (02704).

3-17. DISINFECTION. Disinfection of pipelines is not required.

End of Section

Schedule 15062-S01

Steel Pipe Schedule

1.000	**General**					
1.010	Service	Filter Influent	Filter Influent	Backwash Drain	Backwash Supply	Filter Effluent
1.020	Location	Exposed	Exposed	Exposed	Exposed	Exposed
1.030	Size (in)	54	36	36	30	20-30
1.040	Working Pressure (psi)	5	5	10	50	5
1.050	Surge Pressure (psi)	0	0	0	50	0
1.060	Field Test Pressure (psi)	25	25	25	100	25
1.070	Shop Test Pressure (psi) **	AWWA C200				
1.080	Total External Load (lb/ft)	N/A	N/A	N/A	N/A	N/A
1.090	Maximum D/T ratio	158	158	158	158	158
1.100	Min. Wall Thickness (in) *	0.342	0.25	0.25	0.25	0.25
1.110	Material ASTM Designation & Grade**	AWWA C200				

* Wall thickness shall include zero minus tolerance. Minimum wall thickness based on larger of specified maximum D/t ratio or t = (PD)/(2s) with maximum yield strength of 42,000 psi [289,000,000 Pa]. Lower yield strength steel will result in increased thickness where yield strength controls thickness.

** In accordance with ANSI/AWWA C200 and as specified.

Schedule 15062-S01

Steel Pipe Schedule Continued

1.000	**General**					
1.010	Service	SS CW Effluent	NW CW Effluent	Filter Effluent		
1.020	Location	Buried	Buried	Buried		
1.030	Size (in)	72	66	48		
1.040	Working Pressure (psi)	5	5	5		
1.050	Surge Pressure (psi)	N/A	N/A	N/A		
1.060	Field Test Pressure (psi)	25	25	25		
1.070	Shop Test Pressure (psi) **	AWWA C200				
1.080	Total External Load (lb/ft)	14,700	13,500	9,900		
1.090	Maximum D/T ratio	165	165	165		
1.100	Min. Wall Thickness (in) *	0.436	0.400	0.291		
1.110	Material ASTM Designation & Grade**	AWWA C200				

* Wall thickness shall include zero minus tolerance. Minimum wall thickness based on larger of specified maximum D/t ratio or t = (PD)/(2s) with maximum yield strength of 42,000 psi [289,000,000 Pa]. Lower yield strength steel will result in increased thickness where yield strength controls thickness.

** In accordance with ANSI/AWWA C200 and as specified.

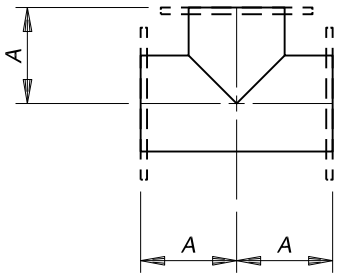

TEE

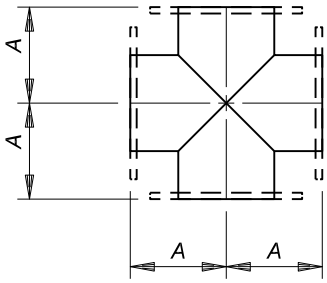

CROSS

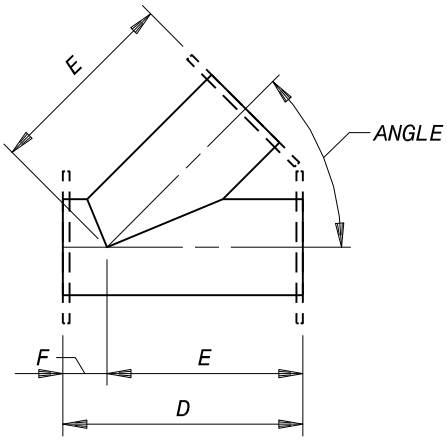

LATERAL 45° (0.7 rad) MIN; 75° (1.3 rad) MAX

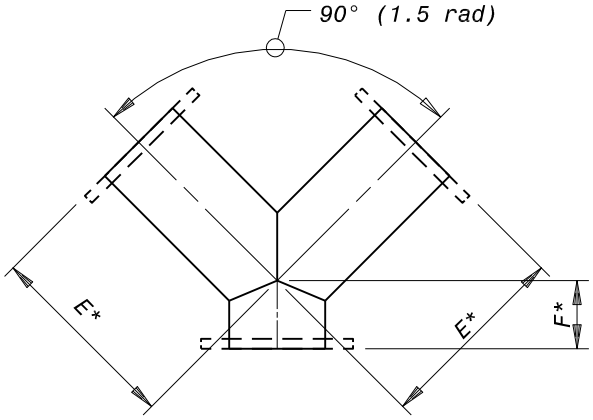

TRUE WYE-90° (1.5 rad)

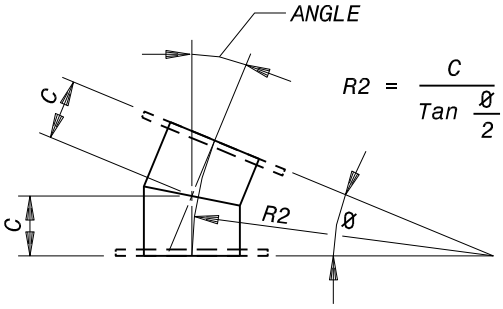

$$R2 = \frac{C}{\tan\frac{Ø}{2}}$$

2-PIECE ELBOW
0-30° (0-0.52 rad)

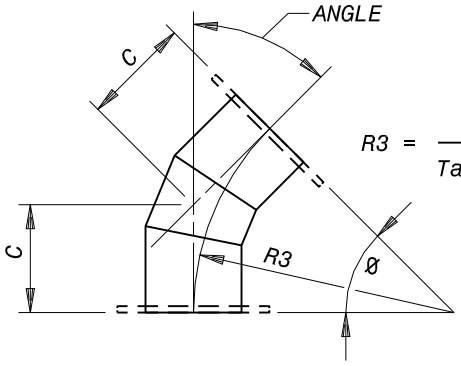

$$R3 = \frac{C}{\tan\frac{Ø}{2}}$$

3-PIECE ELBOW 31-60°
(0.54-1.0 rad)

$$R4 = \frac{A}{\tan\frac{Ø}{2}}$$

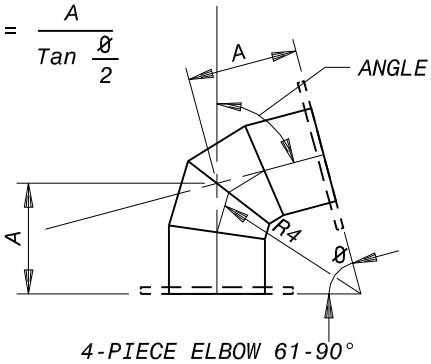

4-PIECE ELBOW 61-90°
(1.1-1.5 rad)

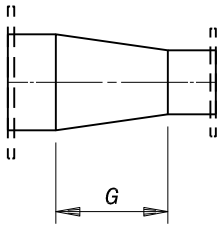

REDUCER

NOTE:
SEE FIGURE 1-15062(B) FOR DIMENSIONS.

STEEL PIPE FITTINGS

BLACK & VEATCH	STEEL PIPE	FIG 1-15062(A)

BLACK & VEATCH

STEEL PIPE

FIG 1-15062(B)

DIMENSIONS FOR STEEL PIPE FITTINGS

DIMENSIONS IN INCHES (MILLIMETERS)

NOMINAL DIA	TEE		CROSS A+A	LATERAL (45–75\) (0.7–1.3 rad)		TRUE WYE (90\) (1.5 rad)		ELBOWS			REDUCER CONE G
	RUN A+A	OUTLET A		RUN D	OUTLET E	E*	F*	2–PIECE (0–30\) (0.0–0.52 rad) C	3–PIECE (31–60\) (0.54–1.0 rad) C	4–PIECE (61–90\) (1.1–1.5 rad) A	
4 (100)	13 (330)	6.5 (165)	13 (330)	15 (381)	12 (305)	6.5 (330)	3 (76)	4 (102)	4 (102)	6.5 (162)	7 (178)
6 (150)	16 (406)	8 (203)	16 (406)	18 (457)	14.5 (368)	8 (203)	3.5 (89)	5 (127)	5 (127)	8 (203)	9 (229)
8 (200)	18 (457)	9 (229)	18 (457)	22 (559)	17.5 (445)	9 (229)	4.5 (114)	5.5 (140)	5.5 (140)	9 (229)	11 (279)
10 (250)	22 (559)	11 (279)	22 (559)	25.5 (648)	20.5 (521)	11 (279)	5 (127)	6.5 (165)	6.5 (165)	11 (279)	12 (305)
12 (300)	24 (610)	12 (305)	24 (610)	30 (762)	24.5 (622)	12 (305)	5.5 (140)	7.5 (191)	7.5 (191)	12 (305)	14 (356)
14 (350)	28 (711)	14 (356)	28 (711)	33 (838)	27 (686)	14 (356)	6 (152)	7.5 (191)	7.5 (191)	14 (356)	16 (406)
16 (400)	30 (762)	15 (381)	30 (762)	36.5 (927)	30 (762)	15 (381)	6.5 (165)	8 (203)	8 (203)	15 (381)	18 (457)
18 (450)	33 (838)	16.5 (419)	33 (838)	39 (991)	32 (813)	16.5 (419)	7 (178)	8.5 (216)	8.5 (216)	16.5 (419)	19 (483)
20 (500)	36 (914)	18 (457)	36 (914)	43 (1092)	35 (889)	18 (457)	8 (203)	9.5 (241)	9.5 (241)	18 (457)	20 (508)
22 (550)	40 (1016)	20 (508)	40 (1016)	46 (1168)	37.5 (953)	22 (559)	9 (229)	10 (254)	10 (254)	20 (508)	22 (559)
24 (600)	44 (1118)	22 (559)	44 (1118)	49.5 (1257)	40.5 (1029)	25 (635)	10 (254)	11 (279)	11 (279)	22 (559)	24 (610)
30 (750)	50 (1270)	25 (635)	50 (1270)	59 (1499)	49 (1245)			15 (381)	15 (381)	25 (635)	30 (762)
36 (900)	56 (1422)	28 (711)	56 (1422)	84 (2134)	60 (1524)			18 (457)	18 (457)	28 (711)	36 (914)
42 (1050)	62 (1575)	31 (787)	62 (1575)	95 (2413)	69 (1753)			21 (533)	21 (533)	31 (787)	42 (1067)
48 (1200)	68 (1727)	34 (864)	68 (1727)	104 (2642)	77 (1956)			24 (610)	24 (610)	34 (864)	48 (1219)
54 (1350)	74 (1880)	37 (940)	74 (1880)					27 (686)	27 (686)	37 (940)	54 (1372)
60 (1500)	80 (2032)	40 (1016)	80 (2032)					30 (762)	30 (762)	40 (1016)	60 (1524)

Section 15064

STAINLESS STEEL PIPE AND ALLOY PIPE, TUBING, AND ACCESSORIES

PART 1 - GENERAL

1-1. SCOPE. This section covers the furnishing of stainless steel pipe and alloy pipe, tubing and accessories through 24" diameter for the services as indicated herein. Pipe and tubing shall be furnished complete with all fittings, flanges, unions, and other accessories specified herein.

1-2. SUBMITTALS.

1-2.01. Drawings and Data. Complete specifications, data, and catalog cuts or drawings shall be submitted in accordance with the Submittals section. Submittals are required for all piping, fittings, gaskets, sleeves, and accessories, and shall include the following data:

Name of Manufacturer
Type and model
Construction materials, thickness, and finishes
Pressure and temperature ratings

Contractor shall obtain and submit a written statement from the gasket material manufacturer certifying that the gasket materials are compatible with the joints specified herein and are recommended for the specified field test pressures and service conditions.

All welding and brazing procedures and operators shall be qualified by an independent testing laboratory in accordance with the applicable provisions of Section IX of the ASME Code. All procedure and operator qualifications shall be in written form and submitted to the Engineer for review.

Pipe for liquid chemical service shall comply with ASME B31.3. Pipe for all other services shall comply with ASME B31.1.

1-3. DELIVERY, STORAGE, AND HANDLING. Shipping shall be in accordance with the Product Delivery Requirements section. Handling and storage shall be in accordance with the Product Storage and Handling Requirements section. All materials shall be stored in a sheltered location above the ground, separated by type, and shall be supported to prevent sagging or bending.

PART 2 - PRODUCTS

2-1. MATERIALS. Stainless steel pipe and alloy pipe materials shall be as specified herein.

2-1.01. Material Classification SS-1. Not Used.

2-1.02. Material Classification SS-2.

SS-2 – Schedule 10S with Beveled Ends. Filter air scour piping. 2-1/2 inch and larger.	Pipe Fittings	ASTM A312 or ASTM A778 with longitudinal seams only, TP316L. Buttwelded, ASTM A403 WP-W or A774, wrought stainless steel, grade equivalent to pipe. Fittings shall conform to ANSI/ASME B16.9, Schedule 10S with beveled ends.

2-1.03. Material Classification SS-3. Not Used.

2-1.04. Material Classification SS-4. Not Used.

2-1.05. Material Classification SS-5. Not Used.

2-1.06. Material Classification SS-6.

SS-6 – Schedule 40S with Threaded Ends. Gauge piping in stainless steel piping systems (to match pipe). 2 inch and smaller.	Pipe Fittings	ASTM A312, TP316. Threaded, material to match pipe. Fittings shall conform to ANSI/ASME B16.3, Class 150.

2-1.07. Material Classification SS-7. Not Used.

2-1.08. Material Classification SS-8. Not Used.

2-1.09. Material Classification SS-9.

SS-9 – SS Tubing with Compression Fittings Instrumentation process.	Tubing	ASTM A269, seamless, TP316, annealed, max hardness Rockwell B80; with the following min wall thicknesses: Tube OD inches [mm] — Wall Thickness inches [mm] 1/4 to 3/8 [6 to 9] — 0.065 [1.65] 1/2 to 7/8 [13 to 22] — 0.083 [2.11] 1 to 2 [25 to 50] — 0.109 [2.77]
	Fittings	Compression type, AISI Type 316 stainless steel; Crawford "Swagelok", or Parker Hannifin "CPI" or "Ferulok".

2-1.10. Material Classification SS-10. Not Used.

2-1.11. Material Classification SS-11. Not Used.

2-1.12. Material Classification CRP-1. Not Used.

2-1.13. Material Classification HST-1. Not Used.

2-1.14. Accessory Materials. Accessory materials for the stainless steel pipe systems shall be as indicated. Flanges shall be flat faced for water service and shall be raised face for air or gas service except when connecting to flat face equipment or valve flanges.

Flanges

SS-2 Pipe Backing Flanges	Stainless steel plate, AISI Type 316 to match fittings. Provide stub ends or angle face rings with material and thickness to match fittings. The angle or radius between the angle face ring or stub end and the pipe shall match the angle or radius of the backing flange for proper seating. Flanges shall conform with ANSI/ASME B16.5, Class 150 diameter and drilling; with the following thicknesses: Nominal Pipe Size inches [mm] — Flange Thickness inches [mm] 1/2-8 [13-200] — 1/2 [13] 10-16 [250-400] — 5/8 [16] 18-20 [450-500] — 3/4 [19] 24-30 [600-750] — 1 [25] 36 [900] — 1-1/4 [32]

Flange Bolts	ASTM A193 Class 2, AISI Type 316, ANSI B18.2.1, heavy hex head, length such that, after installation, the bolts will project 1/8 to 3/8 inch beyond outer face of the nut.
Flange Nuts	ASTM A194, AISI Type 316, ANSI/ASME B18.2.2, heavy hex pattern. Washers shall be installed under the nuts.
Flange Gaskets	
Filter air scour	
Raised Face Flanges	PTFE; dimensions to suit flange contact face, 1/8 inch minimum thickness, rated for 275°F service; Garlock "Gylon Style 3545".
Flat Faced Flanges	Premium Grade, EPDM, full face type, 1/8 inch thick, rated for 275°F service; Garlock "8314".
Grooved Couplings	
Filter air scour	
Rigid	AWWA C606, roll grooved pipe end; Victaulic "Style 489 Zero-Flex".
Coupling Gaskets	Victaulic Silicone "Grade L" rated for 350°F service.
Elbows	Elbows shall be long radius type for which the laying length is 1.5 times the pipe diameter.
Protective Coatings –	
Epoxy for filter air scour piping	Shop or field applied high solids epoxy; suitable for protection at continuous pipe wall temperatures up to 300 F. Coating shall be abrasion resistant. The finished coating shall have a minimum total film thickness of 10 mils. The surface shall be prepared in accordance with SSPC-SP7 as a minimum unless otherwise recommended by the coating manufacturer. The coating shall be Carboline “Thermaline 450”, PPG Amercoat “Amerlock 400”, or Owner approved equal.

Expansion Joints	
Filter air scour	Expansion joints shall be the elastomeric, arched type and shall be Mercer “Type 450” with “Type 500” retaining rings and Kevlar reinforcement, or Owner approved equal. The number of arches shall be as indicated on the Drawings. The connection shall be suitable for a maximum pressure of 15 psig and maximum temperature of 275 F.
Anti-Seize Thread Lubricant	
Insulating Fittings	
Threaded	Dielectric steel pipe nipple, ASTM A53, Schedule 40, polypropylene lined, zinc plated; Perfection Corp. "Clearflow Fittings".
Flanged	Epco "Dielectric Flange Unions" or Central Plastics "Insulating Flange Unions".

2-1.14.01. Branch Connections. Branch connections 2-1/2 inches and smaller shall be made with welding fittings. Welded outlets shall be used. Where the exact outlet size desired is in doubt, but is known to be less than 1 inch, a 1 inch outlet shall be provided and reducing bushings used as needed.

Branch connections sized 3 and larger shall be made with pipe nipples or with welding fittings with welded outlets. Pipe nipples and welding fittings shall be welded to the pipe shell and reinforced as needed to meet design and testing requirements. The pressure rating of branch and branch connections shall equal or exceed the pressure rating of the main pipe it is connected to.

Small branch connections shall be so located that they will not interfere with joints, supports, or other details, and shall be provided with caps or plugs to protect the threads during shipping and handling.

2-2. WELDING OF STAINLESS STEEL AND ALLOYS. Filler metal for welding austenitic stainless steel and alloys, P-number 8 base materials shall be in accordance with the following:

Material Type/Grade 316, shall use Type 316 filler metal.

Material Type/Grade 316L shall use Type 316L filler metal.

The following requirements shall apply when fabricating austenitic stainless steel and alloy components.

Grinding shall be by aluminum oxide, zirconium oxide, or silicon carbide grinding wheels that shall not have been used on carbon or low alloy steels. Hand or power wire brushing shall be by stainless steel brushes that shall not have been used on carbon or low alloy steels for stainless steel pipe. Hand or power wire brushing shall be by Carpenter 20 brushes that shall not have been used on carbon or low alloy steels for Carpenter 20 pipe. Hand or power wire brushing shall be by Hastelloy C276 brushes that shall not have been used on carbon or low alloy steels for Hastelloy C276 pipe. All tools used in fabrication shall be protected to minimize contact with steel alloys or free iron. Grinding wheels and brushes shall be identified and controlled for their use on these materials only to ensure that contamination of these materials does not occur.

Antispatter compounds, marking fluids, marking pens, tape, temperature indicating crayons, and other tools shall have a total halogen content of less than 200 parts per million.

Heat input control for welding shall be specified in the applicable WPS and shall not exceed 55,000 joules per inch (22,000 joules per cm) as determined by the following formula:

$$\text{Heat Input (J/in.)} = \frac{\text{Voltage x Amperage x 60}}{\text{Travel Speed (in./min.)}}$$

Complete penetration pressure retaining welds shall be made using the Gas Tungsten Arc Welding (GTAW) process for the root and second layer as a minimum.

Austenitic stainless steel instrument tubing shall be welded using only the GTAW process.

Socket welds or butt welds in all austenitic stainless steel instrument tubing lines shall require an inert gas backing (purge) using argon during welding to avoid oxidation.

The application of heat to correct weld distortion and dimensional deviation without prior written approval from the Engineer is prohibited.

Unless otherwise approved in writing, the GTAW process shall require the addition of filler metal.

The maximum preheat and interpass temperature for austenitic stainless steel shall be 350° F. The minimum preheat temperature shall be 50° F.

Complete joint penetration welds welded from one side without backing, weld repairs welded from one side without backing, or weld repairs in which the base metal remaining after excavation is less than 0.1875 inch from being through

wall, which are fabricated from austenitic stainless steel ASME P-number 8 base metal or unassigned metals with similar chemical compositions, shall have the root side of the weld purged with an argon backing gas prior to welding. Backing gas (purge) shall only be argon. The argon backing gas shall be classified as welding grade argon or shall meet Specification SFA-5.32, AWS Classification SG-A. The backing gas (purge) shall be maintained until a minimum of two layers of weld metal have been deposited.

2-3. SHOP CLEANING AND PICKLING OF STAINLESS STEEL PIPING AND WELDS. All stainless steel piping shall be thoroughly cleaned and pickled at the mill in accordance with ASTM A380.

Pickling shall produce a modest etch and shall remove all embedded iron and heat tint. After fabrication, pickled surfaces shall be subjected to a 24 hour water test or a ferroxyl test to detect the presence of residual embedded iron. All pickled surfaces damaged during fabrication including welded areas shall either be mechanically cleaned or repickled or passivated in accordance with ASTM A380. Materials that have been contaminated with steel alloys or free iron shall not be used until all contamination is removed. When cleaning to remove steel or iron contamination is required, it shall be performed in accordance with ASTM A380, Code D requirements. All stainless steel surfaces shall be adequately protected during fabrication, shipping, handling, and installation to prevent contamination from iron or carbon steel objects or surfaces. Particulate matter shall be removed from piping and welds. Labels shall be affixed to the piping sections to indicate shop cleaning has been performed. Welds shall be either mechanically cleaned or pickled or passivated on the exterior of the pipe.

2-4. HIGH TEMPERATURE EPOXY COATING. Filter air scour piping shall be protected against corrosion by a shop or field applied high-solids epoxy coating as specified herein.

2-5. INSULATING FITTINGS. In all piping, insulating fittings shall be provided to prevent contact of dissimilar metals, including but not limited to, contact of copper, brass, or bronze pipe, tubing, fittings, valves, or appurtenances, or stainless steel pipe, tubing, fittings, valves, or appurtenances with iron or steel pipe, fittings, valves, or appurtenances. Insulating fittings shall also be provided to prevent contact of copper, brass, or bronze pipe, tubing, fittings, valves or appurtenances with stainless steel pipe, tubing, fittings, valves, or appurtenances.

PART 3 - EXECUTION

3-1. INSTALLATION. Materials furnished under this section will be installed in accordance with the Miscellaneous Piping and Accessories Installation section.

End of Section

Section 15065

MISCELLANEOUS STEEL PIPE, TUBING, AND ACCESSORIES

PART 1 - GENERAL

1-1. SCOPE. This section covers the furnishing of miscellaneous steel pipe, tubing and accessories that for pipe diameters 24 inches [600 mm] and smaller. Pipe and tubing shall be furnished complete with all fittings, flanges, unions, and other accessories specified herein.

Steel pipe for potable and non-potable water conveyance are covered in the Steel Pipe section.

1-2. GENERAL.

1-2.01. General Equipment Stipulations. The General Equipment Stipulations shall apply to all equipment furnished under this section. If requirements in this specification differ from those in the General Equipment Stipulations, the requirements specified herein shall take precedence.

1-3. SUBMITTALS.

1-3.01. Drawings and Data. Complete specifications, data, and catalog cuts or drawings shall be submitted in accordance with the Submittals section. Submittals are required for all piping, fittings, gaskets, sleeves, and accessories, and shall include the following data:

Name of Manufacturer
Type and model
Construction materials, thickness, and finishes
Pressure and temperature ratings

Contractor shall obtain and submit a written statement from the gasket material manufacturer certifying that the gasket materials are compatible with the joints specified herein and are recommended for the specified field test pressures and service conditions.

1-4. DELIVERY, STORAGE, AND HANDLING. Shipping shall be in accordance with the Product Delivery Requirements section. Handling and storage shall be in accordance with the Product Storage and Handling Requirements section. All materials shall be stored in a sheltered location above the ground, separated by type, and shall be supported to prevent sagging or bending.

1-4.01. Coated Pipe. Handling methods and equipment used shall prevent damage to the protective coating and shall include the use of end hooks, padded calipers, and nylon or similar fabric slings with spreader bars. Bare cables, chains, or metal bars shall not be used. Coated pipe shall be stored off the ground on wide, padded skids. Plastic coated pipe shall be covered or otherwise protected from exposure to sunlight.

PART 2 - PRODUCTS

2-1. GALVANIZED STEEL PIPE.
Galvanized steel pipe materials and service shall be as specified herein.

2-1.01. Material Classification CSG-1.

CSG-1 – Standard Weight Galvanized Steel with Threaded Fittings All pipe sleeves except where plastic sleeves are required.	Pipe Fittings	ASTM A53, Type E, standard weight, Grade A or B; or ASTM A106, of equivalent thickness, galvanized. Cast iron threaded, galvanized. Fittings shall conform to ANSI/ASME B16.4, Class 125.

2-1.02. Material Classification CSG-2.

CSG-2 – Standard Weight Galvanized Steel with Threaded Fittings Grease piping – pumping units. Sump pump discharge piping in interior locations except where buried. Filtrate piping. Drain piping from equipment.	Pipe Fittings	ASTM A53, Type E, standard weight, Grade A or B; or ASTM A106, of equivalent thickness, galvanized. Malleable iron threaded, galvanized. Fittings shall conform to ANSI/ASME B16.3, Class 150, or Fed Spec WW-P-521, Type II.

2-1.03. Material Classification CSG-3. Not Used.

2-1.04. Accessory Materials. Accessory materials for galvanized steel pipe shall be as indicated in the Steel Pipe section of the specification.

2-2. STEEL PIPE. Steel pipe materials and service shall be as specified herein.

2-2.01. Material Classification CS-1. Not Used.

2-2.02. Material Classification CS-2. Not Used.

2-2.03. Material Classification CS-3. Not Used.

2-2.04. Material Classification CS-4. Not Used.

2-2.05. Material Classification CS-5. Not Used.

2-2.06. Material Classification CS-6. Not Used.

2-2.07. Material Classification CS-7. Not Used.

2-2.08. Material Classification CS-8. Not Used.

2-2.09. Material Classification CS-9. Not Used.

2-2.10. Material Classification CS-10. Not Used.

2-2.11. Material Classification CS-11. Not Used.

2-2.12. Material Classification CS-12. Not Used.

2-2.13. Material Classification CS-13. Not Used.

2-2.14. Material Classification CS-14. Not Used.

2-2.15. Accessory Materials. Accessory materials for the miscellaneous steel pipe and tubing systems shall be as indicated.

Nipples	ASTM A733, seamless, extra strong (Schedule 80); "close" nipples will be permitted only by special authorization in each case.
Unions (Malleable Iron)	Fed Spec WW-U-53l, Class 2; Type B (galvanized) for galvanized pipe or Type A (black) for ungalvanized pipe.
Flanges	
Standard Weight Pipe	ANSI/ASME B16.5, Class 150, flat faced when connected to flat faced flanges; otherwise, raised face.

Extra Strong Pipe	
Other services	ANSI/ASME B16.5, Class 300, raised face.
Flange Bolts and Nuts	ASTM A193, Grade B7 with ASTM A194 Grade 2H nuts. Length such that, after installation, the bolts will project 1/8 to 3/8 inch [3 to 10 mm] beyond outer face of the nut.
Flange Gaskets	
For Process Air Service	
Raised Face Flanges	Non-asbestos inorganic fiber with EPDM binder; dimensions to suit flange contact face, 1/16 inch [1.5 mm] minimum thickness for plain finished surfaces, 3/32 inch [2 mm] minimum thickness for serrated surfaces, rated for 275°F [135°C] service; Garlock "IFG 5507".
Flat Faced Flanges	Premium Grade, EPDM, full face for 12 inch [300 mm] and smaller ring type for 14 inch [350 mm] and larger, 1/8 inch [3 mm] thick, rated for 275°F [135°C] service; Garlock "8314".
For Water Service	ASTM D1330, Grade I, red rubber, ring type, 1/8 inch [3 mm] thick.
For Chemical Service	Suitable for chemical.
For Other Services	
Flat Faced Flanges	Non-asbestos filler with neoprene or nitrile binder; dimensions to suit flange contact face; 1/16 inch [1.5 mm] minimum thickness for plain finished surfaces, 3/32 inch [2 mm] minimum thickness for serrated surfaces.
Raised Face Flanges	Continuous stainless steel ribbon wound into a spiral with non-asbestos filler between adjacent coils with a carbon steel gauge ring. Compressed gasket thickness shall be 0.095 inch ±0.005 inch [2.4 mm ±0.13 mm].

Grooved Couplings	
Rigid	AWWA C606; Gustin-Bacon "No. 120 Rigid" or Victaulic "07 Zero-Flex".
Standard	AWWA C606; Gustin-Bacon "No. 100 Standard" or Victaulic "Style 77".
Mechanical Couplings	Dresser "Style 38" or Smith-Blair "Type 411 Flexible Coupling"; without pipe stop.
Material Classification	CS-14: Double wall pipe with leak detection.
Joining	Carrier pipe shall be joined by socket welding. Containment pipe shall be joined by split sleeve of the same diameter as containment pipe with minimum 60 mil [1.5 mm] thick polyethylene jacket.
End Seal	End seals shall be furnished at all terminal ends. The end seal shall be sealed to the containment pipe.
Leak Detection	Microprocessor based monitoring unit, for continuous monitoring by cable of a single line for water and hydrocarbon.
Control Panel	Modified NEMA Type 12 enclosure, with Status and Alarm Data Model "PAL-AT20C". Power supply to the unit will be 120 volt, 1 phase, 60 Hz. Unit shall be UL listed with alarm horn and shall locate leaks and not depend on battery back-up functions. System conditions shall be stored in memory in the event of power failure and shall automatically resume monitoring without reset once power is available. Monitoring unit shall be able to differentiate between water left in pipe during installation and an actual growing leak. Panel shall also be able to detect a break in sensor cable and its location.
Cable	Cable shall be located in the interstitial space between the carrier and containment pipe, shall detect both water and hydrocarbon, and shall be capable of being dried in place without being replaced

after exposure to any fluid Type "AGW-Gold". Coaxial cable shall interface monitoring control panel with sensor cable by utilizing waterproof junction box for protecting connection.

2-3. COATINGS. Standard weight steel pipe in buried locations, except hot piping such as aeration air piping, shall have exterior surfaces protected with a shop applied plastic coating. Coatings for hot piping shall be as specified.

Extra strong steel pipe in buried locations shall have exterior surfaces protected with a shop applied plastic coating.

All surfaces to be tape-wrapped in the shop shall be thoroughly cleaned and primed in accordance with the tape manufacturer's recommendations immediately before wrapping. The tape shall be applied by two-ply (half-lap) wrapping or as needed to provide a total installed tape thickness of at least 60 mils [1.5 mm].

Shop applied coatings shall be as follows:

External Coatings

Plastic	Liberty Coating Company “Pritec" or Bredero-Shaw “Entec". The products of other manufacturers will not be acceptable.
Tape Wrap	ANSI/AWWA C209, except single ply tape thickness shall not be less than 30 mils [760 µm]; Protecto Wrap "200" or Tapecoat "CT".
High temperature epoxy for aeration and process air piping	Shop or field applied high solids epoxy; suitable for protection at continuous pipe wall temperatures up to 300 F. Coating shall be abrasion resistant. The finished coating shall have a minimum total film thickness of 10 mils. The surface shall be prepared in accordance with SSPC-SP7 as a minimum unless otherwise recommended by the coating manufacturer. The coating shall be Carboline “Thermaline 450”, Ameron

"Amerlock 400 with Amercoat 880 Additive", or approved equal.

PART 3 - EXECUTION

3-1. INSTALLATION. Materials furnished under this section will be installed in accordance with the Miscellaneous Piping and Accessories Installation section.

End of Section

Section 15067

MISCELLANEOUS PLASTIC PIPE, TUBING, AND ACCESSORIES

PART 1 - GENERAL

1-1. SCOPE. This section covers the furnishing of miscellaneous plastic pipe, tubing, and accessories. Pipe and tubing shall be furnished complete with all fittings, flanges, unions, jointing materials and other necessary appurtenances.

1-2. SUBMITTALS.

1-2.01. Drawings and Data. Complete specifications, data and catalog cuts or drawings shall be submitted in accordance with the Submittals section. Submittals are required for all piping, fittings, gaskets, sleeves, and accessories, and shall include the following data:

Name of Manufacturer
Type and model
Construction materials, thickness, and finishes
Pressure and temperature ratings

Contractor shall obtain and submit a written statement from the gasket material manufacturer certifying that the gasket materials are compatible with the joints specified herein and are recommended for the specified field test pressures and service conditions.

1-3. DELIVERY, STORAGE, AND HANDLING. Shipping shall be in accordance with the Product Delivery Requirements section. Handling and storage shall be in accordance with the Product Storage and Handling Requirements section. All materials shall be stored in a sheltered location above the ground, separated by type, and shall be supported to prevent sagging or bending.

Pipe, tubing, and fittings shall be stored between 40°F and 90°F [4°C and 32°C].

PART 2 - PRODUCTS

2-1. FRP PIPE. Not Used.

2-2. PVC PIPE MATERIALS. PVC pipe materials and services shall be as specified herein.

2-2.01. Material Classification PVC-1.

PVC-1 – Schedule 40 PVC Pipe with Solvent Welded Joints. Carrier Pipe for sodium bisulfite.	Pipe Fittings	ASTM D1785, Cell Classification 12454, bearing NSF seal, Schedule 40. ASTM D2466, Cell Classification 12454, bearing NSF seal. All 90 degree bends shall be long radius.

2-2.02. Material Classification PVC-2. Not Used.

2-2.03. Material Classification PVC-3. Not Used.

2-2.04. Material Classification PVC-4. Not Used.

2-2.05. Material Classification PVC-5. Not Used.

2-2.06. Material Classification PVC-6. Not Used.

2-2.07. Material Classification PVC-7. Not Used.

2-2.08. Material Classification PVC-8. Not Used.

2-2.09. Accessory Materials. Accessory materials for the PVC Pipe systems shall be as indicated.

Flanges	Diameter and drilling shall conform to ANSI/ASME B16.5, Class 150. Schedule 80 for DWV systems.
Flange Bolts and Nuts	ASTM A307, Grade B, length such that, after installation, the bolts will project 1/8 to 3/8 inch [3 to 10 mm] beyond outer face of the nut. Stainless steel for DWV and chemical feed systems, galvanized steel for all other systems.
Flat Washers	ANSI B18.22.1, plain. Same material as bolts and nuts.
Flange Gaskets	Full face, 1/8 inch [3 mm] thick, chemical-resistant elastomeric material suitable for the specified service.

Expansion Joints	Edlon "Thermo-molded TFE" or Resistoflex "Style R6905" molded expansion joint.

2-3. CPVC PIPE. CPVC pipe materials and services shall be as specified herein.

2-3.01. Material Classification CPVC-1.

CPVC-1 – Schedule 80 CPVC Pipe with Solvent Welded Joints. Sodium bisulfite solution piping.	Pipe Fittings	ASTM F441, Cell Classification 23447, bearing NSF seal, Schedule 80. ASTM F439, Cell Classification 23447, bearing NSF seal. Flanges or unions shall be provided where needed to facilitate disassembly of equipment or valves. Flanges or unions shall be joined to the pipe by a solvent weld. When acceptable to Engineer, threaded joints may be used instead of solvent welded joints in exposed interior locations for the purpose of facilitating assembly. The use of threaded joints in this system shall be held to a minimum.

2-3.02. Accessory Materials. Accessory materials for the CPVC Pipe systems shall be as indicated.

Flanges	Diameter and drilling shall conform to ANSI/ASME B16.5, Class 150.
Flange Bolts and Nuts	ASTM A307, Grade B, length such that, after installation, the bolts will project 1/8 to 3/8 inch [3 to 10 mm] beyond outer face of the nut. Stainless steel for chemical feed systems, galvanized steel for all other systems.
Flat Washers	ANSI B18.22.1, plain. Same material as bolts and nuts.
Flange Gaskets	Full face, 1/8 inch [3 mm] thick, chemical-resistant elastomeric material suitable for the specified service.

Expansion Joints	Edlon "Thermo-molded TFE" or Resistoflex "Style R6905" molded expansion joint.

2-4. PE PIPE. PE pipe materials and services shall be as specified herein.

2-4.01. Material Classification PE-1. Not Used.

2-4.02. Material Classification PE-2. Not Used.

2-4.03. Material Classification PE-3. Not Used.

2-4.04. Material Classification PE-4.

PE-4 – Polyethylene Pipe. Sodium bisulfite solution piping, in carrier pipe.	Pipe Fittings	ASTM D3350, Cell Classification PE345464C or PE345464E. ASTM F412, SDR-11, pressure rating Driscoplex "PE 3408". Molded or manufactured from pipe; cell classification of material and pressure rating same as for pipe.

2-4.05. Material Classification PE-5. Not Used.

2-4.06. Material Classification PE-6. Not Used.

2-4.07. Accessory Materials. Accessory materials for the PE Pipe systems shall be as indicated.

Flanges	Schedule 80 PVC; diameter and drilling shall conform to ANSI/ASME B16.5, Class 150.
Flange Bolts and Nuts	ANSI B18.2.1, ASTM A193, AISI Type 304, heavy hex head, length such that after installation the bolts will project 1/8 to 3/8 inch [3 to 10 mm] beyond outer face of the nut. ASTM A194, AISI Type, ANSI/ASME B18.2.2, heavy hex pattern.
Fittings and Flange Adapters	Molded or manufactured from the pipe; cell classification of material and pressure rating same as for pipe.

2-5. POLYPROPYLENE PIPE. Not Used.

2-6. PVDF PIPE. Not Used.

2-7. REINFORCED PLASTIC TUBING. Not Used.

2-8. FLEXIBLE PFA TUBING. Not Used.

PART 3 - EXECUTION

3-1. INSTALLATION. Materials furnished under this section will be installed in accordance with the Miscellaneous Piping and Accessories Installation section.

End of Section

Section 15070

COPPER TUBING AND ACCESSORIES

PART 1 - GENERAL

1-1. SCOPE. This section covers the furnishing of copper tubing and accessories. Copper tubing shall be furnished complete with all fittings, flanges, unions, and other accessories specified herein.

1-2. SUBMITTALS.

1-2.01. Drawings and Data. Complete specifications, data, and catalog cuts or drawings shall be submitted in accordance with the Submittals section. Submittals are required for all piping, fittings, gaskets, sleeves, and accessories, and shall include the following data:

Name of Manufacturer
Type and model
Construction materials, thickness, and finishes
Pressure and temperature ratings

Contractor shall obtain and submit a written statement from the gasket material manufacturer certifying that the gasket materials are compatible with the joints specified herein and are recommended for the specified field test pressures and service conditions.

1-3. DELIVERY, STORAGE, AND HANDLING. Shipping shall be in accordance with the Product Delivery Requirements section. Handling and storage shall be in accordance with the Product Storage and Handling Requirements section. All materials shall be stored in a sheltered location above the ground, separated by type, and shall be supported to prevent sagging or bending.

PART 2 - PRODUCTS

2-1. MATERIALS. Copper tubing materials and service shall be as specified herein.

2-1.01. Material Classification CU-1. Not Used.

2-1.02. Material Classification CU-2. Not Used.

2-1.03. Material Classification CU-3.

CU-3 – Water Tubing with Solder and Brazed Joints Vacuum priming service, vacuum pump isolation service, vacuum pump seal ring water service	Tubing	Hard drawn copper tubing, ASTM B88, Type L.
	Fittings	Solder joint (smaller than 2 inch except compressed air piping), Brazed joint (2 inch and larger for piping other than compressed air and all sizes for compressed air piping), material to match tubing. Fittings shall conform to ANSI B16.18, or ANSI/ASME B16.22.
	Flanges	Where required for connection to equipment, valves, and accessories, ANSI B16.24, class 150, cast bronze, brazed joint.

2-1.04. Material Classification CU-4. Not Used.

2-1.05. Material Classification CU-5. Not Used.

2-1.06. Material Classification CU-6. Not Used.

2-1.07. Material Classification CU-7. Not Used.

2-1.08. Material Classification CU-8. Not Used.

2-1.09. Accessory Materials. Accessory materials for the copper tubing systems shall be as indicated.

Flange Bolts and Nuts	ASTM A307, Grade B, length such that, after installation, the bolts will project 1/8 to 3/8 inch [3 to 10 mm] beyond outer face of the nut.
Flange Gaskets	ASTM D1330, Grade I, red rubber, ring type, 1/8 inch [3 mm] thick.
Expansion Joints	Tempflex "Model HB Expansion Compensators" with copper tube ends.
Insulating Fittings	
Threaded	Dielectric steel pipe nipple, ASTM A53, Schedule 40, poly-propylene lined, zinc plated; Perfection Corp. "Clearflow Fittings".

Flanged	Epco "Dielectric Flange Unions" or Central Plastics "Insulating Flange Unions".

PART 3 - EXECUTION

3-1. INSTALLATION. Materials furnished under this section will be installed in accordance with the Miscellaneous Piping and Accessories Installation section.

End of Section

SECTION 15077

IDENTIFICATION FOR HVAC PIPING AND EQUIPMENT

PART 1 - GENERAL

1.01 SUMMARY

A. Section Includes:

1. Equipment labels.

1.02 SUBMITTAL

A. Product Data: For each type of product indicated.

1.03 TRAINING

A. No training is required.

1.04 OPERATION AND MAINTENANCE

A. Provide O&M data sheets per Division 1 specifications.

PART 2 - PRODUCTS

2.01 EQUIPMENT LABELS

A. Plastic Labels for Equipment:

1. Material and Thickness: Multilayer, multicolor, plastic labels for mechanical engraving, 1/8 inch thick, and having predrilled holes for attachment hardware.
2. Letter Color: Black.
3. Background Color: White.
4. Maximum Temperature: Able to withstand temperatures up to 160 deg F.
5. Minimum Label Size: Length and width vary for required label content, but not less than 2-1/2 by 3/4 inch.
6. Minimum Letter Size: 1/4 inch for name of units if viewing distance is less than 24 inches, 1/2 inch for viewing distances up to 72 inches, and proportionately larger lettering for greater viewing distances. Include secondary lettering two-thirds to three-fourths the size of principal lettering.
7. Fasteners: Stainless-steel rivets or self-tapping screws.
8. Adhesive: Contact-type permanent adhesive, compatible with label and with substrate.

B. Label Content: Include equipment's Drawing designation or unique equipment number, Drawing numbers where equipment is indicated (plans, details, and schedules), plus the Specification Section number and title where equipment is specified.

PART 3 - EXECUTION

3.01 PREPARATION

A. Clean piping and equipment surfaces of substances that could impair bond of identification devices, including dirt, oil, grease, release agents, and incompatible primers, paints, and encapsulants.

3.02 EQUIPMENT LABEL INSTALLATION

A. Install or permanently fasten labels on each major item of mechanical equipment.

B. Locate equipment labels where accessible and visible.

END OF SECTION 15077

SECTION 15083

HVAC INSULATION

PART 1 - GENERAL

1.01 SUMMARY

A. Section Includes:

1. Insulation Materials:
   a. Mineral fiber.
2. Adhesives.
3. Mastics.
4. Sealants.
5. Factory-applied jackets.
6. Tapes.

B. Related Sections:
1. Division 15 Section "Plumbing Insulation."

1.02 SUBMITTALS

A. Product Data: For each type of product indicated.

B. Field quality-control reports.

1.03 QUALITY ASSURANCE

A. Fire-Test-Response Characteristics: Insulation and related materials shall have fire-test-response characteristics indicated, as determined by testing identical products per ASTM E 84, by a testing and inspecting agency acceptable to authorities having jurisdiction. Factory label insulation and jacket materials and adhesive, mastic, tapes, and cement material containers, with appropriate markings of applicable testing and inspecting agency.

1. Insulation Installed Indoors: Flame-spread index of 25 or less, and smoke-developed index of 50 or less.

1.04 TRAINING

A. No training is required.

1.05 OPERATION AND MAINTENANCE

A. Provide O&M data sheets per Division 1 specifications.

PART 2 - PRODUCTS

2.01 INSULATION MATERIALS

A. Comply with requirements in Part 3 schedule articles for where insulating materials shall be applied.

B. Products shall not contain asbestos, lead, mercury, or mercury compounds.

C. Mineral-Fiber Blanket Insulation: Mineral or glass fibers bonded with a thermosetting resin. Comply with ASTM C 553, Type II and ASTM C 1290, Type III with factory-applied FSK jacket. Factory-applied jacket requirements are specified in "Factory-Applied Jackets" Article.

1. Products: Subject to compliance with requirements, available products that may be incorporated into the Work include, but are not limited to, the following:

   a. CertainTeed Corp.; Duct Wrap.
   b. Johns Manville; Microlite.
   c. Knauf Insulation; Duct Wrap.

D. Mineral-Fiber Board Insulation: Mineral or glass fibers bonded with a thermosetting resin. Comply with ASTM C 612, Type IA or Type IB. For duct and plenum applications, provide insulation with factory-applied FSK jacket. Factory-applied jacket requirements are specified in "Factory-Applied Jackets" Article.

1. Products: Subject to compliance with requirements, available products that may be incorporated into the Work include, but are not limited to, the following:

   a. CertainTeed Corp.; Commercial Board.
   b. Johns Manville; 800 Series Spin-Glas.
   c. Knauf Insulation; Insulation Board.

2.02 ADHESIVES

A. Materials shall be compatible with insulation materials, jackets, and substrates and for bonding insulation to itself and to surfaces to be insulated, unless otherwise indicated.

B. Mineral-Fiber Adhesive: Comply with MIL-A-3316C, Class 2, Grade A.

1. Products: Subject to compliance with requirements, available products that may be incorporated into the Work include, but are not limited to, the following:

   a. Childers Products, Division of ITW; CP-82.
   b. Foster Products Corporation, H. B. Fuller Company; 85-20.
   c. ITW TACC, Division of Illinois Tool Works; S-90/80.
   d. Marathon Industries, Inc.; 225.
   e. Mon-Eco Industries, Inc.; 22-25.

2. For indoor applications, use adhesive that has a VOC content of 80 g/L or less when calculated according to 40 CFR 59, Subpart D (EPA Method 24).

C. ASJ Adhesive, and FSK and PVDC Jacket Adhesive: Comply with MIL-A-3316C, Class 2, Grade A for bonding insulation jacket lap seams and joints.

1. Products: Subject to compliance with requirements, provide one of the following:

a. Childers Products, Division of ITW; CP-82.
b. Foster Products Corporation, H. B. Fuller Company; 85-20.
c. ITW TACC, Division of Illinois Tool Works; S-90/80.
d. Marathon Industries, Inc.; 225.
e. Mon-Eco Industries, Inc.; 22-25.

2. For indoor applications, use adhesive that has a VOC content of 50 g/L or less when calculated according to 40 CFR 59, Subpart D (EPA Method 24).

2.03 MASTICS

A. Materials shall be compatible with insulation materials, jackets, and substrates; comply with MIL-C-19565C, Type II.

1. For indoor applications, use mastics that have a VOC content according to 40 CFR 59, Subpart D (EPA Method 24).

B. Vapor-Barrier Mastic: Water based; suitable for indoor and outdoor use on below ambient services.

1. Products: Subject to compliance with requirements, provide one of the following:

a. Childers Products, Division of ITW; CP-35.
b. Foster Products Corporation, H. B. Fuller Company; 30-90.
c. ITW TACC, Division of Illinois Tool Works; CB-50.
d. Marathon Industries, Inc.; 590.
e. Mon-Eco Industries, Inc.; 55-40.
f. Vimasco Corporation; 749.

2. Water-Vapor Permeance: ASTM E 96, Procedure B, 0.013 perm at 43-mil dry film thickness.
3. Service Temperature Range: Minus 20 to plus 180 deg F.
4. Solids Content: ASTM D 1644, 59 percent by volume and 71 percent by weight.
5. Color: White.

C. Breather Mastic: Water based; suitable for indoor and outdoor use on above ambient services.

1. Products: Subject to compliance with requirements, provide the following:

a. Childers Products, Division of ITW; CP-10.
b. Foster Products Corporation, H. B. Fuller Company; 35-00.
c. ITW TACC, Division of Illinois Tool Works; CB-05/15.
d. Marathon Industries, Inc.; 550.
e. Mon-Eco Industries, Inc.; 55-50.
f. Vimasco Corporation; WC-1/WC-5.

2. Water-Vapor Permeance: ASTM F 1249, 3 perms at 0.0625-inch dry film thickness.
3. Service Temperature Range: Minus 20 to plus 200 deg F.

4. Solids Content: 63 percent by volume and 73 percent by weight.
5. Color: White.

2.04 SEALANTS

A. Joint Sealants:

1. Materials shall be compatible with insulation materials, jackets, and substrates.
2. Permanently flexible, elastomeric sealant.
3. Service Temperature Range: Minus 100 to plus 300 deg F.
4. Color: White or gray.
5. For indoor applications, use sealants that have a VOC content of 250 g/L or less when calculated according to 40 CFR 59, Subpart D (EPA Method 24).

B. FSK and Metal Jacket Flashing Sealants:

1. Products: Subject to compliance with requirements, provide one of the following:

   a. Childers Products, Division of ITW; CP-76-8.
   b. Foster Products Corporation, H. B. Fuller Company; 95-44.
   c. Marathon Industries, Inc.; 405.
   d. Mon-Eco Industries, Inc.; 44-05.
   e. Vimasco Corporation; 750.

2. Materials shall be compatible with insulation materials, jackets, and substrates.
3. Fire- and water-resistant, flexible, elastomeric sealant.
4. Service Temperature Range: Minus 40 to plus 250 deg F.
5. Color: Aluminum.
6. For indoor applications, use sealants that have a VOC content of 250 g/L or less when calculated according to 40 CFR 59, Subpart D (EPA Method 24).

2.05 FACTORY-APPLIED JACKETS

A. Insulation system schedules indicate factory-applied jackets on various applications. When factory-applied jackets are indicated, comply with the following:
   1. FSK Jacket: Aluminum-foil, fiberglass-reinforced scrim with kraft-paper backing; complying with ASTM C 1136, Type II.

2.06 TAPES

A. FSK Tape: Foil-face, vapor-retarder tape matching factory-applied jacket with acrylic adhesive; complying with ASTM C 1136.

1. Products: Subject to compliance with requirements, provide one of the following:

   a. Avery Dennison Corporation, Specialty Tapes Division; Fasson 0827.
   b. Compac Corp.; 110 and 111.
   c. Ideal Tape Co., Inc., an American Biltrite Company; 491 AWF FSK.
   d. Venture Tape; 1525 CW, 1528 CW, and 1528 CW/SQ.

2. Width: 3 inches.

3. Thickness: 6.5 mils.
4. Adhesion: 90 ounces force/inch in width.
5. Elongation: 2 percent.
6. Tensile Strength: 40 lbf/inch in width.
7. FSK Tape Disks and Squares: Precut disks or squares of FSK tape.

PART 3 - EXECUTION

3.01 PREPARATION

A. Surface Preparation: Clean and dry surfaces to receive insulation. Remove materials that will adversely affect insulation application.

B. Wet Insulation: Any insulation that is found to be wet shall be removed from the project immediately and replaced with equal, as specified, submitted and approved. Wet insulation shall be removed and replaced any time through the end of the warranty period.

3.02 GENERAL INSTALLATION REQUIREMENTS

A. Install insulation materials, accessories, and finishes with smooth, straight, and even surfaces; free of voids throughout the length of equipment, ducts and fittings, and piping including fittings, valves, and specialties.

B. Install insulation materials, forms, vapor barriers or retarders, jackets, and thicknesses required for each item of equipment, duct system, and pipe system as specified in insulation system schedules.

C. Install accessories compatible with insulation materials and suitable for the service. Install accessories that do not corrode, soften, or otherwise attack insulation or jacket in either wet or dry state.

D. Install insulation with longitudinal seams at top and bottom of horizontal runs.

E. Install multiple layers of insulation with longitudinal and end seams staggered.

F. Do not weld brackets, clips, or other attachment devices to piping, fittings, and specialties.

G. Keep insulation materials dry during application and finishing.

H. Install insulation with tight longitudinal seams and end joints. Bond seams and joints with adhesive recommended by insulation material manufacturer.

I. Install insulation with least number of joints practical.

J. Where vapor barrier is indicated, seal joints, seams, and penetrations in insulation at hangers, supports, anchors, and other projections with vapor-barrier mastic.

1. Install insulation continuously through hangers and around anchor attachments.

2. For insulation application where vapor barriers are indicated, extend insulation on anchor legs from point of attachment to supported item to point of attachment to structure. Taper and seal ends at attachment to structure with vapor-barrier mastic.
3. Install insert materials and install insulation to tightly join the insert. Seal insulation to insulation inserts with adhesive or sealing compound recommended by insulation material manufacturer.
4. Cover inserts with jacket material matching adjacent pipe insulation. Install shields over jacket, arranged to protect jacket from tear or puncture by hanger, support, and shield.

K. Apply adhesives, mastics, and sealants at manufacturer's recommended coverage rate and wet and dry film thicknesses.

L. Install insulation with factory-applied jackets as follows:

1. Draw jacket tight and smooth.
2. Cover circumferential joints with 3-inch- wide strips, of same material as insulation jacket. Secure strips with adhesive and outward clinching staples along both edges of strip, spaced 4 inches o.c.
3. Overlap jacket longitudinal seams at least 1-1/2 inches. Install insulation with longitudinal seams at bottom of pipe. Clean and dry surface to receive self-sealing lap. Staple laps with outward clinching staples along edge at 2 inches o.c.

   a. For below ambient services, apply vapor-barrier mastic over staples.

4. Cover joints and seams with tape as recommended by insulation material manufacturer to maintain vapor seal.
5. Where vapor barriers are indicated, apply vapor-barrier mastic on seams and joints and at ends adjacent to duct and pipe flanges and fittings.

M. Cut insulation in a manner to avoid compressing insulation more than 75 percent of its nominal thickness.

N. Finish installation with systems at operating conditions. Repair joint separations and cracking due to thermal movement.

O. Repair damaged insulation facings by applying same facing material over damaged areas. Extend patches at least 4 inches beyond damaged areas. Adhere, staple, and seal patches similar to butt joints.

P. For above ambient services, do not install insulation to the following:
1. Testing agency labels and stamps.
2. Nameplates and data plates.
3. Cleanouts.

3.03 DUCT LINER INSTALLATION – TRANSFER DUCTS

A. All portions of duct designated to receive duct liner shall be completely covered with duct liner. All joints shall be neatly butted and there shall be no interruptions or gaps. Duct liner shall be installed with the black surface treatment exposed to the air stream.
B. Duct liner shall be adhered to the sheet metal with 90% (minimum) coverage of adhesive complying with the requirements of ASTM C 916.
C. All transverse edges that are not to receive sheet metal nosing shall be coated. Longitudinal joints shall occur at the corners of ducts. If duct size and standard duct liner product dimensions make exposed longitudinal joints necessary, such joints shall be coated with adhesive designated for duct liner application and which meets the requirements of ASTM C 916. Such

joints shall be additionally secured with mechanical fasteners in accordance with NAIMA FGDLS, or SMACNA HVAC DCS as if they were transverse joints.

D. Duct liner shall be additionally secured with mechanical fasteners complying with the requirements NAIMA FGDLS or SMACNA HVAC DCS and of the correct type for the duct liner being installed. Fasteners may be either weld-secured or impact-driven, and shall be installed perpendicular to the duct surface. Mechanical fasteners shall not compress the insulation more than 1/8" (3 mm) based on nominal insulation thickness. Fastener spacing with respect to interior duct dimensions shall be in accordance with NAIMA FGDLS or SMACNA HVAC DCS. Fastener heads or washers shall have a minimum area of 0.75 in^2 (484 mm^2), with beveled or cupped edges to prevent their cutting into the duct liner.

E. Where air velocities exceed 4000 fpm (20.3 m/sec), metal nosing (either channel or "zee" profile) shall be installed on upstream edges of liner duct sections.

F. Metal nosing shall be securely installed over transverse liner edges facing the airstream at fan discharge and at any point where lined duct is preceded by unlined duct.

G. Duct liner in roll form shall be folded and compressed in the corners of rectangular duct sections, or shall be cut and fit to assure a lapped, compressed corner joint

H. Duct liner in sheet form shall be cut and fit to assure tight, over-lapped corner joints. Top pieces of liner shall be supported at the edges by the side pieces

I. Any damage to the air stream surface must be repaired by coating the damaged area with adhesive or coating designed for duct liner application. Adhesive or coating shall meet requirements of ASTMC916

3.04 PENETRATIONS

Q. Insulation Installation at Aboveground Exterior Wall Penetrations: Install insulation continuously through wall penetrations.

1. Seal penetrations with flashing sealant.
2. For applications requiring only indoor insulation, terminate insulation inside wall surface and seal with joint sealant. For applications requiring indoor and outdoor insulation, install insulation for outdoor applications tightly joined to indoor insulation ends. Seal joint with joint sealant.
3. Extend jacket of outdoor insulation outside wall flashing and overlap wall flashing at least 2 inches.
4. Seal jacket to wall flashing with flashing sealant.

R. Insulation Installation at Interior Wall and Partition Penetrations (That Are Not Fire Rated): Install insulation continuously through walls and partitions.

S. Insulation Installation at Fire-Rated Wall and Partition Penetrations: Install insulation continuously through penetrations of fire-rated walls and partitions. Terminate insulation at fire damper sleeves for fire-rated wall and partition penetrations. Externally insulate damper sleeves to match adjacent insulation and overlap duct insulation at least 2 inches.

1. Comply with requirements in Division 7 Section "Through-Penetration Firestop Systems" for firestopping and fire-resistive joint sealers.

3.05 MINERAL-FIBER INSULATION INSTALLATION

A. Blanket Insulation Installation on Ducts and Plenums: Secure with adhesive and insulation pins.

B. In first subparagraph below, many manufacturers do not recommend 100 percent coverage of adhesive because of the effect on the overall insulation system's fire-performance characteristics. Verify application coverage recommendations with insulation manufacturer.

C. Apply adhesives according to manufacturer's recommended coverage rates per unit area, for 50 percent coverage of duct and plenum surfaces.

D. Revise first subparagraph below to allow adhesive to be omitted from top surface of horizontal rectangular ducts.

E. Apply adhesive to entire circumference of ducts and to all surfaces of fittings and transitions.

F. Install either capacitor-discharge-weld pins and speed washers or cupped-head, capacitor-discharge-weld pins on sides and bottom of horizontal ducts and sides of vertical ducts as follows:

G. On duct sides with dimensions 18 inches and smaller, place pins along longitudinal centerline of duct. Space 3 inches maximum from insulation end joints, and 16 inches o.c.

H. On duct sides with dimensions larger than 18 inches, place pins 16 inches o.c. each way, and 3 inches maximum from insulation joints. Install additional pins to hold insulation tightly against surface at cross bracing.

I. Pins may be omitted from top surface of horizontal, rectangular ducts and plenums.
   1. Do not overcompress insulation during installation.
   2. Impale insulation over pins and attach speed washers.
   3. Cut excess portion of pins extending beyond speed washers or bend parallel with insulation surface. Cover exposed pins and washers with tape matching insulation facing.

J. For ducts and plenums with surface temperatures below ambient, install a continuous unbroken vapor barrier. Create a facing lap for longitudinal seams and end joints with insulation by removing 2 inches from 1 edge and 1 end of insulation segment. Secure laps to adjacent insulation section with 1/2-inch outward-clinching staples, 1 inch o.c. Install vapor barrier consisting of factory- or field-applied jacket, adhesive, vapor-barrier mastic, and sealant at joints, seams, and protrusions.

K. Repair punctures, tears, and penetrations with tape or mastic to maintain vapor-barrier seal.

L. Install vapor stops for ductwork and plenums operating below 50 deg F at 18-foot intervals. Vapor stops shall consist of vapor-barrier mastic applied in a Z-shaped pattern over insulation face, along butt end of insulation, and over the surface. Cover insulation face and surface to be insulated a width equal to 2 times the insulation thickness but not less than 3 inches.

M. Overlap unfaced blankets a minimum of 2 inches on longitudinal seams and end joints. At end joints, secure with steel bands spaced a maximum of 18 inches o.c.

N. Install insulation on rectangular duct elbows and transitions with a full insulation section for each surface. Install insulation on round and flat-oval duct elbows with individually mitered gores cut to fit the elbow.

O. Insulate duct stiffeners, hangers, and flanges that protrude beyond insulation surface with 6-inch- wide strips of same material used to insulate duct. Secure on alternating sides of stiffener, hanger, and flange with pins spaced 6 inches o.c.

P. Board Insulation Installation on Ducts and Plenums: Secure with adhesive and insulation pins.

1. In first subparagraph below, many manufacturers do not recommend 100 percent coverage of adhesive because of the effect on the overall insulation system's fire-performance characteristics. Verify application coverage recommendations with insulation manufacturer.

2. Apply adhesives according to manufacturer's recommended coverage rates per unit area, for 100 percent coverage of duct and plenum surfaces.

3. Revise first subparagraph below to allow adhesive to be omitted from top surface of horizontal rectangular ducts.

4. Apply adhesive to entire circumference of ducts and to all surfaces of fittings and transitions.
5. Install either capacitor-discharge-weld pins and speed washers or cupped-head, capacitor-discharge-weld pins on sides and bottom of horizontal ducts and sides of vertical ducts as follows:

   a. On duct sides with dimensions 18 inches and smaller, place pins along longitudinal centerline of duct. Space 3 inches maximum from insulation end joints, and 16 inches o.c.
   b. On duct sides with dimensions larger than 18 inches, space pins 16 inches o.c. each way, and 3 inches maximum from insulation joints. Install additional pins to hold insulation tightly against surface at cross bracing.
   c. Pins may be omitted from top surface of horizontal, rectangular ducts and plenums.
   d. Do not overcompress insulation during installation.
   e. Cut excess portion of pins extending beyond speed washers or bend parallel with insulation surface. Cover exposed pins and washers with tape matching insulation facing.

Q. For ducts and plenums with surface temperatures below ambient, install a continuous unbroken vapor barrier. Create a facing lap for longitudinal seams and end joints with insulation by removing 2 inches from 1 edge and 1 end of insulation segment. Secure laps to adjacent insulation section with 1/2-inch outward-clinching staples, 1 inch o.c. Install vapor barrier consisting of factory- or field-applied jacket, adhesive, vapor-barrier mastic, and sealant at joints, seams, and protrusions.

1. Repair punctures, tears, and penetrations with tape or mastic to maintain vapor-barrier seal.
2. Install vapor stops for ductwork and plenums operating below 50 deg F at 18-foot intervals. Vapor stops shall consist of vapor-barrier mastic applied in a Z-shaped pattern over insulation face, along butt end of insulation, and over the surface. Cover insulation face and surface to be insulated a width equal to 2 times the insulation thickness but not less than 3 inches.

3. Install insulation on rectangular duct elbows and transitions with a full insulation section for each surface. Groove and score insulation to fit as closely as possible to outside and inside radius of elbows. Install insulation on round and flat-oval duct elbows with individually mitered gores cut to fit the elbow.
4. Insulate duct stiffeners, hangers, and flanges that protrude beyond insulation surface with 6-inch- wide strips of same material used to insulate duct. Secure on alternating sides of stiffener, hanger, and flange with pins spaced 6 inches o.c.

3.06 DUCT INSULATION SCHEDULE, GENERAL

A. Plenums and Ducts Requiring Insulation:

1. Indoor, concealed supply and outdoor air.

2. Indoor, exposed supply and outdoor air.

3. Indoor, concealed return located in non-conditioned space.
4. Indoor, exposed return located in non-conditioned space.
5. Indoor, concealed exhaust between isolation damper and penetration of building exterior.
6. Indoor, exposed exhaust between isolation damper and penetration of building exterior.

END OF SECTION 15083

Section 15091

MISCELLANEOUS BALL VALVES

PART 1 - GENERAL

1-1. SCOPE. This section covers the furnishing of manually operated or remote activated two position (open-close) ball valves as specified herein.

Miscellaneous ball valves shall be provided where AWWA type ball valves are not required.

Piping, pipe supports, insulation, and accessories that are not an integral part of the valves or are not specified herein are covered in other sections.

1-2. GENERAL.

1-2.01. General Equipment Stipulations. The General Equipment Stipulations shall apply to all equipment and materials furnished under this section. If the requirements in this section are different from those in the General Equipment Stipulations, the requirements in the section shall take precedence.

1-2.02. Identification. Valves specified herein shall be tagged in accordance with the Equipment and Valve Identification section.

1-3. SUBMITTALS. Complete drawings, details, and specifications covering the valves and their appurtenances shall be submitted in accordance with the Submittals Procedures section. Included in the submittal shall be drawings by the valve manufacturer to indicate the position of the valve actuator and valve shaft.

PART 2 - PRODUCTS

2-1. CONSTRUCTION. Ball valves shown on the drawing, but not specified herein, shall be selected to match piping material they are installed in.

2-1.01. Valves Type VB-1.

VB-1 vacuum priming service, vacuum pump isolation service, and vacuum pump seal ring water service 2 inch and smaller	Rating	500 psi [3.4 MPa] nonshock cold WOG
	Code	MSS SP-110
	Type	In-line, two piece, end entry, full port
	Body/Bonnet	ASTM B584–C84400 bronze
	Trim	
	Seat	Reinforced Teflon
	Ball	Brass, or chrome plated brass
	Stem	Brass or bronze
	Thrust Washer	Reinforced Teflon
	Stem Seal	Teflon or Viton
	End Connection	Threaded End
	Temp. Limitations	-20 to 400°F [-29 to 204°C]
	Valve Operator	Lever
	Manufacturers	Conbraco Industries "Apollo 77-100 Series"

2-1.02. Valves Type VB-2.

VB-2 vacuum priming service, vacuum pump isolation service 2-1/2 inch and 3 inch	Rating	500 psi [3.4 MPa] nonshock cold WOG
	Code	MSS SP-110
	Type	In-line, three piece, end entry, full port
	Body/Bonnet	ASTM B584-C84400 Bronze
	Trim	
	Seat	Reinforced Teflon
	Ball	Brass or chrome plated
	Stem	Brass or Bronze
	Thrust Washer	Reinforced Teflon
	Stem Seal	Teflon or Viton
	End Connection	Threaded End
	Temp. Limitations	-20 to 400°F [-29 to 204°C]
	Valve Operator	Lever
	Manufacturers	Conbraco Industries "Apollo 82-100 Series"

2-1.03. Valves Type VB-3. Not Used.

2-1.04. Valves Type VB-4. Not Used.

2-1.05. Valves Type VB-5. Not Used.

2-1.06. Valves Type VB-6. Not Used.

2-1.07. Valves Type VB-7. Not Used.

2-1.08. Valves Type VB-8. Not Used.

2-1.09. Valves Type VB-9. Not Used.

2-1.10. Valves Type VB-10.

VB-10 Service as specified in Miscellaneous Plastic Pipe, Tubing, and Accessories section 4 inch and smaller Socket	Rating	150 psig [1.0 MPa] nonshock cold WOG
	Type	In-line, true union, full port (Schedule 80)
	Body/Bonnet	PVC or CPVC to match piping system
	Trim	
	Seat	Teflon
	Ball	PVC or CPVC to match piping system
	Stem	PVC or CPVC to match piping system
	Thrust Washer	Teflon
	Stem Seal	Viton O-ring
	Body Seals	Viton O-rings
	End Connection	Socket
	Temp. Limitations	0 to 140°F [-18 to 60°C]
	Valve Operator	Lever
	Manufacturers	Hayward Plastic Products "True Union Ball Valve"; Nibco "Chemtrol TU Series Tru-Bloc Ball Valve"; Spears Manufacturing Co "True Union 2000 Standard Series 3600 Ball Valve"

2-1.11. Valves Type VB-11.

VB-11 Service as specified in Miscellaneous Plastic Pipe, Tubing, and Accessories section	Rating	150 psig [1.0 MPa] nonshock cold WOG
	Type	In-line, true union, full port (Schedule 80)
	Body/Bonnet	PVC or CPVC to match piping system
	Trim	
	Seat	Teflon
	Ball	PVC or CPVC to match piping

4 inch and smaller Flanged		system
	Stem	PVC or CPVC to match piping system
	Thrust Washer	Teflon
	Stem Seal	Viton O-ring
	Body Seals	Viton O-rings
	End Connection	Flanged, ASME B16.5, Class 150, raised face
	Temp. Limitations	0 to 140°F [-18 to 60°C]
	Valve Operator	Lever
	Manufacturers	Hayward Plastic Products "True Union Ball Valve"; Nibco "Chemtrol TU Series Tru-Bloc Ball Valve"; Spears Manufacturing Co. "True Union 2000 Standard Series 3600 Ball Valve"

2-1.12. Valves Type VB-12. Not Used.

2-1.13. Valves Type VB-13. Not Used.

2-1.14. Valves Type VB-14. Not Used.

2-1.15. Valves Type VB-15. Not Used.

2-1.16. Valves Type VB-16. Not Used.

2-1.17. Valves Type VB-17. Not Used.

2-1.18. Three-Way Ball Valve

.

VB-18 Three-way ball valves in anti-siphon loop service 2 inch and smaller	Rating	150 psig nonshock cold WOG
	Type	True union, three-way valve (Schedule 80)
	Body/Bonnet	PVC to match piping system
	Trim	Teflon
	Seat	PVC to match piping system
	Ball	PVC to match piping system
	Stem	Teflon Viton O-ring

		Viton O-rings
	Thrust Washer	
	Stem Seal	Socket Weld
	Body Seals	
		0 to 140°F
	End Connection	
		Lever
	Temp. Limitations	
		Asahi-America “Type 23
	Valve Operator	Multiport,” Hayward “Three-Way
		Ball Valves,” Nibco “3-Way Ball
	Manufacturers	Valve,” Spears “True Union 2000
		Industrial 3-Way Valve.”

2-1.19. Length Tolerance. Unless otherwise specified, the actual length of valves shall be within plus or minus 1/16 inch [1.6 mm] of the specified or theoretical length.

2-1.20. Shop Coatings. All ferrous metal surfaces of valves and accessories, both interior and exterior, shall be shop coated for corrosion protection. The valve manufacturer’s standard coating will be acceptable, provided it is functionally equivalent to the specified coating.

Coating Materials

Coal Tar Epoxy	High-build coal tar epoxy; Ameron "Amercoat 78HB Coal Tar Epoxy", Carboline "Bitumastic 300 M", Tnemec "46H-413 Hi-Build Tneme-Tar", or Sherwin-Williams "Hi-Mil Sher-Tar Epoxy".
Epoxy Enamel (for liquid service)	Ameron "Amerlock 400 High-Solids Epoxy Coating", Carboline "Carboguard 891", or Tnemec "Series N140 Pota-Pox Plus".
Rust-Preventive Compound	As recommended by the manufacturer.

Surfaces To Be Coated

Unfinished Surfaces

Interior Surfaces

Liquid Service	Epoxy enamel.
Exterior Surfaces of Valves To Be Buried, Submerged, or Installed in Manholes or Valve Vaults	Coal tar epoxy.
Exterior Surfaces of all other valves	Universal primer.

2-2. VALVE ACTUATORS. Ball valve, except those which are equipped with power actuators or are designed for automatic operation, shall be provided with manual actuators. Unless otherwise specified or indicated on the drawings, each manual actuator shall be equipped with a lever operator. Ball valves with center lines more than 7'-6" [2.3m] above the floor shall be provided with chain levers.

Valves indicated to be electric motor operated on the drawings shall have reversible electric motor operators designed for 120 volt ac, single phase operation. Actuators shall include integral thermal overload protection and a declutchable manual override. Actuators shall be equipped with motor operation limit switches and two additional single-pole, double-throw limit switches for auxiliary open and closed indication. An internal heater and thermostat shall be provided in each actuator housing to prevent condensation. Actuators in Class I, Division 1 and Division 2, Group D hazardous areas indicated on the drawings shall have NEMA Type 7 housings. Actuators in other areas shall have NEMA Type 4X housings.

2-3. ACCESSORIES. If the drawings indicate the need for extension stems, stem guides; position indicator; floor boxes; valve boxes; or operating stands, refer to the Valve and Gate Actuator section.

PART 3 - EXECUTION

3-1. INSTALLATION. Materials furnished under this section shall be installed in accordance with the Valve Installation section.

End of Section

Section 15092

INDUSTRIAL BUTTERFLY VALVES

PART 1 - GENERAL

1-1. SCOPE. This section covers the furnishing of manual or remote operated industrial butterfly valves as specified hereinand as indicated in the Industrial Butterfly Valve Schedule.

Industrial type butterfly valves shall be provided where AWWA type butterfly valves are not required.

Piping, pipe supports, insulation, and accessories that are not an integral part of the valves or are not specified herein are covered in other sections. Powered actuators are covered in the Valve and Gate Actuators section.

1-2. GENERAL.

1-2.01. General Equipment Stipulations. The General Equipment Stipulations shall apply to all equipment furnished under this section. If requirements in this specification differ from those in the General Equipment Stipulations, the requirements specified herein shall take precedence.

1-2.02. Temporary Number Plates. Not Used.

1-2.03. Identification. Valves specified herein shall be tagged in accordance with the Equipment and Valve Identification section.

1-3. SUBMITTALS.

1-3.01. Drawings and Data. Complete drawings, details, and specifications covering the valves and their appurtenances shall be submitted in accordance with the Submittals Procedures section. Included in the submittal shall be drawings by the valve manufacturer to indicate the position of the valve actuator and valve shaft.

Drawings shall include separate wiring diagrams for each electrically operated or controlled valve and the electrical control equipment. Each drawing shall be identified with the valve number or name as specified in this section.

1-3.02. Operation and Maintenance Data and Manuals. Operation and maintenance manuals shall be submitted in accordance with the Submittals Section (01300). The operation and maintenance manuals shall be in addition to

any instruction or parts lists packed with or attached to the equipment when delivered.

PART 2 - PRODUCTS

2-1. CONSTRUCTION. Unless otherwise specified, industrial butterfly valves shall be the rubber-seat, tight-closing type. Valves specified with an electric, air, or hydraulic actuators shall be the lugged wafer style. Valve discs shall seat at 90 degrees with the pipe axis.

Industrial butterfly valves with center lines more than 7'-6" above the floor shall be provided with chain-wheels and operating chains as specified herein.

Flanged end valves shall be of the short-body type. Where mechanical joint ends are specified, in the valve schedule, either mechanical joint or push-on ends conforming to ANSI/AWWA C111/A21.11 will be acceptable. For buried or submerged service, shaft seals shall be O-ring type.

2-1.01. Valves VBF-1. Not Used.
2-1.02. Valves VBF-2. Not Used.
2-1.03. Valves VBF-3.

VBF-3 Filter Air Scour service	Rating	ANSI Class 150
	Body	ASTM A 351, CF8M, 316 stainless steel
	Trim	
	Seat	RTFE
	Disc	ASTM A351, CF8M, 316 stainless steel
	Stem	17-4 PH stainless steel
	Stem Packing	TFE or PTFE
	Shaft Bearings	Graphite impregnated or PTFE impregnated 316 stainless steel
	End Connection	Lugged wafer, ASME B16.5, Class 150 diameter and drilling
	Temperature Limitations	-20 to 250°F
	Manual Valve Operator	
	6" & smaller	Lever
	8" & larger	Geared Handwheel
	Manufacturer	Keystone K-LOK High Performance Figure 362-159; Pratt Series 400, Figure 402 ABZ Series 400, Figure 402

2-1.04. Valves VBF-4. Not Used.
2-1.05. Length Tolerance. Unless otherwise specified, the actual length of valves shall be within plus or minus 1/16 inch of the specified or theoretical length.

2-1.06. Shop Coatings. All ferrous metal surfaces of valves and accessories, both interior and exterior, shall be shop coated for corrosion protection. The valve manufacturer's standard coating will be acceptable, provided it is functionally equivalent to the specified coating.

Coating Materials	Specification Compliance
Coal Tar Epoxy	High-build coal tar epoxy; Ameron "Amercoat 78HB Coal Tar Epoxy", Carboline "Bitumastic 300 M", Tnemec "46H-413 Hi-Build Tneme-Tar", or Sherwin-Williams "Hi-Mil Sher-Tar Epoxy".
Rust-Preventive Compound	As recommended by the manufacturer.
Universal Primer	As recommended by the manufacturer.

Surfaces To Be Coated	Material
Unfinished Surfaces	
Exterior Surfaces of Valves To Be Buried, Submerged, or Installed in Manholes or Valve Vaults	Asphalt varnish or coal tar epoxy.
Exterior Surfaces of All Other Valves	Universal primer.
Polished or Machined Surfaces	Rust-preventive compound.
Actuators and Accessories	Universal primer.

2-2. VALVE ACTUATORS. Manual actuated valves 6 inches and smaller, unless chain-wheel actuators are required, shall be provided with levers as specified herein. Valves 8 inches and larger shall have enclosed, geared, hand-wheel or chain-wheel actuators with position indicators as specified herein. Requirements for automatic valve actuators shall be as specified herein, as indicated in the Industrial Butterfly Valves Schedule, and as specified in the Valve and Gate Actuator section.

2-2.01. Manual Actuators. Manual actuators of the types listed herein and in the in the Industrial Butterfly Valves Schedule shall be provided by the valve manufacturer.

Unless otherwise indicated or specified, each geared manual actuator shall be equipped with an operating hand-wheel.

The direction of rotation of the wheel, wrench nut, or lever to open the valve shall be to the left (counterclockwise). Each valve body or actuator shall have cast thereon the word "Open" and an arrow indicating the direction to open.

The housing of traveling-nut type actuators shall be fitted with a removable cover which shall permit inspection and maintenance of the operating mechanism without removing the actuator from the valve. Travel limiting devices shall be provided inside the actuator for the open and closed positions. Travel limiting stop nuts or collars installed on the reach rod of traveling-nut type operating mechanisms shall be field adjustable and shall be locked in position by means of a removable roll pin, cotter pin, or other positive locking device. The use of stop nuts or adjustable shaft collars which rely on clamping force or setscrews to prevent rotation of the nut or collar on the reach rod will not be acceptable.

Each actuator shall be designed so that shaft seal leakage cannot enter the actuator housing.

Valves for throttling service shall be equipped with an infinitely variable locking device or a totally enclosed gear actuator.

Actuators shall produce the required torque with a maximum pull of 80 lbs [356 N] on the lever, hand-wheel, or chain. Actuator components shall withstand, without damage, a pull of 200 lbs [890 N] on the hand-wheel or chain-wheel or an input of 300 foot-lbs [407 J] on the operating nut.

2-2.02. Handwheels. Handwheel diameters shall be as recommended by the valve manufacturer.

2-2.03. Levers. Levers shall be capable of being locked in at least five intermediate positions between fully open and fully closed.

2-2.04. Chain-wheels. All valves with center lines more than 7'-6" above the floor shall be provided with chain-wheels and operating chains, unlessotherwise specified in the Industrial Butterfly Valve Schedule. Each chain-wheel operated valve shall be equipped with a chain guide which will permit rapid handling of the operating chain without "gagging" of the wheel and will also permit reasonable side pull on the chain. Suitable extensions shall be provided, if necessary, to prevent interference of the chain with adjacent piping or equipment. Operating

chains shall be hot-dip galvanized carbon steel and shall be looped to extend to within 4 feet of the floor below the valve.

2-3. ACCESSORIES. Requirements for extension stems and stem guides, position indicators, floor boxes, operating stands, torque tubes, and valves boxes shall be as specified in Valve and Gate Actuator section, and as indicated in the Industrial Butterfly Valves Schedule.

PART 3 - EXECUTION

3-1. INSTALLATION. Materials furnished under this section shall be installed in accordance with Valve Installation section.

End of Section

Section 15093

CHECK VALVES

PART 1 - GENERAL

1-1. SCOPE. This section covers the furnishing of check valves as specified herein and as indicated in the Check Valve Schedule.

Piping, pipe supports, insulation, and accessories that are not an integral part of the valves or are not specified herein are covered in other sections.

1-2. GENERAL. Equipment furnished under this section shall be fabricated and assembled in full conformity with Drawings, Specifications, engineering data, instructions, and recommendations of the equipment manufacturer unless exceptions are noted by Engineer.

Valves shall be furnished with all necessary parts and accessories indicated on the Drawings, specified, otherwise required for a complete, properly operating installation and shall be the latest standard products of a manufacturer regularly engaged in the production of valves.

1-2.01. General Equipment Stipulations. The General Equipment Stipulations shall apply to all equipment furnished under this section. If requirements in this specification differ from those in the General Equipment Stipulations, the requirements specified herein shall take precedence.

1-2.02. Temporary Number Plates. Not Used.

1-2.03. Identification. Valves specified herein shall be tagged in accordance with the Equipment and Valve Identification section.

1-3. SUBMITTALS.

1-3.01. Drawings and Data. Complete drawings, details, and specifications covering the valves and their appurtenances shall be submitted in accordance with the Submittals section. Included in the submittal shall be drawings by the valve manufacturer to indicate the position of the valve actuator and valve shaft.

1-3.02. Operation and Maintenance Data and Manuals. Operation and maintenance manuals shall be submitted in accordance with the Submittals Section (01300). The operation and maintenance manuals shall be in addition to any instruction or parts lists packed with or attached to the equipment when delivered.

PART 2 – PRODUCTS

2-1. CONSTRUCTION.

2-1.01. Valves VC-1. Not used.

2-1.02. Valves VC-2. Not used.

2-1.03. Valves VC-3. Not used.

2-1.04. Valves VC-4. Not used.

2-1.05. Valves VC-5.

VC-5	Rating	Class 150
	Type	Flanged, double disc
Filter Air	Body	A351-CF8M, 316 Stainless steel
Scour service	Trim	
	Seat	Viton
2 inch and	Disc	A351-CF8M, 316 Stainless steel
larger pipe	Hinge Pins/Stops	A351-CF8M, 316 Stainless steel
	Springs	A351-CF8M, 316 Stainless steel
	Bushings	Viton
	End Connection	Flanged, ASME B16.5, Class 150 diameter and drilling
		-20 to 250°F
	Temp. Limitations	Cameron Techno, “Model 5003-316”, US Valve, “Model 19-4-4”, Flexi-Hinge, “Series 503”.
	Manufacturers	

2-1.06. Valves VC-6. Not Used.

2-1.07. Valves VC-7. Not Used.

2-1.08. Valves VC-8. Not Used.

2-1.09. Valves VC-9. Not Used.

2-1.10. Valves VC-10. Not Used.

2-1.11. Valves VC-11. Not Used.

2-1.12. Valves VC-12. Not Used.

2-1.13. Valves VC-13. Not Used.

2-1.14. Valves VC-14. Not Used.

2-1.15. Valves VC-15. Not Used.

2-1.16. Valves VC-16. Not Used.

2-1.17. Valves VC-17.

[VC-17 Chemical piping vacuum relief service PVC or CPVC pipe	Rating Type Body Trim Diaphragm End Connection Temp. Limitations Manufacturers	100 psig [690 kPa] nonshock Diaphragm, two piece PVC Chemical resistant Threaded 0 to 140°F [-18 to 60°C] Plast-O-Matic “Series CKM Check Valves” or “Series VB Vacuum Breakers”

2-1.18. Valves VC-18. Not Used.

2-1.19. Valves VC-19. Not Used.

2-1.20. Shop Coatings. All ferrous metal surfaces of valves and accessories, both interior and exterior, shall be shop coated for corrosion protection. The valve manufacturer’s standard coating will be acceptable, provided it is functionally equivalent to the specified coating.

Coal Tar Epoxy	High-build coal tar epoxy; Ameron "Amercoat 78HB Coal Tar Epoxy", Carboline "Bitumastic 300 M", Tnemec "46H-413 Hi-Build Tneme-Tar", or Sherwin-Williams "Hi-Mil Sher-Tar Epoxy".
Epoxy Enamel (for liquid service)	Ameron "Amerlock 400 High-Solids Epoxy Coating", Carboline "Carboguard°891", or Tnemec "Series N140 Pota-Pox Plus".
Rust-Preventive Compound	As recommended by the manufacturer.

Surfaces To Be Coated

Unfinished Surfaces	
Interior Surfaces	
Liquid Service	Epoxy enamel.
Exterior Surfaces of Valves To Be Buried, Submerged, or Installed in Manholes or Valve Vaults	Asphalt varnish or coal tar epoxy.
Exterior Surfaces of All Other Valves	Universal primer.
Polished or Machined Surfaces	Rust-preventive compound.
Actuators and Accessories	Universal primer.

PART 3 - EXECUTION

3-1. INSTALLATION. Materials furnished under this section shall be installed in accordance with Valve Installation section.

End of Section

Section 15096

GLOBE VALVES

PART 1 - GENERAL

1-1. SCOPE. This section covers the furnishing of manually operated or remote activated two position (open-close) globe valves as specified herein.

1-2. GENERAL. Equipment furnished under this section shall be fabricated and assembled in full conformity with drawings, specifications, engineering data, instructions, and recommendations of the equipment manufacturer unless exceptions are noted by Engineer.

Valves shall be furnished with all necessary parts and accessories indicated on the drawings, specified, otherwise required for a complete, properly operating installation and shall be the latest standard products of a manufacturer regularly engaged in the production of valves.

1-2.01. General Equipment Stipulations. The General Equipment Stipulations shall apply to all equipment furnished under this section. If requirements in this specification differ from those in the General Equipment Stipulations, the requirements specified herein shall take precedence.

1-2.02. Coordination. All equipment provided under this section shall be furnished by or through a single manufacturer who shall be responsible for the design, coordination, and satisfactory performance of all components over the full operating range.

1-2.03. Tagging. Each item of equipment and each part shipped separately shall be tagged and identified with indelible markings for the intended service. Tag number shall be clearly marked on all shipping labels and on the outside of all containers.

1-2.04. Identification. Valves specified herein shall be tagged in accordance with the Equipment and Valve Identification section.

1-3. SUBMITTALS. Complete drawings, details, and specifications covering the valves and their appurtenances shall be submitted in accordance with the Submittals Procedures section. Included in the submittal shall be drawings by the valve manufacturer to indicate the position of the valve actuator and valve shaft.

PART 2 - PRODUCTS

2-1. CONSTRUCTION.

2-1.01. Valves VGL-1. Not Used.

2-1.02. Valves VGL-2.

VGL-2 Globe valves indicated on plumbing drawings, clear water service 3/4 to 2 inch pipe Threaded	Rating Code Type Body/Bonnet Trim Seat Disc Stem Bonnet Gasket Stem Packing End Connection Temp. Limitations Valve Operator Manufacturers	Class 125 MSS SP-80, Type 1 In-line, metal disc, threaded bonnet, rising stem ASTM B62, bronze Integral to body Bronze Bronze Manufacturer's standard Manufacturer's standard Threaded 0 to 350°F [-18 to 177°C] Handwheel Milwaukee "502", Stockham "B-16", Nibco "T-211".

2-1.03. Valves VGL-3. Not Used.

2-1.04. Valves VGL-4. Not Used.

2-1.05. Valves VGL-5. Not Used.

2-1.06. Valves VGL-6. Not Used.

2-1.07. Valves VGL-7. Not Used.

2-1.08. Valves VGL-8. Not Used.

2-1.09. Valves VGL-9. Not Used.

2-1.10. Valves VGL-10. Not Used.

2-1.11. Valves VGL-11. Not Used.

2-1.12. Valves VGL-12. Not Used.

2-1.13. Length Tolerance. Unless otherwise specified, the actual length of valves shall be within plus or minus 1/16 inch [1.6 mm] of the specified or theoretical length.

2-1.14. Shop Coatings. All ferrous metal surfaces of valves and accessories, both interior and exterior, shall be shop coated for corrosion protection. The valve manufacturer's standard coating will be acceptable, provided it is functionally equivalent to the specified coating.

Coating Materials	
Asphalt Varnish	Fed Spec TT-C-494.
Coal Tar Epoxy	High-build coal tar epoxy; Ameron "Amercoat 78HB Coal Tar Epoxy", Carboline "Bitumastic 300 M", Tnemec "46H-413 Hi-Build Tneme-Tar", or Sherwin-Williams "Hi-Mil Sher-Tar Epoxy".
Epoxy Enamel (for liquid service)	Ameron "Amerlock 400 High-Solids Epoxy Coating", Carboline "Carboguard 891", or Tnemec "Series N140 Pota-Pox Plus".
Rust-Preventive Compound	As recommended by the manufacturer.

Surfaces To Be Coated	
Unfinished Surfaces	
Interior Surfaces	
Liquid Service	Asphalt varnish (two coats) or epoxy enamel.
Exterior Surfaces of Valves To Be Buried, Submerged, or Installed in Manholes or Valve Vaults	Asphalt varnish or coal tar epoxy.
Exterior Surfaces of All Other Valves	Universal primer.
Polished or Machined Surfaces	Rust-preventive compound.
Actuators and Accessories	Universal primer.

2-2. VALVE ACTUATORS. Unless otherwise specified, globe valves shall be provided with handweel type manual actuators. Handwheel diameter shall be manufacturers standard size.

Unless otherwise specified, valves indicated to be electric motor operated on the drawings shall have reversible electric motor operators designed for 120 volt ac, single phase operation. Actuators shall include integral thermal overload protection and a declutchable manual override. Actuators shall be equipped with motor operation limit switches and two additional single-pole, double-throw limit switches for auxiliary open and closed indication. An internal heater and thermostat shall be provided in each actuator housing to prevent condensation. Actuators in Class I, Division 1 or Division 2, Group D hazardous areas indicated on the drawings shall have NEMA Type 7 housings. Actuators in other areas shall have NEMA Type 4X housings.

2-3. ACCESSORIES. Requirements for extension stems and stem guides; position indicators; floor boxes; valve boxes; and operating stands shall be as specified in Valve and Gate Actuators section.

PART 3 - EXECUTION

3-1. INSTALLATION. Materials furnished under this section shall be installed in accordance with Valve Installation section.

End of Section

Section 15099

PRESSURE REGULATING VALVES

PART 1 - GENERAL

1-1. SCOPE. This section covers the furnishing of pressure reducing valves, and pressure sustaining valves as specified herein.

Piping, pipe supports, insulation, and accessories which are not an integral part of the valves or are not specified herein are covered in other sections.

1-2. GENERAL.

1-2.01. General Equipment Stipulations. The General Equipment Stipulations shall apply to all equipment and materials provided under this section. If requirements in this specification differ from those in the General Equipment Stipulations, the requirements specified herein shall take precedence.

1-2.02. Identification. Valves specified herein shall be identified in accordance with the Equipment and Valve Identification section.

1-3. SUBMITTALS.

1-3.01. Drawings and Data. Complete fabrication and assembly drawings, together with detailed specifications and data covering materials, parts, devices, and accessories forming a part of the equipment furnished, shall be submitted in accordance with the Submittals Procedures section. The data and specifications for each unit shall include, but shall not be limited to, the following:

Name of Manufacturer
Type and Model
Construction Material and Finishes
Unit Dimensions

Approved Manufacturer and valve requirements are as follows:

Cla-Val Model 50-01 Pressure Sustaining Valve - 4" 50G-01 B, D, P, V, KC, KO, ductile iron body, Stainless steel trim, 150# flanged end connections, 20-200 psi control range. 0-200 psi pressure gauges. Stainless steel tubes and fittings shall be supplied. Valve shall be supplied with X-144 flow meter installed inlet of the valve. X-145.

In addition to standard manufacturer provided equipment and accessories the system shall Insertion Flow Meter x-144 and strainer F-76, and associated piping and fittings.

The Valves and required piping, accessories, and piping assembly shall be factory assembled.

1-3.02. Operation and Maintenance Data and Manuals. Adequate operation and maintenance information shall be supplied as required in the Submittals Procedures section. Operation and maintenance manuals shall be submitted in accordance with the Submittals Procedures section. The operation and maintenance manuals shall be in addition to any instructions or parts lists packed with or attached to the equipment when delivered.

PART 2 - PRODUCTS

2-1. PERFORMANCE AND DESIGN REQUIREMENTS. Pressure reducing valves shall be designed to meet the service requirements as indicated herein.

Each pressure reducing valve shall be designed to provide tight shutoff under conditions of no flow and shall not "hunt" under ordinary flow conditions. Pressure reducing valves shall be selected and sized as recommended by the valve manufacturer. Valve pressure setpoint shall be adjustable to at least 20 percent above and below the reduced pressure setpoint.

2-2. ACCEPTABLE MANUFACTURERS. Acceptable manufacturers and specific products are listed above.

2-3. MATERIALS. Valve materials shall be as indicated below and in the Construction paragraph.

Shop Coatings

Epoxy Enamel, NSF certified (Liquid Service)	Ameron "Amerlock 400 High-Solids Epoxy Coating", Carboline "Carboguard 891", or Tnemec "Series N140 Pota-Pox Plus"; immersion service.

2-4. CONSTRUCTION.

2-4.01. Water Service. Pressure reducing, and pressure sustaining valves shall be direct-acting or pilot-operated type as indicated herein.

The pressure relief pilot shall be a direct-acting, adjustable, spring-loaded, diaphragm valve designed to permit flow when controlling pressure exceeds the adjustable spring setting. The pilot control is normally held closed by the force of the compression on the spring above the diaphragm and it opens when the pressure acting on the underside of the diaphragm exceeds the spring setting.

Pilot control sensing shall be upstream of the pilot system strainer so accurate control may be maintained if the strainer is partially blocked.

A full range of spring settings shall be available in ranges from 20-200 psi.

2-4.02. Gas Service. Not Used.

2-5. SAFETY VALVES FOR AIR SERVICE. Not Used

2-6. SHOP PAINTING. All ferrous metal surfaces of valves and accessories, both interior and exterior, shall be shop painted for corrosion protection in accordance with the following list. The valve manufacturer's standard coating will be acceptable, provided it is functionally equivalent to the specified coating and is compatible with the field painting specified in the Protective Coatings section.

Interior Surfaces	
Liquid Service	Epoxy (NSF certified).
Exterior Surfaces	Universal primer with epoxy finish coat.

PART 3 - EXECUTION

3-1. INSTALLATION. Materials furnished under this section will be installed in accordance with the Valve Installation section.

End of Section

Section 15101

AWWA BUTTERFLY VALVES

PART 1 – GENERAL

1-1. SCOPE. This section covers furnishing of AWWA butterfly valves for cold water service as indicated in the AWWA Butterfly Valve Schedule.

AWWA butterfly valves shall be furnished complete with actuators and accessories as specified herein, as indicated in the schedule, and as specified in the Valve and Gate Actuators section.

1-2. GENERAL. Equipment provided under this section shall be fabricated and assembled in full conformity with Drawings, Specifications, engineering data, instructions, and recommendations of the equipment manufacturer, unless exceptions are noted by Engineer.

Valves shall be furnished with all necessary parts and accessories indicated on the Drawings, specified, or otherwise required for a complete, properly operating installation and shall be the latest standard products of a manufacturer regularly engaged in the production of valves.

1-2.01. General Equipment Stipulations. The General Equipment Stipulations shall apply to all equipment furnished under this section. If requirements in this specification differ from those in the General Equipment Stipulations, the requirements specified herein shall take precedence.

1-2.02. Governing Standard. Except as modified or supplemented herein, all butterfly valves and manual actuators shall conform to the applicable requirements of ANSI/AWWA C504.

1-2.03. Marking. Supplementing the requirements of Section 6.1 of the governing standard, the country of origin of all castings and an identifying serial number shall be stamped on a corrosion-resistant plate attached to the valve body.

1-2.04. Temporary Number Plates. Each butterfly valve shall be tagged or marked in the factory with the identifying number listed in the AWWA Butterfly Valve Schedule.

1-2.05. Identification. AWWA butterfly valves shall be tagged in accordance with the Equipment and Valve Identification section.

1-3. SUBMITTALS.

1-3.01. Drawings and Data. Complete drawings, details, and specifications covering the valves and their appurtenances shall be submitted in accordance with the Submittals section. Included in the submittal shall be drawings by the valve manufacturer to indicate the position of the valve actuator and valve shaft.

Certified copies of test results for tests described in Section 5 of the governing standard, shall be submitted to Engineer before the valves are shipped. An affidavit of compliance with the governing standard for valves 72 inches [1800 mm] and smaller and for valves 78 inches [2000 mm] and larger shall be provided as indicated in Section 6.3 of ANSI/AWWA C504.

1-3.02. Operation and Maintenance Data and Manuals. Operation and maintenance manuals shall be submitted in accordance with the Submittals Section (01300). The operation and maintenance manuals shall be in addition to any instruction or parts lists packed with or attached to the equipment when delivered.

PART 2 - PRODUCTS

2-1. ACCEPTABLE PRODUCTS. Butterfly valves shall be by the manufacturers listed below.

DeZurik

Pratt (Mueller)

2-2. MATERIALS. Except as modified or supplemented herein, materials used in the manufacture of butterfly valves shall conform to the requirements of the governing standard.

Acceptable shop coatings are listed in the following table.

Coal Tar Epoxy	High-build coal tar epoxy; PPG Amercoat "Amercoat 78HB Coal Tar Epoxy", Carboline "Bitumastic 300 M", Tnemec "46H-413 Hi-Build Tneme-Tar", or Sherwin-Williams "Hi-Mil Sher-Tar Epoxy".

Epoxy	
For Liquid Service other than in potable water facilities	PPG Amercoat “Amercoat 385 Epoxy”, Carboline “Carboguard 890”, Sherwin-Williams "Macropoxy 646" or Tnemec “Series N69 Hi-Build Epoxoline II”.
For Raw or Treated Water Service in potable water facilities (NSF certified)	PPG Amercoat “Amerlockt 400 High Solids Epoxy”, Carboline “Carboguard 891”, Sherwin-Williams "Macropoxy 646NSF" or Tnemec “Series N140 Pota-Pox Plus”.
Rust-Preventive Compound	As recommended by manufacturer.

2-3. VALVE CONSTRUCTION.

2-3.01. Valve Bodies. Valves shall be short-body type unless otherwise specified in the AWWA Butterfly Valve Schedule. The use of a stop or lug cast integrally with or mechanically secured to the body for the purpose of limiting disc travel by means of direct contact or interference with the valve disc (in either the open or closed position) will not be acceptable.

2-3.02. Flanges. Flanges shall be finished to true plane surfaces within a tolerance limit of 0.005 inch [125 µm]. The finished face shall be normal to the longitudinal valve axis within a maximum angular variation tolerance of 0.002 inch per foot (0.017 percent) of flange diameter.

2-3.03. Mechanical Joint Ends. Mechanical joint ends shall be either mechanical joint or push-on ends conforming to ANSI/AWWA C111/A21.11.

2-3.04. Valve Shafts. Valve shafts shall be fabricated of AISI Type 304 or 316 stainless steel. The use of shafts having a hexagonal cross section will not be acceptable. The connection between shaft and disc shall be in accordance with the governing standard.

The connection between the shaft and the disc shall be mechanically secured by means of solid, smooth sided, stainless steel or monel taper pins or dowel pins. Each taper pin or dowel pin shall extend through or shall wedge against the side of the shaft and shall be mechanically secured in place. The use of set screws, knurled or fluted dowel pins, expansion pins, roll pins, tension pins, spring pins, or other devices instead of the pins specified herein will not be acceptable.

2-3.05. Valve Seats. Acceptable seating surfaces mating with rubber are AISI Type 304 or 316 stainless steel, monel, or plasma-applied nickel-chrome overlay

for all valves; and alloy cast iron for 20 inch [500 mm] and smaller manually operated valves.

Seats shall be located on the valve body. Valve seat configurations which rely on the mating pipe flange to hold the seat in position in the valve body will not be acceptable.

2-3.06. Shaft Seals. Shaft seals shall be of the chevron type.

2-3.07. Thrust Bearings. Each valve shall be provided with one or more thrust bearings in accordance with the governing standard. Thrust bearings which are directly exposed to line liquid and which consist of a metal bearing surface in rubbing contact with an opposing metal bearing surface will not be acceptable.

2-4. VALVE ACTUATORS. Requirements for valve actuators shall be as specified herein, as indicated in the AWWA Butterfly Valve Schedule, and as specified in the Valve and Gate Actuators section.

All 8 inch [200 mm] and larger valves shall have geared actuators.

If valves with an AWWA class designation higher than specified are furnished, actuator torque capabilities shall be increased accordingly and shall be acceptable to Engineer.

2-4.01. Actuator Sizing. The valve manufacturer shall size the actuator in accordance with the governing standard , the operating conditions and requirements indicated in the AWWA Butterfly Valve Schedule, and the valve manufacturer's requirements.

Unless otherwise indicated or specified, actuator torque requirements shall be based on a maximum differential pressure across the valve equal to the maximum pressure associated with the valve class and a maximum velocity through the valve of 16 feet per second [4.9 m/s].

Valves with operating stands shall have actuator torques increased by 25 percent. Actuator torques determined by the above requirements shall be increased by any design factors required by paragraph 4.2.8 of ANSI/AWWA C504 or as specified herein.

2-5. SHOP PAINTING. All interior and exterior ferrous metal surfaces, except finished surfaces, bearing surfaces, and stainless steel components, of valves and accessories shall be shop painted for corrosion protection. The valve manufacturer's standard coating will be acceptable, provided it is functionally equivalent to the specified coating and is compatible with the specified field painting.

Surfaces shall be painted as follows:

Unfinished Surfaces	
Interior Surfaces	Epoxy.
Exterior Surfaces of Valves to be Buried or Installed in Manholes or Valve Vaults	Coal tar epoxy. Epoxy.
Exterior Surfaces of Valves to be Submerged	Epoxy.
Exterior Surfaces of All Other Valves	Universal primer.
Polished or Machined Surfaces	
Flange Faces	Rust-preventive compound.
Other Surfaces	Epoxy.

Interior coatings shall comply with ANSI/AWWA C550 and shall be free of holidays. The total dry film thickness of shop-applied coatings shall be not less than:

Type of Coating	Minimum Dry Film Thickness
Coal Tar Epoxy	15 mils [380 µm]
Epoxy	10 mils [250 µm]
Universal Primer	3 mils [75 µm]

2-6. ACCESSORIES. Requirements for extension stems and stem guides, position indicators, floor boxes, operating stands, torque tubes, valve boxes, and extension bonnets shall beas indicated in the AWWA Butterfly Valve Schedule and as specified in the Valve and Gate Actuators section.

PART 3 - EXECUTION

3-1. INSTALLATION. Valves shall be installed in accordance with the Valve Installation section.

3-1.01. Installation Check. An experienced, competent, and authorized representative of the manufacturer shall visit the site of the Work and inspect, check, adjust if necessary, and approve the equipment installation. The representative shall be present when the equipment is placed in operation in accordance with Startup Requirements section, and shall revisit the job site as

often as necessary until any problems are corrected and the equipment installation and operation are satisfactory in the opinion of Engineer

The manufacturer's representative shall furnish a written report certifying that the equipment has been properly installed and lubricated; is in accurate alignment; is free from any undue stress imposed by connecting piping and appurtenances; and has been operated under full load conditions and that it has operated satisfactorily.

All costs for these services shall be included in the contract price.

End of Section

Section 15102

ECCENTRIC PLUG VALVES

PART 1 - GENERAL

1-1. SCOPE. This section covers furnishing all eccentric plug valves as required by the Work and as indicated in the Valve Schedule. Plug valves shall be furnished complete with actuators and accessories as specified herein, as indicated in the schedule, and as specified in the Valve and Gate Actuators section.

1-2. GENERAL. Equipment provided under this section shall be fabricated and assembled in full conformity with Drawings, Specifications, engineering data, instructions, and recommendations of the equipment manufacturer, unless exceptions are noted by Engineer.

Valves shall be furnished with all necessary parts and accessories indicated on the Drawings, specified, or otherwise required for a complete, properly operating installation and shall be the latest standard products of a manufacturer regularly engaged in the production of valves.

1-2.01. General Equipment Stipulations. The General Equipment Stipulations shall apply to all equipment and materials furnished under this section. If the requirements in this section are different from those in the General Equipment Stipulations, the requirements in the section shall take precedence.

1.2.02. Governing Standard. Except as modified or supplemented herein, all eccentric plug valves and manual actuators shall conform to the applicable requirements of ANSI/AWWA C517.

1-2.03. Marking. Each valve shall be marked with the manufacturer's name, valve size, and pressure rating, and the country of origin of the body casting. All markings shall be cast on the exterior surface of the valve body. An identifying serial number shall be stamped on a corrosion-resistant plate attached to the valve body.

1-2.04. Temporary Number Plates. Each eccentric plug valve with an identifying number listed in the Valve Schedule, shall be tagged or marked in the factory with the identifying number.

1-2.05. Identification. Eccentric plug valves shall be identified in accordance with the Equipment and Valve Identification section.

1-3. SUBMITTALS.
Complete drawings, details, and specifications covering the valves and their appurtenances shall be submitted in accordance with the Submittals section.

1-3.01. Drawings and Data. Certified copies of test reports for tests described in Section 5. of governing standard, with an affidavit of compliance as indicated in Section 6.3 of governing standard, shall be submitted to Engineer before the valves are shipped.

1-3.02. Operation and Maintenance Data and Manuals. Operation and maintenance manuals shall be submitted in accordance with the Submittals section (01300). The operation and maintenance manuals shall be in addition to any instruction or parts lists packed with or attached to the equipment when delivered.

PART 2 - PRODUCTS

2-1. ACCEPTABLE PRODUCTS. Eccentric plug valves furnished under this section shall be manufactured by DeZurik, Pratt, Milliken, or Victaulic, without exception.

2-2. MATERIALS. Materials used in the manufacture of eccentric plug valves shall be as indicated:

Body	Cast iron, ASTM A126, Class B; or ductile iron, ASTM A536, Grade 65-45-12.
Plug	Cast iron, ASTM A126, Class B; or ductile iron, ASTM A536, Grade 65-45-12.
Plug Facing	Chloroprene, Neoprene or Buna-N, 70 Type A durometer hardness in accordance with ASTM D2240.
Body Seat	Welded nickel overlay.
Upper and Lower Trunnion Bearings	Sleeve type; stainless steel or bronze.
Upper Thrust Bearing	TFE, Nylatron, or Delrin.
Stem Seal	V-type packing or U-cups, Buna-N or TFE.

The following are acceptable shop coatings.

Coal Tar Epoxy	High-build coal tar epoxy; PPG Amercoat "Amercoat 78HB Coal Tar Epoxy", Carboline "Bitumastic 300 M", Tnemec "46H-413 Hi-Build Tneme-Tar", or Sherwin-Williams "Hi-Mil Sher-Tar Epoxy".
Epoxy	
For Gas Service	PPG Amercoat “Amercoat 385 Epoxy”, Carboline “Carboguard 890”, Tnemec “Series N69 Hi-Build Epoxoline II”, Sherwin-Williams "Macropoxy 646" or Carboline “Plasite 7122”.
For Liquid Service other than in potable water facilities	PPG Amercoat “Amercoat 385 Epoxy”, Carboline “Carboguard 890”, Sherwin-Williams "Macropoxy 646".or Tnemec “Series N69 Hi-Build Epoxoline II”.

2-3. VALVE CONSTRUCTION.

2-3.01. Valve Body. The valve port area of each valve shall be at least 80 percent of the cross section of the connecting piping for 20 inch [500 mm] and smaller valves and 70 percent for 24 inch [600 mm] and larger valves. Valves shall provide tight shutoff at the rated pressure from either direction. An adjustable closed position plug stop shall be provided.

Each valve body shall be plainly marked to indicate the seat end. The actual length of 10 inch [250 mm] and smaller valves shall be within plus or minus 1/16 inch [1.6 mm] of the theoretical length. The actual length of 12 inch [300 mm] and larger valves shall be within plus or minus 1/8 inch [3 mm] of the theoretical length.

Valve ends shall be compatible with connecting piping. All valves shall have flanged, grooved or mechanical joint ends as indicated on the Drawings. Flange diameter and drilling shall conform to ANSI B16.1, Class 125. Flanges shall be flat faced and finished to true plane surfaces within a tolerance limit of 0.005 inch [0.12 mm]. The finished face shall be normal to the longitudinal valve axis within a maximum angular variation tolerance of 0.002 inch per foot [0.16 mm per meter] of flange diameter. Grooved end dimensions shall conform to

ANSI/AWWA C606, Table 5, for rigid joints. When grooved end valves are to be installed in flanged piping, two flange adapters compatible with the connecting piping shall be provided with each valve. Mechanical joint ends shall conform to ANSI/AWWA C111/A21.11.

2-3.02. Plug. The plug shall be of one-piece construction and shall have a cylindrical or spherical seating surface eccentrically offset from the center of the plug shaft. The interference between the plug face and the body seat, with the plug in the closed position, shall be externally adjustable in the field with the valve in the line under pressure. Plug surfaces shall be faced with a resilient material.

2-3.03. Seats. Seats shall be cast in the body and shall have raised, welded-in nickel overlay not less than 0.050 inch [1.30 mm] thick on all surfaces in contact with the plug face. The overlay shall be at least 90 percent nickel and have a Brinell hardness of 200 or greater.

2-3.04. Stem Seals. The valve shaft shall be sealed by U-cups or by at least four self-adjusting chevron type packing rings.

2-3.05. Working Pressure. Valves shall be rated for a minimum working pressure as specified below, except where otherwise indicated .

Size in inches(mm)	Pressure Rating in psi(kPa)
3 to 12 (80-300)	175 (1200)
14 to 72 (350-1800)	150 (1000)

2-4. VALVE ACTUATORS. Requirements for valve actuators shall be as specified herein, as indicated in the Valve Schedule, and as specified in the Valve and Gate Actuators section.

Geared actuators shall be used for manually operated valves in the following applications:

a. For all 4 inch [100 mm] and larger buried valves.

b. For all 8 inch [200 mm] and larger valves.

c. For all 6 inch [150 mm] and larger valves in throttling or free discharge applications.

d. For all 6 inch [150 mm] and larger valves where the unseating pressure exceeds 25 psi [170 kPa].

e. For all chainwheel operated valves.

f. For all valves in gas service.

Geared actuators for plug valves unless otherwise specified or listed in the Valve Schedule shall be rated for a differential pressure across the valve, on the seating side, of 100 psi [680 kPa] for 6 inch [150 mm] to 8 inch [200 mm] valves, 50 psi [340 kPa] for 10 inch [250 mm] and larger valves, and 25 psi [170 kPa] for gas service valves and a maximum flow of 8 ft/s [2.4 m/s].

2-5. SHOP PAINTING. All interior and exterior ferrous metal surfaces, except bearing and finished surfaces and stainless steel components of valves and accessories, shall be shop painted for corrosion protection. The valve manufacturer's standard coating will be acceptable, provided it is functionally equivalent to the specified coating and is compatible with the specified field painting.

Surfaces shall be painted as follows:

Unfinished Surfaces	
Interior Surfaces	
For Liquid Service	Epoxy.
For Gas Service	Epoxy.
Exterior Surfaces of Valves to be Buried, Submerged, or Installed in Manholes or Valve Vaults	Coal tar epoxy.
Exterior Surfaces of All Other Valves	Universal primer.
Polished or Machined Surfaces	Rust-preventive compound.

Interior epoxy coatings shall comply with ANSI/AWWA C550 and shall be free of holidays.

The total dry film thickness of shop-applied coatings shall be not less than:

Type of Coating	Minimum Dry Film Thickness
Coal Tar Epoxy	15 mils [380 µm]
Epoxy	10 mils [250 µm]
Universal Primer	3 mils [75 µm]

2-6. ACCESSORIES. Requirements for extension stems and stem guides, position indicators, floor boxes, operating stands, and valve boxes shall be as indicated in the Valve Schedule andas indicated on the Drawings and as specified in the Valve and Gate Actuators section.

2-7. TESTING. Except as modified herein, eccentric plug valves shall be tested in accordance with Section 5 of the governing standard. Each valve shall be performance tested in accordance with Section 5.2 of the governing standard. The leakage test shall be applied to the seating face of the plug (tending to unseat the plug) at the rated pressure of the valve.

Each valve shall be leaktight in both directions when closed by the actuator with the maximum differential pressure applied to the plug as specified herein.

PART 3 - EXECUTION

3-1. INSTALLATION. Valves shall be installed in accordance with Valve Installation section.

3-1.01. Installation Check. An installation check by an authorize representative of the manufacturer is not required.

End of Section

Section 15103

AWWA BALL VALVES

PART 1 - GENERAL

1-1. SCOPE. This section covers furnishing 6 inch [150 mm] and larger AWWA ball valves as required by the Work. Four inch [100 mm] and smaller ball valves and other non AWWA ball valves are covered in the Miscellaneous Ball Valves section. AWWA ball valves shall be furnished complete with actuators and accessories as specified herein and as specified in Valve and Gate Actuators section.

1-2. GENERAL. Equipment provided under this section shall be fabricated and assembled in full conformity with Drawings, Specifications, engineering data, instructions, and recommendation of the equipment manufacturer, unless exceptions are noted by Engineer.

Valves shall be furnished with all necessary parts and accessories indicated on the Drawings, specified, otherwise required for a complete, properly operating installation and shall be the latest standard products of a manufacturer regularly engaged in the production of valves.

1-2.01. General Equipment Stipulations. The General Equipment Stipulations shall apply to all equipment furnished under this section. If requirements in this specification differ from those in the General Equipment Stipulations, the requirements specified herein shall take precedence.

1-2.02. Governing Standard. Except as modified or supplemented herein, all ball valves and manual actuators shall conform to the applicable requirements of ANSI/AWWA C507.

1-2.03. Coordination. All equipment provided under this section shall be furnished by or through a single manufacturer who shall be responsible for the design, coordination, and satisfactory performance of all components over the full operating range.

1-2.04. Temporary Number Plates. Not Used.

1-2.05. Identification. AWWA ball valves shall be tagged in accordance with the Equipment and Valve Identification section.

1-3. SUBMITTALS. Complete drawings, details, and specifications covering the valves and their appurtenances shall be submitted in accordance with the Submittals section.

Certified copies of test results for tests described in Section 5 of the governing standard, with an affidavit of compliance as indicated in Section 6.3 of the governing standard, shall be submitted to Engineer before the valves are shipped.

PART 2 - PRODUCTS

2-1. MATERIALS. Except as modified or supplemented herein, materials used in the manufacture of ball valves shall conform to ANSI/AWWA C507.

Acceptable shop coatings are listed as follows:

Epoxy		
	For Liquid Service other than in potable water facilities	PPG Amercoat “Amercoat 385 Epoxy”, Carboline “Carboguard 890”, Sherwin-Williams "Macropoxy 646" or Tnemec “Series N69 Hi-Build Epoxoline II”.
	For Raw or Treated Water Service in potable water facilities (NSF certified)	PPG Amercoat "Amerlock 400 High-Solids Epoxy Coating"; Carboline "Carboguard 891", Sherwin- Williams “Macropoxy 646NSF” or Tnemec "Series N140 Pota-Pox plus"; immersion service.
Rust-Preventive Compound		As recommended by manufacturer.

2-2. VALVE CONSTRUCTION.

2-2.01. Valve Body. Each valve body shall be provided with flanged ends. Flanges shall be flat faced and finished to true plane surfaces within a tolerance of 0.005 inch [0.12 mm]. Each flange face shall be perpendicular to the longitudinal axis of the valve, within a maximum angular variation tolerance of 0.002 inch per foot [0.16 mm/m] of flange diameter. Flange faces shall have concentric or spiral serrated finish.

Actual length of valves shall be within plus or minus 1/16 inch [1.6 mm] of the theoretical length.

2-2.02. Ball. Each ball shall be designed so that there will be flow between the ball and body when the ball is in a throttled position and so that substantially all flow is through the ball when in the fully open position.

2-2.03. Seats. The seats type shall be resilient.

For resilient-seated valves, seats shall be provided on both the ball and the valve body. The resilient seat shall be located on the ball or the valve body, and the rigid seat shall be located opposite the resilient seat. Each valve shall be equipped with seats on both ends. Seats shall be securely anchored in place.

Contact pressure between seats shall not exceed 1,000 psi [6,895 kPa] at an unbalanced head equal to the specified working pressure.

2-2.04. Operating Mechanism. Unless otherwise specified, the basic operating mechanism for each valve shall be of the traveling-nut type and shall consist of (1) a traveling crosshead which will move transversely to the valve shaft, (2) a threaded lead screw engaging corresponding threads in the crosshead, which will move the crosshead when turned by the valve drive unit for manual or electric motor operated valves, and a piston rod with the crosshead directly attached thereto for cylinder operated valves, and (3) a rotator lever, linked to the crosshead, which will impart a rotary motion to the valve shaft.

2-3. VALVE ACTUATORS. Requirements for valve actuators shall be as specified herein and as specified in the Valve and Gate Actuators section. Valve actuator types shall be manual types.

2-4. SHOP PAINTING. All interior and exterior ferrous metal surfaces of valves and accessories shall be shop painted for corrosion protection. The valve manufacturer's standard coating will be acceptable, provided it is functionally equivalent to the specified coating and is compatible with the specified field painting.

Surfaces shall be painted as follows:

Unfinished Surfaces	
Interior Surfaces	Epoxy.
Exterior Surfaces of Valves to be Buried or Installed in Manholes or Valve Vaults	Epoxy.
Exterior Surfaces of Valves to be Submerged	Epoxy.
Exterior Surfaces of All Other Valves	Universal primer.
Polished or Machined Surfaces	
Flange Faces	Rust-preventive compound.
Other Surfaces	Epoxy.

Interior epoxy coatings shall comply with ANSI/AWWA C550 and shall be free of holidays. The total dry film thickness of shop-applied coatings shall be not less than:

Type of Coating	Minimum Dry Film Thickness
Epoxy	10 mils [250 µm]
Universal Primer	3 mils [75 µm]

2-5. ACCESSORIES. Requirements for extension stems and stem guides; position indicators; floor boxes; and operating stands shall be as specified in the Valve and Gate Actuators section.

PART 3 - EXECUTION

3-1. INSTALLATION. Valves shall be installed in accordance with the Valve Installation section.

3-1.01. Installation Check. An installation check by an authorize representative of the manufacturer is not required.

End of Section

Section 15111

GATE INSTALLATION

PART 1 - GENERAL

1-1. SCOPE. This section covers the installation of new gates and actuators purchased by Contractor as part of this Work.

The following specification sections are applicable to gates to be installed under this contract:

Cast-Iron Slide Gates

Open-Channel Metal Slide Gates and Weir Gates

1-2. GENERAL. Equipment installed under this section shall be erected and placed in proper operating condition in full conformity with Drawings, Specifications, engineering data, instructions, and recommendations of the equipment manufacturer, unless exceptions are noted by Engineer.

Any gates and actuators identified as being provided by others will be furnished complete for installation by Contractor. Technical specifications under which the equipment will be purchased are available.

1-2.01. Coordination. Installation check services shall be provided by the gate manufacturer, Contractor shall coordinate the services with the gate manufacturer. Contractor shall give Engineer written notice at least 30 days prior to the need for manufacturer's installation check services.

Submittals for equipment furnished by others under each procurement contract will be furnished to Contractor upon completion of review by Engineer. Contractor shall review equipment submittals and coordinate with the requirements of the Work and the Contract Documents. Contractor accepts sole responsibility for determining and verifying all quantities, dimensions, and field construction criteria.

PART 2 - PRODUCTS

2-1. MATERIALS. Materials shall be as follows:

Grout	As specified in the Grouting section.

PART 3 - EXECUTION

3-1. INSPECTION. All gates and accessories shall be inspected for damage and cleanliness before being installed. Any material damaged or contaminated in handling on the job shall not be used unless it is repaired and re-cleaned to the original requirements by Contractor. Such material shall be segregated from the clean material and shall be inspected and approved by Owner or his representative before its use. Owner shall, at its sole discretion, decide whether damage to an item of equipment warrants repair or replacement.

3-2. INSTALLATION.

3-2.01. General. Gates and appurtenances shall be installed with sufficient clearance for proper operation of any external mechanisms, and with sufficient clearance to dismantle the gate for maintenance. Installation shall be in accordance with the manufacturer's recommendations and the requirements specified herein.

All bolts shall be tightened and all items requiring lubrication, including pivot pins, shall be lubricated. Anti-seize thread lubricant shall be liberally applied to the threaded portion of stainless steel anchor bolts during the installation and tightening of nuts. Excess lubricant shall be thoroughly removed following final tightening.

The threaded portion of each plastic stem cover shall be wrapped in at least two layers of teflon thread tape, and the threaded portion of steel pipe stem covers shall be coated with teflon thread sealer immediately prior to installation of the cover on the actuator.

Each gate shall be adjusted so that it does not bind or leak in excess of specified requirements. After installation, each gate shall be operated through at least two complete open-close cycles, re-adjusted and re-operated as necessary, and left in a condition acceptable to Engineer.

3-2.02. Installation Checks. Unless otherwise specified in the gate sections, the gate manufacturer will provide installation checks. For installation checks, the manufacturer’s field representative will inspect the gate installation immediately following installation by Contractor. The manufacturer's representatives will revisit the site as often as necessary to ensure installation satisfactory to Owner.

3-2.03. Cast-Iron Slide Gates. Each cast-iron slide gate shall be carefully installed and adjusted for proper operation. Care shall be taken to avoid warping the gate frames and to maintain tolerances between seating faces.

Wall thimbles, where required, shall be accurately positioned and supported to prevent shifting during placement of surrounding concrete. Square or rectangular thimbles shall be carefully braced both horizontally and vertically to prevent distortion.

Gates mounted directly on the vertical face of concrete walls shall be adjusted and grouted in place with non-shrinking grout in accordance with the manufacturer's recommendations.

Gates shall be installed so that frame members and anchor bolts do not rest upon or contact steel reinforcing bars. Anchor bolts shall be set using a template.

Grout fill shall be placed in the pit in front of each flush bottom closure gate after the gate has been adjusted.

Each actuator shall be accurately set and plumbed and shall be in proper alignment with the gate and stem before the actuator is grouted in place. Operating stems shall be installed in proper alignment and shall not bind in the lift nut or stem guides.

3-2.05. Open-Channel Stainless Steel Slide Gates and Weir Gates. Each open-channel slide gate or weir gate shall be carefully installed and adjusted for proper operation. Care shall be taken to avoid deformation of the gate frames and to maintain tolerances between seating faces.

Each embedded frame shall be carefully braced in the forms before concrete is placed, or a space shall be boxed out and the frame shall be grouted in place later. Care shall be exercised to ensure that frame members and anchor bolts do not rest upon or contact steel reinforcing bars.

Where applicable, components of aluminum open-channel slide gates or weir gates installed in contact with concrete, shall be coated with epoxy in accordance with the Protective Coatings section prior to installation. Damaged areas of shop-applied coatings shall be re-coated and allowed to cure before placement of concrete or grout. Anchor bolts shall be carefully set using a template.

3-2.06. Flap Gates. Not used.

3-2.07. Tilting Weirs in Aeration Basins. Not used.

3-3. GATE ACTUATORS. Gate actuators and accessories shall be installed in accordance with the equipment manufacturer's recommendations.

3-4. FIELD QUALITY CONTROL.

3-4.01. Field Testing. After installation, all gates shall be pressure tested for leakage at the hydrostatic heads specified. Leakage exceeding the specified limits which is discovered within the correction period stipulated in the General Conditions shall be repaired by and at the expense of Contractor.

3-4.01.01. Cast-Iron Slide Gates. For the maximum seating heads, the leakage shall not exceed 0.1 gpm per foot of seating perimeter. For the maximum unseating heads, the leakage shall not exceed 0.2 gpm per foot of the seating perimeter.

3-4.01.02. Open-Channel Stainless Steel Slide Gates. For the maximum seating and unseating heads, the leakage shall not exceed 0.1 gpm per foot of seating perimeter.

3-5. ADJUSTING. After installation, the opening and closing time shall be adjusted as needed for each pneumatic, hydraulic, or electric actuated gate as applicable.

End of Section

Section 15112

CAST-IRON SLIDE GATES

PART 1–GENERAL

1-1. SCOPE. This section covers furnishing heavy-duty cast-iron slide gates and actuators as specified herein and as indicated in the Cast-Iron Slide Gate Schedule. Cast-iron slide gates shall be furnished complete with frames, operating stems, stem guides, actuators, and appurtenances as specified herein, as indicated in the schedule, and as specified in the Valve and Gate Actuator section.

Fabricated metal slide and weir gates are covered in another section.

1-2. GENERAL. Equipment provided under this section shall be fabricated, and assembled in full conformity with Drawings, Specifications, engineering data, instructions, and recommendations of the equipment manufacturer, unless exceptions are noted by Engineer.

Gates and actuators shall be furnished with all necessary parts and accessories indicated on the Drawings, specified, or otherwise required for a complete, properly operating installation and shall be the latest standard products of a manufacturer regularly engaged in the production of sluice gates.

1-2.01. General Equipment Stipulations. The General Equipment Stipulations shall apply to all equipment furnished under this section. If requirements in this specification differ from those in the General Equipment Stipulations, the requirements specified herein shall take precedence.

1-2.02. Governing Standard. Except as modified or supplemented herein, all cast-iron slide gates shall conform to the applicable requirements of ANSI/AWWA C560.

1-2.03. Minimum Metal Thickness. Where so indicated in the governing standard, the design safety factors pertaining to tensile, compressive, and shear strength of materials used shall be observed. In addition, unless otherwise acceptable to Engineer, all portions of submerged cast iron components of each gate, exclusive of wall thimbles and stem guide wall brackets, shall have a metal thickness of at least 3/4 inch.

1-2.04. Temporary Number Plates. Not Used.

1-2.05. Identification. Cast-iron slide gates shall be tagged in accordance with the Equipment and Valve Identification section.

1-3. SUBMITTALS. Complete drawings, details, and specifications covering the cast-iron slide gates, actuators (including maximum loads applied in both directions to the structural support or attachment for each manual actuator), and appurtenances shall be submitted in accordance with the Submittals section. Each drawing shall be identified with the corresponding gate designation.

In addition, calculations bearing the seal of a registered professional engineer shall be submitted covering both the design calculations and methodology used in determining the stem forces, required stem diameter, maximum stem guide spacing, and maximum bi-directional design loads for fabricated steel brackets supporting manual actuators.

PART 2 - PRODUCTS

2-1. SERVICE CONDITIONS. All slide gates are located in one of the new clearwells (Southside or Northwest) for the purpose of open-close flow control. Operation of the gates shall be from the top slab level of the respective clearwell structure.

2-2. PERFORMANCE AND DESIGN REQUIREMENTS. Cast-iron slide gates shall be designed for the conditions and requirements indicated in the Cast-Iron Slide Gate Schedule. The design seating and un-seating water levels indicated in the Schedule shall be taken to act independently, meaning that only one side of the gate may have water on it (occurs when the gate is used to isolate a basin or chamber and the basin on one side of the chamber is drained).

Gates shall be designed for the design seating and unseating heads indicated in the gate Schedule. Both the design head and the operating head shall be measured from the surface of the liquid to the center line of the gate.

2-3. ACCEPTABLE MANUFACTURERS. All gates shall be the products of one manufacturer. For cast iron slide gates the acceptable manufacturers are Hydro Gate, Rodney Hunt-Fontaine, Waterman, and Whipps, no alternates. Being named does not relieve a manufacturer from compliance with the requirements herein.

2-4. MATERIALS. Copper alloys susceptible to either dezincification or dealuminization, as set forth in Section 4.3 of the governing standard, shall not be used in wetted gate components. As applicable, materials of construction shall be as follows:

Wall Thimbles	Cast iron, ASTM A126, Class B, or ASTM A48, Class 30.
Gate Frame, Slide, Side Guides, Stem Guides, and Reinforcing Members	Cast iron, ASTM A126, Class B, or ASTM A48, Class 30.
Yoke	Cast iron, ASTM A126, Class B, or ASTM A48, Class 30; or carbon steel, ASTM A36.
Seating Faces	Phosphor bronze, ASTM B139, CA 510; or silicon bronze, ASTM B98, CA 651, or CA 655.
Wedges	Silicon bronze, ASTM B584, CA 873, or CA 878.
Adjusting Bolt and Locknut	Silicon bronze, ASTM B98, CA 655; or stainless steel, ASTM F593 and F594, Type 304, 305, or 316.
Slide Tongue and Guide Groove Liners	Silicon bronze, ASTM B98, 651 or CA 655.
Operating Stems and Couplings	Stainless steel, AISI/ASTM A276 Type 316.
Stem Guide Liners	UHMWP, or stainless steel of dissimilar composition to stem, as recommended by gate manufacturer for chlorinated water with higher splash or out-gassing potential.
Assembly Fasteners	Stainless steel of alloy similar to anchor bolts.
Epoxy (NSF Certified)	PPG Amercoat "Amerlock 400 High-Solids Epoxy Coating", Carboline "Carboguard 891",Sherwin-Williams "Macropoxy 646NSF" or Tnemec "Series N140 Pota-Pox Plus"; immersion service.
Aliphatic Polyurethane	PPG Amercoat "Amercoat 450HS", Carboline "Carbothane 134HG", Sherwin-Williams "Acrolon 218HS" or Tnemec "Series 1074 Endura-Shield II".

2-5. CONSTRUCTION.

2-5.01. Wall Thimbles. Wall thimbles shall be furnished by the gate manufacturer. The type and depth of wall thimbles shall be as listed in the Cast-Iron Slide Gate Schedule and as indicated on the project drawings. Thimbles may require special fabrication or appurtenances as indicated. The width and height of wall thimbles shall be as required for the associated gate. All thimbles shall be provided with a full circumference water stop ring.

In addition to the wall thimbles required for mounting of slide gates, in two locations wall thimbles shall be provided to facilitate the construction or enhance future operational flexibility. The locations are indicated on the drawings and shall be as follows:

- Southside Clearwell. For the south end wall of the Common Outlet Channel, provide a steel wall thimble as follows: E-type thimble, square end flanges, 78-inch inside diameter circular barrel with a smooth and uniform inside surface suitable for passage of a 72-inch steel pipe and made water-tight with a modular wall seal system, interior and exterior flanges of thimble drilled and threaded in the same manner for mounting blind flange plate, and threaded plastic plugs or bolts for all threaded bolt holes. The inside face of thimble shall be provided with a temporary-duty/removable square steel cover plate blind flange and gasket drilled for mounting to the inside flange face to provide a watertight seal. The cover plate shall have two attachment points along the centerline for lowering it into place by crane. The blind flange shall be suitable for a differential head, in either direction, of 10 psi (at plate centerline).

- Northwest Clearwell. For the south end wall of the Common Outlet Channel, provide a steel wall thimble as follows: E-type thimble, square end flanges, 66-inch inside diameter circular barrel, interior and exterior flanges of thimble drilled and threaded for mounting blind or outlet flange plate as required, and threaded plastic plugs or bolts for all threaded bolt holes. The inside face of thimble shall be provided with a temporary-duty/removable square steel cover plate blind flange and gasket drilled for mounting to the inside flange face to provide a watertight seal. The cover plate shall have two attachment points along the centerline for lowering it into place by crane. The blind flange shall be suitable for a differential head (at plate centerline) of 5 psi in the unseating direction and 10 psi in the seating direction. The exterior flange shall be provided with a 66-inch steel flange by plain end pipe spool that is 2 feet long. The pipe barrel wall thickness shall be 3/8-inch minimum and shall be coordinated by Contractor with the manufacturer of the connecting yard piping.

2-5.01.01. Special Wall Thimble Features and Appurtenances. As indicated on the drawings, certain slide gate wall thimbles have special fabrication requirements to facilitate facility construction, or temporary service isolation. These requirements shall supplement the requirements of the slide gate schedule.

- Slide Gate SLG-111. This gate is located in the new Southside Clearwell at the north end of the Common Outlet Channel. Upon completion of construction, the slide gate will be mounted on the south face of the wall thimble. During construction of the Clearwell, the existing 72-inch PCCP discharge line must remain in service. To achieve this requirement, the following appurtenances shall be provided:

    - For the south end of the wall thimble, provide a square flange plate and gasket able to be bolted directly to the thimble in a manner that does not reduce the ability to eventually mount the slide gate. The flange shall be provided with a 72-inch steel plain end pipe spigot that is 2 feet long and located to match the centerline of the existing clearwell wall penetration. The pipe barrel wall thickness shall meet the Minimum Wall Thickness as indicated in the Steel Pipe Schedule Section and shall be coordinated by Contractor with the manufacturer of the connecting temporary piping.

    - For the north end of the wall thimble, provide a square flange plate and gasket able to be bolted directly to the exterior thimble flange. The flange shall be provided with a 72-inch steel plain end pipe spigot that is 2 feet long and located on the centerline of the thimble. The pipe barrel wall thickness shall meet the Minimum Wall Thickness as indicated in the Steel Pipe Schedule Section and shall be coordinated by Contractor with the manufacturer of the connecting piping and pipe coupling to the existing Clearwell.

- Slide Gates SLG-112 and SLG-113. These gates are located in the Southside Clearwell in the north wall of the Distribution Chamber. For the north end of each wall thimble, provide a square flange plate and gasket able to be bolted directly to the exterior thimble flange. The flange shall be provided with a 72-inch steel plain end pipe spigot that is 2 feet long and located to match the centerline of the existing clearwell wall penetration. The pipe barrel wall thickness shall meet the Minimum Wall Thickness as indicated in the Steel Pipe Schedule Section and shall be coordinated by Contractor with the manufacturer of the connecting piping and pipe coupling to the existing Clearwell.

- Slide Gate SLG-101 This gate is located in the new Northwest Clearwell in the east wall of the Storage Chamber. For the east end of the wall thimble, provide a square flange plate and gasket able to be bolted directly to the exterior thimble flange. The flange shall be provided with a 48-inch diameter steel plain end pipe spigot that is 2 feet long and located on the centerline of the connecting pipe. The pipe barrel wall thickness shall meet the Minimum Wall Thickness as indicated in the Steel Pipe Schedule Section and shall be coordinated by Contractor with the manufacturer of the connecting piping and pipe coupling to the existing Filter Building Effluent Conduit.

2-5.02. Frames. Gate frames shall be as indicated in the Cast-Iron Slide Gate Schedule and as supplemented herein. All joint surfaces and bearing areas shall be machined. Accurately machined dovetail grooves shall be provided in the frame face to retain seating faces.

2-5.03. Yokes. Where applicable, gates with self-contained mountings, as indicated in the Cast-Iron Slide Gate Schedule, shall be provided with a yoke designed to deflect not more than 1/720 of the span when the gate is operated at the maximum specified differential head.

2-5.04. Guide Extensions. Not Used.

2-5.05. Slides. Slides shall be of one-piece construction, with accurately machined dovetail grooves in the back face to retain seating faces.

Each slide of rising stem gates shall be provided with a socket to receive the stem thrust nut. The socket shall be constructed so that the thrust nut can be secured to the stem after the stem has been screwed into the nut.

Each slide of non-rising stem gates shall be provided with a socket located at the top of the gate so that the stem cannot protrude into the waterway when the slide is fully raised.

2-5.06. Wedges. Adjustable wedges shall be provided on each gate slide. The number of wedges shall be as recommended by the gate manufacturer, except that at least two side wedges shall be provided on each side of each gate. Side wedge systems using adjustable wedges mounted on the guides will not be acceptable.

2-5.07. Seating Faces. Seating faces shall fill and permanently lock into finished dovetail grooves on each slide and frame. Seating faces shall be pressed or expanded into the grooves.

2-5.08. Operating Stems. Each cast-iron slide gate shall be provided with an operating stem; the type shall be as indicated in the Cast-Iron Slide Gate Schedule.

Operating stems shall be of sufficient size to withstand, without damage or permanent distortion, the tensile, compressive, and buckling stresses resulting from the application of 250 foot-lbs (339 N m) of torque on the pinion shaft of geared actuators by means of a crank , on the wrench nut, and 1.25 times the output thrust of the electric actuator in the stalled motor condition. The ratio of unbraced length to radius of gyration (L/R) shall be less than 180, and the maximum stem guide spacing shall not exceed 10 feet. .

In addition to meeting all criteria for manual operation, the stems and stem guide placement shall be designed to allow retrofitting the gates with electric actuators in the future. The gate manufacturer shall provide additional thread length on the stem if the electric actuator will require more than the manual hoist. To demonstrate compliance, the manufacturer shall submit with the stem design calculations a second set of stem calculations based on the gate equipped with an open-close service electric actuator operating at 460-volt, 3 phase, 60 Hz and the unpriced quotation from at least one electric actuator manufacturer that includes all sizing information to support the submitted design calculations. The manual hoist, stem and stem guide placement calculations in the submittal will not be reviewed without the complete information on the electric actuator sizing, design and stem calculations.

Contact surfaces of stem threads shall be rolled or machined and polished to a 63 microinch [1600 nm] or smoother finish.

2-5.09. Bottom Closure Seal Retainer Bars. Bottom closure seal retainer bars shall be provided for gates with a flush bottom closure.

2-5.10. Connection to Piping. Cast-iron slide gates shall be connected to the piping as indicated on the Drawings and as supplemented herein.

2-6. ACTUATORS. Actuators and their accessories shall be the type as indicated in the Cast-Iron Slide Gate Schedule and as specified in the Valve and Gate Actuator section.

Stem covers for manual actuators shall be plastic or steel pipe as indicated in the Cast-Iron Slide Gate Schedule and as specified in the Valve and Gate Actuator section.

2-6.01. Portable Electric Operator. One tripod-mounted portable electric gate operator shall be provided which is suitable for use on all cast iron slide gates and open channel metal slide gates and weir gates (separate specification). The

operator shall be a proven reliable design and standard product of the gate manufacturer that that been in successful operation for at least 5 years.

The operator shall include a reversing feature and an overload release clutch for the protection of the gate being operated. The required torque shall be generated intrinsically in the drill portion of the actuator, use of an external mechanical torque multiplier device interposed between the drill and the gate will not be acceptable. The overload release clutch shall provide the primary over-torque protection and shall be of the spring loaded, drive-pawl type which releases instantly at preset, predetermined torque setting (the clutch shall be factory preset to 70 ft-lbs.). Disc friction clutches or shear pins/keys shall not be used for primary torque protection.

The operator shall be suitable to operate a 110 volts-ac single phase power supply. The function of the operator shall be by an on-off switch that must be held in the active position during operation. When released the drill driver unit shall stop.

The tripod shall be of lightweight construction, wide stance type, adjustable to vary the height of the output shaft to coincide with the input pinion shaft of the actuator. When in the proper position for gate operation, the operator and tripod shall be lockable to maintain the position.

The portable electric actuator system shall be "Model 15PO" as manufactured by Rodney Hunt, or equal.

2-6.02. Operator Cranks. Each operator shall be of the geared type and shall be provided with a 12-inch radius operating crank. Cranks shall be readily removable for connection of a portable electric actuator. The keyway connecting the crank hub to the actuator pinion shaft shall be provided with a shear key for secondary over-torque protection. The shear keys shall be constructed of aluminum or bronze designed to fail at 200 ft-lbs of torque. Two spare shear keys shall be provided for each operator, in a sealed bag specifically labeled for the applicable gate.

2-6.03. Operator Supports. Each gate operator shall be provided with a fabricated 316 stainless steel support bracket for embedment in or attachment to a concrete wall member of the clearwell. Refer to the construction drawings for specific gate locations and corresponding actuator bracket mounting locations. Gate manufacturer shall be responsible for design of the brackets. The design shall be intentionally conservative with ample factors of safety, utilize the maximum expected stem loadings in both directions (accounting for the possibility of future conversion of the manual operators to electrically driven operators), and be based on a concrete compressive strength of 4,500 psi. The minimum operator loads for bracket design shall be based on the maximum 250 ft-lbs of stem torque without primary of secondary over-torque protection systems

operating. The support brackets shall not interfere with wall primary steel reinforcing in the concrete wall. Where brackets are located on the perimeter of a grated slab opening, there sides of the bracket shall include a 316 stainless steel grating support angle of the same depth and elevation as the adjoining embedded grating support angle.

2-7. SHOP PAINTING. Shop painting shall be an epoxy coating. The epoxy coating shall be NSF certified.

All iron, steel, and stainless steel surfaces, except machined surfaces, shall be shop cleaned by blasting in accordance with the coating manufacturer's recommendations and finish painted with an epoxy or epoxy/polyurethane coating system. Non-submerged components shall be painted with two coats of epoxy paint having a total dry film thickness of at least 10 mils [250 µm] and one topcoat of polyurethane having a dry film thickness of at least 2 mils [50 µm]. All components subject to submergence shall be painted with three coats of epoxy paint having a total combined dry film thickness of at least 15 mils [375 µm].

Finish color shall be medium gray, except for cranks, levers, and other operating devices, which shall be safety red. Field painting of gates, actuators, and appurtenances, other than touchup painting, will not be required. A sufficient quantity of additional coating materials shall be furnished by the gate manufacturer to permit field touchup of damaged coatings.

PART 3 - EXECUTION

3-1. INSTALLATION. Cast-iron slide gates and appurtenances shall be installed in accordance with the Gate Installation section.

3-1.01. Installation Check. An experienced, competent, and authorized representative of the manufacturer shall visit the site of the Work and inspect, check, adjust if necessary, and approve the equipment installation. The representative shall be present when the equipment is placed in operation in accordance with Startup Requirements section, and shall revisit the jobsite as often as necessary until all trouble is corrected and the equipment installation and operation are satisfactory in the opinion of Engineer.

The manufacturer's representative shall furnish a written report certifying that the equipment has been properly installed and lubricated; is in accurate alignment; is free from any undue stress imposed by connecting piping or anchor bolts; and has been operated under full load conditions and that it operated satisfactorily.

All costs for these services shall be included in the contract price.

3-2.02. Installation Supervision. The gate manufacturer shall furnish a qualified field installation supervisor during casting of the following thimbles into the wall and for installation of the initial gates as follows:

- Thimble for Gate SL-05 located at the new Northwest Clearwell.
- Both wall thimbles in the new Southside Clearwell Common Outlet Channel.
- Gate frames, slides and operators for gates SL-01 and SL-05.

All costs for these services shall be included in the contract price.

Manufacturers' installation supervisor shall observe, instruct, guide, and direct the installing contractor's erection or installation procedures for the representative components identified above. The gate manufacturer will be provided with written notification 10 days prior to the need for such services.

End of Section

Schedule 15112-S01
Cast-Iron Slide Gates Schedule
Manual Actuators

1.010	1.020	1.030	1.040	1.050	1.060	1.070	1.080	1.090	1.010	1.110	1.120	1.130	1.140	1.150	1.160	1.180	1.190	2.010	2.020	3.010	3.020	3.030	3.031
Tag Number	**Location(1)**	**Service(2)**	**Size**	**Design Head-seating (see comment)**	**Design Head-unseating (see comment)**	**Operating Head-seating**	**Operating Head-unseating**	**Gate Centerline Elevation**	**Operating Floor Elevation**	**Wall Thimble Type (3)**	**Wall Thimble Depth**	**Frame Type and Shape(4)**	**Type of Closure (5)**	**Type of Mounting (6)**	**Type of Operating Stem(7)**	**Suitable for use with an electric portable actuator**	**Suitable for use with a portable hydrauic actuator**	**Percent of time in open position (typ)**	**SlideTongue and Guide Groove Liner Required**	**Type of Manual Actuator (9)**	**Limit Switches(10)**	**Plastic Stem Cover**	**Steel Stem Cover**
			(in)	(ft)*	(ft)*	(ft)*	(ft)*	(ft)	(ft)		(in)												
SLG-111	SSCW	SO	72	10	20	1.0	4.00	438.00	458.00	ER	20	FLC	CC	DCNSC	RS	Yes	No	90+	No	CGFS	EOT	Yes	No
SLG-112	SSCW	SO	72	10	20	6.0	5.00	437.50	458.00	ER	20	FLC	CC	DCNSC	RS	Yes	No	90+	No	CGFS	EOT	Yes	No
SLG-113	SSCW	SO	72	10	20	6.0	5.00	437.50	458.00	ER	26	FLC	CC	DCNSC	RS	Yes	No	90+	No	CGFS	EOT	Yes	No
SLG-114	SSCW	SO	72	20	10	6.0	4.50	437.17	458.00	ER	20	FLR	CC	DCNSC	RS	Yes	No	90+	No	CGFS	EOT	Yes	No
SLG-101	NWCW	SO	48	10	20	7.0	8.00	436.42	460.00	ER	30	FLC	CC	DCNSC	RS	Yes	No	90+	No	CGFS	EOT	Yes	No
Comment: Design heads listed are unbalanced values, gate shall be designed assuming indicated levels exist on one side of the gate only.																							

* Units are in feet of Head

Section 15114

OPEN-CHANNEL METAL SLIDE GATES AND WEIR GATES

PART 1- GENERAL

1-1. SCOPE. This section covers furnishing fabricated weir gates and associated actuators, as specified herein and as indicated in the gate schedule paragraph at the end of this section. Slide gates shall be furnished complete with frames, slides, seals, actuators, operating stems, and appurtenances as specified herein, as indicated in the schedule and as specified in the Valve and Gate Actuator section. Cast iron slide gates are covered in another specification.

1-2. GENERAL. Equipment furnished under this section shall be fabricated and assembled in full conformity with Drawings, Specifications, engineering data, instructions, and recommendations of the equipment manufacturer, unless exceptions are noted by Engineer.

Gates and actuators shall be furnished with all necessary parts and accessories indicated on the Drawings, specified, or otherwise required for a complete, properly operating installation and shall be the latest products of a manufacturer engaged in the production of slide and weir gates.

1-2.01. General Equipment Stipulations. The General Equipment Stipulations shall apply to all equipment furnished under this section. If requirements in this specification differ from those in the General Equipment Stipulations, the requirements specified herein shall take precedence.

1-2.02. Governing Standard. Except as modified or supplemented herein, all slide gates shall conform to the applicable requirements of ANSI/AWWA C561.

1-2.03. Identification. Slide gates specified herein shall be tagged as specified in the Equipment and Valve Identification section using the numbering indicated on the project drawings.

1-3. SUBMITTALS.

1-3.01. Drawings and Data. Complete drawings, construction details, and specifications covering the slide gates and appurtenances shall be submitted in accordance with the Submittals Procedures section. Each drawing shall be identified with the gate designation.

In addition, calculations bearing the seal of a registered professional engineer shall be submitted covering both the design calculations and methodology used in determining the stem forces, required stem diameter, maximum stem guide

spacing, and maximum design loads for fabricated steel brackets supporting manual actuators.

1-3.02. Operation and Maintenance Data and Manuals. Operation and maintenance manuals shall be submitted in accordance with the Submittals Procedures section (01300). The operation and maintenance manuals shall be in addition to any instruction or parts lists packed with or attached to the equipment when delivered.

PART 2- PRODUCTS

2-1. SERVICE CONDITIONS. Weir gates will be utilized in the two clearwells for the purpose of controlling the flow split between the clearwells. The liquid in the clearwells is wastewater treatment plant secondary effluent that has received tertiary filtration. The wastewater has a maximum chlorine residual of 2 mg/L.

2-2. PERFORMANCE AND DESIGN REQUIREMENTS. Slide gates shall be designed for the conditions and requirements indicated in the gate schedule paragraph.

2-2.01. Design. Liberal factors of safety shall be used throughout the design, especially in the design of parts subject to intermittent or alternating stresses. In general, working stresses shall not exceed one-third of the yield point or one-quarter of the ultimate strength of each material.

Gates shall be designed for the seating and unseating heads indicated in the gate schedule paragraph.

Gates shall be designed to fit into the structures indicated on the drawings.

2-3. ACCEPTABLE MANUFACTURERS. All weir gates shall be the product of the same manufacturer. Acceptable manufacturers are limited to Rodney Hunt-Fontaine, Golden Harvest, Hydro Gate, Waterman, and Whipps, no alternates. Being named as an acceptable manufacturer does not relieve the manufacturer from complying with the requirements herein.

2-4. MATERIALS.

Frames, Guides, Slides, and Reinforcing Members	Stainless steel, ASTM A276, 316L and ASTM A240, 316L.
Flush Bottom Closure Seal	Compressible neoprene.

Seals	Hollow bulb J-seals of compressible neoprene type, or self-adjusting UHMW polyethylene and continuous compression cord type
Seal Retainer Bar	Stainless steel, AISI Type 316.
Slide Seats and Bearing Bars	UHMW polyethylene.
Operating Stems	Stainless steel, AISI Type 316.
Stem Guide Liners	UHMWP, or stainless steel of dissimilar composition to stem, as recommended by gate manufacturer for chlorinated water with higher splash or out-gassing potential.
Assembly Fasteners	Stainless steel, AISI Type 302, 303, or 304.
Epoxy Enamel	PPG-Amercoat "Amercoat 385 Epoxy", Carboline "Carboguard 890", Sherwin-Williams "Macropoxy 646" or Tnemec "Series N69 Hi-Build Epoxoline II".

2-5. CONSTRUCTION.

2-5.01. Frames. Each frame shall be an integral unit of welded structural shapes at least 1/4 inch [6 mm] thick. Frames shall be designed for embedment in concrete or installation on the face of concrete walls as indicated in the gate schedule paragraph. Embedded frames shall be recessed so that the waterways are not obstructed.

Guides shall be provided on each side of each frame. Guides shall be sufficiently strong to require no further reinforcing where they extend above the operating floor, and shall support the entire height of the slide in all positions.

Full-length plastic slide seats or bearing bars shall be provided on the downstream side of the slide on gates subject to seating pressure from one direction. Gates subject to seating pressure from either direction shall be provided with plastic seats or bearing bars on both faces of the slide. Seats and bars shall be mechanically retained in the frame.

2-5.02. Slides. Slides shall be at designed for the applied loads, but not less than 1/4 inch [6 mm] thick, and shall be provided with welded stiffeners as required to limit deflection to L/720 under the maximum seating or unseating head indicated in the Slide Gate Schedule. Slides shall be adequately reinforced to withstand, without permanent distortion, the maximum thrust which can be transmitted by the operating stem. Each slide shall have a reinforced pocket or

an internally threaded nut welded to the slide for connection of the stem. The pocket or nut shall be designed to withstand the maximum thrust which can be transmitted by the operating stem.

2-5.03. Closures. Where indicated in the gate schedule paragraph, gates shall be provided with resilient hollow bulb J-seals of compressible neoprene, or self-adjusting type UHMW polyethylene and continuous compression cord, attached to the frame members.

For weir service, slides will be lowered below the bottom of the opening. A frame member shall be provided at the bottom of the opening to seal the space between the slide and the adjacent concrete. The side guides shall be extended below the bottom of the wall opening as necessary for full and adequate gate movement. A resilient seal shall be attached to the frame along the invert of the opening and up both sides to seal the slide in any positions.

Each seal shall be provided with a full-length retainer bar which shall compress the seal and prevent leakage between the seal and the frame member. The method of attachment of J-seals to frame members shall permit replacement of the seals without disassembling or removing the gate.

An acceptable alternative to J-seals is a UHMW polyethylene seal/seat. A UHMW polyurethane seat/seal shape incorporating continuous compression cords shall fit into a groove or seal retainer cavity in the guide section, and shall seal on both upstream and downstream sides of the slide. The seat/seal system shall act as both a bearing surface and as a seal, and the seal system shall be self-adjusting. The seat/seals shall be easily replaced without removing the gate from the wall.

2-5.04. Operating Stems and Guides. Operating stems shall conform to the requirements in Section 4.4 of the governing standards. Contact surfaces of threads shall be rolled or machined to a 63 microinch [1600 nm] finish, or smoother. Each stem shall be securely attached to the slide.

Dual stems shall be provided for proper operation of all weir gates.

Operating stems shall be of sufficient size to withstand, without damage or permanent distortion, the tensile, compressive, and buckling stresses resulting from the application of 250 foot-lbs of torque on the pinion shaft of geared actuators by means of a crank, on the wrench nut, and 1.25 times the output thrust of the electric actuator in the stalled motor condition. The ratio of unbraced length to radius of gyration (L/R) shall be less than 180, and the maximum stem guide spacing shall not exceed 10 feet. .

Fabricated and adjustable stem guides shall be provided where required to maintain stem alignment and limit lateral deflection of the stem. The materials of

construction shall be suitable for the service conditions, including minimal potential for galvanic corrosion. Stem spacing shall be as recommended by the gate manufacturer, but in no case shall the spacing exceed 10 feet in vertical distance.

2-5.05. Stainless Steel. All stainless steel shall be mechanically cleaned by blasting or be pickled in accordance with ASTM A380 at the mill before being shipped. Pickling shall produce a modest etch and shall remove all embedded iron and heat tint. After fabrication, pickled surfaces shall be subjected to a 24 hour water test or a ferroxyl test to detect the presence of residual embedded iron. All pickled surfaces damaged during fabrication including welded areas shall be repickled or passivated in accordance with ASTM A380 as needed to remove all traces of iron contamination. All stainless steel surfaces shall be adequately protected during fabrication, shipping, handling, and installation to prevent contamination from iron or carbon steel objects or surfaces.

2-6. OPERATORS. Actuators and their accessories shall be the type as indicated in the gate schedule paragraph and as specified in the Valve and Gate Actuator section.

Stem covers for manual actuators shall be UV resistant clear plastic or polycarbonate as indicated in the gate schedule and as specified in the Valve and Gate Actuator section.

2-6.01. Portable Electric Operator Compatibility. A tripod-mounted portable electric gate operator is to be provided under the Cast Iron Slide Gates section. Each actuator provided herein shall be able to connect to the specified portable operator.

2-6.02. Operator Cranks. Each geared operator system shall be provided with a 12-inch radius operating crank. Each crank shall be readily removable for connection of a portable electric actuator. The keyway connecting the crank hub to the actuator pinion shaft shall be provided with a shear key for secondary over-torque protection. The shear keys shall be constructed of aluminum or bronze designed to fail at approximately 150 ft-lbs of torque. Two spare shear keys shall be provided for each operator, in a sealed bag labeled for the applicable gate.

2-6.03. Operator Supports. Each operator for gates SG-111 and SG-112 shall be provided with a fabricated 316 stainless steel support bracket for embedment in or attachment to a concrete wall member of the Southside Clearwell. The operators for gate SG-101 shall be supported on the concrete top slab of the Northwest Clearwell. For gate SG-102, the west operator shall be supported on the concrete top slab of the Northwest Clearwell, and the east operator shall be provided with a fabricated 316 stainless steel support bracket for embedment in or attachment to a concrete wall member of the Northwest Clearwell. Refer to the

construction drawings for specific gate locations, and corresponding actuator bracket mounting locations where applicable.

Gate manufacturer shall be responsible for design of the fabricated brackets. The design shall be intentionally conservative with ample factors of safety, utilize the maximum expected stem loadings in both directions, and be based on a concrete compressive strength of 4,500 psi. The minimum operator loads for bracket design shall be based on the maximum 250 ft-lbs of stem torque without primary of secondary over-torque protection systems operating. The support brackets shall not interfere with wall primary steel reinforcing in the concrete wall. Where brackets are located on the perimeter of a slab opening covered by grating, three sides of the bracket shall include a 316 stainless steel grating support angle of the same depth and elevation as the adjoining embedded grating support angle.

2-7. SHOP PAINTING. Shop painting of stainless steel gates is not required unless specifically indicated in the gate schedule.

2-8. SHOP TESTING. Gates shall be completely assembled in the shop to ensure that all parts fit together properly.

PART 3 - EXECUTION

3-1. INSTALLATION. Slide gates and appurtenances shall be installed in accordance with the Gate Installation section.

3-1.01. Installation Check. An experienced, competent, and authorized representative of the manufacturer shall visit the site of the Work and inspect, check, adjust if necessary, and approve the equipment installation. The representative shall be present when the equipment is placed in operation in accordance with Startup Requirements section, and shall revisit the jobsite as often as necessary until all trouble is corrected and the equipment installation and operation are satisfactory in the opinion of Engineer.

The manufacturer's representative shall furnish a written report certifying that the equipment has been properly installed and lubricated; is in accurate alignment; is free from any undue stress imposed by connecting piping or anchor bolts; and has been operated under full load conditions and that it operated satisfactorily.

All costs for these services shall be included in the contract price.

3-1.02. Installation Supervision. The gate manufacturer shall furnish a qualified field installation supervisor during installation of the first weir gate.

All costs for these services shall be included in the contract price.

Manufacturers' installation supervisor shall observe, instruct, guide, and direct the installing contractor's erection or installation procedures for the representative components identified above. The gate manufacturer will be provided with written notification 10 days prior to the need for such services.

3-2. SLIDE GATE SCHEDULE.

Requirements:

Location(s)	Southside Clearwell Storage Chamber	Northwest Clearwell Storage Chamber
Tag IDs	SG-111, -112	SG-101, -102
Number of Gates	2	2
Type of service	Weir	Weir
Nominal Width of Clear Wall Opening inches	96	96
Direction of gate opening	Downward	Downward
Maximum Operating Head of Water (seating side), Elevation, ft	447.50	446.00
Maximum Operating Head of Water (unseating side), Elevation, ft	439.50	439.50
Top of Gate Slide in full up position, Elevation, feet	442.00	442.00
Invert of Wall Opening / Top of Gate Slide in Full Down Position, Elev, feet	439.50	439.50
Operating Floor Elevation at Actuator Level, feet	458.00	460.00
Type of Mounting	Wall face, with fabricated bracket	Concrete roof slab & fabricated bracket
Type of Closure	As specified herein	
Type of Actuator	Geared Manual	Geared Manual
Manual Actuator System	Dual Actuators with Cranks	

End of Section

Section 15130

PRESSURE GAUGES

PART 1 - GENERAL

1-1. SCOPE. This section covers analog dial-type gauges and accessories to be furnished and installed at the locations indicated on the Drawings.

Gauges to be furnished by an equipment supplier, either with an item of equipment or as a component of an equipment package, are covered in the applicable equipment section.

Gauge piping and fittings are covered in other sections.

1-2. GENERAL.

1-2.01. General Equipment Stipulations. The General Equipment Stipulations shall apply to all equipment furnished under this section. If requirements in this specification differ from those in the General Equipment Stipulations, the requirements specified herein shall take precedence.

1-2.02. Governing Standard. Except as modified or supplemented herein, all gauges shall conform to the requirements of ANSI/ASME B40.1.

1-2.03. Accuracy Grade. Unless otherwise specified, gauge accuracy shall be ANSI Grade 2A or better. Overall accuracy for diaphragm seal protected and liquid-filled gauges shall be ANSI Grade A or better.

1-3. SUBMITTALS. Complete drawings or catalog cuts, together with detailed specifications and data covering materials used, shall be submitted in accordance with the Submittals section.

PART 2 - PRODUCTS

2-1. GAUGE CONSTRUCTION. Unless otherwise specified, gauges shall be indicating dial type, with C-type phosphor bronze Bourdon tube; stainless steel rotary geared movement; phenolic or polypropylene solid front turret case; adjustable pointer; stainless steel, phenolic, or polypropylene ring; and acrylic plastic or shatterproof glass window.

The dial shall be 4-1/2 inches [114 mm] in diameter, with white background and black markings. The units of measurement shall be indicated on the dial face. Subdivisions of the scale shall conform to the requirements of the governing

standard. Pointer travel shall be not less than 200 degrees [3.5 rad] nor more than 270 degrees [4.7 rad] of arc.

Unless otherwise indicated, pressure gauges shall measure in psig and vacuum gauges shall measure in inches Hg vacuum. All gauges shall have a suitable range to give mid-scale readings under normal conditions

Flush-mounted and surface-mounted gauges shall be provided with 1/4 inch [6.3 mm] NPT connections. All stem-mounted gauges shall be provided with 1/2 inch [12.7 mm] NPT connections.

The units of measurement, range, and mounting configuration of each gauge shall be as indicated in the Gauge Schedule.

2-2. GAUGE ACCESSORIES.

2-2.01. Isolation Valves. Each gauge shall be provided with a threaded end ball-type shutoff valve as specified in the Miscellaneous Ball Valves section.

2-2.02. Snubbers. Unless otherwise indicated, each pressure and compound pressure/vacuum gauge shall be provided with a pressure snubber. Each snubber shall be of internal or external design, fabricated of stainless steel, and of a size and pressure range compatible with the gauge served. Pressure snubbers shall be Operating and Maintenance Specialties "Ray Snubbers", Ashcroft "Pulsation Dampers", Weksler "Piston Type Pressure Snubbers", or Trerice "Pulsation Dampeners".

2-2.03. Gauge Isolators.

2-2.03.01. Pipe-mounted Diaphragm Seals. Pipe-mounted diaphragm seals shall be provided where indicated on the Drawings. Diaphragm seals shall be thread-attached type with removable AISI Type 316 stainless steel diaphragm, zinc or cadmium plated carbon steel upper housing, and stainless steel lower housing. The diaphragm seal shall be of "continuous" design to safely contain the process fluid in the event of gauge breakage or removal with the system under pressure. The lower housing shall be provided with a tapped 1/4 inch [6.3 mm] NPT flushing connection and an MxF stainless steel needle valve.

Each diaphragm seal and the gauge served shall be factory assembled, filled with a suitable fluid, and calibrated as a unit.

2-2.03.02. In-line Diaphragm Seals. In-line, flow-through type diaphragm seals shall be provided where indicated on the Drawings.

For in-line diaphragm seals in pipe less than 4 inches, ends shall be flanged, threaded, or welding type to fit the piping system in which the unit is installed.

Flanges shall be flat faced, with ANSI/ASME B16.5, Class 150 diameter and drilling. Threaded ends shall conform to ANSI/ASME B1.20.1, NPT. Each diaphragm seal shall be provided with a removable stainless steel diaphragm and shall be tapped for a 1/2 inch [12.7 mm] NPT gauge connection.

For in-line diaphragm seals in pipe 4 inches and larger, flange type gauge isolators shall be provided. Each unit shall consist of a carbon steel housing, carbon steel assembly flanges, and Buna-N flexible cylinder, and shall be filled with silicone oil. Each isolator shall be a Moyno "RKL Series W Pressure Sensor/Isolator", Ronningen-Petter "Iso-Ring", or Red Valve "Series 40 Flanged Sensor", suitable for installation between two flat faced ANSI/ASME B16.1, Class 125 cast iron pipe flanges, and tapped for a 1/2 inch [12.7 mm] NPT gauge connection.

Each diaphragm seal and the gauge served shall be factory assembled, filled with a suitable fluid, and calibrated as a unit.

PART 3 - EXECUTION

3-1. INSTALLATION. Gauges shall be installed at the locations indicated on the Drawings. Installation configurations shall conform to the requirements of the Gauge Installation Details. For stainless steel pipe, refer to Figure 2-15130, with the exception that all nipples and fittings shall be made of stainless steel.

All gauges, snubbers and diaphragm seals shall be installed in the vertical upright position and so that they can be read at ground level. Threaded connections shall be assembled using teflon thread tape or teflon thread sealer, as specified in the Miscellaneous Piping and Accessories Installation section. Teflon thread sealer shall not be used for liquid oxygen or oxygen gas piping. All connections shall be free from leaks.

Lines shall be purged of trapped air at gauge locations prior to installation of the gauge or diaphragm seal.

End of Section

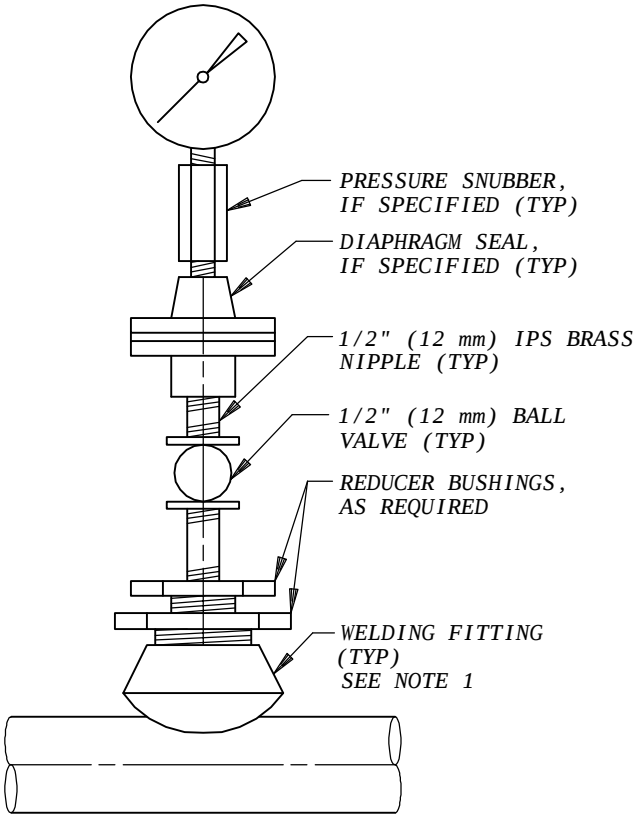

HORIZONTAL RUN

NO SCALE

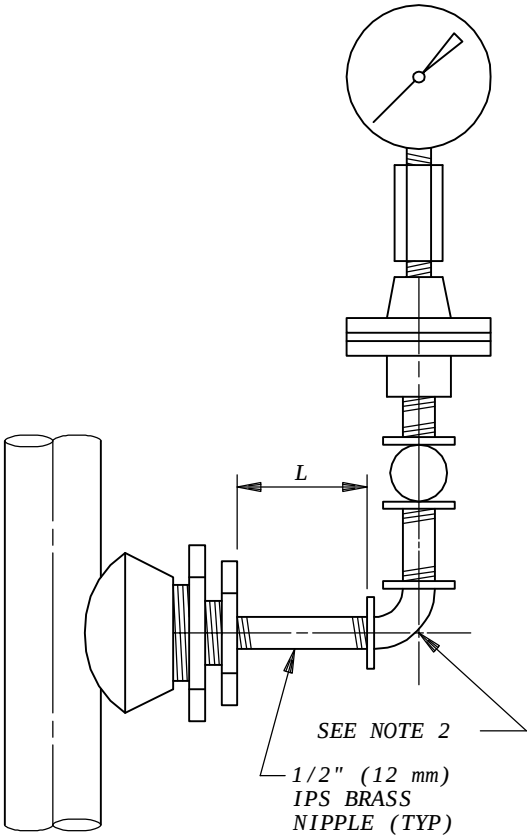

VERTICAL RUN

NO SCALE

NOTES:

1. WELDING FITTING SHALL BE BONNEY FORGE "THREDOLETS", PORTER "W-S TEELETS", OR VOGT "WELD COUPLETS".

2. ANSI B16.15, CLASS 125 BRONZE THREADED FITTING.

3. DIMENSION "L" SHALL BE SUFFICIENT TO PREVENT CONTACT BETWEEN THE GAUGE CASE, DIAPHRAGM SEAL HOUSING, OR VALVE OPERATING LEVER AND ADJACENT PIPING OR INSULATION BUT SHALL NOT EXCEED 4 INCHES (100 mm) UNLESS OTHERWISE PERMITTED BY THE ENGINEER.

GAUGE INSTALLATION DETAILS

BLACK & VEATCH	STEEL PIPE 2-1/2 inch (62 mm) and larger	FIG 2-15130

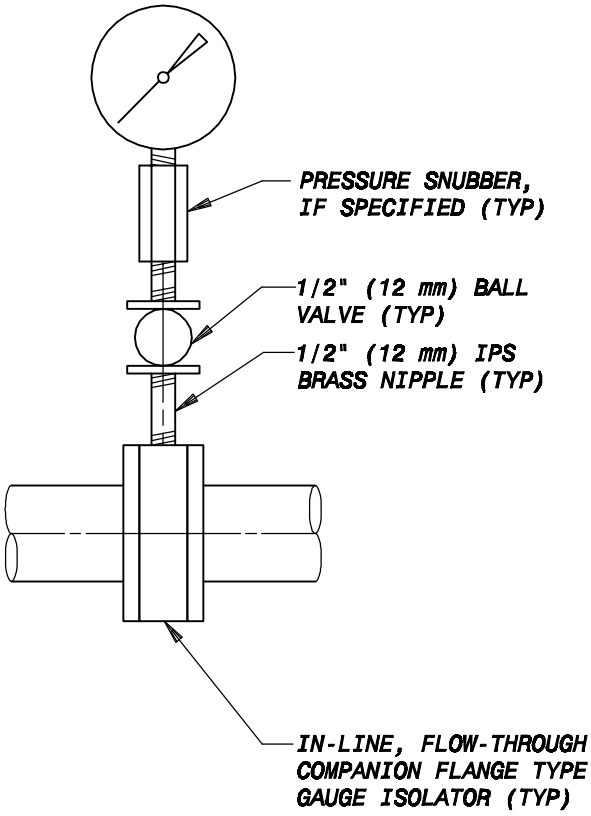

SEE NOTE BELOW

HORIZONTAL RUN

NO SCALE

VERTICAL RUN

NO SCALE

NOTE:
DO NOT INSTALL THIS TYPE OF GAUGE ISOLATOR IN VERTICAL PIPING.

GAUGE INSTALLATION DETAILS

BLACK & VEATCH	GAUGE ISOLATOR	FIG 10-15130

Section 15140

PIPE SUPPORTS

PART 1 - GENERAL

1-1. SCOPE. This section covers the furnishing and installation of pipe hangers, brackets, supports, bracing, anchorage, and the design for the pipe support system for pipes 12 inches and smaller. Pipe supports shall be furnished complete with all necessary inserts, bolts, nuts, rods, washers, and other accessories. This section also covers the spacing of expansion joints in pipes 12 inches in diameter and smaller. Expansion joint products and materials are covered in the respective piping sections.

This section covers pipe supports for the following pipe materials:

Cast or ductile iron
Stainless Steel
Hot-dip galvanized steel
Steel (hot water)
Steel (other)
Copper (hot water)
Copper (other)
Cast iron soil pipe

1-2. GENERAL. Contractor shall provide pipe supports, anchors, flexible couplings, and expansion joints for all piping systems. The Drawings indicate pipe supports, anchors, flexible couplings, and expansion joints for pipes larger than 12 inches in diameter, and in special cases for pipes that are 12 inches and smaller. Contractor shall design anchors, pipe supports, expansion joints, and flexible couplings not already shown on the Drawings, in accordance with the requirements specified herein.

Contractor's design shall include pipe supports, bracing, and anchorage adjacent to expansion joints, couplings, valves, in-line devices, equipment, wyes and tees, or changes in direction as required for dismantling piping, removing valves or other in-line devices, disconnecting piping from equipment, and pipe support, in addition to supports in accordance with the maximum spacing specified herein. The pipe support system design by Contractor shall rigidly support pipe so there is no visible movement or visible sagging between supports. The system shall comply with specified piping code requirements.

Contractor shall not delete or relocate the supports, expansion joints, or couplings indicated on the Drawings without written approval of Engineer.

Pipe supports and expansion joints are not required in buried piping, but concrete blocking or other suitable anchorage shall be provided as indicated on the Drawings or specified in other sections.

1-2.01. General Equipment Stipulations. The General Equipment Stipulations shall apply to all supports furnished under this section. If requirements in this specification differ from those in the General Equipment Stipulations, the requirements specified herein shall take precedence.

1-3. SUBMITTALS. Complete data, catalog information, and drawings covering fabricated pipe supports, fabricated inserts, and stainless steel, galvanized, and copper-plated and plastic-coated pipe supports shall be submitted in accordance with the Submittals section.

Data shall include a listing of the intended use and general location of each item submitted.

When a wind and/or seismic design is required, Contractor shall submit confirmation of compliance with the Meteorological and Seismic Design Criteria section.

PART 2 - PRODUCTS

2-1. MATERIALS. Unless otherwise indicated, all pipe supports shall comply with ANSI/MSS SP-58 and MSS SP-69. Materials of construction for fabricated steel supports are covered in the Structural and Miscellaneous Metals section. All pipe support materials shall be packaged as necessary to ensure delivery in satisfactory condition.

Unless otherwise specified or indicated on the Drawings, pipe supports shall be fabricated of manufacturer's standard materials and provided with manufacturer's standard finish.

Design loads for inserts, brackets, clamps, and other support items shall not exceed the manufacturer's recommended loads.

Pipe supports shall be manufactured for the sizes and types of pipe to which they are applied. Strap hangers will not be acceptable. Threaded rods shall have sufficient threading to permit the maximum adjustment available in the support item. Continuously threaded rod is not acceptable for hanger rods over 12 inches [300 mm] in length.

Unless accepted by Engineer, the use of supports which rely on stressed thermoplastic components to support the pipe will not be permitted.

Contact between dissimilar metals, including contact between stainless steel and carbon steel, shall be prevented. Portions of pipe supports which come into contact with other metals that are dissimilar shall be rubber or vinyl coated. Supports for brass or copper pipe or tubing shall be copper plated or plastic coated.

Stainless steel supports shall be AISI Type 304 or 316 stainless steel, except for stainless steel supports fabricated by welding which shall be AISI Type 304L or 316L. Stainless steel supports shall be provided in air scour piping system.

Hot-dip galvanized supports shall be in accordance with ASTM A153 and A385. Galvanized supports shall be provided as indicated on the Drawings.

Pipe support types and application shall comply with Table 1.

2-2. WIND AND SEISMIC LOADS. Wind and seismic loads for worst case conditions of either full, partially full, or empty pipes shall be considered in the design. Seismic design requirements for products specified herein shall be as indicated in the Meteorological and Seismic Design Criteria section.

PART 3 - EXECUTION

3-1. APPLICATION. Concrete inserts or anchor bolts shall be used to support piping from new cast-in-place concrete. Fastening of supports to existing concrete and masonry shall be in accordance with the Anchorage in Concrete and Masonry section.

Anchorage shall be provided to resist thrust due to temperature changes, changes in diameter or direction, or dead-ending. Anchors shall be located as specified to force expansion and contraction movement to occur at expansion joints, loops, or elbows, and as needed to prevent excessive bending stresses and opening of mechanical couplings. Anchorage for temperature changes shall be centered between elbows and mechanical joints used as expansion joints. Anchorage for bellows type expansion joints may be located adjacent to the joint.

When expansion joints are required, pipe guides shall be provided adjacent to bellows type expansion joints. Guides will not be required where mechanical couplings are permitted as expansion joints. Guides shall be located on both sides of expansion joints, except where anchors are adjacent to the joint. Unless otherwise indicated on the Drawings, one guide shall be within four pipe diameters from the joint and a second guide within 14 pipe diameters from the

first guide. Pipe supports shall allow adequate movement; pipe guides shall not be used for anchoring pipe against longitudinal forces. Pipe guides shall be provided at locations as recommended by the manufacturer.

Pipe supports for insulated cold piping systems shall be sized for the outside diameter of the insulated pipe, and an insulation protection shield shall be installed between the support and the insulation. Rigid insulation inserts shall be installed between the pipe and the insulation shields for piping larger than 2 inches [50 mm] or when needed to prevent crushing of the insulation. Inserts shall be of the same thickness as the adjacent insulation and shall be vapor sealed.

Insulated hot piping systems shall be supported by clevises, clamps, support saddles, or rollers. Pipe clamps shall be attached directly to the pipe. Support saddles and rollers shall be sized for the outside diameter of the insulated pipe, and an insulation protection saddle shall be installed at the support.

When supports for the FRP piping systems are in contact with less than 180 degrees of the pipe surface or when the width of the support is less than one-third the nominal pipe diameter (4 inches [100 mm] minimum), an FRP or steel saddle, shaped to the outside diameter of the pipe, shall be bonded to at least the bottom 120 degrees of the pipe.

3-2. TYPES OF SUPPORTS. The products for pipe supports shall be as indicated in Table 1 for the specified type and size of support. Where stainless steel is specified for pipe supports but is not available from the name suppliers for the model specified in Table 1, Contractor shall provide a heavier duty support that is available in stainless steel.

TABLE 1 - TYPES OF SUPPORTS

Description and Service	MSS SP 69 Type (Note 1)	Specification
Hangers		
2-1/2 inch [63 mm] and smaller pipe		
For hot and cold insulated piping		
Clevis	1	B-Line "B3100", Anvil "260" Piping Technology & Products Fig. 83.

TABLE 1 - TYPES OF SUPPORTS

Description and Service	MSS SP 69 Type (Note 1)	Specification
Other services		
J-style	5	B-Line "B3690", Anvil "67", Unistrut "J Hanger", or Piping Technology & Products Fig. 67.
Clevis	1	B-Line "B3104", Anvil "260", or Piping Technology & Products Fig 83.
3 Through 12 inch [75 through 300 mm] pipe (Note 3)		
For hot insulated piping		
Double bolt	3	B-Line "B3144", Anvil "295", or Piping Technology & Products Fig. 70.
For cold insulated piping		
Clevis	1	B-Line "B3100", Anvil "260", or Piping Technology & Products Fig 83 .
For uninsulated cold piping		
Clamp	4	B-Line "3140", Anvil "212", or Piping Technology & Products Fig. 50.
Clevis	1	B-Line "B3100", Anvil "260", or Piping Technology & Products Fig 83.
Other services		
Clevis	1	B-Line "B3100" or Anvil "260" for steel pipe; B-Line "B3102", Anvil "590", or Piping Technology & Products Fig. 83 C. L. for cast iron pipe.

TABLE 1 - TYPES OF SUPPORTS

Description and Service	MSS SP 69 Type (Note 1)	Specification
Concrete Inserts, Steel		
12 inch [300 mm] and smaller pipe	18	Channel 12 ga [2.66 mm thick], galv, 1-5/8 by 1-3/8 inches [41.3 by 34.9 mm], min. 8 inches [200 mm] long, anchor lugs on 4 inch [100 mm] centers, at least three lugs, end caps, and filler strip.
Beam Clamps, Malleable Iron or Steel, 12 inch [300 mm] and smaller pipe	21	B-Line "3050" and "3055", Anvil "133" and "134", or Piping Technology & Products Fig. 130 and Fig. 130 (SP).
	28, 29	Anvil "292" or Piping Technology & Products Fig. 140.
	30	B-Line "3054", Anvil "228", or Piping Technology & Products Fig. 140.
Side Beam Bracket	34	B-Line "B3062", Anvil "202", or Piping Technology & Products Fig. 20L.
Wall Supports and Frames, Steel, 12 inch [300 mm] and smaller pipe (Note 2)		
Brackets	32	B-Line "B3066", Anvil "195", or Piping Technology & Products Fig. 76.
	33	B-Line "B3067", Anvil "199", or Piping Technology & Products Fig. 76.
Prefabricated channels	--	12 ga [2.66 mm thick], galv, 1-5/8 inches [41.3 by 41.3 mm], with suitable brackets and pipe clamps.
Offset pipe clamp, 1-1/2 inch [38 mm] and smaller pipe	--	Galv, 1-1/4 by 3/16 inch [32 by 4.7 mm] steel, with 3/8 inch [9.5 mm] bolts.

TABLE 1 - TYPES OF SUPPORTS

Description and Service	MSS SP 69 Type (Note 1)	Specification
Offset pipe clamp, 2 to 3-1/2 inch [50 to 88 mm] pipe	--	Galv, 1-1/4 by 1/4 inch [32 by 6 mm] steel, with 3/8 inch [9.5 mm] bolts.
Floor Supports, Steel or Cast Iron		
6 inch [150 mm] and smaller pipe	37 (with base)	B-Line "B3090", Anvil "259" or Piping Technology & Products Fig. 48.
8 through 12 inch [200 to 300 mm] pipe	38	B-Line "B3093", Anvil "264" or Piping Technology & Products Fig. 46.
Pipe Alignment Guides	--	B-Line "B3281" through "B3287", Anvil "255", or Piping Technology & Products Fig. 6.
Turnbuckles Steel	13	B-Line "B3202", Anvil "230", or Piping Technology & Products Fig. 30.
Hanger Rods, Carbon Steel, Threaded Both Ends, 3/8 inch [10 mm] minimum size	--	B-Line "B3205", Anvil "140", or Piping Technology & Products Fig. 128.
Weldless Eye Nut, steel	17	B-Line "B3200", Anvil "290", or Piping Technology & Products Fig. 40.
Insulation Protection Saddle	39	B-Line "B3160 Series", Anvil "160 Series", or Piping Technology & Products Fig. 184.
Insulation Protection Shield	40	B-Line "B3151", Anvil "167", or Piping Technology & Products Fig. 183.

Table 1 Notes:

1. MSS SP-69 supports and hangers are illustrated on Figure 1-15140.
2. Pipe clamps or other devices which rely on the application of a clamping force to the supported pipe in order to maintain the clamp position or location in a prefabricated channel or track will not be acceptable for use with nonmetallic pipe or tubing.

3. Alternatively, pipe hangers for 12 inch pipe may be saddle type as indicated on the Drawings.

3-3. SUPPORT SPACINGS. Pipe supports and expansion joints shall be spaced in accordance with Table 2. The types of pipes to be supported are as specified herein. Table 2 covers spacings for the standard operating conditions specified for each pipe material. Spacing in the tables is the maximum spacing considering gravity loads. Where Contractor's design includes lateral and longitudinal forces due to seismic loads, wind loads, and other forces, the spacing requirement may be less than that indicated in the tables.

TABLE 2 – MAXIMUM PIPE SUPPORT SPACING AT STANDARD TEMPERATURES AND SERVICES

Type of Pipe	Pipe Support Max Spacing feet [m]	Max Run Without Expansion Joint, Loop, or Bend (Note 1) feet [m]	Expansion Joint Max Spacing (Note 2) feet [m]	Type of Expansion Joints
Cast iron or Ductile iron	15 [4.5]	80 [24.4]	80 [24.4]	Note 6
Steel, for hot water heating				
1-1/4 inch [31 mm] and smaller	7 [2.1]	30 [9.1]	100 [30.5]	Note 3
1-1/2 to 4 inch [38 to 100 mm]	10 [3.0]	30 [9.1]	100 [30.5]	Note 3
Over 4 inch [100 mm]	15 [4.5]	30 [9.1]	100 [30.5]	Note 3
Steel, for other services				
1-1/4 inch [31 mm] and smaller	7 [2.1]	30 [9.1]	100 [30.5]	Note 3
1-1/2 to 4 inch [38 to 100 mm]	10 [3.0]	30 [9.1]	100 [30.5]	Note 3
Over 4 inch [100 mm]	15 [4.5]	80 [24.4]	80 [24.4]	Note 6
Stainless steel				
1-1/4 inch [31 mm] and smaller	7 [2.1]	30 [9.1]	100 [30.5]	Note 3

TABLE 2 – MAXIMUM PIPE SUPPORT SPACING AT STANDARD TEMPERATURES AND SERVICES

Type of Pipe	Pipe Support Max Spacing feet [m]	Max Run Without Expansion Joint, Loop, or Bend (Note 1) feet [m]	Expansion Joint Max Spacing (Note 2) feet [m]	Type of Expansion Joints
1-1/2 to 4 inch [38 to 100 mm]	10 [3.0]	30 [9.1]	100 [30.5]	Note 3
Over 4 inch [100 mm]	15 [4.5]	80 [24.4]	80 [24.5]	Note 3
Copper, for hot water				
1 inch [25 mm] and smaller	5 [1.5]	20 [6.1]	100 [30.5]	Note 3
Over 1 inch [25 mm]	7 [2.1]	20 [6.1]	100 [30.5]	Note 3
Copper, for services other than hot water				
1 inch [25 mm] and smaller	5 [1.5]	--	--	Note 7
Over 1 inch [25 mm]	7 [2.1]	50 [15.2]	100 [30.5]	Note 3
Cast iron soil pipe	10 [3.0]	--	--	Notes 7, 8

Table 2 Notes:

1. Unless otherwise acceptable to Engineer, an expansion joint shall be provided in each straight run of pipe having an overall length between loops or bends exceeding the maximum run specified herein.
2. Unless otherwise acceptable to Engineer, the spacing between expansion joints in any straight pipe run shall not exceed the maximum spacing specified herein.
3. Expansion joint fittings are specified in the respective piping sections.
4. At least two properly padded supports for each pipe section.
5. At least one support for each pipe section.
6. Expansion joints shall be mechanical couplings.
7. No expansion joints are required.

8. Supports for 5 and 10 foot [1.5 and 3 m] long pipe sections shall be located within 18 inches [460 mm] of each joint. Supports shall be positioned to maintain the piping alignment and to prevent the piping from sagging.

9 References to specific gravity refer to liquid specific gravity and are referenced to water which is assumed to have a specific gravity of 1.0.

3-3.01. Temperature Adjustments for PVC Pipe. Not Used.

3-3.02. Temperature Adjustments for FRP Pipe. Not Used.

3-4. INSTALLATION.

3-4.01. General. All piping shall be supported in a manner which will prevent undue stress on any valve, fitting, or piece of equipment. In addition, pipe supports shall be provided at changes in direction or elevation, and adjacent to flexible couplings. Pipe supports and hangers shall not be installed in equipment access areas.

Where horizontal piping is arranged with two or more parallel lines, trapeze hangers may be used in lieu of individual hangers. Trapeze assembly section shall consist of structure attachments as previously specified with rod size dependent upon total weight supported. Spacing of assemblies shall be determined by the minimum pipe size included in the group supported. Trapeze horizontal assemblies shall be structural angle or channel section of sufficient size to prevent measurable sag between rods when pipes are full. All lines shall be attached to the horizontal with intermediate pipe guides and U-bolts or one-hole clamps. Pre-engineered support equipment may be used when selected and installed in accordance with the manufacturer's recommendations.

Where copper pipe is installed on a support system of dissimilar metal with other pipes, the copper pipe shall be galvanically isolated from the support using Neoprene strips or other material acceptable to Engineer.

No piping shall be supported from the pipe above.

Horizontal piping hanger support rods shall attach to steel beams with center-loading I-clamps, or welded beam clips. Hanger support rods shall attach to concrete slabs or beams with inserts.

Anchorage shall be provided to resist both lateral and longitudinal seismic forces.

3-4.02. Inserts. Reference building structural concrete Drawings for concrete inserts. When not provided as part of the building concrete structure, provide

inserts for suspending hangers from reinforced concrete slabs and sides of reinforced concrete beams.

Where concrete slabs form finished ceilings, provide inserts flush with the slab surface.

Where inserts are omitted, drill through concrete slab from below and provide thru-bolt with recessed square steel plate and nut recessed into and grouted flush with slab. NDE (Non-Destructive Evaluation) shall be used to locate existing reinforcing before drilling.

3-4.03. Pipe Hangers and Supports. Hanger rod sizes for copper pipe and plastic pipe shall be the size of hanger rods for steel pipe. Install hangers to provide a minimum 1/2 inch [13 mm] space between finished covering and adjacent work.

A hanger shall be placed within 18 inches [450 mm] of each horizontal elbow, and on both sides of all piping accessories and valves weighing 20 lbs [9 kg] or more.

Hangers shall have 1-1/2 inches [38 mm] minimum vertical adjustment.

Support horizontal cast iron, ductile iron and no-hub piping systems adjacent to each joint.

Support vertical piping at every floor using riser clamps.

Support riser piping independently of connected horizontal piping.

Hanger and hanger components shall be sized specifically for the pipe size it is to be used on.

3-5. PLACEMENT. The maximum spacing for pipe supports and expansion joints shall be as indicated in Tables 2, 3, 4, and 5.

Rubber hose and flexible tubing shall be provided with continuous angle or channel support.

Unless otherwise indicated on the Drawings or acceptable to Engineer, piping shall be supported approximately 1-1/2 inches [38 mm] out from the face of walls and at least 3 inches [75 mm] below ceilings.

End of Section

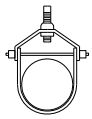

ADJ. STEEL CLEVIS
TYPE-1

ADJ. STEEL
BAND HGR
TYPE-7

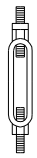

STEEL TURNBUCKLE
TYPE-13

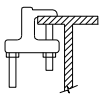

TOP BEAM
C-CLAMP
TYPE-19

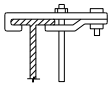

TOP I-BEAM CLAMP
TYPE-25

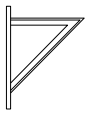

LIGHT WELDED
STEEL BRACKET
TYPE-31

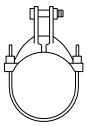

ALLOY STEEL
PIPE CLAMP
TYPE-2

EXTENSION PIPE ON
RISER CLAMP
TYPE-8

STEEL CLEVIS
TYPE-14

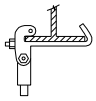

SIDE I-BEAM ON
CHANNEL CLAMP
TYPE-20

CLIP
TYPE-26

MEDIUM WELDED
STEEL BRACKET
TYPE-32

HEAVY WELDED
STEEL BRACKET
TYPE-33

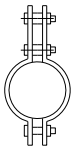

CARBON OR ALLOY
STEEL DOUBLE BOLT
PIPE CLAMP
TYPE-3

ADJUSTABLE
BAND HGR
TYPE-9

SWIVEL
TURNBUCKLE
TYPE-15

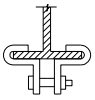

CENTER I-BEAM
TYPE-21

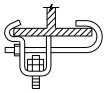

SIDE I-BEAM CLAMP
TYPE-27

SIDE BEAM BRACKET
TYPE-34

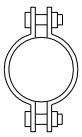

STEEL PIPE CLAMP
TYPE-4

ADJ. SWIVEL RING
BAND TYPE
TYPE-10

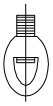

MALLEABLE
IRON SOCKET
TYPE-16

WELDED
ATTATCHMENT
TYPE-22
AS SHOWN OR
INVERTED LESS BOLT

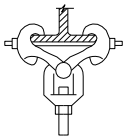

STEEL I-BEAM CLAMP
W/ EYE NUT
TYPE-28

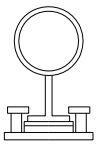

PIPE SLIDE &
SLIDE PLATE
TYPE-35

PIPE HANGER
TYPE-5

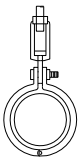

SPLIT PIPE W/WO
TURMBUCKLE ADJ.
TYPE-11

STEEL WELDLESS
EYE NUT
TYPE-17

C-CLAMP
TYPE-23

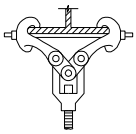

STEEL W.F. CLAMP
W/ EYE NUT
TYPE-29

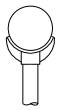

PIPE SADDLE
SUPPORT
TYPE-36

ADJ. SWIVEL PIPE RING
SPLIT RING TYPE OR
SOLID RING TYPE
TYPE-6

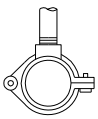

EXTENSION SPLIT
PIPE CLAMP
HINGED OR TWO BOLT
TYPE-12

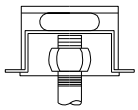

STEEL OR MALLEABLE
CONCRETE INSERT
TYPE-18

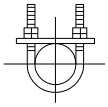

U-BOLT
TYPE-24

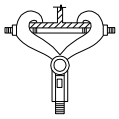

MALLEABLE BEAM CLAMP
W/EXTENSION PIECE
TYPE-30

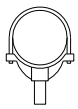

PIPE STANCHION
SADDLE
TYPE-37

HANGERS AND SUPPORTS

Black & Veatch	*PIPE SUPPORTS*	*FIG 1-15140(A)*

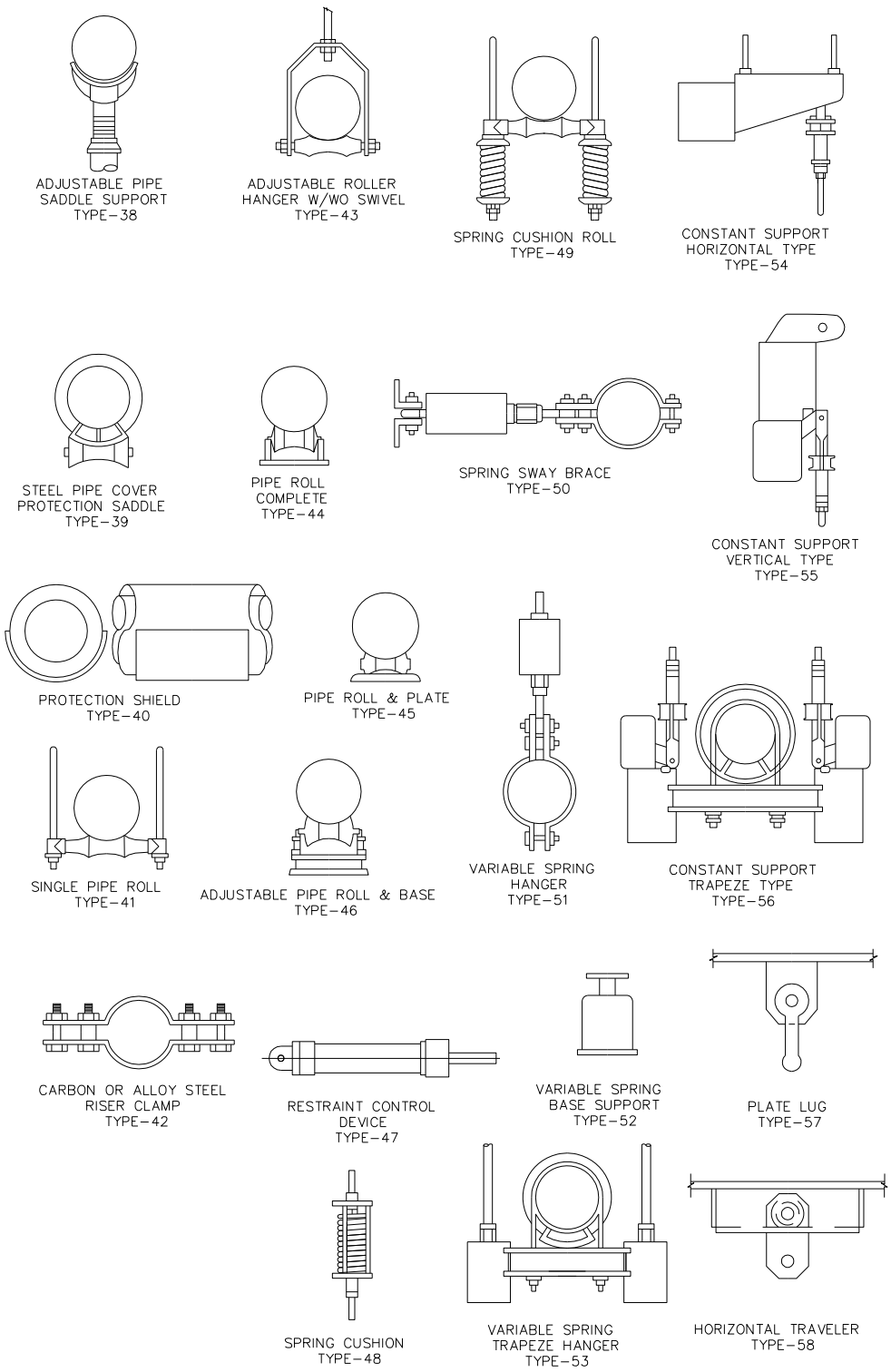

HANGERS AND SUPPORTS

Black & Veatch	PIPE SUPPORTS	FIG 1-15140(B)

SECTION 15170

ELECTRICAL MOTOR, INDUCTION, 600 VOLTS AND BELOW

PART 1 - GENERAL

1-1. SUMMARY

1-1.01. Furnish and install mill and chemical duty high efficiency, squirrel cage induction motor as hereinafter specified. Furnish and install as integral part of rotating driven equipment unit.

1-2. RELATED REQUIREMENTS

1-2.01. Driven equipment specifications, PLANS, and equipment manufacturer requirements define voltage, speed, special features, driven equipment requirements, and special submittal data.

1-2.02. Related work as called for on PLANS or specified in this or other Sections of the Specifications.

1-3. REFERENCES

1-3.01. The publications listed below form a part of this Specification to the extent referenced. The publications are referred to in the text by basic designation only.

a. American Bearing Manufacturers Association (ABMA)

1. ABMA 9 Load Ratings and Fatigue Lift for Ball Bearings.

b. Institute of Electrical and Electronic Engineers (IEEE)

1. IEEE 112 Standard Test Procedures for Polyphase Induction Motors and Generators

2. IEEE 841 Standard for Petroleum and Chemical Industry-Severe Duty Totally Enclosed Fan-Cooled (TEFC) Squirrel Cage Induction Motors-Up to and Including 500 Hp

c. National Electrical Manufacturers Association (NEMA)

1. NEMA MG 1 Motors and Generators.

1-4. SUBMITTALS

1-4.01. Furnish the following in accordance with Specifications Section 01300, “Submittals” and Section 01300, “Operation and Maintenance Data”.

a. Shop drawings. In addition to the items specified in Section 01300, “Submittals”, furnish the following information with the driven equipment submittal:

1. Full nameplate information in accordance with NEMA Standard MG 1-10.37; full load and locked rotor torque, efficiency and power factor data at full load, 3/4 load, and 1/2 load, space heater wattage and voltage, safe stall time, inertia, number of allowable starts (cold/hot) per day and associated time between successive starts

2. Thermal damage curves and speed-torque characteristic

3. Full load, no load, and locked rotor ampere at rated voltage

4. Wiring diagrams

5. Dimensioned drawings, weights, bearing calculations and data.

b. Operation and Maintenance Manuals: Furnish as part of driven equipment O&M manual.

1-5. QUALITY ASSURANCE

1-5.01. Design and construction of motors to be in accordance with NEMA Standard MG 1 and applicable provisions of IEEE, ANSI, NEC, OSHA, and UL.

1-5.02. Furnish identical motors and accessories from a single motor manufacturer for multiple units of the same equipment.

1-5.03. Sole Source Responsibility: Utilize a single supplier to provide the drive motor, the driven equipment and any accessories.

1-6. DELIVERY, STORAGE AND HANDLING

1-6.01. Protect from weather and insects with polyethylene wrapper, energize space heaters to preclude moisture.

PART 2 - PRODUCTS

2-1. MANUFACTURER(S)

2-1.01. Teco-Westinghouse;

2-1.02. U.S. Motor

2-1.03. Reliance/Baldor

2-1.04. General Electric

2-2. MATERIALS AND/OR EQUIPMENT

2-2.01. General: Unless otherwise noted in the driven equipment specification sections, the following items apply as a default standard:

a. Enclosure: TEFC.

b. Service Factor: 1.15.

c. Mounting: As required by the driven equipment.

d. Duty Rating: Continuous.

e. 120-volt space heaters. Wire to the motor terminal box unless specified otherwise.

f. Starting: Across the line, full voltage starting except motors larger than or equal to 75 Hp shall be suitable for reduced voltage auto-transformer starting, with reduced voltage auto-transformer tap setting of 65 percent of the across-the-line voltage.

g. Frequency: 60 Hz.

h. Lifting Lug.

2-2.02. Performance: Unless otherwise noted in the driven equipment specification sections, the following items apply as a default standard:

a. Brake Horsepower: As designated in driven equipment specification. Brake horsepower of the driven equipment is not to exceed motor nameplate horsepower rating, excluding any service factor.

b. Efficiency: Motors shall be of a premium energy-efficient design per NEMA MG 1, Tables 12-12 and 12-13.

c. Locked Rotor kVA Code G or lower for motors sized 15 horsepower and larger.

d. Power Factor: Where shown on the Drawings, furnish and install power factor correction capacitors in the motor terminal box. Furnish and install oversized terminal box. For bidding purposes, furnish and install power factor correction capacitors as required to achieve 95 percent power factor at 100 percent motor load. Additional performance requirements regarding the power factor requirement are as follows:

    1. The proposed size of the power factor correction capacitors will be reviewed after Bid Award during shop drawing submittal review process. The Owner shall select the highest power factor that will not overexcite the motor, and the motor manufacturer shall furnish and install the power factor correction capacitors accordingly, up to and including the value required to achieve 95 percent power factor at 100 percent motor load, at No Additional Cost To The Owner.

2-2.03. Construction and Materials:

a. Frame: Cast iron, size per NEMA designations.

b. End Shields: Cast iron.

c. Drain/Breather: Stainless Steel “T” drains in end brackets.

d. Fan Shroud: Cast iron.

e. Motor Terminal Box: Oversize, cast iron, diagonally split, rotatable, threaded hubs for conduit attachment. Sized per NEMA MG 1, section 1, paragraph 4.19. Terminal box shall be gasketed to frame and furnished with grounding lug.

f. Cooling Fan: Aluminum or polypropylene.

g. Wiring and Insulation: Copper with non-hygroscopic Class F insulation, Class B temperature rise not to exceed insulation temperature rating when operating at service factor rating in 40 degrees Celsius ambient according to NEMA MG 1-12.42. Include extra dips and bakes for high humidity.

h. Rotor: Precision cast aluminum rotor conductor bars, statically and dynamically balanced.

i. Bearings: Ball bearings, B_{10} life of 75,000-hours per ABMA 9, grease lubricated with cast iron bearing caps. Labyrinth sealed with removable grease relief plugs. Extended lubrication lines with Alemite fittings in both end shields. Provide for adding new and draining old grease without major motor disassembly.

j. Hardware: Stainless Steel.

k. Shaft: High strength carbon steel, precision turned and ground. Non-metallic V-ring shaft slinger to prevent moisture seepage along shaft into motor.

l. Nameplate: Stainless Steel securely attached to motor with stainless steel screws. All data to be permanently stamped into nameplate. Data shall include:

1. Horsepower.
2. RPM.
3. NEMA design.
4. Phase
5. Hertz.
6. Service factor.
7. NEMA nominal efficiency.
8. Power factor.
9. Frame size.
10. Duty.
11. Class of insulation.
12. Ambient temperature.
13. Locked rotor KVA code.
14. Full load amps.
15. Locked rotor amps.
16. Bearing identification by ABMA number.
17. Model and catalog number.

m. For motors furnished with power factor correction capacitors, furnish and install an additional auxiliary nameplate to read as follows ""____FLA with ___kVAR power factor correction capacitors installed", with the applicable values inserted as applicable.

n. Additional features for motors sized 100 horsepower and larger:

1. Motor space heaters wired to a dedicated space heater terminal box. Box to be rated NEMA-4, at minimum.

2-3. FABRICATION (NOT USED)

2-4. SOURCE QUALITY CONTROL

2-4.01. Factory Tests:

a. Perform routine (production) tests on all motors in accordance with NEMA MG 1 and IEEE 112.

b. For motors 100 Hp and smaller, testing can be conducted on an identical motor.

c. Testing:

1. No load power at rated voltage.

2. Locked rotor current.

3. Efficiency at 50, 75 and 100 percent of rated horsepower in accordance with IEEE 112, Test Method B, and NEMA MG 1, paragraphs 12.59 and 12.60.

4. Power factor.

5. Speed.

6. Current at rated horsepower.

7. kW input at rated horsepower.

2-4.02. Test Report Forms:

a. Routine Tests: IEEE 112, Form A-1.

b. Efficiency and power factor by Test Method B, IEEE 112, Form A-2, and NEMA MG 1, Table 12-11.

PART 3 - EXECUTION

3-1. ERECTION/INSTALLATION/APPLICATION AND/OR CONSTRUCTION

Follow manufacturer's published instructions and alignment requirements for driven unit. Measure and record amperes at maximum load and verify proper overload heater selection.

3-2. MEASUREMENT AND PAYMENT

No separate measurement or payment for work performed under this Section. Include cost of same in Contract price bid for work of which this is a component part.

End of section

SECTION 15175

ELECTRICAL MOTOR, INDUCTION, 5 KV

PART 1 - GENERAL

1-1. SUMMARY

1-1.01. Furnish and install totally enclosed fan cooled (TEFC) squirrel cage induction motors as hereinafter specified. Furnish and install as integral part of rotating driven equipment unit.

1-2. RELATED REQUIREMENTS

1-2.01. Driven equipment specifications, PLANS, and equipment manufacturer requirements define voltage, speed, special features, driven equipment requirements, and special submittal data.

1-2.02. Related work as called for on the PLANS, as specified herein or in other Sections of the Specifications.

1-3. - 1.05 (NOT USED)

1-4. SUBMITTALS

1-4.01. Shop Drawing Submittals

a. Submit complete shop drawings and engineering data for review per the requirements of Section 01300 of the Specifications. At minimum, shop drawings data shall include the following:

1. For each motor, submit (as minimum):

a) Three-line and wiring diagrams

b) Dimensioned/scaled top and bottom views, front elevations, sectional views, and internal component/device layouts.

c) Net weight of assembled motor, rotor, and net weight of heaviest part to be handled during field assembly of disassembly.

d) Catalog cut sheets on all subcomponents.

e) Performance data:

1) Include efficiency, power factor, and ampere, all at rated voltage, performance curves for 25 through 100 percent of full load, additionally, denote actual values of efficiency, power factor (uncorrected), ampere, all at rated voltage, for 25, 50, 75, and 100 percent of full load. Include non-load losses as well as load losses. Include maximum allowable size of power factor correction capacitor that can be switched with the motor.

2) Full load torque, locked rotor torque, thrust, rated speed and slip.

3) Number of safe starts in succession when starting from 40°C ambient. Describe any intermediate waiting periods and other conditions for driving equipment.

4) Submit composite speed-torque characteristics of the motor and pump. Submit rotor inertia, accelerating time, safe stall time, time-current thermal damage curve, power factor-speed characteristic during starting, maximum power factor correction capacitor size that can be switched with the motor.

f) Bearing size and life calculation

g) Machine reed/critical frequencies, coordinated with the driven equipment

h) Recommended test voltages, durations, test procedures, etc., associated with motor field testing. Submit information required to facilitate the initial field testing as well as periodic maintenance type tests.

i) Prior to shipment of the equipment to the project site, submit certified factory test reports as described in Subsection 3.1, this Section of the Specifications.

j) Field tests: Furnish reports of field tests. Prior notification of field tests shall be submitted for all equipment at least two weeks before testing

2. Spare parts list indicating sizes, quantities and part numbers of the items to be furnished.

3. Manufacturer's delivery, storage and handling requirements

4. Manufacturer's installation instructions and recommendations

5. Proposed oil data sheet.

1-4.02. Operation and Maintenance Manuals:

a. Submit operation and maintenance manuals per the requirements Section 01300 of the Specifications. At minimum, the manuals shall include the following:

1. Contents:

a) Installation and operation manuals

b) Lubrication and maintenance instructions.

c) Test data and performance curves, where applicable.

d) Approved shop drawings.

e) Factory and field calibration, test and setting data, and Manufacturer's Certification Reports.

1-5. QUALITY ASSURANCE

1-5.01. The motors shall be designed, constructed, and tested in accordance with the latest applicable requirements of NEMA MG-1, IEEE, and ANSI standards.

1-5.02. Motors shall be as manufactured by TECO-Westinghouse, Siemens, General Electric Company "G.E.", or approved equal. It is preferred that equipment, components, etc., be manufactured in the USA.

1-5.03. Motor manufacturer shall use a shop test facility that has calibrated testing apparatus and qualified experienced technicians for all shop tests. Calibration of testing apparatus shall be within one year

1-5.04. Manufacturer's test equipment, instrument calibration and test reports shall be in accordance with the latest edition of the accuracy standard of the U.S. National Institute of Standards and Technology and NETA acceptance testing specification.

1-6. DELIVERY, STORAGE AND HANDLING

1-6.01. Protection:

a. The Contractor, and hence the motor supplier, shall be responsible for safety of the motors during storage, transporting and handling.

b. The motors shall have weatherproof non-porous extra heavy duty plastic covers at all times, until they are ready for test and start-up.

c. Energize the space heaters within the motors and energize during storage and installation for humidity control.

d. Unload and handle equipment by suitable methods that are recommended and approved by the manufacturer of the equipment.

1-6.02. Additional requirements for delivery, storage, and handling of equipment and materials provided under this Specification are as follows:

a. Motors shall be inspected for shipping damage when received.

b. All oil lubricated bearing motors shall be identified and the bearing reservoirs filled to normal level.

c. Motors shall be handled using motor lifting lugs. Pounding or bumping of motor may damage motor and shall be prevented. A hoist and spreader bar arrangement shall be used to avoid damage.

d. Care shall be taken to transport vertical motors maintaining their vertical orientation.

e. Motors shall be stored indoors in clean, dry, heated areas.

f. Motor space heaters shall be energized to prevent moisture condensation throughout the storage and construction period.

g. Motors shall not be stored in areas subject to continuous vibration. Shipping/storage crating shall allow for periodic rotation of the motor shaft. Motor shaft shall be rotated periodic, to check for binding, by hand or by tool approved by the motor manufacturer.

1-7. TOOLS AND SPARE PARTS

1-7.01. The Contractor shall provide spare parts for the equipment provided under this Specification. The spare parts shall be listed in an index and packed in containers suitable for long term storage, provided with labels clearly designating the manufacturer's part number with complete information for use and reordering:

a. The spare parts provided shall include the following for each motor:

1. One complete set of drive end and non-drive end bearings.

2. One complete set of fans.

3. Two (2) full sets of oil rings and seals

4. Spare parts recommended by the motor manufacturer for two (2) years of normal motor operation (but not including spare parts already listed above).

b. The Contractor shall provide such special tools and appliances as may be needed to adjust, operate, maintain or repair the equipment furnished under this Specification.

c. The Contractor shall furnish such oil, grease, and any special lubricants as are necessary for the proper operation of the equipment provided under this Specification.

d. The oil, grease, and special lubricants furnished shall be sufficient for the required operation of the equipment prior to its final acceptance, and for the operation of the equipment during the maintenance and guaranty period.

PART 2 - PRODUCTS

2-1. GENERAL

2-1.01. Also refer to and comply with the additional requirements for the motors as shown on the PLANS.

2-1.02. Performance Requirements:

a. Rated Voltage: 4,160 volts. The voltage may vary plus or minus 10 percent of rated voltage. Motor will be served from a solidly grounded WYE system.

b. Brake Horsepower: As required per Section 11115. Brake horsepower of the driven equipment is not to exceed motor nameplate horsepower rating, excluding any service factor.

c. NEC locked rotor current: Locked rotor kVA Code G or lower.

d. Starting Means: Full voltage start, as also shown on the PLANS.

e. Maximum number of starts: 2 cold or 1 hot in a one hour period.

f. Ambient Temperature: 40 degree C

g. Duty: Continuous duty

h. Service Factor: 1.15

i. Nominal Speed: As required per Section 11115.

j. Frequency: 60 Hertz, plus or minus 5 percent

k. Number of Phases: Three

l. Power Factor: High power factor per NEMA MG-1.

m. Efficiency: Premium efficient motor, with minimum efficiency of 93 percent or higher.

n. Motor Enclosure: Totally enclosed fan cooled (TEFC)

o. Noise Level: Shall not exceed 90 decibels as measured on the NEMA A-Weighted Scale at a distance of five (5) feet from any motor surface under no load.

p. Additional performance requirements to serve the driven equipment under which all conditions it could be subjected. Refer to and comply with the requirements of Section 11115.

2-2. MOTOR CONSTRUCTION

2-2.01. Frame

a. Material: Fabricated steel, cast iron, or nodular iron per manufacturers preference

b. End Plate: Steel, cast or fabricated per manufacturers preference. End plates shall be field removable to facilitate rotor removal.

c. Furnish and install integral lifting eyes or lugs to facilitate removal of motor.

2-2.02. Stator:

a. General: The stator core shall be an assembly of laminations as hereinafter specified that are securely clamped between end rings. The manufacturer may also supplement the clamping with through-bolts at the manufacturer's preference.

b. Laminations: High-Grade silicon sheet steel insulated (pre-coated) with C-5 inorganic insulation

c. Windings Material: Copper.

d. Windings Type: Form wound

e. Insulation:

1. Vacuum Pressure Impregnated (VPI) with minimum of 2 dips and bakes in epoxy resin after stator is wound

2. NEMA Class F with Class B temperature rise

3. Tropicalization/fungus protection.

f. End Turn Support System: Braced to withstand an external three-phase short circuit at full load and 100 percent of rated voltage.

g. Space Heaters: Embedded in the stator and sized per manufacturer's recommendations in consideration of the application environment. Space heater voltage shall be 120 volts A.C.

2-2.03. Rotor:

a. Type: Squirrel cage type, designed for overspeed in accordance with NEMA

b. General: The rotor core shall be an assembly of laminations as hereinafter specified that are securely clamped between end rings. The manufacturer may also supplement the clamping with through-bolts at the manufacturer's preference.

c. Laminations: High-grade silicon sheet steel insulated (pre-coated) with C-5 inorganic insulation

d. Rotor bars and end rings:

1. Material: Copper/copper alloy.

2. End rings shall be single-piece forged or cast, and brazed to the rotor bars.

3. Rotor bars shall fit securely in the rotor per manufacturer's standard method. Swaged rotor bars are preferred if available from the manufacturer.

e. Shaft: Hot-rolled steel or forged steel per manufacturer's preference. Furnish and install solid shaft.

f. Fan: Rotor shall have a shaft mounted fan for circulating air across the motor enclosure.

2-2.04. Bearings:

a. General:

1. All bearings shall be oil lubricated. Grease lubricated bearings are not acceptable.

2. Sleeve bearings shall be split type, self lubricating, and be provided with two-piece, easy replaceable brass oil rings. The bearing housing shall be split to permit replacement of the bearings without removing the bottom section of the housing. Oil seals shall be floating labyrinth type.

3. Sleeve bearing motors shall have integral self-cooled oil reservoirs of adequate capacity with fill and drain openings. The bearing sleeves shall be lined with a high tin content Babbitt to minimize oil contamination. Close running shaft seals shall prevent oil leakage as well as prevent entrance of foreign material such as water and dirt into the bearing area. Oil level sight gauges with permanently marked easily discernible oil level shall be provided. In addition, inspection openings to observe the oil rings shall also be provided.

4. For each bearing, furnish and install:

a) Sight glass

b) Oil reservoir

c) Sump breathers

d) Oil fill and drain connection, including fill line filter and cap and drain valve and plug.

b. Drive End Bearing:

1. Type: Sleeve Bearing

2. L-10 life of 100,000 hours when operated at rated speed, at minimum.

c. Thrust Bearing:

1. Type: Oil lubricated spherical roller thrust bearing

2. The guaranteed minimum L-10 life of thrust bearing shall be at least 100,000 hours when operated at rated speed and full load thrust. The driven equipment manufacturer shall supply the motor manufacturer with the speed and thrust conditions required by the driven equipment.

3. The thrust bearing in the motor shall be arranged to withstand any momentary pump up thrust at start-up and shall limit the total movement of the pump shaft under these conditions to less than 0.02-inch.

2-2.05. Enclosure:

a. Type: Totally Enclosed Fan Cooled (TEFC)

b. Application: Suitable for installation in an wet location environment

c. Material: Fabricated steel or cast iron per manufacturer's preference.

d. Accessories: Drain openings and drain plugs.

2-2.06. Painting: The equipment provided under this Specification shall be shop cleaned, primed, and finish painted, and field painted in accordance with the requirement of Specification Section 09800 "Protective Coatings".

2-3. MOTOR TERMINAL BOXES

2-3.01. General:

a. Multiple motor terminal boxes are required for each motor. The minimum requirements for each box are as described hereinafter and as also shown on the PLANS. The physical arrangement of the terminal boxes around the motors shall be as shown on the PLANS. Coordinate with the PLANS.

b. Unless specified otherwise, all space heater, instrumentation, and control devices shall be pre-wired by the manufacturer to terminal blocks in the respective terminal boxes.

c. Refer to the PLANS for field interconnect wiring sizes and quantities.

2-3.02. General requirements for all terminal boxes:

a. NEMA Rating: NEMA 4 at minimum.

b. Material: 11 gauge steel at minimum. Prime and paint per subsection 2.02.E, this Section of the Specifications.

c. Doors: Gasketed bolted cover with handles

d. Size: Determined by motor manufacturer. Size as required to contain the specified components.

e. Accessories:

1. Grounding lug

2. Door bonding strap

3. Door stop kit

4. Backpanel

5. Reinforcing bars for inner device panels as required.

2-3.03. High Voltage Box:

a. Includes the following mounted interior to the box, pre-wired by the motor manufacturer:

1. Tin plated copper busing mounted on 5kV glass reinforced polyester stand-off isolators to facilitate termination of the main motor power terminal leads, the main motor incoming power feeder cables, and other 5 kV equipment located in the box.

2. Box shall be adequately sized to facilitate the use of 5 kV stress cone type cable termination, with the stress cones fully contained inside of the box. Refer to the PLANS for feeder sizes.

3. Grounding lug

2-3.04. Space Heater Termination Box:

a. Includes terminal blocks mounted interior to the box to terminate the motor space heater wiring.

2-4. IDENTIFICATION

2-4.01. Terminal Boxes:

a. All control/metering wires shall be tagged and coded with an identification number. Tagging type and wire coding shall be per manufacturer's standard

b. All terminal blocks shall be identified

c. Properly label the control/metering devices mounted inside the each enclosure using manufacturer's standard labels installed in accordance with the manufacturer's standard method.

d. Furnish and install nameplate on the face of each enclosure door. Nameplate shall be as follows:

1. Type: 3-ply, 1/8" thick, rigid thermoset phenolic resin laminated cellulose paper base engraving stock per ASTM D-709, Type I. Nameplates shall be ASTM Grade ES-1, ES-2, or ES-3 as applicable for the face and lettering colors specified hereinafter. Flexible or acrylic tags will be not be accepted.

2. Color: White-Black-White

3. Lettering: Engraved through the face layer to the melamine middle layer. Nameplates shall be legible at a distance of six feet from the nameplate.

4. Accessories: Provide holes for mechanical fastening.

5. Attachment Means: Attach nameplate with screws/bolts per manufacturer's standard; use of adhesives shall not be accepted.

2-4.02. Motor nameplates:

a. General:

1. Material: Stainless Steel

2. Lettering: Engraved, permanently marked.

b. Data to show on nameplate, at minimum:

1. Manufacturer's Name and Address

2. Motor Shop Order Number

3. Date of motor manufacture

4. Model

5. Horsepower

6. Full Load RPM

7. Duty Rating

8. Temperature Rise

9. Voltage

10. Frequency

11. Number of Phases

12. Full Load Ampere

13. Instruction Book Number

14. Bearing part numbers

15. Space heater voltage and wattage

16. Locked rotor kVA/HP.

2-5. MISCELLANEOUS ACCESSORIES

2-5.01. Provide clamp type terminals for all power and ground cables and stress-cone type termination of all 5kV power cables.

PART 3 - EXECUTION

3-1. FACTORY TESTING

3-1.01. Standard factory tests shall be performed on the equipment specified in accordance with the latest version of ANSI and NEMA standards. The manufacturer shall provide certified copies of factory test reports prior to shipment of the equipment to the project site. Format and quantities of the test report shall be in accordance to Section 01300 of the Specifications. At minimum, include:

a. No load running current and power

b. Current balance

c. Measure winding resistance, insulation resistance, and polarization index per IEEE 43. At minimum for polarization index, record the resistances corresponding to following time intervals from the onset of the test: 15, 30, 45, 60, 120, 300, and 600 seconds

d. High potential test

e. Vibration tests

3-1.02. Completely test each motor per IEEE 112 method F.

3-1.03. Perform noise test per IEEE 85.

3-2. INSTALLATION

3-2.01. Install per manufacturer's instructions and recommendations. Install all required safety labels.

3-2.02. Furnish and install support channel racks as required to support all non-self-supporting motor terminal boxes and other equipment. Support channel racks shall be similar to those shown in the details on the PLANS.

3-3. EQUIPMENT PROTECTION AND RESTORATION

3-3.01. Clean and vacuum all interior of all terminal enclosures.

3-3.02. Painting: Per Specification Section 09902, "Painting and Protective Coatings" as follows:

a. Shop painting: Primer and Finish Paint – per "Factory Finished Machinery, Electrical and Motors – Interior, Exterior" from "Table 1 - System Schedule".

b. Provide additional shop paint coating for touch-up to all surfaces after shop testing is completed and equipment accepted.

c. During installation and after approved testing by the Engineer, apply touch-up paint to all scratched, abraided and damaged shop painted surfaces. Coating type and color shall match shop painting.

3-4. FIELD ADJUSTMENTS AND TESTING

3-4.01. Inspection and final field tests shall be performed for all equipment provided under this Specification, as specified in Specification Section 11000-Equipment General Provisions.

3-4.02. Minimum requirements for the inspection and preliminary field testing of the equipment provided under this Specification shall be as follows.

a. Electrical and grounding connections shall be inspected.

b. Shaft alignment, proper mounting and lubrication shall be inspected.

c. Ventilating air passageways shall be inspected for blockage.

d. Excessive noise shall be inspected and corrected.

e. Any overheating shall be inspected and corrected.

f. Correct rotation shall be inspected and corrected.

g. Protective detectors operation shall be checked.

h. Any excessive vibration shall be checked and corrected.

i. Space heater operation shall be checked.

j. Megger terminals and buses for grounds, test per manufacturer's recommendations.

k. Verify proper operation of all metering and control devices.

l. Test for proper phasing of power connections.

m. Verify proper phase rotation.

n. Check tightness of accessible bolted bus joints using calibrated torque wrench per manufacturer's recommended torque values.

3-4.03. All tests and values for motors shall be in accordance with the manufacturer's recommendations, NEMA/ANSI/IEEE, etc., and NETA, ATS Acceptance Testing Specification

3-4.04. The Contractor shall provide an acceptance testing report. The report shall be in accordance with NETA, ATS Acceptance Testing Specification.

3-4.05. Submit documentation of all tests outlined above. Include all test documentation data in Operation and Maintenance Manuals.

3-5. MEASUREMENT AND PAYMENT

3-5.01. No separate measurement or payment for work performed under this Section. Include cost of same in Contract price bid for work of which this is a component part.

End of Section

Section 15180

VALVE AND GATE ACTUATORS

PART 1 - GENERAL

1-1. SCOPE. This section covers furnishing manual and powered valve and gate actuators and accessories as specified herein.

1-2. GENERAL. Equipment provided under this section shall be fabricated and assembled in full conformity with Drawings, specifications, engineering data, instructions, and recommendations of the equipment manufacturer, unless exceptions are noted by Engineer.

Actuators shall be furnished with all necessary parts and accessories indicated on the Drawings, specified, or otherwise required for a complete, properly operating installation and shall be the latest standard products of a manufacturer regularly engaged in the production of actuators.

1-2.01. General Equipment Stipulations. The General Equipment Stipulations shall apply to all equipment furnished under this section. If requirements in this specification differ from those in the General Equipment Stipulations, the requirements specified herein shall take precedence.

1-2.02. Governing Standards. Except as modified or supplemented herein, cylinder and vane type actuators shall conform to applicable requirements of ANSI/AWWA C541.

Except as modified or supplemented herein, electric motor actuators shall conform to applicable requirements of ANSI/AWWA C542.

Except as modified or supplemented herein, actuators for butterfly and eccentric plug valves shall conform to the applicable requirements of ANSI/AWWA C504.

Except as modified or supplemented herein, manual actuators for ball valves shall conform to the applicable requirements of ANSI/AWWA C507.

Except as modified or supplemented herein, actuators for cast-iron slide gates shall conform to the applicable requirements of ANSI/AWWA C560.

Except as modified or supplemented herein, actuators for open channel slide gates and weir gates shall conform to the applicable requirements of ANSI/AWWA C513.

Except as modified or supplemented herein, actuators for stainless steel slide gates shall conform to the applicable requirements of ANSI/AWWA C561.

Except as modified or supplemented herein, actuators for composite slide gates shall conform to the applicable requirements of ANSI/AWWA C563.

1-2.03. Power Supply. Power supply to electric actuators will be as indicated in the valve and gate schedules.

1-2.04. Marking. Each actuator shall be marked with the manufacturer's name, model number, and the country of origin. An identifying serial number shall be stamped on a corrosion-resistant plate attached to the actuator.

1-2.05. Temporary Number Plates. Each actuator shall be factory tagged or marked to identify the actuator and the applicable valve or gate by number or service as indicated in the valve or gate schedule.

1-3. SUBMITTALS.

1-3.01. Drawings and Data. Complete drawings, details, and specifications covering the actuators and their appurtenances shall be submitted in accordance with the Submittal Procedures section. Submittal drawings shall clearly indicate the country of origin of each actuator and its components.

Submittal drawings shall include separate wiring diagrams for each electrically operated or controlled actuator and the electrical control equipment. Each actuator drawing shall be identified with the respective valve number or name.

For electric or cylinder actuators, certified copies of reports covering proof-of-design testing of the actuators as set forth in Section 5 of ANSI/AWWA C541 or ANSI/AWWA C542 respectively, together with an affidavit of compliance as indicated in Section 6.3 of ANSI/AWWA C541 or ANSI/AWWA C542 respectively, shall be submitted to Engineer before the actuators are shipped.

1-3.02. Operation and Maintenance Data and Manuals. Operation and maintenance manuals shall be submitted in accordance with the Submittals Procedures section (01300). The operation and maintenance manuals shall be in addition to any instruction or parts lists packed with or attached to the equipment when delivered.

PART 2 - PRODUCTS

2-1. PERFORMANCE AND DESIGN REQUIREMENTS.

2-1.01. General. Actuators and appurtenances shall be designed for the conditions and requirements as indicated in the respective valve and gate sections.

Liberal factors of safety shall be used throughout the design, especially in the design of parts subject to intermittent or alternating stresses. In general, working stresses shall not exceed one-third of the yield point or one-fifth of the ultimate strength of each material.

2-1.02. Valve Actuators. Each actuator shall be designed to open or close the valve under all operating conditions. Actuators shall be designed for the maximum pressure differential across the valve and maximum velocities through the valve where indicated in the respective valve schedules.

Valve actuators shall be provided and adjusted by the valve manufacturer. Actuator mounting arrangements and positions shall facilitate operation and maintenance and shall be determined by the valve manufacturer unless indicated otherwise on the Drawings or directed by Engineer.

When valves are to be buried, submerged, or installed in vaults; the actuators and accessories shall be sealed to prevent the entrance of water. The design water depth shall be as indicated in the respective valve schedules but not less than 20 feet [6.1 m].

2-1.03. Gate Actuators. Actuators shall be sized to produce the torque or thrust required to operate the gate when subject to the seating and unseating operating heads as indicated in the respective gate schedules.

Both the design head and the operating head shall be measured from the surface of the liquid to the center line of the gate.

2-1.04. Limit Switches. Limit switches shall be provided as indicated on the Drawings or in the valve and gate schedules.

For manual or cylinder type actuators, each limit switch shall be heavy duty type, with a cast NEMA Type 4 enclosure, a spring return roller lever, and four isolated contacts (two normally open and two normally closed) rated 10 amperes at 120 to 480 volts ac and 5 amperes at 125 volts dc. The switches shall be Allen Bradley "802T" or Square D "9007 Type C".

Limit switches for intelligent and standard electric actuators shall be as indicated in their respective paragraphs.

2-2. MATERIALS. Except as modified or supplemented herein, materials used in the manufacture of actuators shall conform to the requirements of the applicable governing standard(s).

2-3. VALVE MANUAL ACTUATORS.

2-3.01. General. Manual actuators of the types listed in the valve specifications or schedules shall be provided by the valve manufacturer.

Unless otherwise indicated or specified, each geared manual actuator shall be equipped with an operating handwheel.

The direction of rotation of the wheel, wrench nut, or lever to open the valve shall be to the left (counterclockwise). Each valve body or actuator shall have cast thereon the word "Open" and an arrow indicating the direction to open.

The housing of traveling-nut type actuators shall be fitted with a removable cover which shall permit inspection and maintenance of the operating mechanism without removing the actuator from the valve. Travel limiting devices shall be provided inside the actuator for the open and closed positions. Travel limiting stop nuts or collars installed on the reach rod of traveling-nut type operating mechanisms shall be field adjustable and shall be locked in position by means of a removable roll pin, cotter pin, or other positive locking device. The use of stop nuts or adjustable shaft collars which rely on clamping force or setscrews to prevent rotation of the nut or collar on the reach rod will not be acceptable.

Each actuator shall be designed so that shaft seal leakage cannot enter the actuator housing.

Valves for throttling service shall be equipped with an infinitely variable locking device or a totally enclosed gear actuator.

Actuators shall produce the required torque with a maximum pull of 80 lbs [356 N] on the lever, handwheel, or chain. Actuator components shall withstand, without damage, a pull of 200 lbs [890 N] on the handwheel or chainwheel or an input of 300 foot-lbs [407 J] on the operating nut.

2-3.02. Handwheels. Handwheel diameters shall be at least 8 inches [200 mm] but not more than 24 inches [600 mm] for 30 inch [750 mm] and smaller valves and not more than 30 inches [750 mm] for 36 inch [900 mm] and larger valves.

2-3.03. Chainwheels. Unless otherwise specified in the valve schedules, all valves with center lines more than 7'-6" [2.3 m] above the floor shall be provided with chainwheels and operating chains. Each chainwheel operated valve shall be equipped with a chain guide which will permit rapid handling of the operating chain without "gagging" of the wheel and will also permit reasonable side pull on

the chain. Suitable extensions shall be provided, if necessary, to prevent interference of the chain with adjacent piping or equipment. Operating chains shall be hot-dip galvanized or zinc plated carbon steel and shall be looped to extend to within 4 feet [1.2 m] of the floor below the valve.

2-3.04. Levers. Levers shall be capable of being locked in at least five intermediate positions between fully open and fully closed. In any building or structure containing lever operated valves, at least two operating levers shall be provided for each size and type of lever operated valve.

2-3.05. Chain Levers. Suitable actuator extensions shall be provided, if necessary, to prevent interference of the chain with adjacent piping or equipment. Operating chains shall be hot-dip galvanized carbon steel and shall be looped to extend to within 4 feet [1.2 m] of the floor below the valve.

2-3.06. Wrench Nuts. Unless otherwise specified in the valve schedules or on the Drawings, wrench nuts shall be provided on all buried valves and on all valves that are to be operated through floor boxes. Unless otherwise directed by Owner, all wrench nuts shall comply with Section 4.4.13 of ANSI/AWWA C500. At least two operating keys shall be furnished for operation of the wrench nut operated valves.

2-3.07. Operating Stands. Operating stands shall be provided in the locations indicated on the Drawings or as indicated in the valve and gate schedules. Operating stands shall support the handwheel approximately 36 inches [900 mm] above the floor. A sleeve made from standard weight galvanized steel pipe shall be provided for the opening in the floor beneath each operating stand. When stems are 10 feet [3 m] or longer, a suitable thrust bearing shall be provided in each operating stand to carry the weight of the extension stem.

2-3.08. Wall Brackets. Wall brackets shall be provided to support manual actuators in the locations indicated on the Drawings or in the respective valve schedules. The horizontal face of the bracket shall be predrilled to accept the actuator and the stem without modification. The top of the bracket shall extend sufficiently to bear on and transfer thrust loads to the top of the supporting structure.

2-4. GATE MANUAL ACTUATORS.

2-4.01. General. Manual actuators of the types listed in the gate schedules shall be provided by the gate manufacturer. Unless otherwise specified, actuators shall conform to ANSI/AWWA C560.

All bearings and gears shall be totally enclosed in a weathertight housing having a sufficient number of fittings to permit periodic lubrication of all internal moving components without partial or total disassembly of the mechanism. The pinion

shaft of crank-operated mechanisms shall be supported by roller bearings or needle bearings.

The direction of rotation of the wheel, crank, or wrench nut to open the gate shall be to the left (counterclockwise).

Actuators for rising stem self-contained gates shall be designed for mounting directly on the frame yoke.

When indicated in the gate schedules, crank-operated actuators shall be suitable for operation with a portable actuator specified herein. A suitable adapter coupling shall be furnished with each crank actuator to couple the portable actuator to the crank actuator pinion shaft as required.

2-4.02. Remote Actuators. Remote actuators shall be operated by a frame-mounted handwheel and chain drive. An extension shaft suitable for connection to the pinion shaft of the benchstand shall be provided complete with a roller chain, shaft couplings, support bearings, and a roller chain sprocket keyed or bolted to the end of the shaft. A handwheel with bearing housing and sprocket shall be bolted to the side frame approximately 48 inches [1200 mm] above the operating floor. Removable aluminum or stainless steel weathertight covers shall be provided to protect the extension shaft, drive chain, and sprockets. Handwheel and sprocket diameters shall be selected to operate the gate under the maximum specified seating pressure with an effort of not more than 40 lbs [178 N] applied to the rim of the handwheel. Handwheels and sprockets shall be able to withstand a 100 lb [445 N] effort without damage.

2-4.03. Dual Actuators. Dual actuators shall be provided where indicated in the gate schedules. Dual actuators shall be interconnected by a cross shaft complete with required couplings so both stems move at the same rate. Each cross shaft shall be protected by a full length removable aluminum or stainless steel cover attached to the yoke beam or actuator.

2-4.04. Floorstands. Floorstands shall be designed to transfer operating thrusts to the supporting structure. Each floorstand shall be designed to position the crank or the handwheel approximately 36 inches [900 mm] above the frame yoke, supporting surface, or adjacent operating floor or platform.

2-4.05. Wall Brackets. Wall brackets shall be provided to support manual actuators in the locations indicated on the Drawings or indicated in the respective gate schedules. The horizontal face of the bracket shall be predrilled to accept the actuator and the stem without modification. The top of the bracket shall extend sufficiently to bear on and transfer thrust loads to the top of the supporting structure.

2-4.06. Stem Covers. Rising stem manual actuators shall be provided with a stem cover as indicated in the gate schedules. Stem covers shall conform to Section 4.4 of ANSI/AWWA C560.

2-4.06.01. Plastic Covers. Covers shall be constructed of transparent plastic pipe and shall be furnished with an end cap, condensation vents, and a clear mylar position-indicating marking tape. The marking tape shall be adhesive backed and shall be permanently marked and calibrated in feet and inches [meters and millimeters]. The tape shall be applied to the stem cover after the gate has been installed and shall be so positioned that the height of the slide will be indicated by reference to the top of the stem.

2-4.06.02. Steel Covers. Covers shall be constructed from steel pipe and shall be furnished complete with a threaded end cap. All steel components of each cover shall be hot-dip galvanized following fabrication.

The operating mechanism shall be furnished with a digital or dial type mechanical position indicator. The indicator mechanism shall be installed inside a weatherproof housing and shall be clearly visible through a transparent, weatherproof window.

2-5. INTELLIGENT ELECTRIC ACTUATORS.

2-5.01. General. Intelligent electric actuators as listed in the valve and gate schedules shall be provided by the valve or gate manufacturer.

Intelligent electric actuators with torque output requirements of 750 ft-lbs and less for butterfly valves shall be quarter-turn type and shall be Limitorque "QX" or Rotork “IQT Series” without exception.

All other intelligent electric actuators for open-close service shall be multi-turn type and shall be Limitorque "MX” or Rotork "IQ Series" without exception.

Intelligent electric actuators for modulating service shall be Limitorque “MX” or Rotork “IQ Series” without exception.

Intelligent electric actuators produced by other manufacturers are not acceptable.

Intelligent electric actuators shall be capable of non-intrusive configuration without requiring removal of any actuator covers. Configuration of actuator functions shall be by use of a hand held infrared linked device, laptop or PDA with compatible wireless communication capability, and by local control switches and 32-character LCD display mounted on the actuator housing. The display language shall be English.

Each intelligent electric actuator shall be furnished complete with a motor, gearing, handwheel, configurable output relays, torque sensors, lubricants, wiring, and terminals. Each actuator shall be constructed as a self-contained unit with a ductile iron or aluminum alloy housing, of a type as indicated in the valve and gate schedules, and shall be integrally assembled on the applicable valve or gate by the valve or gate manufacturer. Housings shall have two O-ring seals, one on the controls compartment and one on the terminal cover.

Actuators shall be designed to cycle the valve or gate from the fully open to the fully closed position or the reverse in approximately 60 seconds or as indicated in the valve and gate schedules.

Actuator motors may be mounted horizontally adjacent to or vertically above the reduction gearing. All gearing shall be oil or grease lubricated.

2-5.02. Motors. Motors shall be totally enclosed, high torque design made expressly for valve and gate actuator service, capable of operating the valve or gate under full differential pressure for two complete strokes or one complete cycle of travel without overheating. Motors shall be designed in accordance with NEMA standards and shall operate successfully at any voltage within 10 percent above or below rated voltage. Motor bearings shall be permanently lubricated. Motors shall be provided with stall, temperature, loss of phase, and reverse phase protection. Actuators shall be capable of indicating phase loss. Modulating actuator motors shall be continuous duty rated.

2-5.03. Power Gearing. Power gearing shall consist of hardened steel spur or helical gears and alloy bronze or hardened steel worm gear, all suitably lubricated, designed for 100 percent overload, and effectively sealed against entrance of foreign matter. Steel gears shall be hardened to at least 350 Brinell. Planetary or cycloidal gearing, aluminum, mild steel, or nonmetallic gears will not be acceptable. Gearing shall be designed to be self-locking so that actuation of a torque switch or electronic torque protection device by a torque overload condition will not allow the actuator to restart until the torque overload has been eliminated. If a secondary gearbox is required, it shall be designed to withstand the locked rotor torque of the actuator.

2-5.04. Handwheel Mechanism. The handwheel shall not rotate during motor operation. During handwheel operation the motor shall not affect the actuator operation. The actuator shall be responsive to electrical power and control at all times and, when under electrical control, shall instantly disengage the handwheel. The handwheel shall rotate counterclockwise to open the valve. An arrow indicating the opening direction and the word "Open" shall be cast on the handwheel. The force required to operate the handwheel shall not exceed 80 lbs [350 N]. The handwheel shall have a padlockable declutch lever.

2-5.05. Torque Sensing. Torque and thrust loads in both closing and opening dirctions shall be limited by a torque sensing device. Torque settings shall be adjustable and shall be indicated locally. The adjustment shall permit a variation of 40 to 100 percent of rated torque.

2-5.06. Terminal Facilities. Terminal facilities for connection to motor leads, switches, and control and indication signals shall be provided in a readily accessible terminal compartment. The terminal compartment shall have at least two openings for external electrical conduits, one sized at least 3/4 inch [19 mm] and the other at least 1-1/4 inches [31 mm]. Each terminal compartment shall be large enough to allow easy routing and termination of fifteen 12 AWG [4 mm^2] conductors.

2-5.07. Controls Compartment. Each actuator shall be furnished with a sealed compartment containing a reversing controller, multi tap transformer, electronic controls, and monitoring and protection modules. Reversing controllers shall be both mechanically and electrically interlocked and provided with the necessary direct-operated auxiliary contacts for required interlocking and control. The multi tap transformer shall provide power for all internal circuits, and shall provide 120 VAC supply for remote controls as indicated in the valve and gate schedules, or in the schematics on the Drawings.

Actuators for valves listed for modulating service in the valve schedule shall be provided with a control module for position modulating type service. The control module shall be mounted within the controls compartment. The module shall accept a standard 4-20 mA dc analog input signal with a load impedance of not greater than 400 ohms. The control module shall contain adjustments for span, zero, gain, and deadband. Modulating actuators shall have a 4 to 20 mA output signal proportional to valve or gate position.

2-5.08. Local Controls. Each actuator shall have controller devices mounted on the actuator as indicated in the valve and gate schedules.

2-5.09. Remote Indication and Controls. Valve position and actuator status indication shall be provided by four configurable output relay contacts which can be selected to indicate any position of the valve. Relays shall be configurable to the normally open or normally closed states. Relays shall maintain and update position indication during handwheel operation. Contacts shall be rated 5 A, 250 VAC, 30 VDC. Configurable relays shall be selected to signal the following:

Valve Fully Open
Valve Fully Closed
Remote Mode Selected

2-5.10. Remote Electric Actuator Control Station. Each actuator shall be furnished with a remote control station as indicated in the valve schedules and on the Drawings. The control station shall include red and green indicating lights for valve position status, and Local-Off-Remote and Open-Close selector switches for control.

Power for the remote control station shall be provided from its respective actuator unit. The remote control station shall be rated NEMA 4X. Each device mounted on the remote control station shall have an engraved label or escutcheon plate indicating its respective function. The remote control station shall have an engraved tag indicating the tag number or description of the respective actuated valve or gate.

2-6. STANDARD ELECTRIC ACTUATORS. Not used.

2-7. HYDRAULIC CYLINDER ACTUATORS. Not used.

2-8. AIR CYLINDER ACTUATORS. Not used.

2-9. VANE TYPE PNEUMATIC ACTUATORS. Not used.

2-10. AIR-OIL CYLINDER ACTUATORS. Not used.

2-11. PORTABLE ELECTRIC ACTUATORS. Not used.

2-12. PORTABLE HYDRAULIC ACTUATORS. Not used.

2-13. ACTUATOR ACCESSORIES.

2-13.01. Extension Stems. Extension stems and stem guides shall be furnished when indicated in the respective valve schedules, indicated on the Drawings, or otherwise required for proper valve operation. Extension stems shall be of solid steel and shall be not smaller in diameter than the stem of the actuator shaft. Extension stems shall be connected to the actuator with a single Lovejoy "Type D" universal joint with grease-filled protective boot. All stem connections shall be pinned.

At least two stem guides shall be furnished with each extension stem, except for buried valves. Stem guides shall be of cast iron, bronze bushed, and adjustable in two directions. Stem guide spacing shall not exceed 100 times the stem diameter or 10 feet [3 m], whichever is smaller. The top stem guide shall be designed to carry the weight of the extension stem. The extension stem shall be provided with a collar pinned to the stem and bearing against the stem thrust guide.

Extension stems for chemical resistant butterfly valves located in drainage sumps shall be the two-piece type with stainless steel stem, PVC housing, wall support, and collar. Unless otherwise indicated on the Drawings, the length of the stem extension shall be as necessary to position the valve operator 12 inches above the maximum liquid level in the immediate area.

Extension stems for buried valve actuators shall extend to within 6 inches [150 mm] of the ground surface, shall be centered in the valve box using spacers, and shall be equipped with a wrench nut.

Extension stems for buried valve actuators shall be provided with position indicators as specified in the valve schedules.

2-13.02. Position Indicators. Unless otherwise specified, each valve actuator shall be provided with a position indicator to display the position of the plug or disc relative to the body seat opening.

For quarter turn plug, ball, or cone type valves installed in interior locations, the indicating pointer shall be mounted on the outer end of the valve operating shaft extension and shall operate over an indicating scale on the operating mechanism cover. Where the shaft passes through the cover, a suitable stuffing box or other seal shall be provided to prevent the entrance of water.

Each actuator for butterfly valves, except where located in manholes, buried, or submerged, shall have a valve disc position indicator mounted on the end of the valve shaft. A disc position indicator shall also be provided on each operating stand or the actuator mounted thereon.

2-13.02.01. Position Indicators for Buried Actuators. Not used.

2-13.03. Floor Boxes. Openings through concrete slabs provided for key operation of valves shall be provided with a cast iron floor box complete with cover. The floor box shall be of the depth indicated on the Drawings. Where the operating nut is in the slab, the stem shall have a guide to maintain the nut in the center of the box; where the nut is below the slab, the opening in the bottom of the box shall accommodate the operating key.

Each floor box and cover shall be shop coated with manufacturer's standard coating.

2-13.04. Torque Tubes. Torque tube shall utilize pipe rather than solid shafting between the valve input shaft and the output shaft of the valve floorstand operator. An adjustment of 2 inches [50 mm] shall be provided in the torque tube installation. Torque tube shall be coated with the same material as the submerged valve.

2-13.05. Valve Boxes. Each valve buried to a depth of 4 feet [1.2 m] or less shall be provided with a slide type valve box. Valve boxes shall be cast iron, extension sleeve type, suitable for the depth of cover indicated on the Drawings. Only one extension will be allowed with each slide type valve box. Valve boxes shall be at least 5 inches [125 mm] in inside diameter, shall be at least 3/16 inch [4.7 mm] thick, and shall be provided with suitable cast iron bases and covers.

Each valve buried deeper than 4 feet [1.2 m] shall be provided with a valve box consisting of a cast iron cover and a 6 inch [150 mm] Cast Iron Pipe section. The cover shall be Clay & Bailey "No. 2193". The pipe shaft shall extend from the valve to 5 inches [125 mm] inside the valve box cover.

All parts of valve boxes, bases, and covers shall be shop coated with manufacturer's standard coating.

Valve boxes which are to be provided with position indicators shall have top sections and covers designed for proper installation of the position indicator and accessories.

2-14. SHOP PAINTING. All ferrous metal surfaces, except bearing and finished surfaces and stainless steel components of valve actuators and accessories, shall be shop painted for corrosion protection. The valve manufacturer's standard coating will be acceptable, provided it is functionally equivalent to the specified coating and is compatible with the specified field painting.

The following surfaces shall be painted:

Polished or Machined Surfaces	Rust-preventive compound.
Other Surfaces	Epoxy.
Actuators and Accessories	Universal primer.

PART 3 - EXECUTION

3-1. INSTALLATION. Actuators will be installed on the valves in accordance with the Valve Installation section and on gates in accordance with the Gate Installation section.

End of Section

SECTION 15183

REFRIGERANT PIPING

PART 1 - GENERAL

1.01 SUMMARY

A. This Section includes refrigerant piping used for air-conditioning applications.

1.02 PERFORMANCE REQUIREMENTS

A. Line Test Pressure for Refrigerant R-410A:

1. Suction Lines for Air-Conditioning Applications: Per manufacturer's requirements.

2. Hot-Gas and Liquid Lines: Per manufacturer's requirements.

1.03 SUBMITTALS

A. Product Data: For each type of valve and refrigerant piping specialty indicated. Include pressure drop based on manufacturer's test data.

B. Shop Drawings: Show layout of refrigerant piping and specialties, including pipe, tube, and fitting sizes, flow capacities, valve arrangements and locations, slopes of horizontal runs, oil traps, double risers, wall and floor penetrations, and equipment connection details. Show interface and spatial relationships between piping and equipment.

1. Refrigerant piping indicated on Drawings is schematic only. Size piping and design actual piping layout, including oil traps, double risers, specialties, and pipe and tube sizes to accommodate, as a minimum, equipment provided, elevation difference between compressor and evaporator, and length of piping to ensure proper operation and compliance with warranties of connected equipment.

C. Field quality-control test reports.

D. Operation and maintenance data.

1.04 QUALITY ASSURANCE

A. Comply with ASHRAE 15, "Safety Code for Refrigeration Systems."

B. Comply with ASME B31.5, "Refrigeration Piping and Heat Transfer Components."

1.05 PRODUCT STORAGE AND HANDLING

A. Store piping in a clean and protected area with end caps in place to ensure that piping interior and exterior are clean when installed.

1.06 TRAINING

A. No training is required.

1.07 OPERATION AND MAINTENANCE

A. Provide O&M data sheets per Division 1 specifications.

PART 2 - PRODUCTS

2.01 COPPER TUBE AND FITTINGS

A. Copper Tube: Type ACR.

B. Wrought-Copper Fittings: ASME B16.22.

C. Wrought-Copper Unions: ASME B16.22.

D. Solder Filler Metals: ASTM B 32. Use brazing only to join copper socket fittings on copper pipe.

E. Brazing Filler Metals: AWS A5.8.

F. Flexible Connectors:

1. Body: Tin-bronze bellows with woven, flexible, tinned-bronze-wire-reinforced protective jacket.
2. End Connections: Socket ends.
3. Offset Performance: Capable of minimum 3/4-inch misalignment in minimum 7-inch- long assembly.
4. Pressure Rating: Per manufacturer's requirements.
5. Maximum Operating Temperature: Per manufacturer's requirements.

2.02 VALVES AND SPECIALTIES

A. Moisture/Liquid Indicators:

1. Body: Forged brass.
2. Window: Replaceable, clear, fused glass window with indicating element protected by filter screen.
3. Indicator: Color coded to show moisture content in ppm.
4. Minimum Moisture Indicator Sensitivity: Indicate moisture above 60 ppm.
5. End Connections: Brazed.

6. Working Pressure Rating: Per manufacturers requirements.
7. Maximum Operating Temperature: Per manufacturers requirements.

B. Permanent Filter Dryers: Comply with ARI 730.

1. Body and Cover: Painted-steel shell.
2. Filter Media: 10 micron, pleated with integral end rings; stainless-steel support.
3. Desiccant Media: Activated alumina.
4. Designed for reverse flow (for heat-pump applications).
5. End Connections: Brazed.
6. Access Ports: NPS 1/4 connections at entering and leaving sides for pressure differential measurement.
7. Maximum Pressure Loss: 2 psig.
8. Rated Flow: As required

9. Working Pressure Rating: Per manufacturers requirements.
10. Maximum Operating Temperature: Per manufacturers requirements.

2.03 REFRIGERANTS

A. Available Manufacturers: Subject to compliance with requirements, manufacturers offering products that may be incorporated into the Work include, but are not limited to, the following:

1. Atofina Chemicals, Inc.
2. DuPont Company; Fluorochemicals Div.
3. Honeywell, Inc.; Genetron Refrigerants.
4. INEOS Fluor Americas LLC.

PART 3 - EXECUTION

3.01 PIPING APPLICATIONS

A. Suction Lines NPS 1-1/2 and Smaller for Conventional Air-Conditioning Applications: Copper, Type ACR, annealed-temper tubing and wrought-copper fittings with brazed joints.

3.02 VALVE AND SPECIALTY APPLICATIONS

A. Install moisture/liquid indicators in liquid line at the inlet of the thermostatic expansion valve or at the inlet of the evaporator coil capillary tube.

B. Install filter dryers in liquid line between compressor and thermostatic expansion valve.

C. Liquid line filter dryer shall be replaced with a new filter dryer any time the refrigerant system has been opened to the atmosphere, through the end of the warranty period, as specified, submitted and approved. Factory installed filter dryer may be left in place or removed, at Contractor's option, unless the factory installed filter dryer shows a difference in temperature across it one degree F or greater.

3.03 PIPING INSTALLATION

A. Drawing plans, schematics, and diagrams indicate general location and arrangement of piping systems; indicated locations and arrangements were used to size pipe and calculate friction loss, expansion, pump sizing, and other design considerations. Install piping as indicated unless deviations to layout are approved on Shop Drawings. Comply with manufacturer's written instructions if other than noted.

B. Install refrigerant piping according to ASHRAE 15.

C. Install piping in concealed locations unless otherwise indicated and except in equipment rooms and service areas.

D. Install piping indicated to be exposed and piping in equipment rooms and service areas at right angles or parallel to building walls. Diagonal runs are prohibited unless specifically indicated otherwise.

E. Install piping above accessible ceilings to allow sufficient space for ceiling panel removal.

F. Install piping adjacent to machines to allow service and maintenance.

G. Install piping free of sags and bends.

H. Install fittings for changes in direction and branch connections.

I. Select system components with pressure rating equal to or greater than system operating pressure.

J. Install piping as short and direct as possible, with a minimum number of joints, elbows, and fittings.

K. Arrange piping to allow inspection and service of refrigeration equipment. Install valves and specialties in accessible locations to allow for service and inspection. Install access doors or panels as specified in Division 8 Section "Access Doors and Frames" if valves or equipment requiring maintenance is concealed behind finished surfaces.

L. Install refrigerant piping in rigid or flexible conduit in locations where exposed to mechanical injury.

M. Slope refrigerant piping as follows:
   1. Install horizontal suction lines with a uniform slope downward to compressor.
   2. Install traps and double risers to entrain oil in vertical runs.
   3. Liquid lines may be installed level.

N. When brazing, remove solenoid-valve coils and sight glasses; also remove valve stems, seats, and packing, and accessible internal parts of refrigerant specialties. Do not apply heat near expansion-valve bulb.

O. Install pipe sleeves at penetrations in exterior walls and floor assemblies.

P. Seal penetrations through fire and smoke barriers according to Division 7 Section "Through-Penetration Firestop Systems."

Q. Install piping with adequate clearance between pipe and adjacent walls and hangers or between pipes for insulation installation.

R. Install sleeves through floors, walls, or ceilings, sized to permit installation of full-thickness insulation.

S. Seal pipe penetrations through exterior walls according to Division 7 Section "Joint Sealants" for materials and methods.

3.04 PIPE JOINT CONSTRUCTION

A. Brazed Joints: Construct joints according to AWS's "Brazing Handbook," Chapter "Pipe and Tube."

1. Use Type BcuP, copper-phosphorus alloy for joining copper socket fittings with copper pipe.
2. Use Type BAg, cadmium-free silver alloy for joining copper with bronze or steel.

3.05 HANGERS AND SUPPORTS

A. Hanger, support, and anchor products are specified in Division 15 Section "Hangers and Supports."

B. Install the following pipe attachments:

1. Adjustable steel clevis hangers for individual horizontal runs less than 20 feet long.
2. Spring hangers to support vertical runs.
3. Copper-clad hangers and supports for hangers and supports in direct contact with copper pipe.

C. Install hangers for copper tubing with the following maximum spacing and minimum rod sizes:

1. NPS 1/2: Maximum span, 60 inches; minimum rod size, 1/4 inch.
2. NPS 5/8: Maximum span, 60 inches; minimum rod size, 1/4 inch.
3. NPS 1: Maximum span, 72 inches; minimum rod size, 1/4 inch.

3.06 FIELD QUALITY CONTROL

A. Tests and Inspections:

1. Comply with ASME B31.5, Chapter VI.
2. Test refrigerant piping and specialties. Isolate compressor, condenser, evaporator, and safety devices from test pressure if they are not rated above the test pressure.
3. Test high- and low-pressure side piping of each system separately at not less than the pressures indicated in Part 1 "Performance Requirements" Article.

    a. Fill system with nitrogen to the required test pressure.
    b. System shall maintain test pressure at the manifold gage throughout duration of test.
    c. Test joints and fittings with electronic leak detector or by brushing a small amount of soap and glycerin solution over joints.

d. Remake leaking joints using new materials, and retest until satisfactory results are achieved.

3.07 SYSTEM CHARGING

A. Charge system using the following procedures:
   1. Follow manufacturer’s requirements. Document for Engineer and Commissioning Agent to review.

3.08 ADJUSTING

A. Adjust according to manufacturer's written instructions, including but not limited to the following. Document adjustments in accordance with Division 15 section “Commissioning”.

B. Adjust thermostatic expansion valve to obtain proper evaporator superheat.

C. Adjust high- and low-pressure switch settings to avoid short cycling in response to fluctuating suction pressure.

D. Adjust set-point temperature of air-conditioning controllers to the system design temperature.

E. Perform the following adjustments before operating the refrigeration system, according to manufacturer's written instructions:
   1. Verify that compressor oil level is correct.
   2. Open compressor suction and discharge valves.
   3. Open refrigerant valves except bypass valves that are used for other purposes.

END OF SECTION 15183

Section 15250

MECHANICAL INSULATION

PART 1 - GENERAL

1-1. SCOPE. This section covers the furnishing and installation of insulation, jackets, and accessories for the following mechanical systems:

- piping

Building insulation materials are specified in other sections. Insulation for mechanical equipment which is to be applied at the factory prior to shipment is specified in the individual equipment sections.

Electrical heat tracing for piping shall be as specified in the Electrical section.

1-2. GENERAL. Materials furnished and installed under this section shall be in full conformity with the Drawings, Specifications, engineering data, instructions, and recommendations of the equipment manufacturer unless exceptions are noted by Engineer.

1-2.01. Coordination. Contractor shall be responsible for coordinating the installation of insulation with the installation of the items or systems to be insulated. Each item or system shall be tested and accepted by Engineer before installation of the insulation materials.

Contractor shall verify that each component of the insulation systems is compatible with all other parts of the system; that all insulation materials are appropriate for the intended applications; and that all necessary devices and accessories have been provided.

All insulation of the same class shall be the product of a single manufacturer; however, all the insulation types need not be the products of one manufacturer.

1-2.02. General Equipment Stipulations. The General Equipment Stipulations shall apply to all equipment furnished under this section. If requirements in this specification differ from those in the General Equipment Stipulations, the requirements specified herein shall take precedence.

1-2.03. Governing Standards. Except as modified or supplemented herein, all work covered by this section shall be performed in accordance with all applicable municipal codes and ordinances, laws, and regulations. In case of a conflict between this section and any state law or local ordinance, the latter shall govern.

All work shall comply with UL, NFPA, and ASTM safety requirements.

1-2.04. Metal Thickness. Metal thickness and gages specified herein are minimum requirements. Gages refer to US Standard gage.

1-2.05. Surface Burning Characteristics. Insulation, jackets, tapes, and adhesives to be used indoors shall have a composite flame spread rating not to exceed 25 and a composite smoke developed rating of 50 when tested by UL 723, NFPA 255, or ASTM E84. All testing shall be done on materials of the same densities and installed thicknesses as the materials being installed. Insulation materials which have been treated with a flame retardant additive to meet the required flame spread and smoke developed ratings are not acceptable.

1-2.06. Painting and Identification. Field painting and identification shall be as specified in the Protective Coatings section.

Piping systems with electrical heat tracing shall have warning labels attach to the outside of the pipe thermal insulation weather barrier to indicate the presence of electric heat tracing. Labels shall be located every 10 feet [3 m] of pipe, alternating on either side. The labels shall be black on yellow, weatherproof, mylar, with pressure sensitive adhesive and at least 2 inches [50 mm] by 6 inches [150 mm] minimum.

1-3. SUBMITTALS.

1-3.01. Drawings and Data. A complete list of materials and catalog cuts, together with detailed specifications, materials performance data, installation instructions, parts, devices, and accessories furnished, shall be submitted in accordance with the Submittals Procedures section. Information shall include certified test results to show compliance with UL, NFPA, and ASTM safety requirements.

Product data for adhesives shall include VOC content.

1-4. QUALITY ASSURANCE.

1-4.01. Manufacturer Experience. A manufacturer shall have furnished material of the type specified which has been in successful operation for not less than the past 5 years.

1-5. DELIVERY, STORAGE, AND HANDLING. Shipping shall be in accordance with the Product Delivery Requirements section. Handling and storage shall be in accordance with the Product Storage and Handling Requirements section.

PART 2 - PRODUCTS

2-1. ACCEPTABLE MANUFACTURERS. Acceptable manufacturers shall be as listed in the respective product description paragraphs.

2-2. MATERIALS. Insulation, vapor retarders, and field applied jackets shall be installed to cover piping, ductwork, equipment, fittings, and appurtenances as indicated in the Insulation Schedule.

2-2.01. Pipe Insulation.

2-2.01.01. Type PMF1 Insulation. Type PMF1 mineral fiber pipe insulation shall be Johns Manville "Micro-Lok", Knauf "Pipe Insulation" or Owens-Corning.

Type PMF1 pipe insulation shall be a one-piece molded glass fiber material with all-purpose jacket. The all-purpose jacket shall be factory-applied, fiberglass reinforced vapor barrier type, with white kraft bonded to aluminum foil and self sealing adhesive lap. The insulation shall be suitable for a temperature range of 0°F to 850°F [-18°C to 454°C], shall have a maximum thermal conductivity (k) of 0.24 Btu in/hr ft^2 °F at 75°F [0.035 W/m °C at 24°C], and shall conform to ASTM C547.

2-2.01.02. Type PMW1 Insulation. Not used.

2-2.02. Duct Insulation. Not used.

2-2.03. Equipment Insulation. Not used.

2-3. ACCESSORIES.

2-3.01. PVC Insulation Jackets. PVC insulation jackets for piping systems shall be furnished and installed as specified herein and indicated on the Drawings.

All fittings in piping systems insulated with mineral fiber shall be jacketed with a polyvinyl chloride (PVC) jacketing material. Piping systems where indicated to have PVC jackets shall be jacketed with the same PVC jacketing material. Jackets for fittings shall be one piece, factory molded to the contour of the fitting. The PVC jacket and fitting covers shall have a minimum thickness of 0.020 inches [0.51 mm] when installed indoors and 0.030 inches [0.76 mm] when installed outdoors. PVC jacketing shall be Johns Manville "Zeston 2000 Series".

2-3.02. Aluminum Insulation Jackets. Aluminum insulation jackets for insulated piping systems shall be furnished and installed as indicated in the insulation schedule herein and where indicated on the Drawings. Aluminum jackets shall be manufactured from alloys 3003 and 3105alclad conforming with ASTM B209.

The aluminum jacket shall have a nominal thickness of 0.016 in. [0.41 mm]0.020 in. [0.51 mm]0.024 in. [0.61 mm]0.032 in. [0.81 mm], with an embossed finish.

Fittings in insulated piping systems and equipment where indicated in the insulation schedule shall be provided with aluminum jackets of the same aluminum jacketing material as the piping systems. The jacket shall have a factory-applied moisture retarder of at least 3 mils [76 µm] permanently bonded to the interior surface and extending the full width of the jacket. The retarder shall consist of Polysurlyn or polyethylene film and kraft paper.

PART 3 - EXECUTION

3-1. INSTALLATION.

3-1.01. General. Contractor shall install all insulation materials as specified herein for the piping systems, ductwork, and equipment that are not factory insulated. Insulation materials shall be installed in accordance with the manufacturer's written instructions and recommendations. Surfaces to be insulated shall be cleaned and dried. All work shall be performed within the temperature ranges recommended by the insulation product manufacturer. Insulation shall be kept clean and dry and shall remain in the factory container until it is installed. Packages or factory containers shall bear the manufacturer's stamp or label with the name of the manufacturer and description of materials.

Seams of exposed insulation and jackets shall be in the least visible location.

All adhesives used on the interior of the building defined as inside the weatherproofing system shall have a VOC content not greater than 80 g/L.

3-1.02. Piping Insulation.

3-1.02.01. Type PMF1 Insulation. Pipe insulation, vapor retarders, and field applied jackets shall be installed to cover system piping, fittings, and appurtenances. Insulation shall be full factory unit lengths using a single cut piece to complete the run. Abutting cut pieces or scraps shall not be used. End joints and longitudinal seams shall be tightly butted. Insulation for fittings shall be of the same thickness and conductivity as the adjoining pipe insulation.

Insulated piping conveying fluids at lower than ambient temperatures shall be jacketed with a continuous vapor barrier. The insulation shall be continuous through hangers and penetrations, except at firewall penetrations, and shall be sealed with vapor barrier coating. The vapor barrier coating shall be applied at intervals not exceeding 15 feet [4.6 m] for straight runs and not more than 6 inches [150 mm] from fittings. Fibrous insulation laps and butt strips that are

not self-sealing shall be secured with adhesive and stapled. Staples and seams shall be coated with vapor barrier material.

On piping 2 inches [50 mm] and larger where the insulation is continuous through the hanger, an insert shall be installed between the support shield and piping. The insert shall be of the same thickness and contour as the adjacent insulation and installed to maintain a continuous vapor barrier through the support. The insert shall be constructed of wood or heavy density insulating material suitable for the system operating temperatures.

3-1.02.02. Type PMW1 Insulation. Not used.

3-1.02.03. Type PFC1 Insulation. Not used.

3-1.03. Duct Insulation. Not used.

3-1.04. Equipment Insulation. Not used.

3-1.05. PVC Jacketing. PVC jacketing for piping systems shall be installed as specified herein and indicated on the Drawings. End joints and longitudinal seams on piping systems conveying fluids at lower than ambient temperatures shall be vapor-sealed, and covered with vapor-barrier tape to ensure a continuous vapor seal. Fittings shall be insulated with glass fiber material.

3-1.06. Aluminum Jacketing. Aluminum jacketing for piping systems shall be installed as specified herein and indicated on the Drawings. Jacketing shall be held in place with stainless steel securing bands uniformly spaced at not more than 18 inches [457 mm] to produce tight joints without "bulging". The jacket shall overlap at least 2 inches [51 mm] at longitudinal and circumferential joints. Joints shall be overlapped and sealed with caulk to prevent moisture penetration, and longitudinal joints shall be placed to shed water. Exposed ends of pipe insulation shall be provided with covers constructed of the same material as the jacketing.

Elbows shall be jacketed with spirally wrapped aluminum strips or individual mitered segments or gores cut to fit the insulation.

3-2. INSULATION SCHEDULE.

INSULATION SCHEDULE				
Service	Size Inches [mm]	Mechanical Insulation		Notes
		Type	Thickness Inches [mm]	
PIPING - OUTDOOR (EXPOSED)				
Piping with Heat Tracing	All	PMF1	1-1/2 [40]	(1)
Mechanical Insulation Types:	FC - Flexible Cellular MF - Mineral Fiber MW - Mineral Wool			

Notes:

(1) Aluminum jacket.

(2) PVC jackets shall be provided on exposed portions of insulated piping located less than 8 feet [2.4 m] above finished floor. On all other portions of the insulated piping system PVC jackets shall be provided only for fittings.

(3) Insulation shall be provided for portions of the piping system which pass through space above finished ceilings or is exposed above equipment, electrical panels, or cabinets.

(4) Insulation shall be provided for exposed portions of the piping system located less than 8 feet [2.4 m] above the finished floor or grade.

(5) Insulation shall be provided for outside air plenums and ducts that are located upstream of the heating coil or pass through unheated spaces after the heating coil, unless indicated to be internally lined.

(6) Insulation shall be provided for outside air plenums and ducts, air conditioning supply and return ducts, and dehumidifier reactivation air discharge ducts, unless indicated to be internally lined.

(7) Insulation thickness shall be sufficient to provide a cold face temperature not to exceed 150°F [66°C].

(8) The underside of all roof drains shall be insulated to a 1 foot [300 mm] radius from the center of the drain. All roof drain piping within 4 feet [1.2 m] of the drain shall be insulated.

(9) Includes 8 feet [2.4 m] of the cold water inlet piping to the water heater storage tank.

Unless otherwise indicated in the insulation schedule, all mechanical piping, ductwork, equipment, and accessories with an operating temperature in excess of 140°F [60°C] and below 60°F [15°C] shall be insulated.

End of Section

SECTION 15410

COMMON WORK RESULTS FOR PLUMBING

PART 1 - GENERAL

1.01 SCOPE OF WORK

A. The work covered by this section of the specifications consists of furnishing all plant, labor, equipment, appliances, and materials, performing all operations, and paying all costs in connection with the Electrical installation in strict accordance with these specifications and the applicable drawings and subject to the terms and conditions of the Contract. The drawings, specifications, General Conditions and Supplementary General Conditions shall be considered as mutually explanatory, and any work required by one, but not the others, shall be performed as though required by all.

B. The scope of work shall include the following general listings, in addition to which this Contractor shall furnish and install all pipe, fittings, valves, hangers, supports, sleeves, inserts, traps, and such other items and appurtenances as may be required for a complete and operating system of plumbing:
1. System of sanitary waste and vent piping;
2. System of water piping, cold, and hot;
3. Fixtures and water heaters;

1.02 QUALITY ASSURANCE

A. Standards: Comply with standards specified in this section as listed in SECTION 01095. Work shall conform with latest edition of the State Plumbing Code, the Uniform Plumbing Code and with all applicable local codes.

B. Qualifications of Manufacturer: Products used in the work of this Section shall be produced by manufacturers regularly engaged in manufacture of similar items and with a history of successful production acceptable to the Owner

C. Qualifications of Installers: Use adequate numbers of skilled workmen who are thoroughly trained and experienced in the necessary crafts and who are completely familiar with the specified requirements and the methods needed for proper performance of the Work of this Section.

1.03 SUBMITTALS

A. General: Comply with provisions of SECTION 01300.

B. Manufacturer's Data: As soon as possible after award of the contract, submit:
1. Complete materials list of all items proposed to be furnished and installed under this Section.
2. Manufacturer's specifications and other data required to demonstrate compliance with the specified requirements.
3. Manufacturer's recommended installation procedures, when approved by the Architect, will become the basis for inspecting and accepting or rejecting actual installation procedures used on the Work.

1.04 PRODUCT HANDLING

A. Protection: Use all means necessary to protect materials of this Section before, during and after installation and to protect installed work and materials of all other trades.

B. Replacements: In the event of damage, immediately make all repairs and replacements necessary to the approval of the Architect and at no additional cost to the Owner.

C. Delivery and Storage: Deliver all materials to the job site in their original unopened containers with all labels intact and legible at time of use. Store in strict accordance with the manufacturer's recommendations as approved by the Architect.

1.05 TRAINING

A. No training is required.

1.06 OPERATION AND MAINTENANCE

A. Provide O&M data sheets per Division 1 Specifications.

PART 2 - PRODUCTS

2.01 GENERAL PIPING REQUIREMENTS

A. This contractor shall furnish all labor and materials required for the complete installation and erection of the various piping systems as hereinafter specified, adhering to the general routing and methods of distribution shown on the drawings. All piping shall be installed in the most direct, neat, and workmanlike manner, employing only mechanics who are skilled in each respective trade.

B. Exposed lines shall be run parallel with, or perpendicular to, building lines and wherever possible shall be grouped together for easier service and identification. Sanitary, waste, and similar lines which require a definite grade of drainage, shall be given precedence in routing over all other lines. Whenever possible, horizontal and vertical runs shall be held as close as possible to the walls, ceilings, struts, members, etc., so as to occupy the minimum space consistent with the proper requirements for insulation, expansion, removal of pipe and access to valves, dampers, etc. All concealed work shall finish off within the limits permitted by the vertical or horizontal chases. All lines shall be graded to permit complete drainage of the piping systems or equipment. This Contractor shall take note of the Architectural and Structural features of the building and shall arrange for the concealment of all piping in finished areas of the building.

C. Valves required for control of isolation of any part of the system shall be located in an accessible position or made accessible through removable panels, etc., and where several valves are related shall arrange with the Contractor for proper location of all access panels required subject to the approval of the Architect. Access panels and doors shall be provided by General Contractor where required. Valves shall be identified with engraved plastic identification plates mounted on ceiling.

D. Unions or flanges shall be used at connections to all equipment to facilitate dismantling and elsewhere as required in the erection of the pipe or installation of valves.

E. Particular care shall be exercised to avoid leaving tool marks where connections are exposed in toilet rooms and other conspicuous places.

F. All sanitary, soil, waste, and vent piping, and water piping shall be securely clamped to, and suspended from, the structural members of the building. Hangers for horizontal piping shall be provided for each interval of not over ten (10') feet for pipes and one and one-half (1-1/2") inches and larger, and eight (8') feet for pipe one and one-quarter (1-1/4") inches and smaller, and in the case of soil or waste pipe, one hanger at each joints. Hangers shall be secured to approved insert or beam clamps as dictated by the type of construction employed. Vertical lines shall have base support with hangers at each floor.

G. Approved expansion members, anchors, and flexible connections shall be provided as required to control the expansion and contraction of pipe and to prevent undue stress at joints, etc.,

2.02 SYSTEM OF SANITARY, WASTE, AND VENT PIPING

A. This system shall consist of all sanitary, waste, and vent piping from each and every fixture furnished, installed, or connected under this contract.

B. Under this heading, all pipe which occurs under the floor shall be bell and spigot, standard weight PVC pipe. Waste and vent piping within the building shall be cast iron pipe and fittings. Verify with local authorities if PVC is acceptable.

C. Horizontal offsets in all sanitary and waste pipe shall be accomplished with one-sixteenth (1/16), one-eighth (1/8), or one-sixth (1/6) bends, with preference given in the order named. Horizontal intersections shall be accomplished with forty-five (45) degree or sixty (60) degree "Y" branches, or combination "Y" and eighth bends, with preference given to the order named. Sanitary tees of crosses may be used on vertical lines for fixture connections. Intersections between vertical and horizontal lines shall be the same as for horizontal lines except that long sweep, quarter bends will be permitted.

E. Horizontal runs of all sanitary and waster and vent lines shall have an even grade of at least one-eighth (1/8") inch per foot without sag or pockets, unless otherwise shown.

F. Every fixture and/or trap shall be vented as shown and/or required by Code. Vents shall be connected as close as possible to the trap, and on the sewer side and combined a minimum of one foot (1') above the fixture overflow before connecting to stack.

G. Provide and set cleanouts at the end of all branches, at the base of all vertical soil and waste lines, on all exposed or accessible traps, at intervals of not over eighty feet (100') on straight horizontal runs and at all points of the system where so indicated or called for, or necessary to remove obstructions, on all sanitary and drainage lines. Cleanouts in pipe below the floor shall be brought to floor level unless otherwise shown.

H. All fixtures and floor drains shall be separately trapped close to the fixtures and in such manner that the discharge from any one fixture does not pass through more than one (1) trap before reaching the drains.

2.03 SYSTEM OF HOT AND COLD WATER PIPING

A. This system shall consist of all hot and cold water piping from the service to and including distribution and connections to all fixtures, all as shown on drawings and specified herein.

B. Pipe under this heading shall be copper. Hot and cold water piping in walls and above ceiling and in walls subject to freezing shall be insulated. All connections at wall shall be copper.

C. All water piping shall be run overhead in all areas.

D. At the end of the run out to each plumbing fixture group, provide a full sized bellows type pre-charged air chamber and at all low points in the system provide a three-fourth (3/4") inch drain valve.

2.04 PIPE FITTINGS AND VALVES

A. Valves - screwed end, single wedge, non-rising stem, pattern brass trim, ASTM A 62 for one hundred and fifty (150) pounds, Jenkins, Crane, Walworth or approved equal.

B. Unions - Crane, Jenkins, Walworth, or approved equal, malleable iron, one hundred and fifty (150) pounds, ground joint.

C. Steel pipe - ASTM A 120, conforming to ASA B 36.10, dimensional standards. Up to two inches (2") butt welded; two and one-half (2-1/2") inches and over, lap welded. Schedule 40 up to six (6") inches and Schedule 30 for eight (8") inches and over.

2.05 HANGERS AND SUPPORTS

A. Individual hangers shall be adjustable swivel, malleable iron, ring type, and with threaded rod and locknut.

B. Where pipes are grouped in a horizontal run, they shall be supported on trapeze type hangers, constructed from channel and angle sections suspended from steel rods.

C. Where suspension rods or brackets fasten to concrete, suitable inserts shall be set in before concrete is poured.

2.06 PARTITION PLATES AND SLEEVES

A. At all points where pipes pass through walls, partitions, floors, or ceilings, provide galvanized wrought sleeves cut flush with the surface except floor sleeves which shall be extended to a minimum of one (1") inch above floor.

B. Plates in all finished areas shall be one piece polished, chromium plated brass. All others shall be polished brass or painted steel, as directed.

C. Provide and install 6” Sch. 40 sleeves in slab for HVAC refrigerant piping and controls, as directed by the Mechanical Contractor – coordinate.

2.07 CLEANOUTS

A. Cleanouts in floors shall be provided with brass sleeve and recessed brass screw cap with square head.

2.08 TRAPS

A. Unless otherwise specified, traps shall be approved self-cleaning type, of the same material and finish as pipes on which they occur.

2.09 FLOOR DRAIN

A. Floor and shower drains shall be as shown on drawings.

B. All floor drains shall have trap primers with wall mounted access panel to allow access to and maintenance of trap primer and valves in wall.

2.10 FIXTURE INSTALLATION

A. All wall-hung fixtures shall be rigidly supported by approved metal hangers, chairs, etc., and all floor outlet fixtures shall be rigidly secured to the floor by approved brass floor flange, screwed or bolted to the floor.

B. Connections to plumbing fixtures shall be of the minimum sizes listed below:

Fixtures:	Soil or Waste	Vent	Trap	Cold Water	Hot Water
Lavatories	1-1/4"	1-1/4"	1-1/4"	1/2"	1/2"
Sinks	1-1/2"	1-1/4"	1-1/4"	1/2"	1/2"

These sizes are for short branches only; main lines are to be installed of the sizes indicated on the drawings.

C. Each fixture supply shall have a shut-off valve at the fixture. These valves are to be adjusted so as to prevent excessive pressure.

2.11 FIXTURES

A. The fixtures included on the plumbing schedule shall be furnished and installed complete by the Plumbing Contractor, together with all necessary hangers, bolts, anchors, and brackets. All fixtures shall be properly connected to waste, vent, and supplies, and shall be installed in a rigid and substantial manner without damage to any adjoining work or finish. All exposed piping and other metal parts shall be chromium plated and polished. Personal showers shall have vacuum breaks.

2.12 INSULATION

A. Hot and cold water piping mains and branches in equipment room, unheated areas, attics, above suspended ceilings, and behind furrings shall be insulated with Owens-Corning low pressure fiberglass pipe covering installed in full accordance with manufacturer's recommendations. Insulation shall be 1" thick.

2.13 WATER HEATERS

A. Water Heaters for Domestic hot water shall be as scheduled. Provide instantaneous type electric water heater as specified. Hot and cold water piping to be connected with unions. .

2.14 STERILIZATION

A. The entire domestic hot and cold water piping systems shall be thoroughly sterilized with a solution containing not less than 150 parts per million available chlorine. The chlorinating material shall be a sodium hypochlorite solution or chlorine. The lines shall be filled slowly and the sterilizing agent shall be applied at a rate of 50 ppm of chlorine as determined by residual chlorine tests at the end of the lines. The valves shall be opened and closed while the system is being chlorinated. After the sterilizing agent has been applied and left standing for 24 hours, tests for residual chlorine at ends of lines shall be done. After standing for 24 hours, if the tests show at least 25 ppm of residual chlorine, the system shall be flushed until the residual chemical content is not greater than 0.2 ppm.

B. Samples of the water shall be submitted to the State Department of Health for bacteriological testing after sterilization. Submit a copy of the report to the Architect.

2.15 TESTS

The Contractor shall notify the Local Authority and the Administrative Authority having jurisdiction over plumbing work three working days before the tests are to be made. Concealed work shall remain uncovered until required tests have been completed, but if necessary, tests on portions of the work may be made and those portions of the work may be concealed after being proved satisfactory. All tests shall be made in the presence of representatives of the Local Authority. Repairs of defects that are discovered as a result of inspections or tests shall be made with new materials. Caulking of screwed joints, cracks, or holes will not be accepted. Tests shall be repeated after defects have been eliminated.

A. Drainage System Tests: A water test shall be applied to all parts of the drainage system before the pipes are concealed or fixtures set in place. The test may be applied in sections. All openings of each system to be tested shall be tightly closed except the highest opening above the roof, and the entire system shall be filled with water up to the overflow point of the highest opening.

All parts of the system shall be subject to not less than 10 feet of hydra-static head except the uppermost 10 feet of the piping directly below the openings. The water shall remain in the system for not less than one hour after which time no leaks at any joint or lowering of the water level at the overflow shall be visible.

B. Water Supply System Tests: A water pressure test shall be applied to all parts of the water supply systems for 24 hours before the piping is concealed or before the fixtures are connected. A hydra-static pressure of not less than 100 pounds per square inch shall be applied to the system, and there shall be no leaks at any point in the system at this pressure.

2.16 ACCESS DOORS

A. At locations where access doors are required in gypsum board walls or ceilings to reach valves, trap primers or other access points install a 1 hr. fire-rated access door where required. These doors shall be furnished and installed by the Contractor that requires access to his components. Coordinate with architect for exact location of access doors.

PART 3 - EXECUTION

3.01 PREPARATION

A. Ream pipe and tube ends. Remove burrs. Bevel plain end ferrous pipe.

B. Remove scale and dirt, on inside and outside piping before assembly.

C. Prepare piping connections to equipment with flanges or unions.

D. Coordinate cutting or forming floor construction to receive drains to required invert elevations.

E. Review millwork shop drawings. Confirm location and size of fixtures and openings before rough-in and installation.

F. Verify adjacent construction is ready to receive rough-in work of this Section.

3.02 INSTALLATION

A. Provide dielectric connections wherever jointing dissimilar metals.

B. Water entrance piping in slab shall be sleeved to 3 feet beyond perimeter of slab, with no joints in water line inside sleeve.

C. Install piping to conserve building space and not interfere with use of space. Group piping whenever practical at common elevations.

D. Install piping to allow for expansion and contraction without stressing pipe, joints, or connected equipment.

E. Provide clearance for installation of insulation and access to valves and fittings.

F. Slope water piping and arrange to drain at low points.

G. Install bell and spigot pipe with bell end upstream.

H. Install specialties in accordance with manufacturer's instructions.

B. Extend cleanouts to finished floor or wall surface. Lubricate threaded cleanout plugs with mixture of graphite and linseed oil. Ensure clearance at cleanout for rodding of drainage system.

C. Install water hammer arrestors complete with accessible isolation valve.

D. Install each fixture with chrome plated rigid or flexible supplies with stop valves, reducers, and escutcheons.

E. Adjust stops or valves for intended water flow rate to fixtures without splashing, noise, or overflow.

F. Install water heaters in accordance with manufacturer's instructions and to NFPA & UL requirements. Coordinate with plumbing piping and related electrical work to achieve operating system.

G. Where required for connections to fixtures, equipment items, etc., employ lengths of red brass pipe with threaded ends of copper to IPS adapters, brass couplings, etc., to the end that there shall be no ferrous pipe in any water piping systems.

H. Provide air chambers on cold water and hot water supplies to plumbing fixtures.

I. Sterilize each unit of completed supply line and distribution system with chlorine before acceptance for domestic operation. Provide written certification to Owner that proper sterilization of domestic system has been completed.

J. Provide expansion loops or offsets at all building expansion joints where straight piping runs exceed 100 feet. Coordinate with General Contractor. It is not possible to indicate all of the offsets and fittings that will be required. The Contractor shall carefully investigate the structural, finish conditions, all existing and proposed conditions affecting the work, and shall take such steps as may be required to meet such conditions. All piping shall be installed close to walls, ceilings and columns (consistent with proper space for covering, removal of pipe, access, and special clearances), so as to occupy the minimum of space, and all offsets, fittings, etc., required shall be provided.

3.03 APPLICATION

A. Use grooved mechanical couplings and fasteners, and dielectric connections only in accessible locations.

B. Install unions downstream of valves and at equipment or apparatus connections.

C. Install brass male adapters each side of valves in copper piped system. Sweat solder adapters to pipe.

D. Install gate valves for shut-off and to isolate equipment, part of systems, or vertical risers.

E. Install butterfly valves for throttling, bypass, or manual flow control services.

END OF SECTION 15410

Section 15495

AUTOMATIC STRAINING EQUIPMENT

PART 1 - GENERAL

1-1. SCOPE. This section covers automatic, in-line, self-cleaning strainers and controls.

1-2. GENERAL. Equipment furnished under this section shall be fabricated and assembled in full conformity with Drawings, Specifications, engineering data, instructions, and recommendations of the equipment manufacturer, unless exceptions are noted by Engineer.

1-2.01. General Equipment Stipulations. The General Equipment Stipulations shall apply to all equipment and materials provided under this section. If requirements in this specification differ from those in the General Equipment Stipulations, the requirements specified herein shall take precedence.

1-2.02. Power Supply. Power supply to the equipment shall be 480V, 3 phase, 60 Hz. The system control panel shall include control power transformers to provide lower voltages for controls and back wash valve operation.

1-2.03. Mechanical Identification. Mechanical identification consisting of equipment number plates and equipment information plates shall conform to the requirements of the Equipment and Valve Identification section and as indicated herein.

1-3. SUBMITTALS.

1-3.01. Drawings and Data. Complete fabrication and assembly drawings, together with detailed specifications and data covering materials, drive unit, parts, devices, and accessories forming a part of the equipment furnished, shall be submitted in accordance with the Submittals section. Device tag numbers indicated on the Drawings shall be referenced on the wiring and schematic diagrams where applicable. The data and specifications for each unit shall include, but shall not be limited to, the following:

Equipment

- Name of manufacturer.
- Type and model.
- Construction materials, thicknesses, and finishes.
- Manufacturer's performance data.
- Overall dimensions and required clearances.
- Net weight and load distribution.
- Wiring diagrams.

Equipment Motors

Name of manufacturer.
Type and model.
Horsepower rating and service factor.
Temperature rise and insulation rating.
Full load rotative speed.
Bearing types and numbers.
Weight.
Overall dimensions.
Full load amperes, efficiency, and power factor.
Locked rotor current.

1-3.02. Operations and Maintenance Data and Manuals. Adequate operation and maintenance information shall be supplied as required in the Submittals section. Operation and maintenance manuals shall be submitted in accordance with the Submittals section. The operation and maintenance manuals shall be in addition to any instructions or parts lists packed with or attached to the equipment when delivered.

1-4. DELIVERY, STORAGE, AND HANDLING. Shipping shall be in accordance with the Product Delivery Requirements section. Handling and storage shall be in accordance with the Product Storage and Handling Requirements section.

1-5. EXTRA MATERIALS Extra materials shall be furnished for the equipment as specified below.

Extra Materials	Quantity
Sets of gaskets and seals per unit	1
Replacement Mesh size US 20	1
Replacement Mesh Size US 50	1

Extra materials shall be packaged in accordance with the Product Delivery Requirements section, with labels indicating the contents of each package. Each label shall indicate manufacturer's name, equipment name, equipment designation, part nomenclature, part number, address of nearest distributor, and current list price. Extra materials shall be delivered to Owner as directed.

Extra materials subject to deterioration such as ferrous metal items and electrical components shall be properly protected by lubricants or desiccants and encapsulated in hermetically sealed plastic wrapping.

PART 2 - PRODUCTS

2-1. SERVICE CONDITIONS. The strainer shall be designed for installation as part of a Plant Non-Potable water system.

2-2. PERFORMANCE AND DESIGN REQUIREMENTS. Performance and design requirements shall be as follows:

Strainer size	6	in
Minimum operating pressure at inlet	30	psig
Maximum operating pressure at inlet	150	psig
Maximum flow	1100	gpm
Maximum clean screen pressure drop	2	psig
Size of screen openings	0.012	in
Maximum backwash motor power	3/4	hp

2-3. ACCEPTABLE MANUFACTURERS. The automatic strainers shall be Hayward "Model 596", or S.P. Kinney "Model A".

2-4. CONSTRUCTION. The automatic strainer shall be installed in the water system piping. The strainer shall be complete with backwash control valve, local control panel, and sensing system for backwash self-cleaning operation.

The strainer shall be motor driven, automatic self-flushing type. The strainer body shall have a bolted cover assembly; blowoff connection with manual valve; plugged drain connection; and air vent connection with manual air vent valve when air can be trapped within the strainer body. Influent and effluent connections shall have ANSI Class 125 flat faced flanges and shall be equipped with pressure gauges.

Design of the strainer body shall be such that all strainer elements may be removed from the unit without disassembly of inlet or outlet piping. Strainer body shall be constructed of cast iron or epoxy coated steel. The backwash device shall be so constructed that no permanent mechanical damage will result from the accidental entry of the large object through the inlet piping.

2-4.01. Screening Elements. Screening elements shall consist of straining media arranged vertically in a one-piece cartridge design. The cartridge shall be constructed of V-shaped profile wire or multi-layer weave-wire with a V-shaped grid for structural strength. The design shall permit the debris to be easily dislodged during a backwash cycle. Strainer media and media retainer shall be constructed of AISI Type 316 stainless steel.

2-4.02. Differential Pressure Switch. An adjustable differential pressure sensing switch shall be connected to the strainer inlet and outlet. The switch shall be used to initiate a backwash cycle and shall be a dual type where also needed to indicate the alarm condition. Pressure gauges with a 4 inch [100 mm] dial shall be provided at the inlet and outlet connections for differential pressure switch adjustment.

2-4.03. Backwash Line. The strainer shall have at least a 1-1/2 inch [38 mm] backwash line leading to the drain located as indicated on the Drawings. An electrically or hydraulically operated full port ball or diaphragm type valve shall be located in the backwash line to control the backwash flow. The backwash line shall be provided with a manual shutoff valve.

2-4.04. Drive Unit. The backwash drive motor shall be totally-enclosed fan cooled, and the operating speed shall not exceed 1750 rpm. A gear reducer shall be provided to drive the backwash shaft. The nominal input horsepower [kW] rating of the gear reducer shall be at least equal to the nameplate horsepower [kW] of the drive motor. The drive unit shall be designed for 24 hour continuous service.

2-4.05. Controls. A factory wired local control panel complete with NEMA Type 4 enclosure shall be provided with the strainer and mounted near the strainer. The local control panel shall include the following:

“Power On” green indicating light.

"Backwash Cycle On" red indicating light.

"Excess Pressure Drop” or “Strainer Fault" amber indicating light.

System mode selector switch to manually initiate the backwash cycle or have the backwash cycle automatically controlled.

Adjustable timer for backwash initiation frequency with a 24 hour period and a minimum setting of 10 minutes

Timer for backwash duration with an adjustable range of 30 seconds to 10 minutes or controls to operate the backwash cycle until the differential pressure across the filter returns to normal with adjustable timer to limit backwash time.

Control power transformer.

Combination circuit breaker type magnetic motor starter.

Terminal blocks.

The control panel shall be prewired, ready for power supply and field item connections. CONTRACTOR shall connect to all field items. Wiring shall be no smaller than 14 AWG.

The control panel shall distribute power to all auxiliary control devices including the backwash valve.

The green light shall indicate that the control circuit is energized and the strainer is ready for operation. The amber light shall indicate that the pressure differential across the strainer is excessive, i.e., more than 4 psi [28 kPa] over the normal operating differential of the strainer or the backwash cycle has exceeded the cleaning cycle time of 10 minutes. The red light shall indicate that the strainer is in the backwash cycle. Plastic nameplates shall be provided beneath each indicating light.

The strainer shall automatically backwash according to a time cycle or whenever the pressure drop across the strainer exceeds the manufacturer's recommended differential pressure over the normal strainer operating differential. The maximum pressure loss should not exceed 7 psi [48 kPa]. The timer shall initially be set to backwash the strainer every two hours, or as needed to meet the water conditions, regardless of differential pressure.

The control panel shall provide isolated contact to the Plant Control System to alarm "Strainer Fault/Excess Pressure Drop" across the strainer.

The Plant Control System will provide remote monitoring of "Power On" and "Backwash Cycle On" in parallel with the local controls provided under this contract. All contacts required for proper interface of the Plant Control System and the strainer controls shall be provided in the strainer control panel.

2-4.06. Electric Motors. Motors furnished with equipment shall meet the following requirements:

a. Shall be totally enclosed type with a continuous moisture drain that excludes insects.

b. Designed and applied in accordance with NEMA, ANSI, IEEE, AFBMA, and NEC for the duty service imposed by the driven equipment, such as frequent starting, intermittent overload, high inertia, mounting configuration, or service environment.

c. Rated for continuous duty at 40°C ambient, unless the application is well recognized for intermittent duty service as a standard industry practice.

d. To ensure long life, motors shall have nameplate horsepower [kW] equal or greater than the maximum load imposed by the driven equipment and shall carry a minimum 1.0 service factor.

e. Designed to operate from an electrical system that may have a maximum of 5 percent voltage distortion according to IEEE 519.

PART 3 - EXECUTION

3-1. INSTALLATION. Equipment installed under this section shall be erected and placed in proper operating condition in full conformity with Drawings, specifications, engineering data, instructions, and recommendations of the equipment manufacturer, unless exceptions are noted by ENGINEER.

3-2. FIELD QUALITY CONTROL.

3-2.01. Installation Check. An installation check by an authorized representative of the manufacturer is not required for equipment specified in this section

End of Section

Section 15499

SEAL WATER STATIONS

PART 1 - GENERAL

1-1. SCOPE. This section covers the furnishing of seal water stations for the application types as stated in the pump specification sections. Seal water stations shall be furnished complete with all fittings, unions, valves, gauges, switches, piping, and other accessories specified herein or otherwise required for proper operation.

1-2. GENERAL. Equipment provided under this section shall be fabricated and assembled in full conformity with drawings, specifications, engineering data, instructions, and recommendations of the equipment manufacturer, unless exceptions are noted by Engineer.

Components of the seal water stations shall be the latest standard products of manufacturers regularly engaged in the production of equipment of this type.

1-2.01. Coordination. When two or more units of the same class of equipment are required they shall be the product of a single manufacturer; however all of the component parts of the system need not be the products of one manufacturer.

1-2.02. General Equipment Stipulations. The General Equipment Stipulations shall apply to all equipment furnished under this section. If requirements in this specification differ from those in the General Equipment Stipulations, the requirements specified herein shall take precedence.

1-2.03. Identification. All seal water stations shall be provided with a number plate with text as follows:

"SEAL WATER STATION – PUMP – [*pump designation*]"

where pump designation refers to the pump tag number as listed in the specifications or shown on the drawings. The location of number plates and the method of fastening shall be acceptable to Engineer. Numerals shall be at least 1 inch high and shall be black baked enamel on anodized aluminum plate.

1-3. SUBMITTALS.

1-3.01. Drawings and Data. Complete specifications, data and catalog cuts or drawings shall be submitted in accordance with the Submittals section. The data and specifications for each item shall include, but shall not be limited to, the following:

Name of manufacturer.
Type and model.
Construction materials, thicknesses, and finishes.
Setpoint adjustment range.
Pressure and temperature ratings.

PART 2 - PRODUCTS

2-1. PERFORMANCE AND DESIGN REQUIREMENTS. Seal water stations shall be designed for the following requirements unless otherwise indicated:

Max design pressure	200 psig
Inlet working pressure	To be determined by Contractor
Outlet working pressure	To be determined by pump supplier
Temperature range	40 to 150 °F
Flow capacity	
Double mechanical seal	0.1 to 1 gpm
Single mechanical seal	3 to 5 gpm
Packing box	3 to 5 gpm
Vertical turbine pump	0.75 gpm per inch of shaft diameter

2-2. MATERIALS.

Pipe	1/2 inch Hard drawn copper tubing, ASTM B88, Type L for line piping with solder joint fittings. 1/4 inch ASTM B43. red brass, seamless, regular weight for instrument piping.
Strainers	Y-pattern type with bronze body, threaded ends, and monel or stainless steel screens (100 mesh for single mechanical seals and packing, and double mechanical seals). The blowoff from each strainer shall be equipped with a shutoff valve. Hoffman ITT “Series 400” or Metraflex “Model BS”.

Pressure Gauges	Liquid filled indicating dial type with 1/4 inch NPT connections, 2-1/2 inch dial, A316 stainless steel Bourdon tube, stainless steel rotary geared movement, stainless steel case, adjustable pointer, and polycarbonate or shatterproof glass window. The pointer shall span not less than 200 degrees nor more than 300 degrees. Indicating units shall be psig. Ashcroft, Duralife “Type 1009”, or Weiss Instruments, Inc.
Pressure Switches	Diaphram actuated type with a weatherproof housing, Teflon coated diaphragm, viton seals, and a stainless steel connection port. Ashcroft, Barksdale, NeoDyn, Mercoid Controls, or S.O.R.
Flow Switches	Vane-style variable area rotameters with scale pointers and adjustable switch contacts. Universal Flow Monitors “Series SN”.
Sight Flow Indicators	Ball or paddlewheel type with threaded end connections.
Orifice Plates	Flow control orifice plates of diameter and type as recommended by the pump manufacturer.
Flexible Connections	Tygon “B-44-4X I.B.” tubing with Tygopure Reusable Fittings.
Ball Valves	Inline, two-piece, end entry, regular port with threaded end connections. Bronze body and trim with reinforced Teflon seats, seals, and washers. As manufactured by Cobraco Industries “Apollo 70-100 Series” or Powell “Fig 4210T”.
Globe Valves	Inline, metal disc, threaded bonnet, rising stem, with threaded end connections. Bronze body and trim. As manufactured by Milwauke “502”, Stockham “B-16”, or Walworth “Fig 3058”. Globe valves for Type A Stations on vertical diffusion vane shall be throttled to 25 percent open to permit some bypass flow around the solenoid valve to maintain lubrication flow around bearings.

Check Valves	Class 125 Horizontal swing, threaded bonnet type, ASTM B62 bronze, threaded end connections, -20 to 212°F temperature limits , Stockham “B-321”, Walworth “Fig 3406”.
Solenoid Valves	Two-position, normally closed, pilot operated with threaded end connections. Solenoid valves shall be 120 volt, 60 Hz, with class F insulation and rated for continuous duty. Bronze body with Buna-N or Teflon trim. As manufactured by ASCO “8210 Series”.
Pressure Regulating Valves	Direct acting, globe type valve with threaded connections and union assembly. Bronze body and cover, stainless steel trim, reinforced neoprene diaphragm, Buna-N disc, and stainless steel trim. As manufactured by Cla-Val “Model 990”, Cash-Acme, or Watts.

2-3. SEAL WATER STATIONS. Schematics of the different types of seal water stations are shown in Figure 1-15499. The following descriptions are for each types of seal water stations specified herein:

External Water Source Type

Type A	Solenoid valve, flow switch
Type B	Solenoid valve, pressure switch
Type C	Solenoid valve downstream of pump seal
Type D	Solenoid valve, simplified station

Re-circulating type

Type E	Re-circulating from pump discharge to pump seal
Type F	Re-circulating from pump seal to pump suction

2-4. ACCESSORIES.

2-4.01. Pressure Gauges. Except as modified or supplemented herein, all gauges shall conform to the requirements of ANSI B40.1. Accuracy shall be ANSI Grade 1A or better.

The range shall be selected so that the normal operating reading is near the midpoint of the scale.

Each gauge shall be provided with a threaded end ball-type shutoff valve.

2-4.02. Pressure Reducing Valves. Each pressure reducing valve shall be designed to provide tight shutoff under conditions of no flow and shall not “hunt” under ordinary flow conditions. Pressure reducing valves shall be selected and sized as recommended by the valve manufacturer. Valve pressure setpoint shall be adjustable to at least 20 percent above and below the reduced pressure setpoint.

2-4.03. Pressure Switches. Switches shall be field adjustable type, with trip point repeatability better than 1 percent of actual pressure. Switches shall have over-range protection to maximum process line pressure. Switch wetted parts shall be compatible with the process fluid.

Switches shall have a fixed deadband and shall be auto-reset type. Switches shall be SPDT, rated at least 10 ampere at 120 volts ac.

Each switch shall be provided with a threaded end, ball-type shutoff valve.

2-4.04. Flow Switches. Switches shall be SPDT with contacts rated at least 10 ampere at 120 volts ac. Switches shall be suitable for a flow of 20 to 100 percent of the required flows specified herein.

PART 3 – EXECUTION

3-1. INSPECTION. All piping and equipment shall be inspected for damage and cleanliness before being installed. All strainer elements shall be removed, cleaned, and reinstalled. Any material damaged or contaminated in handling on the job shall not be used unless it is repaired and re-cleaned to the original requirements by Contractor. Such material shall be segregated from the clean material and shall be inspected and approved by Owner or his representative before its use.

3-2. INSTALLATION. All equipment shall be installed with sufficient clearance for proper operation of any external mechanisms, and with sufficient clearance to dismantle any portion of the station for in-place maintenance. Unions shall be required at all solenoid valves and pressure reducing valves. Installation shall be in accordance with the manufacturers’ recommendations.

End of Section

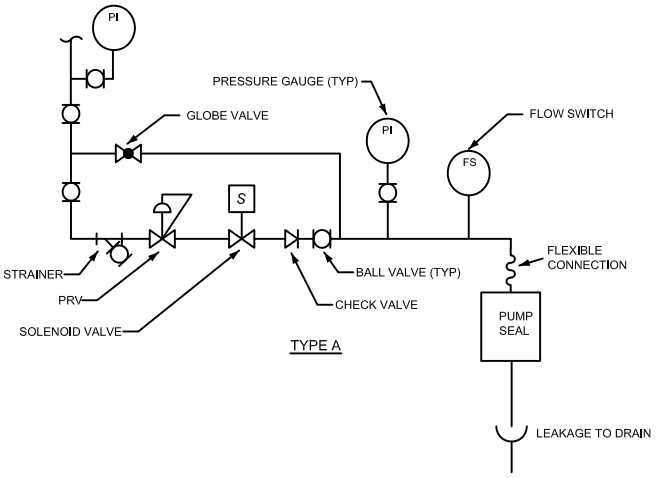

TYPE A

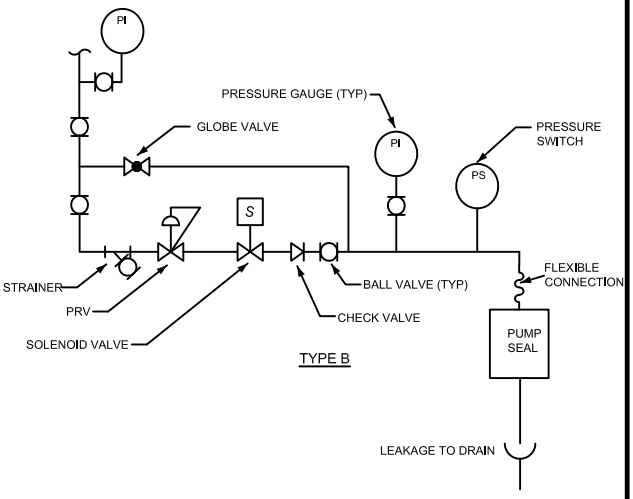

TYPE B

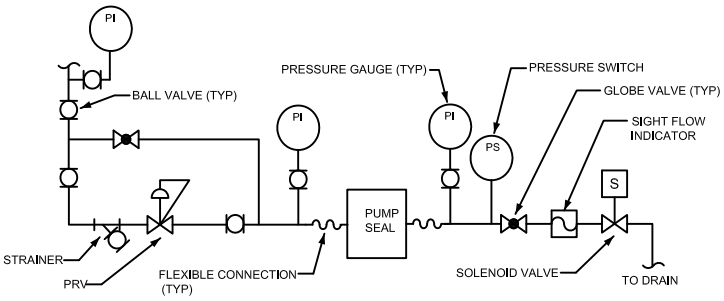

TYPE C

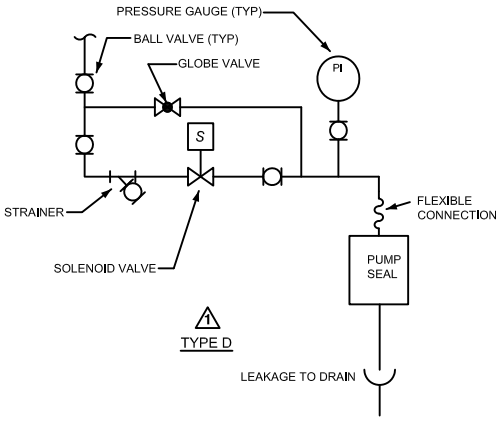

1
TYPE D

EXTERNAL WATER SOURCE TYPE

1 REVISED 9-24-2014 COA REQUEST

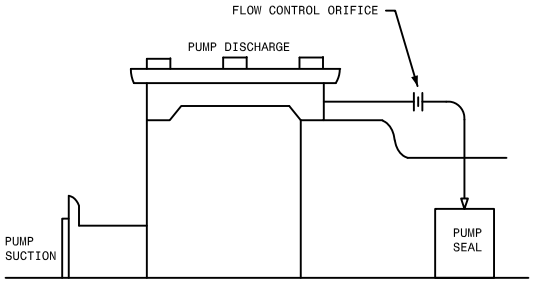

TYPE E

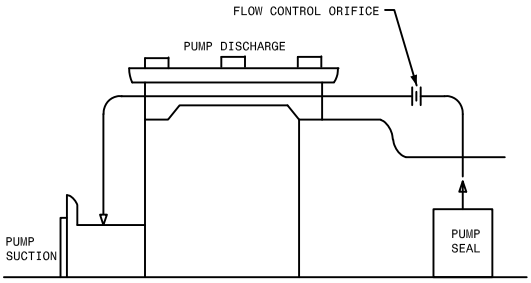

TYPE F

RECIRCULATING TYPE

SEAL WATER STATION ALTERNATIVES

BLACK & VEATCH	SEAL WATER STATIONS	FIG 1-15499

SECTION 15530

AIR HANDLERS

PART 1 - GENERAL

1.01 SUMMARY

A. This Section includes the following:

1. Electric heating and accessories complete with controls.
2. Air filters.
3. Refrigeration components.

1.02 SUBMITTALS

A. Product Data: Include rated capacities, operating characteristics, furnished specialties, and accessories for each of the following:

1. Air handler unit with coil and electric heating element.
2. Thermostat.
3. Air filter.
4. Refrigeration components.

B. Operation and maintenance data.

C. Warranty.

1.03 QUALITY ASSURANCE

A. Electrical Components, Devices, and Accessories: Listed and labeled as defined in NFPA 70, Article 100, by a testing agency acceptable to authorities having jurisdiction, and marked for intended use.

B. ASHRAE Compliance: Applicable requirements in ASHRAE 62.1-2004, Section 5 - "Systems and Equipment" and Section 7 - "Construction and Startup."

C. ASHRAE/IESNA 90.1-2004 Compliance: Applicable requirements in ASHRAE/IESNA 90.1-2004, Section 6 - "Heating, Ventilating, and Air-Conditioning."

D. Comply with NFPA 70.

1.04 WARRANTY

A. Special Warranty: Manufacturer's standard form in which manufacturer agrees to repair or replace the following components of furnaces that fail in materials or workmanship within specified warranty period:

1. Warranty Period, Commencing on Date of Substantial Completion:

    a. Electric heating element: 1 year.
    b. Integrated heating energizing and Blower Control Circuit Board: Five years.
    c. Refrigeration Compressors: 10 years.
    d. Evaporator and Condenser Coils: Five years.
    e. All other components: One year or manufacturer's standard, whichever is longer.

1.05 TRAINING

A. Manufacturer representative shall be present on site at startup.

B. No other training is required.

1.06 OPERATION AND MAINTENANCE

A. Provide O&M data sheets per Division 1 specifications.

PART 2 - PRODUCTS

2.01 AIR HANDLING UNITS

A. Manufacturers: Subject to compliance with requirements, provide products by one of the following (air handling units shall be of the same manufacturer as the matching condensing unit, unless scheduled otherwise):

B. Basis-of-Design Product: Subject to compliance with requirements, provide the product indicated on Drawings or a comparable product by one of the following:
    1. Carrier Corporation; Div. of United Technologies Corp.
    2. Lennox.

C. Cabinet: Steel.

    1. Cabinet interior shall be factory-installed insulation.
    2. Lift-out panels shall expose all items requiring access for maintenance.
    3. Factory paint external cabinets in manufacturer's standard color.
    4. Airstream Surfaces: Surfaces in contact with the airstream shall comply with requirements in ASHRAE 62.1-2010.

D. Fan: Centrifugal, factory balanced, resilient mounted, direct drive.

    1. Fan Motors: Comply with requirements in Division 15 Section "Motors."
    2. Special Motor Features: Single speed, Premium (TM) efficiency, as defined in Division 15 Section "Motors," and with internal thermal protection and permanent lubrication.
    3. Special Motor Features: Multitapped, multispeed with internal thermal protection and permanent lubrication.
    4. Special Motor Features: Electronically controlled motor (ECM) controlled by integrated blower control.

E. Capacities and Characteristics: See Mechanical Schedule Drawing

2.02 THERMOSTATS

A. Solid-State Thermostat: Wall-mounting, programmable, microprocessor-based unit with manual switching from heating to cooling, preferential rate control, seven-day programmability with minimum of four temperature presets per day, and battery backup protection against power failure for program settings.

B. Control Wiring: Unshielded twisted-pair cabling.

1. No. 18 AWG, thermostat control wire.

C. Controls shall comply with requirements in ASHRAE/IESNA 90.1-2004, "Controls."

D. Manufacturers:
1. Honeywell
2. Johnson Controls
3. Siemens

2.03 AIR FILTERS

A. Disposable Filters: 2-inch- thick pleated media with MERV rating of 8 or higher.

B. Manufactuer: Filters shall be by American Air Filter or Farr.

2.04 REFRIGERATION COMPONENTS

A. General Refrigeration Component Requirements:

1. Refrigeration compressor, coils, and specialties shall be designed to operate with CFC-free refrigerants.
2. Energy Efficiency: Equal to or greater than prescribed by ASHRAE/IESNA 90.1-2004, "Energy Standard for Buildings except Low-Rise Residential Buildings."

B. Refrigerant Coil: Copper tubes mechanically expanded into aluminum fins. Match size with furnace. Include condensate drain pan with accessible drain outlet complying with ASHRAE 62.1-2004.

1. Refrigerant Coil Enclosure: Steel, matching furnace and evaporator coil, with access panel and flanges for integral mounting at or on furnace cabinet and galvanized sheet metal drain pan coated with black asphaltic base paint.

C. Refrigerant Line Kits: Annealed-copper suction and liquid lines factory cleaned, dried, pressurized with nitrogen, sealed, and with suction line insulated. Provide in standard lengths for installation without joints, except at equipment connections.

1. Flexible Elastomeric pipe insulation: Closed-cell, sponge- or expanded-rubber materials. Comply with ASTM C 534, Type I, 1.5 inch thick.

D. Refrigerant Piping: Comply with requirements in Division 15 Section "Refrigerant Piping."

E. Air-Cooled, Compressor-Condenser Unit:

1. Units as scheduled, and specified in section 15671.

F. Capacities and Characteristics:

1. Refrigerant Coil: See Mechanical Schedule Drawing

2. Compressor-Condenser Unit: See Mechanical Schedule Drawing

PART 3 - EXECUTION

3.01 INSTALLATION

A. Install air handling units and associated features and systems according to applicable codes and ordinances.

B. Base-Mounted Units: Secure units to substrate. Provide optional bottom closure base if required by installation conditions.

C. Controls: Install thermostats at mounting height of 48 inches above floor or as noted on drawings.

D. Wiring Method: Install control wiring in accessible ceiling spaces and in gypsum board partitions where unenclosed wiring method may be used. Conceal control wiring except in unfinished spaces.

E. Install ground-mounted, compressor-condenser components on 4-inch- thick, reinforced concrete base; 4 inches larger on each side than unit. Concrete, reinforcement, and formwork are specified in Division 3 Section "Cast-in-Place Concrete." See plans for roof mounted condensing unit mounting.

F. Provide 2 spare filters for each unit, and 2 spare belts for each fan.

3.02 CONNECTIONS

A. Connect ducts to air handling units with flexible connector. Comply with requirements in Division 15 Section "Duct Accessories."

B. Connect refrigerant tubing kits to refrigerant coil in air handling units and to air-cooled, compressor-condenser unit.
   1. Brazed Joints: Construct joints according to AWS's "Brazing Handbook," "Pipe and Tube" Chapter, using copper-phosphorus brazing filler metal complying with AWS A5.8.

C. Comply with requirements in Division 15 Section "Refrigerant Piping" for installation and joint construction of refrigerant piping.

D. Complete installation and startup checks and start units according to manufacturer's written instructions.

E. Verify proper operation of capacity control device.

F. Adjust airflow and initial temperature and humidity set points.

G. Set controls and other adjustments for optimum heating performance and efficiency. Adjust heat-distribution features, including shutters, dampers, and relays, to provide optimum heating performance and system efficiency.

H. After completing installation, clean air handling units internally according to manufacturer's written instructions.

I. Install new filters in each air handling unit within 1 day after Substantial Completion.

3.03 FIELD QUALITY CONTROL

A. Perform the following field tests and inspections and prepare test reports:

1. Perform electrical test and visual and mechanical inspection.
2. Leak Test: After installation, charge systems with refrigerant and oil and test for leaks. Repair leaks, replace lost refrigerant and oil, and retest until no leaks exist.
3. Operational Test: After electrical circuitry has been energized, start units to confirm proper operation, product capability, and compliance with requirements.
4. Verify that fan wheel is rotating in the correct direction and is not vibrating or binding.
5. Test and adjust controls and safeties. Replace damaged and malfunctioning controls and equipment.

B. Verify that vibration isolation and flexible connections properly dampen vibration transmission to structure.

END OF SECTION 15530

SECTION 15671

CONDENSING UNITS

PART 1 - GENERAL

1.01 SUMMARY

A. This Section includes air-cooled condensing units.

1.02 SUBMITTALS

A. Product Data: For each type of product indicated.

B. Wiring diagrams.

C. Operation and maintenance data.

1.03 QUALITY ASSURANCE

A. Electrical Components, Devices, and Accessories: Listed and labeled as defined in NFPA 70, Article 100, by a testing agency acceptable to authorities having jurisdiction, and marked for intended use.

B. Fabricate and label refrigeration system according to ASHRAE 15, "Safety Code for Mechanical Refrigeration."

C. ASHRAE/IESNA 90.1-2004 Compliance: Applicable requirements in ASHRAE/IESNA 90.1-2007, Section 6 - "Heating, Ventilating, and Air-Conditioning."

1.04 WARRANTY

A. Special Warranty: Manufacturer's standard form in which manufacturer agrees to repair or replace components of condensing units that fail in materials or workmanship within specified warranty period.

1. Warranty Period (Compressor Only): 10 years from date of Substantial Completion.
2. Warranty Period (Condenser Coil Only): Five years from date of Substantial Completion.
3. All other components: minimum of One year from date of Substantial Completion, or Manufacturer’s warranty, if longer.

1.05 TRAINING

A. Manufacturer representative shall be present on site at startup.

B. No other training is required.

1.06 OPERATION AND MAINTENANCE

A. Provide O&M data sheets per Division 1 specifications.

PART 2 - PRODUCTS

2.01 MANUFACTURERS

A. In other Part 2 articles where titles below introduce lists, the following requirements apply to product selection:
   1. Manufacturers: Subject to compliance with requirements, provide products by one of the manufacturers specified.

2.02 CONDENSING UNITS, AIR COOLED, 6 to 10 TONS

A. Manufacturers (condensing units shall be of the same manufacturer as the matching air handler or gas furnace unit, unless scheduled otherwise):
   1. Carrier Corporation; Div. of United Technologies Corp.
   2. Lennox.

B. Description: Factory assembled and tested, consisting of compressor, condenser coil, fan, motors, refrigerant reservoir, and operating controls.

C. Compressor: Scroll, hermetically sealed, with rubber vibration isolators.

   1. Motor: Single speed, and includes thermal- and current-sensitive overload devices, start capacitor, relay, and contactor.
   2. Compressor: Include manual-reset, high-pressure switch and automatic-reset, low-pressure switch.
   3. Accumulator: Suction tube.
   4. Refrigerant Charge: R-410A.

D. Condenser Coil: Seamless copper-tube, aluminum-fin coil; circuited for integral liquid subcooler, with removable drain pan and brass service valves with service ports.

E. Condenser Fan: Direct-drive, aluminum propeller fan; with permanently lubricated, totally enclosed fan motor with thermal-overload protection.

F. Accessories:
   1. Crankcase heater.
   2. Cycle Protector: Automatic-reset timer to prevent rapid compressor cycling.
   3. Evaporator Freeze Thermostat: Temperature-actuated switch that stops unit when evaporator reaches freezing temperature.
   4. Filter-dryer.
   5. High-Pressure Switch: Automatic-reset switch cycles compressor off on high refrigerant pressure.
   6. Low-Pressure Switch: Automatic-reset switch cycles compressor off on low refrigerant pressure.
   7. Precharged and insulated suction and liquid tubing.
   8. Time-Delay Relay: Continues operation of evaporator fan after compressor shuts off.

G. Unit Casing: Galvanized steel, finished with baked enamel; with removable panels for access to controls, weep holes for water drainage, and mounting holes in base. Mount service valves, fittings, and gage ports on exterior of casing.

H. Verification of Performance: Rate condensing units according to ARI 210/240.

2.03 SOURCE QUALITY CONTROL

A. Verification of Performance: Rate condensing units according to ARI 210/240, ARI 340/360, or ARI 365.

1. Energy Efficiency: Equal to or greater than prescribed by ASHRAE/IESNA 90.1-2007, "Energy Efficient Design of New Buildings except Low-Rise Residential Buildings."

B. Testing Requirements: Factory test sound-power-level ratings according to ARI 270.

PART 3 - EXECUTION

3.01 INSTALLATION

A. Install units level and plumb, firmly anchored in locations indicated; maintain manufacturer's recommended clearances.

B. Install condensing units on concrete base where mounted on the ground. Roof mounted units shall be mounted as noted in the drawings. Concrete base is specified in Division 15 Section "Basic Mechanical Materials and Methods," and concrete materials and installation requirements are specified in Division 3.

C. Maintain manufacturer's recommended clearances for service and maintenance.

D. Connect refrigerant piping to air-cooled condensing units; maintain required access to unit. Install furnished field-mounted accessories. Refrigerant piping and specialties are specified in Division 15 Section "Refrigerant Piping."

3.02 FIELD QUALITY CONTROL

A. Perform the following field tests and inspections and prepare test reports:

1. Perform electrical test and visual and mechanical inspection.
2. Leak Test: After installation, charge systems with refrigerant and oil and test for leaks. Repair leaks, replace lost refrigerant and oil, and retest until no leaks exist.
3. Operational Test: After electrical circuitry has been energized, start units to confirm proper operation, product capability, and compliance with requirements.
4. Test and adjust controls and safeties. Replace damaged and malfunctioning controls and equipment.
5. Verify proper airflow over coils.

B. Verify that vibration isolation and flexible connections properly dampen vibration transmission to structure.

C. Remove and replace malfunctioning condensing units and retest as specified above.

END OF SECTION 15671

SECTION 15815

METAL DUCTS

PART 1 - GENERAL

1.01 SUMMARY

A. Section Includes:

1. Rectangular ducts and fittings.
2. Round ducts and fittings.
3. Sheet metal materials.
4. Sealants and gaskets.
5. Hangers and supports.

B. Related Sections:
1. Division 15 Section "Duct Accessories" for dampers, sound-control devices, duct-mounting access doors and panels, turning vanes, and flexible ducts.
2. Division 15 Section "Testing, Adjusting, and Balancing" for testing, adjusting, and balancing requirements for metal ducts.

1.02 PERFORMANCE REQUIREMENTS

A. Delegated Duct Design: Duct construction, including sheet metal thicknesses, seam and joint construction, reinforcements, and hangers and supports, shall comply with SMACNA's "HVAC Duct Construction Standards - Metal and Flexible" and performance requirements and design criteria indicated in "Duct Schedule" Article.

B. Structural Performance: Duct hangers and supports shall withstand the effects of gravity loads and stresses within limits and under conditions described in SMACNA's "HVAC Duct Construction Standards - Metal and Flexible"

C. Airstream Surfaces: Surfaces in contact with the airstream shall comply with requirements in ASHRAE 62.1-2010.

1.03 SUBMITTALS

A. Product Data: For each type of product indicated.

B. Shop Drawings:

1. Fabrication, assembly, and installation, including plans, elevations, sections, components, and attachments to other work.
2. Factory- and shop-fabricated ducts and fittings.
3. Duct layout indicating sizes, configuration, liner material, and static-pressure classes.
4. Elevation of top of ducts.
5. Penetrations through fire-rated and other partitions.
6. Equipment installation based on equipment being used on Project.

7. Locations for duct accessories, including dampers, turning vanes, and access doors and panels.
8. Hangers and supports, including methods for duct and building attachment and vibration isolation.

C. Coordination Drawings: Plans, drawn to scale, on which the following items are shown and coordinated with each other, using input from installers of the items involved:

1. Duct installation in congested spaces, indicating coordination with general construction, building components, and other building services. Indicate proposed changes to duct layout.
2. Penetrations of smoke barriers and fire-rated construction.
3. Items penetrating finished ceiling including the following:

a. Lighting fixtures.
b. Air outlets and inlets.
c. Speakers.
d. Sprinklers.
e. Access panels.

1.04 QUALITY ASSURANCE

A. ASHRAE Compliance: Applicable requirements in ASHRAE 62.1-2004, Section 5 - "Systems and Equipment" and Section 7 - "Construction and System Start-Up."

B. ASHRAE/IESNA Compliance: Applicable requirements in ASHRAE/IESNA 90.1-2004, Section 6.4.4 - "HVAC System Construction and Insulation."

1.05 TRAINING

A. No training is required.

1.06 OPERATION AND MAINTENANCE

A. Provide O&M data sheets per Division 1 specifications.

PART 2 - PRODUCTS

2.01 RECTANGULAR DUCTS AND FITTINGS

A. General Fabrication Requirements: Comply with SMACNA's "HVAC Duct Construction Standards - Metal and Flexible" based on indicated static-pressure class unless otherwise indicated.

B. Transverse Joints: Select joint types and fabricate according to SMACNA's "HVAC Duct Construction Standards - Metal and Flexible," Figure 1-4, "Transverse (Girth) Joints," for static-pressure class, applicable sealing requirements, materials involved, duct-support intervals, and other provisions in SMACNA's "HVAC Duct Construction Standards - Metal and Flexible."

C. Longitudinal Seams: Select seam types and fabricate according to SMACNA's "HVAC Duct Construction Standards - Metal and Flexible," Figure 1-5, "Longitudinal Seams - Rectangular Ducts," for static-pressure class, applicable sealing requirements, materials involved, duct-support intervals, and other provisions in SMACNA's "HVAC Duct Construction Standards - Metal and Flexible."

D. Elbows, Transitions, Offsets, Branch Connections, and Other Duct Construction: Select types and fabricate according to SMACNA's "HVAC Duct Construction Standards - Metal and Flexible," Chapter 2, "Fittings and Other Construction," for static-pressure class, applicable sealing requirements, materials involved, duct-support intervals, and other provisions in SMACNA's "HVAC Duct Construction Standards - Metal and Flexible."

2.02 ROUND DUCTS AND FITTINGS

A. General Fabrication Requirements: Comply with SMACNA's "HVAC Duct Construction Standards - Metal and Flexible," Chapter 3, "Round, Oval, and Flexible Duct," based on indicated static-pressure class unless otherwise indicated. Provide double-walled duct with 1” insulation between walls where shown on the drawings.

1. Manufacturers: Subject to compliance with requirements, provide products by one of the following:
   a. McGill AirFlow LLC.
   b. SEMCO Incorporated.
   c. Sheet Metal Connectors, Inc.
   d. Spiral Manufacturing Co., Inc.

B. Transverse Joints: Select joint types and fabricate according to SMACNA's "HVAC Duct Construction Standards - Metal and Flexible," Figure 3-2, "Transverse Joints - Round Duct," for static-pressure class, applicable sealing requirements, materials involved, duct-support intervals, and other provisions in SMACNA's "HVAC Duct Construction Standards - Metal and Flexible."

C. Longitudinal Seams: Select seam types and fabricate according to SMACNA's "HVAC Duct Construction Standards - Metal and Flexible," Figure 3-1, "Seams - Round Duct and Fittings," for static-pressure class, applicable sealing requirements, materials involved, duct-support intervals, and other provisions in SMACNA's "HVAC Duct Construction Standards - Metal and Flexible."

D. Tees and Laterals: Select types and fabricate according to SMACNA's "HVAC Duct Construction Standards - Metal and Flexible," Figure 3-4, "90 Degree Tees and Laterals," and Figure 3-5, "Conical Tees," for static-pressure class, applicable sealing requirements, materials involved, duct-support intervals, and other provisions in SMACNA's "HVAC Duct Construction Standards - Metal and Flexible." All fittings shall be factory fabricated.

2.03 SHEET METAL MATERIALS

A. General Material Requirements: Comply with SMACNA's "HVAC Duct Construction Standards - Metal and Flexible" for acceptable materials, material thicknesses, and duct construction methods unless otherwise indicated. Sheet metal materials shall be free of pitting, seam marks, roller marks, stains, discolorations, and other imperfections.

B. Galvanized Sheet Steel: Comply with ASTM A 653/A 653M.

1. Galvanized Coating Designation: G60.
2. Finishes for Surfaces Exposed to View: Mill phosphatized.

C. Reinforcement Shapes and Plates: ASTM A 36/A 36M, steel plates, shapes, and bars; black and galvanized.

D. Tie Rods: Galvanized steel, 1/4-inch minimum diameter for lengths 36 inches or less; 3/8-inch minimum diameter for lengths longer than 36 inches.

2.04 SEALANT AND GASKETS

A. General Sealant and Gasket Requirements: Surface-burning characteristics for sealants and gaskets shall be a maximum flame-spread index of 25 and a maximum smoke-developed index of 50 when tested according to UL 723; certified by an NRTL.

B. Two-Part Tape Sealing System:

1. Tape: Woven cotton fiber impregnated with mineral gypsum and modified acrylic/silicone activator to react exothermically with tape to form hard, durable, airtight seal.
2. Tape Width: 3 inches.
3. Sealant: Modified styrene acrylic.
4. Water resistant.
5. Mold and mildew resistant.
6. Maximum Static-Pressure Class: 10-inch wg, positive and negative.
7. Service: Indoor and outdoor.
8. Service Temperature: Minus 40 to plus 200 deg F.
9. Substrate: Compatible with galvanized sheet steel (both PVC coated and bare), stainless steel, or aluminum.
10. For indoor applications, use sealant that has a VOC content of 250 g/L or less when calculated according to 40 CFR 59, Subpart D (EPA Method 24).

C. Water-Based Joint and Seam Sealant:

1. Application Method: Brush on.
2. Solids Content: Minimum 65 percent.
3. Shore A Hardness: Minimum 20.
4. Water resistant.
5. Mold and mildew resistant.
6. VOC: Maximum 75 g/L (less water).
7. Maximum Static-Pressure Class: 10-inch wg, positive and negative.
8. Service: Indoor or outdoor.
9. Substrate: Compatible with galvanized sheet steel (both PVC coated and bare), stainless steel, or aluminum sheets.

D. Flanged Joint Sealant: Comply with ASTM C 920.

1. General: Single-component, acid-curing, silicone, elastomeric.
2. Type: S.
3. Grade: NS.
4. Class: 25.
5. Use: O.
6. For indoor applications, use sealant that has a VOC content of 250 g/L or less when calculated according to 40 CFR 59, Subpart D (EPA Method 24).

E. Flange Gaskets: Butyl rubber, neoprene, or EPDM polymer with polyisobutylene plasticizer.

2.05 HANGERS AND SUPPORTS

A. Hanger Rods for Noncorrosive Environments: Cadmium-plated steel rods and nuts.

B. Strap and Rod Sizes: Comply with SMACNA's "HVAC Duct Construction Standards - Metal and Flexible," Table 4-1, "Rectangular Duct Hangers Minimum Size," and Table 4-2, "Minimum Hanger Sizes for Round Duct."

C. Steel Cables for Galvanized-Steel Ducts: Galvanized steel complying with ASTM A 603.

D. Steel Cable End Connections: Cadmium-plated steel assemblies with brackets, swivel, and bolts designed for duct hanger service; with an automatic-locking and clamping device.

E. Duct Attachments: Sheet metal screws, blind rivets, or self-tapping metal screws; compatible with duct materials.

F. Trapeze and Riser Supports:

1. Supports for Galvanized-Steel Ducts: Galvanized-steel shapes and plates.

PART 3 - EXECUTION

3.01 DUCT INSTALLATION

A. Drawing plans, schematics, and diagrams indicate general location and arrangement of duct system. Indicated duct locations, configurations, and arrangements were used to size ducts and calculate friction loss for air-handling equipment sizing and for other design considerations. Install duct systems as indicated unless deviations to layout are approved on Shop Drawings and Coordination Drawings.

B. Install ducts according to SMACNA's "HVAC Duct Construction Standards - Metal and Flexible" unless otherwise indicated.

C. Install round ducts in maximum practical lengths.

D. Install ducts with fewest possible joints.

E. Install factory- or shop-fabricated fittings for changes in direction, size, and shape and for branch connections.

F. Unless otherwise indicated, install ducts vertically and horizontally, and parallel and perpendicular to building lines.

G. Install ducts close to walls, overhead construction, columns, and other structural and permanent enclosure elements of building.

H. Install ducts with a clearance of 1 inch, plus allowance for insulation thickness.

I. Route ducts to avoid passing through transformer vaults and electrical equipment rooms and enclosures.

J. Where ducts pass through non-fire-rated interior partitions and exterior walls and are exposed to view, cover the opening between the partition and duct or duct insulation with sheet metal flanges of same metal thickness as the duct. Overlap openings on four sides by at least 1-1/2 inches.

K. Where ducts pass through fire-rated interior partitions and exterior walls, install fire dampers. Comply with requirements in Division 15 Section "Duct Accessories" for fire and smoke dampers.

L. Protect duct interiors from moisture, construction debris and dust, and other foreign materials. Comply with SMACNA's "Duct Cleanliness for New Construction Guidelines."

3.02 INSTALLATION OF EXPOSED DUCTWORK

A. Protect ducts exposed in finished spaces from being dented, scratched, or damaged.

B. Trim duct sealants flush with metal. Create a smooth and uniform exposed bead. Do not use two-part tape sealing system.

C. Grind welds to provide smooth surface free of burrs, sharp edges, and weld splatter. When welding stainless steel with a No. 3 or 4 finish, grind the welds flush, polish the exposed welds, and treat the welds to remove discoloration caused by welding.

D. Maintain consistency, symmetry, and uniformity in the arrangement and fabrication of fittings, hangers and supports, duct accessories, and air outlets.

E. Repair or replace damaged sections and finished work that does not comply with these requirements.

3.03 DUCT SEALING

A. Seal ducts for duct static-pressure, seal classes, and leakage classes specified in "Duct Schedule" Article according to SMACNA's "HVAC Duct Construction Standards - Metal and Flexible."

3.04 HANGER AND SUPPORT INSTALLATION

A. Comply with SMACNA's "HVAC Duct Construction Standards - Metal and Flexible," Chapter 4, "Hangers and Supports."

B. Building Attachments: Powder-actuated fasteners, or structural-steel fasteners appropriate for construction materials to which hangers are being attached.
   1. Install powder-actuated concrete fasteners after concrete is placed and completely cured.
   2. Use powder-actuated concrete fasteners for standard-weight aggregate concretes or for slabs more than 4 inches thick.
   3. Do not use powder-actuated concrete fasteners for lightweight-aggregate concretes or for slabs less than 4 inches thick.

C. Hanger Spacing: Comply with SMACNA's "HVAC Duct Construction Standards - Metal and Flexible," Table 4-1, "Rectangular Duct Hangers Minimum Size," and Table 4-2, "Minimum Hanger Sizes for Round Duct," for maximum hanger spacing; install hangers and supports within 24 inches of each elbow and within 48 inches of each branch intersection.

D. Hangers Exposed to View: Threaded rod and angle or channel supports.

E. Support vertical ducts with steel angles or channel secured to the sides of the duct with welds, bolts, sheet metal screws, or blind rivets; support at each floor and at a maximum intervals of 16 feet.

F. Install upper attachments to structures. Select and size upper attachments with pull-out, tension, and shear capacities appropriate for supported loads and building materials where used.

3.05 CONNECTIONS

A. Make connections to equipment with flexible connectors complying with Division 15 Section "Duct Accessories."

B. Comply with SMACNA's "HVAC Duct Construction Standards - Metal and Flexible" for branch, outlet and inlet, and terminal unit connections.

3.06 DUCT CLEANING

A. Clean new duct system(s) before testing, adjusting, and balancing.

B. Use service openings for entry and inspection.

1. Create new openings and install access panels appropriate for duct static-pressure class if required for cleaning access. Provide insulated panels for insulated or lined duct. Patch insulation and liner as recommended by duct liner manufacturer. Comply with Division 15 Section "Duct Accessories" for access panels and doors.
2. Disconnect and reconnect flexible ducts as needed for cleaning and inspection.
3. Remove and reinstall ceiling to gain access during the cleaning process.

3.07 START UP

A. Air Balance: Comply with requirements in Division 15 Section "Testing, Adjusting, and Balancing."

3.08 DUCT SCHEDULE

A. Fabricate ducts with galvanized sheet steel.

B. Supply Ducts:

1. Ducts Connected to Furnaces:

a. Pressure Class: Positive 1-inch wg.

b. Minimum SMACNA Seal Class: A.
c. SMACNA Leakage Class for Rectangular: 24.
d. SMACNA Leakage Class for Round and Flat Oval: 24.

C. Return Ducts:

1. Ducts Connected to Furnaces:

a. Pressure Class: Positive or negative 1-inch wg.
b. Minimum SMACNA Seal Class: A.
c. SMACNA Leakage Class for Rectangular: 24.
d. SMACNA Leakage Class for Round and Flat Oval: 24.

D. Exhaust Ducts:

1. Ducts Connected to Fans Exhausting (ASHRAE 62.1, Class 1 and 2) Air:

a. Pressure Class: Negative 1-inch wg.
b. Minimum SMACNA Seal Class: A if negative pressure, and A if positive pressure.
c. SMACNA Leakage Class for Rectangular: 12.

E. Outdoor-Air (Not Filtered, Heated, or Cooled) Ducts:

1. Ducts Connected to Furnaces:

a. Pressure Class: Positive or negative 1-inch wg.
b. Minimum SMACNA Seal Class: A.
c. SMACNA Leakage Class for Rectangular: 12.
d. SMACNA Leakage Class for Round and Flat Oval: 12.

F. Intermediate Reinforcement:

1. Galvanized-Steel Ducts: Galvanized steel.

G. Elbow Configuration:

1. Rectangular Duct: Comply with SMACNA's "HVAC Duct Construction Standards - Metal and Flexible," Figure 2-2, "Rectangular Elbows."

a. Velocity 1000 fpm or Lower:

1) Radius Type RE 1 with minimum 0.5 radius-to-diameter ratio.
2) Mitered Type RE 4 without vanes.

b. Velocity 1000 to 1500 fpm:

1) Radius Type RE 1 with minimum 1.0 radius-to-diameter ratio.
2) Radius Type RE 3 with minimum 0.5 radius-to-diameter ratio and two vanes.
3) Mitered Type RE 2 with vanes complying with SMACNA's "HVAC Duct Construction Standards - Metal and Flexible," Figure 2-3, "Vanes and Vane Runners," and Figure 2-4, "Vane Support in Elbows."

c. Velocity 1500 fpm or Higher:

1) Radius Type RE 1 with minimum 1.5 radius-to-diameter ratio.
2) Radius Type RE 3 with minimum 1.0 radius-to-diameter ratio and two vanes.
3) Mitered Type RE 2 with vanes complying with SMACNA's "HVAC Duct Construction Standards - Metal and Flexible," Figure 2-3, "Vanes and Vane Runners," and Figure 2-4, "Vane Support in Elbows."

2. Rectangular Duct: Comply with SMACNA's "HVAC Duct Construction Standards - Metal and Flexible," Figure 2-2, "Rectangular Elbows."

a. Radius Type RE 1 with minimum 1.5 radius-to-diameter ratio.
b. Radius Type RE 3 with minimum 1.0 radius-to-diameter ratio and two vanes.
c. Mitered Type RE 2 with vanes complying with SMACNA's "HVAC Duct Construction Standards - Metal and Flexible," Figure 2-3, "Vanes and Vane Runners," and Figure 2-4, "Vane Support in Elbows."

3. Round Duct: Comply with SMACNA's "HVAC Duct Construction Standards - Metal and Flexible," Figure 3-3, "Round Duct Elbows."

a. Minimum Radius-to-Diameter Ratio and Elbow Segments: Comply with SMACNA's "HVAC Duct Construction Standards - Metal and Flexible," Table 3-1, "Mitered Elbows." Elbows with less than 90-degree change of direction have proportionately fewer segments.

1) Velocity 1000 fpm or Lower: 0.5 radius-to-diameter ratio and three segments for 90-degree elbow.
2) Velocity 1000 to 1500 fpm: 1.0 radius-to-diameter ratio and four segments for 90-degree elbow.
3) Velocity 1500 fpm or Higher: 1.5 radius-to-diameter ratio and five segments for 90-degree elbow.
4) Radius-to Diameter Ratio: 1.5.

b. Round Elbows, 12 Inches and Smaller in Diameter: Stamped or pleated.
c. Round Elbows, 14 Inches and Larger in Diameter: Standing seam or Welded.

H. Branch Configuration:

1. Rectangular Duct: Comply with SMACNA's "HVAC Duct Construction Standards - Metal and Flexible," Figure 2-6, "Branch Connections."

a. Rectangular Main to Rectangular Branch: 45-degree entry.
b. Rectangular Main to Round Branch: Spin in.

2. Round: Comply with SMACNA's "HVAC Duct Construction Standards - Metal and Flexible," Figure 3-4, "90 Degree Tees and Laterals," and Figure 3-5, "Conical Tees." Saddle taps are permitted in existing duct.

a. Velocity 1000 fpm or Lower: 90-degree tap.
b. Velocity 1000 to 1500 fpm: Conical tap.
c. Velocity 1500 fpm or Higher: 45-degree lateral.

END OF SECTION 15815

SECTION 15820

DUCT ACCESSORIES

PART 1 - GENERAL

1.01 SUMMARY

A. Section Includes:

1. Backdraft dampers.
2. Manual volume dampers.
3. Control dampers.
4. Fire dampers.
5. Smoke dampers.
6. Flange connectors.
7. Turning vanes.
8. Duct-mounted access doors.
9. Flexible connectors.
10. Flexible ducts.
11. Duct accessory hardware.

1.02 SUBMITTALS

A. Product Data: For each type of product indicated.

B. Shop Drawings: For duct accessories. Include plans, elevations, sections, details and attachments to other work.

1. Detail duct accessories fabrication and installation in ducts and other construction. Include dimensions, weights, loads, and required clearances; and method of field assembly into duct systems and other construction. Include the following:

   a. Special fittings.
   b. Control damper installations.
   c. Fire-damper and smoke-damper installations, including sleeves; and duct-mounted access doors.
   d. Wiring Diagrams: For power, signal, and control wiring.

C. Operation and maintenance data.

1.03 QUALITY ASSURANCE

A. Comply with NFPA 90A, "Installation of Air Conditioning and Ventilating Systems," and with NFPA 90B, "Installation of Warm Air Heating and Air Conditioning Systems."

B. Comply with AMCA 500-D testing for damper rating.

1.04 TRAINING

A. No training is required.

1.05 OPERATION AND MAINTENANCE

A. Provide O&M data sheets per Division 1 specifications.

PART 2 - PRODUCTS

2.01 MATERIALS

A. Comply with SMACNA's "HVAC Duct Construction Standards - Metal and Flexible" for acceptable materials, material thicknesses, and duct construction methods unless otherwise indicated. Sheet metal materials shall be free of pitting, seam marks, roller marks, stains, discolorations, and other imperfections.

B. Galvanized Sheet Steel: Comply with ASTM A 653/A 653M.

1. Galvanized Coating Designation: G60.
2. Exposed-Surface Finish: Mill phosphatized.

C. Reinforcement Shapes and Plates: Galvanized-steel reinforcement where installed on galvanized sheet metal ducts; compatible materials for aluminum and stainless-steel ducts.

D. Tie Rods: Galvanized steel, 1/4-inch minimum diameter for lengths 36 inches or less; 3/8-inch minimum diameter for lengths longer than 36 inches.

2.02 BACKDRAFT DAMPERS

A. Manufacturers: Subject to compliance with requirements, available manufacturers offering products that may be incorporated into the Work include, but are not limited to, the following:
1. Arrow United Industries
2. Ruskin Company.

B. Description: Gravity balanced.

C. Maximum Air Velocity: 2000 fpm.

D. Maximum System Pressure: 1-inch wg.

E. Frame: 0.052-inch- thick, galvanized sheet steel, with welded corners and mounting flange if required,.

F. Blades: Multiple single-piece blades, center-pivoted, maximum 6-inch width, 0.025-inch- thick, roll-formed aluminum with sealed edges.

G. Blade Action: Parallel.

H. Blade Seals: Felt.

I. Blade Axles:

1. Material: Galvanized steel.
2. Diameter: 0.20 inch.

J. Tie Bars and Brackets: Galvanized steel.

K. Return Spring: Adjustable tension.

L. Bearings: Steel ball or synthetic pivot bushings.

M. Accessories:

1. Adjustment device to permit setting for varying differential static pressure.
2. Screen Mounting: Front mounted in sleeve.

   a. Sleeve Thickness: 20-gage minimum.
   b. Sleeve Length: 6 inches minimum.

3. Screen Mounting: Rear mounted.
4. Screen Material: Galvanized steel.
5. Screen Type: Insect.
6. 90-degree stops.

2.03 MANUAL VOLUME DAMPERS

A. Standard, Steel, Manual Volume Dampers:

1. Manufacturers: Subject to compliance with requirements, available manufacturers offering products that may be incorporated into the Work include, but are not limited to, the following:
   a. Ruskin Company.
   b. Arrow United Industries

2. Standard leakage rating, with linkage outside airstream.
3. Suitable for horizontal or vertical applications.
4. Frames:

   a. Hat-shaped, galvanized-steel channels, 0.064-inch minimum thickness.
   b. Mitered and welded corners.
   c. Flanges for attaching to walls and flangeless frames for installing in ducts.

5. Blades:

   a. Multiple or single blade.
   b. Parallel- or opposed-blade design.
   c. Stiffen damper blades for stability.
   d. Galvanized-steel, 0.064 inch thick.

6. Blade Axles: Galvanized steel.
7. Bearings:

   a. Oil-impregnated bronze.

b. Dampers in ducts with pressure classes of 3-inch wg or less shall have axles full length of damper blades and bearings at both ends of operating shaft.

8. Tie Bars and Brackets: Galvanized steel.

B. Jackshaft:

1. Size: 1-inch diameter.
2. Material: Galvanized-steel pipe rotating within pipe-bearing assembly mounted on supports at each mullion and at each end of multiple-damper assemblies.
3. Length and Number of Mountings: As required to connect linkage of each damper in multiple-damper assembly.

C. Damper Hardware:

1. Zinc-plated, die-cast core with dial and handle made of 3/32-inch- thick zinc-plated steel, and a 3/4-inch hexagon locking nut.
2. Include center hole to suit damper operating-rod size.
3. Include elevated platform for insulated duct mounting.

2.04 CONTROL DAMPERS

A. Manufacturers: Subject to compliance with requirements, available manufacturers offering products that may be incorporated into the Work include, but are not limited to, the following:
1. Arrow United Industries; a division of Mestek, Inc.
2. Ruskin Company.

B. Frames:

1. Hat shaped.
2. Galvanized-steel channels, 0.064 inch thick.
3. Mitered and welded corners.

C. Blades:

1. Multiple blade with maximum blade width of 8 inches.
2. Parallel- and opposed-blade design.
3. Galvanized steel.
4. 0.064 inch thick.
5. Blade Edging: Closed-cell neoprene edging.
6. Blade Edging: Inflatable seal blade edging, or replaceable rubber seals.

D. Blade Axles: 1/2-inch- diameter; galvanized steel; blade-linkage hardware of zinc-plated steel and brass; ends sealed against blade bearings.

1. Operating Temperature Range: From minus 40 to plus 200 deg F.

E. Bearings:

1. Oil-impregnated bronze.
2. Dampers in ducts with pressure classes of 3-inch wg or less shall have axles full length of damper blades and bearings at both ends of operating shaft.
3. Thrust bearings at each end of every blade.

2.05 FIRE DAMPERS

A. Manufacturers: Subject to compliance with requirements, provide products by one of the following:

1. Air Balance Inc.; a division of Mestek, Inc.
2. Ruskin Company.

B. Type: Static and dynamic; rated and labeled according to UL 555 by an NRTL.

C. Closing rating in ducts up to 4-inch wg static pressure class and minimum 4000-fpm velocity.

D. Fire Rating: 1-1/2 and 3 hours.

E. Frame: Curtain type with blades outside airstream Multiple-blade type; fabricated with roll-formed, 0.034-inch- thick galvanized steel; with mitered and interlocking corners.

F. Mounting Sleeve: Factory- or field-installed, galvanized sheet steel.

1. Minimum Thickness: 0.052 or 0.138 inch thick, as indicated, and of length to suit application.
2. Exception: Omit sleeve where damper-frame width permits direct attachment of perimeter mounting angles on each side of wall or floor; thickness of damper frame must comply with sleeve requirements.

G. Mounting Orientation: Vertical or horizontal as indicated.

H. Blades: Roll-formed, interlocking, 0.034-inch- thick, galvanized sheet steel. In place of interlocking blades, use full-length, 0.034-inch- thick, galvanized-steel blade connectors.

I. Horizontal Dampers: Include blade lock and stainless-steel closure spring.

J. Heat-Responsive Device: Replaceable, 165 deg F rated, fusible links.

2.06 SMOKE DAMPERS

A. Manufacturers: Subject to compliance with requirements, available manufacturers offering products that may be incorporated into the Work include, but are not limited to, the following:

1. Air Balance Inc.; a division of Mestek, Inc.
2. Ruskin Company.

B. General Requirements: Label according to UL 555S by an NRTL.

C. Smoke Detector: Integral, factory wired for single-point connection.

D. Frame: Curtain type with blades outside airstream Multiple-blade type; fabricated with roll-formed, 0.034-inch- thick galvanized steel; with mitered and interlocking corners.

E. Blades: Roll-formed, horizontal, interlocking, 0.034-inch- thick, galvanized sheet steel. In place of interlocking blades, use full-length, 0.034-inch- thick, galvanized-steel blade connectors.

F. Leakage: Class I .

G. Rated pressure and velocity to exceed design airflow conditions.

H. Mounting Sleeve: Factory-installed, 0.052-inch- thick, galvanized sheet steel; length to suit wall or floor application.

I. Damper Motors: two-position action.

J. Comply with NEMA designation, temperature rating, service factor, enclosure type, and efficiency requirements for motors specified in Division 15 Section "Common Motor Requirements for HVAC Equipment."

1. Motor Sizes: Minimum size as indicated. If not indicated, large enough so driven load will not require motor to operate in service factor range above 1.0.
2. Controllers, Electrical Devices, and Wiring: Comply with requirements for electrical devices and connections specified in Division 16 Sections.
3. Permanent-Split-Capacitor or Shaded-Pole Motors: With oil-immersed and sealed gear trains.
4. Spring-Return Motors: Equip with an integral spiral-spring mechanism where indicated. Enclose entire spring mechanism in a removable housing designed for service or adjustments. Size for running torque rating of 150 in. x lbf and breakaway torque rating of 150 in. x lbf.
5. Outdoor Motors and Motors in Outdoor-Air Intakes: Equip with O-ring gaskets designed to make motors weatherproof. Equip motors with internal heaters to permit normal operation at minus 40 deg F.
6. Electrical Connection: 115 V, single phase, 60 Hz.

K. Accessories:

1. Auxiliary switches for signaling.
2. Test and reset switches, damper mounted.

2.07 TURNING VANES

A. Manufacturers: Subject to compliance with requirements, available manufacturers offering products that may be incorporated into the Work include, but are not limited to, the following:

1. Ductmate Industries, Inc.
2. Duro Dyne Inc.
3. METALAIRE, Inc.
4. SEMCO Incorporated.
5. Ward Industries, Inc.; a division of Hart & Cooley, Inc.

B. Manufactured Turning Vanes for Metal Ducts: Curved blades of galvanized sheet steel; support with bars perpendicular to blades set; set into vane runners suitable for duct mounting.

1. Acoustic Turning Vanes: Fabricate airfoil-shaped aluminum extrusions with perforated faces and fibrous-glass fill.

C. General Requirements: Comply with SMACNA's "HVAC Duct Construction Standards - Metal and Flexible"; Figures 2-3, "Vanes and Vane Runners," and 2-4, "Vane Support in Elbows."

D. Vane Construction: Double wall.

2.08 DUCT-MOUNTED ACCESS DOORS

A. Manufacturers: Subject to compliance with requirements, available manufacturers offering products that may be incorporated into the Work include, but are not limited to, the following:

1. American Warming and Ventilating; a division of Mestek, Inc.
2. Ductmate Industries, Inc.
3. Flexmaster U.S.A., Inc.
4. Greenheck Fan Corporation.
5. McGill AirFlow LLC.
6. Nailor Industries Inc.
7. Ventfabrics, Inc.
8. Ward Industries, Inc.; a division of Hart & Cooley, Inc.

B. Duct-Mounted Access Doors: Fabricate access panels according to SMACNA's "HVAC Duct Construction Standards - Metal and Flexible"; Figures 2-10, "Duct Access Doors and Panels," and 2-11, "Access Panels - Round Duct."

1. Door:

a. Double wall, rectangular.
b. Galvanized sheet metal with insulation fill and thickness as indicated for duct pressure class.
c. Vision panel.
d. Hinges and Latches: 1-by-1-inch butt or piano hinge and cam latches.
e. Fabricate doors airtight and suitable for duct pressure class.

2. Frame: Galvanized sheet steel, with bend-over tabs and foam gaskets.
3. Number of Hinges and Locks:

a. Access Doors Less Than 12 Inches Square: No hinges and two sash locks.
b. Access Doors up to 18 Inches Square: Two hinges and two sash locks.

2.09 FLEXIBLE CONNECTORS

A. Manufacturers: Subject to compliance with requirements, available manufacturers offering products that may be incorporated into the Work include, but are not limited to, the following:
1. Ventfabrics, Inc.

B. Materials: Flame-retardant or noncombustible fabrics.

C. Coatings and Adhesives: Comply with UL 181, Class 1.

D. Metal-Edged Connectors: Factory fabricated with a fabric strip 3-1/2 inches wide attached to 2 strips of 2-3/4-inch- wide, 0.028-inch- thick, galvanized sheet steel or 0.032-inch- thick aluminum sheets. Provide metal compatible with connected ducts.

E. Indoor System, Flexible Connector Fabric: Glass fabric double coated with neoprene.

1. Minimum Weight: 26 oz./sq. yd..
2. Tensile Strength: 480 lbf/inch in the warp and 360 lbf/inch in the filling.
3. Service Temperature: Minus 40 to plus 200 deg F.

2.010 FLEXIBLE DUCTS

A. Manufacturers: Subject to compliance with requirements, available manufacturers offering products that may be incorporated into the Work include, but are not limited to, the following:

1. Flexmaster U.S.A., Inc.
2. Flexible Technologies Inc.

B. Insulated, Flexible Duct: UL 181, Class 1, 2-ply vinyl film supported by helically wound, spring-steel wire; fibrous-glass insulation; polyethylene or aluminized vapor-barrier film.

1. Pressure Rating: 10-inch wg positive and 1.0-inch wg negative.
2. Maximum Air Velocity: 4000 fpm.
3. Temperature Range: Minus 10 to plus 160 deg F.
4. Insulation R-value: Comply with ASHRAE/IESNA 90.1-2004.

C. Insulated, Flexible Duct: UL 181, Class 1, multiple layers of aluminum laminate supported by helically wound, spring-steel wire; fibrous-glass insulation; polyethylene or aluminized vapor-barrier film.

1. Pressure Rating: 10-inch wg positive and 1.0-inch wg negative.
2. Maximum Air Velocity: 4000 fpm.
3. Temperature Range: Minus 20 to plus 210 deg F.
4. Insulation R-value: Comply with ASHRAE/IESNA 90.1-2004.

D. Flexible Duct Connectors:

1. Clamps: Stainless-steel band with cadmium-plated hex screw to tighten band with a worm-gear action in sizes 3 through 18 inches, to suit duct size.

2.011 DUCT ACCESSORY HARDWARE

A. Instrument Test Holes: Cast iron, including screw cap and gasket. Size to allow insertion of pitot tube and other testing instruments and of length to suit duct-insulation thickness.

B. Adhesives: High strength, quick setting, neoprene based, waterproof, and resistant to gasoline and grease.

PART 3 - EXECUTION

3.01 INSTALLATION

A. Install duct accessories according to applicable details in SMACNA's "HVAC Duct Construction Standards - Metal and Flexible" for metal ducts and in NAIMA AH116, "Fibrous Glass Duct Construction Standards," for fibrous-glass ducts.

B. Install duct accessories of materials suited to duct materials; use galvanized-steel accessories in galvanized-steel ducts.

C. Install backdraft dampers at inlet of exhaust fans or exhaust ducts as close as possible to exhaust fan unless otherwise indicated.

D. Install volume dampers at points on supply, return, and exhaust systems where branches extend from larger ducts. Install volume dampers where required by the Test and Balance Contractor for systems air balance.

1. Install steel volume dampers in steel ducts.

E. Set dampers to fully open position before testing, adjusting, and balancing.

F. Install test holes at fan inlets and outlets and elsewhere as indicated.

G. Install fire and smoke dampers according to UL listing.

H. Install duct access doors on sides of ducts to allow for inspecting, adjusting, and maintaining accessories and equipment at the following locations:
1. Downstream from manual volume dampers, control dampers, backdraft dampers, and equipment.
2. Adjacent to and close enough to fire or smoke dampers, to reset or reinstall fusible links. Access doors for access to fire or smoke dampers having fusible links shall be pressure relief access doors; and shall be outward operation for access doors installed upstream from dampers and inward operation for access doors installed downstream from dampers.
3. Elsewhere as indicated.

I. Install access doors with swing against duct static pressure.

J. Access Door Sizes:

1. One-Hand or Inspection Access: 8 by 5 inches.
2. Two-Hand Access: 12 by 6 inches.
3. Head and Hand Access: 18 by 10 inches.
4. Head and Shoulders Access: 21 by 14 inches.

K. Install flexible connectors to connect ducts to equipment.

L. Connect diffuser to ducts with maximum 60-inch lengths of flexible duct clamped in place.

M. Connect flexible ducts to metal ducts with duct connector clamps.

N. Install duct test holes where required for testing and balancing purposes.

3.02 FIELD QUALITY CONTROL

A. Tests and Inspections:

1. Operate dampers to verify full range of movement.
2. Inspect locations of access doors and verify that purpose of access door can be performed.
3. Operate fire and smoke dampers to verify full range of movement and verify that proper heat-response device is installed.
4. Inspect turning vanes for proper and secure installation.

END OF SECTION 15820

SECTION 15838

POWER VENTILATORS

PART 1 - GENERAL

1.01 SUMMARY

A. This Section includes the following:
   1. Centrifugal wall ventilators.

1.02 SUBMITTALS

A. Product Data: Include rated capacities, furnished specialties, and accessories for each type of product indicated and include the following:

B. Shop Drawings: Detail equipment assemblies and indicate dimensions, weights, loads, required clearances, method of field assembly, components, and location and size of each field connection.

C. Field quality-control test reports.

D. Operation and maintenance data.

1.03 QUALITY ASSURANCE

A. Electrical Components, Devices, and Accessories: Listed and labeled as defined in NFPA 70, Article 100, by a testing agency acceptable to authorities having jurisdiction, and marked for intended use.

B. NEMA Compliance: Motors and electrical accessories shall comply with NEMA standards.

C. UL Standard: Power ventilators shall comply with UL 705.

1.04 TRAINING

A. Manufacturer representative shall be present on site at startup.

B. No other training is required.

1.05 OPERATION AND MAINTENANCE

A. Provide O&M data sheets per Division 1 specifications.

PART 2 - PRODUCTS

2.01 CENTRIFUGAL WALL VENTILATORS

A. Basis-of-Design Product: Subject to compliance with requirements, provide the product indicated on Drawings or a comparable product by one of the following:

1. Acme Engineering & Mfg. Corp.
2. Greenheck.
3. Loren Cook Company.
4. Penn Ventilation.

B. Description: Direct- or belt-driven centrifugal fans consisting of housing, wheel, fan shaft, bearings, motor and disconnect switch, drive assembly, and accessories.

C. Housing: Heavy-gage, removable, spun-aluminum, dome top and outlet baffle; venturi inlet cone.

D. Fan Wheel: Aluminum hub and wheel with backward-inclined blades.

E. Belt-Driven Drive Assembly: Resiliently mounted to housing, with the following features:

1. Fan Shaft: Turned, ground, and polished steel; keyed to wheel hub.
2. Shaft Bearings: Permanently lubricated, permanently sealed, self-aligning ball bearings.
3. Pulleys: Cast-iron, adjustable-pitch motor pulley.
4. Fan and motor isolated from exhaust airstream.

F. Accessories:

1. Disconnect Switch: Nonfusible type, with thermal-overload protection mounted inside fan housing, factory wired through internal aluminum conduit.
2. Bird Screens: Removable, 1/2-inch mesh, aluminum or brass wire.
3. Dampers: Counterbalanced, parallel-blade, backdraft dampers mounted in wall sleeve; factory set to close when fan stops.

2.02 MOTORS

A. Comply with requirements in Division 15 Section "Motors."

B. Enclosure Type: Totally enclosed, fan cooled.

PART 3 - EXECUTION

3.01 INSTALLATION

A. Install power ventilators level and plumb.

B. Support units using elastomeric mounts.

C. Secure roof-mounting fans to roof curbs with cadmium-plated hardware. Refer to Division 7 Section "Roof Accessories" for installation of roof curbs.

D. Ceiling Units: Suspend units from structure; use steel wire or metal straps.

E. Install units with clearances for service and maintenance.

F. Duct installation and connection requirements are specified in other Division 15 Sections. Drawings indicate general arrangement of ducts and duct accessories. Make final duct connections with flexible connectors. Flexible connectors are specified in Division 15 Section "Duct Accessories."

G. Install ducts adjacent to power ventilators to allow service and maintenance.

H. Ground equipment according to Division 16 Section "Grounding and Bonding."

I. Connect wiring according to Division 16 Section "Conductors and Cables."

3.02 FIELD QUALITY CONTROL

A. Perform the following field tests and inspections and prepare test reports:

1. Verify that shipping, blocking, and bracing are removed.
2. Verify that unit is secure on mountings and supporting devices and that connections to ducts and electrical components are complete. Verify that proper thermal-overload protection is installed in motors, starters, and disconnect switches.
3. Verify that cleaning and adjusting are complete.
4. Disconnect fan drive from motor, verify proper motor rotation direction, and verify fan wheel free rotation and smooth bearing operation. Reconnect fan drive system, align and adjust belts, and install belt guards.
5. Adjust belt tension.
6. Adjust damper linkages for proper damper operation.
7. Verify lubrication for bearings and other moving parts.
8. Verify that manual dampers in connected ductwork systems are in fully open position.
9. Disable automatic temperature-control operators, energize motor and adjust fan to indicated rpm, and measure and record motor voltage and amperage.
10. Shut unit down and reconnect automatic temperature-control operators.
11. Remove and replace malfunctioning units and retest as specified above.

B. Test and adjust controls and safeties. Replace damaged and malfunctioning controls and equipment.

END OF SECTION 15838

SECTION 15855

DIFFUSERS, REGISTERS, AND GRILLES

PART 1 - GENERAL

1.01 SUMMARY

A. Section Includes:
   1. Rectangular and square ceiling diffusers.
   2. Perforated diffusers.
   3. Louver face diffusers.
   4. Fixed face registers and grilles.

B. Related Sections:

   1. Division 10 Section "Louvers and Vents" for fixed and adjustable louvers and wall vents, whether or not they are connected to ducts.
   2. Division 15 Section "Duct Accessories" for fire and smoke dampers and volume-control dampers not integral to diffusers, registers, and grilles.

1.02 SUBMITTALS

A. Product Data: For each type of product indicated, include the following:

   1. Data Sheet: Indicate materials of construction, finish, and mounting details; and performance data including throw and drop, static-pressure drop, and noise ratings.
   2. Diffuser, Register, and Grille Schedule: Indicate drawing designation, room location, quantity, model number, size, and accessories furnished.

B. Samples: For each exposed product and for each color and texture specified.

1.03 TRAINING

A. No training is required.

1.04 OPERATION AND MAINTENANCE

A. Provide O&M data sheets per Division 1 specifications.

PART 2 - PRODUCTS

2.01 CEILING DIFFUSERS

A. Rectangular and Square Ceiling Diffusers:

1. Basis-of-Design Product: Subject to compliance with requirements, provide product indicated on Drawings or comparable product by one of the following:
   a. Krueger.
   b. METALAIRE, Inc.
   c. Price Industries.
   d. Titus.

2. Devices shall be specifically designed for variable-air-volume flows.
3. Material: Steel or Aluminum.
4. Finish: Baked enamel, white.
5. Mounting: Surface or T-bar.
6. Accessories: See Schedule

B. Louver Face Diffuser:
1. Basis-of-Design Product: Subject to compliance with requirements, provide product indicated on Drawings or comparable product by one of the following:
   a. Price Industries.
   b. Titus.
   c. Tuttle & Bailey.

2. Devices shall be specifically designed for variable-air-volume flows.
3. Material: Steel orAluminum.
4. Finish: Baked enamel, white.
5. Mounting: Surface .
6. Accessories: See Schedule

2.02 REGISTERS AND GRILLES

A. Fixed Face Register:
1. Basis-of-Design Product: Subject to compliance with requirements, provide product indicated on Drawings or comparable product by one of the following:
   a. Price Industries.
   b. Titus.
   c. Tuttle & Bailey.

2. Material: Steel or Aluminum.
3. Finish: Baked enamel, white.
4. Face Arrangement: 1/2-by-1/2-by-1/2-inch grid core.
5. Frame: 1-1/4 inches wide.
6. Accessory: See Schedule.

B. Fixed Face Grille:
1. Basis-of-Design Product: Subject to compliance with requirements, provide product indicated on Drawings or comparable product by one of the following:
   a. Price Industries.
   b. Titus.
   c. Tuttle & Bailey.

2. Material: Steel or Aluminum.
3. Finish: Baked enamel, white.
4. Frame: 1-1/4 inches wide.
5. Accessory: See Schedule.

2.03 SOURCE QUALITY CONTROL

A. Verification of Performance: Rate diffusers, registers, and grilles according to ASHRAE 70, "Method of Testing for Rating the Performance of Air Outlets and Inlets."

PART 3 - EXECUTION

3.01 INSTALLATION

A. Install diffusers, registers, and grilles level and plumb.

B. Ceiling-Mounted Outlets and Inlets: Drawings indicate general arrangement of ducts, fittings, and accessories. Air outlet and inlet locations have been indicated to achieve design requirements for air volume, noise criteria, airflow pattern, throw, and pressure drop. Make final locations where indicated, as much as practical. For units installed in lay-in ceiling panels, locate units in the center of panel. Where architectural features or other items conflict with installation, notify Architect for a determination of final location.

C. Install diffusers, registers, and grilles with airtight connections to ducts and to allow service and maintenance of dampers, air extractors, and fire dampers.

3.02 ADJUSTING

A. After installation, adjust diffusers, registers, and grilles to air patterns indicated, or as directed, before starting air balancing.

END OF SECTION 15855

Section 15885

VENT ROOF HOODS

PART 1 - GENERAL

1-1. SCOPE. This section covers the furnishing and installation of vent roof hood equipment, devices, and appurtenances associated with the clearwell vent systems.

1-2. GENERAL. Equipment furnished and installed under this section shall be fabricated, assembled, erected, and placed in proper operating condition in full conformity with the Drawings, Specifications, engineering data, instructions, and recommendations of the equipment manufacturer unless exceptions are noted by Engineer.

1-2.01. Coordination. Contractor shall verify that each component of the system is compatible with all other parts of the system; that all materials and sizes are appropriate; and that all devices necessary for a properly functioning system have been provided.

Where two or more units of the same class of equipment are needed, they shall be the product of a single manufacturer; however, all the component parts of the system need not be the products of one manufacturer.

Where several manufacturers' names have been listed in this section as possible suppliers, only the products of the first manufacturer listed have been checked for size, functions, and features.

1-2.02. General Equipment Stipulations. The General Equipment Stipulations shall apply to all equipment and materials furnished under this section. If requirements in this specification differ from those in the General Equipment Stipulations, the requirements specified herein shall take precedence.

1-2.03. Seismic Design Requirements. Seismic design requirements for products specified herein shall be as indicated in the Meteorological and Seismic Design Criteria section.

1-2.04. Governing Standards. Except as modified or supplemented herein, all work covered by this section shall be performed in accordance with all applicable municipal codes and ordinances, laws, and regulations. In case of a conflict between this section and any state law or local ordinance, the latter shall govern.

All work shall comply with UL safety requirements.

1-2.05. Power Supply. Not Used.

1-2.06. Metal Thickness. Metal thickness and gages specified herein are minimum requirements. Gages refer to US Standard gage.

1-3. SUBMITTALS.

1-3.01. Drawings and Data. Complete assembly and installation drawings, together with detailed specifications and data covering materials, parts, devices, and accessories forming a part of the equipment furnished, shall be submitted in accordance with the Submittals section. Device tag numbers indicated on the design documents shall be referenced in the submittal. The data and specifications for each unit shall include, but shall not be limited to, the following:

Equipment (not specifically listed)

Name of manufacturer.
Type and model.
Construction materials, thickness, and finishes.
Manufacturer's performance data.
Overall dimensions and required clearances.
Net weight and load distribution.

1-4. DELIVERY, STORAGE, AND HANDLING. Shipping shall be in accordance with the Product Delivery Requirements section. Handling and Storage shall be in accordance with the Product Storage and Handling Requirements section.

PART 2 - PRODUCTS

2-1. SERVICE CONDITIONS. All equipment shall be designed and selected to meet the specified conditions.

2-2. PERFORMANCE AND DESIGN REQUIREMENTS. Equipment capacities shall be as indicated herein.

2-2.01. Dimensional Restrictions. Layout dimensions will vary between manufacturers and the layout area indicated on the Drawings is based on typical values of the first manufacturer listed. Contractor shall review the contract Drawings, the manufacturer’s layout drawings, and installation requirements and shall make any modifications required for proper installation subject to acceptance by Engineer. At least 3 feet of clear access space shall be provided on all sides of the unit unless otherwise indicated.

2-2.02. Elevation. Equipment shall be designed to operate at the elevation indicated in the Meteorological and Seismic Design Criteria section. All equipment furnished for sites above 2000 feet [610 m] above sea level shall be

properly derated to operate and meet the specified capacities at the site conditions.

2-3. ACCEPTABLE MANUFACTURERS. Acceptable manufacturers shall be as listed in the respective product description paragraphs.

2-4. MATERIALS.

2-4.01. Vent Roof Hoods. Roof Hoods, denoted by the symbol "RH" and an identifying number, also referred to as vent hoods on the drawings, shall be United Enertech “Model PFL-D-4.”

Roof hoods shall be high performance louvered penthouse type suitable for both air intake and exhaust and shall have throat dimensions as indicated in the table below. The roof hood assembly shall be constructed of 0.081” extruded aluminum. Each roof hood shall be complete with a louvered weather hood sized to limit the face free area velocity to 400 feet per minute, 18-14 mesh insect screen of stainless steel material over all openings, a hinged pitched roof, closed cell insulation, and a mounting base with extended sill suitable for installation on a curb as indicated on the Drawings. Roof hood construction shall have a wind rating of 125 MPH.

Roof hoods shall be given a bronze Kynar coating resistant to a corrosive chlorine atmosphere.

2-4.01.01. Minimum Performance Requirements:

Tag	Location	CFM	Throat (in.)	Height (in.)
RH-01	Southside Clearwell	11,140	108 x 48	54
RH-02	Northwest Clearwell	7,430	66 x 40	48

2-5. MANUFACTURE AND FABRICATION.

2-5.01. Anchor Bolts and Expansion Anchors. Anchor bolts, expansion anchors, nuts, and washers shall be as indicated in the Anchorage in Concrete and Masonry section unless otherwise indicated on the Drawings.

PART 3 - EXECUTION

3-1. INSPECTION. Contractor shall field verify opening dimensions and other provisions for installation prior to purchasing equipment.

3-2. PREPARATION.

3-2.01. Field Measurement. Contractor shall be responsible for verifying all field dimensions, and for verifying location of all equipment relative to any existing equipment or structures.

3-2.02. Surface Preparation. Surface finish damaged during installation shall be repaired to the satisfaction of Engineer. Field painting shall be as specified in the Protective Coatings sections.

3-3. INSTALLATION. Equipment and materials furnished under this section shall be installed in proper operating condition in full conformity with the drawings, specifications, engineering data, instructions, and recommendations of the equipment manufacturer, unless exceptions are noted by Engineer.

3-3.01. Vent Roof Hoods. Roof hoods shall be secured with stainless steel anchors. A ¼" thick chlorine resistant elastomeric curb seal shall be installed and shall prevent direct contact between the roof hood and the concrete curb.

3-4. FIELD QUALITY CONTROL.

3-4.01. Installation Check. An installation check by an authorized representative of the manufacturer is not required for equipment specified in this section.

3-4.02. Startup and Testing. Tests shall be as indicated in the Startup Requirements section.

If inspection or tests indicate defects, the defective work or material shall be replaced, and inspection and tests repeated.

3-5. CLEANING. At the completion of the testing, all equipment shall be cleaned of grease, debris, metal cuttings, and dirt. Any stoppage, discoloration, or other damage to parts of the structure, its finish, or furnishings shall be repaired by Contractor at no additional cost to Owner.

End of Section

SECTION 15950

TESTING, ADJUSTING, AND BALANCING

PART 1 - GENERAL

1.01 SUMMARY

A. Section Includes:

1. Balancing Air Systems:

a. Constant-volume air systems.

1.02 DEFINITIONS

A. AABC: Associated Air Balance Council.

B. NEBB: National Environmental Balancing Bureau.

C. TAB: Testing, adjusting, and balancing.

D. TABB: Testing, Adjusting, and Balancing Bureau.

E. TAB Specialist: An entity engaged to perform TAB Work.

1.03 SUBMITTALS

A. Strategies and Procedures Plan: Within 30 days of Contractor's Notice to Proceed, submit TAB strategies and step-by-step procedures as specified in "Preparation" Article.

B. Certified TAB reports.

1.04 QUALITY ASSURANCE

A. TAB Contractor Qualifications: Engage a TAB entity certified by AABC, NEBB or TABB.

1. TAB Field Supervisor: Employee of the TAB contractor and certified by AABC, NEBB or TABB.
2. TAB Technician: Employee of the TAB contractor and who is certified by AABC, NEBB or TABB as a TAB technician.

B. Certify TAB field data reports and perform the following:

1. Review field data reports to validate accuracy of data and to prepare certified TAB reports.
2. Certify that the TAB team complied with the approved TAB plan and the procedures specified and referenced in this Specification.

C. TAB Report Forms: Use standard TAB contractor's forms.

D. Instrumentation Type, Quantity, Accuracy, and Calibration: As described in ASHRAE 111, Section 5, "Instrumentation."

E. **TAB SUBCONTRACTOR SHALL BE HIRED, DIRECTED AND PAID BY THE GENERAL CONTRACTOR, INDEPENDENT OF THE MECHANICAL CONTRACTOR.**

F. Acceptable TAB subcontractors:
   1. PHI
   2. Air Technologies
   3. Fluid Balance, Inc.

1.05 TRAINING

A. No training is required.

1.06 OPERATION AND MAINTENANCE (Not Applicable)

PART 2 - PRODUCTS (Not Applicable)

PART 3 - EXECUTION

3.01 EXAMINATION

A. Examine the Contract Documents to become familiar with Project requirements and to discover conditions in systems' designs that may preclude proper TAB of systems and equipment.

B. Examine systems for installed balancing devices, such as manual volume dampers. Verify that locations of these balancing devices are accessible.

C. Examine the approved submittals for HVAC systems and equipment.

D. Examine design data including HVAC system descriptions, statements of design assumptions for environmental conditions and systems' output, and statements of philosophies and assumptions about HVAC system and equipment controls.

E. Examine ceiling plenums used for supply, return, or relief air to verify that they meet the leakage class of connected ducts as specified in Division 15 Section "Metal Ducts" and are properly separated from adjacent areas. Verify that penetrations in plenum walls are sealed and fire-stopped if required.

F. Examine equipment performance data including fan curves.

   1. Relate performance data to Project conditions and requirements, including system effects that can create undesired or unpredicted conditions that cause reduced capacities in all or part of a system.
   2. Calculate system-effect factors to reduce performance ratings of HVAC equipment when installed under conditions different from the conditions used to rate equipment

performance. To calculate system effects for air systems, use tables and charts found in AMCA 201, "Fans and Systems," or in SMACNA's "HVAC Systems - Duct Design." Compare results with the design data and installed conditions.

G. Examine system and equipment installations and verify that field quality-control testing, cleaning, and adjusting specified in individual Sections have been performed.

H. Examine test reports specified in individual system and equipment Sections.

I. Examine HVAC equipment and filters and verify that bearings are greased, belts are aligned and tight, and equipment with functioning controls is ready for operation.

J. Examine heat-transfer coils for correct piping connections and for clean and straight fins.

K. Examine operating safety interlocks and controls on HVAC equipment.

L. Report deficiencies discovered before and during performance of TAB procedures. Observe and record system reactions to changes in conditions. Record default set points if different from indicated values.

M. Perform duct leak testing of all duct systems. Coordinate testing with Commissioning Agent and Engineer. Leakage shall be less than 6 CFM per SF of conditioned floor area served by the unit, at 25 Pa test pressure, or as required by latest code and ordinance.

3.02 PREPARATION

A. Prepare a TAB plan that includes strategies and step-by-step procedures.

B. Complete system-readiness checks and prepare reports. Verify the following:

1. Permanent electrical-power wiring is complete.
2. Automatic temperature-control systems are operational.
3. Equipment and duct access doors are securely closed.
4. Balance, smoke, and fire dampers are open.
5. Isolating and balancing valves are open.
6. Ceilings are installed in critical areas where air-pattern adjustments are required and access to balancing devices is provided.
7. Windows and doors can be closed so indicated conditions for system operations can be met.

C. TAB Subcontractor shall visit the site not less than twice during the duct installation, prior to insulation, to verify balancing devices are being installed in proper locations and functional for balancing efforts. Submit a written report at each visit as to what was found, and any recommendations, and to verify corrections were or were not made from previous visits.

D. Coordinate with the Mechanical Contractor to participate in a complete duct leakage test for the supply and return duct.

3.03 GENERAL PROCEDURES FOR TESTING AND BALANCING

A. Perform testing and balancing procedures on each system according to the procedures contained in AABC's "National Standards for Total System Balance" or ASHRAE 111 or NEBB's

"Procedural Standards for Testing, Adjusting, and Balancing of Environmental Systems" or SMACNA's "HVAC Systems - Testing, Adjusting, and Balancing" and in this Section.

1. Comply with requirements in ASHRAE 62.1-2004, Section 7.2.2, "Air Balancing."

B. Cut insulation, ducts, pipes, and equipment cabinets for installation of test probes to the minimum extent necessary for TAB procedures.

1. After testing and balancing, patch probe holes in ducts with same material and thickness as used to construct ducts.
2. Install and join new insulation that matches removed materials. Restore insulation, coverings, vapor barrier, and finish according to Division 15 Section "HVAC Insulation."

C. Mark equipment and balancing devices, including damper-control positions, valve position indicators, fan-speed-control levers, and similar controls and devices, with paint or other suitable, permanent identification material to show final settings.

D. Take and report testing and balancing measurements in inch-pound (IP) units.

3.04 GENERAL PROCEDURES FOR BALANCING AIR SYSTEMS

A. Prepare test reports for both fans and outlets. Obtain manufacturer's outlet factors and recommended testing procedures. Crosscheck the summation of required outlet volumes with required fan volumes.

B. Prepare schematic diagrams of systems' "as-built" duct layouts.

C. Determine the best locations in main and branch ducts for accurate duct-airflow measurements.

D. Check airflow patterns from the outdoor-air louvers and dampers and the return- and exhaust-air dampers through the supply-fan discharge and mixing dampers.

E. Locate start-stop and disconnect switches, electrical interlocks, and motor starters.

F. Verify that motor starters are equipped with properly sized thermal protection.

G. Check dampers for proper position to achieve desired airflow path.

H. Check for airflow blockages.

I. Check condensate drains for proper connections and functioning.

J. Check for proper sealing of air-handling-unit components.

K. Verify that air duct system is sealed as specified in Division 15 Section "Metal Ducts."

3.05 PROCEDURES FOR CONSTANT-VOLUME AIR SYSTEMS

A. Adjust fans to deliver total indicated airflows within the maximum allowable fan speed listed by fan manufacturer.

1. Measure total airflow.

a. Where sufficient space in ducts is unavailable for Pitot-tube traverse measurements, measure airflow at terminal outlets and inlets and calculate the total airflow.

2. Measure fan static pressures as follows to determine actual static pressure:

a. Measure outlet static pressure as far downstream from the fan as practical and upstream from restrictions in ducts such as elbows and transitions.
b. Measure static pressure directly at the fan outlet or through the flexible connection.
c. Measure inlet static pressure of single-inlet fans in the inlet duct as near the fan as possible, upstream from the flexible connection, and downstream from duct restrictions.

3. Measure static pressure across each component that makes up an air-handling unit.

a. Report the cleanliness status of filters and the time static pressures are measured.

4. Review Record Documents to determine variations in design static pressures versus actual static pressures. Calculate actual system-effect factors. Recommend adjustments to accommodate actual conditions.
Comply with requirements in Division 15 Sections for air-handling units for adjustment of fans, belts, and pulley sizes to achieve indicated air-handling-unit performance.
5. Do not make fan-speed adjustments that result in motor overload. Consult equipment manufacturers about fan-speed safety factors. Modulate dampers and measure fan-motor amperage to ensure that no overload will occur. Measure amperage in full-cooling, full-heating, economizer, and any other operating mode to determine the maximum required brake horsepower.

B. Adjust volume dampers for main duct, submain ducts, and major branch ducts to indicated airflows within specified tolerances.

1. Measure airflow of submain and branch ducts.

a. Where sufficient space in submain and branch ducts is unavailable for Pitot-tube traverse measurements, measure airflow at terminal outlets and inlets and calculate the total airflow for that zone.

2. Measure static pressure at a point downstream from the balancing damper, and adjust volume dampers until the proper static pressure is achieved.
3. Remeasure each submain and branch duct after all have been adjusted. Continue to adjust submain and branch ducts to indicated airflows within specified tolerances.

C. Measure air outlets and inlets without making adjustments.

1. Measure terminal outlets using a direct-reading hood or outlet manufacturer's written instructions and calculating factors.

D. Adjust air outlets and inlets for each space to indicated airflows within specified tolerances of indicated values. Make adjustments using branch volume dampers rather than extractors and the dampers at air terminals.

1. Adjust each outlet in same room or space to within specified tolerances of indicated quantities without generating noise levels above the limitations prescribed by the Contract Documents.
2. Adjust patterns of adjustable outlets for proper distribution without drafts.

3.06 PROCEDURES FOR MOTORS

A. Motors, 1/2 HP and Larger: Test at final balanced conditions and record the following data:

1. Manufacturer's name, model number, and serial number.
2. Motor horsepower rating.
3. Motor rpm.
4. Efficiency rating.
5. Nameplate and measured voltage, each phase.
6. Nameplate and measured amperage, each phase.
7. Starter thermal-protection-element rating.

B. Motors Driven by Variable-Frequency Controllers: Test for proper operation at speeds varying from minimum to maximum. Test the manual bypass of the controller to prove proper operation. Record observations including name of controller manufacturer, model number, serial number, and nameplate data.

3.07 PROCEDURES FOR CONDENSING UNITS

A. Verify proper rotation of fans.

B. Measure entering- and leaving-air temperatures.

C. Record compressor data.

3.08 TOLERANCES

A. Set HVAC system's air flow rates and water flow rates within the following tolerances:

1. Supply, Return, and Exhaust Fans and Equipment with Fans: Plus or minus 10 percent.
2. Air Outlets and Inlets: Plus or minus 10 percent.

3.09 REPORTING

A. Initial Construction-Phase Report: Based on examination of the Contract Documents as specified in "Examination" Article, prepare a report on the adequacy of design for systems' balancing devices. Recommend changes and additions to systems' balancing devices to facilitate proper performance measuring and balancing. Recommend changes and additions to HVAC systems and general construction to allow access for performance measuring and balancing devices.

3.010 FINAL REPORT

A. General: Prepare a certified written report; tabulate and divide the report into separate sections for tested systems and balanced systems.

1. Include a certification sheet at the front of the report's binder, signed and sealed by the certified testing and balancing engineer.
2. Include a list of instruments used for procedures, along with proof of calibration.

B. Final Report Contents: In addition to certified field-report data, include the following:

1. Pump curves.
2. Fan curves.
3. Manufacturers' test data.
4. Field test reports prepared by system and equipment installers.
5. Other information relative to equipment performance; do not include Shop Drawings and product data.

C. General Report Data: In addition to form titles and entries, include the following data:

1. Title page.
2. Name and address of the TAB contractor.
3. Project name.
4. Project location.
5. Architect's name and address.
6. Engineer's name and address.
7. Contractor's name and address.
8. Report date.
9. Signature of TAB supervisor who certifies the report.
10. Table of Contents with the total number of pages defined for each section of the report. Number each page in the report.
11. Summary of contents including the following:

    a. Indicated versus final performance.
    b. Notable characteristics of systems.
    c. Description of system operation sequence if it varies from the Contract Documents.

12. Nomenclature sheets for each item of equipment.
13. Data for terminal units, including manufacturer's name, type, size, and fittings.
14. Notes to explain why certain final data in the body of reports vary from indicated values.
15. Test conditions for fans and pump performance forms including the following:

    a. Settings for outdoor-, return-, and exhaust-air dampers.
    b. Conditions of filters.
    c. Cooling coil, wet- and dry-bulb conditions.
    d. Face and bypass damper settings at coils.
    e. Fan drive settings including settings and percentage of maximum pitch diameter.
    f. Inlet vane settings for variable-air-volume systems.
    g. Settings for supply-air, static-pressure controller.
    h. Other system operating conditions that affect performance.

D. System Diagrams: Include schematic layouts of air distribution systems. Present each system with single-line diagram and include the following:

1. Quantities of outdoor, supply, return, and exhaust airflows.
2. Duct, outlet, and inlet sizes.

3.011 ADDITIONAL TESTS

A. Within 90 days of completing TAB, perform additional TAB to verify that balanced conditions are being maintained throughout and to correct unusual conditions.

B. Seasonal Periods: If initial TAB procedures were not performed during near-peak summer and winter conditions, perform additional TAB during near-peak summer and winter conditions.

END OF SECTION 15950

SECTION 15990

COMMISSIONING OF HVAC

PART 1 - GENERAL

1.1 SUMMARY

A. Section includes commissioning process requirements for HVAC&R systems, assemblies, and equipment.

1.2 DEFINITIONS

A. Commissioning Plan: A document that outlines the organization, schedule, allocation of resources, and documentation requirements of the commissioning process.

B. CxA: Commissioning Authority, hired by Contractor.

C. HVAC&R: Heating, Ventilating, Air Conditioning, and Refrigeration.

D. Systems, Subsystems, Equipment, and Components: Where these terms are used together or separately, they shall mean "as-built" systems, subsystems, equipment, and components.

1.3 CONTRACTOR'S RESPONSIBILITIES

A. Perform commissioning tests at the direction of the CxA.

B. Attend construction phase controls coordination meeting.

C. Attend testing, adjusting, and balancing review and coordination meeting.

D. Participate in HVAC&R systems, assemblies, equipment, and component maintenance orientation and inspection as directed by the CxA.

E. Provide information requested by the CxA for final commissioning documentation.

F. Provide measuring instruments and logging devices to record test data, and provide data acquisition equipment to record data for the complete range of testing for the required test period.

1.4 CxA'S RESPONSIBILITIES

A. Provide Project-specific construction checklists and commissioning process test procedures for actual HVAC&R systems, assemblies, equipment, and components to be furnished and installed as part of the construction contract.

B. Direct commissioning testing.

C. Verify testing, adjusting, and balancing of Work are complete.

D. Provide test data, inspection reports, and certificates in Systems Manual.

1.5 COMMISSIONING DOCUMENTATION

A. Provide the following information to the CxA for inclusion in the commissioning plan:

1. Plan for delivery and review of submittals, systems manuals, and other documents and reports.
2. Identification of installed systems, assemblies, equipment, and components including design changes that occurred during the construction phase.
3. Process and schedule for completing construction checklists and manufacturer's prestart and startup checklists for HVAC&R systems, assemblies, equipment, and components to be verified and tested.
4. Certificate of readiness, signed by the Contractor, certifying that HVAC&R systems, assemblies, equipment, components, and associated controls are ready for testing.
5. Certificate of completion certifying that installation, prestart checks, and startup procedures have been completed.
6. Certificate of readiness certifying that HVAC&R systems, subsystems, equipment, and associated controls are ready for testing.
7. Test and inspection reports and certificates.
8. Corrective action documents.
9. Verification of testing, adjusting, and balancing reports.

1.6 SUBMITTALS

A. Certificates of readiness.

B. Certificates of completion of installation, prestart, and startup activities.

PART 2 - PRODUCTS (Not Used)

PART 3 - EXECUTION

3.1 TESTING PREPARATION

A. Certify that HVAC&R systems, subsystems, and equipment have been installed, calibrated, and started and are operating according to the Contract Documents.

B. Certify that HVAC&R instrumentation and control systems have been completed and calibrated, that they are operating according to the Contract Documents, and that pretest set points have been recorded.

C. Certify that testing, adjusting, and balancing procedures have been completed and that testing, adjusting, and balancing reports have been submitted, discrepancies corrected, and corrective work approved.

D. Set systems, subsystems, and equipment into operating mode to be tested (e.g., normal shutdown, normal auto position, normal manual position, unoccupied cycle, emergency power, and alarm conditions).

E. Inspect and verify the position of each device and interlock identified on checklists.

F. Check safety cutouts, alarms, and interlocks with smoke control and life-safety systems during each mode of operation.

G. Testing Instrumentation: Install measuring instruments and logging devices to record test data as directed by the CxA.

3.2 TESTING AND BALANCING VERIFICATION

A. Prior to performance of testing and balancing Work, provide copies of reports, sample forms, checklists, and certificates to the CxA.

B. Notify the CxA at least 10 days in advance of testing and balancing Work, and provide access for the CxA to witness testing and balancing Work.

C. Provide technicians, instrumentation, and tools to verify testing and balancing of HVAC&R systems at the direction of the CxA.

1. The CxA will notify testing and balancing Subcontractor 10 days in advance of the date of field verification. Notice will not include data points to be verified.
2. The testing and balancing Subcontractor shall use the same instruments (by model and serial number) that were used when original data were collected.
3. Failure of an item includes, other than sound, a deviation of more than 10 percent. Failure of more than 10 percent of selected items shall result in rejection of final testing, adjusting, and balancing report. For sound pressure readings, a deviation of 3 dB shall result in rejection of final testing. Variations in background noise must be considered.
4. Remedy the deficiency and notify the CxA so verification of failed portions can be performed.

3.3 GENERAL TESTING REQUIREMENTS

A. Provide technicians, instrumentation, and tools to perform commissioning test at the direction of the CxA.

B. Scope of HVAC&R testing shall include entire HVAC&R installation, from central equipment for heat generation and refrigeration through distribution systems to each conditioned space. Testing shall include measuring capacities and effectiveness of operational and control functions.

C. Test all operating modes, interlocks, control responses, and responses to abnormal or emergency conditions, and verify proper response of building automation system controllers and sensors.

D. The CxA along with the HVAC&R Subcontractor, testing and balancing Subcontractor, and HVAC&R Instrumentation and Control Subcontractor shall prepare detailed testing plans, procedures, and checklists for HVAC&R systems, subsystems, and equipment.

E. Tests will be performed using design conditions whenever possible.

F. Simulated conditions may need to be imposed using an artificial load when it is not practical to test under design conditions. Before simulating conditions, calibrate testing instruments. Provide equipment to simulate loads. Set simulated conditions as directed by the CxA and

document simulated conditions and methods of simulation. After tests, return settings to normal operating conditions.

G. The CxA may direct that set points be altered when simulating conditions is not practical.

H. The CxA may direct that sensor values be altered with a signal generator when design or simulating conditions and altering set points are not practical.

I. If tests cannot be completed because of a deficiency outside the scope of the HVAC&R system, document the deficiency and report it to the Owner. After deficiencies are resolved, reschedule tests.

J. If the testing plan indicates specific seasonal testing, complete appropriate initial performance tests and documentation and schedule seasonal tests.

3.4 HVAC&R SYSTEMS, SUBSYSTEMS, AND EQUIPMENT TESTING PROCEDURES

A. HVAC&R Instrumentation and Control System Testing: Field testing plans and testing requirements are specified in Division 15 Section "Testing, Adjusting and Balancing." Assist the CxA with preparation of testing plans.

B. Pipe system cleaning, flushing, hydrostatic tests, and chemical treatment requirements are specified in Division 15 piping Sections. HVAC&R Subcontractor shall prepare a pipe system cleaning, flushing, and hydrostatic testing plan. Provide cleaning, flushing, testing, and treating plan and final reports to the CxA. Plan shall include the following:

1. Sequence of testing and testing procedures for each section of pipe to be tested, identified by pipe zone or sector identification marker. Markers shall be keyed to Drawings for each pipe sector, showing the physical location of each designated pipe test section. Drawings keyed to pipe zones or sectors shall be formatted to allow each section of piping to be physically located and identified when referred to in pipe system cleaning, flushing, hydrostatic testing, and chemical treatment plan.
2. Description of equipment for flushing operations.
3. Minimum flushing water velocity.
4. Tracking checklist for managing and ensuring that all pipe sections have been cleaned, flushed, hydrostatically tested, and chemically treated.

C. Refrigeration System Testing: Provide technicians, instrumentation, tools, and equipment to test performance of chillers, cooling towers, refrigerant compressors and condensers, heat pumps, and other refrigeration systems. The CxA shall determine the sequence of testing and testing procedures for each equipment item and pipe section to be tested.

D. HVAC&R Distribution System Testing: Provide technicians, instrumentation, tools, and equipment to test performance of air, steam, and hydronic distribution systems; special exhaust; and other distribution systems, including HVAC&R terminal equipment and unitary equipment.

E. Vibration and Sound Tests: Provide technicians, instrumentation, tools, and equipment to test performance of vibration isolation and seismic controls.

END OF SECTION 15990

SECTION 16041

5KV MOTOR CONTROL CENTERS MODIFICATIONS

PART 1 - GENERAL

1-1. SCOPE OF WORK

1-1.01. The Contractor shall furnish and install the proposed 5kV motor control center starters as well as the modifications required to the Owner's existing 5kV motor control centers as specified herein and as shown on the PLANS.

1-1.02. The existing 5kV motor control centers and corresponding 5kV metal-enclosed overhead bus duct are a product of Cutler-Hammer (Eaton) and were manufactured in year 2001.

1-1.03. The existing motor control centers are vital to the Owner's waste-water treatment plant process system. Therefore, required interruptions to the plant process shall be minimized and carefully coordinated with the Owner. Regarding interruptions, refer to and comply with the General Notes shown on the Electrical PLANS.

1-1.04. The arrangement and dimensions of the existing motor control centers are based on the data available and information provided by the Owner and based on site investigations. The Contractor shall also field verify all available data/information prior to commencement of the improvements required under this project. Should any deviation be found between the PLANS and the Contractor's site findings, it shall be brought to the attention of the Owner prior to Bid. Otherwise, it shall be assumed that conditions are as is and no additional, less, and/or departure of work is expected from what is shown on the PLANS and Specified herein.

1-1.05. The proposed 5kV motor control center starters shall be close-coupled to the Owner's existing 5kV motor control center lineup as also shown on the Drawings.

1-2. RELATED REQUIREMENTS

1-2.01. The PLANS designate type, number, size, and rating of devices included in the "MCCs".

1-2.02. Related work as called for on the PLANS, as specified herein or in other Sections of the Specifications.

1-3. QUALITY ASSURANCE

1-3.01. All parts and distribution and control equipment required to modify the existing motor control centers shall be the product of the original manufacturer of the motor control centers, Cutler-Hammer (Eaton), and/or as recommended/approved by Cutler-Hammer, NO EQUAL, for use in the existing Motor Control Centers, and as also called for on the PLANS and in compliance with this Section of the Specifications. Substitute manufacturers will not be accepted.

1-3.02. Modifications to the motor control centers shall be performed and tested in accordance with the latest applicable requirements of NEMA, ANSI, UL, and NEC standards. Modifications to the motor control centers shall be performed by qualified, experienced, Cutler-Hammer (Eaton) trained technical (non-sales type) employees of Cutler-Hammer (Eaton) with NO EQUAL accepted.

1-3.03. In addition to these Specifications, refer to the PLANS for specific requirements on the 5kV Motor Control Centers.

1-4. SHOP DRAWING SUBMITTALS

1-4.01. Submit complete shop drawings and engineering data for review per the requirements of Section 01300 of the Contract Specifications. At minimum, shop drawings data shall include the following:

a. For each 5kV MCC, submit (as minimum):

1. One-line, three-line, and all power, control, and auxiliary wiring diagrams and/or schematics on engineered drawings.

2. Dimensioned/scaled top and bottom views, front elevations, and internal component/device layouts. Include overall weight for each vertical section.

3. Catalog cut sheets

4. All component, devices, etc, installed, including the MCC ratings, size, capacity, fault bracing, etc.

5. Prior to shipment of the equipment to the project site, submit certified factory test reports as described in Subsection 3.1, this Section of the Specifications.

6. Field test results

1-4.02. Operation and Maintenance Manuals

a. Submit operation and maintenance manuals per the requirements Section 01300 of the Contract Specifications. At minimum, the manuals shall be inclusive of the requirements of this Subsection of the Specifications and as follows:

1. Installation and operation manuals

2. Renewal parts bulletin.

3. As built drawings, including approved shop drawings.

4. Test data.

1-4.03. Submit report of results of arc-flash hazard analysis, short circuit analysis, coordination study, and motor starting studies described in Subsection 1.08, this Section of the Specifications, in accordance with the requirements of Section 01300 of the Contract Specifications. Submit preliminary analysis report(s) for review. Include the following data:

a. Executive Summary discussion narrative

b. Short-Circuit Methodology Analysis Results and Recommendations, with discussion narrative and device evaluation/comparison tables as applicable

c. Protective Device Coordination Methodology Analysis Results and Recommendations, with discussion narrative and device settings tables as applicable

d. Time-Current Coordination Graphs and Recommendations

e. Arc Flash Hazard Methodology Analysis Results and Recommendations with discussion narrative and tables as applicable. Include text of Arc Flash labels to be provided

f. Motor starting methodology analysis results and recommendations. Submit composite graphs of voltage dip associated with motor starting measured at the primary of the process area service transformer, and motor control center bus (at minimum) for the sequential motor starting described hereinafter. Include composite graphs of motor and pump speed along with associated voltage dip. Provide commensurate graphs for each of the various reduced voltage auto-transformer tap settings and start-to-run transition time settings examined, and the final recommended setpoints. Include copies of motor and pump speed-torque characteristics and additional motor and pump information used in the study such as inertia, locked rotor current, etc

g. One-line system diagram that shall be computer generated and will clearly identify individual equipment buses, bus numbers used in the analysis, cable and bus connections between the equipment, calculated maximum short-circuit current at each bus location, device numbers used in the time-current coordination analysis, and other information pertinent to the computer analysis. Use 11” x 17” sized paper, at minimum

h. Studies input data such as X/R ratio, cable impedance, and other information, in tabular form.

i. Additional information as required by subsection 1.12, this section of the Specifications.

1-4.04. Pre-Construction Existing Protective Device Settings Archive:

a. Prior to commencing the reconfiguration/reprogramming effort of any of the Owner’s existing protective devices, develop a complete archive (back-up) of all existing protective device settings, relay configuration files, RTD alarm/trip points, etc., in order to restore all protective device settings to their pre-construction state. Submit for review. Also, submit on CD-ROM.

1-5. STORAGE AND HANDLING

1-5.01. Protection:

a. The Contractor, and hence the MCC supplier, shall be responsible for safety of the MCC products during storage, transporting and handling.

b. Deliver, store, protect, and handle products in conformance with manufacturer's recommended practices as outlined in applicable Installation and Maintenance Manuals

c. At all times, store products inside a moisture free, non-porous, extra heavy duty plastic weatherproof housing.

d. Interior and exterior of MCC shall be kept clean at all times.

1-6. TOOLS AND SPARE PARTS

1-6.01. Furnish the following spare parts with the equipment for each modified Motor Control Center lineup in conformance with the specifications:

a. Two(2) - 5kV fuse puller tong tool.

b. Two(2) - Disconnect hook stick or handle, if separable.

c. One (1) set of fuses per size – Provide one 5kV spare set of fuses for each fuse size installed in the MCCs. Include one set of spare fuses each for Potential Transformers (P.T.'s) and Control Power Transformers (C.P.T.'s).

d. 25% spare push-buttons, selector switches, indication light assemblies for each type used.

e. One(1) - Replacement coil for each size/rating coil furnished.

f. One (1) - Spare timing relay.

g. Two (2) - Full sets of vacuum bottles for motor load primary contactor.

h. One (1) - Spare control relay complete with all accessories specified. Control relays shall be furnished complete with relay coils, Four (4) Normally Open (N.O.) contacts, Four (4) Normally Closed (N.C.) contacts, and shall be furnished with Relay Manufacturer's Transient Voltage Suppression Module.

i. One (1) - Motor Protection Relays complete with all accessories as specified under subsection 2.11.

j. One (1) quart of touch-up paint.

1-7. SPECIAL MANUFACTURER'S SERVICES

1-7.01. Furnish the services of a qualified, experienced, factory trained technical (non-sales type) representative to assist in the installation of the equipment. Include checking alignment of parts, wiring connections, and functional operation test. Include time to correct and re-check any discrepancies which are discovered. Also include providing the Owner with a report certifying that the equipment was installed properly tested and set in accordance with the specifications and is in satisfactory operating condition. Format and quantity of reports shall be per the requirements of Section 01300 and 01300 of the Contract Specifications.

1-7.02. Prepare an arc-flash hazard analysis study and a coordination study, complete with short circuit calculations and coordination curves reflecting calculated fault values and recommended and/or proposed fuse type/ratings, motor protective relay settings, equipment/device settings (as applicable) from the 12,470kV level (with close coordination with the Owner's upstream 12470V protective devices) through the 208/120V subsystem level equipment and devices. Coordination with the Owner is required. Additional details concerning the implementation of the short circuit, coordination, arc flash studies such as main-tie-main circuit breaker states to be assumed, etc., will be provided after Bid Award. As shown on the PLANS, this project involves multiple facilities (Filter Building, WRI building, etc.) with each facility having multiple electrical

services requiring study. Additionally, elements of the Filter Building power distribution system are also served from a standby generator; repeat study effort associated with the generator electrical service. Additionally, repeat study effort for the existing (unmodified) distribution system of each facility to document the existing system conditions prior to the proposed modifications performed under this project for the Owner's information.

1-7.03. Prepare motor starting studies, complete with load calculations and voltage dip curves reflecting calculated load, voltage, motor and load speed-torque characteristics and values, tabulated voltage dip duration and magnitude at the 480V, 5kV, and 15kV level, and recommended and/or proposed protective relay settings, reduced voltage auto-transformer starter tap settings, start to run transition time settings, equipment/device settings (as applicable), etc. for all proposed motor starters/distribution equipment on the project. All studies shall be performed assuming each blower starts against a closed inlet guide vane. Assume that once the blower motor reduced voltage auto-transformer starter transitions from the "start" (reduced voltage Auto-transformer reduced voltage setting) setting to the "run" (full voltage auto-transformer voltage setting) setting, the inlet guide vane will open. Verify and coordinate the validity of these assumptions and the sequence of vane operation with the Owner after Bid Award and follow the recommendations of the Owner regarding the process system operation. Repeat all motor starting studies for each reduced voltage starter tap setting (50%, 65%, etc.) available for the reduced voltage starter, and also among each tap setting with a minimum of four different tap settings as applicable for each tap setting, to determine the optimal setpoints to successfully start the load while minimizing service voltage dip. Additionally, perform all motor starting studies assuming one main 12470V utility service is energized, the tie circuit breakers are closed, and the second 12470V utility service is de-energized. Perform the motor starting studies for the sequential progressive starting of the proposed pumping units. Repeat studies for each 12470V electrical service. As shown on the PLANS, this project involves multiple facilities with each facility having multiple electrical services requiring study. Additionally, elements of the Filter Building power distribution system are also served from a standby generator; repeat study effort associated with the generator electrical service.

1-7.04. The study should also include adjustments/ recommendations in the proposed/new protective relaying devices to better coordinate with the existing upstream protective devices in lieu of replacing any of the existing protective devices. The study shall also include any adjustments, recommendations, and requirements of the Owner and be fully coordinated with the Owner and the Owner's requirements. Coordinate with the Owner as required and submit documentation as required to meet the Owner's requirements at no additional cost to the Owner. The manufacturer's services should also include setting/re-

adjusting and testing/calibration of the proposed protective devices and protective relaying, etc. (Referenced below).

1-7.05. Perform the arc flash hazard analysis in conjunction with the short circuit and coordination analysis previously described herein and also in compliance with IEEE 1584 and NFPA 70E standards. The flash protection boundary and incident energy shall be calculated at all points in the distribution system (transformers, motor control centers, panelboards, etc.) where work could be performed on energized parts. The following additional requirements apply for the arc flash hazard analysis:

a. Perform arc flash hazard studies assuming one main 12470V utility service is energized, the tie circuit breakers are closed, and the second 12470V main utility service is de-energized.

b. Repeat studies for each electrical service and for each facility.

c. Calculations to address worst case (maximum) hazard analysis. Describe scenario employed in submittals.

d. Perform analysis for one (1) additional configuration of main-tie-main switch/breaker positions that will be explained by the Owner after bid award.

1-7.06. The arc flash hazard analysis effort shall also include:

a. Reporting incident energy values based upon recommended protective device settings for all equipment,

b. Reporting recommendations to reduce AFIE levels and enhance worker safety

c. Furnish and install label(s) for all equipment included in the study indicating the following, at minimum:

1. System voltage

2. Shock and Flash protection boundaries

3. Personal protective equipment requirements for each electrical task based upon hazard category (including flame resistant clothing requirements).

4. Arc flash incident energy value (cal/cm2)

5. Limited, restricted, and prohibited approach boundaries

6. Study report number and issue date

7. Additional information required by the applicable NFPA and IEEE standards.

8. Labels shall be manufacturer's standard labels with quantity and mounting location per manufacturer's standard.

1-7.07. Prior to construction, the manufacturer's technical representative is to field verify and obtain all pre-construction protective device settings for the Filter Building 1, Filter Building 2, WRI Electrical Building, and SUB1 15kV switchgear and submit to the Owner. Extensive field investigation effort is required to ascertain and document the settings of the existing protective devices, existing cable sizes, cable lengths, etc. Coordinate with the Owner to perform the necessary field investigations.

1-7.08. As shown on the PLANS, this project involves the staged/phased construction of the electrical service equipment associated with the Filter Building and WRI facility to facilitate the continuous operation of the Owner's process plant. To facilitate this staged/phased construction approach, additional system studies will be required in order to develop protective device setpoints for temporary electrical service equipment, etc., in order to fulfill the construction sequencing requirements of this project. The manufacturer shall review the construction sequencing requirements of the project and provide system studies as required to address the interim construction stages complete with associated interim protective device settings At No Additional Cost to the Owner.

1-7.09. THE ARC-FLASH STUDIES, THE SHORT CIRCUIT CALCULATIONS AND ANALYSIS, THE COORDINATION STUDY, AND THE MOTOR STARTING STUDIES, AND HARMONIC STUDY SHALL BE PERFORMED:

a. UTILIZING SKM SOFTWARE, LATEST RELEASE – MICROSOFT WINDOWS VERSION. In addition to the hard copy submittal, an electronic copy of the FINAL VERSION of the short circuit analysis/calculations and the protective device setting curves (time-current curves) and summary setting tables, etc. shall be submitted on CD-ROM.

b. By a State of Texas Licensed Professional Electrical Engineer. The final version of the studies shall be signed and sealed by a Professional Engineer who is licensed in the State of Texas as an electrical engineer.

1-7.10. Furnish the services of a qualified, experienced, factory trained technical (non-sales type) representative to assist in the installation of the equipment. Include checking alignment of parts, wiring connections, and functional operation test. Include time to correct and re-check any discrepancies which are discovered. Also include providing the Owner with a report certifying that the equipment was installed properly tested and set in accordance with the

specifications and is in satisfactory operating condition. Format and quantity of reports shall be per the requirements of Section 01300 and 01300 of the Contract Specifications.

1-7.11. Work in conjunction with the project's Process Instrumentation and Control System Contractor (PICS) during start-up to ensure that all Instrumentation and Control System interlocks between the MCCs and the Owner's Distributed Control System (DCS), are in satisfactory operating condition to the Owner/Engineer.

1-7.12. Manufacturer's technical representative is to set, adjust and test all protective relays, etc. in the presence of a representative of the Owner. The settings will be based on coordination and short circuit studies performed in compliance with Section 16041 of the Specifications "5kV Motor Control Centers Modifications", paragraph 1.07 "Special Manufacturer's Services". Provide the Owner with test report certified by the manufacturer. Include a record of all settings. Format and quantity of reports shall be per the requirements of Section 01300 of the Specifications. The Manufacturer shall furnish the protective device of the appropriate characteristics that shall be the most suitable for the proper protection and coordination of the system at No Additional Cost to the Owner.

1-7.13. Any problems encountered with the operation of equipment, parts, components, etc. installed within MCCs line-up/assembly shall be repaired/remedied by the manufacturer's technical representative.

1-8. WARRANTY

1-8.01. The manufacturer shall warrant that the proposed medium voltage starter assemblies serving the proposed backwash pumping units will be in accordance with the requirements of this specification and the recommendations of the manufacturer. If, within 24 months after acceptance by the Owner (after the final completion date of the project as shown on the Contract Documents), the equipment of any parts installed, are found defective because of material, workmanship, selection of materials, or design, the manufacturer shall at the manufacturer's expense furnish and install replacement parts of a design, workmanship, and material approved by the Owner. Any repairs or replacement parts furnished under the above stated warranty shall carry warranties of the same terms as set forth above from the date of its repair or replacement. Cost of Travel, lodging, labor and parts required as a result of any Warranty Work shall be covered by the warranty (the Manufacturer).

PART 2 - PRODUCTS

2-1. GENERAL STRUCTURE REQUIREMENTS – 5KV MCCS

2-1.01. Refer to the PLANS for layout and location of equipment and components, ratings of devices, busing, and other required details. Furnish the MCCs complete with all necessary equipment, wiring, power, controls, protective relaying, current transformers, potential transformers, space heaters, ground buses, etc. within the compartments as specified herein and as required by the Contract Documents. The arrangement and dimensions of the MCCs shall be as shown on the PLANS. The overall dimensions of each individual lineup of Motor Control Center shall not exceed the dimensions shown on the PLANS.

2-1.02. The 5kV MCCs shall be indoor, NEMA-1, gasketed, non-walk-in type, manufacturer's standard unitized metal enclosed general purpose indoor type free standing structure suitable for use on 4160 volt, 60 Hertz, 3 phase, 3 wire, solidly grounded WYE system. Enclosure shall be the totally enclosed, dead front, free standing type suitable for back-to-wall mounting. The MCCs shall be of the FRONT ACCESSIBLE ONLY design. MCC shall consist of required number of vertical sections bolted together to form a rigid self supporting free standing assembly.

2-1.03. The MCCs shall consist of completely metal enclosed vertical sections containing load interrupter switches and fuses, Full Voltage Non-Reversing (FVNR), and Reduced Voltage Auto-Transformer (RVAT) fused contactors starters of the quantity, rating and type required by the PLANS and specified herein.

2-1.04. Each vertical section of each MCC shall contain provisions for conduits entering from below and from top. Refer to the PLANS for conduit entry requirements. Also, provide space sufficient to make traditional stress cone terminations.

2-1.05. The main bus compartment of each MCC shall be fully isolated from the load interrupter switch compartments, the fused contactor starter compartments, and from the compartment enclosing instrument transformers, cable terminations and accessories. In general, the stationary structure of each MCC shall be so constructed and arranged that the sections are isolated from adjoining sections.

2-1.06. All painted steel work shall be per manufacturer's standard painting system applied at the factory, such that no field painting will be required except for "touching up" of damaged areas. Color shall be ANSI#61 Gray

2-1.07. Each vertical section shall be furnished with a space heater rated for 120 volts A.C. Provide thermostat for control of enclosure space heating system per manufacturer's standard.. Space heater supply circuits in adjacent sections shall be interconnected together and served from a common source external to the MCC.

2-2. MAIN BUS

2-2.01. The main bus shall be rated as shown on the drawings and/or data sheets and shall extend the entire length of the MCC. The bus shall consist of rigidly supported insulated tin-plated copper bars. The bus shall be insulated and the bus insulation shall be the manufacturer's standard for 5 kV service. The bus shall be braced to withstand not less than 40 kA symmetrical short circuit current at 5kV. The bus bars shall be of suitable design and cross sectional area to satisfactorily carry the rated current without exceeding the temperature rise as specified in the IEEE and NEMA standards.

2-2.02. Bus stand-off insulators shall be glass polyester

2-3. GROUND BUS

2-3.01. A continuous tin plated copper ground bus shall be furnished for the entire length of the MCC. The ground bus shall be rated for 50 percent of the main horizontal power (phase) bus rating, at minimum. Stack multiple ground bus bars as required to provide the required ground bus rating. Provide ground bolted connectors for the size and quantity of wire at each end of the bus as shown on the PLANS.

2-4. ISOLATING SWITCH AND CONTACTOR/CONTROLLER (STARTER) REQUIREMENTS

2-4.01. General:

a. 5kV rated Contactors/Controllers shall be the Full Voltage Non-Reversing (FVNR) and Reduced Voltage Auto-Transformer (RVAT) type controllers (as shown on the PLANS), and shall be installed in vertical sections construction as shown on the PLANS (complete controllers including control power transformer, isolating switch assembly, instrument transformers, contactor assembly, etc.).

b. Stacking controllers at two(2) or more levels shall NOT be permitted [i.e.; two(2) or three(3) high construction is NOT permitted.].

c. The isolating switch shall be provided with an externally operated, manual, three pole switch that isolates the controller from the line connectors and also grounds the controller (load side) when in the Open position. Isolation switch handle shall have padlock provisions. Interlocks shall be provided to prevent entry into the medium-voltage areas while the controller is energized and to block accidental opening or closing of the isolating switch when the door is open or the contactor is closed. Additionally, the isolation switch and starter contactor door shall be electrically interlocked with the contactor control logic via 120 volt AC, 5-ampere rated Double-Pole-Double-Throw (DPDT) limit switches. The contacts of the respective (related) limit switches shall open once the door to the contactor/isolation switch compartments are opened. Also, refer to the applicable PLANS.

d. Provide current limiting power fuses with visible fuse condition indicators for each controller. Coordinate controller fuse ratings with contactor ratings.

e. The main vacuum contactor assembly shall be of the drawout type capable of being withdrawn without a lifting device and/or transport truck. Provide disconnect stabs to facilitate contactor draw-out. “Bolt-in” contactors shall not be accepted. Additionally, there shall be no bolted connections between the contactor and the load terminals. Each contactor shall be the vacuum type and shall be the magnetically held design with the ratings as specified hereinafter and as shown on the PLANS.

f. A built-in test circuit and control circuit test selector switch shall be included within each controller to permit checking of the control and pilot circuit, with the medium-voltage de-energized and isolated, and the contactor in its normal position or in the draw-out position. The control circuit shall be capable of being energized through a polarized plug connector from an external 115 volt supply while in the test mode.

g. The low-voltage control compartment shall be isolated and barriered from the medium-voltage area and mounted on a panel with a separate low-voltage access door. Locate majority of low-voltage control compartments (control relays, motor management relays, pilot devices, terminal blocks, etc.,) in the low voltage control compartment.

h. Each controller (starter) shall be equipped with dedicated Stationary Control Power Transformer “CPT”, 120 volt Secondary, with fused and grounded secondary. Control Power Transformer “CPT” of each controller shall be adequately sized to drive all control components of its respective equipment shown on the control schematics/operation narratives in addition to the respective motor space heater. Minimum acceptable Control Power Transformer “CPT” size shall be 2 kVA.

i. Install banks (group) of 4160 volt, 3-phase, power factor correction capacitors for each starter in the MCCs, as shown on the PLANS and per the following:

1. Each Starter shall be close coupled with a bank (group) of 4160 volt individually fused power factor correction capacitors (primary fusing per phase and per individual capacitor), as also shown on the PLANS.

2. Each bank (group) of power factor correction capacitors of each individual starter shall be made of the composition of multiple of 3-phase capacitor units, with total quantity and kVAR correction per bank (group) of capacitors as shown on the PLANS. After Bid Award, the kVAR correction per bank may be reduced in accordance with the proposed process/mechanical equipment motor load information (specified elsewhere) during review of the Shop Drawings at the discretion of the Owner at no additional cost to the Owner.

3. Each capacitor bank (group of capacitors) shall be installed in an individual section of the Motor Control Center directly adjacent and close-coupled with its associated starter section. Also, refer to MCC elevations shown on the PLANS.

4. Fuse each phase of each individual 4160 volt, 3-phase, capacitor unit. Lesser quantity of fuses, i.e., fusing each phase of only a bank (group) of capacitors per starter, etc., <u>shall not be accepted</u>. Each fuse shall be equipped with Normally Open (N.O.) dry contacts that shall serve as remote blown fuse indicators. Each dry contact shall change state when its associated fuse is blown. Each dry contact shall be rated 5-ampere at 120 volts AC. Wire each contact to an interposing relay and connect to the motor management relay as well as other control logic as shown on the PLANS.

5. Additional capacitor features are as follows:

   a) Construction: Totally enclosed metal case primed and painted per manufacturer's standard with mounting brackets. Enclosure shall comply with applicable ANSI and NEMA standards for shunt capacitors.

   b) Solid dielectric with non-PCB type insulating fluid

   c) Integral discharge resistor assembly to reduce the residual voltage to 50 volts or less within 5 minutes after the capacitor is disconnected from rated voltage

   d) Gasketed high voltage bushings with tin plated copper threaded terminals.

e) Manufacturer: General Electric "G.E." type HWT, or approved equal.

j. The control description requirements of the Specifications show the minimum requirements for the each starter. Additionally, provide the manufacturer's standard starter control logic as a base (as applicable) that is supplemented by the additional requirements shown on the Specifications and PLANS to deliver a starting scheme that is in full satisfaction to the Owner. Furnish additional controller contact inputs/outputs, interposing relays, timing relays, selector switch contacts, fused power supplies, etc., as required to facilitate proper starter operation. However, the manufacturer's standard control logic shall only employ the use of hardwired and non-programmable relay logic. The use of programmable logic controllers (PLCs) or other similar appearing type devices located inside the MCCs shall not be accepted.

k. Provide one elapsed time meter as hereinafter specified for each motor starter and mount to the front of the motor control center. Wire meter to the motor starter auxiliary contact. Refer to the PLANS for additional requirements.

2-4.02. Medium Voltage Controller Ratings:

a. Medium Voltage Starters/Controllers shall have the following continuous and integrated interrupting ratings with current limiting fuses FVNR and RVAT Rated Controllers:

Voltage	Maximum Horsepower	Continuous Current Rating	Interrupting Rating
5.0Kv	3000 Hp	400 Ampere	400 MVA

b. The controllers shall be designed to accommodate motors of the size and type as shown on the PLANS.

2-4.03. Vacuum Contactor:

a. The 400 Ampere vacuum contactor shall have the following ratings:

Max. Interrupting Current (3 Operations)	=5,000 Amp
Rated Current:	
Enclosed	=400 Amp
Open	=400 Amp
Short Time Current:	
30-seconds	=2400 Amp

1-second	=6000 Amp
0.5 cycle	=63 kAmp (peak)
Mechanical Life	=2.0 Million Operations
Electrical Life at rated current	=250,000 Operations
Impulse Withstand Rating	=60 kV

2-5. INSTRUMENT TRANSFORMERS

2-5.01. General: All instrument transformers specified shall be installed and connected at the factory

2-5.02. Instrument current transformers (C.T.'s):

a. Instrument current transformers shall have the ratio and ratio type shown on the PLANS, suitable to withstand ANSI standard test voltages for 5kV. Provide window type CTs are required for the CTs dedicated to the respective starters/controllers.

b. The accuracy of the instrument current transformers shall be suitable for the meters and/or relays specified, with normal burdens of the various devices of not less than an ANSI standard accuracy classification of 0.3 with burden B-0.1.

c. Install a shorting terminal block for each current transformer. Prewire all terminals of each C.T. to its respective shorting terminal block. Shorting terminal blocks shall be as manufactured by "G.E.", or approved equal.

2-5.03. Instrument Potential Transformers (P.T.'s):

a. The instrument potential transformers and their associated primary and secondary fuses shall be installed provided where shown on the PLANS. Fixed mounted PTs are required for the PTs dedicated to the respective starters/controllers and as described hereinafter. Refer to the PLANS.

b. The instrument potential transformers shall have a rating of not less than 100 volt-amp (VA) on a thermal basis.

c. The instrument potential transformers shall have the following primary and secondary voltage ratings:

1. Primary voltage = 4,160V

2. Secondary voltage = 120 volt (AC)

3. Frequency = 60 hertz

d. The accuracy classification of the instrument potential transformers shall be 0.3 with burdens of W, X, and Y.

e. Install instrument potential transformers with primary and secondary fusing and other accessories in conformance with IEEE and NEMA standards.

2-6. MOTOR MANAGEMENT RELAY "MMR"

2-6.01. Where required by the PLANS, furnish and install Motor Management Relay (MMR) in the MCC. The Motor Management Relays shall be as manufactured by General Electric - MULTILIN Model 469 complete with the Ethernet communication capability as also shown on the PLANS, No Equal. Connect per manufacturer's recommendations and as shown on the PLANS. Protective relaying features will be enabled as determined during the performance of the studies performed per Subsection 1.07, "Special Manufacturer's Services", this Section of the Specifications. The control power supply to the Motor Management Relay (MMR) shall be fused and shall be wired to the respective motor starter dedicated control power transformer. Provide with harsh environment UL 746C recognized conformal coating on all printed circuit assemblies.

2-7. TERMINATIONS, WIRING, AND TAGGING

2-7.01. Connections and Terminals

a. Provide clamp type terminals for all power and ground cables and stress-cone type termination of all 5kV power cables.

b. All interior wiring to be neatly and carefully installed in suitable wiring gutters or conduit as required. Where not possible to install in wiring gutters, spiral wrapping, or corrugated protective plastic tubing, etc., must be used. Secure wiring to hinged doors and panels to the enclosure with flexibility provided around hinges to prevent fatigue and eventual breaking.

c. All spare contacts of all devices furnished shall be wired to terminals for external connection.

d. Terminal blocks shall be manufacturer's standard.

2-7.02. Instrument and Control Wiring

a. General: Wiring shall be installed inside the 5kV MCCs in suitable wiring gutters (plastic wireways, etc.). Where not possible to install in wiring gutters, spiral wrapping, or corrugated protective plastic tubing, etc., must be used.

b. Secondary Signal Wiring to/from Instrument Transformers:

    1. Signal wiring shall be manufacturer's standard.

    2. All Instrument and Control wire/cables shall be UL recognized/CSA approved.

    3. Phase sequencing shall have proper identification.

c. 120 Volts AC - Discrete Control Wiring System:

    1. 120 volts AC discrete control wiring shall be manufacturer's standard.

d. Ethernet Digital Data Communication System Wiring:

    1. Number of Pairs: Four

    2. Wire Size: #23 AWG

    3. Type of Conductors: solid copper conductors, twisted

    4. Individual Conductor Insulation: 300 volt polyolefin

    5. Individual Conductor Insulation Color: White/Blue Stripe, Blue, White/Orange Stripe, Orange, White/Green Stripe, Green, White/Brown Stripe, Brown

    6. Drain Wire: No. 24 AWG Tinned copper

    7. Overall Shield: Aluminum-mylar shield.

    8. Overall Jacket: PVC, include ripcord

    9. Overall Jacket Color: Blue.

    10. Maximum Attenuation at 100 MHz: 18.9 dB per 100 meters of cable length

    11. Maximum Attenuation at 250 MHz: 31.2 dB per 100 meters of cable length

    12. Manufacturer: Belden, Catalog No. 7851A, or approved equal. .

13. Agency Compliance: ANSI/TIA/EIA-568 B.2-1 Category 6.

2-7.03. Device/Component Identification and Wire Tagging Requirements

a. All component and control identification labels shall include the device name and number exactly as it appears on the PLANS. Refer to the PLANS.

b. All control/metering wires shall be tagged and coded with an identification number. Provide heat shrinkable sleeve type tagging and wire coding per manufacturer's standard.

c. All terminal blocks shall be identified

d. Properly label the control/metering devices mounted inside the each section using manufacturer's standard laminated labels installed in accordance with the manufacturer's standard method.

e. Nameplates:

1. Type: 3-ply, 1/8" thick, rigid thermoset phenolic resin laminated cellulose paper base engraving stock per ASTM D-709, Type I. Nameplates shall be ASTM Grade ES-1, ES-2, or ES-3 as applicable for the face and lettering colors specified hereinafter. Flexible or acrylic tags will be not be accepted.

2. Color: White-Black-White

3. Lettering: Engraved through the face layer to the melamine middle layer. Nameplates located on the face of each section/compartment of each MCC shall be legible at a distance of six feet from the nameplate.

4. Accessories: Provide holes for mechanical fastening.

5. Attachment Means: Secured with two Stainless Steel screws.

f. Furnish and install nameplates for:

1. Each equipment/device/etc. installed/mounted on the face of the MCC.

2. Each exterior section/compartment of each MCC.

3. Overall entire lineup of MCC, i.e. a master nameplate. Master nameplate shall include the tag of the MCC as shown on the PLANS, at minimum, in addition to manufacturer's standard information for master nameplates. .

2-8. MISCELLANEOUS ACCESSORIES

2-8.01. Selector/Control Switches:

a. Provide where required by the PLANS.

b. Heavy duty NEMA 12/13, oil tight and dustight,

c. NEMA Style full size 30-millimeter (30mm),

d. Contacts shall be rated 10 amps at 120 VAC.

e. Provide with legend plates.

f. Furnish each position/function of each selector switch/pushbutton with one additional Normally Open (N.O.) and one additional Normally Closed (N.C.) contacts over the number required by the control description shown in the SPECIFICATIONS, excluding any additional contacts that the MCC Manufacturer may require for their purposes.

2-8.02. Pilot Lights:

a. Type: Transformer Type Light Emitting Diode (LED),

b. Style: Push-to-test

c. Lens Color: Furnish and install the colors as shown on the PLANS.

d. Rating: NEMA 4/13, oil tight and water tight, Heavy Duty

e. Size: NEMA Style full size 30-millimeter (30mm),

f. Contacts: 10 ampere minimum at 120 volts A.C. Provide number of contacts to satisfy the requirements of the PLANS.

g. Legend Plate: Furnish and install per manufacturer's standard with inscription as shown on the PLANS.

h. Manufacturer: Allen Bradley Bulletin 800T, or approved equal.

2-8.03. General Control Relays (non-protective relays) shall have the following characteristics:

a. 600 volts, standard NEMA Size, AC Heavy-Duty industrial type with 120 volt AC coils.

b. Minimum contact rating of 10A, continuous, at 120 volts AC. Contacts shall be field convertible.

c. Furnish each relay with one additional Normally Open (N.O.) and one additional Normally Closed (N.C.) contacts over the number required by the PLANS

d. Provide each relay with Relay Manufacturer's Transient Suppression Module.

e. Relays shall be "Allen Bradley Bulletin 700", Type-700P, or approved equal relays of the MCC manufacturer.

2-8.04. General Control Time Delay Relays (Non-Protective Relays) shall have the following characteristics:

a. Solid state, multi-time, and multi-function type relay

b. Both timing ranges and timing modes shall be field selectable. Each relay shall be capable of the following timing modes:

1. On Delay

2. Off Delay

3. One Shot

4. Repeat Cycle

5. Interval

c. Minimum relay contact rating shall be 10 amps, continuous, at 120 VAC.

d. Timing relays shall be Square D Class 9050 model No. JCK70 complete with Type NR61 Socket, or approved equal.

2-8.05. Provide key interlocks where required by the PLANS.

2-8.06. 600 volt circuit breakers: Provide manufacturer's standard.

2-8.07. Elapsed Time Meters: Meters shall be the non-resettable type, and shall have cyclometric type reading at least to 9999.9 hours and at least to the nearest one-tenth of an hour. Elapsed time meters shall be as manufactured by Eagle Signal/Danaher controls series HK410, or approved equal.

PART 3 - EXECUTION

3-1. FACTORY TESTS

3-1.01. Standard factory tests shall be performed on the equipment specified under this section. All tests shall be in accordance with the latest version of ANSI and NEMA standards. The manufacturer shall provide certified copies of factory test reports prior to shipment of the equipment to the project site. Format and quantities of the test report shall be in accordance to Section 01300 and Section 01300 of the Contract Specifications.

3-2. FIELD INSTALLATION

3-2.01. Perform Motor Control Center modifications in accordance with manufacturer's written guidelines, the NEC, and local codes.

3-2.02. Refinish all painted steel work that was damaged during Motor Control Center modification activities. Finish shall match the existing Motor Control Center.

3-2.03. Install all required safety labels.

3-2.04. Perform special manufacturer's field services as previously specified per subsection 1.8, this Section of the Specifications.

3-2.05. Clean and vacuum all interior of the equipment.

3-2.06. Touch-up and restore damaged surfaces to factory finish.

3-2.07. Size, furnish and install the overload relay heaters based on actual motor nameplate current. Set overload relay settings at maximum values permitted by the NEC 430-32.

3-2.08. Size, furnish and install the motor space heater fuses based on actual motor space heater load current.

3-3. FIELD ADJUSTMENTS AND TESTING

3-3.01. Set, adjust and test all protective relays based on the results of the coordination study.

3-3.02. At minimum, test the following:

a. Test for proper phasing of power connections.

b. Megger terminals and buses for grounds, test per manufacturer's recommendations.

c. Verify ratios of all CT's and proper operation of all metering.

d. Verify proper rotation of all motors loads.

e. Verify motor space heater circuits are operational

f. Key interlock system functionality

g. Check tightness of accessible bolted bus joints using calibrated torque wrench per manufacturer's recommended torque values.

h. Set, adjust, and test all protective relays based on the results of the coordination study, refer to sub-section 1.07, this Section of the Specifications.

3-3.03. Submit documentation of all tests. Include all test documentation data in Operation and Maintenance Manuals.

3-4. MANUFACTURER'S CERTIFICATION

3-4.01. The manufacturer shall provide a report certifying in writing that the equipment has been installed, adjusted and tested in accordance with the manufacturer's recommendations and are in proper working order.

3-4.02. Format and quantity of Certification Reports shall be per the requirements of Section 01300 and 01300 of the Contract Specifications. Also, refer to Subsection 1.08 in this Section of the Specifications.

3-5. TRAINING

3-5.01. Provide training sessions for owner's representatives for Four (4) FULL normal workdays at the job-site location and/or at a location determined by the owner. If training is conducted in less than the time required by these specifications, the remaining time shall be utilized at the discretion of the Owner.

3-5.02. The training session shall be conducted by the MCCs manufacturer's non-sales-type technical representative, who performed the field installation and start-up/setting/adjustment services.

3-5.03. At minimum, the training session shall include:

a. Operation and maintenance procedure for the equipment and all components installed within the MCCs.

b. Factory contact persons phone numbers, persons names, ordering procedures and procedures to follow to obtain meaningful results from the factory.

c. Proposed motor management relay configuration software operation, establishing and diagnosing communication links, error messages, alarms, battery replacement, firmware update, relay configuration.

3-5.04. Submit complete training agenda, training materials and documents (training manual, as applicable), schedule, etc., for review and approval.

3-6. MEASUREMENT AND PAYMENT

3-6.01. No separate measurement or payment for work performed under this Section. All costs are included in the Base Bid.

END OF SECTION

SECTION 16120

480 VOLT MOTOR CONTROL CENTERS

PART 1 - GENERAL

1-1. SUMMARY

1-1.01. Scope of Work

a. The Contractor shall furnish and install the motor control centers as specified herein and as shown on the PLANS.

b. Where bus duct is required by the PLANS, the Contractor shall furnish and install the bus duct system including all necessary fittings, hangers, and accessories as specified herein and as shown on the PLANS.

c. The subsequent document entitled “Appendix A – Panelboard Schedule” is hereto made part of this section and includes a listing of certain proposed panelboards and other requirements. This schedule in “Appendix A” is not inclusive of all equipment required by this Contract. Refer to Part 2 of this section for additional requirements in addition to those listed in “Appendix A”. Conduit size as shown in Appendix A may increase for conduit systems routed underground/underslab/etc., in a duct bank system. Refer to the PLANS and other Sections of the Specifications for additional information.

1-2. RELATED WORK NOT INCLUDED

1-2.01. The PLANS designate the type, number, size and rating of devices included in the Motor Control Centers (MCCs)

1-2.02. Related work as called for on the PLANS, as specified herein or in other Sections of the Specifications.

1-3. QUALIFICATIONS

1-3.01. The manufacturer of the MCCs shall also manufacture the majority of components and subsystems therein (i.e., circuit breakers, starters, controls relays, etc.). The manufacturer of the MCC shall also manufacture the bus duct.

1-3.02. The MCCs and bus duct shall be designed, constructed, and tested in accordance with the latest applicable requirements of NEMA, ANSI, UL, and NEC standards.

1-3.03. MCCs and bus duct shall be as manufactured by Square D Company, General Electric Company “G.E.”, Allen-Bradley, or Cutler Hammer Corporation, or approved equal.

1-4. SUBMITTALS

1-4.01. Submit shop drawings in accordance with the requirements of Section 01300 of the Contract Specifications. Include:

a. Dimensioned/scaled top and bottom views, front elevations, internal component/device layouts, and overhead bus duct connection

b. One-line diagrams and wiring diagrams,

c. Catalog cut sheets. Include protective device coordination curves and current limiting circuit breaker/fuse peak current let through curves, where applicable.

d. Key interlock scheme drawing and sequence of operations, where applicable.

e. Overhead bus duct support details and support recommendations

f. Panelboard schedule.

1-5. OPERATION AND MAINTENANCE MANUALS

1-5.01. Furnish Operation and Maintenance Manuals in accordance with the requirements of Section 01300 of the Contract Specifications. Include:

a. Installation and operation manuals.

b. Renewal parts bulletin.

c. As built drawings, including approved shop drawings.

d. Test data.

e. Sealed and signed arc flash hazard analysis, harmonic study, motor starting, short circuit, and coordination study report. Report to include all final setpoints used.

1-6. STORAGE AND HANDLING

1-6.01. Protection

a. The Contractor, and hence the MCC supplier, shall be responsible for safety of the MCC and associated bus duct during storage, transporting and handling.

b. At all times the MCC shall be housed inside a moisture free, non-porous, extra heavy duty plastic weatherproof housing.

c. Interior and exterior of MCC shall be kept clean at all times.

d. Energize the space heaters within the MCC and energize during storage and installation for humidity control.

1-7. TOOLS AND SPARE PARTS

1-7.01. Furnish the following spare parts with the equipment for each MCC in conformance with the specifications:

a. One (1) – Set of fuses (minimum 3) for each type and size used.

b. One (1) – Set of starter contacts for every three(3) like starters used (a minimum of 1 for each size used). If contacts are not replaceable a spare starter for each size used shall be supplied.

c. Two (2) - Contactor coils for every NEMA size and type starter installed, a minimum of one coil per size.

d. Two (2) - Spare control relays for each type used. Control relay shall be furnished complete with relay coils, Four (4) Normally Open (N.O.) contacts, Four (4) Normally Closed (N.C.) contacts, and shall be furnished with Relay Manufacturer's Transient Voltage Suppression Module.

e. One (1) - Spare timing relay.

f. Two (2) – Sets of overload heaters for each size and type used.

g. One (1) Motor Management Relay / Motor Protection Relay, where Motor Management Relay / Motor Protection Relays are required by the PLANS

h. One (1) Power Monitoring Unit (PMU)

i. Provide breaker test set for Solid-State-Trip units for each type used.

j. One (1) quart of touch-up paint.

1-8. SPECIAL MANUFACTURER SERVICES

1-8.01. Prepare an arc-flash study, harmonic study, and a coordination study, complete with short circuit calculations and coordination curves, etc. as required by and in compliance with Section 16041 of the Specifications “5KV Motor Control Center Modifications”, paragraph 1.07 “Special Manufacturer’s Services.

1-8.02. Furnish the services of a qualified, experienced, factory trained technical (non-sales type) representative to assist in the installation of the equipment. Include checking alignment of parts, wiring connections, operation of all parts (relays, starters, monitoring relays, etc.). Include time to correct and recheck any discrepancies which are discovered. Also include providing the OWNER with a report certifying that the equipment was installed, adjusted, properly tested, and set in accordance with the manufacturer’s recommendations and is in satisfactory operating condition. Format and quantity of reports shall be per the requirements of Section 01300 of the Contract Specifications.

1-8.03. Manufacturer's technical representative is to set, adjust and test all protective relays, etc. in the presence of a representative of the Owner. The settings will be based on coordination and short circuit studies performed in compliance with Section 16120 of the Specifications “480 Volt Motor Control Centers”, paragraph 1.08 “Special Manufacturer’s Services”. Provide the Owner with test report certified by the manufacturer. Include a record of all settings. Format and quantity of reports shall be per the requirements of Section 01300 of the Specifications. The Manufacturer shall furnish the protective device of the appropriate characteristics that shall be the most suitable for the proper protection and coordination of the system at No Additional Cost to the Owner.

1-8.04. Any problems encountered with the operation of equipment, parts, components, etc. installed within the MCC line-up, and associated bus duct, shall be repaired/remedied by the manufacturer's technical representative.

PART 2 - PRODUCTS

2-1. GENERAL

2-1.01. For additional construction notes and special requirements, refer to the PLANS. Also refer and adhere to the requirements of the PLANS.

2-1.02. Motor Control Center shall not exceed the dimensions shown on the PLANS. Compartment/component arrangement shall be as shown on the elevation drawings. Provide for incoming feeder entering from below or above, and for outgoing circuits exiting from above and below, as shown on the PLANS.

2-2. CONSTRUCTION

2-2.01. Structure

a. Enclosures shall be NEMA Type 1, Gasketed. Enclosure shall be the totally enclosed, dead front, free standing type suitable for back-to-wall mounting.

b. MCC shall consist of required number of vertical sections bolted together to form a rigid self supporting assembly. Each vertical section shall be nominally 90 inches high. Each vertical section shall be subdivided into compartments (units). Refer to the PLANS for additional dimensional requirements.

c. The MCC shall contain a top horizontal wireway and a bottom horizontal wireway running the full width of the MCC. The bottom horizontal wireway shall be covered by hinged doors. Each vertical section shall include a top plate and a bottom plate; plates shall be removable.

d. Each vertical section containing a plug-in unit shall also contain a vertical wireway that interconnects the top and bottom horizontal wireways. The vertical wireway shall be covered by a hinged door.

e. Each unit within each vertical section shall have a hinged door. Each unit shall have a padlockable disconnect operating handle. Include provisions for up to three padlocks. Handle shall be mechanically interlocked with the door to prevent personnel from opening the door when the unit disconnect is in the ON position. Provide handle-door interlock defeating (bypass) feature. Provide non-defeatable interlock to prevent the installation of a plug-in unit unless the unit disconnect is in the OFF position.

f. Unused unit spaces in each vertical section shall be covered by hinged blank doors and equipped to accept future units..

g. All combination starter and feeder units of plug-in construction shall utilize mechanical guides to insure positive alignment of the unit stabs to the section vertical bus. For each unit, shutters shall be provided to cover bus access openings when unit is removed. Unused structure openings shall have plugs or covers to prevent entry of foreign objects into the bus area.

h. Structure finish shall be primed and painted using the manufacturer's standard finishing process. Finish shall be applied at the manufacturing plant. Color shall be manufacturer's standard.

i. Provide each vertical section with a space heater wired to terminal blocks in the respective section. Size the space heater per manufacturer's standard.

j. Structure shall include field removable lifting means.

k. Where an incoming line section is required by the PLANS, the Incoming Line Section shall include lugs for the connection of the field wiring shown on the PLANS.

2-2.02. Buses

a. All buses shall be tin plated copper.

b. The main horizontal bus shall extend the entire length of the motor control center. Buses shall be fully rated and the rating shall be based on 65 degrees C maximum temperature rise in a 40 degree C ambient. The main bus shall be rated as shown on the drawings and/or data sheets. Provisions shall be provided to facilitate future extension of the buses.

c. The vertical bus in each section shall be rated for 300 ampere, at minimum.

d. The minimum RMS symmetrical short circuit current rating of the buses shall be as indicated on the one-line diagram drawings.

e. The power buses shall be isolated by barriers from starters, wire troughs, and other areas.

f. A continuous ground bus shall be furnished for the entire length of the MCC. The ground bus shall be rated for 50 percent of the main horizontal power (phase) bus rating, at minimum. Stack multiple ground bus bars as required to provide the required ground bus rating. Provide ground bolted connectors for the size and quantity of wire at each end of the bus as shown on the PLANS.

2-2.03. Wiring

a. Unless otherwise noted, the MCC shall be wired Class II, type B construction with terminal blocks for each cubicle.

b. All wiring shall be neatly bounded with tie-wraps and supported to wire ways supports.

c. Wiring shall be terminated to split-type terminal blocks.

2-2.04. Identification

a. All component and control identification labels shall include the device name and number exactly as it appears on the PLANS. Refer to the PLANS.

b. All control wires shall be tagged and coded with an identification number. Tagging type and wire coding shall be per manufacturer's standard..

c. All terminal blocks shall be identified.

d. Properly label the devices mounted inside each section using manufacturer's standard laminated labels installed in accordance with the manufacturer's standard method.

e. Nameplates:

1. Type: 3-ply, 1/8" thick, rigid thermoset phenolic resin laminated cellulose paper base engraving stock per ASTM D-709, Type I. Nameplates shall be ASTM Grade ES-1, ES-2, or ES-3 as applicable for the face and lettering colors specified hereinafter. Flexible or acrylic tags will be not be accepted

2. Color: White-Black-White

3. Lettering: Engraved through the face layer to the melamine middle layer. Nameplates located on the face of each section/compartment of each MCC shall be legible at a distance of six feet from the nameplate.

4. Accessories: Provide holes for mechanical fastening.

5. Attachment Means: Secured with two Stainless Steel screws/bolts per manufacturer's standard; use of adhesives shall not be accepted.

f. Furnish and install nameplates for:

1. Each equipment/device/etc. installed/mounted on the face of the MCC.

2. Each exterior section/compartment of each MCC.

3. Overall entire lineup of MCC, i.e. a master nameplate. Master nameplate shall include the tag of the MCC as shown on the PLANS, at minimum, in addition to manufacturer's standard information for master nameplates.

2-3. MAIN/TIE AND BRANCH FEEDER CIRCUIT BREAKERS

2-3.01. Provide thermal magnetic molded case circuit breakers with the following minimum requirements:

a. U.L. listed minimum RMS symmetrical short circuit current rating equal to or greater than that of the main bus.

b. Circuit breaker shall be three pole, 600 volt with a maximum continuous current carrying capacity shown on the PLANS.

c. Breakers shall operate continuously when operating/running current is equal to 80% of the long time trip setting (or frame rating, as applicable) of the breakers.

d. Breakers shall have an overcenter, toggle handle-operated, trip free mechanism with quick make, quick break action independent of the speed of the toggle handle operation. The design shall provide common tripping of all poles. Breakers shall be suitable for reverse feeding.

e. Provide complete with rating plug and other accessories as required for proper operation of circuit breaker.

f. Provide mechanical padlock attachment for each circuit breaker.

g. Furnish lugs for feeders where required to facilitate field wiring termination, sizes shall be as required by the PLANS.

2-3.02. Additional requirements for Main/Tie circuit breakers only:

a. All Main and Tie circuit breakers shall be furnished with solid state type electronic trip attachment. The attachment shall have the following minimum features:

1. Alpha-numeric display

2. Circuit breaker test receptacle

3. Field adjustable settings:

a) Long time pickup

b) Long time delay

c) Short time pickup

d) Short time delay

e) Instantaneous pickup

f) Ground fault pickup

g) Ground fault delay.

2-3.03. Additional requirements for branch/feeder circuit breakers only:

a. All circuit breakers shall be unit mounted

2-3.04. Provide where specifically shown on the PLANS:

a. Current limiting circuit breaker.

b. Electronic trip attachment. Trip unit shall be solid state type with field adjustable long time, short time, ground fault and pick up settings.

c. Auxiliary contacts rated for 120 volts A.C. Contacts shall satisfy the requirements of the PLANS.

2-4. COMBINATION UNITS

2-4.01. Each combination motor controller and feeder unit shall have the following characteristics:

a. Molded case circuit breakers for branch circuit protection. Circuit breakers shall have the following characteristics:

1. U.L. listed minimum RMS symmetrical short circuit current rating equal to or greater than that of the main bus.

2. Three pole, 600 volt, type and maximum continuous current carrying capacity as shown on the PLANS.

b. Starters shall have the following characteristics:

1. Starters shall be magnetic type, NEMA rated, with 120 volts A.C. operating coils. International type starters (IEC rated), will not be accepted, even if the starters were to show equivalent NEMA ratings.

2. Size and configuration (full voltage non-reversing, full voltage reversing, reduced voltage solid state, etc.) as shown on the PLANS.

3. Provide each starter coil with the manufacturer's standard transient voltage surge suppression module.

4. Provide auxiliary contacts as required by the PLANS. Contacts shall be rated for 120 volts A.C and shall satisfy the requirements of the PLANS. Provide each starter with one (1) normally open auxiliary contact wired to terminal blocks over the number of contacts required by the PLANS.

5. The control description requirements of the Specifications show the minimum requirements for the each starter. Additionally, provide the manufacturer's standard starter control logic as a base (as applicable)

that is supplemented by the additional requirements shown on the Specifications and PLANS to deliver a starting scheme that is in full satisfaction to the Owner. Furnish additional controller contact inputs/outputs, interposing relays, timing relays, selector switch contacts, fused power supplies, etc., as required to facilitate proper starter operation. However, the manufacturer's standard control logic shall only employ the use of hardwired and non-programmable relay logic. The use of programmable logic controllers (PLCs) or other similar appearing type devices located inside the MCCs shall not be accepted.

c. Reduced Voltage Auto-transformer type non-reversing starter (RVAT):

    1. Each reduced-voltage auto-transformer starter assembly shall consist of a reduced voltage auto-transformer, an input isolation contactor, an output isolation contactor, and a paralleling bypass (run) contactor as shown on the PLANS. The reduced voltage auto-transformer shall have field adjustable tap settings of 50, 65, and 80 percent of the across-the-line voltage. Factory set at 65 percent tap setting.

    2. The reduced voltage starter shall have the closed transition type of operation.

d. Provide Overload relays where required by the PLANS. Overload relays shall have the following characteristics:

    1. Standard class 20, ambient compensated,

    2. Manually reset by push-button located on front of the compartment door.

    3. Provide with auxiliary contact rated for 120 volts A.C. Contact shall satisfy the requirements of the PLANS.

    4. The overload relay heaters will be selected by the Contractor after delivery of the MCC. Include all necessary delivery, packaging, and administrative costs associated with the delivery of overload heaters.

e. Control Power Transformer. The transformer shall have the following characteristics:

    1. Adequately sized to serve all loads shown on the PLANS. Minimum size shall be as follows unless noted otherwise on the PLANS.:

        a) NEMA Size 4 and larger starters: 750 VA.

        b) All other starters, 200VA,

2. Connect as shown on the PLANS.

f. Provide one single pole fuse block with fuse for each motor space heater.

g. Provide one elapsed time meter as hereinafter specified for each motor starter and mount to the front of the motor control center. Wire meter to the motor starter auxiliary contact. Refer to the PLANS for additional requirements.

h. Provide additional requirements as shown on the PLANS.

2-5. SURGE PROTECTIVE DEVICE (SPD)

2-5.01. Provide Surge Protective Device system (SPD) were required by the PLANS. The SPD shall have the following characteristics:

a. SPD shall be tested with the ANSI/IEEE Category C high exposure waveform of 10 kA for 8 x 20 microseconds, at minimum.

b. Integrated surge protective device recognized in accordance with UL 1449.

c. Minimum surge current withstand shall be 160 kA per phase (80 kA per mode)

d. Has a minimum pulse life of 5000 ANSI/IEEE Category C high transients without failure or degradation of clamping voltage by more than 10 percent.

e. Provide with manufacturer's standard line side disconnect.

f. Provide visual indication of SPD status

g. Surge counter.

h. Provide dry contact failure status output contact. Contact shall be rated for 120 volts A.C. and shall satisfy the requirements of the PLANS.

i. 5 year warranty, at minimum.

2-6. POWER MONITORING UNIT (PMU)

2-6.01. Where required by the PLANS, furnish and install a Power Metering Unit (PMU). The PMUs shall be as manufactured by General Electric - MULTILIN Model EPM 9450 (Transducer Module) complete with complete with the Ethernet communication capability, three line LED combination display and keypad Model PL900040N and all required interconnect cabling, No Equal. Connect per manufacturer's recommendations and as shown on the PLANS.

The control power supply to the PMU shall be fused and shall be wired to the respective PMU potential transformer secondary. Provide with harsh environment UL 746C recognized conformal coating on all printed circuit assemblies.

2-7. MOTOR MANAGEMENT RELAY "MPR/MMR"

2-7.01. Where required by the PLANS, furnish and install Motor Protection and Management Relay (MMR) in the MCC. The Motor Protection and Management Relays shall be as manufactured by General Electric - MULTILIN Model 469 complete with the Ethernet communication capability as also shown on the PLANS, No Equal. Connect per manufacturer's recommendations and as shown on the PLANS. Protective relaying features will be enabled as determined during the performance of the studies performed per Subsection 1.08, "Special Manufacturer's Services", this Section of the Specifications. The control power supply to the Motor Protection and Management Relay (MMR) shall be fused and shall be wired to the respective motor starter dedicated control power transformer. Provide with harsh environment UL 746C recognized conformal coating on all printed circuit assemblies.

2-8. INSTRUMENT TRANSFORMERS

2-8.01. General

a. All instrument transformers specified shall be installed and connected at the factory.

2-8.02. Instrument current transformers (C.T.'s):

a. Provide current transformers where required by the PLANS. Connect as shown on the PLANS.

b. Current transformers shall be the window type and shall have an ANSI 60 Hz Metering Accuracy Class of 0.3 measured at burden of B0.1, at minimum.

c. Install a shorting terminal block for each current transformer (C.T.). Prewire all terminals of each C.T. to its respective shorting terminal block. Shorting terminal blocks shall be as manufactured by "G.E.", or approved equal.

2-8.03. Instrument Potential Transformers (P.T.'s):

a. Provide potential transformers where required by the PLANS. Connect as shown on the PLANS.

b. Potential transformers shall have the following characteristics:

1. Primary voltage: 480 volts A.C.
2. Secondary voltage: 120 volts A.C.
3. Accuracy rating: 0.6 Y at burden of 1.2X
4. Thermal Burden: 150 VA at 30 degrees C ambient
5. Frequency: 60 Hz.

c. Install with primary and secondary disconnect devices, grounding device, and accessories in conformance with IEEE and NEMA standards.

d. Provide current limiting type primary fuses.

2-9. MISCELLANEOUS ACCESSORIES

2-9.01. Pilot Lights:

a. Type: Transformer Type Light Emitting Diode (LED),

b. Style: Push-to-test

c. Lens Color: Furnish and install the colors as shown on the PLANS.

d. Rating: NEMA 4/13, oil tight and water tight, Heavy Duty

e. Size: NEMA Style full size 30-millimeter (30mm),

f. Contacts: 10 ampere minimum at 120 volts A.C. Provide number of contacts to satisfy the requirements of the PLANS.

g. Legend Plate: Furnish and install per manufacturer's standard with inscription as shown on the PLANS.

h. Manufacturer: Allen Bradley Bulletin 800T, or approved equal.

2-9.02. Control relays shall have the following characteristics:

a. 600 volts, standard NEMA Size, AC Heavy-Duty industrial type with 120 volt AC coils.

b. Minimum contact rating of 10A, continuous, at 120 volts AC.

c. Furnish each relay with one additional Normally Open (N.O.) and one additional Normally Closed (N.C.) contacts over the number required by the PLANS.

d. Provide each relay with Relay Manufacturer's Transient Suppression Module.

e. Relays shall be "Allen Bradley Bulletin 700", Type-700P, or approved equal relays of the MCC manufacturer.

2-9.03. Timing Relays shall have the following characteristics:

a. Solid state, multi-time, and multi-function type relay

b. Both timing ranges and timing modes shall be field selectable. Each relay shall be capable of the following timing modes:

1. On Delay

2. Off Delay

3. One Shot

4. Repeat Cycle

5. Interval

c. Minimum relay contact rating shall be 10 amps, continuous, at 120 VAC.

d. Timing relays shall be Square D Class 9050 model No. JCK70 complete with Type NR61 Socket, or approved equal.

2-9.04. MCC Space Heater Control Power Transformer for the MCC, where required by the PLANS, shall have the following characteristics:

a. Minimum size as shown on the PLANS. Adjust size as needed to serve the space heater loads.

b. 120 volt AC grounded secondary

c. Connect as shown on the PLANS.

d. The space heater of each vertical section of the MCC shall be individually protected with a fuse mounted in the control power transformer compartment.

e. The space heater circuitry shall be thermostatically controlled by centrally located thermostat(s). Provide the quantity of thermostats necessary to serve the load of the space heater circuitry.

2-9.05. Provide control power transformer, fuses, power supplies, etc., and associated interconnect wiring as required to provide functional control power service to

the circuit breaker trip circuitry for proper operation of circuitry, per manufacturer's standard.

2-9.06. Provide key interlocks where required by the PLANS.

2-9.07. Lightning arrestors. Provide U.L. Listed and certified, valve type, three phase lighting arrestors where required by the PLANS.

2-9.08. Elapsed Time Meters: Meters shall be the non-resettable type, and shall have cyclometric type reading at least to 9999.9 hours and at least to the nearest one-tenth of an hour. Elapsed time meters shall be as manufactured by Eagle Signal/Danaher controls series HK410, or approved equal.

2-10. OVERHEAD BUS DUCT

2-10.01. Furnish and install bus duct were required by the PLANS. The overhead bus duct shall have the following characteristics:

a. All buses shall be tin plated copper

b. All buses shall be insulated with manufacturer's standard insulation

c. Buses shall be fully rated and the rating shall be based on 55 degrees C maximum temperature rise in a 40 degree C ambient. The bus continuous current rating shall be the same as the Switchboard main bus, as also shown on the PLANS.

d. The minimum RMS symmetrical short circuit current rating of the buses shall be as indicated on the one-line diagram drawings.

e. Dedicated continuous ground bus shall be furnished for the entire length of the bus duct. The ground bus shall be rated for 50 percent of the main power (phase) bus rating, at minimum.

f. The bus duct shall have the "sandwich" type configuration with no air gap between bus bars.

2-10.02. Bus duct enclosure shall have the following characteristics:

a. Totally enclosed, non-ventilated, suitable for indoor use.

b. Fabricated from aluminum or steel per manufacturer's standard.

c. Finish shall be primed and painted using the manufacturer's standard finishing process. Finish shall be applied at the manufacturing plant. Color shall be manufacturer's standard.

2-10.03. Provide with all necessary joints, fittings, covers, adapters, hardware, etc., as required for a complete and functional bus duct installation. This shall include, but not be limited to:

a. Elbows, flanges, TEE fittings

b. Flexible connectors

c. All necessary covers for openings

d. Thermal expansion fitting when bus duct crosses a building expansion joint. Refer to the PLANS for locations of building expansion joints.

2-11. LIGHTING / AUXILIARY POWER TRANSFORMER AND PANELBOARD

2-11.01. General:

a. Furnish and install lighting / auxiliary power transformers and panelboards inside the MCC where required by the PLANS. Refer to the PLANS.

b. Panelboard schedules are shown in Appendix A attached to this Specification. Refer to Appendix A.

2-11.02. Lighting /Auxiliary Power Transformer:

a. Manufacturer's premium quality dry type transformers suitable for installation inside a MCC.

b. Primary and secondary voltage ratings, and, KVA ratings to be as shown on the PLANS.

c. All windings shall be copper.

d. Transformers shall meet NEMA TP-1 efficiency requirements.

e. Temperature Rise: 150 degrees Celsius above a 40 degree Celsius. Ambient

f. All insulating materials shall be in accordance with NEMA ST20 standards for a 220 degree Celsius. U.L. component recognized insulation system.

g. Continuous wound core impregnated with non-hygroscopic, thermosetting varnish.

h. Core to be of high grade, non-aging silicon steel with high magnetic permeability.

i. Core and coil bolted to base of enclosure but isolated from it by rubber vibration absorbing mounts.

j. Furnish with four (4) 2-1/2 percent full capacity primary taps, two (2) above and two (2) below rated primary voltage.

k. Core is to be visibly grounded to enclosure by means of a flexible grounding conductor sized per NEMA, IEEE and ANSI standards.

l. All transformers shall be U.L. listed and certified and carry the U.L. label.

m. Sound levels: Shall have sound level not to exceed 45 dB.

2-11.03. Lighting Panelboard:

a. Main Bus:

1. All buses shall be tin-plated copper, distributed phase sequence type, and shall extend the full length of the panelboard.

2. Refer to the PLANS for bus ratings. Ratings to be established by heat rise tests with maximum hot spot temperature on any connector or bus bar not to exceed 50 degrees Celsius rise above an ambient of 40 degrees Celsius.

3. Circuit numbering to be such that odd numbered circuits are on the left and even numbered on the right facing the front of the panel.

b. Ground Bus: Each panelboard shall have a tin plated copper ground bus for connecting equipment grounds. Ground bus shall not be connected to the neutral bus.

c. Circuit Breakers:

1. Circuit breakers to be single pole, two pole or three pole as shown on the panel schedules on the attached Appendix A.

2. All breakers to be quick-make, quick-break thermal magnetic molded case bolt-on type, with inverse time thermal trip and instantaneous time magnetic trip. Multi-pole breakers to be common trip with a single trip handle. Provide overload tripping elements in each pole. A tripped condition to be indicated by the breaker assuming a neutral position between “ON” and “OFF”.

3. Circuit breakers to be equipped with individually insulated, braced and protected connectors. Affix large, permanent, individual circuit numbers to each breaker in a uniform position.

4. Provide lugs as required to facilitate the field wiring termination shown on the PLANS.

5. Interrupting ratings and Type:

   a) Main Circuit Breaker:

      1) Minimum U.L listed Symmetrical Current Interrupting rating (A.I.C. rating) at rated voltage shall be as shown and required by the PLANS.

      2) Panelboards shall be provided with high interrupting capacity or current limiter type breakers where necessary to withstand the available short circuit or limit it to a value which the downstream breakers can withstand.

      3) Provide as manufactured by Square D Company Type FC, or approved equal by General Electric Company "G.E.", Cutler-Hammer Corporation.

   b) Branch Circuit Breakers:

      1) U.L listed Symmetrical Current Interrupting 10,000 A.I.C. symmetrical at rated voltage.

      2) Provide as manufactured by Square D Company Type QOB, or approved equal by General Electric Company "G.E.", Cutler-Hammer Corporation.

d. Integrated Equipment Rating: Each panelboard, as a complete unit, shall have a rating equal to or greater than the integrated equipment rating shown on the PLANS.

e. Provide a minimum of 20 percent spares on all panelboards and/or as shown on panel schedules on the attached Appendix A.

f. Doors: Provide hinged doors complete with door handles.

g. A circuit directory in a metal frame with clear plastic covering shall be provided on the inside of the door. A directory card shall be typed to identify the load served by each circuit. Spare breakers shall be noted in pencil, however.

h. The panelboard interior assembly to be dead front with panelboard front removed. Main lugs or main breaker to be barrier on five sides. The end of the bus structure opposite the mains to be barriered.

i. Tagging:

1. Tag panelboard with the name as it appears on the PLANS using the specified nameplates. Panelboard nameplate shall also include: voltage ratings, phase, wire, ampere rating, AIC and withstand current rating, size and type of the main circuit breaker OR Main Lug Assembly (as applicable).

2. Panelboards shall be provided with typed circuit schedule including circuit number, breaker rating and circuit description.

PART 3 - EXECUTION

3-1. FACTORY INSPECTION AND TEST

3-1.01. Standard factory tests shall be performed on the equipment specified in this section. All tests shall be in accordance with the latest version of ANSI and NEMA standards. The manufacturer shall provide certified copies of factory test reports prior to shipment of the equipment to the project site. Format and quantities of the test report shall be in accordance to Section 01300 of the Contract Specifications.

3-2. FIELD INSTALLATION (BY CONTRACTOR)

3-2.01. Install per manufacturer's instructions and recommendations. Install all required safety labels.

3-2.02. Perform manufacturer's field services as previously specified.

3-2.03. Size, furnish and install the overload relay heaters based on actual motor nameplate current. Set overload relay settings at maximum values permitted by the NEC 430-32.

3-2.04. Size, furnish and install the motor space heater fuses based on actual motor space heater load current.

3-2.05. Where bus duct is shown on the PLANS, install the bus duct and associated bus duct supports per the manufacturer's recommendations and as also shown on the PLANS. Coordinate all aspects of bus duct installation with manufacturer.

3-2.06. The following apply where specifically noted on the panelboard schedules:

a. Contractor shall field verify existing branch circuiting loads and conduit/wire associated with this circuit. Contractor shall perform extensive field investigation to ascertain existing branch circuit loads and existing conduit/wire and update the panel schedule with the field discovered loads and conduit/wire. Extend existing circuiting conduit/wire to match existing as required to facilitate circuiting termination to the proposed panelboard.

3-3. FIELD TEST AND CHECKS

3-3.01. Verify proper rotation of all motor loads

3-3.02. Verify motor space heater circuits are operational..

3-3.03. The following minimum test and checks shall be made before energizing the MCCs. These tests shall be performed by a Factory Trained Field Technician (non sales type):

a. Thoroughly inspect the MCC.

b. Test for proper phasing of power connections. Additionally, check phasing across the MCCs and connecting overhead bus duct/tie feeders (as applicable) using phasing sticks.

c. Set, adjust, and test all protective relays based on the results of the coordination study, refer to sub-section 1.08, this Section of the Specifications.

d. Megger terminals and buses for grounds, test per manufacturer's recommendations.

e. Verify ratios of all CT's, and proper operation of all metering.

f. Verify MCC enclosure space heater circuits are operational.

g. Test key interlock system functionality

h. Check tightness of accessible bolted bus joints using calibrated torque wrench per manufacturer's recommended torque values.

3-3.04. Submit documentation of all tests outlined above.

3-3.05. Submit manufacturer's certification report per sub-section 1.08, this Section of the Specifications.

3-4. EQUIPMENT PROTECTION AND RESTORATION

3-4.01. Clean and vacuum all interior of the equipment.

3-4.02. Touch-up and restore damaged surfaces to factory finish.

3-4.03. Energize the space heaters within the MCC and energize during storage and installation for humidity control.

3-5. TRAINING

3-5.01. Provide training sessions for owner's representatives for Two (2) FULL normal workdays at the job-site location and/or at a location determined by the OWNER. If training is conducted in less than the time required by these specifications, the remaining time shall be utilized at the discretion of the OWNER.

3-5.02. The training session shall be conducted by the MCC manufacturer's non-sales-type technical representative, who performed the field installation and start-up/setting/adjustment services.

3-5.03. At minimum, the training session shall include:

a. Operation and maintenance procedure for the equipment and all components installed within the MCCs.

b. Factory contact persons phone numbers, persons names, ordering procedures and procedures to follow to obtain meaningful results from the factory.

c. Potential of arc-flash hazards associated with working on energized equipment.

3-6. MEASUREMENT AND PAYMENT

3-6.01. No separate measurement or payment for work performed under this Section. Include cost of same in Contract price bid for work of which this is a component part.

END OF SECTION

CIRCUIT BREAKER PANEL SCHEDULE - "FL-1"

VOLTS: 240/120 V BUS AMPS: 225 A MAIN: MLO A PHASE/WIRE: 1Φ 3W

CONDUIT/WIRE DESCRIPTION	CKT BKR SIZE	CKT. NO.	LOAD DESCRIPTIONS	PHASE A	PHASE B	LOAD DESCRIPTIONS	CKT. NO.	CKT BKR SIZE	CONDUIT/WIRE DESCRIPTION
	20 A 1 P	1	SPARE	0		SPARE	2	20 A 1 P	
				0					
COMPLY WITH SECTION 16120.3-2.06.a	20 A 1 P	3	LTS. WEST LEVEL 1		0	REP. EAST LEVEL 1	4	20 A 1 P	COMPLY WITH SECTION 16120.3-2.06.a
					0				
COMPLY WITH SECTION 16120.3-2.06.a	20 A 1 P	5	LTS. OVER FILTERS	0		SPARE	6	20 A 1 P	
				0					
	20 A 1 P	7	SPARE		0	PUMP PROTECTION PANEL	8	20 A 1 P	COMPLY WITH SECTION 16120.3-2.06.a
					0				
	20 A 1 P	9	SPARE	0		REP. PIPE GALLERY	10	20 A 1 P	COMPLY WITH SECTION 16120.3-2.06.a
				0					
	20 A 1 P	11	SPARE		0	BUBBLER PANEL	12	20 A 1 P	COMPLY WITH SECTION 16120.3-2.06.a
					0				
	20 A 1 P	13	SPARE	0		FB1-SAP-1 (FB1-SAP-004)	14	20 A 1 P	COMPLY WITH SECTION 16120.3-2.06.a
				0					
COMPLY WITH SECTION 16120.3-2.06.a	20 A 1 P	15	TBAC-5-L (FB1-CP-WRS)		0	BACKWASH VALVE SOLENOIDS	16	20 A 1 P	COMPLY WITH SECTION 16120.3-2.06.a
					0				
COMPLY WITH SECTION 16120.3-2.06.a	20 A 1 P	17	TBAC-7-L (FB1-UPS-WRS)	0		TBYAY-6 (FB1-CP-WRS)	18	20 A 1 P	COMPLY WITH SECTION 16120.3-2.06.a
				0					
COMPLY WITH SECTION 16120.3-2.06.a	20 A 1 P	19	TBAC-4-L (CONV. OUTLET)		0	TBAC-1-L (FB1-PLC-1)	20	20 A 1 P	COMPLY WITH SECTION 16120.3-2.06.a
					0				
COMPLY WITH SECTION 16120.3-2.06.a	20 A 1 P	21	TBAC-3-L (HEATER - FAN)	0		TBAC-2-L (FB1-PLC-2)	22	20 A 1 P	COMPLY WITH SECTION 16120.3-2.06.a
				0					
	20 A 1 P	23	SPARE		0	SPARE	24	20 A 1 P	
					0				
	TOTAL CONNECTED VOLT AMPS (VA)			0	0				

This document is sealed on the seal sheet as required by TBPE under the authority of K.A. Harutunian, P.E. 59181

CIRCUIT BREAKER PANEL SCHEDULE - "FL-2"

VOLTS: 240/120 V BUS AMPS: 225 A MAIN: MLO A PHASE/WIRE: 1Φ 3W

CONDUIT/WIRE DESCRIPTION	CKT BKR SIZE	CKT. NO.	LOAD DESCRIPTIONS	PHASE A	PHASE B	LOAD DESCRIPTIONS	CKT. NO.	CKT BKR SIZE	CONDUIT/WIRE DESCRIPTION
	20 A 1 P	1	SPARE	0		SPARE	2	20 A 1 P	
				0					
COMPLY WITH SECTION 16120.3-2.06.a	20 A 1 P	3	REP. WEST LEVEL 1		0	LTS. EAST LEVEL 1	4	20 A 1 P	COMPLY WITH SECTION 16120.3-2.06.a
					0				
		5		4000		SPARE	6	20 A 1 P	
				0					
3/4" - 2#6(P),1#10(G)	45 A 2 P	7	INSTANT WATER HEATER		4000	SPARE	8	20 A 1 P	
					0				
COMPLY WITH SECTION 16120.3-2.06.a	20 A 1 P	9	HIGH WATER DETECTOR	0		SPRINKLER SYSTEM	10	20 A 1 P	COMPLY WITH SECTION 16120.3-2.06.a
				0					
COMPLY WITH SECTION 16120.3-2.06.a	20 A 1 P	11	REP. PIPE GALLERY		0	LTS. PIPE GALLERY	12	20 A 1 P	COMPLY WITH SECTION 16120.3-2.06.a
					0				
	20 A 1 P	13	SPARE	0		WATER FOUNTAIN	14	20 A 1 P	COMPLY WITH SECTION 16120.3-2.06.a
				0					
	20 A 1 P	15	SPARE		0	REFRIGERATOR	16	20 A 1 P	3/4" - 2#10(P),1#10(G)
					1200				
	20 A 1 P	17	SPARE	0		SPARE	18	20 A 1 P	
				0					
	20 A 1 P	19	SPARE		0	SPARE	20	20 A 1 P	
					0				
	20 A 1 P	21	SPARE	0		SPARE	22	20 A 1 P	
				0					
	20 A 1 P	23	SPARE		0	SPARE	24	20 A 1 P	
					0				
	TOTAL CONNECTED VOLT AMPS (VA)			4000	5200				

This document is sealed on the seal sheet as required by TBPE under the authority of K.A. Harutunian, P.E. 59181

SECTION 16150

RACEWAYS, FITTINGS AND SUPPORTS

PART 1 - GENERAL

1-1. SUMMARY

1-1.01. This section specifies raceways, fittings, and supports for all cables, conductors and electrical equipment. The Contractor shall furnish and install complete raceway systems in accordance with the following specifications and as also shown on the PLANS.

1-2. RELATED REQUIREMENTS

1-2.01. The PLANS designate the numbers and sizes of raceways and other requirements

1-2.02. Related work as called for on the PLANS, as specified herein or in other Sections of the Specifications..

1-3. REFERENCES

1-3.01. The publications listed below form a part of this specification to the extent referenced. The Publications are references in the text by designation only.

1-3.02. This section contains references to codes and standards. They are a part of this section as specified. In case of conflict between the requirements of this section and the listed standards, the requirements of this section shall prevail. All raceways, fitting and supports are to be U.L. listed and certified and shall conform to ANSI and NEMA standards.

1-4. SUBMITTALS

1-4.01. The Contractor shall submit manufacturer's catalog data for all material provided under this section and in accordance with the requirements of Section 01300 of the Specifications. The Contractor shall submit certified notification from the Manufacturer that the rigid aluminum conduit system and all related materials, as described within this specification, is 99.0 percent copper-free.

a. Submit certifications of training associated with proper installation the PVC coated rigid galvanized conduit.

b. Material Safety Data sheets for all sealants, solvents, etc.

PART 2 - PRODUCT

2-1. EXPOSED CONDUIT SYSTEM INDOOR, AND EXPOSED-OUTDOOR ABOVE GROUND LEVEL

2-1.01. General: All components shall be 99.0 percent copper free rigid aluminum.

2-1.02. Rigid Metal Conduit System

a. Conduit run above ground shall be rigid aluminum in all areas unless specifically specified otherwise hereinafter in subsection 3.02, this Section of the Specifications.

b. Rigid Aluminum Conduit shall meet the following requirements

1. U.L. listed

2. Comply with ANSI C80.5 and U.L.6.

c. Bending Requirements: Furnish factory bends. 90-degree bends of conduit sizes equal to or greater than 4-inches in diameter shall have a minimum bending radius of 48-inches unless otherwise noted on the PLANS. 90-degree factory bends of conduit sizes less than 4-inches in diameter, shall be per manufacturers standard unless otherwise noted on the PLANS.

d. Minimum conduit size for all work shall be 3/4 inches.

e. Manufacturer: VAW of America Inc., or approved equal.

2-1.03. Conduit Hubs:

a. Provide grounding type with integral threaded insulated throat, and with solderless grounding lugs, complete with rubber gasket.

b. Manufacturer: by “Myers”, or approved equal.

2-1.04. Grounding Bushings:

a. Provide with integral threaded insulated throat, and with solderless grounding lugs

b. Manufacturer: “O.Z. Gedney” type ABLG with specified options, or approved equal.

2-1.05. Conduit Bodies

a. Conduit body covers shall be of the bolt-on type and shall have Type 316-Stainless Steel screws/hardware.

b. Manufacturer: **"**Crouse-Hinds" Form-7, or approved equal..

2-1.06. Conduit Unions: Threaded, as manufactured by "Crouse-Hinds" type UNF or UNY, or approved equal

2-1.07. Conduit Reducers:

a. Threaded.

b. Shall be used for final conduit system connection to equipment where shown on the PLANS

c. Manufacturer: "Crouse-Hinds" type RE and type REA, or approved equal.

2-1.08. Cord and Cable Fittings:

a. Provide threaded gland nut, straight threaded body, and also a neoprene sealing cable bushing.

b. Furnished with a Type 316 Stainless Steel wire mesh grip

c. Shall be used only where specifically shown on the PLANS.

d. Manufacturer: "Crouse-Hinds" type CGB, complete with all specified accessories, or approved equal.

2-1.09. Expansion Fittings:

a. Furnished with oversized sleeve and insulated bushing

b. Furnished with tinned copper braided bonding jumper

c. Manufacturer: O.Z./Gedney Type EXPB-A, or approved equal

2-1.10. Sealing Fittings:

a. Furnish with drain

b. Manufacturer: Crouse Hinds, Type EYD, or approved equal

c. Sealing Compound:

1. Where conduit seals are installed in compliance with NEC Class-I and Class-II requirements, the sealing compound shall be as manufactured by “Crouse-Hinds” type Chico-AP, or approved equal.

2. Where conduit seals are not required for NEC Class-I and Class-II installations but are shown to be installed on the PLANS to block the migration of corrosive gases into the conduit system and conduit bodies, the conduit seals Sealing Compound shall be as manufactured by “3M” type Scotchcast Reenterable Electrical Insulating Resin 2123, or approved equal.

2-1.11. Miscellaneous Requirements:

a. Conduit nipples shall have two independent sets of threads.

2-2. UNDERGROUND CONDUIT IN DUCT BANK SYSTEM

2-2.01. General:

a. Type: All components shall be non-metallic, except where noted herein and specifically shown otherwise on the PLANS. Refer to the PLANS.

b. Bending Requirements: Furnish factory bends. 90-degree factory bends of conduit sizes equal to or greater than 4-inches in diameter shall have a minimum bending radius of 48-inches. Also, all 90-degree, 45-degree, and 30-degree conduit bends shall be factory made bends.

c. Minimum conduit size for all work shall be 1 inch.

2-2.02. Rigid Nonmetallic Conduit System, “PVC Conduit”

a. All components shall be schedule 40 PVC, heavy wall, U.L. rated, No. 651, conforming to NEMA standard TC-2-75 and listed in conformity with Article 352 of the latest edition of the National Electrical Code (NEC).

b. Solvent weld: Shall be a type approved by the conduit manufacturer.

c. Manufacturer: Conduit shall be as manufactured by “Carlon”, or approved equal.

2-2.03. PVC Coated Rigid Metal Conduit System

a. Material: - Rigid Galvanized Steel conduit per UL 6 and ANSI C80.1, hot-dipped galvanized inside and out after the threads are cut.

b. Exterior Coatings:

1. After galvanizing, the conduit/fittings shall be uniformly and consistently coated with a gray PVC coating of minimal 40 mil thickness. Exception: The threads shall be coated with urethane in lieu of PVC.

2. The PVC coating adhesion performance shall be ETL verified to the Intertek ETL SEMKO, High Temperature H_2O PVC Coating Adhesion, Test Procedure for 200 hours.

c. Interior Coating:

1. After galvanizing, the interior of conduit and fittings shall be uniformly and consistently coated with a urethane coating of nominal 2 mil thickness.

d. Accessories: Threads shall be furnished with plastic thread protector caps.

e. Manufacturer: Robroy Industries, Perma-Cote, Plasti-Bond REDH_2OT, or approved equal.

2-3. LIQUID TIGHT FLEXIBLE CONDUIT

2-3.01. Sizes: - Greater than or equal to ¾ inch (in general or ½- inch where permitted) and smaller than or equal to 2 inch Flexible Conduit:

a. Conduit Type: Non-metallic type liquid tight conduit, formed from PVC plastic

b. Conduit Installation Temperature Range: –20 degrees Celsius to + 60 degrees Celsius (suitable for use outdoors and indoors)

c. Conduit Manufacturer: ELECTRI-FLEX series NM type B-PVC, or approved equal.

d. Fittings Type: Non-metallic PVC fittings

e. Fittings Manufacturer: CARFLEX, or approved equal.

2-3.02. Sizes:- Greater than 2 inch Flexible Conduit:

a. Conduit Type: PVC-COATED metallic liquid tight conduit, formed from PVC plastic

b. Conduit Temperature Range: –20 degrees Celsius to + 60 degrees Celsius (suitable for use outdoors and indoors)

c. Conduit Manufacturer: SEALTITE, or approved equal.

d. Fittings Type: 99.0 percent Copper-Free-Aluminum

e. Fittings Manufacturer: Appleton, Crouse-Hinds, or approved equal.

2-3.03. Minimum liquid-tight flexible conduit size for all work shall be ¾-inch unless specifically noted otherwise on the PLANS.

a. Exception: Where field instrument enclosures are fitted with ½-inch NPT threaded conduit hub(s), ½-inch liquid-tight flexible conduit shall be permitted for the final conduit connection to the instrument. Transition to ½-inch liquid-tight flexible conduit shall be implemented by installing a pull box or conduit body and conduit reducer at the point of transition.

2-4. MISCELLANEOUS

2-4.01. Fire-retardant and waterproof conduit/duct sealant: NELSON FLAMESEAL, or approved equal,

2-4.02. Pipe Tape: 20 mil, 3M company No.51, or approved equal

2-4.03. Conduit Sleeves

a. For grounding electrode conductor wall penetrations to handholes/manholes: Conduit sleeves shall be schedule 80 PVC, heavy wall, U.L. rated, No. 651, conforming to NEMA standard TC-2-75 and listed in conformity with Article 352 of the National Electrical Code (NEC).

b. Conduit sleeves in all other locations shall be Type 316 schedule 10 stainless steel pipe.

2-4.04. Link Type Mechanical Seals:

a. General:

1. Provide as required by the PLANS. Refer to the PLANS. Mechanical seals shall be corrosion resistant and suitable for use in a corrosive wastewater treatment plant environment.

2. Install per manufacturer's recommendations. Use a socket or offset wrench to tighten link bolts. Impact wrench/gun shall not be used. After tightening, all bolt threads/heads shall be coated with mastic.

b. Type: Modular, mechanical type seal consisting of interlocking synthetic rubber links shaped to continuously fill the annular space between the conduit and the wall sleeve.

c. Sealing Link Elements: EPDM interlocking links shaped to fit the surface of the conduit. Include the type and number required for the conduit material and size of conduit. Elements shall comply with ASTM D2000 M3 BA510.

d. Connecting Bolts, Nuts, and hardware: Type 316 Stainless steel of size, length and quantity required.

e. Pressure Plates: Glass reinforced nylon polymer per ASTM D-790. Provide plate for side of sealing element

f. Accessories: Provide Type 316 schedule 10 stainless steel pipe for each penetration.

g. Manufacturer: Pipeline Seal and Insulator PSI "Link-Seal Modular Seal", or approved equal.

2-5. ELECTRICAL EQUIPMENT AND RACEWAY SYSTEM SUPPORT CHANNELS

2-5.01. General requirements for all support channels:

a. Channels located in all areas:

1. Type: Type 316-Stainless Steel

2. Manufacturer: "Unistrut Corporation" series P-1000ST and P-1001ST, or approved equal.

2-5.02. All fastening hardware, fittings, supports, post bases, conduit clamps, beam clamps channel nuts, threaded rod, framing system, etc. shall be as follows:

a. Items located in all areas:

1. Type 316 stainless steel

b. Manufacturer: "Unistrut Corporation", or approved equal.

c. Additionally, the following designations correspond to the following "Unistrut Corporation" series numbers as used in the details shown on the PLANS:

1. Items located in all areas:

a) Beam clamps: "Unistrut Corporation" series P-2785ST and P-2786ST, or approved equal.

b) Swivel fittings: "Unistrut Corporation" series M-2137ST, or approved equal.

c) Post bases: “Unistrut Corporation” series P-2072AST and series P-2073AST, or approved equal.

d) Hanger clevis fittings: “Unistrut Corporation” series P-2682ST, or approved equal.

2-5.03. Expansion anchors shall be installed per the manufacturer’s recommendations and shall be as follows:

1. Expansion anchors located in all areas shall be Type 316 Stainless Steel and shall also be per Section 05550 “Anchorage in Concrete and Masonry”.

2. Also refer to the PLANS.

3. Bolts with epoxy inserts are not acceptable.

2-6. MANHOLES AND HANDHOLES

2-6.01. Refer to the Civil/Structural PLANS and Specifications for manhole requirements.

2-6.02. Furnish and install handholes as shown on the PLANS and as specified herein.

2-6.03. Provide all cable pulling eyes, cable support system components and accessories indicated on the PLANS and as otherwise required. Arrange support systems so that each cable can be securely anchored.

2-7. CABLE SUPPORT SYSTEM IN UNDERGROUND ELECTRICAL MANHOLES AND HANDHOLES

2-7.01. General Requirements for support channels:

a. Type: Type 316-Stainless Steel

b. Manufacturer: “Unistrut Corporation” series P-1000ST and P-1001ST, or approved equal.

2-7.02. All fastening hardware, fittings, supports, post bases, conduit clamps, beam clamps channel nuts, threaded rod, framing system, etc. shall be fabricated with Type 316 stainless steel, as manufactured by “Unistrut Corporation”, or approved equal. Additionally, the following designations correspond to the

following “Unistrut Corporation” series numbers as used in the details shown on the PLANS:

a. Porcelain Clamps and Saddles-“Unistrut Corporation P1787A through P1795B Porcelain Cable Clamps”, for both Electric and Communications and Instrumentation and Control.

b. Surface Mounted Vertical Channels (Columns)-“Unistrut P-1000ST Type 316 stainless steel channels and accompanying Unistrut post bases”.

c. Surface Mounted Horizontal Channels (side mounted channels)-**“**Unistrut P-1001ST Type 316 stainless steel channels and accompanying Unistrut post bases as well as wall mounted vertical channels”.

d. Brackets-**“**Unistrut” P-2515 ST of 15 inch length for Electric, and P-2542 ST of 15 inch length for Telephone and Communications. All parts given shall be Type 316 stainless steel.

e. Beam Clamps – “Unistrut” P-2785 ST”. All parts given shall be Type 316 stainless steel.

PART 3 - EXECUTION

3-1. GENERAL

3-1.01. Install electrical equipment and conduit raceway system in accordance with the recommendations of the manufacturer, the requirements of the latest edition of the National Electrical Code, and the PLANS.

3-1.02. Contractor shall be trained and certified by the PVC coated rigid galvanized steel conduit manufacturer in the proper installation of the PVC coated rigid galvanized conduit.

3-2. CONDUIT SYSTEM

3-2.01. General:

a. Run conduits continuous from outlet to outlet, from outlets to cabinets, pull or junction boxes, etc..

b. Install all conduits as a complete system before wiring is pulled in. Conduits shall be reamed, thoroughly cleaned of debris, and swabbed immediately before wire is pulled.

c. Furnish and install expansion fitting for each conduit across structural expansion joints. Coordinate locations of expansion joints with the PLANS.

Additionally, furnish and install additional appropriate fittings such as conduit unions, adapters, etc. as required for a complete installation.

d. Conduit shall contain no more than the equivalent of three (3) 90 degree bends between outlets or pull points.

e. Maintain a minimum 6 inch clearance between conduit and piping and a minimum 12 inch clearance between conduit and heat sources.

f. Protect all coated conduit from accidental coating damage during storage and installation. Repair all damaged conduits in accordance with manufacturer's recommendations at no additional cost to the OWNER.

g. Furnish and install temporary conduit closures during construction activities to prevent foreign matter from entering raceways.

h. Furnish and install conduit measuring tape in each empty spare conduit as manufactured by Ideal Industries Incorporated or approved equal.

3-2.02. Additional requirements regarding the use of the Owner's existing conduit system:

a. Prior to the installation of wiring in the OWNER's existing conduits, thoroughly clear existing conduits that shall be used for renovation activity to remove 100 percent of obstructions (objects, rocks, concrete bits, rough edges, debris, etc.) that may damage the proposed wiring during the wire installation process. Field verify that the proposed wiring can be installed in the OWNER's existing conduits prior to attempting wire installation. Should it be discovered that the OWNER's existing conduits cannot be used without causing damage to the proposed wiring, the existing discovered field conditions must be brought to the OWNER's attention for execution of the necessary adjustments/modifications.

3-2.03. Exposed Conduit System Indoor, and Exposed-Outdoor Above Ground Level:

a. Rigid conduit joints shall be cut square, threaded, reamed smooth and drawn up tight. Make field bends or offsets with an approved bender or hickey or hub type conduit fittings.

b. Run conduit parallel or at right angles to building lines and such to avoid moisture traps.

c. Arrange conduits to maintain headroom and present a neat appearance.

d. Support conduit using support channels as shown on the PLANS and as specified herein.

e. Coat all conduit threads with Penetrox or Noalox prior to assembly.

f. Secure conduit runs firmly to specified support channels by conduit straps or by hangers, as required, and as shown on the PLANS.

3-2.04. Underground Conduit in Duct Bank System

a. Install all underground conduit in concrete encased and steel reinforced duct banks.

b. Concrete shall be “Electrical Ductbank Concrete” per Section 403S “Concrete for Structures”. Also, refer to conduit/duct bank reinforcement and concrete encasement details shown on the PLANS.

c. Provide a minimum of 3-inches separation between conduits installed in concrete construction except at panelboards, pull or junction boxes and/or other locations where the conduits are grouped. Furnish and install plastic spacers as shown on the PLANS.

d. Underground system conduits shall be installed with the minimum depths below finished grade as shown on the PLANS and shall slope 3-inches per 100 feet from high points toward pull boxes and handholes/manholes, at minimum. Additionally, underground duct bank system shall be routed per the PLANS and coordinated with the depths of Civil/Structural foundations, beams, etc. No conduit shall be routed through grade beam slab of a building floor slab.

e. All underground conduit joints shall be watertight in accordance with the manufacturer’s recommendations.

f. Transition from underground (underground work in duct bank) to above ground conduit as shown on the PLANS.

g. Where a duct bank penetrates a concrete structure, dowel between the duct bank and the structure at the point of penetration and tie the steel reinforcing rebar system of the underground duct bank system to the concrete structure and steel reinforcing rebar system of the concrete structure. Refer to the Civil/Structural Specifications and PLANS for additional requirements.

3-2.05. Conduit Penetrations:

a. Install sleeves for conduit penetrations of walls and floors unless shown otherwise on the PLANS. Install sleeves during erection of concrete and masonry walls. Exception: Sleeves are not required for conduits stub-ups through floor slab from underground duct bank.

b. Where aluminum conduit penetrates a wall/floor-slab and/or walls/floors of dissimilar material (other than Stainless Steel) or is in contact with dissimilar material, wrap the aluminum conduit with Pipe Tape using a 50 percent overlap throughout the entire distance/length of the penetration and an additional 6-inches of distance beyond either side of the penetration/contacted region. Apply bitumastic coating over the pipe tape layer.

c. Install pitch pans on conduits which penetrate through roofs.

d. Also refer to the conduit penetration details shown on the PLANS.

3-2.06. Miscellaneous:

a. Seal empty spare conduits (at above ground stub-ups) with an aluminum threaded conduit plug.

b. Seal and pack/fill ends of each conduit with flame-retardant sealant.

c. In all sealing fittings, utilize sealing compound to seal around and between each conductor and associated sealing fitting body.

3-2.07. Requirements for cables inside of Manholes, Handholes, etc.:

a. Arrange cables so that there is a minimum of crossing. Provide slack in each cable.

b. Secure cables in handholes/manholes on support channel system as specified herein and as shown on the PLANS.

3-2.08. Connections to Equipment:

a. Liquid tight flexible conduit shall be used for connections to motors, field instruments, etc., and any equipment subject to vibration, and where shown on the PLANS. Length of conduit shall not exceed 36-inches, unless specifically noted otherwise on the PLANS.

3-3. INSTALLATION OF SUPPORT CHANNELS

3-3.01. Utilize support channels and mounting hardware as previously specified to install raceways, and any other surface mounted electrical, instrumentation and control equipment. Refer to details shown on the PLANS. The PLANS may not show all of the mounting hardware that is required for this project, regardless, furnish and install all hardware required for a secure installation. Although it may not be shown on the PLANS related with installation of all-

thread rods, furnish and install lock washers, washers, and backing nuts at each end of all-thread rods (exterior to channel) in addition to the spring nuts located within the channel. Although it may not be shown on the PLANS related with enclosure/fixture attachments to channels, furnish and install bolts with washers, lock washers, and spring-nuts for all enclosure/fixture attachments to channels.

3-4. HOUSEKEEPING CONCRETE PAD FOR EQUIPMENT

3-4.01. Provide housekeeping concrete pad for all outdoor equipment whether it is free-standing or surface mounted. All housekeeping pad edges shall be chamfered. Outdoor electrical equipment pads shall be as detailed on the PLANS.

3-4.02. Provide housekeeping concrete pad for indoor all free-standing equipment. Indoor electrical equipment pads shall be as detailed on the PLANS.

3-5. MEASUREMENT AND PAYMENT

No separate measurement or payment for work performed under this Section. Include cost of same in Contract price bid for work of which this is a component part.

END OF SECTION

SECTION 16182

MEDIUM VOLTAGE CABLES

PART 1 - GENERAL

1-1. SUMMARY

1-1.01. Furnish and install the medium voltage cables (5kV) as specified herein and as shown on the PLANS.

1-2. RELATED REQUIREMENTS

1-2.01. PLANS indicate number, size, and voltage of the medium voltage cables.

1-2.02. Related work as called for on the PLANS, as specified herein or in other Sections of the Specifications.

1-3. SUBMITTALS

1-3.01. Submit shop drawings in accordance with Section 01300 of the Contract Specifications. Additionally, at minimum, submit the following information and materials:

a. Cable material sample (minimum 12 inches long).

b. Catalog data for all cable and accessories.

c. Pulling tension and sidewall pressure calculations.

d. A list of cable tags, showing the identity of each cable, the content of the tag, the initially suggested height and type of lettering, mounting/installation method, and the tag material and type and size (dimensions).

e. Testing forms and test procedure

f. Test results and measured pulling tension

g. Manufacturer's recommended maximum test voltages and test durations for each cable voltage rating.

h. Manufacturer's letter of approval for proposed cable terminations and cable lubricants.

1-3.02. Submit Operations and Maintenance Manuals (O&M) in accordance with the requirements of Section 01300 of the Contract Specifications which shall include approved shop drawings, factory test and certification reports, and on-site/field test and certification reports.

1-4. QUALITY ASSURANCE

1-4.01. Manufacturer: Furnish cable meeting these Specifications and manufactured by CME Wire and Cable Inc., The Kerite Company, The Okonite Company, General Cable Company, Prysmian Cables, or approved equal meeting all the special requirements of this specification.

1-4.02. Standards: Meet applicable requirements of NEC, OSHA, ICEA, U.L., AEIC, and IEEE. U.L. listed for use in underground electrical duct bank (conduit) systems.

1-4.03. Factory and On-Site (Field) Tests: Factory test cables in accordance with applicable UL, NEMA, ICEA and AEIC standards. Field test all cables by an independent testing company as indicated elsewhere in the Section of the Specifications. Furnish certified copies of both Factory and Field (On-Site) test reports. Format and quantity of the reports shall be per the requirements of Section 01300 of the Contract Specifications.

1-5. DELIVERY, STORAGE AND HANDLING

1-5.01. Deliver and store cable on appropriately sized cable reels with cable protected with plyboard or tekboard lagging. Unload and handle cables by suitable methods that are recommended and approved by the cable manufacturer.

1-5.02. Carefully inspect cables upon arrival to the job site and note any damage.

1-5.03. Cover cable reels with plastic sheeting or tarpaulin.

PART 2 - PRODUCTS

2-1. GENERAL

2-1.01. Cable Type: Single conductor shielded cable.

2-1.02. Insulation Level: Insulation level shall be as follows:

a. 5kV – 133 percent

2-1.03. Operating Voltage: Operating voltage level shall be as follows (refer to the PLANS):

a. 4160 volts, 3-phase, 60Hz, grounded distribution system.

2-1.04. Conductor Temperature Ratings:

a. Normal Continuous Operation: 105 degrees C

b. Emergency Overload Conditions: 140 degrees C

c. Short Circuit Conditions: 250 degrees C

2-1.05. Conductors shall be provided for use in circuits with voltage measured phase-to-phase not exceeding:

a. 5000 volts for 5 kV cables.

2-1.06. The manufacturer's name, the voltage class, type of insulation, thickness of insulation, jacket type, conductor size, U.L. listing and date of manufacture shall be printed on the jacket.

2-1.07. Cables shall be suitable for use in partially submerged wet locations, dry locations, in non-metallic or metallic conduits, underground duct systems and direct buried installation.

2-2. CABLE MATERIALS

2-2.01. General: Comply with ICEA S-93-639, AEIC CS8 and UL 1072.

2-2.02. Phase Conductors: Copper, stranded in accordance with ASTM B-496. Tinned in accordance with ASTM B-33.

2-2.03. Phase Conductors Strand Screen: Extruded semiconducting copolymer Strand Screen compatible with EPR. Concentrically extruded directly over the copper strands.

2-2.04. Phase Conductor Insulation: A homogenous wall of thermosetting Ethylene-Propylene Rubber (EPR) based elastomer applied directly over the Phase Conductor Strand Screen.

2-2.05. Phase Conductor Insulation Screen: Extruded semiconducting copolymer Strand Screen compatible with EPR and providing 100% coverage directly over the Conductor Insulation.

2-2.06. Phase Conductor Shielding: Conductor shielding shall be concentrically extruded directly over the Conductor Insulation Screen, providing 100% coverage. Apply (helically) a 5 mil copper tape shield directly over the Conductor Insulation Screen with a 10% lap.

2-2.07. Manufacturer's Cable Overall Jacket: Overall cable jacket shall be Flame resistant Polyvinyl-Chloride (PVC) jacket encasing the cables round core.

2-3. ACCESSORIES

2-3.01. Stress Cones: Provide as manufactured by 3M or approved equal, and as also recommended by the Medium Voltage Cable Manufacturer. A letter of approval must be issued by the Cable Manufacturer which shall accept and approve the use of the selected Stress Cones.

2-3.02. Cable Tags:

a. Type: Holder with slip-in tags

b. Material: Polyethylene

c. Color: BLACK lettering with YELLOW background.

d. Letter Height: 1-1/2", however, in the submittal review process the OWNER may elect to change the lettering height of certain tags to a size smaller than 1-1/2" or maintain the height of each letter of each tag at 1-1/2" in height. The Contractor shall make this adjustment as deemed necessary by the OWNER at no additional cost to the OWNER.

e. Additional Requirements:

1. Minimum anticipated number of characters for each tag shall be 24-characters, however the final number of characters shall be determined by the OWNER and shall be furnished and installed at no additional cost to the OWNER.

2. Comply with the OWNER's Tagging Methodology described in Section 16200 of the Contract Specifications, Subsection 3.03 Wiring Methodology.

f. Manufacturer: Almetek, Model-TH complete with slip-in characters style EZ-H,or approved equal.

2-3.03. Cable Lubricant:

a. Cable lubricant shall be manufactured specifically for lubricating cable which is pulled through conduit.

b. Cable lubricant shall be of type recommended by cable manufacturer.

2-3.04. Arc and Fireproofing tapes:

a. Withstand arc temperature of 13000 degrees Kelvin for 70 cycles on 60 Hertz basis, tape shall be as manufactured by 3M Scotch 77, or approved equal, applied with 3M Scotch 69 glass cloth tape, or approved equal.

PART 3 - EXECUTION

3-1. FACTORY TESTS AND INSPECTION

3-1.01. Standard factory tests shall be performed on the cables specified in accordance with the latest version of UL, NEMA, ICEA and AEIC standards. Factory tests to include the following at a minimum:

a. High AC voltage test

b. Partial Discharge (Corona) test

c. Conductor, Shield, and Insulation Resistance

3-1.02. The manufacturer shall provide certified copies of factory test reports prior to shipment of the equipment to the project site. Format and quantities of the test report shall be in accordance to Section 01300 of the Specifications. .

3-2. INSTALLATION

3-2.01. Install cable in accordance with manufacturer's instructions and recommendations. Do not violate the minimum cable bending radius.

3-2.02. Thoroughly lubricate conduit and all cables to be pulled with lubricant to minimize pulling tension. Monitor pulling tension with tension meter and record pulling tension.

3-2.03. Install continuous length of cable. Splice only where specifically shown on the PLANS.

3-2.04. Terminate all cable with appropriate terminator. Coordinate with the equipment requirements as specified elsewhere.

3-2.05. Color code all cables per the OWNER's color code using colored phase tape.

3-2.06. Train cables around the sides of the manholes and secure as shown on the PLANS and as specified in Section 16150.

3-2.07. Fireproof all cables inside of each manhole, pullbox, and cable closet with the previously specified tapes applied per the manufacturer's recommendations.

3-2.08. Cable tagging:

a. Cable tags shall be installed at the following points on each cable:

1. Origin

2. Destination

3. At each entry to manhole and pull box.

b. Fasten tag each end of wire tag with the nylon tie straps to insure a secure installation.

c. Cable tags to indicate the following:

1. Load (as indicated on One Line Diagram).

2. Circuit number (as indicated on One Line Diagram).

3. Phase.

4. Load break switch, controller, and/or circuit breaker tag serving the cable and served by the cable.

3-3. FIELD TESTING

3-3.01. Field Testing Company and Witnessing: All Field Testing is to be performed by an independent testing company normally employed in this field. Testing shall be witnessed by the OWNER/ENGINEER. All test reports shall be certified by the testing company. Format and quantity of reports shall be per the requirements of Sections 01300 and 01300 of the Contract Specifications. Perform each of the following tests for 15 minutes in accordance with the cable manufacturers recommendations after cable is installed in conduit and before cable is connected to equipment:

a. Megger Test

b. DC HIPOT

3-4. MEASUREMENT AND PAYMENT

3-4.01. No separate measurement or payment for work performed under this Section. Include cost of same in Contract price bid for work of which this is a component part.

END OF SECTION

SECTION 16200

WIRING (600 VOLTS AND BELOW)

PART 1 - GENERAL

1-1. SUMMARY

1-1.01. Furnish and install the field wiring as specified herein and as shown on the PLANS.

1-1.02. Furnish and install all wiring required to make the electrical system completely and satisfactorily operable. Comply with the National Electrical Code and all applicable federal, state, and local codes, regulations and ordinances.

1-1.03. The requirements of this section also applies in whole to the installation of the fiber-optic cables and Ethernet copper cables. Fiber optic cables and are specified in Section 11465 “Filter Control System” of the Specifications.

1-2. RELATED REQUIREMENTS

1-2.01. The PLANS designate the type, number, and size of field wiring.

1-2.02. Related work as called for on the PLANS, as specified herein or in other Sections of the Specifications.

1-3. SUBMITTALS

1-3.01. Submit shop drawings in accordance with Section 01300 of the Contract Specifications.

1-3.02. Submit Operations and Maintenance Manuals (O&M) in accordance with Section 01300 of the Contract Specifications. O&M Manuals shall include copies of the approved shop drawings, factory and on-site/field test data.

PART 2 - PRODUCTS

2-1. GENERAL REQUIREMENTS

2-1.01. All wire and cable on this project shall be new, unused, in good condition and shall be delivered in standard coils, packages or reels. Submit wire samples

when requested by the OWNER. Final acceptance of wire shall be made by the OWNER or its representative.

2-2. SINGLE CONDUCTOR - GENERAL ELECTRICAL POWER SYSTEM AND AUXILIARY ELECTRICAL SYSTEM WIRING

2-2.01. All wire shall be 98% conductivity copper, stranded, single conductor Type THWN-2/THHN. This wire shall have moisture resistant insulation and clean stripping characteristics. Wire shall be marked at minimum distance of every ten feet (10') with the size, type and voltage of the wires as well as the manufacturer's name and measurement markers. All neutral and ground wires shall be insulated and identified and marked.

2-2.02. The color of the wire shall be selected to conform in all instances to the following table:

Phase	277/480 Volts	120/208 Volts AC	24 Volts DC
ΦA	Brown	Red	----------
ΦB	Yellow	Black	----------
ΦC	Purple	Blue	----------
Neutral	Gray	White	Brown
Ground	Green	Green	Green
Motor Space Heater (H)	----------	Black	----------
DC (+)	----------	----------	Blue

2-2.03. Any interlock wiring installed in one device with power from another device shall be properly marked.

2-2.04. The minimum wire size shall be No.10 for all wiring unless shown otherwise on the PLANS.

2-2.05. Departures from the sizes shown shall be made only in those cases in which the National Electric Code requires the use of larger conductors.

2-2.06. General Electrical Power System and Auxiliary Electrical System Wiring shall be as manufactured by General Cable Company, The Okonite Company, or approved equal.

2-3. SIGNAL AND COMMUNICATION WIRING

2-3.01. 4-20 Milliamp Signal wiring:

a. Number of Pairs: One

b. Wire Size: #16 AWG

c. Type of Conductors: Stranded copper conductors, twisted

d. Individual Conductor Insulation: PVC

e. Individual Conductor Insulation Color: Positive (+) is Black, Negative (-) is White.

f. Drain Wire: Tinned copper

g. Overall Shield: Aluminum-mylar shield.

h. Overall Jacket: PVC

i. Overall Jacket Color: Black.

j. Manufacturer: Samuel Moore and Company, Dekoron Division, Cat. No. 1852 or approved equal.

2-3.02. Multi-Conductor RTD Temperature Signal Wiring:

a. Number of Triads: One

b. Wire Size: #16 AWG

c. Type of Conductors: Stranded copper conductors, twisted

d. Individual Conductor Insulation: PVC

e. Individual Conductor Insulation Color: Positive (+) is Black, Negative (-) is White, Sense (S) is Red.

f. Drain Wire: Tinned copper

g. Overall Shield: Aluminum-mylar shield.

h. Overall Jacket: PVC

i. Overall Jacket Color: Black.

j. Manufacturer: Samuel Moore and Company, Dekoron Division, Cat. No. 1862 or approved equal.

2-3.03. Ethernet Data Communication Wiring:

a. Number of Pairs: Four

b. Wire Size: #23 AWG

c. Type of Conductors: solid copper conductors, twisted

d. Individual Conductor Insulation: 300 volt polyolefin

e. Individual Conductor Insulation Color: White/Blue Stripe, Blue, White/Orange Stripe, Orange, White/Green Stripe, Green, White/Brown Stripe, Brown

f. Drain Wire: No. 24 AWG Tinned copper

g. Overall Shield: Aluminum-mylar shield.

h. Overall Jacket: PVC, include ripcord

i. Overall Jacket Color: Blue.

j. Maximum Attenuation at 100 MHz: 18.9 dB per 100 meters of cable length

k. Maximum Attenuation at 250 MHz: 31.2 dB per 100 meters of cable length

l. Manufacturer: Belden, Catalog No. 7851A, or approved equal. .

m. Agency Compliance: ANSI/TIA/EIA-568 B.2-1 Category 6

2-3.04. Fiber Optic

a. Refer to Section 17350 Fiber Optic Communication Subsystem.

2-3.05. RS-485 Communication wiring:

a. Comply with sub-section 2.03.A, this Section of the Specifications.

2-4. SINGLE CONDUCTOR CONTROL WIRING

2-4.01. Single conductor control wiring shall be 98% conductivity copper, stranded, single conductor Type THWN-2/THHN. This wire shall have moisture resistant insulation and clean stripping characteristics. Wire shall be marked at

minimum distance of every ten feet (10') with the size, type and voltage of the wires as well as the manufacturer's name and measurement markers.

2-4.02. Conductors shall have a minimum size of #14 AWG, unless shown otherwise on the PLANS. The color of the wire shall be RED.

2-4.03. Single Conductor Control Wiring shall be as manufactured by General Cable Company, The Okonite Company**,** or approved equal.

2-5. MULTI-CONDUCTOR CONTROL WIRING

2-5.01. General: Multi-Conductor control system cables shall be shielded and shall be rated 600 volts. Cables shall be suitable and rated for installation for AC or DC service in wet or dry locations at conductor temperatures of 90 degrees C. Cable shall be suitable and rated for installation in conduit system, cable tray system, and directly buried in the ground/earth where electrostatic shielding is required.

2-5.02. Features: As minimum, the Multi-Conductor shielded control cables shall have the following features:

a. Passes the IEEE 383 and IEEE 1202 flame tests as well as ICEA T-29-520 (210,000 BTU/hour) flame test

b. Conductors: Each individual conductor in each multi-conductor cable shall be copper per ASTM B-3. Each conductor shall have the following additional features:

1. Stranding: Class B stranding per ASTM B-8

2. Insulation: Meet or exceed the requirements of ICEA S-73-532

3. Conductor Identification: Color coded using base colors and tracers according to the following:

Conductor Size	Number of Conductors in a cable	Conductor Insulation Thickness	Cable Maximum Overall Diameter	Color Code		
				Cond. No.	Base Color	Tracer
				1	Black	----
				2	White	----
				3	Red	----
#12	Seven	30	0.74	4	Green	----

Conductor Size	Number of Conductors in a cable	Conductor Insulation Thickness	Cable Maximum Overall Diameter	Color Code		
				Cond. No.	Base Color	Tracer
AWG	(7)	mils	inches	5	Orange	----
				6	Blue	----
				7	White	Black
				1	Black	----
				2	White	----
				3	Red	----
				4	Green	----
#12	Twelve	30	0.96	5	Orange	----
AWG	(12)	mils	inches	6	Blue	----
				7	White	Black
				8	Red	Black
				9	Green	Black
				10	Orange	Black
				11	Blue	Black
				12	Black	White
				1	Black	----
				2	White	----
				3	Red	----
				4	Green	----
				5	Orange	----
				6	Blue	----
				7	White	Black
				8	Red	Black
#12	Nineteen	30	1.09	9	Green	Black
AWG	(19)	mils	inches	10	Orange	Black
				11	Blue	Black
				12	Black	White
				13	Red	White

Conductor Size	Number of Conductors in a cable	Conductor Insulation Thickness	Cable Maximum Overall Diameter	Color Code		
				Cond. No.	Base Color	Tracer
				14	Green	White
				15	Blue	White
				16	Black	Red
				17	White	Red
				18	Orange	Red
				19	Blue	Red

c. Size of each conductor and quantity of conductors: There shall be three kinds of multi-conductor control cables: Seven (7) conductor (#12 AWG) cables, Nineteen (19) conductor (#12 AWG) cables, and Nineteen (19) conductor (#12 AWG) cables. Sizes and quantities shall be as shown on the Conduit/Wire Schedule shown on the Drawings.

d. Overall Cable Shield: 100 percent shield consisting of 5-mil corrugated copper tape, longitudinally applied.

e. Overall outer jacket: Each multi-conductor cable shall be covered with overall black thermoset chlorinated polyethylene flame retardant outer jacket. Minimum jacket thickness is 60 mils.

f. Number of conductors in a cable: Number of conductors shall be as shown on the Conduit/Wire Schedule shown on the Drawings.

g. Manufacturer: Okonite FMR-LCS-Okolon TS-CPE, or approved equal.

2-6. WIRE TAGGING

2-6.01. Wire Tags:

a. Rating: Flame-Retardant,

b. Style: Heavy-Duty Industrial Grade

c. Type: Heat Shrinkable type.

d. Character Height: 1/8 inch.

e. Maximum Length: 2 inches.

f. Text Type: Typed with indelible marking process. Handwritten shall not be accepted.

g. Color: Yellow. Exception: Use White for 120 volts A.C. power circuits to instrument/devices, and branch circuit lighting and convenience receptacle circuits.

h. Manufacturer: “Raychem type Heavy-Duty Industrial Grade ShrinkMark Heat-Shrinkable Marking Sleeves”, or approved equal. Utilize "Raychem" Portable-Marking-System” complete with wire tag cartridges, or approved equal.

2-7. MISCELLANEOUS

2-7.01. Wire Pulling Lubricant: Ideal #77 or approved equal

2-7.02. Vertical cable supports (in conduit): O.Z. Gedney Type “S”, or approved equal.

2-7.03. Multi-Cable Connector Blocks:

a. Use only for power wiring termination for motors rated 600V and below

b. 600V rated

c. Insulated with UV rated chemical resistant plastisol compound that will not support combustion

d. Suitable for use with fine stranded extra-flexible wiring

e. Suitable for use with aluminum and copper conductors

f. U. L. 486A Listed

g. Pre-filled with an oxide inhibitor.

h. Manufacturer: “Polaris Connectors” Series Polaris Grey, or approved equal.

2-7.04. Submersible Roadway Lighting Multi-Cable Connector Blocks:

a. Use only for wiring termination for roadway lighting and where specifically called for by the PLANS

b. 600V rated, 6061-T6 aluminum alloy EPDM rubber insulated connector,

c. submersible,

d. U.L. Listed and complies with ANSI C119.1, ANSI C119.4,

e. Suitable for use with aluminum or copper connectors,

f. Furnish and install with manufacturer's standard silicone grease and corrosion inhibitor,

g. Manufacturer: "Connector Manufacturing Company" (CMC) Type SSBC-S, or approved equal

2-7.05. Pin Connectors:

a. Use only for terminating wire where specifically called for by the PLANS. Coordinate pin diameter for proper termination.

b. UL listed

c. 600V rated copper compression connector with EPDM insulation sleeve,

d. Rated for 90 degrees C conductor temperature

e. Manufacturer: "Burndy" HYPLUG Type YE-P-FX, or approved equal.

2-7.06. Corrosion Resistant and Moisture Repelling Electrical Coating/Spray:

a. Color: Clear. Coordinate spray color with the Owner. Furnish and install the color requested by the Owner at No Additional Cost to the Owner.

b. Type: Corrosion resistant and moisture repellant fast drying spray coating sealant

c. Manufacturer: "3M" 1601 Clear-Color Fast Drying Sealer and Insulator, or approved equal.

PART 3 - EXECUTION

3-1. INSTALLATION

3-1.01. Before wire is pulled into any conduit, thoroughly swab the conduit to remove all foreign material and to permit the wire to be pulled into a clean, dry conduit. Use wire pulling lubricant in pulling any wire. Pull all conductors into their respective conduits by hand except where written permission of the OWNER is secured to the contrary.

3-1.02. Furnish and install the previously specified vertical cable supports in conduit were required by the NEC.

3-1.03. No wire splices shall be accepted except as permitted below:

a. Splicing of 208/120 volt lighting and receptacle circuiting:

1. General: Perform all splicing in splice/junction boxes dedicated for this purpose.

2. For splices where wiring is:

a) #10 AWG and smaller: Utilize 600 volts WeatherProof Wire-Nut Wire Connectors. The WeatherProof Wire-Nut Wire Connectors shall be twist-on type and shall be pre-filled (factory- filled) with Silicone-Based Sealant for maximum protection against Moisture and Corrosion. The WeatherProof Wire-Nut Wire Connectors shall be as manufactured by IDEAL Model 61, 62, or 63 WeatherProof Wire-Nut Wire Connectors, or approved equal.

b) All other sizes: Use the Multi-Cable Connector Blocks as Specified in 2.07.C, this Section of the Specifications.

3. For splices located in roadway lighting handholes and outdoor light pole bases:

a) Use the Submersible Roadway Lighting Multi-Cable Connector Blocks as Specified in 2.07.D, this Section of the Specifications

b. Splicing of existing site wiring routed in duct bank systems where specifically noted to be spliced on the plans with submergence rated splice kit:

1. General: Perform all splicing in splice/junction boxes dedicated for this purpose. Each splice shall be performed using a submergence rated splice kit furnished complete with a compression type wire connector, epoxy resin sealant, and plastic form/mold for casting the epoxy resin sealant as hereinafter specified. Cord and cable fittings shall be used to facilitate wiring penetration through junction box. Furnish and install junction box with Nema-4X rated enclosure drain fitting.

2. Wire Connector:

a) Compression Type, rated 600 volts and color-coded. Coordinate size required with the requirements of the DRAWINGS

b) Material: Tin plated copper per ASTM B75, seamless, one-piece connector

c) Certifications: UL 486A listed.

d) Manufacturer: Burndy Hylink Type YSCM or approved equal.

3. Splice Kit:

a) General: 600 volt submergence rated splice kit. Install per manufacturer's instructions and recommendations.

b) Sealant: Field installable epoxy resin

c) Certifications: UL 486D listed

d) Form/mold: Plastic. Coordinate required size of mold with the requirements of the DRAWINGS.

e) Manufacturer: 3M Scotchcast Inline Resin Splice Kit 82-A series, or approved equal.

3-1.04. For wiring termination to motors rated 600 volt and below, use the Multi-Cable Connector Blocks as Specified in 2.07.C, this Section of the Specifications.

3-1.05. All wiring connections must be insulated with 600 volt insulation system

3-1.06. Tagging:

a. Tag all power, Instrumentation and Controls, Fiber Optic Cables, and all other types of auxiliary electrical wiring and cables at both ends with the specified heat shrinkable tags and heat shrink tags.

b. Tag per Subsection 3.03 of this Section of the Specifications and per the OWNER's cable and wire tagging standards.

c. Tag each wire in a Multi-Conductor cable in addition to the overall cable itself.

d. Group wiring routed in pullboxes that are routed in common conduits and tag each wiring group inside each pullbox with nameplates as follows:

1. Type: 3-ply, 1/8" thick, rigid thermoset phenolic resin laminated cellulose paper base engraving stock per ASTM D-709, Type I. Nameplates shall be ASTM Grade ES-1, ES-2, or ES-3 as applicable for the face and lettering colors specified hereinafter. Flexible or acrylic tags will be not be accepted

2. Color: White-Black-White

3. Lettering: 1/4 inch height, minimum, engraved through the face layer to the melamine middle layer

4. Accessories: Provide holes for mechanical fastening.

e. Secure each phenolic tag (where required) with a minimum of two nylon cable ties, one at each end of the tag.

3-1.07. Ground shielded instrument cables at one point only, i.e.; at the final destination in the associated instrument and control cabinets.

3-1.08. Terminate stranded wiring by use of lugs, clamps or pressure type terminals.

3-1.09. After all wiring connections have been made, the Contractor shall apply the Corrosion Resistant and Moisture Repelling Electrical Coating/Spray to all wiring connections. Coordinate with the Owner prior to application of spray. The extent of spray application is further clarified as follows:

a. Spray shall be applied for all terminations of the following types of connections at a minimum:

1. termination points, terminals, terminal blocks, ground bar, neutral bar/bus,

2. lugs of circuit breakers, buses, doors, etc.

3. exposed/stripped ends of each conductor, etc.

4. bolt-on connections, split-bolt connections, ring lugs, etc.

5. submersible roadway connectors, compression connectors, connector blocks, etc.

6. all other connection types not listed above

b. Spray shall be applied for all terminations at the following types of equipment at a minimum:

1. Panelboards, transformers, motor control centers, manual motor starters, contactors, light switches, light fixtures, etc.

2. Motor termination enclosures, valve actuators, etc.

3. Convenience receptacles, etc.

4. All other types of equipment not listed above.

3-2. TESTS

3-2.01. Perform all tests as outlined in Section 16800 and all other tests which are necessary to determine that the electrical wiring system is in satisfactory operating condition. Wiring shall be tested end-to-end after it is pulled in the conduit system.

3-3. WIRE TAGGING METHODOLOGY

3-3.01. Wire Tagging Scheme:

a. All wiring shall be tagged utilizing the source and destination method. In general, as minimum each tag shall be comprised of various fields which are:

1. Device Identifiers,
2. Terminal Numbers and,
3. Equipment Identification name

b. The following is the format that shall be used for each wire tag:

XXXX	-	XX	(XXXX-XXXX-XXXX	/	XXXX	-	XX)
Device Identifier		Terminal Number	Equipment Identification Name		Device Identifier		Terminal Number

1. The tag information to the left refers to the point of termination. Tag information in parenthesis refers to the point of origination. Note: For wiring within the boundaries of a piece of equipment, The Equipment identification name shall not be required, only the Device Identifier and the Terminal Number from the point of origination. Examples to this exception would be, wiring from one terminal strip to another within the same control panel, etc.

c. The following provides a brief description to each of the fields required within a phenolic wire tag:

FIELD	DESCRIPTION
Device Identifier:	A four (4) alphanumeric character field that shall uniquely identify a device within a piece of equipment. Examples are: TB1, for Terminal Block Number 1, and CR02 for Control Relay #02, etc.
Terminal Number:	A two (2) alphanumeric character field that shall identify which specific point on the Device the wire must be terminated to. Refer to manufacturer's labeling or record drawings for Device Terminal Numbers.
Equipment Identification Name:	A twelve (12) alphanumeric character field that shall be the same as the physical Equipment Identification Nameplate attached to the equipment.

3-4. MEASUREMENT AND PAYMENT

3-4.01. No separate measurement or payment for work performed under this Section. Include cost of same in Contract price bid for work of which this is a component part.

END OF SECTION

SECTION 16250

BOXES AND CABINETS

PART 1 - GENERAL

1-1. SUMMARY

1-1.01. Furnish and install all cabinets, junction boxes, pull boxes and outlet boxes as shown on the PLANS, required by the Specifications or N.E.C., or as otherwise necessary for a satisfactory operating system.

1-2. RELATED REQUIREMENTS

1-2.01. The PLANS designate other requirements associated with the proposed equipment specified under this Section

1-2.02. Related work as called for on the PLANS, as specified herein or in other Sections of the Specifications.

1-3. SUBMITTALS

1-3.01. Submit shop drawings in accordance with the Section 01300 of the Specifications.

1-3.02. Submit Operations and Maintenance Manuals (O&M) in accordance with Section 01300 of the Specifications. O&M Manuals shall include copies of the approved shop drawings, factory and on-site/field test data.

PART 2 - PRODUCTS

2-1. JUNCTION AND PULL BOXES

2-1.01. Lighting and power, signal, telephone, voice communication, instrumentation and controls, and any other junction and pull boxes hereinafter specified or shown on the PLANS shall be as provided as follows:

a. Outdoor boxes shall be NEMA-4X Type 316-Stainless Steel Boxes. Boxes shall be equipped with hinged doors complete with 1/4 (quarter) turn door latches.

b. Indoor boxes in non-environmentally controlled rooms shall be as follows:

1. All areas:

    a) Smaller than or equal to 12” wide x 12” high: 99.0% copper-free rigid Aluminum NEMA-4X corrosion resistant and water tight boxes.

    b) Larger than 12” side x 12” high: NEMA-4X Type 316-stainless steel Boxes.

2. Boxes shall be equipped with hinged doors complete with 1/4 (quarter) turn door latches.

c. Indoor boxes in environmentally controlled rooms shall be as follows:

1. NEMA 12 with ANSI No. 61 Gray finish

2. Boxes shall be equipped with hinged doors complete with 1/4 (quarter) turn door latches.

2-1.02. Additional requirements for Generator Terminal Junction Boxes dedicated for the termination of the Owner’s mobile standby generator set field wiring:

a. Junction boxes shall be furnished and installed with a full size back panel for mounting power distribution blocks. Back panel shall be painted white and be the standard product of the junction box manufacturer.

b. Furnish and install power distribution blocks as specified hereinafter for terminating the field interconnect wiring. Furnish and install all mounting hardware and make all final connections. All hardware shall be Type 316 stainless steel.

c. Interior Labeling:

1. Label all terminal blocks (phases A, B, and C) with a nameplate as specified in subsection 2-3, this Section of the Specifications.

2. Inside of the enclosure in a conspicuous location, furnish and install a nameplate as specified in subsection 2-3, this Section of the Specifiations with the following exceptions:

    a) 1/2” high lettering

    b) Red background with white lettering

    c) The nameplate shall have the following inscription: “WARNING: MAXIMUM GENERATOR PROTECTIVE DEVICE RATING IS 600 AMPERE”.

d. Power Distribution Blocks:

1. Rating: 600 volts A.C., with minimum of 600 Ampere continuous rating.

2. Number of Poles: As required.

3. Type: Single Layer, mounted on insulated base.

4. Temperature Rating: 75 degrees C.

5. Material: Tin-plated aluminum alloy, suitable for use with copper conductors.

6. Wire Range: As required to terminate the field wiring shown on the PLANS. Additionally, the generator side connection shall be suitable to terminate two sets of 500 kcmil copper conductors per phase.

7. UL recognized.

8. Manufacturer: Littelfuse Powr-Bloks, Ilsco, Allen-Bradley, or approved equal.

2-1.03. Boxes or cabinets shall be not less than 6-inches deep and their size determined by the requirements of , and in compliance with the National Electrical Code (NEC).

2-1.04. Each type of boxes and cabinet on the project shall be manufactured by a single manufacturer.

2-1.05. Manufacturer:

a. Hoffman Concept Series, Rittal, Millbank, or approved equal.

2-2. DEVICE BOXES FOR CONVENIENCE/SPECIAL PURPOSE RECEPTACLES AND LIGHT SWITCHES

2-2.01. Boxes for convenience/special-purpose receptacles shall be as specified in Section 16300 “Wiring Devices”.

2-2.02. Boxes for Light Switches shall be as specified in Section 16300 “Wiring Devices”.

2-3. NAMEPLATES

2-3.01. General:

a. Type: 3-ply, 1/8" thick, rigid thermoset phenolic resin laminated cellulose paper base engraving stock per ASTM D-709, Type I. Nameplates shall be ASTM Grade ES-1, ES-2, or ES-3 as applicable for the face and lettering colors specified hereinafter. Flexible or acrylic tags will be not be accepted

b. Color: White-Black-White

c. Lettering: 1/4 inch height, minimum, engraved through the face layer to the melamine middle layer

d. Accessories: Provide holes for mechanical fastening. Provide adhesive backplane where required in Part 3, Execution.

PART 3 - EXECUTION

3-1. APPLICATION

3-1.01. General:

a. Pullboxes shall be used only to reduce the number of bends for conduit, supports, taps, troughs and similar applications. No splicing shall be performed in pullboxes.

b. Junction boxes shall only be used where shown on the PLANS. Any other use of junction boxes other than for receptacle and lighting circuit wiring, is not permitted.

c. Outlet boxes shall be used for ceiling or wall mounting of light fixtures, receptacles, open type manual motor starters, and where required by the PLANS and Specifications to facilitate proper connection to equipment.

3-2. INSTALLATION

3-2.01. Set box square and true with building surfaces. Secure boxes firmly to support channels. Coordinate final location of boxes with other trades to avoid any conflicts.

3-2.02. Utilize specified support channels, then secure/mount boxes and cabinets to the support channels. All mounting hardware shall be Type 316-stainless steel. Equipment support channels shall be per the requirements of Section 16150 "Raceways, Fittings, and Supports". Additionally, refer to details shown on the PLANS.

3-2.03. Tagging:

a. Tag each box with the name as it appears on the PLANS using the specified namplates. Exception: Use nameplates specified in Section 16300 “Wiring Devices” for manual motor starters located in environmentally controlled rooms, light switches, and outlet boxes.

b. Attach identification nameplates with two stainless steel screws.

3-2.04. Cap all outlets not used under this Contract with blank outlet covers.

3-2.05. Furnish and install labels as required by the NEC.

3-3. MEASUREMENT AND PAYMENT

3-3.01. No separate measurement or payment for work performed under this Section. Include cost of same in Contract price bid for work of which this is a component part.

END OF SECTION

SECTION 16300

WIRING DEVICES

PART 1 - GENERAL

1-1. SUMMARY

1-1.01. Furnish and install all necessary wiring devices at the locations indicated on the PLANS and as specified herein.

1-2. RELATED REQUIREMENTS

1-2.01. The PLANS designate other requirements associated with the proposed equipment specified under this Section

1-2.02. Related work as called for on the PLANS, as specified herein or in other Sections of the Specifications.

1-3. SUBMITTALS

1-3.01. Submit shop drawings in accordance with Section 01300 of the Contract Specifications. Include manufacturer's catalog data/notification certifying Aluminum Device Boxes, as specified hereinafter, to be 99.0% copper-free.

1-3.02. Submit Operations and Maintenance Manuals (O&M) in accordance with Section 01300 of the Contract Specifications. O&M Manuals shall include copies of the approved shop drawings, factory and on-site/field test data.

PART 2 - PRODUCTS

2-1. LIGHT SWITCHES

2-1.01. General: Shall be provided complete with light switch, box, and coverplate with the following features.

2-1.02. Light switch:

a. Specification grade, 20 amp, 120/277 volts

b. Provide the number of poles as required by the PLANS.

c. Provide maintained action type operation, unless momentary action is specifically required by the PLANS.

d. Ivory color switch handle operator.

e. Manufacturer: Pass and Seymour No. PS20AC, or approved equal.

2-2. 120 VOLTS AC, COVENIENCE RECEPTACLES

2-2.01. General: Shall be provided complete with receptacle, box, and coverplate with the following features:

2-2.02. Receptacle

a. Specification grade

b. Duplex, 3-wire, polarized grounding type, rated 20 amp, 125 volt, 60 Hertz

c. Ivory color

d. Manufacturer: Hubbell No. HBL5362I, Bryant**,** Pass and Seymour, or approved equal.

2-2.03. Ground Fault Interrupter Receptacle:

a. Provide where G.F.I receptacles are indicated on the PLANS

b. Specification grade, weather-resistant type,

c. Duplex, 3-wire, polarized grounding type, rated 20 amp, 125 volt, 60 Hertz..

d. Red indicator light

e. Test and Reset pushbutton

f. Ivory color.

g. Manufacturer: Pass & Seymour Cat. No. 2095TRWR, or approved equal.

2-2.04. Box: Provide as hereinafter specified.

2-3. DEVICE ENCLOSURES

2-3.01. General: Furnish and install the type of device enclosure complete with coverplate and necessary adapters as specified herein, fully coordinated with the operating environment and mounting configuration.

2-3.02. Die Cast Aluminum, 99.0% copper-free, one piece construction, suitable for surface mounting

2-3.03. Single and Multi-Gang Weatherproof Outlet boxes, as required.

2-3.04. 3/4-inch threaded hubs, minimum box depth shall be 2-5/8". Use 2-3/4" depth when "gang" arrangements of outlets are used.

2-3.05. Manufacturer: Crouse-Hinds Series FS or FD, Appleton, or approved equal.

2-3.06. Coverplate:

a. Receptacles:

1. Weatherproof: Die Cast Aluminum 99.0% copper-free, complete with rubber gasket, as manufactured by Crouse-Hinds WLRS (single cover) and WLRD (duplex cover), or approved equal.

2. Raintight while-in-use type hinged coverplate: Suitable suitable for installation outdoors in a wet location. Provide gasket, adapter, and mounting hardware to mount cover to device enclosure. Cover material shall be extra deep clear thermoplastic. Provide as manufactured by Leviton "Raintight While In Use Covers" Model 5977-DCL or approved equal.

b. Switches: Die Cast Aluminum, 99.0% copper-free, gasketed coverplate with external operating handle for on-off operation (with hole for lock), as manufactured by Crouse-Hinds or approved equal.

2-4. MISCELLANEOUS

2-4.01. All mounting hardware shall be Type 316-stainless steel.

PART 3 - EXECUTION

3-1. INSTALLATION

3-1.01. Mounting: Device enclosures shall be surface mounted on conduit support channels per Section 16150 and as shown on the PLANS.

3-1.02. Mounting heights shall be as follows unless otherwise noted on the PLANS:

a. Light switches: 48 inches above finished floor to center of switch

b. Receptacles: 36 inches above finished floor to center of receptacle.

3-1.03. Tagging:

a. Tag all receptacles and switches

b. Tagging format: “ckt. LPY-XX” where Y represents the panel number (i.e. for “LP-01”, Y is 1) and XX represents the circuit number. Add voltage if other than 120V.

c. Tag type:

1. Type: 3-ply, 1/8” thick, rigid thermoset phenolic resin laminated cellulose paper base engraving stock per ASTM D-709, Type I. Nameplates shall be ASTM Grade ES-1, ES-2, or ES-3 as applicable for the face and lettering colors specified hereinafter. Flexible or acrylic tags will be not be accepted

2. Color: White-Black-White

3. Lettering: Engraved through the face layer to the melamine middle layer

4. Accessories: adhesive backplane

3-1.04. Provide 6-inches offset for receptacles or other wiring devices mounted on opposite sides of a wall.

3-1.05. Do not use switch boxes as junction boxes for switch and receptacle.

3-1.06. Set box square and true with building surfaces.

3-1.07. Maintain symmetry of all devices as closely as possible within the Architectural Section contained. For example, center a light fixture over a doorway, or a receptacle in a section of wall, if shown in that approximate position.

3-1.08. Verify location of receptacles and switches in finished rooms. In centering devices and locating device boxes, allow for overhead pipes, and mechanical equipment; etc., and correct any inaccuracy from failure to do so without extra expense to the OWNER.

3-1.09. Cap all device boxes not used under this Contract with blank outlet covers.

3-1.10. Orient convenience receptacles such that ground terminal is above the phase terminals.

3-2. MEASUREMENT AND PAYMENT

3-2.01. No separate measurement or payment for work performed under this Section. Include cost of same in Contract price bid for work of which this is a component part.

END OF SECTION

SECTION 16350

LIGHTING

PART 1 - GENERAL

1-1. SUMMARY

1-1.01. Furnish and install lighting fixtures, outdoor lighting photocells, and lighting contactors as specified herein and as indicated on the PLANS.

1-1.02. The subsequent document entitled “Appendix A – Lighting Fixture Schedule” is hereto made part of this section and includes a listing of proposed lighting fixtures and other requirements. This schedule in “Appendix A” is not inclusive of all equipment required by this Contract. Refer to Part 2 of this section for quantities of spare parts and additional equipment in addition to those listed in “Appendix A”.

1-2. RELATED REQUIREMENTS

1-2.01. The PLANS designate the number of lighting fixtures and other requirements for the proposed equipment specified under this Section.

1-2.02. Related work as called for on the PLANS, as specified herein or in other Sections of the Specifications.

1-3. SUBMITTALS

1-3.01. Submit shop drawings in accordance with Section 01300 of the Contract Specifications. Submit a lighting fixture brochure for each fixture indicating catalog number, pertinent physical characteristics, and complete photometric data.

1-3.02. Submit Operations and Maintenance Manuals (O&M) in accordance with Section 01300 of the Contract Specifications. O&M Manuals shall include copies of the approved shop drawings, factory and on-site/field test data.

1-4. SPARE PARTS

1-4.01. Provide quantities of spare parts as follows:

a. Spare HID, Flourescent, and Quartz lamps: 100 percent spare lamps for each fixture type specified.

b. Spare LED lamp modules: Five percent spare LED lamp modules for each fixture type specified, with minimum of 3 lamp modules of each type.

c. Spare Ballasts: 10 percent spare ballasts for each fixture type specified, with minimum of 3 ballasts of each type.

d. Spare Drivers: Five percent spare drivers for each fixture type specified, with minimum of 6 drivers of each type.

e. Photocells: Provide 3 spare photocells of each type specified.

PART 2 - PRODUCTS

2-1. GENERAL

2-1.01. General:

a. Furnish and install fixtures in accordance with the requirements of this specification and the requirements of the PLANS. Fixtures shall bear the U.L. label and such labels shall apply to entire fixture as installed.

b. Deliver lamps to job site in original cartons. Lamps shall be as manufactured by General Electric, Sylvania, or approved equal.

2-2. LIGHT FIXTURES

2-2.01. General: Multiple types of light fixtures are required for this project and as described hereinafter in Appendix A. Refer to the PLANS for application of the specific light fixture types.

2-3. LIGHT POLE

2-3.01. Type: Round tubular tapered pole with integral mounting base and continuously welded joints

2-3.02. Tube Material: Aluminum 6063-T6

2-3.03. Base material: 356-T6 aluminum. Entire assembly of light pole and base is heat treated to T6 temper. Drill holes in base for anchor bolts.

2-3.04. Shape: Round. Pole shall be uniformly tapered along its height.

2-3.05. Size: 8-inch diameter (diameter as measured at bottom of pole) pole shaft, 0.156 inch wall thickness at minimum. Increase size as required to support

the load with a wind speed of 100 miles per hour, at minimum, at no additional cost to the Owner. Provide pole length as required in accordance with the requirements of the PLANS.

2-3.06. Handhole: Welded into pole shaft, minimum of 3" x 5" rectangular opening. Provide with bolted and gasketed field removable cover. Provide oversized handhole as required to facilitate wiring installation.

2-3.07. Finish: Powder coated per manufacturer's standard process. Finish shall be applied to both the interior and exterior of the pole as well as both sides of the base, base cover, handhole cover, accessories, etc. i.e., all surfaces. Final finish color shall be dark bronze to match the Owner's existing roadway light fixtures. Coordinate finish color with the Owner at no additional cost to the Owner.

2-3.08. Accessories:

a. Bolted pole top cap with retainer

b. Grounding lug

c. Wind vibration dampeners

d. Pole cover collar.

e. Transformer Base:

1. 356 aluminum alloy heat treated to T6

2. 17 inch height, at minimum

3. Handhole with bolted field removable handhole cover

4. Grounding lug

f. Additional accessories as required by the plans..

2-3.09. Manufacturer: NAFCO International "Round Tapered Aluminum Pole" and "17" Transformer Base" or approved equal.

2-4. ACCESSORIES

2-4.01. Deliver all fixtures complete with suspension chains, accessories, canopies, hickeys, casings, sockets, holders, reflectors, ballast, diffusers, frames, recessing boxes, etc.

2-5. PROTECTION

2-5.01. Protect all fixtures, lenses and louvers from damage. Leave protective coverings on lenses and louvers until fixtures are installed. Replace all damaged lenses and louvers immediately prior to final inspection at no cost to the OWNER.

2-6. SUBSTITUTIONS

2-6.01. Comply with requirements of the Contract Specifications.

2-7. PHOTOCELL FOR OUTDOOR AND PERIMETER LIGHTING CONTROL

2-7.01. General:

a. Type: 180 degree Swivel type

b. Conduit Size: 1/2" NPT nipple

c. Enclosure: Metallic gray polycarbonate enclosure (lexan)

d. Timer: Internal two (2) minutes built-in delay to prevent false switching

e. Contacts: Rated for 15 ampere at 208/120 volts A.C. Coordinate voltage required with the requirements of the PLANS.

f. Accessories:

1. Field adjustable Light level selector for "on/off" adjustment

2. NEMA-4X stainless steel gasketed outlet box coverplate complete with 1/2" threaded opening for Photocell mounting.

g. Manufacturer: TORK catalog No. 2002 (208 volts A.C. units) and TORK catalog No. 2001 (120 volts A.C. units), or approved equal.

2-8. LIGHTING CONTACTOR

2-8.01. Furnish and install totally enclosed Lighting Contactors and associated controls, as specified hereinafter and as shown on the PLANS.

2-8.02. General:

a. Number of Poles and Configuration: Four (4) pole single throw

b. Contactor Type: Electrically held

c. Contacts Configuration: Normally Open (N.O.) contacts.

d. Minimum continuous current rating of the contacts: 60 amperes at 208 volts AC, unless otherwise shown to be greater on the PLANS.

e. Contact Application: Suitable to drive Ballast Tungsten and Inductive Loads

f. Certifications: U.L. listed

g. Symmetrical Short Circuit Rating: Minimum of 10,000 ampere at 208 volts A.C. unless shown to be greater on the PLANS.

h. Control Coil Voltage: 120 volts A.C..

i. Accessories:

1. Two wire control relay per manufacturer's standard product to facilitate the control logic as shown on the PLANS.

2. Vibration isolators

3. Hand-Off-Auto selector switch. Selector switch shall be 30-millimeter, rated NEMA-4X corrosion resistant industrial grade with minimum contact rating of 10-amperes at 120 volts AC. Miniature size selector switches will not be accepted. Mount to face of contactor enclosure and wire as shown on the PLANS. Furnish and install with legend plate per manufacturer's standard with inscription as shown on the PLANS. Selector switch shall be as manufactured by Allen-Bradley Bulletin 800H or approved equal.

4. Pilot Lights: Pilot lights shall be 30-millimeter, Transformer Type push-to-test Light Emitting Diode (LED) type, rated NEMA-4X corrosion resistant oil-tight industrial grade with minimum contact rating of 10-amperes at 120 volts AC. Miniature size selector switches will not be accepted. Mount to face of contactor enclosure and wire as shown on the PLANS. Furnish and install the colors as shown on the PLANS. Furnish and install with legend plate per manufacturer's standard with inscription as shown on the PLANS. Pilot lights shall be as manufactured by Allen-Bradley Bulletin 800H or approved equal.

2-8.03. Enclosure: NEMA-4X Type 316 Stainless Steel gasketed cabinet enclosure.

2-8.04. Manufacturer: "General Electric Company "G.E." Series CR360L with specified accessories, or approved equal.

PART 3 - EXECUTION

3-1. INSTALLATION AND TESTING

3-1.01. Maintain perfect horizontal and vertical alignment of fixtures throughout.

3-1.02. Do not locate circuiting splices or taps within an arm, stem or chain.

3-1.03. Replace any damaged fixture or lens at no cost to the OWNER.

3-1.04. Support all pendant fixtures with swivel type hangers.

3-1.05. Install recessed luminaries to permit removal from below, to gain access to outlet or prewired fixture box.

3-1.06. Locate fixtures where shown on the PLANS and coordinate fixture location such to avoid interference with piping, fans, ducts, and other obstructions. Obtain approval of any location differing from the location shown on the PLANS.

3-1.07. Furnish and install outlet box as specified in Section 16250 “Boxes and Cabinets” for photocell mounting. Orient and make wiring connections to photocell per photocell manufacturer’s recommendations.

3-2. MEASUREMENT AND PAYMENT

3-2.01. No separate measurement or payment for work performed under this Section. Include cost of same in Contract price bid for work of which this is a component part.

END OF SECTION

SECTION 16350
APPENDIX A LIGHT FIXTURE SCHEDULE

LIGHT FIXTURE SCHEDULE			
TYPE	**LAMP**	**ACCEPTABLE MANUFACTURER/ CATALOG NO.**	**DESCRIPTION**
B1	LED 21900 Lumens	Beacon Products VP-L / 96NB-280 / 4K / T2 / UNV / NP / 20k / RA / BZ / or approved equal	Outdoor located area and roadway luminaire suitable for wet locations. Luminaire shall be listed as “Nighttime Friendly” and shall be consistent with LEED goals for light pollution reduction. IES Type II distribution. 280 Watt, 4000K, 65 CRI, Light Emitting Diode (LED) with L85 life of 50,000 hours in ambient of 25 degrees C. Four (4) light engines per fixture. Drivers shall be thermally isolated from heat-generating light engine. Power factor of greater than or equal to 90 percent lagging. Total harmonic distortion less than 20 percent. Housing shall be rugged, Die-Cast aluminum. Door shall be Die-Cast aluminum, fully sealed with one-piece tubular silicone gasket. Molded acrylic lens. : Corrosion resistant dark bronze polyester powder finish. Coordinate color to match Owner’s existing roadway light fixtures at no additional cost to the Owner. Pole Mounted. Fixture shall be suitable for mounting on specified support pole. Double fusing shall be furnished and installed for use with Line-Line voltages. The complete assembly of luminaire, arm, and pole shall be able to withstand 100 MPH wind gusts. Five year minimum warranty. All required mounting accessories and hardware for a complete installation. All hardware shall be Type 316 Stainless Steel. Mounting pole complete with all accessories as specified.

SECTION 16350
APPENDIX A LIGHT FIXTURE SCHEDULE

LIGHT FIXTURE SCHEDULE			
TYPE	**LAMP**	**ACCEPTABLE MANUFACTURER/ CATALOG NO.**	**DESCRIPTION**
B2	LED 21900 Lumens	Beacon Products VP-L / 96NB-280 / 4K / T4 / UNV / NP / 20k / RA / BZ / or approved equal	Outdoor located area and roadway luminaire suitable for wet locations. Luminaire shall be listed as “Nighttime Friendly” and shall be consistent with LEED goals for light pollution reduction. Forward throw type distribution. 292 Watt, 4000K, 65 CRI, Light Emitting Diode (LED) with L85 life of 50,000 hours in ambient of 25 degrees C. Four (4) light engines per fixture. Drivers shall be thermally isolated from heat-generating light engine. Power factor of greater than or equal to 90 percent lagging. Total harmonic distortion less than 20 percent. Housing shall be rugged, Die-Cast aluminum. Door shall be Die-Cast aluminum, fully sealed with one-piece tubular silicone gasket. Molded acrylic lens. : Corrosion resistant dark bronze polyester powder finish. Coordinate color to match Owner’s existing roadway light fixtures at no additional cost to the Owner. Pole Mounted. Fixture shall be suitable for mounting on specified support pole. Double fusing shall be furnished and installed for use with Line-Line voltages. The complete assembly of luminaire, arm, and pole shall be able to withstand 100 MPH wind gusts. Five year minimum warranty. All required mounting accessories and hardware for a complete installation. All hardware shall be Type 316 Stainless Steel. Mounting pole complete with all accessories as specified

SECTION 16350
APPENDIX A LIGHT FIXTURE SCHEDULE

LIGHT FIXTURE SCHEDULE			
TYPE	**LAMP**	**ACCEPTABLE MANUFACTURER/ CATALOG NO.**	**DESCRIPTION**
G	LED 3300 lumens	LITHONIA #VAP/39LED/57/SYM/MVOLT/SF/STSL/JSB/WLFEND2/QMB or approved equal	4-ft vapor-tight, ceiling/wall mounted led luminaire. Luminaire body shall be fully gasketed and polycarbonate housing. Captive, corrosion resistant pivot stainless steel latches or rail clamps shall secure the diffuser. The neoprene gasket shall be permanently molded in lens for a reliable seal. The lens shall be of ultra-violet stabilized, clear polycarbonate. The driver shall be high power factor. The luminaire shall be ul listed for wet locations. Led color rendering index shall be 70 at minimum. Furnish and install with manufacturer's standard surface mounting brackets. Coordinate, furnish, and install fixture with wet location fittings. Refer to the plans.
J	LED 5500 Lumens	Lithonia (Contour Series) #CSXW LED 1 30B700/40K SR4 120 DF/DDBXD, or approved equal	Wall mounted, led luminaire, suitable for outdoor use. Luminaire shall be listed as “Nighttime Friendly” and shall be consistent with LEED goals for light pollution reduction. Housing and door frame shall be of corrosion-resistant, die-cast aluminum, sealed and gasketed to inhibit the entrance of contaminants. Hardware shall be of stainless steel. Finish shall be power coat dark bronze for corrosion resistance. The lens shall be of molded acrylic. Integral aluminum heat sinks. Power factor of greater than or equal to 90 percent lagging. Total harmonic distortion less than 20 percent. Light engine shall have L85 life of 50,000 hours in ambient of 25 degrees C. The driver shall be fused. Complete unit shall come with a 5-year full warranty. The luminaire shall be UL listed for wet locations. Led shall have minimum CRI of 65.

SECTION 16350
APPENDIX A LIGHT FIXTURE SCHEDULE

LIGHT FIXTURE SCHEDULE			
TYPE	**LAMP**	**ACCEPTABLE MANUFACTURER/ CATALOG NO.**	**DESCRIPTION**
K	(1) 250W metal halide (1) 100W Quartz	HUBBELL-KEMLUX III KH series # KH/E/P/25/O/B/2/GL /G/F1/BP/KPA40 /QS and with corrosion-free epoxy coating inside and out with natural aluminum finish, or approved equal	The wall mounted with through feed 250W pulse start metal halide lighting fixture shall be suitable for Class 1, Div. 2 environment. The hinged, ballast housing and optical assembly shall be gasketed/sealed to isolate from the environment. The ballast housing with mounting shall be of cast copper free aluminum with corrosion-free epoxy powder coating inside and out powder (natural aluminum) finish. The lamp socket shall be porcelain in a mogul base configuration. The multi-tap (suitable for 120 or 208 volt) integral enclosed high power factor ballast shall be able to operate in an ambient temperature range from -40°c to +40°c. The globe shall be of a high impact, heat resistant glass with an internal fluted pattern. Provide 30 degree angle reflector of fiberglass reinforced polyester. Provide globe with #316 stainless steel wire guard. External hardware shall be of #316 stainless steel. Fixture shall be UL listed. Provide fixture with integral 100 Watt quartz restrike auxiliary light wired to de-energize once the main metal-halide lamp illuminates.
L	LED 3000 Lumens	Lithonia #VRR LED 3L / FHL / 120 / ALDF / SF Or Approved Equal	Recessed canopy / ceiling mounted, 120V, LED luminaire for vandal resistant applications. Housing 16 gauge steel. Door frame shall be of corrosion-resistant, die-cast aluminum. Finish shall be white polyester polyester powder coat finish for corrosion resistance. Integral aluminum heat sinks. Light engine shall have L70 life of 50,000 hours in ambient of 25 degrees C. The lens shall be of flat heat resistant tempered glass. The luminaire shall be UL listed for wet locations. Complete unit shall come with a 5-year full warranty. Led shall have minimum CRI of 70.

SECTION 16350
APPENDIX A LIGHT FIXTURE SCHEDULE

LIGHT FIXTURE SCHEDULE			
TYPE	**LAMP**	**ACCEPTABLE MANUFACTURER/ CATALOG NO.**	**DESCRIPTION**
R	LED 16400 Lumens	LITHONIA #CSX2LED-3-30B700/40K-SR4-MVOLT-RPA-DF-DDBXD, or approved equal	Outdoor located area and roadway luminaire suitable for wet locations. Luminaire shall be listed as “Nighttime Friendly” and shall be consistent with LEED goals for light pollution reduction. IES Type IV distribution. 222 Watt, 4000K, 65 CRI, Light Emitting Diode (LED) with L85 life of 50,000 hours in ambient of 25 degrees C. Three (3) light engines per fixture. Drivers shall be thermally isolated from heat-generating light engine. Power factor of greater than or equal to 90 percent lagging. Total harmonic distortion less than 20 percent. Housing shall be rugged, Die-Cast aluminum. Door shall be Die-Cast aluminum, fully sealed with one-piece tubular silicone gasket. Molded acrylic lens. : Corrosion resistant dark bronze polyester powder finish. Coordinate color to match Owner’s existing roadway light fixtures at no additional cost to the Owner. Pole Mounted. Fixture shall be suitable for mounting on specified support pole. Double fusing shall be furnished and installed for use with Line-Line voltages. The complete assembly of luminaire, arm, and pole shall be able to withstand 100 MPH wind gusts. Five year minimum warranty. All required mounting accessories and hardware for a complete installation. All hardware shall be Type 316 Stainless Steel. Mounting pole complete with all accessories as specified. Provide 1” stainless steel pipe nipple welded to pole at 24” above top of pole base to facilitate routing of switch wiring through side of pole to a device enclosure mounted to exterior face of pole. Brush ends of nipple

SECTION 16350
APPENDIX A LIGHT FIXTURE SCHEDULE

LIGHT FIXTURE SCHEDULE			
TYPE	**LAMP**	**ACCEPTABLE MANUFACTURER/ CATALOG NO.**	**DESCRIPTION**
X	LED	Dual-Lite #SEWLDRBE-4X-FAP Or approved equal	Universal mounted, double faced nema 4x rated, led exit sign complete with sealed long life heavy duty nickel cadmium battery and 120v/277v as required by charger. housing shall be of cast aluminum construction with black enamel finish and red letters with stencil face of brushed aluminum. Each face shall be covered by a heavy duty polycarbonate lens. Fixture shall have self diagnostic testing functionality to perform periodic and automatic self test of battery and circuit operation and indicate failure via integral diagnostic led indicating light mounted on the side of the fixture. The solid state charger shall have integral test switch and be capable to fully charge batteries within 24 hours. The unit shall be UL listed and meet the current life safety code, NFPA101, the NEC and OSHA illuminations standards. Furnish with arrow in direction as show on plans. Furnish with double face as shown on the plans.
Y	(2) 9 WATT hit (or) 8 WATT Halogen PAR36 sealed beam	Emergi-Lite #12 KSE 36-2 Series Or approved equal	Wall mounted 12v twin light, battery emergency luminaire. NEMA 4X cabinet shall be constructed of molded fiberglass with ASA 61 gray finish and with fully gasketed front door. Charger is 100% solid state, automatic pulse type with transfer by sealed relay that energizes lamp load upon failure of ac supply. A low voltage battery disconnect circuit senses low battery voltage and automatically disconnects the lamp load from the battery to prevent deep discharges. Unit equipped with volt meter. Unit batteries are sealed maintenance free long life lead type with 35-watt capacity. Operation input voltage shall be 120v. Provide with chord and plug. Complete unit shall come with a 3-year full warranty. Unit shall be UL listed.

SECTION 16444

COMBINATION MOTOR STARTERS

PART 1 - GENERAL

1-1. SUMMARY

1-1.01. Scope of Work

a. The Contractor shall furnish and install the combination motor starters as specified herein and as shown on the PLANS.

1-2. RELATED REQUIREMENTS

1-2.01. The PLANS designate the type, number, size and rating of devices included in the combination motor starters.

1-2.02. Related work as called for on the PLANS, as specified herein or in other Sections of the Specifications.

1-3. -1.05 (NOT USED)

1-6. SUBMITTALS

1-6.01. Submit shop drawings in accordance with the requirements of Section 01300 of the Contract Specifications. Include:

a. Dimensioned/scaled top and bottom views, front elevations

b. One-line diagrams and wiring diagrams,

c. Catalog cut sheets. Include protective device coordination curves and current limiting circuit breaker/fuse peak current let through curves, where applicable.

1-6.02. Operation and Maintenance Manuals

a. Furnish Operation and Maintenance Manuals in accordance with the requirements of Section 01300 of the Contract Specifications. Include:

1. Installation and operation manuals.

2. Renewal parts bulletin.

3. As built drawings, including approved shop drawings.

4. Test data.

1-7. QUALITY ASSURANCE

1-7.01. All Combination Motor Starters on the project shall be manufactured by a single Combination Motor Starter manufacturer. The manufacturer of the Combination Motor Starters shall also manufacture the majority of components and subsystems therein (i.e., circuit breakers, starters, controls relays, etc.)

1-7.02. The Combination Motor Starters shall be designed, constructed, and tested in accordance with the latest applicable requirements of NEMA, ANSI, UL, and NEC standards.

1-7.03. Combination Motor Starters shall be as manufactured by Square D Company, General Electric Company "G.E.", Allen-Bradley, or Cutler Hammer Corporation, or approved equal.

1-8. DELIVERY, STORAGE AND HANDLING

1-8.01. Protection

a. The Contractor, and hence the Combination Motor Starters supplier, shall be responsible for safety of the Combination Motor Starters during storage, transporting and handling.

b. At all times the Combination Motor Starters shall be housed inside a moisture free, non-porous, extra heavy duty plastic weatherproof housing.

c. Interior and exterior of Combination Motor Starters shall be kept clean at all times.

d. Energize the space heaters within the Combination Motor Starters and energize during storage and installation for humidity control.

1-9. TOOLS AND SPARE PARTS

1-9.01. Furnish the following spare parts with the equipment for each Combination Motor Starter in conformance with the specifications:

a. One (1) – Set of fuses (minimum 2) for each type and size used.

b. One (1) – Set of starter contacts for each size used. If contacts are not replaceable a spare starter for each size used shall be supplied.

c. One (1) - Contactor coils for every NEMA size and type starter installed, a minimum of one coil per size.

d. One (1) - Spare control relays for each type used. Control relay shall be furnished complete with relay coils, Four (4) Normally Open (N.O.) contacts, Four (4) Normally Closed (N.C.) contacts, and shall be furnished with Relay Manufacturer's Transient Voltage Suppression Module.

e. One (1) - Spare timing relay.

f. Two (2) – Sets of overload heaters for each size and type used.

PART 2 - PRODUCTS

2-1. GENERAL

2-1.01. For additional construction notes and special requirements, refer to the PLANS. Also refer and adhere to the requirements of the PLANS.

2-1.02. Combination Motor Starters shall not exceed the dimensions shown on the PLANS.

2-2. CONSTRUCTION

2-2.01. Enclosure:

a. NEMA 4X, Type 304 Stainless Steel gasketed enclosure.

b. Enclosure shall have a hinged door with padlockable disconnect operating handle. Include provisions for up to three padlocks. Handle shall be mechanically interlocked with the door to prevent personnel from opening the door when the disconnect is in the ON position. Provide handle-door interlock defeating (bypass) feature.

c. Include lugs for the connection of the field wiring shown on the PLANS.

2-2.02. Ground Bus

a. A tin plated ground bus shall be furnished for each Combination Motor Starter. The ground bus shall be rated for 50 percent of the main power (phase) rating of the starter, at minimum. Provide ground bolted connectors for the size and quantity of wire at each end of the bus.

2-2.03. Wiring

a. All wiring shall be stranded copper not smaller than No. 14 AWG.

b. All wiring shall be neatly bounded with tie-wraps and supported to wire ways supports.

2-2.04. Identification

a. All component and control identification labels shall include the device name and number exactly as it appears on the PLANS. Refer to the PLANS.

b. All control wires shall be tagged and coded with an identification number. Tagging type and wire coding shall be per manufacturer's standard..

c. All terminal blocks shall be identified.

d. Properly label the devices mounted inside each section using manufacturer's standard laminated labels installed in accordance with the manufacturer's standard method.

e. Nameplates:

1. Type: 3-ply, 1/8" thick, rigid thermoset phenolic resin laminated cellulose paper base engraving stock per ASTM D-709, Type I. Nameplates shall be ASTM Grade ES-1, ES-2, or ES-3 as applicable for the face and lettering colors specified hereinafter. Flexible or acrylic tags will be not be accepted.

2. Color: White-Black-White.

3. Lettering: Engraved through the face layer to the melamine middle layer. Nameplates located on the face of each combination motor starter shall be legible at a distance of six feet from the nameplate.

4. Accessories: Provide holes for mechanical fastening.

5. Attachment Means: Secured with two Stainless Steel screws/bolts per manufacturer's standard; use of adhesives shall not be accepted.

f. Furnish and install nameplates for:

1. Each equipment/device/etc. installed/mounted on the face of the Combination Motor Starter.

2. Overall nameplate for the exterior of each Combination Motor Starter.

2-3. COMBINATION UNITS

2-3.01. Each combination motor controller and feeder unit shall have the following characteristics:

a. Molded case circuit breakers for branch circuit protection. Circuit breakers shall have the following characteristics:

1. U.L. listed minimum RMS symmetrical short circuit current rating equal to or greater than that of the bus serving the starter, unless otherwise shown on the PLANS.

2. Three pole, 600 volt, type and maximum continuous current carrying capacity as shown on the PLANS.

b. Starters shall have the following characteristics:

1. Starters shall be magnetic type, NEMA rated, with 120 volts A.C. operating coils. International type starters (IEC rated), will not be accepted, even if the starters were to show equivalent NEMA ratings.

2. Size and configuration (full voltage non-reversing, full voltage reversing, reduced voltage solid state, etc.) as shown on the PLANS.

3. Provide each starter coil with the manufacturer's standard transient voltage surge suppression module.

4. Provide auxiliary contacts as required by the PLANS. Contacts shall be rated for 120 volts A.C and shall satisfy the requirements of the PLANS. Provide each starter with one (1) normally open auxiliary contact wired to terminal blocks over the number of contacts required by the PLANS.

5. The control description requirements of the Specifications show the minimum requirements for the each starter. Additionally, provide the manufacturer's standard starter control logic as a base (as applicable) that is supplemented by the additional requirements shown on the Specifications and PLANS to deliver a starting scheme that is in full satisfaction to the Owner. Furnish additional controller contact inputs/outputs, interposing relays, timing relays, selector switch contacts, fused power supplies, etc., as required to facilitate proper starter operation. However, the manufacturer's standard control logic shall only employ the use of hardwired and non-programmable relay logic. The use of programmable logic controllers (PLCs) or other similar appearing type devices located inside the Combination Motor Starter shall not be accepted.

c. Provide Overload relays where required by the PLANS. Overload relays shall have the following characteristics:

1. Standard class 20, ambient compensated,

2. Manually reset by push-button located on front of the compartment door.

3. Provide with auxiliary contact rated for 120 volts A.C. Contact shall satisfy the requirements of the PLANS.

4. The overload relay heaters will be selected by the Contractor after delivery of the Combination Motor Starter. Include all necessary delivery, packaging, and administrative costs associated with the delivery of overload heaters.

d. Control Power Transformer. The transformer shall have the following characteristics:

1. Adequately sized to serve all loads shown on the PLANS. Minimum size shall be 200VA, unless noted otherwise on the PLANS.

2. Connect as shown on the PLANS.

e. Provide one single pole fuse block with fuse for each motor space heater.

f. Provide one elapsed time meter as hereinafter specified for each motor starter and mount to the front of the Combination Motor Starter. Wire meter to the motor starter auxiliary contact. Refer to the PLANS for additional requirements.

g. Provide additional requirements as shown on the PLANS.

2-4. MISCELLANEOUS ACCESSORIES

2-4.01. Control relays shall have the following characteristics:

a. 600 volts, standard NEMA Size, AC Heavy-Duty industrial type with 120 volt AC coils.

b. Minimum contact rating of 10A, continuous, at 120 volts AC.

c. Furnish each relay with one additional Normally Open (N.O.) and one additional Normally Closed (N.C.) contacts over the number required by the PLANS.

d. Provide each relay with Relay Manufacturer's Transient Suppression Module.

e. Relays shall be “Allen Bradley Bulletin 700”, Type-700P, or approved equal relays of the MCC manufacturer.

2-4.02. Timing Relays shall have the following characteristics:

a. Solid state, multi-time, and multi-function type relay

b. Both timing ranges and timing modes shall be field selectable. Each relay shall be capable of the following timing modes:

1. On Delay

2. Off Delay

3. One Shot

4. Repeat Cycle

5. Interval

c. Minimum relay contact rating shall be 10 amps, continuous, at 120 VAC.

d. Timing relays shall be Square D Class 9050 model No. JCK70 complete with Type NR61 Socket, or approved equal.

2-4.03. Pushbuttons, Selector Switches, Pilot Lights

a. General Requirements:

1. Rating: NEMA 4X, corrosion resistant, Heavy Duty

2. Size: NEMA Style full size 30-millimeter (30mm),

3. Contacts: 10 ampere minimum at 120 volts A.C. Provide number of contacts to satisfy the requirements of the PLANS.

4. Legend Plate: Provide per manufacturer’s standard with inscription as shown on the PLANS.

5. Manufacturer: Allen Bradley Bulletin 800H, or approved equal.

b. Additional Requirements for Selector Switch/ Pushbuttons:

1. Operator Color: Black, unless shown otherwise on the PLANS.

2. Selector Switch Action Type: Maintained action, unless shown otherwise on the PLANS.

3. Pushbutton Action Type: Momentary action, unless shown otherwise on the PLANS.

c. Additional Requirements for Pilot Lights:

1. Type: Transformer Type Light Emitting Diode (LED),

2. Voltage: 120 volts A.C.

3. Style: Push-to-test

4. Lens Color: Refer to the PLANS..

2-4.04. Enclosure space heater:

a. Sized per manufacturer's standard

b. Individually protected with a fuse

c. Thermostatically controlled and wired to terminal blocks in the starter. Served from the starter control power transformer.

2-4.05. Elapsed Time Meters: Totally sealed, NEMA 4X rated, black polymer rectangular, flush panel mounted enclosure with mounting clip. Non-resettable quartz electronic clock timing, operating voltage of 90-264 volts AC, -40 degrees C to +85 degrees C temperature range, reading at least to 99999.9 hours and at least to nearest one-tenth of an hour. White digits on black background, U. L. recognized. Elapsed time meter shall be as manufactured by Redington Model 722-0002 Totally Sealed AC Hour Meter, with Model 5003-009 Nema 4X gasket, or approved equal.

PART 3 - EXECUTION

3-1. FACTORY INSPECTION AND TEST

3-1.01. Standard factory tests shall be performed on the equipment specified in this section. All tests shall be in accordance with the latest version of ANSI and NEMA standards. The manufacturer shall provide certified copies of factory test reports prior to shipment of the equipment to the project site. Format and quantities of the test report shall be in accordance to Section 01300 and Section 01300 of the Contract Specifications.

3-2. FIELD INSTALLATION (BY CONTRACTOR)

3-2.01. Install per manufacturer's instructions and recommendations. Install all required safety labels.

3-2.02. Size, furnish and install the overload relay heaters based on actual motor nameplate current. Set overload relay settings at maximum values permitted by the NEC 430-32.

3-2.03. Size, furnish and install the motor space heater fuses based on actual motor space heater load current.

3-2.04. Surface mount Combination Motor Starter units where the top of each unit is no higher than 5-feet-6-inches above the finished floor elevation, unless otherwise noted on the PLANS. Mount free standing Combination Motor Starters on an equipment pad as shown on the PLANS.

3-3. FIELD TEST AND CHECKS

3-3.01. Verify proper rotation of all motor loads

3-3.02. Verify motor space heater circuits are operational.

3-3.03. Verify Combination Motor Starter enclosure space heater circuits are operational.

3-3.04. Verify functional operation of the applicable starter control logic circuitry.

3-3.05. Submit documentation of all tests outlined above.

3-4. EQUIPMENT PROTECTION AND RESTORATION

3-4.01. Clean and vacuum all interior of the equipment.

3-4.02. Touch-up and restore damaged surfaces to factory finish.

3-4.03. Energize the space heaters within the Combination Motor Starter and energize during storage and installation for humidity control.

3-5. MEASUREMENT AND PAYMENT

3-5.01. No separate measurement or payment for work performed under this Section. Include cost of same in Contract price bid for work of which this is a component part.

END OF SECTION

SECTION 16450

600 VOLTS AND BELOW DRY TYPE TRANSFORMERS

PART 1 - GENERAL

1-1. SUMMARY

1-1.01. Furnish and install dry type transformers as specified herein and as shown on the PLANS.

1-2. RELATED REQUIREMENTS

1-2.01. The PLANS designate the number, size and rating of transformers required.

1-2.02. Related work as called for on the PLANS, as specified herein or in other Sections of the Specifications.

1-3. - 1.05 (NOT USED)

1-4. SUBMITTALS

1-4.01. Submit shop drawings in accordance with Section 01300 of the Specifications. For each individual Transformer include:

a. Dimensioned/scaled plan view and elevation,

b. Ratings, product data sheets, including weight and nameplate data

c. Wiring connection diagram

1-4.02. Submit Operations and Maintenance Manuals (O&M) in accordance with Section 01300 of the Specifications. O&M Manuals shall include copies of the approved shop drawings, factory and on-site/field test data.

1-5. (NOT USED)

1-6. DELIVERY, STORAGE AND HANDLING

1-6.01. Deliver, receive, unload and handle equipment by suitable methods. Inspect for damage before accepting shipment. Wrap in protective plastic wrapping

and store in humidity controlled environment. Use heat lamps as necessary to prevent condensation.

1-7. - 1.10 (NOT USED)

1-8. ACCEPTABLE MANUFACTURER

1-8.01. General Use (Power & Lighting) Dry-Type Ventilated Isolation Transformers shall be Watchdog Premium Quality units manufactured by Sorgel (Square D) class 7430, or approved equal.

1-8.02. General Use (Power & Lighting) Dry-Type Non-Ventilated Isolation Transformers in all areas shall be as manufactured by Square D class 7400, or approved equal.

1-8.03. Ultra-Isolator, Highly Shielded and Noise and Transient Voltage Suppressing Transformers IN ALL AREAS: shall be as manufactured by "Eaton" Power-Suppress T7 Series 30 Ultra-Isolation Transformers with "K" Factor 13 Rating (with electrostatic shielding) and all other specified accessories, or approved equal.

PART 2 - PRODUCT

2-1. GENERAL AND BASIC REQUIREMENTS FOR ALL 600 VOLT AND BELOW DRY TYPE TRANSFORMERS

2-1.01. Type:

a. Manufacturer's premium quality dry type transformers.

b. Primary and secondary voltage ratings, and, KVA ratings to be as shown on the PLANS.

c. All windings shall be copper.

d. Transformers shall be of ventilated type.

2-1.02. Core and coils:

a. Continuous wound core impregnated with non-hygroscopic, thermosetting varnish.

b. Core to be of high grade, non-aging silicon steel with high magnetic permeability.

c. Core and coil bolted to base of enclosure but isolated from it by rubber vibration absorbing mounts.

2-1.03. Additional Requirements:

a. Furnish with four (4) 2-1/2 percent full capacity primary taps, two (2) above and two (2) below rated primary voltage.

b. Core is to be visibly grounded to enclosure by means of a flexible grounding conductor sized per NEMA, IEEE and ANSI standards.

c. All transformers shall be U.L. listed and certified and carry the U.L. label.

d. Sound levels: Guaranteed not to exceed the following:

Transformer KVA Range	Sound Level
15 to 50KVA	45dB
51 to 150KVA	50dB
151 to 300KVA	55dB

2-2. GENERAL USE (POWER & LIGHTING) VENTILATED DRY TYPE ISOLATION TRANSFORMERS

2-2.01. General:

a. Transformers shall be suitable for indoor installation. Comply with all requirements/specifications outlined in subsection 2.01, above (Basic and General Requirements for All 600 volt and Below Dry Type Transformers).

b. Transformers shall meet NEMA TP-1 efficiency requirements

2-2.02. Temperature Rise and Insulation System:

a. Temperature Rise: 80 degrees Celsius above a 40 degree Celsius. ambient

b. All insulating materials shall be in accordance with NEMA ST20 standards for a 220 degree Celsius. U.L. component recognized insulation system.

2-2.03. Enclosure: Heavy gauge sheet steel with ventilation openings designed in accordance with U.L., NEMA and the N.E.C. Phosphatized, primed and finished with ANSI#61 gray baked enamel. Provide surface/wall mounting brackets where surface/wall mounting is shown on the PLANS.

2-3. GENERAL USE (POWER & LIGHTING) NON-VENTILATED DRY TYPE ISOLATION TRANSFORMERS

2-3.01. General:

a. Transformers shall be suitable for indoor installation. Comply with all requirements/specifications outlined in subsection 2.01, above (Basic and General Requirements for All 600 volt and Below Dry Type Transformers). Note: Requirements hereinafter specified take precedence over the requirements outlined in subsection 2.01 above.

2-3.02. Temperature Rise and Insulation System:

a. Transformer core and coils shall be totally encapsulated in epoxy resin.

b. Temperature Rise: 150 degrees Celsius above a 40 degree Celsius. ambient

c. All insulating materials shall be in accordance with NEMA ST20 standards for a 220 degree Celsius. U.L. component recognized insulation system.

2-3.03. Enclosure: Type 316 Stainless Steel, totally enclosed non-ventilated, designed in accordance with U.L., NEMA and the N.E.C. Provide surface/wall mounting brackets where surface/wall mounting is shown on the PLANS.

2-4. CONTROL AND INSTRUMENT POWER ULTRA-ISOLATOR, HIGHLY SHIELDED AND NOISE SUPPRESSION TRANSFORMERS

2-4.01. General:

a. Transformers shall be of the dry type suitable for indoor installation. Comply with all specifications requirements outlined in subsection 2.1, above (Basic and General Requirements for All Dry Type Transformers) in addition to the requirement specified in this subsection 2.2. Note: Requirements hereinafter specified take precedence over the requirements outlined in subsection 2.1 above.

2-4.02. Ratings:

a. Input Voltage Range: Plus or minus 10 percent of nominal.

b. Isolation: All winding are to be electrically isolated from each other

c. Temperature Rise and Insulation System:

1. Temperature Rise: 115 degrees Celsius above a 40 degree Celsius. ambient.

2. All insulating materials shall be in accordance with NEMA ST20 standards for a 200 degree Celsius. U.L. component recognized insulation system.

d. Load Regulation: 3.5 percent or less from no load to full load at unity power factor.

e. Frequency Range: 57 Hz to 63 Hz.

f. Overload Capacity: 500 percent for one cycle with no adverse effects

g. Harmonic Distortion: 1 percent added to the output waveform, at maximum

h. Efficiency: 95 percent at all load levels, at minimum.

i. Maximum Audible Noise: Less than 50 dBA measured at a distance of 3-feet.

j. Common-Mode Noise Attenuation: 120 dB minimum

k. Shielding: 100 percent electrostatic shield wound between the primary and secondary windings. Shield must be connected to a terminal inside the transformer enclosure.

l. “K” Factor Rating: 13, U. L. Listed.

m. Transient voltage surge suppression network conforming to UL 1449 rating.

2-4.03. Enclosure: Heavy gauge sheet steel with ventilation openings designed in accordance with U.L., NEMA and the N.E.C. Phosphatized, primed and finished with gray baked enamel.

2-5. NAMEPLATES

2-5.01. General:

a. Type: 3-ply, 1/8” thick, rigid thermoset phenolic resin laminated cellulose paper base engraving stock per ASTM D-709, Type I. Nameplates shall be ASTM Grade ES-1, ES-2, or ES-3 as applicable for the face and lettering colors specified hereinafter. Flexible or acrylic tags will be not be accepted

b. Color: White-Black-White

c. Lettering: 3/8 inch height, minimum, engraved through the face layer to the melamine middle layer

d. Accessories: Provide holes for mechanical fastening.

PART 3 - EXECUTION

3-1. INSTALLATION

3-1.01. Install at the locations shown on the PLANS in accordance with manufacturer's recommendations. Furnish and install equipment pads as shown on the PLANS for floor mounted transformers and surface/wall mounted brackets for surface/wall mounted transformers as required.

3-1.02. Make grounding connections as required by the N.E.C. and as shown on the PLANS.

3-1.03. Tagging:

a. Tag each transformer with the name as it appears on the PLANS using the specified nameplates attached with stainless steel screws. Include the following additional information: name of the load served by the transformer, primary voltage rating, secondary voltage ratings, KVA rating, phase, wire, primary and secondary winding configuration, and transformer type.

3-2. TESTS AND INSPECTIONS

3-2.01. All test results (including factory test) shall be certified.

3-3. MEASUREMENT AND PAYMENT

3-3.01. No separate measurement or payment for work performed under this Section. Include cost of same in Contract price bid for work of which this is a component part.

END OF SECTION

SECTION 16500

PANELBOARDS

PART 1 - GENERAL

1-1. SUMMARY

1-1.01. Furnish and install panelboards, mini-power centers, and surge protective devices where indicated on the PLANS and as specified herein.

1-1.02. The subsequent document entitled “Appendix A – Panelboard Schedule” is hereto made part of this section and includes a listing of certain proposed panelboards and other requirements. This schedule in “Appendix A” is not inclusive of all equipment required by this Contract. Refer to Part 2 of this section for additional requirements in addition to those listed in “Appendix A”. Conduit size as shown in Appendix A may increase for conduit systems routed underground/underslab/etc., in a duct bank system. Refer to the PLANS and other Sections of the Specifications for additional information.

1-2. RELATED REQUIREMENTS

1-2.01. The PLANS designate the type, size, ratings, and other requirements of the equipment specified in this Section.

1-2.02. Related work as called for on the PLANS, as specified herein or in other Sections of the Specifications.

1-3. - 1.05 (NOT USED)

1-4. SUBMITTALS

1-4.01. Submit Shop Drawings in accordance with Section 01300 of the Specifications. Include panelboard dimensions, ratings, branch circuit breaker schedules and main circuit breakers size. Submit protective device coordination curves and current limiting circuit breaker/fuse peak current let through curves, and transformer impedance, where applicable.

1-4.02. Submit Operations and Maintenance Manuals (O&M) in accordance with Section 01300 of the Specifications. O&M Manuals shall include copies of the approved shop drawings, and on-site/field test data.

1-5. QUALITY ASSURANCE

1-5.01. Panelboards to be U.L. labeled “U.L. 67”, “U.L 508” and meeting Fed. Spec. WP-115, Type 1, Class 1, latest revisions. Breakers to meet Fed. Spec. WC-375, latest revision.

1-6. DELIVERY, STORAGE AND HANDLING

1-6.01. Deliver, receive, unload and handle equipment by suitable methods. Store in humidity controlled environment in original packaging, or, in protective plastic wrapping.

1-7. ACCEPTABLE MANUFACTURERS

1-7.01. All Panelboards on the project shall be manufactured by a single Panelboard manufacturer.

1-7.02. 480 volts A.C., 3-phase, 3-wire Power Distribution Class Panelboards with main bus current rating of 300 ampere or greater, where indicated on the PLANS:

a. Square D Company Series I-LINE with specified accessories. Approved equal Panelboards manufactured by Cutler-Hammer or General Electric are acceptable as equals.

b. These panelboards will be known as Type I panelboards hereinafter

1-7.03. 480 volts A.C., 3-phase, 3-wire Panelboards with main bus current rating lower than 300 ampere, where indicated on the PLANS:

a. Square D Company Series “NF” with specified accessories. Approved equal Panelboards manufactured by Cutler-Hammer or General Electric are acceptable as equals.

b. These panelboards will be known as Type II panelboards hereinafter

1-7.04. 208/120 volts A.C., 3-phase, 4-wire Panelboards - Cutler-Hammer Corporation Type POW-R-Line 3a with specified accessories. Approved equal Panelboards manufactured by Square-D Company or General Electric are acceptable as equals.

1-7.05. 208/120 volts A.C., 3-phase 4-wire Mini Power Center Transformer/Panelboard – Square D Type Mini Power Zone with specified

accessories. Approved equal Panelboards manufactured by General Electric or Cutler-Hammer are acceptable as equals.

1-8. SPECIAL MANUFACTURER'S SERVICES

1-8.01. Prepare an arc-flash study, harmonic study, and a coordination study, complete with short circuit calculations and coordination curves, etc. as required by and in compliance with Section 16041 of the Specifications "5KV Motor Control Center Modifications", paragraph 1.07 "Special Manufacturer's Services".

1-8.02. Manufacturer's technical representative is to set, adjust and test all protective relays, etc. in the presence of a representative of the Owner. The settings will be based on coordination and short circuit studies performed per subsection 1.10.A, this Section of the Specifications. Provide the Owner with test report certified by the manufacturer. Include a record of all settings. Format and quantity of reports shall be per the requirements of Section 01300 of the Specifications. The Manufacturer shall furnish the protective device of the appropriate characteristics that shall be the most suitable for the proper protection and coordination of the system at No Additional Cost to the Owner.

PART 2 - PRODUCTS

2-1. GENERAL

2-1.01. Bussing Requirements

a. Main Bus

1. All buses shall be tin-plated copper, distributed phase sequence type, and shall extend the full length of the panelboard.

2. Refer to the PLANS for bus ratings. Ratings to be established by heat rise tests with maximum hot spot temperature on any connector or bus bar not to exceed 50 degrees Celsius rise above an ambient of 40 degrees Celsius.

3. Circuit numbering to be such that odd numbered circuits are on the left and even numbered on the right facing the front of the panel.

b. Ground Bus

1. Each panelboard shall have a tin plated copper ground bus for connecting equipment grounds. Ground bus shall not be connected to the neutral bus.

c. Isolated Ground Bus:

1. In addition to the equipment ground bar, where called for per subsection 3.02, this Section of the Specifications, furnish a second tin-plated isolated ground bar in panelboard which shall be electrically isolated from the panelboard cabinet/enclosure by 600 volt isolators. Isolated ground bar shall have the same current rating as the phase-bussing (bus rating) of the panelboard.

2-1.02. Circuit Breakers

a. General:

1. Circuit breakers to be single pole, two pole or three pole as shown on the PLANS.

2. All breakers to be quick-make, quick-break thermal magnetic molded case bolt-on type, with inverse time thermal trip and instantaneous time magnetic trip. Multi-pole breakers to be common trip with a single trip handle. Provide overload tripping elements in each pole. A tripped condition to be indicated by the breaker assuming a neutral position between “ON” and “OFF”.

3. Circuit breakers to be equipped with individually insulated, braced and protected connectors. Affix large, permanent, individual circuit numbers to each breaker in a uniform position.

4. Circuit breakers for lighting circuit protection are not to be larger than 20 amperes.

5. Key interlocks shall be provided for circuit breakers where shown on the PLANS.

6. Padlock attachments shall be provided for circuit breakers where shown on the PLANS.

7. Provide lugs as required to facilitate the field wiring termination shown on the PLANS.

b. Circuit breaker interrupting ratings and type to be as follows:

1. Main/Branch Circuit Breakers in Type I Panelboards, and Main Circuit Breakers in Type II Panelboards and Lighting/Control Power Panelboards:

a) Minimum U.L listed Symmetrical Current Interrupting rating (A.I.C. rating) at rated voltage shall be as shown and required by the PLANS.

b) Panelboards shall be provided with high interrupting capacity or current limiter type breakers where necessary to withstand the available short circuit or limit it to a value which the downstream breakers can withstand.

c) Provide current limiting circuit breakers where shown on the PLANS.

d) Provide electronic trip attachment were shown on the PLANS. Trip unit shall be solid state type with field adjustable long time, short time, ground fault and pick up settings.

e) Provide as manufactured by Square D Company Type FC, or approved equal by General Electric Company “G.E.”, Cutler-Hammer Corporation.

2. Branch Circuit Breakers in Type II Panelboards:

a) Minimum U.L listed Symmetrical Current Interrupting (A.I.C rating) at rated voltage shall be as shown and required by the PLANS for the panelboard main circuit breaker.

b) Provide as manufactured by Square D Company Type EDB, or approved equal by General Electric Company “G.E.”, Cutler-Hammer Corporation.

3. Branch Circuit Breakers in Lighting/Control Power Panelboards:

a) U.L listed Symmetrical Current Interrupting 10,000 A.I.C. symmetrical at rated voltage.

b) Provide as manufactured by Square D Company Type QOB, or approved equal by General Electric Company “G.E.”, Cutler-Hammer Corporation.

4. Main and Branch circuit breakers in Mini-Power Centers:

a) U.L listed Symmetrical Current Interrupting 10,000 A.I.C. symmetrical at rated voltage.

b) Although required otherwise elsewhere, bolt-on type circuit breakers are not required for these assemblies.

c) Provide as manufactured by Square D Company Type QO, or approved equal by General Electric Company "G.E.", Cutler-Hammer Corporation.

2-1.03. Miscellaneous Requirements

a. Integrated Equipment Rating: Each panelboard, as a complete unit, shall have a rating equal to or greater than the integrated equipment rating shown on the PLANS.

b. Provide a minimum of 20 percent spares on all panelboards and/or as shown on panel schedules on the attached Appendix A.

2-2. MINI-POWER CENTER TRANSFORMER

2-2.01. General:

a. All windings shall be copper.

b. Transformer shall be totally encapsulated in epoxy resin.

c. Furnish with two (2) 5 percent full capacity primary taps below rated primary voltage.

d. 115 degrees Celsius temperature rise above 40 degree Celsius ambient

e. All insulating materials shall be in accordance with NEMA ST20 standards for a 175 degree Celsius U.L. component recognized insulation system.

2-2.02. Enclosure: NEMA-4X, Type 316 stainless steel.

2-3. CABINET

2-3.01. Adhere to the requirements of UL 50.

2-3.02. Panelboard assemblies installed inside the control room level of the Filter Building Nos. 1 and 2:

a. Enclosure: NEMA-12, gasketed.

b. Doors: Provide door-in-door type arrangement

c. Finish: Primed and painted using the manufacturer's standard finishing process. Finish shall be applied at the manufacturing plant. Color shall be ANSI #61 Gray finish

2-3.03. Panelboard assemblies installed elsewhere:

a. Enclosure: NEMA-4X, Type 316 stainless steel, gasketed

b. Doors: Provide hinged doors complete with door handles.

2-3.04. A circuit directory in a metal frame with clear plastic covering shall be provided on the inside of the door. A directory card shall be typed to identify the load served by each circuit. Spare breakers shall be noted in pencil, however.

2-3.05. The panelboard interior assembly to be dead front with panelboard front removed. Main lugs or main breaker to be barrier on five sides. The end of the bus structure opposite the mains to be barriered.

2-4. NAMEPLATES

2-4.01. General:

a. Type: 3-ply, 1/8" thick, rigid thermoset phenolic resin laminated cellulose paper base engraving stock per ASTM D-709, Type I. Nameplates shall be ASTM Grade ES-1, ES-2, or ES-3 as applicable for the face and lettering colors specified hereinafter. Flexible or acrylic tags will be not be accepted

b. Color: White-Black-White

c. Lettering: 1/2 inch height, minimum, engraved through the face layer to the melamine middle layer

d. Accessories: Provide holes for mechanical fastening.

2-5. SURGE PROTECTIVE DEVICE

2-5.01. Furnish and install Surge Protective Devices (SPD) where required by the PLANS. Each SPD shall have the following features:

a. Number of phases and system configuration (delta, wye grounded) to match and fully protect the bus to which the SPD is connected.

b. SPD shall be tested with the ANSI/IEEE Category C high exposure waveform of 10 kA for 8 x 20 microseconds, at minimum.

c. Visual indication of SPD status.

d. Surge counter.

e. Provide dry contact failure status output contact. Contact shall be rated for 120 volts A.C. and shall satisfy the requirements of the PLANS.

f. UL 1449.

g. 10 year minimum warranty.

h. SPD surge current withstand ratings shall be as follows:

Panelboard Voltage	Minimum Current Withstand rating (Ampere per phase)	Minimum Current Withstand rating (Ampere per mode)
480 volts AC	160kA	80kA
120/208 volts AC	80kA	40kA

2-5.02. Enclosure

a. SPD located indoors in environmentally controlled rooms: NEMA 12

b. SPD located outdoors or indoors in non-environmentally controlled rooms: NEMA 4X, Type 316 stainless steel.

2-5.03. Manufacturer: Innovative Technologies Model PTX 120, Surge Suppression Inc. or approved equal.

PART 3 - EXECUTION

3-1. INSTALLATION

3-1.01. Install panelboards at the locations shown on the PLANS per the manufacturer's instructions and recommendations.

3-1.02. Top of all panelboards shall be at no higher than 6 foot 0 inches above the finished floor elevation, unless specifically noted otherwise on the PLANS.

3-1.03. Tagging:

a. Tag equipment with the name as it appears on the PLANS using the specified nameplates. Panelboard nameplate shall also include: voltage ratings, phase, wire, ampere rating, AIC and withstand current rating, size and type of the main circuit breaker OR Main Lug Assembly (as applicable).

b. Panelboards shall be provided with typed circuit schedule including circuit number, breaker rating and circuit description.

3-1.04. Balance phases as closely as possible and type in directory at the close of the job. Use erasable pencil to indicate “Spares” and “Spaces”.

3-1.05. For surface mounting, use support channel per the requirements of Section 16150 “Raceways, Fittings and Supports” and per the details shown on the PLANS. For floor mounting, provide equipment pad as shown on the PLANS. Also refer to the details shown on the PLANS.

3-1.06. Connect SPD per the requirements of the PLANS and in accordance with the TVSS manufacturer’s recommendations.

3-1.07. The following apply where specifically noted on the panelboard schedules:

a. Refer to the Instrumentation and Control system One-Line diagrams for conduit/wire requirements associated with this load. Additionally, comply with the minimum conduit/wire size requirements specified elsewhere in other Sections of the Specifications.

b. Contractor shall field verify existing branch circuiting loads and conduit/wire associated with this circuit. Contractor shall perform extensive field investigation to ascertain existing branch circuit loads and existing conduit/wire and update the panel schedule with the field discovered loads and conduit/wire. Extend existing circuiting conduit/wire to match existing as required to facilitate circuiting termination to the proposed panelboard.

3-2. ISOLATED GROUND BUS APPLICATION

3-2.01. Furnish and install an isolated ground bus in panelboard and “FB1-CPP-001” and “FB2-CPP-001”.

3-3. MEASUREMENT AND PAYMENT

3-3.01. No separate measurement or payment for work performed under this Section. Include cost of same in Contract price bid for work of which this is a component part.

END OF SECTION

CIRCUIT BREAKER PANEL SCHEDULE - "BB-MPC-001"

VOLTS: 208/120 V BUS AMPS: 100 A MAIN: 60 A PHASE/WIRE: 3Φ 4W

CONDUIT/WIRE DESCRIPTION	CKT BKR SIZE	CKT. NO.	LOAD DESCRIPTIONS	PHASE A	PHASE B	PHASE C	LOAD DESCRIPTIONS	CKT. NO.	CKT BKR SIZE	CONDUIT/WIRE DESCRIPTION
3/4" - 2#10(P),1#10(G)	20 A 2 P	1	INTERIOR LIGHTING	360			INTERIOR RECEPTACLES	2	20 A 1 P	3/4" - 4#10(P),2#10(G)
				1250						
		3			360		EXTERIOR PERIMETER RECEPTACLES	4	20 A 1 P	INCLUDED IN CONDUIT WITH CIRCUIT NO. 2
					1250					
INCLUDED IN CONDUIT WITH CIRCUIT NO. 10	20 A 1 P	5	SOUTH CLEARWELL & FILTER BUILDING EXTERIOR POLE-MOUNTED LIGHTING			180	SOUTH CLEARWELL EXTERIOR POLE-MOUNTED RECEPTACLE	6	20 A 1 P	3/4" - 4#10(P),2#10(G)
						1110				
INCLUDED IN CONDUIT WITH CIRCUIT NO. 10	20 A 1 P	7	EXTERIOR PERIMETER LIGHTING	360			FILTER BUILDING EXTERIOR POLE-MOUNTED RECEPTACLES	8	20 A 1 P	INCLUDED IN CONDUIT WITH CIRCUIT NO. 6
				304						
3/4" - 2#10(P),1#10(G)	20 A 1 P	9	INTERIOR EMERGENCY LIGHTING		100		LIGHTING CONTACTOR "BB-ELC-001" CONTROL POWER	10	20 A 1 P	1" - 6#10(P),3#10(G)
					50					
3/4" - 4#10(P),2#10(G)	20 A 1 P	11	EXHAUST FAN			250	ROLLUP DOOR	12	20 A 2 P	3/4" - 2#10(P),1#10(G)
						264				
INCLUDED IN CONDUIT WITH CIRCUIT NO. 11	20 A 1 P	13	EXHAUST FAN CONTROL POWER	250				14		
				100						
	20 A 1 P	15	SPARE		0		SPARE	16	20 A 1 P	
					0					
	20 A 1 P	17	SPARE			0	SPARE	18	20 A 1 P	
						0				
	20 A 1 P	19	SPARE	0			SPARE	20	20 A 1 P	
				0						
	20 A 1 P	21	SPARE		0		SPARE	22	20 A 1 P	
					0					
	20 A 1 P	23	SPARE			0	SPARE	24	20 A 1 P	
						0				
	TOTAL CONNECTED VOLT AMPS (VA)			2624	1760	1804				

This document is sealed on the seal sheet as required by TBPE under the authority of K.A. Harutunian, P.E. 59181

CIRCUIT BREAKER PANEL SCHEDULE - "FB1-CPP-001"

VOLTS: 208/120 V BUS AMPS: 100 A MAIN: 100 A PHASE/WIRE: 3Φ 4W

CONDUIT/WIRE DESCRIPTION	CKT BKR SIZE	CKT. NO.	LOAD DESCRIPTIONS	PHASE A	PHASE B	PHASE C	LOAD DESCRIPTIONS	CKT. NO.	CKT BKR SIZE	CONDUIT/WIRE DESCRIPTION
COMPLY WITH SECTION 16500.3-1.07.a	20 A 1 P	1	FILTER NO.1 LOCAL CONTROL PANEL "FB1-LCP-001-I"	85 / 85			FILTER NO.2 LOCAL CONTROL PANEL "FB1-LCP-002-I"	2	20 A 1 P	COMPLY WITH SECTION 16500.3-1.07.a
COMPLY WITH SECTION 16500.3-1.07.a	20 A 1 P	3	FILTER NO.1 LEVEL "FB1-LIT-001-I"		36 / 36		FILTER NO.2 LEVEL "FB1-LIT-002-I"	4	20 A 1 P	COMPLY WITH SECTION 16500.3-1.07.a
COMPLY WITH SECTION 16500.3-1.07.a	20 A 1 P	5	FILTER NO.1 DISCHARGE FLOW "FB1-FIT-001-I"			17 / 17	FILTER NO.2 DISCHARGE FLOW "FB1-FIT-002-I"	6	20 A 1 P	COMPLY WITH SECTION 16500.3-1.07.a
COMPLY WITH SECTION 16500.3-1.07.a	20 A 1 P	7	FILTER NO.1 TURBIDITY "FB1-AIT-001-I"	40 / 40			FILTER NO.2 TURBIDITY "FB1-AIT-002-I"	8	20 A 1 P	COMPLY WITH SECTION 16500.3-1.07.a
COMPLY WITH SECTION 16500.3-1.07.a	20 A 1 P	9	FILTER NO.3 LOCAL CONTROL PANEL "FB1-LCP-003-I"		85 / 85		FILTER NO.4 LOCAL CONTROL PANEL "FB1-LCP-004-I"	10	20 A 1 P	COMPLY WITH SECTION 16500.3-1.07.a
COMPLY WITH SECTION 16500.3-1.07.a	20 A 1 P	11	FILTER NO.3 LEVEL "FB1-LIT-003-I"			36 / 36	FILTER NO.4 LEVEL "FB1-LIT-004-I"	12	20 A 1 P	COMPLY WITH SECTION 16500.3-1.07.a
COMPLY WITH SECTION 16500.3-1.07.a	20 A 1 P	13	FILTER NO.3 DISCHARGE FLOW "FB1-FIT-003-I"	17 / 17			FILTER NO.4 DISCHARGE FLOW "FB1-FIT-004-I"	14	20 A 1 P	COMPLY WITH SECTION 16500.3-1.07.a
COMPLY WITH SECTION 16500.3-1.07.a	20 A 1 P	15	FILTER NO.3 TURBIDITY "FB1-AIT-003-I"		40 / 40		FILTER NO.4 TURBIDITY "FB1-AIT-004-I"	16	20 A 1 P	COMPLY WITH SECTION 16500.3-1.07.a
COMPLY WITH SECTION 16500.3-1.07.a	20 A 1 P	17	FILTER MASTER CONTROL PANEL "FB1-LCP-101-I"			43 / 44	FILTER BWP NO. 1 LOCAL CONTROL PANEL "FB1-LCP-102-I"	18	20 A 1 P	COMPLY WITH SECTION 16500.3-1.07.a
COMPLY WITH SECTION 16500.3-1.07.a	20 A 1 P	19	BACKWASH FLOW "FB1-FIT-110-I"	43 / 17			FILTER BWP NO. 2 LOCAL CONTROL PANEL "FB1-LCP-103-I"	20	20 A 1 P	COMPLY WITH SECTION 16500.3-1.07.a
COMPLY WITH SECTION 16500.3-1.07.a	20 A 1 P	21	BACKWASH BYPASS FLOW "FB1-FIT-120-I"		17 / 17		NPW DISCHARGE FLOW "FB1-FIT-020-I"	22	20 A 1 P	COMPLY WITH SECTION 16500.3-1.07.a
COMPLY WITH SECTION 16500.3-1.07.a	20 A 1 P	23	NORTHWEST CLEARWELL LEVEL "CW-LIT-001-I"			17 / 36	NPW PRS FLOW "FB1-FIT-021-I"	24	20 A 1 P	COMPLY WITH SECTION 16500.3-1.07.a
COMPLY WITH SECTION 16500.3-1.07.a	20 A 1 P	25	SOUTH CLEARWELL LEVEL "CW-LIT-011-I"	384 / 36			GENERATOR BUILDING LIGHTS	26	20 A 1 P	1" - 4#10(P),2#10(G)
3/4" - 4#10(P),2#10(G)	20 A 1 P	27	CONTROL ROOM QUAD RECEPTACLE		360 / 360		GENERATOR BUILDING RECEPTACLES	28	20 A 1 P	INCLUDED IN CONDUIT WITH CIRCUIT NO. 26
INCLUDED IN CONDUIT WITH CIRCUIT NO. 27	20 A 1 P	29	CONTROL ROOM QUAD RECEPTACLE			500 / 360	EMERGENCY GENERATOR	30	20 A 1 P	1" - 6#10(P),3#10(G)
	20 A 1 P	31	SPARE	500 / 0			EMERGENCY GENERATOR	32	20 A 1 P	INCLUDED IN CONDUIT WITH CIRCUIT NO. 30
	20 A 1 P	33	SPARE		500 / 0		EMERGENCY GENERATOR	34	20 A 1 P	INCLUDED IN CONDUIT WITH CIRCUIT NO. 30
	20 A 1 P	35	SPARE			0 / 0	SPARE	36	20 A 1 P	
	20 A 1 P	37	SPARE	0 / 0			SPARE	38	20 A 1 P	
	20 A 1 P	39	SPARE		0 / 0		SPARE	40	20 A 1 P	

This document is sealed on the seal sheet as required by TBPE under the authority of K.A. Harutunian, P.E. 59181

CIRCUIT BREAKER PANEL SCHEDULE - "FB1-CPP-001"

VOLTS: 208/120 V BUS AMPS: 100 A MAIN: 100 A PHASE/WIRE: 3Φ 4W

CONDUIT/WIRE DESCRIPTION	CKT BKR SIZE	CKT. NO.	LOAD DESCRIPTIONS	PHASE A	PHASE B	PHASE C	LOAD DESCRIPTIONS	CKT. NO.	CKT BKR SIZE	CONDUIT/WIRE DESCRIPTION
	20 A 1 P	41	SPARE			0	SPARE	42	20 A 1 P	
						0				
	TOTAL CONNECTED VOLT AMPS (VA)			1264	1576	1106				

This document is sealed on the seal sheet as required by TBPE under the authority of K.A. Harutunian, P.E. 59181

CIRCUIT BREAKER PANEL SCHEDULE - "FB1-VPP-0"

VOLTS: 480/277 V BUS AMPS: 100 A MAIN: 50 A PHASE/WIRE: 3Φ 4W

CONDUIT/WIRE DESCRIPTION	CKT BKR SIZE	CKT. NO.	LOAD DESCRIPTIONS	PHASE A	PHASE B	PHASE C	LOAD DESCRIPTIONS	CKT. NO.	CKT BKR SIZE	CONDUIT/WIRE DESCRIPTION
	15 A 3 P	1	SPARE	1330 / 0			BACKWASH DISCHARGE HEADER ISOLATION VALVE "FB1-BFV-026"	2	15 A 3 P	3/4" - 3#10(P), 1#10(G)
		3			1330 / 0			4		
		5				1330 / 0		6		
	15 A 3 P	7	SPARE	1330 / 0			BACKWASH BYPASS VALVE "FB1-BFV-110"	8	15 A 3 P	3/4" - 3#10(P), 1#10(G)
		9			1330 / 0			10		
		11				1330 / 0		12		
	15 A 3 P	13	SPARE	0 / 0			SPARE	14	15 A 3 P	
		15			0 / 0			16		
		17				0 / 0		18		
	0 A 1 P	19	SPACE	0 / 0			SPACE	20	0 A 1 P	
	0 A 1 P	21	SPACE		0 / 0		SPACE	22	0 A 1 P	
	0 A 1 P	23	SPACE			0 / 0	SPACE	24	0 A 1 P	
	0 A 1 P	25	SPACE	0 / 0			SPACE	26	0 A 1 P	
	0 A 1 P	27	SPACE		0 / 0		SPACE	28	0 A 1 P	
	0 A 1 P	29	SPACE			0 / 0	SPACE	30	0 A 1 P	
	0 A 1 P	31	SPACE	0 / 0			SPACE	32	0 A 1 P	
	0 A 1 P	33	SPACE		0 / 0		SPACE	34	0 A 1 P	
	0 A 1 P	35	SPACE			0 / 0	SPACE	36	0 A 1 P	
	0 A 1 P	37	SPACE	0 / 0			SPACE	38	0 A 1 P	
	0 A 1 P	39	SPACE		0 / 0		SPACE	40	0 A 1 P	

This document is sealed on the seal sheet as required by TBPE under the authority of K.A. Harutunian, P.E. 59181

CIRCUIT BREAKER PANEL SCHEDULE - "FB1-VPP-0"

VOLTS: 480/277 V BUS AMPS: 100 A MAIN: 50 A PHASE/WIRE: 3Φ 4W

CONDUIT/WIRE DESCRIPTION	CKT BKR SIZE	CKT. NO.	LOAD DESCRIPTIONS	PHASE A	PHASE B	PHASE C	LOAD DESCRIPTIONS	CKT. NO.	CKT BKR SIZE	CONDUIT/WIRE DESCRIPTION
	0 A 1 P	41	SPACE			0 0	SPACE	42	0 A 1 P	
	TOTAL CONNECTED VOLT AMPS (VA)			2660	2660	2660				

This document is sealed on the seal sheet as required by TBPE under the authority of K.A. Harutunian, P.E. 59181

CIRCUIT BREAKER PANEL SCHEDULE - "FB1-VPP-2"

VOLTS: 480/277 V BUS AMPS: 100 A MAIN: 50 A PHASE/WIRE: 3Φ 4W

CONDUIT/WIRE DESCRIPTION	CKT BKR SIZE	CKT. NO.	LOAD DESCRIPTIONS	PHASE A	PHASE B	PHASE C	LOAD DESCRIPTIONS	CKT. NO.	CKT BKR SIZE	CONDUIT/WIRE DESCRIPTION
3/4" - 3#10(P), 1#10(G)	15 A 3 P	1	FILTER NO. 2 INFLUENT VALVE "FB1-BFV-031"	1330			FILTER NO. 2 EFFLUENT VALVE "FB1-BFV-025"	2	15 A 3 P	3/4" - 3#10(P), 1#10(G)
				1330						
		3			1330			4		
					1330					
		5				1330		6		
						1330				
3/4" - 3#10(P), 1#10(G)	15 A 3 P	7	FILTER NO. 2 BACKWASH SUPPLY VALVE "FB1-BFV-032"	1330			FILTER NO. 2 AIR SCOUR SUPPLY VALVE "FB1-BFV-092"	8	15 A 3 P	3/4" - 3#10(P), 1#10(G)
				1330						
		9			1330			10		
					1330					
		11				1330		12		
						1330				
3/4" - 3#10(P), 1#10(G)	15 A 3 P	13	FILTER NO. 2 BACKWASH DRAIN VALVE "FB1-BFV-034"	0			SPARE	14	15 A 3 P	
				1330						
		15			0			16		
					1330					
		17				0		18		
						1330				
3/4" - 3#10(P), 1#10(G)	15 A 3 P	19	FILTER NO. 4 INFLUENT VALVE "FB1-BFV-041"	1330			FILTER NO. 4 EFFLUENT VALVE "FB1-BFV-036"	20	15 A 3 P	3/4" - 3#10(P), 1#10(G)
				1330						
		21			1330			22		
					1330					
		23				1330		24		
						1330				
3/4" - 3#10(P), 1#10(G)	15 A 3 P	25	FILTER NO. 4 BACKWASH SUPPLY VALVE "FB1-BFV-042"	1330			FILTER NO. 4 AIR SCOUR SUPPLY VALVE "FB1-BFV-094"	26	15 A 3 P	3/4" - 3#10(P), 1#10(G)
				1330						
		27			1330			28		
					1330					
		29				1330		30		
						1330				
3/4" - 3#10(P), 1#10(G)	15 A 3 P	31	FILTER NO. 4 BACKWASH DRAIN VALVE "FB1-BFV-044"	0			SPARE	32	15 A 3 P	
				1330						
		33			0			34		
					1330					
		35				0		36		
						1330				
	0 A 1 P	37	SPACE	0			SPACE	38	0 A 1 P	
				0						
	0 A 1 P	39	SPACE		0		SPACE	40	0 A 1 P	
					0					

This document is sealed on the seal sheet as required by TBPE under the authority of K.A. Harutunian, P.E. 59181

CIRCUIT BREAKER PANEL SCHEDULE - "FB1-VPP-2"

VOLTS: 480/277 V BUS AMPS: 100 A MAIN: 50 A PHASE/WIRE: 3Φ 4W

CONDUIT/WIRE DESCRIPTION	CKT BKR SIZE	CKT. NO.	LOAD DESCRIPTIONS	PHASE A	PHASE B	PHASE C	LOAD DESCRIPTIONS	CKT. NO.	CKT BKR SIZE	CONDUIT/WIRE DESCRIPTION
	0 A 1 P	41	SPACE			0 0	SPACE	42	0 A 1 P	
	TOTAL CONNECTED VOLT AMPS (VA)			13300	13300	13300				

This document is sealed on the seal sheet as required by TBPE under the authority of K.A. Harutunian, P.E. 59181

CIRCUIT BREAKER PANEL SCHEDULE - "FB2-CPP-002"

VOLTS: 208/120 V BUS AMPS: 100 A MAIN: 100 A PHASE/WIRE: 3Φ 4W

CONDUIT/WIRE DESCRIPTION	CKT BKR SIZE	CKT. NO.	LOAD DESCRIPTIONS	PHASE A	PHASE B	PHASE C	LOAD DESCRIPTIONS	CKT. NO.	CKT BKR SIZE	CONDUIT/WIRE DESCRIPTION
COMPLY WITH SECTION 16500.3-1.07.a	20 A 1 P	1	FILTER NO.5 LOCAL CONTROL PANEL "FB1-LCP-005-I"	85 / 85			FILTER NO.6 LOCAL CONTROL PANEL "FB1-LCP-006-I"	2	20 A 1 P	COMPLY WITH SECTION 16500.3-1.07.a
COMPLY WITH SECTION 16500.3-1.07.a	20 A 1 P	3	FILTER NO.5 LEVEL "FB1-LIT-005-I"		36 / 36		FILTER NO.6 LEVEL "FB1-LIT-006-I"	4	20 A 1 P	COMPLY WITH SECTION 16500.3-1.07.a
COMPLY WITH SECTION 16500.3-1.07.a	20 A 1 P	5	FILTER NO.5 DISCHARGE FLOW "FB1-FIT-005-I"			17 / 17	FILTER NO.6 DISCHARGE FLOW "FB1-FIT-006-I"	6	20 A 1 P	COMPLY WITH SECTION 16500.3-1.07.a
COMPLY WITH SECTION 16500.3-1.07.a	20 A 1 P	7	FILTER NO.5 TURBIDITY "FB1-AIT-005-I"	40 / 40			FILTER NO.6 TURBIDITY "FB1-AIT-006-I"	8	20 A 1 P	COMPLY WITH SECTION 16500.3-1.07.a
COMPLY WITH SECTION 16500.3-1.07.a	20 A 1 P	9	FILTER NO.7 LOCAL CONTROL PANEL "FB1-LCP-007-I"		85 / 85		FILTER NO.8 LOCAL CONTROL PANEL "FB1-LCP-008-I"	10	20 A 1 P	COMPLY WITH SECTION 16500.3-1.07.a
COMPLY WITH SECTION 16500.3-1.07.a	20 A 1 P	11	FILTER NO.7 LEVEL "FB1-LIT-007-I"			36 / 36	FILTER NO.8 LEVEL "FB1-LIT-008-I"	12	20 A 1 P	COMPLY WITH SECTION 16500.3-1.07.a
COMPLY WITH SECTION 16500.3-1.07.a	20 A 1 P	13	FILTER NO.7 DISCHARGE FLOW "FB1-FIT-007-I"	17 / 17			FILTER NO.8 DISCHARGE FLOW "FB1-FIT-008-I"	14	20 A 1 P	COMPLY WITH SECTION 16500.3-1.07.a
COMPLY WITH SECTION 16500.3-1.07.a	20 A 1 P	15	FILTER NO.7 TURBIDITY "FB1-AIT-007-I"		40 / 40		FILTER NO.8 TURBIDITY "FB1-AIT-008-I"	16	20 A 1 P	COMPLY WITH SECTION 16500.3-1.07.a
COMPLY WITH SECTION 16500.3-1.07.a	20 A 1 P	17	FILTER NO.9 LOCAL CONTROL PANEL "FB1-LCP-009-I"			85 / 85	FILTER NO.10 LOCAL CONTROL PANEL "FB1-LCP-010-I"	18	20 A 1 P	COMPLY WITH SECTION 16500.3-1.07.a
COMPLY WITH SECTION 16500.3-1.07.a	20 A 1 P	19	FILTER NO.9 LEVEL "FB1-LIT-009-I"	36 / 36			FILTER NO.10 LEVEL "FB1-LIT-010-I"	20	20 A 1 P	COMPLY WITH SECTION 16500.3-1.07.a
COMPLY WITH SECTION 16500.3-1.07.a	20 A 1 P	21	FILTER NO.9 DISCHARGE FLOW "FB1-FIT-009-I"		17 / 17		FILTER NO.10 DISCHARGE FLOW "FB1-FIT-010-I"	22	20 A 1 P	COMPLY WITH SECTION 16500.3-1.07.a
COMPLY WITH SECTION 16500.3-1.07.a	20 A 1 P	23	FILTER NO.9 TURBIDITY "FB1-AIT-009-I"			40 / 40	FILTER NO.10 TURBIDITY "FB1-AIT-010-I"	24	20 A 1 P	COMPLY WITH SECTION 16500.3-1.07.a
	20 A 1 P	25	SPARE	0 / 0			SPARE	26	20 A 1 P	
	20 A 1 P	27	SPARE		0 / 0		SPARE	28	20 A 1 P	
	20 A 1 P	29	SPARE			0 / 0	SPARE	30	20 A 1 P	
	20 A 1 P	31	SPARE	0 / 0			SPARE	32	20 A 1 P	
	20 A 1 P	33	SPARE		0 / 0		SPARE	34	20 A 1 P	
	20 A 1 P	35	SPARE			0 / 0	SPARE	36	20 A 1 P	
	20 A 1 P	37	SPARE	1264 / 0				38		
	20 A 1 P	39	SPARE		1576 / 0		CONTROL POWER PANELBOARD "FB1-CPP-001"	40	100A 3 P	1-1/2"-4 #2(P), 1#2(IG), 1#6(G)

This document is sealed on the seal sheet as required by TBPE under the authority of K.A. Harutunian, P.E. 59181

CIRCUIT BREAKER PANEL SCHEDULE - "FB2-CPP-002"

VOLTS: 208/120 V BUS AMPS: 100 A MAIN: 100 A PHASE/WIRE: 3Φ 4W

CONDUIT/WIRE DESCRIPTION	CKT BKR SIZE	CKT. NO.	LOAD DESCRIPTIONS	PHASE A	PHASE B	PHASE C	LOAD DESCRIPTIONS	CKT. NO.	CKT BKR SIZE	CONDUIT/WIRE DESCRIPTION
	20 A 1 P	41	SPARE			1106		42		
						0				
	TOTAL CONNECTED VOLT AMPS (VA)			1620	1932	1462				

This document is sealed on the seal sheet as required by TBPE under the authority of K.A. Harutunian, P.E. 59181

CIRCUIT BREAKER PANEL SCHEDULE - "FB2-VPP-1"

VOLTS: 480/277 V BUS AMPS: 100 A MAIN: 50 A PHASE/WIRE: 3Φ 4W

CONDUIT/WIRE DESCRIPTION	CKT BKR SIZE	CKT. NO.	LOAD DESCRIPTIONS	PHASE A	PHASE B	PHASE C	LOAD DESCRIPTIONS	CKT. NO.	CKT BKR SIZE	CONDUIT/WIRE DESCRIPTION
3/4" - 3#10(P), 1#10(G)	15 A 3 P	1	FILTER NO. 1 INFLUENT VALVE "FB1-BFV-029"	1330			FILTER NO. 1 EFFLUENT VALVE "FB1-BFV-024"	2	15 A 3 P	3/4" - 3#10(P), 1#10(G)
				1330						
		3			1330			4		
					1330					
		5				1330		6		
						1330				
3/4" - 3#10(P), 1#10(G)	15 A 3 P	7	FILTER NO. 1 BACKWASH SUPPLY VALVE "FB1-BFV-030"	1330			FILTER NO. 1 AIR SCOUR SUPPLY VALVE "FB1-BFV-091"	8	15 A 3 P	3/4" - 3#10(P), 1#10(G)
				1330						
		9			1330			10		
					1330					
		11				1330		12		
						1330				
3/4" - 3#10(P), 1#10(G)	15 A 3 P	13	FILTER NO. 1 BACKWASH DRAIN VALVE "FB1-BFV-033"	0			SPARE	14	15 A 3 P	
				1330						
		15			0			16		
					1330					
		17				0		18		
						1330				
3/4" - 3#10(P), 1#10(G)	15 A 3 P	19	FILTER NO. 3 INFLUENT VALVE "FB1-BFV-039"	1330			FILTER NO. 3 EFFLUENT VALVE "FB1-BFV-035"	20	15 A 3 P	3/4" - 3#10(P), 1#10(G)
				1330						
		21			1330			22		
					1330					
		23				1330		24		
						1330				
3/4" - 3#10(P), 1#10(G)	15 A 3 P	25	FILTER NO. 3 BACKWASH SUPPLY VALVE "FB1-BFV-040"	1330			FILTER NO. 3 AIR SCOUR SUPPLY VALVE "FB1-BFV-093"	26	15 A 3 P	3/4" - 3#10(P), 1#10(G)
				1330						
		27			1330			28		
					1330					
		29				1330		30		
						1330				
3/4" - 3#10(P), 1#10(G)	15 A 3 P	31	FILTER NO. 3 BACKWASH DRAIN VALVE "FB1-BFV-043"	0			SPARE	32	15 A 3 P	
				1330						
		33			0			34		
					1330					
		35				0		36		
						1330				
	0 A 1 P	37	SPACE	0			SPACE	38	0 A 1 P	
				0						
	0 A 1 P	39	SPACE		0		SPACE	40	0 A 1 P	
					0					

This document is sealed on the seal sheet as required by TBPE under the authority of K.A. Harutunian, P.E. 59181

CIRCUIT BREAKER PANEL SCHEDULE - "FB2-VPP-1"

VOLTS: 480/277 V BUS AMPS: 100 A MAIN: 50 A PHASE/WIRE: 3Φ 4W

CONDUIT/WIRE DESCRIPTION	CKT BKR SIZE	CKT. NO.	LOAD DESCRIPTIONS	PHASE A	PHASE B	PHASE C	LOAD DESCRIPTIONS	CKT. NO.	CKT BKR SIZE	CONDUIT/WIRE DESCRIPTION
	0 A 1 P	41	SPACE			0 0	SPACE	42	0 A 1 P	
	TOTAL CONNECTED VOLT AMPS (VA)			13300	13300	13300				

This document is sealed on the seal sheet as required by TBPE under the authority of K.A. Harutunian, P.E. 59181

CIRCUIT BREAKER PANEL SCHEDULE - "FB2-VPP-3"

VOLTS: 480/277 V BUS AMPS: 100 A MAIN: 50 A PHASE/WIRE: 3Φ 4W

CONDUIT/WIRE DESCRIPTION	CKT BKR SIZE	CKT. NO.	LOAD DESCRIPTIONS	PHASE A	PHASE B	PHASE C	LOAD DESCRIPTIONS	CKT. NO.	CKT BKR SIZE	CONDUIT/WIRE DESCRIPTION
3/4" - 3#10(P), 1#10(G)	15 A 3 P	1	FILTER NO. 5 INFLUENT VALVE "FB2-BFV-051"	1330			FILTER NO. 5 EFFLUENT VALVE "FB2-BFV-047"	2	15 A 3 P	3/4" - 3#10(P), 1#10(G)
				1330						
		3			1330			4		
					1330					
		5				1330		6		
						1330				
3/4" - 3#10(P), 1#10(G)	15 A 3 P	7	FILTER NO. 5 BACKWASH SUPPLY VALVE "FB2-BFV-049"	1330			FILTER NO. 5 AIR SCOUR SUPPLY VALVE "FB2-BFV-053"	8	15 A 3 P	3/4" - 3#10(P), 1#10(G)
				1330						
		9			1330			10		
					1330					
		11				1330		12		
						1330				
3/4" - 3#10(P), 1#10(G)	15 A 3 P	13	FILTER NO. 5 BACKWASH DRAIN VALVE "FB2-BFV-057"	0			SPARE	14	15 A 3 P	
				1330						
		15			0			16		
					1330					
		17				0		18		
						1330				
3/4" - 3#10(P), 1#10(G)	15 A 3 P	19	FILTER NO. 7 INFLUENT VALVE "FB2-BFV-063"	1330			FILTER NO. 7 EFFLUENT VALVE "FB2-BFV-059"	20	15 A 3 P	3/4" - 3#10(P), 1#10(G)
				1330						
		21			1330			22		
					1330					
		23				1330		24		
						1330				
3/4" - 3#10(P), 1#10(G)	15 A 3 P	25	FILTER NO. 7 BACKWASH SUPPLY VALVE "FB2-BFV-061"	1330			FILTER NO. 7 AIR SCOUR SUPPLY VALVE "FB2-BFV-065"	26	15 A 3 P	3/4" - 3#10(P), 1#10(G)
				1330						
		27			1330			28		
					1330					
		29				1330		30		
						1330				
3/4" - 3#10(P), 1#10(G)	15 A 3 P	31	FILTER NO. 7 BACKWASH DRAIN VALVE "FB2-BFV-069"	0			SPARE	32	15 A 3 P	
				1330						
		33			0			34		
					1330					
		35				0		36		
						1330				
	0 A 1 P	37	SPACE	0			SPACE	38	0 A 1 P	
				0						
	0 A 1 P	39	SPACE		0		SPACE	40	0 A 1 P	
					0					

This document is sealed on the seal sheet as required by TBPE under the authority of K.A. Harutunian, P.E. 59181

CIRCUIT BREAKER PANEL SCHEDULE - "FB2-VPP-3"

VOLTS: 480/277 V BUS AMPS: 100 A MAIN: 50 A PHASE/WIRE: 3Φ 4W

CONDUIT/WIRE DESCRIPTION	CKT BKR SIZE	CKT. NO.	LOAD DESCRIPTIONS	PHASE A	PHASE B	PHASE C	LOAD DESCRIPTIONS	CKT. NO.	CKT BKR SIZE	CONDUIT/WIRE DESCRIPTION
	0 A 1 P	41	SPACE			0 0	SPACE	42	0 A 1 P	
	TOTAL CONNECTED VOLT AMPS (VA)			13300	13300	13300				

This document is sealed on the seal sheet as required by TBPE under the authority of K.A. Harutunian, P.E. 59181

CIRCUIT BREAKER PANEL SCHEDULE - "FB2-VPP-4"

VOLTS: 480/277 V BUS AMPS: 100 A MAIN: 50 A PHASE/WIRE: 3Φ 4W

CONDUIT/WIRE DESCRIPTION	CKT BKR SIZE	CKT. NO.	LOAD DESCRIPTIONS	PHASE A	PHASE B	PHASE C	LOAD DESCRIPTIONS	CKT. NO.	CKT BKR SIZE	CONDUIT/WIRE DESCRIPTION
3/4" - 3#10(P), 1#10(G)	15 A 3 P	1	FILTER NO. 6 INFLUENT VALVE "FB2-BFV-052"	1330			FILTER NO. 6 EFFLUENT VALVE "FB2-BFV-048"	2	15 A 3 P	3/4" - 3#10(P), 1#10(G)
				1330						
		3			1330			4		
					1330					
		5				1330		6		
						1330				
3/4" - 3#10(P), 1#10(G)	15 A 3 P	7	FILTER NO. 6 BACKWASH SUPPLY VALVE "FB2-BFV-050"	1330			FILTER NO. 6 AIR SCOUR SUPPLY VALVE "FB2-BFV-054"	8	15 A 3 P	3/4" - 3#10(P), 1#10(G)
				1330						
		9			1330			10		
					1330					
		11				1330		12		
						1330				
3/4" - 3#10(P), 1#10(G)	15 A 3 P	13	FILTER NO. 6 BACKWASH DRAIN VALVE "FB2-BFV-058"	0			SPARE	14	15 A 3 P	
				1330						
		15			0			16		
					1330					
		17				0		18		
						1330				
3/4" - 3#10(P), 1#10(G)	15 A 3 P	19	FILTER NO. 8 INFLUENT VALVE "FB2-BFV-064"	1330			FILTER NO. 8 EFFLUENT VALVE "FB1-BFV-060"	20	15 A 3 P	3/4" - 3#10(P), 1#10(G)
				1330						
		21			1330			22		
					1330					
		23				1330		24		
						1330				
3/4" - 3#10(P), 1#10(G)	15 A 3 P	25	FILTER NO. 8 BACKWASH SUPPLY VALVE "FB2-BFV-062"	1330			FILTER NO. 8 AIR SCOUR SUPPLY VALVE "FB2-BFV-066"	26	15 A 3 P	3/4" - 3#10(P), 1#10(G)
				1330						
		27			1330			28		
					1330					
		29				1330		30		
						1330				
3/4" - 3#10(P), 1#10(G)	15 A 3 P	31	FILTER NO. 8 BACKWASH DRAIN VALVE "FB2-BFV-070"	0			SPARE	32	15 A 3 P	
				1330						
		33			0			34		
					1330					
		35				0		36		
						1330				
	0 A 1 P	37	SPACE	0			SPACE	38	0 A 1 P	
				0						
	0 A 1 P	39	SPACE		0		SPACE	40	0 A 1 P	
					0					

This document is sealed on the seal sheet as required by TBPE under the authority of K.A. Harutunian, P.E. 59181

CIRCUIT BREAKER PANEL SCHEDULE - "FB2-VPP-4"

VOLTS: 480/277 V BUS AMPS: 100 A MAIN: 50 A PHASE/WIRE: 3Φ 4W

CONDUIT/WIRE DESCRIPTION	CKT BKR SIZE	CKT. NO.	LOAD DESCRIPTIONS	PHASE A	PHASE B	PHASE C	LOAD DESCRIPTIONS	CKT. NO.	CKT BKR SIZE	CONDUIT/WIRE DESCRIPTION
	0 A 1 P	41	SPACE			0 0	SPACE	42	0 A 1 P	
	TOTAL CONNECTED VOLT AMPS (VA)			13300	13300	13300				

This document is sealed on the seal sheet as required by TBPE under the authority of K.A. Harutunian, P.E. 59181

CIRCUIT BREAKER PANEL SCHEDULE - "FB2-VPP-5"

VOLTS: 480/277 V BUS AMPS: 100 A MAIN: 50 A PHASE/WIRE: 3Φ 4W

CONDUIT/WIRE DESCRIPTION	CKT BKR SIZE	CKT. NO.	LOAD DESCRIPTIONS	PHASE A	PHASE B	PHASE C	LOAD DESCRIPTIONS	CKT. NO.	CKT BKR SIZE	CONDUIT/WIRE DESCRIPTION
3/4" - 3#10(P), 1#10(G)	15 A 3 P	1	FILTER NO. 9 INFLUENT VALVE "FB2-BFV-075"	1330			FILTER NO. 9 EFFLUENT VALVE "FB2-BFV-071"	2	15 A 3 P	3/4" - 3#10(P), 1#10(G)
				1330						
		3			1330			4		
					1330					
		5				1330		6		
						1330				
3/4" - 3#10(P), 1#10(G)	15 A 3 P	7	FILTER NO. 9 BACKWASH SUPPLY VALVE "FB2-BFV-073"	1330			FILTER NO. 9 AIR SCOUR SUPPLY VALVE "FB2-BFV-077"	8	15 A 3 P	3/4" - 3#10(P), 1#10(G)
				1330						
		9			1330			10		
					1330					
		11				1330		12		
						1330				
3/4" - 3#10(P), 1#10(G)	15 A 3 P	13	FILTER NO. 9 BACKWASH DRAIN VALVE "FB2-BFV-082"	0			SPARE	14	15 A 3 P	
				1330						
		15			0			16		
					1330					
		17				0		18		
						1330				
	0 A 1 P	19	SPACE	0			SPACE	20	0 A 1 P	
				0						
	0 A 1 P	21	SPACE		0		SPACE	22	0 A 1 P	
					0					
	0 A 1 P	23	SPACE			0	SPACE	24	0 A 1 P	
						0				
	0 A 1 P	25	SPACE	0			SPACE	26	0 A 1 P	
				0						
	0 A 1 P	27	SPACE		0		SPACE	28	0 A 1 P	
					0					
	0 A 1 P	29	SPACE			0	SPACE	30	0 A 1 P	
						0				
	0 A 1 P	31	SPACE	0			SPACE	32	0 A 1 P	
				0						
	0 A 1 P	33	SPACE		0		SPACE	34	0 A 1 P	
					0					
	0 A 1 P	35	SPACE			0	SPACE	36	0 A 1 P	
						0				
	0 A 1 P	37	SPACE	0			SPACE	38	0 A 1 P	
				0						
	0 A 1 P	39	SPACE		0		SPACE	40	0 A 1 P	
					0					

This document is sealed on the seal sheet as required by TBPE under the authority of K.A. Harutunian, P.E. 59181

CIRCUIT BREAKER PANEL SCHEDULE - "FB2-VPP-5"

VOLTS: 480/277 V BUS AMPS: 100 A MAIN: 50 A PHASE/WIRE: 3Φ 4W

CONDUIT/WIRE DESCRIPTION	CKT BKR SIZE	CKT. NO.	LOAD DESCRIPTIONS	PHASE A	PHASE B	PHASE C	LOAD DESCRIPTIONS	CKT. NO.	CKT BKR SIZE	CONDUIT/WIRE DESCRIPTION
	0 A 1 P	41	SPACE			0 0	SPACE	42	0 A 1 P	
	TOTAL CONNECTED VOLT AMPS (VA)			6650	6650	6650				

This document is sealed on the seal sheet as required by TBPE under the authority of K.A. Harutunian, P.E. 59181

CIRCUIT BREAKER PANEL SCHEDULE - "FB2-VPP-6"

VOLTS: 480/277 V BUS AMPS: 100 A MAIN: 50 A PHASE/WIRE: 3Φ 4W

CONDUIT/WIRE DESCRIPTION	CKT BKR SIZE	CKT. NO.	LOAD DESCRIPTIONS	PHASE A	PHASE B	PHASE C	LOAD DESCRIPTIONS	CKT. NO.	CKT BKR SIZE	CONDUIT/WIRE DESCRIPTION
3/4" - 3#10(P), 1#10(G)	15 A 3 P	1	FILTER NO. 10 INFLUENT VALVE "FB2-BFV-076"	1330			FILTER NO. 10 EFFLUENT VALVE "FB2-BFV-072"	2	15 A 3 P	3/4" - 3#10(P), 1#10(G)
				1330						
		3			1330			4		
					1330					
		5				1330		6		
						1330				
3/4" - 3#10(P), 1#10(G)	15 A 3 P	7	FILTER NO. 10 BACKWASH SUPPLY VALVE "FB2-BFV-074"	1330			FILTER NO. 10 AIR SCOUR SUPPLY VALVE "FB2-BFV-078"	8	15 A 3 P	3/4" - 3#10(P), 1#10(G)
				1330						
		9			1330			10		
					1330					
		11				1330		12		
						1330				
3/4" - 3#10(P), 1#10(G)	15 A 3 P	13	FILTER NO. 10 BACKWASH DRAIN VALVE "FB2-BFV-083"	0			SPARE	14	15 A 3 P	
				1330						
		15			0			16		
					1330					
		17				0		18		
						1330				
	0 A 1 P	19	SPACE	0			SPACE	20	0 A 1 P	
				0						
	0 A 1 P	21	SPACE		0		SPACE	22	0 A 1 P	
					0					
	0 A 1 P	23	SPACE			0	SPACE	24	0 A 1 P	
						0				
	0 A 1 P	25	SPACE	0			SPACE	26	0 A 1 P	
				0						
	0 A 1 P	27	SPACE		0		SPACE	28	0 A 1 P	
					0					
	0 A 1 P	29	SPACE			0	SPACE	30	0 A 1 P	
						0				
	0 A 1 P	31	SPACE	0			SPACE	32	0 A 1 P	
				0						
	0 A 1 P	33	SPACE		0		SPACE	34	0 A 1 P	
					0					
	0 A 1 P	35	SPACE			0	SPACE	36	0 A 1 P	
						0				
	0 A 1 P	37	SPACE	0			SPACE	38	0 A 1 P	
				0						
	0 A 1 P	39	SPACE		0		SPACE	40	0 A 1 P	
					0					

This document is sealed on the seal sheet as required by TBPE under the authority of K.A. Harutunian, P.E. 59181

CIRCUIT BREAKER PANEL SCHEDULE - "FB2-VPP-6"

VOLTS: 480/277 V BUS AMPS: 100 A MAIN: 50 A PHASE/WIRE: 3Φ 4W

CONDUIT/WIRE DESCRIPTION	CKT BKR SIZE	CKT. NO.	LOAD DESCRIPTIONS	PHASE A	PHASE B	PHASE C	LOAD DESCRIPTIONS	CKT. NO.	CKT BKR SIZE	CONDUIT/WIRE DESCRIPTION
	0 A 1 P	41	SPACE			0 0	SPACE	42	0 A 1 P	
	TOTAL CONNECTED VOLT AMPS (VA)			6650	6650	6650				

This document is sealed on the seal sheet as required by TBPE under the authority of K.A. Harutunian, P.E. 59181

CIRCUIT BREAKER PANEL SCHEDULE - "FL-3"

VOLTS: 208/120 V BUS AMPS: 225 A MAIN: 125 A PHASE/WIRE: 3Φ 4W

CONDUIT/WIRE DESCRIPTION	CKT BKR SIZE	CKT. NO.	LOAD DESCRIPTIONS	PHASE A	PHASE B	PHASE C	LOAD DESCRIPTIONS	CKT. NO.	CKT BKR SIZE	CONDUIT/WIRE DESCRIPTION
COMPLY WITH SECTION 16500.3-1.07.b	20 A 1 P	1	RECEPTACLES	0 / 0			RECEPTACLES	2	20 A 1 P	COMPLY WITH SECTION 16500.3-1.07.b
COMPLY WITH SECTION 16500.3-1.07.b	20 A 1 P	3	RECEPTACLES		0 / 0		RECEPTACLES	4	20 A 1 P	COMPLY WITH SECTION 16500.3-1.07.b
COMPLY WITH SECTION 16500.3-1.07.b	20 A 1 P	5	RECEPTACLES			0 / 0	RECEPTACLES	6	20 A 1 P	COMPLY WITH SECTION 16500.3-1.07.b
COMPLY WITH SECTION 16500.3-1.07.b	20 A 1 P	7	LTS.	0 / 0			LTS.	8	20 A 1 P	COMPLY WITH SECTION 16500.3-1.07.b
COMPLY WITH SECTION 16500.3-1.07.b	20 A 1 P	9	LTS.		0 / 0		LTS.	10	20 A 1 P	COMPLY WITH SECTION 16500.3-1.07.b
COMPLY WITH SECTION 16500.3-1.07.b	20 A 1 P	11	LTS. SOFFIT			0 / 0	LTS. POLES	12	20 A 1 P	COMPLY WITH SECTION 16500.3-1.07.b
	20 A 1 P	13	SPARE	0 / 0			SPACE HEATER	14	20 A 1 P	COMPLY WITH SECTION 16500.3-1.07.b
	20 A 1 P	15	SPARE		0 / 0		SPARE	16	20 A 1 P	
	20 A 1 P	17	SPARE			0 / 0	SPARE	18	20 A 1 P	
COMPLY WITH SECTION 16500.3-1.07.b	20 A 1 P	19	TIMER	0 / 0			PHOTOCELL AT POLE BETWEEN FILTERS 5/7	20	20 A 1 P	COMPLY WITH SECTION 16500.3-1.07.b
	20 A 1 P	21	SPARE		0 / 0		SPARE	22	20 A 1 P	
	20 A 1 P	23	SPARE			0 / 0	SPARE	24	20 A 1 P	
	TOTAL CONNECTED VOLT AMPS (VA)			0	0	0				

This document is sealed on the seal sheet as required by TBPE under the authority of K.A. Harutunian, P.E. 59181

CIRCUIT BREAKER PANEL SCHEDULE - "HW2-MPC-001"

VOLTS: 208/120 V BUS AMPS: 100 A MAIN: 60 A PHASE/WIRE: 3Φ 4W

CONDUIT/WIRE DESCRIPTION	CKT BKR SIZE	CKT. NO.	LOAD DESCRIPTIONS	PHASE A	PHASE B	PHASE C	LOAD DESCRIPTIONS	CKT. NO.	CKT BKR SIZE	CONDUIT/WIRE DESCRIPTION
1" - 2#8(P), 1#10(G)	20 A 1 P	1	SODIUM BISULFITE FEED PUMP NO. 1	180 / 1200			SODIUM BISULFITE AREA RECEPTACLE	2	20 A 1 P	3/4" - 2#10(P), 1#10(G)
1" - 2#8(P), 1#10(G)	20 A 1 P	3	SODIUM BISULFITE FEED PUMP NO. 1		117 / 1200		SODIUM BISULFITE AREA TASK LIGHTING	4	20 A 1 P	3/4" - 2#10(P), 1#10(G)
1" - 6#10(P), 3#10(G)	20 A 1 P	5	HEAT TRACE FEED PUMP NO. 1			17 / 500	SODIUM BISULFITE FEED PUMP NO.1 FLOW TRANSMITTER	6	20 A 1 P	3/4" - 4#10(P), 2#10(G)
INCLUDED IN CONDUIT WITH CIRCUIT NO. 5	20 A 1 P	7	HEAT TRACE FEED PUMP NO. 2	17 / 500			SODIUM BISULFITE FEED PUMP NO.2 FLOW TRANSMITTER	8	20 A 1 P	INCLUDED IN CONDUIT WITH CIRCUIT NO. 6
INCLUDED IN CONDUIT WITH CIRCUIT NO. 5	20 A 1 P	9	HEAT TRACE EYEWASH		0 / 500		SPARE	10	20 A 1 P	
1" - 3"10(P), 1#10(G)	20 A 3 P	11	SURGE PROTECTIVE DEVICE "HW2-SPD-MPC1"			0 / 0	SPARE	12	20 A 1 P	
		13		0 / 0			SPARE	14	20 A 1 P	
		15			0 / 0		SPARE	16	20 A 1 P	
	20 A 1 P	17	SPARE			0 / 0	SPARE	18	20 A 1 P	
	20 A 1 P	19	SPARE	0 / 0			SPARE	20	20 A 1 P	
	20 A 1 P	21	SPARE		0 / 0		SPARE	22	20 A 1 P	
	20 A 1 P	23	SPARE			0 / 0	SPARE	24	20 A 1 P	
	TOTAL CONNECTED VOLT AMPS (VA)			1897	1817	517				

This document is sealed on the seal sheet as required by TBPE under the authority of K.A. Harutunian, P.E. 59181

CIRCUIT BREAKER PANEL SCHEDULE - "HW2-MPC-002"

VOLTS: 208/120 V BUS AMPS: 100 A MAIN: 60 A PHASE/WIRE: 3Φ 4W

CONDUIT/WIRE DESCRIPTION	CKT BKR SIZE	CKT. NO.	LOAD DESCRIPTIONS	PHASE A	PHASE B	PHASE C	LOAD DESCRIPTIONS	CKT. NO.	CKT BKR SIZE	CONDUIT/WIRE DESCRIPTION
1" - 2#8(P), 1#10(G)	20 A 2 P	1	HEADWORKS NO. 2 WEST VICINITY ROADWAY LIGHTING	0 / 420			SPARE	2	20 A 1 P	
		3			100 / 420		LIGHTING CONTACTOR "HW2-CONT-3" CONTROL POWER	4	20 A 1 P	3/4" - 2#10(P), 1#10(G)
1" - 2#10(P), 1#10(G)	20 A 1 P	5	OUTFALL JUNCTION BOX TASK LIGHTING			180 / 210	SODIUM BISULFITE AREA RECEPTACLE	6	20 A 1 P	3/4" - 2#10(P), 1#10(G)
1" - 3#10(P), 1#10(G)	20 A 3 P	7	SURGE PROTECTIVE DEVICE "HW2-SPD-MPC2"	0 / 0			SPARE	8	20 A 1 P	
		9			0 / 0		SPARE	10	20 A 1 P	
		11				0 / 0	SPARE	12	20 A 1 P	
	20 A 1 P	13	SPARE	0 / 0			SPARE	14	20 A 1 P	
	20 A 1 P	15	SPARE		0 / 0		SPARE	16	20 A 1 P	
	20 A 1 P	17	SPARE			0 / 0	SPARE	18	20 A 1 P	
	20 A 1 P	19	SPARE	0 / 0			SPARE	20	20 A 1 P	
	20 A 1 P	21	SPARE		0 / 0		SPARE	22	20 A 1 P	
	20 A 1 P	23	SPARE			0 / 0	SPARE	24	20 A 1 P	
	TOTAL CONNECTED VOLT AMPS (VA)			420	520	390				

This document is sealed on the seal sheet as required by TBPE under the authority of K.A. Harutunian, P.E. 59181

SECTION 16524

480 VOLT AUTOMATIC TRANSFER SWITCHES

PART 1 - GENERAL

1-1. SCOPE OF WORK

1-1.01. Furnish and install the 480 volt Automatic Transfer Switch (ATS) as specified herein and as shown on the PLANS.

1-2. RELATED WORK NOT INCLUDED

1-2.01. The PLANS designate the size, rating, and other requirements of the ATS.

1-2.02. Related work as called for on the PLANS, as specified herein or in other Sections of the Specifications.

1-3. QUALIFICATIONS

1-3.01. The ATS shall be designed, constructed, and tested in accordance with the latest applicable requirements of NEMA, ANSI, U.L., and NEC standards.

1-3.02. All ATS's on the project shall be manufactured by a single ATS manufacturer.

1-3.03. The ATS shall be as manufactured by "Automatic Switch Company-ASCO, Model 7000" or Russelectric Inc, No Equal.

1-4. SUBMITTALS

1-4.01. Submit Shop Drawings in accordance with Section 01300 of the Specifications. Submittals shall include:

a. Dimensioned/scaled top and bottom views, front elevations, and internal component/device layouts

b. One-line and wiring diagrams,

c. Catalog cut sheets

1-4.02. Submit Operations and Maintenance Manuals (O&M) in accordance with Section 01300 of the Specifications. O&M Manuals shall include copies of the approved shop drawings. Also, as minimum the Operations and Maintenance Manuals shall include:

a. Copies of certified and approved shop drawings.

b. Detailed information on each component used, including:

1. Installation and operation manual.

2. Renewal parts bulletin.

3. As built drawings, including approved shop drawings.

4. Test data.

5. Detailed transfer switch setting parameters, DIP-switch settings, ranges, options, operating setting and calibrating instructions, etc.

1-5. STORAGE AND HANDLING

1-5.01. Protection

a. The CONTRACTOR, and hence the ATS supplier, shall be responsible for safety of the ATS during storage, transporting and handling.

b. At all times the ATS shall be housed inside a moisture free, non-porous, extra heavy duty plastic weatherproof housing.

c. Interior and exterior of the ATS shall be kept clean at all times.

d. Size, furnish and install temporary space heaters within the ATS and energize during storage and installation for humidity control.

1-6. SPARE PARTS

1-6.01. One (1) quart of touch up paint.

PART 2 - PRODUCT

2-1. AUTOMATIC TRANSFER SWITCHES REQUIREMENTS AND UNIT DESCRIPTION

2-1.01. General:

a. Automatic transfer switch shall be completely factory interconnected, pre-wired and tested.

b. Automatic transfer switch mechanism shall be of the electrically operated, double throw mechanically held type, actuated by a single solenoid operator momentarily energized to assure quiet operation.

c. Automatic transfer switch shall be inherently interlocked, mechanically in either normal or emergency position with no “OFF” position possible. Gravity or spring operated switches will not be acceptable. ATS shall be the “open transition” type of automatic transfer switch.

d. All main contacts shall be provided with silver alloy material for high conductivity under all conditions of service. The transfer switch shall be suitable for all classes of loads, including inductive loads, resistive loads, control loads, and electrical discharge and tungsten-filament loads.

e. Inspection of contacts shall be possible from the front of the switch.

f. A manual operating handle shall be provided.

g. The ATS shall have a U.L. listed minimum RMS symmetrical short circuit current rating equal to or greater than the minimum RMS symmetrical short circuit current rating shown on the PLANS. The ATS contacts rating and number of poles shall be as shown on the PLANS (electrical one line diagrams).

h. The automatic transfer switch shall be furnished complete with the automatic transfer control system.

i. The automatic transfer switch ATS, automatic control transfer system, sensors, timers, etc. shall be mounted, as one unit, in a single enclosure as specified hereinafter. The ATS shall be mounted where shown on the PLANS.

2-2. AUTOMATIC TRANSFER SWITCH ATS CONTROL REQUIREMENTS

2-2.01. General:

a. The ATS shall automatically transfer power from one power source to another, in the event of normal/primary power source failure, one primary feeder failure, etc. The ATS shall ensure continuity of 480 volt 3-phase power supply for as long as one of the two primary feeders to the ATS is active. The ATS shall also include functionality to initiate transfer of power from one source to another based upon discrete commands received from the Owner's Distributed Control System, as also shown on the PLANS.

b. For "FB1-ATS-MCCNPW2" only: The ATS shall also have functionality to initiate engine generator start and stop commands to a remotely located engine generator with field adjustable delayed timing action. The start/stop commands shall prevent dry cranking of the engine by requiring the generator set to reach proper output, and run for the duration of the cool down setting, regardless of whether the normal source restores before the load is transferred.

2-2.02. Voltage and frequency sensing:

a. Provide field adjustable setpoints with the following Dropout and Pickup ranges for the following parameters:

Parameter	Source	Dropout Range	Pickup Range
Undervoltage	Normal and Emergency	70% – 98%	85% - 100%
Underfrequency	Normal and Emergency	85% - 98%	90% - 100%
Voltage Unbalance	Normal and Emergency	5% - 20%	2% below dropout

2-2.03. Transfer time delays:

a. Provide the following field adjustable setpoints with the following ranges:

1. Time delay to override momentary normal power source outages to delay transfer switch: 0 to 6 seconds.

2. Transfer to backup power source time delay: 1 to 300 seconds.

3. Time delay to re-transfer to normal power source (upon restoration): 0 to 30 minutes.

4. For “FB1-ATS-MCCNPW2” only:

    a) Time delay for engine generator cool down: 0 to 60 minutes.

2-2.04. Manual transfer switch controls:

a. Combination Display and Keypad: Provide manufacturer’s standard four line, 20 character liquid crystal display (LCD) combination display and pushbutton keypad user interface module. The combination display and keypad module shall be an integral part of the ATS for viewing all available data and field adjustment of desired operational parameters. Mount the Combination Display and Keypad to the face of the ATS.

2-2.05. Accessories:

a. Provide a detailed instruction plate for convenient operation.

b. Auxiliary Contacts:

    1. All contacts shall be rated for 10 ampere at 120 volts A.C. Wire to terminal blocks.

    2. Provide contacts for the following:

        a) ATS in normal position.

        b) ATS in emergency (backup) position.

        c) Normal source voltage is present.

        d) Emergency (backup) source voltage is present.

        e) Additional contacts where required by the PLANS.

c. Nameplates:

    1. Provide nameplates/legend plates for each pilot device and each component/device/equipment installed on the face and inside the enclosure of the ATS.

    2. Identification Nameplates:

        a) Type: 3-ply, 1/8” thick, rigid thermoset phenolic resin laminated cellulose paper base engraving stock per ASTM D-709, Type I. Nameplates shall be ASTM Grade ES-1, ES-2, or ES-3 as applicable for the face and lettering colors specified hereinafter. Flexible or acrylic tags will be not be accepted

b) Color: White-Black-White

c) Lettering: Nameplate shall be legible at a distance of six feet from the nameplate. Lettering shall be engraved through the face layer to the melamine middle layer

d) Accessories: Provide holes for mechanical fastening.

e) Nameplates located on the face of the cabinet shall be secured with two Stainless Steel screws.

2-3. ATS ENCLOSURE

2-3.01. The Automatic Transfer Switch ATS assembly (controls, contactors, sensors, relays, etc.) shall be mounted in a NEMA-12 gasketed enclosure. The ATS controller combination display and keypad switch operators shall be mounted on the face of the enclosure door. Each door shall have a continuous piano hinge with key-lockable stainless steel handle (3-point latching mechanism).

PART 3 - EXECUTION

3-1. FACTORY INSPECTION AND TESTS

3-1.01. Standard factory tests shall be performed on the equipment specified in this section. All tests shall be in accordance with the latest version of ANSI and NEMA standards. The manufacturer shall provide certified copies of factory test reports prior to shipment of the equipment to the project site. Format and quantities of the test report shall be in accordance to Section 01300 and Section 01300 of the Contract Specifications.

3-2. FIELD INSTALLATION (BY CONTRACTOR)

3-2.01. Mount the ATS as shown on the PLANS. Top of ATS shall be no higher than 6 foot 0 inches above the finished floor elevation. For surface mounting, use support channel per the requirements of Section 16150 “Raceways, Fittings and Supports” and per the details shown on the PLANS. For floor mounting, provide equipment pad as shown on the PLANS. Also refer to the details shown on the PLANS.

3-3. FIELD TEST AND CHECKS

3-3.01. The following minimum test and checks shall be made before energizing the Automatic Transfer ATS. These tests shall be performed by a Factory Trained Field Technician (non sales type):

a. Thoroughly inspect ATS.

b. Test for proper operation.

c. Calibrate, set and test control timers, relays according to settings provided and required by this Specifications Section and as recommended by the manufacturer.

d. Submit documentation of all tests outlined above. Include all test documentation data in operation and maintenance manuals.

3-4. EQUIPMENT PROTECTION AND RESTORATION (BY CONTRACTOR)

3-4.01. Clean and vacuum clean all interior of the equipment.

3-4.02. Touch-up and restore damaged surfaces to factory finish.

3-5. TRAINING

3-5.01. Provide training sessions for OWNER's representatives for Two (2) normal workday and Four (4) working hours each day, at the job-site location. If training is conducted in less than the time required by these Specifications, the remaining time shall be utilized at the discretion of the OWNER.

3-5.02. The training session shall be conducted by the ATS manufacturer's non-sales-type technical representative.

3-5.03. At minimum, the training session shall include:

a. Operation and maintenance procedure for the equipment and all components installed within the ATS.

b. Factory contact persons phone numbers, persons names, ordering procedures and procedures to follow to obtain meaningful results from the factory.

3-6. MEASUREMENT AND PAYMENT

3-6.01. No separate measurement or payment for work performed under this Section. Include cost of same in Contract price bid for work of which this is a component part.

END OF SECTION

SECTION 16550

GROUNDING

PART 1 - GENERAL

1-1. SUMMARY

1-1.01. Provide grounding in accordance with the PLANS, these Specifications and the National Electrical Code "N.E.C." Included within this section are furnishing and installing all the wire, connections, ground electrodes, and other devices associated with the grounding system associated with the aforementioned.

1-2. RELATED REQUIREMENTS

1-2.01. The PLANS designate the size, rating, and other requirements of the equipment specified under this Section.

1-2.02. Related work as called for on the PLANS, as specified herein or in other Sections of the Specifications.

1-3. -1.5 (NOT USED)

1-4. SUBMITTALS

1-4.01. Submit shop drawings on all grounding system product and in accordance with Section 01300 of the Specifications.

1-4.02. Submit Operations and Maintenance Manuals (O&M) in accordance with Section 01300 of the Specifications. O&M Manuals shall include copies of the approved shop drawings, and on-site/field test data.

PART 2 - PRODUCTS

2-1. GENERAL

2-1.01. Ground electrodes shall be minimally sized as follows:

a. Rods: ¾" diameter by 10 feet length rods of high conductivity copper clad steel by Erico (Cadweld), or approved equal.

b. Plates: 24 inch depth by 24 inch wide high conductivity copper sheet with the plate thickness as shown on the PLANS, by Erico (Cadweld), or approved equal. Multiple plate thicknesses are required for this project as shown on the PLANS. Each ground plate shall have two bare copper 250 kCMIL wire pigtails exothermically welded to the plate by the plate manufacturer. Exception: ground plates connected to test wells are not required to have pigtails. Refer to the PLANS for additional requirements.

2-1.02. Connections between ground electrodes and grounding electrode conductors shall be made below grade using Cadweld, Burndy Thermoweld, or equal thermite reaction welding system. Exception: Connections between ground electrodes and grounding electrode conductors made inside an accessible underground Grounding System Test Well, only where noted/detailed/shown on the PLANS, shall be permitted to be made with tin-plated Bolted Ground Lug connectors as manufactured by BURNDY Type GK , or approved equal.

2-1.03. Grounding electrode conductors/wire shall be green insulated stranded copper. Use bare copper for grounding grids only (as shown on the PLANS).

2-1.04. Equipment and/or static voltage and/or any other ground buses/bars (for any other type of use) called for on the PLANS and Specifications shall be tin-plated copper.

PART 3 - EXECUTION

3-1. GENERAL:

3-1.01. Connect each Ground Bus/bar directly to the Grounding Network conduit routed in the duct bank system in addition to the Grounding System around the manhole/handhole, as also shown on the PLANS.

3-1.02. Extend a dedicated equipment ground wire, minimum size No. 6 AWG green insulated wire, from each Ground Bus/bar to each individual conduit system grounding bushings, each cable clamp, each support channel, etc. housed inside the associated electrical manhole/handhole. Also, refer to the PLANS

3-1.03. Ground all electrical equipment, including lights and receptacles, etc., with a separate equipment ground wire installed in the conduit with the power conductors.

3-1.04. Install grounding system electrically and mechanically continuous throughout. System neutral shall be bonded only at the building service transformer.

3-1.05. Ground lighting transformer neutrals to their housing and bond the housing to the equipment grounding conductor.

3-1.06. Connect equipment grounding conductors to ground bars or busses provided at panelboards, motor control centers, disconnect switches, switchgears, etc., from which the equipment is served.

3-1.07. Where the equipment has no facility to attach an equipment ground wire, use a Burndy Quicklug or equal. Clean the metal surface under the lug to bright metal so that good contact can be made. Repaint metal surfaces after the lug and connecting ground wires are installed.

3-1.08. Make ground connections to equipment by using ground lugs or ground bars, where they are provided.

3-1.09. Use a thermite reaction welding system process as previously specified to make connections to ground electrodes; and, at any joint or connection which will be inaccessible after the construction. Exception: Connect to Grounding System Test Wells as previously specified and as also shown on the PLANS. Do not cover until each connection has been inspected by the Owner.

3-1.10. Furnish bonding jumpers as shown or as otherwise required by the National Electrical Code “N.E.C.” Use stranded copper wire.

3-1.11. Inside buildings and at above ground level and through concrete floor slabs, route the ground wire(s) in a conduit raceway system. Fill annular space between ground wire and conduit with Crouse Hinds, Nelson or Raychem watertight and flame-retardant sealant.

3-1.12. Connect ground wires entering outlet boxes in such a manner that removal of the receptacle will not interrupt the continuity of the grounding circuit. A grounding screw attached to the box, and used for no other purpose, may be used to accomplish this.

3-1.13. Test grounding in accordance with Section 16800. Maximum resistance to ground shall not exceed 2-ohms. At no additional cost to the owner, install additional ground eletrodes over the number required by the PLANS, as necessary to accomplish the 2-ohms or less resistance.

3-1.14. Install a bonding jumper from the grounding lug of each Conduit-Grounding-Bushing to the ground bar or bus of each enclosure and/or equipment housing (such as pull boxes, junction boxes, panelboards, motor control centers, transformers, automatic transfer switches, instrument and control panels, etc.),

as applicable. Instrument Grounds to be separate from power grounds. Instrument ground to be insulated up to the connection to the ground grid. Also refer to details shown on the Drawings. Bonding jumper wire for Conduit system Grounding-Bushings shall be STRANDED bare copper wire with minimum of 19-strands. Minimum wire size shall be #10 AWG.

3-1.15. In each manhole/handhole:

a. Mount a 400 amperes rated, tin-plated copper Ground Bus/bar of minimum length of 1-feet, unless shown otherwise on the PLANS.

b. Mount ground bus on 600 volts AC stand-off isolators/insulators, as manufactured by Square-D Company or approved equal.

c. Furnish each Ground Bus/bar with a minimum of six (6) terminals (ground lugs), unless shown otherwise on the PLANS. Each terminal (Grounding lug) shall be:

   1. Tin-plated copper,

   2. Cable of terminating wire from #10 AWG to #4 AWG

d. Connect each Ground Bus/bar directly to the Grounding Network conduit routed in the duct bank system in addition to the Grounding System around the manhole/handhole, as also shown on the PLANS.

e. Extend a dedicated equipment ground wire, minimum size No. 6 AWG green insulated wire, from each Ground Bus/bar to each individual conduit system grounding bushings, each cable clamp, each support channel, etc. housed inside the associated electrical manhole/handhole. Also, refer to the PLANS.

3-2. MEASUREMENT AND PAYMENT

3-2.01. No separate measurement or payment for work performed under this Section. Include cost of same in Contract price bid for work of which this is a component part.

END OF SECTION

SECTION 16600

DISCONNECT SWITCHES AND ENCLOSURES

PART 1 - GENERAL

1-1. SUMMARY

1-1.01. Furnish and install disconnect switches, enclosed circuit breakers, and manual motor starters as shown on the PLANS and specified herein.

1-2. RELATED REQUIREMENTS

1-2.01. The PLANS designate the size, rating, and other requirements of the equipment specified under this Section.

1-2.02. Related work as called for on the PLANS, as specified herein or in other Sections of the Specifications.

1-3. SUBMITTALS

1-3.01. Submit Shop Drawings in accordance with Section 01300 of the Contract Specifications. Include enclosure dimensions, ratings, wiring connection diagram and fabrication drawings. Submit protective device coordination curves and current limiting circuit breaker/fuse peak current let through curves, where applicable.

1-3.02. Submit Operations and Maintenance Manuals (O&M) in accordance with Section 01300 of the Contract Specifications. O&M Manuals shall include copies of the approved shop drawings, and on-site/field test data.

PART 2 - PRODUCTS

2-1. DISCONNECT SWITCHES

2-1.01. Construction:

a. U.L. Listed, Non-fused, Single Throw, Heavy Duty type.

b. Switch blades shall be fully visible in the "OFF" position when the door is open.

c. Dead-front construction with permanently attached arc suppressors.

d. Switches to have quick-make and quick-break operating mechanism and handles with provision for padlocking in all three positions, with at least three padlocks. The locking provisions shall be such that the padlock directly interferes with the operating handle and is fully visible.

e. Switches shall have a dual cover interlock to prevent unauthorized opening of the switch door in an "ON" position from either source, or closing of the switch mechanism with the door open.

f. Furnish lugs to terminate the incoming/outgoing field wiring as shown on the DRAWINGS. Refer to the DRAWINGS. Additionally, provide a grounding lug for equipment ground wire connection. Lugs to be U.L. listed.

g. All current-carrying parts to be plated.

2-1.02. Ratings:

a. Voltage Rating: 600 Volts AC

b. Current Rating: Maximum continuous current capacity shown on the DRAWINGS

c. Number of Phases: Three, unless shown otherwise on the DRAWINGS

d. Minimum RMS symmetrical short circuit current rating: 10000 ampere at 208 volts A.C.

2-1.03. Enclosure: Enclosed switch assemblies installed in ALL AREAS shall be enclosed in NEMA-4X Type 304-Stainless Steel gasketed cabinets.

2-1.04. Manufacturer:

a. All Disconnect Switches on the project shall be manufactured by a single Disconnect Switch manufacturer.

b. Square D Company Class 3110, General Electric Company “G.E.”, Cutler-Hammer Corporation, or approved equal.

2-2. ENCLOSED CIRCUIT BREAKERS

2-2.01. Construction:

a. Molded case type, NEMA rated, and U.L. Listed.

b. Circuit breakers shall have an overcenter, toggle handle-operated, trip free mechanism with quick make, quick break action independent of the speed of

the toggle handle operation. Breakers shall be thermal magnetic molded case type having inverse time thermal trip and instantaneous time magnetic trip. The design shall provide common tripping of all poles.

c. Circuit breaker shall have handles with provision for padlocking in the ”OFF” position. The locking provisions shall be such that the padlock directly interferes with the operating handle and is fully visible. Circuit breakers shall have a dual enclosure interlock to prevent unauthorized opening of the enclosure door when the circuit breaker is in the "ON" position, or closing of the circuit breaker mechanism with the door open.

d. Furnish lugs to terminate the incoming/outgoing field wiring as shown on the PLANS. Refer to the PLANS. Additionally, provide a grounding lug for equipment ground wire connection. Lugs shall be U.L. listed.

2-2.02. Enclosures: NEMA-4X type 316 Stainless Steel gasketed cabinet

2-2.03. Circuit Breaker Ratings:

a. Voltage Ratings: 600 volts AC

b. Number of Phases: Three, unless shown otherwise on the PLANS.

c. Current Rating: Maximum continuous current carrying capacity shown on the PLANS

d. Minimum RMS symmetrical short circuit current rating: Equal to or greater than that of bus serving the circuit breaker at rated bus voltage A. C.

e. Breakers shall operate continuously when operating/running current is equal to 80% of the long time trip setting (or frame rating, as applicable) of the breakers.

f. Provide complete with rating plug and other accessories as required for proper operation of circuit breaker.

g. Furnish current limiting type circuit breakers when specifically required by the one-line drawings shown on the PLANS.

h. Provide electronic trip attachment where specifically shown on the PLANS. Trip unit shall be solid state type with adjustable long time, short time, instantaneous, ground fault and pick up settings as manufactured by **“**Square D” Micrologic LSIG Series B Trip Unit and Internal Ground Fault Protection, or approved equal.

2-2.04. Manufacturer: Circuit breakers shall be Square D Company Type FCL, General Electric Company "G.E.", Cutler-Hammer Corporation, or approved equal.

2-3. MANUAL MOTOR STARTERS

2-3.01. General

a. Type: Enclosed

b. Rating: NEMA size 1

c. Voltage Rating: 208 volts A.C.

d. Horsepower Rating: 7.5 HP

e. Number of Poles: Provide as required by the PLANS.

f. Operator: Pushbutton

g. Approvals: U.L. listed

h. Enclosure: NEMA 4X Type 304 Stainless Steel.

i. Accessories:

1. Thermal Overload Heater Element: Provide thermal overload heater elements as required. Size per NEC

2. Red "On" indicating pilot light wired per manufacturer's standard.

j. Manufacturer: Square D, Class 2510 Type M, Cutler-Hammer, General Electric Company "G.E.", or approved equal.

2-4. IDENTIFICATION

2-4.01. General:

a. Furnish and install identification nameplates for each piece of equipment as follows:

1. Type: 3-ply, 1/8" thick, rigid thermoset phenolic resin laminated cellulose paper base engraving stock per ASTM D-709, Type I. Nameplates shall be ASTM Grade ES-1, ES-2, or ES-3 as applicable for the face and lettering colors specified hereinafter. Flexible or acrylic tags will be not be accepted

2. Color: White-Black-White

3. Lettering: 1/4 inch height, minimum, engraved through the face layer to the melamine middle layer

4. Accessories: Provide holes for mechanical fastening.

5. Attachment Means: Secured with two Stainless Steel screws.

b. Exception: Identify manual motor starters mounted in environmentally controlled rooms as specified in Section 16300 “Wiring Devices”.

PART 3 - EXECUTION

3-1. INSTALLATION

3-1.01. Install where the top of each enclosure is no higher than 6-feet-6-inches above the finished floor elevation, unless otherwise noted on the PLANS.

3-1.02. Surface mount on support channels per the requirements Section 16150 “Raceways, Fittings and Supports” and the details shown on the PLANS. Also refer to details shown on the PLANS.

3-1.03. Tag equipment with the name as it appears on the PLANS using the specified nameplates.

3-2. MEASUREMENT AND PAYMENT

3-2.01. No separate measurement or payment for work performed under this Section. Include cost of same in Contract price bid for work of which this is a component part.

END OF SECTION

SECTION 16800

ELECTRICAL CALIBRATION, TESTING AND SETTINGS

PART 1 - GENERAL

1-1. SUMMARY

1-1.01. Provide all equipment and labor required for calibration, setting and testing as described herein or otherwise required. All tests shall be witnessed by the OWNER or the OWNER's designated representative. Give written notification of the tests at least seven days prior to the desired date to perform the tests. Repair or replace all defective material, equipment or workmanship disclosed as a result of these tests at no cost to OWNER.

1-1.02. All work, including installation, connection, calibration, testing, and adjustment, shall be accomplished by qualified, experienced personnel working under continuous, competent supervision. The completed installation shall display competent work, reflecting adherence to prevailing industrial standards and methods.

1-1.03. Tests: The Contractor shall make all tests required by these specifications, or other authorities having jurisdictions. All such tests shall be performed in the presence of the Construction Manager or his representative. The Contractor shall furnish all necessary testing equipment and pay all costs of tests, including all replacement parts and labor necessary due to damage resulting from damaged equipment or from test and correction of faulty installation.

1-2. SUBMITTALS

1-2.01. Submittals shall include copies of the test results/reports. Submittals shall be per the quantity and format requirements of Section 01300 and 01300 of the Specifications. Include the following at minimum:

a. Test results, inclusive of catalog number/drawing cross-reference, where applicable, and any other data entered on the field test report

b. Testing Plans

c. All test instrument data sheets and calibration certificates

1-3. TEST PLAN AND TEST RESULTS

1-3.01. Performance: Testing shall be performed in compliance with the approved Test Plan. The Test Plan shall be submitted in accordance with the outline given below. Provide the OWNER with typewritten results of all tests, including a description of the equipment tested, the date and time of day tested, names of witnesses, weather conditions; and test values and results.

1-3.02. Test plan: At minimum, Submit a Test Plan for each of the Sections listed in Division 16 of these specifications. Test Plan shall be submitted at least two(2) weeks prior to the desired date and time of the test. Test Plan shall clearly identify the following, as applicable:

a. Desired date and time to perform the test

b. Name of Entity/individual that shall perform the test

c. Test procedures and recording data sheets

d. Name, description, catalog number, calibration date, and calibration entity's name of each of the test instruments to be used in executing the test

e. Expected duration of the test

f. Request for type, time and duration of any shutdown that may be required during the test.

1-3.03. Test Results:

a. Submit Test Results for each of the Sections listed in Division 16 of these specifications. Test Results shall be submitted no later than at least two (2) weeks after the last date of the respective test. Test Results shall be typewritten and shall include the following, as minimum:

1. All data and information provided in the Test Plan

2. Name of Entities and individuals that attended and witnessed the test

3. Weather Conditions

4. Tabulated test values and results

5. Corrective measures taken and/or to be taken toward defective material, equipment or workmanship disclosed as a result of these tests. Also include Re-Test dates and procedures for defective material, equipment or workmanship disclosed from the previous test.

1-4. TEST EQUIPMENT

1-4.01. Each test instrument shall have been certified by an established calibration laboratory within the six (6) months prior to its use in testing and calibration procedures. Calibration shall be traceable to the National Institute of Standards and Technology (NIST).

PART 2 - PRODUCTS

2-1.01. No products are required by this Section of the Specifications.

PART 3 - EXECUTION

3-1. INSULATION RESISTANCE (MEGGER) TESTS:

3-1.01. Use a minimum 500 volt megohmeter.

3-1.02. Take each reading for at least one minute.

3-1.03. Include the following tests:

Equipment	Minimum Resistance
115 and 230 volt motors	5.0 Megohms
460 volt motors	7.0 Megohms
4000 volt motors	10.0 Megohms
600 volt transformer winding	100.0 Megohms
600 volt wiring up to 1000 ft.	25.0 Megohms

Coordinate minimum values shown with equipment manufacturer's recommendations.

3-1.04. Test all transformer windings as follows:

a. Primary to ground

b. Secondary to ground

c. Primary to secondary

3-1.05. Record and submit all Megger readings to the OWNER/ENGINEER for review and record keeping purposes. Neatly type all readings and organize in a

Database table form. Incremental megger readings shall also be recorded and included in the table.

3-1.06. Test medium voltage cables in accordance with Section 16182 “Medium Voltage Cables.

3-2. GROUND TEST

3-2.01. Ground System testing shall be performed by an independent professional testing company specialized in, and well equipped to perform, ground resistance testing.

3-2.02. Ground testing shall assure resistance to ground values listed in the Grounding Specification. All tests must be witnessed by the Owner or the Owner's designated representative.

3-2.03. At a minimum, test each of the following separately, with ground under test isolated from other grounds:

a. Each process area/building grounding network, i.e., Blower Building, Canopy, etc. Furnish and install additional grounding/ground electrodes if the resistance to ground measures more than the values stipulated in the Grounding Section of the Specifications. This shall be executed at no additional cost to the Owner.

b. Each manhole,

c. Each handhole,

3-2.04. Finally, after all tests of each individual process area/building, manhole, handhole, etc., are performed as previously specified, perform a final test after all of the individual process areas/buildings, manholes, handholes, etc. grounding networks are interconnected as also shown on the PLANS.

3-3. MOTORS

3-3.01. Test the insulation resistance (megger test) of all motors installed under this Contract inclusive of process mechanical drive motors and the Heating and Ventilation System drive motors such as exhaust fans, fan and coil units drive motors, etc. Test all motors in accordance to with subsection 3.01 above.

3-3.02. Dry out any wet insulation by use of space heaters or other approved methods.

3-3.03. Check coupling alignment, shaft end play, lubrication, and other mechanical checks as required. Follow manufacturer's instructions.

3-3.04. Check for proper motor rotation.

3-4. RECEPTACLES

3-4.01. Test all receptacles for proper connections and grounding. Use an approved plug-in tester equal to Woodhead 1750 or Hubbell 5200.

3-5. CONTINUITY TESTS

3-5.01. Perform continuity test on all low voltage conductors (600 volt, and below, wiring system). Continuity test must be performed after wiring is pulled in the conduit system and/or underground electrical system (as applicable). Continuity test must be performed on each conductor between its source and final destination (point of termination to load/device/etc.). Utilize Ohmmeter for this test. Ohmmeter must be set to lowest ohm setting (highest resolution).

3-6. MEASUREMENT AND PAYMENT

3-6.01. No separate measurement or payment for work performed under this Section. Include cost of same in Contract price bid for work of which this is a component part.

END OF SECTION