CITY OF AUSTIN, TEXAS

AUSTIN WATER UTILITY

WALNUT CREEK WWTP TERTIARY FILTER REHABILITATION PROJECT CIP ID No. 3023.025

NOTES:

1. CONTRACTOR SHALL NOTIFY THE PUBLIC WORKS DEPARTMENT 24 HOURS PRIOR TO STARTING CONSTRUCTION OR CLEARING OPERATIONS.
2. CONTRACTOR SHALL CALL "ONE CALL" AT 1-800-344-8377 FOR UTILITY LOCATIONS AT LEAST 48 HOURS PRIOR TO ANY WORK IN CITY EASEMENTS OR STREET RIGHT OF WAYS.
3. THIS PROJECT IS LOCATED WITHIN THE WALNUT CREEK WATERSHED (CLASSIFIED AS SUBURBAN) AND SHALL BE DEVELOPED, CONSTRUCTED AND MAINTAINED IN ACCORDANCE WITH CHAPTER 25 OF THE CODE OF THE CITY OF AUSTIN.
4. NO PORTION OF THIS SITE IS LOCATED WITHIN PARKLAND OR LAND USED FOR PARK PURPOSES. (IF SUCH LAND IS INCLUDED, DOCUMENTATION OF PARKS AND RECREATION DEPT APPROVAL IS REQUIRED AT THE TIME OF SUBMITTAL FOR GENERAL PERMIT PROGRAM APPROVAL.)
5. A PORTION OF THIS SITE IS LOCATED WITHIN THE 100-YEAR FLOODPLAIN, PER CITY OF AUSTIN AND FEDERAL EMERGENCY MANAGEMENT AGENCY FLOOD INSURANCE RATE MAPS.
6. THIS PROJECT IS NOT WITHIN THE EDWARDS AQUIFER RECHARGE ZONE AS DEFINED BY THE CITY OF AUSTIN. THIS PROJECT IS NOT WITHIN THE EDWRDS AQUIFER RECHARGE ZONE AS REGULATED BY THE TEXAS COMMISSION ON ENVIRONMENTAL QUALITY (TCEQ).
7. THERE ARE NO CRITICAL ENVIRONMENTAL FEATURES WITHIN 150' OF ANY PORTION OF THIS PROJECT. A FIELD INVESTIGATION HAS NOT BEEN PERFORMED AS A PART OF THIS PROJECT AND IS NOT REQUIRED.
8. ADDITIONAL TRENCH E/S CONTROL: A TRIANGULAR SEDIMENT FILTER DIKE WILL BE INSTALLED ACROSS FULL WIDTH OF TRAFFIC CLOSURE AND DOWNSTREAM OF CONSTRUCTION AREA, PERPENDICULAR TO CURB. FILTER DIKE TO FOLLOW ACTIVE CONSTRUCTION. REMOVING AND RE-SETTING FILTER DIKE IS CONSIDERED SUBSIDIARY TO BARRICADES AND TRAFFIC HANDLING.
9. APPROPRIATE EASEMENTS/APPROVALS MUST BE SECURED AND DOCUMENTED FOR PROJECT AREAS LOCATED OUTSIDE OF RIGHT OF WAYS. NO WORK SHALL BE PERFORMED WITHIN THESE AREAS UNTIL ASSOCIATED RIGHT OF ENTRY HAS BEEN SECURED. ADDITIONALLY, PROJECT PORTIONS IMPACTED BY LACK OF RECORDED DOCUMENT NUMBERS WILL BE CONSIDERED FOR FORMAL GPP REVIEW.
10. CONTRACTOR SHALL STAKE ALL PROPOSED SERVICE CONNECTIONS LOCATED WITHIN THE CRITICAL ROOT ZONE OF TREES 8" IN CALIPER AND LARGER AT LEAST 21 CALENDAR DAYS PRIOR TO CONSTRUCTION OF SUCH SERVICES. STAKING SHALL CONSIST OF A LATH WITH NAIL AND PAINT MARKINGS. IN CASES WHERE A STAKE CANNOT BE PLACED WITHOUT DAMAGING PROPERTY, CONTRACTOR MAY USE PAINT ONLY. ONCE STAKING IS COMPLETED, IT IS THE CONTRACTOR'S RESPONSIBILITY TO INFORM THE CITY OF AUSTIN'S CONSTRUCTION INSPECTOR WITHIN TWENTY-FOUR HOURS. THE CITY OF AUSTIN'S CONSTRUCTION INSPECTOR WILL THEN COORDINATE A FIELD REVIEW OF THE SERVICE LOCATIONS WITH THE GENERAL PERMIT PROGRAM COORDINATOR AND PROPERTY OWNERS. SERVICE LINE LOCATIONS MAY BE ADJUSTED BASED ON THE REVIEW AND WILL BE RESTAKED BY THE CONTRACTOR AT NO ADDITIONAL COST TO THE CONTRACT. ALL SERVICE LINE STAKING SHALL BE MAINTAINED UNTIL THE SERVICE IS INSTALLED.

REVISIONS/CORRECTIONS RECORD

NUMBER	DESCRIPTION	REVISE (R) ADD (A) VOID (V) SHEET Nos.	TOTAL # SHEETS IN PLAN SET	TOTAL SITE IMP. COVER (SQ. FT.)/%	CITY OF AUSTIN APPROVAL-DATE	DATE IMAGED

NOTES:

RELEASE OF THIS APPLICATION DOES NOT CONSTITUTE A VERIFICATION OF ALL DATA, INFORMATION AND CALCULATIONS SUPPLIED BY THE APPLICANT. THE ENGINEER OF RECORD IS SOLELY RESPONSIBLE FOR THE COMPLETENESS, ACCURACY AND ADEQUACY OF HIS/HER SUBMITTAL, WHETHER OR NOT THE APPLICATION IS REVIEWED FOR CODE COMPLIANCE BY CITY ENGINEERS.

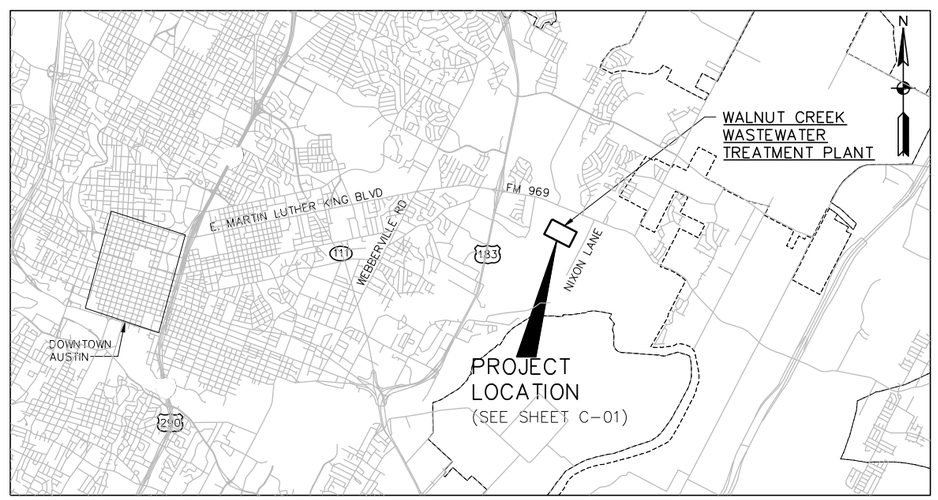

PROJECT LOCATION MAP

NOT TO SCALE

PROJECT INFORMATION:

STREET ADDRESS:
7113 FM 969
AUSTIN, TEXAS 78724

OWNER:
AUSTIN WATER UTILITY
625 EAST 10TH STREET
AUSTIN, TEXAS 78701

CONTACT:
REBECCA VENTO
625 EAST 10TH STREET, SUITE 400
AUSTIN, TEXAS 78701
512-972-0230

SUBMITTAL PREPARED BY:

BLACK & VEATCH
Building a world of difference.

CONTACT:
MR. CHRIS DORMIER, PE
1701 DIRECTORS BLVD, SUITE 940
AUSTIN, TEXAS 78744

PHONE:
1-512-448-2503

SUBMITTED FOR APPROVAL BY:

Carlos Chavez — Carlos Chavez — 6/7/2016
ENGINEER OF RECORD — CARLOS CHAVEZ — DATE

Carlos Chavez
STATE OF TEXAS
CARLOS A. CHAVEZ
119722
LICENSED
PROFESSIONAL ENGINEER
6/7/2016

APPROVED BY:

STEVE PARKS, PROJECT MANAGER
PUBLIC WORKS DEPARTMENT
PROJECT MANAGEMENT DIVISION

LAUREN KING, PE, PROJECT SPONSOR
AUSTIN WATER

PERMIT NO:
SPL-01-0020C

Austin WATER — Walnut Creek WWTP - Tertiary Filter Rehabilitation Project

REVISION:

DISCIPLINE NO. G-01

DWG. NO. SHEET 1 OF 273

SHEET NO.	DISCIPLINE NO.	SHEET NAME
		GENERAL
1	G-01	COVER SHEET
2	G-02	SHEET LIST
3	G-03	LEGEND
4	G-04	GENERAL NOTES
5	G-05	ABBREVIATIONS
6	G-06	PROCESS FLOW DIAGRAM
7	G-06A	FILTER PIPING SCHEMATIC
8	G-07	HYDRUALIC PROFILE
		CIVIL
9	C-01	OVERALL SITE PLAN
10	C-02	ENLARGED FILTER AREA SITE PLAN
11	C-02A	ENLARGED SOUTHSIDE CLEARWELL AREA SITE PLAN
12	C-02B	ENLARGED SODIUM BISULFITE FAGILITY SITE PLAN
13	C-02C	SOUTHSIDE CLEARWELL EXCAVATION SECTIONS
14	C-02D	NORTHWEST CLEARWELL EXCAVATION SECTIONS
15	C-03A	ENLARGED FILTER AREA SITE PLAN - YARD PIPING - DEMOLITION
16	C-03B	ENLARGED FILTER AREA SITE PLAN - YARD PIPING - NEW WORK
17	C-03C	YARD PIPING - 66" FILTER EFFLUENT DETAILS
18	C-04	CIVIL - YARD PIPING - 16" NPW RELOCATION
19	C-06	CIVIL - YARD PIPING- 8" FIRE LINE RELOCATION
20	C-07	CIVIL - YARD PIPING DETAILS - SHEET 1 OF 3
21	C-08	CIVIL - YARD PIPING DETAILS - SHEET 2 OF 3
22	C-09	CIVIL - YARD PIPING DETAILS - SHEET 3 OF 3
23	C-10	STANDARD DETAILS - SHEET 1 OF 3
24	C-11	STANDARD DETAILS - SHEET 2 OF 3
25	C-12	STANDARD DETAILS - SHEET 3 OF 3
26	C-13	CITY OF AUSTIN - EROSION/SEDIMENTATION CONTROL SITE PLAN
27	C-14	CITY OF AUSTIN - EROSION/SEDIMENTATION CONTROL
28	C-15	CITY OF AUSTIN - TREE PROTECTION AND ENVIRONMENTAL NOTES
		MECHANICAL PROCESS
29	M-01	OVERALL FILTER TOP PLAN - DEMOLITION AND NEW WORK
30	M-02	FILTER GALLERY DEMOLITION - PLAN AND SECTION, SHEET 1 OF 2
31	M-03	FILTER GALLERY DEMOLITION - PLAN AND SECTION, SHEET 2 OF 2
32	M-04	FILTERS 1 TO 4 DEMOLITION - SECTIONS AND PHOTOS
33	M-05	FILTERS 5 TO 10 DEMOLITION - SECTIONS AND PHOTOS
34	M-06	FILTER GALLERY - PLAN AND SECTION, SHEET 1 OF 2
35	M-07	FILTER GALLERY - PLAN AND SECTION, SHEET 2 OF 2
36	M-08	FILTERS 1 TO 4 SECTIONS
37	M-09	FILTERS 5 TO 10 SECTIONS
38	M-13	FILTER DETAILS - SHEET 1 OF 2
39	M-14	FILTER DETAILS - SHEET 2 OF 2
40	M-16	NORTHWEST CLEARWELL - SECTIONAL PLANS
41	M-17	NORTHWEST CLEARWELL - TOP PLAN AND SECTIONS
42	M-18	NORTHWEST CLEARWELL - SECTIONS
43	M-19	SOUTHSIDE CLEARWELL - SECTIONAL PLAN
44	M-20	SOUTHSIDE CLEARWELL - TOP SLAB PLAN
45	M-21	SOUTHSIDE CLEARWELL - SECTIONS
46	M-22	SOUTHSIDE CLEARWELL - SECTIONS
47	M-23	BLOWER BUILDING PLAN AND SECTION
48	M-24	SOUTHSIDE CLEARWELL - 72" FILTER AND CLEARWELL EFFLUENT PIPE SECTIONS
49	M-25	SOUTHSIDE CLEARWELL - 72" CLEARWELL CONNECTION PIPE SECTIONS
50	M-28	NON-POTABLE WATER - EFFLUENT CHANNEL - 12" SUCTION PIPING DEMOLITION
51	M-29	NON-POTABLE WATER - FILTER GALLERY - DEMOLITION (SHEET 1 OF 2)
52	M-30	NON-POTABLE WATER - FILTER GALLERY - DEMOLITION (SHEET 2 OF 2)
53	M-31	NON-POTABLE WATER - FILTER GALLERY - PLAN AND SECTIONS
54	M-32	NON-POTABLE WATER - FILTER GALLERY - SECTIONS
55	M-33	NON-POTABLE WATER - FILTER GALLERY - DETAILS
56	M-34	SODIUM BISULFITE STRUCTURE - PLANS, SECTIONS AND DETAILS
57	M-35	NORTHWEST JUNCTION BOX MODIFICATIONS - PLANS AND SECTIONS
58	M-36	PROCESS AIR PIPE SUPPORTS - SHEET 1 OF 3
59	M-37	PROCESS AIR PIPE SUPPORTS - SHEET 2 OF 3
60	M-38	PROCESS AIR PIPE SUPPORTS - SHEET 3 OF 3
		STRUCTURAL
61	S-01	GENERAL NOTES - SHEET 1 OF 2
62	S-02	GENERAL NOTES - SHEET 2 OF 2
63	S-03	TYPICAL DETAILS
64	S-04	TYPICAL DETAILS
65	S-05	TYPICAL DETAILS
66	S-06	TYPICAL DETAILS
67	S-07	BEAM AND SLAB SCHEDULES
68	S-08	SOUTHSIDE CLEARWELL - FOUNDATION LEVEL PLAN
69	S-09	SOUTHSIDE CLEARWELL - CLEARWELL ROOF LEVEL PLAN
70	S-10	SOUTHSIDE CLEARWELL - GROUND LEVEL PLAN
71	S-11	BLOWER BUILDING - ROOF FRAMING PLAN
72	S-12	SOUTHSIDE CLEARWELL - SECTION LOOKING NORTH
73	S-13	SOUTHSIDE CLEARWELL - SECTION LOOKING WEST
74	S-14	SOUTHSIDE CLEARWELL - SECTION LOOKING WEST
75	S-15	SOUTHSIDE CLEARWELL - SECTIONS & DETAILS
76	S-16	SOUTHSIDE CLEARWELL - SECTIONS & DETAILS
77	S-17	SOUTHSIDE CLEARWELL - SECTIONS & DETAILS
78	S-18	SOUTHSIDE CLEARWELL - SECTIONS & DETAILS
79	S-19	EXISTING FILTER BUILDING - PERMANENT BULKHEAD DETAILS
80	S-20	EXISTING FILTER BUILDING - AUGMENTATION WALLS & TEMP PIPE PLUGS
81	S-21	EXISTING FILTER BUILDING - AUGMENTATION WALL & TEMP PIPE PLUG
82	S-22	SOUTHSIDE CLEARWELL - SECTIONS & DETAILS
83	S-23	SOUTHSIDE CLEARWELL - WALL SCHEDULE
84	S-24	BLOWER BUILDING - FOUNDATION DETAILS
85	S-25	BLOWER BUILDING - ROOF FRAMING DETAILS
86	S-26	NORTHWEST CLEARWELL - FOUNDATION LEVEL PLAN
87	S-27	NORTHWEST CLEARWELL - ROOF LEVEL PLAN
88	S-28	NORTHWEST CLEARWELL - SECTION LOOKING EAST
89	S-29	NORTHWEST CLEARWELL - SECTION LOOKING NORTH
90	S-30	NORTHWEST CLEARWELL - SECTIONS & DETAILS
91	S-31	NORTHWEST CLEARWELL - SECTIONS & DETAILS
92	S-32	SODIUM BISULFITE FACILITY - FOUNDATION PLANS
93	S-33	SODIUM BISULFITE FACILITY - FOUNDATION DETAILS
94	S-34	EXISTING FILTER BASINS - MODIFCATIONS TO EXISTING WALLS
		ARCHITECTURAL
95	A-01	BLOWER BUILDING - BUILDING PERSPECTIVES
96	A-02	BLOWER BUILDING - OPERATING FLOOR AND ROOF PLANS
97	A-03	BLOWER BUILDING - BUILDING ELEVATIONS
98	A-04	BLOWER BUILDING - WALL SECTIONS AND DETAILS
99	A-05	BLOWER BUILDING - ROOM FINISH, DOOR AND LOUVER SCHEDULES
100	A-06	FILTER BUILDING - REHABILITATION FLOOR PLANS
		HVAC
101	H-01	GENERAL - HVAC NOTES & SYMBOLS
102	H-02	FILTER BUILDING NO. 1 - DUCTWORK AND MECHANICAL UNITS PLAN
103	H-03	FILTER BUILDING NO. 2 - DUCTWORK AND MECHANICAL UNITS PLAN
104	H-04	PIPE GALLERY - FILTER BUILDING 1 - DUCTWORK AND MECHANICAL UNITS PLAN
105	H-05	PIPE GALLERY - FILTER BUILDING 2 - DUCTWORK AND MECHANICAL UNITS PLAN
106	H-06	PIPE GALLERY - FILTER BUILDING 1 - DUCTWORK AND MECHANICAL UNITS PLAN
107	H-07	PLAN - AIR BLOWER - BUILDING VENTILATION
108	H-08	DETAILS
109	H-09	SCHEDULES
		PLUMBING
110	P-01	PLUMBING PLAN - FILTER BUILDING - FLOOR DRAINS AND WATER HEATER
111	P-02	PLUMBING PLAN - SODIUM BISULFITE FEED AREA - EMERGENCY SHOWER AND EYEWASH
112	P-03	PLUMBING SCHEDULE AND NOTES
		ELECTRICAL
113	E-01	SYMBOLS LEGEND (SHEET 1 OF 2)
114	E-02	SYMBOLS LEGEND (SHEET 2 OF 2)
115	E-03	GENERAL NOTES
116	E-04	SITE ELECTRICAL PLAN - DEMOLITION
117	E-05	SITE ELECTRICAL DUCT BANK SECTION VIEWS - DEMOLITION
118	E-06	FB1/FB2 480V OVERALL ONE-LINE DIAGRAM - DEMOLITION
119	E-07	FB1/FB2 480V ONE-LINE DIAGRAM - DEMOLITION (SHEET 1 OF 3)
120	E-08	FB1/FB2 480V ONE-LINE DIAGRAM - DEMOLITION (SHEET 2 OF 3)
121	E-09	FB1/FB2 480V ONE-LINE DIAGRAM - DEMOLITION (SHEET 3 OF 3)
122	E-10	FB1/FB2 DISTRIBUTION EQUIPMENT FRONT ELEVATIONS - DEMOLITION
123	E-11	FB1/FB2 POWER FLOOR PLANS - DEMOLITION (SHEET 1 OF 3)
124	E-12	FB1/FB2 POWER FLOOR PLANS - DEMOLITION (SHEET 2 OF 3)
125	E-13	FB1/FB2 POWER FLOOR PLANS - DEMOLITION (SHEET 3 OF 3)
126	E-14	FB1/FB2 480V OVERALL ONE-LINE DIAGRAM SUGGESTED INTERIM STAGE 1
127	E-15	FB1/FB2 480V OVERALL ONE-LINE DIAGRAM SUGGESTED INTERIM STAGE 2
128	E-16	FB1/FB2 480V OVERALL ONE-LINE DIAGRAM SUGGESTED INTERIM STAGE 3
129	E-17	FB1/FB2 480V OVERALL ONE-LINE DIAGRAM SUGGESTED INTERIM STAGE 4
130	E-18	FB1/FB2 480V OVERALL ONE-LINE DIAGRAM SUGGESTED INTERIM STAGE 5
131	E-19	FB1/FB2 480V OVERALL ONE-LINE DIAGRAM SUGGESTED INTERIM STAGE 6
132	E-20	SITE ELECTRICAL PLAN - RENOVATION
133	E-21	SITE ELECTRICAL DUCT BANK SECTION VIEWS - RENOVATION
134	E-22	HW2 VICINITY SITE ELECTRICAL PLAN AND ENLARGED DETAILS - RENOVATION
135	E-23	FB1/FB2 480V OVERALL ONE-LINE DIAGRAM - RENOVATION
136	E-24	FB1/FB2 480V ONE-LINE DIAGRAMS - RENOVATION (SHEET 1 OF 4)
137	E-25	FB1/FB2 480V ONE-LINE DIAGRAMS - RENOVATION (SHEET 2 OF 4)
138	E-26	FB1/FB2 480V ONE-LINE DIAGRAMS - RENOVATION (SHEET 3 OF 4)
139	E-27	FB1/FB2 480V ONE-LINE DIAGRAMS - RENOVATION (SHEET 4 OF 4)
140	E-28	FB1/FB2 KEY INTERLOCK SCHEME AND LIGHTING CONTACTOR SCHEMATICS
141	E-29	FB1/FB2 DISTRIBUTION EQUIPMENT FRONT ELEVATIONS - PROPOSED
142	E-30	FB1/FB2 EQUIPMENT LOCATION PLAN CONTROL ROOM LEVEL - RENOVATION
143	E-31	FB1/FB2 EQUIPMENT LOCATION PLAN PIPE GALLERY LEVEL - RENOVATION
144	E-32	FB1/FB2 ELECTRICAL POWER PLAN CONTROL ROOM LEVEL - RENOVATION
145	E-33	FB1/FB2 ELECTRICAL POWER PLAN PIPE GALLERY LEVEL - RENOVATION
146	E-34	FB1 EXTERIOR POWER, LIGHTING, AND AUXILIARY PLAN MODIFICATIONS
147	E-35	FB1/FB2 ELECTRICAL CONDUIT CORRIDORS PLAN PIPE GALLERY LEVEL - RENOVATION
148	E-36	FB1/FB2 ELECTRICAL CONDUIT CORRIDORS SECTIONS - RENOVATION (SHEET 1 OF 2)
149	E-37	FB1/FB2 ELECTRICAL CONDUIT CORRIDORS SECTIONS - RENOVATION (SHEET 2 OF 2)
150	E-38	FB1/FB2/BB ELECTRICAL CONDUIT CORRIDOR SECTION TABLE - RENOVATION
151	E-39	BLOWER BUILDING ELECTRICAL POWER PLAN
152	E-40	BLOWER BUILDING LIGHTING AND AUXILIARY PLAN
153	E-41	BLOWER BUILDING CONDUIT CORRIDOR AND GROUNDING PLAN
154	E-42	WRI 4160V ONE-LINE DIAGRAM - MODIFICATIONS (SHEET 1 OF 2)
155	E-43	WRI 4160V ONE-LINE DIAGRAM - MODIFICATIONS (SHEET 2 OF 2)
156	E-44	WRI DISTRIBUTION EQUIPMENT FRONT ELEVATIONS - MODIFICATIONS
157	E-45	WRI ELECTRICAL BUILDING POWER PLAN - MODIFICATIONS
158	E-46	HW2 ONE-LINE AND ELECTRICAL CONDUIT CORRIDOR PLAN - MODIFICATIONS
159	E-47	PROPOSED ELECTRICAL CONDUIT/WIRE SCHEDULE
160	E-48	TYPICAL ELECTRICAL DETAILS (SHEET 1 OF 10)
161	E-49	TYPICAL ELECTRICAL DETAILS (SHEET 2 OF 10)
162	E-50	TYPICAL ELECTRICAL DETAILS (SHEET 3 OF 10)
163	E-51	TYPICAL ELECTRICAL DETAILS (SHEET 4 OF 10)
164	E-52	TYPICAL ELECTRICAL DETAILS (SHEET 5 OF 10)
165	E-53	TYPICAL ELECTRICAL DETAILS (SHEET 6 OF 10)
166	E-54	TYPICAL ELECTRICAL DETAILS (SHEET 7 OF 10)
167	E-55	TYPICAL ELECTRICAL DETAILS (SHEET 8 OF 10)
168	E-56	TYPICAL ELECTRICAL DETAILS (SHEET 9 OF 10)
169	E-57	TYPICAL ELECTRICAL DETAILS (SHEET 10 OF 10)
170	E-58	REFERENCE DRAWING - FB1/FB2/WRI VICNITY SITE ELECTRICAL PLAN (SHEET 1 OF 2)
171	E-59	REFERENCE DRAWING - FB1/FB2/WRI VICNITY SITE ELECTRICAL PLAN (SHEET 2 OF 2)
172	E-60	REFERENCE DRAWING - FILTER BUILDING ONE-LINE DIAGRAMS (SHEET 1 OF 4)
173	E-61	REFERENCE DRAWING - FILTER BUILDING ONE-LINE DIAGRAMS (SHEET 2 OF 4)
174	E-62	REFERENCE DRAWING - FILTER BUILDING ONE-LINE DIAGRAMS (SHEET 3 OF 4)
175	E-63	REFERENCE DRAWING - FILTER BUILDING ONE-LINE DIAGRAMS (SHEET 4 OF 4)
176	E-64	REFERENCE DRAWING - FILTER BUILDING NO.1 PLAN AND SECTIONAL PLAN
177	E-65	REFERENCE DRAWING - FILTER BUILDING NO.2 STRUCTURAL UPPER LEVEL PLAN
178	E-66	REFERENCE DRAWING - FILTER BUILDING NO.1 EXISTING POWER FLOOR PLANS (SHEET 1 OF 2)
179	E-67	REFERENCE DRAWING - FILTER BUILDING NO.1 EXISTING POWER FLOOR PLANS (SHEET 2 OF 2)
180	E-68	REFERENCE DRAWING - WRI BUILDING 4160V ONE-LINE DIAGRAM (SHEET 1 OF 2)
181	E-69	REFERENCE DRAWING - WRI BUILDING 4160V ONE-LINE DIAGRAM (SHEET 2 OF 2)
182	E-70	REFERENCE DRAWING - WRI BUILDING 4160V MCC FRONT ELEVATIONS
183	E-71	REFERENCE DRAWING - WRI BUILDING POWER PLAN
184	E-72	REFERENCE DRAWING - HEADWORKS NO. 2 VICNITY SITE ELECTRICAL PLAN (SHEET 1 OF 2)
185	E-73	REFERENCE DRAWING - HEADWORKS NO. 2 VICNITY SITE ELECTRICAL PLAN (SHEET 2 OF 2)
186	E-74	REFERENCE DRAWING - HEADWORKS NO. 2 480V ONE-LINE DIAGRAM
187	E-75	REFERENCE DRAWING - HEADWORKS NO. 2 FLOOR PLAN (SHEET 1 OF 3)
188	E-76	REFERENCE DRAWING - HEADWORKS NO. 2 FLOOR PLAN (SHEET 2 OF 3)
189	E-77	REFERENCE DRAWING - HEADWORKS NO. 2 FLOOR PLAN (SHEET 3 OF 3)
		PROCESS AND INSTRUMENTATION DIAGRAM
190	PID-01	LEGENDS AND ABBREVIATIONS - SHEET 1 OF 3
191	PID-02	LEGENDS AND ABBREVIATIONS - SHEET 2 OF 3
192	PID-03	LEGENDS AND ABBREVIATIONS - SHEET 3 OF 3
193	PID-04	OVERALL PROCESS FLOW DIAGRAM
194	PID-05	FILTER NO. 1
195	PID-06	FILTER NO. 2
196	PID-07	FILTER NO. 3
197	PID-08	FILTER NO. 4
198	PID-09	FILTER NO. 5
199	PID-10	FILTER NO. 6
200	PID-11	FILTER NO. 7
201	PID-12	FILTER NO. 8
202	PID-13	FILTER NO. 9
203	PID-14	FILTER NO. 10
204	PID-15	FILTER BACKWASH PUMPS
205	PID-16	FILTER BLOWERS
206	PID-17	NPW PUMPS
207	PID-18	NORTHWEST AND SOUTHSIDE CLEARWELLS
208	PID-19	LIQUID RING VACUUM PUMP
209	PID-20	SODIUM BISULFITE FEED SYSTEM
		INSTRUMENTATION
210	I-01	DEMOLITION FILTER BUILDING NO. 1 - INSTRUMENATION AND CONTROLS PLAN
211	I-02	DEMOLITION FILTER NO. 1-4 GALLERY INSTRUMENTATION AND CONTROLS PLAN
212	I-03	DEMOLITION FILTER BUILDING NO. 2 - INSTRUMENATION AND CONTROL PLAN
213	I-04	DEMOLITION FILTER NO. 5-10 GALLERY INSTRUMENTATION AND CONTROLS PLAN
214	I-05	DEMOLITION FILTER BUILDING NO. 1, 2, AND SITE PLC NETWORK
215	I-06	FILTER BUILDING NO. 1 - INSTRUMENATION AND CONTROLS PLAN
216	I-07	FILTER NO. 1-4 GALLERY INSTRUMENTATION AND CONTROLS PLAN
217	I-08	FILTER BUILDING NO. 2 - INSTRUMENATION AND CONTROL PLAN
218	I-09	FILTER NO. 5-10 GALLERY INSTRUMENTATION AND CONTROLS PLAN
219	I-10	DUCT BANK
220	I-11	CONTROL SYSTEM BLOCK DIAGRAM
221	I-12	FILTER MASTER CONTROL PANEL DETAIL
222	I-13	FILTER CONSOLE NO. 1 DETAIL
223	I-14	FILTER CONSOLE NO. 2 DETAIL
224	I-15	FILTER CONSOLE NO. 3 DETAIL
225	I-16	FILTER CONSOLE NO. 4 DETAIL
226	I-17	FILTER CONSOLE NO. 5 DETAIL
227	I-18	FILTER CONSOLE NO. 6 DETAIL
228	I-19	FILTER CONSOLE NO. 7 DETAIL
229	I-20	FILTER CONSOLE NO. 8 DETAIL
230	I-21	FILTER CONSOLE NO. 9 DETAIL
231	I-22	FILTER CONSOLE NO. 10 DETAIL
232	I-23	FILTER CONSOLES ONE-LINE DIAGRAM SH. 1 OF 3
233	I-24	FILTER CONSOLES ONE-LINE DIAGRAM SH. 2 OF 3
234	I-25	FILTER CONSOLES ONE-LINE DIAGRAM SH. 3 OF 3
235	I-26	MISCELLANOUS ONE-LINE DIAGRAMS SH. 1 OF 2
236	I-27	MISCELLANOUS ONE-LINE DIAGRAMS SH. 2 OF 2
237	I-28	FILTER CONSOLE NO. 1 PLC I/O POINT WIRING SCHEMATIC SH. 1 OF 2
238	I-29	FILTER CONSOLE NO. 1 PLC I/O POINT WIRING SCHEMATIC SH. 2 OF 2
239	I-30	FILTER CONSOLE NO. 2 PLC I/O POINT WIRING SCHEMATIC SH. 1 OF 2
240	I-31	FILTER CONSOLE NO. 2 PLC I/O POINT WIRING SCHEMATIC SH. 2 OF 2
241	I-32	FILTER CONSOLE NO. 3 PLC I/O POINT WIRING SCHEMATIC SH. 1 OF 2
242	I-33	FILTER CONSOLE NO. 3 PLC I/O POINT WIRING SCHEMATIC SH. 2 OF 2
243	I-34	FILTER CONSOLE NO. 4 PLC I/O POINT WIRING SCHEMATIC SH. 1 OF 2
244	I-35	FILTER CONSOLE NO. 4 PLC I/O POINT WIRING SCHEMATIC SH. 2 OF 2
245	I-36	FILTER CONSOLE NO. 5 PLC I/O POINT WIRING SCHEMATIC SH. 1 OF 2
246	I-37	FILTER CONSOLE NO. 5 PLC I/O POINT WIRING SCHEMATIC SH. 2 OF 2
247	I-38	FILTER CONSOLE NO. 6 PLC I/O POINT WIRING SCHEMATIC SH. 1 OF 2
248	I-39	FILTER CONSOLE NO. 6 PLC I/O POINT WIRING SCHEMATIC SH. 2 OF 2
249	I-40	FILTER CONSOLE NO. 7 PLC I/O POINT WIRING SCHEMATIC SH. 1 OF 2
250	I-41	FILTER CONSOLE NO. 7 PLC I/O POINT WIRING SCHEMATIC SH. 2 OF 2
251	I-42	FILTER CONSOLE NO. 8 PLC I/O POINT WIRING SCHEMATIC SH. 1 OF 2
252	I-43	FILTER CONSOLE NO. 8 PLC I/O POINT WIRING SCHEMATIC SH. 2 OF 2
253	I-44	FILTER CONSOLE NO. 9 PLC I/O POINT WIRING SCHEMATIC SH. 1 OF 2
254	I-45	FILTER CONSOLE NO. 9 PLC I/O POINT WIRING SCHEMATIC SH. 2 OF 2
255	I-46	FILTER CONSOLE NO. 10 PLC I/O POINT WIRING SCHEMATIC SH. 1 OF 2
256	I-47	FILTER CONSOLE NO. 10 PLC I/O POINT WIRING SCHEMATIC SH. 2 OF 2
257	I-48	FILTER MASTER PLC I/O POINT WIRING SCHEMATIC SH. 1 OF 3
258	I-49	FILTER MASTER PLC I/O POINT WIRING SCHEMATIC SH. 2 OF 3
259	I-50	FILTER MASTER PLC I/O POINT WIRING SCHEMATIC SH. 3 OF 3
260	I-51	FILTER BACKWASH & NPW PUMPS PLC I/O POINT WIRING SCHEMATIC SH. 1 OF 4
261	I-52	FILTER BACKWASH & NPW PUMPS PLC I/O POINT WIRING SCHEMATIC SH. 2 OF 4
262	I-53	FILTER BACKWASH & NPW PUMPS PLC I/O POINT WIRING SCHEMATIC SH. 3 OF 4
263	I-54	FILTER BACKWASH & NPW PUMPS PLC I/O POINT WIRING SCHEMATIC SH. 4 OF 4
264	I-55	AIR SCOUR BLOWER NO. 1 PLC I/O POINT WIRING SCHEMATIC SH. 1 OF 2
265	I-56	AIR SCOUR BLOWER NO. 1 PLC I/O POINT WIRING SCHEMATIC SH. 2 OF 2
266	I-57	AIR SCOUR BLOWER NO. 2 PLC I/O POINT WIRING SCHEMATIC SH. 1 OF 2
267	I-58	AIR SCOUR BLOWER NO. 2 PLC I/O POINT WIRING SCHEMATIC SH. 2 OF 2
268	I-59	SODIUM BISULFITE SYSTEM PLC I/O POINT WIRING SCHEMATIC SH. 1 OF 2
269	I-60	SODIUM BISULFITE SYSTEM PLC I/O POINT WIRING SCHEMATIC SH. 2 OF 2
270	I-61	FILTER BACKWASH AIR SCOUR BLOWERS LOCAL CONTROL PANEL DETAILS
271	I-62	NPW PUMP LOCAL CONTROL PANEL DETAILS
272	I-63	INSTALLATION DETAILS
273	I-64	SCHEMATICS

NO.	DR	CK	DATE	DESCRIPTION

REVISIONS

BLACK & VEATCH
Building a world of difference.
Black & Veatch Corporation
Registration No. F-869
Austin, Texas

STATE OF TEXAS
CARLOS R. CHAVEZ
119722
LICENSED
PROFESSIONAL ENGINEER
Carlos Chavez
6/17/2016

Austin WATER
Walnut Creek WWTP - Tertiary Filter Rehabilitation Project
CIP ID No. 3023.025

GENERAL
SHEET LIST

DESIGNED BY:	AWL
DRAWN BY:	AWL
REVIEWED BY:	WLK
APPROVED BY:	TSD
PROJECT NO.:	168622
DATE:	4/4/2014
SCALE:	NOT TO SCALE
REVISION:	
DISCIPLINE NO.	G-02
DWG. NO.	2 OF 273

F0168622 SAVED: LER07108, 11/7/2013 9:37:57 AM
D168622 CAD ID: General Drawings
File: C:\PWBatchPDF\Process\168622 - Austin Walnut Creek WWTP Filter Rehab\G_02.dwg Layout: Work Plotted: 6/9/2016 1:49:54 PM

GENERAL LEGEND

- SURFACED STREET, ROAD OR DRIVE
- SURFACED STREET, ROAD OR DRIVE WITH CURBS
- NON-SURFACED STREET, ROAD OR DRIVE
- CONCRETE WALK
- CB — CATCH BASIN
- MANHOLE
- DRAINAGE COURSE OR FLOW LINE
- 326 — EXISTING GROUND CONTOUR
- 326 — FINISH GRADE CONTOUR
- BANK OR SLOPE LINES
- #3 OR T.H.#3 B3 — TEST HOLE AND NUMBER
- SURVEY LINE WITH PI, PT, OR POT
- CONCRETE ENCASEMENT-PLAN
- CONCRETE REACTION BLOCKING AT BEND, PLUG OR TEE
- DRAINS OR CULVERTS
- TUNNEL CASING - PLAN
- SMALLER THAN 24" / 24" AND LARGER — EXISTING
- GENERAL LAYOUT YARD PIPING
- SMALLER THAN 24" / 24" AND LARGER — NEW
- NEW WATER LINE OR SEWER IN PROFILE
- NON-CONNECTING PIPING
- CE/L — CONSTRUCTION EASEMENT LINE
- E/L — EASEMENT LINE
- R/W — RIGHT-OF-WAY LINE
- PL — PROPERTY LINE
- PE/L — PERMANENT EASEMENT LINE
- TE/L — TEMPORARY EASEMENT LINE
- UE/L — UTILITY EASEMENT LINE
- S/L — SURVEY LINE / SECTION LINE
- W — WATER LINE
- G — GAS LINE
- T — TELEPHONE (UNDERGROUND)
- E — ELECTRICAL (UNDERGROUND)
- P — T — POWER OR TELEPHONE LINES (OVERHEAD)
- (G) (W) — WATER OR GAS VALVE
- (WM) (GM) — WATER OR GAS METER
- TELEPHONE OR POWER POLE WITH GUY ANCHOR
- FIRE HYDRANT
- YARD HYDRANT
- STREET LIGHT POLE
- TRAFFIC SIGNAL
- TRAFFIC SIGN
- STOPSIGN
- HEDGE, BRUSH, SHRUBS, WOODS
- 10" — DECIDUOUS TREE AND TRUNK DIAMETER
- 4" — CONIFEROUS TREE AND TREE AND TRUNK DIAMETER
- SWAMP

- BUILDINGS, STRUCTURES
- STRUCTURES UNDERGROUND
- FUTURE BUILDINGS, STRUCTURES
- CLOTHES LINE
- SWING SET
- FENCE
- FENCE, WOOD
- RAILROAD, EACH TRACK
- CENTERLINE
- 1 / AC45 — SECTION NUMBER OR DETAIL LETTER; DRAWING NUMBER ON WHICH SECTION OR DETAIL APPEARS; OR WHERE SECTION IS CUT OR DETAIL IS NOTED
- DOOR, WINDOW AND LOUVER SCHEDULE REFERENCE
- 1 / A045 — WALL ELEVATION
- 1 / - — PHOTO LOCATION AND DIRECTION
- D / 4 — ABBREVIATION; SCHEDULE NUMBER
- F102 — ROOM NUMBER; AREA DESIGNATION
- PV / 10 — EQUIPMENT OR VALVE IDENTIFICATION CODE; EQUIPMENT NUMBER
- PV-10 — EQUIPMENT OR VALVE IDENTIFICATION CODE; EQUIPMENT NUMBER
- EQUIP CALLOUT — EQUIPMENT REPRESENTATION WITH CALLOUT
- EXISTING FACILITY TO BE DEMOLISHED OR REMOVED

MATERIALS LEGEND

- EARTH OR GRADE
- GRANULAR FILL (CRUSHED ROCK OR GRAVEL)
- ROCK
- NEW CONCRETE
- EXISTING CONCRETE, PRECAST OR PRESTRESSED CONCRETE
- BRICK, FACE
- BRICK, COMMON
- CONCRETE MASONRY UNITS (CMU)
- CUT STONE OR SAND FILL, GROUT, MORTAR, AND PLASTER
- WOOD, SHEATHING, PANELING, DECKING, ETC.
- WOOD, STUDS, BEAMS, JOISTS, ETC.
- RIPRAP
- CHECKERED PLATE or CHECKERED PLATE OVER GRATING
- GRATING
- STEEL (FOR 1"SCALE & LARGER)
- STEEL OR ALUMINUM (FOR 3/4" SCALE & SMALLER)
- BAR GRATING (LINES IN DIRECTION OF SPAN)
- ALUMINUM
- INSULATION (BATT)
- INSULATION (RIGID)

PIPING SYSTEMS

NEW PIPING	CDWR	CONDENSER WATER RETURN	HWR	HEATING SYSTEM WATER RETURN	NPW	WATER, NON-POTABLE
UNDERGROUND PIPING	CDWS	CONDENSER WATER SUPPLY	HWS	HEATING SYSTEM WATER SUPPLY	NPHW	WATER, NON-POTABLE HOT
EXISTING PIPING	Co2(G)	CARBON DIOXIDE GAS	HW	WATER, POTABLE HOT	OX	OXYGEN
FUTURE PIPING	Co2(S)	CARBON DIOXIDE SOLUTION	HWC	HOT WATER CIRCULATING	OZ	OZONE
AIR (COMPRESSED)	CW	WATER, COLD	IA	INSTRUMENT AIR	OF	OVERFLOW
ALUMINUM SULFATE - (ALUM)	DW	DISTILLED WATER	PERM	POTASSIUM PERMANGANATE	POLY	POLYMER SOLUTION
ARGON	FeCl	FERRIC CHLORIDE	LIME	LIME	RF	REFRIGERANT
CHEMICAL RESISTANT ACID WASTE	FeS	FERRIC SULFATE	PG	LP GAS (PROPANE)	ST	STORM DRAIN
CHEMICAL RESISTANT ACID WASTE VENT	F	FIRE PROTECTION WATER SYSTEM	N	NITROGEN	SG	SLUDGE GAS
TEMPERED OR BLENDED WATER	FL	FLUORIDE	SA	SODA ASH	SI	SILICA
CARBON SLURRY	FOR	FUEL OIL RETURN	NaOH	SODIUM HYDROXIDE	PD	SUMP PUMP DISCHARGE
ACETYLENE	FOS	FUEL OIL SUPPLY	SP	SODIUM HEXAMETAPHOSPHATE (PHOSPHATE)	SAN	SANITARY SEWER
CHILLED WATER RETURN	FOV	FUEL OIL VENT	NaOCL	SODIUM HYPOCHLORITE	V	VENT
CHILLED WATER SUPPLY	G	GAS, NATURAL	AMM(G)	AMMONIA GAS	VAC	VACUUM
CHLORINE GAS	H	HYDROGEN	AMM(S)	AMMONIA SOLUTION	W	WATER
CHLORINE LIQUID	HE	HELIUM	NO	NITROUS OXIDE	LPA	LOW PRESSURE AIR
CHLORINE SOLUTION	HP	HYDROGEN PEROXIDE			FIF	FILTER INFLUENT
	PA	PHOSPHORIC ACID				

PIPING ACCESSORIES LEGEND

- BLIND FLANGE
- CAP OR PLUG
- CO — CLEANOUT
- CROSS
- S — DIAPHRAGM SEAL
- ELBOW
- ELBOW DOWN
- ELBOW TURNING UP
- SIZE — HOSE CONNECTION
- Q — QUICK COUPLING
- REDUCER
- RUPTURE DISK
- TEE
- TEE LINE DOWN
- TEE LINE UP
- WYE
- S — WYE STRAINER
- S — WYE STRAINER WITH BLOWOFF
- DRAIN OR BELL-UP
- CALIBRATING COLUMN
- TRAP
- UNION
- WALL SLEEVE
- AT — AUTOMATIC DRAIN TRAP
- DT — DRIP TRAP
- S / S — DUPLEX STRAINER
- EXPANSION COMPENSATOR
- F — INLINE FILTER
- FLEXIBLE HOSE OR TUBING
- FLEXIBLE CONNECTOR
- HOSE REEL
- INJECTOR, EDUCTOR, BLENDER
- ORIFICE PLATE
- PIPE GUIDE
- S — SEDIMENT TRAP
- S — STRAINER
- SUCTION DIFFUSER
- PIPE DIFFUSER
- SURGE CHAMBER
- VENT - SCREENED
- VENT
- P — PRESSURE GAUGE W/SNUBBER
- SIGHT FLOW INDICATOR
- T — TEMPERATURE INDICATOR
- THERMOMETER
- ELECTROMAGNETIC/ULTRASONIC FLOWMETER
- PITOT TUBE
- ROTAMETER
- TURBINE OR PROPELLOR FLOWMETER
- M — SET STOP METER
- VENTURI
- FM — FLOW METER

MISCELLANEOUS EQUIPMENT

- STATIC MIXER
- VERTICAL MIXER
- SIGHT GLASS
- CENTRIFUGE
- CHANNEL DIFFUSER
- COMPRESSOR OR BLOWER
- PIPE ANCHOR
- PUMP
- SLUICE GATE
- SLIDE GATE
- STOP PLATE
- BAR SCREEN
- EXPANSION TANK
- SCREW (LIFT) PUMP
- FLUME
- WEIR

VALVE LEGEND

- PINCH VALVE
- PLUG VALVE, ECCENTRIC
- PLUG VALVE, NON-ECCENTRIC
- BUTTERFLY VALVE
- GATE VALVE
- BALL VALVE
- GLOBE VALVE
- CHECK VALVE
- 3 WAY VALVE
- 4 WAY VALVE
- ANGLE VALVE
- CHLORINE INSTITUTE VALVE
- DIAPHRAGM VALVE
- THROTTLING VALVE
- FLAME ARRESTER OR CHECK
- BACKWATER VALVE
- INLINE PRESSURE RELIEF VALVE
- PRESSURE REGULATING VALVE
- PRESSURE SUSTAINING OR MAINTAINING VALVE
- VACUUM BREAKER
- THERMAL SHUTOFF VALVE
- EXPLOSION RELIEF VALVE
- HOSE FAUCET
- HOSE FAUCET W/VACUUM BREAKER
- HOSE VALVE W/HOSE NIPPLE
- BACKFLOW PREVENTER
- SAFETY RELIEF VALVE
- V — VACUUM RELIEF CHECK VALVE
- PRESSURE VACUUM RELIEF VALVE

ACTUATOR LEGEND

- E — ELECTRIC
- FLOAT
- DIAPHRAGM
- P / O — AIR/OIL TANDEM
- S — SOLENOID
- A — AIR

NOTE :
SYMBOLS ON THIS SHEET WHICH ARE TO BE SHOWN AS EXISTING SHALL BE DELINEATED AS SCREENED
THOSE SYMBOLS WHICH ARE TO BE SHOWN AS NEW SHALL BE DELINEATED AS SOLID (HEAVY)

NO.	DR	CK	DATE	DESCRIPTION

REVISIONS

BLACK & VEATCH
Building a world of difference.
Black & Veatch Corporation
Registration No. F-869
Austin, Texas

STATE OF TEXAS — CARLOS R. CHAVEZ — 119722 — LICENSED PROFESSIONAL ENGINEER
Carlos Chavez
6/17/2016

Austin WATER
Walnut Creek WWTP - Tertiary Filter Rehabilitation Project
CIP ID No. 3023.025

GENERAL LEGEND

DESIGNED BY:	AWL
DRAWN BY:	AWL
REVIEWED BY:	WLK
APPROVED BY:	TSD
PROJECT NO.:	168622
DATE:	4/4/2014
SCALE:	NOT TO SCALE

REVISION:

DISCIPLINE NO.
G-03

DWG. NO.
3 OF 273

FD168622 SAVED: LER07108, 2/5/2013 11:39:29 AM
D168622 CAD ID: General Drawings
File: C:\PWBatchPDF\Process\168622 - Austin Walnut Creek WWTP Filter Rehab\G_03.dwg Layout: Work Plotted: 6/9/2016 1:50:04 PM

GENERAL NOTES FOR CIVIL DRAWINGS

1. THE COORDINATES SHOWN ARE BASED ON THE TEXAS STATE PLANE, CENTRAL ZONE NAD83(2011), MODIFIED TO SURFACE VALUES, USING A SURFACE ADJUSTMENT FACTOR (SAF) OF 1.00006. SURFACE DATA IS MOVED TO GRID LOCATION USING CONTROL POINT NUMBER 2 - N.10075666.138, E 3142966.286.

2. VERTICAL DATA IS NAVD88

4. EXISTING UTILITIES AND STRUCTURES (UNDERGROUND, SURFACE, OR OVERHEAD) ARE INDICATED ONLY TO THE EXTENT THAT SUCH INFORMATION WAS KNOWN, OR MADE AVAILABLE TO, OR DISCOVERED BY THE ENGINEER IN PREPARING THE DRAWINGS. THE LOCATIONS, CONFIGURATIONS, AND ELEVATIONS OF SUBSURFACE FACILITIES AND UTILITIES ARE APPROXIMATE, AND NOT ALL UTILITIES AND FACILITIES MAY BE INDICATED. OVERHEAD UTILITIES ARE NOT INDICATED IN ARCHITECTURAL ELEVATIONS, PROFILE OR SECTION DRAWINGS. THE ENGINEERING INVESTIGATIONS, LOCATION, AND DESIGNATION OF SUBSURFACE UTILITIES INDICATED IN THESE CONTRACT DOCUMENTS HAS BEEN PERFORMED TO QUALITY LEVEL C IN ACCORDANCE WITH GENERALLY ACCEPTED ENGINEERING PRINCIPLES AND PRACTICES AS OUTLINED IN ASCE STANDARD AND GUIDELINE BULLETIN CI/ASCE 38-02 UNLESS OTHERWISE DESIGNATED. WHERE SUCH ACTIVITIES HAVE BEEN TO A HIGHER LEVEL OF QUALITY, THE HIGHER QUALITY LEVEL FOR THE AFFECTED AREAS IS INDICATED IN THE CONTRACT DOCUMENTS.

5. "SCREENED" (LIGHT) DELINEATION INDICATED ON THE DRAWINGS DENOTES EXISTING FACILITIES. "SCREENED" INFORMATION WAS TAKEN FROM EXISTING CONSTRUCTION DRAWINGS AND DATA, IS FOR REFERENCE ONLY, AND SHALL BE FIELD VERIFIED BY THE CONTRACTOR PRIOR TO THE ORDERING OF MATERIALS AND BEGINNING OF CONSTRUCTION. "BOLD" DELINEATION IS NEW WORK TO BE CONSTRUCTED UNDER THIS CONTRACT.

6. CONTRACTOR'S STAGING, PARKING AND MATERIAL STORAGE SHALL BE LIMITED TO THE SPACE(S) DESIGNATED ON THE DRAWINGS. PROVIDING ADDITIONAL STORAGE OR PARKING SHALL BE THE RESPONSIBILITY OF THE CONTRACTOR.

7. CALL BEFORE YOU DIG. CONTRACTOR SHALL VERIFY PRECISE LOCATIONS AND ELEVATIONS OF ALL UTILITIES AND STRUCTURES, WHETHER INDICATED ON THE DRAWINGS OR NOT, IN THE FIELD IN ADVANCE OF EXCAVATING, BY CONTACTING ALL UTILITIES AND OTHER AGENCIES, AND BY PROSPECTING. CONTRACTOR SHALL BE RESPONSIBLE FOR REMOVAL, DEMOLITION, RECONSTRUCTION, AND RECONNECTION OF EXISTING FACILITIES AS REQUIRED TO COMPLETE THE WORK. IF REQUIRED AFTER FIELD VERIFICATION, CONTRACTOR SHALL COORDINATE WITH THE ENGINEER TO DETERMINE ANY NECESSARY MODIFICATIONS TO PROPOSED NEW WORK.

8. BEFORE CONSTRUCTION IS STARTED, CONTRACTOR SHALL COORDINATE WITH THE OWNER OF EACH UTILITY AND DEFINE THE REQUIREMENTS AND METHODS TO ACCOMMODATE THE PROTECTION, TEMPORARY SUPPORT, ADJUSTMENT, OR RELOCATION OF ANY UTILITIES AFFECTED BY THE PROPOSED NEW WORK.

9. CONTRACTOR SHALL COMPLY WITH THE GOVERNING AGENCY NPDES CONSTRUCTION REQUIREMENTS, AND SHALL PROVIDE APPROPRIATE MITIGATION MEASURES OR PROTECTION AND RESTORATION AT ALL LOCATIONS AS REQUIRED BY THEIR OPERATIONS, AND AS DIRECTED BY ENGINEER. SPECIAL CONSTRUCTION REQUIREMENTS, TEMPORARY PROTECTIVE FENCING OR BARRICADES, SHEETING, SHORING, EROSION PROTECTION, AND SURFACE RESTORATION AT CERTAIN LOCATIONS ARE INDICATED ON THE DRAWINGS TO BRING CONTRACTOR'S ATTENTION TO SENSITIVE AREAS.

10. THE CONTRACTOR SHALL BE RESPONSIBLE FOR THE PROTECTION OF ALL PROPERTY CORNER MARKERS. PROPERTY CORNER MARKERS DAMAGED BY CONSTRUCTION ACTIVITIES SHALL BE REESTABLISHED BY A PROFESSIONAL SURVEYOR LICENSED IN THE STATE OF TEXAS.

11. THE LOCATION OF TEST HOLES INDICATED ON THE DRAWINGS IS APPROXIMATE. CONTRACTOR SHALL REFER TO THE GEOTECHNICAL REPORT FOR ACTUAL TEST HOLE LOCATIONS AND THE FINDINGS OF THE GEOTECHNICAL INVESTIGATIONS.

12. CONTRACTOR SHALL PROTECT AND MAINTAIN ALL EXISTING TREES, SHRUBS, AND PLANTS UNLESS OTHERWISE NOTED.

13. CONTRACTOR SHALL INSTALL ALL PIPELINES, PAVING, WALKWAYS, AND CURB AND GUTTER AT A UNIFORM GRADE BETWEEN ELEVATIONS DEPICTED ON THE DRAWINGS.

14. FOR ALL SITE GRADING, SMOOTH PARABOLIC TRANSITIONS SHALL BE MADE BETWEEN CHANGES IN SLOPE. PARABOLIC ROUNDING SHALL APPLY TO ALL CUT AND FILL SECTIONS.

15. FINISHED GRADE ELEVATION AT THE BUILDING FACE, WHERE NOT ADJACENT TO PAVEMENT, SHALL BE APPROXIMATELY 6 INCHES BELOW FINISHED FLOOR ELEVATION UNLESS OTHERWISE NOTED. FINISHED GRADE ELEVATION ADJACENT TO BASINS SHALL BE APPROXIMATE AS INDICATED BY CONTOURS, OR AS REQUIRED TO MEET STAIR LANDINGS.

16. THE CONTRACTOR'S OPERATIONS SHALL CONFORM TO THE RULES AND REGULATIONS OF THE STATE CONSTRUCTION SAFETY ORDERS PERTAINING TO EXCAVATION AND TRENCHING.

17. RESTRAINED JOINTS SHALL BE PROVIDED FOR BURIED PIPING AS INDICATED ON THE DRAWINGS AND/OR AS SCHEDULED IN THE SPECIFICATIONS.

18. THE DRAWINGS INDICATE TYPES OF PIPE SUPPORT SYSTEMS AT VARIOUS LOCATIONS. HOWEVER, All PIPE SUPPORTS, HANGERS, BRACKETS, INSERTS OR BRACES ARE NOT SHOWN. CONTRACTOR SHALL REFER TO THE SPECIFICATIONS AND PROVIDE A COMPLETE SUPPORT SYSTEM AS REQUIRED.

19. THE TERM "PROPOSED" AS INDICATED ON THE DRAWINGS MEANS THE ITEM IS DESIGNED OR PLANNED TO BE PROVIDED BY OWNER OR OTHERS SEPARATE FROM THIS CONTRACT. THE TERM "FUTURE" AS INDICATED ON THE DRAWINGS REFERS TO THE ENGINEER'S INTERPRETATION OF THE ITEM FOR THE FUTURE, BASED ON AVAILABLE INFORMATION.

20. THE EXISTING PROCESS FACILITIES SHALL REMAIN IN OPERATION CONTINUOUSLY THROUGHOUT THE CONSTRUCTION ACTIVITIES. INDIVIDUAL PROCESS FACILITIES CAN BE TAKEN OUT OF SERVICE FOR LIMITED PERIODS OF TIME TO FACILITATE CONSTRUCTION AS SPECIFIED IN THE CONTRACT DOCUMENTS.

21. STRUCTURES SUCH AS CURBS AND GUTTERS, CONCRETE AND ASPHALT DRIVES AND WALKWAYS, PAVING BRICKS, FENCING, RETAINING WALLS, ETC., CROSSED BY THE PIPELINE ARE NOT ALL INDICATED IN PROFILE. CONTRACTOR SHALL RESTORE ANY EXISTING STRUCTURES THAT ARE DISTURBED, DAMAGED OR REMOVED BY CONSTRUCTION.

22. CONTRACTOR SHALL REPLACE EXISTING PIPE CULVERTS THAT ARE REMOVED TO INSTALL THE NEW PIPELINE WITH NEW PIPE CULVERTS OF THE SAME SIZE, MATERIAL AND CONSTRUCTION AT THE SAME LOCATION AND INVERT ELEVATION AS THOSE THAT WERE REMOVED, AND SHAPE THE DITCH TO DRAIN WITH THE REPLACED CULVERT. CONTRACTOR SHALL PROVIDE ANY TEMPORARY CULVERTS THAT MAY BE REQUIRED FOR CONTRACTOR'S OPERATIONS. CONTRACTOR SHALL COORDINATE REMOVAL AND REPLACEMENT OF ANY CULVERTS WITHIN PUBLIC RIGHT-OF-WAY WITH THE REGULATING AGENCY.

23. HORIZONTAL STATIONING ALONG THE PIPELINE ALIGNMENT IS FOR LEVEL LINE MEASUREMENT AND FOR PAYMENT OF THE PIPELINES. CONTRACTOR SHALL PROVIDE THE ACTUAL PIPE LENGTH TO BE DETERMINED BY THE SLOPE OR CURVE ON WHICH THE PIPE IS INSTALLED.

24. UNLESS OTHERWISE SPECIFIED, INDICATED ON THE DRAWINGS, OR DIRECTED BY THE ENGINEER, INSTALL PIPELINES SLOPING DOWNWARD FROM AN AIR VALVE MINIMUM 4'-0" COVER AT MANHOLE OR AT MANUAL ARV TO A BLOWOFF, AND PROVIDE THE SPECIFIED MINIMUM PIPE COVER. MINIMUM PIPE COVER SHALL BE FROM THE EXISTING, PROPOSED, OR FUTURE GROUND SURFACE OR ROAD PROFILE, WHICHEVER GROUND SURFACE OR ROAD PROFILE IS APPLICABLE AS INDICATED ON THE DRAWINGS. IF THE PROPOSED GROUND SURFACE IS ABOVE THE EXISTING GROUND SURFACE INDICATED ON THE DRAWINGS AND IS NOT THE ACTUAL GROUND SURFACE AT THE TIME OF PIPELINE INSTALLATION, INSTALL THE PIPELINE TO PROVIDE MINIMUM PIPE COVER FROM THE ACTUAL GROUND SURFACE IF ACCEPTABLE TO THE ENGINEER. HIGH POINTS IN THE PIPELINE WILL NOT BE PERMITTED EXCEPT AT LOCATIONS OF AIR VALVES AS INDICATED ON THE DRAWINGS. REVIEW THE PIPELINE PROFILE REQUIREMENTS WITH THE ENGINEER PRIOR TO PREPARING LAYING SCHEDULES AND PERFORMING FIELD STAKING.

25. CONTRACTOR SHALL FIELD VERIFY PRECISE LOCATION, ELEVATION, AND ARRANGEMENT OF CONNECTIONS OF NEW PIPELINES WITH EXISTING PIPELINES BASED ON FIELD CONDITIONS, INCLUDING EXPOSING EXISTING PIPING PRIOR TO FABRICATING NEW PIPING. CONTRACTOR SHALL PROVIDE FITTINGS, ADAPTERS, SOLID SLEEVE CLOSURES, AND HARNESSED MECHANICAL COUPLING; ROTATE FITTINGS; DEFLECT JOINTS; AND MODIFY EXISTING PIPING AS APPLICABLE AND AS REQUIRED TO MAKE CONNECTIONS, INCLUDING ADJUSTMENTS FOR ANY OFFSETS IN CENTERLINE ELEVATIONS BETWEEN PIPELINES. CONTRACTOR SHALL PROVIDE TEMPORARY PLUG WITH FACTORY OUTLET SIZED AS REQUIRED FOR CONTRACTOR'S TESTING AND DISINFECTION WORK BEFORE MAKING CONNECTION, WHEN APPLICABLE. CONTRACTOR SHALL COORDINATE MAKING EACH CONNECTION WITH THE OWNER.

26. ALL DIP SHALL BE PROTECTED WITH A MINIMUM OF ONE WRAP OF POLYETHYLENE ENCASEMENT. LOCATIONS WHERE DIP IS TO BE DOUBLE WRAPPED WITH POLYETHYLENE ENCASEMENT, AND PCCP IS TO BE WRAPPED (SINGLE OR DOUBLE) WITH POLYETHYLENE ENCASEMENT ARE SPECIFIED AND INDICATED ON THE DRAWINGS.

27. WHERE DEMOLITION WORK INDICATES DEMOLITION OF CONCRETE SUPPORTS, PIPE SUPPORTS, EQUIPMENT BASES, ETC THE EXISTING REINFORCING AND/OR ANCHOR BOLTS SHALL BE CUT AT 1 INCH BELOW THE CONCRETE SURFACE AND THE REMAINING HOLE SHALL BE PATCHED WITH GROUT.

CITY OF AUSTIN - STANDARD NOTES:

1. THE CONTRACTOR SHALL INSTALL EROSION/SEDIMENTATION CONTROLS AND TREE/NATURAL AREA PROTECTIVE FENCING PRIOR TO ANY SITE PREPARATION WORK (CLEARING, GRUBBING OR EXCAVATION).

2. THE PLACEMENT OF EROSION/SEDIMENTATION CONTROLS SHALL BE IN ACCORDANCE WITH THE ENVIRONMENTAL CRITERIA MANUAL AND THE APPROVED EROSION AND SEDIMENTATION CONTROL PLAN. THE COA ESC PLAN SHALL BE CONSULTED AND USED AS THE BASIS FOR A TPDES REQUIRED SWPPP. IF A SWPPP IS REQUIRED, IT SHALL BE AVAILABLE FOR REVIEW BY THE CITY OF AUSTIN ENVIRONMENTAL INSPECTOR AT ALL TIMES DURING CONSTRUCTION, INCLUDING AT THE PRE-CONSTRUCTION MEETING. THE BASIC ELEMENTS THAT SHALL BE REVIEWED FOR PERMIT APPROVAL BY COA EV PLAN REVIEWERS AS WELL AS COA EV INSPECTORS.

3. A PRE-CONSTRUCTION CONFERENCE SHALL BE HELD ON-SITE WITH THE CONTRACTOR, DESIGN ENGINEER/PERMIT APPLICANT AND ENVIRONMENTAL INSPECTOR AFTER INSTALLATION OF THE EROSION/SEDIMENTATION CONTROLS AND TREE/NATURAL AREA PROTECTION MEASURES AND PRIOR TO BEGINNING ANY SITE PREPARATION WORK. THE OWNER OR OWNER'S REPRESENTATIVE SHALL NOTIFY THE PLANNING AND DEVELOPMENT REVIEW DEPARTMENT, 974-2278, AT LEAST THREE DAYS PRIOR TO THE MEETING DATE. COA APPROVED ESC PLAN AND TPDES SWPPP (IF REQUIRED) SHOULD BE REVIEWED BY COA EV INSPECTOR AT THIS TIME.

CONSTRUCTION SEQUENCE:

THE WORK SHALL BE COMPLETED IN THE FOLLOWING SUGGESTED CONSTRUCTION SEQUENCE SCHEDULE: (1) SODIUM BISULFITE SYSTEM, (2) NORTHWEST CLEARWELL, (3) SOUTHSIDE CLEARWELL, (4) BLOWER BUILDING, (5) FILTER GALLERY, (6) FILTERS 1-4, AND (7) FILTERS 5-10. THE INTENT OF THE CONSTRUCTION SEQUENCING IS TO PROVIDE THE CONTRACTOR A SUGGESTED SEQUENCE TO PERFORM THE WORK IN SUCH A MANNER THAT CONTINUOUS, UNINTERRUPTED TREATMENT OF WASTEWATER AND ALL ESSENTIAL PLANT SERVICES AND FACILITIES ARE MAINTAINED OPERATIONAL THROUGHOUT THE CONSTRUCTION PERIOD. THE CONTRACTOR SHALL SUBMIT A CONSTRUCTION SCHEDULE AS SPECIFIED IN THE GENERAL CONDITIONS, WHICH SHALL MEET THE RESTRICTIONS AND CONDITIONS SPECIFIED IN SECTION 01080 CONSTRUCTION SEQUENCING. THE CONTRACTOR SHALL BE ABLE TO WORK CONCURRENTLY IN MULTIPLE FACILITIES. CONTRACTOR SHALL REFER TO SPECIFICATION SECTION 01080 FOR COMPLETE DETAILS.

CITY OF AUSTIN
PUBLIC WORKS DEPARTMENT
ENGINEERING SERVICES DIVISION

GENERAL CONSTRUCTION NOTES:

1. THE PROJECT MANUAL CONTAINS IMPORTANT INFORMATION THAT IS NOT REPEATED IN THE PLAN SET. THE CONTRACTOR SHALL KEEP THE PROJECT MANUAL ON SITE AND IMMEDIATELY AVAILABLE TO THOSE PERSONS PERFORMING THE WORK. UPON REQUEST, THE CONTRACTOR SHALL PRESENT THIS COPY OF THE PROJECT MANUAL TO THE CONSTRUCTION INSPECTOR, ENGINEER OR PROJECT MANAGER.

2. THE INFORMATION SHOWN ON THESE DRAWINGS INDICATING TYPE AND LOCATION OF SURFACE, SUBSURFACE, AND AERIAL UTILITIES IS NOT GUARANTEED TO BE EXACT OR COMPLETE. THE CONTRACTOR IS RESPONSIBLE FOR DETERMINING THE EXACT TYPE AND LOCATION OF ALL UTILITIES AFFECTED BY THE CONSTRUCTION IN ORDER TO AVOID DAMAGING THOSE UTILITIES.

3. THE CONTRACTOR SHALL COORDINATE WITH OTHER CONTRACTORS AND UTILITIES IN THE VICINITY OF THIS PROJECT. THIS INCLUDES, BUT IS NOT LIMITED TO, GAS, WATER, WASTEWATER ELECTRIC, TELEPHONE, CABLE TELEVISION, PETROLEUM PIPELINES, FIBER OPTIC, STREET, DRAINAGE, AND ANY OTHER WORK OCCURRING IN OR NEAR THE PROJECT SITE. ONCE THE CONTRACTOR BECOMES AWARE OF A POSSIBLE CONFLICT, IT IS THE CONTRACTOR'S RESPONSIBILITY TO NOTIFY THE OWNER'S REPRESENTATIVE IMMEDIATELY, BUT NO LATER THAN TWENTY-FOUR (24) HOURS AFTER DISCOVERY.

4. SHOULD THE CONTRACTOR DAMAGE A UTILITY DURING THE COURSE OF THE WORK, THE CONTRACTOR SHALL IMMEDIATELY ARRANGE FOR REPAIR AND RESTORATION OF THE DAMAGED UTILITY. THE EXPENSE FOR THESE REPAIRS WILL BE AT THE CONTRACTOR'S SOLE EXPENSE.

5. ALL EXISTING STRUCTURES, FACILITIES, AND UTILITIES DAMAGED BY CONSTRUCTION SHALL BE REMOVED AND RESTORED WITH MATERIALS EQUAL TO OR BETTER THAN THE ORIGINAL AND TO CONDITIONS EQUAL TO OR BETTER THAN THE ORIGINAL. UNLESS OTHERWISE NOTED IN THE PLANS, THIS WILL NOT BE MEASURED AND PAID FOR DIRECTLY, BUT SHALL BE AT THE CONTRACTOR'S SOLE EXPENSE.

6. SLOPES OF ROADWAY CUTS AND EMBANKMENTS DAMAGED BY ANY OPERATION OF THE CONTRACTOR DURING THE EXECUTION OF THIS PROJECT SHALL BE REPAIRED AND RESTORED TO THE ORIGINAL PRE-CONSTRUCTION CONDITION. BACKFILL AND FILL PLACED DURING REMEDIAL GRADING SHALL BE COMPACTED TO AT LEAST 95% COMPACTION AND TO THE SATISFACTION OF THE ENGINEER AND GOVERNING AUTHORITIES.

AUSTIN WATER UTILITY GENERAL CONSTRUCTION NOTES:

1. ALL MATERIAL USED ON THIS PROJECT MUST BE LISTED ON THE STANDARD PRODUCTS LISTING. ANY MATERIAL NOT LISTED HAS TO GO THROUGH THE REVIEW OF THE STANDARDS COMMITTEE FOR REVIEW AND APPROVAL PRIOR TO START OF PROJECT. TESTING AND EVALUATION OF PRODUCTS ARE REQUIRED BEFORE APPROVAL WILL BE GIVEN ANY CONSIDERATION.

2. ALL MANHOLES IN UNPAVED AREAS PROVIDING DIRECT ACCESS TO A WASTEWATER LINE SHALL BE WATERTIGHT AND BEAR THE WORDING AND INSIGNIA FOR THE CITY OF AUSTIN.

3. THE CONTRACTOR SHALL VERIFY ALL VERTICAL AND HORIZONTAL LOCATIONS OF EXISTING UTILITIES PRIOR TO STARTING ONSITE UTILITY WORK.

4. ALL WATER AND WASTEWATER MAINS SHALL BE INSTALLED IN ACCORDANCE WITH THE SEPARATION DISTANCES INDICATED IN CHAPTER 290 DRINKING WATER STANDARDS, AND CHAPTER 217 DESIGN CRITERIA FOR SEWAERAGE SYSTEMS, OF TCEQ RULES.

5. CONTRACTOR'S PERSONNEL THAT PERFORM BUTT FUSION AND ELECTROFUSIONON ON OR TO HDPE PIPE AND FITTINGS MUST HAVE CURRENT QUALIFICATION TRAINING CERTIFICATE ISSUED BY MCELROY OR COMPARABLE TRAINING PROGRAM.

6. SHOP DRAWINGS SHALL BE SUBMITTED FOR AWU APPROVAL FOR LARGE DIAMETER PRE-CAST MANHOLES, JUNCTION BOXES, WET WELLS, AND SIMILAR STRUCTURES. THE SHOP DRAWINGS SHALL INCLUDE FLOWLINE ELEVATIONS OF ALL INCOMING AND OUTGOING PIPES, ELEVATION OF TRANSITION FROM LARGE DIAMETER SECTIONS TO 48" ID SECTION, TOP OF MANHOLE ELEVATION, SURROUNDING GROUND ELEVATION, AS WELL AS SPECIAL CONSTRUCTION CONSIDERATIONS THAT ARE SPECIFIED IN THE CONTRACT DRAWINGS.

7. ASBESTOS CONCRETE PIPE (AC PIPE) HAS BEEN INSTALLED IN THE PAST AS PART OF AUSTIN WATER UTILITY'S WATER DISTRIBUTION AND WASTEWATER COLLECTION SYSTEMS. AUSTIN WATER UTILITY'S INFRASTRUCTURE INCLUDES AC PIPE THAT IS CURRENTLY IN SERVICE AS WELL AS AC PIPE THAT HAS BEEN ABANDONED AND IS NO LONGER IN SERVICE. RECORD INFORMATION MAY NOT BE COMPLETE IN YOUR PROJECT AREA. CONTRACTORS AND SUBCONTRACTORS MUST BE ALERT TO THE PRESENCE AC PIPE AND BE KNOWLEDGABLE OF HOW TO IDENTIFY IT. DISTURBANCE, REMOVAL OR CUTTING OF ASBESTOS CONTAINING PIPE IS TO BE CONDUCTED IN ACCORDANCE WITH THE REQUIREMENTS OF TEXAS ADMINISTRATIVE CODE 25, SECTION 15, ARTICLE 4477-3A AND 29 CFR 1926.1101. REFERENCE STANDARD SPECIFICATION SECTION 01901. CONTACT THE CITY OF AUSTIN ASBESTOS MANAGER AT 512-974-7154 THIRTY (30) DAYS PRIOR TO THE PLANNED DISTURBANCE OF THE AC PIPE. ONLY LICENSED PERSONNEL ARE PERMITTED TO DISTURB, REMOVE, TRANSPORT AND DISPOSE OF AC PIPE.

NO.	DR	CK	DATE	DESCRIPTION

REVISIONS

BLACK & VEATCH
Building a world of difference.
Black & Veatch Corporation
Registration No. F-258
Austin, Texas

STATE OF TEXAS
CARLOS A. CHAVEZ
119722
LICENSED PROFESSIONAL ENGINEER
Carlos Chavez 8/23/2016

Austin WATER
Walnut Creek WWTP - Tertiary Filter Rehabilitation Project
CIP ID No. 3023.025

GENERAL
GENERAL NOTES

DESIGNED BY:	AWL
DRAWN BY:	AWL
REVIEWED BY:	WLK
APPROVED BY:	TSD
PROJECT NO.:	168622
DATE:	4/4/2014
SCALE:	NOT TO SCALE

REVISION:

DISCIPLINE NO.
G-04

DWG. NO.
4 OF 273

FD168622 SAVED: RAM12044, 8/23/2016 12:12:39 PM
D168622 09C5020 ID: General Drawings
File: C:\pw_working\cngpw\d0671622\G-04.dwg Layout: Work Plotted: 8/23/2016 1:11:13 PM

A	ACID, AMBER INDICATING LIGHT,AMP
AB	ANCHOR BOLT
ABS	ACID BATH SINK
AC	ALTERNATING CURRENT
A/C	AIR CONDITIONER, (ING)
ACP	ASBESTOS CEMENT PIPE
ACST	ACOUSTIC, (AL
AD	ACCESS DOOR, AREA DRAIN, AIR DAMPER, ANODE
ADD	ADDITIONAL
ADDT'L	ADDITIONAL
ADH	ADHESIVE
ADJ	ADJUSTABLE, ADJACENT
ADMIN	ADMINISTRATION
AF	AIR FLOW
AFF	ABOVE FINISH FLOOR
AH	AHEAD
AHU	AIR HANDLING UNIT
AL	ACTIVE LEAF
ALT	ALTERNATE, (IVE)
ALUM	ALUMINUM
AM	AMMETER
AMP	AMPERE
ANOD	ANODIZED
AP	ACCESS PANEL
APPR	APPROACH
APPROX	APPROXIMATE, (LY)
AR	ALARM RELAY
ARCH	ARCHITECTURAL
AS	AMMETER SWITCH
ASSY	ASSEMBLY
AUTO	AUTOMATIC
AUX	AUXILIARY
AVS	AUTOMATIC VALVE STATION
AWG	AMERICAN WIRE GAGE
B	BEAM
B TO B	BACK TO BACK
BA	BEARING AREA
BAL	BALANCE
BAT	BATTERY
BC	BEGIN CURVE
BD	BOARD
BEJ	BRICK EXPANSION JOINT
BF	BLIND FLANGE
BHP	BRAKE HORSEPOWER
BITUM	BITUMINOUS
BKR	BREAKER
BLDG	BUILDING
BLK	BLOCK
BM	BENCHMARK
BM	BEAM
BOF	BOTTOM OF FOOTING
BOT	BOTTOM
BP	BACK PRESSURE
BPMK NO	BASEPLATE MARK NUMBER
BRG	BEARING
BRK	BRICK
BS	BOTH SIDES
B&S	BELL AND SPIGOT
BSMT	BASEMENT
BTU	BRITISH THERMAL UNIT
BTUH	BRITISH THERMAL UNIT-HOUR
BU	BELL-UP
BUR	BUILT UP ROOFING
BVC	BEGIN VERTICAL CURVE
C	COUNTER
C TO C	CENTER TO CENTER
CB	CATCH BASIN
CD	CEILING DIFFUSER
C/EJ	CONTRACTION/EXPANSION JOINT
CFM	CUBIC FEET PER MINUTE
C&G	CURB AND GUTTER
CHKD	CHECKERED
CI	CAST IRON
CIMH	CAST IRON MANHOLE
CIMHS	CAST IRON MANHOLE STEPS
CIP	CAST IRON PIPE
CISP	CAST IRON SOIL PIPE
CJ	CONSTRUCTION JOINT
CJT	CONTROL JOINT
CKT	CIRCUIT
CL	CLASS
CLSM	CONTROLLED LOW STRENGTH MATERIAL
C/L	CENTERLINE
CLG	CEILING
CLO	CLOSET
CLR	CLEAR, (ANCE)
CMP	CORRUGATED METAL PIPE
CMU	CONCRETE MASONRY UNIT
CO	CLEAN OUT, COMPANY
COD	CHEMICAL OXYGEN DEMAND
COL	COLUMN
COMB	COMBINATION
COMB SWR	COMBINED SEWER
COMP	COMPRESSOR, (ED)
CONC	CONCRETE
CONN	CONNECTION
CONST	CONSTRUCTION
CONT	CONTINUOUS, CONTINUATION, CONTROL
CONTR	CONTRACTOR
COR	CORNER
CORR	CORRIDOR, CORRUGATED
CP	CONTROL PANEL
CPLG	COUPLING
CPT	CONTROL POWER TRANSFORMER
CRS	COURSES, (ING)
CS	CONTROL SWITCH, CONTROL STATION, CUP SINK
CSK	COUNTERSUNK, (INK)
CT	CERAMIC TILE, CYCLE TIMER
CT	CURRENT TRANSFORMER
CTR(S)	CENTER(S)
CU	CUBIC
CU YD	CUBIC YARD
CW	COLD WATER
D	DOOR
DBL	DOUBLE
DC	DIRECT CURRENT
DEG	DEGREE
DEPT	DEPARTMENT
DET	DETAIL
DF	DRINKING FOUNTAIN
DH	DOOR HEIGHT
DI	DROP INLET, DUCTILE IRON
DIA	DIAMETER
DIFF	DIFFUSER
DIM	DIMENSION
DIP	DUCTILE IRON PIPE
DISCH	DISCHARGE
DISP	DISPENSER
DIST	DISTRIBUTION
DIV	DIVISION
DL	DEAD LOAD
DM	DAMPER MOTOR
DMJ	DOUBLE MECHANICAL JOINT
DN	DOWN
DO	DOOR OPENING, DISSOLVED OXYGEN
DPDT	DOUBLE POLE DOUBLE THROW
DR	DRAIN
DS	DOWNSPOUT
DT	DISTRIBUTION TRANSFORMER
DV	DRAIN VALVE
DWG(S)	DRAWING(S)
DWL(S)	DOWEL(S)
E	EAST, ELECTRICAL
EA	EACH
EAT	ENTERING AIR TEMPERATURE
EC	END CURVE
ECC	ECCENTRIC
ECC RED	ECCENTRIC REDUCER
EEW	EMERGENCY EYEWASH
EF	EACH FACE
EFF	EFFLUENT
EJ	EXPANSION JOINT
EL	ELEVATION
ELB	ELBOW
ELEC	ELECTRIC, (AL)
ELEV	ELEVATOR
EMER	EMERGENCY
ENC	ENCASEMENT
ENCL	ENCLOSURE
ENT	ENTRANCE
EOL	END OF LINE
EQ	EQUAL
EQUIP	EQUIPMENT
EW	EACH WAY
EW	EMERGENCY EYEWASH
EWEF	EACH WAY EACH FACE
EXCH	EXCHANGER
EXH	EXHAUST
EXIST	EXISTING
EXP	EXPANSION, EXPOSED
EXP JT	EXPANSION JOINT
EXT	EXTENSION, EXTERIOR, EXTERNAL
F	FAN
F TO F	FACE TO FACE
FB	FACE BRICK
FC	FLEXIBLE CONNECTION, FLOW CONTROL
FCA	FLANGED COUPLING ADAPTER
FD	FLOOR DRAIN
FDN	FOUNDATION
FDPR	FIRE DAMPER
FE	FIRE EXTINGUISHER
FEC	FIRE EXTINGUISHER CABINET
FH	FLAT HEAD, FIRE HYDRANT
FHMS	FLAT HEAD MACHINE SCREW
FIG	FIGURE
FIN	FINISH
FIN GR	FINISH GRADE
FL	FLOOR, FLOW LINE
FLEX	FLEXIBLE
FLG	FLANGE, FLASHING
FM	FORCE MAIN
FO	FUEL OIL
FOB	FLAT ON BOTTOM
FOM	FACE OF MASONRY
FOS	FACE OF STUDS
FOT	FLAT ON TOP
FRP	FIBERGLASS REINFORCED PLASTIC
FS	FAR SIDE, FLOOR SLEEVE, FLOAT SWITCH
FT	FOOT
FTG	FOOTING
FURN	FURNISH, FURNISHED
FV	FLAP VALVE
FWD	FORWARD
G	GAS
GA	GAUGE
GAL	GALLON
GALV	GALVANIZED
GC	GENERAL CONTRACTOR
GC/MS	GAS CHROMATOGRAPH/MASS SPECTROMETER
GEN	GENERAL, GENERATOR
GM	GAS METER
GPM	GALLONS PER MINUTE
GR	GRADE
GWB	GYPSUM WALLBOARD
GYP	GYPSUM
H	HIGH, HOUR, HYDROGEN
HB	HOSE BIBB
HC	HOLLOW CORE
HCA(S)	HEADED CONCRETE ANCHOR(S)
HDR	HEADER
HE	HEAT EXCHANGER
HEX	HEXAGONAL
HF	HOSE FAUCET
HGT	HEIGHT
HH	HANDHOLE
HLS	HIGH LEVEL SWITCH
HMC	HARNESSED MECHANICAL COUPLING
HMD	HOLLOW METAL DOOR
HMJ	HARNESSED MECHANICAL JOINT
HORIZ	HORIZONTAL
HP	HIGH POINT, HORSEPOWER
HR	HOUR, HANDRAIL
HS	HIGH STRENGTH
HV	HOSE VALVE
HVAC	HEATING,VENTILATING AND AIR CONDITIONING
HW	HOT WATER
HWY	HIGHWAY
HYDRO	HYDROPNEUMATIC
I	INDICATOR
ID	INSIDE DIAMETER
IF	INSIDE FACE
I/I	CURRENT TO CURRENT BOOSTER
IN	INCHES
INC	INCORPORATED
INCL	INCLUDING
INCR	INCREASE
INFO	INFORMATION
INST	INSTRUMENT, (ATION)
INSUL	INSULATE, (ED), (ING)
INT	INTERIOR, INTERNAL
INV	INVERT
IPS	IRON PIPE SIZE
JAN	JANITOR
JB	JUNCTION BOX
JF	JOINT FILLER
JT	JOINT
K	KIPS
KIT	KITCHEN
KO	KNOCK OUT
KS	KITCHEN SINK
KV	KILOVOLT
KVA	KILOVOLT AMPERE
KW	KILOWATT
KWH	KILOWATT HOUR
L	LOUVER
LAB	LABORATORY
LAM	LAMINATE(D)
LAT	LEAVING AIR TEMPERATURE
LAT	LATERAL
LAV	LAVATORY
LB(S)	POUNDS
LG	LENGTH, LONG
LH	LEFT HAND
LIN	LINEAL, LINEAR
LL	LIVE LOAD
LO	LOUVER OPENING
LS	LEVEL SWITCH
LT	LEFT, LAB TABLE
MA	MILLIAMPERE
MACH	MACHINE
MAINT	MAINTENANCE
MAN	MANUAL
MAS	MASONRY
MAX	MAXIMUM
MB	MACHINE BOLT
MC	MECHANICAL COUPLING
MCC	MOTOR CONTROL CENTER
MECH	MECHANICAL
MED	MEDIUM
MET	METAL
MEZ	MEZZANINE
MFM	MAGNETIC FLOWMETER
MFR(S)	MANUFACTURER(S)
MG	MILLION GALLONS
MGD	MILLION GALLONS PER DAY
MH	MANHOLE
MIN	MINIMUM, MINUTE
MISC	MISCELLANEOUS
MJRG	MECHANICAL JOINT RETAINER GLAND
MJTR	MECHANICAL JOINT WITH TIE ROD
MO	MASONRY OPENING, MOTOR OPERATED
MP	METERING PUMP
MRD	METAL ROOF DECK
MS	MACHINE SCREW
MSL	MEAN SEA LEVEL
MTD	MOUNTED
MTL	MATERIAL
MTR	MOTOR
N	NORTH
N/A	NOT APPLICABLE
NBC	NAIL IN BOTTLE CAP
NC	NORMALLY CLOSED
NEUT	NEUTRAL
NF	NEAR FACE
N.O.	NORMALLY OPEN
NO.(S)	NUMBER(S)
NOM	NOMINAL
NORM	NORMAL
NPT	NATIONAL PIPE THREAD
NPW	NONPOTABLE WATER
NS	NEAR SIDE
NTS	NOT TO SCALE
O/O	OUT TO OUT
OC	ON CENTER, ODOR CONTROL
OD	OUTSIDE DIAMETER
OF	OUTSIDE FACE, OVERFLOW
OH	OVERHEAD
OL	OVERLOAD
OPER	OPERATING
OPNG	OPENING
OPNG(S)	OPENINGS
OPP	OPPOSITE
OSL	OUTSTANDING LEG
OZ	OUNCE
PC	POINT OF CURVE
PCC	POINT OF COMPOUND CURVATURE
PCCP	PRESTRESSED CONCRETE CYLINDER PIPE
PCP	PIER CUTOFF POINT
PD	PLAN DIMENSION
PE	PLAIN END
PG	PRESSURE GAUGE
PH	PIPE HANGER, PENTHOUSE
PIVC	POINT OF INTERSECTION ON VERTICAL CURVE
PL	PLATE
PLYWD	PLYWOOD
PNL(S)	PANEL(S)
POLY	POLYMER
POT	POINT ON TANGENT
PP	POWER POLE
PR	PAIR
PROJ	PROJECTION
PRS	PRESSURE REDUCING STATION
PRV	POWER ROOF VENTILATOR
PS	PIPE SUPPORT
PSF	POUNDS PER SQUARE FOOT
PSI	POUNDS PER SQUARE INCH
PT	POINT, POINT OF TANGENCY
PVC	POLYVINYL CHLORIDE, POINT ON VERTICAL CURVE
PVCP	POLYVINYL CHLORIDE PIPE
PVMT	PAVEMENT
PW	POTABLE WATER
R	RADIUS, RISER
RAS	RETURN ACTIVATED SLUDGE
RCP	REINFORCED CONCRETE PIPE
RCCP	REINFORCED CONCRETE CYLINDER PIPE
RCHEP	REINFORCED CONCRETE HORIZONTAL ELLIPTICAL PIPE
RD	ROOF DRAIN, ROAD
RDL	ROOF DRAIN LEADER
RECEP	RECEPTION
RECIRC	RECIRCULATING
RECP	RECEPTACLE
RED	REDUCER, REDUCING
REG	REGULATOR, REGULATING
REF	REFERENCE
REFR	REFRIGERATION, REFRIGERATOR
REINF	REINFORCING, REINFORCED
REM	REMOVABLE
REQD	REQUIRED
RET	RETURN
REV	REVISION, REVISED, REVERSED
RFG	ROOFING
RG	RETAINER GLAND
RH	ROOF HOOD, RIGHT HAND, ROUND HEAD, RED HEAD
RHMS	ROUND HEAD MACHINE SCREW
RHWS	ROUND HEAD WOOD SCREW
RM	ROOM
RO	ROUGH OPENING
RPM	REVOLUTIONS PER MINUTE
RR	RAILROAD
RS	RAW SLUDGE, RAW SEWAGE, ROLLED STEEL
RT	RIGHT
R/W	RIGHT OF WAY
S	SOUTH, SPEAKER
SBD	SCHEDULED BEAM DEPTH
SBW	SCHEDULED BEAM WIDTH
SAN SWR	SANITARY SEWER
SCHED	SCHEDULE, SCHEDULED
SD	STORM DRAIN, SOAP DISH
SEC	SECOND
SECT	SECTION
SER SK	SERVICE SINK
SG	SLUICE GATE, SUPPLY GRILLE
SH	SHEET
SHR	SHOWER
SHD	SHOWER DOOR
SHT	SHEET
SIM	SIMILAR
SKL	SKYLIGHT
SM	SHEET METAL
SP	SUMP PUMP
SPA	SPACING, SPACES
SPEC(S)	SPECIFICATION(S)
SPLY	SUPPLY
SQ	SQUARE
SR	SUPPLY REGISTER
SS	STAINLESS STEEL
SS	SANITARY SEWER
SSD	SCHEDULED SLAB DEPTH
SSK	SERVICE SINK
ST	SELF TAPPING
STIR	STIRRUP, STIRRUPS
ST SWR	STORM SEWER
STA	STATION
STD	STANDARD
STL	STEEL
STOR	STORAGE
STR	STRUCTURAL
SUP	SUPPLY
SUSP	SUSPENDED
SV	SHUTOFF VALVE
SW	SWITCH
SWBD	SWITCHBOARD
SWGR	SWITCHGEAR
SWS	SEAL WATER SOLENOID
SYM	SYMMETRICAL
SYS	SYSTEM
T	THERMOSTAT, TREAD, TOTALIZER
T	TRANSFORMER, TELEPHONE, TOP
TAN	TANGENT
TB	TERMINAL BOX
T&B	TOP AND BOTTOM
TBE	THREAD BOTH ENDS
TBM	TEMPORARY BENCHMARK
TC	TOWEL CABINET, TOP OF CURB
TC	TERMINAL CABINET
TEL	TELESCOPING
TEMP	TEMPERATURE, TEMPORARY
TERM	TERMINAL
T&G	TONGUE & GROOVE
TH	TEST HOLE
THK	THICK, THICKNESS
THR	THRESHOLD
TI	TOTALIZING INDICATOR, TEMPERATURE INDICATOR
TIR	TOTALIZING INDICATING RECORDER
TOC	TOP OF CONCRETE
TOF	TOP OF FOOTING
TOM	TOP OF MASONRY
TOS	TOP OF STEEL
TP	TWISTED PAIR COUPLE, TOWEL PIN
TRANS	TRANSFORMER, TRANSMITTER, TRANSFER
TS	TEMPERATURE SWITCH
TV	TELEVISION
TYP	TYPICAL
UDM	ULTRASONIC DENSITY METER
UGND	UNDERGROUND
UH	UNIT HEATER
UNO	UNLESS NOTED OTHERWISE
UR	URINAL
USGS	UNITED STATES GEOLOGICAL SURVEY
V	VALVE, VOLT, VENT
VAC	VACUUM
VAT	VINYL ASBESTOS TILE
VBF	VALVE, AWWA BUTTERFLY
VBI	VALVE, INDUSTRIAL BUTTERFLY
VBL	VALVE, BALL
VBM	VALVE, BALL MISCELLANEOUS
VC	VERTICAL CURVE, VICTAULIC COUPLING
VCD	VERTICAL CONTROL DAMPER
VCK	VALVE, CHECK
VCN	VALVE, CONE
VCP	VITRIFIED CLAY PIPE
VG	VALVE, GATE
VGD	VALVE, DOUBLE DISC GATE
VGL	VALVE, GLOBE
VERT	VERTICAL
VF	VACUUM FILTER
VIB	VIBRATION
VKG	VALVE, KNIFE GATE
VM	VOLT METER
VNR	VENEER
VPC	VALVE, PRESSURE REGULATING
VPG	VALVE, PLUG
VPL	VALVE, ECCENTRIC PLUG
VPR	VALVE, PRESSURE REDUCING
VSP	VALVE, PRESSURE RELIEF
VSPV	VALVE, PRESSURE/VACUUM RELIEF
VSV	VALVE, VACUUM RELIEF
VV	VENT VALVE
VVB	VACUUM BREAKER
W	WEST, WIDE, WINDOW, WATT, WATER
W/	WITH
WAS	WASTE ACTIVATED SLUDGE
WB	WALLBOARD
WC	WATER CLOSET
WD	WOOD, WIDTH
WF	WALL FITTING
WH	WALL HYDRANT
WL	WATER LEVEL
WM	WATER METER, WATTMETER
WO	WINDOW OPENING
W/O	WITHOUT
WOM	WOMEN
WP	WATERPROOF, WORKING POINT
WR	WASTE RECEPTACLE
WS	WATERSTOP
WT	WEIGHT
WW	WETWELL
WWF	WELDED WIRE FABRIC
x	BY,TIMES
YH	YARD HYDRANT
&	AND
@	AT
<	DEFLECTION ANGLE
#	NUMBER
%	PER CENT

NO.	DR	CK	DATE	DESCRIPTION

REVISIONS

BLACK & VEATCH
Building a world of difference.
Black & Veatch Corporation
Registration No. F-258
Austin, Texas

Carlos Chavez
STATE OF TEXAS
CARLOS A. CHAVEZ
119722
LICENSED PROFESSIONAL ENGINEER
6/7/2016

Austin WATER

Walnut Creek WWTP - Tertiary Filter Rehabilitation Project

CIP ID No. 3023.025

GENERAL ABBREVIATIONS

DESIGNED BY:	AWL
DRAWN BY:	AWL
REVIEWED BY:	WLK
APPROVED BY:	TSD
PROJECT NO.:	168622
DATE:	4/4/2014
SCALE:	NOT TO SCALE

REVISION:

DISCIPLINE NO.
G-05

DWG. NO.
5 OF 273

FD168622 SAVED: LER07108, 3/19/2014 6:41:43 AM
D168622 09C3020 ID: General Drawings
File: C:\PWBatchPDF\Process\168622 - Austin Walnut Creek WWTP Filter Rehab\G_05.dwg Layout: Work Plotted: 6/9/2016 1:50:24 PM

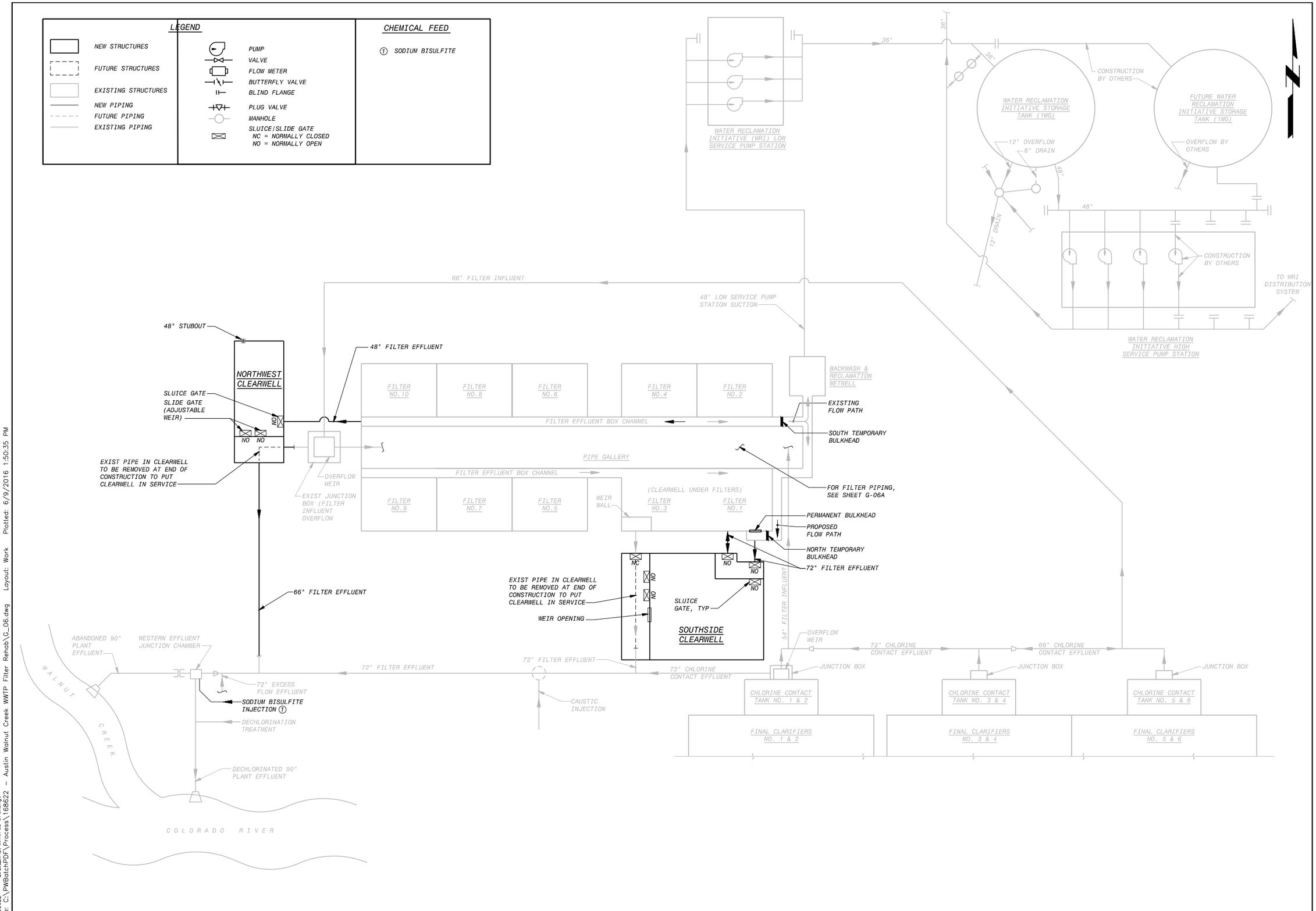

NO.	BY	CK	DATE	DESCRIPTION

REVISIONS

BLACK & VEATCH
Building a world of difference.
Black & Veatch Corporation
Registration No. F-869
Austin, Texas

STATE OF TEXAS
CARLOS R. CHAVEZ
119722
LICENSED
PROFESSIONAL ENGINEER
6/17/2016

Walnut Creek WWTP - Tertiary Filter Rehabilitation Project

Austin WATER

CIP ID No. 3023.025

GENERAL
PROCESS FLOW DIAGRAM

DESIGNED BY:	EP
DRAWN BY:	AWL
REVIEWED BY:	WLK
APPROVED BY:	TSD
PROJECT NO.:	168622
DATE:	4/4/2014
SCALE:	NOT TO SCALE

REVISION:

DISCIPLINE NO.
G-06

DWG. NO.
6 OF 273

F0168622 SAVED: LEF07108, 2/25/2014 6:32:15 AM
D168622 CAD ID: General Drawings
File: C:\PWBatchPDF\Process\168622 - Austin Walnut Creek WWTP Filter Rehab\G_06.dwg Layout: Work Plotted: 6/9/2016 1:50:35 PM

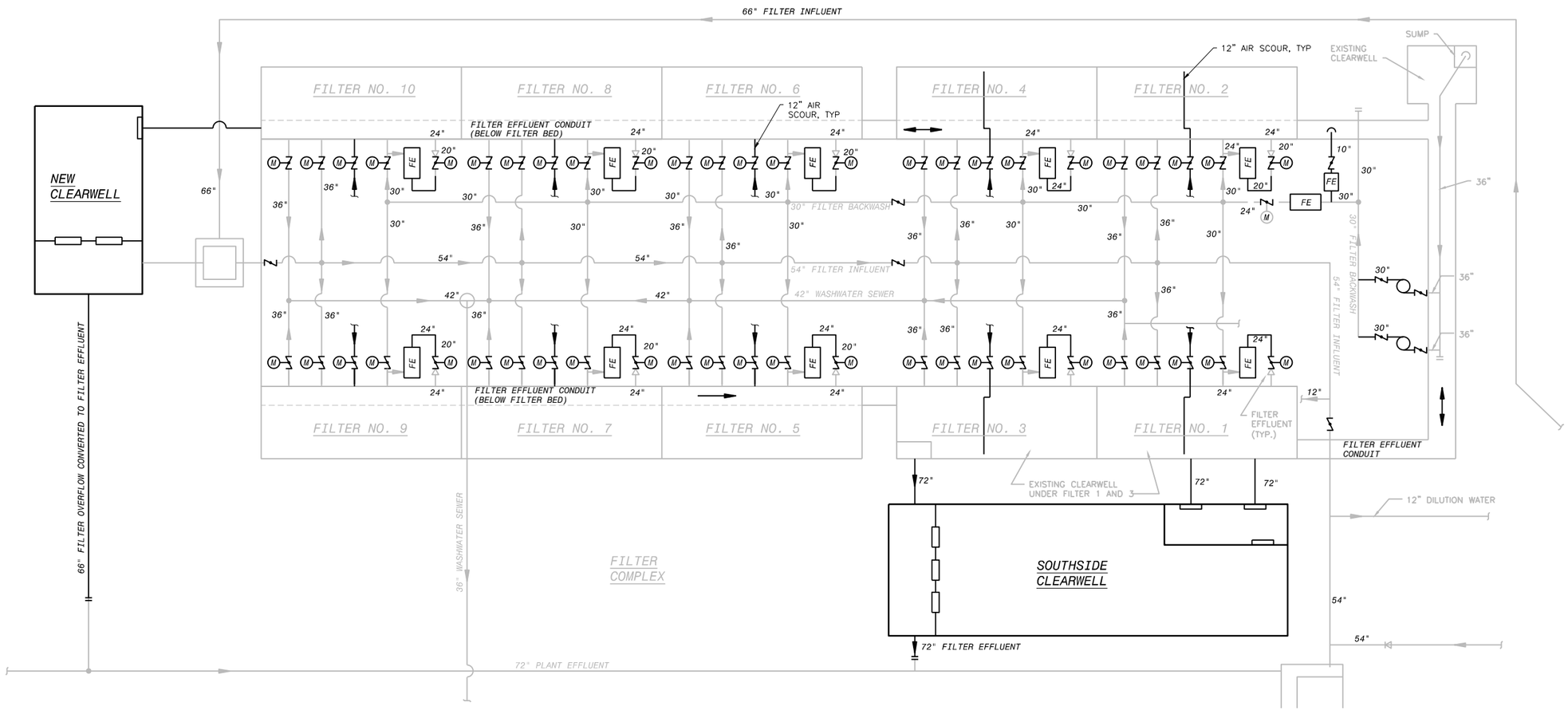

NOTE:
THIS SCHEMATIC HAS BEEN PRODUCED AS AN AID FOR CONSTRUCTION SHUTDOWNS AND SEQUENCING AND FOR ANY OTHER PLANNING PURPOSES REQUIRED. THIS SCHEMATIC DOES NOT INDICATE THE SCOPE OF THE NEW WORK TO BE PERFORMED UNDER THIS CONTRACT.

NO.	DR	CK	DATE	DESCRIPTION

REVISIONS

BLACK & VEATCH
Building a world of difference.
Black & Veatch Corporation
Registration No. F-869
Austin, Texas

STATE OF TEXAS
CARLOS R. GOMEZ
119722
LICENSED PROFESSIONAL ENGINEER
6/7/2016

Austin WATER
Walnut Creek WWTP - Tertiary Filter Rehabilitation Project
CIP ID No. 3023.025

GENERAL
FILTER PIPING SCHEMATIC

DESIGNED BY:	AWL
DRAWN BY:	AWL
REVIEWED BY:	WLK
APPROVED BY:	TSD
PROJECT NO.:	168622
DATE:	4/4/2014
SCALE:	NOT TO SCALE

REVISION:

DISCIPLINE NO.
G-06A

DWG. NO.
7 OF 273

F0168622 SAVED: LER07108, 3/1/2014 10:16:16 AM
D168622 ORIGINAL SIZE: 30X42 D:\ General Drawings
File: C:\PWBatchPDF\Process\168622 - Austin Walnut Creek WWTP Filter Rehab\G_06A.dwg Layout: Work Plotted: 6/9/2016 1:50:46 PM

FILTER BUILDING FEED

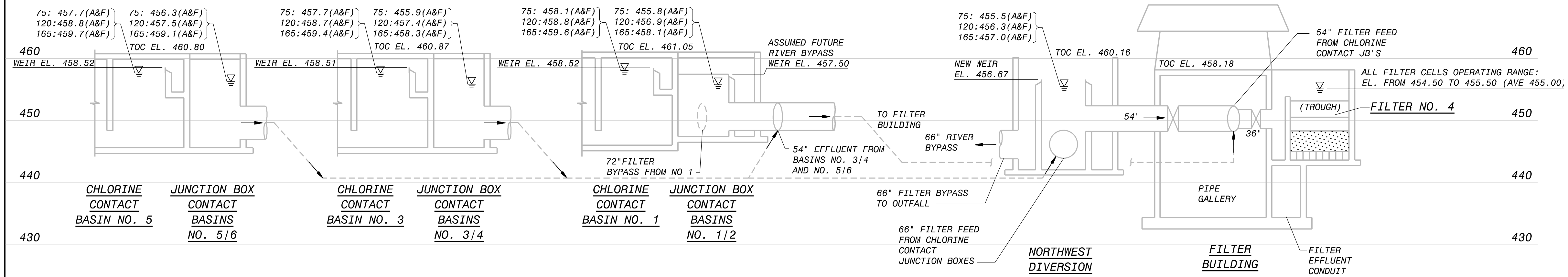

CASE 1 - CHLORINE CONTACT BASIN JUNCTION BOXES TO FILTER NO. 4

CHLORINE CONTACT BASIN WALL FREEBOARD (IN)

FLOW CASE	BASIN PAIR 1/2	3/4	5/6
75MGD	35	38	37
120MGD	27	26	24
165MGD	17	18	13

THESE FREEBOARD VALUES ARE BASED UPON THE FUTURE CHLORINE BASIN 1/2 JUNCTION BOX HAVING A FIXED WEIR EL OF 457.50. FOR ADDITIONAL FLEXIBILITY SEE NOTE 11.

FILTER BUILDING DISCHARGE

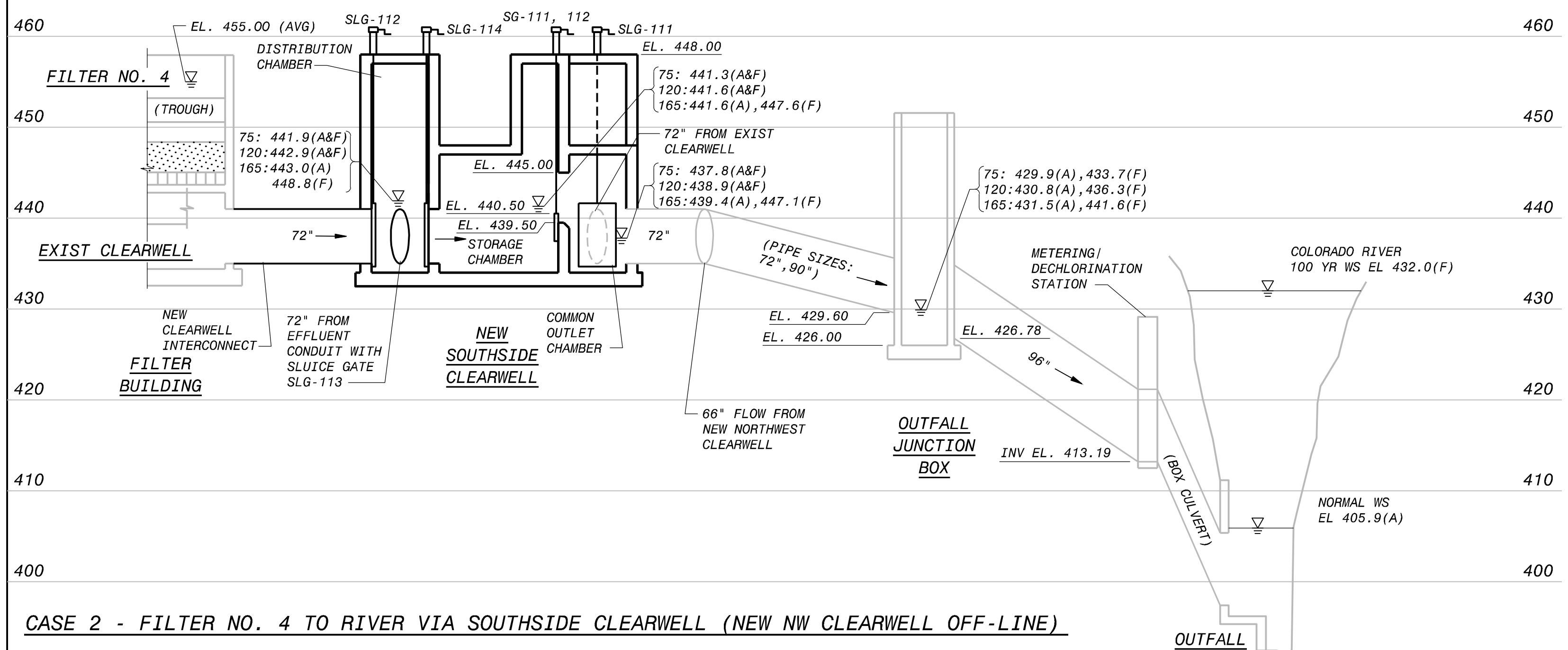

CASE 2 - FILTER NO. 4 TO RIVER VIA SOUTHSIDE CLEARWELL (NEW NW CLEARWELL OFF-LINE)

FILTER BUILDING DISCHARGE

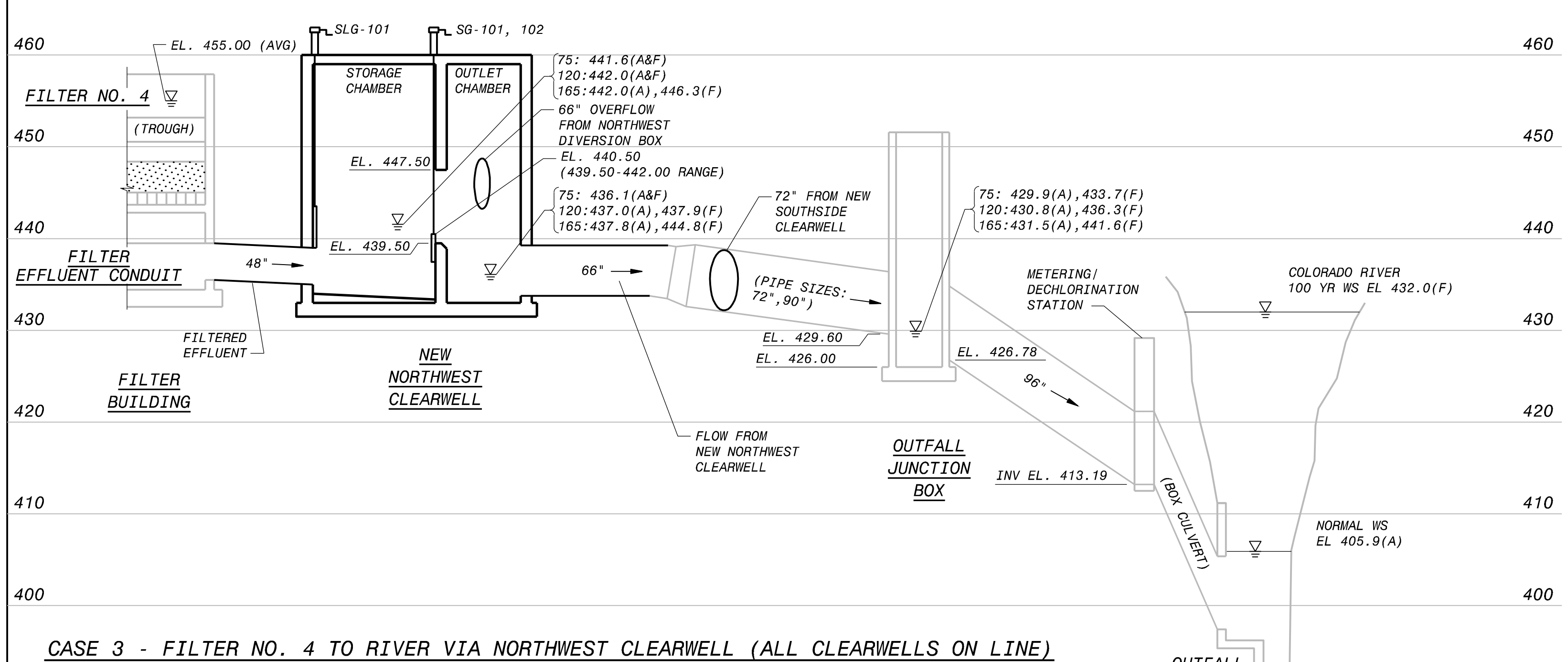

CASE 3 - FILTER NO. 4 TO RIVER VIA NORTHWEST CLEARWELL (ALL CLEARWELLS ON LINE)

FILTER HEADLOSS AVAILABLE TO ACCOMODATE SOLIDS COLLECTION, FT[(1)]

WWTP TOTAL FLOW MGD	NORMAL RIVER STAGE	RIVER AT FLOOD STAGE
75	11.2	11.2
120	8.6	8.6
165	7.6	3.3

NOTES:
1. AVAILABLE FILTER HEADLOSS VALUES ABOVE ARE BASED ON AN ASSUMED FILTER BUILDING EFFLUENT FLOW SPLIT OF 50% THROUGH THE SOUTHSIDE CLEARWELL COMPLEX AND 50% THROUGH THE NW CLEARWELL, SEE GENERAL NOTE 3.

HYDRAULIC PROFILE GENERAL NOTES

1. THE INDICATED ELEVATIONS ARE BASED ON THE NAD29 DATUM. THE SITE CONVERSION IS BELIEVED TO BE NAD29 = NAD88 – 0.30 (CONTRACTOR TO VERIFY).
2. FOR ALL FLOW CASES, THE INFLUENT FLOW DISTRIBUTION SPLIT BETWEEN THE TWO 54" FEED LINES INTO THE FILTER BUILDING WERE APPROXIMATED BY NETWORK ANALYSES OF THE FILTER BUILDING FEED PIPING NETWORK.
3. EXCEPT AS NOTED, ALL HYDRAULIC PROFILE INFORMATION PRESENTED IS BASED ON OPERATION OF THE NEW FILTER BUILDING IN THE RECOMMENDED INITIAL OPTIMAL MANNER. WHICH MEANS INFLUENT ENTERS FROM BOTH SIDES OF THE BUILDING VIA THE TWO 54" LINES, THE AVERAGE FILTER WATER SURFACE CONTROL ELEVATION IS 455.00 FT, ALL THREE CLEARWELLS ARE OPERATING, ALL INTERCONNECTION GATES ARE OPEN, AND ALL SLIDING WEIR GATES ARE SET TO ELEVATION 440.50 FT (MATCHING THE EXIST CLEARWELL WEIR). IN ACTUALITY THE GATE POSITIONS CAN BE REFINED TO DISCHARGE VARIOUS PERCENTAGES OF THE TOTAL EFFLUENT FLOW THROUGH THE NEW NW CLEARWELL, THE REMAINDER DISCHARGING THROUGH THE COMBINATION OF THE EXISTING AND NEW SOUTHSIDE CLEARWELLS. WITH ALL WEIR GATES SET TO THE SAME ELEVATION, THE TOTAL FILTER BUILDING DISCHARGE FLOW WILL NATURALLY SPLIT IN RELATION TO THE INTRINSIC HEADLOSS THROUGH THE FLOW PATHS. THAT SPLIT WILL NOT PERFECTLY BE 50/50.
4. THE MAXIMUM RATED CAPACITY OF THE FILTER BUILDING IS 120 MGD. ALL WWTP EFFLUENT FLOWS IN EXCESS OF 120 MGD MUST BE BYPASSED TO THE COLORADO RIVER.
5. BASED ON NETWORK MODELING, THE WEIR AT THE NW JUNCTION BOX WILL BE RAISED SLIGHTLY UNDER THIS PROJECT TO EL 456.67 FT. THE WEIR PLATES HAVE LIMITED ADJUSTABILITY AND CAN BE INDIVIDUALLY REMOVED.
6. THE FILTER FEED FLOW CASES ANALYZED WERE 75 MGD, 120 MGD (MAX FILTER BUILDING CAPACITY), AND 165 MGD (MAX RATED WWTP CAPACITY).
7. THE FILTERED WATER DISCHARGE FLOW CASES ANALYZED WERE 75 MGD, 120 MGD, AND 165 MGD (MAX RATED WWTP CAPACITY) FOR BOTH THE ASSUMED AVERAGE/NORMAL COLORADO RIVER LEVEL OF EL 405.9 FT, AND THE 100-YEAR FLOOD RIVER LEVEL OF EL 432.0 FT.
8. SLIDING WEIR GATES (SGS) IN THE NEW SOUTHSIDE CLEARWELL, AND THE NEW NW CLEARWELL CAN BE USED TO APPROXIMATE A GENERALLY EQUAL SPLIT IN THE TOTAL FILTER BUILDING FILTERED WATER DISCHARGE BETWEEN THE TWO OUTLET PATHS TO THE RIVER. HYDRAULIC PROFILES WERE CALCULATED ASSUMING SLIDE GATE ELEVATIONS WERE ADJUSTED SUCH THAT THE DISCHARGE FLOWS WERE GENERALLY EQUAL. RAISING THE GATES IN ONE CLEARWELL RELATIVE TO THOSE IN THE OTHER CLEARWELL WILL REDUCE THE TOTAL FLOW DISCHARGED FROM THE RAISED WEIR CLEARWELL. THE BENEFITS ASSOCIATED WITH RAISING OR MAINTAINING HIGH SLIDING WEIR ELEVATIONS ARE INCREASED CLEARWELL WATER STORAGE VOLUME. THE DETRIMENTS ASSOCIATED WITH RAISING OR MAINTAINING HIGH WEIR ELEVATIONS INCLUDE REDUCTION IN FILTER RUN TIMES, AND HIGHER WATER LEVELS AND HIGHER PRESSURES/SURCHARGING IN BASINS UP STREAM AND DOWNSTREAM OF THE FILTERS. CAUTION IS NEEDED WHEN THE THE COLORADO RIVER IS AT FLOOD STAGE.
9. IN GENERAL FOR NON-RIVER BYPASS TOTAL WWTP FLOWS (120 MGD MAX), ALL OF THE DISCHARGE FROM CL2 BASINS 1 & 2 AND MOST OF THE DISCHARGE FROM CL2 BASINS 3 & 4 FEED THE FILTERS VIA THE SE 54" INFLUENT LINE. ALL OF THE DISCHARGE FROM CL2 BASINS 5 & 6 BASINS FEED THE FILTERS VIA THE NW 54" INFLUENT LINE.
10. THE FIVE HEAVY DUTY SLUICE GATES MUST BE EITHER FULLY OPEN OR CLOSED. THE GATES ARE NOT SUITABLE FOR THROTTLING SERVICE.
11. BASED ON MODELING, THE EXISTING WEIR IN THE CL2 BASINS 1 & 2 JUNCTION BOX COULD BE RAISED AS MUCH AS 12" (TO ELEVATION 457.50') WHILE MAINTAINING AT LEAST A 12" FREEBOARD IN EVERY CL2 BASIN AT A MAXIMUM FLOW OF 165 MGD. HOWEVER FOR IMPROVED OPERATIONAL FLEXIBILITY, IT IS STRONGLY RECOMMENDED THAT THE JUNCTION BOX BE ENLARGED TO DISSIPATE THE MOMENTUM OF THE FLOW FROM THE CL2 BASINS AND PERMIT A SIGNIFICANT INCREASE IN THE LENGTH OF THE OVERFLOW WEIR. FURTHERMORE, INSTEAD OF FIXED WEIRS, DOWNWARD ACTING ADJUSTABLE WEIR GATES SHOULD BE INSTALLED WITH 18" OF TRAVEL. (SEE NOTE 12 FOR JUSTIFICATION.)
12. DURING EXTREME HYDRAULIC EVENTS INVOLVING HIGH WWTP FLOWS (>165 MGD) AND/OR THE COLORADO RIVER AT FLOOD STAGES, WATER SURFACE ELEVATIONS IN MANY BASINS OF THE WWTP MAY RISE SIGNIFICANTLY. SHOULD EMERGENCY ACTION BE WARRANTED TO REDUCE THE WATER SURFACE LEVELS IN THE CHLORINE CONTACT BASINS, FILTER BUILDING, ETC., THE FOLLOWING ACTIONS CAN BE IMPLEMENTED: BRING ALL FILTER BUILDING CLEARWELLS ONLINE, LOWER ALL WEIR GATES TO THEIR LOWEST POSITIONS, CONFIRM THAT ALL SLUICE GATES ARE FULLY OPEN, REMOVE SOME OR ALL OF THE REMOVABLE WEIR PLATES IN THE NW DISTRIBUTION BOX, AS POSSIBLE REMOVE OR LOWER WEIR PLATES/GATES FOR THE FUTURE OVERFLOW WEIR IN THE CHLORINE CONTACT BASIN NO. 1/2 JUNCTION BOX, AND OPERATE ALL FILTERS.

WATER SURFACE LEVEL LEGEND

120: 443.00(A), 445.50(F)
- 445.50(F) — WSL AT 100-YR FLOOD COLORADO RIVER STAGE
- 443.00(A) — WSL AT AVERAGE COLORADO RIVER STAGE
- 120 — TOTAL WWTP FLOW, MGD

NO.	DR	CK	DATE	DESCRIPTION

REVISIONS

BLACK & VEATCH
Building a world of difference.
Black & Veatch Corporation
Registration No. F-258
Austin, Texas

STATE OF TEXAS
CARLOS R. CHAVEZ
119722
LICENSED PROFESSIONAL ENGINEER
Carlos Chavez
6/7/2016

Austin WATER

Walnut Creek WWTP - Tertiary Filter Rehabilitation Project
CIP ID No. 3023.025

GENERAL HYDRAULIC PROFILE

DESIGNED BY:	BMC
DRAWN BY:	BLR
REVIEWED BY:	EP,DDM
APPROVED BY:	TSD
PROJECT NO.:	168622
DATE:	4/4/2014
SCALE:	NONE

REVISION:

DISCIPLINE NO.
G-07
DWG. NO.
8 OF 273

FD168622 D168622 File: C:\PWBatchPDF\Process\168622 – Austin Walnut Creek WWTP Filter Rehab\G_07.dwg Layout: Work Plotted: 6/9/2016 1:50:57 PM
SAVED: ROB03455, 04/01/2014 6:27:25 AM
09SEQ0ID: General Drawings

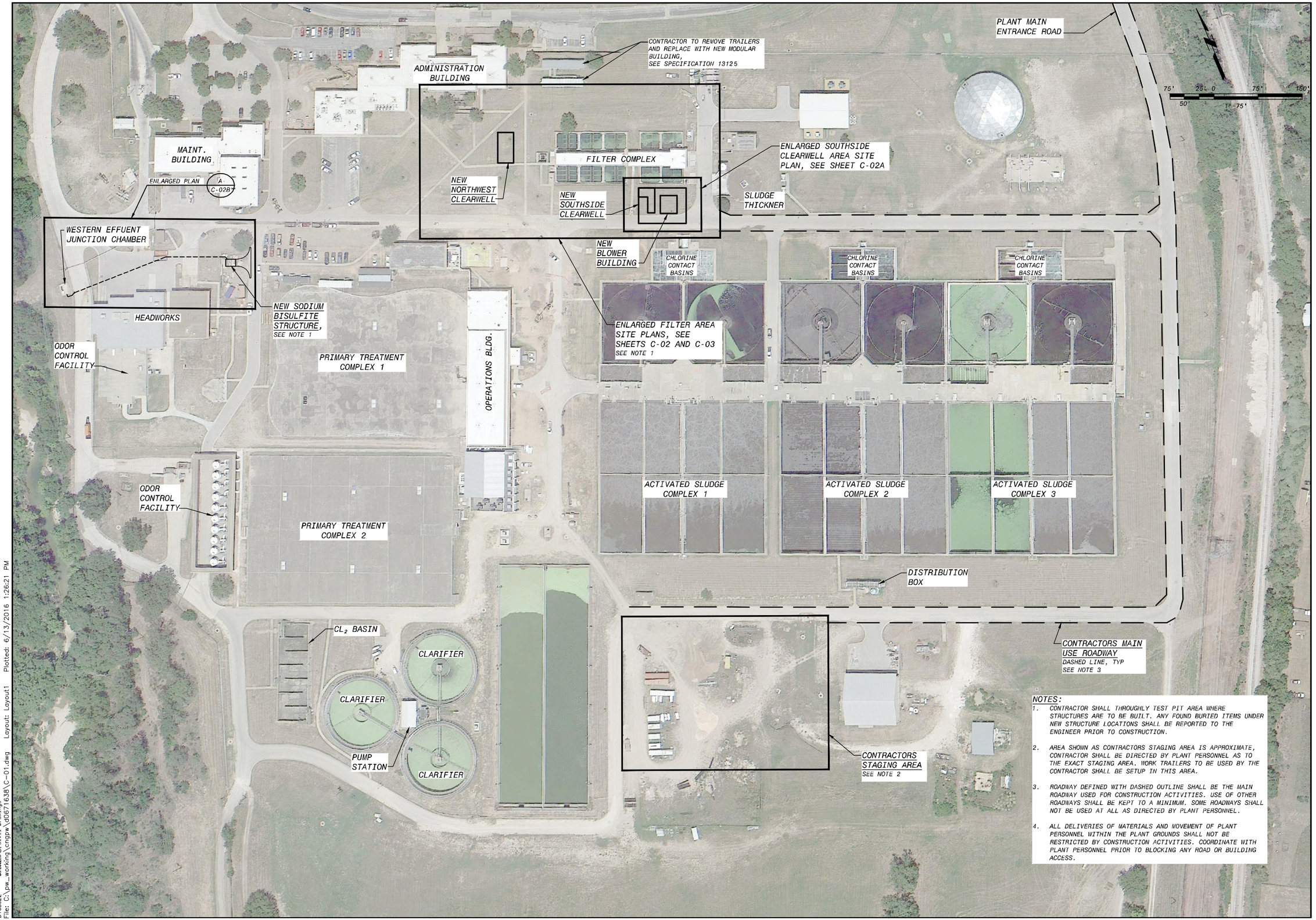

NOTES:

1. CONTRACTOR SHALL THROUGHLY TEST PIT AREA WHERE STRUCTURES ARE TO BE BUILT. ANY FOUND BURIED ITEMS UNDER NEW STRUCTURE LOCATIONS SHALL BE REPORTED TO THE ENGINEER PRIOR TO CONSTRUCTION.
2. AREA SHOWN AS CONTRACTORS STAGING AREA IS APPROXIMATE, CONTRACTOR SHALL BE DIRECTED BY PLANT PERSONNEL AS TO THE EXACT STAGING AREA. WORK TRAILERS TO BE USED BY THE CONTRACTOR SHALL BE SETUP IN THIS AREA.
3. ROADWAY DEFINED WITH DASHED OUTLINE SHALL BE THE MAIN ROADWAY USED FOR CONSTRUCTION ACTIVITIES. USE OF OTHER ROADWAYS SHALL BE KEPT TO A MINIMUM. SOME ROADWAYS SHALL NOT BE USED AT ALL AS DIRECTED BY PLANT PERSONNEL.
4. ALL DELIVERIES OF MATERIALS AND MOVEMENT OF PLANT PERSONNEL WITHIN THE PLANT GROUNDS SHALL NOT BE RESTRICTED BY CONSTRUCTION ACTIVITIES. COORDINATE WITH PLANT PERSONNEL PRIOR TO BLOCKING ANY ROAD OR BUILDING ACCESS.

NO.	DR	CK	DATE	DESCRIPTION

REVISIONS

BLACK & VEATCH
Building a world of difference.
Black & Veatch Corporation
Registration No. F-253
Austin, Texas

Carlos Gonzalez
CARLOS R. GONZALEZ
119722
LICENSED
PROFESSIONAL ENGINEER
6/7/2016

Austin WATER

Walnut Creek WWTP - Tertiary Filter Rehabilitation Project

CIP ID No. 3023.025

CIVIL
OVERALL SITE PLAN

DESIGNED BY:	AWL
DRAWN BY:	AWL
REVIEWED BY:	WLK
APPROVED BY:	TSD
PROJECT NO.:	168622
DATE:	4/4/2014
SCALE:	1"=75'

REVISION:

DISCIPLINE NO.
C-01

DWG. NO.
9 OF 273

50168622 SAVED:LEO7108, 9/8/2014 6:57:19 AM
D168622 CHANGED:C7141, 3/8/2016
File: C:\pw_working\cnpgw\d0671638\C-01.dwg Layout: Layout1 Plotted: 6/13/2016 1:26:21 PM

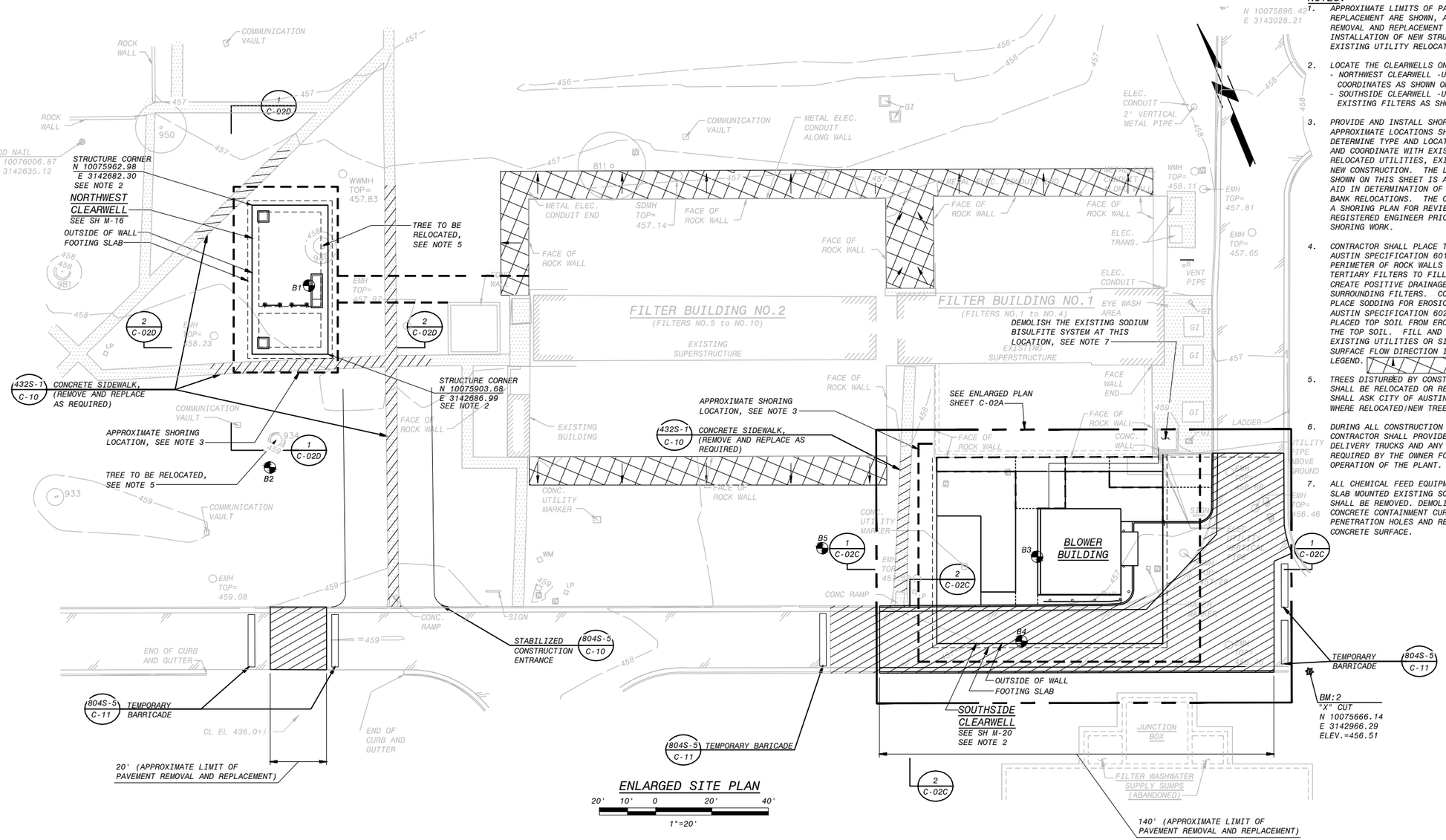

ENLARGED SITE PLAN

20' 10' 0 20' 40'

1"=20'

NOTES:

1. APPROXIMATE LIMITS OF PAVEMENT REMOVAL AND REPLACEMENT ARE SHOWN, ADDITIONAL PAVEMENT REMOVAL AND REPLACEMENT MAY BE REQUIRED FOR INSTALLATION OF NEW STRUCTURES AND FOR EXISTING UTILITY RELOCATION.
2. LOCATE THE CLEARWELLS ON SITE AS FOLLOWS:
   - NORTHWEST CLEARWELL -USE OUTSIDE CORNER COORDINATES AS SHOWN ON THIS SHEET
   - SOUTHSIDE CLEARWELL -USE DIMENSIONS TO EXISTING FILTERS AS SHOWN ON SHEET S-08.
3. PROVIDE AND INSTALL SHORING SYSTEM AT APPROXIMATE LOCATIONS SHOWN. CONTRACTOR SHALL DETERMINE TYPE AND LOCATION OF SHORING SYSTEM AND COORDINATE WITH EXISTING UTILITIES, RELOCATED UTILITIES, EXISTING STRUCTURES, AND NEW CONSTRUCTION. THE LOCATION OF THE SYSTEM SHOWN ON THIS SHEET IS APPROXIMATE AND IS TO AID IN DETERMINATION OF YARD PIPING AND DUCT BANK RELOCATIONS. THE CONTRACTOR SHALL SUBMIT A SHORING PLAN FOR REVIEW DESIGNED BY A REGISTERED ENGINEER PRIOR TO BEGINNING ANY SHORING WORK.
4. CONTRACTOR SHALL PLACE TOP SOIL PER CITY OF AUSTIN SPECIFICATION 601S AROUND OUTSIDE PERIMETER OF ROCK WALLS SURROUNDING ALL TEN TERTIARY FILTERS TO FILL EXISTING VOIDS AND CREATE POSITIVE DRAINAGE AWAY FROM ROCK WALLS SURROUNDING FILTERS. CONTRACTOR SHALL THEN PLACE SODDING FOR EROSION CONTROL PER CITY OF AUSTIN SPECIFICATION 602S TO PROTECT RECENTLY PLACED TOP SOIL FROM EROSION AND TO STABILIZE THE TOP SOIL. FILL AND SOD SHALL NOT COVER EXISTING UTILITIES OR SIDEWALKS. LIMIT AND SURFACE FLOW DIRECTION INDICATED WITH THIS LEGEND.
5. TREES DISTURBED BY CONSTRUCTION ACTIVITIES SHALL BE RELOCATED OR REPLACED. CONTRACTOR SHALL ASK CITY OF AUSTIN WCWWTP PLANT STAFF WHERE RELOCATED/NEW TREES SHALL BE PLACED.
6. DURING ALL CONSTRUCTION ACTIVITIES THE CONTRACTOR SHALL PROVIDE ACCESS FOR CHLORINE DELIVERY TRUCKS AND ANY OTHER VEHICLES REQUIRED BY THE OWNER FOR THE CONTINUAL OPERATION OF THE PLANT.
7. ALL CHEMICAL FEED EQUIPMENT AND PIPING FOR THE SLAB MOUNTED EXISTING SODIUM BISULFITE SYSTEM SHALL BE REMOVED. DEMOLISH THE EXISTING CONCRETE CONTAINMENT CURB, PLUG ANY PIPE PENETRATION HOLES AND REPAIR ANY DAMAGE TO THE CONCRETE SURFACE.

NO.	BY	CK	DATE	DESCRIPTION

REVISIONS

BLACK & VEATCH
Building a world of difference.
Black & Veatch Corporation
Registration No. F-869
Austin, Texas

STATE OF TEXAS
CARLOS R. CHAVEZ
119722
LICENSED
PROFESSIONAL ENGINEER
6/17/2016

Austin WATER

Walnut Creek WWTP - Tertiary Filter Rehabilitation Project
CIP ID No. 3023.025

CIVIL
ENLARGED FILTER AREA SITE PLAN

DESIGNED BY:	AWL
DRAWN BY:	AWL
REVIEWED BY:	WLK
APPROVED BY:	TSD
PROJECT NO.:	168622
DATE:	4/4/2014
SCALE:	1"=20'
REVISION:	
DISCIPLINE NO.	C-02
DWG. NO.	10 OF 273

F0168622 SAVED: LEP07108, 3/19/2014 6:55:25 AM
D168622 ORIGIN: 3023.025.Civil Drawings
File: C:\PWBatchPDF\Process\168622 - Austin Walnut Creek WWTP Filter Rehab\C_02.dwg Layout: Layout1 Plotted: 6/9/2016 1:50:20 PM

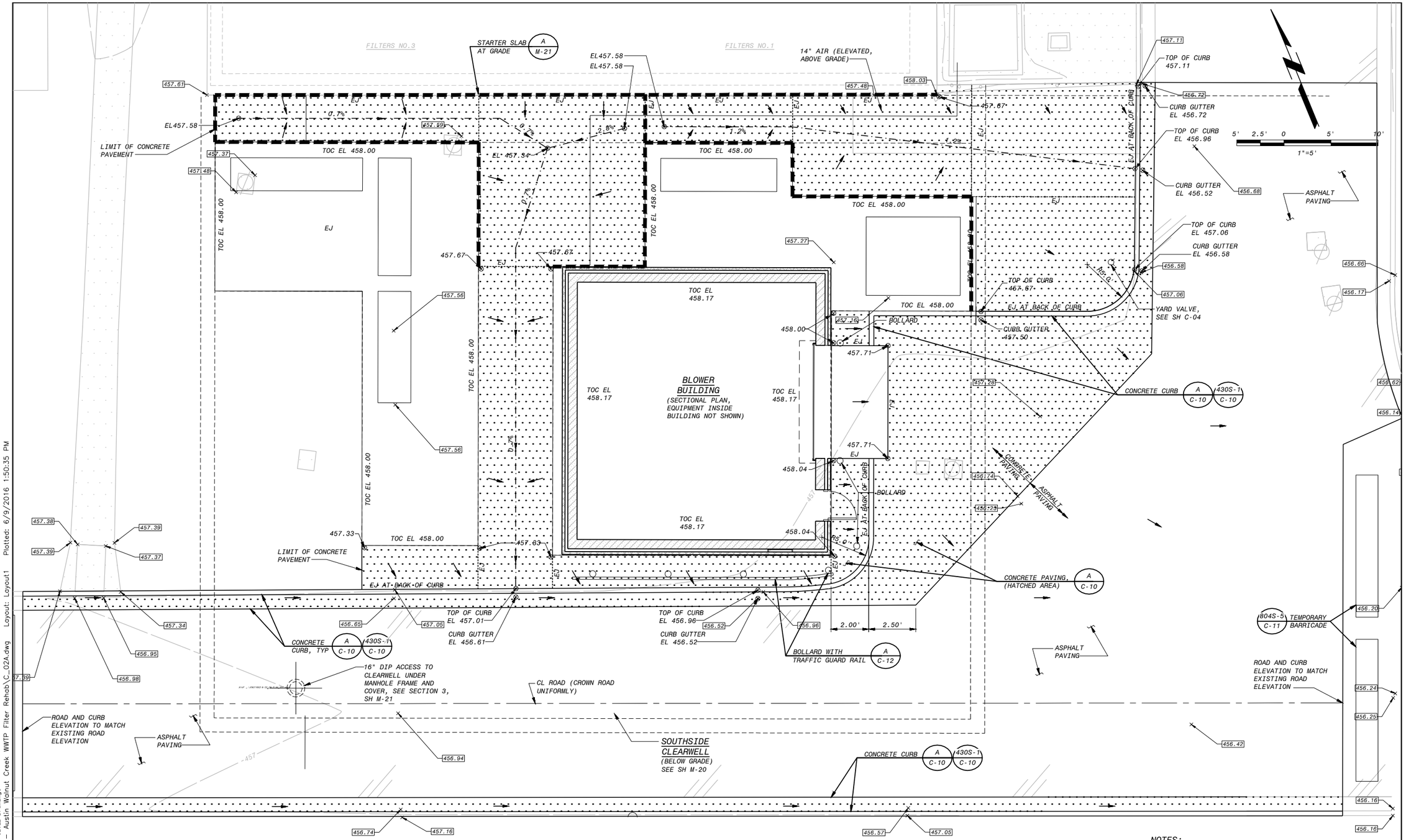

LEGEND (THIS SHEET ONLY)

- NEW CONCRETE PAVING AT GRADE
- TOP OF NEW CONCRETE PAVING AT ELEVATION 457.67
- EJ — CONCRETE EXPANSION JOINT
- 1.50% — CONCRETE SURFACE GULLY WITH FLOW LINE AND SLOPE
- SURFACE WATER FLOW DIRECTION
- 456.16 — EXISTING SURFACE SPOT ELEVATION FROM SITE SURVEY
- EL 456.16 — NEW SURFACE SPOT ELEVATION
- TOC EL 458.00 — TOP OF CONCRETE ELEVATION

NOTES:

1. DEMOLITION WORK NOT SHOWN, SEE SHEET C-02.
2. SEE CONCRETE PAVING NOTES AND DETAILS ON SHEET C-10.
3. ALL NEW PAVEMENT SHALL BE SLOPED TO DRAIN, NO NO AREAS OF NEW PAVING SHALL POND. PAVEMENT SHALL BE SLOPED UNIFORMLY FROM NEW ELEVATIONS GIVEN TO CONNECTIONS WITH EXISTING PAVING.

ENLARGED SOUTHSIDE CLEARWELL SITE PLAN

NO.	DR	CK	DATE	DESCRIPTION

REVISIONS

BLACK & VEATCH
Building a world of difference.
Black & Veatch Corporation
Registration No. F-869
Austin, Texas

Carlos Gomez
STATE OF TEXAS
CARLOS A. GOMEZ
119722
LICENSED
PROFESSIONAL ENGINEER
6/7/2016

Austin WATER
Walnut Creek WWTP - Tertiary Filter Rehabilitation Project
CIP ID No. 3023.025

CIVIL
ENLARGED SOUTHSIDE CLEARWELL AREA SITE PLAN

DESIGNED BY:	AWL
DRAWN BY:	AWL
REVIEWED BY:	WLK
APPROVED BY:	TSD
PROJECT NO.:	168622
DATE:	4/4/2014
SCALE:	1"=20'
REVISION:	
DISCIPLINE NO.	C-02A
DWG. NO.	11 OF 273

F0168622 SAVED: CADS1124, 10/7/2013 9:28:20 AM
D168622 PLOTTED BY: D168622, ...\09.3025 - Civil Drawings
File: C:\PWBatchPDF\Process\168622 - Austin Walnut Creek WWTP Filter Rehab\C_02A.dwg Layout: Layout1 Plotted: 6/9/2016 1:50:35 PM

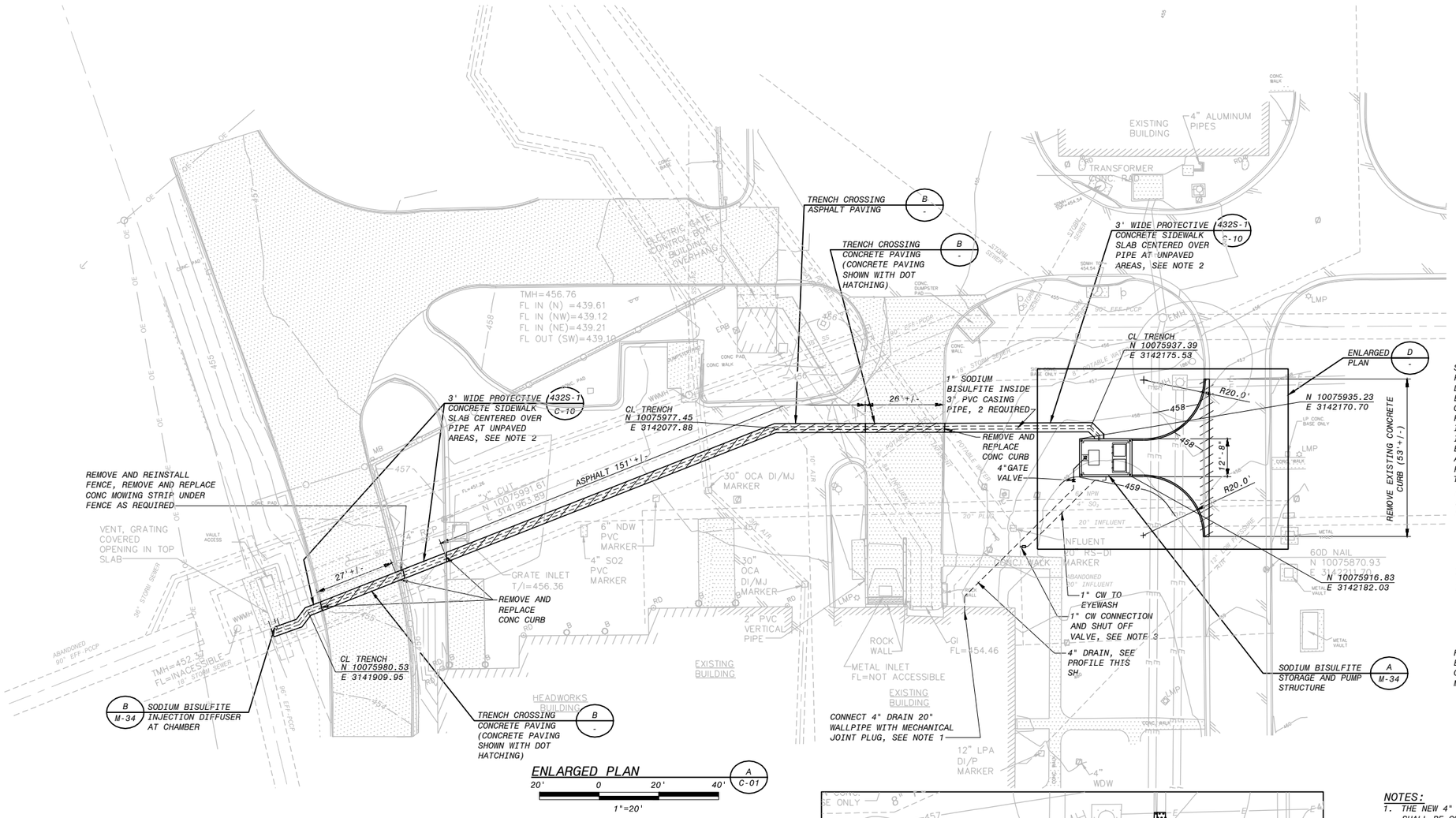

ENLARGED PLAN

A C-01

20' 0 20' 40'

1"=20'

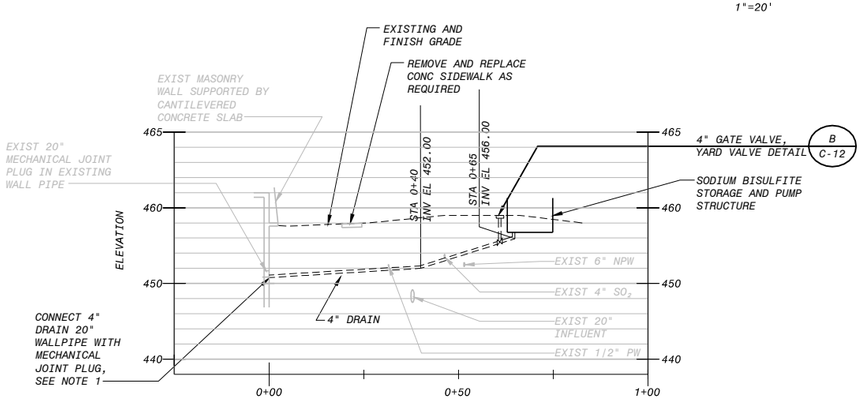

4" DRAIN PROFILE

C -

1"=20' HORIZ
1"=10' VERTICAL

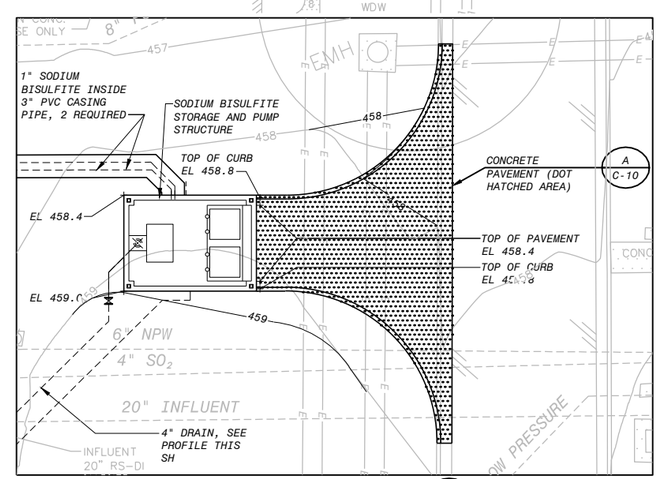

ENLARGED PLAN

D -

CONCRETE PAVEMENT

SCORE EXISTING CONCRETE PAVEMENT IN A STRAIGHT LINE WITH SAW. DO NOT CUT EXIST REINF. BREAKOUT CONC AND BEND REINF. AS REQUIRED FOR PIPE INSTALLATION. AFTER PIPE INSTALLATION BEND REINF BACK ACROSS TRENCH, ADD ADDITIONAL #5@12 EW AND POUR NEW CONCRETE (7" THICK MIN)

ASPHALT PAVEMENT

CUT EXISTING ASPHALT PAVEMENT IN A STRAIGHT LINE. NEW ASPHALT SHALL BE THE SAME THICKNESS AS EXISTING, (5" MIN. THICK)

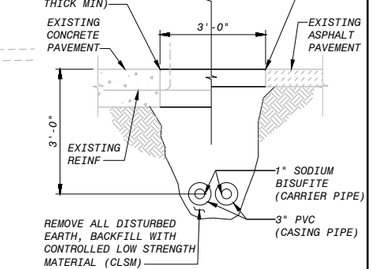

TRENCH THROUGH EXIST CONCRETE AND ASPHALT PAVEMENT

B -

NOT TO SCALE

NOTES:

1. THE NEW 4" SODIUM BISULFITE STRUCTURE DRAIN PIPE SHALL BE CONNECTED TO THE EXISTING HEADWORKS INLET BAY. REMOVE AN EXISTING 20" MJ PLUG IN THE EXISTING WALL AT CL EL 450.8+/-. INSTALL NEW 20" MJ PLUG WITH 4" FLANGE CONNECTION, CONNECT DRAIN PIPE AS REQUIRED.
2. ALL DISTURBED EARTH IN TRENCH UNDER PROTECTIVE SIDEWALK OR PAVEMENT SHALL BE FULLY BACKFILLED WITH CLSM.
3. 1" POTABLE WATER FOR EYEWASH SHALL BE CONNECTED TO EXISTING 1-1/2" POTABLE WATER AT LOCATION SHOWN. FROM CONNECTION ROUTE 1" UP TO A NEW METER BOX WHERE A 1" BALL VALVE SHALL BE LOCATED. ROUTE PIPE TO NEW SODIUM BISULFITE STRUCTURE WITH 3 FEET OF EARTH COVER.

NO.	BY	CK	DATE	DESCRIPTION

REVISIONS

BLACK & VEATCH
Building a world of difference.
Black & Veatch Corporation
Registration No. F-439
Austin, Texas

STATE OF TEXAS
CARLOS R. CHAVEZ
119722
LICENSED PROFESSIONAL ENGINEER
6/17/2016

Walnut Creek WWTP - Tertiary Filter Rehabilitation Project
CIP ID No. 3023.025

Austin WATER

CIVIL
ENLARGED SODIUM BISULFITE FACILITY SITE PLAN

DESIGNED BY:	AWL
DRAWN BY:	AWL
REVIEWED BY:	WLK
APPROVED BY:	TSD
PROJECT NO.:	168622
DATE:	4/4/2014
SCALE:	AS SHOWN

REVISION:

DISCIPLINE NO.
C-02B

DWG. NO.
12 OF 273

FD168622 SAVED: LEB07108, 3/19/2014 7:01:44 AM
D168622 OPSAVE: 6/9/2016 1:50:54 PM
File: C:\PWBatchPDF\Process\168622 - Austin Walnut Creek WWTP Filter Rehab\C_02B.dwg Layout: Layout1 Plotted: 6/9/2016 1:50:54 PM

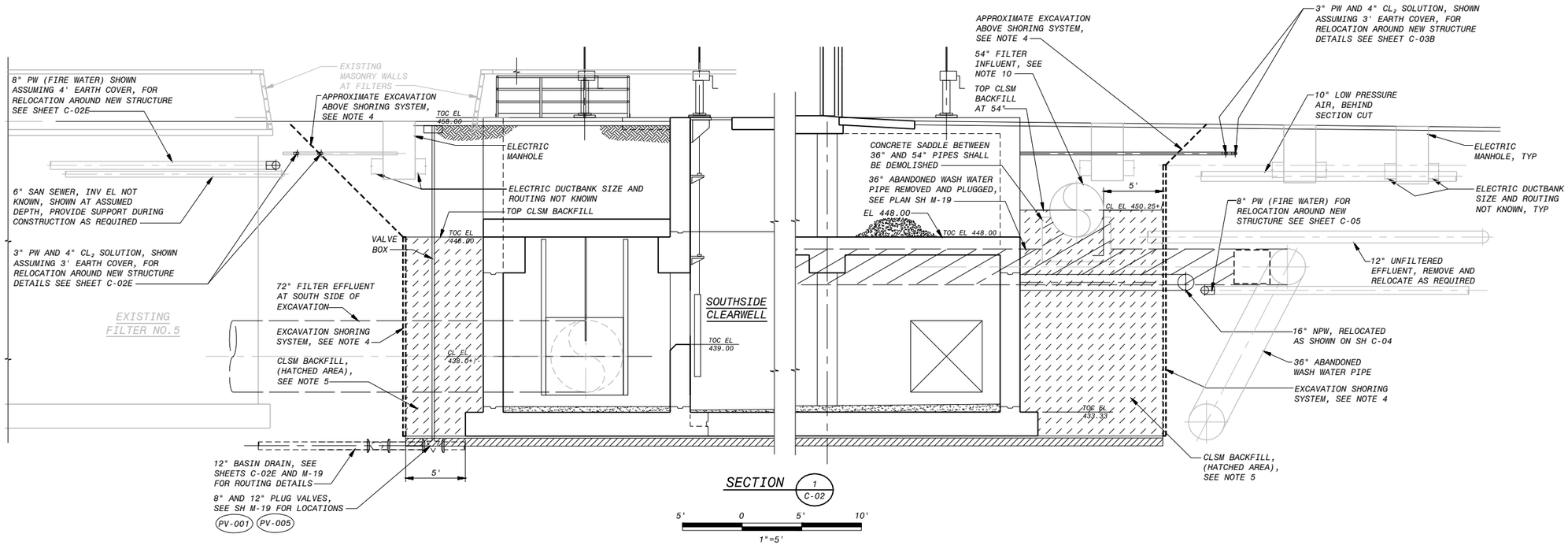

SECTION 1 / C-02

5' 0 5' 10'

1"=5'

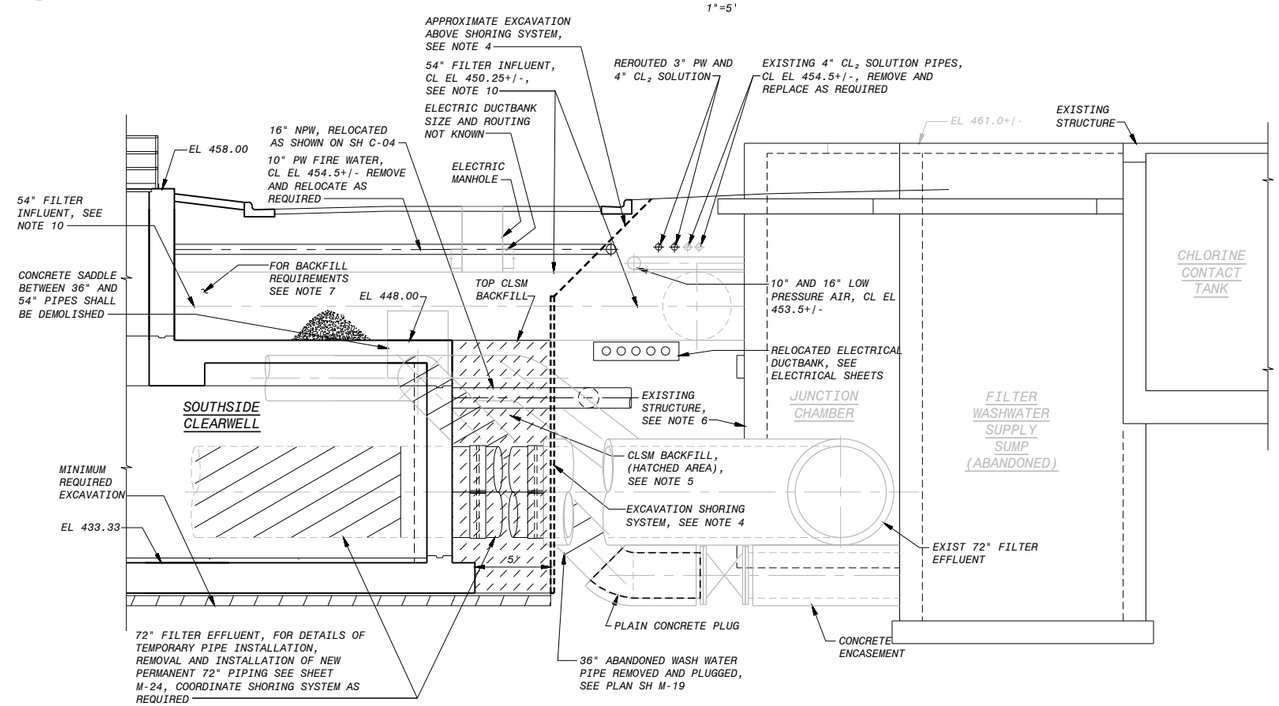

SECTION 2 / C-02

5' 0 5' 10'

1"=5'

NOTES:

1. THESE EXCAVATION SECTIONS ARE BASED ON AS-BUILT INFORMATION PROVIDED BY THE OWNER. BEST EFFORT WAS MADE TO SHOW ALL PIPES AND DUCTBANKS. CONTRACTOR SHALL PERFORM TEST PIT INVESTIGATIONS TO CONFIRM AND REPORT RESULTS AND DIFFERENCES TO THESE SECTIONS TO THE ENGINEER.
2. ALL EXISTING ITEMS ARE SHOWN WITH SCREENED LINES, ALL NEW ITEMS ARE SHOWN WITH DARK LINES.UNLESS NOTED AS NEW.
3. SOME BUT NOT ALL DEMOLITION WORK IS SHOWN ON THIS SHEET. SOME BUT NOT ALL NEW WORK IS SHOWN ON THIS SHEET.
4. PROVIDE AND INSTALL SHORING SYSTEM AT APPROXIMATE LOCATIONS SHOWN. CONTRACTOR SHALL DETERMINE TYPE AND LOCATION OF SHORING SYSTEM AND COORDINATE WITH EXISTING UTILITIES, RELOCATED UTILITIES, EXISTING STRUCTURES, AND NEW CONSTRUCTION. THE LOCATION OF THE SYSTEM SHOWN ON THIS SHEET IS APPROXIMATE AND IS TO AID IN DETERMINATION OF YARD PIPING AND DUCT BANK RELOCATIONS. THE CONTRACTOR SHALL SUBMIT A SHORING PLAN FOR REVIEW DESIGNED BY A REGISTERED ENGINEER PRIOR TO BEGINNING ANY SHORING WORK.
5. CLSM (FLOWABLE FILL) BACKFILL TO BE INSTALLED AT ALL AREAS BETWEEN STRUCTURE AND SHORING SYSTEM TO HEIGHT SHOWN.
6. NO EXISTING STRUCTURES, YARD PIPING, ELECTRICAL ITEMS, ETC SHALL BE UNDERMINED OR DISTURBED DUE TO EXCAVATION OR ANY OTHER CONSTRUCTION ACTIVITIES. ALL EXISTING ITEMS SHALL BE PROTECTED THROUGH ALL CONSTRUCTION ACTIVITIES.
7. FOR ADDITIONAL BACKFILL REQUIREMENTS (I.E. SELECT BACKFILL, CLAY CAP, ETC) SEE SPECIFICATIONS AND STRUCTURAL SHEETS.
8. CONTRACTOR SHALL EXERCISE CAUTION CONCERNING THE USE OF COMPACTION EQUIPMENT ON TOP OF SUSPENDED SLABS, SEE STRUCTURAL SHEETS FOR ADDITIONAL INFORMATION.
9. THE LOCATION OF RELOCATED YARD PIPING, DUCTBANKS, ETC MAY BE MODIFIED DUE TO FOUND FIELD CONDITIONS. ALL PROPOSED RELOCATIONS FROM THE CONTRACTOR SHALL BE APPROVED BY THE ENGINEER. ALL ITEMS SHALL BE THOROUGHLY DOCUMENTED ON AS-BUILT DOCUMENTS.
10. THE EXISTING 54" FILTER INFLUENT PIPE SHALL REMAIN IN SERVICE. THIS PIPE SHALL BE SUPPORTED IN PLACE DURING ALL CONSTRUCTION ACTIVITIES. THE FINAL SUPPORT OF THIS PIPE SHALL HAVE CLSM POURED UP TO THE PIPE SPRINGLINE. ALL DISTURBED EARTH UNDER THIS PIPE SHALL BE REMOVED AND REPLACED WITH CLSM.

NO.	BY	CK	DATE	DESCRIPTION

REVISIONS

BLACK & VEATCH
Building a world of difference.
Black & Veatch Corporation
Registration No. F-869
Austin, Texas

STATE OF TEXAS
CARLOS R. CHAVEZ
119722
LICENSED PROFESSIONAL ENGINEER
6/17/2016

Austin WATER
Walnut Creek WWTP - Tertiary Filter Rehabilitation Project
CIP ID No. 3023.025

CIVIL
SOUTHSIDE CLEARWELL
EXCAVATION SECTIONS

DESIGNED BY:	SNA, AWL
DRAWN BY:	AWL
REVIEWED BY:	WLK
APPROVED BY:	TSD
PROJECT NO.:	168622
DATE:	4/4/2014
SCALE:	AS SHOWN

REVISION:

DISCIPLINE NO.
C-02C

DWG. NO.
13 OF 273

F0168622 SAVED: LEF07108, 3/24/2014 8:14:37 AM
D168622 ORIGINAL SIZE: 30x42 Civil Drawings
File: C:\PWBatchPDF\Process\168622 - Austin Walnut Creek WWTP Filter Rehab\C_02C.dwg Layout: Layout1 Plotted: 6/9/2016 1:51:07 PM

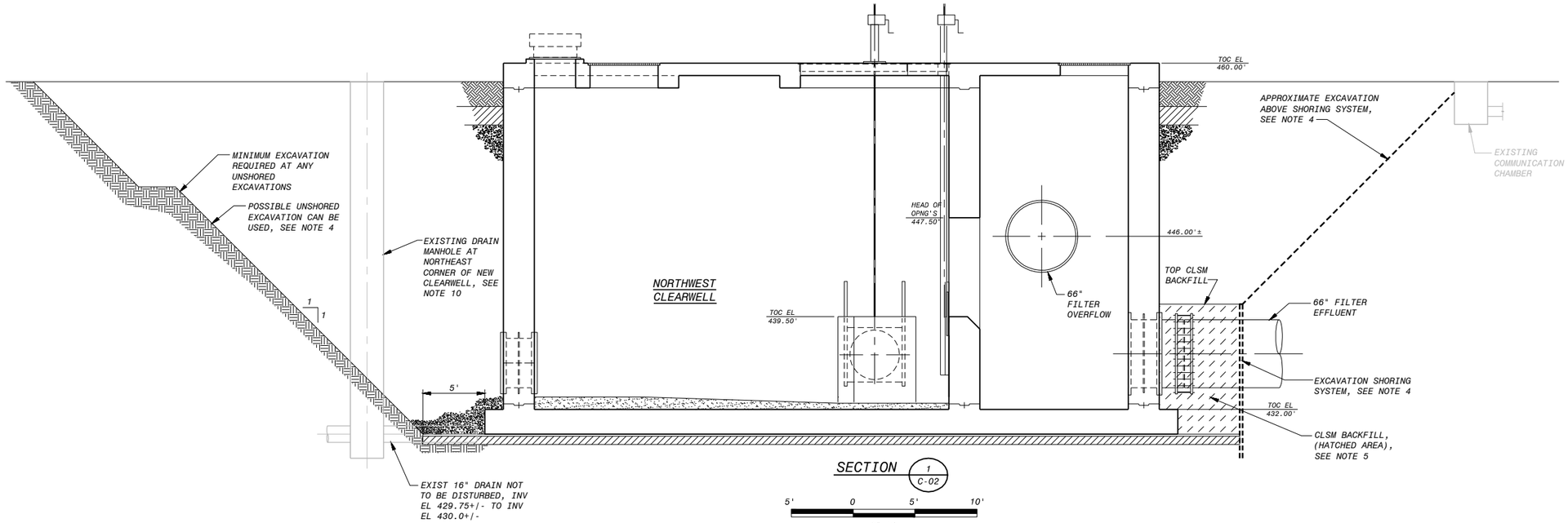

SECTION 1 / C-02

5' 0 5' 10'

1"=5'

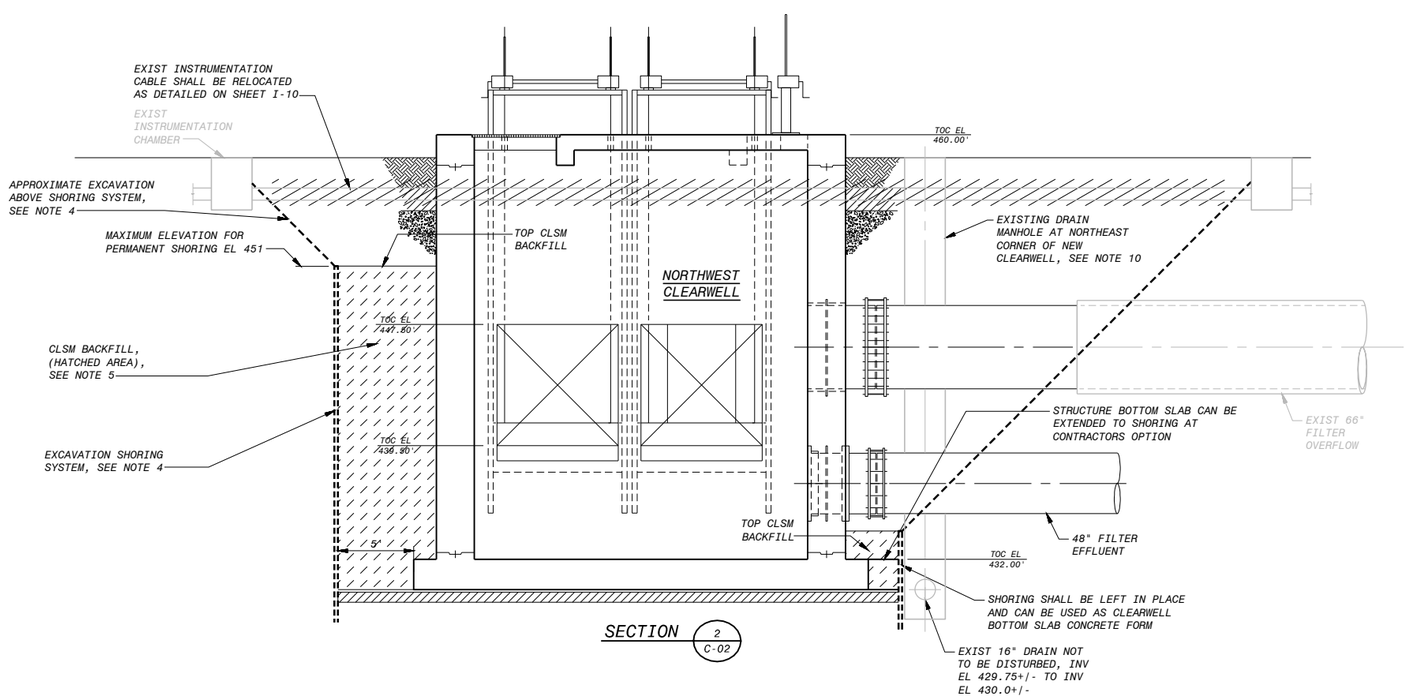

SECTION 2 / C-02

NOTES:

1. THESE EXCAVATION SECTIONS ARE BASED ON AS-BUILT INFORMATION PROVIDED BY THE OWNER. BEST EFFORT WAS MADE TO SHOW ALL PIPES AND DUCTBANKS. CONTRACTOR SHALL PERFORM TEST PIT INVESTIGATIONS TO CONFIRM AND REPORT RESULTS AND DIFFERENCES TO THESE SECTIONS TO THE ENGINEER.

2. ALL EXISTING ITEMS ARE SHOWN WITH SCREENED LINES, ALL NEW ITEMS ARE SHOWN WITH DARK LINES.UNLESS NOTED AS NEW.

3. SOME BUT NOT ALL DEMOLITION WORK IS SHOWN ON THIS SHEET. SOME BUT NOT ALL NEW WORK IS SHOWN ON THIS SHEET.

4. PROVIDE AND INSTALL SHORING SYSTEM AT APPROXIMATE LOCATIONS SHOWN. CONTRACTOR SHALL DETERMINE TYPE AND LOCATION OF SHORING SYSTEM AND COORDINATE WITH EXISTING UTILITIES, RELOCATED UTILITIES, EXISTING STRUCTURES, AND NEW CONSTRUCTION. THE LOCATION OF THE SYSTEM SHOWN ON THIS SHEET IS APPROXIMATE AND IS TO AID IN DETERMINATION OF YARD PIPING AND DUCT BANK RELOCATIONS. THE CONTRACTOR SHALL SUBMIT A SHORING PLAN FOR REVIEW DESIGNED BY A REGISTERED ENGINEER PRIOR TO BEGINNING ANY SHORING WORK.

   IF NO EXISTING ITEMS ARE FOUND THAT WOULD RESTRICT EXCAVATION THEN AT THE CONTRACTORS OPTION UNSHORED EXCAVATION CAN BE USED.

5. CLSM (FLOWABLE FILL) BACKFILL TO BE INSTALLED AT ALL AREAS BETWEEN STRUCTURE AND SHORING SYSTEM TO HEIGHT SHOWN.

6. NO EXISTING STRUCTURES, YARD PIPING, ELECTRICAL ITEMS, ETC SHALL BE UNDERMINED OR DISTURBED DUE TO EXCAVATION OR ANY OTHER CONSTRUCTION ACTIVITIES. ALL EXISTING ITEMS SHALL BE PROTECTED THROUGH ALL CONSTRUCTION ACTIVITIES.

7. FOR ADDITIONAL BACKFILL REQUIREMENTS (I.E. SELECT BACKFILL, CLAY CAP, ETC) SEE SPECIFICATIONS AND STRUCTURAL SHEETS.

8. CONTRACTOR SHALL EXERCISE CAUTION CONCERNING THE USE OF COMPACTION EQUIPMENT ON TOP OF SUSPENDED SLABS, SEE STRUCTURAL SHEETS FOR ADDITIONAL INFORMATION.

9. THE LOCATION OF RELOCATED YARD PIPING, DUCTBANKS, ETC MAY BE MODIFIED DUE TO FOUND FIELD CONDITIONS. ALL PROPOSED RELOCATIONS FROM THE CONTRACTOR SHALL BE APPROVED BY THE ENGINEER. ALL ITEMS SHALL BE THOROUGHLY DOCUMENTED ON AS-BUILT DOCUMENTS.

10. EXISTING DRAIN MANHOLE TO REMAIN IN SERVICE DURING CONSTRUCTION. CONTRACTOR SHALL PROTECT THIS MANHOLE AND DRAIN PIPE AS REQUIRED. SHORING IS NOT SHOWN BUT MAY BE REQUIRED.

NO.	DR	CK	DATE	DESCRIPTION

REVISIONS

BLACK & VEATCH
Building a world of difference.
Black & Veatch Corporation
Registration No. F-869
Austin, Texas

STATE OF TEXAS
CARLOS R. CARVEZ
119722
LICENSED
PROFESSIONAL ENGINEER
6/17/2016

Austin WATER
Walnut Creek WWTP - Tertiary Filter Rehabilitation Project
CIP ID No. 3023.025

CIVIL
NORTHWEST CLEARWELL
EXCAVATION SECTIONS

DESIGNED BY:	SNA, AWL
DRAWN BY:	AWL
REVIEWED BY:	WLK
APPROVED BY:	TSD
PROJECT NO.:	168622
DATE:	4/4/2014
SCALE:	1"=5'

REVISION:

DISCIPLINE NO.
C-02D

DWG. NO.
14 OF 273

F0168622 SAVED: LER07108, 3/24/2014 8:14:37 AM
D168622 ORIGIN: Civil Drawings
File: C:\PWBatchPDF\Process\168622 - Austin Walnut Creek WWTP Filter Rehab\C_02D.dwg Layout: Layout1 Plotted: 6/9/2016 1:51:19 PM

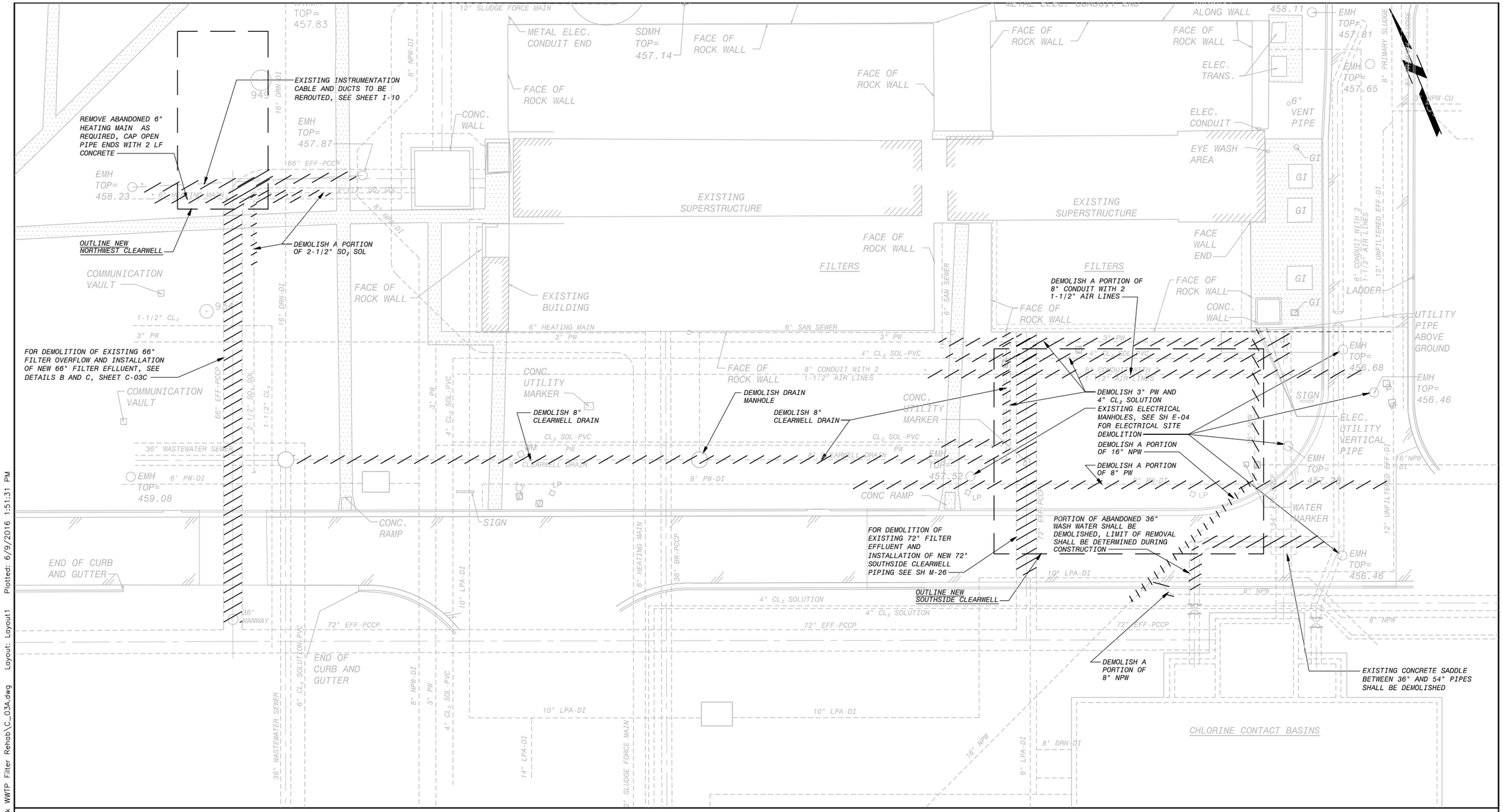

SITE PLAN YARD PIPING - DEMOLITION

15' 0 15' 30'

1"=15'

NOTES:

1. CONTRACTOR SHALL THOROUGHLY TEST PIT ALL AREAS WITH NEW CONSTRUCTION TO LOCATE UNDERGROUND ITEMS PRIOR TO CONSTRUCTION. TEST PIT INVESTIGATION SHALL BE PERFORMED TO DISCOVER ALL EXISTING PIPE CONNECTIONS TO ASSURE THAT ALL CONNECTIONS ARE RESTORED WITH RELOCATED PIPING. REPORT ANY DISCREPANCIES FOUND TO THE ENGINEER.

NO.	DR	CK	DATE	DESCRIPTION

REVISIONS

BLACK & VEATCH
Building a world of difference.
Black & Veatch Corporation
Registration No. F-869
Austin, Texas

STATE OF TEXAS
CARLOS R. CHAVEZ
119722
LICENSED PROFESSIONAL ENGINEER
6/17/2016

Austin WATER

Walnut Creek WWTP - Tertiary Filter Rehabilitation Project

CIP ID No. 3023.025

CIVIL
ENLARGED FILTER AREA SITE PLAN
YARD PIPING - DEMOLITION

DESIGNED BY:	SNA
DRAWN BY:	AWL
REVIEWED BY:	WLK
APPROVED BY:	TSD
PROJECT NO.:	168622
DATE:	4/4/2014
SCALE:	1"=15'

REVISION:

DISCIPLINE NO.
C-03A

DWG. NO.
15 OF 273

F0168622 SAVED: LEF07108, 3/5/2014 1:01:03 PM
D168622 PW ENGINEER: D168622.::(09.3025)*.Civil Drawings
File: C:\PWBatchPDF\Process\168622 - Austin Walnut Creek WWTP Filter Rehab\C_03A.dwg Layout: Layout1 Plotted: 6/9/2016 1:51:31 PM

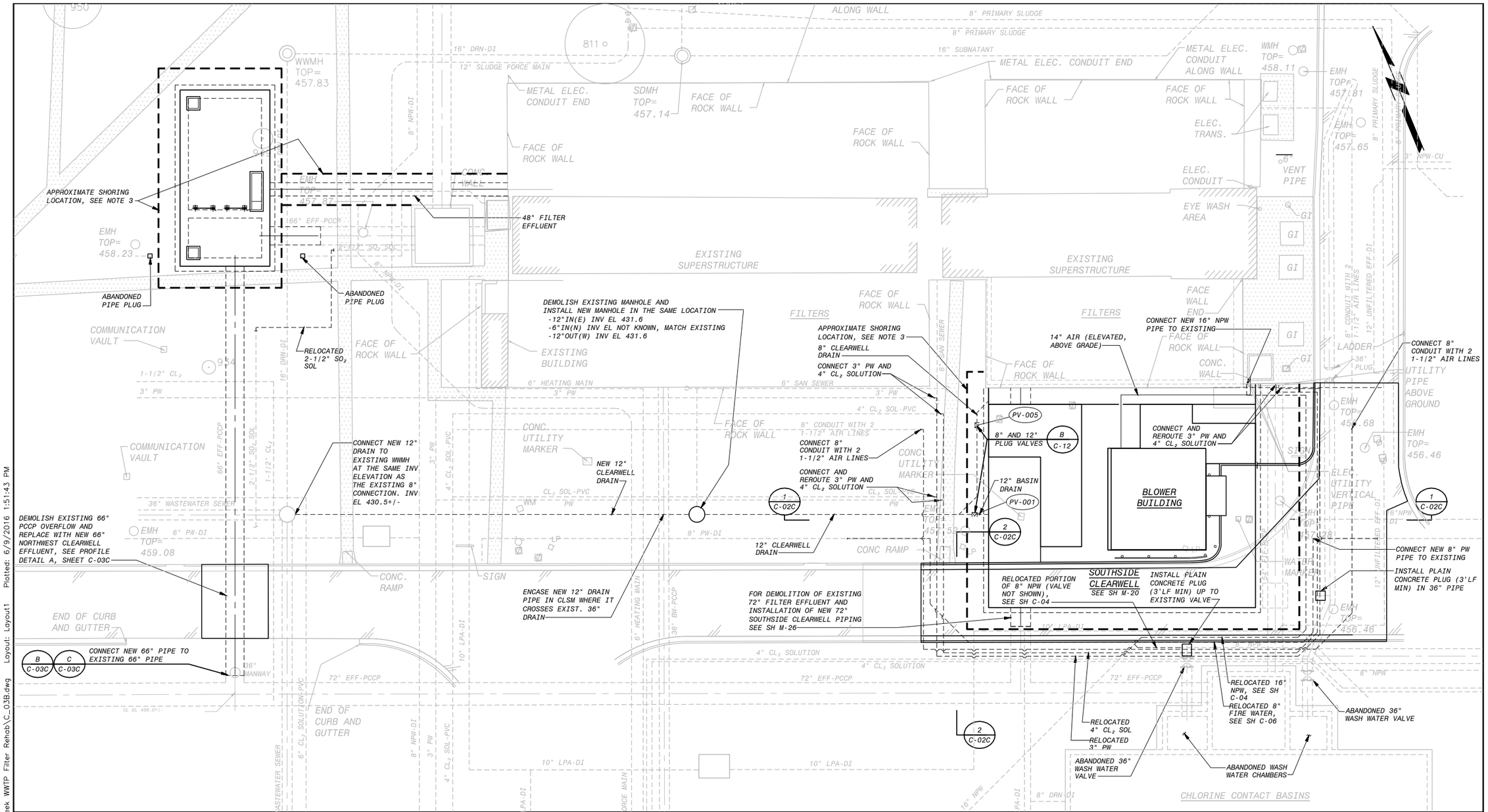

SITE PLAN YARD PIPING - NEW WORK

15' 0 15' 30'

1"=15'

NOTES:

1. THE 8" AND 12" CLEARWELL DRAINS SHALL BE INSTALLED SLOPED UNIFORMLY AS DETAILED ON SHEETS C-03B AND M-19. SEE ELECTRICAL SHEETS FOR RELOCATED DUCTBANKS. CONTRACTOR SHALL THOROUGHLY TEST PIT ALL AREAS WITH NEW CONSTRUCTION TO LOCATE UNDERGROUND ITEMS PRIOR TO CONSTRUCTION. TEST PIT INVESTIGATION SHALL BE PERFORMED TO DISCOVER ALL EXISTING PIPE CONNECTIONS TO ASSURE THAT ALL CONNECTIONS ARE RESTORED WITH RELOCATED PIPING. REPORT ANY DISCREPANCIES FOUND TO THE ENGINEER. UNLESS OTHERWISE INDICATED RELOCATED YARD PIPING DETAILED ON THIS SHEET DOES NOT SHOW NORTH-EAST COORDINATES. CONTRACTOR SHALL SUPPLY INSTALLED NORTH-EAST COORDINATES AND ELEVATIONS ON ALL RELOCATED YARD PIPES.

2. CONTRACTOR TO TAKE NECESSARY MEASURES TO PROTECT EXISTING AND RELOCATED YARD PIPING DURING EXCAVATION AND CONSTRUCTION. THE LOCATION OF RELOCATED YARD PIPING, DUCTBANKS, ETC MAY BE MODIFIED DUE TO FOUND FIELD CONDITIONS. ALL PROPOSED RELOCATIONS FROM THE CONTRACTOR SHALL BE APPROVED BY THE ENGINEER. ALL ITEMS SHALL BE THOROUGHLY DOCUMENTED ON AS-BUILT DOCUMENTS

3. PROVIDE AND INSTALL SHORING SYSTEM AT APPROXIMATE LOCATIONS SHOWN. CONTRACTOR SHALL DETERMINE TYPE AND LOCATION OF SHORING SYSTEM AND COORDINATE WITH EXISTING UTILITIES, RELOCATED UTILITIES, EXISTING STRUCTURES, AND NEW CONSTRUCTION. THE LOCATION OF THE SYSTEM SHOWN ON THIS SHEET IS APPROXIMATE AND IS TO AID IN DETERMINATION OF YARD PIPING AND DUCT BANK RELOCATIONS. THE CONTRACTOR SHALL SUBMIT A SHORING PLAN FOR REVIEW DESIGNED BY A REGISTERED ENGINEER PRIOR TO BEGINNING ANY SHORING WORK.

4. CLSM (FLOWABLE FILL) SHALL BE USED FOR BACKFILL WHERE CLEAR AREA BETWEEN YARD PIPING IS LESS THAN 24 INCHES OR AS DETERMINED BY ENGINEER

NO.	DR	CK	DATE	DESCRIPTION

REVISIONS

BLACK & VEATCH
Building a world of difference.
Black & Veatch Corporation
Registration No. F-869
Austin, Texas

Carlos Gonzalez
STATE OF TEXAS
CARLOS R. GONZALEZ
119722
LICENSED
PROFESSIONAL ENGINEER
6/17/2016

Austin WATER
Walnut Creek WWTP - Tertiary Filter Rehabilitation Project
CIP ID No. 3023.025

CIVIL
ENLARGED FILTER AREA SITE PLAN
YARD PIPING - NEW WORK

DESIGNED BY:	SNA
DRAWN BY:	AWL
REVIEWED BY:	WLK
APPROVED BY:	TSD
PROJECT NO.:	168622
DATE:	4/4/2014
SCALE:	1"=15'
REVISION:	
DISCIPLINE NO.	C-03B
DWG. NO.	16 OF 273

FD168622 SAVED:LER07108, 3/5/2014 1:01:03 PM
D168622 ENVIRONRD\168622...\09.5025 - Civil Drawings
File: C:\PWBatchPDF\Process\168622 - Austin Walnut Creek WWTP Filter Rehab\C_03B.dwg Layout: Layout1 Plotted: 6/9/2016 1:51:43 PM

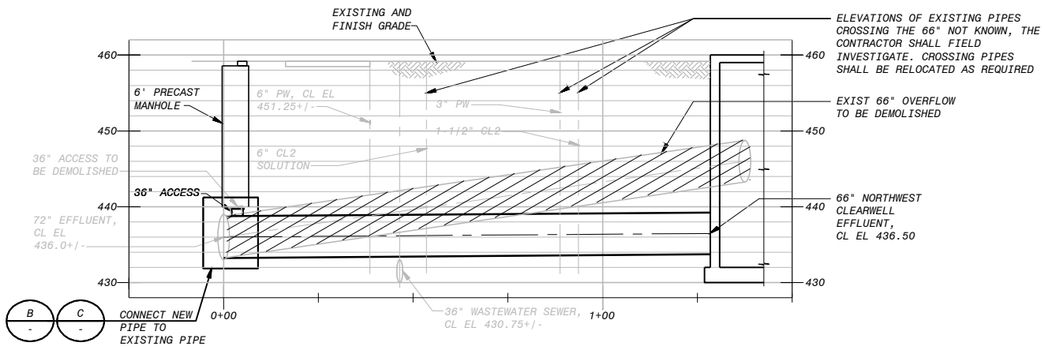

66" NORTHWEST CLEARWELL EFFLUENT PROFILE (A)

HORIZ 1"=20'
VERT 1'=5'

C-03A, C-03B

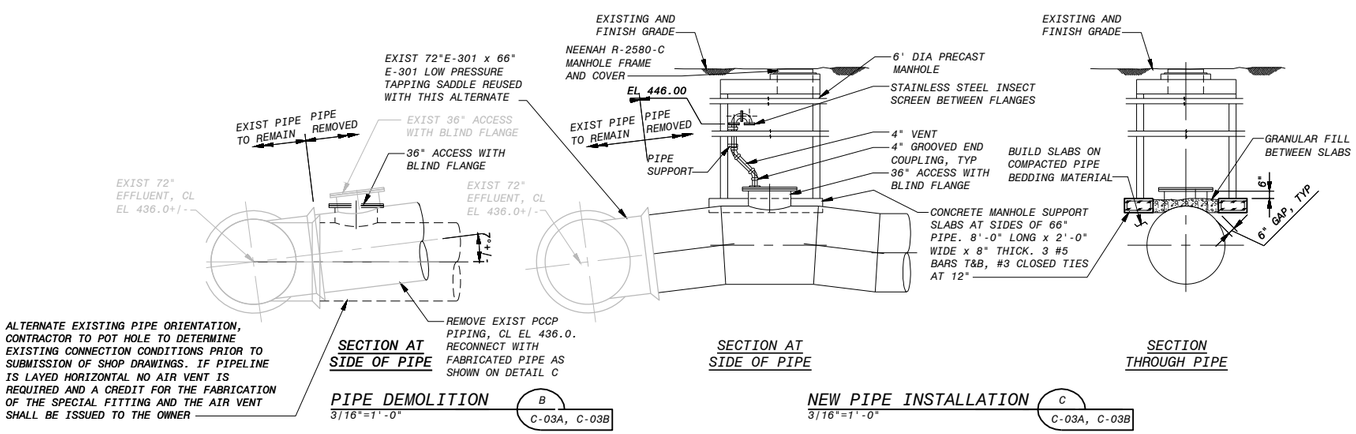

PIPE DEMOLITION (B)

3/16"=1'-0"

C-03A, C-03B

NEW PIPE INSTALLATION (C)

3/16"=1'-0"

C-03A, C-03B

NO.	BY	CK	DATE	DESCRIPTION

REVISIONS

BLACK & VEATCH
Building a world of difference.
Black & Veatch Corporation
Registration No. F-869
Austin, Texas

STATE OF TEXAS
CARLOS R. CHAVEZ
119722
LICENSED
PROFESSIONAL ENGINEER
Carlos Chavez
6/17/2016

Austin WATER
Walnut Creek WWTP - Tertiary Filter Rehabilitation Project
CIP ID No. 3023.025

CIVIL
YARD PIPING
66" FILTER EFFLUENT DETAILS

DESIGNED BY:	BMC, SNA
DRAWN BY:	AWL
REVIEWED BY:	WLK
APPROVED BY:	TSD
PROJECT NO.:	168622
DATE:	4/4/2014
SCALE:	AS SHOWN

REVISION:

DISCIPLINE NO.
C-03C

DWG. NO.
17 OF 273

FD168622 SAVED: LEF097108, 3/5/2014 1:01:03 PM
D168622 CAD STANDARD: Civil Drawings
File: C:\PWBatchPDF\Process\168622 - Austin Walnut Creek WWTP Filter Rehab\C_03C.dwg Layout: Layout1 Plotted: 6/9/2016 1:51:57 PM

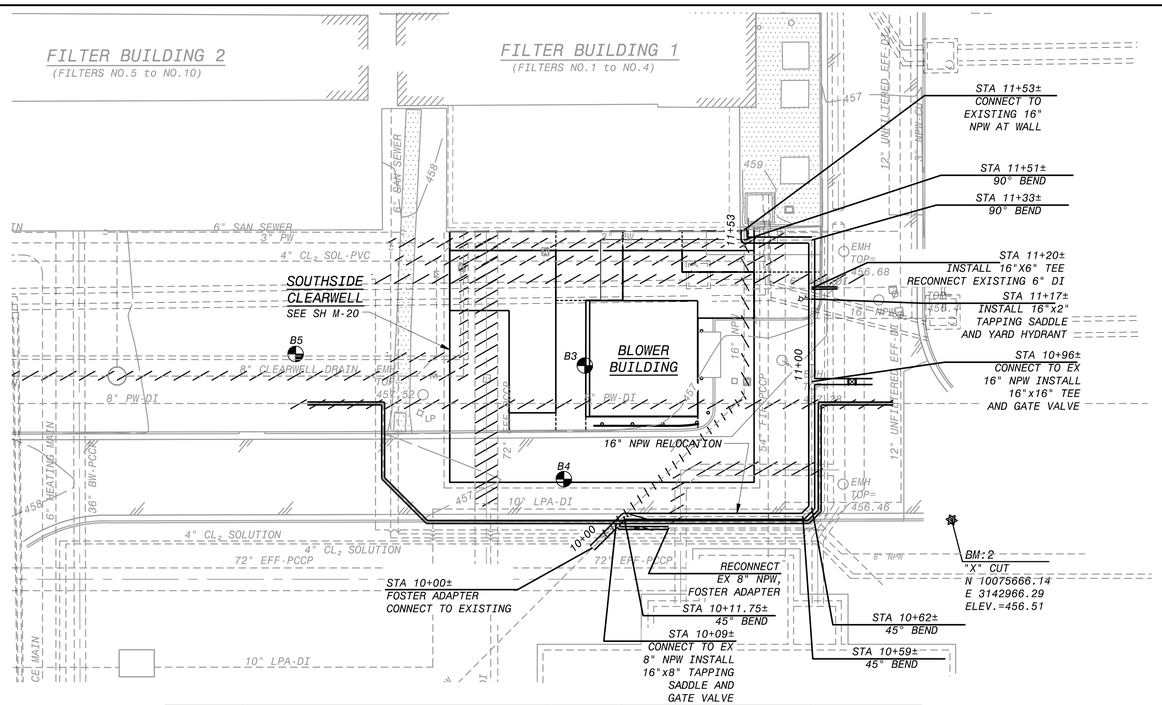

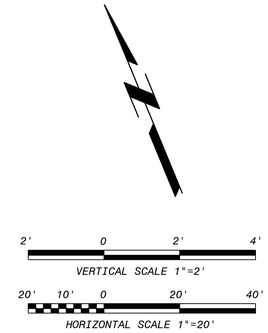

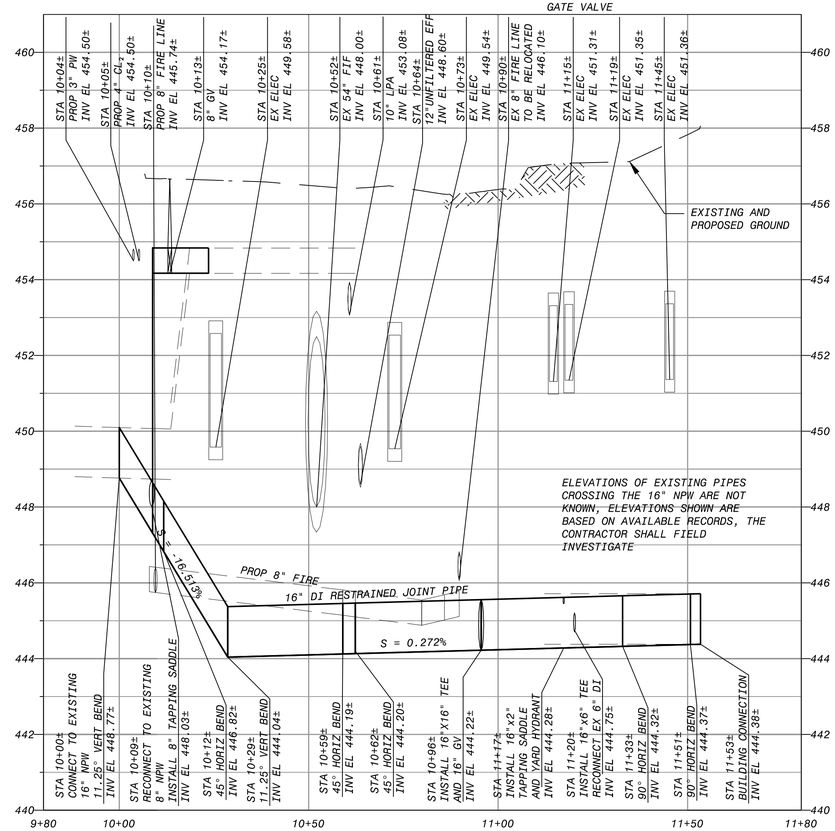

16" NPW RELOCATION

1"=20'HORIZONTAL
1"=2' VERTICAL

NOTES:

1. UTILITY INFORMATION, SHOWN AS BACKGROUND IN THE PLAN VIEW, WAS OBTAINED FROM RECORD DRAWINGS. PIPE ROUTE SHOWN WAS SELECTED TO MINIMIZE CONFLICTS WITH EXISTING UTILITIES. PRIOR TO STARTING PIPE INSTALLATION, CONTRACTOR SHALL EVALUATE PROPOSED PIPE ROUTE AND PERFORM EXCAVATION IN THE FIELD, AS REQUIRED, TO IDENTIFY LOCATION OF EXISTING UTILITIES. AFTER EXISTING UTILITY LOCATION IS DEFINED, SUBMIT LOCATION INFORMATION TO ENGINEER FOR CONFIRMATION THAT EXISTING UTILITIES DO NOT CONFLICT WITH PROPOSED PIPE ROUTE. OBTAIN CONFIRMATION FROM ENGINEER PRIOR TO BEGINNING PIPE INSTALLATION.

2. CONTRACTOR IS RESPONSIBLE FOR ANY DAMAGES DURING THE COURSE OF CONSTRUCTION TO BELOW GROUND UTILITIES AND ABOVE GROUND FACILITIES AND MUST REPAIR ANY DAMAGE IMMEDIATELY (NO SEPARATE PAY ITEM).

3. CONTRACTOR SHALL THOROUGHLY TEST PIT ALL AREAS WITH NEW CONSTRUCTION TO LOCATE UNDERGROUND ITEMS PRIOR TO CONSTRUCTION. TEST PIT INVESTIGATION SHALL BE PERFORMED TO DISCOVER ALL EXISTING PIPE CONNECTIONS TO ASSURE THAT ALL CONNECTIONS ARE RESTORED WITH RELOCATED PIPING. REPORT ANY DISCREPANCIES FOUND TO THE ENGINEER.

4. SEE GEOTECHNICAL DATA REPORT IN SECTION 0220 OF THE SPECIFICATIONS FOR BORE LOG INFORMATION.

BACKGROUND INFORMATION NOTE:

BACKGROUND IMAGES USED ON THIS SHEET ARE FROM AS-BUILT DRAWINGS FROM PREVIOUS CONTRACTS THAT WERE PREPARED BASED ON INFORMATION PROVIDED BY OTHERS. ALL ITEMS SHOWN IN THE BACKGROUND AND ALL NEW ITEMS RELYING ON BACKGROUND INFORMATION SHALL BE VERIFIED BY THE CONTRACTOR FOR ACCURACY BEFORE APPLYING THIS INFORMATION FOR ANY PURPOSE.

NO.	DR	CK	DATE	DESCRIPTION
				REVISIONS

BLACK & VEATCH
Building a world of difference.
Black & Veatch Corporation
Registration No. F-258
Austin, Texas

CAS CONSULTING & SERVICES INC
ENGINEERING
AUSTIN, TEXAS 78754
TBPE NO. F-10673

STATE OF TEXAS
KENNY CALLIER LEIGHTON
97914
LICENSED
PROFESSIONAL ENGINEER
9/24/2014

Austin WATER
Walnut Creek WWTP - Tertiary Filter Rehabilitation Project
CIP ID No. 3023.025

CIVIL
YARD PIPING
16" NPW RELOCATION

DESIGNED BY:	BMC, SNA
DRAWN BY:	AWL
REVIEWED BY:	WLK
APPROVED BY:	TSD
PROJECT NO.:	168622
DATE:	4/4/2014
SCALE:	AS SHOWN
REVISION:	
DISCIPLINE NO.	C-04
DWG. NO.	18 OF 273

FD168622 SAVED: LEIGHTON, 9/5/2014 1:01:03 PM
D168622 PW:PWEDMS01\DMS02, 168622, 3023.025 - CIP Drawings
File: C:\pw_working\cnapw\d0671638\C-04.dwg Layout: Layout1 Plotted: 9/24/2014 4:47:14 PM

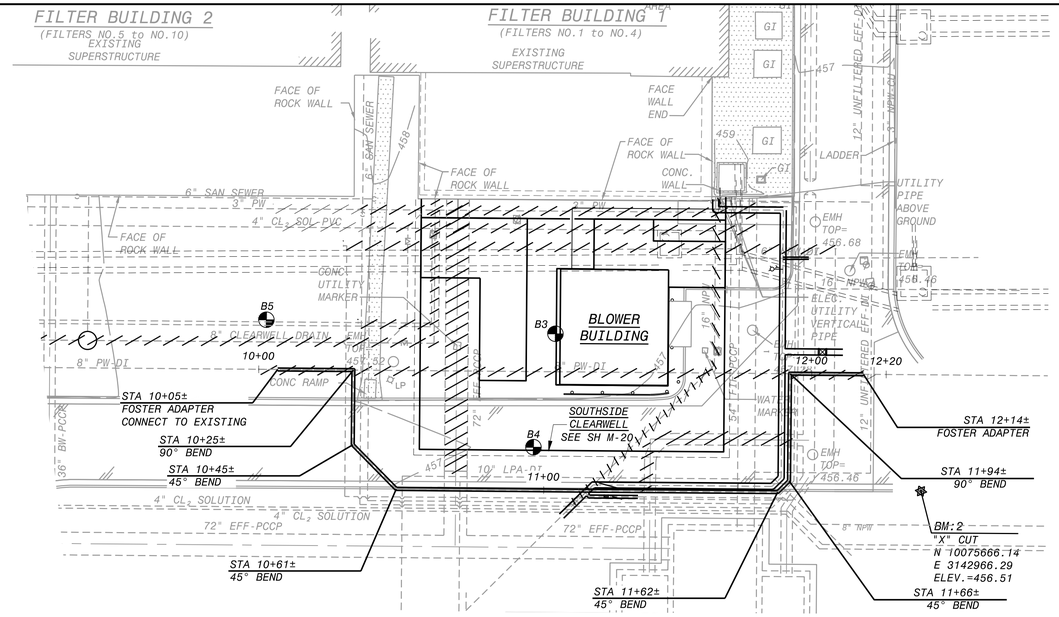

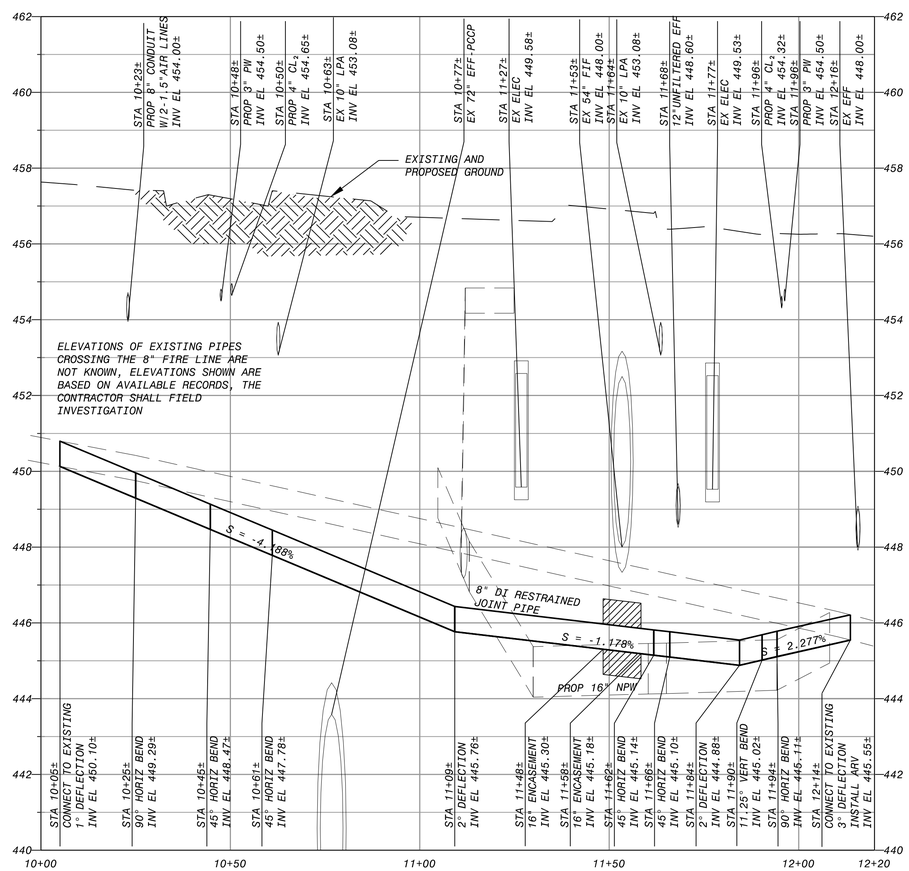

8" FIRE LINE RELOCATION

1"=20'HORIZONTAL
1"=2' VERTICAL

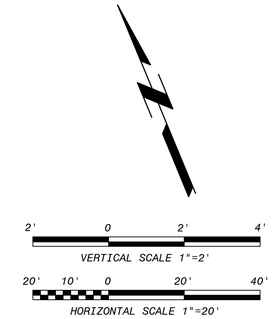

NOTES:

1. UTILITY INFORMATION, SHOWN AS BACKGROUND IN THE PLAN VIEW, WAS OBTAINED FROM RECORD DRAWINGS. PIPE ROUTE SHOWN WAS SELECTED TO MINIMIZE CONFLICTS WITH EXISTING UTILITIES. PRIOR TO STARTING PIPE INSTALLATION, CONTRACTOR SHALL EVALUATE PROPOSED PIPE ROUTE AND PERFORM EXCAVATION IN THE FIELD, AS REQUIRED, TO IDENTIFY LOCATION OF EXISTING UTILITIES. AFTER EXISTING UTILITY LOCATION IS DEFINED, SUBMIT LOCATION INFORMATION TO ENGINEER FOR CONFIRMATION THAT EXISTING UTILITIES DO NOT CONFLICT WITH PROPOSED PIPE ROUTE. OBTAIN CONFIRMATION FROM ENGINEER PRIOR TO BEGINNING PIPE INSTALLATION.

2. CONTRACTOR IS RESPONSIBLE FOR ANY DAMAGES DURING THE COURSE OF CONSTRUCTION TO BELOW GROUND UTILITIES AND ABOVE GROUND FACILITIES AND MUST REPAIR ANY DAMAGE IMMEDIATELY (NO SEPARATE PAY ITEM).

3. CONTRACTOR SHALL THOROUGHLY TEST PIT ALL AREAS WITH NEW CONSTRUCTION TO LOCATE UNDERGROUND ITEMS PRIOR TO CONSTRUCTION. TEST PIT INVESTIGATION SHALL BE PERFORMED TO DISCOVER ALL EXISTING PIPE CONNECTIONS TO ASSURE THAT ALL CONNECTIONS ARE RESTORED WITH RELOCATED PIPING. REPORT ANY DISCREPANCIES FOUND TO THE ENGINEER.

4. SEE GEOTECHNICAL DATA REPORT IN SECTION 0220 OF THE SPECIFICATIONS FOR BORE LOG INFORMATION.

BACKGROUND INFORMATION NOTE:

BACKGROUND IMAGES USED ON THIS SHEET ARE FROM AS-BUILT DRAWINGS FROM PREVIOUS CONTRACTS THAT WERE PREPARED BASED ON INFORMATION PROVIDED BY OTHERS. ALL ITEMS SHOWN IN THE BACKGROUND AND ALL NEW ITEMS RELYING ON BACKGROUND INFORMATION SHALL BE VERIFIED BY THE CONTRACTOR FOR ACCURACY BEFORE APPLYING THIS INFORMATION FOR ANY PURPOSE.

NO.	DR	CK	DATE	DESCRIPTION
				REVISIONS

BLACK & VEATCH
Building a world of difference.
Black & Veatch Corporation
Registration No. F-258
Austin, Texas

CAS CONSULTING & SERVICES INC
7000 N. MOPAC EXPY.
SUITE 200
AUSTIN, TEXAS 78731
(512) 346-8087

STATE OF TEXAS
HENRY CALDER LEIGHTON
97914
LICENSED PROFESSIONAL ENGINEER
9/24/2014

Austin WATER
Walnut Creek WWTP - Tertiary Filter Rehabilitation Project
CIP ID No. 3023.025

CIVIL
YARD PIPING
8" FIRE LINE RELOCATION

DESIGNED BY:	CRS
DRAWN BY:	BRV
REVIEWED BY:	CRS
APPROVED BY:	CRS
PROJECT NO.:	168622
DATE:	04/04/2014
SCALE:	AS NOTED
REVISION:	
DISCIPLINE NO.	C-06
DWG. NO.	19 OF 273

FD168622
D168622
File: C:\pw_working\cngpw\d0671638\C-06.dwg Layout: Layout1 Plotted: 9/24/2014 4:50:30 PM
SAVED: LEIGHTON, 6/12/2013 9:00:17 AM
PW-FIGURE: LEIGHTON, 9/24/2014 4:50:29 PM
PW-FIGURE: C:\Civil 3D Drawings

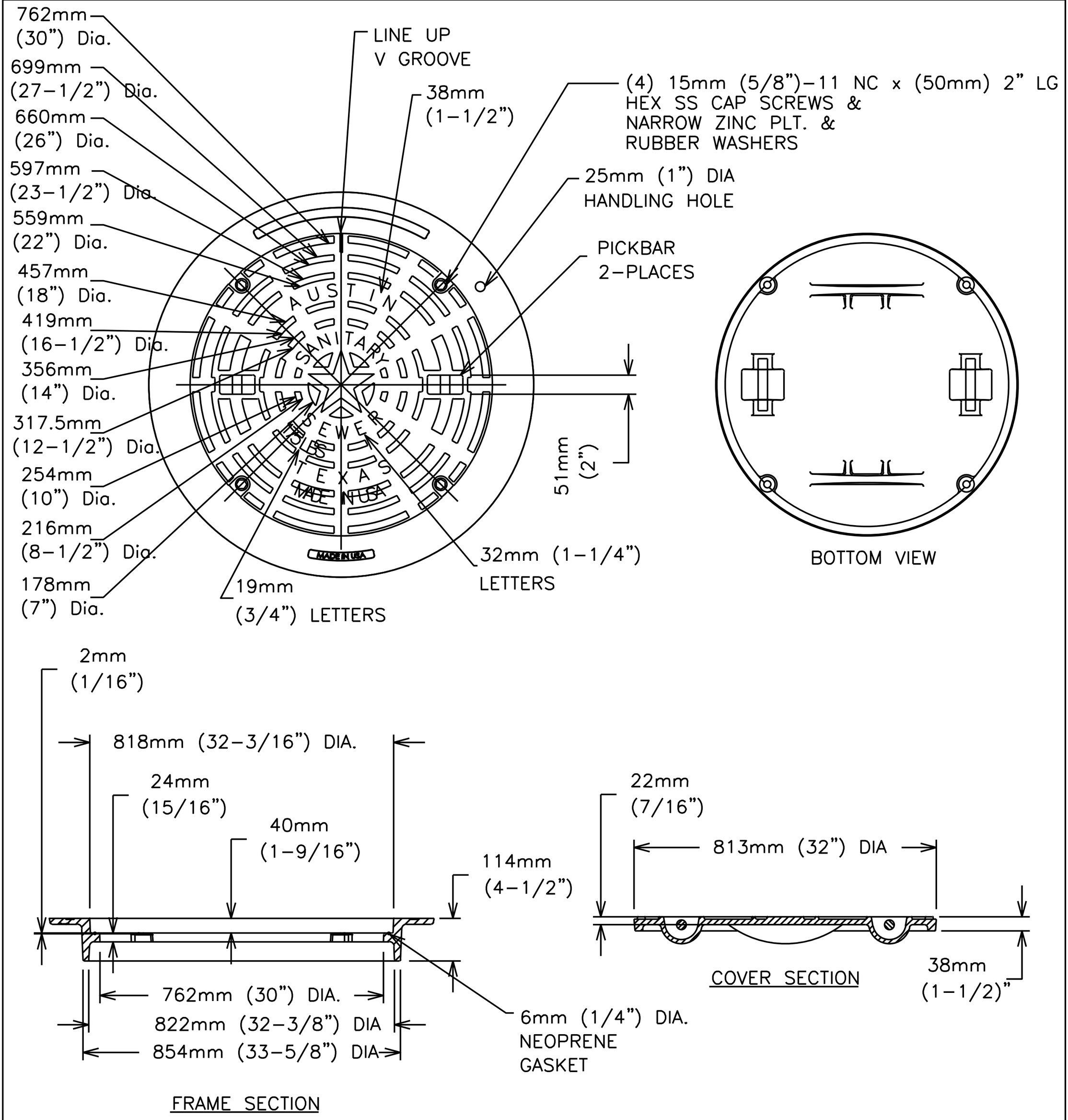

NOTES :
1. MANUFACTURER'S LOGO, COUNTRY OF ORIGIN, LID WEIGHT (IN LBS.) AND DATE OF CASTING SHALL BE CAST IN RING AND COVER AS DESCRIBED BY 503S-5W.

2. SEE SPL WW-219 FOR ADDITIONAL INFORMATION.

CITY OF AUSTIN AUSTIN WATER UTILITY	WATERTIGHT MANHOLE RING AND 813mm 32" COVER	
RECORD COPY SIGNED BY KATHI L FLOWERS — 06/01/10 ADOPTED	THE ARCHITECT/ENGINEER ASSUMES RESPONSIBILITY FOR APPROPRIATE USE OF THIS STANDARD.	STANDARD NO. 503S-6W 1 OF 2

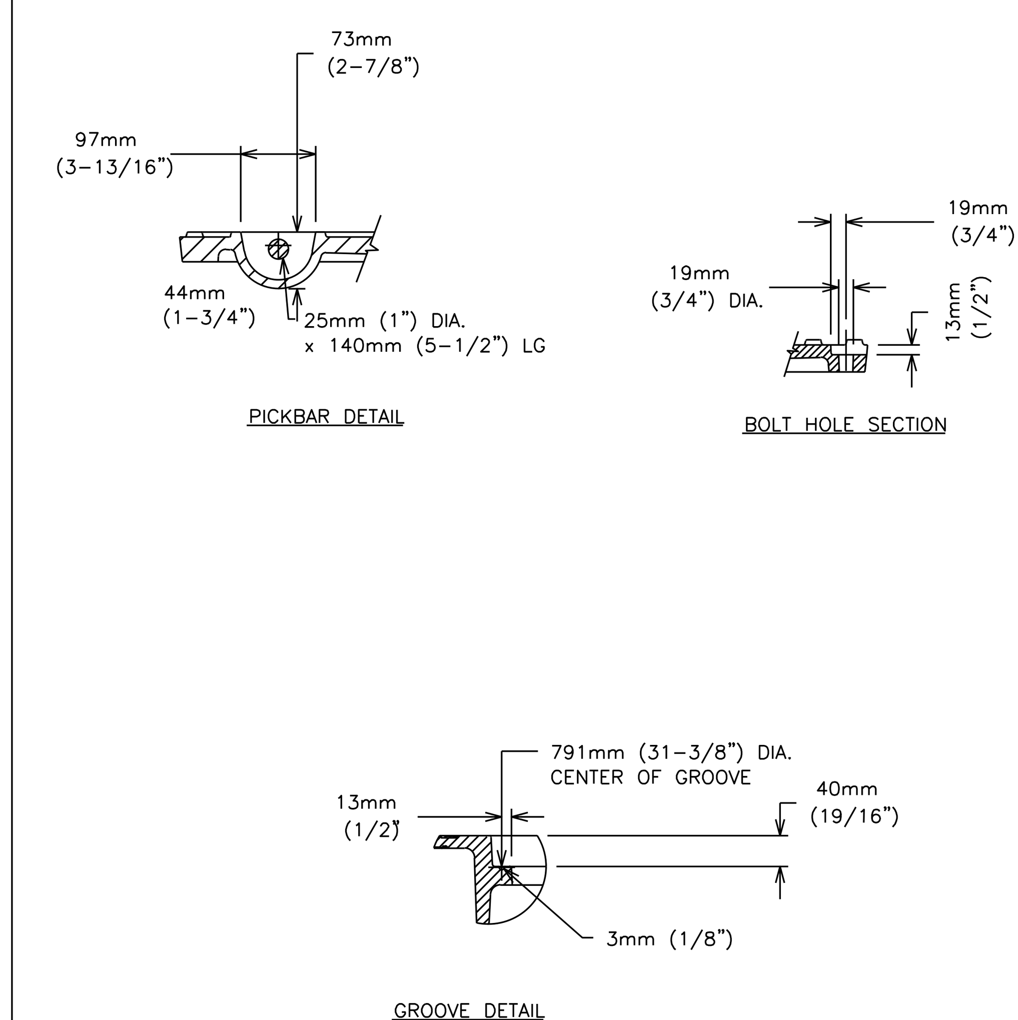

CITY OF AUSTIN AUSTIN WATER UTILITY	WATERTIGHT MANHOLE RING AND 813mm 32" COVER	
RECORD COPY SIGNED BY KATHI L FLOWERS — 06/01/10 ADOPTED	THE ARCHITECT/ENGINEER ASSUMES RESPONSIBILITY FOR APPROPRIATE USE OF THIS STANDARD.	STANDARD NO. 503S-6W 2 OF 2

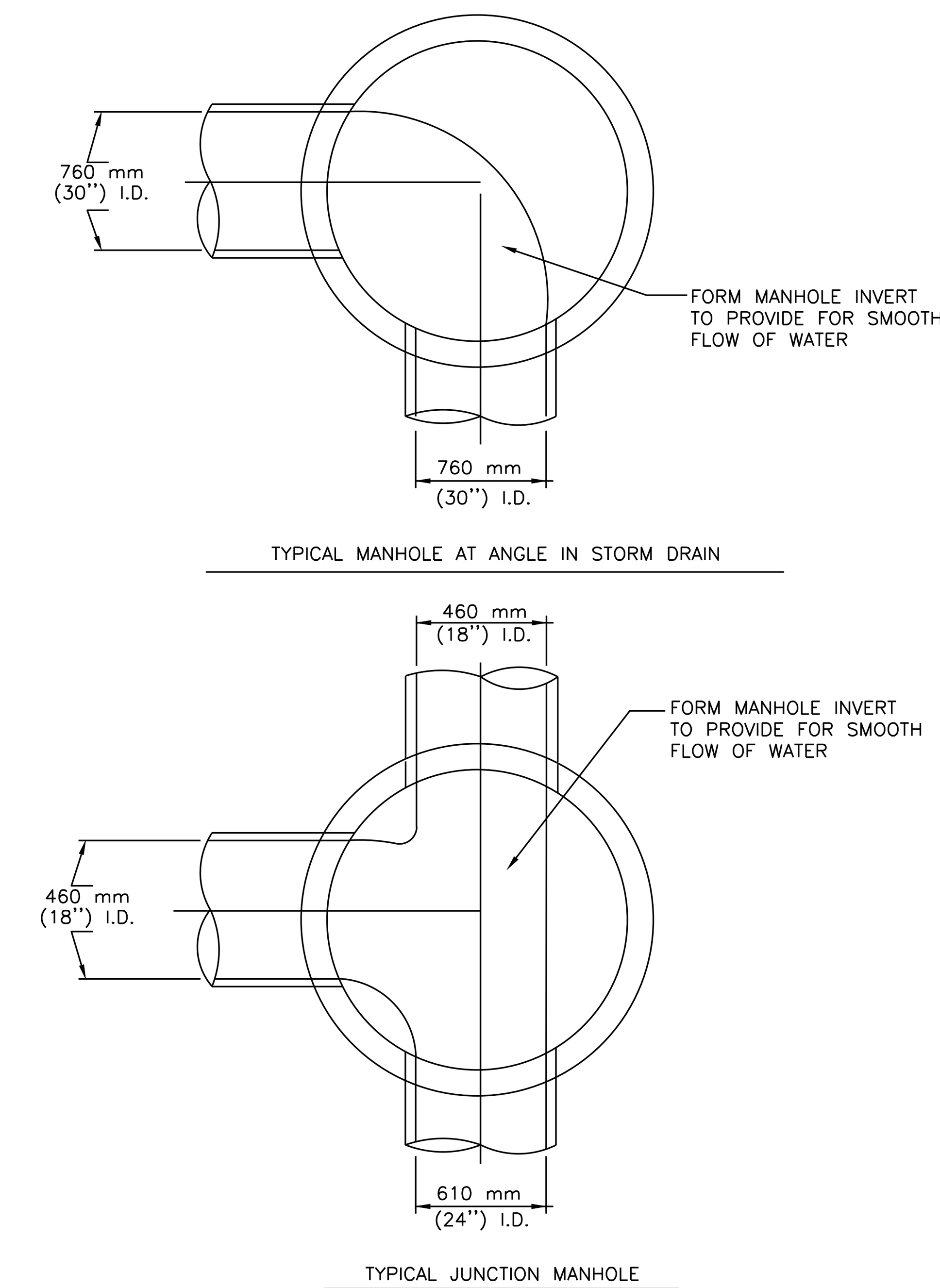

CITY OF AUSTIN DEPARTMENT OF WATERSHED PROTECTION AND DEVELOPMENT REVIEW	MANHOLE INVERT PLAN	
RECORD COPY SIGNED BY GEORGE E. OSWALD — 2/14/02 ADOPTED	THE ARCHITECT/ENGINEER ASSUMES RESPONSIBILITY FOR APPROPRIATE USE OF THIS STANDARD.	STANDARD NO. 506S-1

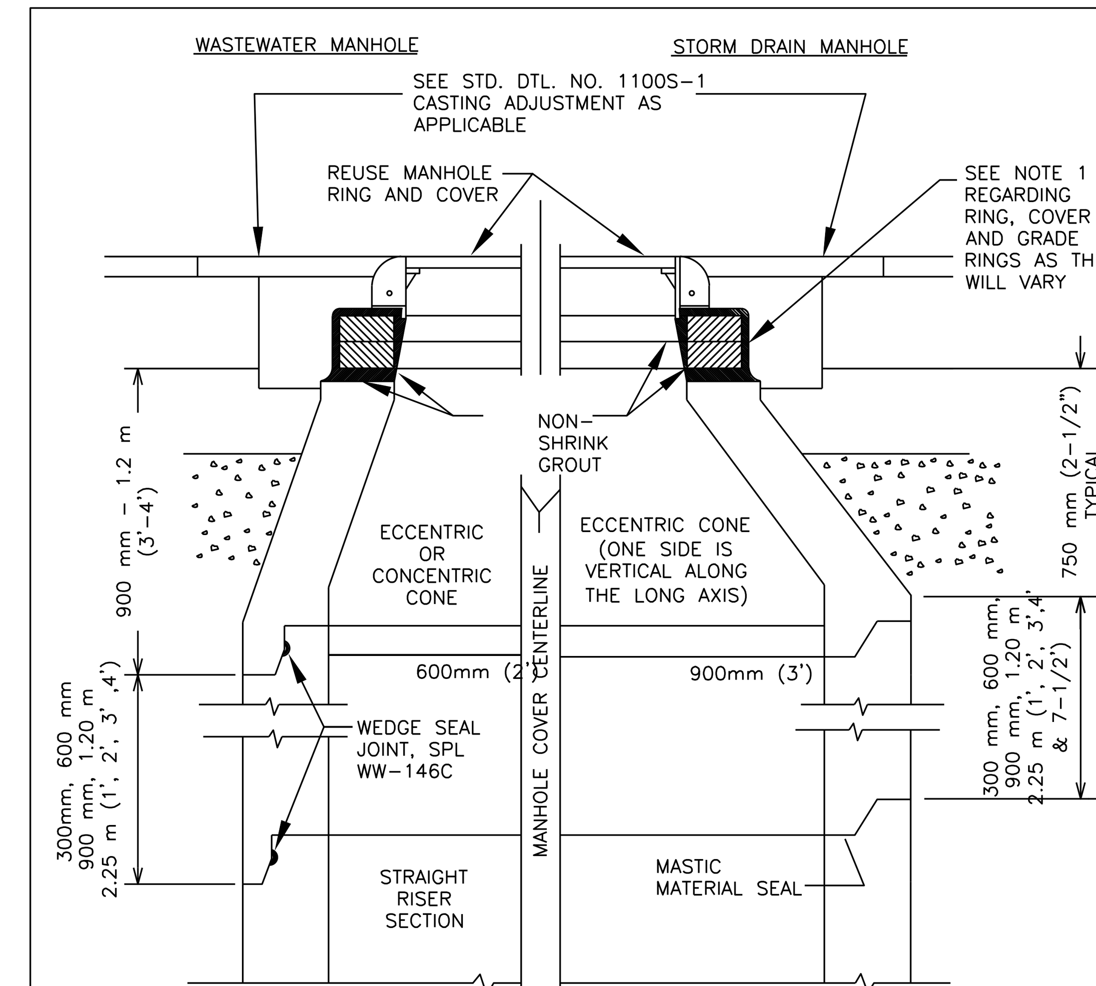

1. SEE "MINOR MANHOLE HEIGHT ADJUSTMENT" STANDARDS 506S-4 AND 506S-4A FOR ADDITIONAL INFORMATION.
2. MANHOLE SECTIONS TEMPORARILY REMOVED FOR ROADWAY CONSTRUCTION MAY BE REUSED ONLY WITH WRITTEN APPROVAL OF THE INSPECTOR. WEDGE SEALS SHALL NOT BE REUSED.
3. ANY COMBINATION OF REMOVING THE GRADE RINGS, AND/OR THE MANHOLE CONE, AND/OR THE STRAIGHT RISER SECTION OF THE MANHOLE SHALL BE ACCEPTABLE TO TEMPORARILY LOWER THE MANHOLE GRADE FOR RECONSTRUCTION.
4. WHILE THE MANHOLE IS TEMPORARILY LOWERED, A SHEET OF STEEL SUITABLE TO SUPPORT ALL IMPOSED LOADS SHALL BE USED TO COVER THE OPENING. STEEL SHALL BE PLACED SO THE SHEET WILL NOT MOVE UNDER ANY & ALL TRAFFIC CONDITIONS.
5. SUB-GRADE AND BASE MATERIALS SHALL BE COMPACTED TO 95% AND 100% DENSITIES, RESPECTIVELY, COMPACTION SHALL BE BY MECHANICAL TAMPING TO THE DENSITIES SPECIFIED, SEE STD. DTL. NO.1100S-1.

CITY OF AUSTIN AUSTIN WATER UTILITY	MAJOR MANHOLE ADJUSTMENT	
RECORD COPY SIGNED BY KATHI L FLOWERS — 08/31/2011	THE ARCHITECT/ENGINEER ASSUMES RESPONSIBILITY FOR APPROPRIATE USE OF THIS STANDARD.	STANDARD NO. 506S-2

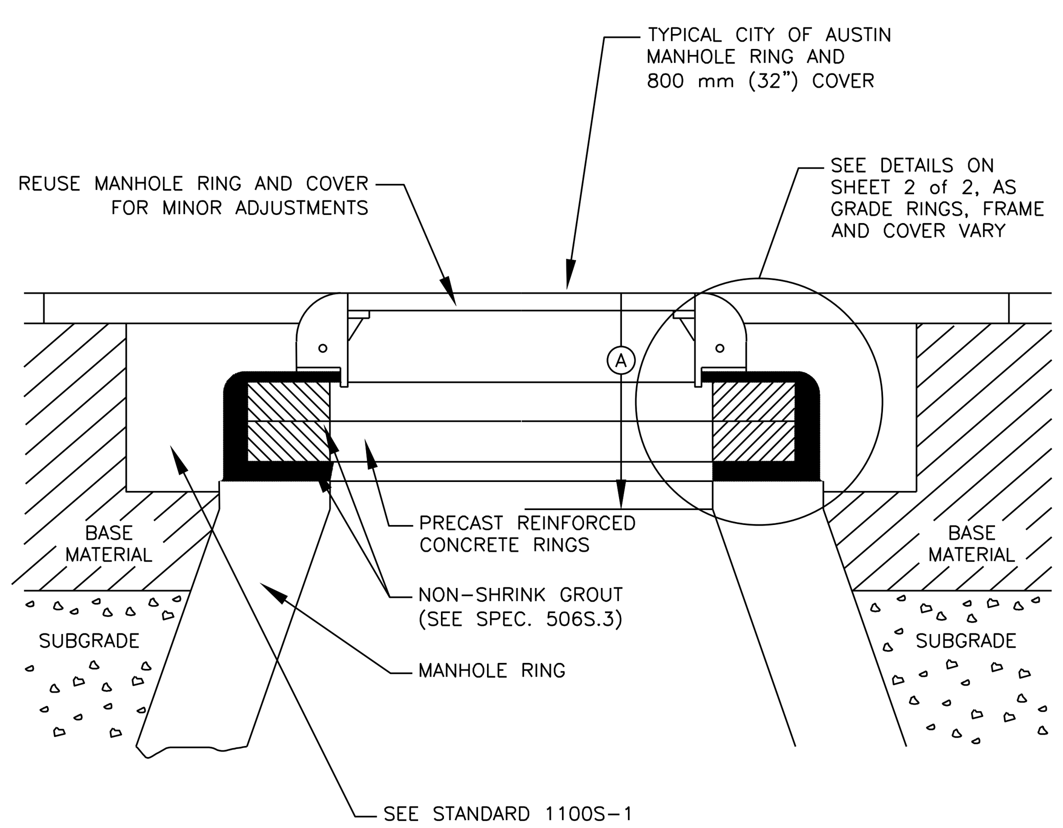

(A) VERTICAL FACE = ALLOWABLE THROAT OR CHIMNEY HEIGHT
= NEW CONSTRUCTION = 525mm = (21") Max.
= EXISTING CONSTRUCTION = 675mm (27") Max.

NOTES:
1. NON-SHRINK GROUT SHALL NOT EXCEED 25 mm (1") IN ANY DIMENSION.
2. SUB-GRADE AND BASE MATERIALS SHALL BE COMPACTED ACCORDING TO ITEMS 201S AND 210S, RESPECTIVELY, OF THE CITY OF AUSTIN STANDARD SPECIFICATIONS.
3. REFER TO STANDARD 1100S-1 FOR REPAIRS AROUND MANHOLES.
4. SEE STANDARD 506S-4A FOR HDPE RING INSTALLATION (FOR USE IN PAVED AREAS ONLY).

CITY OF AUSTIN AUSTIN WATER UTILITY	MINOR MANHOLE ADJUSTMENT & NEW MANHOLE CONSTRUCTION	
RECORD COPY SIGNED BY KATHI L FLOWERS — 08/31/2011	THE ARCHITECT/ENGINEER ASSUMES RESPONSIBILITY FOR APPROPRIATE USE OF THIS STANDARD.	STANDARD NO. 506S-4 1 OF 2

INSIDE PAVEMENT DETAIL

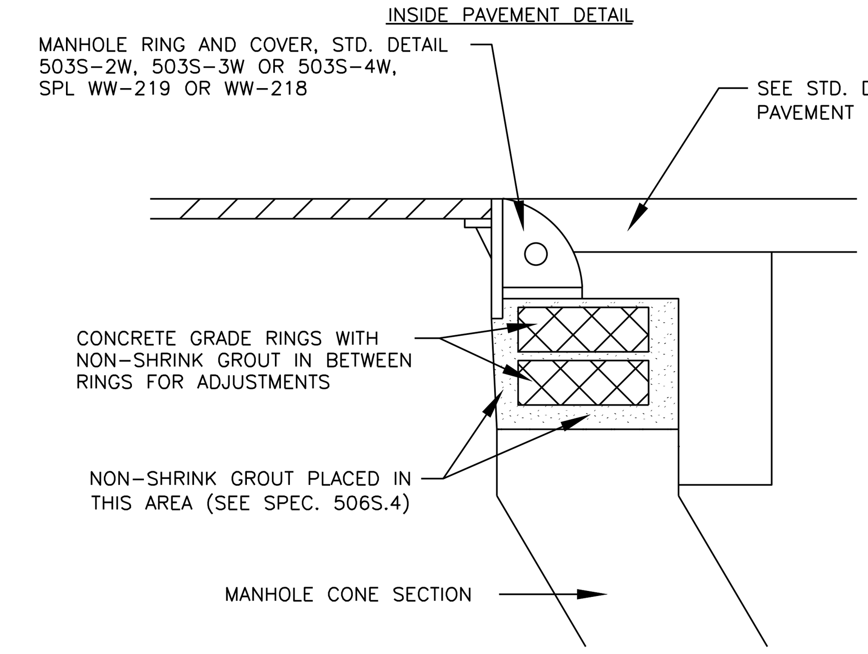

OUTSIDE PAVEMENT DETAIL

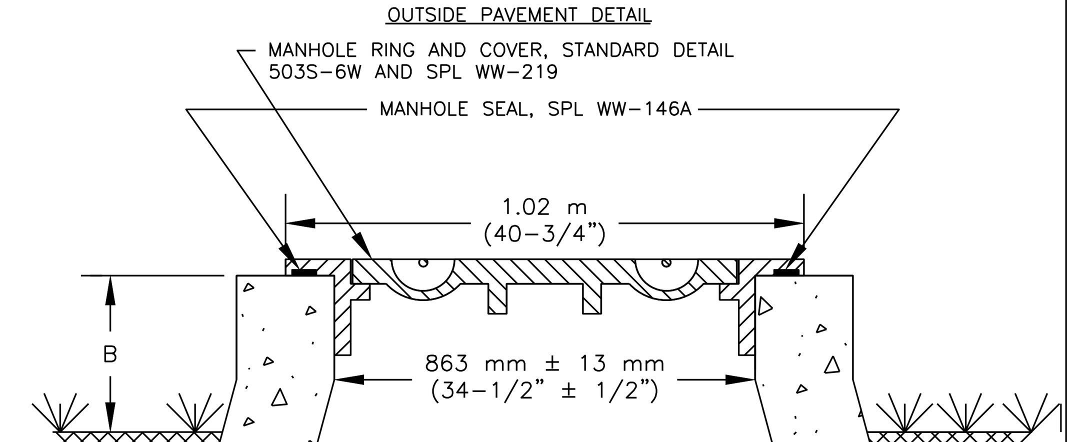

NOTES:
1. FOR USE IN UNPAVED AREAS ONLY
2. WHEN USED WITHIN 100-YEAR FLOODPLAIN, SEE DTL. 506S-6 FOR ADDITIONAL M.H. REQUIREMENTS.
3. DIMENSION B=150-300 mm (6"-12") FOR M.H. LOCATED IN 100-YR FLOOD PLAN.
=50-300 mm (2"-12") FOR M.H. OUTSIDE 100-YR FLOOD PLAN.

CITY OF AUSTIN AUSTIN WATER UTILITY	MINOR MANHOLE ADJUSTMENT & NEW MANHOLE CONSTRUCTION	
RECORD COPY SIGNED BY KATHI L FLOWERS — 08/31/2011	THE ARCHITECT/ENGINEER ASSUMES RESPONSIBILITY FOR APPROPRIATE USE OF THIS STANDARD.	STANDARD NO. 506S-4 2 OF 2

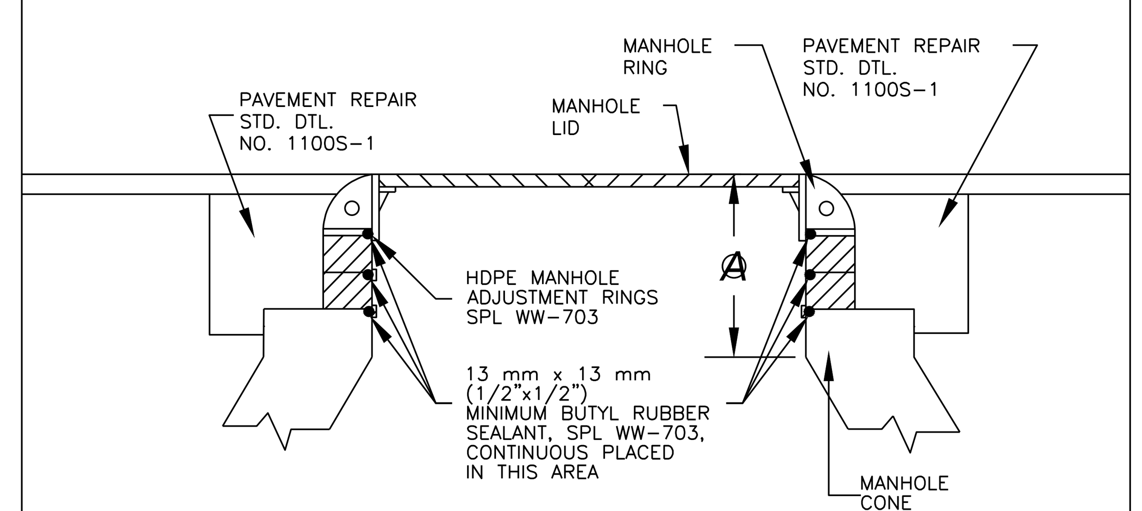

(A) VERTICAL FACE = ALLOWABLE THROAT OR CHIMNEY HEIGHT
NEW CONSTRUCTION = 525mm (21") Max.
EXISTING CONSTRUCTION = 675mm (27") Max.

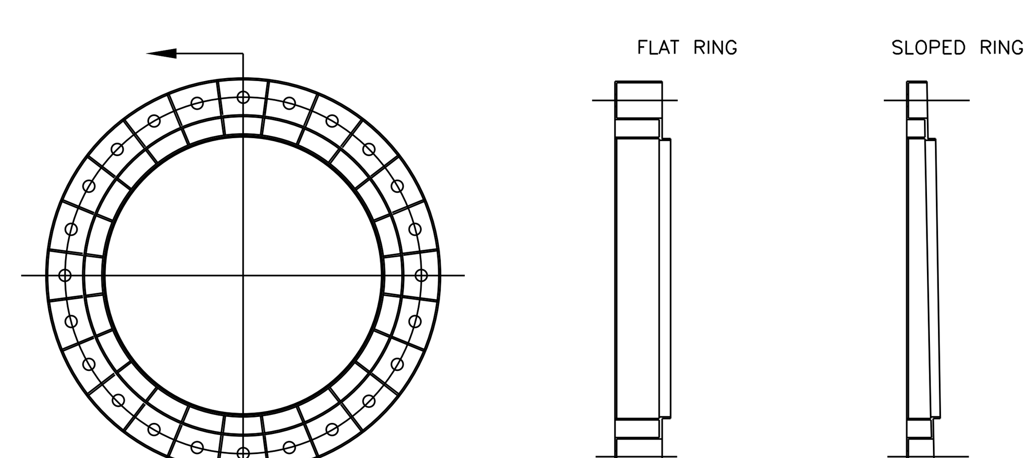

NOTE:
1. HDPE RINGS ONLY IN PAVED AREAS

CITY OF AUSTIN AUSTIN WATER UTILITY	MINOR MANHOLE HEIGHT ADJUSTMENT (HDPE RINGS)	
RECORD COPY SIGNED BY KATHI L FLOWERS — 08/31/2011	THE ARCHITECT/ENGINEER ASSUMES RESPONSIBILITY FOR APPROPRIATE USE OF THIS STANDARD.	STANDARD NO. 506S-4A 1 OF 3

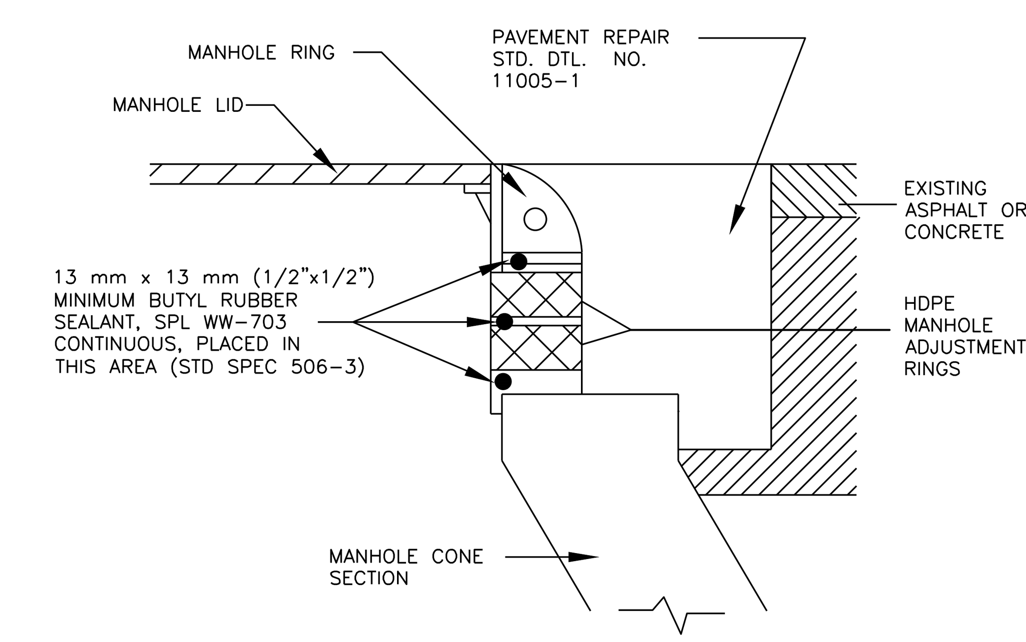

CITY OF AUSTIN AUSTIN WATER UTILITY	MINOR MANHOLE HEIGHT ADJUSTMENT (HDPE RINGS)	
RECORD COPY SIGNED BY KATHI L FLOWERS — 08/31/2011	THE ARCHITECT/ENGINEER ASSUMES RESPONSIBILITY FOR APPROPRIATE USE OF THIS STANDARD.	STANDARD NO. 506S-4A 2 OF 3

REVISIONS

NO.	DR	CK	DATE	DESCRIPTION

BLACK & VEATCH
Building a world of difference.
Black & Veatch Corporation
Registration No. F-258
Austin, Texas

CAS CONSULTING & SERVICES INC
7908 CAMERON RD
AUSTIN, TEXAS 78754
REG. No. F-003572

STATE OF TEXAS
HENRY CALDER LEIGHTON
97914
LICENSED PROFESSIONAL ENGINEER
9/24/2014

Walnut Creek WWTP - Tertiary Filter Rehabilitation Project
CIP ID No. 3023.025

CIVIL
YARD PIPING DETAILS
SHEET 1 OF 3

DESIGNED BY:	CRS
DRAWN BY:	BRV
REVIEWED BY:	CRS
APPROVED BY:	CRS
PROJECT NO.:	168622
DATE:	04/04/2014
SCALE:	NTS

REVISION:

DISCIPLINE NO.
C-07

DWG. NO.
20 OF 273

FD168622 SAVED: CAR51124, 10/7/2013 10:03:06 AM
D168622 CRSNET ID: CRS
File: C:\pw_working\cngpw\d0671638\C-07.dwg Layout: Work Plotted: 9/24/2014 4:51:25 PM

INSTALLATION INSTRUCTIONS
HDPE MANHOLE ADJUSTMENT RINGS
(FOR NEW CONSTRUCTION AND REHABILITATION)

1. REMOVE EXISTING CASTING AND RINGS OR COVER PLATE TO EXPOSE CONCRETE. MANHOLE SURFACE MUST BE CLEAN AND LEVEL ±6 mm (1/4"). NOTE: IF TOP OF CONCRETE STRUCTURE IS IN VERY POOR CONDITION OR IRREGULAR, THE FIRST RING CAN BE PRESSED FULLY INTO A HEAVY BED OF MORTAR ALLOWING IT AND SUBSEQUENT RINGS TO BE POSITIONED WITHOUT WOBBLE OR POINT-LOADING.
2. POSITION STRAIGHT AND LEVEL TO DETERMINE HEIGHT ADJUSTMENT REQUIRED. CONFIRM BEFORE PLACING RINGS.
3. COMBINE VARIOUS RING HEIGHTS, IN BOTH FLAT AND SLOPE, TO REACH DESIRED ADJUSTMENT. PLACE RINGS WITH INNER POCKET OPENING UP (OUTER POCKET OPENING WITH HOLES DOWN). THE INTERLOCKING LIP (MALE TONGUE) EXTENDS DOWN INTO THE STRUCTURE OF LOWER RING. MULTIPLE SLOPE RINGS CAN BE ADDED AND ROTATED TO ACHIEVE DESIRED GRADE MATCH WITHIN 6 mm (1/4"). NOTE: SLOPE RINGS ARE TAPERED TO PROVIDE 2% GRADE COMPENSATION. IF REQUIRED, HDPE SHIMS (MAX. 6 mm (1/2") PER RING MAY BE USED TO MATCH GRADE EXACTLY.
4. DRY STACK RINGS WITHOUT SEALANT TO ACHIEVE DESIRED VERTICAL AND SLOPE ADJUSTMENT. IF SLOPE RINGS ARE USED, MARK INNER FACE OF STOCK WITH PAINT OR MARKER TO MAINTAIN ALIGNMENT WHEN RE-STACKING.
5. REMOVE THE RINGS AND PLACE NEARBY IN UPSIDE-DOWN ORDER (THIS ALLOWS FOR EASY RE-ASSEMBLY IN THE CORRECT ORDER). APPLY A CONTINUOUS BEAD OF APPROVED RUBBER BUTYL SEALANT (SPL WW-703) TO THE FLAT SURFACE OF THE FIRST RING ON THE SIDE OF THE MALE TONGUE THAT WILL REST AGAINST THE CONE OPENING (MALE TONGUE DOWN). APPLY SEALANT TO AFFECT A SEAL BETWEEN THE INTERLOCKING LIP AND THE CONCRETE SURFACE IT RESTS ON.
6. APPLY 13 mm (1/2") CONTINUOUS BEAD OF APPROVED BUTYL RUBBER SEALANT (SPL WW-703) TO THE NEXT RING. THE SEALANT MUST BE APPLIED DIRECTLY INTO THE INTERLOCKING LIP (MALE TONGUE) AND THE BOTTOM OF THE RING, FAVORING THE SIDE OF THE LIP TO ASSURE A SEAL. PLACE THIS RING WITH THE INTERLOCKING LIP (MALE TONGUE) FACING DOWN ON TOP OF THE LOWER RING PREVIOUSLY INSTALLED. PRESS THE RING IN PLACE TO SET AND DISPERSE SEALANT. REMEMBER TO RE-ASSEMBLE THE RINGS USING ALIGNMENT MARKS TO POSITION SLOPE RING(S) CORRECTLY.
7. REPEAT #6 ON ALL PRE-ASSEMBLED RINGS TO REACH DESIRED HEIGHT AND SLOPE ADJUSTMENT.
8. APPLY 13 mm (1/2") CONTINUOUS BEAD OF APPROVED BUTYL RUBBER SEALANT (SPL WW-703), TO THE TOP OF THE UPPER RING.
9. POSITION CASTING ON RING(S). PRESS THE CASTING FRAME IN PLACE TO SET AND DISPERSE SEALANT.
10. BACKFILL TO RESTORE TO STD. DETAIL 1100S-1.
11. RING MANUFACTURER MUST BE LISTED ON SPL WW-703.
12. FOR USE IN PAVED AREAS ONLY.

CITY OF AUSTIN
AUSTIN WATER UTILITY

MINOR MANHOLE HEIGHT ADJUSTMENT (HDPE RINGS)

RECORD COPY SIGNED BY KATHI L FLOWERS 08/31/2011

THE ARCHITECT/ENGINEER ASSUMES RESPONSIBILITY FOR APPROPRIATE USE OF THIS STANDARD.

STANDARD NO. 506S-4A 3 OF 3

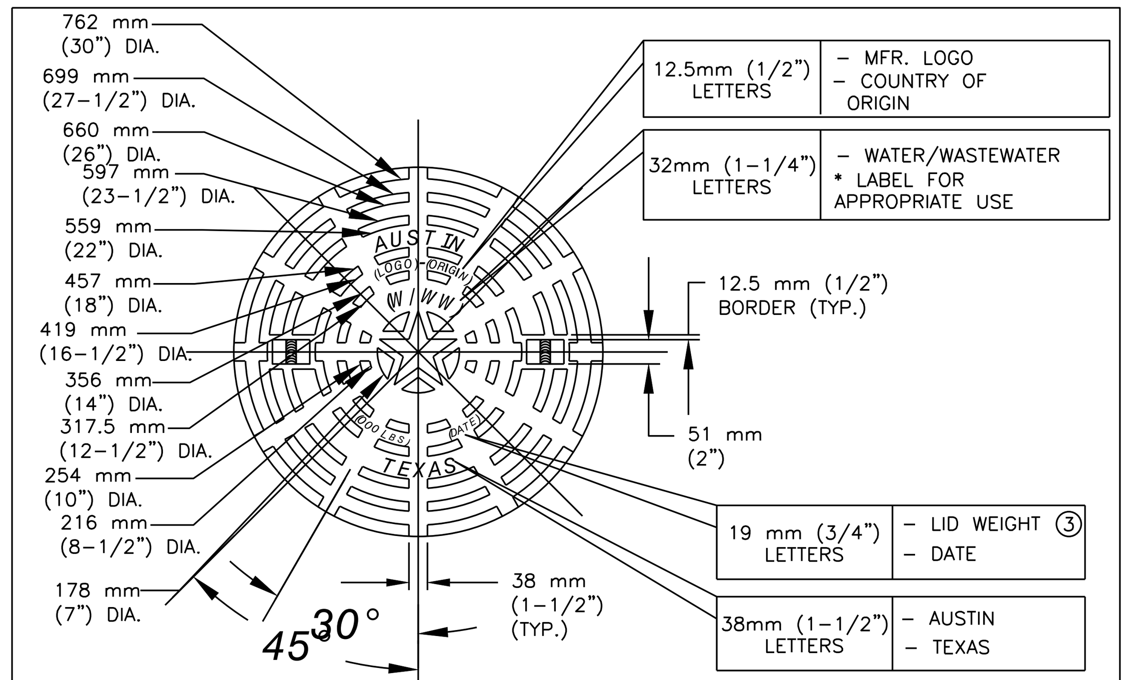

NOTE: ALL MANHOLES NOT LOCATED IN PAVED AREAS SHALL HAVE BOLTED COVERS AS PER SPEC. 506.

LID PLAN VIEW

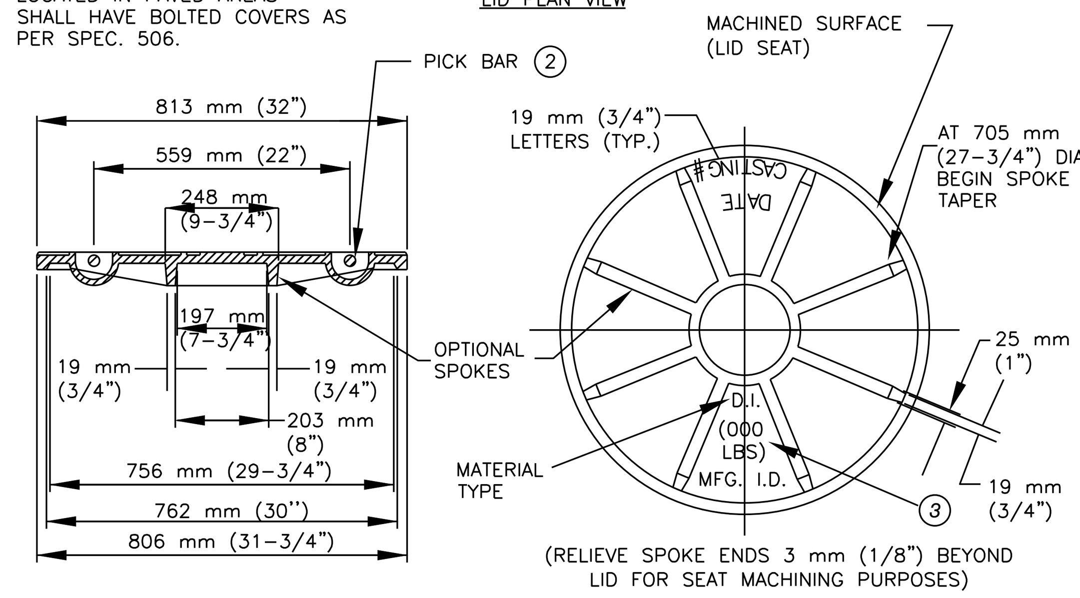

LID SECTION VIEW

LID SECTION VIEW

CITY OF AUSTIN
AUSTIN WATER UTILITY

MANHOLE RING AND 813 mm (32") COVER

RECORD COPY SIGNED BY KATHI L. FLOWERS 09/23/10 ADOPTED

THE ARCHITECT/ENGINEER ASSUMES RESPONSIBILITY FOR APPROPRIATE USE OF THIS STANDARD.

STANDARD NO. 503S-4W 1 OF 3

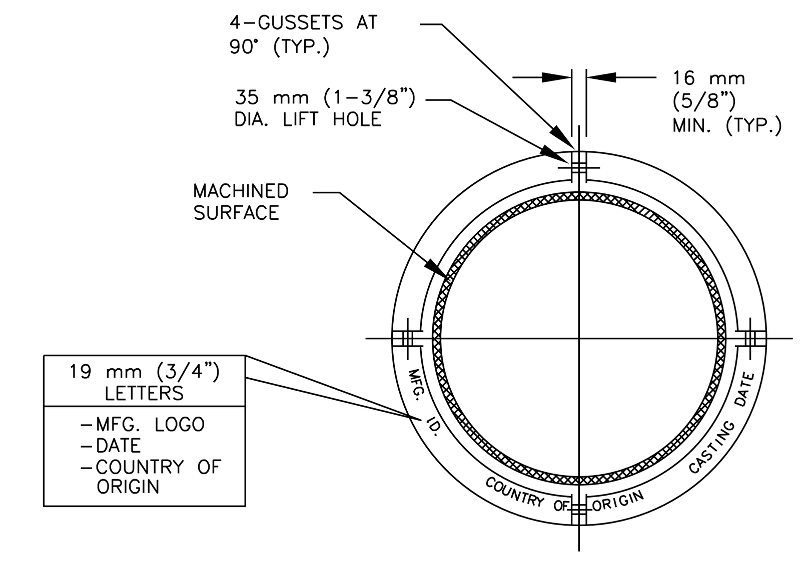

MANHOLE RING

NOTE: ALL MANHOLES NOT LOCATED IN PAVED AREAS SHALL HAVE BOLTED COVERS AS PER SPEC. 506.

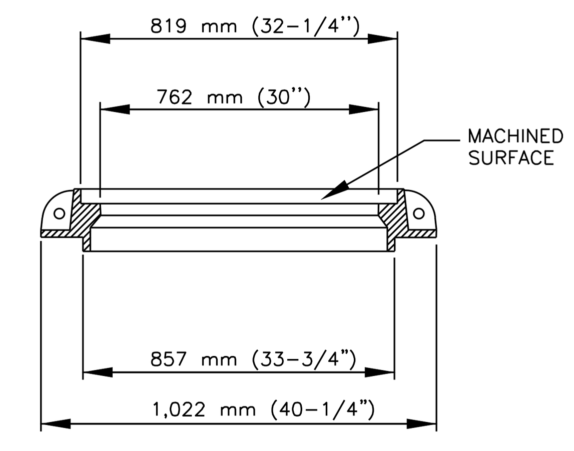

RING SECTION

CITY OF AUSTIN
AUSTIN WATER UTILITY

MANHOLE RING AND 813 mm (32") COVER

RECORD COPY SIGNED BY KATHI L. FLOWERS 09/23/10 ADOPTED

THE ARCHITECT/ENGINEER ASSUMES RESPONSIBILITY FOR APPROPRIATE USE OF THIS STANDARD.

STANDARD NO. 503S-4W 2 OF 3

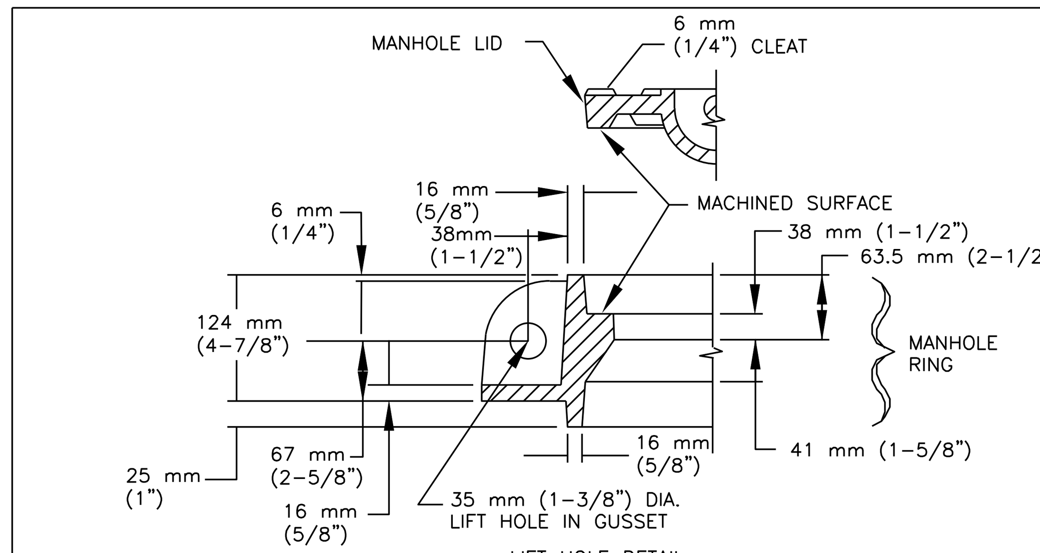

LIFT HOLE DETAIL

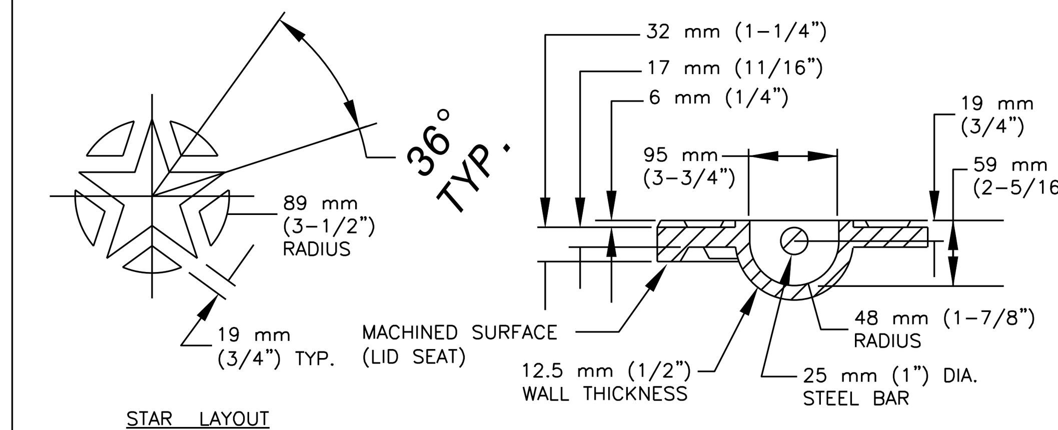

STAR LAYOUT

PICK BAR DETAIL

NOTES:
1. ALL CORNERS AND EDGES SHALL HAVE A 1.5mm (1/16") MINIMUM RADIUS.
2. LIDS SHALL BE CAST WITH TWO 25mm (1") DIA. STEEL PICK BARS.
3. LID WEIGHTS SHALL BE 779 N (175 LBS.) FOR DUCTILE IRON. WEIGHT SHALL BE CAST ON BOTH TOP & BOTTOM OF LID.
4. MANUFACTURER SHALL PROVIDE INDEPENDENT TESTING LABORATORY REPORT ON 40,000 LB. PROOF LOAD TEST CONDUCTED ACCORDING TO AASHTO M-306.
5. FILLETS SHALL BE 6mm (1/4") RADIUS UNLESS OTHERWISE SPECIFIED.
6. MANUFACTURER SHALL REMOVE EXCESS IRON AND MACHINE FINISH SEATING SURFACES TO NOTED DIMENSIONS.

NOTE: ALL MANHOLES NOT LOCATED IN PAVED AREAS SHALL HAVE BOLTED COVERS AS PER SPEC. 506.

CITY OF AUSTIN
AUSTIN WATER UTILITY

MANHOLE RING AND 813 mm (32") COVER

RECORD COPY SIGNED BY KATHI L. FLOWERS 09/23/10 ADOPTED

THE ARCHITECT/ENGINEER ASSUMES RESPONSIBILITY FOR APPROPRIATE USE OF THIS STANDARD.

STANDARD NO. 503S-4W 3 OF 3

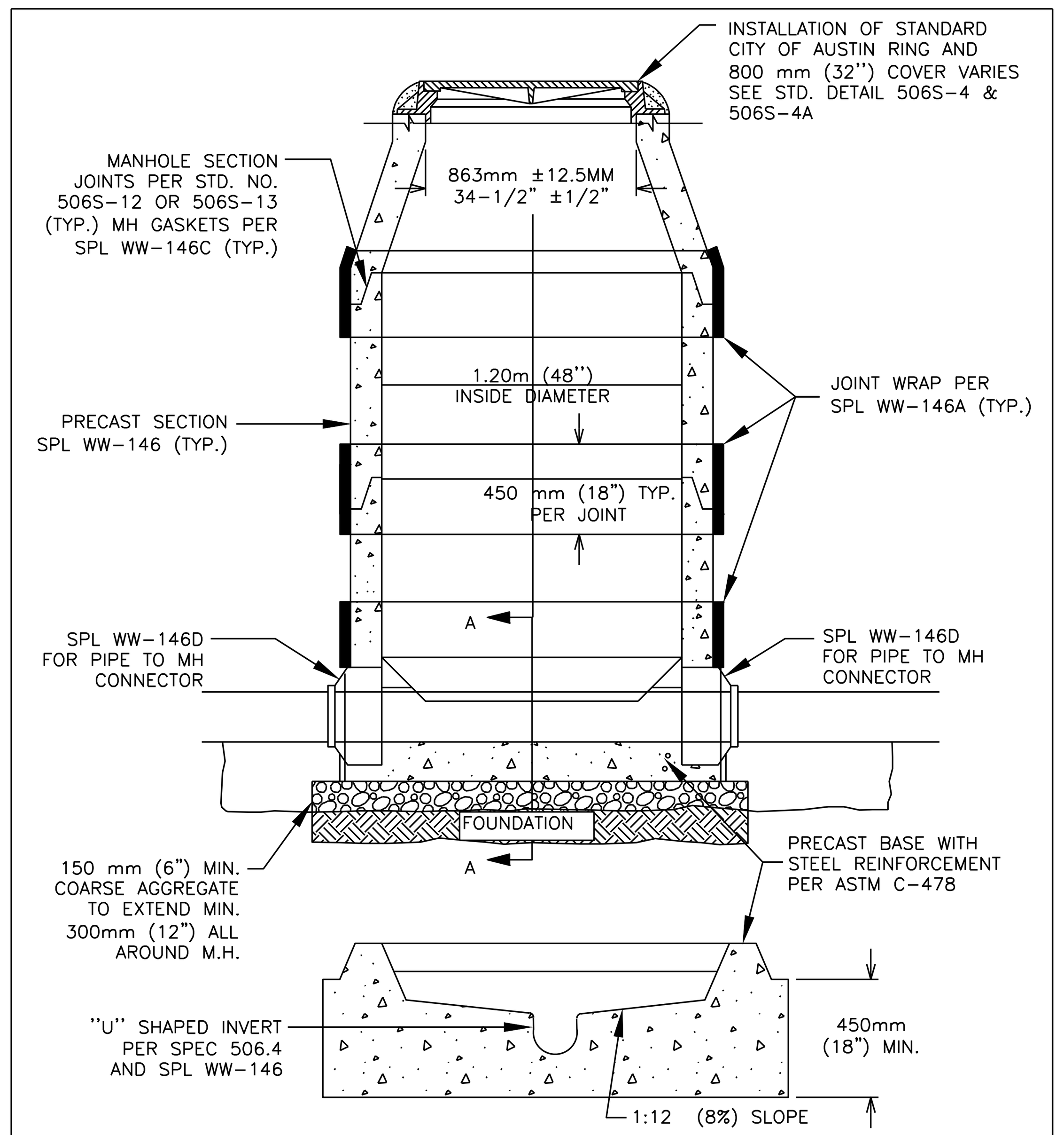

TYPICAL PRECAST BASE

NOTE:
1. THE MANHOLE BASE SHALL BE BEDDED ON 150 mm (6") COARSE AGGREGATE. THE CONTRACTOR SHALL LEVEL AND PLUMB THE BASE PRIOR TO SETTING THE PRECAST MANHOLE RISER SECTIONS ON THE PRECAST CONCRETE BASE.
2. MANHOLE FOUNDATION SHALL MEET OR EXCEED SPEC. 506.5B.

CITY OF AUSTIN
AUSTIN WATER UTILITY

WATER TIGHT WASTEWATER MANHOLE ON PRECAST BASE

RECORD COPY SIGNED BY KATHI L FLOWERS 08/31/2011

THE ARCHITECT/ENGINEER ASSUMES RESPONSIBILITY FOR APPROPRIATE USE OF THIS STANDARD.

STANDARD NO. 506S-6

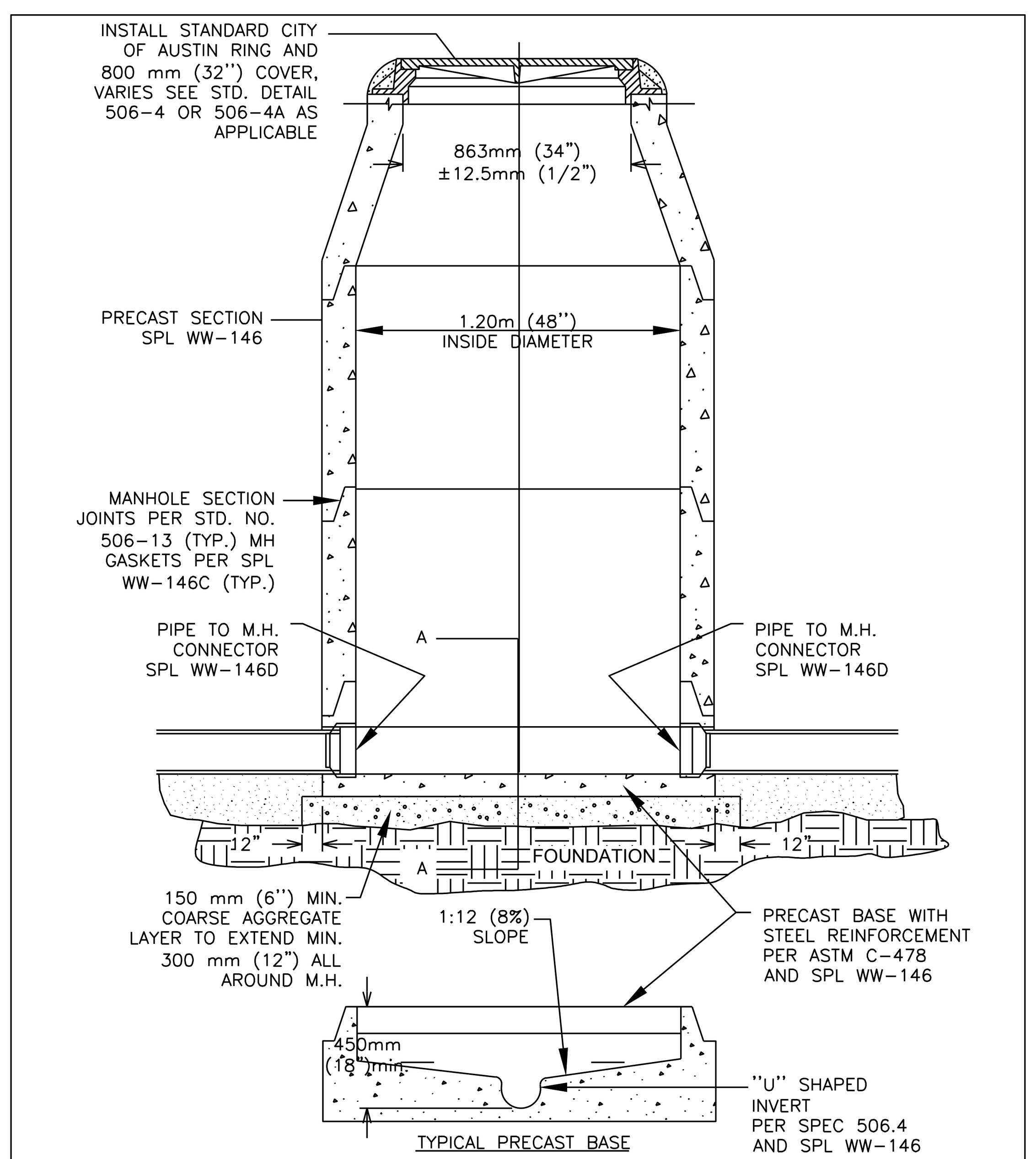

TYPICAL PRECAST BASE

NOTE:
1. THE MANHOLE BASE SHALL BE BEDDED ON 150 mm (6") COARSE AGGREGATE. THE CONTRACTOR SHALL LEVEL AND PLUMB THE BASE PRIOR TO SETTING THE PRECAST MANHOLE RISER SECTIONS ON THE PRECAST CONCRETE BASE.
2. MH FOUNDATION SHALL MEET OR EXCEED STD. SPEC. 506.5B.

CITY OF AUSTIN
AUSTIN WATER UTILITY

WASTEWATER MANHOLE ON PRECAST BASE

RECORD COPY SIGNED BY KATHI L FLOWERS 08/31/2011

THE ARCHITECT/ENGINEER ASSUMES RESPONSIBILITY FOR APPROPRIATE USE OF THIS STANDARD

STANDARD NO. 506S-10

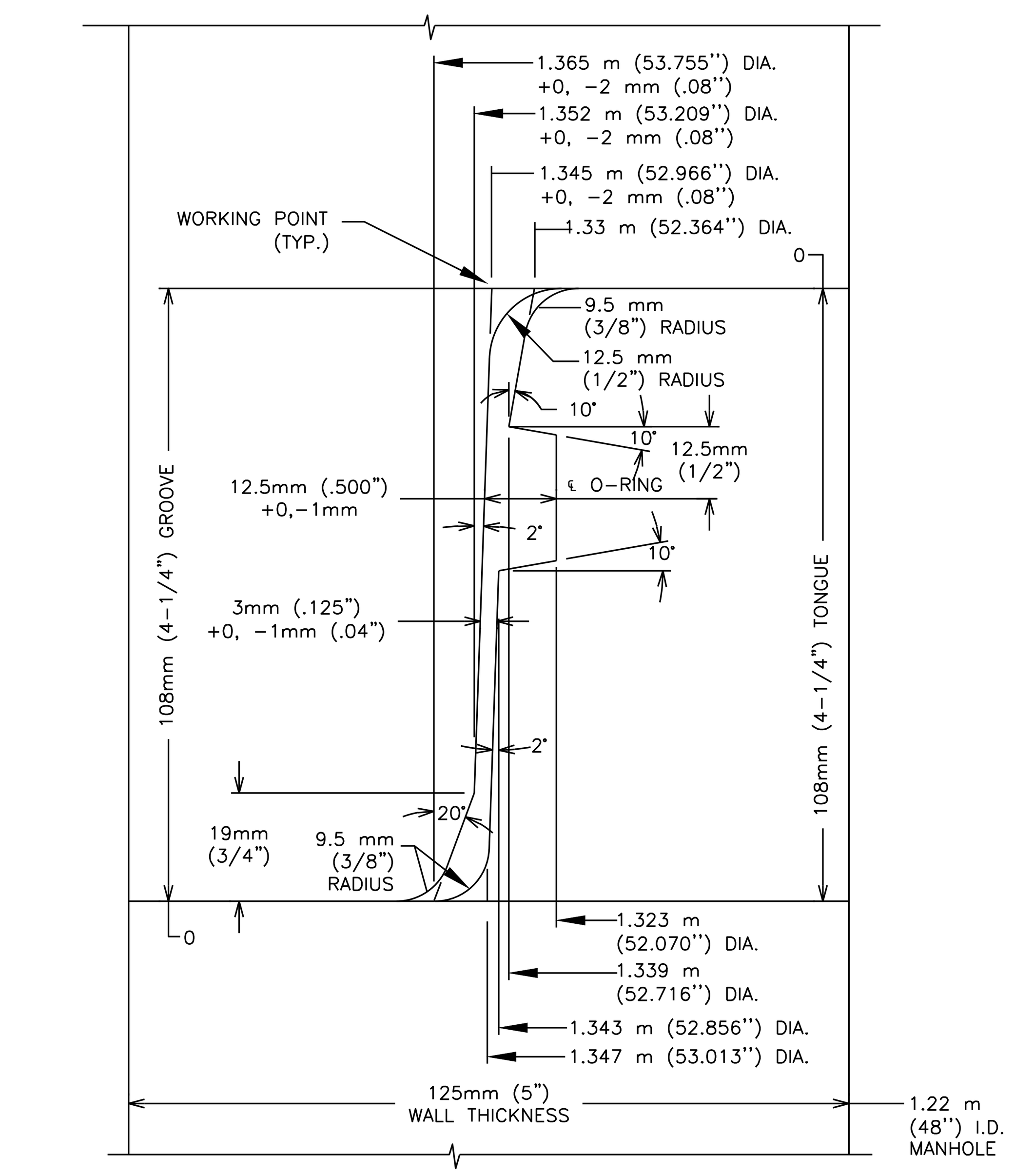

NOTES:
1. O-RING DIMENSION 20mm (25/32") DIA., 1013cc VOLUME.
2. DRAWING NOT TO SCALE FOR CLARIFICATION OF DIMENSIONS.
3. FOR EX. MANHOLES ONLY.

CITY OF AUSTIN
AUSTIN WATER UTILITY

O-RING JOINT DETAIL PRECAST MANHOLE SECTION

RECORD COPY SIGNED BY KATHI L FLOWERS 06/01/10 ADOPTED

THE ARCHITECT/ENGINEER ASSUMES RESPONSIBILITY FOR APPROPRIATE USE OF THIS STANDARD.

STANDARD NO. 506S-12

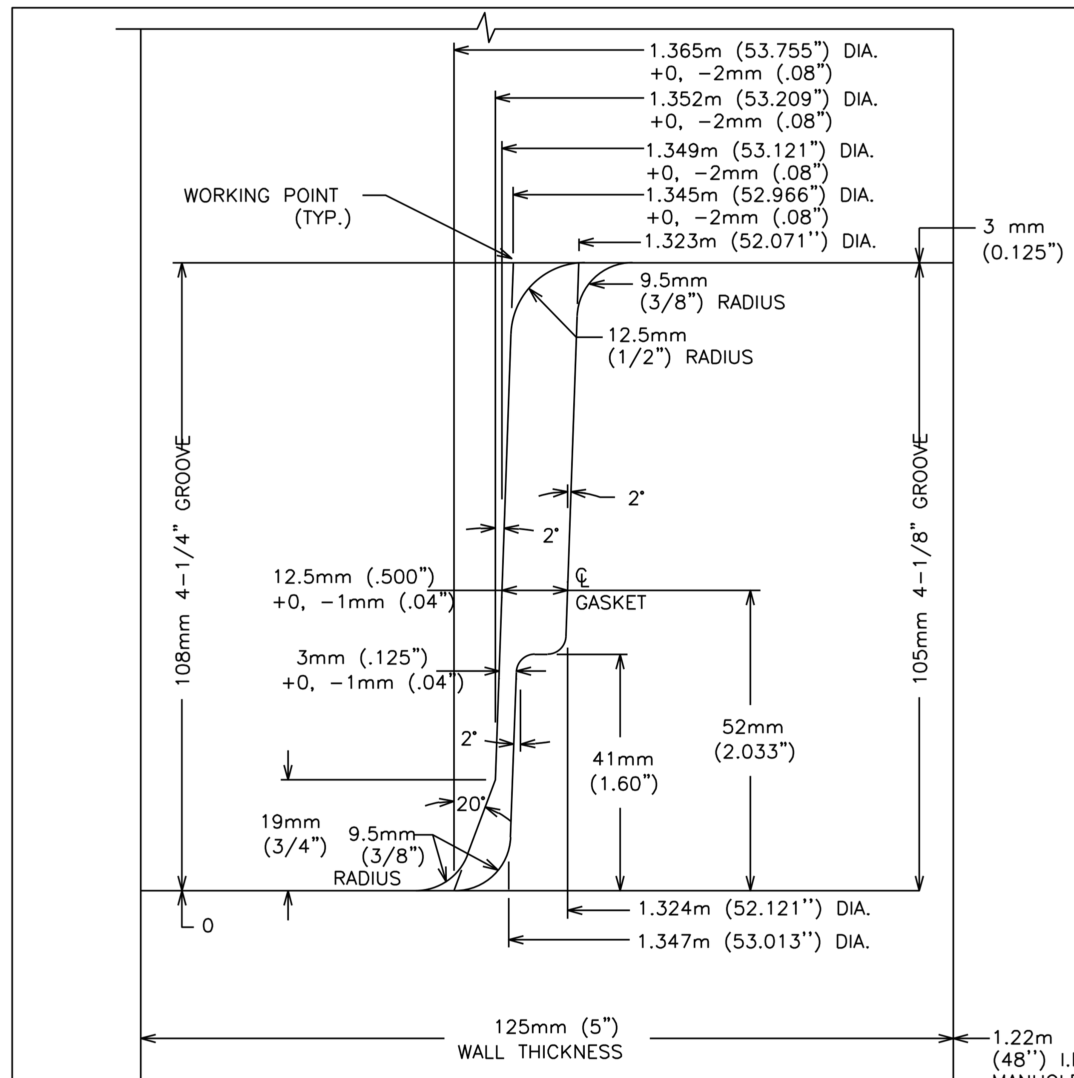

NOTES :
1. DRAWING NOT TO SCALE FOR CLARIFICATION OF DIMENSIONS.
2. GASKET STRETCH; MIN.10, MAX 15%.

CITY OF AUSTIN
AUSTIN WATER UTILITY

WEDGE - SEAL JOINT DETAIL PRECAST MANHOLE SECTION

RECORD COPY SIGNED BY KATHI L FLOWERS 06/01/10 ADOPTED

THE ARCHITECT/ENGINEER ASSUMES RESPONSIBILITY FOR APPROPRIATE USE OF THIS STANDARD.

STANDARD NO. 506S-13

NO.	DR	CK	DATE	DESCRIPTION

REVISIONS

BLACK & VEATCH
Building a world of difference.
Black & Veatch Corporation
Registration No. F-258
Austin, Texas

CAS CONSULTING & SERVICES INC
7908 CAMERON RD
AUSTIN, TEXAS 78754
REG. No. F-003572

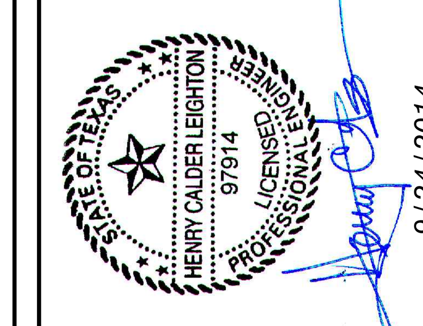

9/24/2014

Austin WATER

Walnut Creek WWTP - Tertiary Filter Rehabilitation Project
CIP ID No. 3023.025

CIVIL
YARD PIPING DETAILS
SHEET 2 OF 3

DESIGNED BY:	CRS
DRAWN BY:	BRV
REVIEWED BY:	CRS
APPROVED BY:	CRS
PROJECT NO.:	168622
DATE:	04/04/2014
SCALE:	NTS

REVISION:

DISCIPLINE NO.
C-08

DWG. NO.
21 OF 273

FD168622 D168622 File: C:\pw_working\cngpw\d0671638\C-08.dwg
SAVED: CAR51124, 10/7/2013 10:03:06 AM CRS NET ID:
Layout: Work Plotted: 9/24/2014 4:52:32 PM

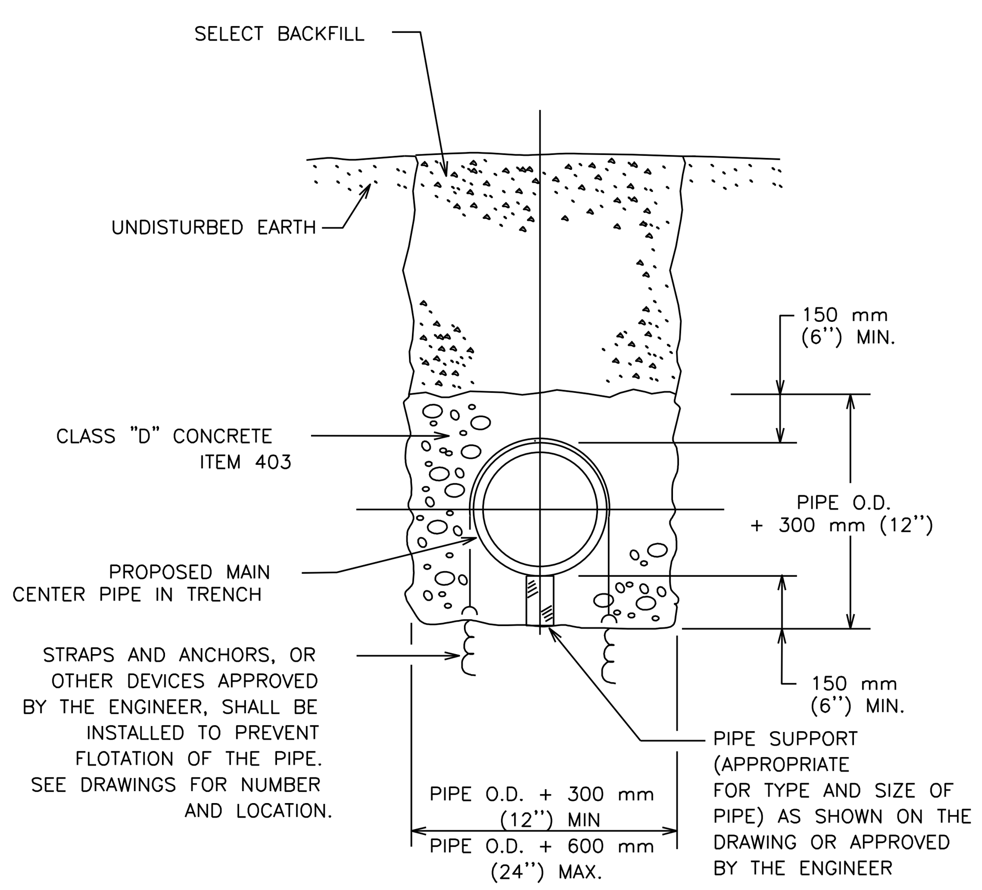

CITY OF AUSTIN WATER AND WASTEWATER UTILITY	CONCRETE ENCASEMENT	
RECORD COPY SIGNED BY LEON BARBA — 8/18/00 ADOPTED	THE ARCHITECT/ENGINEER ASSUMES RESPONSIBILITY FOR APPROPRIATE USE OF THIS STANDARD.	STANDARD NO. 505S-1

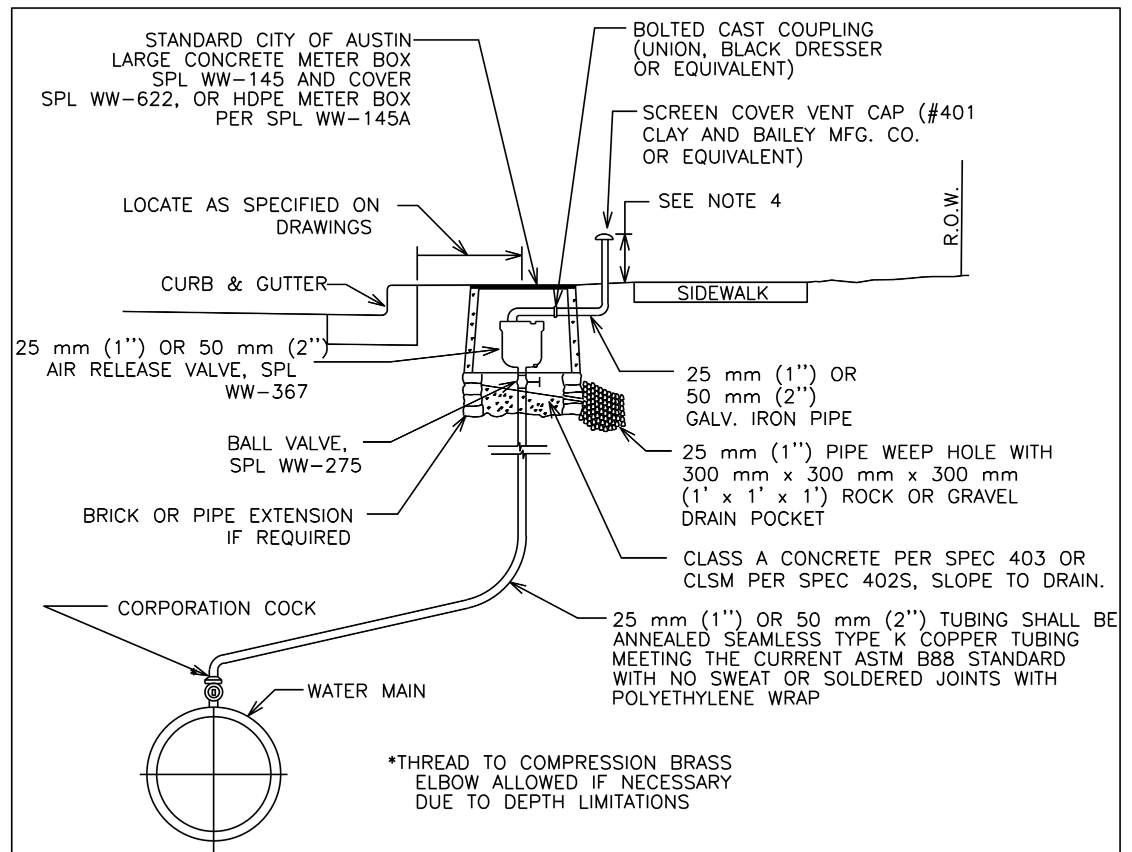

NOTES:
1. EXTERIOR SURFACES OF EXPOSED AIR VENT PIPE AND D.I. SUPPORT PIPE SHALL BE PAINTED PER SPL WW-3C, POTABLE WATER PIPE – SAFETY BLUE.
2. AIR VENT PIPE INSTALLATION SHALL BE AS NEAR AS PRACTICAL TO RIGHT-OF-WAY LINE WITH MINIMUM CLEARANCE OF 450mm (18") FROM ANY OBSTACLE.
3. CONCRETE METER BOX PENETRATION SHALL BE CORE BIT DRILLED. VOID SHALL BE FILLED BY PRESS-SEAL GASKET CORP. PSX RESILIENT CONNECTOR MEETING ASTM C923 OR APPROVED EQUAL.
4. IN UNDEVELOPED AREAS, THE AIR RELEASE SHALL BE .6m (2') MIN. IN HEIGHT SUPPORTED BY A 100mm (4") DIA. STEEL PIPE WHICH HAS BEEN PAINTED BLUE (SEE NOTE ONE) AND FILLED WITH CONCRETE (STEEL PIPE SHALL BE 1.8m (6') LONG, BURIED IN CLASS A CONCRETE OR CLSM 0.9m (3') BELOW FINAL GRADE AND EXTENDING, 0.9m (3') ABOVE FINAL GRADE). FLEXSTAKE SOIL ANCHOR DELINEATOR OR EQUIVALENT 1.8m (6'), BLUE, SHALL BE PLACED WITHIN 0.9m (3') OF VAULT ON THE VEHICULAR ACCESS SIDE OF VAULT OR AS DIRECTED BY AWU. IN DEVELOPED AREAS, THE AIR RELEASE SHALL BE 200mm (8") TO 300mm (12") IN HEIGHT AND LOCATED NOT TO CONFLICT WITH SIDEWALK, DRIVEWAY OR OTHER PEDESTRIAN TRAFFIC.
5. THE AIR VALVE AND ASSOCIATED PIPING SHALL BE INSTALLED ABOVE THE HIGHEST ELEVATION OF THE WATER MAIN. AIR VALVE PIPING, FROM THE WATER MAIN TO THE AIR VALVE, SHALL MAINTAIN A CONSTANT RISE, WITH NO DIPS, TO THE TOP OF THE GROUND.

CITY OF AUSTIN AUSTIN WATER UTILITY	25mm (1") - 50 mm (2") VENTED AIR RELEASE VALVE INSTALLATION (TYPE 1)	
RECORD COPY SIGNED BY KATHI L FLOWERS — 08/31/2011	THE ARCHITECT/ENGINEER ASSUMES RESPONSIBILITY FOR APPROPRIATE USE OF THIS STANDARD.	STANDARD NO. 511S-1

THIS DETAIL FOR USE ONLY ON CITY OF AUSTIN C.I.P. PROJECTS.

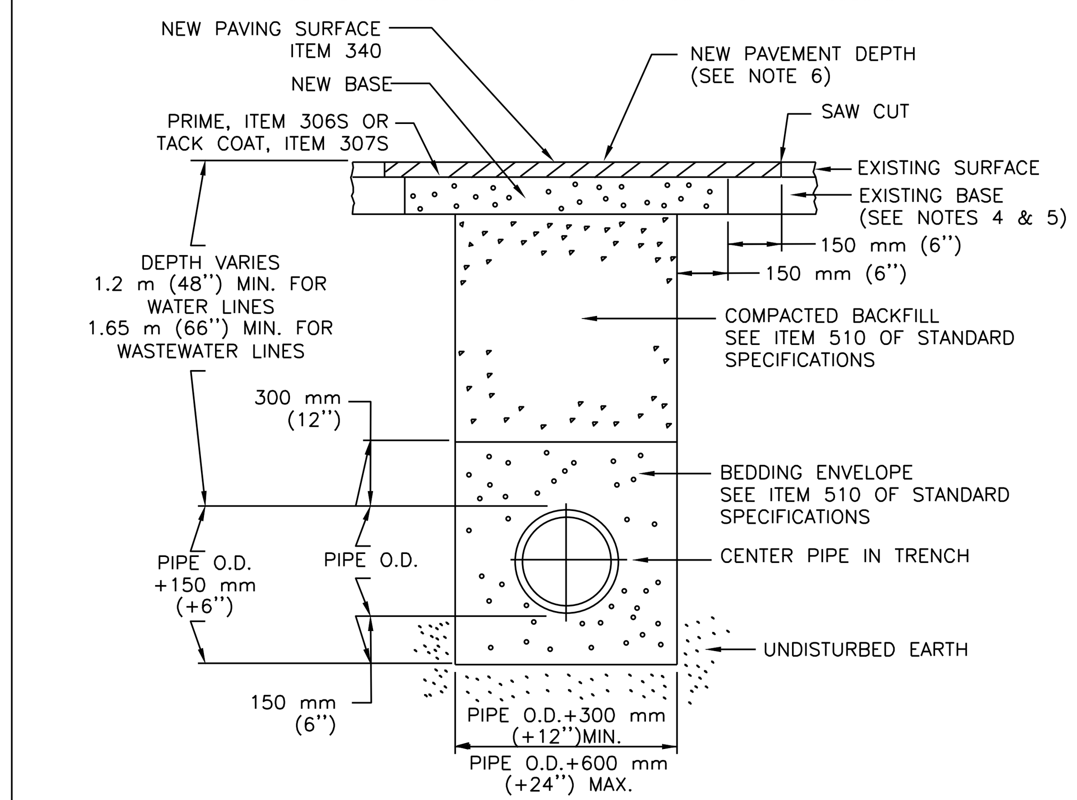

NOTES:

1. THE EXISTING PAVING SURFACE SHALL BE SAW CUT IN A STRAIGHT LINE A MINIMUM OF 300 mm (12") WIDER THAN THE UNDISTURBED SIDES OF THE TRENCH, SYMETRICAL ABOUT THE CENTER LINE OF THE EXCAVATION.
2. ANY CONCRETE PAVING SHALL BE SAW CUT 150 mm (6") WIDER THAN UNDISTURBED SIDES OF EXCAVATION.
3. IF EXCAVATION AREA IS OPEN FOR TEMPORARY PUBLIC USE, THE SURFACE SHALL BE MAINTAINED LEVEL WITH ADJACENT RIDING SURFACE WITH COLD MIX OR TEMPORARY HOT MIX ASPHALTIC CONCRETE.
4. ROAD BASE AND SURFACE MATERIALS IN THE TRENCH CUT SHALL BE REPLACED IN KIND OF EQUAL THICKNESS, OR MINIMUM BASE THICKNESS OF 250 mm (10"), WHICHEVER IS GREATER.
5. ALL DAMAGED AREAS OF PAVEMENT OUTSIDE THE TRENCH CUT SHALL BE REMOVED AND REPLACED WITH MINIMUM OF 200 mm (8") OF BASE OR MATCH EXISTING THICKNESS, WHICHEVER IS GREATER.
6. SURFACE PAVEMENT SHALL BE OF THE KIND AND THICKNESS AS EXISTING, OR MINIMUM 50 mm (2"), WHICHEVER IS GREATER.

CITY OF AUSTIN WATER AND WASTEWATER UTILITY	TYPICAL TRENCH WITH PAVED SURFACE	
RECORD COPY SIGNED BY KATHI L. FLOWERS — 8/19/02 ADOPTED	THE ARCHITECT/ENGINEER ASSUMES RESPONSIBILITY FOR APPROPRIATE USE OF THIS STANDARD.	STANDARD NO. 510S-3

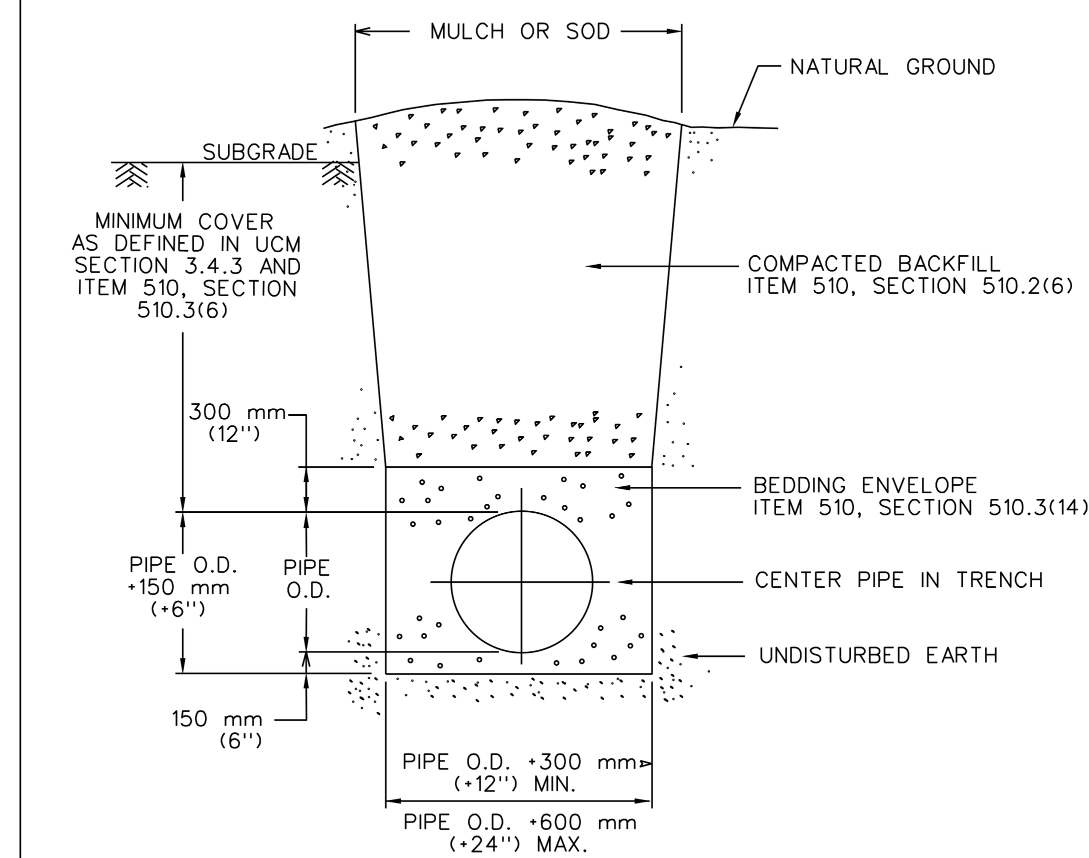

REFERENCES:
1. UTILITY CRITERIA MANUAL SECTION 3.4.3, "FINAL DESIGN"
2. STANDARD SPECIFICATION MANUAL ITEM 510,
   SECTION 510.2(6), "SELECT BACKFILL OR BORROW";
   SECTION 510.3(6), "TRENCH DEPTH AND DEPTH OF COVER";
   SECTION 510.3(14), "PIPE BEDDING ENVELOPE"

CITY OF AUSTIN DEPARTMENT OF PUBLIC WORKS	TYPICAL TRENCH DETAIL WITH UNFINISHED SURFACE	
RECORD COPY SIGNED BY BILL GARDNER — 03/13/06 ADOPTED	THE ARCHITECT/ENGINEER ASSUMES RESPONSIBILITY FOR APPROPRIATE USE OF THIS STANDARD.	STANDARD NO. 510S-5

NOTES:
1. WELD SOCKET 64 mm X 51 mm (2½" X 2") DEEP TO 25 mm (1") SCH. 40 ROUND STEM EXTENSION, FITTED ON OPERATING NUT, SCH. 80 FOR LENGTHS OVER 3 m (10').
2. CITY OF AUSTIN STANDARD VALVE CASTING RING C-6 & LID C-7 OR C-5A LID IN UNPAVED AREAS. SEE VALVE CASTING DETAIL.
3. NUT AT TOP OF VALVE EXTENSION ROD SHALL BE SQUARE 51 mm (2") LONG WELDED TO TOP OF ROD.

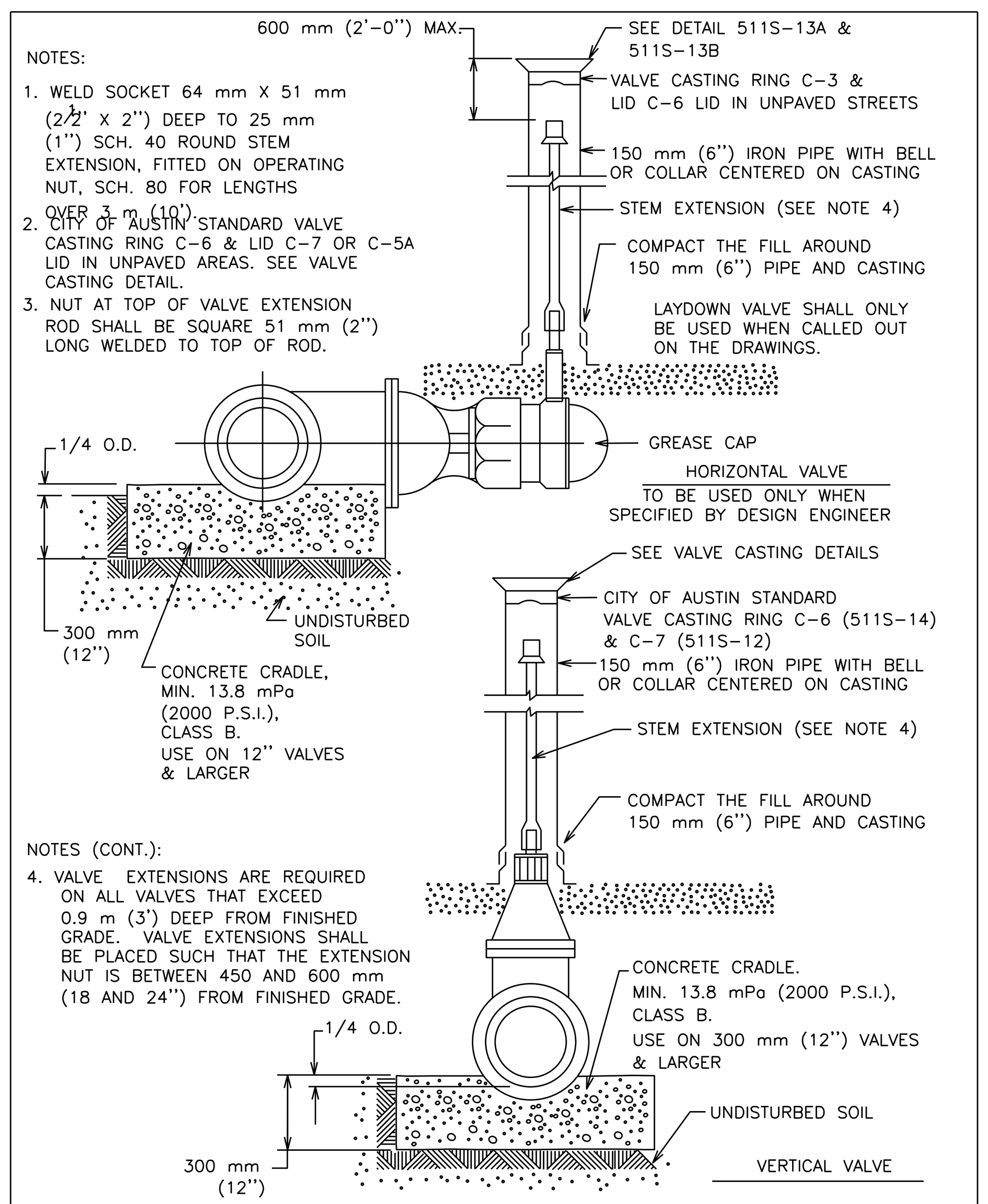

NOTES (CONT.):
4. VALVE EXTENSIONS ARE REQUIRED ON ALL VALVES THAT EXCEED 0.9 m (3') DEEP FROM FINISHED GRADE. VALVE EXTENSIONS SHALL BE PLACED SUCH THAT THE EXTENSION NUT IS BETWEEN 450 AND 600 mm (18 AND 24") FROM FINISHED GRADE.

CITY OF AUSTIN AUSTIN WATER UTILITY	TYPICAL GATE VALVE 100 mm-600 mm (4"-24")	
RECORD COPY SIGNED BY KATHI L. FLOWERS — 3/9/04 ADOPTED	THE ARCHITECT/ENGINEER ASSUMES RESPONSIBILITY FOR APPROPRIATE USE OF THIS STANDARD.	STANDARD NO. 511S-7

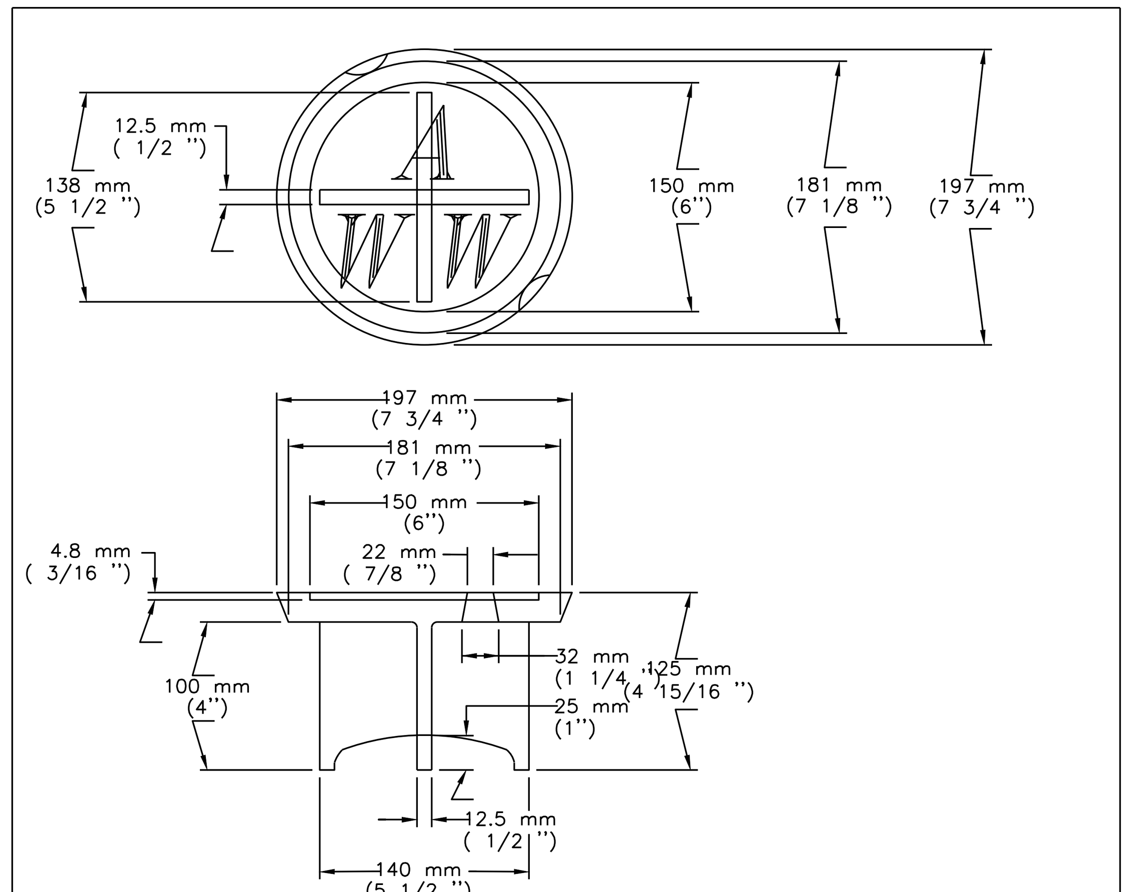

NOTES:
1. MATERIAL SHALL BE GRAY CAST IRON, ASTM A48, GRADE 30B.
2. TYPICAL FILLET IS 4.8 mm (3/16 ") RADIUS
3. LETTERING SHALL BE 38 mm (1 1/2 ") HEIGHT AND LOCATED AS SHOWN.
4. THIS LID REQUIRES TWO (2) PICK SLOTS.
5. THE MANUFACTURER'S IDENTIFICATION AND CASTING NUMBER, AND THE COUNTRY WHERE CAST, SHALL BE DISTINCTLY CAST ONTO EACH LID.
6. DRAFT AND SHRINKAGE ALLOWANCE SHALL BE IN ACCORD WITH NORMAL FOUNDRY PRACTICE.
7. FINISH BY REMOVING FINS AND FLASHING; PAINT WITH BLACK ASPHALT COATING,
8. WEIGHT: APPROXIMATELY 6 kg (13 lbs).

CITY OF AUSTIN WATER AND WASTEWATER UTILITY	VALVE BOX CASTING C-7 LID	
RECORD COPY SIGNED BY KATHI F. PAYNE — 4/5/99 ADOPTED	THE ARCHITECT/ENGINEER ASSUMES RESPONSIBILITY FOR APPROPRIATE USE OF THIS STANDARD.	STANDARD NO. 511S-12

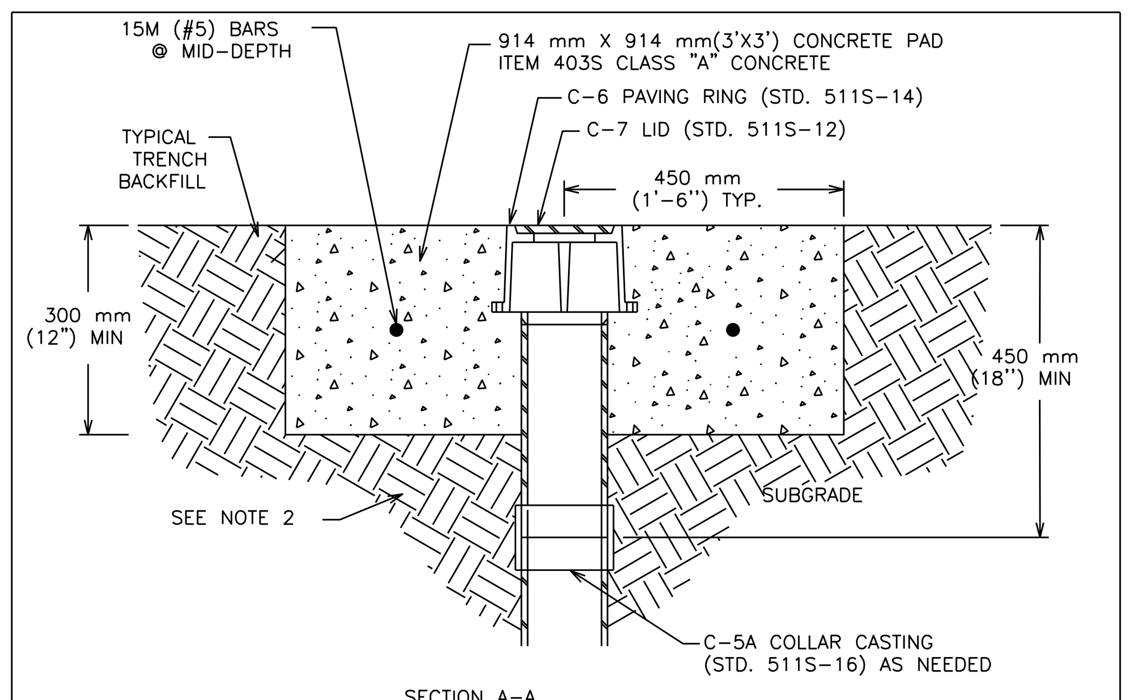

SECTION A-A

NOTES:
1. PADS ARE TO BE INSTALLED AROUND VALVE BOX LIDS ON ALL WATER VALVES IN UNPAVED AREAS.
2. TRENCH BACKFILL SHALL BE COMPACTED AS PER ITEM 510.
3. VALVE CASTINGS SHALL BE ADJUSTED TO GRADE AFTER FINAL GRADING OF TRENCH BACKFILL IS COMPLETED.
4. CLEAN VALVE BOX OF ALL DEBRIS DOWN TO THE VALVE OPERATOR.
5. REINFORCING STEEL SHALL MEET ITEM 406S, REINFORCING STEEL.
6. IN UNDEVELOPED AREAS THAT WILL NOT BE REGULARLY MOWED AND MAINTAINED, INSTALL ONE DELINEATOR STAKE IMMEDIATELY ADJACENT TO THE EDGE OF THE PAD. DELINEATOR SHALL BE BLUE FOR WATER (FLEX STAKE HD600 OR APPROVED EQUAL) AND PURPLE FOR RECLAIMED WATER (CHRISTY'S PART NO. IDSF66.PRW WITH VANDAL RESISTANT ANCHOR KIT PART NO. IDSF.ANCHOR INSTALLED OR APPROVED EQUAL) AND SHALL EXTEND AT LEAST 60" ABOVE GROUND. DELINEATORS SHALL HAVE 2" WIDE, WHITE, TYPE I REFLECTIVE TAPE (COLE FARMS OR APPROVED EQUAL) MOUNTED DIAGONALLY AT 12" SPACING ON BOTH SIDES.

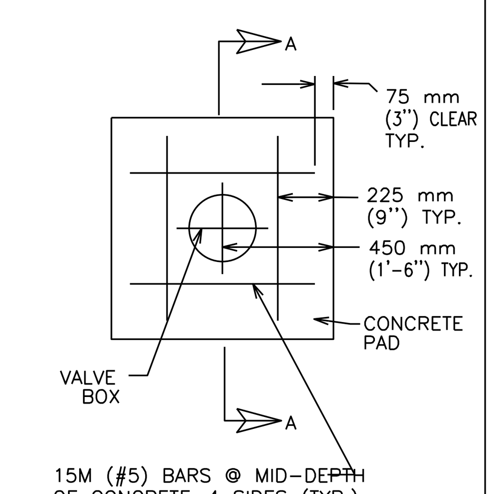

PLAN VIEW

CITY OF AUSTIN AUSTIN WATER UTILITY	WATER VALVE BOX CONCRETE PAD IN UNPAVED AREA	
RECORD COPY SIGNED BY SAM ANGOORI — 10/19/09 ADOPTED	THE ARCHITECT/ENGINEER ASSUMES RESPONSIBILITY FOR APPROPRIATE USE OF THIS STANDARD.	STANDARD NO. 511S-13C

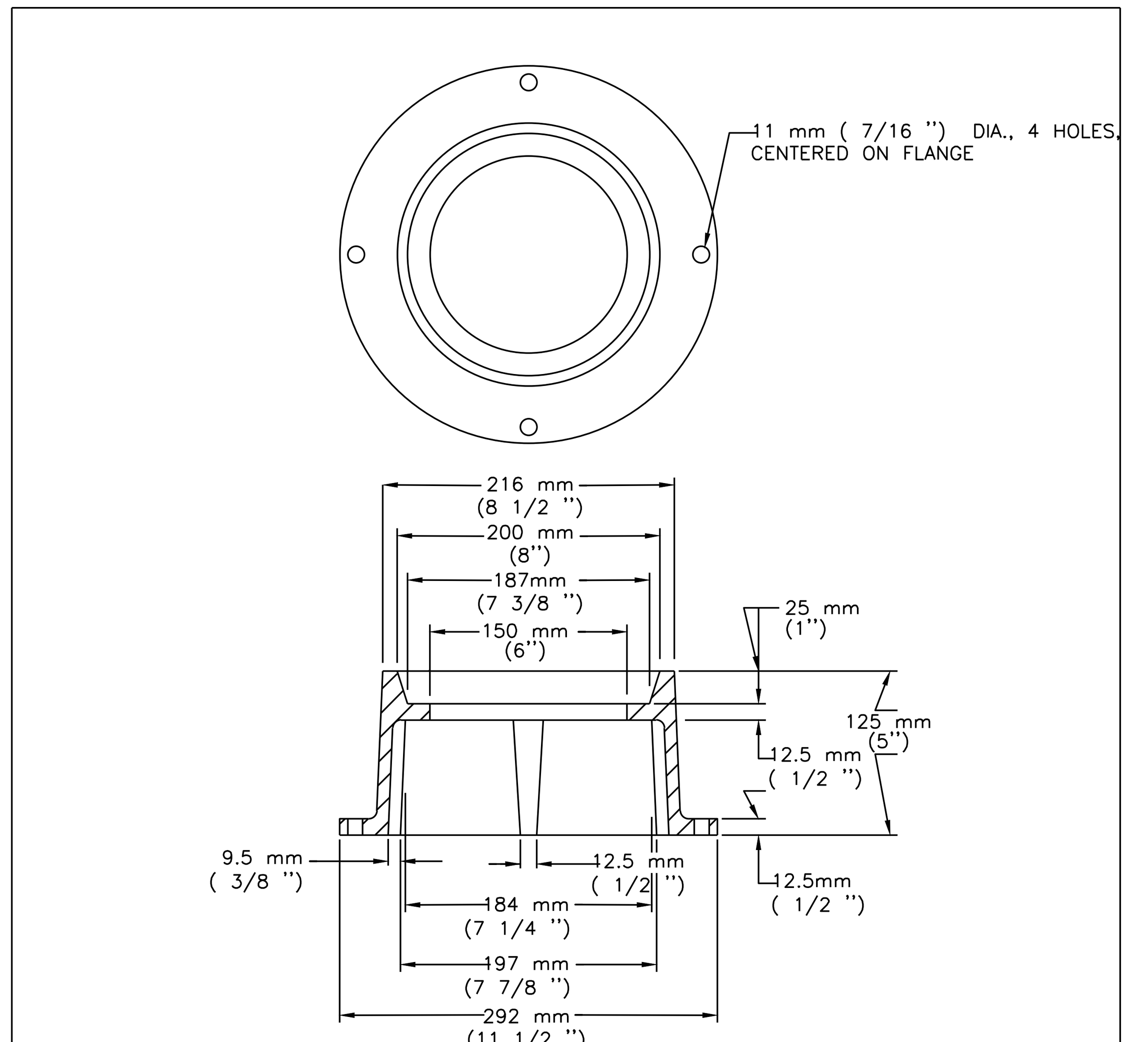

NOTES:
1. MATERIALS SHALL BE GRAY CAST IRON, ASTM A48, GRADE 30B.
2. THE MANUFACTURER'S IDENTIFICATION & CASTING NUMBER & THE COUNTRY WHERE CAST, SHALL BE DISTINCTLY CAST ONTO EACH RING.
3. DRAFT & SHRINKAGE ALLOWANCE SHALL BE IN ACCORD WITH NORMAL FOUNDRY PRACTICE.
4. FINISH BY REMOVING FINS & FLASHING; PAINT WITH BLACK ASPHALT COATING.
5. WEIGHT: APPROXIMATELY 10.5 kg (23 lbs).

CITY OF AUSTIN WATER AND WASTEWATER UTILITY	VALVE BOX CASTING C-6 PAVING RING	
RECORD COPY SIGNED BY KATHI F. PAYNE — 4/5/99 ADOPTED	THE ARCHITECT/ENGINEER ASSUMES RESPONSIBILITY FOR APPROPRIATE USE OF THIS STANDARD.	STANDARD NO. 511S-14

REVISIONS

NO.	DR	CK	DATE	DESCRIPTION

BLACK & VEATCH
Building a world of difference.
Black & Veatch Corporation
Registration No. F-258
Austin, Texas

CAS CONSULTING & SERVICES INC
7908 CAMERON RD
AUSTIN, TEXAS 78754
REG. No. F-003572

STATE OF TEXAS
HENRY CALDER LEIGHTON
97914
LICENSED PROFESSIONAL ENGINEER
9/24/2014

Austin WATER
Walnut Creek WWTP - Tertiary Filter Rehabilitation Project
CIP ID No. 3023.025

CIVIL
YARD PIPING DETAILS
SHEET 3 OF 3

DESIGNED BY:	CRS
DRAWN BY:	BRV
REVIEWED BY:	CRS
APPROVED BY:	CRS
PROJECT NO.:	168622
DATE:	11/4/13
SCALE:	NTS

REVISION:

DISCIPLINE NO.
C-09

DWG. NO.
22 OF 273

FD168622 SAVED: CAR51124, 10/7/2013 10:03:06 AM
D168622 PW FLDR: D168622....\09.5025 - Civil Drawings
File: C:\pw_working\cngpw\d0671638\C-09.dwg Layout: Work Plotted: 9/24/2014 4:54:08 PM

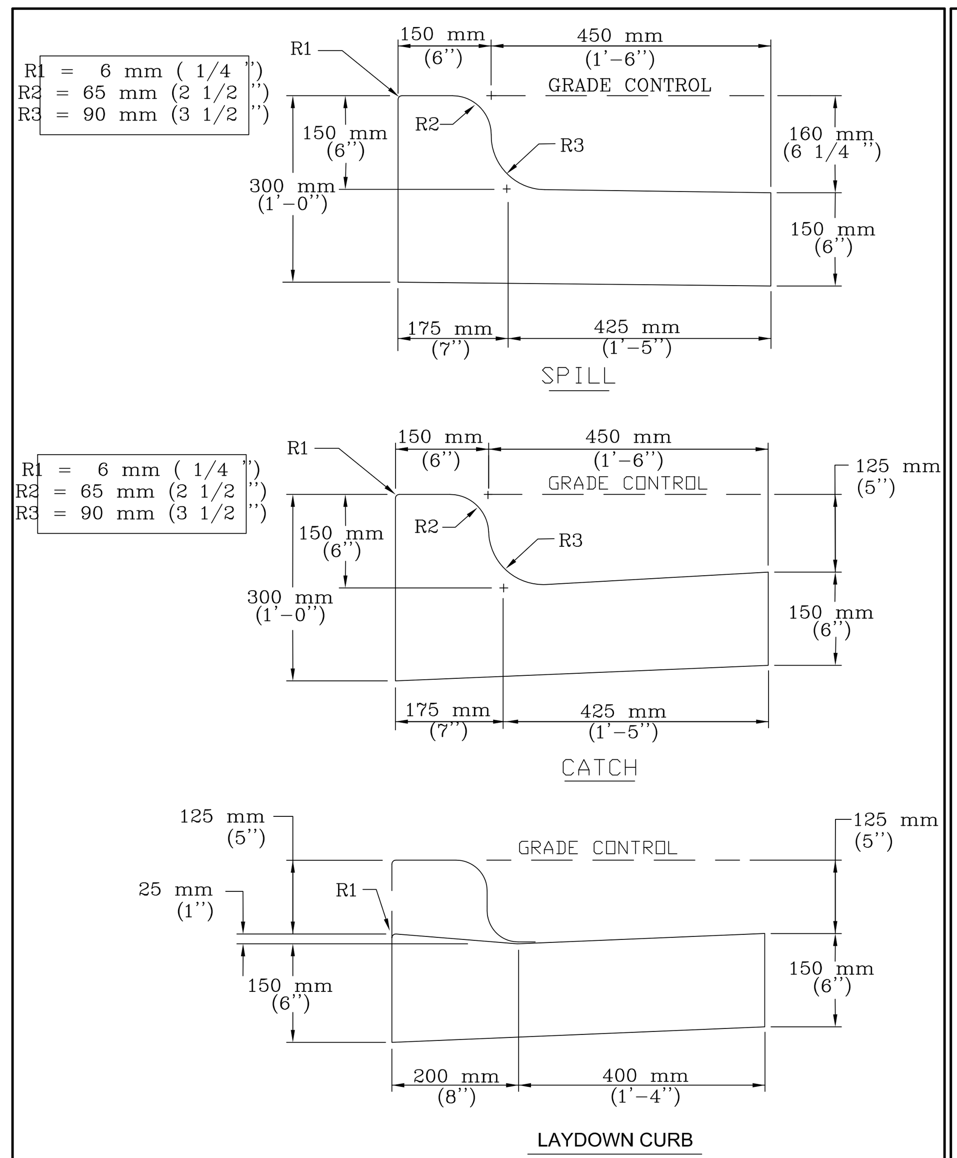

CITY OF AUSTIN DEPARTMENT OF PUBLIC WORKS AND TRANSPORTATION	CURB AND GUTTER SECTION	
RECORD COPY SIGNED BY LINO RIVERA — 9/29/99 ADOPTED	THE ARCHITECT/ENGINEER ASSUMES RESPONSIBILITY FOR APPROPRIATE USE OF THIS STANDARD.	STANDARD NO. 430S-1

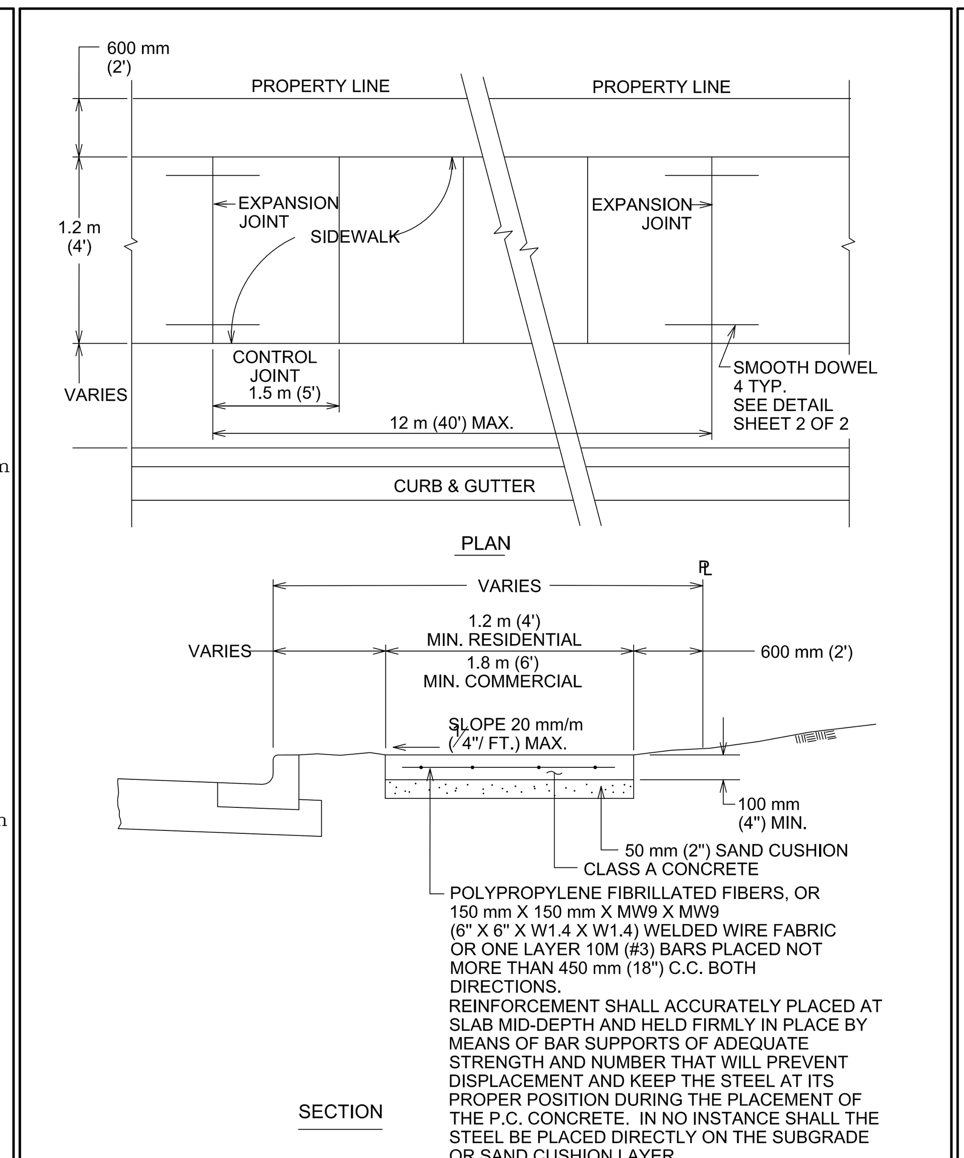

CITY OF AUSTIN DEPARTMENT OF PUBLIC WORKS	SIDEWALK	
RECORD COPY SIGNED BY BILL GARDNER — 03/26/08 ADOPTED	THE ARCHITECT/ENGINEER ASSUMES RESPONSIBILITY FOR APPROPRIATE USE OF THIS STANDARD.	STANDARD NO. 432S-1 1 OF 3

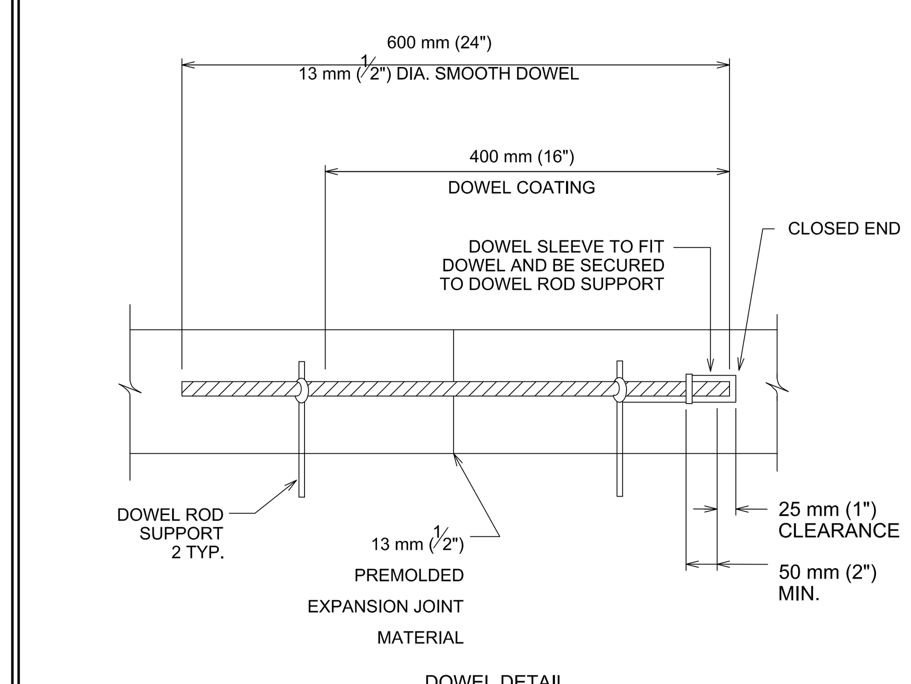

CITY OF AUSTIN DEPARTMENT OF PUBLIC WORKS	SIDEWALK	
RECORD COPY SIGNED BY BILL GARDNER — 03/26/08 ADOPTED	THE ARCHITECT/ENGINEER ASSUMES RESPONSIBILITY FOR APPROPRIATE USE OF THIS STANDARD.	STANDARD NO. 432S-1 2 OF 3

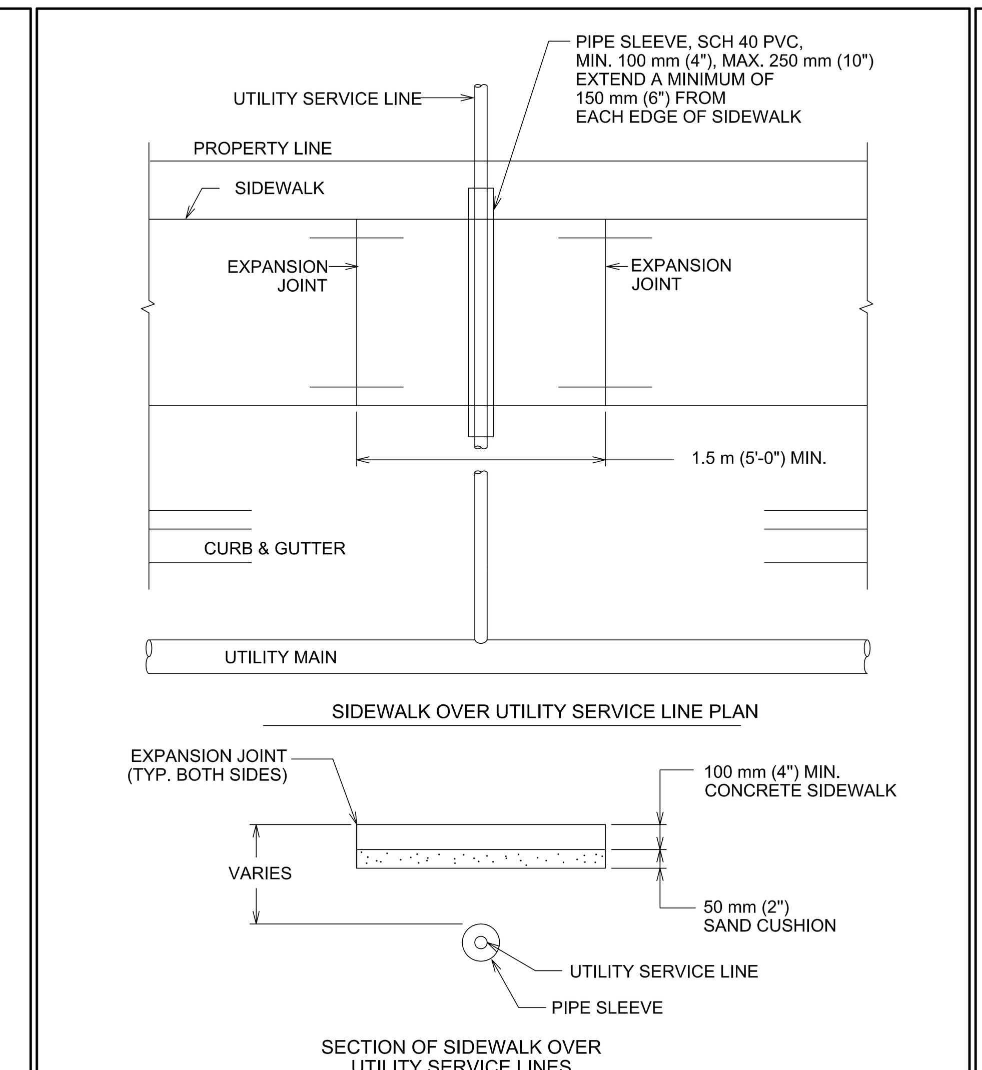

NOTES:
1. THIS STANDARD APPLIES TO THE INSTALLATION OF NEW UTILITIES OR UTILITIES BEING REPLACED BY A NEW LINE.
2. NO JOINTS IN UTILITY SERVICE PIPE TO BE LOCATED INSIDE PVC PIPE SLEEVE.

CITY OF AUSTIN DEPARTMENT OF PUBLIC WORKS	SIDEWALK	
RECORD COPY SIGNED BY BILL GARDNER — 03/26/08 ADOPTED	THE ARCHITECT/ENGINEER ASSUMES RESPONSIBILITY FOR APPROPRIATE USE OF THIS STANDARD.	STANDARD NO. 432S-1 3 OF 3

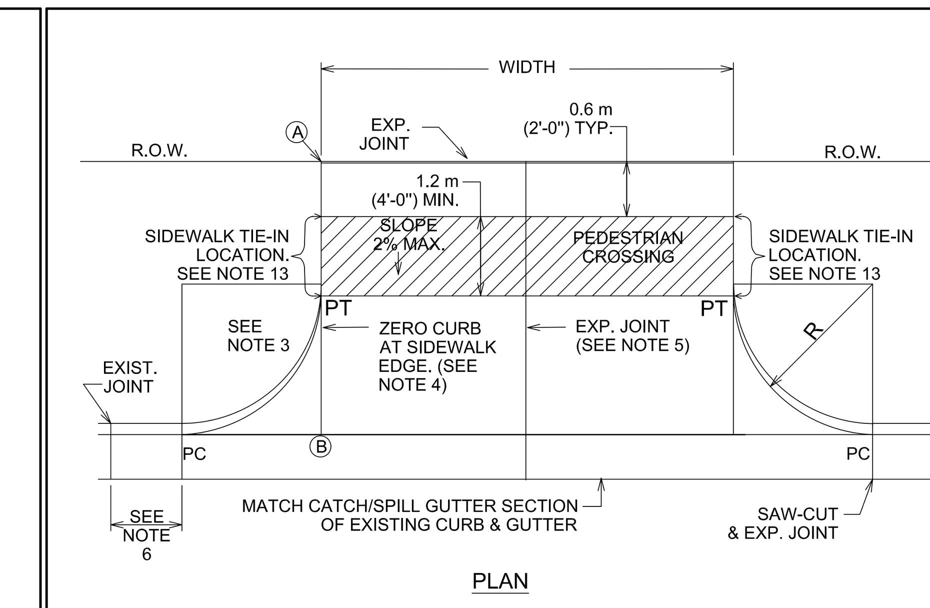

NOTE: ALL DRIVEWAYS SHALL BE SLOPED TOWARDS THE STREET FROM THE R.O.W. LINE. ELEVATION OF POINT (A) ABOVE POINT (B) IS, TYPICALLY A MINIMUM OF 150 mm (6") PLUS 20 mm/m (1/4" RISE/FOOT) OVER DISTANCE "X" IN METERS (FEET).

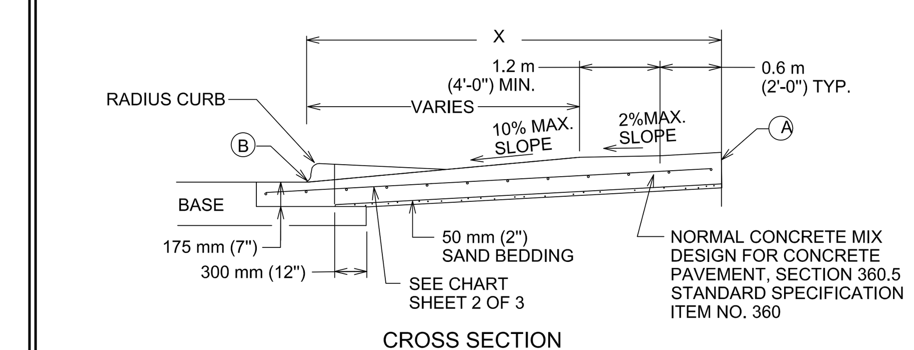

CITY OF AUSTIN DEPARTMENT OF PUBLIC WORKS	TYPE II DRIVEWAY	
RECORD COPY SIGNED BY CUONG TRAN — 02/24/10 ADOPTED	THE ARCHITECT/ENGINEER ASSUMES RESPONSIBILITY FOR APPROPRIATE USE OF THIS STANDARD.	STANDARD NO. 433S-2 1 OF 2

USE	THICKNESS	REINFORCEMENT
~~DRIVEWAYS FOR PASSENGER VEHICLE PARKING LOTS~~	~~150 mm (6") MIN.~~	~~125 mm (5") MIN. CONCRETE WITH ONE LAYER OF13M (#4) BARS PLACED ON CHAIRS AT MIDDEPTH OF SLAB AT NO MORE THAN 450 mm (18") O.C. BOTH DIRECTIONS~~
ALL OTHERS	175 mm (7") MIN.	125 mm (5") MIN. CONCRETE WITH ONE LAYER OF13M (#4) BARS PLACED ON CHAIRS AT MIDDEPTH OF SLAB AT NO MORE THAN 450 mm (18") O.C. BOTH DIRECTIONS

THE PAVEMENT THICKNESS USED FOR THIS PROJECT WILL BE 7" MINIMUM. PAVEMENT THICKNESS OF 6" SHALL NOT BE USED.

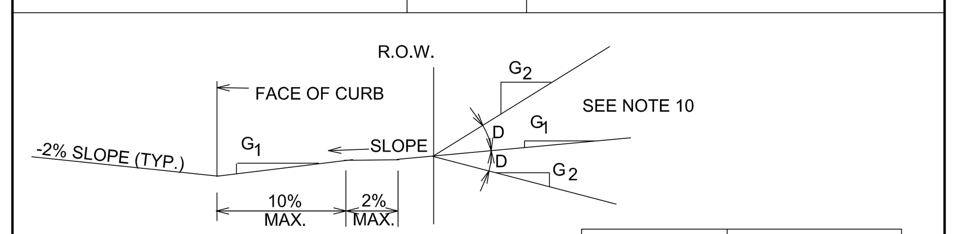

ALLOWABLE GRADES

DRIVEWAY VOLUME (ADT)	D=GRADE CHANGE STD.	MAX
>1500	0%	3%
500-1500	3%	6%
< 500	6%	15%

NOTES:
1. ALL TYPE II DRIVEWAYS SHALL HAVE RADIUS ENDS.
2. DRIVEWAY WIDTHS AND RADII DIMENSIONS, ONE/TWO WAY TRAVEL REQUIREMENTS, AND GEOMETRIC LAY-OUT ARE HIGHLY VARIABLE, SUBJECT TO SITE SPECIFIC CONDITIONS AND REQUIREMENTS. SEE TRANSPORTATION CRITERIA MANUAL. SECTION 5 "DRIVEWAYS".
3. THE DRIVEWAY EDGE SHALL BE SMOOTHLY TRANSITITIONED INTO THE SIDEWALK TIE-IN LOCATION BEGINNING AT THE RADIUS PC LINE.
4. "ZERO" CURB AT PT OR SIDEWALK EDGE, WHICHEVER IS ENCOUNTERED FIRST.
5. PLACE AN EXPANSION JOINT DOWN THE CENTER OF DRIVEWAY ALL DRIVEWAYS.
6. IF DIMENSION IS LESS THAN 1.5 METERS (5 FEET), REMOVE CURB AND GUTTER TO EXISTING JOINT AND POUR MONOLITHICALLY WITH DRIVEWAY.
7. IF THE BASE IS OVER-EXCAVATED WHERE THE CURB AND GUTTER WERE REMOVED, BACKFILL WITH CONCRETE MONOLITHICALLY WITH THE DRIVEWAY.
8. TYPE II DRIVEWAYS ARE TO BE LOCATED NO CLOSER TO THE CORNER OF INTERSECTING RIGHT OF WAY THAN 60% OF PARCEL FRONTAGE AT 30 METERS (100 FEET): WHICHEVER IS LESS.
9. DRIVEWAY SHALL NOT BE CONSTRUCTED WITHIN THE CURB RETURN OF A STREET INTERSECTION.
10. WHILE THE PROPERTY OWNER REMAINS RESPONSIBLE FOR GRADE BREAKS WITHIN PRIVATE PROPERTY, THE FIRE DEPARTMENT SHALL BE CONSULTED WHERE THE DRIVEWAY IS ESSENTIAL TO EMERGENCY VEHICLE ACCESS AND "G2 IS GREATER THAN 15%.
11. USE 12 MM (1/2") ASPHALT BOARD OR OTHER APPROVED MATERIAL FOR CURB AND GUTTER EXPANSION JOINTS. SIDEWALK, AT THE R.O.W. LINE AND AT MIDWIDTH, SEE NOTE 5.
12. SEE TRANSPORTATION CRITERIA MANUAL, SECTION 5 FOR OTHER DRIVEWAY REQUIREMENTS.
13. THE SIDEWALK, REGARDLESS OF ITS LOCATION WITH RESPECT TO THE CURB OR PROPERTY LINE, SHALL BE CONNECTED TO THE DRIVEWAY AT THESE LOCATIONS.
14. WATER METER BOXES AND WASTEWATER CLEAN OUTS ARE PROHIBITED FROM BEING LOCATED IN DRIVEWAY AREAS.

CITY OF AUSTIN DEPARTMENT OF PUBLIC WORKS	TYPE II DRIVEWAY	
RECORD COPY SIGNED BY CUONG TRAN — 02/24/10 ADOPTED	THE ARCHITECT/ENGINEER ASSUMES RESPONSIBILITY FOR APPROPRIATE USE OF THIS STANDARD.	STANDARD NO. 433S-2 2 OF 2

CITY OF AUSTIN — DEPARTMENT OF PUBLIC WORKS AND TRANSPORTATION — RECORD COPY SIGNED BY LEON BARBA — 2/21/01 ADOPTED — THE ARCHITECT/ENGINEER ASSUMES RESPONSIBILITY FOR APPROPRIATE USE OF THIS STANDARD. — ALTERNATE URBAN STANDARD 12 m (40') ROADWAY — STANDARD NO. 1000S-5

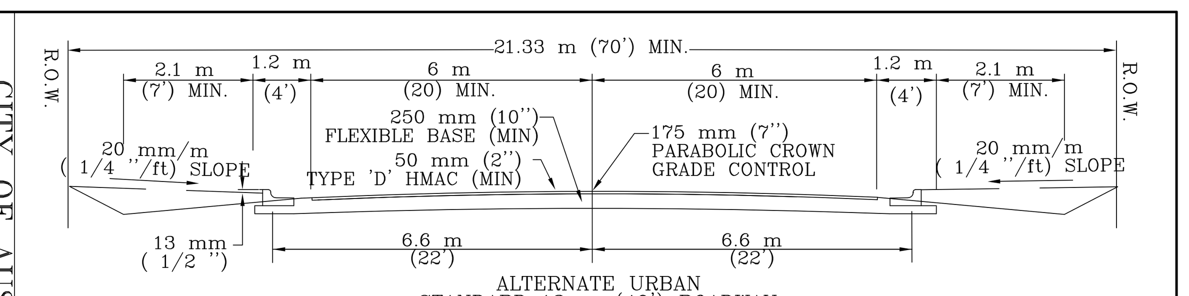

GENERAL NOTES:
1. ALL CONSTRUCTION IN ACCORDANCE WITH CITY SPECIFICATIONS.
2. DRAINAGE CALCULATIONS TO CITY DRAINAGE MANUAL.
3. ROADWAY DITCHES SHALL BE ADEQUATE FOR 25 YEAR RUNOFF.
4. ROADWAY DITCHES SHALL BE NO STEEPER THAN 4:1 EXCEPT TP ACCOMODATE DRIVEWAYS.
5. UTILITIES SHALL BE LOCATED TO ALLOW FOR FUTURE RECONSTRUCTION TO URBAN STANDARDS.
6. THE PAVEMENT IS DESIGNED FOR ROADWAY WIDENING IN FUTURE AS SHOWN BY DASHED LINES IN THE ABOVE DRAWING AND BELOW DETAIL. THE PAVEMENT THICKNESS IS A MINIMUM, THE ACTUAL THICKNESS IS BASED ON COMPUTERIZED PAVEMENT DESIGN.

THE DRAWING SHOWN BELOW IS FOR FUTURE CONSTRUCTION ONLY.
SEE STANDARD NO. STD1000S-6

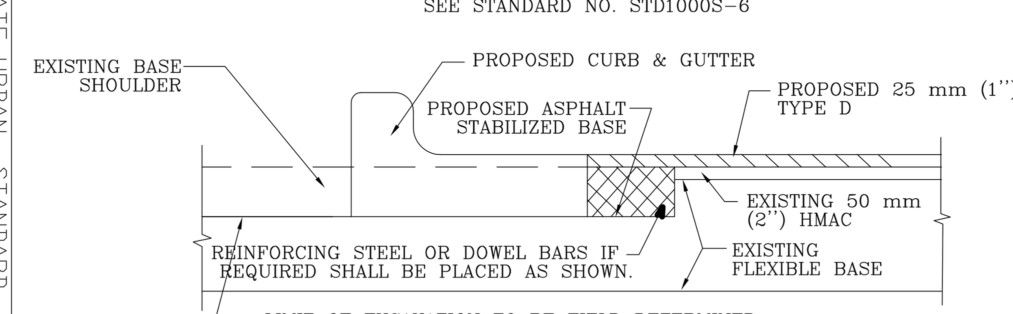

ASPHALT PAVING NOTES:
1. *DIMENSIONS FOR ASPHALT PAVING WIDTHS SHOWN IN THE STANDARD DETAIL SHALL BE MODIFIED AS REQUIRED FOR SITE ROADS.*

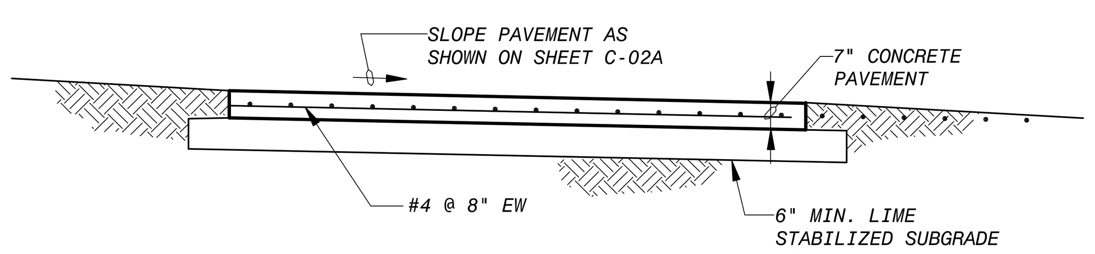

TYPICAL CONCRETE PAVEMENT AND CONCRETE SURFACING SECTION (A / -)
1/4" = 1'-0"

CONCRETE PAVING NOTES:
1. *ALL CONCRETE PAVING SHALL BE 7" THICK WITH ONE COURSE OF #4@8" EW REINFORCING. CONCRETE PAVING IS USED WHERE INDICATED ON SHEETS C-02 AND C-02A. CONCRETE PAVING IS ALSO USED AS INFILL SURFACE AT SOUTHSIDE CLEARWELL AS SHOWN ON SH C-02A.*
2. *CITY OF AUSTIN DETAIL 433S-2 (THIS SHEET) SHALL BE USED WHERE APPLICABLE.*
3. *USE 3/4" EXPANSION JOINT MATERIAL BETWEEN CONCRETE PAVEMENT AND ABUTTING STRUCTURES AND WHERE INDICATED ON SHEET C-02A.*
4. *ALL CONCRETE PAVING SHALL BE SLOPED TO DRAIN AT 0.5% MINIMUM.*
5. *SPACE SAWED CONTRACTION JOINTS AT APPROXIMATE 15 FEET IN BOTH DIRECTIONS, SEE DETAILS C THIS SHEET.*
6. *CONTRACTION JOINTS SHALL BE PLACED BETWEEN ADJACENT POURS. SEE DETAIL C THIS SHEET.*
7. *CONCRETE CURBS DETAIL 430S-1 (THIS SHEET) SHALL BE USED FOR CONCRETE THICKNESS AND LENGTHS. THE NEW CURB PROFILE SECTION SHALL MATCH THE EXISTING ADJACENT CURBS AT THE TREATMENT PLANT. SOME GUTTER DEPTHS WILL REQUIRE MODIFICATION FROM COA DETAIL TO FACILITATE SITE DRAINAGE.*

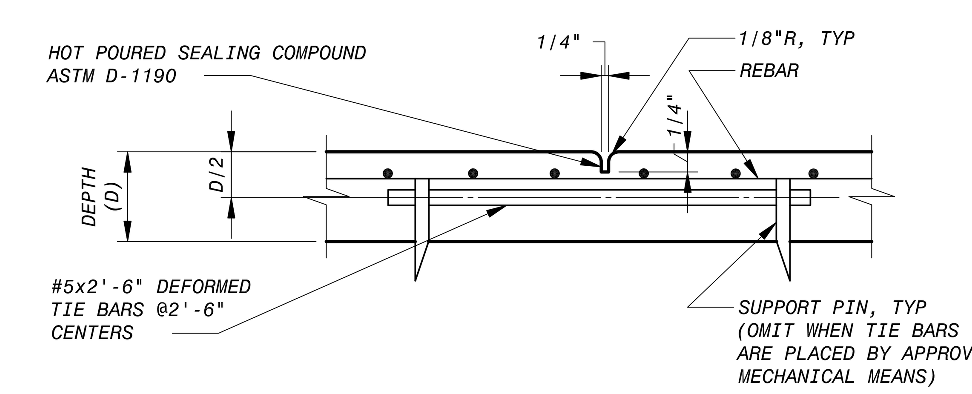

SAWED LONGITUDINAL JOINT (B)
NO SCALE

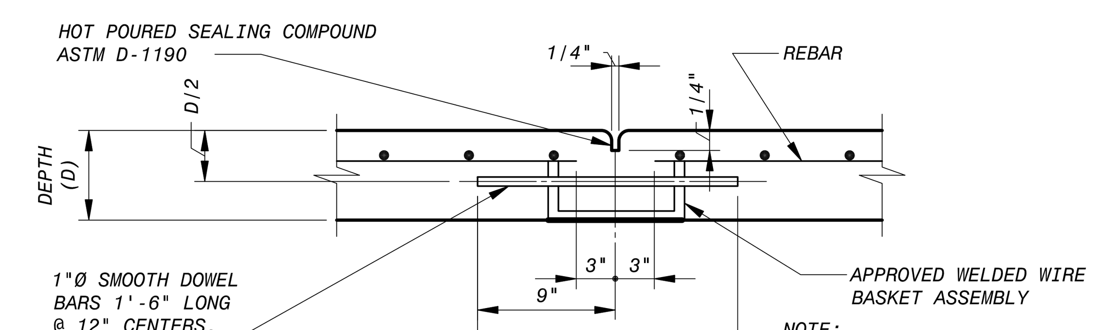

NOTE: SAWED DUMMY JOINT SIMILAR EXCEPT WITH CONTINUOUS REINF

SAWED CONTRACTION JOINT (C)
NO SCALE

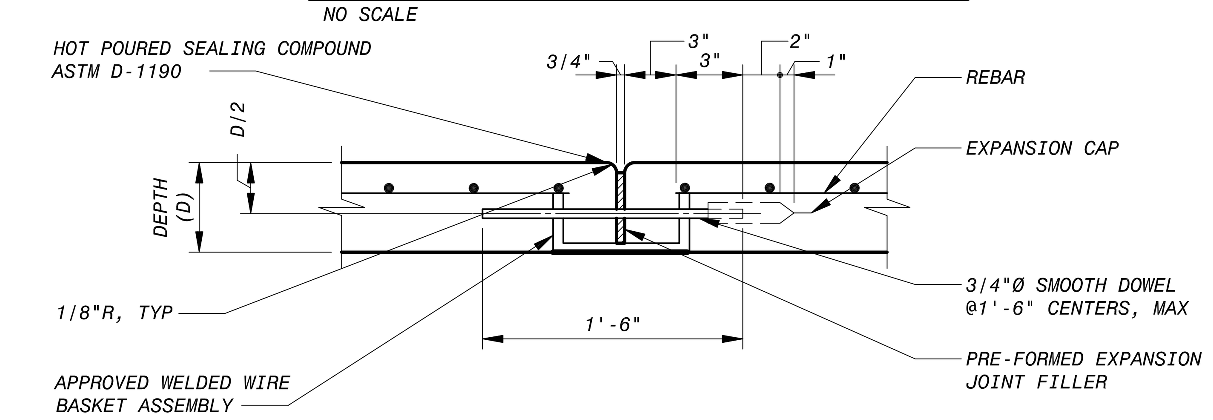

TRANSVERSE EXPANSION JOINT (D)
NO SCALE

NO.	DR	CK	DATE	DESCRIPTION
				REVISIONS

BLACK & VEATCH — Building a world of difference.
Black & Veatch Corporation
Registration No. F-258
Austin, Texas

STATE OF TEXAS — CARLOS R. CHAVEZ — 119722 — LICENSED PROFESSIONAL ENGINEER — 8/23/2016

Austin Water
Walnut Creek WWTP - Tertiary Filter Rehabilitation Project
CIP ID No. 3023.025

CIVIL
STANDARD DETAILS
SHEET 1 OF 3

DESIGNED BY:	AWL
DRAWN BY:	AWL
REVIEWED BY:	WLK
APPROVED BY:	TSD
PROJECT NO.:	168622
DATE:	4/4/2014
SCALE:	AS SHOWN
REVISION:	

DISCIPLINE NO. C-10
DWG. NO. 23 OF 273

FD168622 SAVED: RAM12044, 8/23/2016 1:41:09 PM
D168622 09C3025 ID: Civil Drawings
File: C:\pw_working\cngpw\d0671638\C-10.dwg Layout: Work Plotted: 8/23/2016 1:42:20 PM

BARRICADES (STANDARD NO. 804S-5, 3 OF 13)

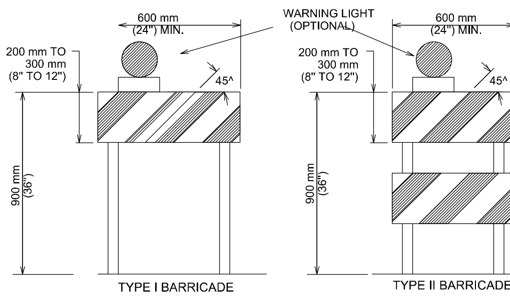

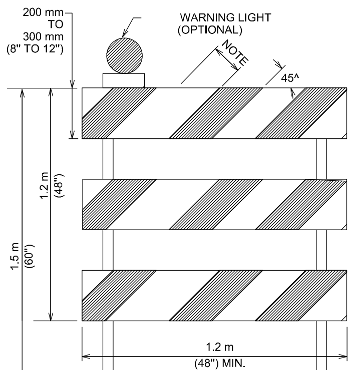

TYPE III BARRICADE

NOTES:

1. NOMINAL LUMBER DIMENSIONS ARE SATISFACTORY FOR BARRICADE RAIL WIDTH DIMENSIONS.
2. RAIL STRIPE WIDTHS SHALL BE 150 mm (6") EXCEPT WHERE RAIL LEGNTHS ARE LESS THAN 900 mm (36"), THEN 100 mm (4") WIDE STRIPES MAY BE USED.
3. THE SIDE OF BARRICADES FACING TRAFFIC SHALL HAVE RETRO-REFLECTIVE RAIL FACES.

SEE STANDARD 804S-5 SHEET 12 OF 13 AND SHEET 13 OF 13 FOR GENERAL NOTES AND DEVICE SPACING.

CITY OF AUSTIN DEPARTMENT OF PUBLIC WORKS	BARRICADES	
RECORD COPY SIGNED BY SAM ANGOORI — 01/04/10 ADOPTED	THE ARCHITECT/ENGINEER ASSUMES RESPONSIBILITY FOR APPROPRIATE USE OF THIS STANDARD.	STANDARD NO. 804S-5 3 OF 13

BARRICADES (STANDARD NO. 804S-5, 4 OF 13)

BARRICADES

1. BARRICADES SHALL BE OF THREE TYPES: TYPE I, TYPE II OR TYPE III.
2. STRIPES ON BARRICADE RAILS SHALL BE ALTERNATING ORANGE AND WHITE RETRO-REFLECTIVE STRIPES (SLOPING DOWNWARD AT AN ANGLE OF 45 DEGREES IN THE DIRECTION TRAFFIC IS TO PASS). THE STRIPES SHALL BE 150 mm (6") WIDE, EXCEPT WHERE RAIL LENGTHS ARE LESS THAN 900 mm (36"), WHEN 100 mm (4") WIDE STRIPES MAY BE USED.
3. WHERE A BARRICADE EXTENDS ENTIRELY ACROSS A ROADWAY, THE SURFACE STRIPES SHOULD SLOPE DOWNWARD IN THE DIRECTION TOWARD WHICH TRAFFIC MUST TURN. WHERE BOTH RIGHT AND LEFT TURNS ARE PROVIDED, THE STRIPES MAY SLOPE DOWN-WARD IN BOTH DIRECTIONS FROM THE CENTER OF THE BARRICADE OR BARRICADES. WHERE NO TURNS ARE INTENDED, THE STRIPES SHOULD SLOPE DOWNWARD TOWARD THE CENTER OF THE BARRICADE OR BARRICADES.
4. BARRICADE RAILS SHOULD BE SUPPORTED IN A MANNER THAT WILL ALLOW THEM TO BE SEEN BY THE MOTORIST AND PROVIDE A STABLE SUPPORT NOT EASILY BLOWN OVER BY THE WIND OR TRAFFIC. FOR TYPE I BARRICADES, THE SUPPORT MAY INCLUDE OTHER UNSTRIPED HORIZONTAL PANELS NECESSARY TO PROVIDE STABILITY.
5. BARRICADES ARE LOCATED ADJACENT TO TRAFFIC AND ARE THEREFORE SUBJECT TO IMPACT WITH ERRANT VEHICLES. BECAUSE OF THEIR VULNERABLE POSITION AND THE HAZARD THEY COULD CREATE, THEY SHOULD BE CONSTRUCTED OF LIGHTWEIGHT MATERIALS AND HAVE NO RIGID STAY BRACING FOR A-FRAME DESIGNS. ALL BARRICADE SYSTEMS SHOULD BE CRASHWORTHY.
6. ON HIGH-SPEED EXPRESSWAYS OR IN OTHER SITUATION WHERE BARRICADES MAY BE SUSCEPTIBLE TO OVERTURNING IN THE WIND, SANDBAGS SHOULD BE USED FOR BALLASTING. SANDBAGS MAY BE PLACED ON PARTS OF THE FRAME OR STAYS TO PROVIDE THE REQUIRED BALLAST BUT SHALL NOT BE PLACED ON TOP OF ANY STRIPED RAIL. BARRICADES SHALL NOT BE BALLASTED BY HEAVY OBJECTS SUCH AS ROCKS OR CHUNKS OF CONCRETE.

CITY OF AUSTIN DEPARTMENT OF PUBLIC WORKS	BARRICADES	
RECORD COPY SIGNED BY SAM ANGOORI — 01/04/10 ADOPTED	THE ARCHITECT/ENGINEER ASSUMES RESPONSIBILITY FOR APPROPRIATE USE OF THIS STANDARD.	STANDARD NO. 804S-5 4 OF 13

TRAFFIC CONTROL SIGNS (STANDARD NO. 804S-5, 5 OF 13)

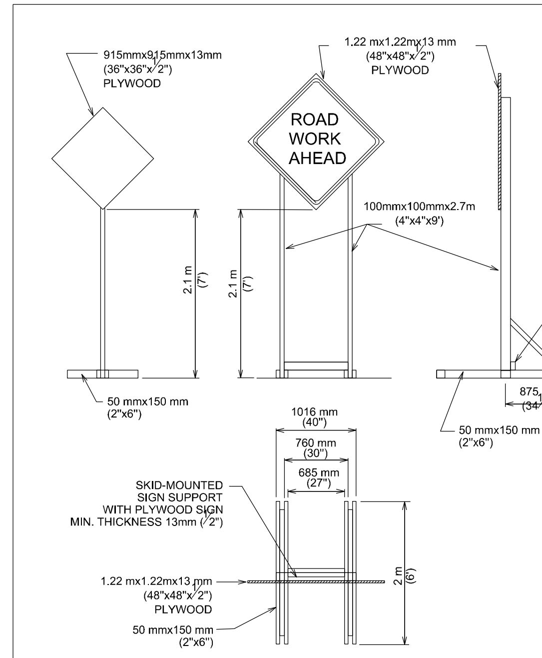

(LONG TERM AND INTERMEDIATE-TERM STATIONARY WORK)

TEMPORARY SIGN SUPPORT

SEE STANDARD 804S-5 SHEET 12 OF 13 AND SHEET 13 OF 13 FOR GENERAL NOTES AND DEVICE SPACING.

CITY OF AUSTIN DEPARTMENT OF PUBLIC WORKS	TRAFFIC CONTROL SIGNS	
RECORD COPY SIGNED BY SAM ANGOORI — 01/04/10 ADOPTED	THE ARCHITECT/ENGINEER ASSUMES RESPONSIBILITY FOR APPROPRIATE USE OF THIS STANDARD.	STANDARD NO. 804S-5 5 OF 13

TRAFFIC CONTROL SIGNS (STANDARD NO. 804S-5, 6 OF 13)

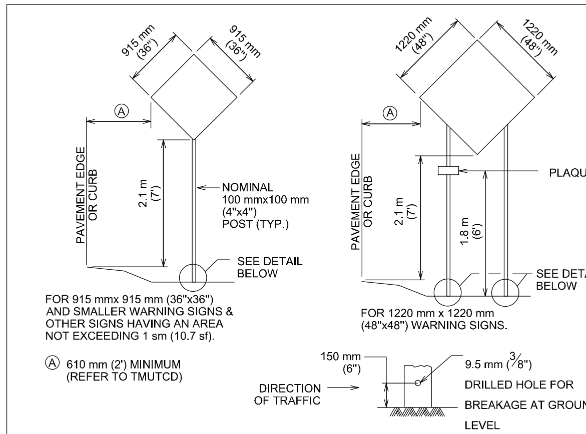

FOR 915 mmx 915 mm (36"x36") AND SMALLER WARNING SIGNS & OTHER SIGNS HAVING AN AREA NOT EXCEEDING 1 sm (10.7 sf).

FOR 1220 mm x 1220 mm (48"x48") WARNING SIGNS.

Ⓐ 610 mm (2') MINIMUM (REFER TO TMUTCD)

WOOD POST SIGN SUPPORT USED AS FIXED SIGN SUPPORTS

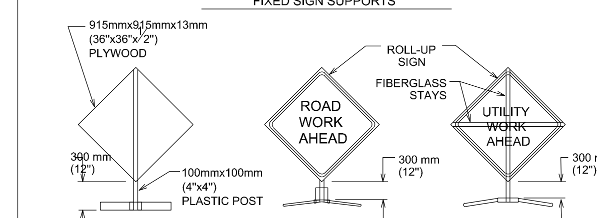

300 mm (1') MOUNTING HEIGHT (SHORT TERM AND SHORT DURATION WORK)

PORTABLE SIGN SUPPORT

SEE STANDARD 804S-5 SHEET 12 OF 13 AND SHEET 13 OF 13 FOR GENERAL NOTES AND DEVICE SPACING.

CITY OF AUSTIN DEPARTMENT OF PUBLIC WORKS	TRAFFIC CONTROL SIGNS	
RECORD COPY SIGNED BY SAM ANGOORI — 01/04/10 ADOPTED	THE ARCHITECT/ENGINEER ASSUMES RESPONSIBILITY FOR APPROPRIATE USE OF THIS STANDARD.	STANDARD NO. 804S-5 6 OF 13

TRAFFIC CONTROL SIGNS (STANDARD NO. 804S-5, 7 OF 13)

1. WARNING SIGNS SHALL BE ORANGE, FLUORESCENT RED-ORANGE OR FLUORESCENT YELLOW-ORANGE IN COLOR. THE FLUORESCENT VERSIONS OF ORANGE PROVIDE HIGHER CONSPICUITY THAN STANDARD ORANGE, ESPECIALLY DURING TWILGHT. ALL SIGNS USED AT NIGHT SHALL BE EITHER RETRORE-FLECTIVE, WITH A MATERIAL THAT HAS A SMOOTH, SEALED OUTER SURFACE, OR ILLUMINATED TO SHOW SIMILAR SHAPE AND COLOR BOTH DAY AND NIGHT. SIGN ILLUMINATION MAY BE EITHER IN-TERNAL OR EXTERNAL. ROADWAY LIGHTING DOES NOT MEET THE REQUIREMENTS FOR SIGN ILLUMINATION.
2. TYPE A FLASHING WARNING LIGHTS MAY BE USED IN CONJUNCTION WITH SIGNS AT NIGHT. STANDARD ORANGE FLAGS MAY BE USED FOR DAY TIME OPERATIONS. HOWEVER, NEITHER LIGHTS NOR FLAGS MAY BLOCK THE SIGN LEGEND.
3. SIGNS SHOULD BE LOCATED ON THE RIGHT-HAND SIDE OF THE ROADWAY. WHEN SPECIAL EMPHASIS IS NEEDED, SIGNS MAY BE PLACE ON BOTH THE LEFT AND RIGHT SIDES OF ROADWAY. SIGNS SHALL BE PLACED ON BOTH THE LEFT AND RIGHT SIDES OF ONE-WAY OR DIVIDED ROADWAYS. SIGNS USED FOR LONG-TERM STATIONARY AND INTERMEDIATE-TERM STATIONARY WORK SHALL BE MOUNTED AT A HEIGHT OF AT LEAST 2.1 m (7'), MEASURED FROM THE BOTTOM OF THE SIGN. THE HEIGHT TO THE BOTTOM OF A SECONDARY SIGN MOUNTED BELOW ANOTHER SIGN MAY BE O.3 m (1') LESS THAN THE APPROPRIATE HEIGHT ABOVE.
4. SIGNS MAY BE MOUNTED ON PORTABLE SUPPORTS FOR SHORT-TERM, SHORT DURATION, MOBILE CON-DITIONS AND EMERGENCIES. SIGNS MOUNTED ON PORTABLE SUPPORTS SHALL BE AT A HEIGHT OF AT LEAST 0.3 m (1'), MEASURED FROM THE BOTTOM OF THE SIGN.
5. ALL SIGN SYSTEMS SHOULD BE CRASHWORTHY. NO SIGN MOUNTS SHALL BLOCK OR IMPEDE SIDEALKS UNLESS NO OTHER OPTION IS AVAILABLE. ONLY SANDBAGS SHOULD BE USED FOR BALLASTING SIGN MOUNTS.

TABLE VI-3 TYPICAL CONSTRUCTION WARNING SIGN SIZE AND SPACING

Roadway Classi fication	Posted Speed	Sign Spacing ☆	Long-term Stationary Or Intermediate-term Stationary Approaching Warning Signs CW20 Series And CW22-1 Sign		Short-term Stationary Or Short Duration Approach Warning Signs CW22 Series		Other Warning Signs
			Standard	Minimum4	Standard	Minimum4	Standard
Conven.	KPH (MPH)	meter (feet)	mm (inches)	mm (inches)	mm (inches)	mm (inches)	mm (inches)
	50 (30)	40 (120)	1220x1220 (48x48)	915x915 (36x36)			
	55 (35)	50 (160)			915x915 (36x36)		915x915 (36x36)
	65 (40)	75 (240)					
	70 (45)	100 (320)		Use Standard Size		Use Standard Size	
	80 (50)	120 (400)					
	90 (55)	150 (500) 2					
	100 (60)	180 (600) 2			1220x1220 (48x48)		1220x1220 (48x48)
	105 (65)	210 (700) 2					
	115 (70)	240 (800) 2					
Exp. or Fwy	☆☆	☆☆ 3			☆☆☆	☆☆☆	☆☆☆

☆ MINIMUM DISTANCE FROM WORK TO 1st ADVANCE WARNING SIGN AND/OR DISTANCE BETWEEN EACH ADDITIONAL SIGN.

☆☆ FOR TYPICAL SIGN SPACINGS ON EXPRESSWAYS AND FREEWAYS, REFER TO THE CURRENT ADDITION OF TMUTCD.

☆☆☆ SMALLER SIGN SIZES MAY BE USED WHERE SIGN DESIGNS HAVE NOT BEEN INCLUDED IN THE "STANDARD HIGHWAY SIGNS DESIGN MANUAL".

1. SPECIAL OR LARGER SIZE SIGNS MAY BE USED AS NECESSARY.
2. DISTANCE BETWEEN SIGNS SHOULD BE INCREASED AS REQUIRED TO HAVE 450 m (1500') OR MORE ADVANCE WARNING.
3. DISTANCE BETWEEN SIGNS SHOULD BE INCREASED AS REQUIRED TO HAVE A 0.8 km (1/2 MILE) OR MORE ADVANCE WARNING.
4. FOR USE ONLY ON SECONDARY ROADS OR CITY STREETS WHERE SPEEDS ARE LOW.

CITY OF AUSTIN DEPARTMENT OF PUBLIC WORKS	TRAFFIC CONTROL SIGNS	
RECORD COPY SIGNED BY SAM ANGOORI — 01/04/10 ADOPTED	THE ARCHITECT/ENGINEER ASSUMES RESPONSIBILITY FOR APPROPRIATE USE OF THIS STANDARD.	STANDARD NO. 804S-5 7 OF 13

TYPICAL CMTA/C.I.P. SIGN LOCATIONS (STANDARD NO. 804S-5, 8 OF 13)

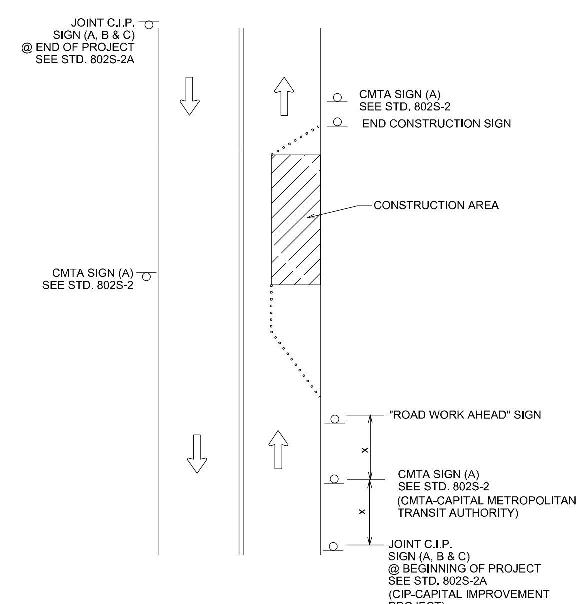

NOTES:

1. OTHER REQUIRED SIGNS NOT SHOWN FOR CLARITY.
2. "X" DISTANCES SAME AS STANDARD TABLE SHOWN ON SHEET 13 OF 13.

SEE STANDARD 804S-5 SHEET 12 OF 13 AND SHEET 13 OF 13 FOR GENERAL NOTES AND DEVICE SPACING.

CITY OF AUSTIN DEPARTMENT OF PUBLIC WORKS	TYPICAL CMTA/C.I.P. SIGN LOCATIONS	
RECORD COPY SIGNED BY SAM ANGOORI — 01/04/10 ADOPTED	THE ARCHITECT/ENGINEER ASSUMES RESPONSIBILITY FOR APPROPRIATE USE OF THIS STANDARD.	STANDARD NO. 804S-5 8 OF 13

SPECIAL WORK ZONE SIGNS (STANDARD NO. 804S-5, 9 OF 13)

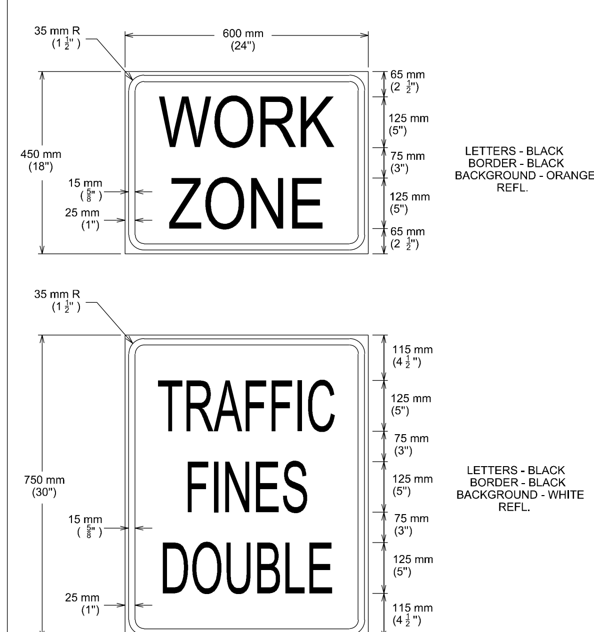

SEE STANDARD DETAIL 804S-5 SHEET 5 OF 13 FOR SKID-MOUNTED SIGN SUPPORT.

CITY OF AUSTIN DEPARTMENT OF PUBLIC WORKS	SPECIAL WORK ZONE SIGNS	
RECORD COPY SIGNED BY SAM ANGOORI — 01/04/10 ADOPTED	THE ARCHITECT/ENGINEER ASSUMES RESPONSIBILITY FOR APPROPRIATE USE OF THIS STANDARD.	STANDARD NO. 804S-5 9 OF 13

SPECIAL WORK ZONE SIGNS (STANDARD NO. 804S-5, 10 OF 13)

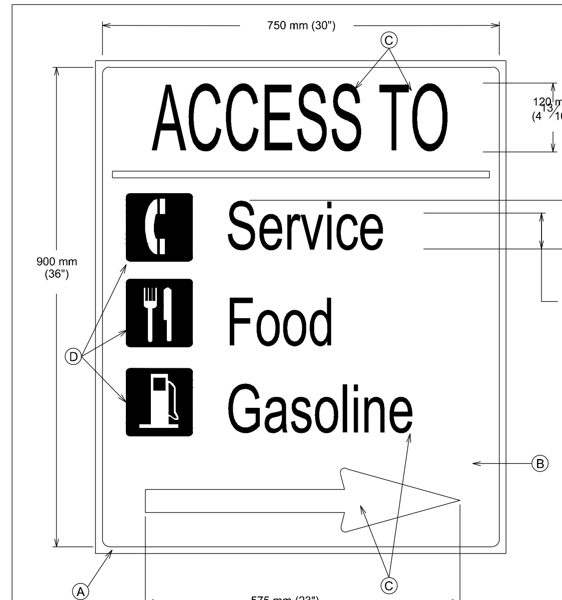

Ⓐ 50 mm (1/2") WHITE RETROREFLECTIVE BORDER
Ⓑ BLUE RETROFEFLECTIVE BACKGROUND
Ⓒ WHITE RETROREFLECTIVE ARROW AND LETTERS
Ⓓ WHITE RETROREFELCTIVE BUSINESS LOGO

NOTES:

1. CONTRACTORS CAN MAKE BUSINESS NAMES REMOVABLE/CHANGEABLE AS AN OPTION.
2. BUSINESS LOGO ARE OPTIONAL. IF USED LETTERING MUST BE MINIMIZED.

CITY OF AUSTIN DEPARTMENT OF PUBLIC WORKS	SPECIAL WORK ZONE SIGNS	
RECORD COPY SIGNED BY SAM ANGOORI — 01/04/10 ADOPTED	THE ARCHITECT/ENGINEER ASSUMES RESPONSIBILITY FOR APPROPRIATE USE OF THIS STANDARD.	STANDARD NO. 804S-5 10 OF 13

NO.	DR	CK	DATE	DESCRIPTION

REVISIONS

BLACK & VEATCH
Building a world of difference.
Black & Veatch Corporation
Registration No. F-258
Austin, Texas

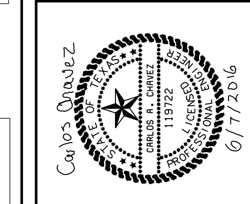

Austin WATER

Walnut Creek WWTP - Tertiary Filter Rehabilitation Project

CIP ID No. 3023.025

CIVIL
STANDARD DETAILS
SHEET 2 OF 3

DESIGNED BY:	AWL
DRAWN BY:	AWL
REVIEWED BY:	WLK
APPROVED BY:	TSD
PROJECT NO.:	168622
DATE:	4/4/2014
SCALE:	NTS

REVISION:

DISCIPLINE NO.
C-11

DWG. NO.
24 OF 273

FD168622 SAVED: CAR51124, 10/7/2013 10:03:06 AM
D168622 09C5025 ID: Civil Drawings
File: C:\PWBatchPDF\Process\168622 - Austin Walnut Creek WWTP Filter Rehab\C_11_.dwg Layout: Work Plotted: 6/9/2016 1:52:19 PM

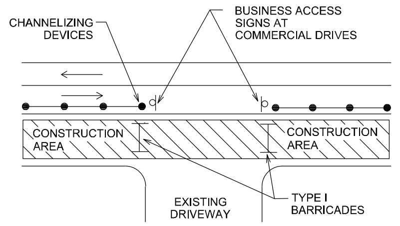

DRIVEWAY ACCESS BARRICADE DETAIL

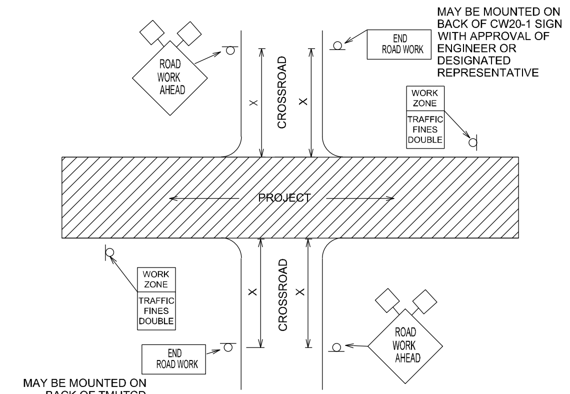

MAY BE MOUNTED ON BACK OF TMUTCD CW20-1 SIGN WITH APPROVAL OF ENGINEER OR DESIGNATED REPRESENTATIVE (TMUTCD-TEXAS MANUAL FOR UNIFORM TRAFFIC CONTROL DEVICES)

CROSSROAD SIGNING AND BARRICADING

SEE STANDARD 804S-5
SHEET 12 OF 13 AND SHEET 13 OF 13
FOR GENERAL NOTES AND DEVICE SPACING.

CITY OF AUSTIN DEPARTMENT OF PUBLIC WORKS	SIGNING AND BARRICADING CROSSROAD & DRIVEWAY
RECORD COPY SIGNED BY SAM ANGOORI *01/04/10* ADOPTED	THE ARCHITECT/ENGINEER ASSUMES RESPONSIBILITY FOR APPROPRIATE USE OF THIS STANDARD. — STANDARD NO. 804S-5, 11 OF 13

1. ALL TRAFFIC CONTROL DEVICES, SIGNS, BARRICADES AND WARNING SIGNS SHALL BE FURNISHED, PLACED, CONSTRUCTED AND MAINTAINED IN THE APPROPRIATE TYPES AND SIZES AND FLAGGER OPERATIONS EXECUTED IN ACCORDANCE WITH THE CURRENT EDITION OF THE TEXAS MANUAL ON UNIFORM CONTROL DEVICES (TMUTCD), THE CITY OF AUSTIN STANDARD SPECIFICATIONS SERIES 800 AND THE CITY OF AUSTIN TRANS-PORTATION CRITERIA MANUAL, OR AS DIRECTED BY THE ENGINEER OR DESIGNATED RE-PRESENTATIVE. IF A CONFLICT ARISES THEN THE CITY OF AUSTIN TRANSPORTATION CRITERIA MANUAL SHALL CONTROL UNLESS OTHERWISE INSTRUCTED BY THE ENGINEER OR DESIGNATED REPRESENTATIVE.
2. THE CONTRACTOR SHALL NOTIFY THE TRANSPORTATION DIVISION OF THE DEPARTMENT OF PUBLIC WORKS AT 974-7024 NO LATER THAN THE MONDAY OF THE WEEK DURING WHICH THE CONTRACTOR INTENDS TO SET UP BARRICADES TO START CONSTRUCTION.
3. PROPOSED CONSTRUCTION TRAFFIC MOVEMENTS MAY REQUIRE EXISTING SIGNAL HEADS TO BE RELOCATED. THE CITY OF AUSTIN WILL REVIEW SIGNAL HEAD LOCATIONS DURING CONSTRUCTION AND PERFORM THE REQUIRED ADJUSTMENTS. THE CONTRACTOR SHALL CONTACT THE TRANSPORTATION DIVISION OF THE DEPARTMENT OF PUBLIC WORKS AT 974-7024, THREE (3) DAYS PRIOR TO PLACMENT ANY TRAFFIC CONTROLS WHICH MAY REQUIRE SIGNAL HEAD ADJUSTMENTS/RELOCATION.
4. THE CONTRACTOR SHALL PROVIDE ONE (1) FULL-TIME OFF-DUTY, UNIFORMED AUSTIN POLICE DEPARTMENT CERTIFIED PEACE OFFICER AND ONE (1) VEHICLE OF THE TYPE APPROVED BY THE ENGINEER OR DESIGNATED REPRESENTATIVE FOR TEMPORARY LANE CLOSURES WHEN UNDERSEALING, MILLING, PAVING AND WHEN WORKING IN INTERSECTIONS AS PART OF THE TRAFFIC CONTROL OPERATIONS. THE PEACE OFFICER SHALL BE ABLE TO SHOW PROOF OF CERTIFICATION BY THE TEXAS COMMISSION ON LAW ENFORCEMENT OFFICER STANDARDS.
5. THE CONTRACTOR SHALL NOTIFY ALL OTHER GOVERNMENTAL AGENCIES WHOSE RIGHTS-OF-WAY ARE AFFECTED BY HIS WORK ACTIVITIES. THE CONTRACTOR SHALL PROVIDE ANY ADDITIONAL TRAFFIC CONTROL DEVICES THAT THEY MAY NEED.
6. THE CONTRACTOR SHALL MAINTAIN ONE (1) DUST-FREE LANE OF TRAFFIC IN EACH DIRECTION AT ALL TIMES, UNLESS OTHERWISE NOTED IN THE DRAWINGS OR APPROVED THE ENGINEER OR DESIGNATED REPRESENTATIVE.
7. THERE SHALL BE A MINIMUM OF THREE (3) METERS (10 FEET) CLEAR WIDTH FOR EACH LANE OF TRAFFIC IN CHANNELIZED AREAS, UNLESS OTHERWISE NOTED ON THE DRAWINGS OR APPROVED BY THE ENGINEER OR DESIGNATED REPRESENTATIVE.
8. THE CONTRACTOR SHALL MAINTAIN DRIVEWAY ACCESS AT ALL TIMES. IF ACCESS CANNOT BE MAINTAINED, THE CONTRACTOR WITH THE APPROVAL OF THE ENGINEER OR DESIGNATED REPRESENTATIVE SHALL PROVIDE AT LEAST 24 HOUR WRITTEN NOTICE OF LIMITED ACCESS TO AFFECTED PROPERTY OWNERS. THE CONTRACTOR SHALL PROVIDE BUSINESS ACCESS SIGNS AS NEEDED TO NFORM DRIVERS OF THE LOCATIONS OF ALL DRIVEWAYS.
9. TEMPORARY LANE CLOSURES IN THE CENTRAL BUSINESS DISTRICT (CBD) OR ON ARTERIAL STREETS SHALL NOT BE PERMITTED DURING THE HOURS OF 7 AM TO 9 AM AND 4 PM TO 6PM MONDAY THROUGH FRIDAY UNLESS PRIOR APPROVAL HAS BEEN OBTAINED FROM THE TRANSPORTATION DIVISION.
10. TRAFFIC CONTROL SHOWN ON STANDARD DETAILS IS TYPICAL. ADDITIONAL SIGNING AND/ OR BARRICADING, AS WELL AS TEMPORARY PAVEMENT MARKINGS AND OBLITERATION/ RESTORATION OF EXISTING PAVEMENT MARKINGS, MAY BE REQUIRED DEPENDING ON FIELD CONDITIONS. FIELD ADJUSTMENTS TO TRAFFIC CONTROLS WILL NOT BE PAID FOR DIRECTLY, BUT WILL BE CONSIDERED SUBSIDIARY TO ITEM NO. 803S "BARRICADES, SIGNS AND TRAFFIC HANDLING".
11. THE CONTRACTOR SHALL DESIGNATE A COMPETENT PERSON FOR TRAFFIC CONTROL. THE COMPETENT PERSON SHALL MAKE INSPECTIONS OF THE TRAFFIC CONTROL DEVICES AT LEAST TWO (2) TIMES A DAY (ONCE AT THE BEGINNING OF THE DAY AND ONCE AT THE END OF THE DAY), INCLUDING NON-WORKING DAYS, ENSURING THAT ALL DEVICES ARE IN THEIR PROPER PLACE AND ARE IN WORKING ORDER.
12. ALL DEVICES SHALL BE MADE USING MATERIALS LISTED ON THE TxDOT APPROVED PRODUCTS LIST.

CITY OF AUSTIN DEPARTMENT OF PUBLIC WORKS	GENERAL TRAFFIC CONTROL NOTES
RECORD COPY SIGNED BY SAM ANGOORI *01/04/10* ADOPTED	THE ARCHITECT/ENGINEER ASSUMES RESPONSIBILITY FOR APPROPRIATE USE OF THIS STANDARD. — STANDARD NO. 804S-5, 12 OF 13

13. ALL PERSONS WORKING WITHIN THE RIGHT-OF-WAY SHALL WEAR A BRIGHTLY COLORED SAFETY VEST. FOR NIGHTTIME WORK THE VEST SHALL BE RETROREFLECTIVE,
14. WHEN AN INTERSECTION IS CLOSED FOR CONSTRUCTION, THE CONTRACTOR SHALL PROCEED WITH CONSTRUCTION IN SUCH A MANNER THAT THE CLOSURE TIME IS MINIMIZED.
15. THE CONTRACTOR SHALL NOTIFY THE CAPITAL METRO DISPATCHER AT 385-4295 ONE (1) WEEK PRIOR TO LANE CLOSURES ADJACENT TO BUS STOPS.

DURATION OF WORK

WORK DURATION IS A MAJOR FACTOR IN DETERMINING THE NUMBER AND TYPES OF DEVICES USED IN TEMPORARY TRAFFIC ZONES. THE FIVE (5) CATEGORIES OF WORK DURATION AND THEIR TIME AT A LOCATION ARE AS FOLLOWS:

- LONG-TERM STATIONARY-WORK THAT OCCUPIES A LOCATION FOR MORE THAN 3 DAYS.
- INTERMEDIATE-TERM STATIONARY-WORK THAT OCCUPIES A LOCATION FROM OVERNIGHT TO 3 DAYS.
- SHORT-TERM STATIONARY-DAYTIME WORK THAT OCCUPIES A LOCATION FROM 1 TO 12 HOURS.
- SHORT-DURATION WORK THAT OCCUPIES A LOCATION UP TO 1 HOUR.
- MOBILE-WORK THAT MOVES INTERMITTENTLY OR CONTINUOUSLY.

Typical Transition Lengths and Suggested Maximum Spacing of Devices

		Minimum Desirable Taper Lengths (L) Meters (Feet)			Suggested Max. Device Spacing		Suggested Sign Spacing Meters (Feet)
Posted Speed KPH (MPH)	Formula	3.0(10) Offset Meters (feet)	3.3(11) Offset Meters (feet)	3.6(12) Offset Meters (feet)	On a taper Meters (feet)	On a tangent Meters (feet)	"X" Dimension
50 (30)	$L=\frac{WS^2}{60}$	45 (150)	50 (165)	55 (180)	9 (30)	15-20 (60-75)	40 (120)
55 (35)		65 (205)	70 (225)	75 (245)	10 (35)	25-25 (70-90)	50 (160)
65 (40)		80 (265)	90 (295)	100 (320)	12 (40)	25-30 (80-100)	75 (240)
70 (45)	L=WS	135 (450)	(495)	165 (540)	13 (45)	25-30 (90-110)	100 (320)
80 (50)		150 (500)	165 (550)	180 (600)	15 (50)	30-35 (100-125)	120 (400)
90 (55)		165 (550)	185 (605)	200 (660)	16 (55)	35-40 (110-140)	150 (500)
100 (60)		180 (600)	200 (660)	220 (720)	18 (60)	40-45 (120-150)	180 (600)
105 (65)		195 (650)	215 (715)	235 (780)	19 (65)	40-50 (130-165)	210 (700)
115 (70)		215 (700)	235 (770)	255 (840)	21 (70)	45-55 (140-175)	240 (800)

CITY OF AUSTIN DEPARTMENT OF PUBLIC WORKS	GENERAL TRAFFIC CONTROL NOTES
RECORD COPY SIGNED BY SAM ANGOORI *01/04/10* ADOPTED	THE ARCHITECT/ENGINEER ASSUMES RESPONSIBILITY FOR APPROPRIATE USE OF THIS STANDARD. — STANDARD NO. 804S-5, 13 OF 13

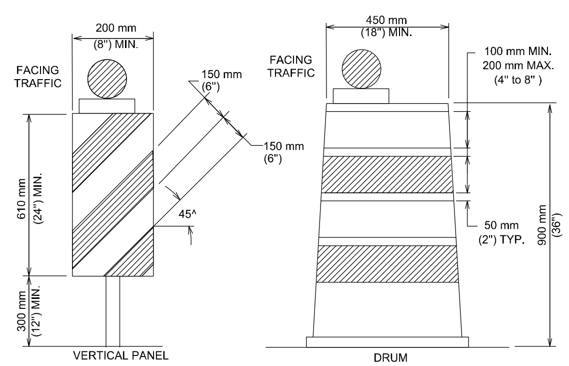

LONG TERM AND INTERMEDIATE TERM STATIONARY WORK

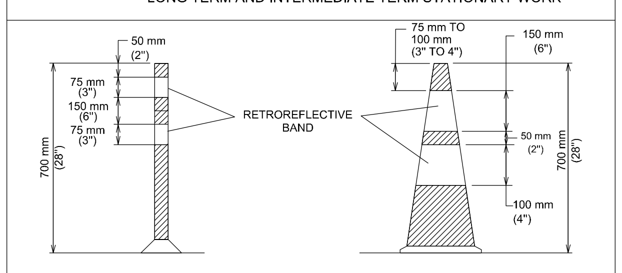

SHORT TERM AND SHORT DURATION WORK

SEE STANDARD 804S-5
SHEET 12 OF 13 AND SHEET 13 OF 13
FOR GENERAL NOTES AND DEVICE SPACING.

CITY OF AUSTIN DEPARTMENT OF PUBLIC WORKS	CHANNELIZING DEVICES
RECORD COPY SIGNED BY SAM ANGOORI *01/04/10* ADOPTED	THE ARCHITECT/ENGINEER ASSUMES RESPONSIBILITY FOR APPROPRIATE USE OF THIS STANDARD. — STANDARD NO. 804S-5, 1 OF 13

CHANNELIZING DEVICES

1. ALL CHANNELIZING DEVICES SHALL HAVE WARNING LIGHTS OR LARGE REFLECTORS WHEN USED AT NIGHT. FLASHING WARNING LIGHTS MAY BE PLACED ON CHANNELIZING DEVICES USED SINGULARLY OR IN GROUPS TO MARK A SPOT CONDITION. WARNING LIGHTS ON CHANNELIZING DEVICES USED IN A SERIES SHALL BE STEADY-BURN. CHANNELIZING DEVICES IN TAPERS AT NIGHT SHALL HAVE TYPE C WARNING LIGHTS.
2. THE RETROREFLECTIVE MATERIAL USED ON CHANNELIZING DEVICES SHALL HAVE A SMOOTH, SEALED OUTER SURFACE.
3. THE NAME AND TELEPHONE NUMBER OF THE AGENCY, CONTRACTOR OR SUPPLIER SHALL BE SHOWN ON THE NON-RETROREFLECTIVE SURFACE OF ALL CHANNELIZING DEVICES. THE LETTERS AND NUMBERS SHALL BE A NON-RETROREFLECTIVE COLOR AND NOT OVER 50 mm (2") IN HEIGHT.
4. PARTICULAR ATTENTION SHOULD BE GIVEN TO ASSURE THAT CHANNELIZING DEVICES ARE MAINTAINED AND KEPT CLEAN, VISIBLE AND PROPERLY POSTITIONED AT ALL TIMES. DEVICES SHALL BE REPLACED THAT ARE DAMAGED AND HAVE LOST A SIGNIFICANT AMOUNT OF THEIR RETROREFLECTIVITY AND EFFECTIVENESS.

CONES

CONES SHALL PREDOMINANTLY BE ORANGE, FLUORESCENT RED-ORANGE, OR FLUORESCENT YELLOW-ORANGE IN COLOR, NOT LESS THAN 70 mm (28") IN HEIGHT, AND SHALL BE MADE OF A MATERIAL THAT CAN BE STRUCK WITHOUT DAMAGING VEHICLES ON IMPACT. FOR NIGHT TIME USE, CONES SHALL BE RETROREFLECTIVE OR EQUIPPED WITH LIGHTING DEVICES FOR MAXIMUM VISIBLITY. RETROREFLECTION OF CONES SHALL BE PROVIDED BY A WHITE BOND 150 mm (6") WIDE, NO MORE THAN 75 TO 100 mm (3 TO 4") FROM THE TOP OF THE CONE, AND AN ADDITIONAL 100 mm (4") WHITE BAND A MINIMUM OF 50 mm (2") BELOW THE 150 mm (6") BAND. TRAFFIC CONES ARE NORMALLY USED FOR SHORT-TERM STATIONARY AND SHORT DURATION WORK. HOWEVER, CONES MAY BE USED FOR INTERMEDIATE-TERM STATIONARY WORK AT NIGHT, IF THE SITE IS CONTINUOUSLY MANNED.

TUBULAR MARKERS

TUBULAR MARKERS SHALL PREDOMINANTLY BE ORANGE IN COLOR, NOT LESS THAN 700 mm (28") IN HEIGHT , A MINIMUM 50 mm (2") WIDE WHEN FACING TRAFFIC AND MADE OF A MATERIAL THAT CAN BE STRUCK WITHOUT DAMAGING VEHICLES. FOR NIGHT TIME USE, TUBLULAR MARKERS SHALL BE RETROREFLECTIVE PROVIDED BY TWO (2) 75 mm (3") WIDE WHITE BANDS PLACED A MAXIMUM OF 50 mm (2") FROM THE TOP, WITH A MAXIMUM OF 150 mm (6") BETWEEN BANDS. TUBULAR MARKERS ARE NORMALLY USED FOR SHORT-TERM STATIONARY AND SHORT DURATION WORK. HOWEVER, TUBULAR MARKERS MAY BE USED FOR INTERMEDIATE-TERM STATIONARY WORK AT NIGHT, IF THE SITE IS CONTINUOUSLY MANNED.

VERTICAL PANELS

VERTICAL PANELS SHALL BE 200 TO 300 mm (8 TO 12") WIDE AND AT LEAST 600 mm (24") IN HEIGHT. THEY SHALL HAVE ORANGE AND WHITE STRIPES, AND BE RETROREFLECTIVE. PANEL STRIPE WIDTHS SHALL BE 150 mm (6") EXCEPT WHERE PANEL HEIGHTS ARE LESS THAN 900 mm (36"), WHEN 100 mm (4") STRIPES MAY BE USED. IF USED FOR TWO-WAY TRAFFIC, BACK-TO-BACK PANELS SHALL BE USED.

DRUMS

1. DRUMS USED FOR TRAFFIC WARNING OR CHANNELIZATION SHALL BE CONSTRUCTED OF LIGHT-WEIGHT FLEXIBLE AND DEFORMABLE MATERIALS AND BE A MINIMUM OF 900 mm (36") IN HEIGHT, AND HAVE AT LEAST 450 mm (18") MINIMUM WIDTH, REGARDLESS OF OREINTATION. STEEL DRUMS SHALL NOT BE USED. THE MARKINGS ON DRUMS SHALL BE HORIZONTAL, CIRCUNFERENTIAL, ALTERNATING ORANGE AND WHITE RETROREFLECTIVE STRIPES 100 TO 200 mm (4 TO 8") WIDE. EACH DRUM SHALL HAVE A MINIMUM OF TWO (2) ORANGE AND TWO (2) WHITE STRIPES. ANY NON-RETROREFLECTIVE SPACES BETWEEN THE HORIZONTAL ORANGE AND WHITE STRIPES, SHALL NOT EXCEED 50 mm (2") WIDE. DRUMS SHALL HAVE CLOSED TOPS THAT WILL NOT ALLOW COLLECTION OF ROADWORK OR OTHER DEBRIS.
2. DRUMS SHOULD NOT BE WEIGHTED WITH SAND, WATER OR ANY MATERIAL TO AN EXTENT THAT WOULD MAKE THE HAZARDOUS TO MOTORISTS, PEDESTRIANS OR WORKERS. WHEN THEY ARE USED IN REGIONS SUSCEPTIBLE TO FREEZING, THEY SHOULD HAVE DRAINAGE HOLES IN THE BOTTOM SO WATER WILL NOT ACCUMULATE AND FREEZE,CAUSING A HAZARD IF STRUCK BY A MOTORIST. BALLAST SHALL NOT BE PLACED ON TOP OF THE DRUM.

CITY OF AUSTIN DEPARTMENT OF PUBLIC WORKS	CHANNELIZING DEVICES
RECORD COPY SIGNED BY SAM ANGOORI *01/04/10* ADOPTED	THE ARCHITECT/ENGINEER ASSUMES RESPONSIBILITY FOR APPROPRIATE USE OF THIS STANDARD. — STANDARD NO. 804S-5, 2 OF 13

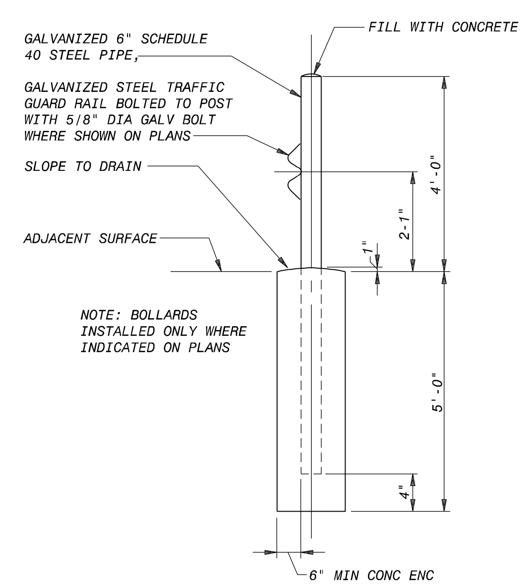

BOLLARD (GUARDPOST) (A/-)
NO SCALE

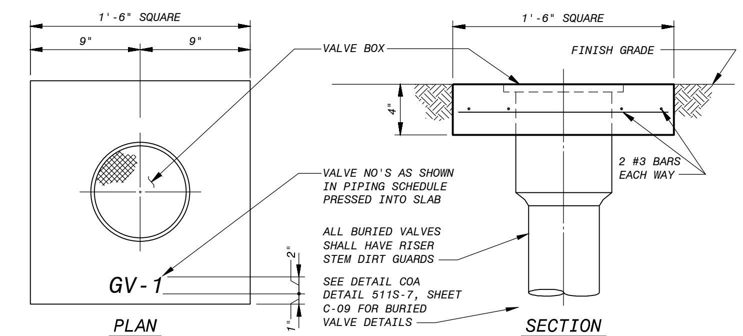

YARD VALVE BOX (B)
NO SCALE

REVISIONS

NO.	DR	CK	DATE	DESCRIPTION

BLACK & VEATCH
Building a world of difference.
Black & Veatch Corporation
Registration No. F-258
Austin, Texas

STATE OF TEXAS — CARLOS R. CHAVEZ — 119722 — LICENSED PROFESSIONAL ENGINEER
Carlos Chavez 6/7/2016

Austin WATER
Walnut Creek WWTP - Tertiary Filter Rehabilitation Project
CIP ID No. 3023.025

CIVIL
STANDARD DETAILS
SHEET 3 OF 3

DESIGNED BY:	AWL
DRAWN BY:	AWL
REVIEWED BY:	WLK
APPROVED BY:	TSD
PROJECT NO.:	168622
DATE:	4/4/2014
SCALE:	NTS

REVISION:

DISCIPLINE NO.
C-12

DWG. NO.
25 OF 273

FD168622 SAVED: LER07108, 1/29/2014 9:17:26 AM
D168622 09:3025 ID: Civil Drawings
File: C:\PWBatchPDF\Process\168622 - Austin Walnut Creek WWTP Filter Rehab\C_12.dwg Layout: Work Plotted: 6/9/2016 1:52:31 PM

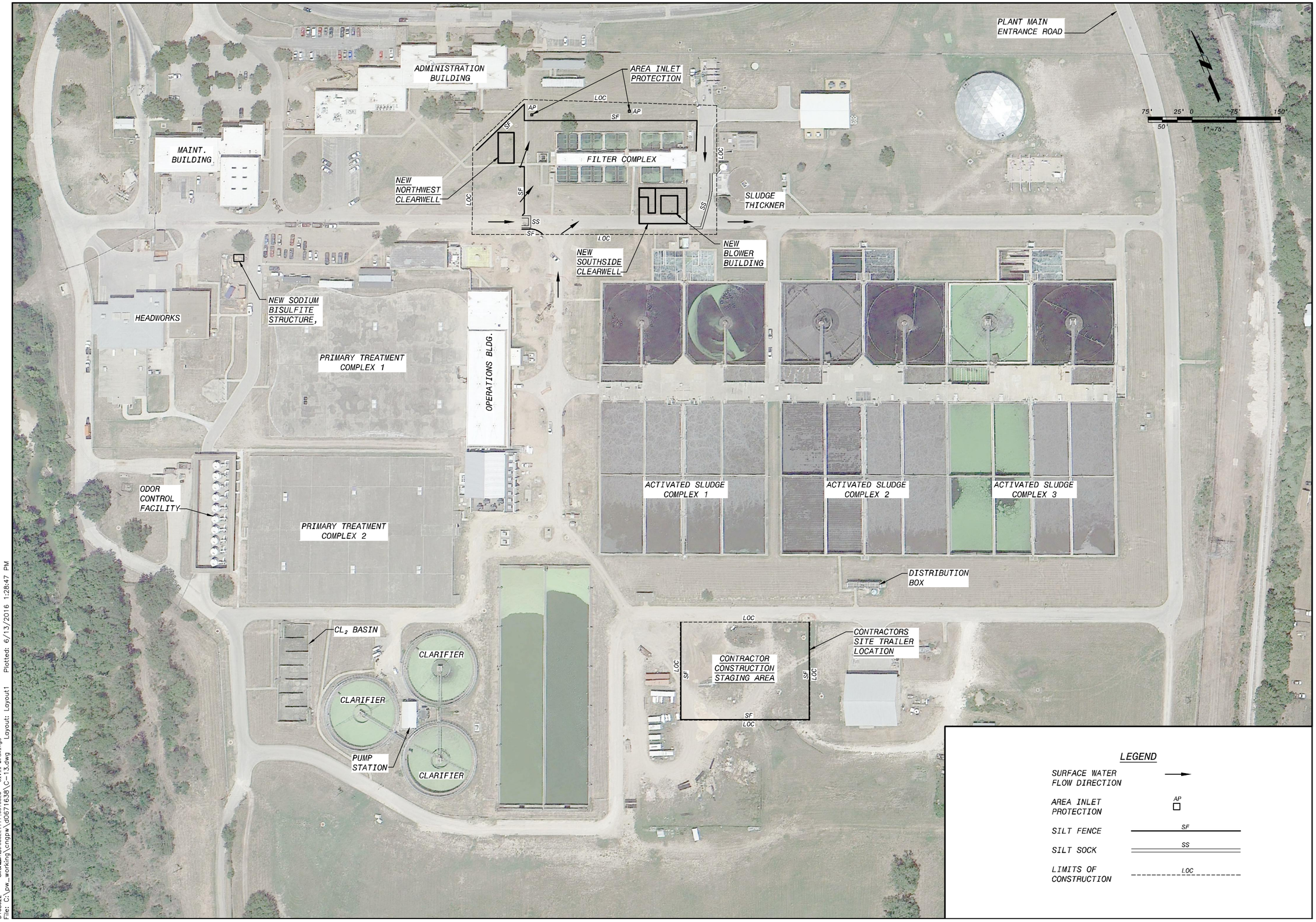

LEGEND

SURFACE WATER FLOW DIRECTION	→
AREA INLET PROTECTION	AP □
SILT FENCE	SF
SILT SOCK	SS
LIMITS OF CONSTRUCTION	LOC

NO.	DR	CK	DATE	DESCRIPTION

REVISIONS

BLACK & VEATCH
Building a world of difference.
Black & Veatch Corporation
Registration No. F-258
Austin, Texas

Carlos Gonzalez
STATE OF TEXAS
CARLOS R. GONZALEZ
119722
LICENSED PROFESSIONAL ENGINEER
6/7/2016

Austin WATER

Walnut Creek WWTP - Tertiary Filter Rehabilitation Project

CIP ID No. 3023.025

CIVIL
CITY OF AUSTIN EROSION/SEDIMENTATION CONTROL SITE PLAN

DESIGNED BY:	EEP
DRAWN BY:	AWL
REVIEWED BY:	WLK
APPROVED BY:	TSD
PROJECT NO.:	168622
DATE:	4/4/2014
SCALE:	1"=75'

REVISION:

DISCIPLINE NO.
C-13

DWG. NO.
26 OF 273

50106822 SAVED: LEP07106, 11/14/2013 8:44:41 PM
D168622 PWGBEEP01P8892, 6/13/2016 1:28:47 PM
File: C:\pw_working\cnpnw\d0671638\C-13.dwg Layout: Layout1 Plotted: 6/13/2016 1:28:47 PM

CITY OF AUSTIN – STANDARD NOTES
EROSION AND SEDIMENTATION CONTROL
(MODIFIED FOR USE ON GENERAL PERMIT PROJECTS)

1. THE CONTRACTOR SHALL INSTALL EROSION/SEDIMENTATION CONTROLS AND TREE/NATURAL AREA PROTECTIVE FENCING PRIOR TO ANY SITE PREPARATION WORK (CLEARING, GRUBBING, OR EXCAVATION).

2. THE PLACEMENT OF EROSION/SEDIMENTATION CONTROLS SHALL BE IN ACCORDANCE WITH THE ENVIRONMENTAL CRITERIA MANUAL AND THE APPROVED EROSION AND SEDIMENTATION CONTROL PLAN.

3. THE PLACEMENT OF TREE/NATURAL AREA PROTECTIVE FENCING SHALL BE IN ACCORDANCE WITH THE CITY OF AUSTIN STANDARD NOTES FOR TREE AND NATURAL AREA PROTECTION AND THE APPROVED GRADING/TREE AND NATURAL AREA PLAN.

4. A PRE-CONSTRUCTION CONFERENCE SHALL BE HELD ON-SITE WITH THE CONTRACTOR, DESIGN ENGINEER, PERMIT APPLICANT, AND GENERAL PERMIT PROGRAM REPRESENTATIVE AFTER INSTALLATION OF THE EROSION/SEDIMENTATION CONTROLS AND THE TREE/NATURAL AREA PROTECTION MEASURES AND PRIOR TO BEGINNING ANY SITE PREPARATION WORK. THE CONTRACTOR SHALL NOTIFY THE GENERAL PERMIT PROGRAM OFFICE AT 512/974-6330, AT LEAST 3 DAYS PRIOR TO THE MEETING DATE.

5. ANY SIGNIFICANT VARIATION IN MATERIALS OR LOCATIONS OF CONTROLS OR FENCES FROM THOSE SHOWN ON THE APPROVED PLANS MUST BE APPROVED BY THE REVIEWING ENGINEER AND THE GENERAL PERMIT PROGRAM REPRESENTATIVE.

6. THE CONTRACTOR IS REQUIRED TO INSPECT THE CONTROLS AND FENCES AT DAILY INTERVALS AND AFTER SIGNIFICANT RAINFALL EVENTS TO INSURE THAT THEY ARE FUNCTIONING PROPERLY. THE PERSON(S) RESPONSIBLE FOR MAINTENANCE OF CONTROLS AND FENCES SHALL IMMEDIATELY MAKE ANY NECESSARY REPAIRS TO DAMAGED AREAS. SILT ACCUMULATION AT CONTROLS MUST BE REMOVED WHEN THE DEPTH REACHES SIX (6) INCHES. SILT ACCUMULATION AT INLET DEVICES SHOULD BE REMOVED WHEN THE DEPTH REACHES TWO (2) INCHES.

7. PRIOR TO FINAL ACCEPTANCE BY THE CITY, HAUL ROADS AND WATERWAY CROSSINGS CONSTRUCTED FOR TEMPORARY CONTRACTOR ACCESS MUST BE REMOVED, ACCUMULATED SEDIMENT REMOVED FROM THE WATERWAY AND THE AREA RESTORED TO THE ORIGINAL GRADE AND REVEGETATED. ALL LAND CLEARING DEBRIS SHALL BE DISPOSED OF IN APPROVED SPOIL DISPOSAL SITES.

8. ALL WORK MUST STOP IF A VOID IN THE ROCK SUBSTRATE IS DISCOVERED WHICH IS ONE SQUARE FOOT OR LARGER IN TOTAL AREA, BLOWS AIR FROM WITHIN THE SUBSTRATE, AND/OR CONSISTENTLY RECEIVES WATER DURING ANY RAIN EVENT. AT THIS TIME, IT IS THE RESPONSIBILITY OF THE PROJECT MANAGER TO IMMEDIATELY CONTACT THE GENERAL PERMIT PROGRAM REPRESENTATIVE FOR FURTHER INVESTIGATION.

9. FIELD REVISIONS TO THE EROSION/SEDIMENTATION CONTROL PLAN MAY BE REQUIRED BY THE GENERAL PERMIT PROGRAM REPRESENTATIVE DURING THE COURSE OF CONSTRUCTION TO CORRECT CONTROL INADEQUACIES. ANY REVISIONS TO THE PERMITTED PLAN MUST BE APPROVED BY THE GENERAL PERMIT PROGRAM OFFICE OF THE PLANNING AND DEVELOPMENT REVIEW DEPARTMENT.

10. PERMANENT EROSION/SEDIMENTATION CONTROL: ALL DISTURBED AREAS SHALL BE RESTORED IN ACCORDANCE WITH THE CONTRACT DOCUMENTS. WHERE THE CRITERIA MANUAL AND CONTRACT DOCUMENTS DIFFER THE MOST ENVIRONMENTALLY BENEFICIAL MATERIALS/METHOD SHALL BE REQUIRED UNLESS OTHERWISE APPROVED BY THE GENERAL PERMIT PROGRAM REPRESENTATIVE.

11. DEVELOPER INFORMATION:

OWNER:

COMPANY:	CITY OF AUSTIN
CONTACT:	LAUREN TRACY, PE
ADDRESS:	625 EAST 10TH STREET,
	SUITE 400
	AUSTIN, TEXAS 78701
PHONE:	512-972-0230
E-MAIL:	LAUREN.TRACY@AUSTINTEXAS.GOV

OWNER'S REPRESENTATIVE RESPONSIBLE FOR PLAN ALTERATIONS:

COMPANY:	CITY OF AUSTIN
CONTACT:	STEVE PARKS, PE
ADDRESS:	505 BARTON SPRINGS RD.
PHONE:	512-924-7065
E-MAIL:	STEVE.PARKS@AUSTINTEXAS.GOV

PARTY RESPONSIBLE FOR EROSION/SEDIMENTATION CONTROL MAINTENANCE:
COMPANY: CONTRACTOR

PARTY RESPONSIBLE FOR TREE/NATURAL AREA PROTECTION MAINTENANCE:
COMPANY: CONTRACTOR

12. THE CONTRACTOR SHALL NOT DISPOSE OF SURPLUS EXCAVATED MATERIAL FROM THE SITE WITHOUT NOTIFYING THE GENERAL PERMIT PROGRAM REPRESENTATIVE, AT 974-6330, AT LEAST 48 HOURS PRIOR TO THE SPOILS REMOVAL. THIS NOTIFICATION SHALL INCLUDE THE DISPOSAL LOCATION AND A COPY OF THE PERMIT ISSUED TO RECEIVE THE MATERIAL.

13. INLET PROTECTION SHALL BE INSTALLED IMMEDIATELY PRIOR TO STREET WORK, AND WILL BE REMOVED AS SOON AS THE GENERAL PERMIT PROGRAM REPRESENTATIVE AGREES THAT THERE IS NO POTENTIAL FOR SEDIMENTATION.

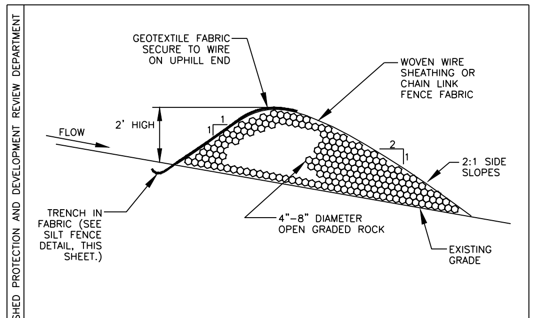

NOTES:

1. USE ONLY OPEN GRADED ROCK, 4-8 INCH DIAMETER, FOR STREAM FLOW CONDITION. USE OPEN GRADED ROCK, 3-5 INCH DIAMETER, FOR OTHER CONDITIONS.
2. ROCK BERM SHALL BE SECURED WITH A WOVEN WIRE SHEATHING HAVING MAXIMUM 1 INCH OPENING AND MINIMUM WIRE DIAMETER OF 20 GAUGE.
3. ROCK BERM SHALL BE INSPECTED WEEKLY OR AFTER EACH RAIN, AND THE STONE AND/OR FABRIC CORE-WOVEN WIRE SHEATHING SHALL BE REPLACED WHEN THE STRUCTURE CEASES TO FUNCTION AS INTENDED, DUE TO SILT ACCUMULATION AMONG THE ROCKS, WASHOUT, CONSTRUCTION TRAFFIC DAMAGE, ETC.
4. WHEN SILT REACHES A DEPTH EQUAL TO ONE-THIRD THE HEIGHT OF THE BERM OR ONE FOOT, WHICHEVER IS LESS, THE SILT SHALL BE REMOVED AND DISPOSED OF IN AN APPROVED SITE AND IN A MANNER AS TO NOT CREATE A SILTATION PROBLEM.
5. DAILY INSPECTION SHALL BE MADE ON SEVERE SERVICE ROCK BERMS; SILT SHALL BE REMOVED WHEN ACCUMULATION REACHES 6 INCHES.
6. WHEN SITE IS COMPLETELY STABILIZED, THE BERM AND ACCUMULATED SILT SHALL BE REMOVED AND DISPOSED OF IN AN APPROVED MANNER.

DESCRIPTION: APPROVED BY WATERSHED PROTECTION AND DEVELOPMENT REVIEW DEPARTMENT | REV. DATE:

FABRIC COVERED (SEVERE SERVICE) ROCK BERM

CITY OF AUSTIN		
GENERAL PERMIT PROGRAM / APPROVED	ADOPTED: / SCALE: N.T.S. / INITIAL:	STANDARD NO. N/A

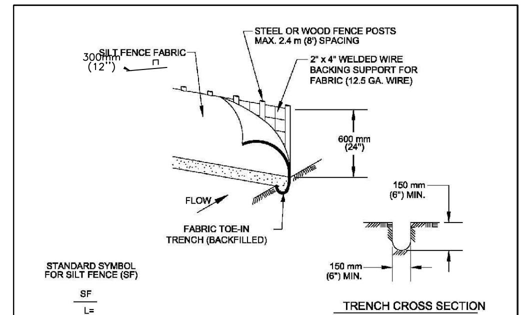

1. STEEL OR WOOD POSTS WHICH SUPPORT THE SILT FENCE SHALL BE INSTALLED ON A SLIGHT ANGLE TOWARD THE ANTICIPATED RUNOFF SOURCE. POST MUST BE EMBEDDED A MINIMUM OF 300 mm (12 INCHES). IF WOOD POSTS CANNOT ACHIEVE 300 mm (12 inches) DEPTH, USE STEEL POSTS.
2. THE TOE OF THE SILT FENCE SHALL BE TRENCHED IN WITH A SPADE OR MECHANICAL TRENCHER, SO THAT THE DOWNSLOPE FACE OF THE TRENCH IS FLAT AND PERPENDICULAR TO THE LINE OF FLOW.
3. THE TRENCH MUST BE A MINIMUM OF 150 mm (6 inches) DEEP AND 150 mm (6 inches) WIDE TO ALLOW FOR THE SILT FENCE FABRIC TO BE LAID IN THE GROUND AND BACKFILLED WITH COMPACTED MATERIAL.
4. SILT FENCE FABRIC SHOULD BE SECURELY FASTENED TO EACH STEEL OR WOOD SUPPORT POST OR TO WOVEN WIRE , WHICH IS IN TURN ATTACHED TO THE STEEL OR WOOD FENCE POST.
5. INSPECTION SHALL BE MADE WEEKLY OR AFTER EACH RAINFALL EVENT AND REPAIR OR REPLACEMENT SHALL BE MADE PROMPTY AS NEEDED.
6. SILT FENCE SHALL BE REMOVED WHEN THE SITE IS COMPLETELY STABILIZED SO AS NOT TO BLOCK OR IMPEDE STORM FLOW OR DRAINAGE.
7. ACCUMULATED SILT SHALL BE REMOVED WHEN IT REACHES A DEPTH OF 150 mm (6 inches). THE SILT SHALL BE DISPOSED OF ON AN APPROVED SITE AND IN SUCH A MANNER THAT WILL NOT CONTRIBUTE TO ADDITIONAL SILTATION.

CITY OF AUSTIN WATERSHED PROTECTION DEPARTMENT	SILT FENCE	
RECORD COPY SIGNED BY MORGAN BYARS — 09/01/2011 ADOPTED	THE ARCHITECT/ENGINEER ASSUMES RESPONSIBILITY FOR APPROPRIATE USE OF THIS STANDARD.	STANDARD NO. 642S-1

NOTES:

1. MATERIAL ˉ THE FPBRIC MUST CORRESPOND TO THE FOLLWNG REQUIREMENTS:

PROPERTY	ASTM TEST METHOD	REQUIREMENTS
FABRIC WEIGHT	D 3776	≥3.0 OUNCES/SQUARE YPAD
ULTRAVIOLET (UV) RADIATION STABILITY	D 4355	70% STRENGTH RETAINB) MIN., AFTER 500 HOURS IN XENON ARC DEVICE
MUUEN BURST STRENGTH	D 3786	≥120 POUND PER SQUPRE INCH
WATER FLOW RATE	D 4491	≥ 275 GALLONS/MINUTE/SQUARE FEET

2. THIS MATERIAL SHOULD HAVE A EXPECTED USEFUL LIFE OF APPROXIMATELY EIGHTEEN (18) MONTHS. THE INLET PROTECTION DEVICES SHOULD BE CONSTRUCTED IN A MANNER THAT WILL FACILITATE CLEAN OUT AND DISPOSAL OF TRAPPED SEDIMENT WHILE MINIMIZING INTERFERENCE WITH CONSTRUCTION ACTIVITIES. THEY SHOULD ALSO BE CONSTRUCTED SUCH THAT ANY PONDING OF STORM WATER WILL NOT CAUSE EXCESSIVE R.O.W. FLOODING (I.E. <4 INCHES OF STANDING WATER) OR DAMAGE TO A THE STRUCTURE OR ADJACENT AREAS.
3. COVERAGE - THE FABRIC/WIRE SHOULD COMPLETELY COVER THE OPENING OF THE INLET DEVICES SHOULD BE INSTALLED WITHOUT PROTRUDING PARTS THAT COULD BE A TRAFFIC, WORKER, OR PEDESTRIAN HAZARD. WHERE SECTIONS OF THE FABRIC OVERLAP THEY SHALL OVERLAP AT LEAST THREE (3) INCHES.
4. THE INLET FILTER SHALL BE ATTACHED IN A WAY THAT THEY CAN EASILY BE REMOVED AND ARE NOT SECURED OR ATTACHED BY THE USE OF SAND BAGS. THE INLET FILTER MUST BE REMOVED UPON COMPLETION OF WORK. IF REMOVAL DAMAGES THE CONCRETE CURB, THE CURB MUST BE REPAIRED IMMEDIATELY.
5. DAILY INSPECTION SHALL BE MADE BY THE CONTRACTOR AND SILT ACCUMULATION MUST BE REMOVED WHEN DEPTH REACHES 50 MM (2 INCHES) OR ONE THIRD THE A HEIGHT OF THE INLET THROAT,AND DISPOSED OF IN A MANNER WHICH NOT CAUSE ADDITIONAL SILTATION.
6. CONTRACTOR SHALL MONITOR THE PERFORMANCE OF INLET PROTECTION DURING EACH RAINFALL EVENT AND IMMEDIATELY REMOVE THE INLET PROTECTIONS IF THE STORMWATER BEGINS TO OVERTOP THE CURB.
7. FINAL PROTECTIONS SHALL BE REMOVED AS SOON AS THE SOURCE OF SEDIMENT HAS ACHIEVED FINAL STABILIZATION CONDITIONS.

CITY OF AUSTIN WATERSHED PROTECTION DEPARTMENT	FILTER DIKE CURB INLET PROTECTION	
RECORD COPY SIGNED BY MAPI VIGIL — 10/30/09 ADOPTED	THE ARCHITECT/ENGINEER ASSUMES RESPONSIBILITY FOR APPROPRIATE USE OF THIS STANDARD.	STANDARD NO. 628S-2

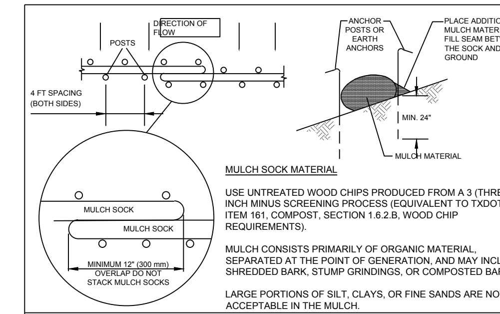

MULCH SOCK MATERIAL

USE UNTREATED WOOD CHIPS PRODUCED FROM A 3 (THREE) INCH MINUS SCREENING PROCESS (EQUIVALENT TO TXDOT ITEM 161, COMPOST, SECTION 1.6.2.B, WOOD CHIP REQUIREMENTS).

MULCH CONSISTS PRIMARILY OF ORGANIC MATERIAL, SEPARATED AT THE POINT OF GENERATION, AND MAY INCLUDE: SHREDDED BARK, STUMP GRINDINGS, OR COMPOSTED BARK.

LARGE PORTIONS OF SILT, CLAYS, OR FINE SANDS ARE NOT ACCEPTABLE IN THE MULCH.

NOTES:

1. STEEL OR WOOD POSTS WHICH SUPPORT THE MULCH SOCK SHALL BE INSTALLED ON A SLIGHT ANGLE TOWARD THE ANTICIPATED RUNOFF SOURCE. POST MUST BE EMBEDDED A MINIMUM OF 600mm (24 inches). IF WOOD POSTS CANNOT ACHIEVE 600mm (24 inches) DEPTH, USE STEEL POSTS. EARTH ANCHORS ARE ALSO ACCEPTABLE.
2. THE TOE OF THE MULCH SOCK SHALL BE PLACED SO THAT THE MULCH SOCK IS FLAT AND PERPENDICULAR TO THE LINE OF FLOW. IN ORDER TO PREVENT WATER FROM FLOWING BETWEEN THE JOINTS OF ADJACENT ENDS OFMULCH SOCKS, LAP THE ENDS OF ADJACENT MULCH SOCKS A MINIMUM OF 300mm (12 inches).
3. MULCH MATERIAL MUST BE FREE OF REFUSE, PHYSICAL CONTAMINANTS, AND MATERIAL TOXIC TO PLANT GROWTH; IT IS NOT ACCEPTABLE FOR THE MULCH MATERIAL TO CONTAIN GROUND CONSTRUCTION DEBRIS, BIOSOLIDS, OR MANURE.
4. SOCK MATERIAL WILL BE 100% BIODEGRADABLE, PHOTODEGRADABLE, OR RECYCLABLE SUCH AS BURLAP, TWINE, UV PHOTOBIODEGRADABLE PLASTIC, POLYESTER, OR ANY OTHER ACCEPTABLE MATERIAL.
5. MULCH SOCKS SHOULD BE USED AT THE BASE OF SLOPES NO STEEPER THAN 2:1 AND SHOULD NOT EXCEED THE MAXIMUM SPACING CRITERIA PROVIDED IN CITY OF AUSTIN ENVIRONMENTAL CRITERIA MANUAL TABLE 1.4.5.F.1 FOR A GIVEN SLOPE CATEGORY.
6. ACCUMULATED SILT SHALL BE REMOVED WHEN IT REACHES A DEPTH OF 150mm (6 inches). THE SILT SHALL BE DISPOSED OF ON AN APPROVED SITE AND IN SUCH A MANNER THAT WILL NOT CONTRIBUTE TO ADDITIONAL SILTATION.

CITY OF AUSTIN WATERSHED PROTECTION DEPARTMENT	MULCH SOCK	
RECORD COPY SIGNED BY MORGAN BYARS — 08/24/2010 ADOPTED	THE ARCHITECT/ENGINEER ASSUMES RESPONSIBILITY FOR APPROPRIATE USE OF THIS STANDARD.	STANDARD NO. 648S-1

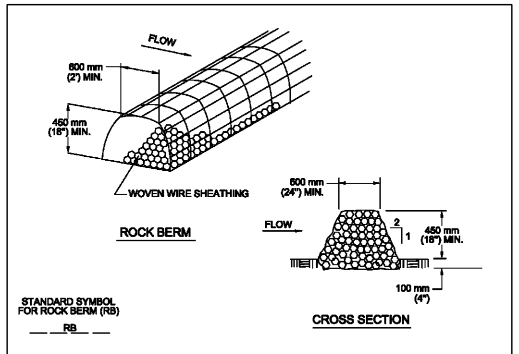

NOTES:

1. USE ONLY OPEN GRADED ROCK 75 to 125 mm (3 to 5") DIAMETER FOR ALL CONDITIONS.
2. THE ROCK BERM SHALL BE SECURED WITH A WOVEN WIRE SHEATHING HAVING MAXIMUM 25 mm (1") OPENING AND MINIMUM WIRE DIAMETER OF 12.9 mm (20 GAUGE).
3. THE ROCK BERM SHALL BE INSPECTED DAILY OR AFTER EACH RAIN, AND THE STONE AND/OR FABRIC CORE-WOVEN SHEATHING SHALL BE REPLACED WHEN THE STRUCTURE CEASES TO FUNCTION AS INTENDED, DUE TO SEDIMENT ACCUMULATION AMONG THE ROCKS, WASHOUT, CONSTRUCTION TRAFFIC DAMAGE, ETC.
4. IF SEDIMENT REACHES A DEPTH EQUAL TO ONE-THIRD THE HEIGHT OF THE BERM OR 150 mm (6"), WHICHEVER IS LESS, THE SEDIMENT SHALL BE REMOVED AND DISPOSED OF ON AN APPROVED SITE AND IN A MANNER THAT WILL NOT CREATE A SEDIMENTION PROBLEM.
5. WHEN THE SITE IS COMPLETELY STABILIZED,THE BERM AND ACCUMULATED SEDIMENT SHALL BE REMOVED AND DISPOSED OF IN AN APPROVED MANNER.

CITY OF AUSTIN WATERSHED PROTECTION DEPARTMENT	ROCK BERM	
RECORD COPY SIGNED BY MORGAN BYARS — 8/24/2010 ADOPTED	THE ARCHITECT/ENGINEER ASSUMES RESPONSIBILITY FOR APPROPRIATE USE OF THIS STANDARD.	STANDARD NO. 639S-1

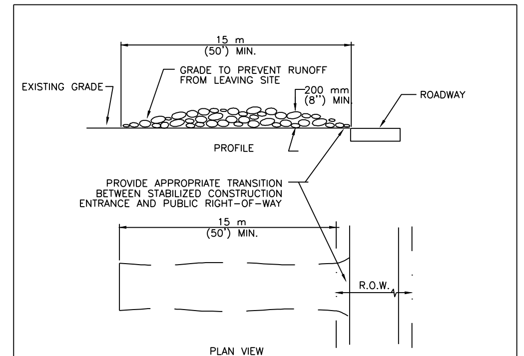

NOTES:

1. STONE SIZE: 75-125 mm (3-5") OPEN GRADED ROCK.
2. LENGTH: AS EFFECTIVE BUT NOT LESS THAN 15 m (50').
3. THICKNESS: NOT LESS THAN 200 mm (8").
4. WIDTH: NOT LESS THAN FULL WIDTH OF ALL POINTS OF INGRESS/EGRESS.
5. WASHING: WHEN NECESSARY, VEHICLE WHEELS SHALL BE CLEANED TO REMOVE SEDIMENT PRIOR TO ENTRANCE ONTO PUBLIC ROADWAY. WHEN WASHING IS REQUIRED, IT SHALL BE DONE ON AN AREA STABILIZED WITH CRUSHED STONE AND DRAINS INTO AN APPROVED TRAP OR SEDIMENT BASIN. ALL SEDIMENT SHALL BE PREVENTED FROM ENTERING ANY STORM DRAIN, DITCH OR WATERCOURSE USING APPROVED METHODS.
6. MAINTENANCE: THE ENTRANCE SHALL BE MAINTAINED IN A CONDITION THAT WILL PREVENT TRACKING OR FLOWING OF SEDIMENT ONTO PUBLIC ROADWAY. THIS MAY REQUIRE PERIODIC TOP DRESSING WITH ADDITIONAL STONE AS CONDITIONS DEMAND, AS WELL AS REPAIR AND CLEAN OUT OF ANY MEASURE DEVICES USED TO TRAP SEDIMENT. ALL SEDIMENTS THAT IS SPILLED, DROPPED, WASHED OR TRACKED ONTO PUBLIC ROADWAY MUST BE REMOVED IMMEDIATELY.
7. DRAINAGE: ENTRANCE MUST BE PROPERLY GRADED OR INCORPORATE A DRAINAGE SWALE TO PREVENT RUNOFF FROM LEAVING THE CONSTRUCTION SITE.

CITY OF AUSTIN WATERSHED PROTECTION DEPARTMENT	STABILIZED CONSTRUCTION ENTRANCE	
RECORD COPY SIGNED BY J. PATRICK MURPHY — 5/23/00 ADOPTED	THE ARCHITECT/ENGINEER ASSUMES RESPONSIBILITY FOR APPROPRIATE USE OF THIS STANDARD.	STANDARD NO. 641S-1

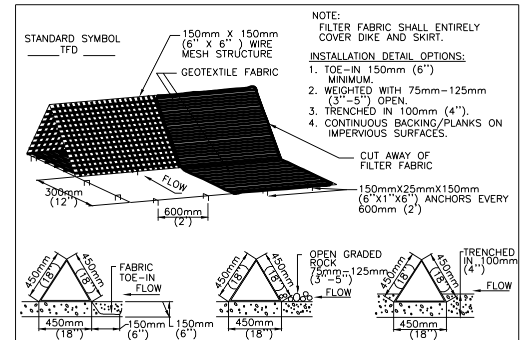

GENERAL NOTES

1. DIKES SHALL BE PLACED IN A ROW WITH ENDS TIGHTLY ABUTTING THE ADJACENT DIKE.
2. THE FABRIC COVER AND SKIRT SHALL BE A CONTINUOUS WRAPPING OF GEOTEXTILE. THE SKIRT SHALL BE A CONTINUOUS EXTENSION OF THE FABRIC ON THE UPSTREAM FACE.
3. THE SKIRT SHALL BE WEIGHTED WITH A CONTINUOUS LAYER OF 75-125mm (3-5") OPEN GRADED ROCK OR TOED-IN 150mm (6") WITH MECHANICALLY COMPACTED MATERIAL. OTHERWISE, THE ENTIRE STRUCTURE SHALL BE TRENCHED IN 100mm (4").
4. DIKES AND SKIRT SHALL BE SECURELY ANCHORED IN PLACE USING 150mm (6") WIRE STAPLES ON 600mm (2') CENTERS ON BOTH EDGES AND SKIRT, OR STAKE USING 10M (3/8 ") DIAMETER RE-BAR WITH TEE ENDS.
5. FILTER MATERIAL SHALL BE LAPPED OVER ENDS 150mm (6") TO COVER DIKE TO DIKE JOINTS. JOINTS SHALL BE FASTENED WITH GALVANIZED SHOAT RINGS.
6. THE DIKE STRUCTURE SHALL BE MW40-150mmX150mm (6 GA. 6"X6") WIRE MESH, 450mm (18") ON A SIDE.
7. INSPECTION SHALL BE MADE WEEKLY OR AFTER EACH RAINFALL EVENT AND REPAIR OR REPLACEMENT SHALL BE MADE PROMPTLY AS NEEDED BY THE CONTRACTOR.
8. ACCUMULATED SILT SHALL BE REMOVED WHEN IT REACHES A DEPTH OF 150mm (6") AND DISPOSED OF IN A MANNER WHICH WILL NOT CAUSE ADDITIONAL SILTATION.
9. AFTER THE DEVELOPMENT SITE IS COMPLETLY STABILIZED, THE DIKES AND ANY REMAINING SILT SHALL BE REMOVED. SILT SHALL BE DISPOSED OF AS INDICATED IN GENERAL NOTE 8 ABOVE.

CITY OF AUSTIN WATERSHED PROTECTION DEPARTMENT	TRIANGULAR SEDIMENT FILTER DIKE	
RECORD COPY SIGNED BY J. PATRICK MURPHY — 3/27/00 ADOPTED	THE ARCHITECT/ENGINEER ASSUMES RESPONSIBILITY FOR APPROPRIATE USE OF THIS STANDARD.	STANDARD NO. 628S

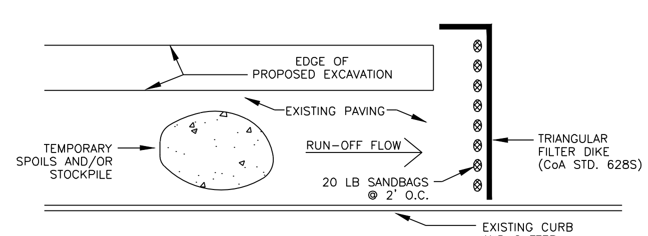

NOTES:

1. THE TEMPORARY SPOILS/STOCKPILE STORAGE AREA AND STAGING AREA MAY BE LOCATED DIRECTLY ADJACENT TO THE EXCAVATION AND ON THE PAVEMENT.
2. ANY SPOIL NOT INTENDED TO BE REUSED WILL BE HAULED TO AN APPROVED OR PERMITTED DISPOSAL SITE DAILY.
3. INSTALL TRIANGULAR SEDIMENT FILTER DIKE (DETAIL 682S) ACROSS FULL WIDTH OF TRAFFIC CLOSURE AND DOWNSTREAM OF CONSTRUCTION AREA, PERPENDICULAR TO CURB AND PLACED TO EFFECTIVELY CATCH AND CONTAIN SEDIMENT LADEN RUNOFF FROM THE EXCAVATED AREA. FILTER DIKE TO FOLLOW ACTIVE CONSTRUCTION. REMOVING AND RE-SETTING FILTER DIKE IS CONSIDERED SUBSIDIARY TO BARRICADES AND TRAFFIC HANDLING.

ADDITIONAL EROSION/SEDIMENTATION CONTROL FOR WORK IN PAVED AREAS FOR GENERAL PERMIT PROGRAM PROJECTS

CITY OF AUSTIN - STANDARD DRAWING

NO.	DR	CK	DATE	DESCRIPTION

REVISIONS

BLACK & VEATCH
Building a world of difference.
Black & Veatch Corporation
Registration No. F-258
Austin, Texas

Carlos Chavez 6/7/2016
STATE OF TEXAS — CARLOS A. CHAVEZ — 119722 — LICENSED PROFESSIONAL ENGINEER

Austin Water
Walnut Creek WWTP - Tertiary Filter Rehabilitation Project
CIP ID No. 3023.025

CIVIL
CITY OF AUSTIN
EROSION/SEDIMENTATION CONTROL

DESIGNED BY:	COA
DRAWN BY:	COA
REVIEWED BY:	WLK
APPROVED BY:	TSD
PROJECT NO.:	168622
DATE:	4/4/2014
SCALE:	NOT TO SCALE

REVISION:

DISCIPLINE NO.
C-14

DWG. NO.

FD168622 D168622 File: C:\PWBatchPDF\Process\168622 - Austin Walnut Creek WWTP Filter Rehab\C_14.dwg Layout: Work Plotted: 6/9/2016 1:52:56 PM
SAVED: 09/30/25 ID: Civil Drawings

GENERAL PERMIT PROGRAM (GPP) STANDARD ENVIRONMENTAL NOTES:

ADDITIONAL AREAS:

1. ANY ADDITIONAL AREAS REQUIRED FOR CONSTRUCTION OF THIS PROJECT SHALL BE THE SOLE RESPONSIBILITY OF THE CONTRACTOR. CONTRACTOR MUST SECURE CITY OF AUSTIN APPROVAL OF PROPOSED ADDITIONAL AREAS PRIOR TO USE. APPROVAL OF "CORRECTION REQUEST" MUST BE SECURED FROM THE GENERAL PERMIT PROGRAM OFFICE OF THE PLANNING AND DEVELOPMENT REVIEW DEPARTMENT.
2. ALL ASSOCIATED PERMITS AND FEES SHALL BE THE SOLE RESPONSIBILITY OF THE CONTRACTOR.
3. IN ORDER TO SECURE APPROVAL FOR USE OF ADDITIONAL AREAS, CONTRACTOR MUST PROVIDE COMPLETE "CORRECTION REQUEST" SUBMITTAL TO GENERAL PERMIT PROGRAM OFFICE AND ALLOW A ONE WEEK COMMENT PERIOD FOR EACH REVIEW. CONTRACTOR SHOULD REQUEST INFORMATION ON THE ELEMENTS REQUIRED TO BE INCLUDED IN THE SUBMITTAL FROM THE OWNER'S REPRESENTATIVE OR THE GENERAL PERMIT PROGRAM OFFICE.
4. CONTRACTOR MUST INSTALL AND MAINTAIN EROSION/SEDIMENTATION CONTROLS AND TREE PROTECTION FOR ALL SUCH AREAS IN ACCORDANCE WITH THE CITY OF AUSTIN ENVIRONMENTAL CRITERIA MANUAL AND AS INCLUDED IN THE APPROVED SUBMITTAL OR DIRECTED IN THE FIELD BY THE GENERAL PERMIT PROGRAM REPRESENTATIVE.
5. A SIGNED COPY OF THE PLANS PERMITTED THROUGH THE GENERAL PERMIT PROGRAM MUST BE KEPT ON SITE AND ACCESSIBLE AT ALL TIMES DURING PROJECT CONSTRUCTION.

DEWATERING:

CONTRACTOR IS RESPONSIBLE FOR DEWATERING OF WORK AREA. CONTRACTOR MUST SECURE CITY OF AUSTIN APPROVAL OF PROPOSED DEWATERING PROCEDURES PRIOR TO INSTALLATION OR USE. APPROVAL MUST BE SECURED FROM THE GENERAL PERMIT PROGRAM (GPP) OFFICE OF THE PLANNING AND DEVELOPMENT REVIEW DEPARTMENT. CONTRACTOR MUST PROVIDE COMPLETE SUBMITTAL TO GPP OFFICE AND ALLOW AN ONE WEEK (MIN.) COMMENT PERIOD FOR EACH REVIEW. CONTACT THE GPP OFFICE FOR SUBMITTAL REQUIREMENTS.

FUEL STORAGE:

FUEL STORAGE IS PROHIBITED ON THIS PROJECT. ADDITIONALLY, THE CONTRACTOR IS REQUIRED TO NOTIFY THE GENERAL PERMIT PROGRAM OFFICE IMMEDIATELY FOLLOWING ANY SPILL OF FUEL OR OTHER TOXIC MATERIAL. CONTRACTOR IS REQUIRED TO FOLLOW-UP WITH WRITTEN DOCUMENTATION, INCLUDING A COMPLETE DESCRIPTION OF THE INCIDENT, MATERIAL SPILLED, AND ACTIONS TAKEN TO CONTAIN AND CLEAN-UP MATERIAL.

FUGITIVE DUST CONTROL:

ALL PROJECTS APPROVED THROUGH THE GENERAL PERMIT PROGRAM (GPP) MUST COMPLY WITH THE CODE OF THE CITY OF AUSTIN AND THE ENVIRONMENTAL CRITERIA MANUAL REQUIREMENTS TO CONTROL AIRBORNE DUST. COMPLIANCE IS REQUIRED FOR ENTIRE PROJECT SITE AS WELL AS ASSOCIATED OPERATIONS. CONTACT THE GPP OFFICE FOR RECOMMENDED CONTROL METHODS.

SPOILS STORAGE:

NO SPOILS STORAGE IS ALLOWED WITHIN A CRITICAL WATER QUALITY ZONE, A 100-YEAR FLOODPLAIN, OR ON A SLOPE WITH A GRADIENT OF MORE THAN 15 PERCENT.

E/S CONTROLS FOR BORE / RECEIVING PIT LOCATIONS:

TEMPORARY E/S CONTROLS MUST SURROUND THE ENTIRETY OF BORING OPERATIONS, INCLUDING PIT, EQUIPMENT, ETC. FOR LOCATIONS WITHIN IMPERVIOUS AREAS, TEMPORARY CONTROL WILL BE TRIANGULAR FILTER DIKE (COA STANDARD DETAIL #628S). DIKE FLAP WILL BE CONTINUOUSLY WEIGHTED DOWN THROUGH THE USE OF 1" BY 4" WOOD STRIPS NAILED TO THE PAVEMENT, EXCEPT FOR THE ACCESS POINT. PLACEMENT OF TEMPORARY E/S CONTROLS ACROSS ACCESS POINT WILL BE REQUIRED WHENEVER THE SITE IS NOT ACTIVELY USED. FOR LOCATIONS WITHIN PERVIOUS AREAS, TEMPORARY CONTROL WILL BE SILT FENCE (COA STANDARD DETAIL #642S-1) OR MULCH SOCKS (COA STANDARD DETAIL #648S-1), AS INDICATED ON APPROVED PLANS.

SOIL RETENTION BLANKET:

UNLESS OTHERWISE INDICATED IN THE PROJECT DOCUMENTS, INSTALLATION OF SOIL RETENTION BLANKET WILL BE REQUIRED FOR ALL IMPACTED SLOPES GREATER THAN 3:1 AND ALL IMPACTED AREAS WITHIN DRAINAGE CONVEYANCES. (CITY OF AUSTIN STANDARD SPECIFICATION ITEM 605S) SOIL RETENTION BLANKET SUBMITTAL MUST BE APPROVED BY PROJECT ENGINEER AND GENERAL PERMIT PROGRAM (GPP) REPRESENTATIVE PRIOR TO USE AND MUST INCLUDE PRODUCT AND INSTALLATION DETAILS PROVIDED BY MANUFACTURER. FINISH GRADING MUST BE INSPECTED AND APPROVED BY GPP INSPECTOR PRIOR TO BLANKET INSTALLATION. INSTALLATION MUST BE IN ACCORDANCE WITH MANUFACTURER'S RECOMMENDATIONS AND MUST BE INSPECTED AND APPROVED BY GPP REPRESENTATIVE PRIOR TO ACCEPTANCE.

SOD INSTALLATION:

REVEGETATION WITHIN MANAGED TURF AREAS MUST BE ACCOMPLISHED THROUGH THE INSTALLATION OF SOLID BLOCK GRASS SOD. SOD TYPE MUST MATCH ADJACENT GRASS TYPE. QUESTIONS REGARDING SOD TYPE WILL BE RESOLVED BY THE GENERAL PROGRAM PERMIT REPRESENTATIVE. REFER TO CITY OF AUSTIN STANDARD SPECIFICATION ITEM NO. 602S: SODDING FOR EROSION CONTROL, UNLESS OTHERWISE NOTED ON THE APPROVED PLANS.

TxDOT RIGHTS-OF-WAY:

TOPSOIL (TxDOT ITEM NO. 160), SOIL RETENTION BLANKET (TxDOT ITEM NO. 169), AND REVEGETATION (TxDOT ITEM NO. 164) INSTALLED WITHIN TEXAS DEPARTMENT OF TRANSPORTATION (TxDOT) RIGHT-OF-WAY SHALL COMPLY WITH "REQUIREMENTS FOR INSTALLATION OF UTILITIES WITHIN THE STATE RIGHT-OF-WAY, AUSTIN DISTRICT".

PROJECT SEQUENCE:
(REFER TO FULL PLAN SET FOR PROJECT-SPECIFIC ADDITIONS, IF APPLICABLE.)

PRIOR TO CONSTRUCTION:

1. SECURE APPLICABLE COA PERMITS, INCLUDING APPROVAL UNDER GENERAL PERMIT PROGRAM AND RIGHT-OF-WAY EXCAVATION PERMIT.
2. NOTIFY GENERAL PERMIT PROGRAM REPRESENTATIVE PRIOR TO PLACEMENT OF E/S CONTROLS AND TREE PROTECTION FENCING. ALL PROPOSED PHASING OF CONTROLS MUST BE SUBMITTED TO AND APPROVED BY THE GENERAL PERMIT PROGRAM REPRESENTATIVE PRIOR TO THE FIELD PRE-CONSTRUCTION CONFERENCE.
3. NOTIFY COA TEMPORARY TRAFFIC CONTROL REPRESENTATIVE PRIOR TO PLACEMENT OF TEMPORARY TRAFFIC CONTROLS. ALL PROPOSED PHASING OF CONTROLS MUST BE INDICATED ON APPROVED TEMPORARY TRAFFIC CONTROL PLAN AND SEALED BY PROFESSIONAL ENGINEER.
4. PLACE TEMPORARY E/S CONTROLS AND TREE PROTECTION FENCING PRIOR TO BEGINNING ANY EXCAVATION. INSTALL C.I.P. SIGN, IF APPLICABLE.
5. HOLD ENVIRONMENTAL PRE-CONSTRUCTION CONFERENCE ON SITE WITH THE CONTRACTOR, OWNER'S REPRESENTATIVE, AND GENERAL PERMIT PROGRAM REPRESENTATIVE AFTER INSTALLATION OF E/S CONTROLS AND TREE PROTECTION FENCING AND PRIOR TO ANY TRENCHING OPERATIONS.
6. PLACE TEMPORARY TRAFFIC CONTROL DEVICES.

PROJECT CONSTRUCTION:

1. BEGIN CONSTRUCTION. NOTIFY GENERAL PERMIT PROGRAM REPRESENTATIVE A MINIMUM OF 48 HOURS IN ADVANCE OF TRANSITION BETWEEN PHASES.
2. CONTACT GENERAL PERMIT OFFICE TO SCHEDULE FIELD INSPECTION PRIOR TO BEGINNING INSTALLATION OF PERMANENT E/S CONTROLS.
3. COMPLETE RESTORATION OF ALL AREAS DISTURBED BY CONSTRUCTION ACTIVITIES FOR THIS PROJECT. (PERMANENT E/S CONTROLS)
4. REMOVE TEMPORARY TRAFFIC CONTROL DEVICES RELATED TO WORK AREAS OUTSIDE OF THE STREET.
5. HOLD ENVIRONMENTAL POST-CONSTRUCTION CONFERENCE ON SITE WITH THE CONTRACTOR, OWNER'S REPRESENTATIVE, AND GENERAL PERMIT PROGRAM REPRESENTATIVE. ALL PERMANENT E/S CONTROLS MUST BE ACCEPTED BY THE GENERAL PERMIT PROGRAM REPRESENTATIVE. PERMANENT CONTROLS SHALL CONSIST OF REVEGETATION PER DETAILS 602, 604S, AND 609S AS INDICATED ON APPROVED PLANS.
6. FOLLOWING FINAL ACCEPTANCE OF PERMANENT E/S CONTROLS BY THE GENERAL PERMIT PROGRAM REPRESENTATIVE, REMOVE TEMPORARY E/S CONTROLS. CLEAN EXISTING STORM DRAINAGE SYSTEMS AS NECESSARY DUE TO CONSTRUCTION OPERATIONS.
7. DRESS-UP AND RESTORE ANY AREAS DISTURBED BY REMOVAL OF TEMPORARY E/S CONTROLS DESCRIBED ABOVE.

REQUIRED SUBMITTALS:

SUBMITTALS REQUIRED TO BE APPROVED BY GENERAL PERMIT PROGRAM REPRESENTATIVE INCLUDE: SUBMITTALS TRIGGERED BY CITY OF AUSTIN SERIES 600 SPECIFICATIONS AND RELATED SPECIAL PROVISIONS/SPECIFICATIONS, CONSTRUCTION SCHEDULE, TREE PROTECTION, P-6 AND OTHER ROOT ZONE PROTECTION/MITIGATION MEASURES, DEWATERING PLAN, WATERING SCHEDULE FOR REVEGETATION AREAS, AND ANY VEGETATIVE REPLACEMENT PROPOSALS, IF NOT ALREADY PART OF THE PERMITTED PLAN SET.

CITY OF AUSTIN – STANDARD NOTES TREE AND NATURAL AREA PROTECTION (MODIFIED FOR USE ON GENERAL PERMIT PROJECTS)

1. ALL TREES AND NATURAL AREAS SHOWN ON PLAN TO BE PRESERVED SHALL BE PROTECTED DURING CONSTRUCTION WITH TEMPORARY MEASURES.
2. PROTECTIVE MEASURES SHALL BE INSTALLED ACCORDING TO CITY OF AUSTIN STANDARDS FOR TREE PROTECTION.
3. PROTECTIVE MEASURES SHALL BE INSTALLED PRIOR TO THE START OF ANY SITE PREPARATION WORK (CLEARING, GRUBBING OR GRADING), AND SHALL BE MAINTAINED THROUGHOUT ALL PHASES OF THE PROJECT.
4. EROSION AND SEDIMENTATION CONTROL MEASURES SHALL BE INSTALLED OR MAINTAINED IN A MANNER WHICH DOES NOT RESULT IN SOIL BUILD-UP, COMPACTION OR CUTTING OF CRITICAL ROOT ZONE WITHIN TREE DRIP LINES.
5. TREE PROTECTION SHALL COMPLETELY SURROUND THE TREES OR GROUP OF TREES AND WILL BE LOCATED AT THE OUTERMOST LIMIT OF BRANCHES (DRIP LINE). FOR NATURAL AREAS, PROTECTIVE MEASURES SHALL FOLLOW THE LIMIT OF CONSTRUCTION LINE, IN ORDER TO PREVENT THE FOLLOWING:
   A. SOIL COMPACTION IN THE ROOT ZONE AREA RESULTING FROM VEHICULAR TRAFFIC OR STORAGE OF EQUIPMENT OR MATERIALS;
   B. ROOT ZONE DISTURBANCES DUE TO GRADE CHANGES (GREATER THAN 6 INCHES CUT OR FILL) OR TRENCHING NOT REVIEWED AND AUTHORIZED BY THE GENERAL PERMIT PROGRAM OFFICE OF THE PLANNING AND DEVELOPMENT REVIEW DEPARTMENT;
   C. WOUNDS TO EXPOSED ROOTS, TRUNK OR LIMBS BY MECHANICAL EQUIPMENT;
   D. OTHER ACTIVITIES DETRIMENTAL TO TREES SUCH AS CHEMICAL STORAGE, CEMENT TRUCK CLEANING, AND FIRES.
6. EXCEPTIONS TO INSTALLING PROTECTIVE FENCES AT CRITICAL ROOT ZONES MAY BE PERMITTED IN THE FOLLOWING CASES:
   A. WHERE THERE IS TO BE AN APPROVED GRADE CHANGE, IMPERMEABLE PAVING SURFACE, TREE WELL, OR OTHER SUCH SITE DEVELOPMENT, ERECT THE FENCE APPROXIMATELY 2 FEET BEYOND THE AREA DISTURBED;
   B. WHERE PERMEABLE PAVING IS TO BE INSTALLED, ERECT THE FENCE AT THE OUTER LIMITS OF THE PERMEABLE PAVING AREA
   C. WHERE TREES ARE CLOSE TO PROPOSED BUILDINGS, ERECT THE FENCE NO CLOSER THAN 6 FEET TO THE BUILDING
   D. WHERE THERE ARE SEVERE SPACE CONSTRAINTS DUE TO TRACT SIZE, OR OTHER SPECIAL REQUIREMENTS, CONTACT THE GENERAL PERMIT PROGRAM OFFICE AT 974-6330 TO DISCUSS ALTERNATIVES.

SPECIAL NOTE: FOR THE PROTECTION OF NATURAL AREAS, NO EXCEPTIONS TO INSTALLING FENCES AT THE LIMIT OF CONSTRUCTION LINE WILL BE PERMITTED.

WHERE ANY OF THE ABOVE EXCEPTIONS RESULT IN A FENCE 5 FEET OR CLOSER TO A TREE TRUNK, PROTECT THE TRUNK WITH STRAPPED-ON PLANKING TO A HEIGHT OF 8 FEET (OR TO THE LIMITS OF LOWER BRANCHING) IN ADDITION TO THE REDUCED FENCING.

7. WHERE ANY OF THE ABOVE EXCEPTIONS RESULT IN AREAS OF UNPROTECTED ROOT ZONES, THOSE AREAS SHOULD BE COVERED WITH 12 INCHES OF ORGANIC MULCH TO MINIMIZE SOIL COMPACTION DURING CONSTRUCTION. FILTER FABRIC UNDERLAYMENT MAY BE REQUIRED AT DIRECTION OF GENERAL PERMIT PROGRAM REPRESENTATIVE BASED ON SITE CONDITIONS AND CONSTRUCTION ACTIVITIES. MAXIMUM FOUR (4) INCHES DEPTH MAY BE LEFT IN PLACE AFTER CONSTRUCTION WITH APPROVAL FROM THE GENERAL PERMIT PROGRAM REPRESENTATIVE.
8. ALL GRADING WITHIN PROTECTED ROOT ZONE AREAS SHALL BE DONE BY HAND OR WITH SMALL EQUIPMENT TO MINIMIZE ROOT DAMAGE. PRIOR TO GRADING, RELOCATE PROTECTIVE FENCES TO 2 FEET BEHIND THE GRADE CHANGE AREA.
9. ANY ROOTS EXPOSED BY CONSTRUCTION ACTIVITY SHALL BE PRUNED FLUSH WITH THE SOIL. BACKFILL ROOT AREAS WITH GOOD QUALITY TOP SOIL AS SOON AS POSSIBLE. IF EXPOSED ROOT AREAS ARE NOT BACKFILLED WITHIN 2 DAYS, COVER THEM WITH ORGANIC MATERIAL IN A MANNER WHICH REDUCES SOIL TEMPERATURE AND MINIMIZES WATER LOSS DUE TO EVAPORATION.
10. PRIOR TO EXCAVATION OR GRADE CUTTING WITHIN TREE DRIPLINES, MAKE A CLEAN CUT BETWEEN THE DISTURBED AND UNDISTURBED ROOT ZONES WITH A ROCK SAW OR SIMILAR EQUIPMENT TO MINIMIZE DAMAGE TO REMAINING ROOTS.
11. TREES MOST HEAVILY IMPACTED BY CONSTRUCTION ACTIVITIES SHOULD BE WATERED DEEPLY ONCE A WEEK DURING PERIODS OF HOT, DRY WEATHER. TREE CROWNS SHOULD BE SPRAYED WITH WATER PERIODICALLY TO REDUCE DUST ACCUMULATION ON THE LEAVES.
12. ANY TRENCHING REQUIRED FOR THE INSTALLATION OF LANDSCAPE IRRIGATION SHALL BE PLACED AS FAR FROM EXISTING TREE TRUNKS AS POSSIBLE.
13. NO LANDSCAPE TOPSOIL DRESSING GREATER THAN 4 INCHES SHALL BE PERMITTED WITHIN THE DRIPLINE OF TREES. NO SOIL IS PERMITTED ON THE ROOT FLARE OF ANY TREE.
14. PRUNING TO PROVIDE CLEARANCE FOR STRUCTURES, VEHICULAR TRAFFIC AND EQUIPMENT SHALL TAKE PLACE BEFORE CONSTRUCTION BEGINS. SEE NOTE THREE (3) OF SUPPLEMENTAL TREE PROTECTION NOTES FOR ADDITIONAL REQUIREMENTS.
15. ALL FINISHED PRUNING MUST BE DONE ACCORDING TO RECOGNIZED, APPROVED STANDARDS OF THE INDUSTRY (REFERENCE THE NATIONAL ARBORIST ASSOCIATION PRUNING STANDARDS FOR SHADE TREES AVAILABLE ON REQUEST FROM THE GENERAL PERMIT PROGRAM OFFICE).
16. DEVIATIONS FROM THE ABOVE NOTES MAY BE CONSIDERED ORDINANCE VIOLATIONS IF THERE IS SUBSTANTIAL NONCOMPLIANCE OR IF A TREE SUSTAINS DAMAGE AS A RESULT.
17. TREES APPROVED FOR REMOVAL SHALL BE REMOVED IN A MANNER WHICH DOES NOT IMPACT TREES TO BE PRESERVED.

SUPPLEMENTAL TREE PROTECTION NOTES

1. ALL TREE PROTECTION MUST COMPLY WITH CITY OF AUSTIN REQUIREMENTS AS OUTLINED IN THE ENVIRONMENTAL CRITERIA MANUAL AND AS INDICATED BY STANDARD COA NOTES AND DETAILS INCLUDED WITHIN THIS DOCUMENT SET. CONTRACTOR SHALL INSTALL PROTECTION PRIOR TO PRE-CONSTRUCTION CONFERENCE, MAKE ADJUSTMENTS TO PROTECTION AS DIRECTED BY THE GPP REPRESENTATIVE, AND MAINTAIN PROTECTION UNTIL PROJECT IS COMPLETE.
2. TYPE AND LOCATION OF ALL TREE PROTECTION MUST BE APPROVED IN THE FIELD BY THE GENERAL PERMIT PROGRAM (GPP) REPRESENTATIVE PRIOR TO CONSTRUCTION.
3. WALK-THROUGH: CONTRACTOR SHALL CONDUCT WALK-THROUGH MEETING WITH GENERAL PERMIT PROGRAM REPRESENTATIVE PRIOR TO PERFORMING ANY PRUNING ACTIVITIES ON TREES IN PROJECT AREA. PURPOSE OF WALK-THROUGH WILL BE TWOFOLD. ONE PURPOSE WILL BE TO DETERMINE THE MINIMUM AMOUNT OF PRUNING NECESSARY TO ALLOW CONSTRUCTION WORK TO BE COMPLETED. SECOND PURPOSE WILL BE TO DETERMINE AREAS OF PROJECT IN WHICH EXHAUST DIVERTERS WILL BE REQUIRED ON CONSTRUCTION EQUIPMENT TO PREVENT SCORCHING OF EXISTING TREES.
4. ALL PRUNING MUST BE PERFORMED IN ACCORDANCE WITH ANSI A300 (PART 1) – 2001 AMERICAN NATIONAL STANDARD FOR TREE CARE OPERATIONS (PRUNING), OR LATEST APPROVED VERSION. THIS DOCUMENT MAY BE OBTAINED ONLINE FOR A FEE AT WWW.ANSI.ORG.
5. PRUNING SHALL BE DONE WITH CLEAN, SHARP TOOLS. TO PREVENT BARK TEARS, THE WEIGHT OF THE BRANCH SHALL BE REMOVED BEFORE MAKING FINAL PRUNING CUT.
6. ALL PRUNING SHALL PRESERVE THE NATURAL CHARACTER OF THE TREE.
7. ONLY COLLAR CUTS ARE ACCEPTABLE. NO FLUSH CUTS OR STUB CUTS WILL BE ALLOWED.
8. ALL BRANCHES THAT ARE BROKEN OR DAMAGED DURING CONSTRUCTION SHALL BE REMOVED.
9. PRUNING CUTS OR DAMAGED AREAS ON AN OAK TREE SHALL BE PAINTED WITHIN FIVE MINUTES WITH A STANDARD TREE WOUND DRESSING. TREE WOUND DRESSING SHALL BE EITHER TREEKOTE AEROSOL OR TANGLEFOOT PRUNING SEALER (OR APPROVED EQUAL). THIS ALSO APPLIES TO WOUNDS CREATED BY CONSTRUCTION VEHICLES OR EQUIPMENT. ALL PRUNING MUST BE IN ACCORDANCE WITH COA OAK WILT PREVENTION POLICY.
10. ANY TREE ROOTS THAT ARE EXPOSED, CUT, OR TORN DURING CONSTRUCTION ACTIVITY SHALL BE PRUNED FLUSH WITH THE SURROUNDING SOIL. (REFER ALSO TO NUMBER 9 OF THE TREE AND NATURAL AREA PROTECTION NOTES INCLUDED IN THIS PLAN SET.)
11. ALL TRENCHING WITHIN THE CRITICAL ROOT ZONE OF A TREE TO BE PRESERVED WILL BE SAW CUT OR EXCAVATED BY HAND, AS APPROVED BY THE GENERAL PERMIT PROGRAM ARBORIST.
12. REFER TO ENVIRONMENTAL CRITERIA MANUAL APPENDIX P-6 FOR FURTHER REMEDIAL TREE CARE REQUIREMENTS. P-6 REMEDIAL TREE CARE WILL BE COORDINATED WITH AND APPROVED BY THE GENERAL PERMIT PROGRAM ARBORIST FOR PROJECTS PERMITTED THROUGH THE GENERAL PERMIT PROGRAM.

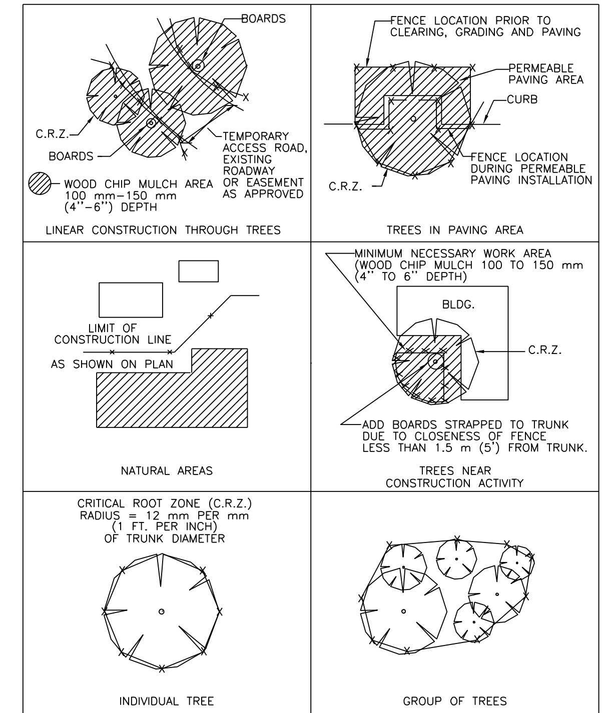

CITY OF AUSTIN WATERSHED PROTECTION DEPARTMENT		TREE PROTECTION FENCE LOCATIONS	
RECORD COPY SIGNED BY J. PATRICK MURPHY	11/15/99 ADOPTED	THE ARCHITECT/ENGINEER ASSUMES RESPONSIBILITY FOR APPROPRIATE USE OF THIS STANDARD.	STANDARD NO. 610S-1

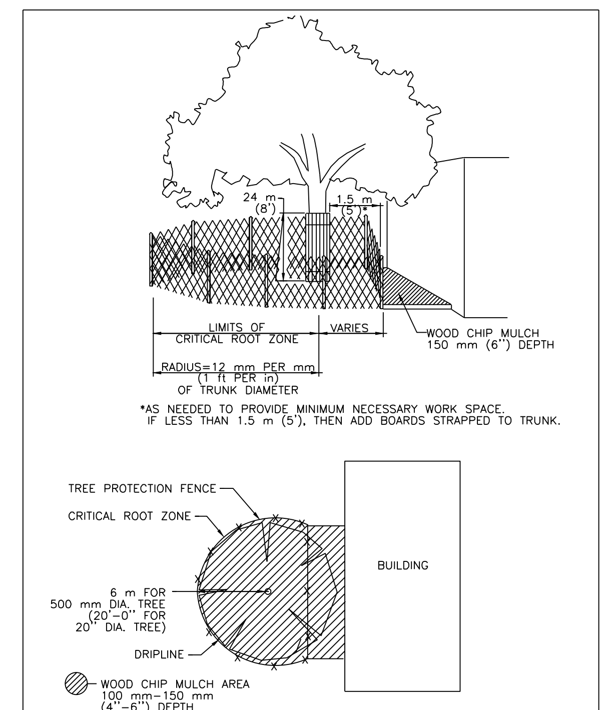

CITY OF AUSTIN WATERSHED PROTECTION DEPARTMENT		TREE PROTECTION FENCE MODIFIED TYPE A - CHAIN LINK	
RECORD COPY SIGNED BY J. PATRICK MURPHY	11/15/99 ADOPTED	THE ARCHITECT/ENGINEER ASSUMES RESPONSIBILITY FOR APPROPRIATE USE OF THIS STANDARD.	STANDARD NO. 610S-4

CITY OF AUSTIN - STANDARD DRAWING

REVISIONS

NO.	DR	CK	DATE	DESCRIPTION

BLACK & VEATCH
Building a world of difference.
Black & Veatch Corporation
Registration No. F-258
Austin, Texas

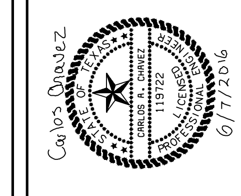

Austin Water
Walnut Creek WWTP - Tertiary Filter Rehabilitation Project
CIP ID No. 3023.025

CIVIL
CITY OF AUSTIN - TREE PROTECTION AND ENVIRONMENTAL NOTES

DESIGNED BY:	COA
DRAWN BY:	COA
REVIEWED BY:	WLK
APPROVED BY:	TSD
PROJECT NO.:	168622
DATE:	4/4/2014
SCALE:	NOT TO SCALE

REVISION:

DISCIPLINE NO.
C-15

DWG. NO.
28 OF 273

FD168622 D168622 SAVED: LER07108, 12/18/2013 7:01:48 AM 09/30/25 ID: Civil Drawings
File: C:\PWBatchPDF\Process\168622 - Austin Walnut Creek WWTP Filter Rehab\C_15.dwg Layout: Work Plotted: 6/9/2016 1:53:06 PM

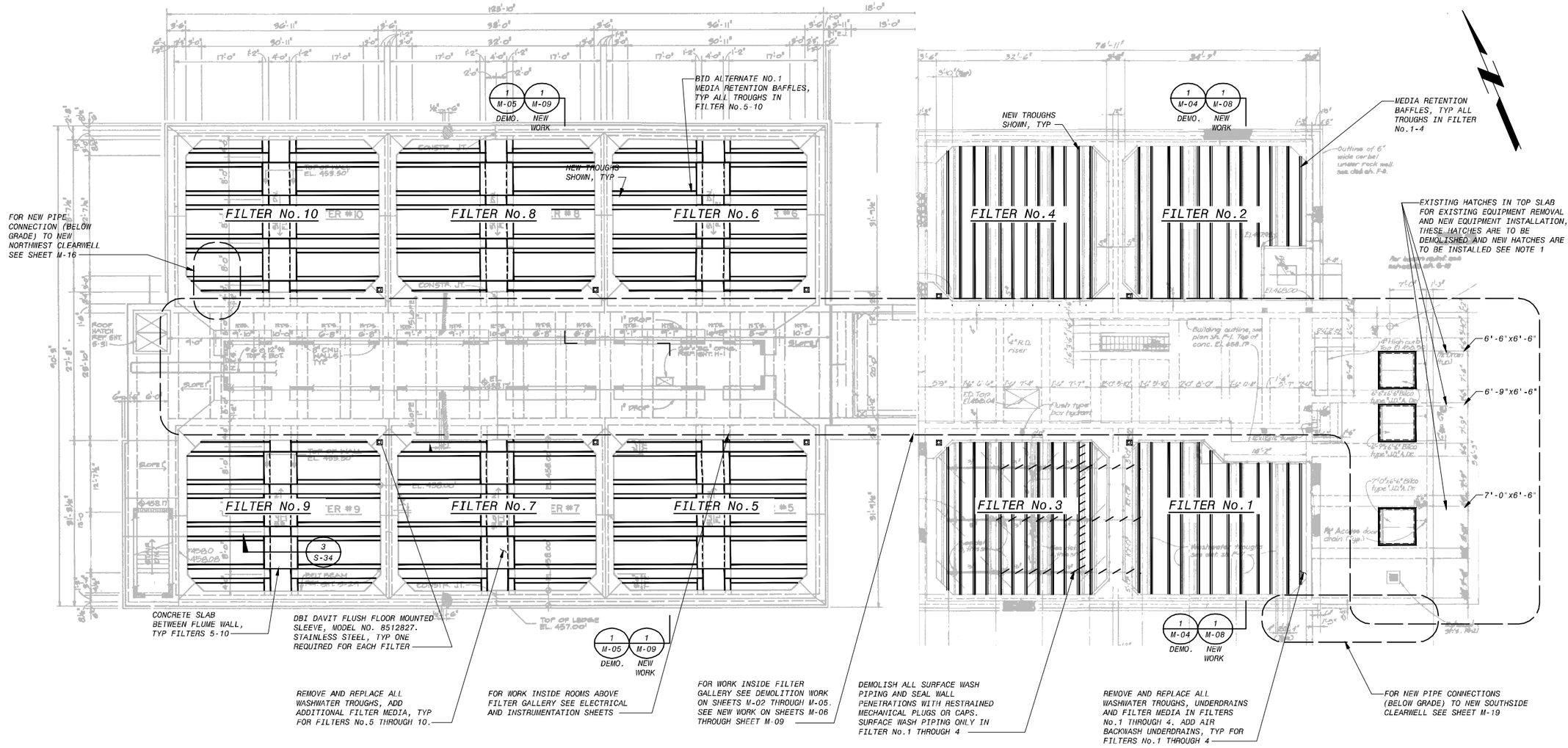

OVERALL FILTER TOP PLAN

12' 8' 4' 0 10' 20'

3/32"=1'-0"

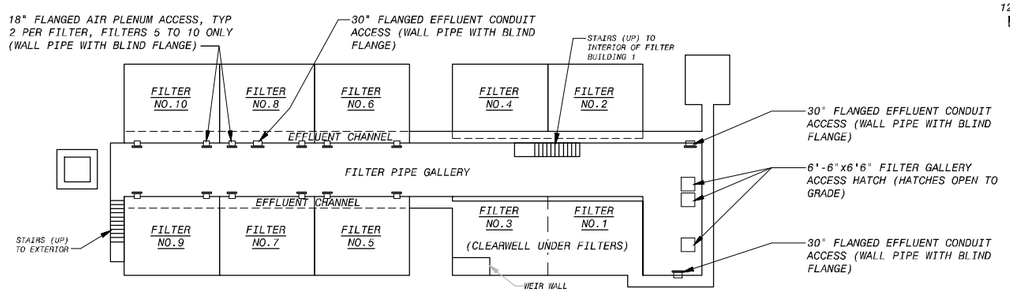

ALL ITEMS SHOWN IN THIS DETAIL ARE EXISTING

FILTER COMPLEX ACCESS DIAGRAM

NOT TO SCALE

NOTE:

1. EXISTING SLAB AROUND EXISTING FLOOR HATCHES SHALL BE SCORED WITH A CONCRETE SAW (DO NOT CUT REINFORCING) CONCRETE SHALL BE CHIPPED OUT AND EXISTING HATCHES SHALL BE REMOVED. CONTRACTOR TO FIELD VERIFY SIZES OF EXISTING HATCHES AND INSTALL NEW ALUMINUM HATCHES TO MATCH ACTUAL SIZES. NEW HATCHES SHALL BE INSTALLED IN SLAB WITH NON-SHRINK GROUT. FALL PROTECTION GRATING AND HATCH FRAME DRAINS SHALL BE PROVIDED (SIZE AS RECOMMENDED BY HATCH MANUF.) ROUTE DRAINS TO FLOOR DRAIN GUTTER IN FILTER GALLERY. TYP OF 3

BACKGROUND INFORMATION NOTE:

BACKGROUND IMAGES USED ON THIS SHEET ARE FROM AS-BUILT DRAWINGS FROM PREVIOUS CONTRACTS THAT WERE PREPARED BASED ON INFORMATION PROVIDED BY OTHERS. ALL ITEMS SHOWN IN THE BACKGROUND AND ALL NEW ITEMS RELYING ON BACKGROUND INFORMATION SHALL BE VERIFIED BY THE CONTRACTOR FOR ACCURACY BEFORE APPLYING THIS INFORMATION FOR ANY PURPOSE. BACKGROUND IMAGES ON THIS SHEET ARE FROM WALNUT CREEK WASTEWATER PLANT CONTRACT 4, SHEET F-4, AND CONTRACT 6, SHEET S-27.

NO.	DR	CK	DATE	DESCRIPTION

REVISIONS

BLACK & VEATCH
Building a world of difference.
Black & Veatch Corporation
Registration No. F-295
Austin, Texas

Carlos Gonzalez
CARLOS R. GONZALEZ
LICENSED
PROFESSIONAL ENGINEER
119722
STATE OF TEXAS
6/7/2016

Austin WATER

Walnut Creek WWTP - Tertiary Filter Rehabilitation Project

CIP ID No. 3023.025

MECHANICAL PROCESS
OVERALL FILTER TOP PLAN
DEMOLITION AND NEW WORK

DESIGNED BY:	KAI
DRAWN BY:	AWL
REVIEWED BY:	WLK
APPROVED BY:	TSD
PROJECT NO.:	168622
DATE:	4/4/2014
SCALE:	AS SHOWN
REVISION:	

DISCIPLINE NO.
M-01

DWG. NO.
29 OF 273

FD168622 SAVED: LEP07106, 2/27/2014 2:02:24 PM
D168622 ORIGINAL PLOT SCALE: 1:1 Plotted: 6/13/2016 1:33:13 PM
File: C:\pw_working\cngpw\d0671660\M-01.dwg Layout: Work

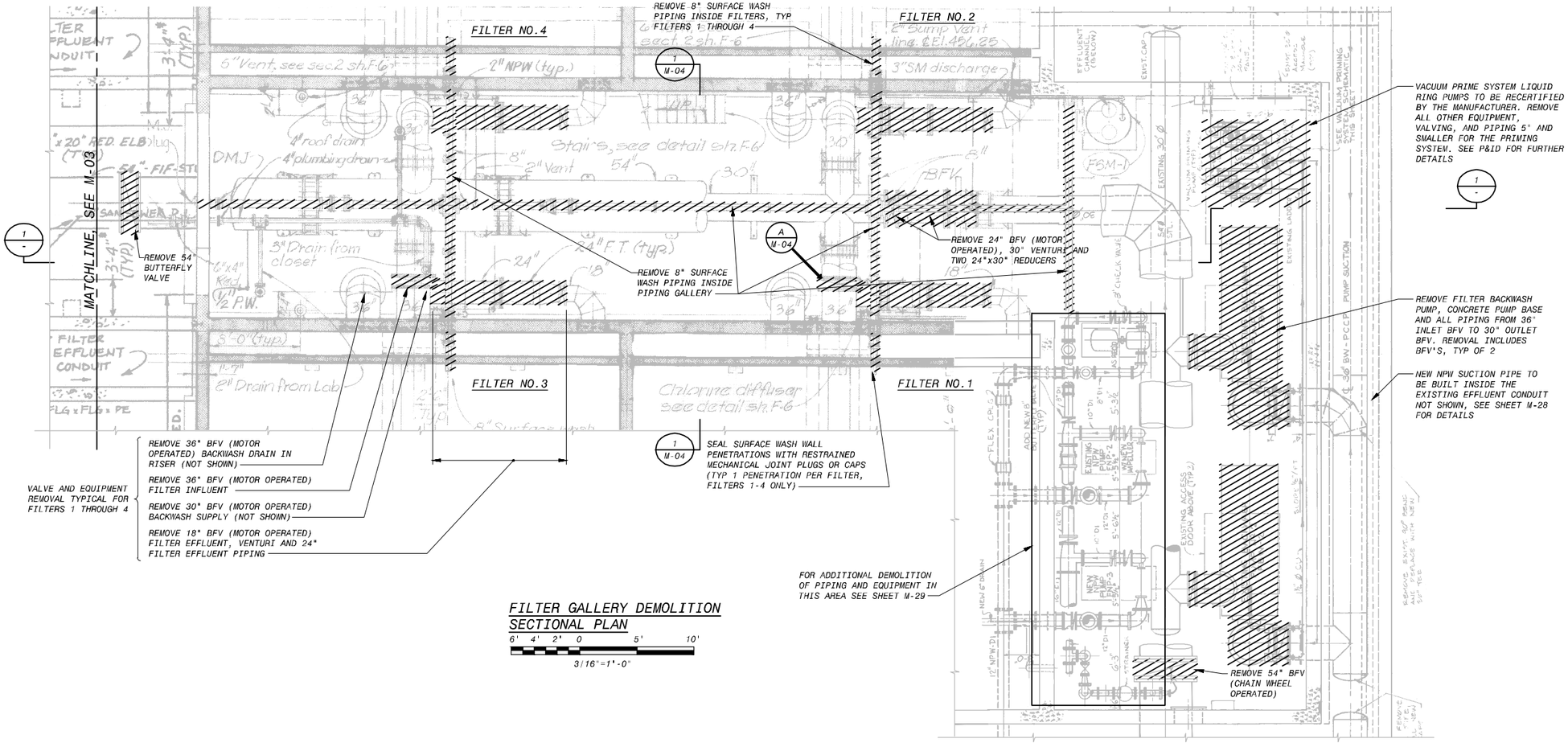

FILTER GALLERY DEMOLITION SECTIONAL PLAN

6' 4' 2' 0 5' 10'

3/16"=1'-0"

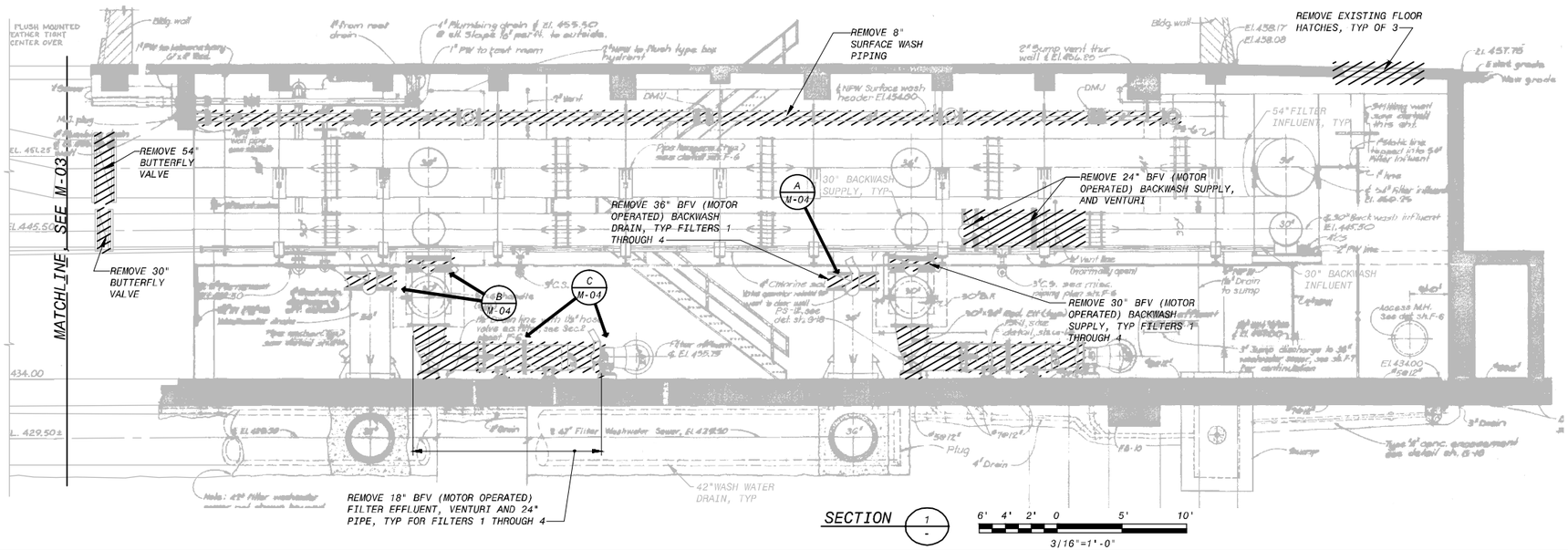

SECTION 1

6' 4' 2' 0 5' 10'

3/16"=1'-0"

NOTES:

1. WHERE EXISTING PIPING AND VALVES ARE INDICATED TO BE REMOVED THIS WORK INCLUDES REMOVAL OF ALL ASSOCIATED PIPE HANGERS, PIPE SUPPORTS, CHAIN WHEEL OPERATORS, ETC.
2. REMOVAL OF VALVES SHALL ALSO INCLUDE REMOVAL OF EXISTING MECHANICAL COUPLINGS ASSOCIATED WITH VALVES. NEW MECHANICAL COUPLINGS SHALL BE INSTALLED WITH NEW GASKETS, TIE RODS AND NEW BOLT SETS.
3. ALL PIPING, ELECTRICAL ITEMS OR ANY OTHER ITEMS NOT DESIGNATED TO BE REMOVED SHALL BE PROTECTED DURING CONSTRUCTION. IF ANY OF THESE ITEMS ARE DAMAGED THEY SHALL BE COMPLETELY REMOVED AND REPLACED AT NO ADDITIONAL COST TO THE OWNER.
4. THIS DEMOLITION SHEET ONLY SHOWS MECHANICAL PROCESS ITEM REMOVAL, SEE HVAC, ELECTRICAL, INSTRUMENTATION AND STRUCTURAL SHEETS FOR ADDITIONAL DEMOLITION WORK. ALSO SEE SHEET M-29 FOR DEMOLITION OF NON-POTABLE WATER SYSTEM PIPING AND EQUIPMENT.
5. CONTRACTOR SHALL SALVAGE ALL EQUIPMENT AS SPECIFIED IN SPEC. SECTION 02050.

BACKGROUND INFORMATION NOTE:

BACKGROUND IMAGES USED ON THIS SHEET ARE FROM AS-BUILT DRAWINGS FROM PREVIOUS CONTRACTS THAT WERE PREPARED BASED ON INFORMATION PROVIDED BY OTHERS. ALL ITEMS SHOWN IN THE BACKGROUND AND ALL NEW ITEMS RELYING ON BACKGROUND INFORMATION SHALL BE VERIFIED BY THE CONTRACTOR FOR ACCURACY BEFORE APPLYING THIS INFORMATION FOR ANY PURPOSE. BACKGROUD IMAGES ON THIS SHEET ARE FROM WALNUT CREEK WASTEWATER PLANT CONTRACT 4, SHEET F-4 AND F-5.

NO.	DR	CK	DATE	DESCRIPTION

REVISIONS

BLACK & VEATCH
Building a world of difference.
Black & Veatch Corporation
Registration No. F-538
Austin, Texas

Carlos Gonzalez
STATE OF TEXAS
CARLOS A. GONZALEZ
LICENSED
PROFESSIONAL ENGINEER
119722
6/17/2016

Austin WATER
Walnut Creek WWTP - Tertiary Filter Rehabilitation Project
CIP ID No. 3023.025

MECHANCAL PROCESS
FILTER GALLERY DEMOLITION
PLAN AND SECTION - SHEET 1 OF 2

DESIGNED BY:	KAI
DRAWN BY:	AWL
REVIEWED BY:	WLK
APPROVED BY:	TSD
PROJECT NO.:	168622
DATE:	4/4/2014
SCALE:	3/16"=1'-0"
REVISION:	
DISCIPLINE NO.	M-02
DWG. NO.	30 OF 273

F0168622 SAVED: F0671660 6/13/2016 1:51:49 PM
D0168622 CAD Date: 6/13/2016 1:35:21 PM Plotted: 6/13/2016 1:35:21 PM
File: C:\pw_working\cngpw\d0671660\M-02.dwg Layout: Work

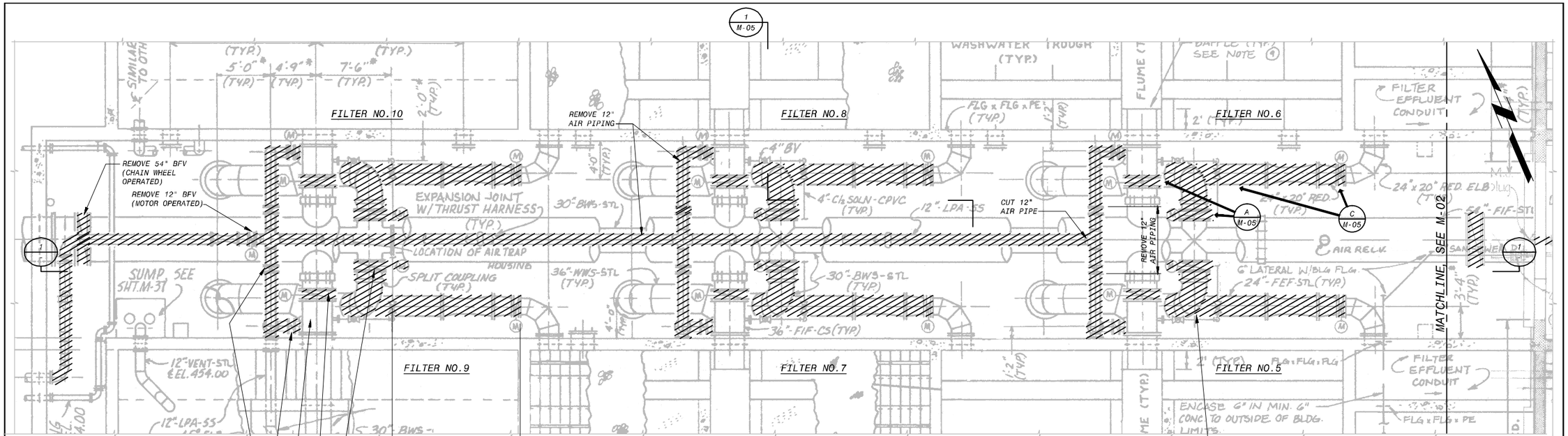

REMOVE 12" BFV, AIR
REMOVE 12" BFV (MOTOR OPERATED), AIR
REMOVE 36" BFV (MOTOR OPERATED), BACKWASH DRAIN IN RISER (NOT SHOWN)
REMOVE 36" BFV (MOTOR OPERATED), FILTER INFLUENT
REMOVE 30" BFV (MOTOR OPERATED), BACKWASH SUPPLY
REMOVE 20" BFV (MOTOR OPERATED), FILTER EFFLUENT, VENTURI AND PIPING

VALVE AND EQUIPMENT REMOVAL TYPICAL FOR FILTERS 5 THROUGH 10

REMOVE 30" GROOVED COUPLING, ALL PIPING BETWEEN 30" BFV AND MECHANICAL COUPLING, INCLUDING THE MECHANICAL COUPLING, TYP FILTERS No.5 THROUGH 10

FILTER GALLERY DEMOLITION SECTIONAL PLAN

6' 4' 2' 0 5' 10'

3/16"=1'-0"

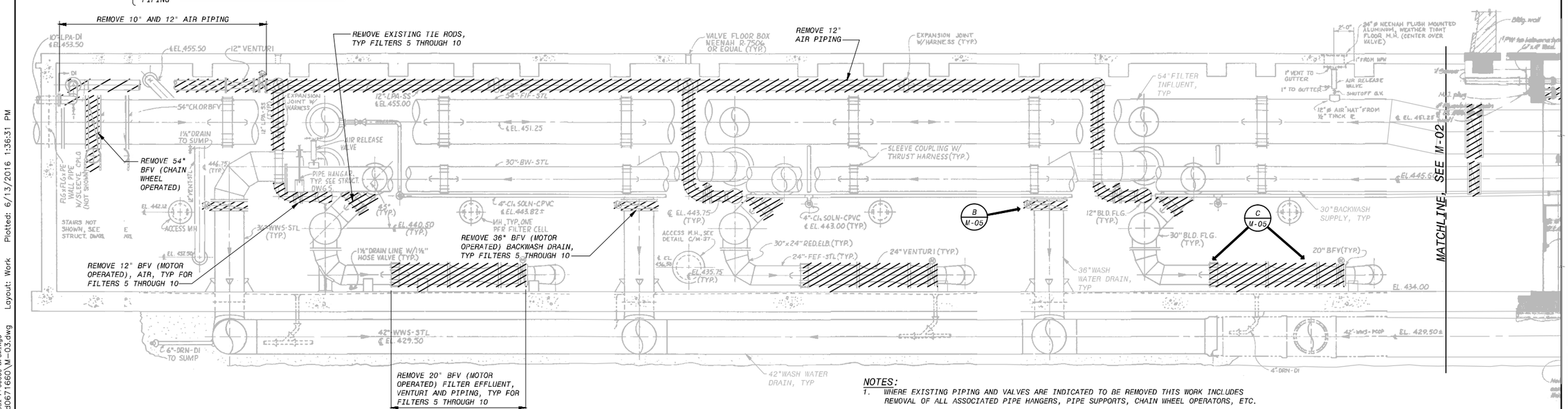

SECTION 1

6' 4' 2' 0 5' 10'

3/16"=1'-0"

BACKGROUND INFORMATION NOTE:

BACKGROUND IMAGES USED ON THIS SHEET ARE FROM AS-BUILT DRAWINGS FROM PREVIOUS CONTRACTS THAT WERE PREPARED BASED ON INFORMATION PROVIDED BY OTHERS. ALL ITEMS SHOWN IN THE BACKGROUND AND ALL NEW ITEMS RELYING ON BACKGROUND INFORMATION SHALL BE VERIFIED BY THE CONTRACTOR FOR ACCURACY BEFORE APPLYING THIS INFORMATION FOR ANY PURPOSE. BACKGROUD IMAGES ON THIS SHEET ARE FROM WALNUT CREEK WASTEWATER PLANT CONTRACT 6, SHEET M-33 AND M-35.

NOTES:

1. WHERE EXISTING PIPING AND VALVES ARE INDICATED TO BE REMOVED THIS WORK INCLUDES REMOVAL OF ALL ASSOCIATED PIPE HANGERS, PIPE SUPPORTS, CHAIN WHEEL OPERATORS, ETC.
2. REMOVAL OF VALVES SHALL ALSO INCLUDE REMOVAL OF EXISTING MECHANICAL COUPLINGS ASSOCIATED WITH VALVES. NEW MECHANICAL COUPLINGS SHALL BE INSTALLED WITH NEW GASKETS, TIE RODS, AND NEW BOLT KITS, UNLESS OTHERWISE INDICATED.
3. ALL PIPING, ELECTRICAL ITEMS OR ANY OTHER ITEMS NOT DESIGNATED TO BE REMOVED SHALL BE PROTECTED DURING CONSTRUCTION. IF ANY OF THESE ITEMS ARE DAMAGED THEY SHALL BE COMPLETELY REMOVED AND REPLACED AT NO ADDITIONAL COST TO THE OWNER.
4. THIS DEMOLITION SHEET ONLY SHOWS MECHANICAL PROCESS ITEM REMOVAL, SEE HVAC, ELECTRICAL, INSTRUMENTATION AND STRUCTURAL SHEETS FOR ADDITIONAL DEMOLITION WORK.
5. CONTRACTOR SHALL SALVAGE ALL EQUIPMENT AS SPECIFIED IN SECTION 02050.

NO.	DR	CK	DATE	DESCRIPTION

REVISIONS

BLACK & VEATCH
Building a world of difference.
Black & Veatch Corporation
Registration No. F-326
Austin, Texas

CARLOS R. CHAVEZ, LICENSED PROFESSIONAL ENGINEER, 119722, STATE OF TEXAS
6/17/2016

Walnut Creek WWTP - Tertiary Filter Rehabilitation Project
CIP ID No. 3023.025

MECHANCAL PROCESS
FILTER GALLERY DEMOLITION
PLAN AND SECTION - SHEET 2 OF 2

DESIGNED BY:	KAI
DRAWN BY:	AWL
REVIEWED BY:	WLK
APPROVED BY:	TSD
PROJECT NO.:	168622
DATE:	4/4/2014
SCALE:	3/16"=1'-0"

REVISION:

DISCIPLINE NO. M-03

DWG. NO. 31 OF 273

F0168622 SAVED: F0168622 2/27/2014 3:19:57 PM
D168622 CREATED: Monday, April 21, 2014 Process: pgs
File: C:_pw_working\cngpw\d0671660\M-03.dwg Layout: Work Plotted: 6/13/2016 1:36:31 PM

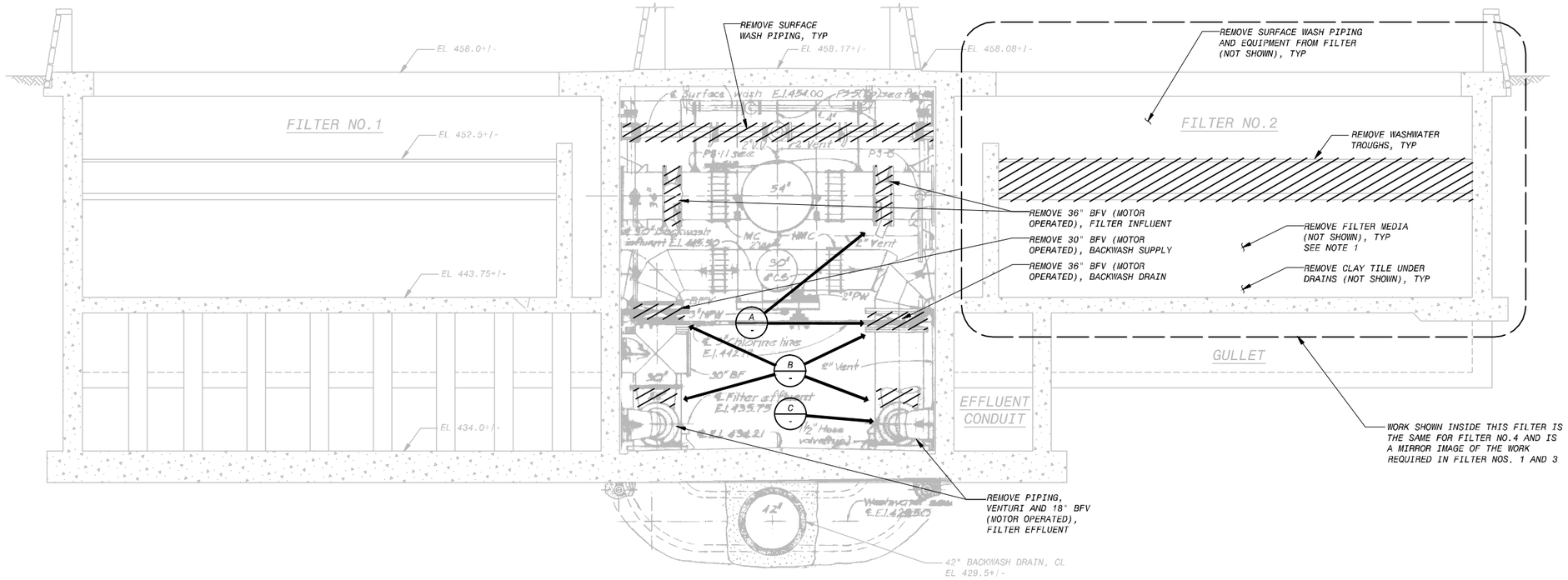

SECTION 1 M-01 / 1 M-02

4' 2' 0 4' 8'

1/4"=1'-0"

NOTE:
1. FILTER MEDIA TO BE REMOVED IS APPROXIMATELY 22" ANTHRACITE, 12" SAND, AND 10" GRAVEL, TYP FOR EACH FILTER.

PHOTO A NOT TO SCALE M-02

PHOTO B NOT TO SCALE M-02

PHOTO C NOT TO SCALE M-02

BACKGROUND INFORMATION NOTE:
BACKGROUND IMAGES USED ON THIS SHEET ARE FROM AS-BUILT DRAWINGS FROM PREVIOUS CONTRACTS THAT WERE PREPARED BASED ON INFORMATION PROVIDED BY OTHERS. ALL ITEMS SHOWN IN THE BACKGROUND AND ALL NEW ITEMS RELYING ON BACKGROUND INFORMATION SHALL BE VERIFIED BY THE CONTRACTOR FOR ACCURACY BEFORE APPLYING THIS INFORMATION FOR ANY PURPOSE. BACKGROUND IMAGES ON THIS SHEET ARE FROM WALNUT CREEK WASTEWATER PLANT, CONTRACT 4, SHEET F-6.

NO.	DR	CK	DATE	DESCRIPTION

REVISIONS

BLACK & VEATCH
Building a world of difference.
Black & Veatch Corporation
Registration No. F-230
Austin, Texas

STATE OF TEXAS
CARLOS R. CHAVEZ
119722
REGISTERED PROFESSIONAL ENGINEER
06/17/2016

Austin WATER
Walnut Creek WWTP - Tertiary Filter Rehabilitation Project
CIP ID No. 3023.025

MECHANICAL PROCESS
FILTERS 1 TO 4 DEMOLITION
SECTIONS AND PHOTOS

DESIGNED BY:	KAI
DRAWN BY:	AWL
REVIEWED BY:	WLK
APPROVED BY:	TSD
PROJECT NO.:	168622
DATE:	4/4/2014
SCALE:	AS SHOWN
REVISION:	
DISCIPLINE NO.	M-04
DWG. NO.	32 OF 273

SAVED: 6/17/2016 4:26:48 PM
CAD KEY: 3023010_Mechanical Process Drawings
File: C:\pw_working\cngpw\d0671660\M-04.dwg Layout: Work Plotted: 6/13/2016 1:37:54 PM
F0168622
D168622

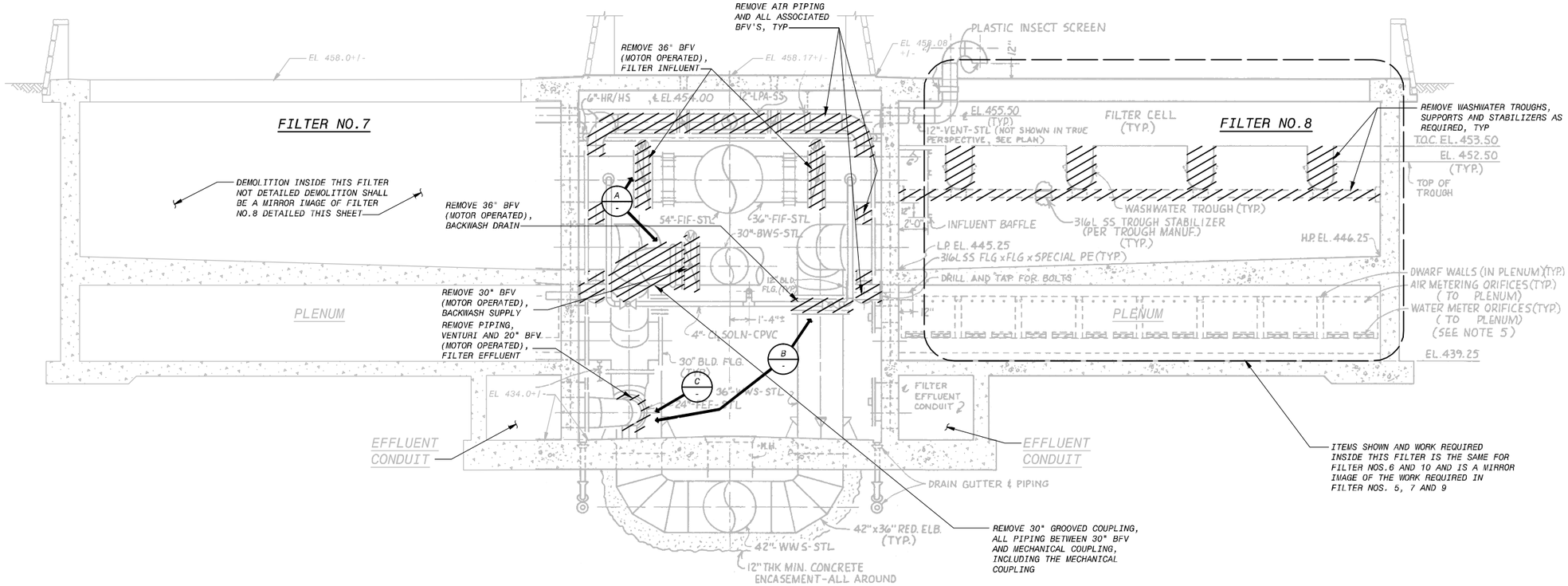

SECTION 1 / M-01 — 1 / M-03

4' 2' 0 4' 8'

1/4"=1'-0"

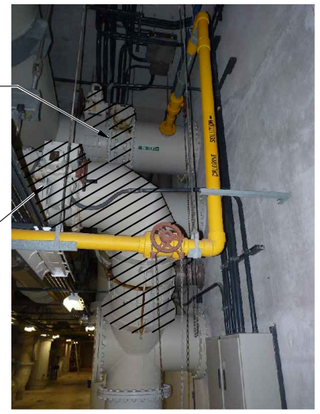

PHOTO A / M-03
NOT TO SCALE

PHOTO B / M-03
NOT TO SCALE

PHOTO C / M-03
NOT TO SCALE

BACKGROUND INFORMATION NOTE:
BACKGROUND IMAGES USED ON THIS SHEET ARE FROM AS-BUILT DRAWINGS FROM PREVIOUS CONTRACTS THAT WERE PREPARED BASED ON INFORMATION PROVIDED BY OTHERS. ALL ITEMS SHOWN IN THE BACKGROUND AND ALL NEW ITEMS RELYING ON BACKGROUND INFORMATION SHALL BE VERIFIED BY THE CONTRACTOR FOR ACCURACY BEFORE APPLYING THIS INFORMATION FOR ANY PURPOSE. BACKGROUD IMAGES ON THIS SHEET ARE FROM WALNUT CREEK WASTEWATER PLANT CONTRACT 6, SHEET M-35.

NO.	DR	CK	DATE	DESCRIPTION

REVISIONS

BLACK & VEATCH
Building a world of difference.
Black & Veatch Corporation
Registration No. F-230
Austin, Texas

Carlos Gonzalez
STATE OF TEXAS
CARLOS A. GONZALEZ
119722
LICENSED PROFESSIONAL ENGINEER
6/7/2016

Austin WATER
Walnut Creek WWTP - Tertiary Filter Rehabilitation Project
CIP ID No. 3023.025

MECHANICAL PROCESS
FILTER 5 TO 10 DEMOLITION
SECTIONS AND PHOTOS

DESIGNED BY:	KAI
DRAWN BY:	AWL
REVIEWED BY:	WLK
APPROVED BY:	TSD
PROJECT NO.:	168622
DATE:	4/4/2014
SCALE:	AS SHOWN
REVISION:	
DISCIPLINE NO.	M-05
DWG. NO.	33 OF 273

SAVED: 5/18/2022
PLOTTED: D168622
SAVED: D168622
File: C:\pw_working\cngpw\d0671660\M-05.dwg Layout: Work Plotted: 6/13/2016 1:38:34 PM
...\09.3030 - Mechanical Process Drawings

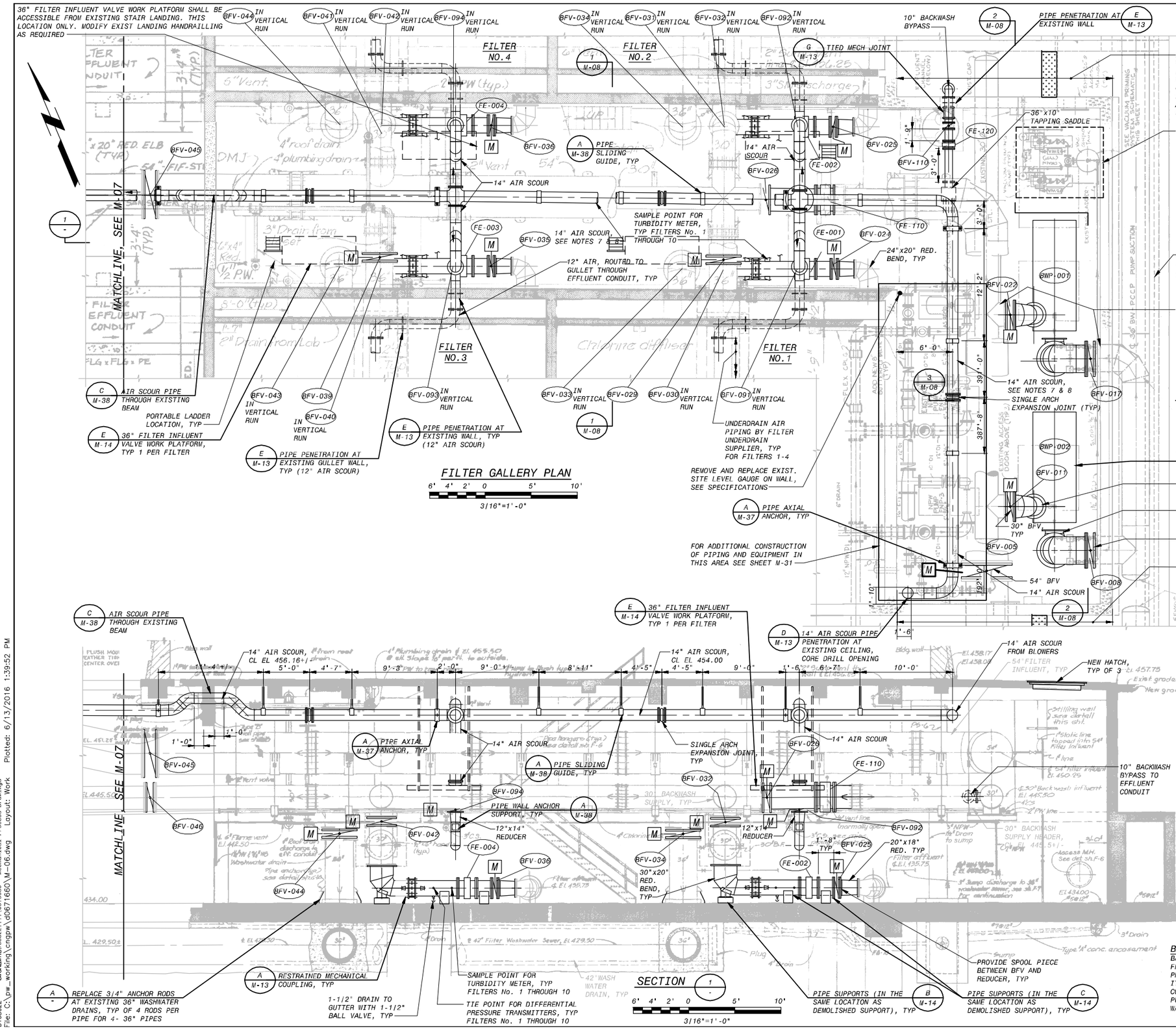

NOTES:

1. CONTRACTOR TO FIELD VERIFY PRECISE LOCATION, ELEVATION, ARRANGEMENT, SIZE, TYPE AND CONDITION OF EXISTING PIPING TO COORDINATE CONNECTIONS TO NEW PIPING, FITTINGS, VALVES, ETC. PRIOR TO FABRICATION OF NEW ITEMS.
2. REPLACEMENT OF EXISTING VALVES WITH NEW VALVES MAY REQUIRE MODIFICATION OF ASSOCIATED PIPING, COUPLINGS, ETC TO ACCOMMODATE DIFFERENT VALVE LENGTHS, DIFFERENT MOTOR OPERATOR CONFIGURATION, ETC. ALL REQUIRED MODIFICATIONS SHALL BE MADE AT NO ADDITIONAL COST TO THE OWNER.
3. INSTALLATION OF REPLACEMENT VALVES SHALL ALSO INCLUDE REMOVAL OF EXISTING MECHANICAL COUPLINGS ASSOCIATED WITH VALVES. NEW MECHANICAL COUPLINGS SHALL BE INSTALLED WITH NEW GASKETS, TIE RODS AND NEW BOLT KITS.
4. IF ANY PIPING OR EQUIPMENT NOT DESIGNATED TO BE REMOVED ARE DAMAGED DUE TO CONSTRUCTION THEY SHALL BE COMPLETELY REMOVED AND REPLACED AT NO ADDITIONAL COST TO THE OWNER.
5. THIS NEW WORK SHEET ONLY SHOWS MECHANICAL PROCESS NEW WORK, SEE HVAC, ELECTRICAL, INSTRUMENTATION AND STRUCTURAL SHEETS FOR ADDITIONAL NEW WORK. ALSO SEE SHEET M-31 FOR NEW WORK ON NON-POTABLE WATER SYSTEM PIPING AND EQUIPMENT.
6. IF REQUIRED, CONTRACTOR SHALL MODIFY PUMP SUCTION AND/OR DISCHARGE PIPING TO ACCOMODATE NEW BACKWASH PUMPS, AT NO ADDITIONAL COST TO OWNER.
7. PRIOR TO ORDERING NEW AIR SCOUR PIPING, CONTRACTOR SHALL FIELD VERIFY EXISTING CONDITIONS. IF AIR PIPING ROUTE SHOWN NEEDS TO BE MODIFIED CONTRACTOR SHALL SUBMIT PLAN OF NEW AIR SCOUR PIPE ROUTE.
8. ELECTRICAL CONDUITS AND PIPING THAT CONFLICTS WITH NEW PIPE ROUTING SHALL BE RELOCATED USING MATERIALS THAT MATCH THE EXISTING MATERIALS. RELOCATION OF CONDUITS AND SMALL DIAMETER PIPING SHALL BE A SUBSIDIARY OBLIGATION OF THE CONTRACTOR AND SHALL BE INCLUDED IN THE BID PRICE.
9. SEE SHEET S-02 FOR TEMPORARY BULKHEAD INFORMATION. APPROX. DIMENSIONS OF CHANNEL ARE 5'-0" WIDE BY 8'-9" DEEP.

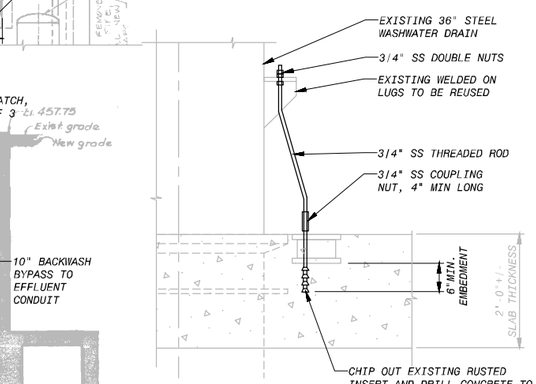

DETAIL A NOTES:

1. REPLACE ANCHOR RODS AT 4 36" PIPES AT FILTERS 1 THRU 4 ONLY. THERE ARE 4 ANCHOR RODS AT EACH 36" PIPE.
2. ALL NEW ANCHOR ROD HARDWARE SHALL BE STAINLESS STEEL.

DETAIL A
3/8"=1'-0"

BACKGROUND INFORMATION NOTE:

BACKGROUND IMAGES USED ON THIS SHEET ARE FROM AS-BUILT DRAWINGS FROM PREVIOUS CONTRACTS THAT WERE PREPARED BASED ON INFORMATION PROVIDED BY OTHERS. ALL ITEMS SHOWN IN THE BACKGROUND AND ALL NEW ITEMS RELYING ON BACKGROUND INFORMATION SHALL BE VERIFIED BY THE CONTRACTOR FOR ACCURACY BEFORE APPLYING THIS INFORMATION FOR ANY PURPOSE. BACKGROUD IMAGES ON THIS SHEET ARE FROM WALNUT CREEK WASTEWATER PLANT CONTRACT 4, SHEET F-4 AND F-5.

NO.	DR	CK	DATE	DESCRIPTION

REVISIONS

BLACK & VEATCH
Building a world of difference.
Black & Veatch Corporation
Registration No. F-295
Austin, Texas

CARLOS R. CHAVEZ
119722
REGISTERED PROFESSIONAL ENGINEER
6/17/2016

Austin WATER
Walnut Creek WWTP - Tertiary Filter Rehabilitation Project
CIP ID No. 3023.025

MECHANCAL PROCESS
FILTER GALLERY
PLAN AND SECTION - SHEET 1 OF 2

DESIGNED BY:	KAI, AWL
DRAWN BY:	AWL
REVIEWED BY:	WLK
APPROVED BY:	TSD
PROJECT NO.:	168622
DATE:	4/4/2014
SCALE:	3/16"=1'-0"
REVISION:	
DISCIPLINE NO.	M-06
DWG. NO.	34 OF 273

SWATX-LCD07108, 2/3/2012 2:11:02 PM
D168622 Walnut Creek WWTP, Mechanical Process Drawings
File: C:\pw_working\cngpw\d0671660\M-06.dwg Layout: Work Plotted: 6/13/2016 1:39:52 PM

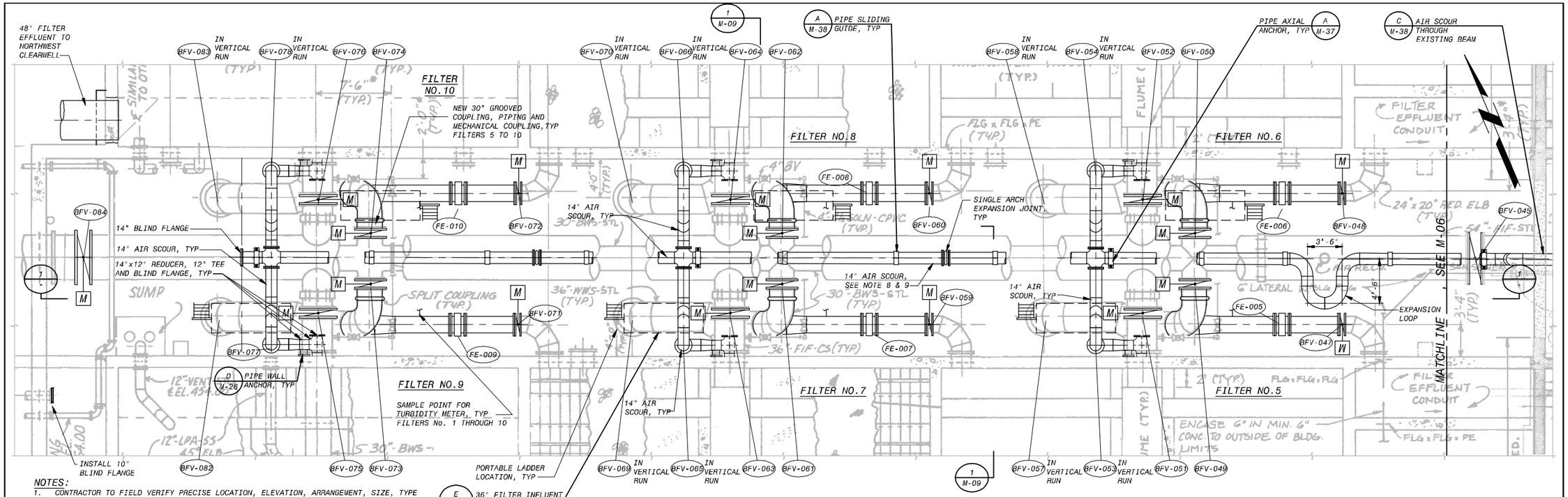

FILTER GALLERY PLAN

6' 4' 2' 0 5' 10'

3/16"=1'-0"

NOTES:

1. CONTRACTOR TO FIELD VERIFY PRECISE LOCATION, ELEVATION, ARRANGEMENT, SIZE, TYPE AND CONDITION OF EXISTING PIPING TO COORDINATE CONNECTIONS TO NEW PIPING, FITTINGS, VALVES, ETC. PRIOR TO FABRICATION OF NEW ITEMS.
2. REPLACEMENT OF EXISTING VALVES WITH NEW VALVES MAY REQUIRE MODIFICATION OF ASSOCIATED PIPING, COUPLINGS, ETC TO ACCOMMODATE DIFFERENT VALVE LENGTHS, DIFFERENT MOTOR OPERATOR CONFIGURATION, ETC. ALL REQUIRED MODIFICATIONS SHALL BE MADE AT NO ADDITIONAL COST TO THE OWNER.
3. INSTALLATION OF REPLACEMENT VALVES SHALL ALSO INCLUDE REMOVAL OF EXISTING MECHANICAL COUPLINGS ASSOCIATED WITH VALVES. NEW MECHANICAL COUPLINGS SHALL BE INSTALLED WITH NEW GASKETS, NEW TIE RODS AND NEW BOLT KITS, UNLESS OTHERWISE INDICATED.
4. IF ANY PIPING OR EQUIPMENT NOT DESIGNATED TO BE REMOVED ARE DAMAGED DUE TO CONSTRUCTION THEY SHALL BE COMPLETELY REMOVED AND REPLACED AT NO ADDITIONAL COST TO THE OWNER.
5. THIS NEW WORK SHEET ONLY SHOWS MECHANICAL PROCESS NEW WORK, SEE HVAC, ELECTRICAL, INSTRUMENTATION AND STRUCTURAL SHEETS FOR ADDITIONAL NEW WORK.
6. EXISTING FLANGE OR MJ PIPING JOINTS THAT ARE DISASSEMBLED SHALL BE REINSTALLED WITH NEW GASKETS AND BOLT KITS.
7. WHERE HARNESSED MECHANICAL JOINTS ARE REPLACED PROVIDE NUMBER OF LUGS AND TIE RODS TO MATCH EXISTING.

NOTES (CONTINUED)

8. PRIOR TO ORDERING NEW AIR SCOUR PIPING, CONTRACTOR SHALL FIELD VERIFY EXISTING CONDITIONS. IF AIR PIPING ROUTE SHOWN NEEDS TO BE MODIFIED CONTRACTOR SHALL SUBMIT PLAN OF NEW AIR SCOUR PIPE ROUTE.
9. ELECTRICAL CONDUITS AND PIPING THAT CONFLICTS WITH NEW AIR SCOUR PIPE ROUTING SHALL BE RELOCATED USING MATERIALS THAT MATCH THE EXISTING MATERIALS. RELOCATION OF CONDUITS AND SMALL DIAMETER PIPING SHALL BE A SUBSIDIARY OBLIGATION OF THE CONTRACTOR AND SHALL BE INCLUDED IN THE BID PRICE.

BACKGROUND INFORMATION NOTE:

BACKGROUND IMAGES USED ON THIS SHEET ARE FROM AS-BUILT DRAWINGS FROM PREVIOUS CONTRACTS THAT WERE PREPARED BASED ON INFORMATION PROVIDED BY OTHERS. ALL ITEMS SHOWN IN THE BACKGROUND AND ALL NEW ITEMS RELYING ON BACKGROUND INFORMATION SHALL BE VERIFIED BY THE CONTRACTOR FOR ACCURACY BEFORE APPLYING THIS INFORMATION FOR ANY PURPOSE. BACKGROUND IMAGES ON THIS SHEET ARE FROM WALNUT CREEK WASTEWATER PLANT CONTRACT 6, SHEETS M-33 AND M-35.

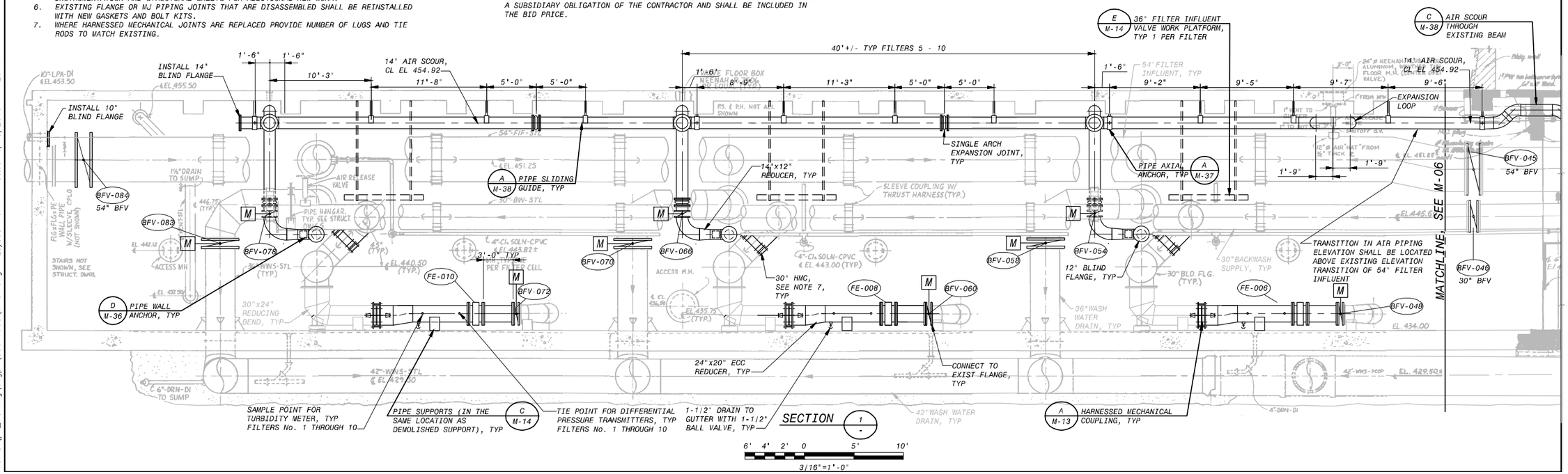

SECTION 1 -

6' 4' 2' 0 5' 10'

3/16"=1'-0"

NO.	DR	CK	DATE	DESCRIPTION

REVISIONS

BLACK & VEATCH
Building a world of difference.
Black & Veatch Corporation
Registration No. F-230
Austin, Texas

Carlos Gonzalez
TEXAS
CARLOS A. GONZALEZ
119722
LICENSED PROFESSIONAL ENGINEER
6/17/2016

Walnut Creek WWTP - Tertiary Filter Rehabilitation Project
Austin Water
CIP ID No. 3023.025

MECHANCAL PROCESS
FILTER GALLERY
PLAN AND SECTION - SHEET 2 OF 2

DESIGNED BY:	KAI, AWL
DRAWN BY:	AWL
REVIEWED BY:	WLK
APPROVED BY:	TSD
PROJECT NO.:	168622
DATE:	4/4/2014
SCALE:	3/16"=1'-0"

REVISION:

DISCIPLINE NO.
M-07

DWG. NO.
35 OF 273

F0168622 SAVED: LPD07108, 2/23/2013 6:07:47 PM
D168622 SAVED: BRF08892, 4/4/2014 1:41:20 PM
File: C:\pw_working\cngpw\d0671660\M-07.dwg Layout: Work Plotted: 6/13/2016 1:41:20 PM

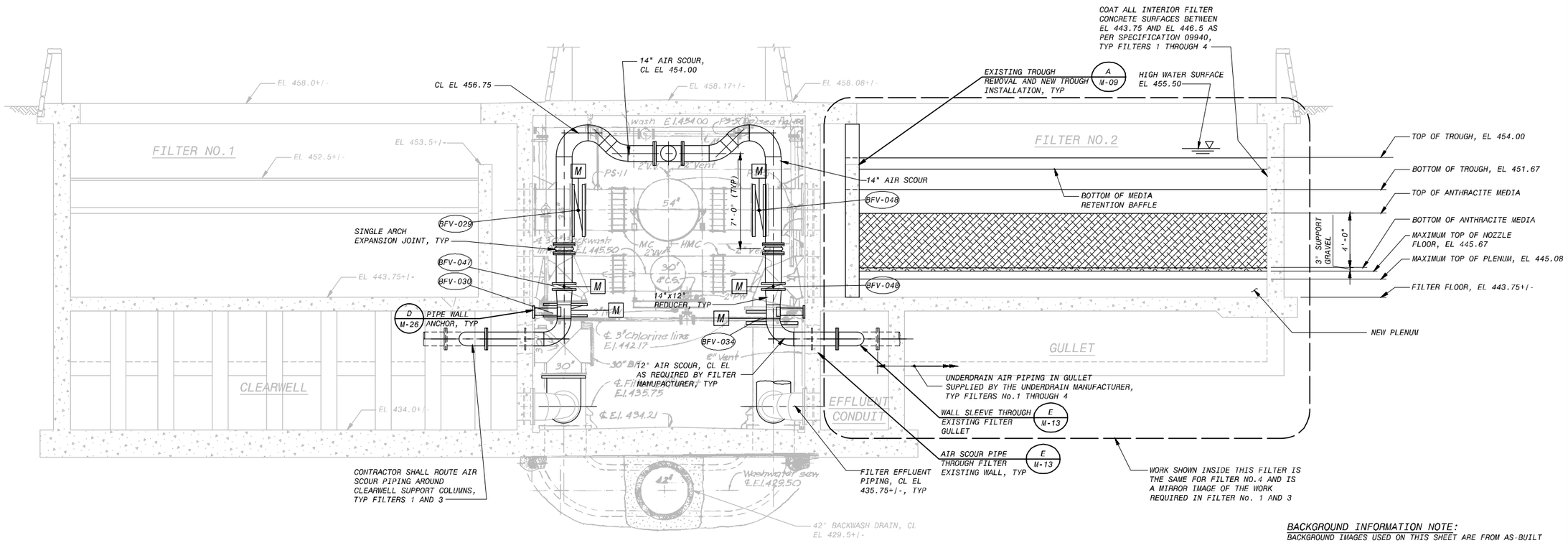

BACKGROUND INFORMATION NOTE:

BACKGROUND IMAGES USED ON THIS SHEET ARE FROM AS-BUILT DRAWINGS FROM PREVIOUS CONTRACTS THAT WERE PREPARED BASED ON INFORMATION PROVIDED BY OTHERS. ALL ITEMS SHOWN IN THE BACKGROUND AND ALL NEW ITEMS RELYING ON BACKGROUND INFORMATION SHALL BE VERIFIED BY THE CONTRACTOR FOR ACCURACY BEFORE APPLYING THIS INFORMATION FOR ANY PURPOSE. BACKGROUD IMAGES ON THIS SHEET ARE FROM WALNUT CREEK WASTEWATER PLANT CONTRACT 4, SHEETS F-4 AND F6.

SECTION 1 M-01 / 1 M-06

4' 2' 0 4' 8'

1/4"=1'-0"

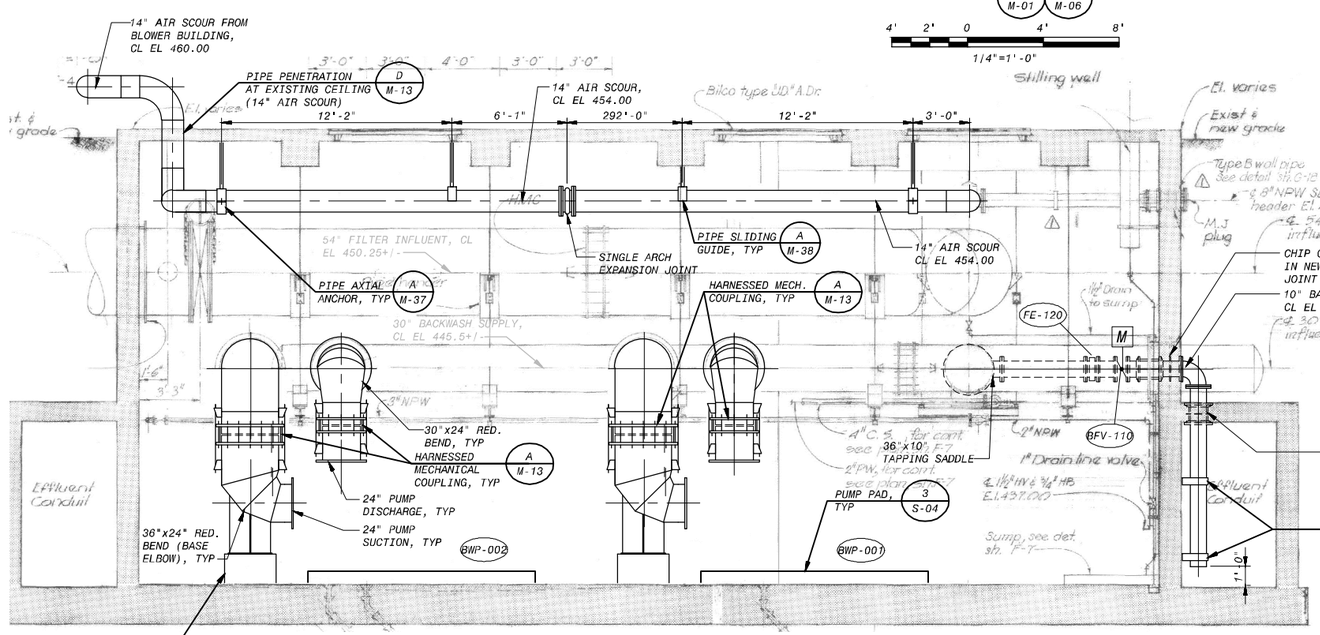

SECTION 2 M-06

4' 2' 0 4' 8'

1/4"=1'-0"

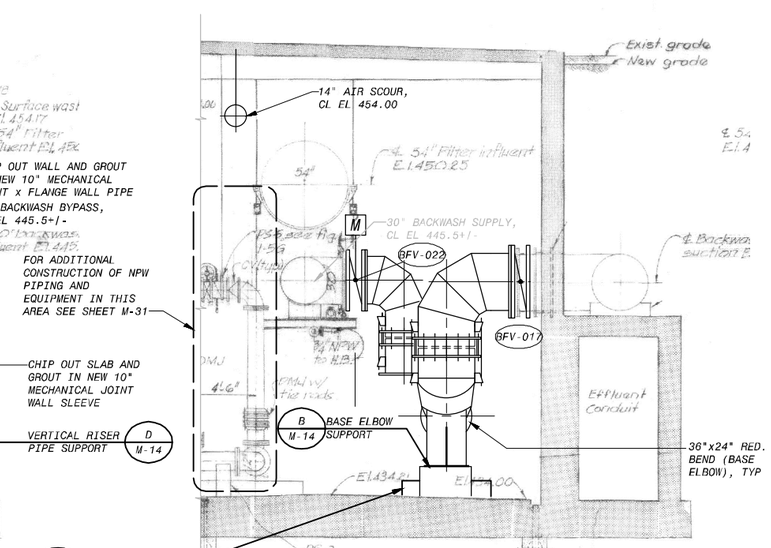

SECTION 3 M-06

4' 2' 0 4' 8'

1/4"=1'-0"

NO.	DR	CK	DATE	DESCRIPTION

REVISIONS

BLACK & VEATCH
Building a world of difference.
Black & Veatch Corporation
Registration No. F-258
Austin, Texas

Carlos Gonzalez
STATE OF TEXAS
CARLOS A. GONZALEZ
LICENSED
PROFESSIONAL ENGINEER
119722
6/7/2016

Walnut Creek WWTP - Tertiary Filter Rehabilitation Project

CIP ID No. 3023.025

Austin Water

MECHANICAL PROCESS
FILTERS 1 TO 4
SECTIONS

DESIGNED BY:	KAI, AWL
DRAWN BY:	AWL
REVIEWED BY:	WLK
APPROVED BY:	TSD
PROJECT NO.:	168622
DATE:	4/4/2014
SCALE:	1/4"=1'-0"

REVISION:

DISCIPLINE NO.
M-08

DWG. NO.
36 OF 273

F0168622 SAVED: F0168622, 9/10/2014 7:44:52 AM
D168622 PLOTTED BY: Wilson, Jull Process: 2-sv.pc5
File: C:\pw_working\cnapw\d0671660\M-08.dwg Layout: Work Plotted: 6/13/2016 1:43:49 PM

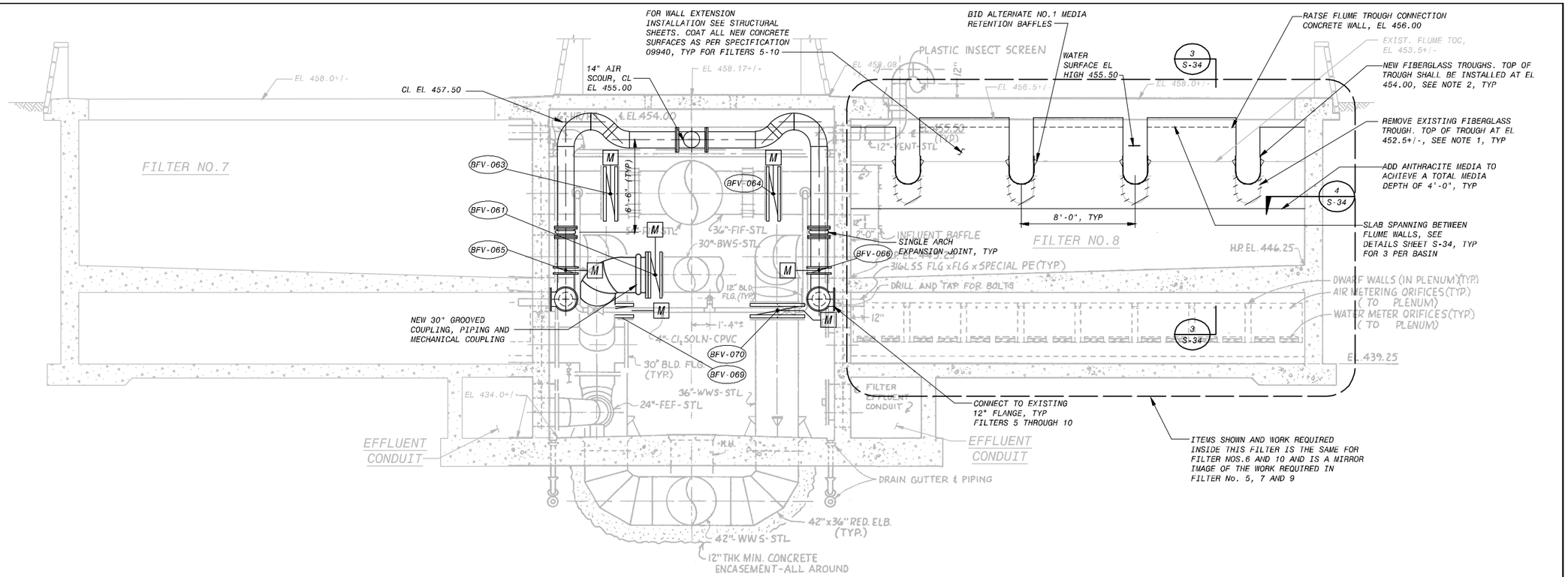

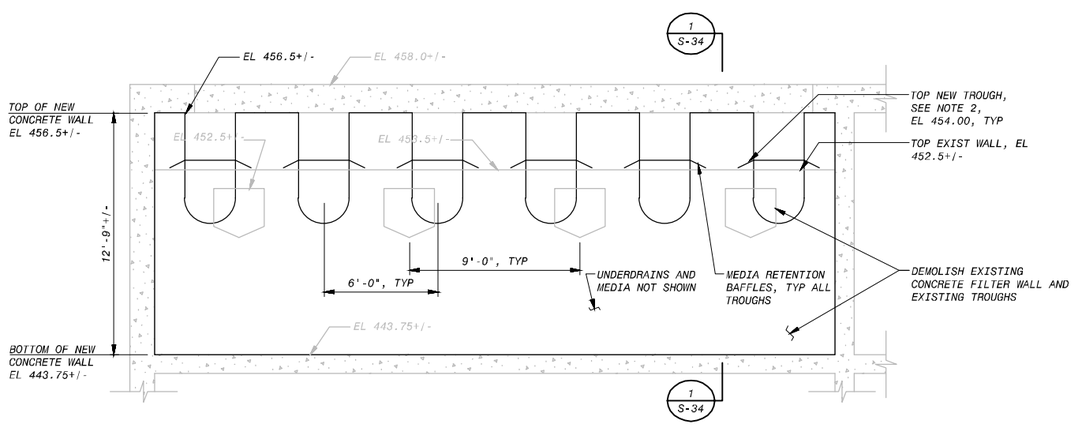

DETAIL OF NEW TROUGH CONNECTION AT CONCRETE FLUME WALL AT FILTERS 1 THROUGH 4 (A / M-08)

NOTES:

1. DEMOLISH EXISTING TROUGHS AND FILL OPENING WITH CONCRETE. DIMENSIONS GIVEN ARE APPROXIMATE BASED ON RECORD DRAWINGS.
2. INSTALLATION OF NEW TROUGHS BASED ON REQUIREMENTS IN SPECIFICATION 06600 AND ACTUAL TROUGHS SUPPLIED. INSTALL TROUGHS AS PER MANUFACTURER'S RECOMMENDATIONS.

BACKGROUND INFORMATION NOTE:
BACKGROUND IMAGES USED ON THIS SHEET ARE FROM AS-BUILT DRAWINGS FROM PREVIOUS CONTRACTS THAT WERE PREPARED BASED ON INFORMATION PROVIDED BY OTHERS. ALL ITEMS SHOWN IN THE BACKGROUND AND ALL NEW ITEMS RELYING ON BACKGROUND INFORMATION SHALL BE VERIFIED BY THE CONTRACTOR FOR ACCURACY BEFORE APPLYING THIS INFORMATION FOR ANY PURPOSE. BACKGROUD IMAGES ON THIS SHEET ARE FROM WALNUT CREEK WASTEWATER PLANT 6, SHEET M-35.

NO.	DR	CK	DATE	DESCRIPTION

REVISIONS

BLACK & VEATCH
Building a world of difference.
Black & Veatch Corporation
Registration No. F-295
Austin, Texas

Carlos Gonzalez
TEXAS
CARLOS A. GONZALEZ
119722
LICENSED
PROFESSIONAL ENGINEER
6/7/2016

Austin Water
Walnut Creek WWTP - Tertiary Filter Rehabilitation Project
CIP ID No. 3023.025

MECHANICAL PROCESS
FILTER 5 TO 10
SECTIONS

DESIGNED BY:	KAI
DRAWN BY:	AWL
REVIEWED BY:	WLK
APPROVED BY:	TSD
PROJECT NO.:	168622
DATE:	4/4/2014
SCALE:	1/4"=1'-0"
REVISION:	
DISCIPLINE NO.	M-09
DWG. NO.	37 OF 273

F0168622
D168622
SAVED:
PLOTTED:D168622,...\09.5030 - Mechanical Process Drawings
File: C:\pw_working\cngpw\d0671660\M-09.dwg Layout: Work Plotted: 6/13/2016 1:44:46 PM

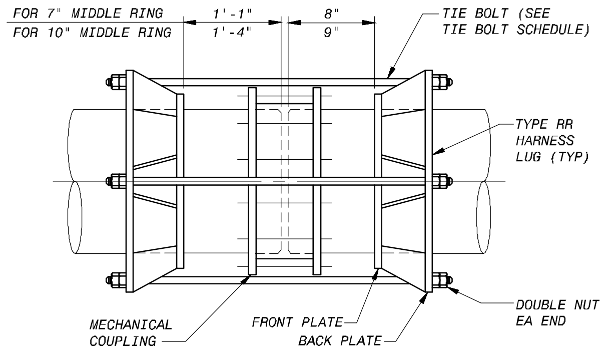

NOTES:

1. THE PIPE FOR LUG DESIGN SHALL INCLUDE WRAPPERS OR PADS OR THE PIPE WALL THICKNESS INCREASED AS REQUIRED TO MEET MINIMUM PIPE THICKNESS IN ACCORDANCE WITH AWWA M-11 DESIGN REQUIREMENTS.

STEEL PIPE HARNESSED MECHANICAL COUPLING WITH TYPE RR LUGS (A)

NO SCALE

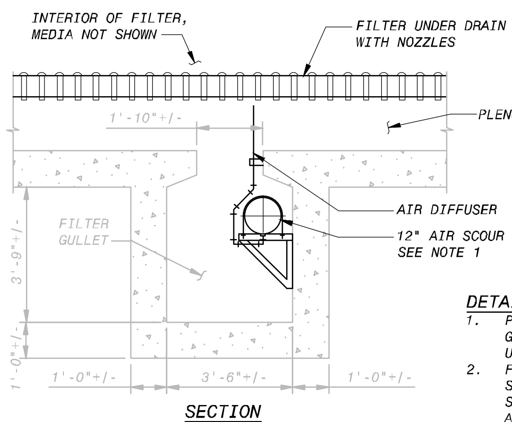

DETAIL F NOTES:

1. PLACEMENT OF AIR SCOUR PIPE THROUGH GULLET MAY VARY DEPENDING ON UNDERDRAIN MANUFACTURER SELECTED.
2. FILTER NOZZLES, AIR SCOUR PIPE SUPPORTS, AND AIR DIFFUSER PIPING SUPPLIED BY UNDERDRAIN MANUFACTURER. ACTUAL MAY BE DIFFERENT THAN WHAT IS DEPICTED.

AIR SCOUR PIPE THROUGH GULLET - FILTERS 1-4 (F)

12" 6" 0 1' 2' 3' 4' 5' 6' 7'

3/8"=1'-0"

STEEL PIPE TIE BOLT SCHEDULE FOR HARNESSED JOINTS

NOMINAL PIPE SIZE (INCHES)	PRESSURE (psi) (NOTE 1)	LUG TYPE	TIE BOLT DIA (INCHES)	NO. BOLTS (NOTE 3)
6	250 OR LESS	P	5/8	2
8	250 OR LESS	P	5/8	2
10	50	P	5/8	2
	100	P	5/8	2
	150	P	5/8	2
	200	P	3/4	2
	250	P	3/4	2
12	50	P	5/8	2
	100	P	5/8	2
	150	P	3/4	2
	200	P	3/4	2
	250	P	7/8	2
14	50	RR	5/8	2
	100	RR	5/8	2
	150	RR	3/4	2
	200	RR	7/8	2
	250	RR	1	2
16	50	RR	5/8	2
	100	RR	3/4	2
	150	RR	7/8	2
	200	RR	1	2
	250	RR	1 1/8	2
18	50	RR	5/8	2
	100	RR	7/8	2
	150	RR	1	2
	200	RR	1 1/4	2
	250	RR	1 1/4	2
20	50	RR	5/8	2
	100	RR	7/8	2
	150	RR	1 1/8	2
	200	RR	1 1/4	2
	250	RR	1	4
24	50	RR	3/4	2
	100	RR	3/4	4
	150	RR	1	4
	200	RR	1 1/8	4
	250	RR	1 1/4	4

NOMINAL PIPE SIZE (INCHES)	PRESSURE (psi) (NOTE 1)	LUG TYPE	TIE BOLT DIA (INCHES)	NO. BOLTS (NOTE 3)
30	50	RR	3/4	4
	100	RR	1	4
	150	RR	1 1/8	4
	200	RR	1 1/4	4
	250	RR	1 1/2	4
36	50	RR	7/8	4
	100	RR	1 1/8	4
	150	RR	1 3/8	4
	200	RR	1 1/4	6
	250	RR	1 3/8	6
42	50	RR	7/8	4
	100	RR	1 1/4	4
	150	RR	1 1/4	6
	200	RR	1 1/2	6
	250	RR	1 3/4	6
48	50	RR	1	4
	100	RR	1 1/2	4
	150	RR	1 1/2	6
	200	RR	1 3/4	6
	250	RR	2	6
54	50	RR	1 1/8	4
	100	RR	1 3/8	4
	150	RR	1 3/4	6
	200	RR	2	6
	250	RR	1 3/4	8
60	50	RR	1 1/4	4
	100	RR	1 1/2	6
	150	RR	1 1/2	8
	200	RR	1 3/4	8
	250	RR	1 3/4	10
66	50	RR	1 3/8	4
	100	RR	1 3/4	6
	150	RR	1 3/4	8
	200	RR	1 3/4	10
	250	RR	1 3/4	12

NOMINAL PIPE SIZE (INCHES)	PRESSURE (psi) (NOTE 1)	LUG TYPE	TIE BOLT DIA (INCHES)	NO. BOLTS (NOTE 3)
72	50	RR	1 1/4	6
	100	RR	1 1/2	8
	150	RR	2	8
	200	RR	2	10
	250	RR	2	12
78	50	RR	1 3/8	6
	100	RR	2	6
	150	RR	2	8
	200	RR	2	10
	250	RR	2 1/4	12
84	50	RR	1 1/2	6
	100	RR	1 3/4	8
	150	RR	2	10
	200	RR	2	12
	250	RR	2 1/4	14

NOTES:

1. PRESSURE SHALL BE THE PRESSURE AT WHICH THE PIPE IS HYDROSTATICALLY TESTED, OR IF THERE IS NO HYDROSTATIC FIELD TEST, IT SHALL BE THE SPECIFIED SHOP TEST PRESSURE.
2. NUMBER OF TIE BOLTS IS BASED ON AN ALLOWABLE STRESS ON NET TENSION AREA OF 40,000 PSI.
3. UNLESS OTHERWISE INDICATED, TIE BOLTS SHALL BE SPACED UNIFORMLY AROUND THE PIPE, BEGINNING WITH THE FIRST TWO AT THE HORIZONTAL CENTERLINE OF THE PIPE, SUBJECT TO THE APPROVAL OF THE ENGINEER.

STEEL PIPE TIE BOLT SCHEDULE FOR HARNESSED JOINTS (B)

NO SCALE

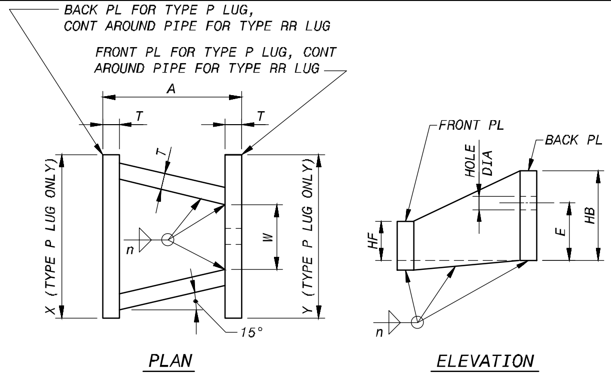

DIMENSIONS IN INCHES									
TIE BOLT DIAMETER	T	A	Y	W	X	HB	E	HF	HOLE DIAMETER
5/8	3/8	5	5	1 3/8	5	3 7/8	3	2	3/4
3/4	3/8	5	5	1 1/2	5	4 1/8	3 1/8	2	7/8
7/8	1/2	5 1/2	5	1 5/8	5	4 1/4	3 1/8	2	1
1	1/2	5 3/4	RING	1 3/4	RING	4 1/2	3 1/4	2	1 1/8
1 1/8	1/2	7	RING	1 7/8	RING	4 3/4	3 5/8	2 1/2	1 1/4
1 1/4	5/8	7 1/2	RING	2	RING	5	3 3/4	2 1/2	1 3/8
1 3/8	5/8	8 3/4	RING	2 1/8	RING	5 3/8	3 3/4	2 1/2	1 1/2
1 1/2	3/4	10	RING	2 1/4	RING	5 1/2	3 7/8	2 1/2	1 5/8
1 5/8	3/4	10 3/4	RING	2 3/8	RING	5 5/8	3 7/8	2 1/2	1 3/4
1 3/4	7/8	12	RING	2 1/2	RING	5 7/8	4	2 1/2	1 7/8
1 7/8	7/8	13	RING	2 5/8	RING	6	4	2 1/2	2
2	1	14	RING	2 3/4	RING	6 1/4	4 1/4	2 1/2	2 1/8
2 1/4	1	15 3/4	RING	3	RING	6 3/4	4 5/16	2 1/2	2 3/8

NOTES:

1. n = PIPE WALL THICKNESS.
2. FOR HARNESS LUG TYPE RR, THE GUSSET PLATES BETWEEN THE FRONT PLATE AND THE BACK PLATE MAY BE PERPENDICULAR TO THE FRONT AND BACK PLATES WITH A MINIMUM CLEAR DISTANCE BETWEEN EACH PAIR OF GUSSET PLATES OF DIMENSION W.

STEEL PIPE HARNESS LUGS (C)

NO SCALE

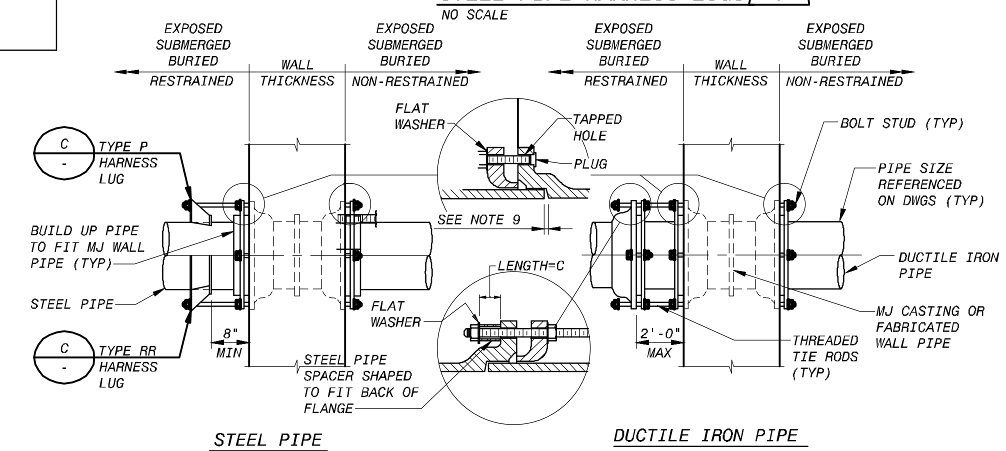

MECHANICAL JOINT TIE ROD SCHEDULE

NOMINAL PIPE SIZE (INCHES)	MAX PRESSURE (PSI) (NOTE 2)	TIE BOLTS: NO. OF RODS (NOTE 3)	TIE BOLTS: DIA OF RODS (INCHES)	PIPE SPACERS: DIA (INCHES)	PIPE SPACERS: LENGTH (INCHES)	PIPE SPACERS: PIPE SCHEDULE
4	350 OR LESS	2	3/4	1	2 1/2	40
6	250 OR LESS 350	2 4	3/4	1	2 1/2	40
8	150 OR LESS 300 350	2 4 6	3/4	1	2 1/2	40
10	200 OR LESS 350	2 4	3/4	1	2 1/2	80
12	150 OR LESS 300 350	2 4 6	3/4	1	2 1/2	80

NOTES:

1. MECHANICAL JOINT OR PUSH-ON STYLE FITTINGS MAY BE FURNISHED WHERE RESTRAINED JOINTS ARE NOT CALLED FOR ON THE DRAWINGS OR PIPE SCHEDULE.
2. PRESSURE SHALL BE THE PRESSURE AT WHICH THE PIPE IS HYDROSTATICALLY TESTED, OR IF THERE IS NO HYDROSTATIC FIELD TEST, IT SHALL BE THE SPECIFIED SHOP TEST PRESSURE.
3. UNLESS OTHERWISE INDICATED, TIE RODS SHALL BE SPACED UNIFORMLY AROUND THE PIPE, BEGINNING WITH THE FIRST TWO AT THE HORIZONTAL CENTERLINE OF THE PIPE, SUBJECT TO THE APPROVAL OF THE ENGINEER.
4. EXCEPT WHERE TIE RODS ARE REQUIRED, BOLTS FOR FOLLOWER RINGS SHALL BE BOLT-STUDS ON WALL PIPE. ALL BOLT HOLES IN WALL PIPE SHALL BE TAPPED. WALL PIPES SHALL BE ORIENTED SO THAT THE BOLT HOLES STRADDLE THE TOP CENTERLINE.
5. AT CONTRACTOR'S OPTION, 4" THROUGH 48" MAY BE FURNISHED AS MECHANICAL JOINT STYLE WITH TIE RODS, OR POSITIVE LOCKING SEGMENTS AND/OR RINGS SUCH AS AMERICAN JOINT STYLE PIPE 14" THROUGH 36" SIZE MAY BE FURNISHED AS FLEX RING STYLE RESTRAINED JOINTS AND 42" THROUGH 64" SIZE MAY BE FURNISHED AS LOC RING STYLE RESTRAINED JOINTS, OR U.S. PIPE "TR-FLEX", OR GRIFFIN PIPE "SNAP-LOCK".
6. FOR BURIED PIPING, CONTRACTOR SHALL PROVIDE AN ADDITIONAL FIELD JOINT AS CLOSE AS PRACTICAL TO FACE OF WALL, BUT NO MORE THAN 5 FEET.
7. USE WAX TAPE TO PROTECT ALL BURIED FERROUS SURFACES, INCLUDING PAINTED SURFACES. FOR PROTECTION OF ADJACENT PIPE BARREL SURFACES, SHRINK WRAP MAY BE USED IN LIEU OF WAX TAPE. SEE SPECIFICATIONS.
8. WHERE PIPE IS REQUIRED ON ONE SIDE ONLY, PROVIDE MJxPE WALL PIPE.
9. FOR PIPING FLEXIBILITY, PROVIDE GAP LARGE ENOUGH TO FACILITATE PIPE ASSEMBLY AND DISASSEMBLY AT ASSOCIATED FLANGE PIPE JOINTS.

MECHANICAL JOINT WALL PIPE WITH TIE RODS (G)

NO SCALE

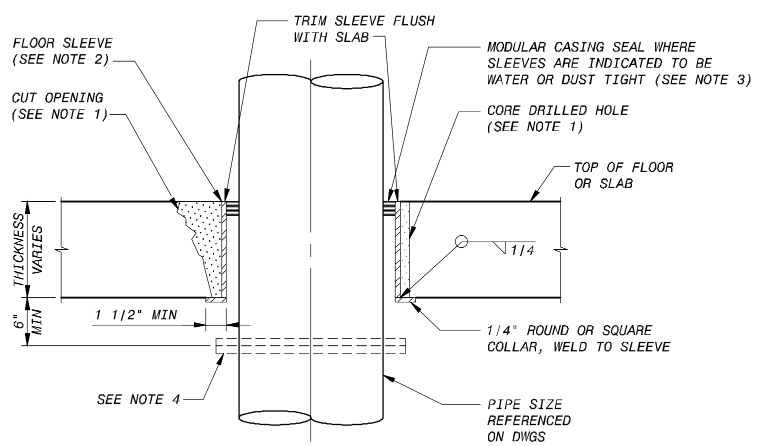

NOTES:

1. FOR SLEEVE OPENINGS SMALLER THAN 12 INCHES IN DIAMETER CORE DRILLED OPENINGS MAY BE USED. FOR LARGER SLEEVES CUT AND BREAK OUT OPENINGS AS NOTED ON THE DRAWINGS. APPLY BONDING AGENT TO EXISTING CONCRETE AND FILL SPACE WITH NON-SHRINK GROUT.
2. FLOOR SLEEVE, SCHEDULE 40 STEEL PIPE FOR 12" AND SMALLER SLEEVES, 1/4" STEEL PIPE FOR SLEEVES LARGER THAN 12", AND HOT DIP GALVANIZE AFTER FABRICATION. COORDINATE SIZE OF SLEEVE WITH MODULAR SEAL MANUFACTURER.
3. FIRESAFING TO BE PROVIDED AT ALL RATED LOCATIONS INDICATED ON THE DRAWINGS AND INSTALLED PER ACCEPTED UL RATED SYSTEMS.
4. TO MINIMIZE SLEEVE SIZE PROVIDE A SCREW-ON FLANGE, GROOVED COUPLING, OR MECHANICAL COUPLING WITH ANCHOR STUDS ON ONE SIDE OF OPENING.

EXISTING FLOOR SLEEVE DETAIL (D)

NO SCALE

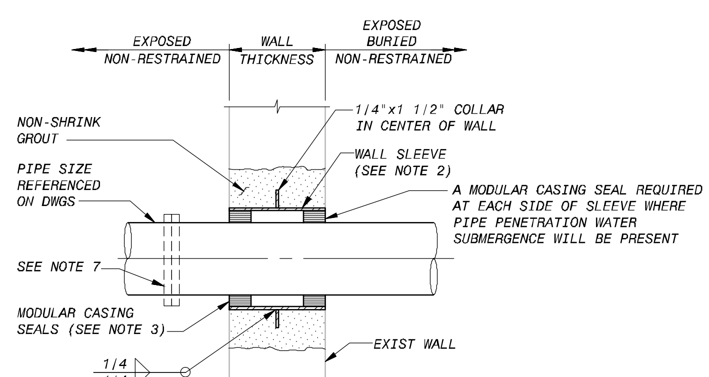

NOTES:

1. CUT OPENING FOR WALL SLEEVE, ROUGHEN EXIST CONCRETE, APPLY BONDING AGENT AND FILL WITH NON-SHRINK GROUT PER THE SPECIFICATIONS. DIAMETER OF OPENING TO BE COLLAR DIAMETER + 4".
2. WALL SLEEVE, SCHEDULE 40 STEEL PIPE FOR 12" AND SMALLER SLEEVES, 1/4" STEEL PIPE FOR SLEEVES LARGER THAN 12", AND HOT DIP GALVANIZED AFTER FABRICATION, 304 SS, OR OTHER MATERIAL AS SPECIFIED OR INDICATED ON DRAWINGS. COORDINATE SLEEVE SIZE WITH MODULAR CASING SEAL MANUFACTURER.
3. WHERE WATER AND SOIL ARE PRESENT, USE TWO SETS OF CASING SEALS. ONE AT EACH FACE OF WALL.
4. FIRESAFING TO BE PROVIDED AT ALL RATED WALLS INDICATED ON THE DRAWINGS AND INSTALLED PER ACCEPTED UL RATED SYSTEM.
5. FOR BURIED PIPING, CONTRACTOR SHALL PROVIDE AN ADDITIONAL FIELD JOINT AS CLOSE AS PRACTICAL TO FACE OF WALL, BUT NO MORE THAN 5 FEET.
6. USE WAX TAPE TO PROTECT ALL BURIED FERROUS SURFACES INCLUDING PAINTED SURFACES. FOR PROTECTION OF ADJACENT PIPE BARREL SURFACES, SHRINK WRAP MAY BE USED IN LIEU OF WAX TAPE. SEE SPECIFICATIONS.
7. TO MINIMIZE SLEEVE SIZE, PROVIDE A SCREW-ON FLANGE, GROOVED COUPLING, OR MECHANICAL COUPLING WITH ANCHOR STUDS ON ONE SIDE OF OPENING.

WALL SLEEVE AT EXISTING CONCRETE WALL (E)

NO SCALE

NO.	DR	CK	DATE	DESCRIPTION

REVISIONS

BLACK & VEATCH
Building a world of difference.
Black & Veatch Corporation
Registration No. F-258
Austin, Texas

Carlos Chavez
STATE OF TEXAS
CARLOS R. CHAVEZ
119722
LICENSED PROFESSIONAL ENGINEER
6/7/2016

Austin WATER

Walnut Creek WWTP - Tertiary Filter Rehabilitation Project

CIP ID No. 3023.025

MECHANICAL PROCESS
FILTER DETAILS
SHEET 1 OF 2

DESIGNED BY:	KAI
DRAWN BY:	AWL
REVIEWED BY:	WLK
APPROVED BY:	TSD
PROJECT NO.:	168622
DATE:	4/4/2014
SCALE:	AS SHOWN

REVISION:

DISCIPLINE NO.
M-13

DWG. NO.

FD168622 D168622 File: C:\pw_working\cngpw\d0671660\M-13.dwg
SAVED: LER07108, 9/10/2014 6:27:34 AM 09C5030ID: Mechanical Process Drawings
Layout: Work Plotted: 6/13/2016 1:45:48 PM

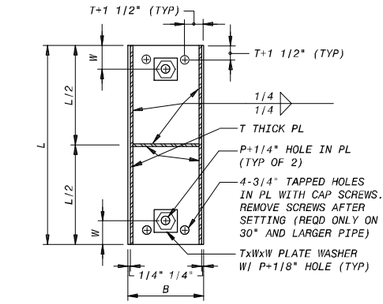

SECTION A-A

DIMENSIONS IN INCHES						
PIPE SIZE	T	S	B	P	W	L
14"	1/4	3/8	6	3/4	1 3/4	10
16"	1/4	3/8	6	3/4	1 3/4	11 1/2
18"	1/4	3/8	10	3/4	2 1/2	13
20"	1/4	3/8	10	3/4	2 1/2	15
24"	1/4	3/8	10	3/4	2 1/2	17
30"	3/8	1/2	12	3/4	3 1/2	22
36"	3/8	1/2	12	3/4	3 1/2	26
42"	7/16	5/8	12	3/4	4	30
48"	1/2	5/8	12	3/4	4	34
54"	9/16	3/4	14	1	4	39
60"	5/8	7/8	15	1	4	44
66"	3/4	1	18	1	4	48

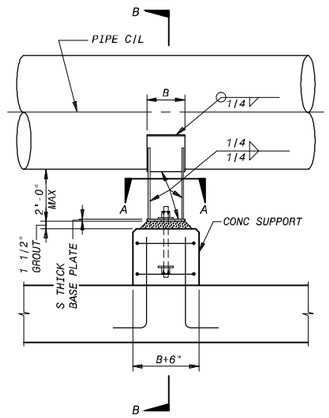

ELEVATION

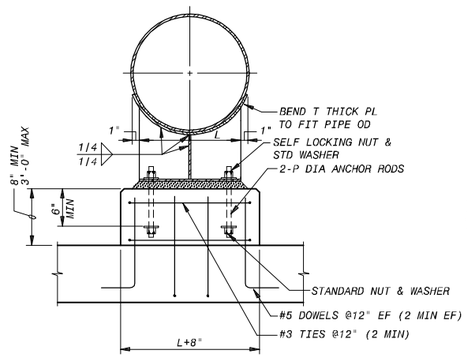

SECTION B-B

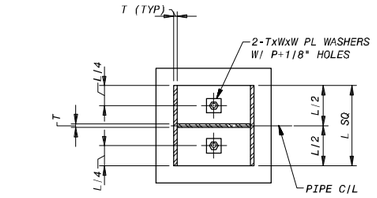

SECTION A-A

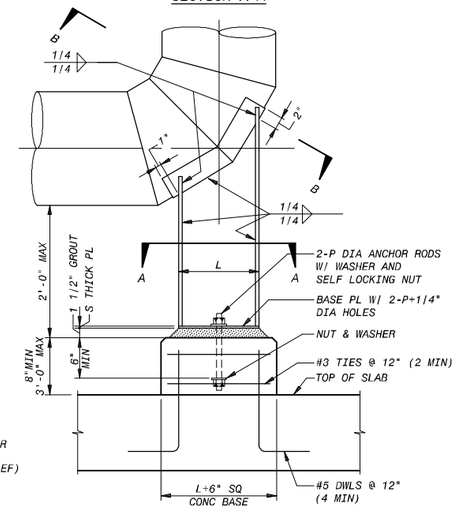

ELEVATION

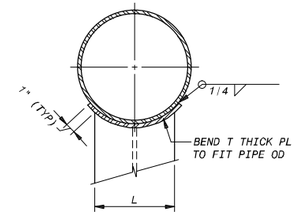

SECTION B-B

DIMENSIONS IN INCHES					
PIPE SIZE	T	S	P	W	L
14	1/4	3/8	3/4	1 3/4	10
16	1/4	3/8	3/4	1 3/4	11 1/2
18	1/4	3/8	3/4	2 1/2	13
20	1/4	3/8	3/4	2 1/2	15
24	1/4	3/8	3/4	2 1/2	17
30	3/8	1/2	3/4	3 1/2	22
36	3/8	1/2	3/4	3 1/2	26
42	7/16	5/8	3/4	4	30
48	1/2	5/8	3/4	4	34
54	9/16	3/4	1	4	39
60	5/8	7/8	1	4	44
66	3/4	1	1	4	48

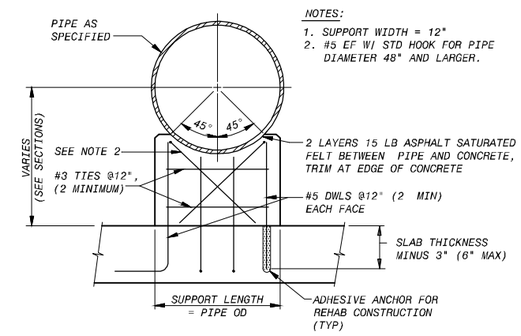

NOTES:
1. SUPPORT WIDTH = 12"
2. #5 EF W/ STD HOOK FOR PIPE DIAMETER 48" AND LARGER.

CONCRETE SADDLE PIPE SUPPORT (C)
NO SCALE

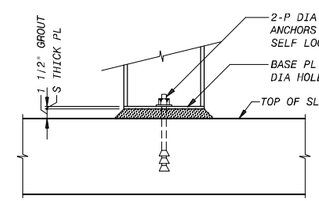

ELEVATION
(ALTERNATE BASE MOUNTING DUE TO REDUCED PIPE HEIGHT)

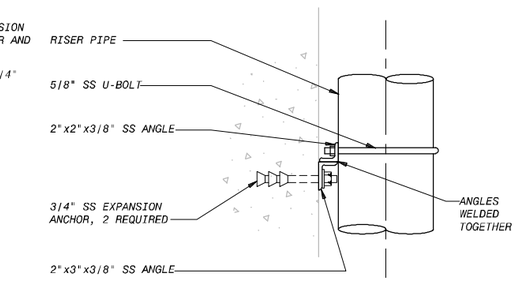

VERTICAL PIPE SUPPORT (D)
12" 9" 6" 3" 0 1'
1 1/2"=1'-0"

STEEL SADDLE PIPE SUPPORT (FIXED) (A)
NO SCALE

90° STEEL PIPE BASE ELBOW SUPPORT (B)
NO SCALE

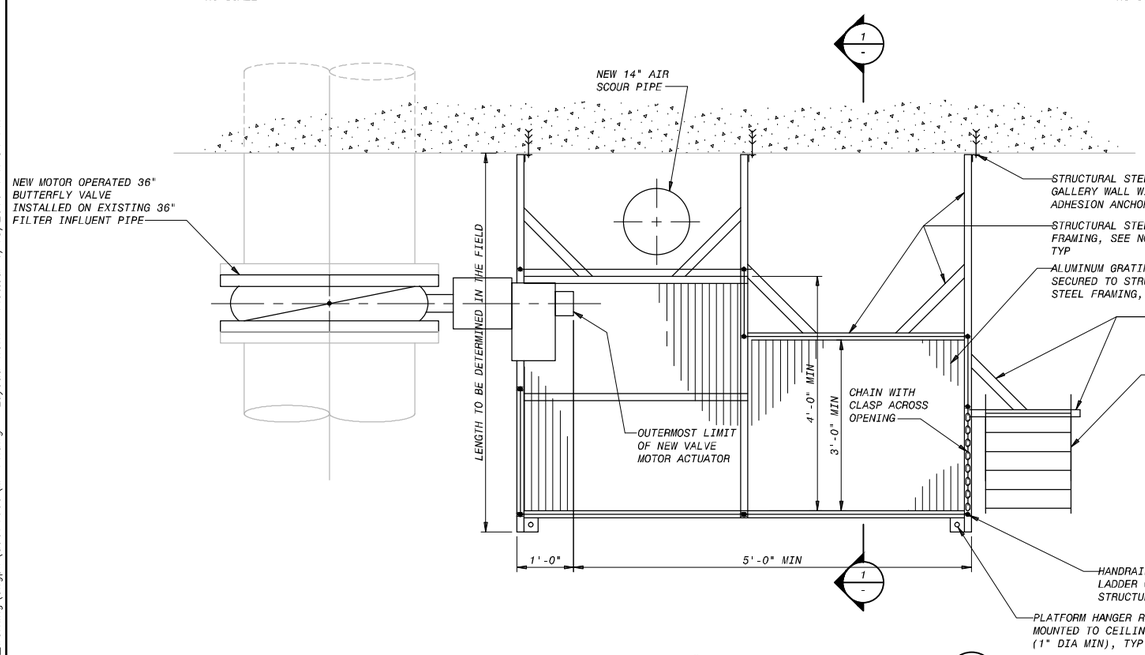

WORK PLATFORM AT 36" FILTER INFLUENT VALVE (E)
3/4"=1'-0"
M-06, 07

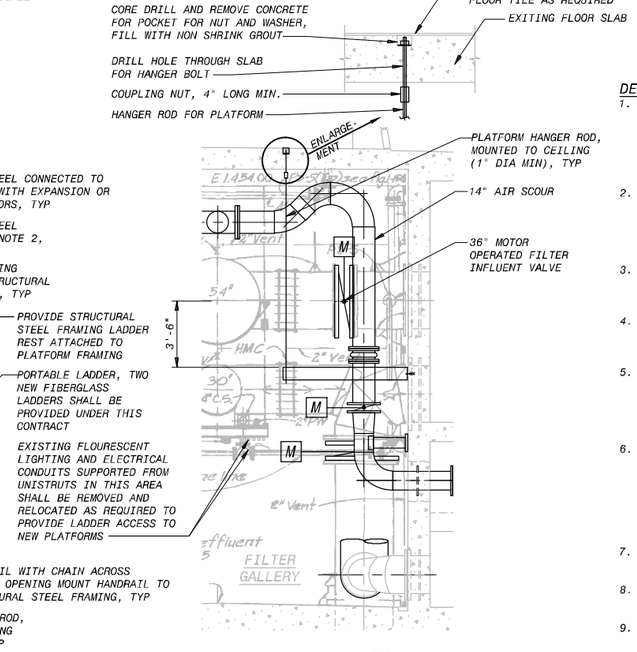

SECTION (1)
1/4"=1'-0"

DETAIL E NOTES:

1. THE NEW WORK PLATFORM CONCEPT IS DETAILED. 10 PLATFORMS ARE REQUIRED, ONE AT EACH NEW 36" FILTER INFLUENT VALVE. ALL PLATFORMS SHALL BE CUSTOM TO FIT INTO THE EXISTING AVAILABLE SPACE. ALL COMPONENTS OF NEW PLATFORMS SHALL BE DESIGNED TO BE COMPLETELY DISASSEMBLED TO FACILITATE FUTURE VALVE REPLACEMENT.
2. PLATFORMS SHALL BE DESIGNED BY THE SUPPLIER IN GENERAL ACCORDANCE WITH DETAILS INDICATED ON THESE DESIGN DRAWINGS. THE DESIGN SHALL COMPLY WITH ALL APPLICABLE PROVISIONS OF THE LOCAL BUILDING CODE, ANSI A117.1 AND OSHA.
3. THE DESIGN SHALL BE SEALED BY AN ENGINEER REGISTERED IN THE STATE OF TEXAS. IF REQUESTED, CALCULATIONS SHALL BE SUBMITTED FOR REVIEW.
4. THE COMPLETED FABRICATIONS SHALL SUPPORT THE LOADS AND DEFLECTION CRITERIA INDICATED IN THE STRUCTURAL AND MISC METALS SPECIFICATION.
5. THE PLATFORM DESIGN AND DETAILS SHALL BE COORDINATED WITH THE HANDRAILING AND GUARDRAILING SUPPLIED. PLATFORM MEMBERS SHALL BE ADEQUATE TO ACCEPT LOADS FROM THE RAIL POSTS BASED UPON THE CRITERIA INDICATED IN THE RAILING SPECIFICATIONS.
6. CONNECTIONS TO THE SUPPORTING STRUCTURE SHALL BE ADEQUATE TO TRANSFER ALL LOADINGS, AND SHALL BE DESIGNED IN ACCORDANCE WITH ALL APPLICABLE PROVISIONS OF THE AISC MANUAL AND ACI 318 APPENDIX D. THE NUMBER AND TYPE OF CONNECTIONS SHALL COMPLY AT A MINIMUM, WITH THESE DESIGN DRAWINGS. ALL NECESSARY BRACKETS, BOLTS, AND ANCHORS SHALL BE PROVIDED.
7. ALL HANDRAILS SHALL BE REMOVABLE TO ALLOW ADEQUATE ADDITIONAL ACCESS TO REMOVE AND REPLACE MOTOR ACTUATOR.
8. ALL STRUCTURAL STEEL MEMBERS SHALL BE GALVANIZED AFTER FABRICATION.
9. ALL HANDRAILING SHALL BE ALUMINUM.

NO.	DR	CK	DATE	DESCRIPTION

REVISIONS

BLACK & VEATCH
Building a world of difference.
Black & Veatch Corporation
Registration No. F-230
Austin, Texas

Carlos Gonzalez
STATE OF TEXAS
CARLOS A. GONZALEZ
LICENSED
119722
PROFESSIONAL ENGINEER
6/7/2016

Austin WATER
Walnut Creek WWTP - Tertiary Filter Rehabilitation Project
CIP ID No. 3023.025

MECHANICAL PROCESS
FILTER DETAILS
SHEET 2 OF 2

DESIGNED BY:	KAI, AWL
DRAWN BY:	AWL
REVIEWED BY:	WLK
APPROVED BY:	TSD
PROJECT NO.:	168622
DATE:	4/4/2014
SCALE:	AS SHOWN
REVISION:	
DISCIPLINE NO.	M-14
DWG. NO.	39 OF 273

50168622 SAVED: 168622 1/13/2014 4:10:45 PM
D168622 PLOTTED BY: Wendell Allen Pecaks Orange
File: C:\pw_working\cngpw\d0671660\M-14.dwg Layout: Work Plotted: 6/13/2016 1:47:54 PM

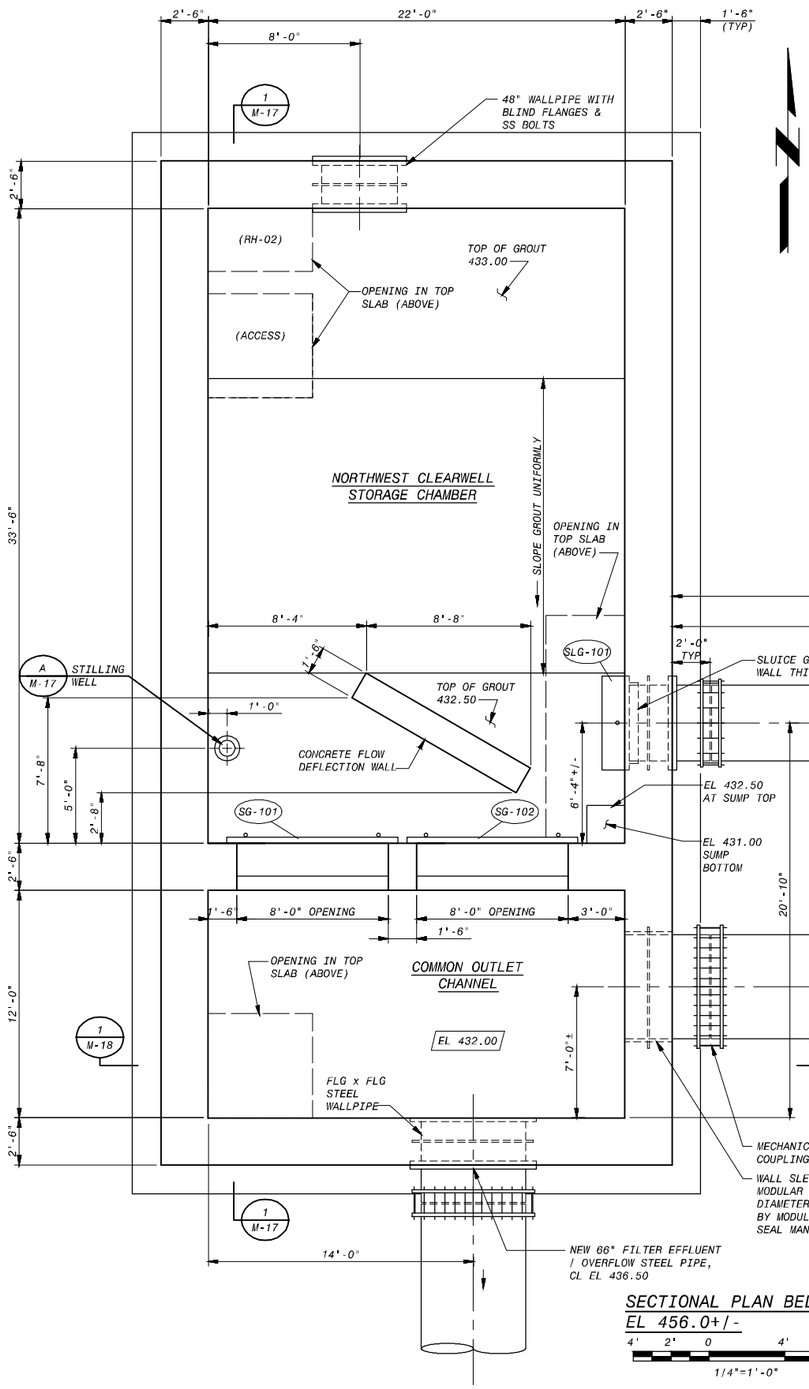

SECTIONAL PLAN BELOW TOP SLAB
EL 456.0+/-

4' 2' 0 4' 8'
1/4"=1'-0"

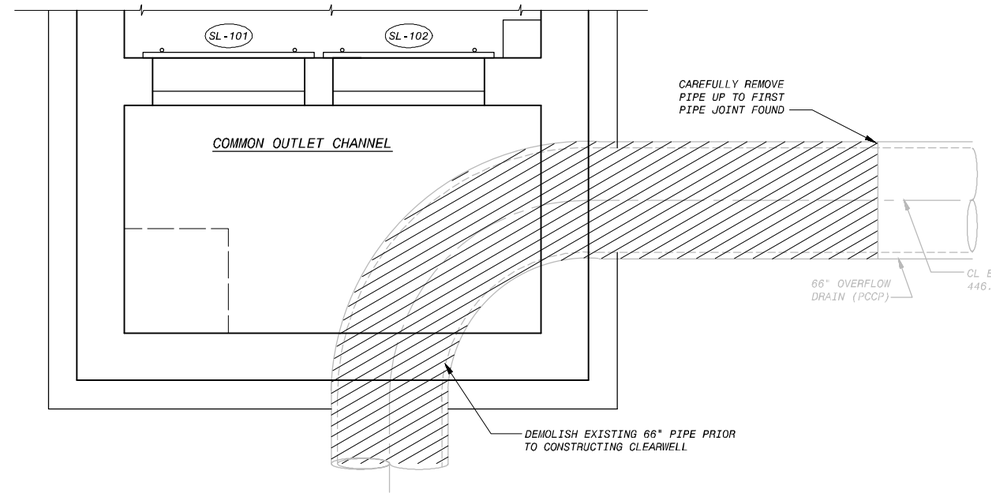

SECTIONAL PLAN - DEMOLITION
EXIST 66" OVERFLOW DRAIN

4' 2' 0 4' 8'
1/4"=1'-0"

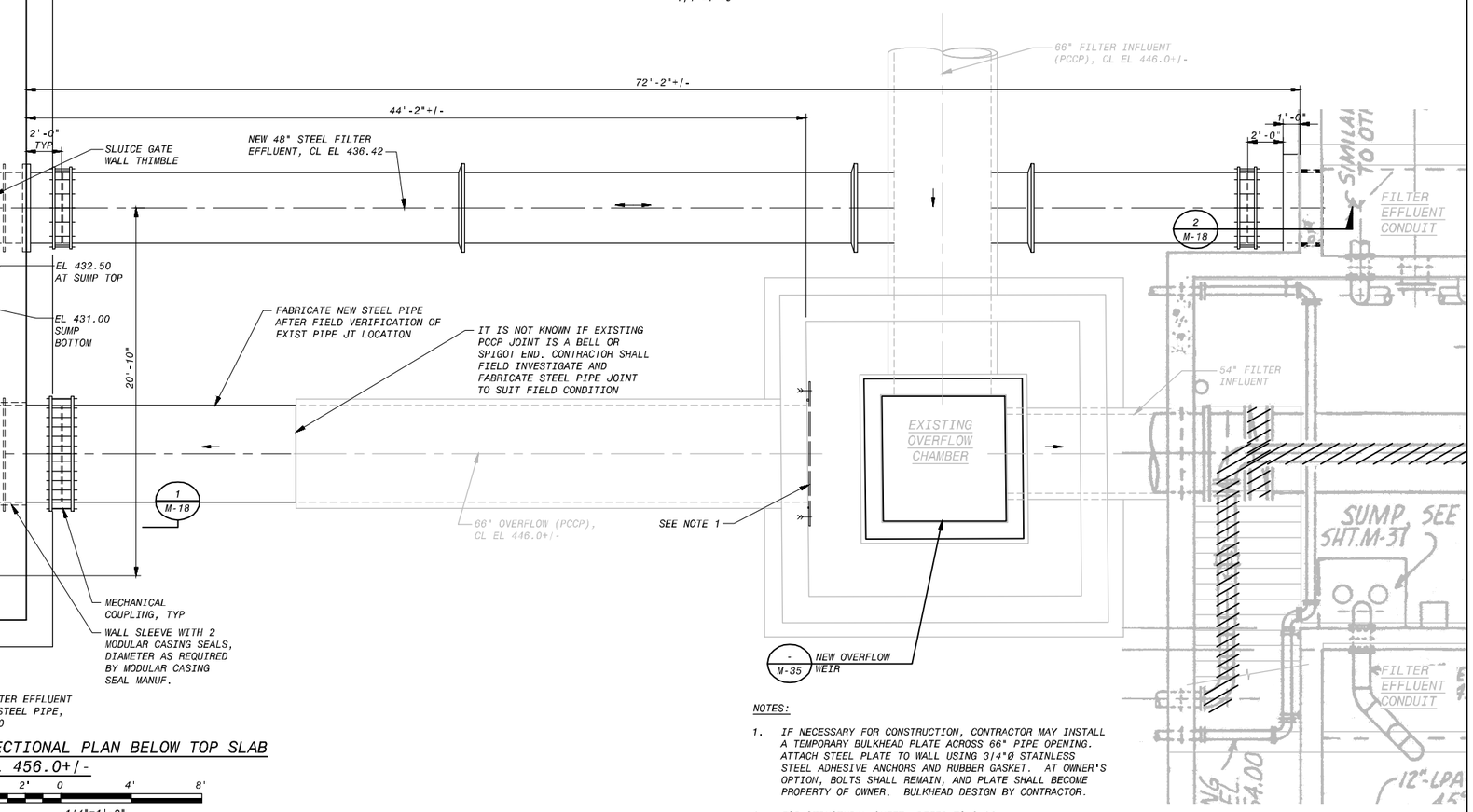

NOTES:

1. IF NECESSARY FOR CONSTRUCTION, CONTRACTOR MAY INSTALL A TEMPORARY BULKHEAD PLATE ACROSS 66" PIPE OPENING. ATTACH STEEL PLATE TO WALL USING 3/4"Ø STAINLESS STEEL ADHESIVE ANCHORS AND RUBBER GASKET. AT OWNER'S OPTION, BOLTS SHALL REMAIN, AND PLATE SHALL BECOME PROPERTY OF OWNER. BULKHEAD DESIGN BY CONTRACTOR.

2. FOR STRUCTURAL SHEET, REFER TO S-26.

NO.	DR	CK	DATE	DESCRIPTION

REVISIONS

BLACK & VEATCH
Building a world of difference.
Black & Veatch Corporation
Registration No. F-326
Austin, Texas

Carlos Gonzalez
Registered Professional Engineer
State of Texas
No. 97262
6/17/2016

Walnut Creek WWTP - Tertiary Filter Rehabilitation Project

CIP ID No. 3023.025

Austin WATER

MECHANICAL PROCESS
NORTHWEST CLEARWELL
SECTIONAL PLANS

DESIGNED BY:	EP, BMC
DRAWN BY:	AWL
REVIEWED BY:	WLK
APPROVED BY:	TSD
PROJECT NO.:	168622
DATE:	4/4/2014
SCALE:	AS SHOWN
REVISION:	

DISCIPLINE NO.
M-16

DWG. NO.
40 OF 273

F0168622 SAVED: 6/10/2016 6:59:37 AM
D168622 CONTENTS: Model, Layouts, Drawings
File: C:\pw_working\cngpw\d0671660\M-16.dwg Layout: Work Plotted: 6/13/2016 1:48:50 PM

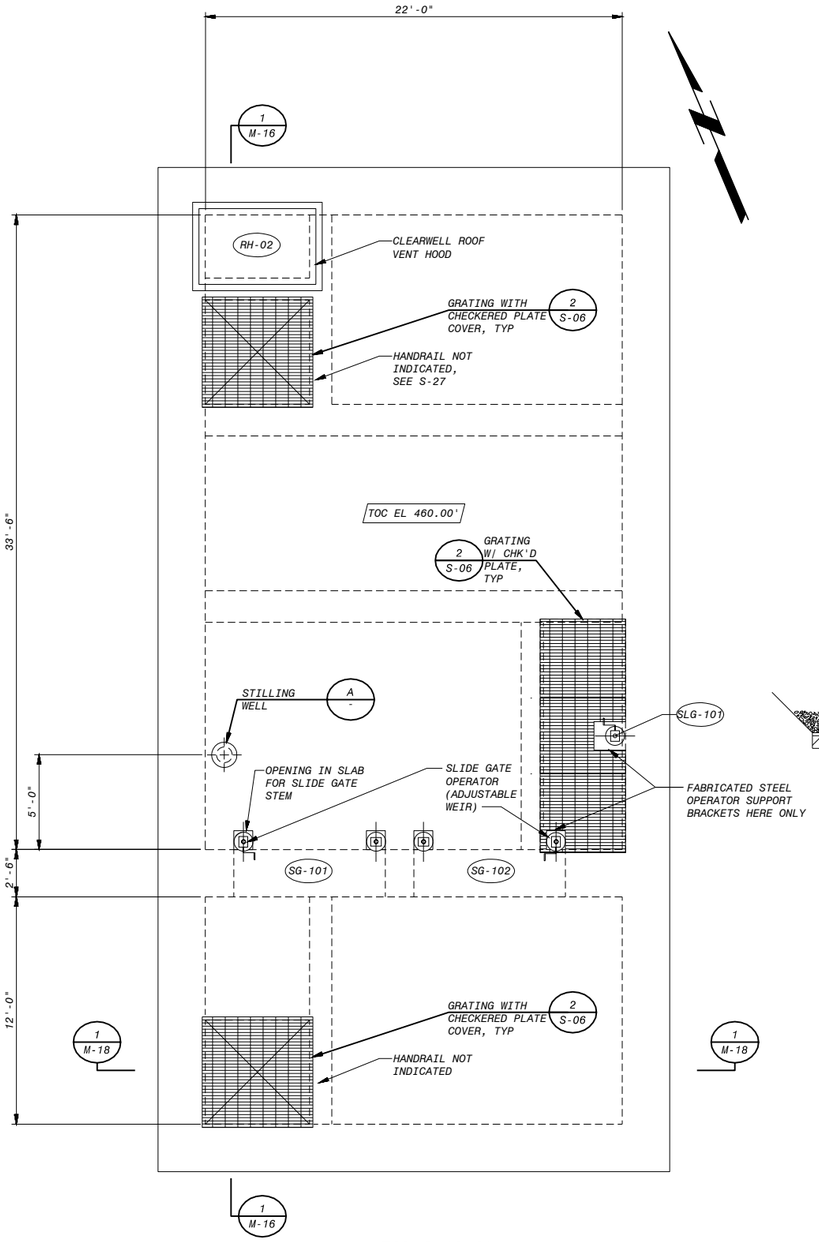

TOP SLAB PLAN

4' 2' 0 4' 8'

1/4"=1'-0"

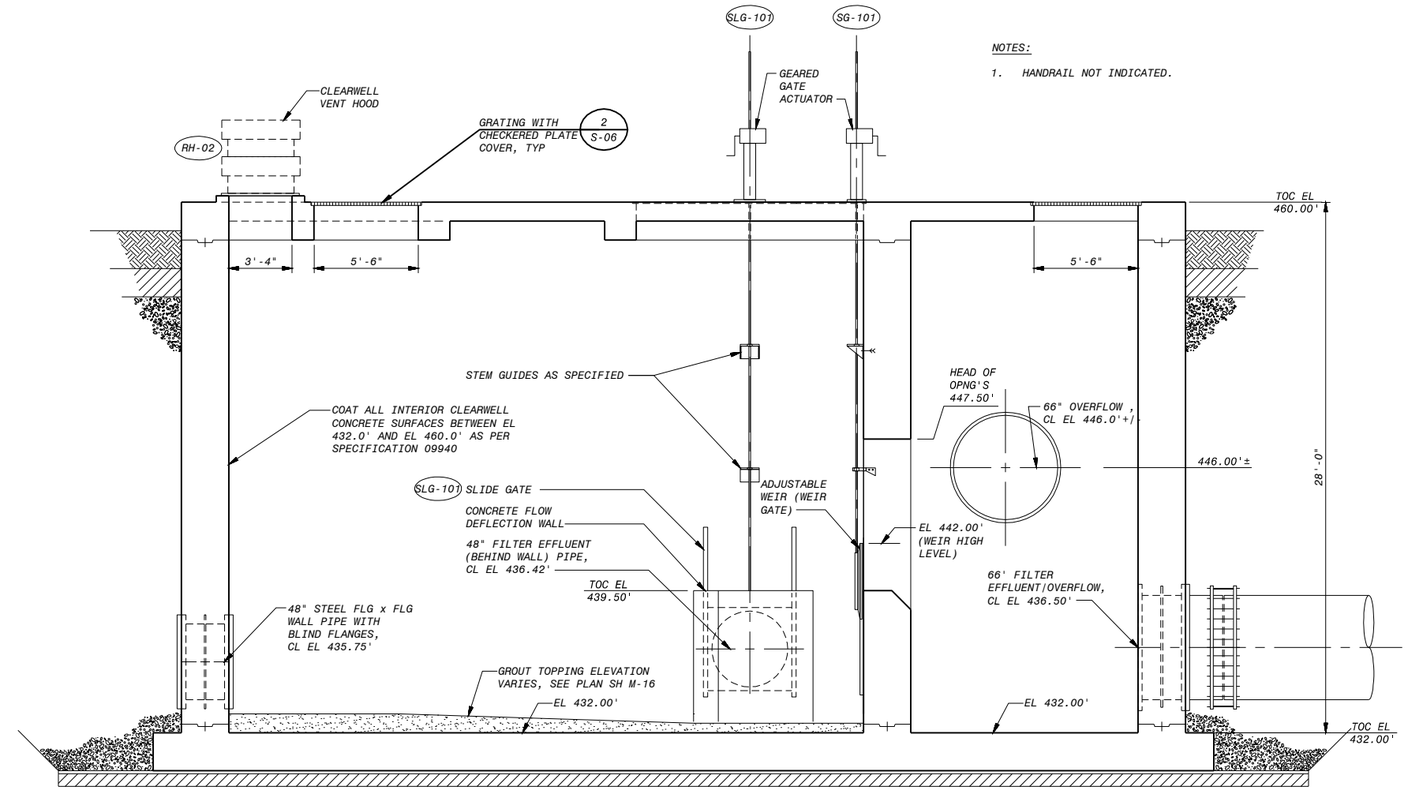

NOTES:

1. HANDRAIL NOT INDICATED.

SECTION 1 / M-16, M-17

NO SCALE

4' 2' 0 4' 8'

1/4"=1'-0"

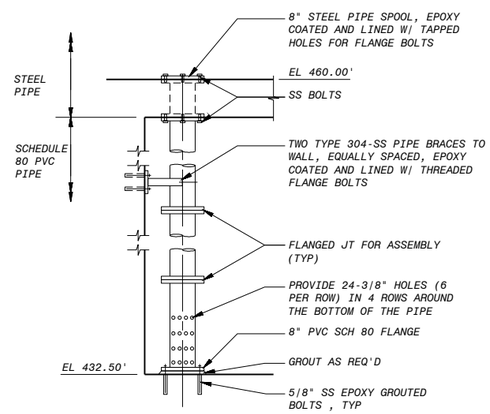

STILLING WELL DETAIL A / M-16, M-17

12" 6" 0 1' 2' 3' 4' 5'

1/2"=1'-0"

NO.	QR	CK	DATE	DESCRIPTION

REVISIONS

BLACK & VEATCH
Building a world of difference.
Black & Veatch Corporation
Registration No. F-295
Austin, Texas

CARLOS R. GONZEZ
119722
LICENSED
PROFESSIONAL ENGINEER
6/7/2016

RANDY W. CANTRELL
115574
LICENSED
PROFESSIONAL ENGINEER

Austin Water

Walnut Creek WWTP - Tertiary Filter Rehabilitation Project

CIP ID No. 3023.025

MECHANICAL PROCESS
NORTHWEST CLEARWELL
TOP PLAN AND SECTIONS

DESIGNED BY:	EP, BMC
DRAWN BY:	AWL
REVIEWED BY:	WLK
APPROVED BY:	TSD
PROJECT NO.:	168622
DATE:	4/4/2014
SCALE:	AS SHOWN

REVISION:

DISCIPLINE NO.
M-17

DWG. NO.
41 OF 273

F0168622 SAVED:
D168622 PLOTTED BY:D168622...\09.5030 - Mechanical Process Drawings
File: C:\PWBatchPDF\Process\168622 - Austin Walnut Creek WWTP Filter Rehab\M_17.dwg Layout: Work Plotted: 6/9/2016 1:47:37 PM

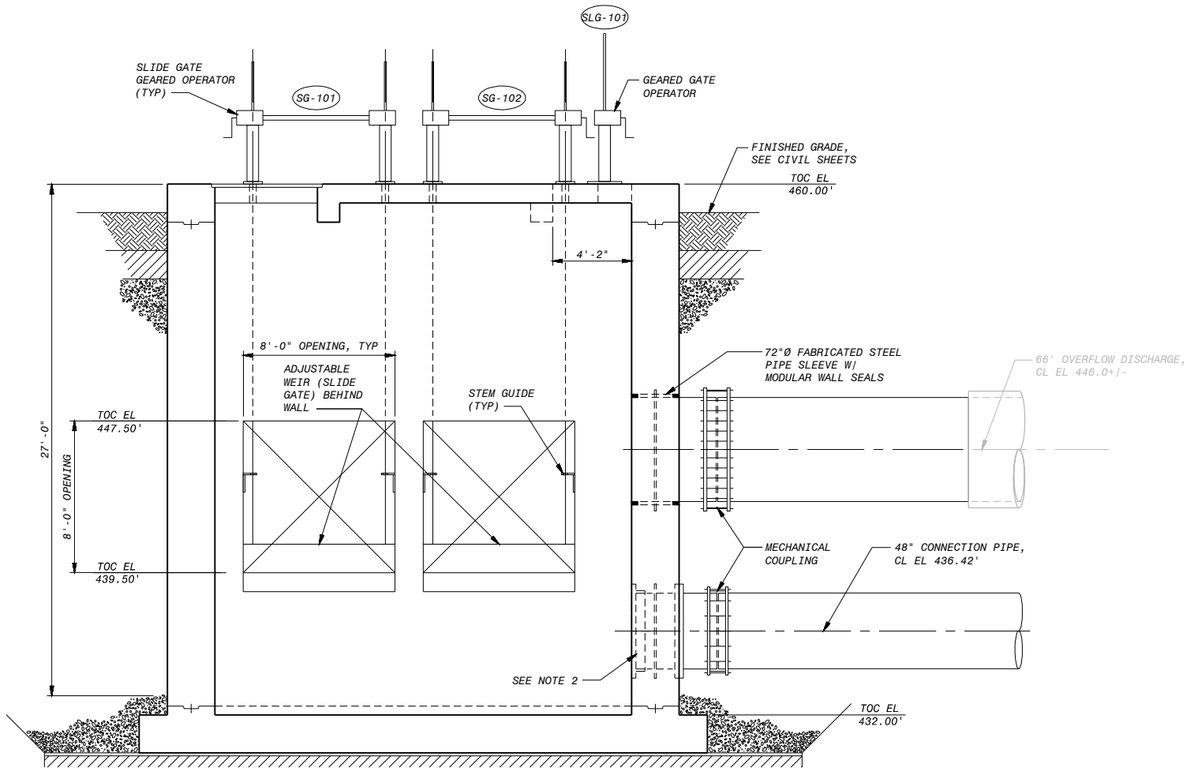

SECTION 1 / M-16,M-17

1/4"=1'-0"

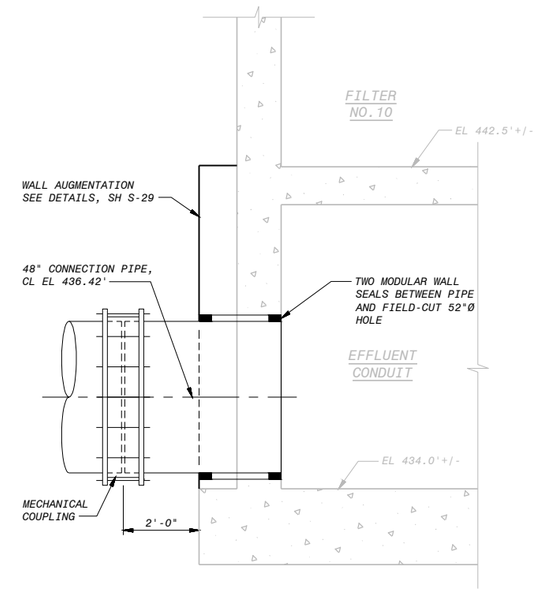

SECTION 2 / M-16

1/2"=1'-0"

NOTES:

1. HANDRAIL NOT INDICATED.
2. GATE SLG-101 WALL THIMBLE IN BACKGROUND.

NO.	DR	CK	DATE	DESCRIPTION

REVISIONS

BLACK & VEATCH
Building a world of difference.
Black & Veatch Corporation
Registration No. F-295
Austin, Texas

STATE OF TEXAS
CARLOS R. CHAVEZ
119722
LICENSED
PROFESSIONAL ENGINEER
Carlos Chavez
6/7/2016

Walnut Creek WWTP - Tertiary Filter Rehabilitation Project

CIP ID No. 3023.025

Austin WATER

MECHANICAL PROCESS
NORTHWEST CLEARWELL
SECTIONS

DESIGNED BY:	EP, BMC
DRAWN BY:	AWL
REVIEWED BY:	WLK
APPROVED BY:	TSD
PROJECT NO.:	168622
DATE:	4/4/14
SCALE:	AS SHOWN

REVISION:

DISCIPLINE NO.
M-18

DWG. NO.
42 OF 273

FD168622
D168622
SAVED:
PLOTTED: D168622...\09.5030 - Mechanical Process Drawings
File: C:\PWBatchPDF\Process\168622 - Austin Walnut Creek WWTP Filter Rehab\M_18.dwg Layout: Work Plotted: 6/9/2016 1:47:49 PM

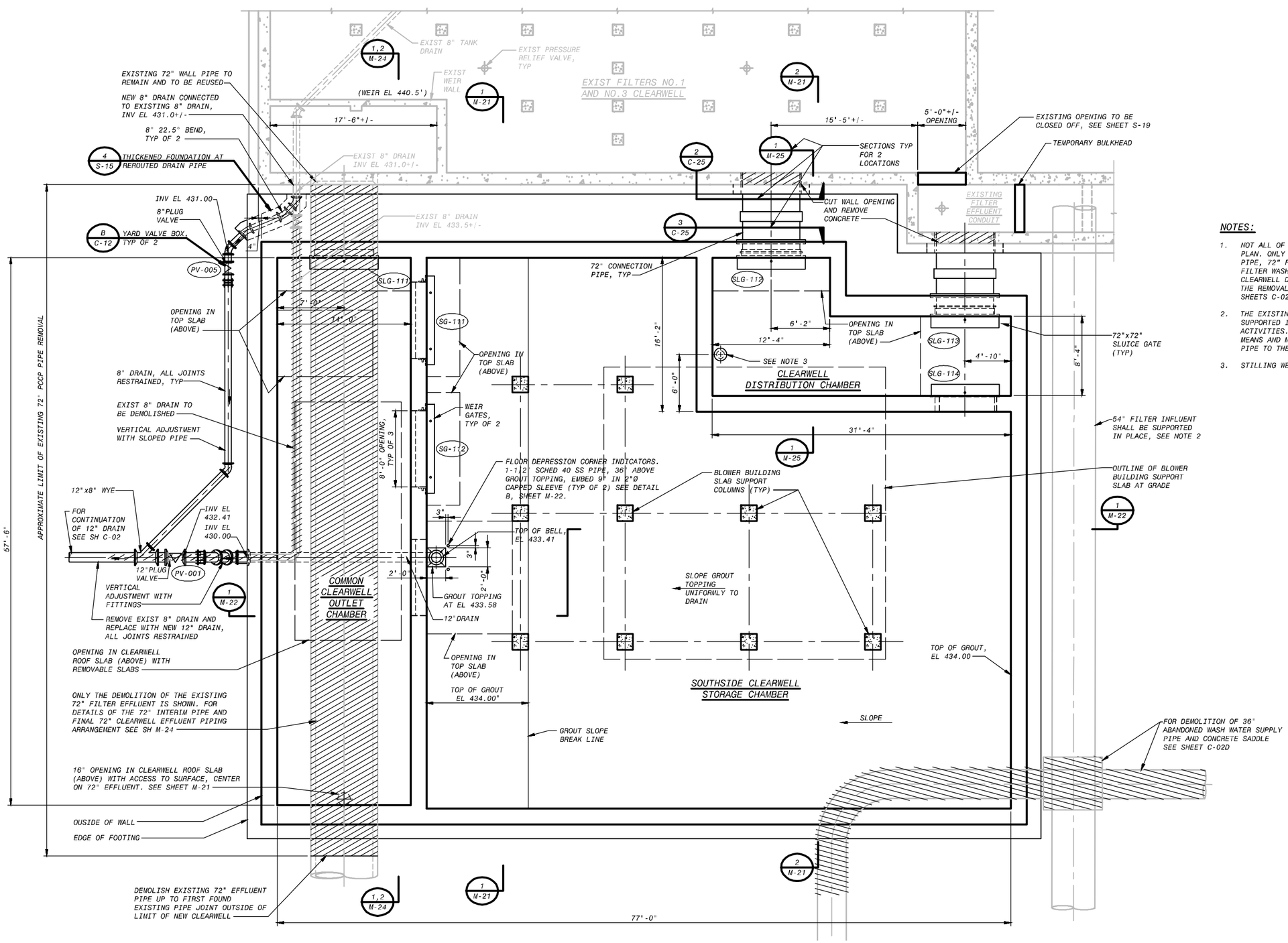

SECTIONAL PLAN

6' 4' 2' 0 5' 10'

3/16"=1'-0"

NOTES:

1. NOT ALL OF THE EXISTING PIPING IS SHOWN ON THIS PLAN. ONLY THE EXISTING 54" FILTER INFLUENT PIPE, 72" FILTER EFFLUENT PIPE, 36" ABANDONED FILTER WASHWATER SUPPLY AND THE 8" EXISTING CLEARWELL DRAIN PIPE ARE SHOWN ON THIS PLAN FOR THE REMOVAL AND RELOCATION OF OTHER PIPING SEE SHEETS C-02 AND C-03 THROUGH C-06.
2. THE EXISTING 54" FILTER EFFLUENT PIPE SHALL BE SUPPORTED IN PLACE DURING ALL CONSTRUCTION ACTIVITIES. THE CONTRACTOR SHALL SUBMIT THE MEANS AND METHODS TO BE USED TO SUPPORT THIS PIPE TO THE ENGINEER FOR REVIEW.
3. STILLING WELL, SIMILAR TO DETAIL A, SHEET M-17.

NO.	DR	CK	DATE	DESCRIPTION

REVISIONS

BLACK & VEATCH
Building a world of difference.
Black & Veatch Corporation
Registration No. F-2295
Austin, Texas

Carlos Gonzalez
CARLOS A. GONZALEZ
119722
LICENSED
PROFESSIONAL ENGINEER
STATE OF TEXAS
6/17/2016

Austin WATER

Walnut Creek WWTP - Tertiary Filter Rehabilitation Project

CIP ID No. 3023.025

MECHANICAL PROCESS
SOUTHSIDE CLEARWELL
SECTIONAL PLAN

DESIGNED BY:	EP, BMC
DRAWN BY:	AWL
REVIEWED BY:	WLK
APPROVED BY:	TSD
PROJECT NO.:	168622
DATE:	4/4/2014
SCALE:	AS SHOWN

REVISION:

DISCIPLINE NO.
M-19

DWG. NO.
43 OF 273

F0168622 SAVED: 6/10/2016 4:55:16 PM
D168622 CAD MODEL: Mechanical Process Drawings
File: C:\pw_working\cngpw\d0671660\M-19.dwg Layout: Work Plotted: 6/13/2016 2:16:08 PM

NOTE:

1. 42" I.D. STEEL WALL PIPE W/ WATERSTOP, SEAL TO PIPE WITH MODULAR WALL SEALS.

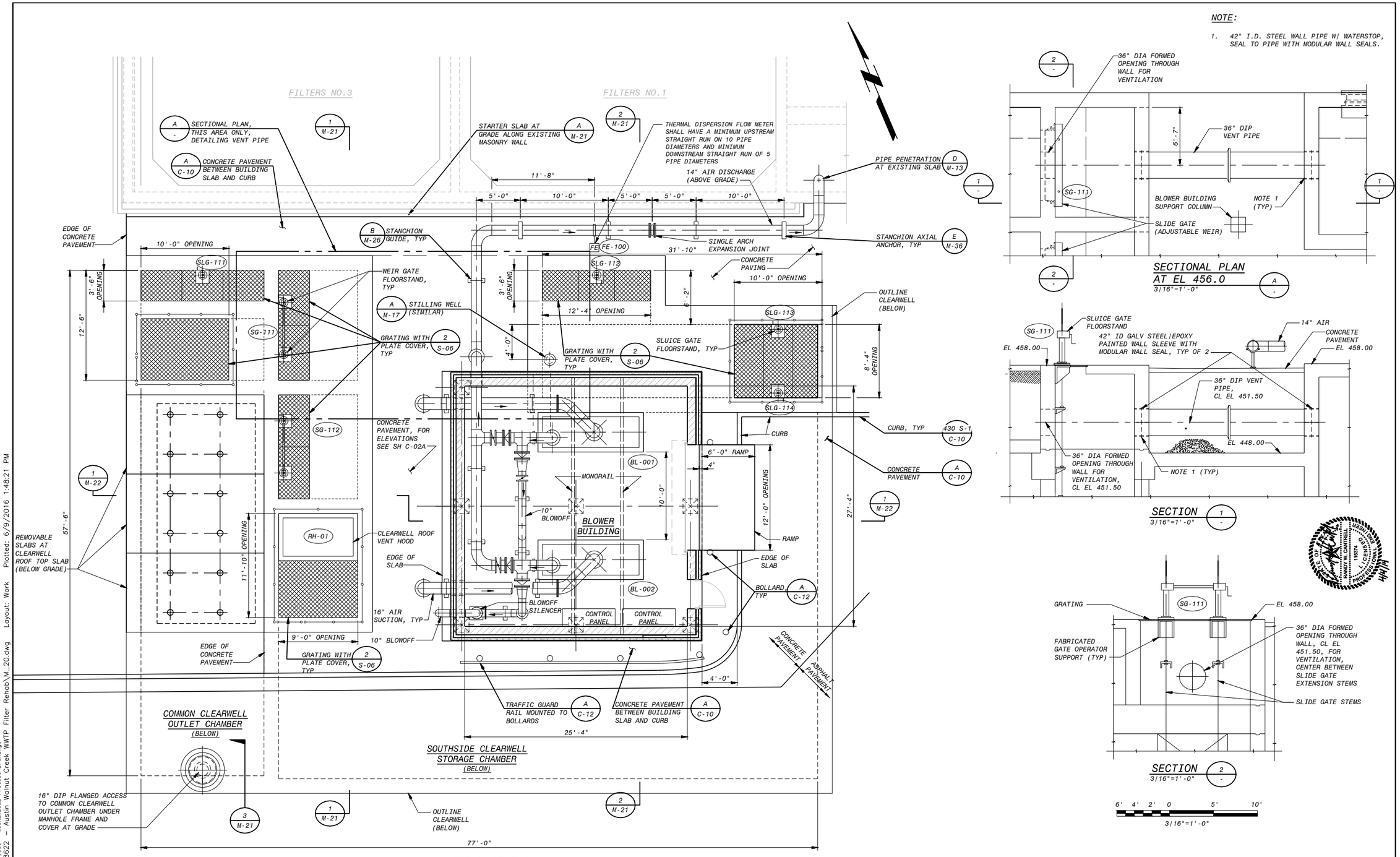

NO.	DESCRIPTION	DATE	CK	DR

REVISIONS

BLACK & VEATCH
Building a world of difference.
Black & Veatch Corporation
Registration No. F-295
Austin, Texas

Carlos Gonzalez
STATE OF TEXAS
CARLOS R. GONZALEZ
119722
LICENSED
PROFESSIONAL ENGINEER
6/7/2016

Walnut Creek WWTP - Tertiary Filter Rehabilitation Project
CIP ID No. 3023.025

Austin WATER

MECHANICAL PROCESS
SOUTHSIDE CLEARWELL
TOP SLAB PLAN

DESIGNED BY:	EP, BMC
DRAWN BY:	AWL
REVIEWED BY:	WLK
APPROVED BY:	TSD
PROJECT NO.:	168622
DATE:	4/4/2014
SCALE:	3/16"=1'-0"

REVISION:

DISCIPLINE NO.
M-20

DWG. NO.
44 OF 273

FD168622
D168622
SAVED:
PLOTTED: 6/9/2016 1:48:21 PM
File: C:\PWBatchPDF\Process\168622 - Austin Walnut Creek WWTP Filter Rehab\M_20.dwg Layout: Work Plotted: 6/9/2016 1:48:21 PM
09.5030 - Mechanical Process Drawings

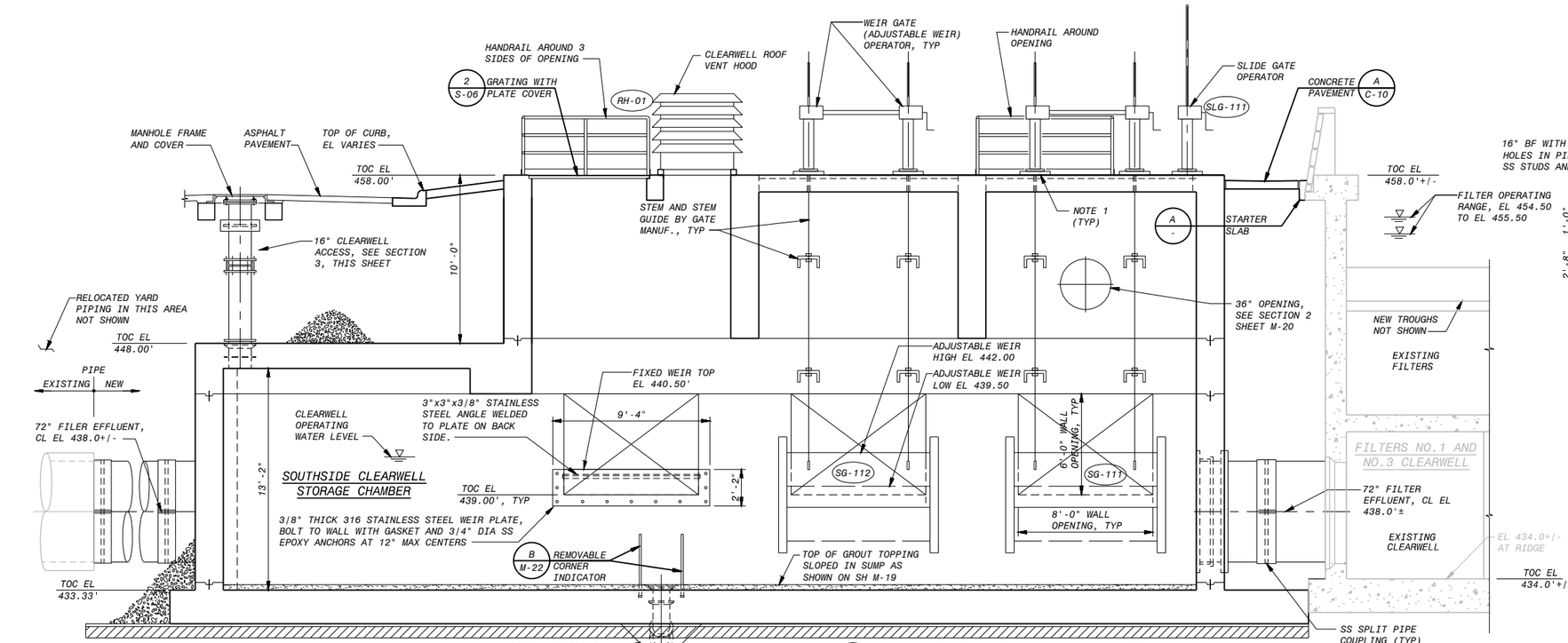

SECTION 1 M-19, M-20

4' 2' 0 4' 8'

1/4"=1'-0"

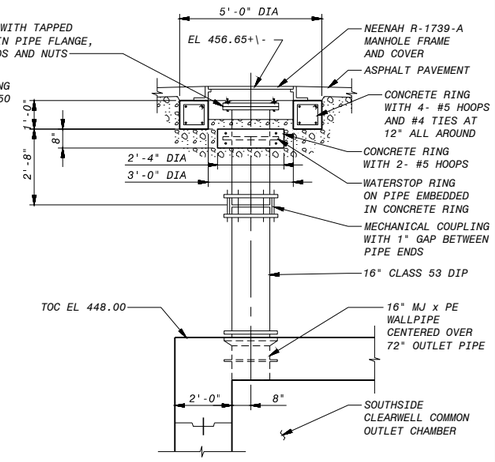

SECTION 3 M-19, M-20

12" 6" 0 1' 2' 3' 4' 5' 6' 7'

3/8"=1'-0"

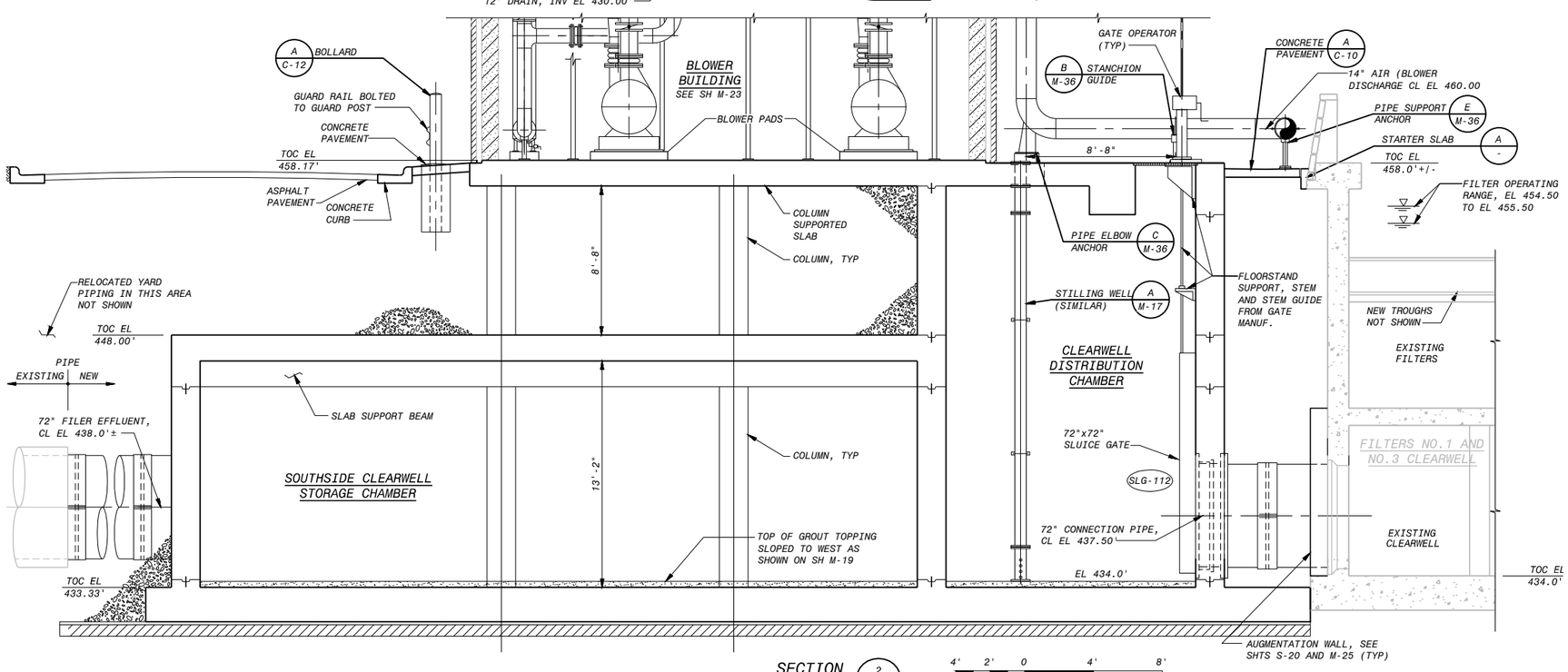

SECTION 2 M-19, M-20

4' 2' 0 4' 8'

1/4"=1'-0"

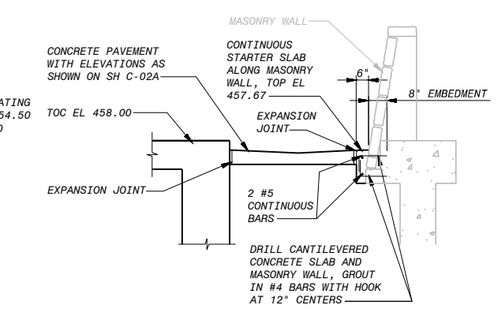

STARTER SLAB AT MASONRY WALL A C-02A, M-20

12" 6" 0 1' 2' 3' 4' 5' 6' 7'

3/8"=1'-0"

NO.	DR	CK	DATE	DESCRIPTION

REVISIONS

BLACK & VEATCH
Building a world of difference.
Black & Veatch Corporation
Registration No. F-295
Austin, Texas

Carlos Ibanez
CARLOS R. IBANEZ
119722
LICENSED
PROFESSIONAL ENGINEER
STATE OF TEXAS
6/7/2016

Walnut Creek WWTP - Tertiary Filter Rehabilitation Project
CIP ID No. 3023.025

Austin Water

MECHANICAL PROCESS
SOUTHSIDE CLEARWELL
SECTIONS

DESIGNED BY:	EP, BMC
DRAWN BY:	AWL
REVIEWED BY:	WLK
APPROVED BY:	TSD
PROJECT NO.:	168622
DATE:	4/4/2014
SCALE:	AS SHOWN
REVISION:	
DISCIPLINE NO.	M-21
DWG. NO.	45 OF 273

SAVED: 6/9/2016 1:48:35 PM
CYGNET ID:PW FLDR: 168622...\09.5030 - Mechanical Process Drawings
File: C:\PWBatchPDF\Process\168622 - Austin Walnut Creek WWTP Filter Rehab\M_21.dwg Layout: Work Plotted: 6/9/2016 1:48:35 PM
F0168622
D168622

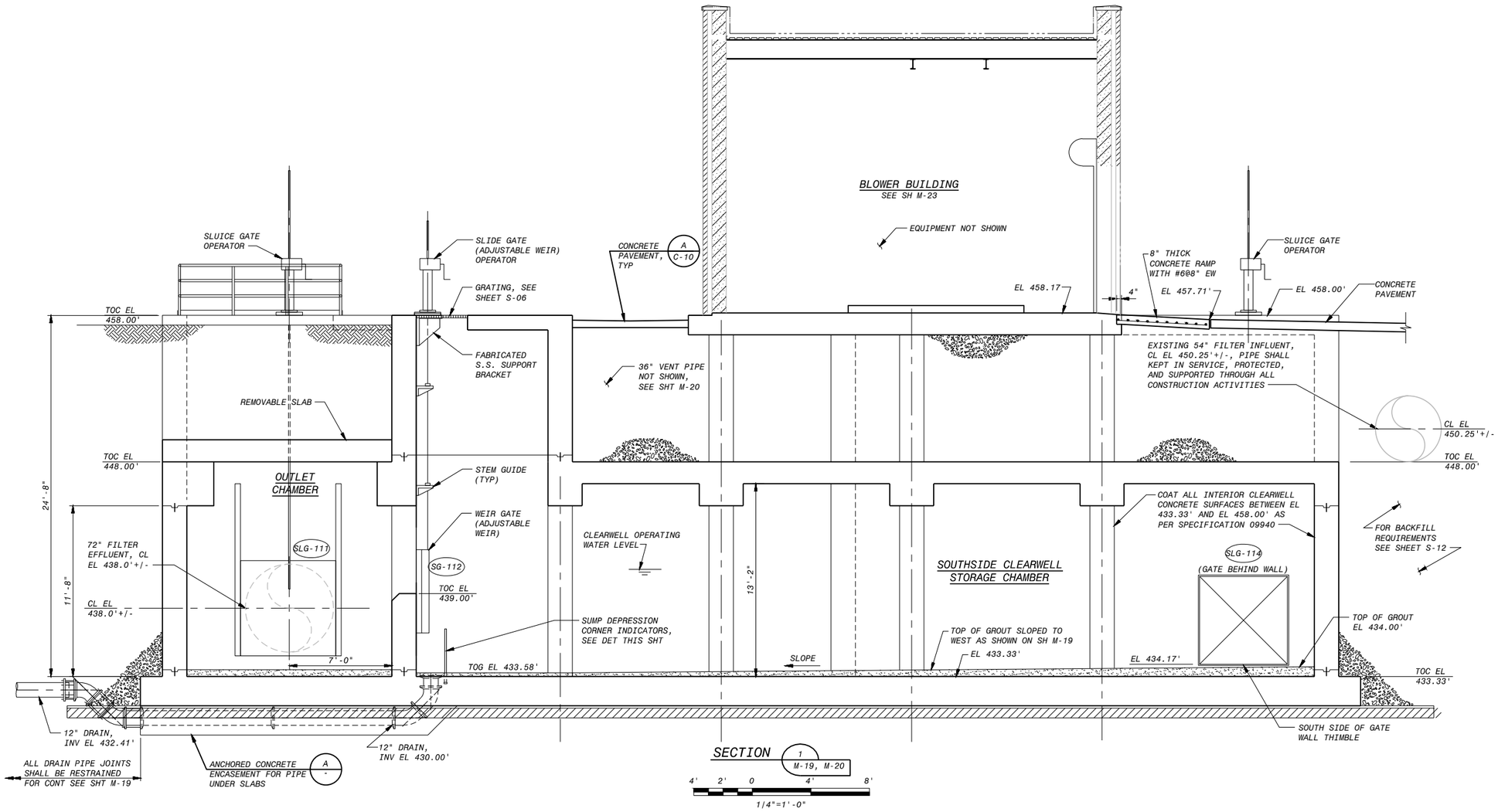

SECTION 1 M-19, M-20

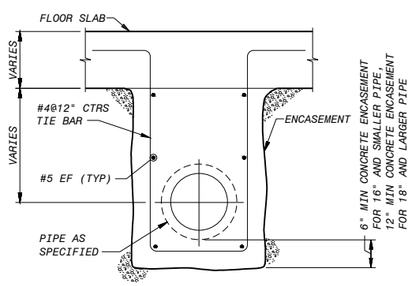

ANCHORED CONCRETE ENCASEMENT FOR PIPE UNDER SLABS A

NO SCALE

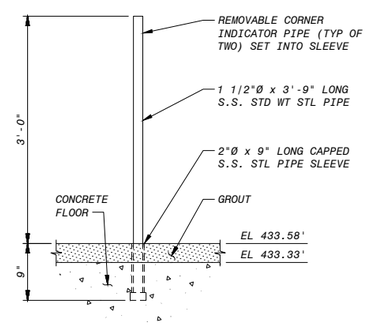

DETAIL B M-19, M-21, M-23

NO SCALE

NO.	BY	CK	DATE	DESCRIPTION

REVISIONS

BLACK & VEATCH
Building a world of difference.
Black & Veatch Corporation
Registration No. F-295
Austin, Texas

STATE OF TEXAS
CARLOS R. GOMEZ
119722
LICENSED
PROFESSIONAL ENGINEER
6/7/2016

Walnut Creek WWTP - Tertiary Filter Rehabilitation Project
CIP ID No. 3023.025

Austin Water

MECHANICAL PROCESS
SOUTHSIDE CLEARWELL
SECTIONS

DESIGNED BY:	EP, BMC
DRAWN BY:	AWL
REVIEWED BY:	WLK
APPROVED BY:	TSD
PROJECT NO.:	168622
DATE:	4/4/2014
SCALE:	AS SHOWN
REVISION:	
DISCIPLINE NO.	M-22
DWG. NO.	46 OF 273

FD168622 SAVED:
D168622 CYGNET ID:PW FLDR: 168622...\09.5030 - Mechanical Process Drawings
File: C:\PWBatchPDF\Process\168622 - Austin Walnut Creek WWTP Filter Rehab\M_22.dwg Layout: Work Plotted: 6/9/2016 1:48:48 PM

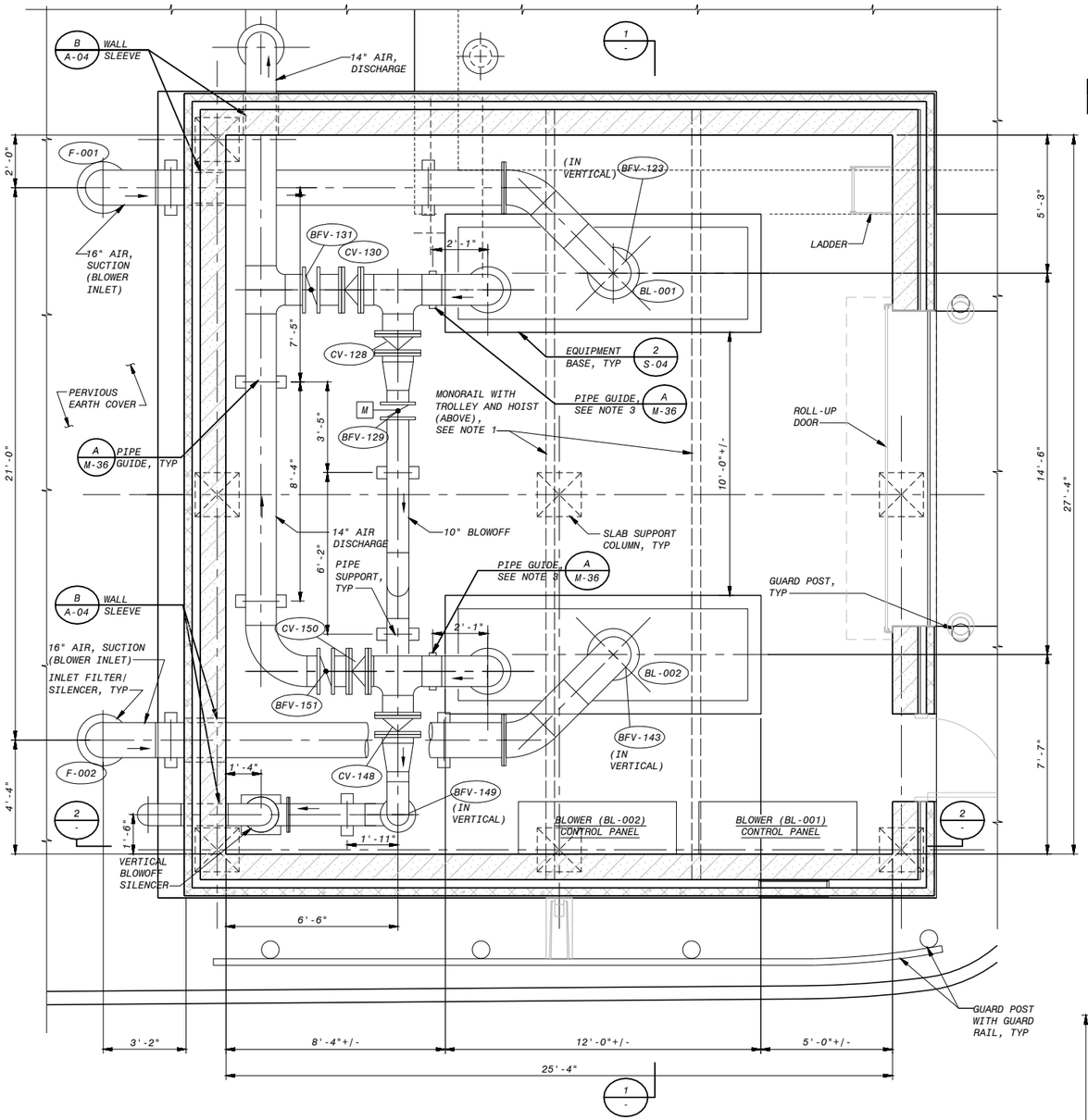

BLOWER BUILDING SECTIONAL PLAN

12" 6" 0 1' 2' 3' 4' 5' 6' 7'

3/8"=1'-0"

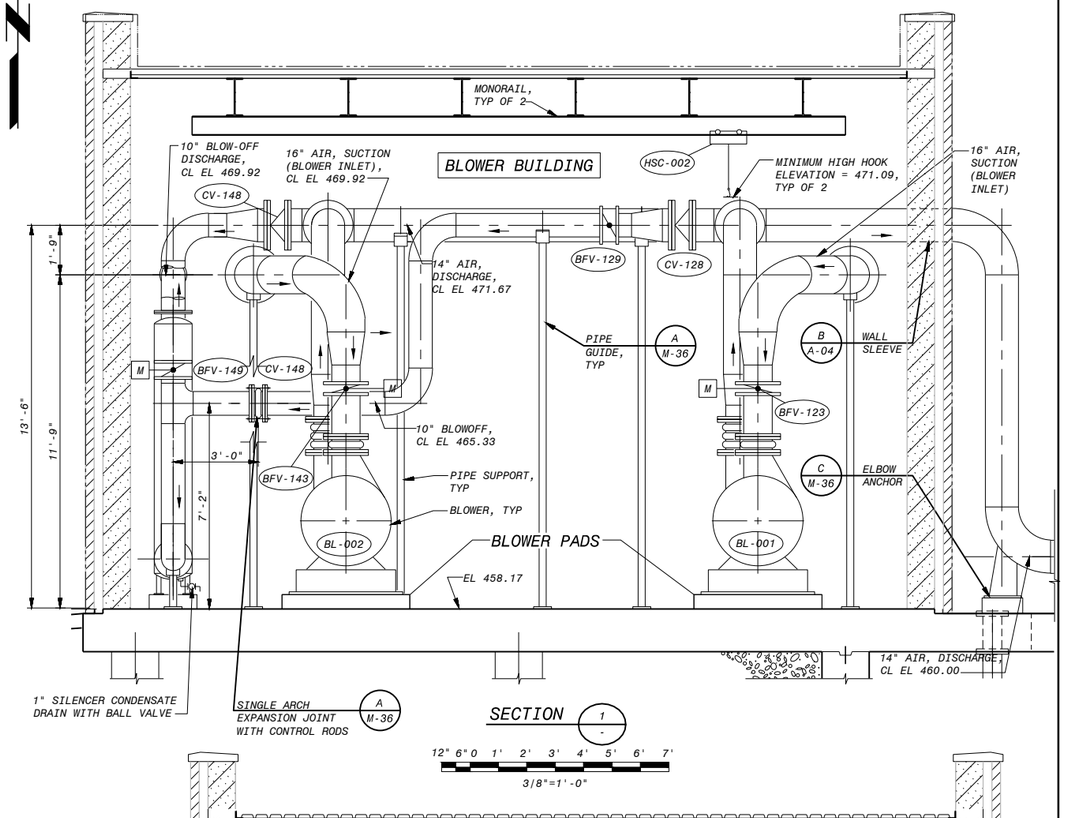

SECTION 1

12" 6" 0 1' 2' 3' 4' 5' 6' 7'

3/8"=1'-0"

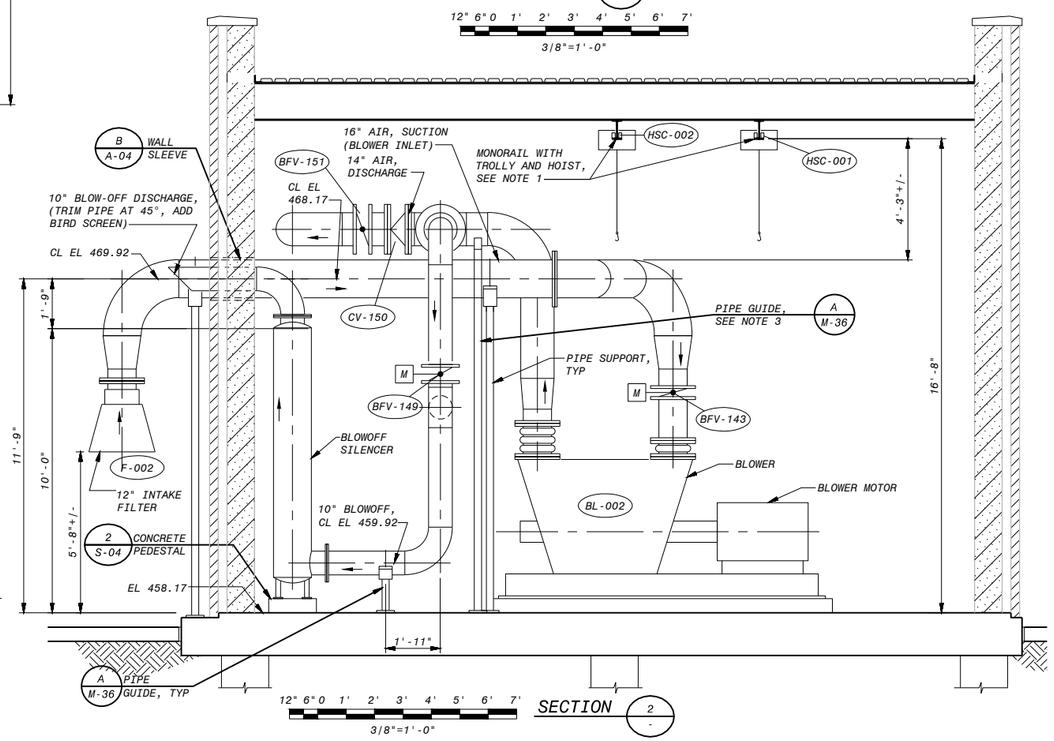

SECTION 2

12" 6" 0 1' 2' 3' 4' 5' 6' 7'

3/8"=1'-0"

NOTES:

1. HORIZONTAL LOCATION OF MONORAIL DEPENDS ON BLOWER SUPPLIED. ONE MONORAIL SHALL BE LOCATED OVER THE CENTER OF GRAVITY OF BLOWER AND ONE MONORAIL SHALL BE LOCATED OVER THE CENTER OF GRAVITY OF BLOWER MOTOR. BOTH CENTER OF GRAVITY LOCATIONS SHALL BE SUPPLIED BY THE BLOWER MANUFACTURER.
2. BLOWER INLET VALVE SIZES SHALL MATCH THE BLOWER INLET FLANGE SIZES.
3. PIPE GUIDE STANCHION SUPPORT CLOSEST TO BLOWER DISCHARGE SHALL NOT HAVE A GAP BETWEEN U-BOLT AND PIPE.

NO.	DR	CK	DATE	DESCRIPTION

REVISIONS

BLACK & VEATCH
Building a world of difference.
Black & Veatch Corporation
Registration No. F-869
Austin, Texas

Carlos Gonzalez
STATE OF TEXAS
CARLOS R. GONZALEZ
119722
LICENSED PROFESSIONAL ENGINEER
6/7/2016

Austin WATER
Walnut Creek WWTP - Tertiary Filter Rehabilitation Project
CIP ID No. 3023.025

MECHANICAL PROCESS
BLOWER BUILDING
PLAN AND SECTION

DESIGNED BY:	VG
DRAWN BY:	AWL
REVIEWED BY:	WLK
APPROVED BY:	TSD
PROJECT NO.:	168622
DATE:	4/4/2014
SCALE:	3/8"=1'-0"
REVISION:	

DISCIPLINE NO. M-23

DWG. NO. 47 OF 273

FD168622 SAVED: LER07108, 2/28/2014 9:43:31 AM
D168622 CONTROL ID: Mechanical Process Drawings
File: C:\PWBatchPDF\Process\168622 - Austin Walnut Creek WWTP Filter Rehab\M_23.dwg Layout: Work Plotted: 6/9/2016 1:49:00 PM

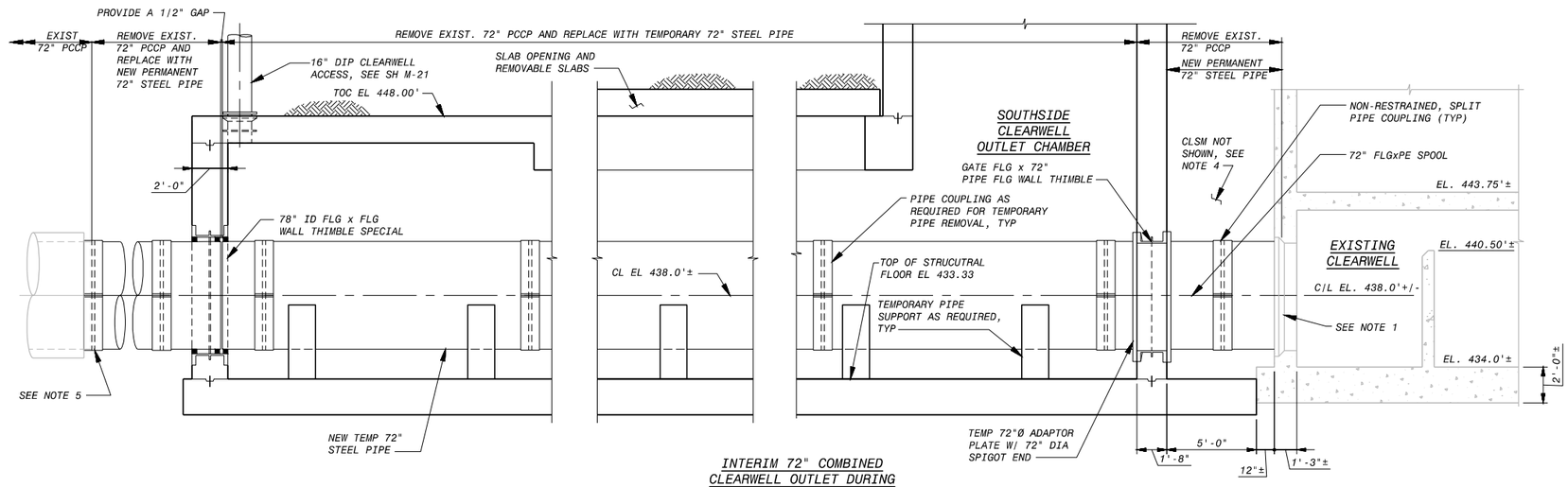

INTERIM 72" COMBINED CLEARWELL OUTLET DURING CONSTRUCTION

SECTION 1 / M-19

4' 2' 0 4' 8'

1/4"=1'-0"

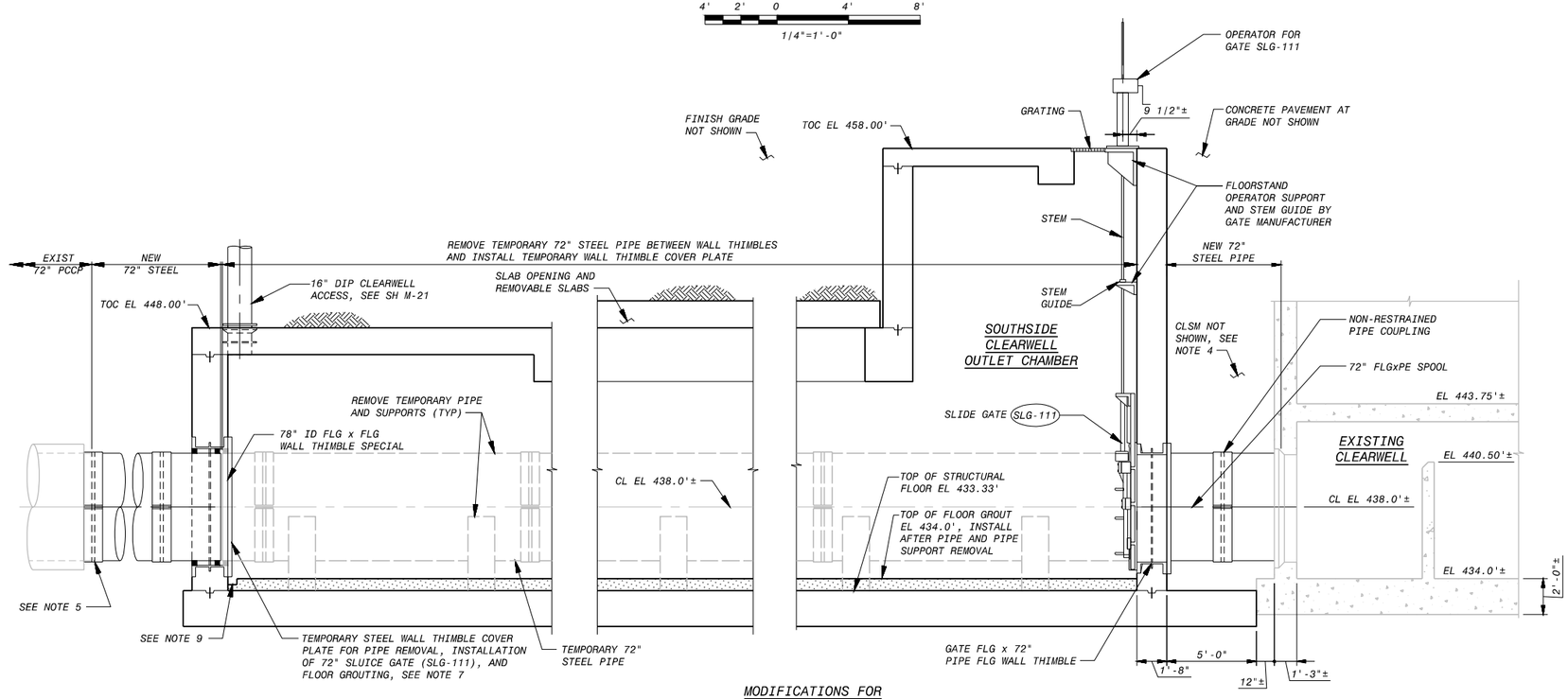

MODIFICATIONS FOR FINAL CONFIGURATION

SECTION 2 / M-19

4' 2' 0 4' 8'

1/4"=1'-0"

NOTES:

1. PRIOR TO FABRICATION OF TEMPORARY STEEL PIPING, CONTRACTOR SHALL EXCAVATE TO EXPOSE PIPE TO CONFIRM ELEVATION, SIZE AND JOINT TYPE AT CLEARWELL WALL.
2. TEMPORARY STEEL PIPING, COUPLINGS, AND COVER PLATE TO BECOME THE PROPERTY OF THE OWNER.
3. PRIOR TO STEEL PIPE FABRICATION, EXCAVATE TO DETERMINE PCCP SIZE AND JOINT LOCATIONS.
4. CLSM BACKFILL NOT INDICATED, SEE STRUCTURAL SHEETS. PLACE IN LIFTS SO AS NOT TO FLOAT PIPING.
5. PIPE JOINT LOCATION AND TYPE NOT KNOWN, ADAPT PIPE CONNECTION AS NECESSARY.
6. THE TEMPORARY PIPE COUPLINGS INSIDE THE OUTLET CHAMBER DO NOT HAVE TO BE STAINLESS STEEL.
7. THE COVER PLATE MUST BE REMOVED IN ORDER TO PLACE THE OUTLET CHAMBER IN SERVICE.
8. UNLESS OTHERWISE ALLOWED BY OWNER, MODULAR WALL SEALS USED FOR TEMP PIPE MAY NOT BE REUSED.
9. BOX OUT GROUT FOR WALL THIMBLE/COVER PLATE AS REQUIRED.

NO.	BY	CK	DATE	DESCRIPTION

REVISIONS

BLACK & VEATCH
Building a world of difference.
Black & Veatch Corporation
Registration No. F-295
Austin, Texas

Carlos Chavez
STATE OF TEXAS
CARLOS H. CHAVEZ
119722
LICENSED
PROFESSIONAL ENGINEER
6/17/2016

Austin WATER

Walnut Creek WWTP - Tertiary Filter Rehabilitation Project

CIP ID No. 3023.025

MECHANICAL PROCESS
SOUTHSIDE CLEARWELL - 72" FILTER AND CLEARWELL EFFLUENT PIPE SECTIONS

DESIGNED BY:	EP, BMC
DRAWN BY:	AWL
REVIEWED BY:	WLK
APPROVED BY:	TSD
PROJECT NO.:	168622
DATE:	4/4/2014
SCALE:	AS SHOWN
REVISION:	

DISCIPLINE NO.
M-24

DWG. NO.
48 OF 273

FD168622 SAVED: DR101229, 04/03/2014 1:31:19 PM
D168622 GROUP: Mechanical Process Drawings
File: C:\PWBatchPDF\Process\168622 - Austin Walnut Creek WWTP Filter Rehab\M_24.dwg Layout: Work Plotted: 6/9/2016 1:49:13 PM

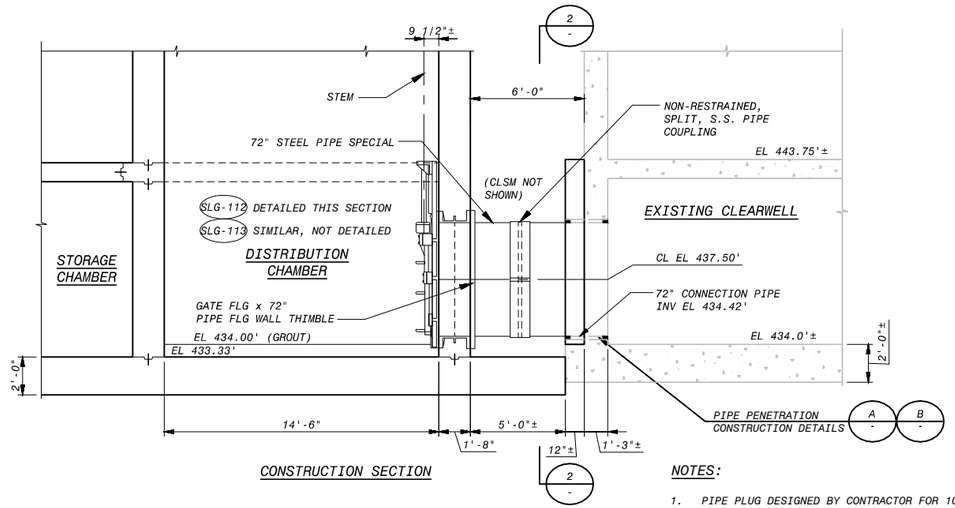

CONSTRUCTION SECTION

SECTION 1 / M-19

1/4"=1'-0"

NOTES:

1. PIPE PLUG DESIGNED BY CONTRACTOR FOR 10 PSI APPLIED PRESSURE.
2. DETAIL SIMILAR FOR EFFLUENT CONDUIT PENETRATIONS.
3. FINAL HOLE DIAMETER TO BE COORDINATED WITH PIPE PIECE AND MODULAR WALL SEAL.
4. STEEL TUBES AS PER SHEET S-20.
5. DETAIL INDICATES A CONCEPTUAL SOLUTION TO THE TEMP PLUG NEED. FINAL DESIGN OF THE PLUG IS THE RESPONSIBILITY OF THE CONTRACTOR.
6. STEEL BOLT AND OVERSIZED PLATE WASHER WELDED TO FRONT PLATE.
7. PLUG DESIGNED FOR A 10 PSI WORKING EXTERNAL PRESSURE.
8. MODULAR SEALS MAY NOT BE RE-USED UNLESS OTHERWISE ALLOWED BY OWNER.
9. SEE SHEET S-20 FOR ADDITIONAL REQUIREMENTS.

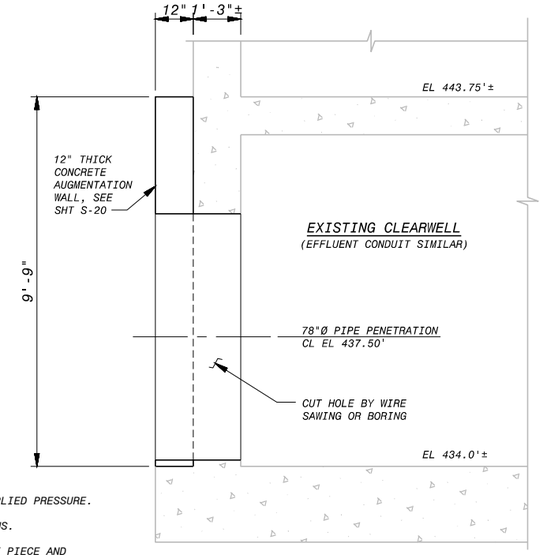

TYPICAL CONCRETE AUGMENTATION WALL AT 72" CONNECTION PIPE

DETAIL A

1/2"=1'-0"

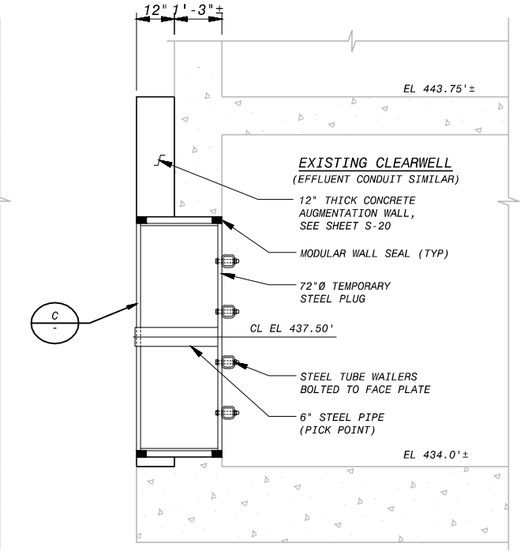

INTERIM TEMP PIPE PLUG DURING CONSTRUCTION

DETAIL B

1/2"=1'-0"

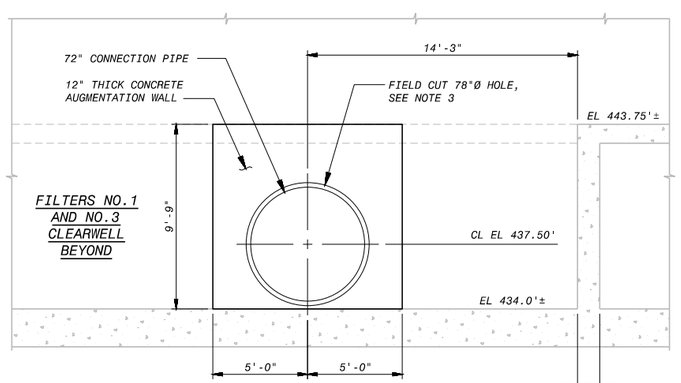

SOUTH EXTERIOR FACE OF EXISTING CLEARWELL (TYP AUGMENTATION WALL EMBEDMENTS)

SECTION 2 / M-19

1/4"=1'-0"

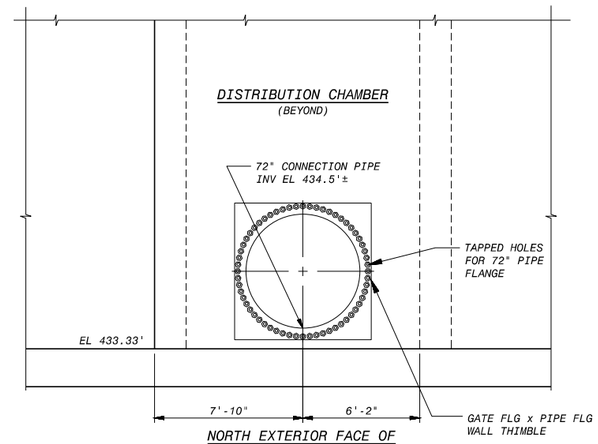

NORTH EXTERIOR FACE OF NEW SOUTHSIDE CLEARWELL

SECTION 3 / M-19

1/4"=1'-0"

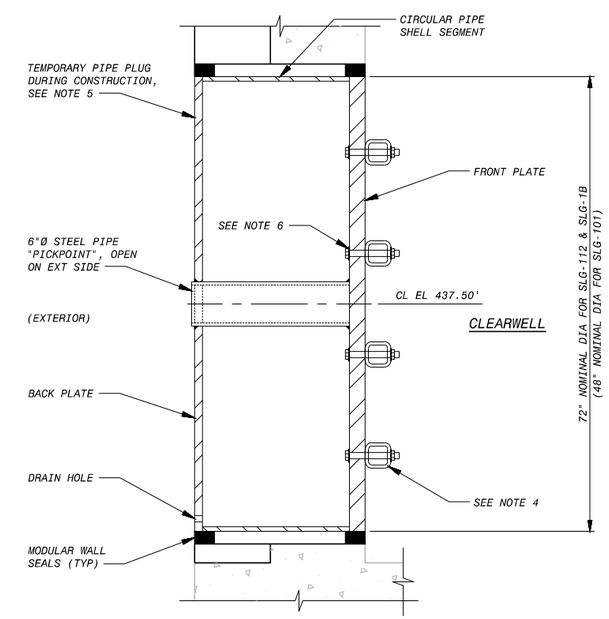

DETAIL C

1"=1'-0"

NO.	QR	CK	DATE	DESCRIPTION

REVISIONS

BLACK & VEATCH
Building a world of difference.
Black & Veatch Corporation
Registration No. F-869
Austin, Texas

CARLOS R. CHAVEZ 119722 LICENSED PROFESSIONAL ENGINEER STATE OF TEXAS
6/7/2016

Walnut Creek WWTP - Tertiary Filter Rehabilitation Project
CIP ID No. 3023.025

Austin WATER

MECHANICAL PROCESS
SOUTHSIDE CLEARWELL - 72" CLEARWELL CONNECTION PIPE SECTIONS

DESIGNED BY:	EP, BMC
DRAWN BY:	AWL
REVIEWED BY:	WLK
APPROVED BY:	TSD
PROJECT NO.:	168622
DATE:	4/4/2014
SCALE:	AS SHOWN

REVISION:

DISCIPLINE NO. M-25

DWG. NO. 49 OF 273

FD168622 SAVED:
D168622 ENVELOPED:D168622....\09.5030 - Mechanical Process Drawings
File: C:\PWBatchPDF\Process\168622 - Austin Walnut Creek WWTP Filter Rehab\M_25.dwg Layout: Work Plotted: 6/9/2016 1:49:26 PM

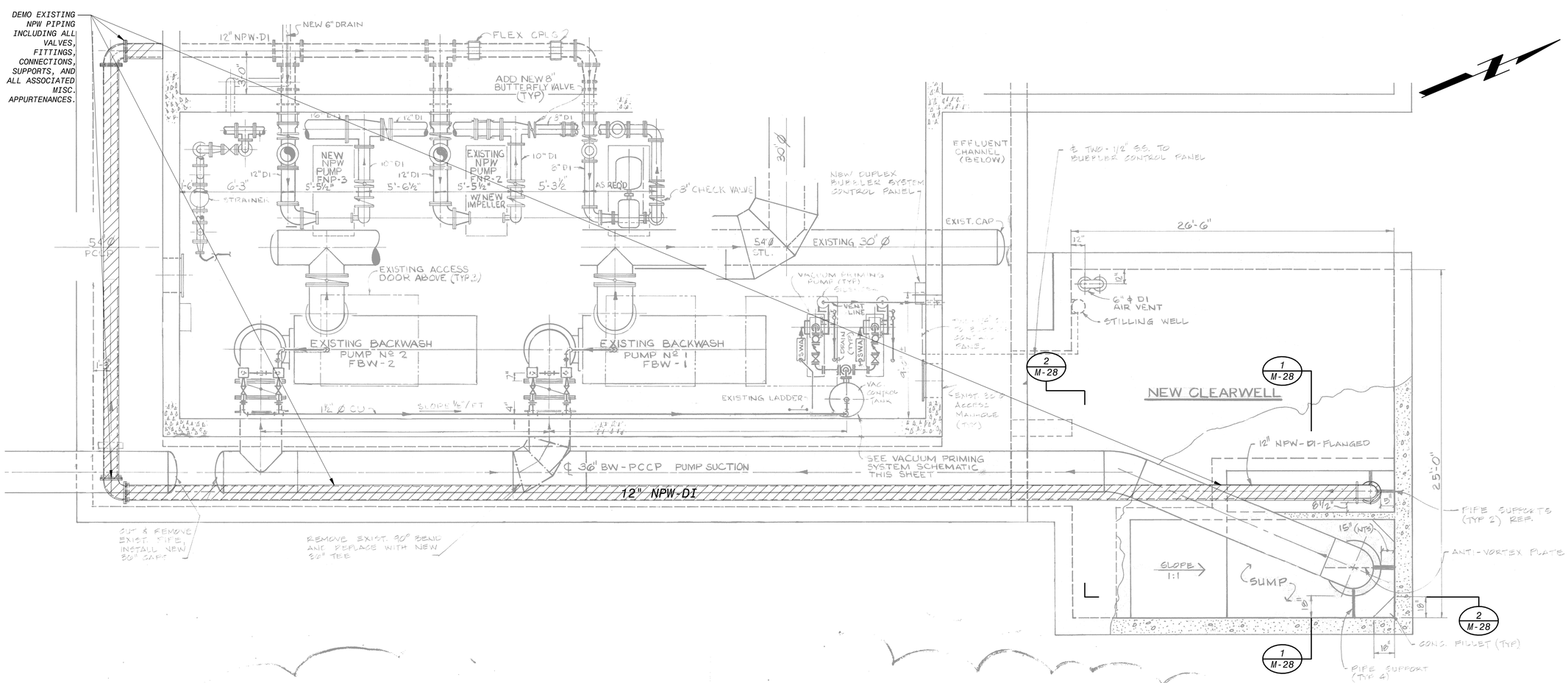

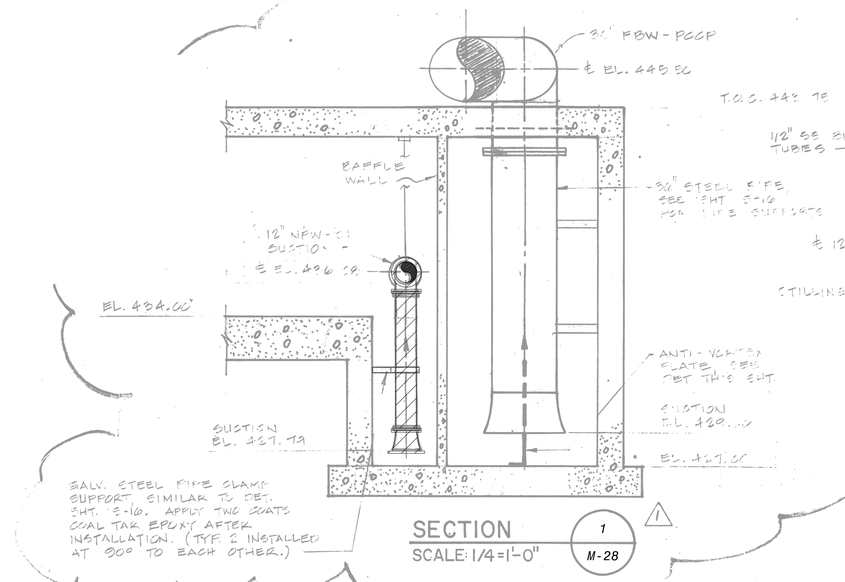

SECTION 1 / M-28
SCALE: 1/4=1'-0"

NPW CLEARWELL SUCTION - SIDE VIEW

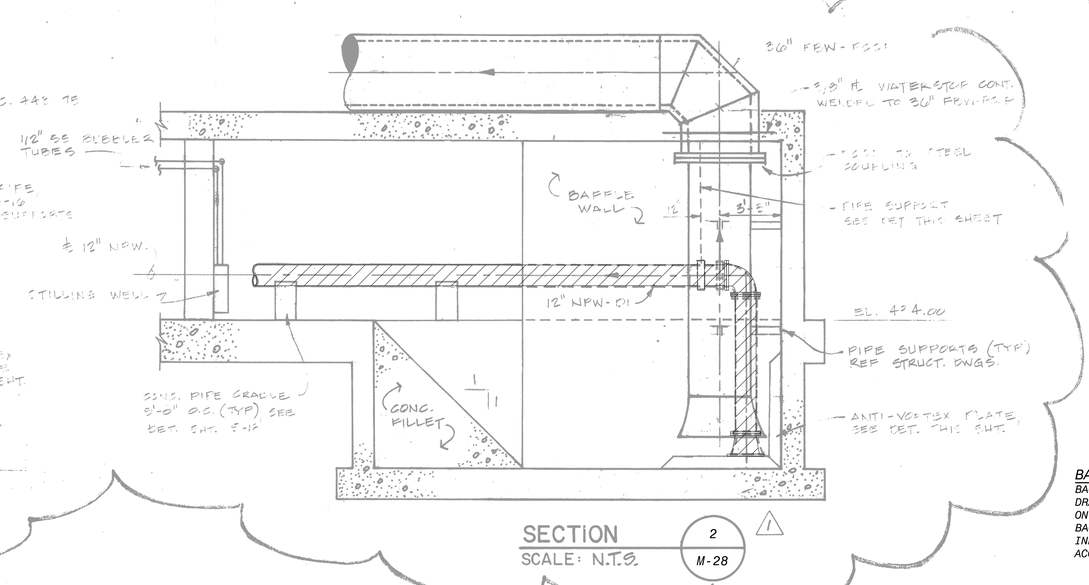

SECTION 2 / M-28
SCALE: N.T.S.

NPW CLEARWELL SUCTION - FRONT VIEW

LEGEND

TO BE REMOVED

NOTES:

1. CONTRACTOR TO FIELD VERIFY PRECISE LOCATION, ELEVATION, ARRANGEMENT, SIZE, TYPE AND CONDITION OF EXISTING PIPING TO COORDINATE CONNECTIONS TO NEW PIPING, FITTINGS, VALVES, ETC. PRIOR TO FABRICATION OF NEW ITEMS.

BACKGROUND INFORMATION NOTE:

BACKGROUND IMAGES USED ON THIS SHEET ARE FROM AS-BUILT DRAWINGS FROM PREVIOUS CONTRACTS THAT WERE PREPARED BASED ON INFORMATION PROVIDED BY OTHERS. ALL ITEMS SHOWN IN THE BACKGROUND AND ALL NEW ITEMS RELYING ON BACKGROUND INFORMATION SHALL BE VERIFIED BY THE CONTRACTOR FOR ACCURACY BEFORE APPLYING THIS INFORMATION FOR ANY PURPOSE.

NO.	DR	CK	DATE	DESCRIPTION
				REVISIONS

BLACK & VEATCH
Building a world of difference.
Black & Veatch Corporation
Registration No. F-258
Austin, Texas

CAS CONSULTING & SERVICES INC
TBPE Registration No. F-8164
Austin, Texas 78704
(512) 416-1500

STATE OF TEXAS
KENT CALLER LEIGHTON
97914
LICENSED PROFESSIONAL ENGINEER
9/24/2014

Austin WATER

Walnut Creek WWTP - Tertiary Filter Rehabilitation Project
CIP ID No. 3023.025

NON-POTABLE WATER EFFLUENT CHANNEL 12" SUCTION PIPING DEMOLITION

DESIGNED BY:	CRS
DRAWN BY:	BRV
REVIEWED BY:	CRS
APPROVED BY:	CRS
PROJECT NO.:	168622
DATE:	11/4/13
SCALE:	AS NOTED
REVISION:	
DISCIPLINE NO.	M-28
DWG. NO.	50 OF 273

F0168622 SACD: D0168622 CWCD: File: C:\pw_working\cngpw\d0671660\M-28.dwg Layout: Layout1 Plotted: 9/24/2014 4:56:55 PM

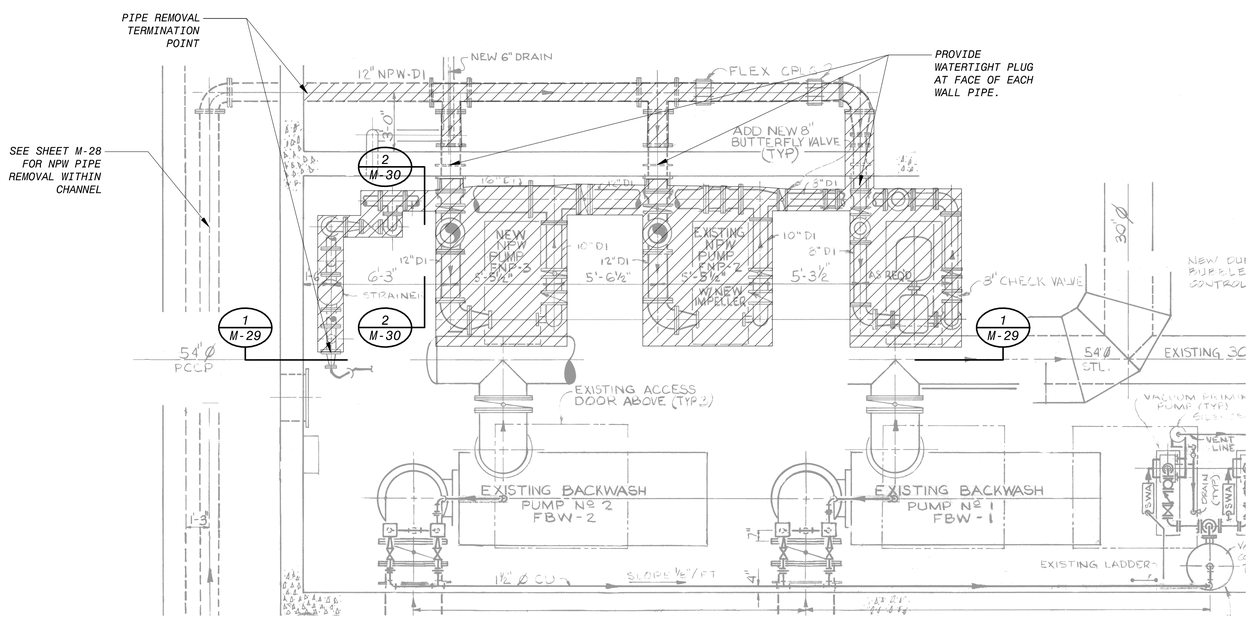

FILTER BUILDING PIPE GALLERY
EXISTING NON-POTABLE WATER PIPING PLAN
CONSTRUCTION RECORD DRAWINGS

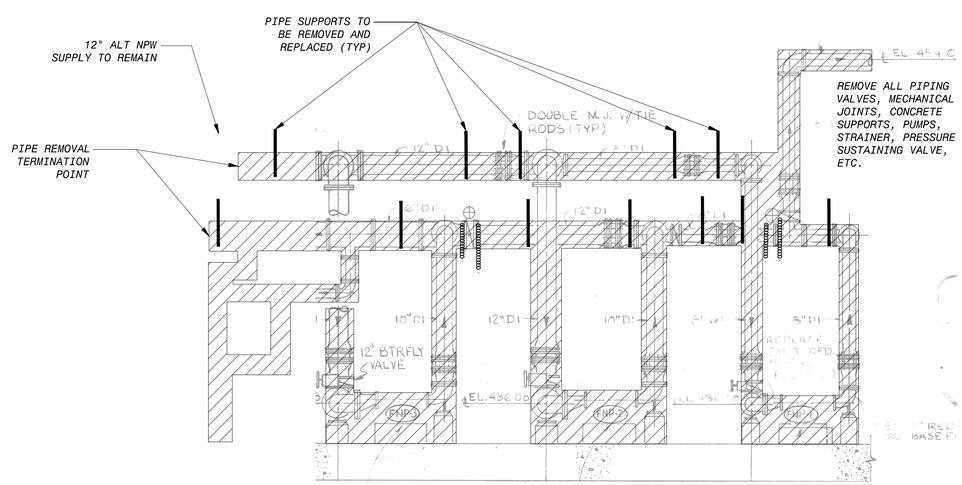

SECTION 1/4" = 1'-0" (1 / M-29)

LEGEND

TO BE REMOVED

NOTES:

1. CONTRACTOR TO FIELD VERIFY PRECISE LOCATION, ELEVATION, ARRANGEMENT, SIZE, TYPE AND CONDITION OF EXISTING PIPING TO COORDINATE CONNECTIONS TO NEW PIPING, FITTINGS, VALVES, ETC. PRIOR TO FABRICATION OF NEW ITEMS.
2. REPLACEMENT OF EXISTING VALVES WITH NEW VALVES MAY REQUIRE MODIFICATION OF ASSOCIATED PIPING, COUPLINGS, ETC TO ACCOMMODATE DIFFERENT VALVE LENGTHS, DIFFERENT MOTOR OPERATOR CONFIGURATION, ETC. ALL REQUIRED MODIFICATIONS SHALL BE MADE AT NO ADDITIONAL COST TO THE OWNER.
3. INSTALLATION OF REPLACEMENT VALVES SHALL ALSO INCLUDE REMOVAL AND REINSTALLATION OF EXISTING MECHANICAL COUPLINGS ASSOCIATED WITH VALVES. EXISTING MECHANICAL COUPLINGS SHALL BE REINSTALLED WITH NEW GASKETS.
4. IF ANY PIPING OR EQUIPMENT NOT DESIGNATED TO BE REMOVED ARE DAMAGED DUE TO CONSTRUCTION THEY SHALL BE COMPLETELY REMOVED AND REPLACED AT NO ADDITIONAL COST TO THE OWNER.
5. THIS NEW WORK SHEET ONLY SHOWS MECHANICAL PROCESS NEW WORK, SEE HVAC, ELECTRICAL, INSTRUMENTATION AND STRUCTURAL SHEETS FOR ADDITIONAL NEW WORK.
6. IT IS THE CONTRACTOR'S RESPONSIBILITY TO SUPPLY NEW GASKETS AND BOLT KITS FOR ALL WORK DONE.
7. SEE P&ID FOR PIPING AND VALVES SMALLER THAN 3". ALL TAPS TO DIP SHALL BE FACTORY TAPS.

BACKGROUND INFORMATION NOTE:

BACKGROUND IMAGES USED ON THIS SHEET ARE FROM AS-BUILT DRAWINGS FROM PREVIOUS CONTRACTS THAT WERE PREPARED BASED ON INFORMATION PROVIDED BY OTHERS. ALL ITEMS SHOWN IN THE BACKGROUND AND ALL NEW ITEMS RELYING ON BACKGROUND INFORMATION SHALL BE VERIFIED BY THE CONTRACTOR FOR ACCURACY BEFORE APPLYING THIS INFORMATION FOR ANY PURPOSE.

NO.	DR	CK	DATE	DESCRIPTION
				REVISIONS

BLACK & VEATCH
Building a world of difference.
Black & Veatch Corporation
Registration No. F-258
Austin, Texas

CAS CONSULTING & SERVICES INC
ARTIC TEXAS 78754
(512) 835-0900
FIRM No. F-9893

STATE OF TEXAS
HENRY CALLER LEIGHTON
97914
LICENSED PROFESSIONAL ENGINEER
9/24/2014

Walnut Creek WWTP - Tertiary Filter Rehabilitation Project
CIP ID No. 3023.025
Austin Water

NON-POTABLE WATER PIPING FILTER GALLERY DEMOLITION (SHEET 1 OF 2)

DESIGNED BY:	CRS
DRAWN BY:	BRV
REVIEWED BY:	CRS
APPROVED BY:	CRS
PROJECT NO.:	168622
DATE:	04/04/2014
SCALE:	AS NOTED
REVISION:	
DISCIPLINE NO.	M-29
DWG. NO.	51 OF 273

F0168622 SAVED:
D0168622 CS-0581 ID:
File: C:\pw_working\cngpw\d0671660\M-29 NPW Demolition - Plan.dwg Layout: Layout1 Plotted: 9/24/2014 4:57:59 PM

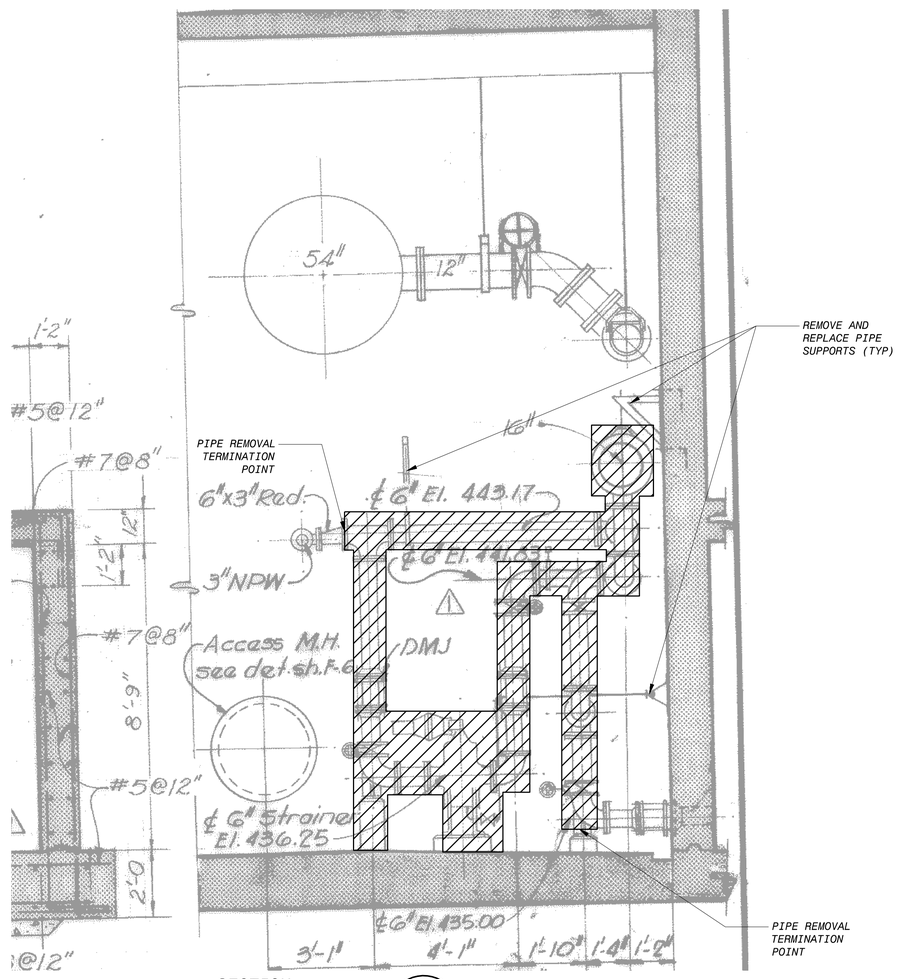

SECTION 2/M-30
3/8" = 1'-0"

LEGEND

TO BE REMOVED

NOTES:

1. CONTRACTOR TO FIELD VERIFY PRECISE LOCATION, ELEVATION, ARRANGEMENT, SIZE, TYPE AND CONDITION OF EXISTING PIPING TO COORDINATE CONNECTIONS TO NEW PIPING, FITTINGS, VALVES, ETC. PRIOR TO FABRICATION OF NEW ITEMS.
2. REPLACEMENT OF EXISTING VALVES WITH NEW VALVES MAY REQUIRE MODIFICATION OF ASSOCIATED PIPING, COUPLINGS, ETC TO ACCOMMODATE DIFFERENT VALVE LENGTHS, DIFFERENT MOTOR OPERATOR CONFIGURATION, ETC. ALL REQUIRED MODIFICATIONS SHALL BE MADE AT NO ADDITIONAL COST TO THE OWNER.
3. INSTALLATION OF REPLACEMENT VALVES SHALL ALSO INCLUDE REMOVAL AND REINSTALLATION OF EXISTING MECHANICAL COUPLINGS ASSOCIATED WITH VALVES. EXISTING MECHANICAL COUPLINGS SHALL BE REINSTALLED WITH NEW GASKETS.
4. IF ANY PIPING OR EQUIPMENT NOT DESIGNATED TO BE REMOVED ARE DAMAGED DUE TO CONSTRUCTION THEY SHALL BE COMPLETELY REMOVED AND REPLACED AT NO ADDITIONAL COST TO THE OWNER.
5. THIS NEW WORK SHEET ONLY SHOWS MECHANICAL PROCESS NEW WORK, SEE HVAC, ELECTRICAL, INSTRUMENTATION AND STRUCTURAL SHEETS FOR ADDITIONAL NEW WORK. ALSO SEE SHEET M-31 FOR NEW WORK ON NON-POTABLE WATER SYSTEM PIPING AND EQUIPMENT.
6. IT IS THE CONTRACTOR'S RESPONSIBILITY TO SUPPLY NEW GASKETS AND BOLT KITS FOR ALL WORK DONE.
7. SEE P&ID FOR PIPING AND VALVES SMALLER THAN 3". ALL TAPS TO DIP SHALL BE FACTORY TAPS.

BACKGROUND INFORMATION NOTE:

BACKGROUND IMAGES USED ON THIS SHEET ARE FROM AS-BUILT DRAWINGS FROM PREVIOUS CONTRACTS THAT WERE PREPARED BASED ON INFORMATION PROVIDED BY OTHERS. ALL ITEMS SHOWN IN THE BACKGROUND AND ALL NEW ITEMS RELYING ON BACKGROUND INFORMATION SHALL BE VERIFIED BY THE CONTRACTOR FOR ACCURACY BEFORE APPLYING THIS INFORMATION FOR ANY PURPOSE.

NO.	DR	CK	DATE	DESCRIPTION

REVISIONS

BLACK & VEATCH
Building a world of difference.
Black & Veatch Corporation
Registration No. F-258
Austin, Texas

CAS CONSULTING & SERVICES INC
7000 BEE CAVES ROAD
AUSTIN, TEXAS 78746
(512) 328-2008

STATE OF TEXAS
HENRY CALDER LEIGHTON
97914
LICENSED PROFESSIONAL ENGINEER
9/24/2014

Austin WATER
Walnut Creek WWTP - Tertiary Filter Rehabilitation Project
CIP ID No. 3023.025

NON-POTABLE WATER PIPING FILTER GALLERY DEMOLITION (SHEET 2 OF 2)

DESIGNED BY:	CRS
DRAWN BY:	BRV
REVIEWED BY:	CRS
APPROVED BY:	CRS
PROJECT NO.:	168622
DATE:	04/04/2014
SCALE:	AS NOTED
REVISION:	
DISCIPLINE NO.	M-30
DWG. NO.	52 OF 273

F0168622 SAVED:
D0168622 SHEET ID:
File: C:\pw_working\cngpw\d0671660\M-30 NPW Demolition - Sections.dwg Layout: Layout1 Plotted: 9/24/2014 4:59:32 PM

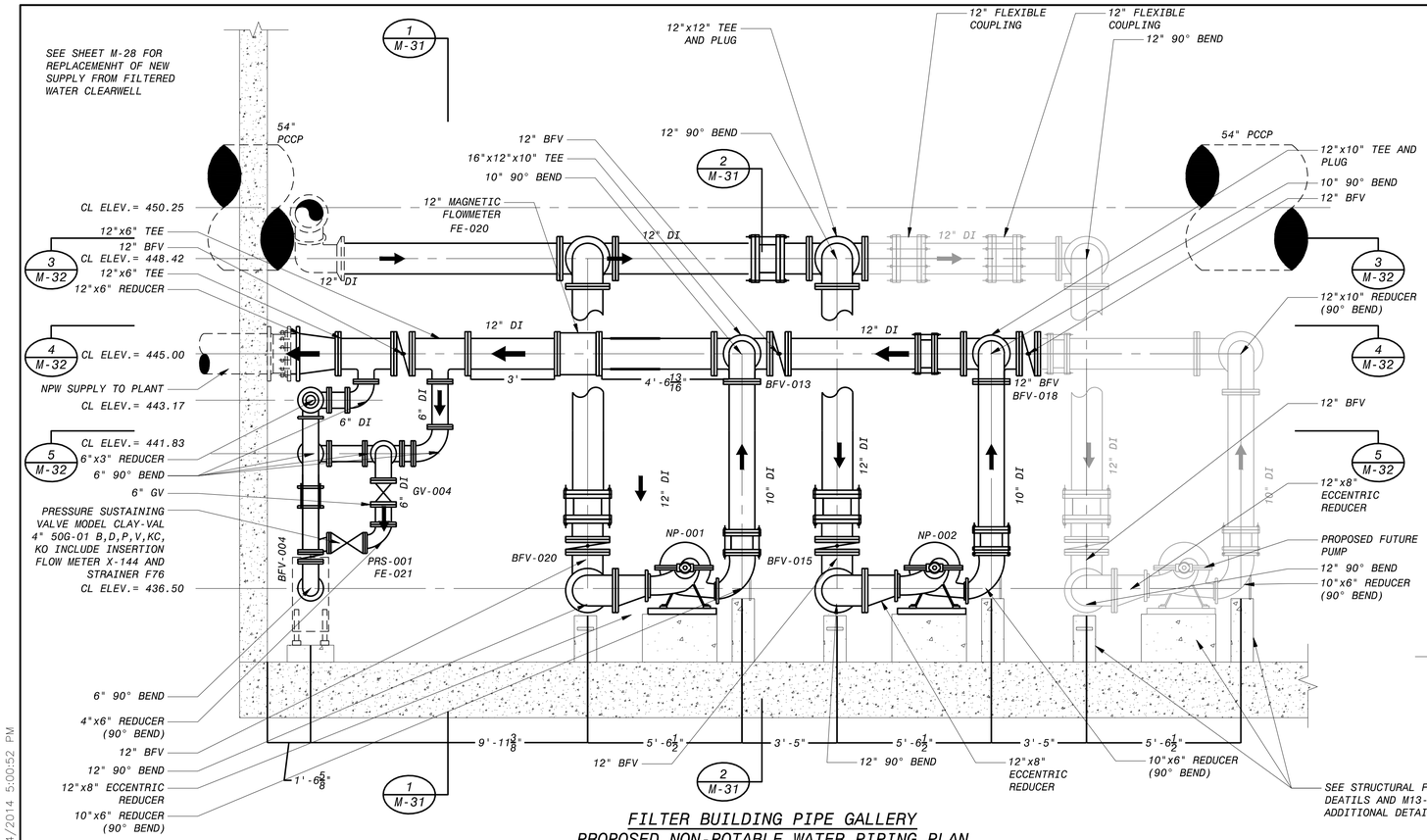

FILTER BUILDING PIPE GALLERY
PROPOSED NON-POTABLE WATER PIPING PLAN
3/8" = 1'-0"

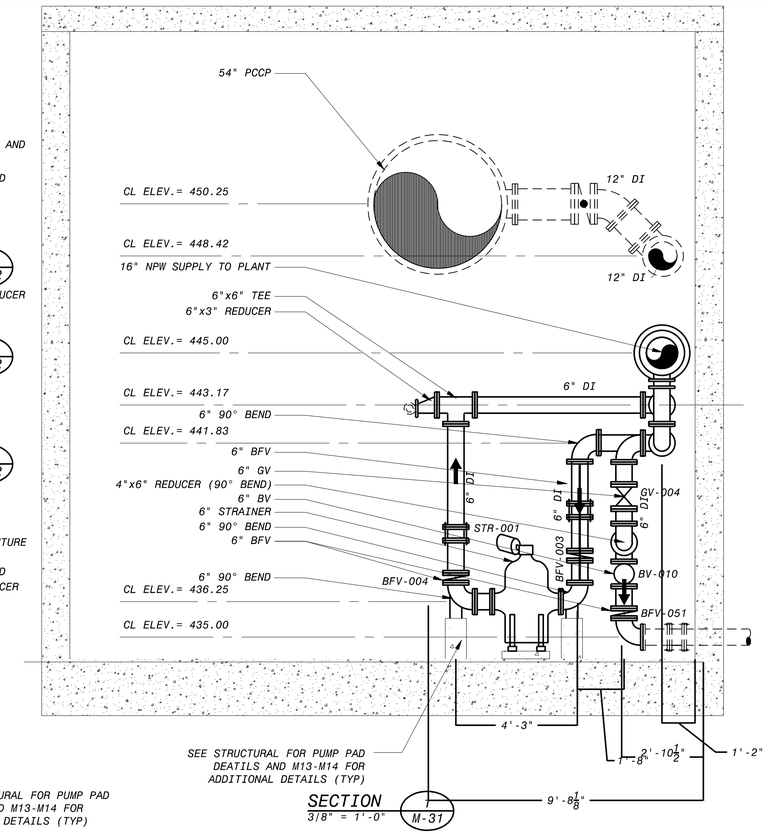

SECTION 1 / M-31
3/8" = 1'-0"

REPLACE ALL APPURTANCES, GAUGES, VALVES, TUBING, ETC. ASSOCIATED WITH PRESSURE SUSTAINING VALVE MODEL CLAY-VAL 4" 50G-01 B,D,P,V,KO, KO INCLUDE INSERTION FLOW METER X-144 AND STRAINER F76

REPLACE ALL APPURTANCES, GAUGES, VALVES, TUBING, ETC. ASSOCIATED WITH STRAINER

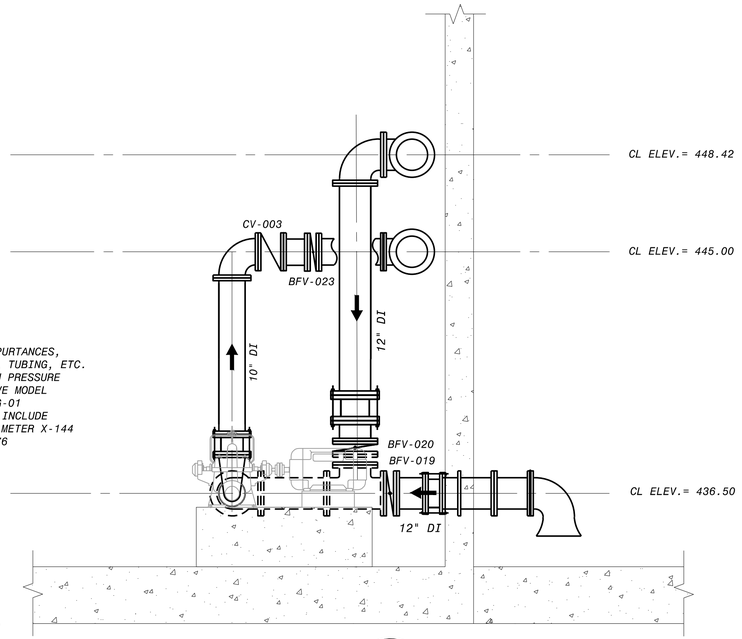

SECTION 2 / M-31
3/8" = 1'-0"

NOTES:

1. CONTRACTOR TO FIELD VERIFY PRECISE LOCATION, ELEVATION, ARRANGEMENT, SIZE, TYPE AND CONDITION OF EXISTING PIPING TO COORDINATE CONNECTIONS TO NEW PIPING, FITTINGS, VALVES, ETC. PRIOR TO FABRICATION OF NEW ITEMS.
2. REPLACEMENT OF EXISTING VALVES WITH NEW VALVES MAY REQUIRE MODIFICATION OF ASSOCIATED PIPING, COUPLINGS, ETC TO ACCOMMODATE DIFFERENT VALVE LENGTHS, DIFFERENT MOTOR OPERATOR CONFIGURATION, ETC. ALL REQUIRED MODIFICATIONS SHALL BE MADE AT NO ADDITIONAL COST TO THE OWNER.
3. INSTALLATION OF REPLACEMENT VALVES SHALL ALSO INCLUDE REMOVAL AND REINSTALLATION OF EXISTING MECHANICAL COUPLINGS ASSOCIATED WITH VALVES. EXISTING MECHANICAL COUPLINGS SHALL BE REINSTALLED WITH NEW GASKETS.
4. IF ANY PIPING OR EQUIPMENT NOT DESIGNATED TO BE REMOVED ARE DAMAGED DUE TO CONSTRUCTION THEY SHALL BE COMPLETELY REMOVED AND REPLACED AT NO ADDITIONAL COST TO THE OWNER.
5. THIS NEW WORK SHEET ONLY SHOWS MECHANICAL PROCESS NEW WORK, SEE HVAC, ELECTRICAL, INSTRUMENTATION AND STRUCTURAL SHEETS FOR ADDITIONAL NEW WORK.
6. IT IS THE CONTRACTOR'S RESPONSIBILITY TO SUPPLY NEW GASKETS AND BOLT KITS FOR ALL WORK DONE.
7. SEE P&ID FOR PIPING AND VALVES SMALLER THAN 3". ALL TAPS TO DIP SHALL BE FACTORY TAPS.

BACKGROUND INFORMATION NOTE:

BACKGROUND IMAGES USED ON THIS SHEET ARE FROM AS-BUILT DRAWINGS FROM PREVIOUS CONTRACTS THAT WERE PREPARED BASED ON INFORMATION PROVIDED BY OTHERS. ALL ITEMS SHOWN IN THE BACKGROUND AND ALL NEW ITEMS RELYING ON BACKGROUND INFORMATION SHALL BE VERIFIED BY THE CONTRACTOR FOR ACCURACY BEFORE APPLYING THIS INFORMATION FOR ANY PURPOSE.

NO.	DR	CK	DATE	DESCRIPTION

REVISIONS

BLACK & VEATCH
Building a world of difference.
Black & Veatch Corporation
Registration No. F-258
Austin, Texas

CAS CONSULTING & SERVICES INC
ARCHITECTURE
ENGINEERING
PLANNING
AUSTIN, TEXAS 78704
(512) 326-5602

STATE OF TEXAS
KENNY CALLER LEIGHTON
97914
LICENSED PROFESSIONAL ENGINEER
9/24/2014

Walnut Creek WWTP - Tertiary Filter Rehabilitation Project
CIP ID No. 3023.025
Austin WATER

NON-POTABLE WATER FILTER GALLERY PLAN AND SECTIONS

DESIGNED BY:	CRS
DRAWN BY:	BRV
REVIEWED BY:	CRS
APPROVED BY:	CRS
PROJECT NO.:	168622
DATE:	11/4/13
SCALE:	AS NOTED
REVISION:	
DISCIPLINE NO.	M-31
DWG. NO.	53 OF 273

FD168622
DD168622
SAVED:
CAD ID:
File: C:\pw_working\cngpw\d0671660\M-31 NPW Proposed - Plan and Sections.dwg Layout: Layout1 Plotted: 9/24/2014 5:00:52 PM

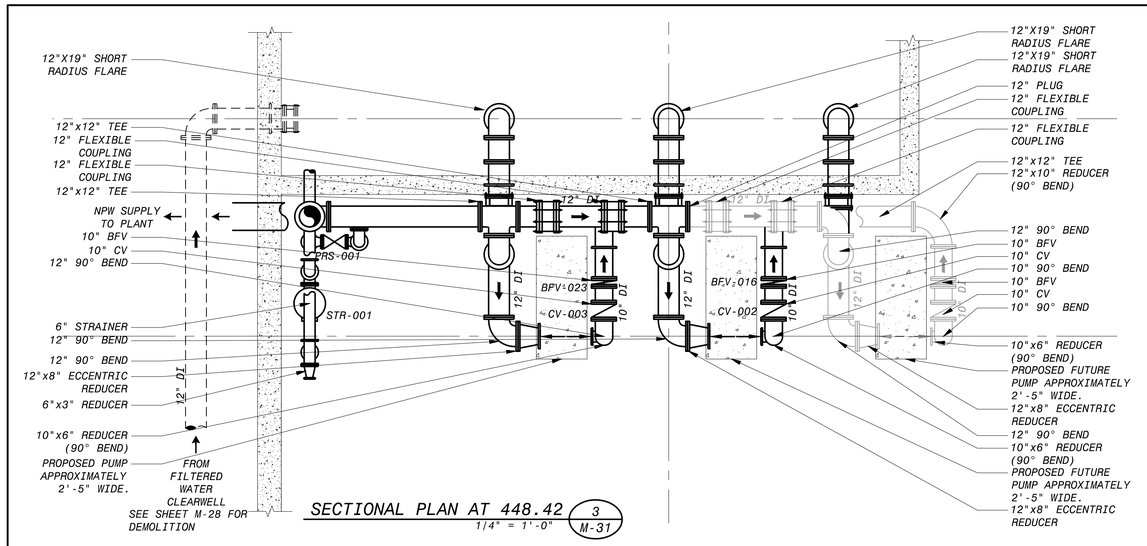

SECTIONAL PLAN AT 448.42 (3 / M-31)
1/4" = 1'-0"

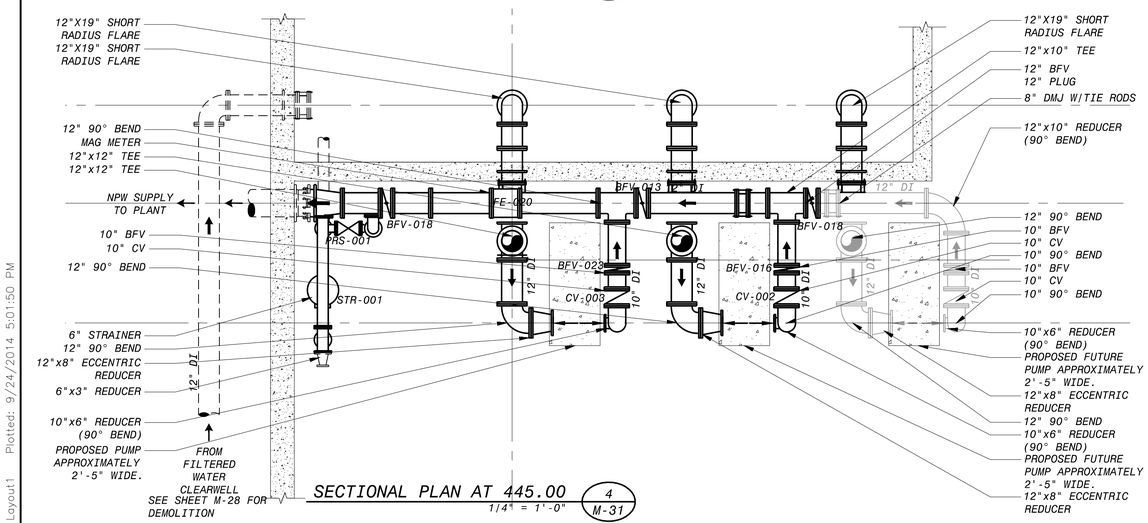

SECTIONAL PLAN AT 445.00 (4 / M-31)
1/4" = 1'-0"

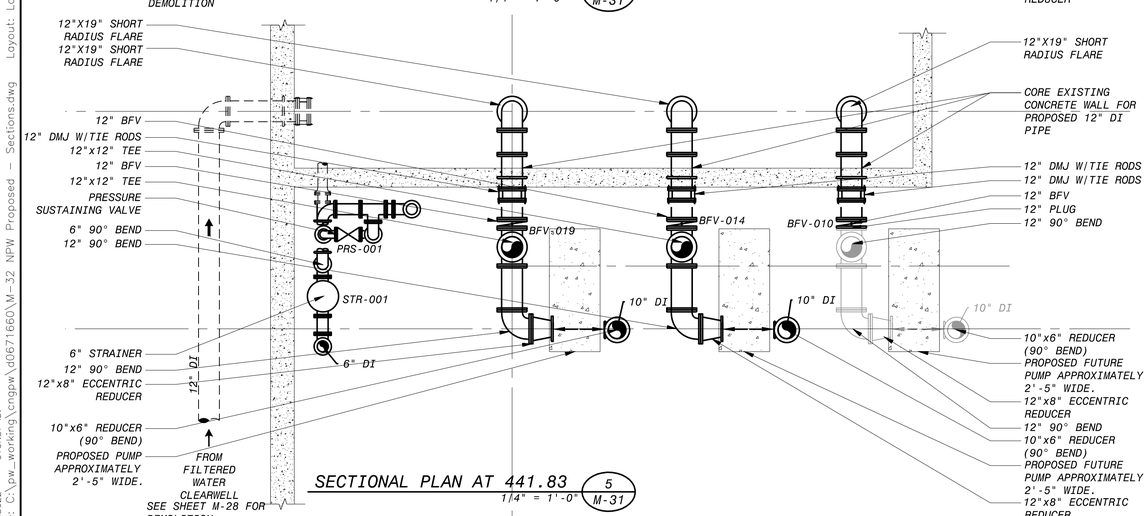

SECTIONAL PLAN AT 441.83 (5 / M-31)
1/4" = 1'-0"

LEGEND

- EXISTING PIPING
- PROPOSED PIPING
- FUTURE PIPING

Pump:

Size: 8x6
Type: HSC
Synch speed: 1800 rpm
Speed: 1750 rpm
Dia: 13.8125 in
Specific Speeds:
Ns: 1370
Nss: ---
Dimensions:
Suction: 8 in
Discharge: 6 in

Pump Limits:

Temperature: 200 °F
Pressure: 150 psi g
Sphere size: 1.25 in
Power: ---
Eye area: ---

Search Criteria:

Flow: 1800 US gpm
Head: 180.85 ft

Fluid:

Water
Density: 62.37 lb/ft³
Viscosity: 1.105 cP
NPSHa: ---
Temperature: 60 °F
Vapor pressure: 0.2563 psi a
Atm pressure: 14.7 psi a

Motor:

Standard: NEMA
Enclosure: TEFC
Size: 125 hp
Speed: 1800
Frame: 444T
Sizing criteria: Max Power on Design Curve

---- Data Point ----	
Flow:	1800 US gpm
Head:	182 ft
Eff:	88.1%
Power:	93.9 hp
NPSHr:	10 ft
---- Design Curve ----	
Shutoff head:	215 ft
Shutoff dP:	93.1 psi
Min flow:	460 US gpm
BEP:	88.1% @ 1839 US gpm
NOL power:	108 hp @ 2358 US gpm
-- Max Curve --	
Max power:	136 hp @ 2650 US gpm

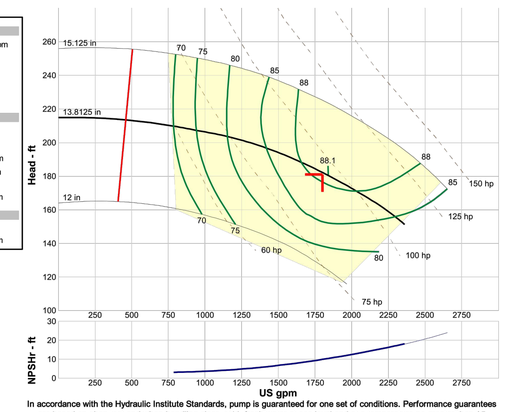

In accordance with the Hydraulic Institute Standards, pump is guaranteed for one set of conditions. Performance guarantees are based on shop test and when handling clear, cold, fresh water at sea level and at a temperature no greater than 85 degrees F. Suction lift must not exceed that shown on curve.

Performance Evaluation:

Flow US gpm	Speed rpm	Head ft	Efficiency %	Power hp	NPSHr ft
2160	1750	164	86.5	103	15
1800	1750	182	88.1	93.9	10
1440	1750	196	85.3	83.5	6.33
1080	1750	205	78.3	71.2	4.06
720	1750	210	67.9	56.8	3.04

NOTES:

1. CONTRACTOR TO FIELD VERIFY PRECISE LOCATION, ELEVATION, ARRANGEMENT, SIZE, TYPE AND CONDITION OF EXISTING PIPING TO COORDINATE CONNECTIONS TO NEW PIPING, FITTINGS, VALVES, ETC. PRIOR TO FABRICATION OF NEW ITEMS.
2. REPLACEMENT OF EXISTING VALVES WITH NEW VALVES MAY REQUIRE MODIFICATION OF ASSOCIATED PIPING, COUPLINGS, ETC TO ACCOMMODATE DIFFERENT VALVE LENGTHS, DIFFERENT MOTOR OPERATOR CONFIGURATION, ETC. ALL REQUIRED MODIFICATIONS SHALL BE MADE AT NO ADDITIONAL COST TO THE OWNER.
3. INSTALLATION OF REPLACEMENT VALVES SHALL ALSO INCLUDE REMOVAL AND REINSTALLATION OF EXISTING MECHANICAL COUPLINGS ASSOCIATED WITH VALVES. EXISTING MECHANICAL COUPLINGS SHALL BE REINSTALLED WITH NEW GASKETS.
4. IF ANY PIPING OR EQUIPMENT NOT DESIGNATED TO BE REMOVED ARE DAMAGED DUE TO CONSTRUCTION THEY SHALL BE COMPLETELY REMOVED AND REPLACED AT NO ADDITIONAL COST TO THE OWNER.
5. THIS NEW WORK SHEET ONLY SHOWS MECHANICAL PROCESS NEW WORK, SEE HVAC, ELECTRICAL, INSTRUMENTATION AND STRUCTURAL SHEETS FOR ADDITIONAL NEW WORK.
6. IT IS THE CONTRACTOR'S RESPONSIBILITY TO SUPPLY NEW GASKETS AND BOLT KITS FOR ALL WORK DONE.
7. SEE P&ID FOR PIPING AND VALVES SMALLER THAN 3". ALL TAPS TO DIP SHALL BE FACTORY TAPS.
8. SEE STRUCTURAL SHEETS FOR PROPOSED PUMP PAD, COORDINATE WITH PUMP MANUFACTURER FOR MOUNTING REQUIREMENTS.
9. SEE SHEET M-13 TO M-14 FOR ADDITIONAL DETAILS

BACKGROUND INFORMATION NOTE:

BACKGROUND IMAGES USED ON THIS SHEET ARE FROM AS-BUILT DRAWINGS FROM PREVIOUS CONTRACTS THAT WERE PREPARED BASED ON INFORMATION PROVIDED BY OTHERS. ALL ITEMS SHOWN IN THE BACKGROUND AND ALL NEW ITEMS RELYING ON BACKGROUND INFORMATION SHALL BE VERIFIED BY THE CONTRACTOR FOR ACCURACY BEFORE APPLYING THIS INFORMATION FOR ANY PURPOSE.

REPLACE ALL TUBING, GAUGES, VALVES, HORSEBIBS, AND MISC APPURTANCES ASSOCIATED WITH PUMPS AND ASSOCIATED WITH PIPING ALL CONNECTIONS TO PROPOSED PIPING SHALL BY FACTORY TAP

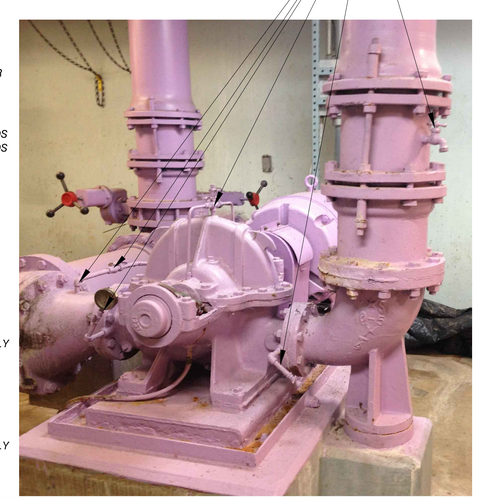

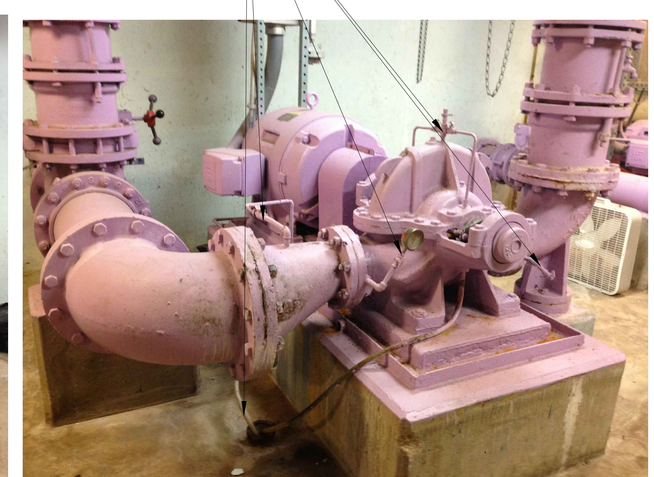

NO.	DR	CK	DATE	DESCRIPTION

REVISIONS

BLACK & VEATCH
Building a world of difference.
Black & Veatch Corporation
Registration No. F-258
Austin, Texas

CAS CONSULTING & SERVICES INC
ARCHITECTURE
ENGINEERING
PLANNING

STATE OF TEXAS
HENRY CALLER LEIGHTON
97914
LICENSED
PROFESSIONAL ENGINEER
9/24/2014

Walnut Creek WWTP - Tertiary Filter Rehabilitation Project
CIP ID No. 3023.025
Austin WATER

NON-POTABLE WATER FILTER GALLERY SECTIONS

DESIGNED BY:	CRS
DRAWN BY:	BRV
REVIEWED BY:	CRS
APPROVED BY:	CRS
PROJECT NO.:	168622
DATE:	04/04/2014
SCALE:	AS NOTED
REVISION:	
DISCIPLINE NO.	M-32
DWG. NO.	54 OF 273

FD168622 SHEET: DT168622 SCHEDULE ID:
File: C:\pw_working\cngpw\d0671660\M-32 NPW Proposed - Sections.dwg Layout: Layout1 Plotted: 9/24/2014 5:01:50 PM

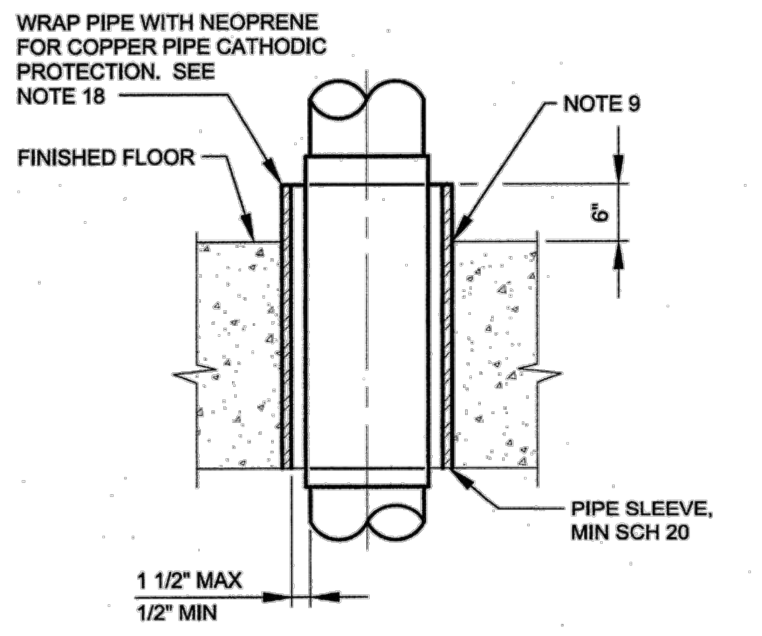

TYPE A
PIPE PENETRATION
FOR FLOORS

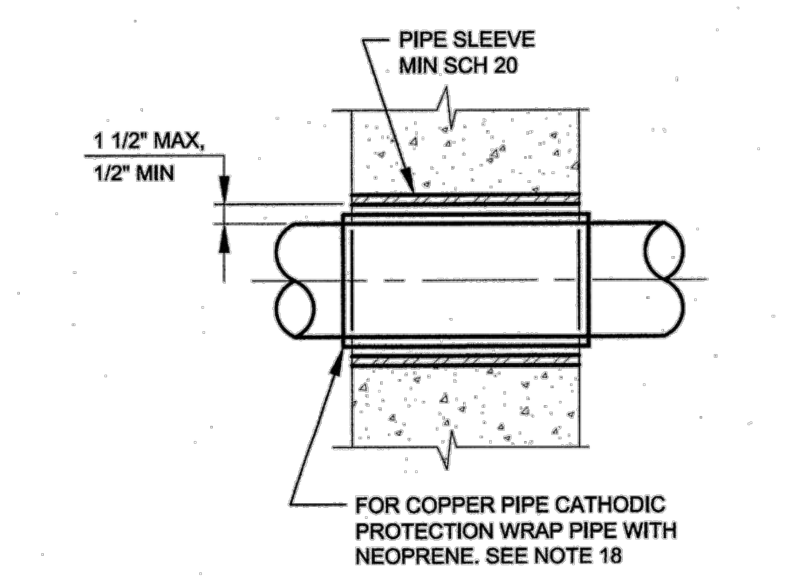

TYPE B
PIPE PENETRATION
FOR WALLS

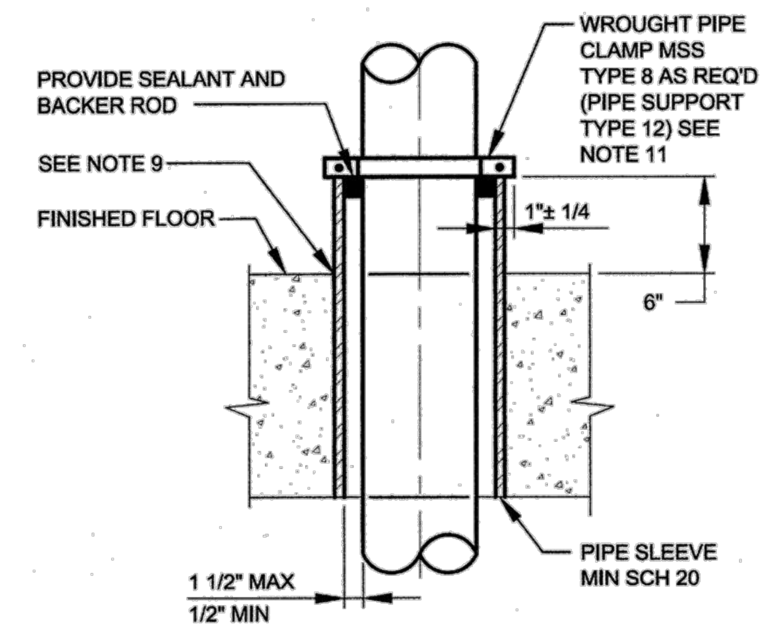

TYPE C
PIPE PENETRATION
FOR FLOORS AND CEILINGS

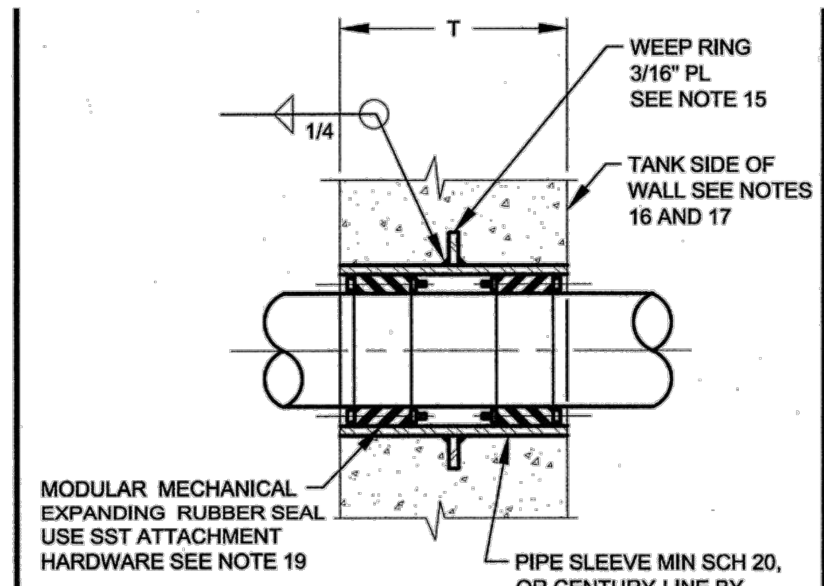

NOTE:
PROVIDE EXPANDING RUBBER SEAL ON BOTH ENDS OF PIPE PENETRATION FOR T≥12-INCHES.

TYPE D
PIPE PENETRATION
FOR WALLS

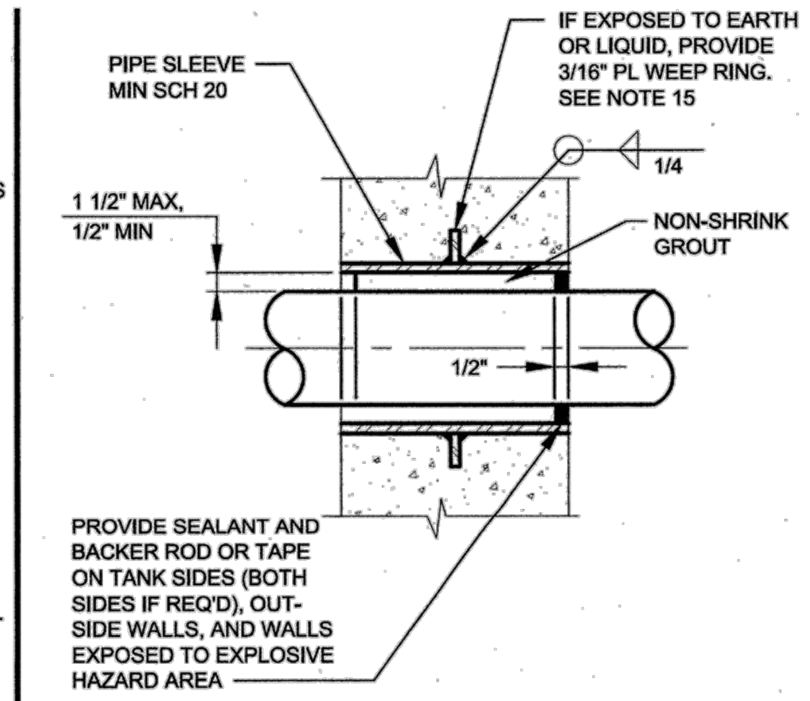

TYPE E
PIPE PENETRATION
FOR WALLS

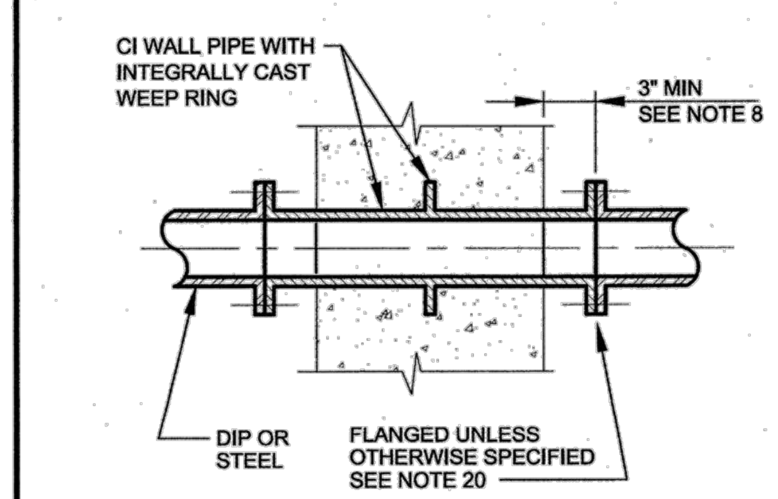

TYPE F
PIPE PENETRATION
FOR WALLS

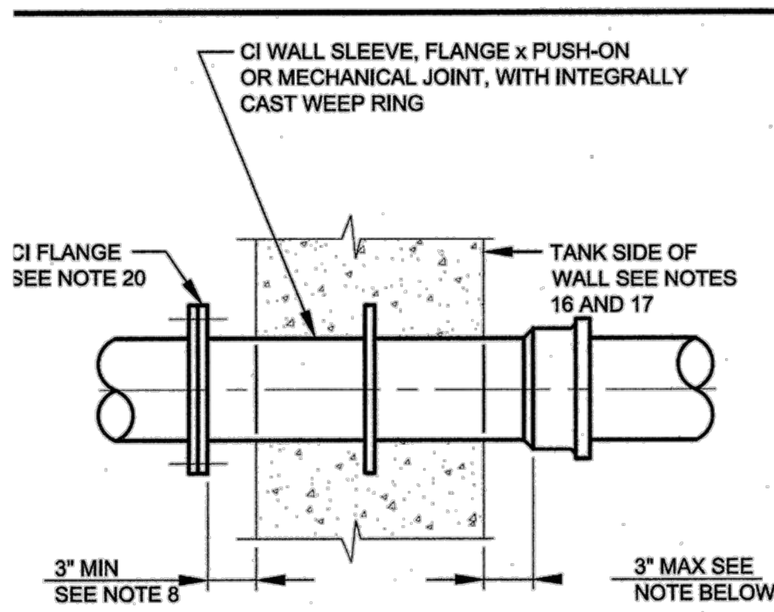

NOTE:
IF TANK SIDE CONNECTION IS PUSH-ON JOINT, BELL FACE MAY BE FLUSH WITH WALL. IF TANK SIDE CONNECTION IS MECHANICAL JOINT, BELL MUST BE PROJECT FAR ENOUGH TO ALLOW BOLTS TO BE REMOVED.

TYPE G
PIPE PENETRATION
FOR WALLS

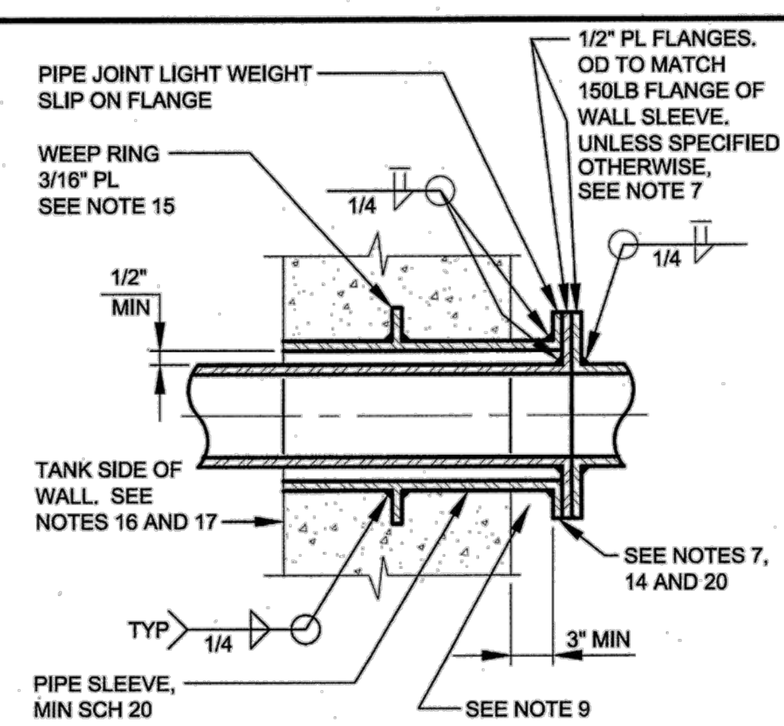

TYPE H
PIPE PENETRATION
FOR WALLS, FLOORS, AND CEILINGS

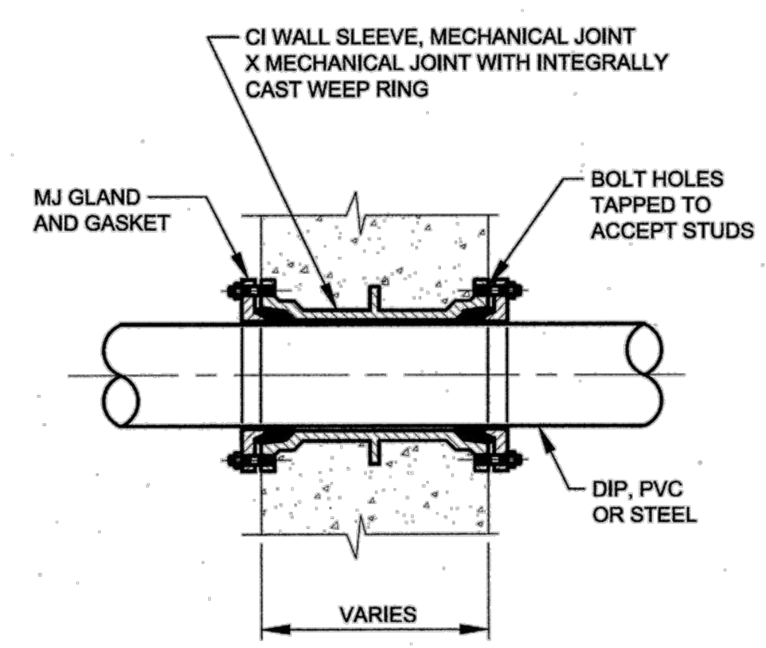

TYPE J
PIPE PENETRATION
FOR WALLS

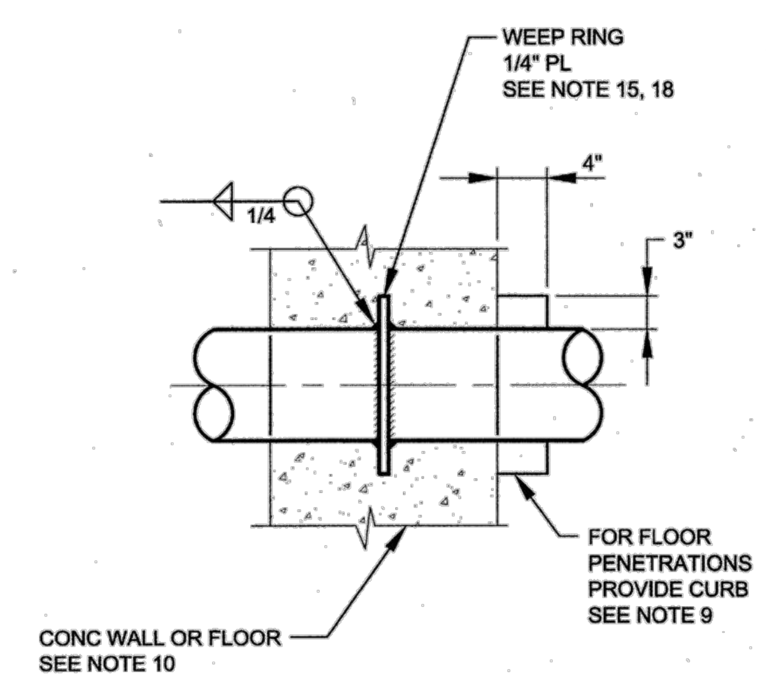

TYPE K
PIPE PENETRATION
FOR WALLS, FLOORS, AND CEILINGS

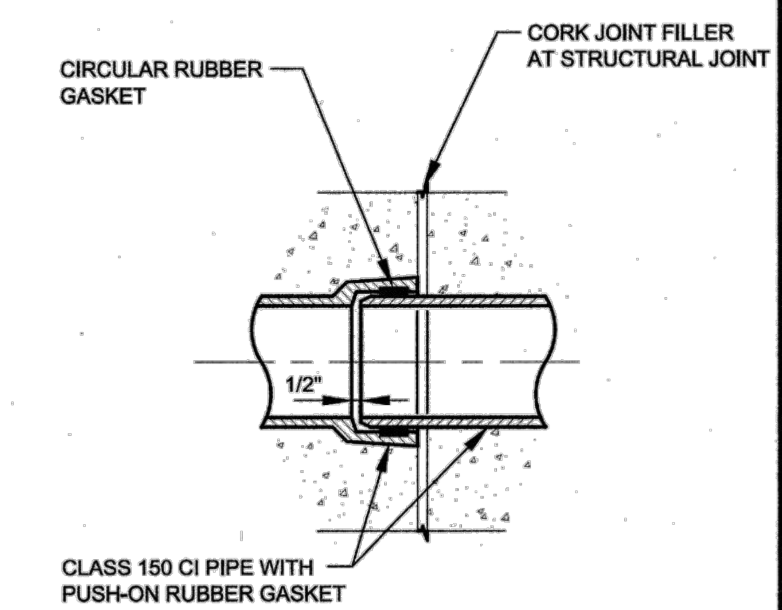

TYPE L
PIPE PENETRATION
AT STRUCTURAL JOINTS
FLEXIBLE JOINT FOR DRAINAGE LINES

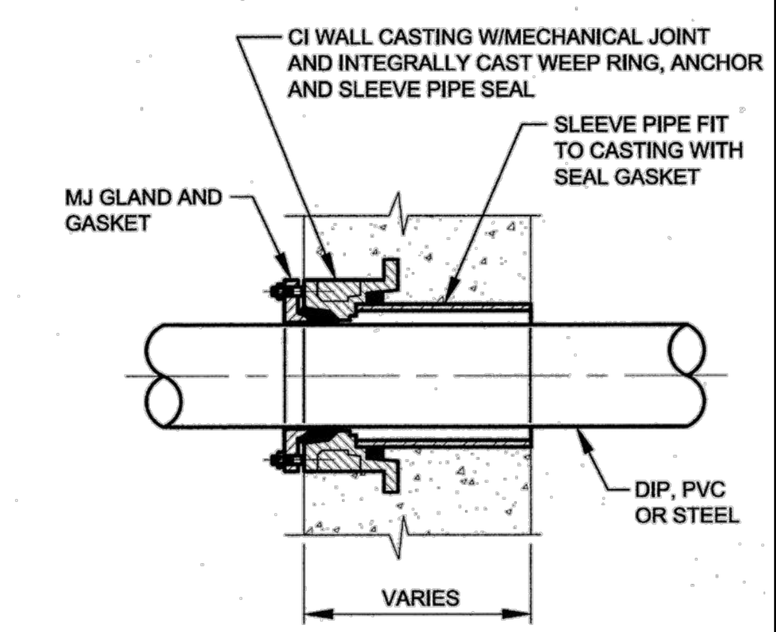

TYPE M
PIPE PENETRATION
FOR WALLS

TABLE OF PIPE PENETRATION TYPES

	CONDITION			PIPE MATERIAL TYPE			
	FROM	TO	STATUS	STEEL	CAST IRON	COPPER	PLASTIC
1	TANK	TANK BELOW WS	NEW	E,H,J OR K	E,F,G OR J	E	E OR J
			EXIST	X1 OR X2	X1 OR X2	X1 OR X2	X1 OR X2
2	TANK	TANK ABOVE WS	NEW	D,E OR M	D,E OR M	D OR E	D,E OR M
			EXIST	X1 OR X2	X1 OR X2	X1 OR X2	X1 OR X2
3	PASSAGE	TANK BELOW WS	NEW	E,H,J OR K	E,F,G OR J	E	E OR J
			EXIST	X1 OR X2	X1 OR X2	X1 OR X2	X1 OR X2
4	PASSAGE	TANK ABOVE WS	NEW	A,C,D,E OR M	A,C,D,E OR M	D OR E	A,C,D,E OR M
			EXIST	X1 OR X2	X1 OR X2	X1 OR X2	X1 OR X2
5	PASSAGE	PASSAGE SEE NOTE 6	NEW	A, B OR C	A, B OR C	A, B OR C	A, B OR C
			EXIST	X1 OR X2	X1 OR X2	X1 OR X2	X1 OR X2
6	PASSAGE	OUTSIDE WALL	NEW	D,E OR J	D,E,G OR J	D OR E	D,G OR J
			EXIST	X1 OR X2	X1 OR X2	X1 OR X2	X1 OR X2
7	PASSAGE	ROOF	ALL	AS SHOWN ON ARCHITECTURAL DETAIL DRAWINGS			
8	TANK	OUTSIDE WALL	NEW	D,E,F OR J	D,E,F,G OR J	D OR E	D,E OR J
			EXIST	X1 OR X2	X1 OR X2	X1 OR X2	X1 OR X2

GENERAL NOTES:

1. THE MATERIAL PRESENTED ON THIS DRAWING IS FOR REFERENCE USE. SOME OF THE DETAILS OR INFORMATION PRESENTED MAY NOT BE REQUIRED AS PART OF THIS CONTRACT.
2. ALL DETAILS ON THIS SHEET ARE NOT TO SCALE.

PIPE PENETRATION NOTES:

1. WHERE PIPES PASS THROUGH WALLS, FLOORS, OR CEILINGS, PENETRATIONS SHALL CONFORM TO TABLE AT LEFT, EXCEPT AS OTHERWISE SPECIFIED.
2. IN TABLE AT LEFT, "TANK" SHALL MEAN ANY PART OF A STRUCTURE CONTAINING LIQUID, OR IN CONTACT WITH THE EARTH.
3. IN TABLE AT LEFT, "PASSAGE" SHALL MEAN ANY ROOM, GALLERY, TUNNEL, OR SIMILAR ENCLOSURE.
4. IN TABLE AT LEFT, WATER SURFACE "WS" SHALL MEAN AN ELEVATION 9-INCHES ABOVE MAXIMUM WATER SURFACE SHOWN.
5. ALL STEEL SLEEVES SHALL BE HOT DIPPED GALVANIZED AFTER FABRICATION.
6. IN CONDITION 5, TYPE E,H,J, OR K SHALL BE USED WHERE ONE SIDE CONTAINS EXPLOSION PROOF EQUIPMENT, WHERE FLOODING IS POSSIBLE, OR WHERE SPECIFIED (TYPE E ONLY FOR COPPER).
7. SEAL FLANGES SHALL BE FACED AND DRILLED TO 150 POUND STANDARD UNLESS SPECIFIED OTHERWISE. EACH JOINT SHALL BE FULL FACE GASKETED.
8. WHERE SPECIFIED, CAST IRON FLANGES MAY BE INSTALLED FLUSH WITH WALL AND TAPPED FOR STUDS.
9. PROVIDE CURB WHERE PENETRATING FLOOR, EXCEPT FOR PENETRATION TYPES A, C, AND H. CURB SHALL BE 4" HIGH BY 3" WIDE.
10. PROVIDE A MINIMUM OF 3" CLEARANCE BETWEEN REINFORCING STEEL AND FERROUS METAL PENETRATIONS.
11. WHEN MSS TYPE 8 PIPE CLAMP IS USED FOR COPPER PIPE, CLAMP SHALL BE PLASTIC COATED BY MFR.
12. TYPE X2 PENETRATION FOR EXISTING STRUCTURES SHOWS SLEEVE INSTALLATION DETAIL ONLY. USE TYPE A,B,C,D,E,H OR K DETAILS FOR ACTUAL PENETRATION.
13. INSULATION SHALL NOT EXTEND THROUGH SLEEVES, UNLESS OTHERWISE SPECIFIED.
14. WHERE CAST IRON PIPE IS EMBEDDED IN CONCRETE AT AN EXPANSION JOINT, USE TYPE L PENETRATION DETAIL.
15. WEEP RINGS SHALL HAVE A MINIMUM DIAMETER 3 INCHES GREATER THAN THE OUTSIDE PIPE DIAMETER.
16. "TANK SIDE OF WALL" SHALL MEAN SIDE OF WALL NORMALLY EXPOSED TO LIQUID, EARTH, OR OUTSIDE ATMOSPHERE.
17. SEAL WITH MASTIC SEALANT WHERE WALL IS EXPOSED TO LIQUID, EARTH OR AN EXPLOSION HAZARD AREA.
18. FOR COPPER PIPE IN A "PASSAGE" TO "PASSAGE" CONDITION (SEE TABLE AT LEFT), PROVIDE A FULL 360 DEGREE WRAP OF 1/16 INCH THICK NEOPRENE. BOND NEOPRENE TO PIPE WITH A COMPATIBLE WATERPROOF ADHESIVE. EXTEND NEOPRENE 1 INCH MINIMUM BEYOND LIMITS OF PENETRATION SLEEVE.
19. WHEN MODULAR MECHANICAL EXPANDING RUBBER SEAL IS USED ON COPPER PIPE, PROVIDE GLASS REINFORCED NYLON PRESSURE PLATES IN PLACE OF STANDARD STEEL UNITS.
20. FLANGE BOLT HOLES SHALL EQUALLY STRADDLE THE VERTICAL CENTER-LINE OF THE FLANGE TO ASSURE PROPER CONNECTION TO ADJOINING PIPE, VALVES AND FITTINGS.
21. CORROSION PROTECTION MEASURES ARE REQUIRED FOR DIP, STEEL AND STAINLESS STEEL PIPES THAT TRANSITION FROM A BURIED CONDITION INTO A TUNNEL OR STRUCTURE. SEE DIVISION 15 AND OUTSIDE PIPING DRAWINGS.

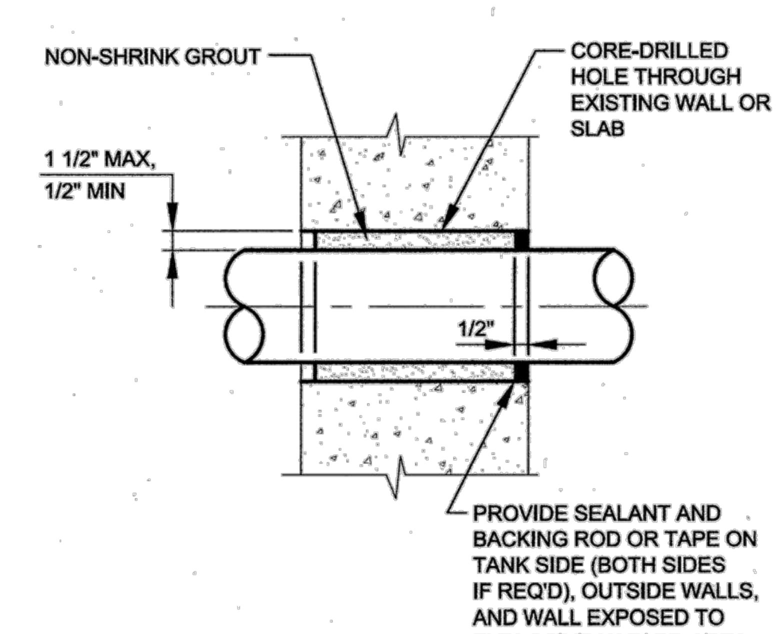

TYPE X1
PIPE PENETRATION
FOR EXISTING WALLS, FLOORS, AND CEILINGS

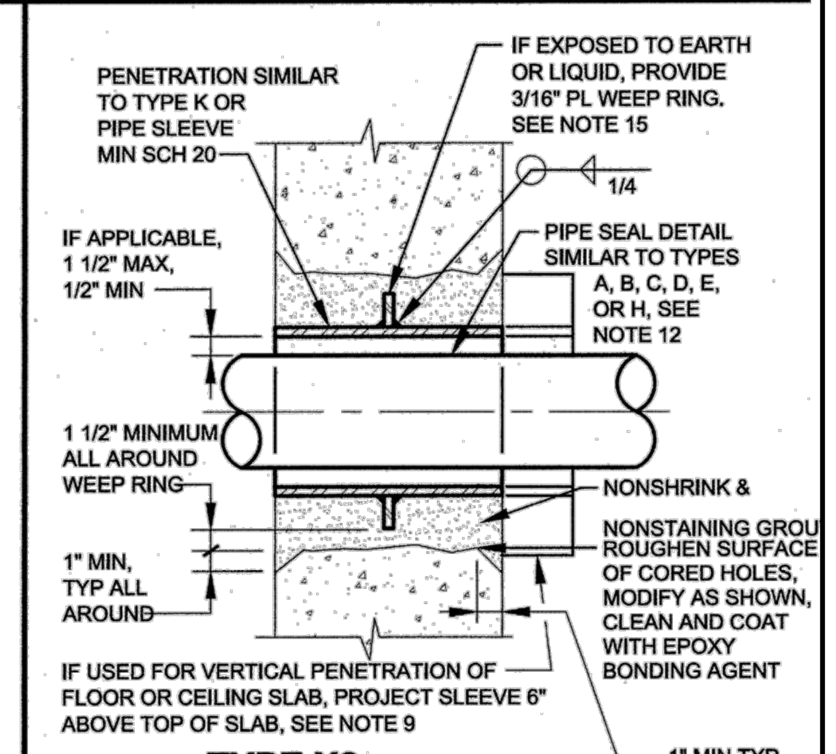

TYPE X2
PIPE PENETRATION
FOR EXISTING WALLS, FLOORS, AND CEILINGS

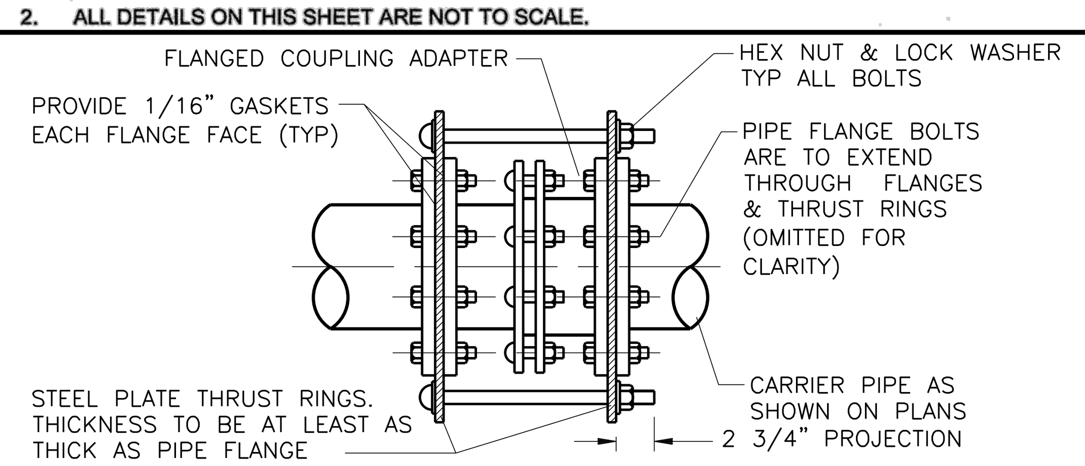

NOTES

1. FOR PIPE 6" DIA AND SMALLER, USE (2) 3/4" DIA TIE RODS MIN.
2. FOR PIPE 8" DIA AND LARGER, USE (4) 1" DIA TIE RODS MIN.

THRUST HARNESS FOR FLANGED COUPLING ADAPTER

DETAIL A
M-33
NTS

NO.	DR	CK	DATE	DESCRIPTION

REVISIONS

BLACK & VEATCH
Building a world of difference.
Black & Veatch Corporation
Registration No. F-258
Austin, Texas

CAS CONSULTING & SERVICES INC
7908 CAMERON RD
AUSTIN, TEXAS 78754
REG. No. F-003572

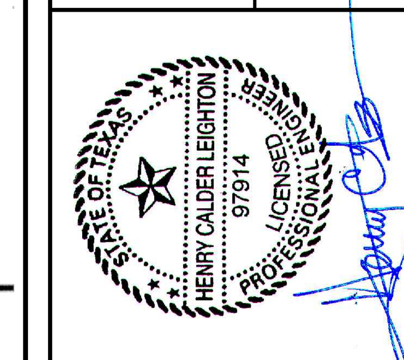

9/24/2014

Austin WATER

Walnut Creek WWTP - Tertiary Filter Rehabilitation Project

CIP ID No. 3023.025

NON-POTABLE WATER FILTER GALLERY DETAILS

DESIGNED BY:	CRS
DRAWN BY:	BRV
REVIEWED BY:	CRS
APPROVED BY:	CRS
PROJECT NO.:	168622
DATE:	04/04/2014
SCALE:	AS NOTED

REVISION:

DISCIPLINE NO.
M-33

DWG. NO.
55 OF 273

FD168622 D168622 File: C:\pw_working\cngpw\d0671660\M-33.dwg
SAVED: LER07108, 6/12/2013 9:00:17 AM
PWFLDR: D168622....\09.5025 - Civil Drawings
Layout: Layout1 Plotted: 9/24/2014 5:02:46 PM

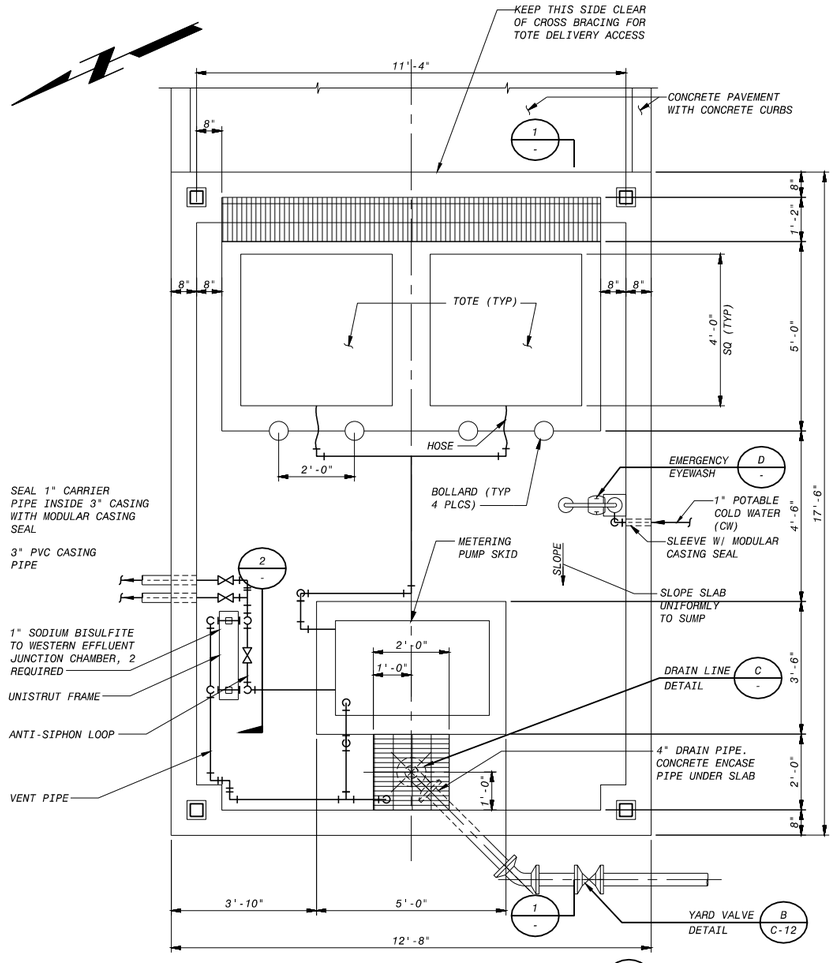

PLAN VIEW: SODIUM BISULFITE FEED AREA (A / C-02B)

12" 6" 0 1' 2' 3' 4' 5'
1/2"=1'-0"

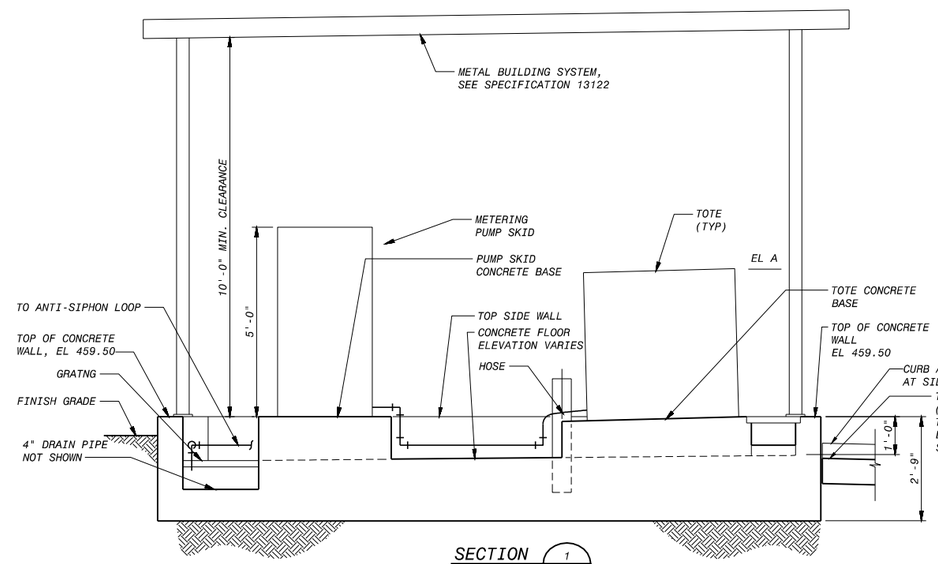

SECTION (1 / -)

12" 6" 0 1' 2' 3' 4' 5'
1/2"=1'-0"

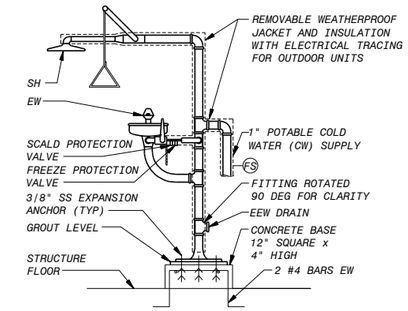

EMERGENCY SHOWER AND EYE WASH (D / -)
NO SCALE

NOTES:
1. SEE STRUCTURAL SHEETS FOR STRUCTURE ELEVATIONS, FLOOR SLOPES, ETC.

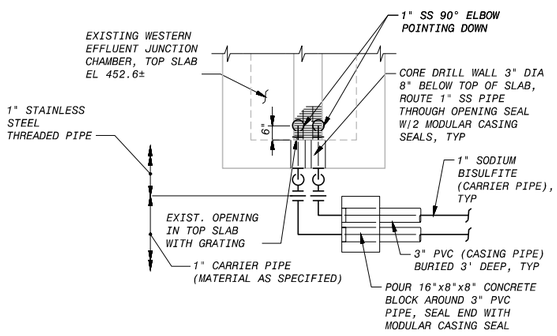

PLAN

DIFFUSER CONNECTION AT WESTERN EFFLUENT JUNCTION CHAMBER (B / C-02B)
NOT TO SCALE

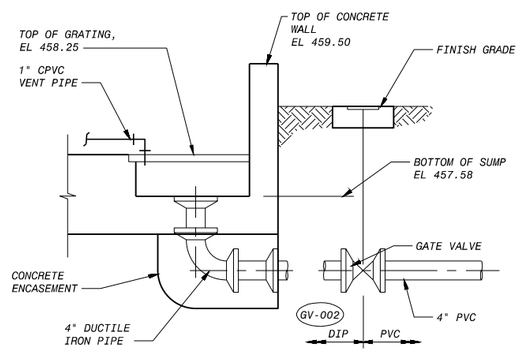

DRAIN LINE DETAIL (C / -)
3/4" = 1'-0"

12" 6" 0 1' 2' 3'
3/4"=1'-0"

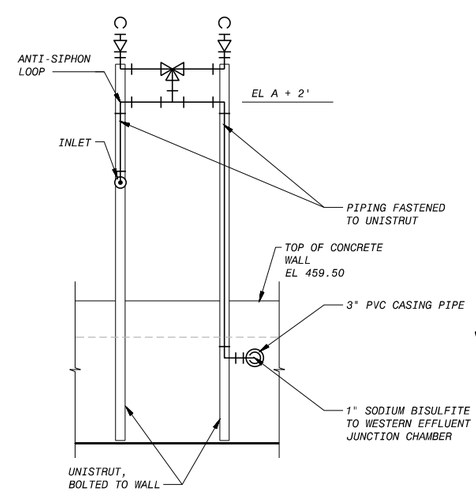

SECTION (2 / -)
3/4" = 1'-0"

12" 6" 0 1' 2' 3'
3/4"=1'-0"

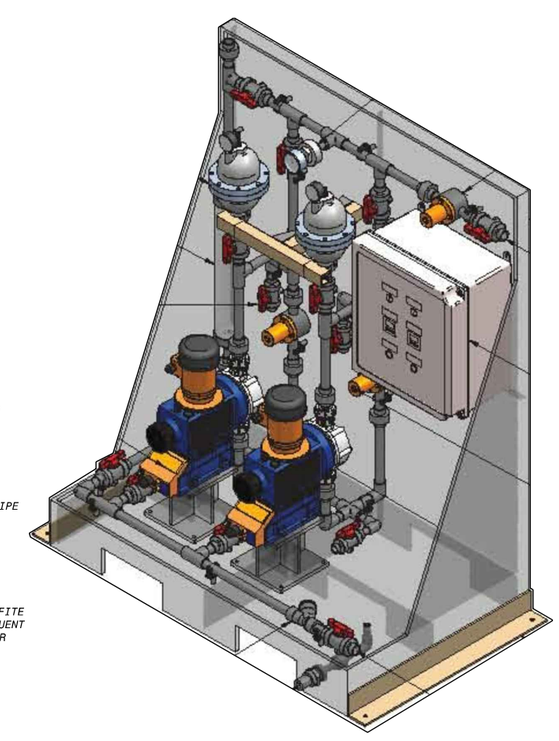

METERING PUMP SKID

NO.	GR	CK	DATE	DESCRIPTION

REVISIONS

BLACK & VEATCH
Building a world of difference.
Black & Veatch Corporation
Registration No. F-869
Austin, Texas

Carlos Dorantes
CARLOS R. CHAVEZ
119722
PROFESSIONAL ENGINEER
STATE OF TEXAS
6/7/2016

Austin WATER
Walnut Creek WWTP - Tertiary Filter Rehabilitation Project
CIP ID No. 3023.025

MECHANCAL PROCESS
SODIUM BISULFITE STRUCTURE
PLAN, SECTIONS AND DETAILS

DESIGNED BY:	JB
DRAWN BY:	JPS
REVIEWED BY:	EDV
APPROVED BY:	EDV
PROJECT NO.:	168622
DATE:	4/4/2014
SCALE:	AS SHOWN
REVISION:	

DISCIPLINE NO. M-34
DWG. NO. 56 OF 273

FD168622 SAVED: LEF07109, 4/2/2014 7:56:11 AM
D168622 DWG ID: Mechanical Process Drawings
File: C:\PWBatchPDF\Process\168622 - Austin Walnut Creek WWTP Filter Rehab\M_34.dwg Layout: Work Plotted: 6/9/2016 1:53:29 PM

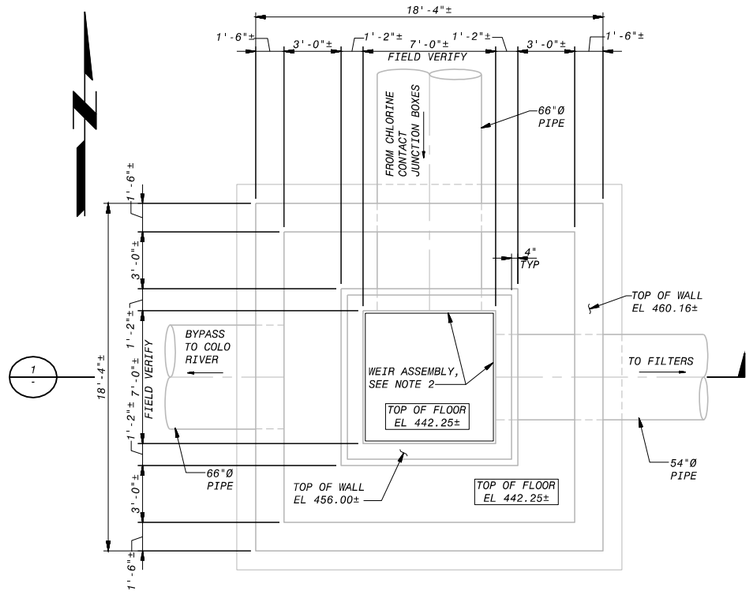

EXISTING OVERFLOW CHAMBER PLAN
1/4" = 1'-0"

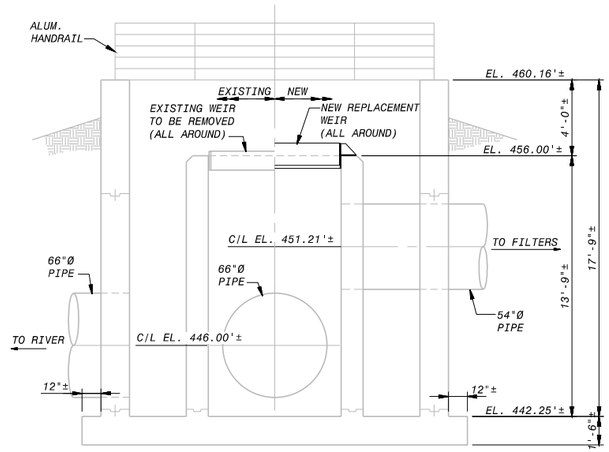

1 - SECTION
1/4" = 1'-0"

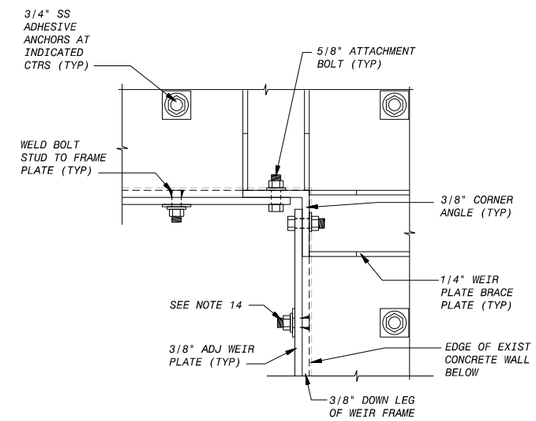

PLAN

A - DETAIL
3" = 1'-0"

NOTES:

1. ALL ITEMS EXISTING EXCEPT NEW OVERFLOW WEIR.
2. REMOVE EXISTING METAL WEIR AND ATTACHMENT BOLTS.
3. WEIR PLATE ATTACHMENT FRAME (ONE-PIECE) FOR DROPPING ONTO EXISTING CONCRETE.
4. CONTRACTOR TO FIELD MEASURE PRIOR TO FABRICATION & SUBMITTAL DRAWINGS PREPARATION.
5. NEW WEIR MOUNTING FRAME, 3/8" THICK UNO, 316 STAINLESS STEEL, ALL WELDS FULL SEAL TYPE.
6. WEIR PLATES (4), 3/8"THICK, 316 STAINLESS STEEL REMOVABLE/ADJUSTABLE TO TOP ELEVATIONS 456.67' AND 456.33'.
7. ALL ADHESIVE ANCHOR BOLTS 3/4"Ø TYPE 316 SS.
8. ALL WEIR PLATE ATTACHMENT BOLTS 5/8"Ø TYPE 316 SS.
9. PICKLE ALL STAINLESS STEEL MEMBERS AFTER FABRICATION.
10. ELEVATIONS INDICATED ARE NAD29 WHERE NAD29=NAD88-0.30.
11. DBI SALA SERIES #2101636 SS D-RING W/ ANCHOR PLATE, OR EQUAL, WELD TO WEIR PLATE.
12. AS REQUIRED, GRIND ALL WELDS THAT PREVENT WEIR PLATES FROM BOLTING FLAT TO THE PERIMETER MOUNTING FRAME.
13. PROVIDE PLASTIC PLUG FOR ALL UNUSED WEIR PLATE ADJ HOLES (TYP).
14. 5/8" SS BOLT STUD, WELDED TO 3/8" THICK FRAME PLATE (TYP).
15. PROVIDE MINIMUM NECESSARY GAP ALL AROUND WEIR ATTACHMENT FRAME TO FACILITATE INSTALLATION.
16. PREPARE EXISTING CONCRETE SURFACE AND APPLY MOISTURE INSENSITIVE MASTIC FULL PERIMETER.

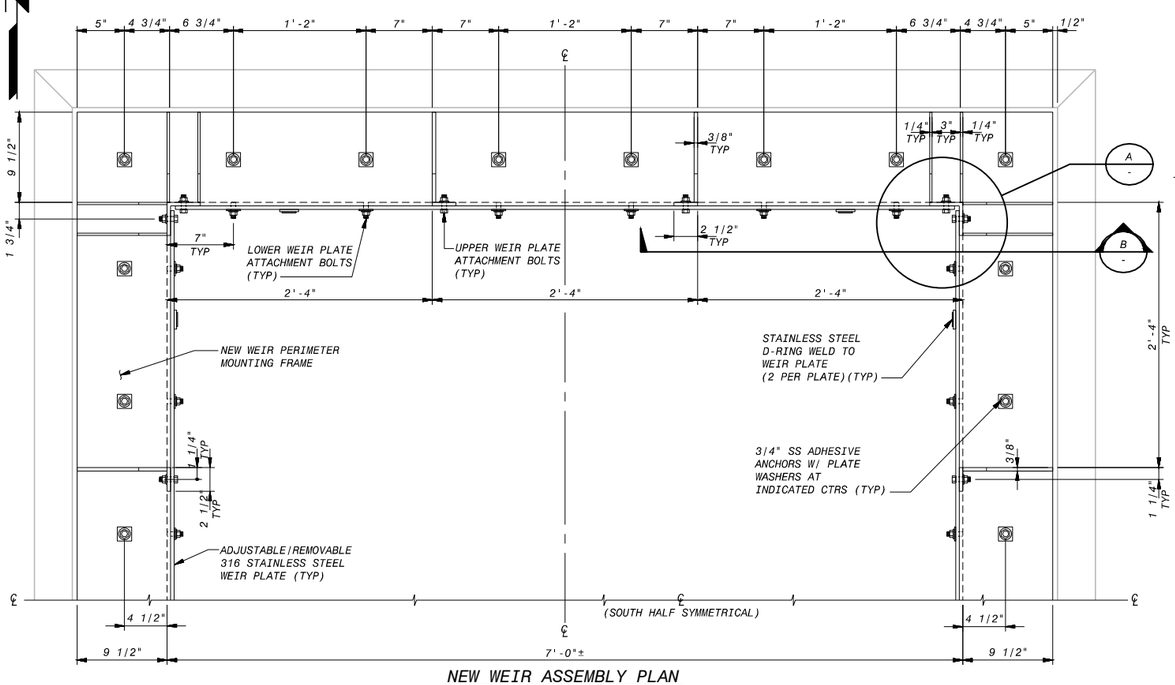

NEW WEIR ASSEMBLY PLAN
1 1/2" = 1'-0"

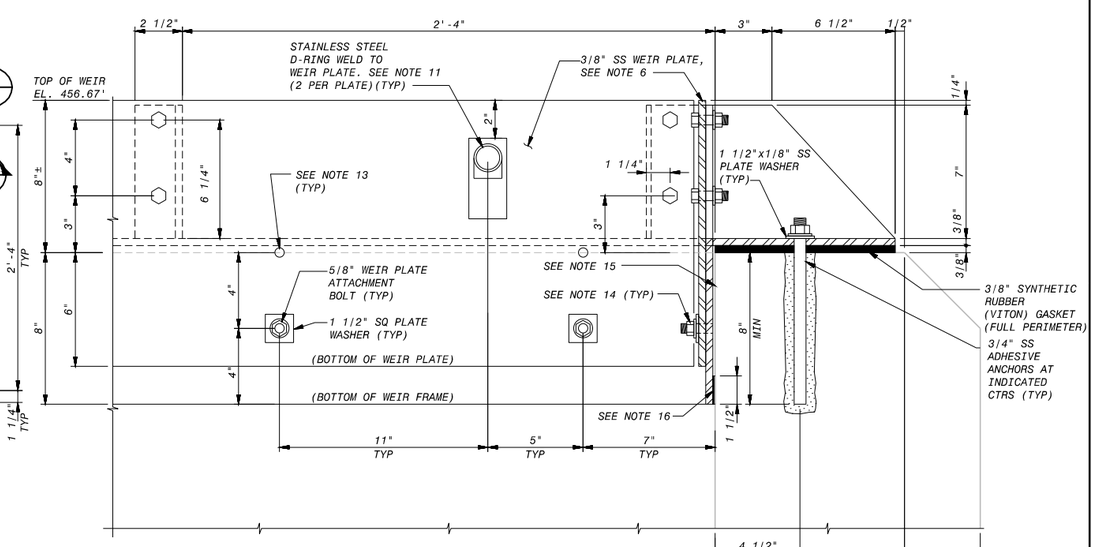

SECTION

B - DETAIL
3" = 1'-0"

NO.	QR	CK	DATE	DESCRIPTION

REVISIONS

BLACK & VEATCH
Building a world of difference.
Black & Veatch Corporation
Registration No. F-869
Austin, Texas

Carlos Dominguez
STATE OF TEXAS
CARLOS R. DOMINGUEZ
119722
REGISTERED PROFESSIONAL ENGINEER
6/7/2016

Walnut Creek WWTP - Tertiary Filter Rehabilitation Project
CIP ID No. 3023.025
Austin Water

MECHANICAL PROCESS
EXIST OVERFLOW CHAMBER MODIFICATIONS
PLANS, SECTIONS, AND DETAILS

DESIGNED BY:	BMC
DRAWN BY:	BLR
REVIEWED BY:	EP
APPROVED BY:	WLK
PROJECT NO.:	168622
DATE:	4/4/2014
SCALE:	AS SHOWN

REVISION:

DISCIPLINE NO.
M-35

DWG. NO.
57 OF 273

F0168622 SAVED: P0903455, 04/02/2014 10:35:33 AM
D168622 PCSAVED: Mechanical Process Drawings
File: C:\PWBatchPDF\Process\168622 - Austin Walnut Creek WWTP Filter Rehab\M_35.dwg Layout: Work Plotted: 6/9/2016 1:53:42 PM

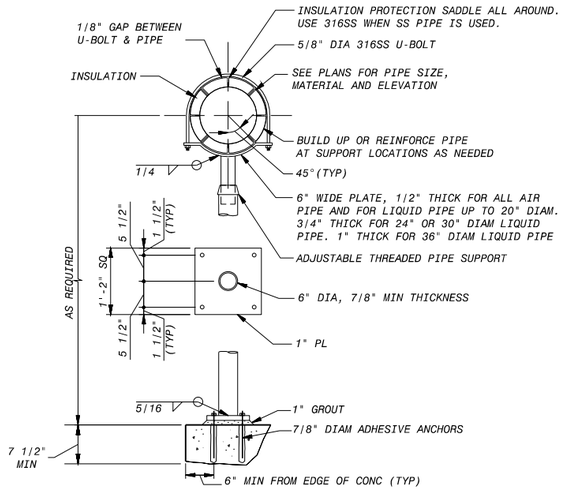

PIPE GUIDE (A)
3/4"=1'-0"

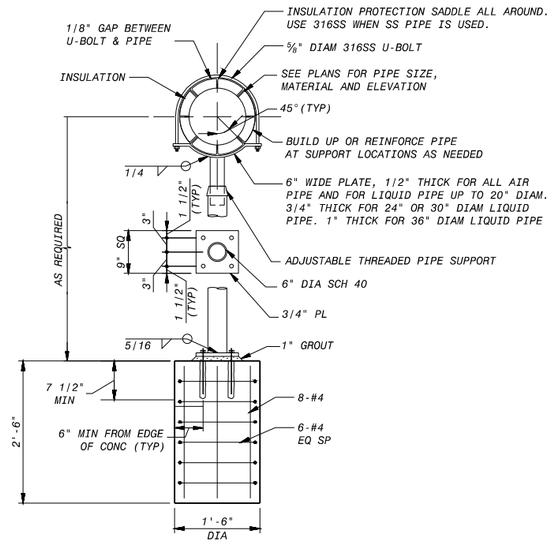

STANCHION GUIDE (B)
3/4" = 1'-0"

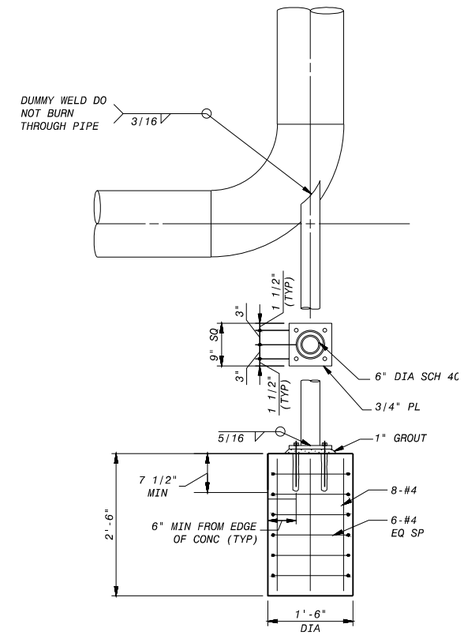

ELBOW ANCHOR (C)
3/4"=1'-0"

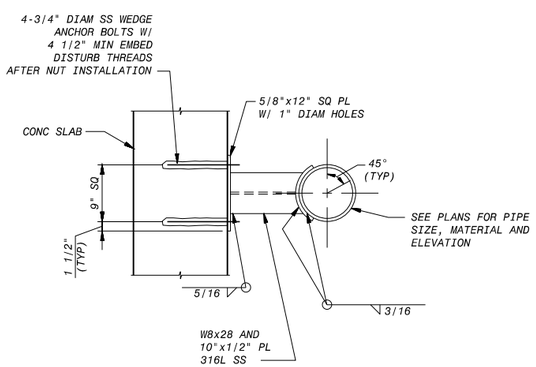

PIPE WALL ANCHOR SUPPORT (D)
1"=1'-0"

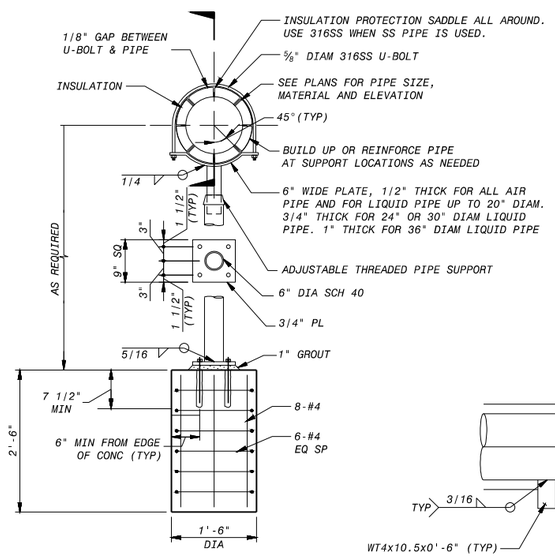

ELEVATION

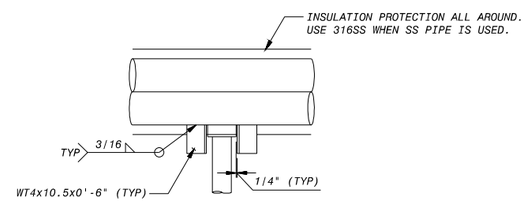

SECTION

PIPE AXIAL ANCHOR (E)
3/4" = 1'-0"

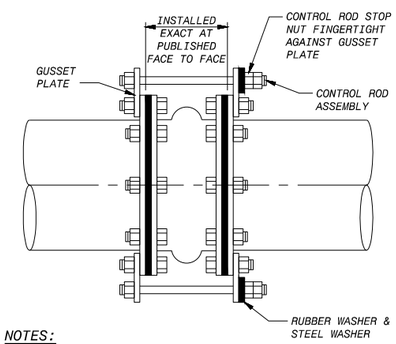

NOTES:

1. INSTALL BOLTS FROM THE BACK UP RING SIDE TO AVOID BOLT PROJECTIONS CUTTING THE COVER.
2. NUMBER OF ARCHS PER EXPANSION JOINT SHALL BE AS INDICATED ON DRAWINGS.
3. CONTRACTOR SHALL LEAVE SPACE BETWEEN PIPE FITTINGS EQUAL TO MANUFACTURER'S EXPANSION JOINTS FACE TO FACE LENGTH.
4. CONTROL ROD STOP NUT SHALL BE FINGER TIGHT AGAINST GUSSET PLATE WHEN PIPE IS AT ROOM TEMPERATURE LOCK ON POSITION WITH LOCKNUT. CONTROL ROD ASSEMBLIES SHALL PREVENT EXTENSION OF EXPANSION JOINT.
5. CONTROL RODS SHALL BE LOCATED AT 6 AND 12 O'CLOCK POSITIONS.

RUBBER EXPANSION JOINT WITH CONTROL RODS (F)
NO SCALE

NO.	BY	CK	DATE	DESCRIPTION

REVISIONS

BLACK & VEATCH
Building a world of difference.
Black & Veatch Corporation
Registration No. F-569
Austin, Texas

STATE OF TEXAS
CARLOS R. GOMEZ
119722
LICENSED
PROFESSIONAL ENGINEER
Carlos Gomez
6/7/2016

Austin WATER

Walnut Creek WWTP - Tertiary Filter Rehabilitation Project
CIP ID No. 3023.025

MECHANICAL PROCESS
PROCESS AIR PIPE SUPPORTS
SHEET 1 OF 3

DESIGNED BY:	SST
DRAWN BY:	AWL
REVIEWED BY:	WLK
APPROVED BY:	TSD
PROJECT NO.:	168622
DATE:	4/4/2014
SCALE:	AS SHOWN
REVISION:	
DISCIPLINE NO.	M-36
DWG. NO.	58 OF 273

F0168622 SAVED: MCKO3672, 2/27/2014 4:11:25 PM
D168622 ORCAD10: Mechanical Process Drawings
File: C:\PWBatchPDF\Process\168622 - Austin Walnut Creek WWTP Filter Rehab\M_36.dwg Layout: Work Plotted: 6/9/2016 1:53:55 PM

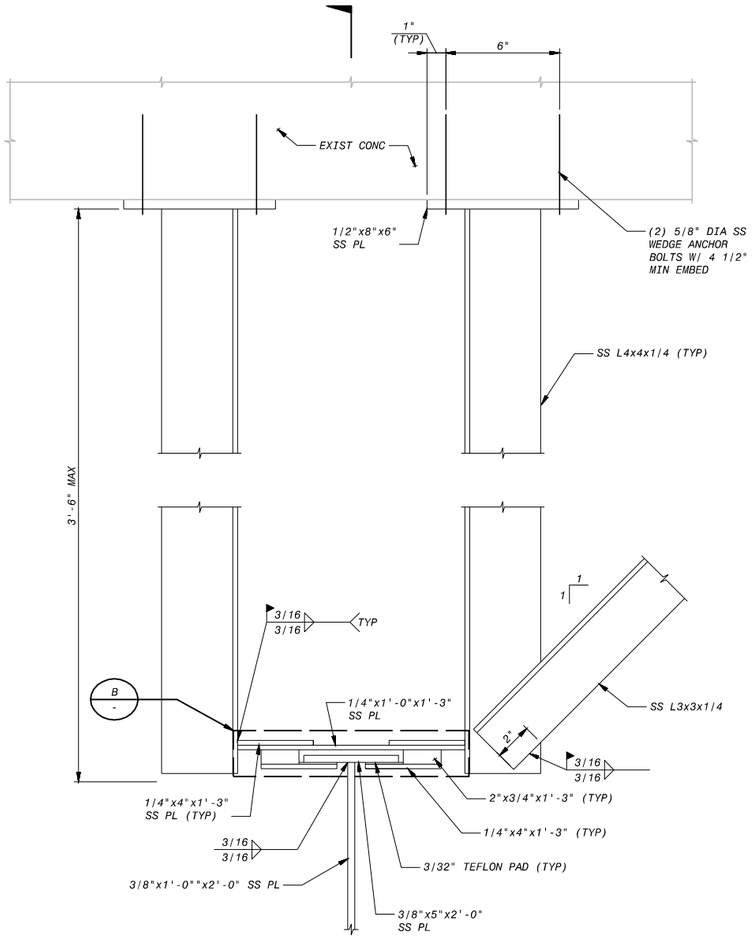

TYPICAL PIPE AXIAL ANCHOR (A / -)
NO SCALE

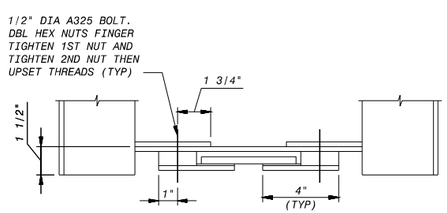

DETAIL (B / -)
NO SCALE

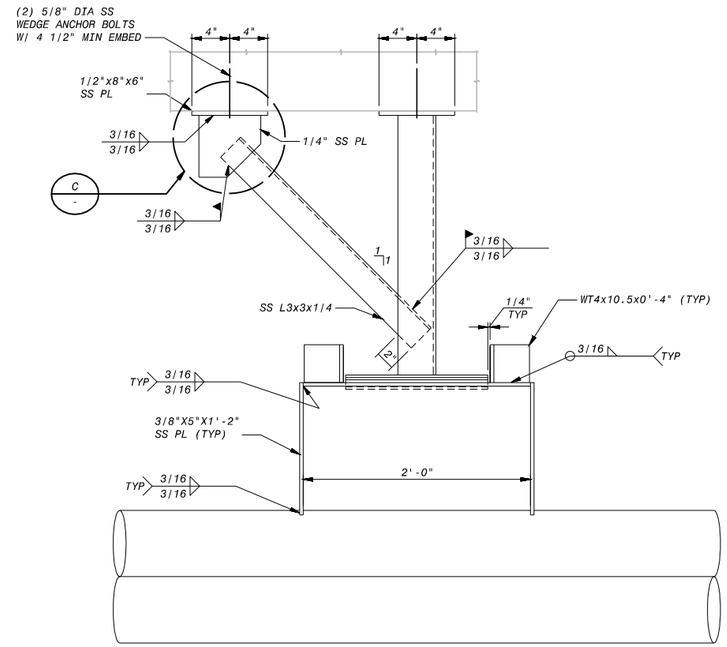

SECTION (1 / -)
1 1/2" = 1'-0"

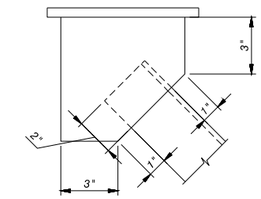

DETAIL (C / -)
3" = 1'-0"

NO.	DR	CK	DATE	DESCRIPTION

REVISIONS

BLACK & VEATCH
Building a world of difference.
Black & Veatch Corporation
Registration No. F-869
Austin, Texas

STATE OF TEXAS
CARLOS R. GOMEZ
119722
LICENSED
PROFESSIONAL ENGINEER
6/7/2016

Austin WATER
Walnut Creek WWTP - Tertiary Filter Rehabilitation Project
CIP ID No. 3023.025

MECHANICAL PROCESS
PROCESS AIR PIPE SUPPORTS
SHEET 2 OF 3

DESIGNED BY:	SST
DRAWN BY:	AWL
REVIEWED BY:	WLK
APPROVED BY:	TSD
PROJECT NO.:	168622
DATE:	4/4/2014
SCALE:	AS SHOWN

REVISION:

DISCIPLINE NO.
M-37

DWG. NO.
59 OF 273

FD168622 SAVED: SP168054 10/8/2013 2:41:43 PM
D168622 PAGE SETUP: D168622 Mechanical Process Drawings
File: C:\PWBatchPDF\Process\168622 - Austin Walnut Creek WWTP Filter Rehab\M_37.dwg Layout: Work Plotted: 6/9/2016 1:54:06 PM

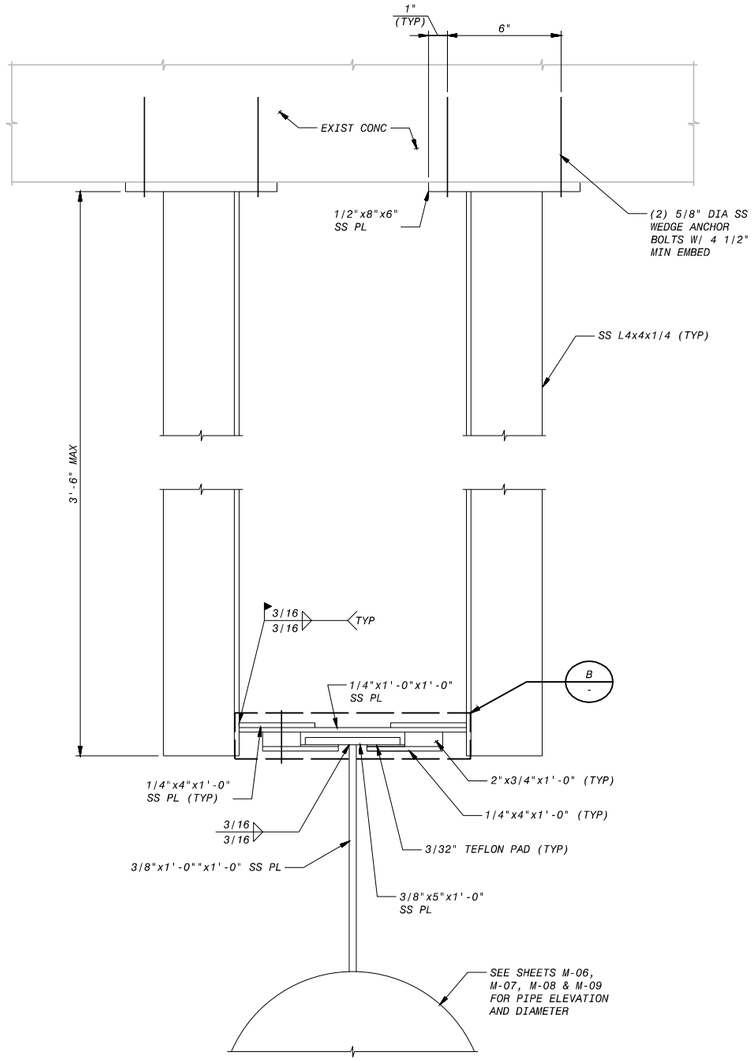

TYPICAL PIPE SLIDING GUIDE (A / -)
3"=1'-0"

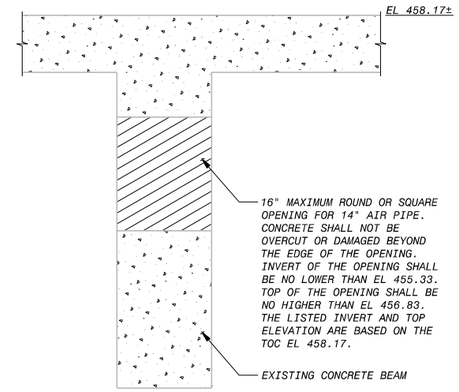

DETAIL (C / -)
NO SCALE

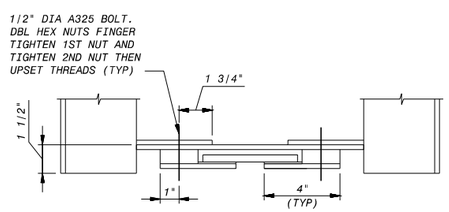

DETAIL (B / -)
3"=1'-0"

NO.	BY	CK	DATE	DESCRIPTION

REVISIONS

BLACK & VEATCH
Building a world of difference.
Black & Veatch Corporation
Registration No. F-869
Austin, Texas

STATE OF TEXAS
CARLOS R. CHAVEZ
119722
LICENSED
PROFESSIONAL ENGINEER
Carlos Chavez
6/7/2016

Walnut Creek WWTP - Tertiary Filter Rehabilitation Project
CIP ID No. 3023.025

Austin Water

MECHANICAL PROCESS
PROCESS AIR PIPE SUPPORTS
SHEET 3 OF 3

DESIGNED BY:	SST
DRAWN BY:	AWL
REVIEWED BY:	WLK
APPROVED BY:	TSD
PROJECT NO.:	168622
DATE:	4/4/2014
SCALE:	AS SHOWN

REVISION:

DISCIPLINE NO.
M-38

DWG. NO.
60 OF 273

FD168622 SAVED: LE007109, 2/28/2014 9:56:33 AM
D168622 PAGESETUP: Mechanical Process Drawings
File: C:\PWBatchPDF\Process\168622 - Austin Walnut Creek WWTP Filter Rehab\M_38.dwg Layout: Work Plotted: 6/9/2016 1:54:18 PM

STRUCTURAL GENERAL NOTES

THESE GENERAL NOTES SHALL APPLY UNLESS OTHERWISE SPECIFICALLY NOTED ON PLANS AND DETAILS. THE CONTRACTOR SHALL VERIFY ALL DIMENSIONS AND SHALL COORDINATE ALL STRUCTURAL PLANS AND DETAILS WITH OTHER DISIPLINES'DRAWINGS BEFORE STARTING WORK. THE ENGINEER SHALL BE NOTIFIED OF ANY DISCREPANCIES PRIOR TO CONSTRUCTION. DESIGN, CONSTRUCTION, WORKMANSHIP AND MATERIALS SHALL COMPLY WITH THE 2012 EDITION OF THE INTERNATIONAL BUILDING CODE (IBC).

DESIGN CRITERIA

1. SUPERIMPOSED LIVE LOADS:

   CLEARWELLS

   BURIED ROOF LEVEL..100 PSF

   GROUND LEVEL ROOF SLABS & PLATFORMS........................100 PSF

   BLOWER BUILDING

   GROUND LEVEL FLOOR SLAB....................................200 PSF

   MONORAIL BEAMS (LIFTED LOADS)..............................5 TONS PER BEAM

   ROOF HANGING LIVE LOAD (BELOW)..............................10 PSF

   ROOFTOP LIVE LOAD (ABOVE)..................................20 PSF

   EXISTING FILTER BUILDING

   BULKHEADS AT EXISTING EFFLUENT CONDUIT......................10 PSI

2. WIND LOADS (PER 2012 IBC AND ASCE/SEI 7-10):

   ULTIMATE DESIGN WIND SPEED (3-SECOND GUST): 120 MPH
   NOMINAL DESIGN WIND SPEED (3-SECOND GUST): 93 MPH
   RISK CATEGORY: III
   WIND EXPOSURE C
   INTERNAL PRESSURE COEFFICIENT (GCpi): +0.18/-0.18
   MAXIMUM WIND DESIGN PRESSURE FOR WALL COMPONENTS AND CLADDING:
   END STRIPS: 27.5/-48.2 PSF
   INTERIOR ZONE: 27.5/-28.2 PSF

3. SEISMIC LOADS (PER 2012 IBC AND ASCE/SEI 7-10):

   RISK CATEGORY: III
   SEISMIC IMPORTANCE FACTOR: 1.25
   MAPPED SPECTRAL RESPONSE ACCELERATION PARAMETERS:
   Ss = 0.082g
   S1 = 0.033g
   SOIL SITE CLASS: D
   DESIGN SPECTRAL RESPONSE ACCELERATION PARAMETERS:
   SDS = 0.088g
   SD1 = 0.053g
   SEISMIC DESIGN CATEGORY: A

4. GROUND SNOW LOAD (PER 2012 IBC AND ASCE/SEI 7-10): 5 PSF

5. FOUNDATION DESIGN IS BASED ON THE GEOTECHNICAL DATA AND DESIGN REPORTS PREPARED BY HVJ ASSOCIATES, INC

   HVJ REPORT NUMBER: AG 11 14441
   DATED: JANUARY 30, 2013 (DATA) AND JUNE 24, 2013 (DESIGN)

6. COMPLETE SHOP DRAWINGS SHALL BE SUBMITTED FOR REVIEW PRIOR TO FABRICATION OF MATERIALS AND COMMENCEMENT OF CONSTRUCTION, IN ACCORDANCE WITH THE SPECIFICATIONS. REVIEW OF SHOP DRAWINGS DOES NOT RELIEVE THE CONTRACTOR OF FULL RESPONSIBILITY FOR CORRECT FABRICATION AND CONSTRUCTION OF THE WORK.

7. THE STRUCTURAL DRAWINGS SHALL NOT BE SCALED FOR DETERMINATION OF QUANTITIES, LENGTHS OR FIT OF MATERIAL.

8. PRINCIPAL OPENINGS ARE SHOWN ON THE STRUCTURAL DRAWINGS. THE CONTRACTOR SHALL REFER TO ARCHITECTURAL, MECHANICAL, ELECTRICAL AND PLUMBING DRAWINGS FOR SLEEVES, CURBS, INSERTS AND SIMILAR DETAILS NOT SHOWN. THE CONTRACTOR SHALL VERIFY THE SIZE AND LOCATION OF ALL OPENINGS. ANY DEVIATION FROM OPENINGS SHOWN ON THE STRUCTURAL DRAWINGS SHALL BE BROUGHT TO THE ENGINEER'S ATTENTION PRIOR TO CONSTRUCTION.

9. THE STRUCTURAL DRAWINGS AND SPECIFICATIONS REPRESENT THE FINISHED STRUCTURE. THEY DO NOT INDICATE THE METHODS OF CONSTRUCTION UNLESS SO STATED OR NOTED. THE CONTRACTOR SHALL PROVIDE ALL MEASURES NECESSARY TO PROTECT THE WORKERS AND ALL OTHER PERSONS DURING CONSTRUCTION. CONSTRUCTION AREA SAFETY IS THE SOLE RESPONSIBILITY OF THE CONTRACTOR.

10. THE CONTRACTOR SHALL PROVIDE TEMPORARY ERECTION BRACING AND SHORING OF ALL STRUCTURAL WORK AS REQUIRED FOR STABILITY OF THE STRUCTURE DURING ALL PHASES OF CONSTRUCTION. THE CONTRACTOR SHALL IMMEDIATELY NOTIFY THE ENGINEER OF ANY CONDITION THAT MIGHT ENDANGER THE STABILITY OF THE STRUCTURE OR CAUSE DISTRESS IN THE STRUCTURE.

11. CONSTRUCTION MATERIALS SHALL NOT BE STORED ON FLOORS OR ROOFS IN QUANTITIES THAT EXCEED OF THE DESIGN LIVE LOADS STATED IN THESE GENERAL NOTES. IMPACT SHALL BE AVOIDED WHEN PLACING MATERIALS ON FLOORS OR ROOFS.

FOUNDATION NOTES FOR CLEARWELL MAT SLABS

1. FOR A MINIMUM DISTANCE OF 5'-0" OUTSIDE OF THE MAT FOUNDATION SLAB PERIMETER, UNLESS NOTED OTHERWISE, REMOVE ALL TOP SOIL, VEGETATION, ORGANICS, DEBRIS, FILL MATERIAL, ETC. REMOVE ENOUGH SITE SOIL TO INSURE THAT FINAL GRADING WILL ALLOW FOR A 2-INCH THICK (OR THICKER) MUD SLAB BELOW THE BOTTOM OF THE MAT SLAB FOUNDATION.

2. REWORK AND COMPACT THE TOP 8-INCHES OF THE EXPOSED SUBGRADE TO 95-PERCENT OF THE MAXIMUM DRY DENSITY IN ACCORDANCE WITH TxDOT METHOD TEX-113/114-E. THE SOIL MOISTURE SHALL BE WITHIN TWO PERCENTAGE POINTS OF THE OPTIMUM MOISTURE CONTENT AT THE TIME OF COMPACTION. THE OWNER'S GEOTECHNICAL REPRESENTATIVE SHALL MONITOR ALL MOISTURE CONDITIONING AND COMPACTION OPERATIONS. FIELD DENSITIES SHALL BE TESTED IN ACCORDANCE WITH TxDOT METHOD TEX-115-E.

3. WATER SHALL NOT BE ALLOWED TO ACCUMULATE WITHIN EXCAVATED AREAS. SHOULD WATER ACCUMULATE, ANY WET OR SOFTENED SOILS SHALL BE REMOVED (OR REWORKED IF APPROPRIATE) AND SUBSEQUENTLY RECOMPACTED.

4. AFTER THE PREPARED SUBGRADE HAS PASSED THE DENSITY TEST, POUR A CONCRETE MUD SLAB OVER THE ENTIRE AREA TO PROVIDE A DRY, LEVEL, AND FLAT SURFACE FOR SUPPORT OF CONCRETE FORMWORK AND REINFORCING STEEL. THE MUD SLAB SHALL HAVE A MINIMUM THICKNESS OF 2-INCHES AND MAY BE THICKER TO COMPENSATE FOR IRREGULARITIES IN THE PREPARED SUBGRADE.

5. ANY REQUIRED HORIZONTAL RUNS OF PIPING AND ELECTRICAL CONDUIT SHALL BE BURIED IN THE SUBGRADE BELOW THE MAT FOUNDATION SLAB. EMBEDMENT OF SUCH ITEMS WITHIN THE SLAB WILL NOT BE PERMITTED.

BACKFILL AT BELOW-GROUND WALLS AND ABOVE THE SOUTHSIDE CLEARWELL ROOF

1. UNLESS SPECIFICALLY NOTED TO BACKFILL WITH CLSM, ALL BELOW-GROUND WALLS SHALL BE BACKFILLED WITH A CRUSHED LIMESTONE FLEXIBLE BASE MATERIAL MEETING THE REQUIREMENTS OF THE TEXAS DEPARTMENT OF TRANSPORTATION (TxDOT) 2004 STANDARD SPECIFICATION FOR CONSTRUCTION OF HIGHWAYS, STREETS, AND BRIDGES, ITEM 247, TYPE A, GRADE 3 OR BETTER.

2. BACKFILL TO BE PLACED AGAINST BELOW-GROUND WALLS SHALL HAVE A WEDGE SHAPE WITH A MAXIMUM RISE-TO-RUN RATIO OF 1:1. SEE STRUCTURAL SECTION DRAWINGS FOR SPECIFIC GRAPHICAL REPRESENTATIONS AND DEFINITIONS OF THIS DESCRIBED BACKFILL WEDGE SHAPE.

3. BACKFILL MATERIALS SHALL BE PLACED IN HORIZONTAL LOOSE LIFTS OF NOT MORE THAN 8-INCHES IN THICKNESS. EACH LIFT SHALL BE COMPACTED TO MINIMUM OF 95-PERCENT OF THE MAXIMUM DRY DENSITY BASED ON TxDOT METHOD TEX-113-E FOR COURSE-GRAINED SOILS OR TEX-114-E FOR FINE-GRAINED SOILS. THE MOISTURE CONTENT SHALL BE BETWEEN OPTIMUM AND 2-PERCENT WET OF OPTIMUM MOISTURE CONTENT AT THE TIME OF COMPACTION. FIELD DENSITIES SHALL BE CHECKED IN ACCORDANCE WITH TxDOT METHOD TEX-115-E.

4. OVER-COMPACTION OF THE BACKFILL SHALL BE AVOIDED TO PREVENT AN INCREASE OF LATERAL EARTH PRESSURES ON BELOW-GROUND WALLS. COMPACTION CONDUCTED WITHIN 4-FEET OF THE WALLS SHALL BE PERFORMED WITH A MANUALLY-PROPELLED COMPACTOR (WEIGHING LESS THAN 500 POUNDS) TO REDUCE LATERAL PRESSURES APPLIED TO THE WALL. BACKFILL MATERIAL IN THIS ZONE SHALL BE PLACED IN 6-INCH LOOSE LIFTS AND COMPACTED AS DESCRIBED ABOVE.

5. THE BLOWER BUILDING FOUNDATION WILL BE SUPPORTED BY COLUMNS EXTENDING ABOVE THE BELOW-GRADE ROOF OF THE SOUTHSIDE CLEARWELL. IN THIS AREA, HAND-COMPACTION METHODS SHALL BE USED AROUND THE COLUMNS.

6. DO NOT BEGIN PLACING BACKFILL AGAINST THE BELOW-GROUND WALLS UNTIL THE ADJOINING ROOF HAS BEEN POURED AND ITS CONCRETE HAS ATTAINED THE SPECIFIED DESIGN COMPRESSIVE STRENGTH.

7. EXCEPT WHERE OVERLAIN WITH PAVING ABOVE, CAP ALL BACKFILL MATERIAL WITH AN 18-INCH LAYER OF CLAY MATERIAL. THE CLAY CAP MATERIAL SHALL HAVE AT LEAST 50-PERCENT PARTICLES PASSING THE NO. 200 SIEVE, A LIQUID LIMIT OF AT LEAST LEAST 40-PERCENT, AND A PLASTICITY INDEX OF AT LEAST 20. THE 18-INCH LAYER SHOULD BE PLACED IN 3 APPROXIMATELY EQUAL COMPACTED LIFTS AT 95-PERCENT OF THE MAXIMUM DRY DENSITY AND WET OF OPTIMUM MOISTURE, AS DETERMINED BY TxDOT METHOD TEX-114-E. THE CLAY CAP SHALL EXTEND 24-INCHES OVER NATURAL SOILS, BEYOND THE LIMITS OF THE BACKFILL MATERIAL. FILTER FABRIC SHALL BE PLACED BETWEEN THE CLAY CAP AND THE BACKFILL MATERIAL. THE CLAY CAP SHALL BE OVERLAIN BY AT LEAST 24-INCHES OF ROOT ZONE/VEGITATIVE SUPPORT SOIL.

8. SAMPLES OF PROPOSED BACKFILL MATERIAL AND CLAY CAP MATERIAL SHALL BE FURNISHED TO THE TESTING LABORATORY AT LEAST 7 DAYS PRIOR TO INSTALLATION TO PERMIT TIME FOR SPECIFICATION COMPLIANCE INSPECTION AND APPROVAL.

CONCRETE NOTES

1. ALL CONCRETE WORK SHALL CONFORM TO THE AMERICAN CONCRETE INSTITUTE'S (ACI) "SPECIFICATIONS FOR STRUCTURAL CONCRETE FOR BUILDINGS", ACI 301 AND THE "BUILDING CODE REQUIREMENTS FOR STRUCTURAL CONCRETE AND COMMENTARY", ACI 318, LATEST EDITION.

2. CONCRETE SHALL MEET THE REQUIREMENTS OF THE FOLLOWING CLASSES AS DEFINED BY THE PROJECT SPECIFICATIONS (CoA SPECIFICATION ITEM NO. 403S, CONCRETE FOR STRUCTURES):

LOCATION	CONCRETE CLASS (MIN 28 DAY STRENGTH)	COURSE AGG GRADE (MAX NOM SIZE)	SLUMP RANGE	HRWR REQ'D (SEE NOTE a)
MUD SLABS	CLASS B (2000 PSI)	GRADE 4 (1")	2" TO 5"	NO
CLEARWELL MAT FOUNDATION SLABS	CLASS Kw (5000 PSI)	GRADE 2 (1 1/2")	6" TO 8"	YES
CLEARWELL WALLS AND COLUMNS	CLASS Kw (5000 PSI)	GRADE 2 (1 1/2")	6" TO 8"	YES
CLEARWELL ROOF SLABS	CLASS Kw (5000 PSI)	GRADE 2 (1 1/2")	6" TO 8"	YES
BLOWER BLDG FLR SLAB SODIUM BISULFITE SLAB	CLASS S (4000 PSI)	GRADE 2 (1 1/2")	2" TO 5"	NO
HOUSEKEEPING PADS PUMP PADS	CLASS C (3600 PSI)	GRADE 4 (1")	2" TO 5"	NO
GROUT TOPPING	CLASS B (2000 PSI) (SEE NOTE c)	GRADE 4 (1")	2" TO 5"	NO

   a. HRWR = HIGH RANGE WATER REDUCER
   b. FURNISH A MIX DESIGN FOR EACH CLASS OF CONCRETE.
   c. GROUT TOPPING SHALL BE REINFORCED WITH FIBRILLATED POLYPROPYLENE FIBERS COMPLYING WITH CoA SPECIFICATION ITEM 407S (FIBROUS CONCRETE) AND ASTM C1116, TYPE III.

3. CONCRETE PLACED BY PUMPING SHALL MEET THE FOLLOWING REQUIREMENTS:

   a. COARSE AGGREGATE SHALL BE GRADED FROM A MAXIMUM OF 1 1/2".

   b. MAXIMUM ALLOWABLE INCREASE IN CEMENT FACTOR SHALL BE 1/2 SACK PER CUBIC YARD OVER NORMAL MIX DESIGN.

   c. MAXIMUM WATER CEMENT RATIO WILL CONFORM TO REQUIREMENTS STATED IN THE PROJECT SPECIFICATIONS. IF MORE WORKABILITY IS REQUIRED, AN ADMIXTURE MAY BE USED.

   d. MAXIMUM WEIGHT RATIO OF FINE AGGREGATES TO COARSE AGGREGATES SHALL NOT EXCEED 2/3.

   e. REFER TO ACI 301, LATEST EDITION, SECTION 800, FOR OTHER PUMPING REQUIREMENTS.

   f. IN NO CASE SHALL CONCRETE BE PUMPED THROUGH AN ALUMINUM TUBE.

4. REINFORCING BARS SHALL BE NEW BILLET STEEL CONFORMING TO ASTM A615, GRADE 60.

5. ALL DETAILING, FABRICATION AND ERECTION OF REINFORCING BARS, UNLESS OTHERWISE NOTED, MUST FOLLOW THE ACI "MANUAL OF STANDARD PRACTICE FOR DETAILING REINFORCED CONCRETE", ACI 315, LATEST EDITION.

6. STANDARD PROTECTIVE COVER OF REINFORCING BARS UNLESS OTHERWISE NOTED SHALL BE:

   WHERE CAST AGAINST EARTH OR FILL .... 3 IN.
   WHERE CAST AGAINST MUD SLAB .... 2 IN.
   EXPOSED TO EARTH, WATER OR WEATHER .... 2 IN.
   SLABS AND WALLS .... 1 IN.

7. MAKE ALL HORIZONTAL WALL STEEL CONTINUOUS AROUND CORNERS PER TYPICAL DETAILS.

8. ALL ACCESSORIES SHALL BE IN ACCORDANCE WITH THE ACI "MANUAL OF STANDARD PRACTICE FOR DETAILING REINFORCED CONCRETE", ACI 315, LATEST EDITION. ACCESSORIES FOR INTERIOR CONCRETE SURFACES EXPOSED TO VIEW SHALL HAVE PLASTIC COATED FEET. ACCESSORIES FOR CONCRETE SURFACES EXPOSED TO EARTH, WEATHER, WATER, OR HIGH HUMIDITY SHALL BE FABRICATED PLASTIC. PROVIDE BOLSTERS AT SUSPENDED SLABS, WALLS AND WIDE BEAMS. PROVIDE STANDEES AT ALL SLABS WITH TWO LAYERS OF REINFORCING. FOR SLAB-ON-GRADE REINFORCING, PROVIDE CHAIRS MANUFACTURED FROM HOT-DIP GALVANIZED STEEL, STAINLESS STEEL, PLASTIC, OR PRECAST CONCRETE BLOCKS OF EQUAL OR GREATER COMPRESSIVE STRENGTH AS THE CONCRETE BEING POURED.

9. MAINTAIN A MINIMUM OF ONE BAR DIAMETER (BUT NOT LESS THAN 1") BETWEEN ALL REINFORCING BARS (INCLUDING LAPS) ON ALL SLABS. MAINTAIN A MINIMUM OF 1-1/2" BETWEEN BARS IN COLUMNS, AND A MINIMUM OF 1-1/2 TIMES THE MAXIMUM COARSE AGGREGATE SIZE IN ALL CASES.

10. SHOP DRAWINGS SHALL BE PREPARED FOR ALL REINFORCING STEEL AND SUBMITTED FOR REVIEW BY ENGINEER. ENGINEERING DRAWINGS SHALL NOT BE REPRODUCED AND USED AS SHOP DRAWINGS.

11. WELDING OF REINFORCING BARS SHALL NOT BE PERMITTED, UNLESS SPECIFIED OR APPROVED BY ENGINEER.

12. DURING PLACEMENT OF CONCRETE, USE TREMIE OR OTHER MEANS TO LIMIT FREE-FALL OF CONCRETE TO 5'-0".

CONCRETE CONSTRUCTION JOINT & MONOLITH DRAWING NOTES

1. THE CONTRACTOR MUST PREPARE AND SUBMIT MONOLITH DRAWINGS FOR ALL CONCRETE WORK. THIS SUBMITTAL IS SUBJECT TO THE REVIEW AND APPROVAL OF THE STRUCTURAL AND PROCESS ENGINEERS. EACH DRAWING SHALL CLEARLY IDENTIFY, LOCATE, AND DIMENSION THE FOLLOWING ITEMS:

   a. ALL CONSTRUCTION JOINTS - JOINTS ADDED, DELETED, OR RELOCATED FROM LOCATIONS INDICATED ON THE CONTRACT DOCUMENTS MUST BE CLEARLY IDENTIFIED.

   b. EMBEDDED ITEMS

   c. ALL CONCRETE OPENINGS OR PENETRATIONS

   d. WATERSTOPS

   e. KEYWAYS

   f. ALL OTHER ITEMS LOCATED IN OR PASSING THRU THE CONCRETE

2. LOCATE CONSTRUCTION JOINTS THAT ARE NOT INDICATED ON THE DRAWINGS AT LOCATIONS TO LEAST IMPAIR THE STRENGTH OF THE STRUCTURE. IN GENERAL, LOCATE JOINTS IN THE MIDDLE OF SLAB AND BEAM SPANS. IF A BEAM INTERSECTS ANOTHER BEAM AT THIS LOCATION, OFFSET THE JOINT A DISTANCE EQUAL TO TWICE THE WIDTH OF THE INTERSECTING BEAM.

3. LOCATE HORIZONTAL JOINTS AT THE TOP OF WALLS AND COLUMNS WHERE THEY MEET THE UNDERSIDE OF SLABS, BEAMS, OR GIRDERS. LOCATE HORIZONTAL JOINTS AT THE BOTTOM OF WALLS AND COLUMNS WHERE THEY MEET THE TOP OF FOOTINGS, SLABS, OR BEAMS.

4. HORIZONTAL JOINTS WILL NOT BE PERMITTED IN SLABS OR BEAMS UNLESS SPECIFICALLY SHOWN ON DRAWINGS. BEAMS SHALL BE POURED MONOLITHICALLY WITH SLABS.

5. LOCATE CONSTRUCTION JOINTS PERPENDICULAR TO PRIMARY REINFORCING STEEL. CONTINUE ALL REINFORCING THRU THE JOINTS AS DETAILED.

6. IN THE SLABS AND WALLS FOR WATER-CONTAINING STRUCTURES, VERTICAL CONSTRUCTION JOINTS SHALL BE LOCATED NO FURTHER THAN 35-FEET ON-CENTER IN EACH DIRECTION. IN THE WALLS FOR WATER-CONTAINING STRUCTURES, CONSTRUCTION JOINTS SHALL NOT BE LOCATED FARTHER THAN 15-FEET FROM ANY WALL INTERSECTION.

7. CONSTRUCTION JOINTS FOR WATER-CONTAINING STRUCTURES SHALL ALL HAVE CONTINUOUS RIBBED WATERSTOPS INSTALLED AS DETAILED.

POST-INSTALLED CONCRETE ANCHOR NOTES

1. POST-INSTALLED CONCRETE ANCHORS SHALL ONLY BE USED WHERE SPECIFICALLY INDICATED ON THE DRAWINGS. HE CONTRACTOR SHALL OBTAIN APPROVAL FROM THE ENGINEER-OF-RECORD PRIOR TO USING POST-INSTALLED ANCHORS TO REPLACE MISSING OR MISPLACED CAST-IN-PLACE ANCHORS.

2. THOROUGHLY CLEAN DRILLED HOLES FOR ANCHOR INSTALLATIONS AND INSTALL ANCHORS PER THE MANUFACTURER'S WRITTEN INSTRUCTIONS.

3. UNLESS SPECIFIED OTHERWISE ON THE DRAWINGS, ANCHORS SHALL BE EMBEDDED INTO THE APPROPRIATE SUBSTRATE WITH A MINIMUM EMBEDMENT OF 8 TIMES THE NOMINAL ANCHOR DIAMETER OR THE EMBEDMENT DEPTH REQUIRED TO SUPPORT THE INTENDED LOAD.

4. ADHESIVE ANCHORING SYSTEMS SHALL BE ONE OF THE FOLLOWING:

   a. HIT-HY 200 SAFE SET ADHESIVE ANCHORING SYSTEM; HILTI (ICC-ES ESR-3187)
   b. SET-XP EPOXY-TIE ANCHORING ADHESIVE; SIMPSON STRONG-TIE CO (ICC-ES ESR-2508)
   c. APPROVED EQUAL

5. TORQUE-CONTROLLED EXPANSION ANCHORS SHALL BE ONE OF THE FOLLOWING:

   a. KWIK BOLT 3 EXPANSION ANCHORS; HILTI (ICC-ES ESR-2302)
   b. STRONG BOLT 2 WEDGE ANCHORS; SIMPSON STRONG-TIE CO (ICC-ES ESR-3037)
   c. APPROVED EQUAL

6. SUBSTITUTION REQUESTS FOR PRODUCTS OTHER THAN THOSE LISTED ABOVE SHALL BE SUBMITTED TO THE STRUCTURAL ENGINEER-OF-RECORD ALONG WITH SUFFICIENT PRODUCT DATA. SUBMITTALS WITH SUBSTITUTION REQUESTS MUST SHOW THAT THE PROPOSED PRODUCT WILL ACHIEVE AN EQUIVALENT LOAD CAPACITY AND THAT IT HAS AN EQUIVALENT CORROSION RESISTANCE. SUBSTITUTION REQUESTS FOR ALTERNATE PRODUCTS MUST BE APPROVED IN WRITING BY THE STRUCTURAL ENGINEER OF RECORD PRIOR TO USE. CONTRACTOR SHALL PROVIDE CALCULATIONS DEMONSTRATING THAT THE SUBSTITUTED PRODUCT IS CAPABLE OF ACHIEVING THE PERFORMANCE VALUES OF THE SPECIFIED PRODUCT.

7. THE CONTRACTOR SHALL ARRANGE AN ANCHOR MANUFACTURER'S REPRESENTATIVE TO PROVIDE ONSITE INSTALLATION TRAINING FOR ALL OF THEIR ANCHORING PRODUCTS SPECIFIED. THE STRUCTURAL ENGINEER OF RECORD MUST RECEIVE DOCUMENTED CONFIRMATION THAT ALL OF THE CONTRACTOR'S PERSONNEL WHO INSTALL ANCHORS ARE TRAINED PRIOR TO THE COMMENCEMENT OF INSTALLING ANCHORS.

8. ANCHOR CAPACITY IS DEPENDANT UPON SPACING BETWEEN ADJACENT ANCHORS AND PROXIMITY OF ANCHORS TO EDGE OF CONCRETE. INSTALL ANCHORS IN ACCORDANCE WITH SPACING AND EDGE CLEARANCES INDICATED ON THE DRAWINGS.

9. EXISTING REINFORCING BARS IN THE CONCRETE STRUCTURE MAY CONFLICT WITH SPECIFIC ANCHOR LOCATIONS. UNLESS NOTED ON THE DRAWINGS THAT THE BARS CAN BE CUT, THE CONTRACTOR SHALL REVIEW THE EXISTING STRUCTURAL DRAWINGS AND SHALL UNDERTAKE TO LOCATE THE POSITION OF THE REINFORCING BARS AT THE LOCATIONS OF THE CONCRETE ANCHORS, BY HILTI FERROSCAN, GPR, X-RAY, CHIPPING OR OTHER APPROVED MEANS.

NO.	DR	CK	DATE	DESCRIPTION

REVISIONS

BLACK & VEATCH
Building a world of difference.
Black & Veatch Corporation
Registration No. F-258
Austin, Texas

Jose I. Guerra, Inc.
Consulting Engineers
2401 South IH-35 Suite 210
Austin, Texas 78741
(512) 445-2090
Structural • Civil • Mechanical • Electrical
TBPE FIRM F-3

STATE OF TEXAS
BRANDON M. GOODLOE
92456
REGISTERED PROFESSIONAL ENGINEER
9-24-2014

Austin WATER
Walnut Creek WWTP - Tertiary Filter Rehabilitation Project
CIP ID No. 3023.025

STRUCTURAL GENERAL NOTES SHEET 1 OF 2

DESIGNED BY:	BG
DRAWN BY:	FS
REVIEWED BY:	LP
APPROVED BY:	JL
PROJECT NO.:	168622
DATE:	09/24/2014
SCALE:	NO SCALE

REVISION:

DISCIPLINE NO.
S-01

FD168622 D168622 SAVED: DWG FEDR ID:168622....\09.5030 - Mechanical Process Drawings
File: F:\12047 Walnut Creek WWTP Filter Improvements\DRAWINGS\CAD\S-01.dwg Layout: S-01 Plotted: 7/29/2013

STRUCTURAL GENERAL NOTES (CONTINUED)

SELF-EXPANDING STRIP WATERSTOP NOTES

1. SELF-EXPANDING STRIP WATERSTOP SHALL BE MANUFACTURED RECTANGULAR OR TRAPEZOIDAL STRIP, BENTONITE-FREE, HYDROPHILIC MATERIAL FOR ADHESIVE BONDING TO CONCRETE. THESE WATERSTOPS SHALL BE MANUFACTURED FROM HYDRO-EXPANSIVE RUBBER WITH A MINIMUM EXPANSION CAPABILITY OF 200-PERCENT OF ITS ORIGINAL VOLUME AFTER IMMERSION IN WATER.
2. INSTALL AT CONSTRUCTION JOINTS AND AT OTHER LOCATIONS INDICATED, ACCORDING TO THE MANUFACTURER'S WRITTEN INSTRUCTIONS, BONDING OR MECHANICALLY FASTENING AND FIRMLY PRESSING INTO PLACE.
3. INSTALL IN THE LONGEST LENGTHS PRACTICAL.
4. PROVIDE ONE OF THE FOLLOWING PRODUCTS:
   a. SWELLSEAL JOINT; DE NEEF CONSTRUCTION CHEMICALS (U.S) INC
   b. HYDROTITE CJ PROFILE; GREENSTREAK
   c. ADEKA ULTRA SEAL MC-2010MN; MITSUBISHI INTERNATIONAL CORP
   d. APPROVED EQUAL

ANTI-CORROSION COATING NOTES

1. ALL NOTED SURFACES OF EXISTING CONCRETE THAT ARE NEWLY EXPOSED BY WIRE CUTTING, SAWCUTTING, OR CORE-DRILLING SHALL BE COATED WITH TWO COATS OF SIKA ARMATEC 110 EPOCEM AS MANUFACTURED BY SIKA CORPORATION (OR AN APPROVED EQUAL), UNLESS NOTED OTHERWISE.
2. APPLY AS AN ANTI-CORROSION COATING PER THE MANUFACTURER'S PUBLISHED GUIDELINES.
3. TWO COATS OF 20 MILS THICKNESS SHALL RESULT IN A FINAL COATING WITH A MINIMUM THICKNESS OF 40 MILS.

CONCRETE MASONRY NOTES

1. SEE CONCRETE MASONRY GENERAL NOTES AND TYPICAL DETAILS ON DRAWING S-05.

VAPOR BARRIER NOTES

1. A VAPOR BARRIER SHALL BE PLACED UNDER THE CONCRETE MAT SLAB FOR THE BLOWER BUILDING. THE VAPOR BARRIER SHALL CONSIST OF A POLYETHELENE OR POLYOLEFIN RESIN GEOMEMBRANE THAT MEETS THE FOLLOWING REQUIREMENTS:
   a. MEET OR EXCEED THE CLASS A REQUIREMENTS OF ASTM E1745
   b. WATER VAPOR TRANSMISSION RATE (WVTR) OF 0.006 GRAINS (0.012 PERMS) OR LESS PER SQUARE FOOT IN ACCORDANCE WITH ASTM E96
   c. MINIMUM PUNCTURE RESISTANCE OF 2445 GRAMS IN ACCORDANCE WITH ASTM D1709
   d. MINIMUM TENSILE STRENGTH OF 76.6 PLF/INCH IN ACCORDANCE WITH ASTM D882
   e. MINIMUM THICKNESS OF 15 MILS
2. ACCEPTABLE PRODUCT IS STEGO WRAP CLASS A VAPOR BARRIER BY STEGO INDUSTRIES LLC, SAN JUAN CAPISTRANO, CALIFORNIA, OR APPROVED EQUAL.
3. VAPOR BARRIER SHALL BE INSTALLED IN STRICT ACCORDANCE WITH THE MANUFACTURER'S INSTRUCTIONS AND RECOMMENDATIONS. SPECIAL ATTENTION SHALL BE PAID TO THE VAPOR BARRIER INSTALLATION AT PIPE AND CONDUIT PENETRATIONS.
4. LAP JOINTS IN VAPOR BARRIER A MINIMUM OF 6 INCHES AND SEAL CONTINUOUSLY WITH A PRESSURE SENSITIVE, HIGH-DENSITY POLYETHELENE TAPE MANUFACTURED SPECIFICALLY FOR THE USE OF SEALING VAPOR BARRIER LAPS. THE TAPE SHALL MEET THE FOLLOWING REQUIREMENTS:
   a. WATER VAPOR TRANSMISSION RATE (WVTR) OF 0.3 PERMS OR LESS PER SQUARE FOOT IN ACCORDANCE WITH ASTM E96
   b. MINIMUM TAPE WIDTH OF 4 INCHES
5. THE VAPOR BARRIER SHALL BE CONTINUOUS UNDER THE MAT SLAB. THE VAPOR BARRIER SHALL BE INSTALLED SMOOTH AND LEVEL. BUNCHING WILL NOT BE PERMITTED AND SHALL BE CORRECTED PRIOR TO CONCRETE PLACEMENT.
6. CAREFULLY INSPECT VAPOR BARRIER FOR DAMAGE, TEARS OR PENETRATIONS PRIOR TO CONCRETE PLACEMENT. ALL DAMAGED AREAS SHALL BE REPAIRED BY CUTTING PATCHES OF VAPOR BARRIER, OVERLAPPING DAMAGED AREA 6 INCHES AND TAPING ALL EDGES.

STRUCTURAL STEEL NOTES

1. ALL HOT ROLLED STRUCTURAL STEEL W-SHAPES SHALL CONFORM TO ASTM SPECIFICATION A992, GRADE 50.
2. ALL STRUCTURAL STEEL M-SHAPES, S-SHAPES, CHANNELS, ANGLES, PLATES AND BARS SHALL CONFORM TO ASTM SPECIFICATION A36 UNLESS OTHERWISE SHOWN OR NOTED.
3. ALL ROUND, SQUARE AND RECTANGULAR HOLLOW STRUCTURAL SHAPES (HSS) SHALL CONFORM TO ASTM A500, GRADE B.
4. ALL STRUCTURAL STEEL PIPE SHALL CONFORM TO ASTM SPECIFICATION A53, GRADE B.
5. ALL ANCHOR RODS SHALL CONFORM TO ASTM SPECIFICATION F1554, GRADE 36.
6. ALL STRUCTURAL BOLTS SHALL CONFORM TO ASTM A325, TYPE I, HEAVY HEX UNLESS OTHERWISE SHOWN OR NOTED. FURNISH HEAVY HEX CARBON-STEEL NUTS PER ASTM A563 AND HARDENED CARBON-STEEL WASHERS PER ASTM F436 AT ALL BOLTED CONNECTIONS, INCLUDING ANCHOR RODS.
7. ALL STAINLESS STEEL SHAPES SHALL CONFORM TO ASTM SPECIFICATION A276 AND/OR A479, TYPE 316, UNLESS OTHERWISE SHOWN OR NOTED. ALL STAINLESS STEEL PLATE, SHEET AND STRIP SHALL CONFORM TO ASTM SPECIFICATION A666 AND/OR A240, TYPE 316, UNLESS OTHERWISE SHOWN OR NOTED.
8. ALL STAINLESS STEEL BOLTS, THREADED ROD MATERIAL, AND EXPANSION ANCHORS SHALL CONFORM TO ASTM F593 OR A193, TYPE 316. ALL NUTS SHALL CONFORM TO ASTM F594 OR A194, TYPE 316.
9. ALL STRUCTURAL STEEL SHALL BE DESIGNED, FABRICATED AND ERECTED IN ACCORDANCE WITH THE LATEST SPECIFICATIONS OF THE AMERICAN INSTITUTE OF STEEL CONSTRUCTION.
10. REFER TO ARCHITECTURAL AND MECHANICAL PLANS FOR VERIFICATION OF ALL BOLTS, BLOCKING ANCHORS, ETC., FOR THE ANCHORAGE OF THEIR RESPECTIVE ITEMS.
11. ALL BEAMS AND COLUMNS SHALL BE FULL LENGTH WITHOUT SPLICES UNLESS OTHERWISE INDICATED ON PLANS.
12. ALL SHOP AND FIELD WELDS SHALL BE MADE BY WELDERS WHO HAVE BEEN QUALIFIED AND CERTIFIED TO MAKE THE REQUIRED WELDS WITHIN THE PREVIOUS SIX MONTHS IN ACCORDANCE WITH THE LATEST AMERICAN WELDING SOCIETY SPECIFICATIONS AWS D1.1 (STEEL) AND AWS D1.6 (STAINLESS STEEL).
13. LOOSE STEEL LINTELS OVER OPENINGS IN EXTERIOR MASONRY WALLS SHALL BE AS FOLLOWS FOR EACH 4" WIDTH OF MASONRY. ALL STEEL LINTELS SHALL BE HOT DIP GALVANIZED. PROVIDE 8" MINIMUM BEARING AT EACH SIDE OF OPENING.

OPENING SIZE	LOOSE LINTEL SIZE
LESS THAN 4'-0	L $3\frac{1}{2}$ X $3\frac{1}{2}$ X $\frac{1}{4}$
4'-0 TO LESS THAN 5'-0	L 4 X $3\frac{1}{2}$ X $\frac{1}{4}$ (LLV)
5'-0 TO LESS THAN 6'-0	L 5 X $3\frac{1}{2}$ X $\frac{1}{4}$ (LLV)
6'-0 TO LESS THAN 7'-0	L 6 X $3\frac{1}{2}$ X 5/16 (LLV)
7'-0 AND LARGER	SEE DETAIL 9/S-05

14. ERECTION CONNECTORS SHALL BE PROVIDED IN ORDER TO PROPERLY ALIGN MEMBERS TRUE TO LINE AND PLUMB WHEN WELDS ARE MADE.
15. SHOP DRAWINGS SHALL BE PREPARED FOR ALL STRUCTURAL STEEL AND SUBMITTED FOR REVIEW BY ENGINEER. ENGINEERING DRAWINGS SHALL NOT BE REPRODUCED AND USED AS SHOP DRAWINGS.

STEEL ROOF DECK NOTES

1. STEEL ROOF DECK SHALL BE FABRICATED FROM COLD ROLLED GALVANIZED STEEL SHEETS CONFORMING TO THE LATEST EDITION OF ASTM A653, STRUCTURAL STEEL (SS), GRADE 33. GALVANIZING ZINC COATING SHALL CONFORM TO ASTM A525, CLASS G60.
2. STEEL ROOF DECK SHALL BE PROVIDED CONTINUOUS OVER A MINIMUM OF 3 SPANS, UNLESS NOTED OTHERWISE.
3. INSTALL DECK UNITS OVER SUPPORTING FRAME WITH A MINIMUM END BEARING OF 1-1/2 INCHES. END JOINTS SHALL BE LAPPED 2 INCHES MINIMUM OR BUTTED OVER SUPPORTS (CONTRACTORS OPTION).
4. IMMEDIATELY AFTER PLACEMENT AND ALIGNMENT, ROOF DECK SHALL BE WELDED TO SUPPORTING MEMBERS IN ACCORDANCE WITH THE STEEL DECK INSTITUTE (SDI) PUBLICATION NO. 30, THE MANUFACTURER'S WRITTEN INSTRUCTIONS, AND APPROVED SHOP DRAWINGS. FASTEN ROOF DECK PANELS TO SUPPORTING MEMBERS BY ARC SPOT (PUDDLE) WELDS OF 5/8" NOMINAL DIAMETER OR ARC SEAM WELDS WITH AN EQUAL PERIMETER, BUT NOT LESS THAN 1-1/2 INCHES LONG.
5. WELD EDGE AND INTERIOR RIBS OF DECK UNITS WITH A MINIMUM OF TWO WELDS PER DECK UNIT AT EACH SUPPORT. SPACE WELDS A MAXIMUM OF 12 INCHES APART IN THE FIELD OF THE ROOF AND 6 INCHES APART IN ROOF CORNERS AND PERIMETER, BASED ON ROOF-AREA DEFINITIONS OF FACTORY MUTUAL (FM) LOSS PREVENTION DATA SHEET 1-28.
6. FASTEN SIDE LAPS OF ADJACENT DECK UNITS AT INTERVALS NOT TO EXCEED THE LESSER OF ONE-HALF OF THE SPAN OR 36 INCHES. SIDE LAP FASTENERS MAY BE ACCOMPLISHED BY ONE OF THE FOLLOWING METHODS:
   a. MECHANICALLY FASTEN WITH SELF-DRILLING NO. 10 DIAMETER OR LARGER CARBON-STEEL TEK SCREWS.
   b. FASTEN WITH A MINIMUM 1-1/2 INCH LONG WELD.

   DO NOT WELD SIDE LAPS FOR DECK WITH A THICKNESS OF 0.028 INCHES OR LESS.

STAINLESS STEEL BAR GRATING NOTES

1. ALL GRATINGS SHALL COMPLY WITH THE ANSI/NAAMM METAL BAR GRATING MANUAL MBG 531, LATEST EDITION.
2. GRATINGS SHALL BE PRESSURE-LOCKED, FABRICATED BY PRESSING RECTANGULAR FLUSH-TOP CROSSBARS INTO SLOTTED BEARING BARS OR BY SWAGING CROSSBARS BETWEEN BEARING BARS.
3. BEARING BARS, CROSS BARS, AND CONNECTING BARS SHALL BE TYPE 316L ALLOY CONFORMING TO ASTM A666.
4. BAR GRATINGS FOR GROUND LEVEL PLATFORMS AT CLEARWELL ROOFS ARE DESIGNED TO SUPPORT A UNIFORM LIVE LOAD OF 100 PSF WITH A MAXIMUM DEFLECTION OF L/240 OR $\frac{1}{4}$ INCH, WHICHEVER IS LESS. SUBMIT MANUFACTURER'S PUBLISHED LOAD TABLES AND ANALYSIS DATA TO SHOW THAT THE PROPOSED GRATINGS MEET THE DESIGN REQUIREMENTS.
5. THE FOLLOWING NOTES 6 THRU 8 APPLY SPECIFICALLY TO GROUND LEVEL GRATING PLATFORMS AT THE CLEARWELLS ROOFS. GRATING AT THE SODIUM BISULFITE PAD DOES NOT REQUIRE FLOOR PLATE CLADDING, BANDED OPENINGS, OR LIFTING HANDLES.
6. ALL CUTOUT OPENINGS FOR GATE OPERATOR SUPPORT BRACKETS SHALL BE LOAD BANDED. THE CUTOUT SIZES AND LOCATIONS SHALL BE FULLY COORDINATED AND DOCUMENTED BY THE GRATING SHOP DRAWING SUBMITTAL. ALL CUTOUT AND BANDING FABRICATION SHALL BE PERFORMED IN THE SHOP.
7. EXCEPT FOR REQUIRED OPENING LOCATIONS IN THE GRATING SECTIONS FOR GATE OPERATOR SUPPORTS AND LIFTING HARDWARE, ALL GRATING SECTIONS SHALL BE CONTINUOUSLY CLAD WITH 1/8-INCH THICK TYPE 316L STAINLESS STEEL DIAMOND FLOOR PLATE ON THE TOP (WALKING) SURFACE. FLOOR PLATES SHALL BE SECURELY SHOP WELDED TO THE GRATING SECTIONS.
8. EACH GRATING SECTION SHALL HAVE FOUR RECESSED (OR LOW PROFILE) LIFTING HANDLES TO ALLOW PLANT PERSONNEL TO THE REMOVE GRATING AS NEEDED. ALTERNATIVELY, GRATING SECTIONS MAY HAVE PERMANENT RECESSED OR LOW-PROFILE LIFTING LUGS WITH LOOSE LIFTING HARDWARE THAT CAN BE MECHANICALLY CONNECTED TO THE LIFTING LUGS OR CAN BE REMOVED AND STORED WHEN NOT IN USE. LIFTING HANDLES SHALL BE CABABLE OF BEING USED FOR LIFTING GRATING SECTIONS BY HAND OR WITH POWERED EQUIPMENT (AS REQUIRED). ALL LIFTING HANDLES AND ASSOCIATED HARDWARE SHALL BE MANUFACTURED FROM TYPE 316 OR 316L STAINLESS STEEL. LIFTING HANDLES SHALL BE CAPABLE OF SUPPORTING THE WEIGHT OF THEIR RESPECTIVE GRATING SECTIONS WITH A MINIMUM FACTOR OF SAFETY OF 2. DETAILS FOR PROPOSED LIFTING HARDWARE SHALL BE INCLUDED WITH THE GRATING SHOP DRAWING SUBMITTAL FOR REVIEW AND APPROVAL PRIOR TO FABRICATION.
9. REFER TO TYPICAL DETAIL 2 ON SHEET S-06 FOR GRATING SUPPORT EMBEDDED FRAME INFORMATION.

NON-SHRINK GROUT NOTES

1. NON-SHRINK GROUT SHALL BE A FACTORY PACKAGED, NON-CORROSIVE AND NON-STAINING, SHRINKAGE-RESISTING GROUT WITH NON-METALLIC AGGREGATE. THE GROUT SHALL CONFORM TO ASTM C1107.
2. NON-SHRINK GROUT SHALL BE MIXED TO A SUITABLE CONSISTENCY, PLACED, AND CURED PER THE MANUFACTURER'S WRITTEN INSTRUCTIONS.
3. NON-SHRINK GROUT SHALL HAVE A MINIMUM WORKING TIME OF 30-MINUTES.

JOINT SEALANT NOTES

1. JOINT SEALANT MATERIAL SHALL BE SIKAFLEX-2c NS EZ MIX TWO-COMPONENT, NON-SAG, POLYURETHANE-BASED, ELASTOMERIC SEALANT AS MANUFACTURED BY SIKA CORPORATION (OR APPROVED EQUAL).
2. INSTALL JOINT SEALANT WITH AN APPROPRIATE BACKER ROD MATERIAL TO PREVENT THREE-SIDED ADHESION. BACKER ROD SHALL BE EXPANDED, CLOSED CELL, POLYETHELENE FOAM COMPATIBLE WITH THE SEALANT. BACKER ROD SHALL BE OF SUFFICIENT WIDTH TO BE IN COMPRESSION WHEN INSTALLED.
3. PRIOR TO APPLYING JOINT SEALANT, PRIME ALL CONCRETE SUBSTRATES WITH SIKAFLEX PRIMER-429 (OR APPROVED EQUAL).

NOTES FOR PLACEMENT OF CONTROLLED LOW STRENGTH MATERIAL (CLSM)

1. CLSM SHALL NOT BE PLACED ON FROZEN GROUND. BATCHING, MIXING, AND PLACING OF CLSM MAY BE STARTED WHEN WEATHER CONDITIONS ARE FAVORABLE AND WHEN THE TEMPERATURE IS AT LEAST 34°F AND RISING. AT THE TIME OF PLACEMENT, CLSM SHALL HAVE A TEMPERATURE OF AT LEAST 40°F. MIXING AND PLACING SHALL STOP WHEN THE TEMPERATURE IS 38°F AND FALLING. EACH FILLING STAGE SHALL BE AS CONTINUOUS AN OPERATION AS IS PRACTICABLE.
2. CLSM SHALL BE DISCHARGED FROM THE MIXER BY AN ACCEPTABLE PROCEDURE INTO THE AREA TO BE FILLED. WITHIN THE LIMITATIONS HEREIN, CLSM SHALL BE PLACED TO THE LIMITS INDICATED ON THE DRAWINGS. MIXING CLSM WITH IN-SITU SOIL SHALL BE AVOIDED.
3. WHEN CLSM IS PLACED AS BACKFILL AGAINST STRUCTURES, THE FILL SHALL BE PLACED IN LIFTS OF 2- TO 3-FEET. A LIFT SHALL NOT BE PLACED UNTIL THE PREVIOUS LIFT HAS TAKEN INITIAL SET AND AT LEAST 16 HOURS HAVE ELAPSED FROM THE END OF THE PREVIOUS PLACEMENT. LIFT THICKNESSES SHALL BE REDUCED AS NECESSARY TO PREVENT FLOATATION OF THE STRUCTURE.
4. WHEN CLSM IS PLACED OVER PIPELINES, THE PIPES SHALL BE SUITABLY ANCHORED TO PREVENT FLOATATION DURING THE PROCESS. PLACEMENT OF CLSM OVER PIPING WITH DIAMETERS GREATER THAN 36-INCHES SHALL MEET THE FOLLOWING MINIMUM REQUIREMENTS:
   a. THE INITIAL CLSM PLACEMENT LAYER SHALL NOT EXCEED A DEPTH MORE THAN 6-INCHES ABOVE THE PIPE INVERT.
   b. SUPPLEMENTAL ANTI-FLOATATION ANCHORAGE PROVISIONS SHALL BE PROVIDED BY THE CONTRACTOR AS NEEDED.
   c. AFTER THE INITIAL LAYER HAS BEEN ALLOWED TO SET FOR AT LEAST 16 HOURS, THE SECOND LAYER MAY BE PLACED TO THE CENTERLINE OF THE PIPE. THE SECOND LAYER OF CLSM SHALL BE ALLOWED TO CURE FOR AT LEAST 16 HOURS.
   d. THE THIRD LAYER OF CLSM SHALL NOT EXCEED A DEPTH OF 3-FEET ABOVE PIPING AND SHALL BE ALLOWED TO CURE FOR AT LEAST 24 HOURS.
   e. ADDITIONAL LAYERS OF CLSM SHALL BE PLACED UNTIL THE REQUIRED TOTAL DEPTH IS ACHIEVED, IN LAYERS NOT TO EXCEED 3-FEET. EACH LAYER SHALL BE ALLOWED TO CURE 16-HOURS BEFORE PLACEMENT OF A SUNSEQUENT LAYER.

TEMPORARY BULKHEAD NOTES

1. THE FABRICATION AND INSTALLATION OF TEMPORARY BULKHEADS WILL BE REQUIRED INSIDE OF THE EXISTING FILTER BUILDING, AT THE EXISTING EFFLUENT CONDUIT. THESE BULKHEADS ARE NECESSARY TO HYDRAULICALLY ISOLATE WORK AREAS FOR THE PROTECTION OF CONSTRUCTION PERSONNEL. THE DESIGN, DETAILING, FABRICATION AND INSTALLATION OF THESE BULKHEADS IS THE RESPONSIBILITY OF THE GENERAL CONTRACTOR. DETAILED DRAWINGS AND A SUMMARY OF THE BASIS OF DESIGN SHALL BE SUBMITTED TO THE DESIGN TEAM FOR REVIEW. DRAWINGS SHALL BEAR THE SEAL AND SIGNATURE OF THE ENGINEER RESPONSIBLE FOR THEIR PREPARATION. THE RESPONSIBLE ENGINEER SHALL BE LICENSED TO PRACTICE ENGINEERING IN THE STATE OF TEXAS.
2. IN ADDTION TO BEING STRUCTURALLY CAPABLE OF RESISTING APPLIED HYDROSTATIC LOADS, THE BULKHEADS SHALL BE SUFFICIENTLY WATER-TIGHT FOR PERSONNEL TO SAFELY PERFORM THEIR WORK AND PRODUCE A QUALITY PRODUCT.
3. LOCATIONS OF REQUIRED TEMPORARY BULKHEADS ARE GRAPHICALLY REPRESENTED ON THE MECHANICAL DRAWINGS. REFER TO DWG M-06.
4. TEMPORARY BULKHEADS SHALL BE DESIGNED TO WITHSTAND A UNIFORM HYDRAULIC PRESSURE OF 10 PSI.
5. DUE TO REQUIRED PLANT SHUTDOWN DURATION LIMITATIONS, THE TEMPORARY BULKHEADS WILL LIKELY REQUIRE PARTIAL/PHASED INSTALLATIONS OCCURING DURING MULIPLE SHUTDOWN PERIODS AND POSSIBLE PARTIAL REMOVAL AND RE-INSTALLATIONS. COORDINATE THESE INSTALLATIONS WITH THE CONSTRUCTION SEQUENCING DOCUMENTS IN THE SPECIFICATIONS.
6. ACCESS INTO THE EFFLUENT CONDUIT IS AVAILABLE THRU 1 OF 2 EXISTING 30-INCH ACCESS MANHOLES LOCATED AT THE LOWER LEVEL OF THE FILTER PIPE GALLERY. LATER IN THE CONSTRUCTION SCHEDULE, ACCESS MAY BECOME AVAILABLE THRU THE NEW 72-INCH CONNECTION PIPES TYING THE NEW SOUTHSIDE CLEARWELL TO THE EXISTING FILTER CLEARWELL OR EFFLUENT CONDUIT. THE CONTRACTOR SHALL CONSIDER THE AVAILABLE ACCESS OPENING SIZES WHEN DETAILING AND DESIGNING THE BULKHEAD PANELS AND PIECES.
7. DIMENSIONS AND CONDITIONS OF THE EXISTING EFFLUENT CONDUIT SHALL BE FIELD MEASURED AND VERIFIED AT EACH BULKHEAD LOCATION BY THE GENERAL CONTRACTOR PRIOR TO DESIGN AND FABRICATION OF MATERIALS.
8. THE PROCESS OF DRILLING TO INSTALL ANCHORS FOR THE TEMPORARY BULKHEAD SHALL NOT DAMAGE OR CUT ANY EXISTING WALL REINFORCING. DETAILING OF BULKHEAD CONNECTIONS SHALL PROVIDE THE FLEXIBILITY TO SHIFT OR RELOCATE ANCHORS TO AVOID EXISTING REINFORCING BARS.
9. WHEN THE TEMPORARY BULKHEADS ARE PERMANENTLY DECONSTRUCTED, ALL STEEL ANCHORS INSTALLED INTO THE EXISTING CONCRETE SHALL BE REMOVED, UNLESS THE ANCHORS ARE MANUFACTURED FROM TYPE 316 STAINLESS STEEL. STAINLESS STEEL ANCHORS THAT REMAIN IN-PLACE MUST BE CUT-OFF FLUSH WITH THE FACE OF THE EXISTING CONCRETE. AT ANCHORS THAT CAN BE REMOVED, SUCH AS SCREW ANCHORS, THE CONTRACTOR SHALL FILL ALL HOLES LEFT BEHIND WITH A CORROSION INHIBITING REPAIR MORTAR SUCH AS "SIKATOP 111 PLUS" AS MANUFACTURED BY SIKA CORPORATION (OR AN APPROVED EQUAL). PREPARE, APPLY, AND CURE PER THE MANUFACTURER'S PUBLISHED GUIDELINES.

NOTES FOR CREATION OF LARGE DIAMETER HOLES

1. THESE NOTES APPLY TO THE THREE LARGE DIAMETER HOLES THAT WILL BE CUT INTO THE EXISTING FILTER BUILDING STRUCTURE AT THE CLEARWELL LEVEL. THE HOLES WILL BE USED FOR CONNECTION PIPE INSTALLIONS BETWEEN THE EXISTING AND NEW CLEARWELL STRUCTURES. SEE DETAILS ON DRAWINGS S-20 AND S-21 FOR ADDT'L INFO.
2. THE LARGE DIAMETER HOLES SHALL BE CUT IN A SUFFICIENTLY PRECISE MANNER TO PRODUCE CIRCULAR OPENINGS THAT DO NOT DEVIATE FROM THEIR DEFINED DIAMETER BY MORE THAN 1/4-INCH (+/-). THE CONTRACTOR SHALL PROPOSE A METHOD THAT CAN BE DEMONSTRATED FROM PAST PROJECTS TO BE CAPABLE OF MEETING THE REQUIRED PRECISION. ONE SUCH CUTTING METHOD THAT MAY BE SUITABLE IS DIAMOND-COATED WIRE SAWING.
3. FOLLOWING THE CREATION OF THE INITIAL HOLE, THE CONTRACTOR SHALL PERFORM LOCALIZED REPAIRS, USING HAND-HELD TOOLS, TO REDUCE THE OUT-OF-TOLERANCE PROJECTIONS. IN ORDER TO ACCOMMODATE THE REQUIRED REPAIR MORTAR APPLICATION, THE FINAL HOLE DIMESION MUST ALLOW FOR AN APPLICATION OF NO LESS THAN 1/8-INCH OF REPAIR MORTAR.
4. FOLLOWING THE REMOVAL/REDUCTION OF PROJECTING AREAS AND ADDITIONAL SURFACE PREPARATION AS REQUIRED BY THE MANUFACTURER, PRIME THE CONCRETE SUBSTRATE AND EXPOSED REINFORCING WITH SIKA ARMATEC 110 EPOCEM (OR AN APPROVED & COMPATIBLE EQUAL). THE ENTIRE SURFACE OF EACH HOLE SHALL RECEIVE AN APPLICATION OF SIKATOP 123 PLUS REPAIR MORTAR AS MANUFACTURED BY SIKA CORPORATION (OR AN APPROVED EQUAL).
5. THE REPAIR MORTAR SHALL BE TROWEL-APPLIED TO FILL ALL INDENTATIONS AND SHALL COVER ALL SURFACES OF THE HOLE WITH A MINIMUM THICKNESS OF 1/8-INCH, INCLUDING LOCATIONS WITH PROTRUSIONS. THE COMPLETED FINISHED SURFACE SHALL HAVE SMOOTH TRANSITIONS THROUGHOUT AND A MAXIMUM DIAMETRICAL REDUCTION OF 1/4-INCH WITH NO DIAMETRICAL INCREASES. IF NECESSARY TO ENSURE THAT PROJECTION LIMITS ARE NOT EXCEEDED, IT IS ACCEPTABLE FOR THE CONTRACTOR TO INCREASE THE INITIAL DIAMETERS OF THE HOLES BY AS MUCH AS 3/8-INCH.
6. THE REPAIR MORTAR AND ITS ASSOCIATED PRIMER SHALL BE MIXED, APPLIED AND CURED PER THE MANUFACTURER'S PUBLISHED GUIDELINES.

REVISIONS

NO.	DR	CK	DATE	DESCRIPTION

BLACK & VEATCH
Building a world of difference.®
Black & Veatch Corporation
Registration No. F-258
Austin, Texas

Jose I. Guerra, Inc.
Consulting Engineers
2401 South IH-35 Suite 210
Austin, Texas 78741
(512) 445-2090
Structural • Civil • Mechanical • Electrical
TBPE FIRM F-3

STATE OF TEXAS — BRANDON M. GOODLOE — 92456 — REGISTERED PROFESSIONAL ENGINEER
9-24-2014

Austin WATER
Walnut Creek WWTP - Tertiary Filter Rehabilitation Project
CIP ID No. 3023.025

STRUCTURAL GENERAL NOTES SHEET 2 OF 2

DESIGNED BY:	BG
DRAWN BY:	FS
REVIEWED BY:	LP
APPROVED BY:	JL
PROJECT NO.:	168622
DATE:	09/24/2014
SCALE:	NO SCALE
REVISION:	
DISCIPLINE NO.	S-02
DWG. NO.	62 OF 273

FD168622 D168622 File: F:\12047 Walnut Creek WWTP Filter Improvements\DRAWINGS\CAD\S-02.dwg Layout: S-02 Plotted: 7/29/2013
SAVED: PWFLDR:D168622....\09.5030 - Mechanical Process Drawings

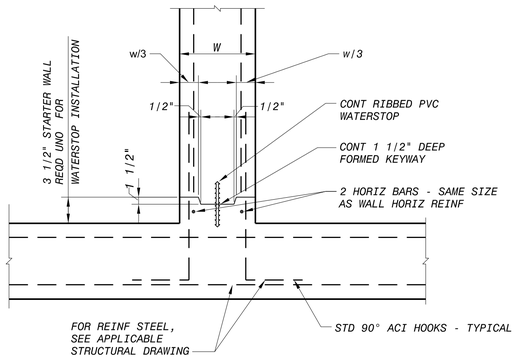

NOTES
1. HORIZ WALL REINF NOT PICTURED FOR CLARITY.
2. ROUGHEN THE SURFACE OF THE STARTER WALL BY SANDBLASTING TO EXPOSE AGGREGATE PARTICLES. REMOVE ALL LOOSE MATERIALS; WASH & SCRUB SURFACE w/ STIFF BROOMS. KEEP CONC SURFACE MOIST FOR 12 HOURS PRIOR TO PLACING WALL CONC. IMMEDIATELY PRIOR TO PLACING CONC, WET SURFACE OF JOINT w/ CLEAN WATER.

STARTER WALL DETAIL (1 / -)
NOT TO SCALE

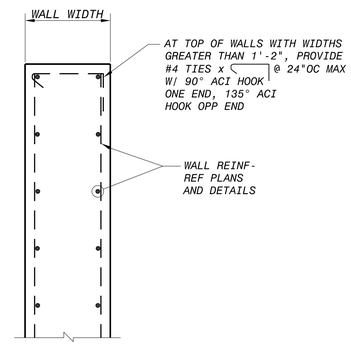

TYPICAL TOP OF WALL REINFORCING DETAIL (2 / -)
NOT TO SCALE

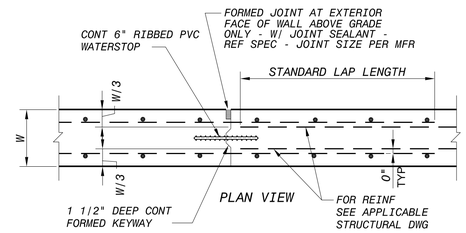

NOTE
1. ROUGHEN THE SURFACE OF THE STARTER WALL BY SANDBLASTING TO EXPOSE AGGREGATE PARTICLES. REMOVE ALL LOOSE MATERIALS; WASH & SCRUB SURFACE w/ STIFF BROOMS. KEEP CONC SURFACE MOIST FOR 12 HOURS PRIOR TO PLACING WALL CONC. IMMEDIATELY PRIOR TO PLACING CONC, WET SURFACE OF JOINT w/ CLEAN WATER.

TYPICAL CONSTRUCTION JOINT (CJ) DETAIL CONCRETE WALL & SLAB (3 / -)
NOT TO SCALE

STANDARD LAP LENGTHS		
BAR SIZE	BAR POSITION	
	CASE 1	CASE 2
#3	28"	36"
#4	37"	48"
#5	47"	60"
#6	56"	72"
#7	81"	106"
#8	93"	121"
#9	105"	136"
#10	118"	153"
#11	131"	170"

CASE 1: HORIZONTAL BARS WITH LESS THAN 12" OF CONC BELOW BARS, AND ALL VERTICAL BARS.

CASE 2: HORIZONTAL BARS W/ 12" OR MORE CONC BELOW BARS.

NOTE
THIS TABLE ONLY APPLIES TO 4000 PSI CONCRETE AND 60 KSI REBAR.

STANDARD LAP LENGTHS (4 / -)
NOT TO SCALE

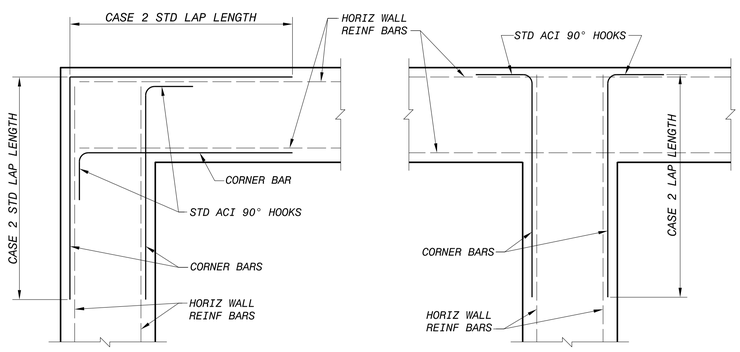

PLAN SECTION AT CORNER

PLAN SECTION AT T-INTERSECTION

NOTES:
1. CORNER BARS SHALL BE THE SAME SIZE & SPACING AS HORIZ WALL REINF.
2. CORNER BARS SHALL BE LOCATED IN THE SAME VERT PLANE AS WALL REINF. SPACES BETWEEN BARS ARE SHOWN FOR CLARITY.
3. REFER TO DETAIL 4 THIS SHEET FOR STANDARD LAP LENGTH TABLE.
4. VERTICAL WALL REINF NOT PICTURED FOR CLARITY.

TYPICAL HORIZ REINF DETAILS FOR CONCRETE WALL INTERSECTIONS (5 / -)
NOT TO SCALE

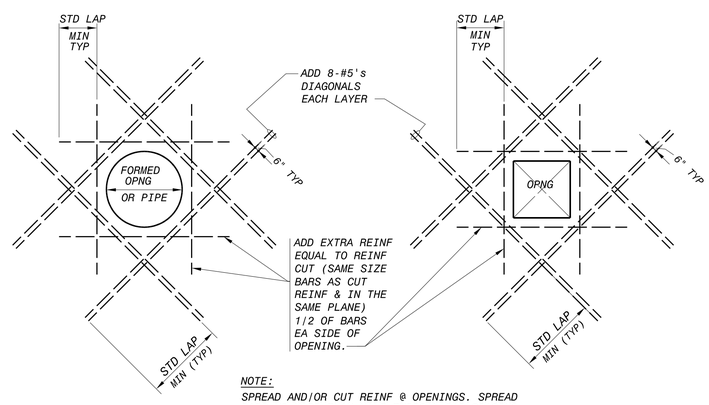

NOTE:
SPREAD AND/OR CUT REINF @ OPENINGS. SPREAD BARS NO MORE THAN HALF TYPICAL BAR SPACING.

TYPICAL CONCRETE REINFORCEMENT AT WALL/ SLAB PENETRATIONS (6 / -)
NOT TO SCALE

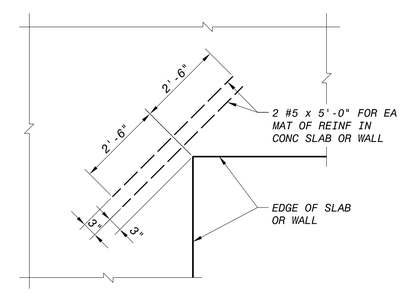

NOTE:
PROVIDE ADDTL REINF BARS @ ALL SLAB AND WALL CONDITIONS WITH RE-ENTRANT CORNERS, OPENINGS, ISOLATION JOINTS, OR POUR JOINTS

TYPICAL CONCRETE RE-ENTRANT CORNER REINFORCMENT DETAIL (7 / -)
NOT TO SCALE

NO.	DR	CK	DATE	DESCRIPTION

REVISIONS

BLACK & VEATCH
Building a world of difference.
Black & Veatch Corporation
Registered No. F-253
Austin, Texas

Jose I. Guerra, Inc.
Consulting Engineers
2000 South IH-35 Suite 210
Austin, Texas 78741
(512) 445-2090
Civil • Structural • Mechanical • Electrical
TBPE FIRM F-3

Brandon M. Gonzalez
92456
Registered Professional Engineer
9-24-2014

AUSTIN WATER
Walnut Creek WWTP - Tertiary Filter Rehabilitation Project
CIP ID No. 3023.025

STRUCTURAL
TYPICAL DETAILS

DESIGNED BY:	BG
DRAWN BY:	RH
REVIEWED BY:	LP
APPROVED BY:	JL
PROJECT NO.:	168622
DATE:	09/24/2014
SCALE:	NOT TO SCALE

REVISION:

DISCIPLINE NO.
S-03

DWG. NO.
63 OF 273

FD168622
D168622
File: F:\12047 Walnut Creek WWTP Filter Improvements\DRAWINGS\CAD\S-03.dwg Layout: S-03 Plotted: 7/29/2013
SAVED:
CYONET ID:

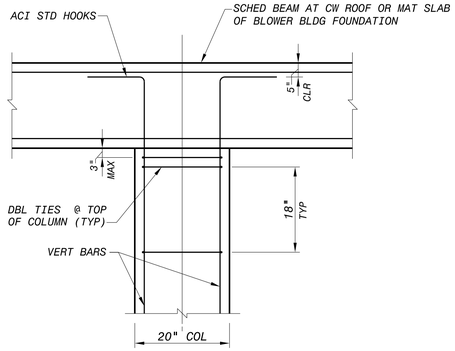

COLUMN DISCONTINUOUS AT TOP

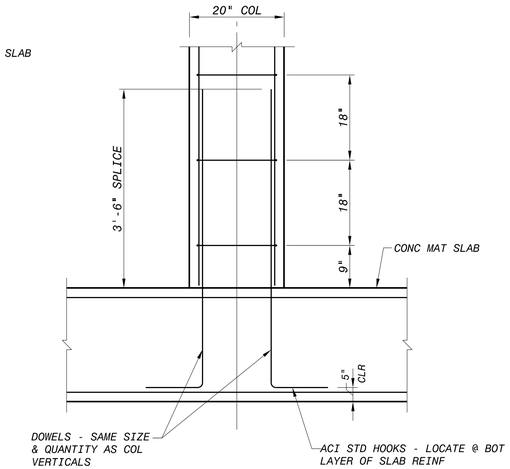

COLUMN ORIGINATING AT FOUNDATION

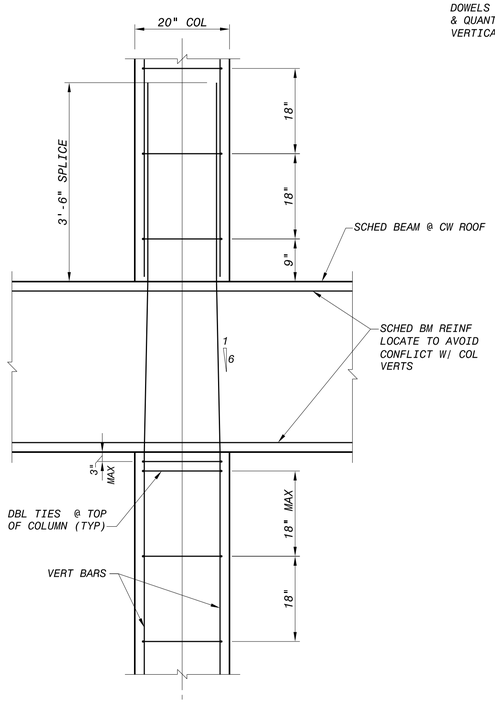

CONTINUOUS COLUMN THRU CW ROOF

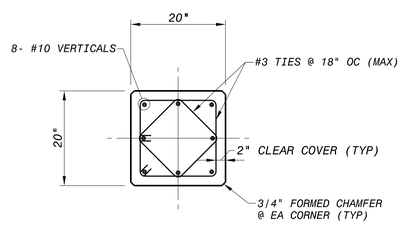

PLAN SECTION THRU COLUMN

TYPICAL CONCRETE COLUMN REINFORCING DETAILS (1 / -)

NOT TO SCALE

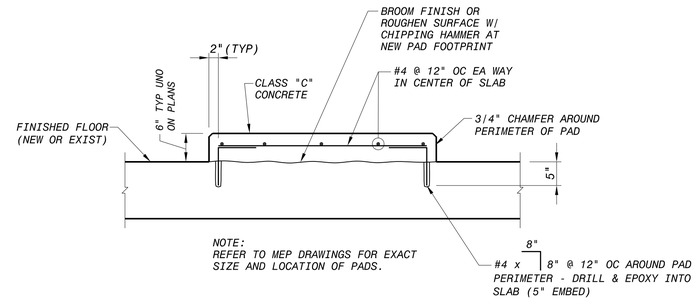

TYPICAL EQUIPMENT HOUSEKEEPING PAD (2 / -)

NOT TO SCALE

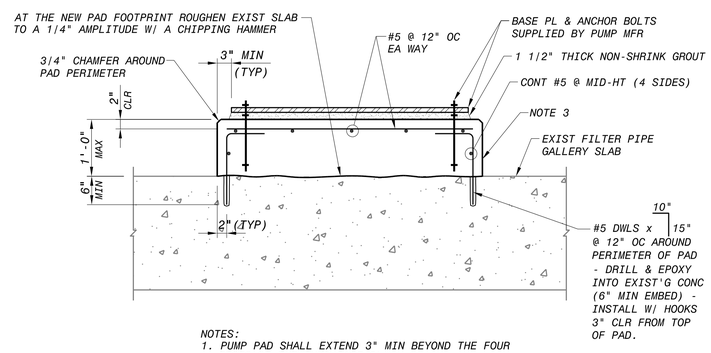

NOTES:
1. PUMP PAD SHALL EXTEND 3" MIN BEYOND THE FOUR EDGES OF THE PUMP BASE PL.
2. MAXIMUM HT OF PUMP PAD IS ASSUMED TO BE 12" NOTIFY ENGINEER IF DEEPER PAD IS REQUIRED TO ACCOMODATE ANCHOR BOLT EMBED.
3. CONCRETE PUMP PADS SHALL BE COATED PER SPEC 09940, 3-8 FINISH 4.

TYPICAL PUMP PAD DETAIL (3 / -)

NOT TO SCALE

NO.	DR	CK	DATE	DESCRIPTION

REVISIONS

BLACK & VEATCH Building a world of difference.
Black & Veatch Corporation
Registration No. F-253
Austin, Texas

Jose I. Guerra, Inc.
Consulting Engineers
2608 Nueces, Suite 210
Austin, Texas 78705
(512) 445-2090
Civil • Structural • Mechanical • Electrical
TBPE FIRM # F-3

TEXAS REGISTERED PROFESSIONAL ENGINEER BRANDON M. GOODOLE 92456 9-24-2014

Walnut Creek WWTP - Tertiary Filter Rehabilitation Project
CIP ID No. 3023.025
AUSTIN WATER

STRUCTURAL
TYPICAL DETAILS

DESIGNED BY:	BG
DRAWN BY:	RH
REVIEWED BY:	LP
APPROVED BY:	JL
PROJECT NO.:	168622
DATE:	09/24/2014
SCALE:	NOT TO SCALE

REVISION:

DISCIPLINE NO. S-04

DWG. NO.

FD168622 D168622 File: F:\2047 Walnut Creek WWTP Filter Improvements\DRAWINGS\CAD\S-04.dwg Layout: S-04 Plotted: 7/29/2013
SAVED: CYONET ID:

CONCRETE MASONRY NOTES

1. ALL CONCRETE MASONRY SHALL BE IN ACCORDANCE WITH THE REQUIREMENTS OF THE LOCAL BUILDING CODES AND THE NATIONAL CONCRETE MASONRY ASSOCIATION.
2. HOLLOW CONCRETE MASONRY UNITS SHALL BE GRADE N UNITS, CONFORMING TO ASTM C90, LATEST EDITION.
3. MASONRY UNITS SHALL HAVE A MINIMUM AVERAGE NET AREA COMPRESSIVE STRENGTH OF 1900 PSI (f'm = 1500 PSI) WHEN TESTED IN ACCORDANCE WITH ASTM C140, "STANDARD TEST METHODS FOR SAMPLING AND TESTING CONCRETE MASONRY UNITS AND RELATED UNITS".
4. MORTAR FOR MASONRY SHALL BE IN ACCORDANCE WITH ASTM C270 TYPE "S", EXCEPT ALL MORTAR BELOW GRADE SHALL BE TYPE "M".
5. GROUT FOR HOLLOW MASONRY UNITS SHALL BE IN ACCORDANCE WITH ASTM C476, AND SHALL HAVE A MINIMUM 28-DAY COMPRESSIVE STRENGTH OF 3000 PSI AND SHALL BE NORMAL WEIGHT CONCRETE WITH PEA GRAVEL AGGREGATE.
6. REINFORCING SHALL BE NEW BILLET STEEL COMPLYING WITH ASTM A615, GRADE 60.
7. UNLESS OTHERWISE NOTED, ALL LOAD BEARING MASONRY WALLS AND EXTERIOR WALLS SHALL BE REINFORCED WITH 9 GAUGE, MILL GALVANIZED, HORIZONTAL WIRE REINFORCEMENT (TRUSS TYPE) EMBEDDED IN MORTAR JOINTS AT 16-INCHES ON-CENTER. WIRE REINFORCEMENT SHALL CONFORM TO ASTM DESIGNATION A82 AND SHALL BE LAPPED AT LEAST 6-INCHES WITH AT LEAST ONE CROSS WIRE WITHIN THE LAP.
8. CONCRETE MASONRY WALLS SHALL BE CONSTRUCTED USING THE LOW-LIFT METHOD, WITH A MAXIMUM GROUT POUR HEIGHT OF 4 FEET.
9. SPLICE VERTICAL WALL REINFORCING 48 BAR DIAMETERS (30-INCHES MINIMUM).
10. PROVIDE VERTICAL CONTROL JOINTS AT 25-FEET OC (MAX). REF ARCH'L FOR LOCATIONS. SEE DETAIL 10 THIS SHEET FOR TYPICAL WALL REINF @ CONTROL JOINTS.

CONCRETE MASONRY LINTEL NOTES

1. FOR OPENINGS LESS THAN 6'-0", PROVIDE AN 8-INCH DEEP LINTEL REINFORCED WITH (2) #4 CONTINUOUS BOTTOM BARS. PROVIDE 8-INCH MINIMUM BEARING AT EACH LINTEL BEAM SUPPORT. GROUT AND REINFORCE ONE CMU CELL AT EACH SIDE OF THE OPENING WITH (1)#5 VERTICAL BAR.
2. FILL LINTEL BLOCKS WITH 3000 PSI NORMAL WEIGHT PEA-GRAVEL CONCRETE.
3. REFER TO THE CMU LINTEL SCHEDULE ON THIS SHEET FOR OPENINGS WITH CLEAR SPANS EQUAL TO OR GREATER THAN 6'-0".

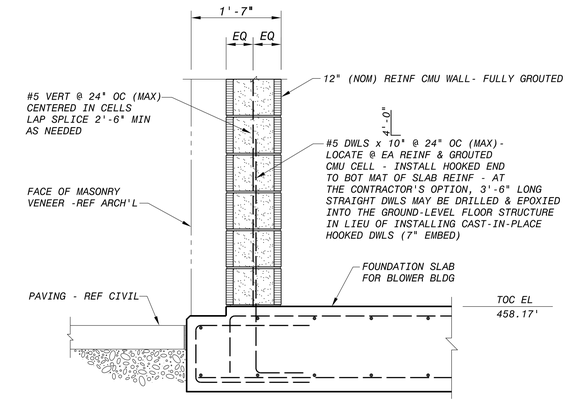

TYPICAL STRUCTURAL CMU WALL DETAIL @ BOTTOM OF WALL (1 / -)
NOT TO SCALE

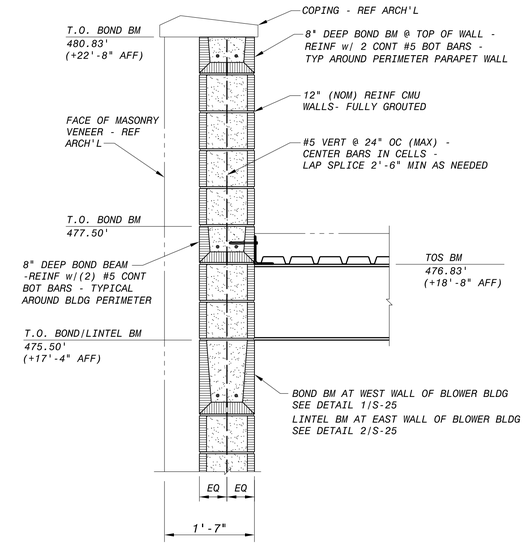

TYPICAL STRUCTURAL CMU WALL DETAIL @ TOP OF WALL (2 / -)
NOT TO SCALE

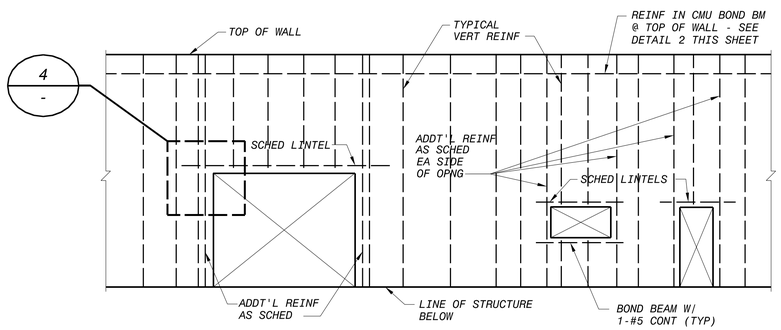

TYPICAL CMU BACK-UP WALL VERTICAL REINFORCING PATTERN (3 / -)
NOT TO SCALE

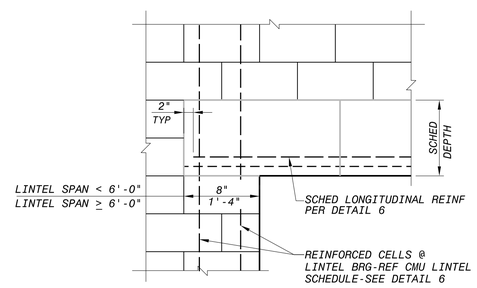

CMU LINTEL SUPPORT DETAIL (4 / -)
NOT TO SCALE

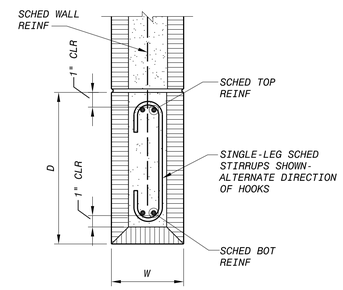

NOTE: 8" CMU LINTEL WITH SINGLE-LEG STIRRUPS SHOWN-PROVIDE DBL-LEG STIRRUPS @ 12" CMU LINTELS

CMU LINTEL SECTION (5 / -)
NOT TO SCALE

CMU LINTEL SCHEDULE

LINTEL SECTION (WxD)	CLEAR SPAN	
	6'-0" TO 10'-0"	10'-0" TO 12'-0"
8" x 16"	2 - #5 TOP & BOT W/ #3 SINGLE-LEG #3 STIR @ 8"OC	2 - #5 TOP & BOT W/ #3 SINGLE-LEG #3 STIR @ 8"OC
12" x 16"	2 - #5 TOP & BOT W/ #3 DBL-LEG #3 STIR @ 8"OC	2 - #5 TOP & BOT W/ #3 DBL-LEG #3 STIR @ 8"OC
REINF CELLS EA SIDE OF OPENINGS	2 #5 VERT	3 #5 VERT

CMU LINTEL SCHEDULE (6 / -)
NOT TO SCALE

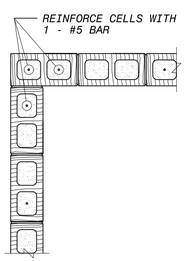

NOTE:
GROUT ALL REINFORCED CELLS (TYPICAL)

CMU WALL - CORNER DETAIL (7 / -)
NOT TO SCALE

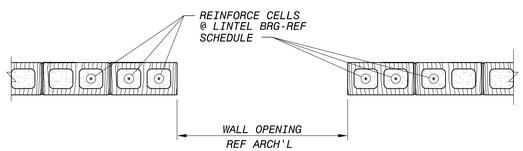

NOTE:
GROUT ALL REINFORCED CELLS (TYPICAL)

CMU WALL - JAMB REINFORCING DETAIL (8 / -)
NOT TO SCALE

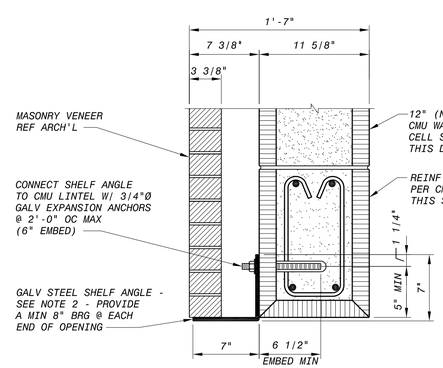

NOTES
1. SHELF ANGLE IS REQ'D AT 7'-0" OPENINGS & LARGER, BEYOND THE LIMITS OF LOOSE LINTELS.
2. SHELF ANGLE DIMS SHALL BE 7x7x3/8. FABRICATE FROM TYPE A36 STEEL. SHELF ANGLE MAY BE A BENT PL, MAY BE CUT FROM A LARGER ANGLE TO MATCH REQ'D LEG DIMS, OR MAY BE FAB'D FROM WELDED STEEL PL's.
3. SHELF ANGLES SHALL HAVE A HOT DIP GALV FINISH.

STEEL SHELF ANGLE AT CMU LINTEL (9 / -)
NOT TO SCALE

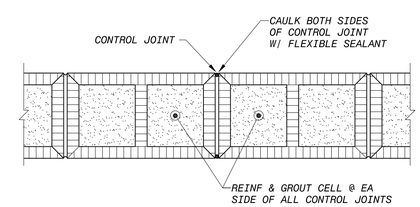

NOTE: STABILIZE CONTROL JOINTS WITH THE USE OF TONGUE-AND-GROOVE CMU UNITS, PREMOULDED CONTROL JOINT INSERTS, OR JOINT STABILIZING ANCHORS. REFER TO ARCH'L DETAILS.

TYPICAL STRUCTURAL CMU WALL DETAIL VERTICAL CONTROL JOINT-PLAN VIEW (10 / -)
NOT TO SCALE

NO.	DR	CK	DATE	DESCRIPTION

REVISIONS

BLACK & VEATCH Building a world of difference.
Black & Veatch Corporation
Registration No. F-253
Austin, Texas

Jose I. Guerra, Inc.
Consulting Engineers
2600 South Gravis Street, Suite 210
Austin, Texas 78741
(512) 445-2090
Civil • Structural • Mechanical • Electrical
TBPE FIRM # F-3

STATE OF TEXAS
BRANDON M. GONZALEZ
92456
LICENSED PROFESSIONAL ENGINEER
9-24-2014

AUSTIN WATER
Walnut Creek WWTP - Tertiary Filter Rehabilitation Project
CIP ID No. 3023.025

STRUCTURAL TYPICAL DETAILS

DESIGNED BY:	BG
DRAWN BY:	RH
REVIEWED BY:	LP
APPROVED BY:	JL
PROJECT NO.:	168622
DATE:	09/24/2014
SCALE:	AS INDICATED
REVISION:	
DISCIPLINE NO.	S-05
DWG. NO.	65 OF 273

FD168622
D168622
File: F:\12047 Walnut Creek WWTP Filter Improvements\DRAWINGS\CAD\S-05.dwg Layout: S-05 Plotted: 7/29/2013
SAVED:
CYONET ID:

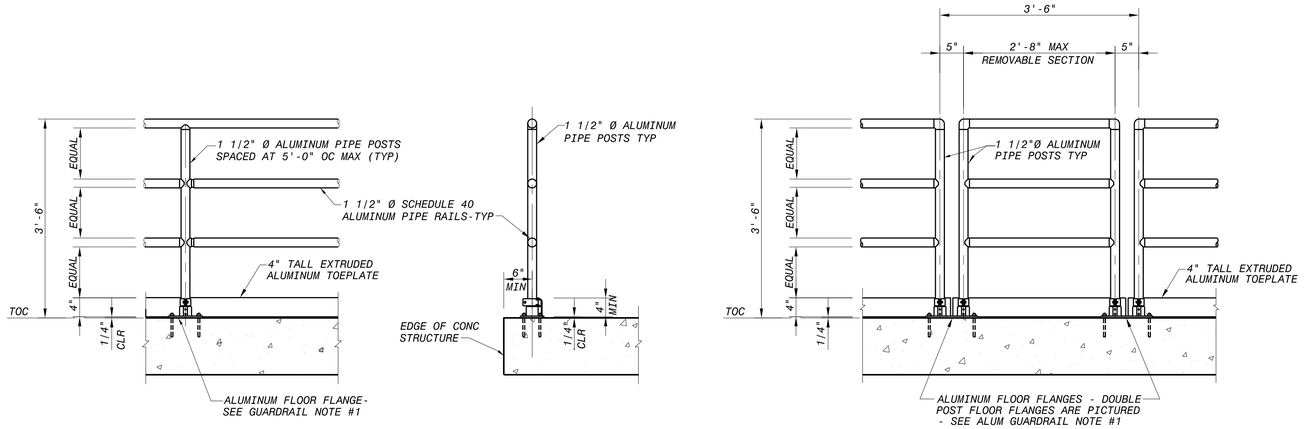

TYPICAL FLOOR MOUNTED ALUMINUM GUARDRAIL SYSTEM DETAILS (1 / -)

NOT TO SCALE

DETAIL 1 NOTES (ALUMINUM GUARDRAIL SYSTEM)

1. ALL GUARDRAILS SHALL HAVE POSTS WITH TOP MOUNTED FLOOR FLANGES ANCHORED TO THE CONC STRUCTURE WITH TYPE 316 STAINLESS STEEL EXPANSION ANCHORS. DOUBLE POST FLOOR FLANGES MAY BE USED TO ALLOW POSTS TO BE INSTALLED IN CLOSE PROXIMITY AT REMOVABLE GUARDRAIL SECTIONS.
2. SPACING OF POSTS SHALL NOT EXCEED 5'-0" OR THE DISTANCE REQUIRED TO RESIST THE DESIGN LOADS LISTED IN THE RAILING SYSTEM SPECIFICATION. IF THE MANUFACTURER'S POSTS ARE NOT OF ADEQUATE STRENGTH, THE MANUFACTURER MAY REDUCE THE POST SPACING OR ADD REINFORCING OR BOTH IN ORDER TO MEET THE LOADING REQUIREMENTS.
3. POSTS AND RAILS SHALL BE A MIN OF 1-½ INCHES NOMINAL DIAMETER AND SHALL HAVE A MIN SCHEDULE 40 WALL THICKNESS.
4. TOE PLATES SHALL CONFORM TO OSHA STANDARDS. THEY SHALL BE A MINUMUM OF 4 INCHES TALL AND SHALL BE AN EXTRUSION THAT ATTACHES TO THE POSTS WITH CLAMPS WHICH ALLOW FOR EXPANSION AND CONTRACTION BETWEEN POSTS. TOE PLATES SHALL BE SET ¼ INCH ABOVE THE WALKING SURFACE.
5. COAT ALL AREAS OF ALUMINUM RAILINGS IN CONTACT WITH CONCRETE, GROUT, MASONRY, WOOD, OR DISSIMILAR METALS WITH A PROTECTIVE COATING OF BITUMINOUS PAINT, MYLAR ISOLATORS, OR OTHER APPROVED MATERIAL.
6. REFER TO THE RAILING SYSTEM SPECIFICATION FOR ADDITIONAL INFORMATION.

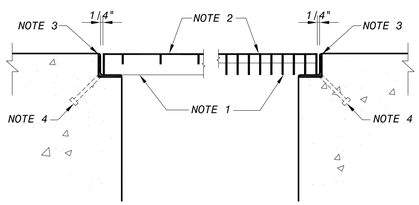

BEARING SIDE NON-BEARING SIDE

DETAIL 2 NOTES (STAINLESS STEEL GRATING & GRATING SUPPORTS)

1. TYPE 316L SS GRATING - REFER TO PLAN DWGS FOR GRATING SIZES AND DESIGNATIONS.
2. EXCEPT FOR OPNG LOCATIONS IN GRATING SECTIONS FOR GATE OPERATOR SUPPORTS AND OPENINGS FOR GRATING LIFTING HARDWARE, ALL GRATING SURFACES SHALL BE CONTINUOUSLY CLAD WITH 1/8-INCH THICK TYPE 316L SS DIAMOND TREAD FLOOR PLATE ON THE TOP WALKING SURFACE. FLOOR PLATING SHALL BE SECURELY SHOP WELDED TO THE GRATING.
3. TYPE 316L SS ANGLE FRAME - SEE SCHEDULE BELOW FOR ANGLE SIZES. MITER AND WELD EMBED ANGLES AT CORNERS. NAIL HOLES (1/8-INCH MAX) MAY BE PUNCHED IN THE ANGLES AT 18" OC FOR SUPPORTING THE ANGLE FRAMES.
4. SHOP WELD 3/8" x 4" TYPE 316L SS HCA'S AT 18" OC MAX AROUND THE ANGLE FRAME PERIMETER (AS ILLUSTRATED). AT THE SODIUM BISULFITE FACILITY'S SUMP PIT, PROVIDE SHORTER HCA'S PER DETAIL 5/S-33.
5. WHEN INSTALLED, THE TOP FLOOR PLATE SURFACES SHALL BE FLUSH WITH THE TOP OF THE ANGLE FRAME'S VERTICAL LEGS AND THE TOP OF THE ADJACENT CONCRETE.
6. REFER TO STAINLESS STEEL BAR GRATING GENERAL NOTES ON SHEET S-02 FOR ADDITIONAL BAR GRATING INFO.
7. NOTES 2 AND 5 APPLY SPECIFICALLY TO GROUND-LEVEL GRATING PLATFORMS AT THE CLEARWELL ROOFS. GRATING SECTIONS AT THE SODIUM BISULFITE FACILITY DO NOT REQUIRE FLOOR PLATE CLADDING.

GRATING SUPPORT SCHEDULE

GRATING DEPTH	SS EMBED ANGLE SIZE	FLOOR PLATE REQUIRED
1-1/4"	L 1 1/2"x 1 1/2"x 1/4"	NO
1-1/2"	L 2"x 2"x 3/8"	YES
2"	L 2 1/2" x 2 1/2" x 3/8"	YES
2-1/2"	L 3"x 3"x 3/8"	YES

TYPICAL STAINLESS STEEL GRATING & SUPPORT DETAIL AND SCHEDULE (2 / -)

NOT TO SCALE

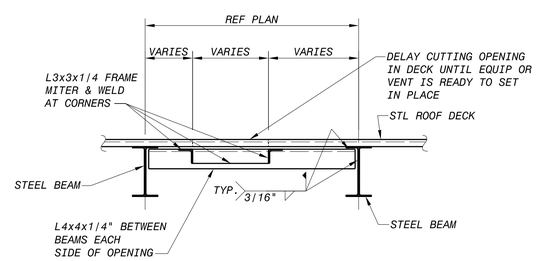

(FOR OPENINGS LARGER THAN 6"x6")

ROOF PENETRATION FRAMING DETAIL (3 / -)

NOT TO SCALE

NO.	DR	CK	DATE	DESCRIPTION

REVISIONS

BLACK & VEATCH Building a world of difference.
Black & Veatch Corporation
Registration No. F-253
Austin, Texas

Jose I. Guerra, Inc.
Consulting Engineers
2600 South Lamar Blvd., Suite 210
Austin, Texas 78704
(512) 445-2090
Structural • Civil • Mechanical • Electrical
TBPE FIRM # F-3

Walnut Creek WWTP - Tertiary Filter Rehabilitation Project

CIP ID No. 3023.025

AUSTIN WATER

STRUCTURAL TYPICAL DETAILS

DESIGNED BY:	BG
DRAWN BY:	RH
REVIEWED BY:	LP
APPROVED BY:	JL
PROJECT NO.:	168622
DATE:	09/24/2014
SCALE:	AS INDICATED

REVISION:

DISCIPLINE NO. S-06

DWG. NO. 66 OF 273

FD168622
D168622
File: F:\12047 Walnut Creek WWTP Filter Improvements\DRAWINGS\CAD\S-06.dwg Layout: S-06 Plotted: 7/29/2013
SAVED:
CYONET ID:

BAR PLACEMENT DIAGRAMS

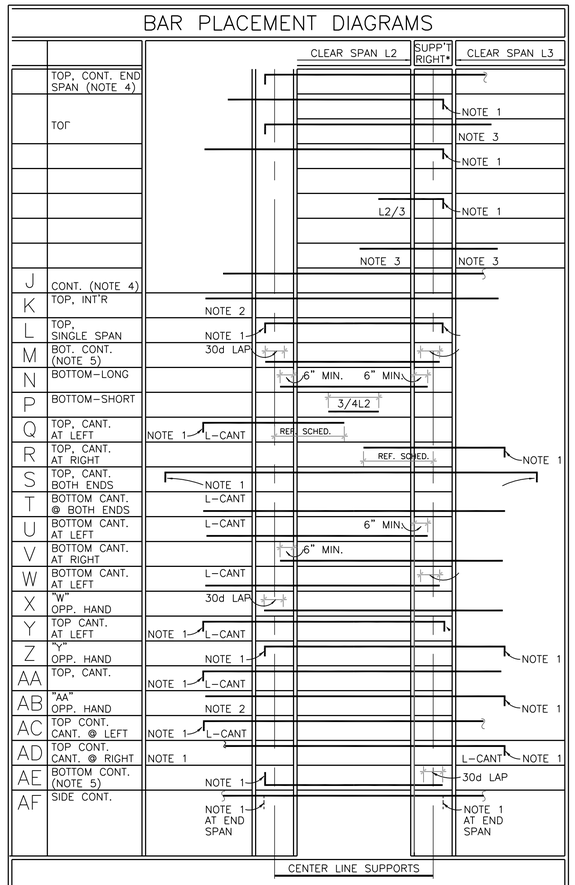

* BEAM ORIENTATION ON FRAMING PLAN RELATIVE TO PLACEMENT DIAGRAM IS DETERMINED BY READING BEAM MARK ON PLAN: LEFT–TO–RIGHT.

JOIST ORIENTATION IS DETERMINED PERPENDICULAR TO JOIST MARK ON FRAMING PLAN: LEFT–TO–RIGHT OR BOTTOM–TO–TOP.

NOTE 1: STANDARD ACI 90° HOOK.
NOTE 2: L1/3 OR L2/3, WHICHEVER IS GREATER.
NOTE 3: L2/3 OR L3/3, WHICHEVER IS GREATER.
NOTE 4: ALL CONT. TOP BARS SHALL BE LAPPED A MIN. OF 30 BAR DIAMETERS (EXCEPT PERIMETER BEAMS) AT THE MID SPAN WHERE SPLICE OCCURS AT PERIMETER BEAMS, PROVIDE CLASS A TENSION SPLICE. SEE NOTE 6.
NOTE 5: SPLICES NOT REQUIRED AT EVERY SUPPORT. BARS MAY BE FURNISHED IN LONGEST PRACTICAL LENGTH, BUT 30d LAP MUST OCCUR OVER SUPPORT.
NOTE 6: PERIMETER BEAM SPLICES SHALL CONFORM WITH SECTION 7.13 OF ACI 318 "REQUIREMENTS FOR STRUCTURAL INTEGRITY".

CONCRETE BEAM SCHEDULE

MARK	SIZE		REFER	LONGITUDINAL REINFORCING				STIRRUPS AT EACH END		
	WIDTH	DEPTH	DETAIL	NO.	SIZE	TYPE	REMARKS	NO.	SIZE	SPCG
B1	20"	24"	4/S-31	5	#9	L		ALL	#4	10"
				8	#9	M				
B2	14"	24"	5/S-31	3	#5	L		ALL	#4	10"
				3	#5	M				
B3	14"	24"	2/S-31	3	#5	L		ALL	#4	10"
				3	#5	M				
B4	24"	18"		4	#6	L		ALL	#4	12"
				6	#6	M				
B5	14"	18"		2	#6	L		ALL	#4	12"
				2	#6	M				
B6	14"	18"		2	#6	C		ALL	#4	12"
				2	#6	M				
B7	14"	18"		2	#6	D		ALL	#4	12"
				2	#6	M				
B8	14"	18"		2	#6	L		ALL	#4	12"
				2	#6	M				
B9	32"	24"		6	#6	L		ALL	DBL #4	8"
				6	#6	M				
B10	32"	36"	4/S-16	2	#9	L	AT WEST FACE OF BM	ALL	#4	12"
				3	#9	A	CONT INTO B11			
				5	#9	M				
B11	20"	36"	4/S-17	3	#9	B		ALL	#4	16"
				3	#9	M				
B12	42"	36"	3/S-17	2	#9	L	AT WEST FACE OF BM	ALL	DBL #4	8"
				4	#9	A	CONT INTO B13			
				2	#9	H				
				10	#9	M				
B13	31"	36"	5/S-17	4	#9	J		ALL	#4	12"
				6	#9	M				
B14	31"	36"	5/S-17	4	#9	J		ALL	#4	12"
				6	#9	M				
B15	31"	36"	5/S-17	4	#9	B		ALL	#4	12"
				6	#9	M				
B16	42"	36"	3/S-17	4	#9	A		8	DBL #4	8"
				6	#9	H		REM	DBL #4	12"
				10	#9	M				
B17	42"	36"	3/S-17	4	#9	J		ALL	DBL #4	12"
				2	#9	H				
				6	#9	M				
B18	42"	36"	3/S-17	4	#9	B		ALL	DBL #4	12"
				8	#9	M				
B19	42"	36"	3/S-17	4	#9	A		10	DBL #4	6"
				6	#9	H		REM	DBL #4	12"
				10	#9	M				
B20	42"	36"	3/S-17	4	#9	J		ALL	DBL #4	12"
				2	#9	H				
				6	#9	M				
B21	42"	36"	3/S-17	4	#9	B		ALL	DBL #4	12"
				6	#9	M				
B22	18"	36"		3	#9	L		ALL	#4	12"
				3	#9	M				
B23	32"	36"	6/S-16	6	#9	L		ALL	#4	12"
				6	#9	M				
B24	24"	36"	5/S-16	4	#9	A		ALL	#4	12"
				4	#9	M				
B25	32"	36"		4	#9	B		ALL	#4	12"
				1	#9	L	AT NORTH FACE OF BM			
				5	#9	M				

CONCRETE SLAB SCHEDULE

MARK	REFERENCE DETAILS	DEPTH	LONGITUDINAL REINFORCING			REMARKS
			SIZE	TYPE	SPACING	
S-1	DWG S-31	12"	#5	A	8"	
			#5	M	8"	
S-2	DWG S-31	12"	#5	J	8"	
			#5	M	8"	
S-3	DWG S-31	12"	#5	B	8"	
			#5	M	8"	
S-4	DWG S-31	12"	#5	L	8"	
			#5	M	8"	
S-5	3/S-22	6"	#5	L	10"	INSTALL HOOKED TOP BARS AT BOT MAT
S-6	5/S-24	16"	#6	D	10"	EXTEND 3 FT PAST WALL
			#6	M	10"	
S-7		16"	#6	L	10"	
			#6	M	10"	
S-8	1/S-16	18"	#7	A	12"	
	DWG S-17		#7	H	12"	
			#7	M	6"	
S-9	1/S-16	18"	#7	J	12"	
	DWG S-17		#7	M	12"	
S-10	1/S-16	18"	#7	B	12"	
	DWG S-17		#7	G	12"	
			#7	M	6"	
S-11	5/S-17	18"	#7	A	12"	
			#7	M	12"	
S-12	5/S-17	18"	#7	A	12"	
			#7	M	6"	
S-13	DWG S-17	18"	#7	B	12"	
			#7	M	6"	

NOTES:

TEMPERATURE REINFORCING SHALL BE PLACED IN ALL ONE WAY SLABS PERPENDICULAR TO MAIN SCHEDULED REINFORCING AS FOLLOWS:

6" SLABS	(1 LAYER)	#5 @ 10" OC
12" SLABS	(2 LAYERS)	#5 @ 8" OC TOP AND BOTTOM
16" SLABS	(2 LAYERS)	#6 @ 10" OC TOP AND BOTTOM
18" SLABS	(2 LAYERS)	#7 @ 12" OC TOP AND BOTTOM

EXTEND ALL SLAB REINF TO THE PERIMETER EDGES OF THE CONCRETE. TERMINATE TOP BARS (BOTH SCHEDULED & TEMPERATURE REINF) WITH STD ACI 90-DEGREE HOOKS.

PROVIDE ADEQUATE STANDEES OR HIGH CHAIRS TO INSURE THAT THE TOP LAYER OF SLAB REINF IS IN THE CORRCT POSITION.

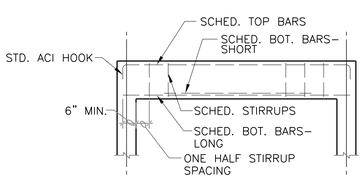

SINGLE SPAN

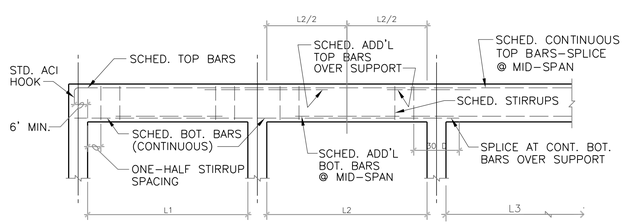

MULTIPLE SPANS

TYPICAL BEAM REINFORCING PLACEMENT DETAILS

NO SCALE

NO.	DR	CK	DATE	DESCRIPTION

REVISIONS

BLACK & VEATCH
Building a world of difference.
Black & Veatch Corporation
Registered Firm F-253
Austin, Texas

Jose I. Guerra, Inc.
Consulting Engineers
2600 South Lamar Blvd., Suite 210
Austin, Texas 78704
(512) 445-2090
Electrical • Civil • Structural • Mechanical • Electrical
TBPE FIRM # F-3

STATE OF TEXAS
BRANDON M. GOODLOE
92456
REGISTERED PROFESSIONAL ENGINEER
9-24-2014

AUSTIN WATER
Walnut Creek WWTP - Tertiary Filter Rehabilitation Project
CIP ID No. 3023.025

STRUCTURAL
BEAM AND SLAB SCHEDULES

DESIGNED BY:	BG
DRAWN BY:	RH
REVIEWED BY:	LP
APPROVED BY:	JL
PROJECT NO.:	168622
DATE:	09/24/2014
SCALE:	NO SCALE
REVISION:	
DISCIPLINE NO.	S-07
DWG. NO.	67 OF 273

FD168622
D168622
File: F:\12047 Walnut Creek WWTP Filter Improvements\DRAWINGS\CAD\S-07.dwg Layout: S-07 Plotted: 7/29/2013
SAVED:
CYONET ID:

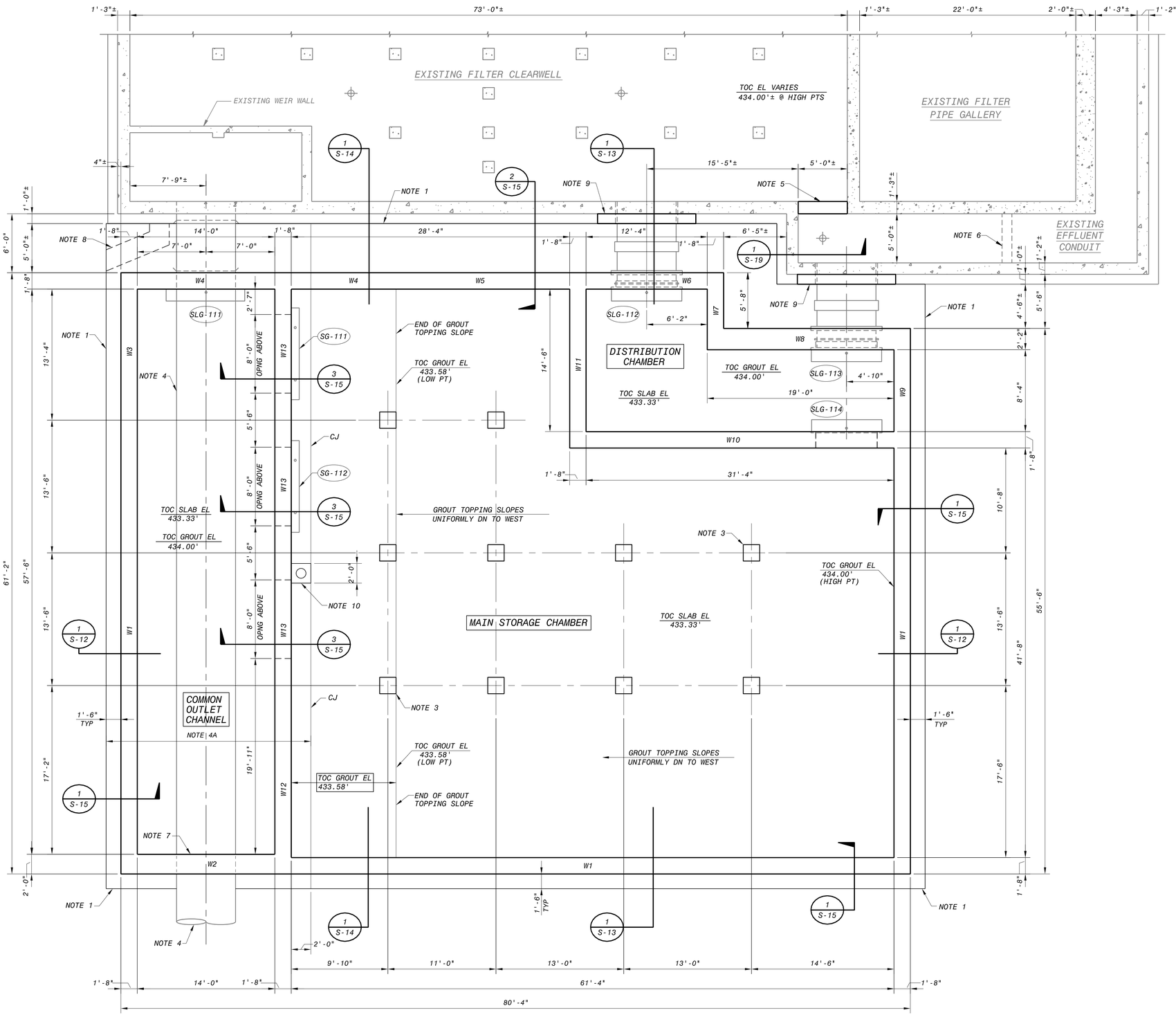

FOUNDATION LEVEL PLAN

6' 4' 2' 0 5' 10'

3/16"=1'-0"

SHEET NOTES

1. 24" MAT FOUNDATION SLAB - TOC EL = 433.33' (TYP)- PROJECT FOUNDATION 1'-6" BEYOND THE PERIMETER WALLS OF THE CLEARWELL ON THREE SIDES. AT THE NORTH SIDE OF THE NEW CLEARWELL, EXTEND THE MAT FOUNDATION SLAB TO ABUT THE EXISTING CLEARWELL FOUNDATION.
2. THE MAIN STORAGE CHAMBER FOUNDATION SLAB WILL RECEIVE A SLOPING GROUT TOPPING APPLIED TO THE INTERIOR OF THE CLEARWELL. SLOPE TO THE DRAIN AS INDICATED ON THIS SHEET.

   THE COMMON OUTLET CHANNEL & THE DISTRIBUTION CHAMBER WILL ALSO RECEIVE GROUT TOPPING. THE TOPPING WILL BE 8" THICK W/ NO SLOPE (TOC GROUT EL = 434.00')

   THE GROUT TOPPING SHALL BE REINFORCED WITH FILBRILLTED POLYPROPYLENE FIBERS COMPLYING WITH CoA SPECIFICATIONS ITEM 407S (FIBROUS CONCRETE) AND ASTM C1116, TYPE III.
3. ALL CONCRETE COLUMNS ARE 20" x 20". REFER TO TYPICAL COLUMN DETAILS 1/S-04 FOR ADDT'L INFO.
4. THE NOTED EXISTING 72" PCCP FILTER EFFLUENT PIPE SHALL BE MAINTAINED DURING CONSTRUCTION AS SPECIFIED. THIS TEMP SERVICE MAY BE ACCOMPLISHED EITHER BY A TOTAL OR PARTIAL REPLACEMENT OF THE EXISTING PIPE. THE PIPING SHALL BE TEMPORARILY SUPPORTED/SUSPENDED PRIOR TO THE CONSTRUCTION OF THE SLAB FOR THE NEW COMMON OUTLET CHANNEL BELOW (KEYED ON PLAN AS NOTE 4A). THE DESIGN OF THE TEMPORARY PIPE SUPPORTS IS THE RESPONSIBILITY OF THE GC. AFTER THE MAT SLAB BELOW THE PIPE HAS ACHIEVED ITS DESIGN STRENGTH, THE SLAB MAY BE USED FOR SUPPORT OF THE PIPE ABOVE.
5. NEW CONC BULKHEAD IN EXISTING CLEARWELL. SEE DETAILS ON DWG S-19.
6. TEMPORARY BULKHEAD - SEE TEMPORARY BULKHEAD GENERAL NOTES ON SHEET S-02.
7. NOTE THAT SOUTH WALL OF COMMON OUTLET CHANNEL IS 24" THICK (NON-STANDARD).
8. THICKEN THE MAT FOUNDATION SLAB AT THE RE-ROUTED FLOOR DRAIN PIPING PER DETAIL 4/S-15. REFER TO MECH DWGS FOR PIPE INFO.
9. NEW CONCRETE AUGMENTATION WALLS AT NEW CONN PIPES (2 LOCATIONS THIS SHT)- SEE DETAILS ON DWG S-20.
10. AT CLEARWELL DRAIN PIPE INLET, DEPRESS A 24" SQUARE SECTION OF THE GROUT TOPPING 2" (TOC GROUT EL= 433.42')

TRUE NORTH

NO.	DR	CK	DATE	DESCRIPTION

REVISIONS

BLACK & VEATCH
Building a world of difference.
Black & Veatch Corporation
Registered Texas Engineering Firm F-253
Austin, Texas

Jose I. Guerra, Inc.
Consulting Engineers
2600 South Gray Street, Suite 210
Austin, Texas 78731
(512) 445-2090
Civil • Structural • Mechanical • Electrical
TBPE FIRM F-3

TEXAS REGISTERED PROFESSIONAL ENGINEER BRANDON W. SCHOOLCRAFT 92456 9-24-2014

Walnut Creek WWTP - Tertiary Filter Rehabilitation Project
CIP ID No. 3023.025

AUSTIN WATER

STRUCTURAL
SOUTHSIDE CLEARWELL
FOUNDATION LEVEL PLAN

DESIGNED BY:	BG
DRAWN BY:	FS
REVIEWED BY:	LP
APPROVED BY:	JL
PROJECT NO.:	168622
DATE:	09/24/2014
SCALE:	3/16" = 1'-0"

REVISION:

DISCIPLINE NO.
S-08

DWG. NO.
68 OF 273

D168622 SAVED:
File: P:\12047 Walnut Creek WWTP Filter Improvements\DRAWINGS\CAD\S-08.dwg Layout: S-08 Plotted: 7/29/2013

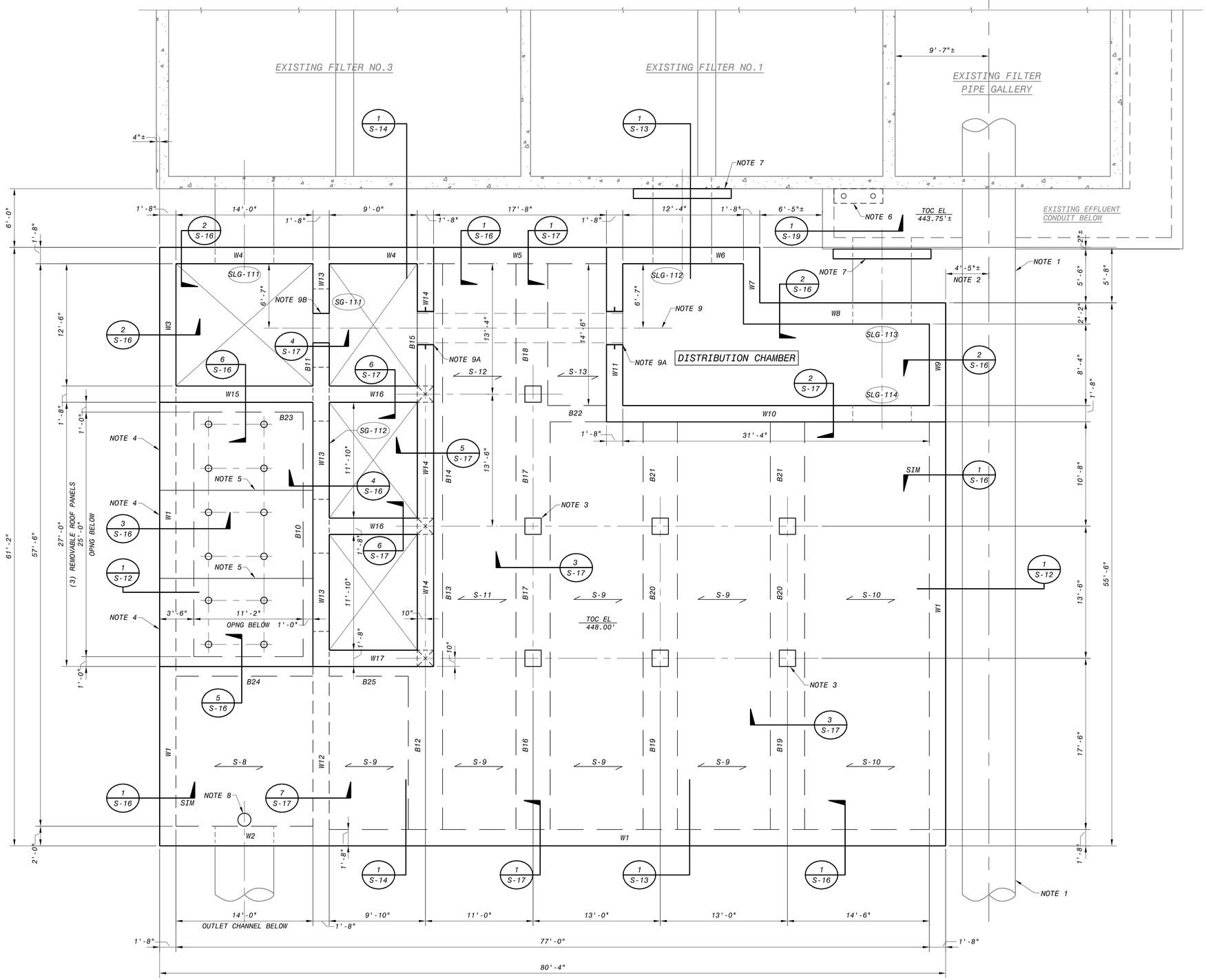

CLEARWELL ROOF LEVEL PLAN

6' 4' 2' 0 5' 10'

3/16"=1'-0"

SHEET NOTES

1. THE NOTED EXISTING 54"Ø FILTER INFLUENT PIPE SHALL REMAIN IN-SERVICE AND SHALL BE SUITABLY PROTECTED AND SUPPORTED BY THE CONTRACTOR THRU ALL CONSTRUCTION ACTIVITIES. THE GC SHALL FIELD VERIFY THE LOCATION AND ALIGNMENT OF THIS PIPE TO ASSURE THE CONSTRUCTABILITY OF THE CLEARWELL IN ASSOCIATION WITH THE TEMP PIPE SUPPORTS.
2. POSTED DIMENSION IS BASED ON RECORD DWGS & REPRESENTS THE APPROXIMATE DIMENSION MEASURED AT THE EXISTING FILTER BLDG.
3. ALL CONCRETE COLUMNS ARE 20" x 20". REFER TO TYPICAL COLUMN DETAILS 1/S-04 FOR ADDT'L INFO.
4. THERE ARE A TOTAL OF 3 REMOVABLE ROOF PANELS OVER THE COMMON OUTLET CHANNEL (NOTED ON PLAN). SEE DETAIL 1/S-18 FOR ADDT'L INFO.
5. INSTALL A 1/2" JOINT BTWN REMOVABLE ROOF PANELS. FILL THESE JOINTS AND ALL OTHER JOINTS BTWN THE PANELS AND THE CLEARWELL STRUCTURE WITH AN APPROVED SEALANT PER THE JOINT SEALANT GENERAL NOTES.
6. NEW CONCRETE BULKHEAD IN EXISTING CLEARWELL BELOW. SEE DETAILS ON DWG S-19.
7. NEW CONCRETE AUGMENTATION WALLS (BELOW) AT NEW CONN PIPES (2 LOCATIONS THIS SHT)-SEE DETAILS ON DWG S-20.
8. 16" WALL PIPE CAST INTO ROOF SLAB FOR ACCESS TO COMMON OUTLET CHANNEL BELOW- SEE DETAIL 3/M-21. FOR ADDT'L INFO.
9. CENTERLINE OF VENTILATION PIPE & OPNGS LINKING THE DISTRIBUTION CHAMBER WITH THE COMMON OUTLET CHANNEL. CL EL FOR PIPE & OPNGS = 451.50' REF MECH DWGS FOR PIPE INFO.

NOTE 9A : 40" WALL SLEEVE FOR INSTALLING VENT PIPE

NOTE 9B : 36" DIA FORMED OPNG FOR VENTILATION LINK

TRUE NORTH

NO.	DR	CK	DATE	DESCRIPTION

REVISIONS

BLACK & VEATCH Building a world of difference.
Black & Veatch Corporation
Registered Texas Firm F-253
Austin, Texas

Jose I. Guerra, Inc.
Consulting Engineers
2600 Dellana Lane, Suite 210
Austin, Texas 78744
(512) 445-2090
Mechanical • Electrical
TBPE FIRM # F-3

TEXAS REGISTERED PROFESSIONAL ENGINEER BRANDON M. GOODLOE No. 92456 9-24-2014

AUSTIN WATER
Walnut Creek WWTP - Tertiary Filter Rehabilitation Project
CIP ID No. 3023.025

STRUCTURAL
SOUTHSIDE CLEARWELL
CLEARWELL ROOF LEVEL PLAN

DESIGNED BY:	BG
DRAWN BY:	FS
REVIEWED BY:	LP
APPROVED BY:	JL
PROJECT NO.:	168622
DATE:	09/24/2014
SCALE:	3/16" = 1'-0"
REVISION:	
DISCIPLINE NO.	S-09
DWG. NO.	69 OF 273

D168622
SAVED: 2/20/07 Walnut Creek WWTP Filter Improvements\DRAWINGS\CAD\S-09.dwg Layout: S-09 Plotted: 7/29/2013
File: F:\12047

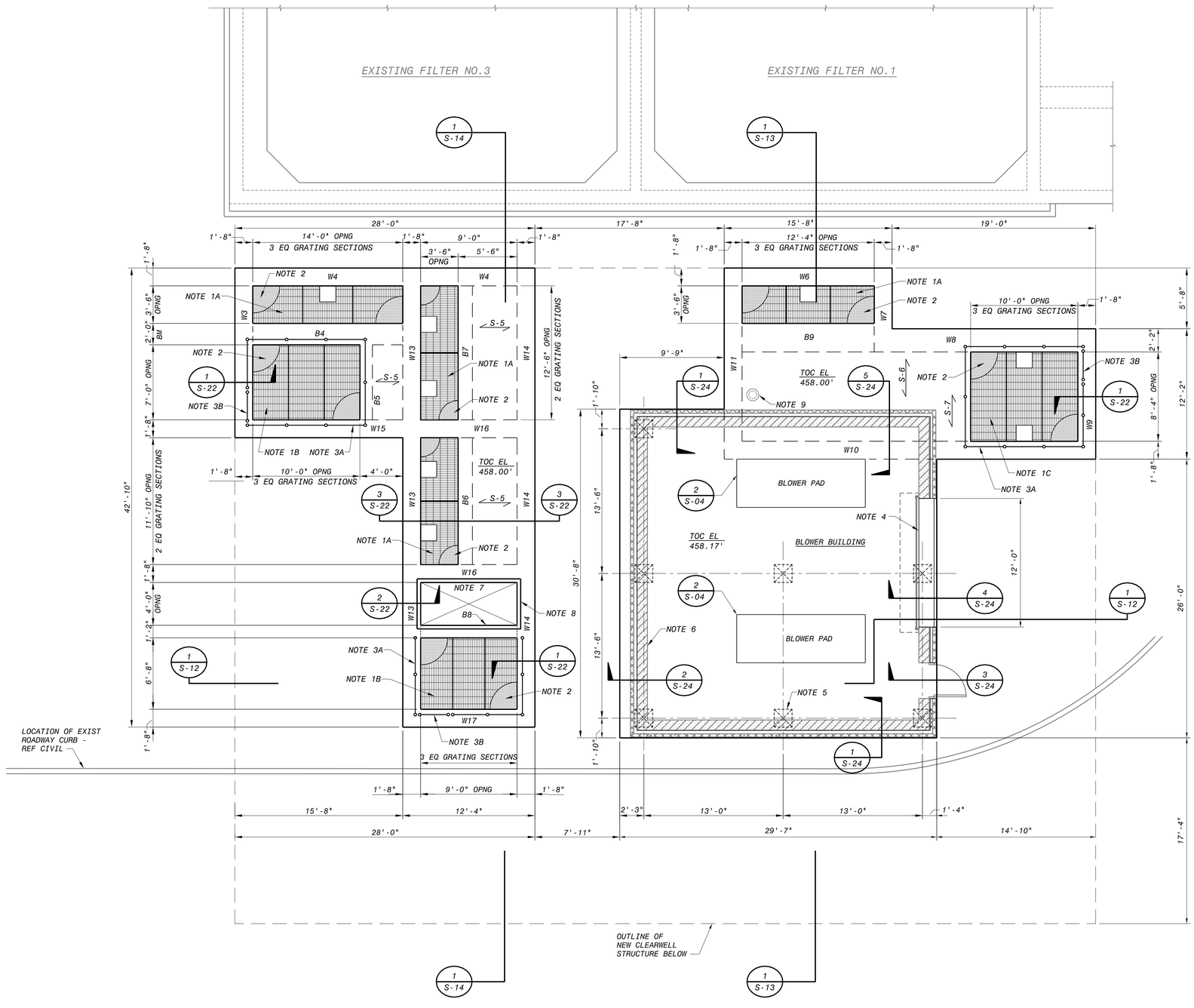

GROUND LEVEL PLAN

6' 4' 2' 0 5' 10'

3/16"=1'-0"

TRUE NORTH

SHEET NOTES

1. PROVIDE PRESSURE-LOCKED RECTANGULAR BAR GRATING AS NOTED BELOW AND KEYED ON PLAN.

   NOTE 1A: P-19-4 (1 1/2 x 1/8) TYPE 316L STAINLESS STEEL
   NOTE 1B: P-19-4 (2 x 3/16) TYPE 316L STAINLESS STEEL
   NOTE 1C: P-10-4 (2 1/2 x 3/16) TYPE 316L STAINLESS STEEL

   REFER TO DETAIL 2 ON SHEET S-06 FOR GRATING SUPPORT DETAILS AND INFO. PROVIDE BANDED OPENINGS AROUND GATE OPERATOR SUPPORT BRACKETS. MAXIMUM ASSUMED DIMENSIONS FOR THESE GRATING OPENINGS IS 18" x 18". NOTIFY ENGINEER IF SIZE MUST BE EXCEEDED.

2. ALL GRATING SECTIONS SHALL BE CLAD WITH TYPE 316L SS DIAMOND TREAD FLOOR PLATE ON THE WALKING SURFACE. SEE DETAIL 2/S-06 FOR ADDT'L INFO.

3. ALUMINUM GUARDRAIL SYSTEM AS NOTED BELOW AND KEYED ON PLAN - SEE DETAILS ON SHEET S-06.

   NOTE 3A: FIXED GUARDRAILS (TYPICAL UNO)
   NOTE 3B: REMOVABLE GUARDRAIL SECTION FOR PERSONNEL ACCESS.

4. AT ROLLUP DOOR, DROP CONCRETE 1/2" AND SLOPE DOWN 1" TOWARD OUTSIDE FACE OF BLDG.

5. CONCRETE COLUMNS EXTEND FROM CLEARWELL BELOW TO SUPPORT THE BLOWER BLDG (7 COLUMNS TOTAL). COLUMNS ARE 20" x 20". REFER TO TYP COLUMN DETAIL 1/S-04 FOR ADDT'L INFO.

6. 12" (NOM) CMU WALLS AROUND BLOWER BLDG PERIMETER - FULLY GROUT ALL CELLS OF WALLS AND REINF PER DETAILS ON DWG S-05.

7. VENT HOOD OPENING

8. BUILD A 4" WIDE x 4" TALL CURB AROUND THE VENT OPENING FOR MOUNTING THE HOOD. SEE DETAIL 5 ON DWG S-31.

9. STEEL PIPE SPOOL FOR STILLING WELL - REF MECH DWGS FOR ADDT'L INFO. SPREAD SLAB REINF AROUND THIS ASSEMBLY.

NO.	DR	CK	DATE	DESCRIPTION

REVISIONS

BLACK & VEATCH
Building a world of difference.
Black & Veatch Corporation
Registered Firm F-253
Austin, Texas

Jose I. Guerra, Inc.
Consulting Engineers
2600 Dellana Lane, Suite 210
Austin, Texas 78744
(512) 445-2090
Civil • Structural • Mechanical • Electrical
TBPE FIRM # F-3

BRANDON M. GOODLOE
92456
REGISTERED
PROFESSIONAL ENGINEER
9-24-2014

Walnut Creek WWTP - Tertiary Filter Rehabilitation Project

CIP ID No. 3023.025

Austin WATER

STRUCTURAL
SOUTHSIDE CLEARWELL
GROUND LEVEL PLAN

DESIGNED BY:	BG
DRAWN BY:	FS
REVIEWED BY:	LP
APPROVED BY:	JL
PROJECT NO.:	168622
DATE:	09/24/2014
SCALE:	3/16" = 1'-0"
REVISION:	

DISCIPLINE NO.
S-10

DWG. NO.
70 OF 273

SAVED: 9/24/2014 PM BY: FSUN
FD168622 D168622 Files: F:\2047 Walnut Creek WWTP Filter Improvements\DRAWINGS\CAD\S-10.dwg Layout: S-10 Plotted: 7/29/2013
168622...109.5030 - Mechanical Process Drawings

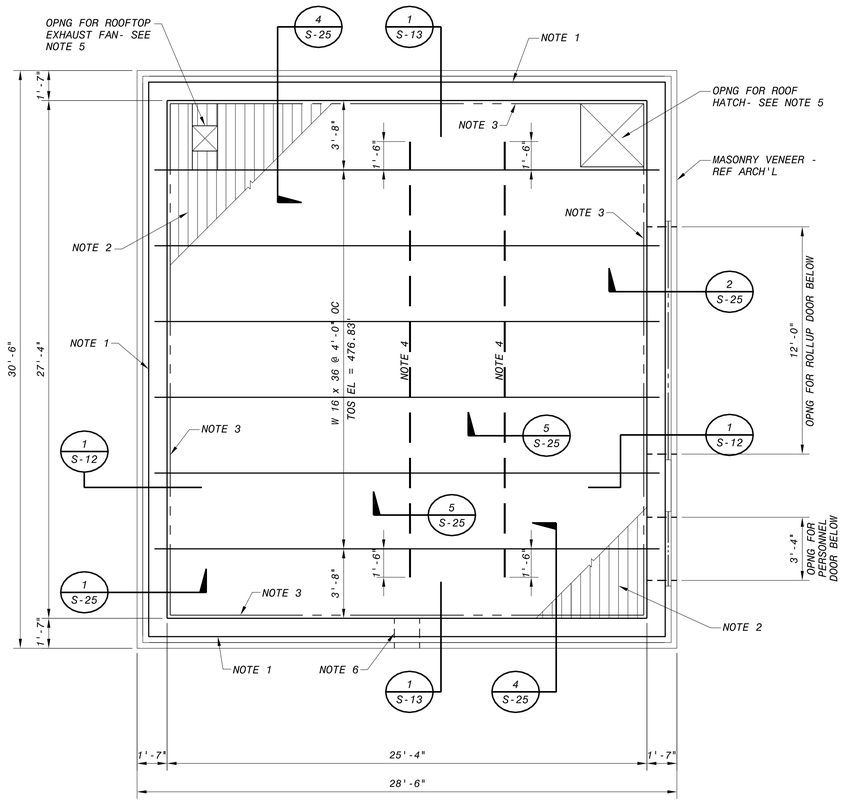

BLOWER BUILDING ROOF FRAMING PLAN

4' 2' 0 4' 8'

1/4"=1'-0"

SHEET NOTES

1. 12" (NOM) CMU WALL - FULLY GROUT ALL CELLS OF CMU WALLS AND REINF PER DETAILS ON DWG S-05. TOP OF PARAPET WALL EL = 480.83' (+22'-8" AFF)

2. 1.5-INCH DEEP x 20 GAUGE GALVANIZED TYPE F (INTERMEDIATE RIB) ROOF DECK - REFER TO SPECS FOR ADDT'L INFO.

3. CONT DECK SUPPORT L6x4x5/16 (LLV) AROUND THE ROOF PERIMETER, AT THE INSIDE FACE OF THE CMU WALL

4. TWO 5-TON MONORAIL HOIST BEAMS - HOIST BEAMS ARE 23'-0" LONG AND ARE SUPPORTED BY 6 ROOF FRAMING BEAMS. MONORAIL BEAM DEPTHS ARE NOT TO EXCEED 8-INCHES. THE DESIGN OF MONORAIL BEAMS AND THEIR CONNECTIONS TO THE ROOF FRAMING ARE TO BE PROVIDED BY THE HOIST MFR. LOCATE BEAMS DIRECTLY ABOVE PICKUP POINTS FOR THE TWO BLOWERS & MOTORS.

5. OPNGS FOR ROOF HATCH & ROOFTOP EXHAUST FAN - SEE DETAIL 3/S-06 FOR DECK SUPPORT FRAMING. EDGE ANGLES PER SHEET NOTE 3 MAY BE USED TO SUPPORT THE ROOF HATCH, EXHAUST FAN, OR ASSOCIATED FRAMING ANGLES. REFER TO ARCH DWGS FOR ADDT'L INFO ABOUT THESE OPNGS AND ROOF CURBS. REFER TO HVAC DWGS FOR ADDT'L EXHAUST FAN INFO.

6. AT THE SCUPPER OPNG ON THE SOUTH WALL, TRIM THE DECK SUPPORT ANGLE PER DETAIL 6/S-25 AND DISCONTINUE THE TYPICAL CONT BOND BM.

TRUE NORTH

NO.	DR	CK	DATE	DESCRIPTION

REVISIONS

BLACK & VEATCH Building a world of difference.
Black & Veatch Corporation
Registered Firm F-253
Austin, Texas

Jose I. Guerra, Inc.
Consulting Engineers
2000 Guadalupe Street, Suite 210
Austin, Texas 78705
(512) 445-2090
Mechanical • Civil • Mechanical • Electrical
TBPE FIRM # F-3

STATE OF TEXAS
BRANDON M. GOODLOE
No. 92456
LICENSED
PROFESSIONAL ENGINEER
9-24-2014

Austin WATER
Walnut Creek WWTP - Tertiary Filter Rehabilitation Project
CIP ID No. 3023.025

STRUCTURAL
BLOWER BUILDING
ROOF FRAMING PLAN

DESIGNED BY:	BG
DRAWN BY:	FS
REVIEWED BY:	LP
APPROVED BY:	JL
PROJECT NO.:	168622
DATE:	09/24/2014
SCALE:	1/4" = 1'-0"

REVISION:

DISCIPLINE NO.
S-11

DWG. NO.
71 OF 273

FD168622
D168622
SAVED:
PW_ADMIN:D168622...109.5030 - Mechanical Process Drawings
File: F:\2047 Walnut Creek WWTP Filter Improvements\DRAWINGS\CAD\S-11.dwg Layout: S-11 Plotted: 7/29/2013

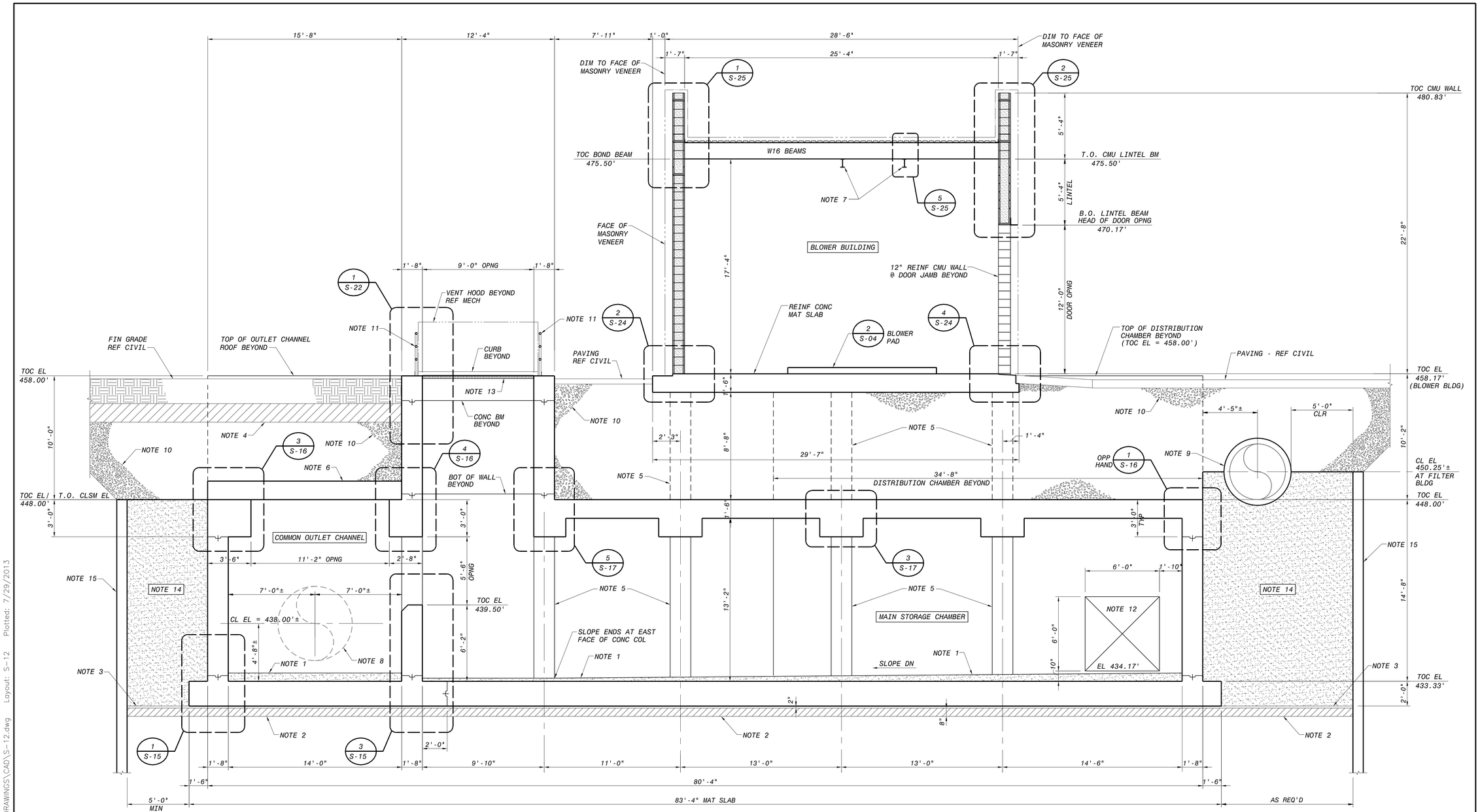

SHEET NOTES

1. GROUT TOPPING - SEE PLAN DWG FOR GROUT ELEVATIONS AND SLOPES - DRAIN PIPING NOT ILLUSTRATED
2. SCARIFY & COMPACT THE EXISTING SUBGRADE (8" THICK MIN).
3. PLACE A 2" THICK MUD SLAB OVER THE ENTIRE PREPARED SUBGRADE.
4. WHERE BACKFILL MATERIAL IS NOT COVERED WITH PAVING AT GRADE, CAP BACKFILL MATERIAL WITH 18" OF CLAY MATERIAL PER SPECS AND GENERAL NOTES.
5. 20" X 20" CONCRETE COLUMNS BEYOND - SEE TYPICAL COLUMN DETAILS 1/S-04 FOR ADDITIONAL INFO.
6. REMOVABLE PRECAST ROOF PANELS OVER OUTLET CHANNEL - SEE PLAN DWG S-09. SEAL ALL EDGES & SEAMS WITH SHEET-TYPE WATERPROOFING MEMBRANE, AS SPECIFIED. SEE DETAIL 1/S-17 FOR ADDT'L ROOF PANEL INFO.
7. MONORAIL HOIST BEAMS (8" DEEP MAX) - LOCATE DIRECTLY ABOVE PICKUP POINTS FOR BLOWER & MOTOR EQUIPMENT.
8. THE FLOW CAPABILITY OF THE NOTED EXISTING 72"Ø PCCP FILTER EFFLUENT PIPE SHALL BE MAINTAINED DURING CONSTRUCTION AS SPECIFIED. THIS TEMP SERVICE MAY BE ACCOMPLISHED EITHER BY A TOTAL OR PARTIAL REPLACEMENT OF THE EXIST'G PIPE. THE PIPING SHALL BE TEMPORARILY SUPPORTED / SUSPENDED PRIOR TO CONSTRUCTION OF THE SLAB FOR THE NEW OUTLET CHANNEL BELOW. THE DESIGN OF THE TEMPORARY PIPE SUPPORTS IS THE RESPONSIBILITY OF THE GC. AFTER THE MAT SLAB BELOW THE PIPE HAS ACHIEVED ITS DESIGN STRENGTH, THE SLAB MAY BE USED FOR SUPPORT OF THE PIPE ABOVE.

SOUTHSIDE CLEARWELL SECTION VIEW LOOKING NORTH

1 / S-08, S-09, S-10, S-11

4' 2' 0 4' 8'

1/4"=1'-0"

SHEET NOTES CONTINUED

9. THE NOTED EXISTING 54"Ø FILTER INFLUENT PIPE SHALL REMAIN IN-SERVICE AND SHALL BE SUITABLY PROTECTED & SUPPORTED BY THE CONTRACTOR THRU ALL CONSTRUCTION ACTIVITIES.
10. COMPACTED SELECT FILL
11. ALUMINUM GUARDRAIL SYSTEM AROUND OPENING - SEE DETAILS ON SHEET S-06.
12. SLUICE GATE OPNG IN WALL BEYOND - COORD w/ GATE THIMBLE & FRAME.
13. REMOVABLE SS GRATING AT THE ACCESS OPNG - SEE PLAN DWG FOR ADDT'L GRATING INFO.
14. BACKFILL AROUND THE CLEARWELL WITH CLSM AS SHOWN. TYP TOP OF CLSM EL = 448.00'. AT THE EXIST FILTER INFLUENT PIPE ON THE EAST SIDE, EXTEND CLSM UP TO CL OF PIPE OR HIGHER. REFER TO CLSM PLACEMENT NOTES ON DWG S-02 FOR ADDT'L INFO.
15. SHORING SYSTEM - REF CIVIL. SHORING MUST REMAIN IN-PLACE PERMANENTLY UP TO EL 448.00'. AT THE EAST SIDE, THE PERMANENT SHORING MAY EXTEND HIGHER BUT MUST STAY BELOW THE TOP OF THE 54" PIPE.

NO.	DR	CK	DATE	DESCRIPTION

REVISIONS

BLACK & VEATCH Building a world of difference.
Black & Veatch Corporation
Registered Texas Firm F-253
Austin, Texas

Jose I. Guerra, Inc.
Consulting Engineers
2000 S. IH-35, Suite 210
Austin, Texas 78704
(512) 445-2090
Civil • Structural • Mechanical • Electrical
TBPE FIRM F-3

PROFESSIONAL ENGINEER BRANDON M. GOODLOE 92456 STATE OF TEXAS 9-24-2014

Austin WATER
Walnut Creek WWTP - Tertiary Filter Rehabilitation Project
CIP ID No. 3023.025

STRUCTURAL
SOUTHSIDE CLEARWELL
SECTION LOOKING NORTH

DESIGNED BY:	BG
DRAWN BY:	RH
REVIEWED BY:	LP
APPROVED BY:	JL
PROJECT NO.:	168622
DATE:	09/24/2014
SCALE:	1/4" = 1'-0"
REVISION:	

DISCIPLINE NO.
S-12

DWG. NO.
72 OF 273

FD168622
D168622
File: F:\12047 Walnut Creek WWTP Filter Improvements\DRAWINGS\CAD\S-12.dwg Layout: S-12 Plotted: 7/29/2013
SAVED:
CYONET ID:

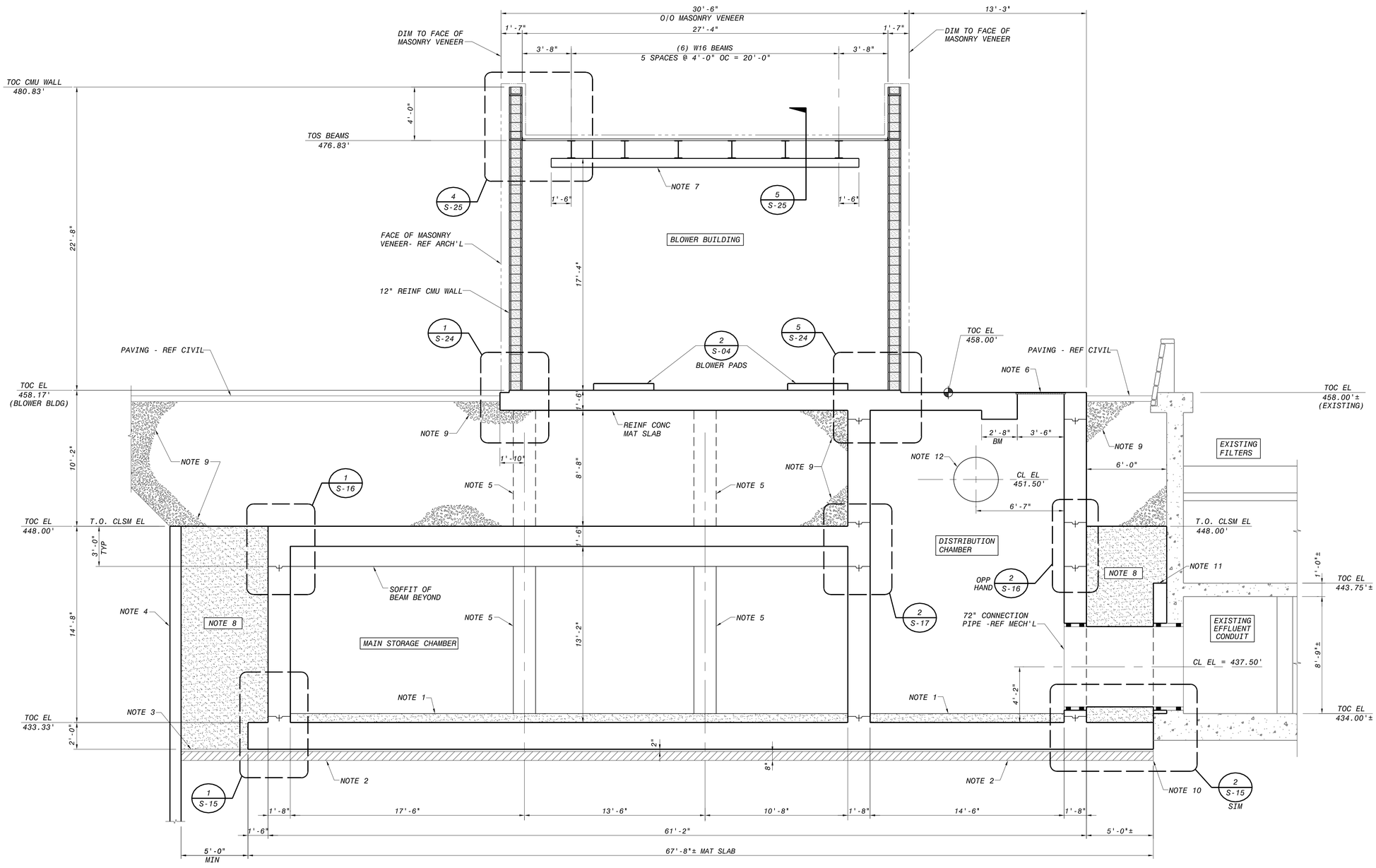

SOUTHSIDE CLEARWELL SECTION VIEW LOOKING WEST

1 / S-08, S-09, S-10, S-11

4' 2' 0 4' 8'

1/4"=1'-0"

SHEET NOTES

1. GROUT TOPPING - SEE PLAN DWG FOR GROUT ELEVATIONS AND SLOPES.
2. SCARIFY & COMPACT THE EXISTING SUBGRADE (8" THICK MIN).
3. PLACE A 2" THICK MUD SLAB OVER THE ENTIRE PREPARED SUBGRADE.
4. SHORING SYSTEM - REF CIVIL. SHORING MUST REMAIN IN-PLACE PERMANENTLY UP TO EL 448.00'.
5. 20" X 20" CONCRETE COLUMNS BEYOND - SEE TYPICAL COLUMN DETAILS 1/S-04 FOR ADDITIONAL INFO.
6. REMOVABLE SS GRATING AT SLUICE GATE MAINTENANCE OPENING - SEE PLAN DWG FOR ADDITIONAL GRATING INFO.
7. MONORAIL HOIST BEAMS (8" DEEP MAX) - LOCATE DIRECTLY ABOVE PICKUP POINTS FOR BLOWER & MOTOR EQUIPMENT.
8. BACKFILL AROUND THE CLEARWELL WITH CLSM AS SHOWN. TYP TOP OF CLSM EL = 448.00'. BTWN THE EXIST FILTER BLDG & THE NEW CLEARWELL, CLSM MAY BE USED TO BACKFILL UP TO THE PAVING ABOVE (OR ANY ELEVATION IN BTWN) IN LIEU OF COMPACTED SELECT FILL (CONTRACTOR'S OPTION). REFER TO CLSM PLACEMENT NOTES ON DWG S-02 FOR ADDT'L INFO.
9. COMPACTED SELECT FILL

SHEET NOTES CONTINUED

10. THE CONTRACTOR SHALL CAUTIOUSLY EXCAVATE NEXT TO THE EXISTING FILTER BUILDING'S FOUNDATION TO AVOID OVER EXCAVATING AND UNDERMINING THE STRUCTURE.
11. CONC AUGMENTATION WALL AT NEW CONNECTION PIPE - SEE DETAILS ON DWG S-20 FOR AUGMENTATION WALL INFO.
12. LOCATION OF 40" WALL SLEEVE IN WALL BEYOND FOR INSTALLATION OF VENT PIPE - REF MECH.

NO.	DR	CK	DATE	DESCRIPTION

REVISIONS

BLACK & VEATCH
Building a world of difference.
Black & Veatch Corporation
Registered Firm F-253
Austin, Texas

Jose I. Guerra, Inc.
Consulting Engineers
2400 Salado Drive - Suite 210
Austin, Texas 78754
(512) 445-2090
Civil • Structural • Mechanical • Electrical
TBPE FIRM # F-3

STATE OF TEXAS
BRANDON W. GOODLE
92456
REGISTERED
PROFESSIONAL ENGINEER
9-24-2014

AUSTIN WATER

Walnut Creek WWTP - Tertiary Filter Rehabilitation Project

CIP ID No. 3023.025

STRUCTURAL
SOUTHSIDE CLEARWELL
SECTION LOOKING WEST

DESIGNED BY:	BG
DRAWN BY:	RH
REVIEWED BY:	LP
APPROVED BY:	JL
PROJECT NO.:	168622
DATE:	09/24/2014
SCALE:	1/4" = 1'-0"

REVISION:

DISCIPLINE NO.
S-13

DWG. NO.
73 OF 273

FD168622
D168622
File: F:\12047 Walnut Creek WWTP Filter Improvements\DRAWINGS\CAD\S-13.dwg Layout: S-13 Plotted: 7/29/2013
SAVED:
CYONET ID:

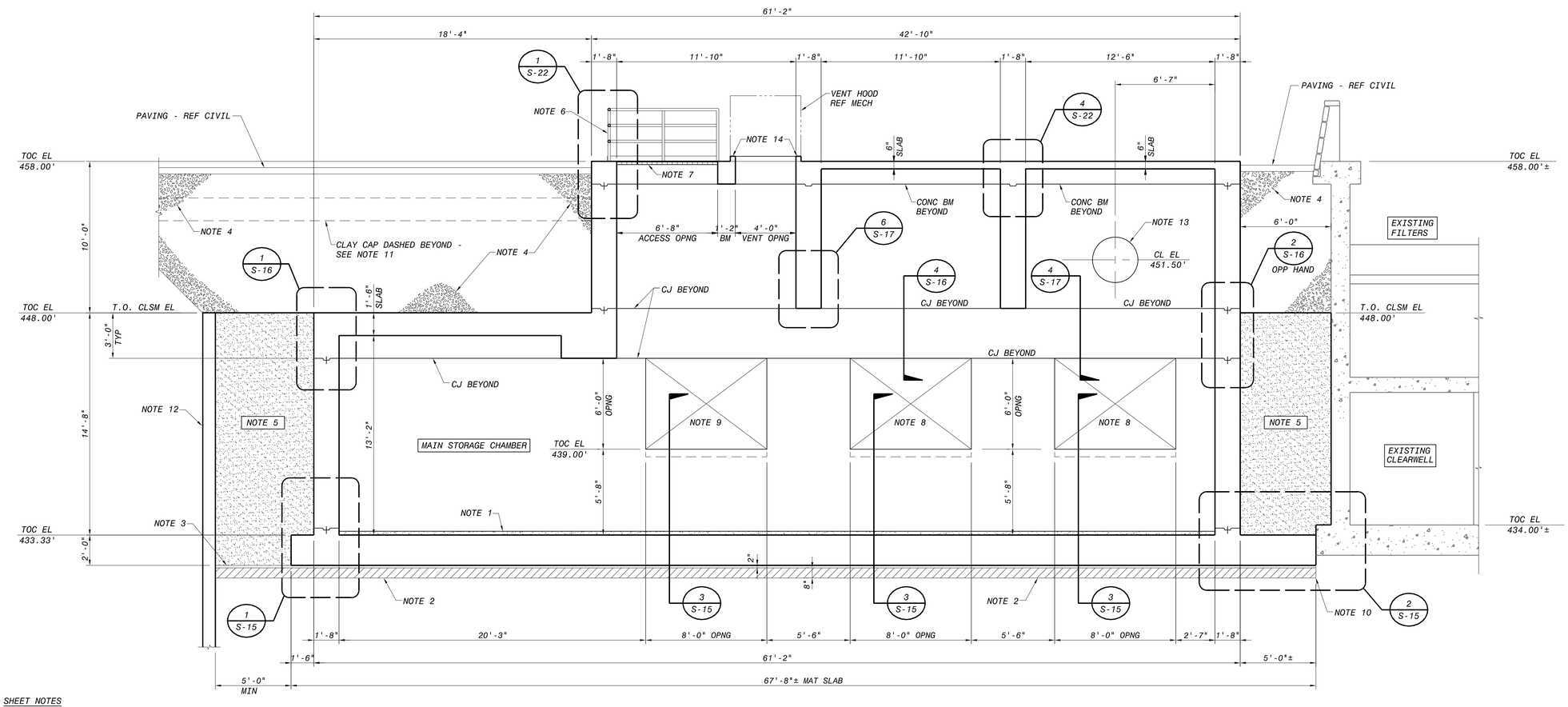

SOUTHSIDE CLEARWELL SECTION
VIEW LOOKING WEST

1 / S-08, S-09, S-10

4' 2' 0 4' 8'

1/4"=1'-0"

SHEET NOTES

1. GROUT TOPPING - SEE PLAN DWG FOR GROUT ELEVATIONS AND SLOPES.
2. SCARIFY & COMPACT THE EXISTING SUBGRADE (8" THICK MIN).
3. PLACE A 2" THICK MUD SLAB OVER THE ENTIRE PREPARED SUBGRADE.
4. COMPACTED SELECT FILL
5. BACKFILL AROUND THE CLEARWELL WITH CLSM AS SHOWN. TYP TOP OF CLSM EL = 448.00'. BTWN THE EXIST FILTER BLDG & THE NEW CLEARWELL, CLSM MAY BE USED TO BACKFILL UP TO THE PAVING ABOVE (OR ANY ELEVATION IN BTWN) IN LIEU OF COMPACTED SELECT FILL (CONTRACTOR'S OPTION). REFER TO CLSM PLACEMENT NOTES ON DWG S-02 FOR ADDT'L INFO.
6. ALUMINUM GUARDRAIL SYSTEM AROUND OPENING - SEE DETAILS ON SHEET S-06.
7. REMOVABLE SS GRATING AT THE ACCESS OPNG - SEE PLAN DWG FOR ADDT'L GRATING INFO.
8. THE TWO NOTED OPNGS HAVE ADJUSTABLE WEIRS (SLIDE GATES) WHICH ARE NOT ILLUSTRATED. SEE MECH'L DWGS FOR ADDT'L INFO AND DETAILS.
9. THE NOTED OPNG HAS A FIXED WEIR ASSEMBLY WHICH IS NOT ILLUSTRATED. SEE MECH DWGS FOR ADDT'L INFO AND DETAILS.

SHEET NOTES

10. THE CONTRACTOR SHALL CAUTIOUSLY EXCAVATE NEXT TO THE EXISTING BUILDING'S FOUNDATION TO AVOID OVER EXCAVATING AND UNDERMINING THE STRUCTURE.
11. WHERE BACKFILL MATERIAL IS NOT COVERED WITH PAVING AT GRADE, CAP BACKFILL MATERIAL WITH 18" OF CLAY MATERIAL PER SPECS AND GENERAL NOTES.
12. SHORING SYSTEM - REF CIVIL. SHORING MUST REMAIN IN-PLACE PERMANENTLY UP TO EL 448.00'.
13. FORM A 36" DIA HOLE IN THE WALL BEYOND FOR CLEARWELL VENTILATION.
14. BUILD A 4" WIDE x 4" TALL CURB AROUND THE VENT HOOD OPNG. SEE DETAIL 2/S-10.

NO.	DR	CK	DATE	DESCRIPTION

REVISIONS

BLACK & VEATCH
Building a world of difference.
Black & Veatch Corporation
Registration No. F-253
Austin, Texas

Jose I. Guerra, Inc.
Consulting Engineers
2400 South IH-35, Suite 210
Austin, Texas 78704
(512) 445-2090
Civil • Structural • Mechanical • Electrical
TBPE FIRM # F-3

STATE OF TEXAS
BRANDON W. GOODOE
92456
REGISTERED PROFESSIONAL ENGINEER
9-24-2014

AUSTIN WATER
Walnut Creek WWTP - Tertiary Filter Rehabilitation Project
CIP ID No. 3023.025

STRUCTURAL
SOUTHSIDE CLEARWELL
SECTION LOOKING WEST

DESIGNED BY:	BG
DRAWN BY:	RH
REVIEWED BY:	LP
APPROVED BY:	JL
PROJECT NO.:	168622
DATE:	09/24/2014
SCALE:	1/4" = 1'-0"

REVISION:

DISCIPLINE NO.
S-14

DWG. NO.
74 OF 273

FD168622
D168622
File: F:\12047 Walnut Creek WWTP Filter Improvements\DRAWINGS\CAD\S-14.dwg Layout: S-14 Plotted: 7/29/2013
SAVED:
XTONET ID:

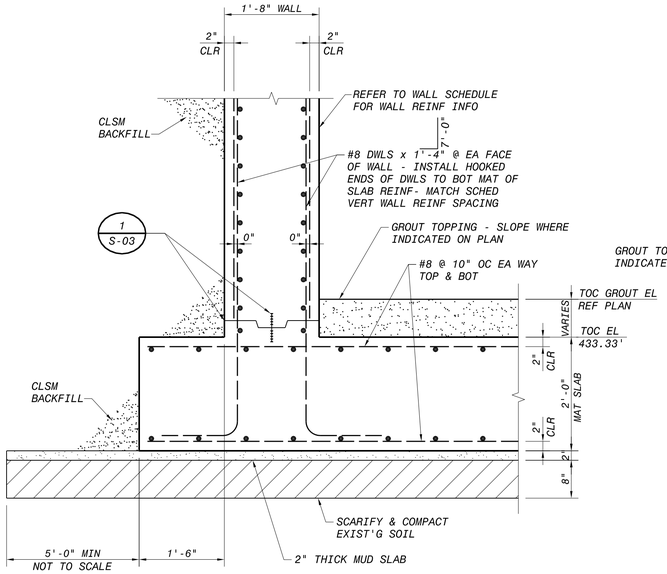

SECTION THRU PERIMETER WALL AT FOUNDATION (1 / S-08, S-12, S-13, S-14)

12" 6" 0 1' 2' 3'
3/4"=1'-0"

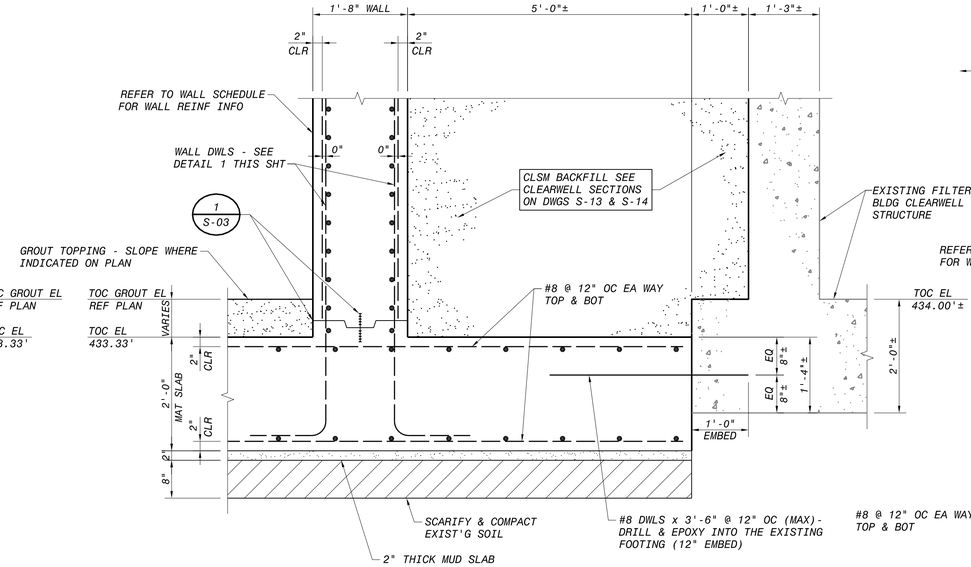

SECTION THRU PERIMETER WALL AT FOUNDATION (2 / S-08, S-13, S-14)

12" 6" 0 1' 2' 3'
3/4"=1'-0"

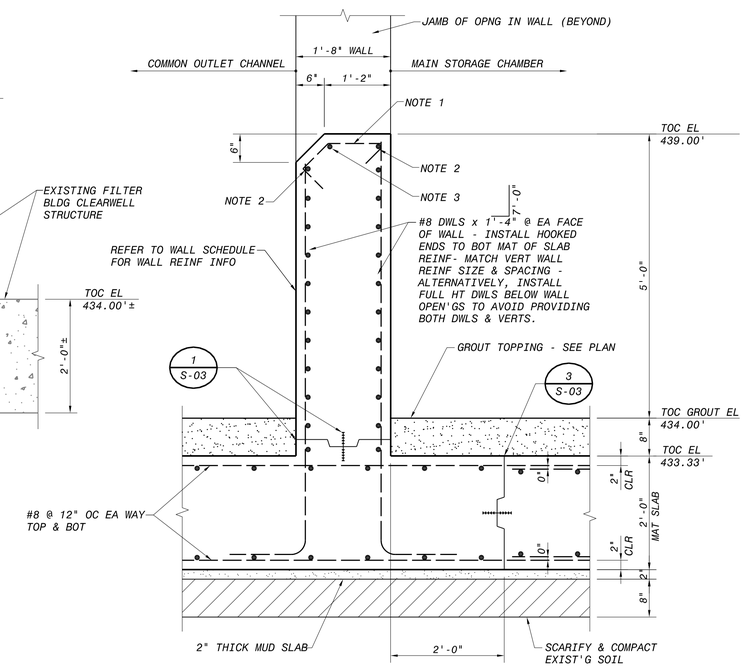

DETAIL 3 NOTES
1. #4 TIES @ 24" OC (MAX) - REFER TO DETAIL 2/S-03 FOR SIM DETAIL
2. INSTALL TWO NOTED #6 HORIZ BARS @ TOP OF WALL (INSIDE OF VERT BARS) TO ACCOMODATE WALL TIES
3. ADDT'L CONT #6 HORIZ
4. SLIDE GATES AND FIXED WIER NOT ILLUSTRATED.

SECTION THRU DIVIDER WALL AT FOUNDATION (3 / S-08, S-12, S-14)

12" 6" 0 1' 2' 3'
3/4"=1'-0"

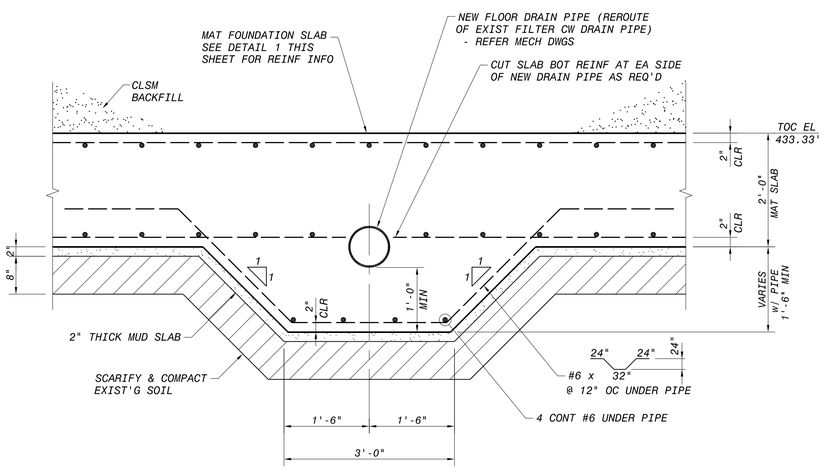

SECTION THRU THICKENED FOUNDATION AT REROUTED DRAIN PIPE (4 / S-08)

12" 6" 0 1' 2' 3'
3/4"=1'-0"

NO.	DR	CK	DATE	DESCRIPTION

REVISIONS

BLACK & VEATCH
Building a world of difference.
Black & Veatch Corporation
Registered Firm F-253
Austin, Texas

Jose I. Guerra, Inc.
Consulting Engineers
2400 Salado Drive, Suite 210
Austin, Texas 78754
(512) 445-2090
Mechanical • Civil • Mechanical • Electrical
TBPE FIRM F-3

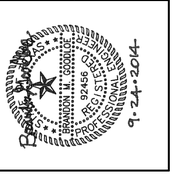

AUSTIN WATER

Walnut Creek WWTP - Tertiary Filter Rehabilitation Project

CIP ID No. 3023.025

STRUCTURAL
SOUTHSIDE CLEARWELL
SECTIONS & DETAILS

DESIGNED BY:	BG
DRAWN BY:	RH
REVIEWED BY:	LP
APPROVED BY:	JL
PROJECT NO.:	168622
DATE:	09/24/2014
SCALE:	3/4" = 1'-0"

REVISION:

DISCIPLINE NO.
S-15

DWG. NO.
75 OF 273

FD168622
D168622
File: F:\2047 Walnut Creek WWTP Filter Improvements\DRAWINGS\CAD\S-15.dwg Layout: S-15 Plotted: 7/29/2013
SAVED:
CYONET ID:

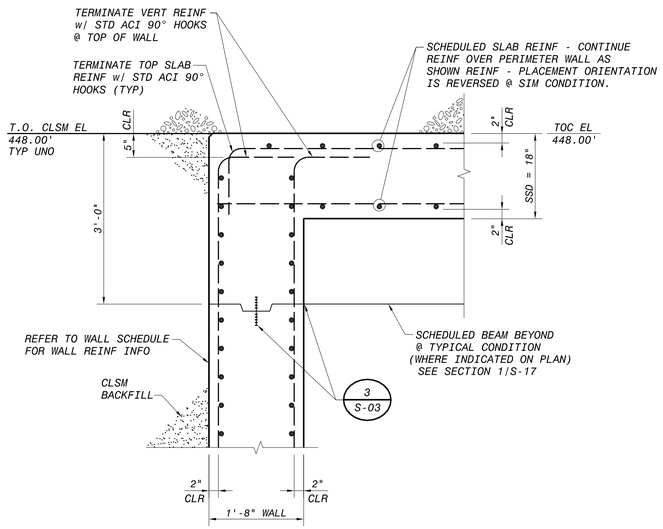

SECTION THRU CLEARWELL ROOF AT PERIMETER (1 S-09, S-12, S-13, S-14)

3/4"=1'-0"

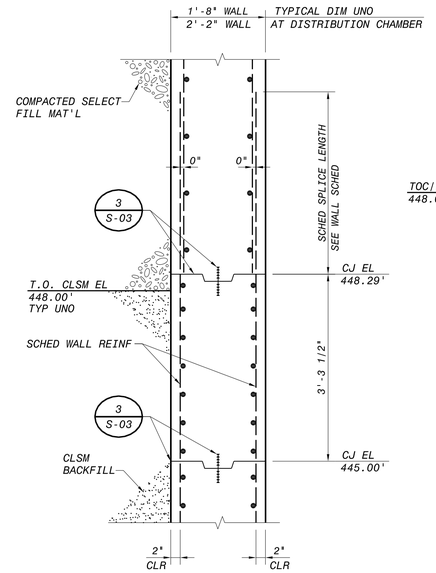

SECTION THRU PERIMETER WALL (2 S-09, S-13, S-14)

3/4"=1'-0"

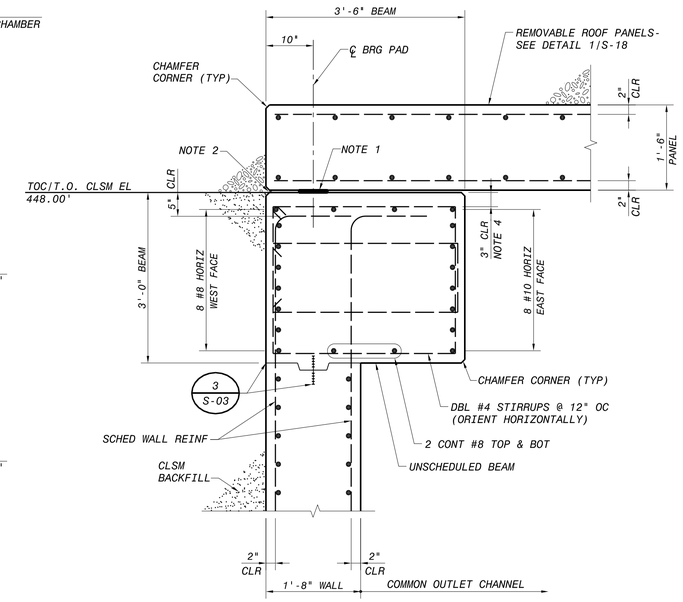

SECTION THRU CLEARWELL ROOF AT REMOVABLE PANELS (3 S-09, S-12)

3/4"=1'-0"

SHEET NOTES

1. BETWEEN THE REMOVABLE ROOF PANELS AND THE CLEARWELL ROOF, INSTALL A CONT 1/2-INCH THICK x 6-INCH WIDE MASTICORD BEARING PAD, AS MANUFACTURED BY JVI, INC (OR APPROVED EQUAL). LOCATE THE PADS AS DIMENSIONED ON THE DETAILS.
2. AT ALL JOINTS BETWEEN THE REMOVABLE ROOF PANELS AND THE CLEARWELL ROOF AND BETWEEN ADJACENT PANELS, INSTALL SEALANT w/ BACKER ROD PER THE JOINT SEALANT GENERAL NOTES. ALSO SEAL ALL JOINTS WITH SHEET-TYPE WATERPROOFING, AS SPECIFIED.
3. INSTALL 2 CONT #4 SIDE REINF BARS EACH FACE - LOCATE BARS AT 1/3 POINTS.
4. TYPICAL CLEAR CONC COVER FOR BEAM STIRRUPS = 2". THE EXCEPTION IS THAT BEAMS RUNNING NORTH/SOUTH WILL REQUIRE 3" CLEAR COVER AT THE TOP.
5. INSTALL WALL DOWELS w/ STD ACI 90° HOOKED ENDS AT BOTTOM REINF FOR BEAM.

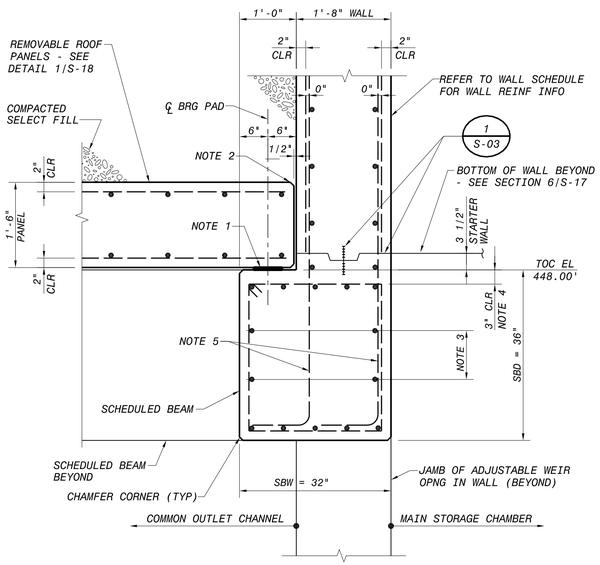

SECTION THRU CLEARWELL ROOF AT REMOVABLE PANELS (4 S-09, S-12, S-14)

3/4"=1'-0"

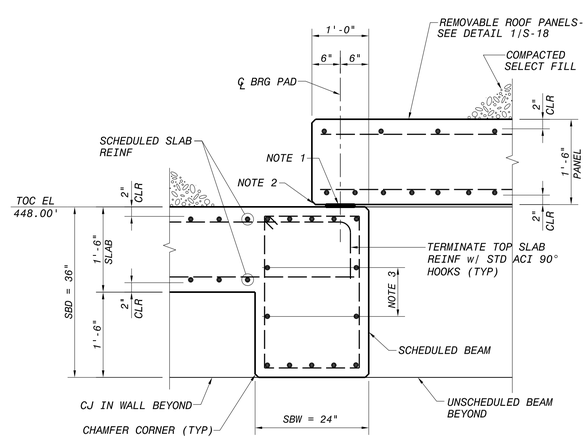

SECTION THRU CLEARWELL ROOF AT REMOVABLE PANELS (5 S-09)

3/4"=1'-0"

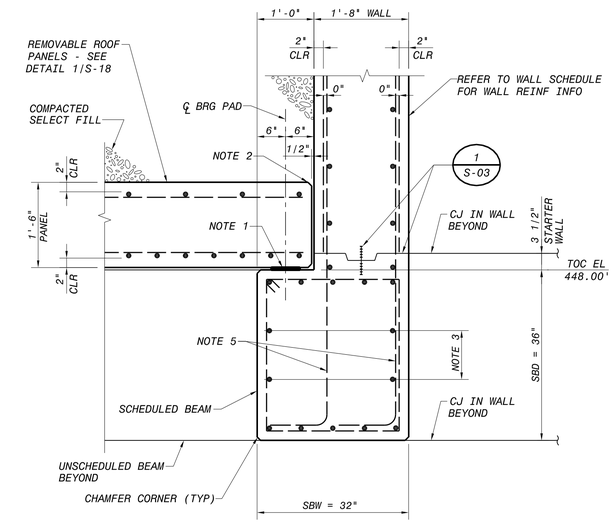

SECTION THRU CLEARWELL ROOF AT REMOVABLE PANELS (6 S-09)

3/4"=1'-0"

NO.	DR	CK	DATE	DESCRIPTION

REVISIONS

BLACK & VEATCH Building a world of difference.
Black & Veatch Corporation
Registered Firm F-253
Austin, Texas

Jose I. Guerra, Inc.
Consulting Engineers
2000 South IH-35, Suite 210
Austin, Texas 78704
(512) 445-2090
Civil • Structural • Mechanical • Electrical
TBPE FIRM F-3

STATE OF TEXAS REGISTERED PROFESSIONAL ENGINEER BRANDON M. GOODLOE 92456 9-24-2014

AUSTIN WATER

Walnut Creek WWTP - Tertiary Filter Rehabilitation Project

CIP ID No. 3023.025

STRUCTURAL
SOUTHSIDE CLEARWELL
SECTIONS & DETAILS

DESIGNED BY:	BG
DRAWN BY:	RH
REVIEWED BY:	LP
APPROVED BY:	JL
PROJECT NO.:	168622
DATE:	09/24/2014
SCALE:	3/4" = 1'-0"
REVISION:	
DISCIPLINE NO.	S-16
DWG. NO.	76 OF 273

FD168622 168622 File: F:\12047 Walnut Creek WWTP Filter Improvements\DRAWINGS\CAD\S-16.dwg Layout: S-16 Plotted: 7/29/2013
SAVED: CYONET ID:

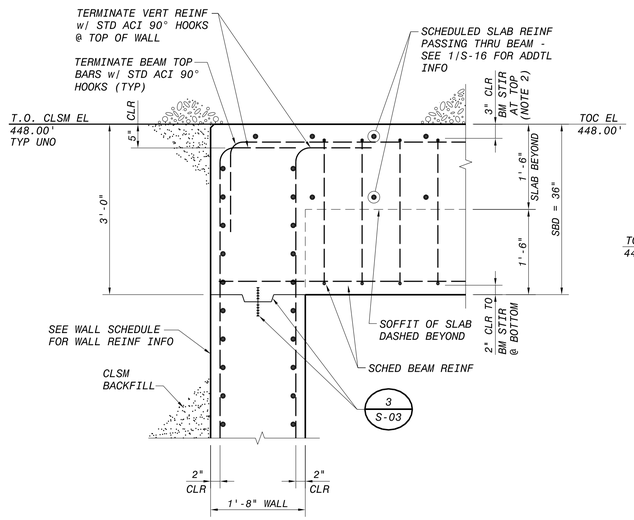

SECTION THRU CLEARWELL ROOF PERIMETER AT BEAM
VIEW LOOKING EAST OR WEST (1 / S-09)

12" 6" 0 1' 2' 3'
3/4"=1'-0"

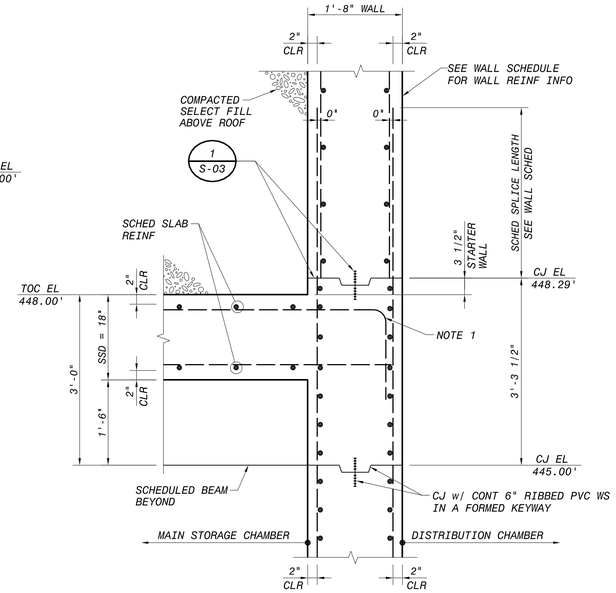

SECTION THRU CLEARWELL ROOF
VIEW LOOKING WEST (2 / S-09, S-13)

12" 6" 0 1' 2' 3'
3/4"=1'-0"

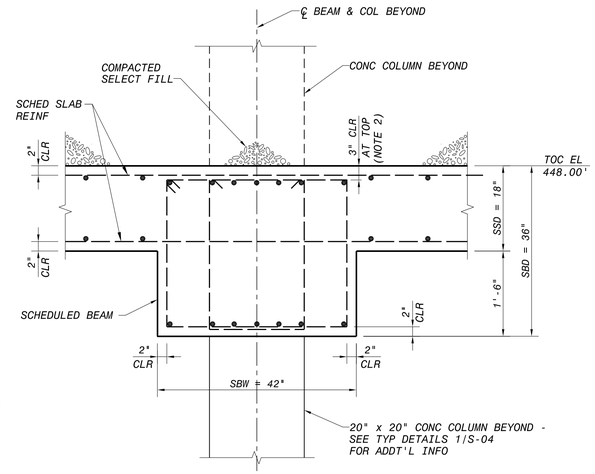

SECTION THRU CLEARWELL ROOF AT BEAM
VIEW LOOKING NORTH OR SOUTH (3 / S-09, S-12)

12" 6" 0 1' 2' 3'
3/4"=1'-0"

SHEET NOTES

1. TERMINATE TOP SLAB REINF w/ STD ACI 90° HOOKS (TYP)
2. TYPICAL CLEAR CONC COVER FOR BEAM STIRRUPS = 2". THE EXCEPTION IS THAT BEAMS RUNNING NORTH/SOUTH WILL REQUIRE 3" CLEAR COVER AT THE TOP.
3. INSTALL WALL DOWELS w/ STD ACI 90° HOOKED ENDS AT BOTTOM REINF FOR BEAM.
4. INSTALL 2 CONT #4 SIDE REINF BARS EACH FACE - LOCATE BARS AT 1/3 POINTS.
5. BOTTOM OF 36"Ø FORMED VENT OPNG IN WALL BEYOND. SEE DWG S-14 FOR LOCATION OF OPNG.

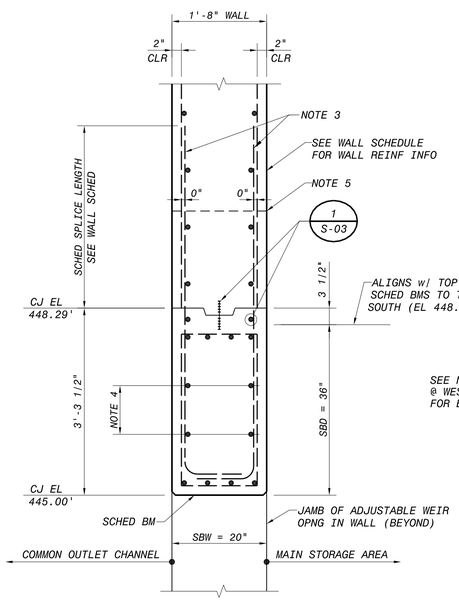

SECTION THRU WALL AT ADJUSTABLE WEIR OPENING
VIEW LOOKING NORTH (4 / S-09, S-14)

12" 6" 0 1' 2' 3'
3/4"=1'-0"

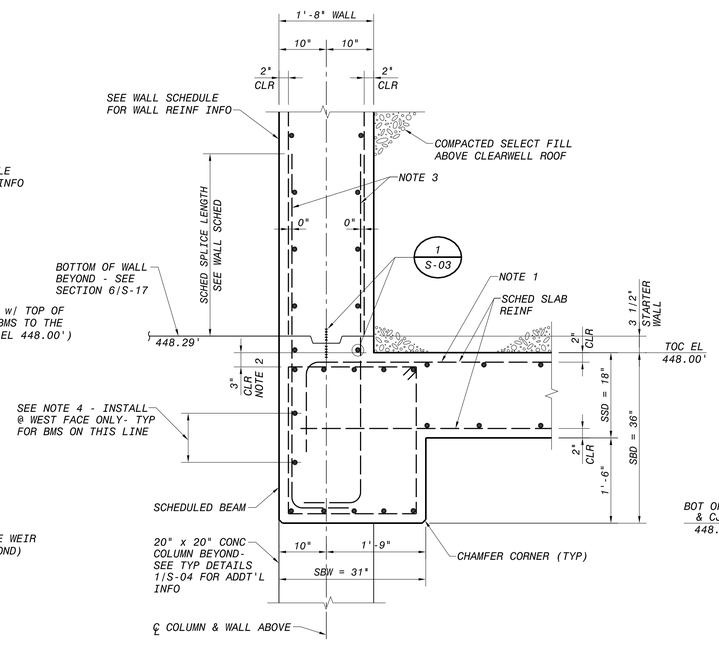

SECTION THRU CLEARWELL ROOF
VIEW LOOKING NORTH (5 / S-09, S-12)

12" 6" 0 1' 2' 3'
3/4"=1'-0"

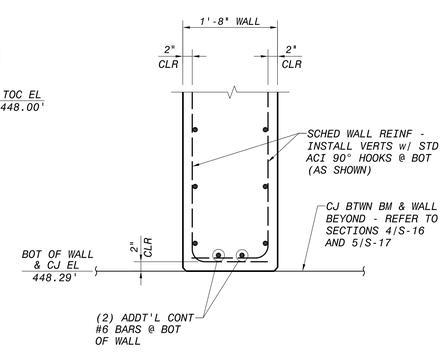

SECTION THRU BOTTOM OF WALL
VIEW LOOKING WEST (6 / S-09, S-14)

12" 6" 0 1' 2' 3'
3/4"=1'-0"

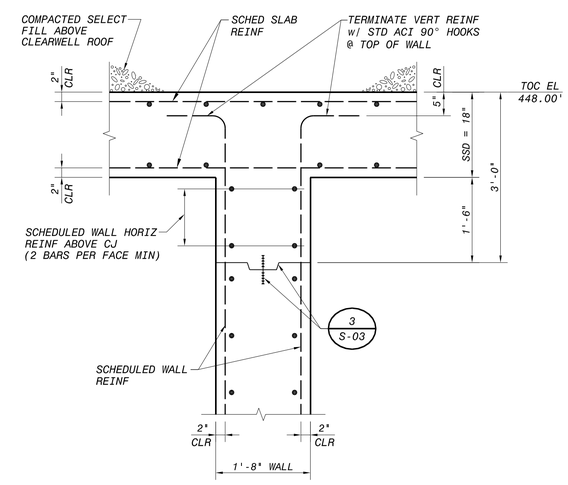

SECTION THRU CLEARWELL ROOF
VIEW LOOKING NORTH (7 / S-09)

12" 6" 0 1' 2' 3'
3/4"=1'-0"

NO.	DR	CK	DATE	DESCRIPTION

REVISIONS

BLACK & VEATCH
Building a world of difference.
Black & Veatch Corporation
Registered Firm F-253
Austin, Texas

Jose I. Guerra, Inc.
Consulting Engineers
2000 South IH-35, Suite 210
Austin, Texas 78704
(512) 445-2090
Electrical • Civil • Mechanical • Electrical
TBPE FIRM F-3

PROFESSIONAL ENGINEER
BRANDON M. GONZALEZ
92456
REGISTERED
9-24-2014

AUSTIN WATER
Walnut Creek WWTP - Tertiary Filter Rehabilitation Project
CIP ID No. 3023.025

STRUCTURAL
SOUTHSIDE CLEARWELL
SECTIONS & DETAILS

DESIGNED BY:	BG
DRAWN BY:	RH
REVIEWED BY:	LP
APPROVED BY:	JL
PROJECT NO.:	168622
DATE:	09/24/2014
SCALE:	3/4" = 1'-0"
REVISION:	

DISCIPLINE NO.
S-17

DWG. NO.
77 OF 273

FD168622
D168622
Files: F:\12047 Walnut Creek WWTP Filter Improvements\DRAWINGS\CAD\S-17.dwg Layout: S-17 Plotted: 7/29/2013
SAVED:
CYONET ID:

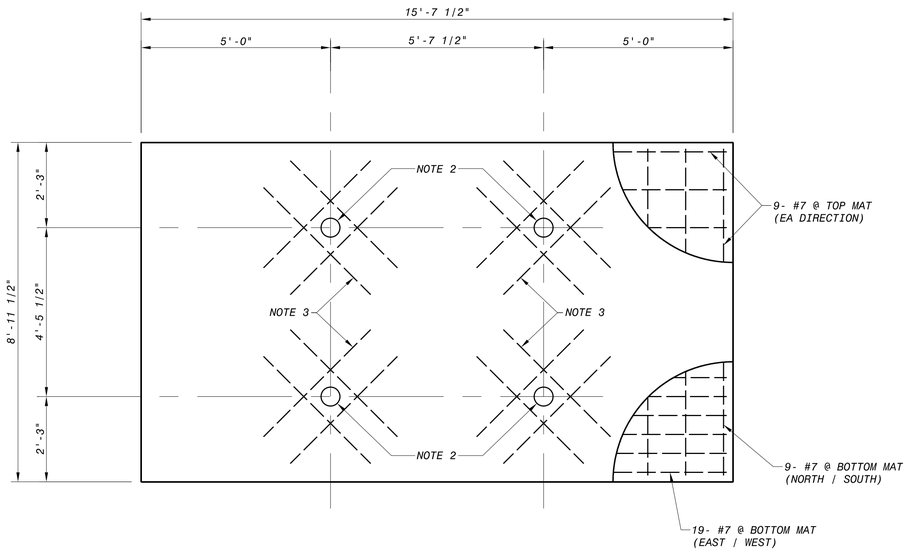

DETAIL 1 NOTES:

1. THERE ARE A TOTAL OF THREE ADJACENT, REMOVABLE PANELS LOCATED AT THE ROOF LEVEL OVER THE COMMON OUTLET CHANNEL. SEE PLAN DRAWING FOR LOCATIONS.
2. CAST FOUR SS LIFTING SLEEVES INTO EACH REMOVABLE ROOF PANEL PER DETAIL 2 THIS SHEET.
3. INSTALL 8 ADDT'L #5 x 4'-0" DIAGONAL BARS AT EACH LIFTING SLEEVE. LOCATE 4 BARS AT THE TOP MAT AND 4 BARS AT THE BOTTOM MAT.
4. SPREAD BARS AROUND LIFTING SLEEVES. DO NOT CUT THEM TO INSTALL SLEEVES.
5. LOCATE REINFORCING RUNNING EAST/WEST CLOSEST TO THE TOP & BOTTOM FACES OF THE PANELS (2-INCHES CLEAR COVER). SEE DETAILS 3 THRU 6 ON SHEET S-16.

REMOVABLE ROOF PANEL PLAN VIEW (1 / S-09)

12" 6" 0 1' 2' 3' 4' 5'

1/2"=1'-0"

TRUE NORTH

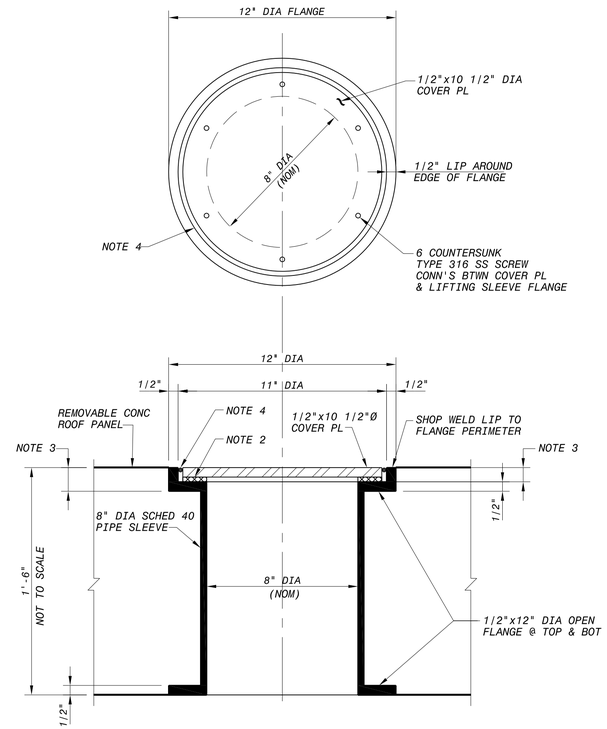

DETAIL 2 NOTES:

1. ALL LIFTING SLEEVE COMPONENTS SHALL BE TYPE 316 OR 316L STAINLESS STEEL.
2. INSTALL A NEOPRENE GASKET BTWN THE COVER PLATES & THE LIFTING SLEEVE FLANGES.
3. SIZE LIP TO FLUSH-OUT WITH THE LID WHEN THE GASKET IS INSTALLED.
4. INSTALL SEALANT W/ BACKER ROD IN GAP BETWEEN PIPE SLEEVE LIP & COVER PLATE. REFER TO JOINT SEALANT GENERAL NOTES ON SHEET S-02 FOR ADDT'L INFO.

TYPICAL LIFTING SLEEVE DETAILS (2 / -)

12" 9" 6" 3" 0

3"=1'-0"

NO.	DR	CK	DATE	DESCRIPTION

REVISIONS

BLACK & VEATCH Building a world of difference.

Black & Veatch Corporation
Registration No. F-253
Austin, Texas

Jose I. Guerra, Inc.
Consulting Engineers
2600 South Lamar Blvd., Suite 210
Austin, Texas 78704
(512) 445-2090
Mechanical • Electrical
TBPE FIRM # F-3

9-24-2014

Austin WATER

Walnut Creek WWTP - Tertiary Filter Rehabilitation Project

CIP ID No. 3023.025

STRUCTURAL
SOUTHSIDE CLEARWELL
SECTIONS & DETAILS

DESIGNED BY:	BG
DRAWN BY:	RH
REVIEWED BY:	LP
APPROVED BY:	JL
PROJECT NO.:	168622
DATE:	09/24/2014
SCALE:	AS INDICATED

REVISION:

DISCIPLINE NO. S-18

DWG. NO. 78 OF 273

FD168622
D168622
File: F:\2047 Walnut Creek WWTP Filter Improvements\DRAWINGS\CAD\S-18.dwg Layout: S-18 Plotted: 7/29/2013
SAVED:
CYONET ID:

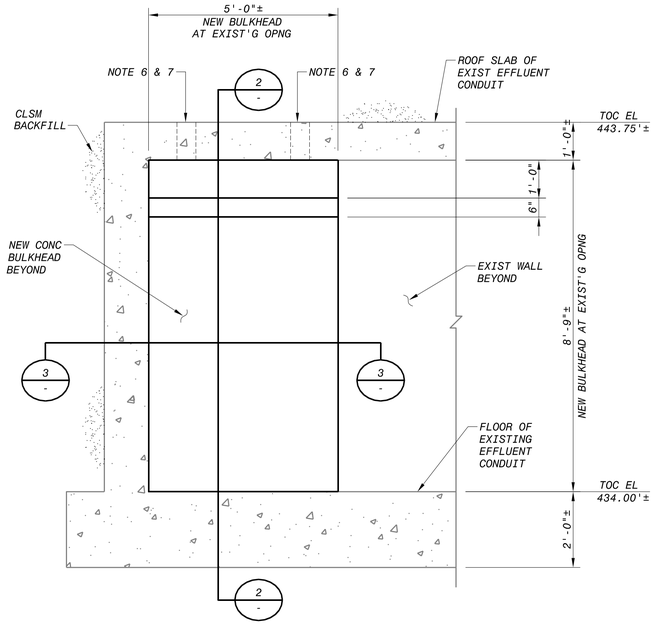

ELEVATION OF NEW BULKHEAD
VIEW LOOKING NORTH FROM EFFLUENT CONDUIT (1 / S-08, S-09)

12" 6" 0 1' 2' 3' 4' 5'
1/2"=1'-0"

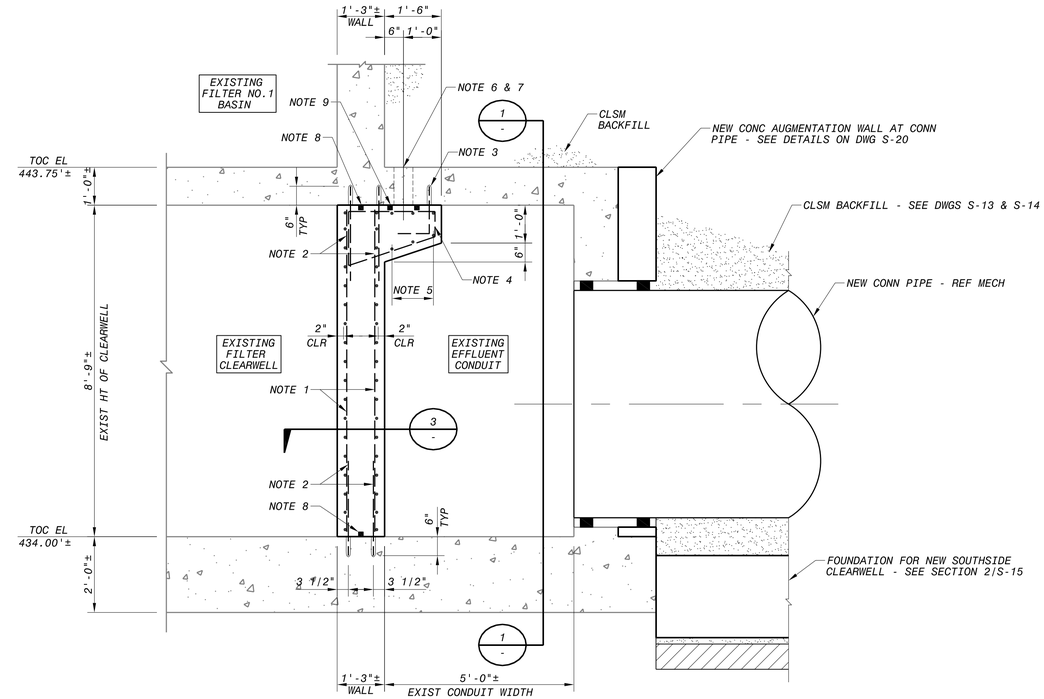

SECTION THRU NEW BULKHEAD
VIEW LOOKING EAST (2 / -)

12" 6" 0 1' 2' 3' 4' 5'
1/2"=1'-0"

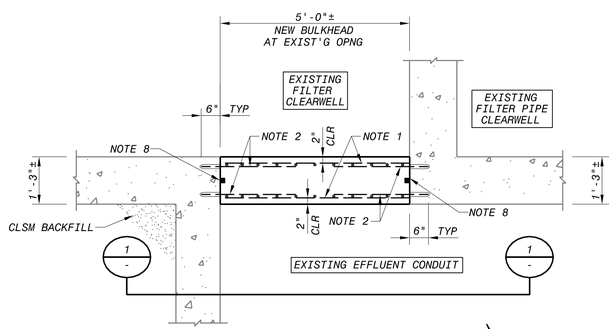

PLAN SECTION OF NEW BULKHEAD
VIEW LOOKING DOWNWARD (3 / -)

12" 6" 0 1' 2' 3' 4' 5'
1/2"=1'-0"

TRUE NORTH

SHEET NOTES

1. REINFORCE PERMANENT CONCRETE BULKHEAD WALL WITH #5 BARS AT 8" OC EACH WAY @ EACH FACE OF WALL. LOCATE HORIZ BARS CLOSEST TO THE FACES OF THE WALL (2" CLR).

2. INSTALL #5 DOWELS x 2'-6" @ 12" OC @ EACH FACE OF WALL. INSTALL DOWELS 3 1/2" FROM EA FACE OF THE WALL. DRILL & EPOXY DOWELS WITH 6" EMBED.

3. INSTALL (6) #5 HOOKED DOWELS x 1'-3" (10") @ 12" OC INTO ROOF OF EXIST EFFLUENT CONDUIT. LOCATE DOWELS 4" FROM THE SOUTH FACE OF THE CONCRETE WALL POUR. DRILL & EPOXY DOWELS WITH 6" EMBED.

4. PROVIDE (6) #4 CLOSED-TIES @ 12" OC AT THE TOP OF THE WALL POUR AS DIMENSIONED BELOW.

5. INSTALL (3) #5 CONT BARS TOP & BOTTOM INSIDE OF TIES AT TOP OF WALL POUR, AS NOTED ON SECTION 2.

6. CORE (2) 6" DIA HOLES IN THE ROOF OF THE EXISTING EFFLUENT CONDUIT FOR POURING THE NEW CONC BULKHEAD WALL BELOW. THE HOLE CORING PROCESS MAY NOT CUT OR DAMAGE THE EXISTING SLAB REINF TO ANY DEGREE. THE CONTRACTOR IS RESPONSIBLE FOR ACCURATELY LOCATING THE EXIST REINF AT EACH FACE OF THE SLAB VIA THE USE OF A NON-DESTRUCTIVE SCANNING SYSTEM. ACCORDING TO RECORD DRAWINGS, THE SLAB IS REINF WITH BARS AT 12" OC EA WAY, TOP & BOTTOM.

7. APPLY A PROTECTIVE COATING TO ALL CONCRETE AREAS NEWLY EXPOSED BY CORING. SEE ANTI-CORROSION COATING GENERAL NOTES ON DWG S-02. ALSO, SEAL ROOF AT INFILLED CORE HOLES WITH SHEET-TYPE WATERPROOFING MEMBRANE, AS SPECIFIED.

8. INSTALL A CONTINUOUS SELF-EXPANDING STRIP WATERSTOP (WS) AROUND THE 4 EDGES OF THE NEW BULKHEAD WALL. INSTALL THE WS AT THE CENTER OF THE NEW WALL. REFER TO DWG S-02 FOR SELF-EXPANDING STRIP WATERSTOP GENERAL NOTES.

9. LOCATE ADDT'L CONT SELF-EXPANDING STRIP WS AROUND (ENCIRCLING) EACH OPENING CORED IN THE EXISTING EFFLUENT CONDUIT ROOF. REFER TO DWG S-02 FOR SELF-EXPANDING STRIP WATERSTOP GENERAL NOTES.

NO.	DR	CK	DATE	DESCRIPTION

REVISIONS

BLACK & VEATCH
Building a world of difference.
Black & Veatch Corporation
Registered Texas Engineering Firm F-253
Austin, Texas

Jose I. Guerra, Inc.
Consulting Engineers
2000 Guadalupe Street, Suite 210
Austin, Texas 78705
(512) 445-2090
Civil • Structural • Mechanical • Electrical
TBPE FIRM # F-3

REGISTERED PROFESSIONAL ENGINEER
BRANDON M. GOODLOE
92456
STATE OF TEXAS
9-24-2014

Walnut Creek WWTP - Tertiary Filter Rehabilitation Project
CIP ID No. 3023.025
Austin WATER

STRUCTURAL
EXISTING FILTER BUILDING
PERMANENT BULKHEAD DETAILS

DESIGNED BY:	BG
DRAWN BY:	RH
REVIEWED BY:	LP
APPROVED BY:	JL
PROJECT NO.:	168622
DATE:	09/24/2014
SCALE:	1/2" = 1'-0"
REVISION:	
DISCIPLINE NO.	S-19
DWG. NO.	79 OF 273

FD168622
D168622
SAVED:
CYONET ID:
File: F:\12047 Walnut Creek WWTP Filter Improvements\DRAWINGS\CAD\S-19.dwg Layout: S-19 Plotted: 7/29/2013

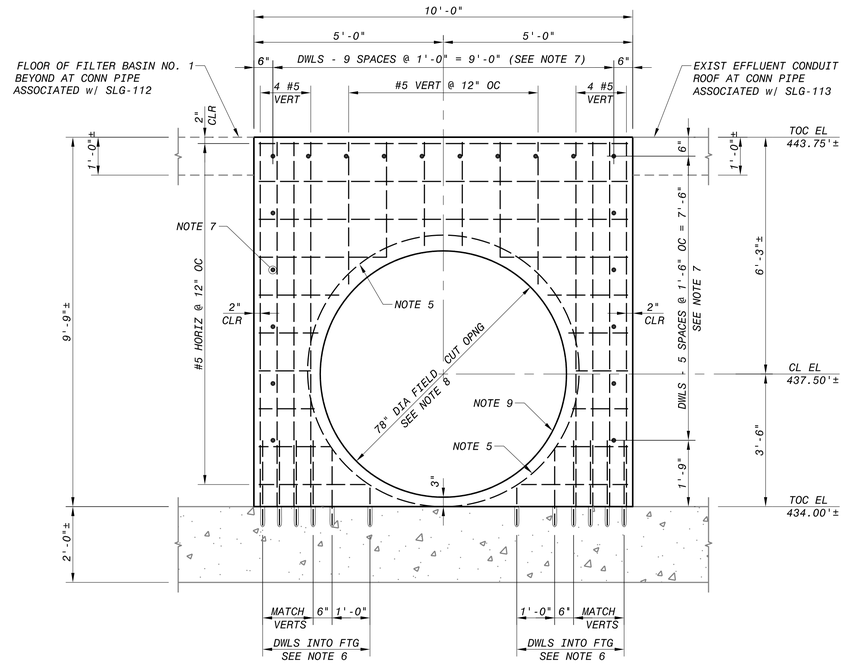

CONC AUGMENTATION WALL AT SOUTHSIDE CLEARWELL CONN PIPES
ELEVATION VIEW LOOKING NORTH

1
S-08, S-09, S-13, S-19

12" 6" 0 1' 2' 3' 4' 5'
1/2"=1'-0"

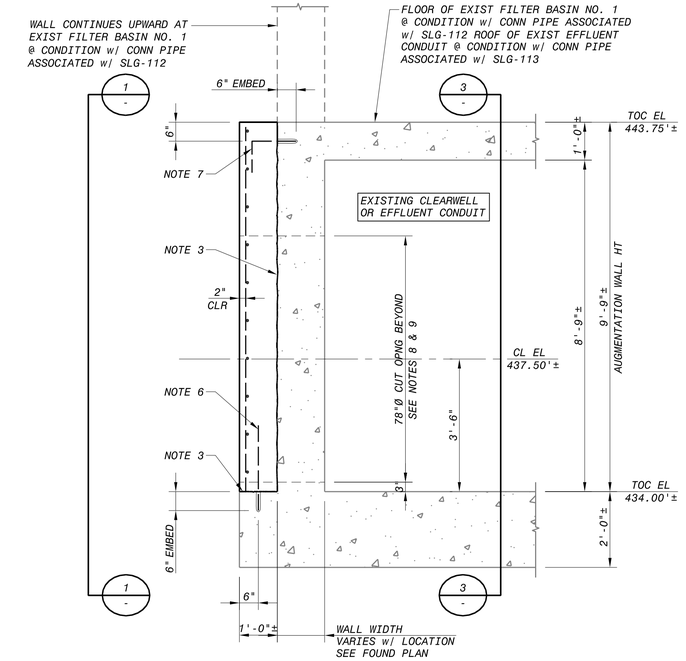

CONC AUGMENTATION WALL AT SOUTHSIDE CLEARWELL CONN PIPES
SECTION VIEW LOOKING WEST

2
S-08, S-09, S-13, S-19

12" 6" 0 1' 2' 3' 4' 5'
1/2"=1'-0"

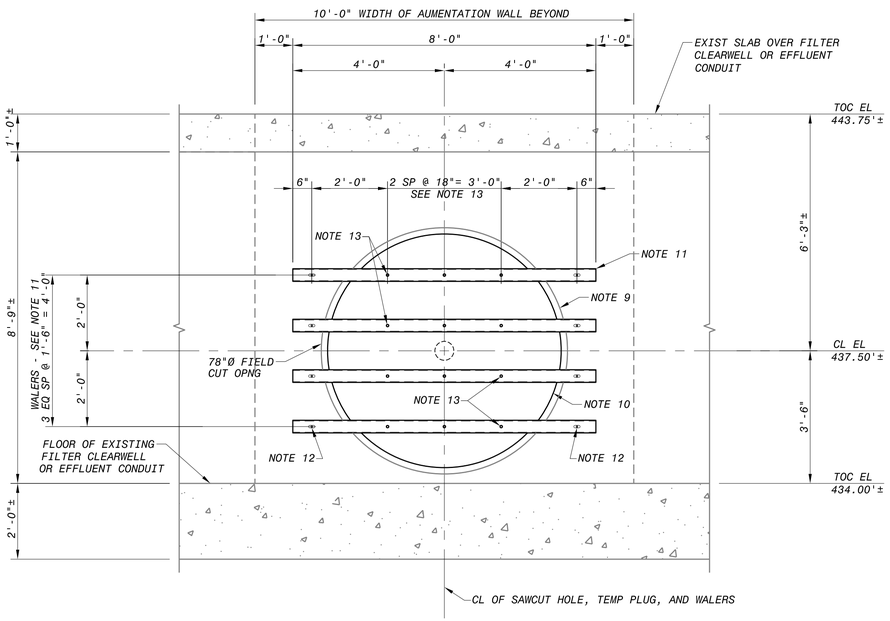

TEMPORARY PIPE PLUG AT SOUTHSIDE CLEARWELL CONN PIPES
ELEVATION VIEW LOOKING SOUTH FROM INSIDE EXIST FILTER CW

3
-

12" 6" 0 1' 2' 3' 4' 5'
1/2"=1'-0"

SHEET NOTES

1. TWO NEW AUGMENTATION WALLS WILL AJOIN THE EXISTING WALLS OF THE FILTER BUILDING CLEARWELL AND EFFLUENT CONDUIT AS SHOWN ON THE PLAN DRAWINGS. NEW AUGMENTATION WALLS WILL BE CENTERED ON THE TWO NEW CONNECTION PIPES. THESE AUGMENTATION WALLS WILL BE CONSTRUCTED PRIOR TO CUTTING HOLES FOR THE CONNECTION PIPE INSTALLATION.

2. PRIOR TO THE FINAL CONNECTION PIPE INSTALLATION, A TEMPORARY PLUG INSTALLATION SHALL BE PROVIDED AS REQ'D BY CONSTRUCTION SEQUENCING. REFER TO DETAILS ON THIS SHEET AND MECH DWGS FOR ADDITIONAL INFO.

3. ROUGHEN THE FACE OF THE EXIST FILTER BLDG WALL TO A 1/4-INCH AMPLITUDE FOR EACH SHARED INTERFACE WITH THE NEW CONC AUGMENTATION WALLS.

4. INSTALL REINFORCING FOR AUGMENTATION WALLS PROVIDING 3-INCHES OF CLR COVER FROM THE FUTURE CUT PIPE OPNG. PROVIDE ADDTL REINF OR DOWELS AS REQUIRED TO MAINTAIN CORRECT REINF POSITIONS.

5. NOTED LINE ON DETAIL 1 REPRESENTS A CONT #4 TIE x 86-INCH OD, AROUND THE FUTURE CUT OPNG, AT THE INSIDE FACE OF THE WALL REINF MAT.

6. DRILL & EPOXY #5 VERT DWLS x 2'-6" INTO THE EXIST FILTER BLDG FOOTING PROJECTION AS NOTED ON DETAILS (6-INCH EMBED). TRIM BARS BELOW FUTURE CUT OPNG (3-INCHES CLR). TURN HOOKS AWAY FROM EDGES OF NEW CONC AUGMENTATION WALL.

7. DRILL & EPOXY #5 HOOKED DWLS x 1'-2"|10" INTO EXIST FILTER BLDG WALL AS NOTED ON DETAILS (6-INCH EMBED).

8. AFTER THE AUGMENTATION WALL HAS ACHIEVED ITS DESIGN STRENGTH, ACCURATELY CUT A 76-INCH DIAMETER OPNG FOR THE INITIAL TEMP PLUG INSTALLATION WHICH WILL ULTIMATELY BE FOLLOWED BY THE FINAL CONNECTION PIPE INSTALLATION. THE CUT WILL PENETRATE THRU BOTH THE AUGMENTATION WALL AND THE EXIST FILTER BUILDING WALL. THE FINAL SURFACES MUST BE SMOOTH ENOUGH TO EFFECTIVELY INSTALL MODULAR WALL SEALS. FOR ADDT'L INFO, REFER TO THE GENERAL NOTES ENTITLED "NOTES FOR CREATION OF LARGE DIAMETER HOLES". THESE NOTES ARE LOCATED ON DWG S-02. REFER TO THE MECH DWGS FOR MODULAR SEAL INFO.

9. COAT ENTIRE SURFACE OF EACH CUT OPNG IN THE CONC WALL W/ AN ANTI-CORROSION COATING AND A REPAIR MORTAR AS DESCRIBED IN THE GENERAL NOTES ENTITLED "NOTES FOR CREATION OF LARGE DIAMETER HOLES". THESE NOTES ARE LOCATED ON DWG S-02.

10. TEMPORARY 72" DIA STEEL PIPE PLUG TO BE USED DURING CONSTRUCTION ONLY (2 TOTAL) - REFER TO MECH DWGS FOR ADDT'L INFO.

11. BRACE EACH TEMP STEEL PIPE PLUG WITH (4) TEMP HSS 4x4x5/16 x 8'-0" WALERS AS SHOWN ON DETAIL 3.

12. CONNECT EACH TEMP HSS WALER MEMBER TO THE EXIST CONC WALL BEYOND WITH A 3/4-INCH DIA TYPE 316 SS THREADED ROD ANCHOR AT EA END (AS SHOWN). DRILL & EPOXY ANCHORS INTO WALL WITH 6-INCH MIN EMBED. DO NOT CUT EXIST WALL REINF TO INSTALL ANCHORS. PROVIDE 2-INCH LONG HORIZ SLOTTED HOLES IN HSS MEMBERS TO PROVIDE FLEXIBILITY FOR INSTALLING ANCHORS. AFTER TEMP PLUG FRAMING IS REMOVED, CUT-OFF PROTRUDING ANCHORS FLUSH WITH THE EXIST CONC WALL.

13. CONNECT TEMP STEEL PIPE PLUG TO TEMP WALERS WITH 3/4-INCH THREADED STUDS SHOP WELDED TO THE STEEL PLUG ASSEMBLY. PROVIDE A MIN OF 3 CONNECTIONS PER WALER (AS SHOWN).

14. HOLE DIMENSIONS & CL ELEVATIONS ARE BASED ON A NOMINAL PIPE SIZE EQUAL TO THE PIPE'S OD. IF OTHERWISE, NOTIFY ENGINEER TO COORDINATE AS NEEDED.

15. WALERS AND THEIR CONN'S ARE DESIGNED TO RESIST A HYDRAULIC PRESSURE OF 10 PSI ON THE TEMP PIPE PLUG.

NO.	DR	CK	DATE	DESCRIPTION

REVISIONS

BLACK & VEATCH
Building a world of difference.
Black & Veatch Corporation
Registered Firm F-253
Austin, Texas

Jose I. Guerra, Inc.
Consulting Engineers
2000 Guadalupe St., Suite 210
Austin, Texas 78705
(512) 445-2090
Civil • Structural • Mechanical • Electrical
TBPE FIRM F-3

STATE OF TEXAS
BRANDON M. GOODLOE
92456
REGISTERED PROFESSIONAL ENGINEER
9-24-2014

Walnut Creek WWTP - Tertiary Filter Rehabilitation Project
CIP ID No. 3023.025

Austin WATER

STRUCTURAL
EXISTING FILTER BUILDING
AUGMENTATION WALLS & TEMP PIPE PLUGS

DESIGNED BY:	BG
DRAWN BY:	RH
REVIEWED BY:	LP
APPROVED BY:	JL
PROJECT NO.:	168622
DATE:	09/24/2014
SCALE:	1/2" = 1'-0"

REVISION:

DISCIPLINE NO.
S-20

DWG. NO.
80 OF 273

FD168622
D168622
File: F:\12047 Walnut Creek WWTP Filter Improvements\DRAWINGS\CAD\S-20.dwg Layout: S-20 Plotted: 7/29/2013
SAVED:
CYGNET ID:

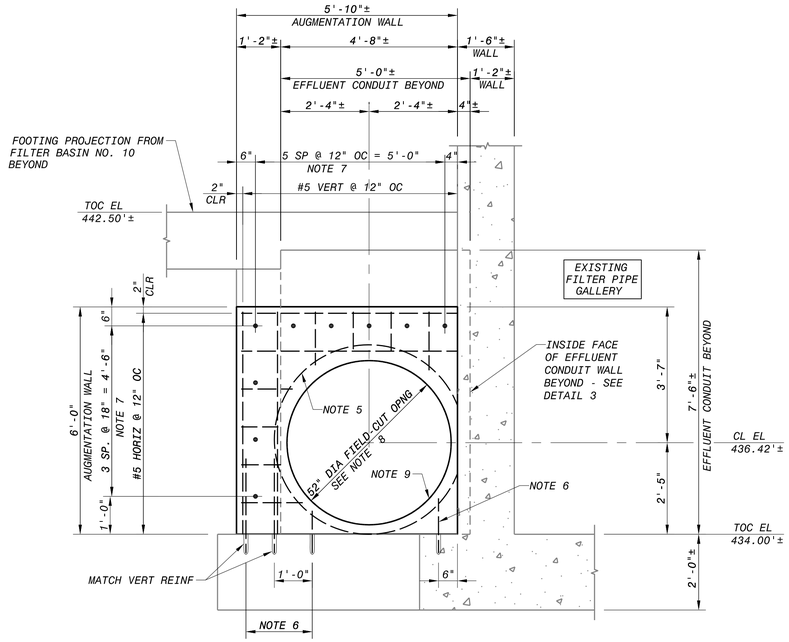

CONC AUGMENTATION WALL AT NW CLEARWELL EFFLUENT PIPE
ELEVATION VIEW LOOKING EAST (1 / S-26)

12" 6" 0 1' 2' 3' 4' 5'
1/2"=1'-0"

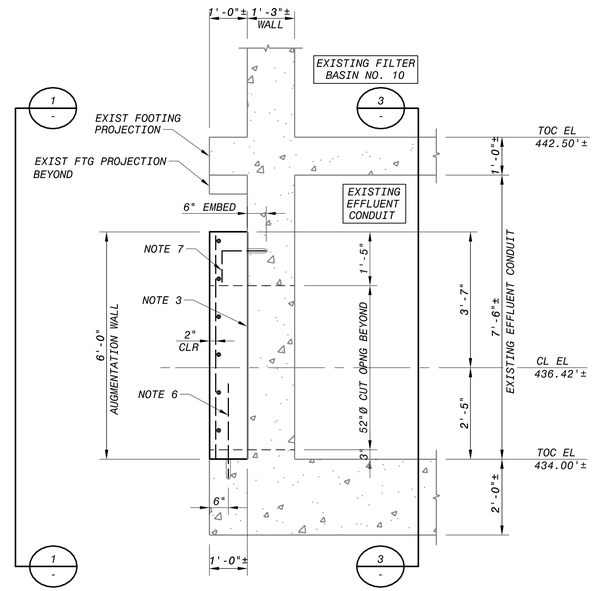

CONC AUGMENTATION WALL AT NW CLEARWELL EFFLUENT PIPE
SECTION VIEW LOOKING NORTH (2 / S-26)

12" 6" 0 1' 2' 3' 4' 5'
1/2"=1'-0"

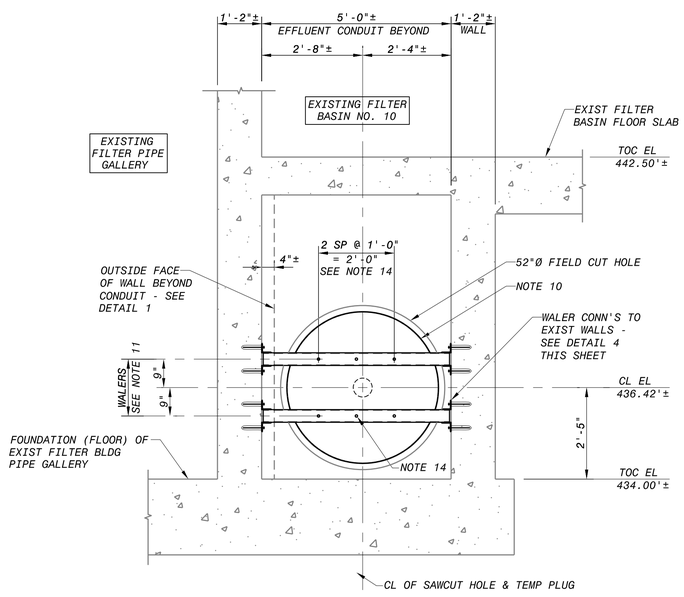

TEMP PIPE PLUG AT NW CLEARWELL EFFLUENT PIPE CONN
ELEVATION LOOKING WEST FROM INSIDE OF EXIST EFFLUENT CONDUIT (3 / S-26)

12" 6" 0 1' 2' 3' 4' 5'
1/2"=1'-0"

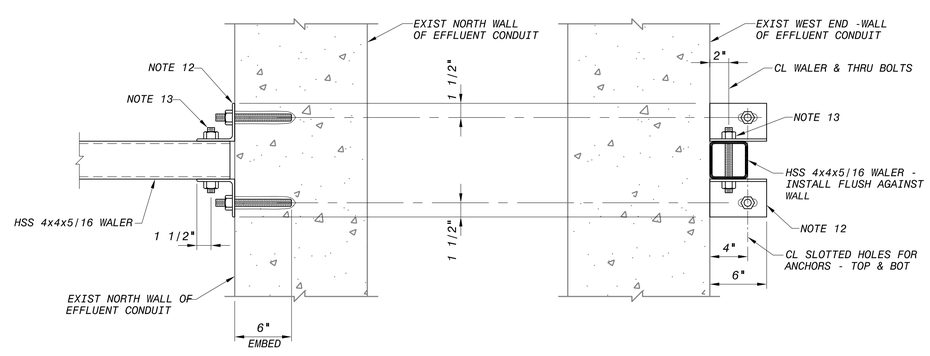

WALER CONNECTION AT EXIST EFFLUENT CONDUIT (4 / -)

12" 9" 6" 3" 0 1'
1 1/2"=1'-0"

SHEET NOTES

1. A NEW AUGMENTATION WALL WILL AJOIN THE EXISTING WALLS OF THE FILTER BLDG AT THE EFFLUENT CONDUIT'S WEST END WALL, AS SHOWN ON THE PLAN DRAWINGS AND DETAILS ON THIS SHEET. THE AUGMENTATION WALLS SHALL BE CONSTRUCTED PRIOR TO CUTTING HOLES FOR THE CONNECTION PIPE INSTALLATION.
2. PRIOR TO THE FINAL CONN PIPE INSTALLATION, A TEMP PIPE PLUG SHALL BE INSTALLED AS REQ'D BY CONSTRUCTION SEQUENCING. SEE DETAILS THIS SHEET AND MECH DWGS FOR ADDT'L INFO.
3. ROUGHEN THE FACE OF THE EXIST FILTER BLDG WALL TO A 1/4-INCH AMPLITUDE FOR THE SHARED INTERFACE WITH THE NEW CONC AUGMENTATION WALL.
4. INSTALL REINFORCING FOR THE AUGMENTATION WALL PROVIDING 3-INCHES OF CLR COVER FROM THE FUTURE CUT OPNG. PROVIDE ADDTL REINF OR DOWELS AS REQUIRED TO MAINTAIN CORRECT REINF POSITIONS.
5. NOTED LINE ON DETAIL 1 REPRESENTS A CONT #4 TIE x 58-INCH OD, CENTERED AROUND THE FUTURE CUT OPNG, AT THE INSIDE FACE OF THE WALL REINF MAT. CUT TIE AT EXISTING WALL.
6. DRILL & EPOXY #5 VERT DWLS x 2'-6" INTO THE EXIST FILTER BLDG FOOTING PROJECTION AS NOTED ON DETAILS (6-INCH EMBED). TRIM BARS BELOW FUTURE CUT OPNG (3-INCHES CLR). TURN HOOKS AWAY FROM EDGES OF NEW CONC AUGMENTATION WALL.
7. DRILL & EPOXY #5 HOOKED DWLS x 1'-2" (10") INTO EXIST FILTER BLDG WALL AS NOTED ON DETAILS (6-INCH EMBED). TURN HOOKS AWAY FROM EDGES OF NEW CONC WALL.
8. AFTER THE AUGMENTATION WALL HAS ACHIEVED ITS DESIGN STRENGTH, ACCURATELY CUT A 52-INCH DIA OPNG FOR THE INITIAL TEMP PLUG INSTALLATION WHICH WILL ULTIMATELY BE FOLLOWED BY THE FINAL CONNECTION PIPE INSTALLATION. THE CUT WILL PENETRATE THRU BOTH THE AUGMENTATION WALL AND THE EXIST FILTER BLDG WALL. THE FINAL SURFACE MUST BE SMOOTH ENOUGH TO EFFECTIVELY INSTALL MODULAR WALL SEALS. FOR ADDT'L INFO, REFER TO THE GENERAL NOTES ENTITLED "NOTES FOR CREATION OF LARGE DIAMETER HOLES". THESE NOTES ARE LOCATED ON DWG S-02. REFER TO THE MECH DWGS FOR MODULAR SEAL INFO.
9. COAT ENTIRE SURFACE OF EACH CUT OPNG IN THE CONC WALL W/ AN ANTI-CORROSION COATING AND A REPAIR MORTAR AS DESCRIBED IN THE GENERAL NOTES ENTITLED "NOTES FOR CREATION OF LARGE DIAMETER HOLES". THESE NOTES ARE LOCATED ON DWG S-02.
10. TEMPORARY 48" DIA STEEL PIPE PLUG TO BE USED DURING CONSTRUCTION ONLY - REFER TO MECH DWGS FOR ADDT'L INFO.
11. BRACE THE TEMP STEEL PIPE PLUG WITH (2) HSS 4x4x5/16 WALERS AS SHOWN ON DETAIL 3.
12. CONNECT ENDS OF WALER MEMBERS TO THE EXIST CONC WALL WITH A PAIR OF CLIP L4 x 4 x ¼ x 0'-6" TOP & BOTTOM. SEE DETAIL 4. EACH CLIP ANGLE SHALL HAVE A 3/4-INCH DIA TYPE 316 SS THREADED ROD ANCHOR AT EA END. DRILL & EPOXY ANCHORS INTO WALL WITH 6-INCH MIN EMBED. DO NOT CUT EXIST WALL REINF TO INSTALL ANCHORS. PROVIDE 2-INCH LONG HORIZ SLOTTED HOLES IN THE CLIP ANGLES TO PROVIDE FLEXIBILITY FOR INSTALLING ANCHORS. AFTER TEMP PLUG FRAMING IS REMOVED, CUT-OFF PROTRUDING ANCHORS FLUSH WITH THE EXIST CONC WALL.
13. CONNECT EACH END OF WALERS TO CLIP ANGLES WITH A 3/4-INCH THRU-BOLT. THRU-BOLT MAY BE A36 THREADED RODS (OR A307 HEADED BOLTS). HOLES IN THE WALERS MAY BE SLOTTED ALONG THEIR LONGITUDINAL AXES TO PROVIDE AN ALLOWANCE FOR FIELD ADJUSTMENT.
14. CONNECT TEMP STEEL PIPE PLUG TO THE TEMP WALERS WITH 3/4-INCH THREADED STUDS SHOP WELDED TO THE STEEL PLUG ASSEMBLY. PROVIDE A MIN OF 3 CONNECTIONS PER WALER (AS SHOWN).
15. HOLE DIMENSIONS & CL ELEVATIONS ARE BASED ON A NOMINAL PIPE SIZE EQUAL TO THE PIPE'S OD. IF OTHERWISE, NOTIFY ENGINEER TO COORDINATE AS NEEDED.
16. WALERS AND THEIR CONN'S ARE DESIGNED TO RESIST A HYDRAULIC PRESSURE OF 10 PSI ON THE TEMP PIPE PLUG.

NO.	DR	CK	DATE	DESCRIPTION

REVISIONS

BLACK & VEATCH Building a world of difference.
Black & Veatch Corporation
Registered Firm No. F-253
Austin, Texas

Jose I. Guerra, Inc.
Consulting Engineers
2000 S. IH-35, Suite 210
Austin, Texas 78704
(512) 445-2090
Civil • Structural • Mechanical • Electrical
TBPE FIRM F-3

STATE OF TEXAS
BRANDON W. SCHOOLCRAFT
92456
REGISTERED PROFESSIONAL ENGINEER
9-24-2014

Walnut Creek WWTP - Tertiary Filter Rehabilitation Project
CIP ID No. 3023.025

STRUCTURAL
EXISTING FILTER BUILDING
AUGMENTATION WALL & TEMP PIPE PLUG

DESIGNED BY:	BG
DRAWN BY:	RH
REVIEWED BY:	LP
APPROVED BY:	JL
PROJECT NO.:	168622
DATE:	09/24/2014
SCALE:	AS INDICATED

REVISION:

DISCIPLINE NO. S-21

DWG. NO. 81 OF 273

FD168622
D168622
File: F:\12047 Walnut Creek WWTP Filter Improvements\DRAWINGS\CAD\S-21.dwg Layout: S-21 Plotted: 7/29/2013
SAVED:
XCONET ID:

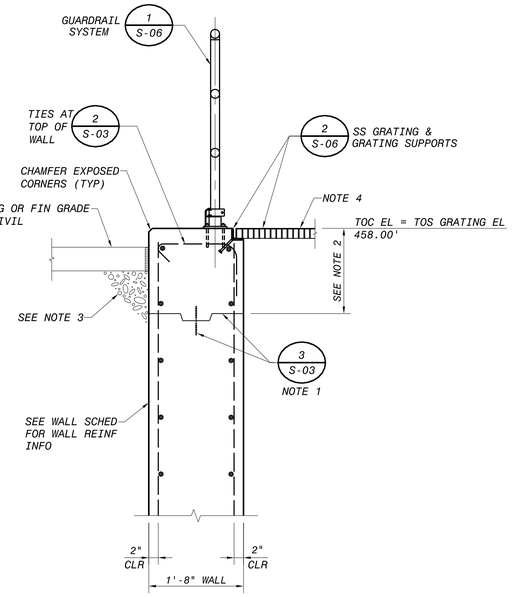

SECTION AT CLEARWELL ROOF (1 / S-10, S-12, S-14)

12" 6" 0 1' 2' 3'
3/4"=1'-0"

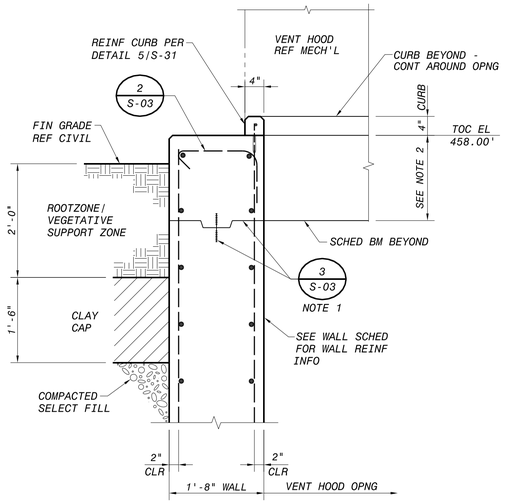

SECTION AT CLEARWELL ROOF (2 / S-10)

12" 6" 0 1' 2' 3'
3/4"=1'-0"

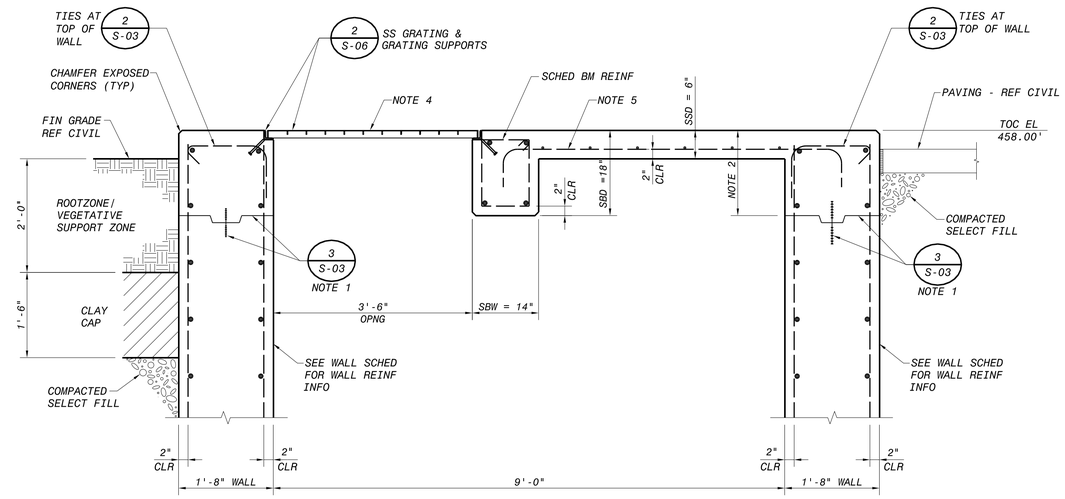

SECTION AT CLEARWELL ROOF (3 / S-10)

12" 6" 0 1' 2' 3'
3/4"=1'-0"

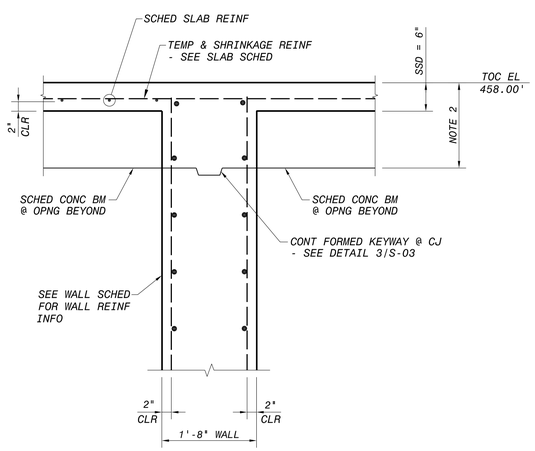

SECTION AT CLEARWELL ROOF (4 / S-14)

12" 6" 0 1' 2' 3'
3/4"=1'-0"

SHEET NOTES

1. CONSTRUCTION JOINT W/ CONT 6-INCH RIBBED PVC WS IN A KEYED JOINT.
2. LOCATED CJ AT EL TO ALIGN WITH THE LOWEST/DEEPEST BM SOFFIT IN THE ASSOCIATED POUR.
3. COMPACTED SELECT FILL MATERIAL - AT CONDITION WHERE THE BACKFILL MATERIAL IS NOT COVERED WITH PAVING ABOVE, CAP WITH CLAY MATERIAL AND ROOT ZONE/VEGITATIVE SUPPORT SOIL PER SPECS AND GENERAL NOTES.
4. REMOVABLE STAINLESS STEEL BAR GRATING CLAD WITH FLOOR PLATE - REFER TO TYPICAL DETAIL 2/S-06 AND SS BAR GRATING GENERAL NOTES FOR ADDITIONAL GRATING INFO.
5. REINFORCE NOTED SCHED SLAB WITH ONE LAYER OF L-TYPE BARS LOCATED IN THE BOTTOM OF THE SLAB. SEE SLAB SCHEDULE SHEET S-07 FOR ADDITIONAL INFO.

NO.	DR	CK	DATE	DESCRIPTION

REVISIONS

BLACK & VEATCH
Building a world of difference.
Black & Veatch Corporation
Registered Firm F-253
Austin, Texas

Jose I. Guerra, Inc.
Consulting Engineers
2000 South IH-35, Suite 210
Austin, Texas 78704
(512) 445-2090
Civil • Structural • Mechanical • Electrical
TBPE FIRM # F-3

STATE OF TEXAS
BRANDON M. GOODLOE
92456
REGISTERED
PROFESSIONAL ENGINEER
9-24-2014

Walnut Creek WWTP - Tertiary Filter Rehabilitation Project
CIP ID No. 3023.025

STRUCTURAL
SOUTHSIDE CLEARWELL
SECTIONS & DETAILS

DESIGNED BY:	BG
DRAWN BY:	RH
REVIEWED BY:	LP
APPROVED BY:	JL
PROJECT NO.:	168622
DATE:	09/24/2014
SCALE:	3/4" = 1'-0"

REVISION:

DISCIPLINE NO.
S-22

DWG. NO.
82 OF 273

FD168622
D168622
File: F:\12047 Walnut Creek WWTP Filter Improvements\DRAWINGS\CAD\S-22.dwg Layout: S-22 Plotted: 7/29/2013
SAVED:
CYONET ID:

SOUTHSIDE CLEARWELL WALL SCHEDULE

	W1	W2	W3	W4	W5	W6	W7	W8	W9
GROUND LEVEL									
WALL THICKNESS			20"	20"		20"	20"	26"	20"
VERT REINF SIZE & SPACING			#8 @ 8" OC	#8 @ 8" OC		#8 @ 8" OC	#8 @ 12" OC	#8 @ 8" OC	#8 @ 12" OC
VERT SPLICE LENGTH			60"	60"		60"	60"	60"	60"
HORIZ REINF SIZE & SPACING			#8 @ 12" OC	#8 @ 8" OC		#8 @ 8" OC	#8 @ 12" OC	#8 @ 8" OC	#8 @ 12" OC
HORIZ SPLICE LENGTH			72"	72"		72"	72"	72"	72"
REFERENCE DETAILS			2/S-16 ; 1/S-22	2/S-16 ; 1/S-14		2/S-16 ; 1/S-13	2/S-16	2/S-16	2/S-16 ; 1/S-22
REMARKS									
CLEARWELL ROOF LEVEL									
WALL THICKNESS	20"	24"	20"	20"	20"	20"	20"	26"	20"
VERT REINF SIZE & SPACING	#8 @ 8" OC	#8 @ 8" OC	#8 @ 8" OC	#8 @ 8" OC	#8 @ 8" OC	#8 @ 8" OC	#8 @ 12" OC	#8 @ 8" OC	#8 @ 12" OC
VERT SPLICE LENGTH	60"	60"	60"	60"	60"	60"	60"	60"	60"
HORIZ REINF SIZE & SPACING	#8 @ 8" OC	#8 @ 8" OC	#8 @ 8" OC	#8 @ 8" OC	#8 @ 8" OC	#8 @ 8" OC	#8 @ 8" OC	#8 @ 8" OC	#8 @ 8" OC
HORIZ SPLICE LENGTH	36"	36"	72"	72"	72"	72"	72"	72"	72"
REFERENCE DETAILS	1/S-15 ; 1/S-16 ; 3/S-16	1/S-15 ; 1/S-16	1/S-15 ; 2/S-16	2/S-15 ; 2/S-16	2/S-15 ; 1/S-16	2/S-15 ; 2/S-16			1/S-16 ; 2/S-16
REMARKS		SOUTH WALL OF CHANNEL							
CLEARWELL FLOOR LEVEL									

SOUTHSIDE CLEARWELL WALL SCHEDULE

	W10	W11	W12	W13	W14	W15	W16	W17
GROUND LEVEL								
WALL THICKNESS	20"	20"		20"	20"	20"	20"	20"
VERT REINF SIZE & SPACING	#8 @ 8" OC	#8 @ 12" OC		#8 @ 12" OC	#8 @ 12" OC	#8 @ 12" OC	#8 @ 12" OC	#8 @ 12" OC
VERT SPLICE LENGTH	60"	60"		36"	36"	36"	36"	36"
HORIZ REINF SIZE & SPACING	#8 @ 12" OC	#8 @ 12" OC		#8 @ 12" OC	#8 @ 12" OC	#8 @ 12" OC	#8 @ 12" OC	#8 @ 12" OC
HORIZ SPLICE LENGTH	36"	36"		72"	72"	72"	72"	72"
REFERENCE DETAILS	2/S-17 ; 1/S-22 ; 5/S-24	2/S-17 (SIM)		2/S-22 ; 3/S-22	5/S-17 ; 1/S-22 ; 3/S-22	6/S-16 ; 1/S-22	6/S-17	5/S-17 (SIM)
REMARKS		SEE NOTE 4		SEE NOTE 4	SEE NOTE 4	ORIGINATES AT CW ROOF LEVEL	ORIGINATES AT CW ROOF LEVEL	ORIGINATES AT CW ROOF LEVEL
CLEARWELL ROOF LEVEL								
WALL THICKNESS	20"	20"	20"	20"				
VERT REINF SIZE & SPACING	#8 @ 8" OC	#8 @ 12" OC	#8 @ 12" OC	#8 @ 12" OC				
VERT SPLICE LENGTH	60"	60"	60"	60"				
HORIZ REINF SIZE & SPACING	#8 @ 8" OC	#8 @ 8" OC	#8 @ 8" OC	#8 @ 8" OC				
HORIZ SPLICE LENGTH	36"	36"	72"	72"				
REFERENCE DETAILS	1/S-13 ; 2/S-17	2/S-17 (SIM)	3/S-15 (SIM) ; 7/S-17	3/S-15 ; 4/S-16 ; 4/S-17				
REMARKS								
CLEARWELL FLOOR LEVEL								

NOTES:

1. SEE PLAN DRAWINGS S-08 THRU S-10 FOR LOCATIONS OF SCHEDULED WALLS.
2. AT THE SOUTHSIDE CLEARWELL, ALL SCHEDULED VERTICAL BARS ARE TO BE LOCATED CLOSEST TO EACH FACE OF THE WALL (2" CLEAR).
3. PROVIDE ADDITIONAL HORIZ REINFORCING AT CORNERS & T-INTERSECTIONS PER DETAIL 5/S-03.
4. PROVIDE ADDITIONAL WALL REINF AT OPENINGS/PENETRATIONS PER DETAIL 6/S-03. ADDITIONAL REINF TO REPLACE CUT/INTERRUPTED BARS IS NOT REQUIRED AT LARGE OPENINGS FOR WATER CONVEYING PIPES LINKING THE NEW CW TO THE EXIST CW OR FOR WEIR OPENINGS. ONLY THE DIAG BARS ARE REQUIRED. ADDITIONAL HORIZ & VERT BARS ARE REQUIRED AT VENT OPNGS IN WALLS W11, W13 & W14.
5. PROVIDE CAP TIES AT THE TOP OF ALL WALLS THAT DO NOT HAVE A TOP SLAB FOR HOOKED TERMINATION OF VERT BARS. SEE DETAIL 2/S-03.

NO.	DR	CK	DATE	DESCRIPTION

REVISIONS

BLACK & VEATCH
Building a world of difference.
Black & Veatch Corporation
Registration No. F-253
Austin, Texas

Jose I. Guerra, Inc.
Consulting Engineers
2000 South IH-35, Suite 210
Austin, Texas 78741
(512) 445-2090
Mechanical • Civil • Mechanical • Electrical
TBPE FIRM # F-3

REGISTERED PROFESSIONAL ENGINEER
BRANDON M. GOODLOE
No. 92456
STATE OF TEXAS
9-24-2014

Walnut Creek WWTP - Tertiary Filter Rehabilitation Project

CIP ID No. 3023.025

AUSTIN WATER

STRUCTURAL
SOUTHSIDE CLEARWELL
WALL SCHEDULE

DESIGNED BY:	BG
DRAWN BY:	FS
REVIEWED BY:	LP
APPROVED BY:	JL
PROJECT NO.:	168622
DATE:	09/24/2014
SCALE:	NO SCALE

REVISION:

DISCIPLINE NO.
S-23

DWG. NO.
83 OF 273

FD168622
168622
File: F:\12047 Walnut Creek WWTP Filter Improvements\DRAWINGS\CAD\S-23.dwg Layout: S-23 Plotted: 7/29/2013
SAVED:
PW USER: 168622...\09.5000 - Mechanical Process Drawings

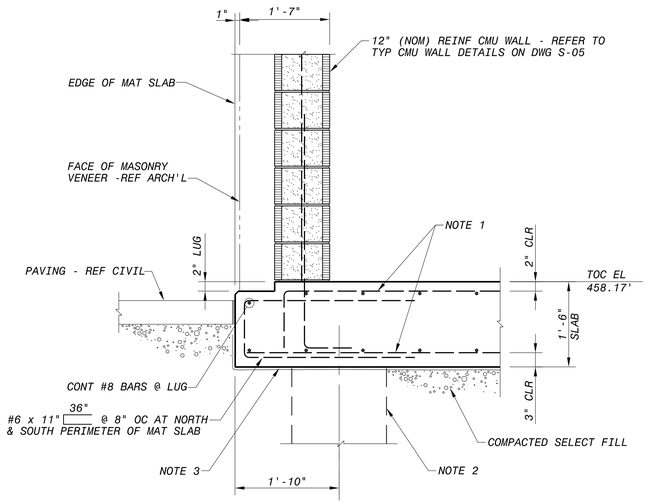

SECTION THRU BLOWER BUILDING FOUNDATION (1 / S-10, S-12, S-13)

12" 6" 0 1' 2' 3'
3/4"=1'-0"

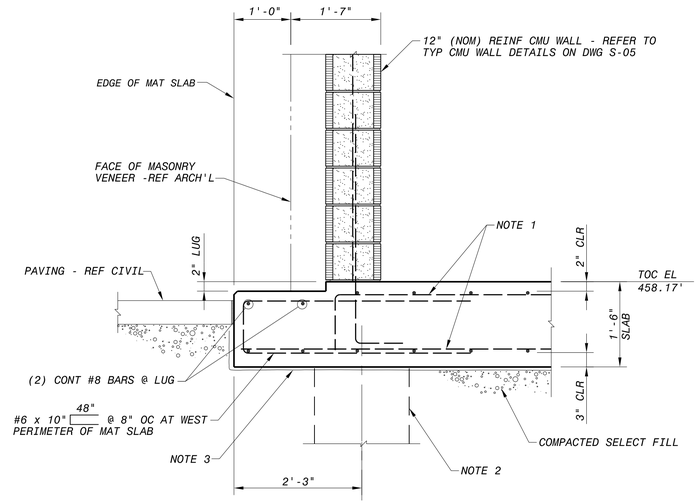

SECTION THRU BLOWER BUILDING FOUNDATION VIEW LOOKING NORTH (2 / S-10, S-12)

12" 6" 0 1' 2' 3'
3/4"=1'-0"

SHEET NOTES (KEYED)

1. REINFORCE THE MAT SLAB WITH #8 BARS @ 8" OC EACH WAY, TOP & BOTTOM. SEE SLAB REINF NOTES BELOW FOR ADDT'L INFO.
2. FORMED 20" x 20" COLUMN BEYOND - SEE TYP COLUMN DETAIL 1 ON DWG S-04.
3. PLACE A CONT VAPOR BARRIER BELOW THE MAT SLAB FOUNDATION FOR THE BLOWER BUILDING. REFER TO VAPOR BARRIER GENERAL NOTES FOR ADDT'L INFO.
4. AT THE ROLLUP DOOR OPENING FOR THE BLOWER BLDG, INSTALL #4 DWLS x 4'-0 @ 8" OC, PROJECTING 24" THRU EACH SIDE OF THE CJ. LOCATE DWLS AT MIDHEIGHT OF THE LUG & APRON SLAB. BEND DWLS TO MATCH THE SLOPE OF THE APRON.
5. LAP NORTH/SOUTH BOTTOM BARS FROM BLOWER BUILDING MAT SLAB AND SCHED SLAB BOT BARS FROM ROOF OVER DISTRIBUTION CHAMBER AT THE CENTER OF THE WALL.
6. CONSTRUCTION JOINT W/ CONT 6" RIBBED PVC WS IN A FORMED KEYWAY

BLOWER BUILDING MAT SLAB REINFORCING NOTES

1. LOCATE THE REINFORCING BARS RUNNING NORTH/SOUTH CLOSEST TO THE TOP AND BOTTOM FACES OF THE SLAB.
2. PROVIDE ADEQUATE STANDEES OR HIGH CHAIRS TO INSURE THAT THE TOP LAYER OF SLAB REINF IS IN THE CORRECT POSITION.
3. EXTEND ALL REINFORCEMENT TO THE PERIMETER EDGES OF THE MAT SLAB. TERMINATE TOP BARS WITH STD ACI 90-DEGREE HOOKS 2" AWAY FROM FORMED MASONRY LUGS.

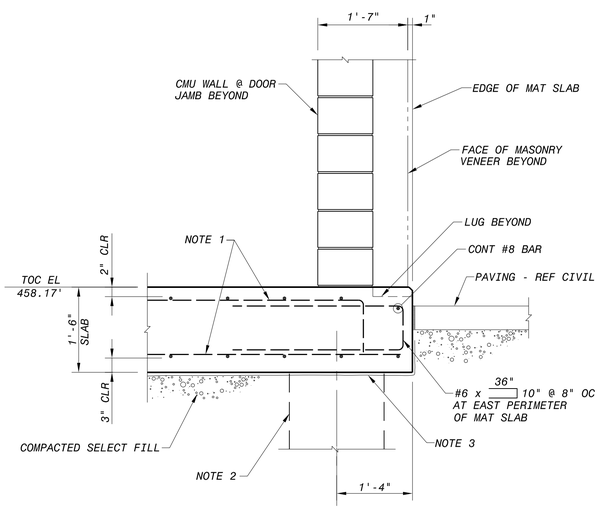

SECTION THRU FOUNDATION AT PERSONNEL DOOR VIEW LOOKING NORTH (3 / S-10)

12" 6" 0 1' 2' 3'
3/4"=1'-0"

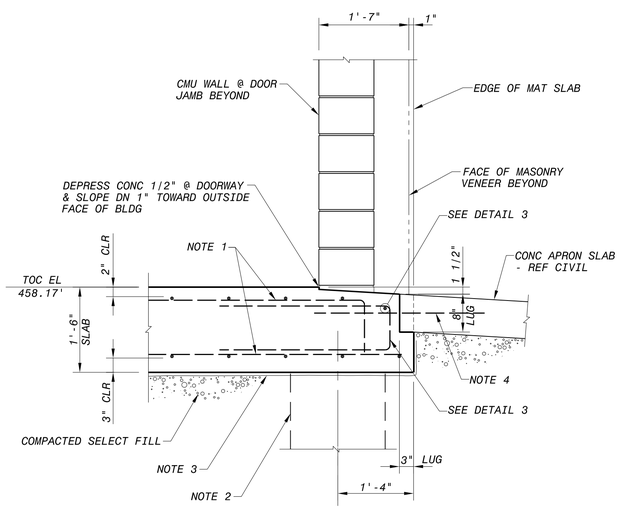

SECTION THRU FOUNDATION AT ROLLUP DOOR VIEW LOOKING NORTH (4 / S-10, S-12)

12" 6" 0 1' 2' 3'
3/4"=1'-0"

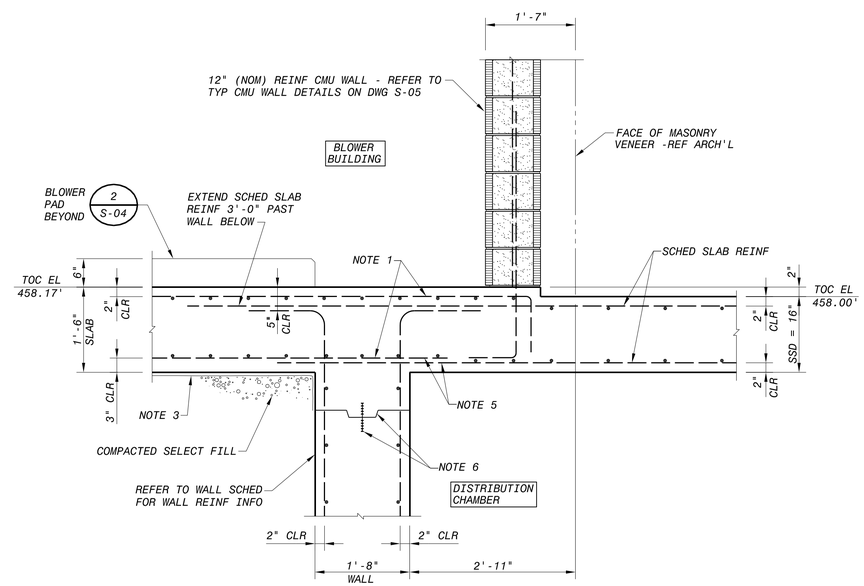

SECTION THRU BLOWER BUILDING FOUNDATION VIEW LOOKING WEST (5 / S-10, S-13)

12" 6" 0 1' 2' 3'
3/4"=1'-0"

NO.	DR	CK	DATE	DESCRIPTION

REVISIONS

BLACK & VEATCH Building a world of difference.
Black & Veatch Corporation
Registered Firm F-253
Austin, Texas

Jose I. Guerra, Inc.
Consulting Engineers
2000 S. IH 35, Suite 210
Austin, Texas 78741
(512) 445-2090
Structural • Civil • Mechanical • Electrical
TBPE FIRM # F-3

Walnut Creek WWTP - Tertiary Filter Rehabilitation Project
CIP ID No. 3023.025

STRUCTURAL
BLOWER BUILDING
FOUNDATION DETAILS

DESIGNED BY:	BG
DRAWN BY:	RH
REVIEWED BY:	LP
APPROVED BY:	JL
PROJECT NO.:	168622
DATE:	09/24/2014
SCALE:	3/4"=1'-0"
REVISION:	
DISCIPLINE NO.	S-24
DWG. NO.	84 OF 273

FD168622
D168622
File: F:\12047 Walnut Creek WWTP Filter Improvements\DRAWINGS\CAD\S-24.dwg Layout: S-24 Plotted: 7/29/2013
SAVED:
CYONET ID:

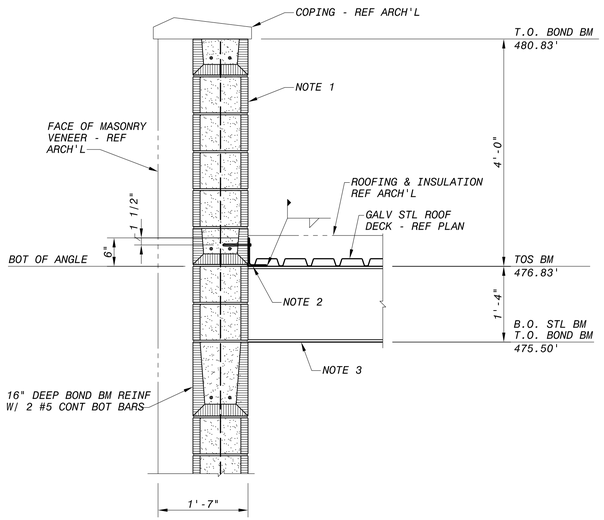

SECTION THRU ROOF AT WEST PERIMETER VIEW LOOKING NORTH

1 / S-11, S-12

12" 6" 0 1' 2' 3'

3/4"=1'-0"

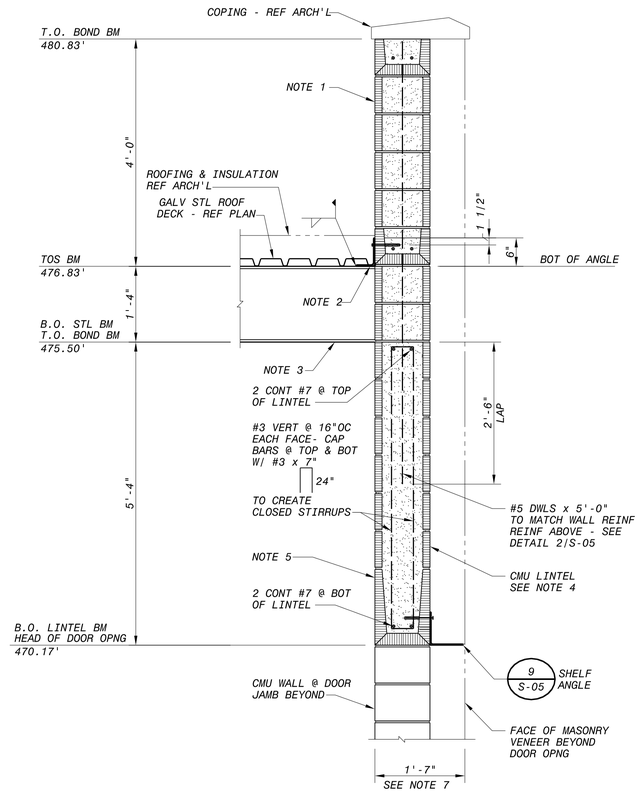

SECTION THRU ROOF AT EAST PERIMETER ROLLUP DOOR VIEW LOOKING NORTH

2 / S-11, S-12

12" 6" 0 1' 2' 3'

3/4"=1'-0"

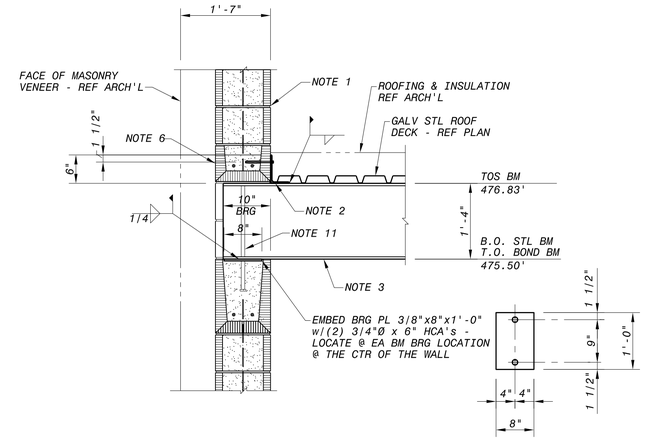

BEAM BEARING DETAIL

3 / -

12" 6" 0 1' 2' 3'

3/4"=1'-0"

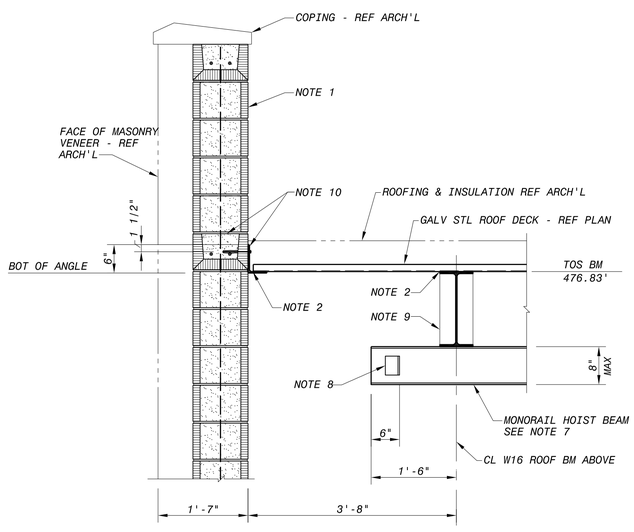

SECTION THRU ROOF PERIMETER VIEW LOOKING EAST OR WEST

4 / S-11, S-13

12" 6" 0 1' 2' 3'

3/4"=1'-0"

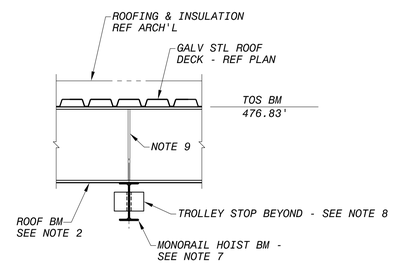

SECTION THRU MONORAIL BEAM

5 / S-11, S-12, S-13

12" 6" 0 1' 2' 3'

3/4"=1'-0"

SHEET NOTES

1. 12" (NOM) REINFORCED CMU WALL - SEE TYPICAL CMU WALL DETAILS ON DWG S-05 FOR TYPICAL WALL INFO.
2. CONT L6x4x5/16 (LLV) AROUND THE ROOF PERIMETER, AT THE INSIDE FACE OF THE CMU WALL - ANCHOR ANGLE TO THE WALL WITH ¾-INCH DIA HOT-DIP GALV EXPANSION ANCHORS @ 2'-0" OC MAX. INSTALL ANCHORS INTO BOND BM WITH 4¾" MIN EMBED. WELD ANGLE TO EACH ROOF BM AS NOTED ON DETAILS.
3. W16 ROOF BEAMS - REFER TO THE ROOF PLAN FOR BM SIZES & LOCATIONS. SEE DETAIL 3 FOR TYP BM BEARING/CONNECTION INFO.
4. THE 12" WIDE (NOM) x 64" DEEP CMU LINTEL SHOWN ON DETAIL 2, ABOVE THE ROLL-UP DOOR OPNG, SHALL RUN THE ENTIRE LENGTH OF THE EAST SIDE OF THE BLOWER BLDG. THIS ASSMBLY SHALL REMAIN SHORED AT THE ROLL-UP DOOR UNTIL VERIFICATION THAT THE GROUT HAS ACHIEVED ITS DESIGN STRENGTH HAS BEEN RECEIVED FROM THE QUALITY CONTROL TESTING LAB.
5. FORM THE BOTTOM OF THE LINTEL BEAM WITH 16" DEEP LINTEL BLOCKS OVER THE ROLL-UP DOOR OPNG. TRANSITION TO BOND BEAM BLOCKS BEYOND THE DOOR JAMBS TO ALLOW VERT REINF TO PASS.
6. THE TYPICAL BLOCKS AT THIS COURSE ARE BOND BEAM BLOCKS. AT BLOCKOUTS FOR STEEL BEAM BEARINGS, PROVIDE LINTEL BLOCKS. REINFORCE WITH (2) #5 BOTTOM BARS.
7. MONORAIL BEAM FOR TROLLEY HOIST WITH 5-TON CAPACITY - BEAM DEPTH IS NOT TO EXCEED 8-INCHES. THE DESIGN OF MONORAIL RUNWAY BEAMS AND THEIR CONNECTIONS TO THE ROOF FRAMING SHALL BE PROVIDED BY THE HOIST MFR.
8. MONORAIL BEAMS SHALL HAVE WELDED TROLLEY STOPS AT EACH SIDE OF THE BEAM'S WEB AND AT EACH END OF THE BEAM, AS SHOWN ON DETAIL 4.
9. AT THE CL OF EA MONORAIL HOIST BEAM CONNECTION, INSTALL 1/4" FULL-HT STIFF PL'S AT EACH SUPPORTING ROOF BEAM, EACH SIDE OF BEAM WEB.
10. AT THE SCUPPER LOCATION ON THE SOUTH WALL, TRIM THE VERT ANGLE LEG PER DETAIL 6 THIS SHEET. ALSO DISCONTINUE THE NOTED BOND BM AT THE SCUPPER OPNG.
11. AT CENTERLINE OF BM BRGS, INSTALL 1/4" FULL-HT STIFF PL's EACH SIDE OF BEAM WEB (TYPICAL).

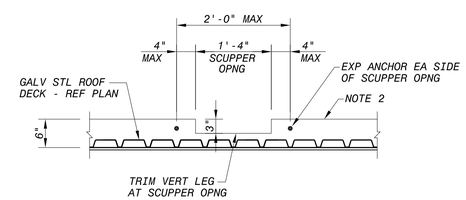

DECK SUPPORT ANGLE AT SCUPPER

6 / -

12" 6" 0 1' 2' 3'

3/4"=1'-0"

NO.	DR	CK	DATE	DESCRIPTION

REVISIONS

BLACK & VEATCH Building a world of difference.
Black & Veatch Corporation
Registered TBPE Firm F-253
Austin, Texas

Jose I. Guerra, Inc.
Consulting Engineers
2000 South IH-35, Suite 210
Austin, Texas 78704
(512) 445-2090
Structural • Civil • Mechanical • Electrical
TBPE FIRM # F-3

REGISTERED PROFESSIONAL ENGINEER BRANDON M. GOODLOE 92456 STATE OF TEXAS
9-24-2014

AUSTIN WATER

Walnut Creek WWTP - Tertiary Filter Rehabilitation Project

CIP ID No. 3023.025

STRUCTURAL
BLOWER BUILDING
ROOF FRAMING DETAILS

DESIGNED BY:	BG
DRAWN BY:	RH
REVIEWED BY:	LP
APPROVED BY:	JL
PROJECT NO.:	168622
DATE:	09/24/2014
SCALE:	3/4"=1'-0"
REVISION:	

DISCIPLINE NO. S-25

DWG. NO.

FD168622
D168622
File: F:\12047 Walnut Creek WWTP Filter Improvements\DRAWINGS\CAD\S-25.dwg Layout: S-25 Plotted: 7/29/2013
SAVED:
XTONET ID:

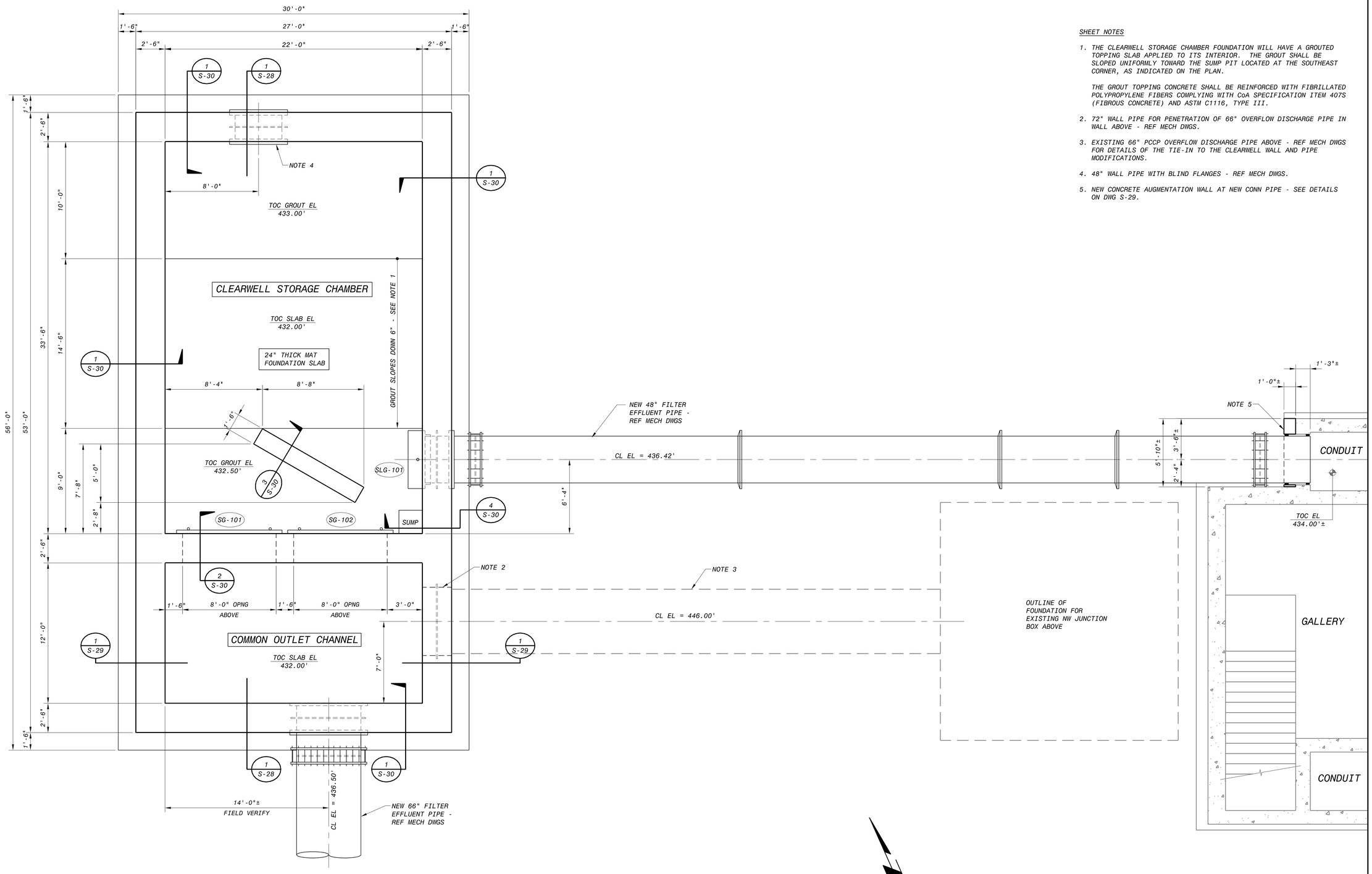

SHEET NOTES

1. THE CLEARWELL STORAGE CHAMBER FOUNDATION WILL HAVE A GROUTED TOPPING SLAB APPLIED TO ITS INTERIOR. THE GROUT SHALL BE SLOPED UNIFORMLY TOWARD THE SUMP PIT LOCATED AT THE SOUTHEAST CORNER, AS INDICATED ON THE PLAN.

   THE GROUT TOPPING CONCRETE SHALL BE REINFORCED WITH FIBRILLATED POLYPROPYLENE FIBERS COMPLYING WITH CoA SPECIFICATION ITEM 407S (FIBROUS CONCRETE) AND ASTM C1116, TYPE III.

2. 72" WALL PIPE FOR PENETRATION OF 66" OVERFLOW DISCHARGE PIPE IN WALL ABOVE - REF MECH DWGS.

3. EXISTING 66" PCCP OVERFLOW DISCHARGE PIPE ABOVE - REF MECH DWGS FOR DETAILS OF THE TIE-IN TO THE CLEARWELL WALL AND PIPE MODIFICATIONS.

4. 48" WALL PIPE WITH BLIND FLANGES - REF MECH DWGS.

5. NEW CONCRETE AUGMENTATION WALL AT NEW CONN PIPE - SEE DETAILS ON DWG S-29.

NO.	DR	CK	DATE	DESCRIPTION

REVISIONS

BLACK & VEATCH Building a world of difference.
Black & Veatch Corporation
Registered TBPE Firm F-253
Austin, Texas

Jose I. Guerra, Inc.
Consulting Engineers
2000 South IH-35 Suite 210
Austin, Texas 78741
(512) 445-2090
Structural • Civil • Mechanical • Electrical
TBPE FIRM # F-3

STATE OF TEXAS
BRANDON M. GOODLOE
92456
REGISTERED PROFESSIONAL ENGINEER
9-24-2014

AUSTIN WATER

Walnut Creek WWTP - Tertiary Filter Rehabilitation Project

CIP ID No. 3023.025

STRUCTURAL
NORTHWEST CLEARWELL
FOUNDATION LEVEL PLAN

DESIGNED BY:	BG
DRAWN BY:	RM,FS
REVIEWED BY:	LP
APPROVED BY:	JL
PROJECT NO.:	168622
DATE:	09/24/2014
SCALE:	1/4" = 1'-0"

REVISION:

DISCIPLINE NO. S-26

DWG. NO.

FD168622
D168622
File: F:\12047 Walnut Creek WWTP Filter Improvements\DRAWINGS\CAD\S-26.dwg Layout: S-26 Plotted: 7/29/2013
SAVED: LER07108, 2/5/2013 2:43:15 PM
BW_REDIR:168622...109.5030 - Mechanical Process Drawings

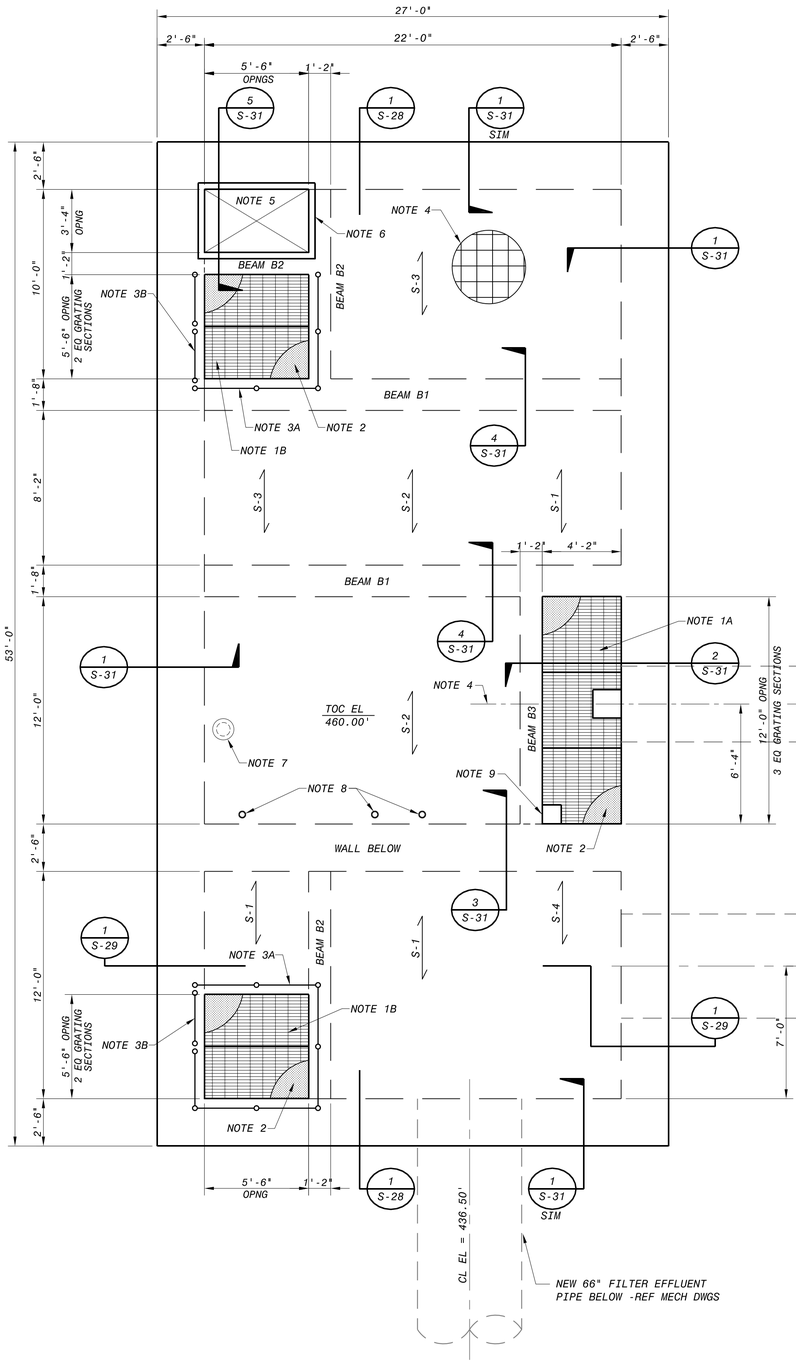

NEW NORTHWEST CLEARWELL

SHEET NOTES

1. PROVIDE PRESSURE-LOCKED RECTANGULAR BAR GRATING AS NOTED BELOW AND KEYED ON PLAN.

   NOTE 1A: P-19-4 (1 1/2" x 1/8") TYPE 316L STAINLESS STEEL
   NOTE 1B: P-19-4 (2" x 3/16") TYPE 316L STAINLESS STEEL

   REFER TO DETAIL 2 ON SHEET S-06 FOR GRATING SUPPORT DETAILS AND INFO. PROVIDE BANDED OPENINGS AROUND GATE OPERATOR SUPPORT BRACKETS. MAXIMUM ASSUMED DIMENSIONS FOR THESE GRATING OPENINGS IS 18" x 18". NOTIFY ENGINEER IF SIZE MUST BE EXCEEDED.

2. ALL GRATING SECTIONS SHALL BE CLAD WITH TYPE 316L SS DIAMOND TREAD FLOOR PLATE ON THE WALKING SURFACE. SEE DETAIL 2/S-06 FOR ADDT'L INFO.

3. ALUMINUM GUARDRAIL SYSTEM AS NOTED BELOW AND KEYED ON PLAN - SEE DETAILS ON SHEET S-06.

   NOTE 3A: FIXED GUARDRAILS (TYPICAL)
   NOTE 3B: REMOVABLE GUARDRAIL SECTION FOR PERSONNEL ACCESS.

4. CENTERLINE OF SLUICE GATE SLG-101 OPERATOR SUPPORT & FILTER EFFLUENT PIPE BELOW.

5. VENT HOOD OPENING.

6. BUILD A 4" WIDE x 4" TALL CURB AROUND THE VENT OPENING FOR MOUNTING THE HOOD. SEE DETAIL 5 ON DWG S-31.

7. STEEL PIPE SPOOL FOR STILLING WELL - REF MECH DWGS FOR ADDT'L INFO. SPREAD SLAB REINF AROUND THIS ASSEMBLY.

8. CAST-IN-PLACE SLEEVES IN SLAB FOR STEMS OF SLIDING WIER GATES BELOW - REF MECH'L DWGS.

9. BANDED OPENING IN GRATING FOR EASTERN OPERATOR FOR SG-102.

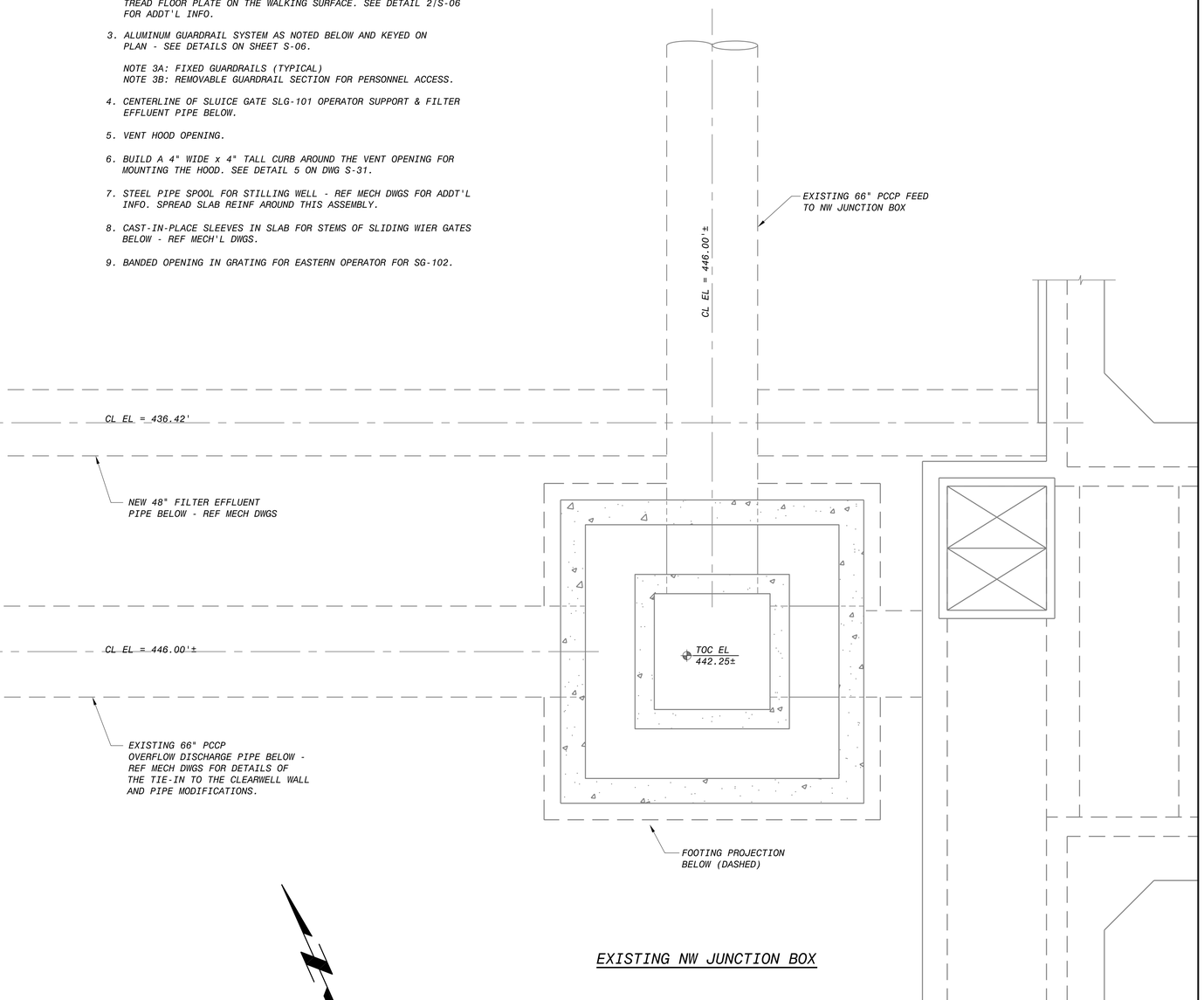

EXISTING NW JUNCTION BOX

EXISTING FILTER BUILDING

ROOF LEVEL PLAN

4' 2' 0 4' 8'

1/4"=1'-0"

TRUE NORTH

NO.	DR	CK	DATE	DESCRIPTION

REVISIONS

BLACK & VEATCH
Building a world of difference.

Black & Veatch Corporation
Registered Firm F-253
Austin, Texas

Jose I. Guerra, Inc.
Consulting Engineers
2000 South IH-35, Suite 210
Austin, Texas 78704
(512) 445-2090
Civil • Structural • Mechanical • Electrical
TBPE FIRM # F-3

STATE OF TEXAS
BRANDON W. SCHOLZ
92456
REGISTERED PROFESSIONAL ENGINEER
9-24-2014

AUSTIN WATER

Walnut Creek WWTP - Tertiary Filter Rehabilitation Project

CIP ID No. 3023.025

STRUCTURAL
NORTHWEST CLEARWELL
ROOF LEVEL PLAN

DESIGNED BY:	BG
DRAWN BY:	RM,FS,RH
REVIEWED BY:	LP
APPROVED BY:	JL
PROJECT NO.:	168622
DATE:	09/24/2014
SCALE:	1/4" = 1'-0"

REVISION:

DISCIPLINE NO.
S-27

DWG. NO.
87 OF 273

FD168622
D168622
File: F:\12047 Walnut Creek WWTP Filter Improvements\DRAWINGS\CAD\S-27.dwg Layout: S-27 Plotted: 7/29/2013
SAVED: LER07108, 2/5/2013 2:43:15 PM
PW/PLOT: D168622...(09.5030 - Mechanical Process Drawings

SHEET NOTES

1. 66" OVERFLOW DISCHARGE PIPE PENETRATION THRU WALL BEYOND - REF MECH DWGS FOR DETAILS.
2. 66" FILTER EFFLUENT PIPE - REF MECH DWGS FOR DETAILS.
3. 48" WALL PIPE WITH DBL BLIND FLANGES - REF MECH DWGS FOR DETAILS.
4. SLUICE & SLIDE GATE FRAMING NOT PICTURED ON THIS DETAIL. REFER TO MECH DWGS FOR ADDT'L INFO.
5. CONCRETE FLOW DEFLECTION WALL BEYOND - SEE DETAIL 3/S-30.
6. 48" FILTER EFFLUENT PIPE PENETRATION THRU CLEARWELL PERIMETER WALL BEYOND. (BLOCKED FROM VIEW BY THE FLOW DEFLECTION WALL).
7. THIS LINE REPRESENTS THE MIN REQ'D PROFILE FOR COMPACTED BACKFILL AROUND THE CLEARWELL STRUCTURE WHERE A SHORING SYSTEM IS NOT USED.
8. OPTIONAL SHORING SYSTEM - REF CIVIL DWGS. MAX SHORING SYSTEM EL = 451.00'. SHORING IF USED SHALL BE A PERMANENT SYSTEM.
9. BACKFILL BTWN SHORING SYSTEM (IF USED) & STRUCTURE WITH CLSM AS SHOWN. REFER TO CLSM PLACEMENT NOTES ON DWG S-02 FOR ADDT'L INFO.
10. THIS LINE REPRESENTS THE REQ'D PROFILE FOR COMPACTED BACKFILL ABOVE THE SHORING SYSTEM (IF USED). PLACE WITH A WEDGE-SHAPED PROFILE HAVING A MAX RISE-TO-RUN RATIO OF 1:1.

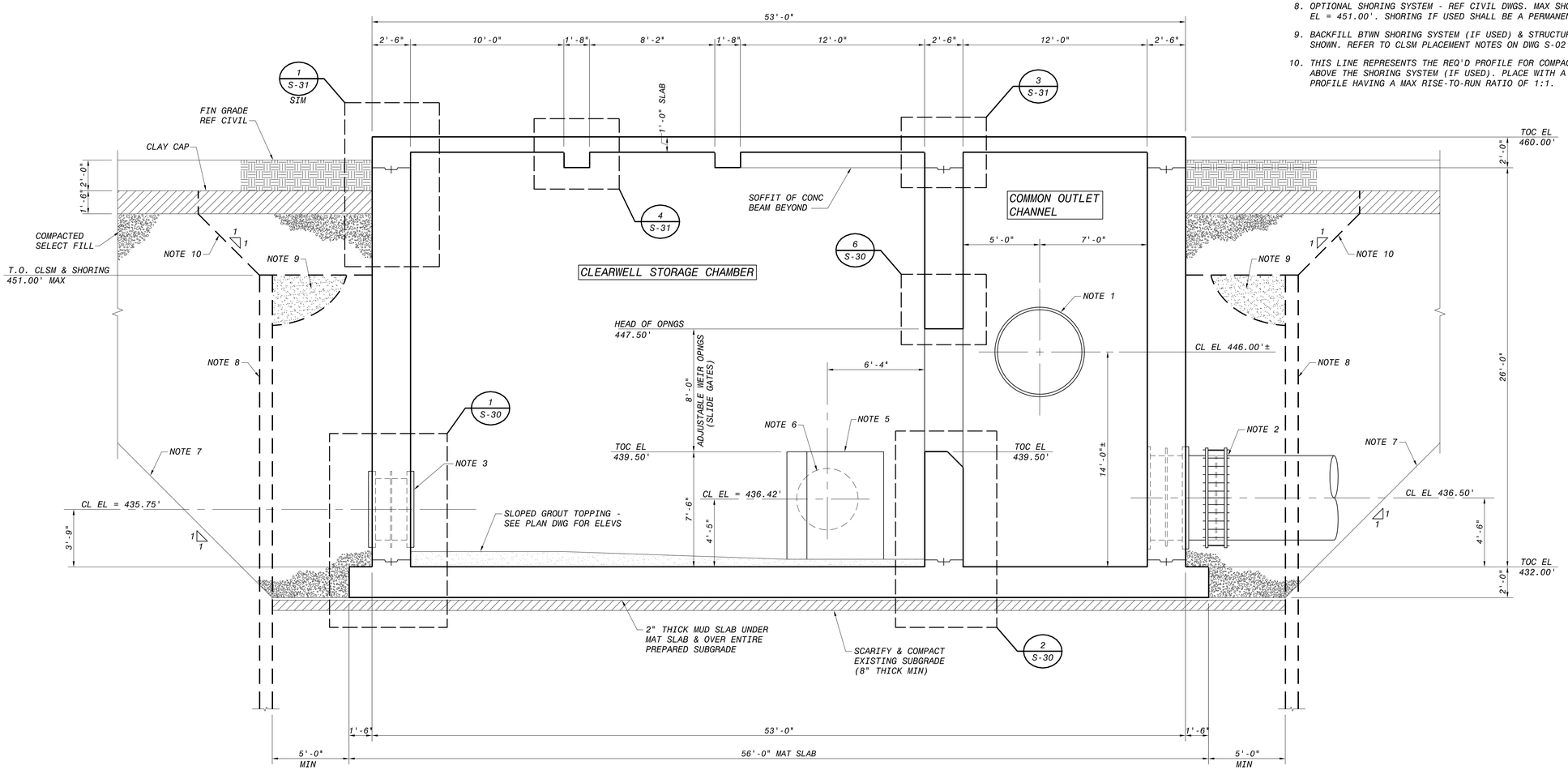

NORTHWEST CLEARWELL SECTION
VIEW LOOKING EAST

1 / S-26, S-27

4' 2' 0 4' 8'

1/4"=1'-0"

NO.	DR	CK	DATE	DESCRIPTION

REVISIONS

BLACK & VEATCH
Building a world of difference.
Black & Veatch Corporation
Registration No. F-253
Austin, Texas

Jose I. Guerra, Inc.
Consulting Engineers
2000 South IH-35, Suite 210
Austin, Texas 78704
(512) 445-2090
Civil • Structural • Mechanical • Electrical
TBPE FIRM # F-3

STATE OF TEXAS
BRANDON W. GOODLOE
92456
REGISTERED PROFESSIONAL ENGINEER
9-24-2014

AUSTIN WATER

Walnut Creek WWTP - Tertiary Filter Rehabilitation Project

CIP ID No. 3023.025

STRUCTURAL
NORTHWEST CLEARWELL
SECTION LOOKING EAST

DESIGNED BY:	BG
DRAWN BY:	RH
REVIEWED BY:	LP
APPROVED BY:	JL
PROJECT NO.:	168622
DATE:	09/24/2014
SCALE:	1/4" = 1'-0"

REVISION:

DISCIPLINE NO.
S-28

DWG. NO.
88 OF 273

FD168622
D168622
File: F:\12047 Walnut Creek WWTP Filter Improvements\DRAWINGS\CAD\S-28.dwg Layout: S-28 Plotted: 7/29/2013
SAVED:
CYONET ID:

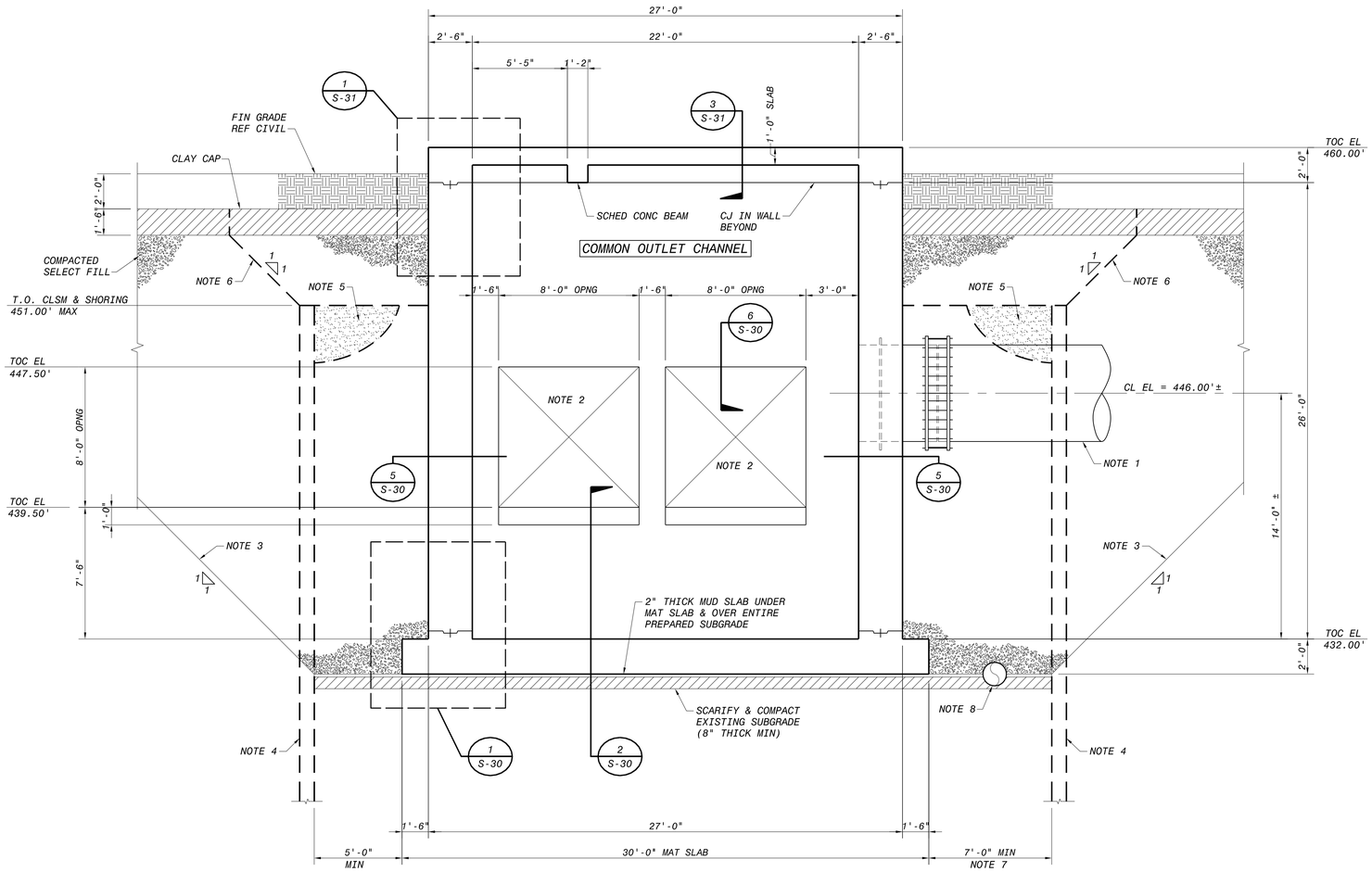

NORTHWEST CLEARWELL SECTION
VIEW LOOKING NORTH

1 S-26, S-27

4' 2' 0 4' 8'

1/4"=1'-0"

SHEET NOTES

1. NEW STEEL PIPE BEYOND CONNECTING EXISTING 66" OVERFLOW DISCHARGE PIPE TO THE COMMON OUTLET CHANNEL - SEE MECH DWGS FOR ADDT'L INFO & DETAILS.
2. OPENINGS FOR ADJUSTABLE WEIRS (SLIDE GATES) - SEE MECH DWGS FOR ADDT'L INFO & DETAILS.
3. THIS LINE REPRESENTS THE MIN REQ'D PROFILE FOR COMPACTED BACKFILL AROUND THE CLEARWELL STRUCTURE WHERE A SHORING SYSTEM IS NOT USED.
4. OPTIONAL SHORING SYSTEM - REF CIVIL DWGS. MAX SHORING SYSTEM EL = 451.00'. SHORING IF USED SHALL BE A PERMANENT SYSTEM.
5. BACKFILL BTWN SHORING SYSTEM (IF USED) & STRUCTURE WITH CLSM AS SHOWN. REFER TO CLSM PLACEMENT NOTES ON DWG S-02 FOR ADDT'L INFO.
6. THIS LINE REPRESENTS THE REQ'D PROFILE FOR COMPACTED BACKFILL ABOVE THE SHORING SYSTEM (IF USED). PLACE WITH A WEDGE-SHAPED PROFILE HAVING A MAX RISE-TO-RUN RATIO OF 1:1.
7. AT THE EAST SIDE, INCREASE THE DISTANCE BTWN THE SHORING & THE STRUCTURE TO AVOID CONFLICTING WITH OR DISTURBING THE EXIST 16" DRAIN LINE. FIELD VERIFY ACTUAL SHORING LOCATION.
8. EXISTING 16" DRAIN LINE SHALL NOT BE DISTURBED. CAREFULLY COMPACT EXISTING SUBGRADE ADJACENT TO PIPE. THE CONTRACTOR SHALL PROVIDE SUITABLE PROTECTION & SUPPORT TO ALLOW THE PIPE TO REMAIN IN-SERVICE THRU CONSTRUCTION ACTIVITIES.

NO.	DR	CK	DATE	DESCRIPTION

REVISIONS

BLACK & VEATCH
Building a world of difference.
Black & Veatch Corporation
Registration No. F-253
Austin, Texas

Jose I. Guerra, Inc.
Consulting Engineers
2600 Dellana Lane, Suite 210
Austin, Texas 78741
(512) 445-2090
Registration No. F-3

9-24-2014

Walnut Creek WWTP - Tertiary Filter Rehabilitation Project
CIP ID No. 3023.025

Austin WATER

STRUCTURAL
NORTHWEST CLEARWELL
SECTION LOOKING NORTH

DESIGNED BY:	BG
DRAWN BY:	RH
REVIEWED BY:	LP
APPROVED BY:	JL
PROJECT NO.:	168622
DATE:	09/24/2014
SCALE:	1/4" = 1'-0"

REVISION:

DISCIPLINE NO.
S-29

DWG. NO.
89 OF 273

FD168622
D168622
File: F:\2047 Walnut Creek WWTP Filter Improvements\DRAWINGS\CAD\S-29.dwg Layout: S-29 Plotted: 7/29/2013
SAVED:
CYGNET ID:

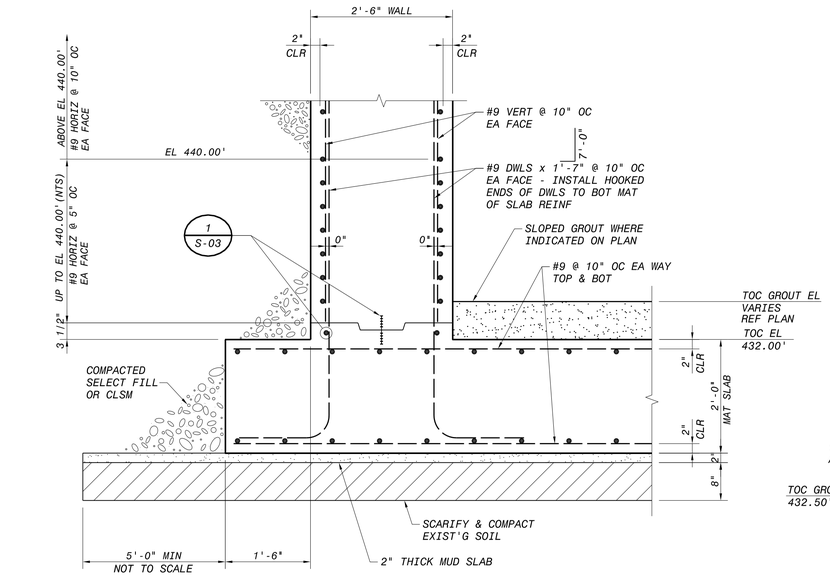

SECTION THRU PERIMETER WALL AT FOUNDATION (1 / S-26, S-28, S-29)

12" 6" 0 1' 2' 3'
3/4"=1'-0"

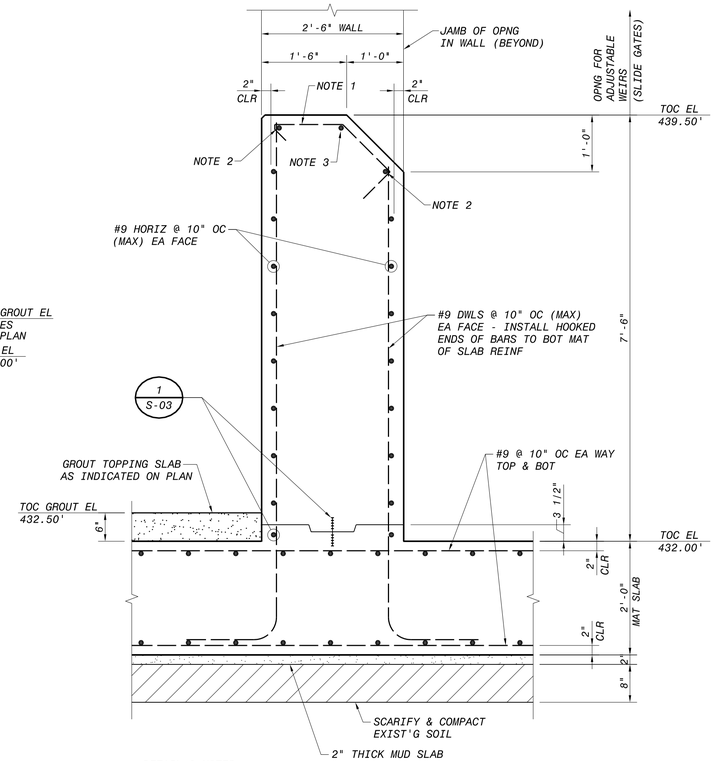

DETAIL 2 NOTES
1. #4 TIES @ 24" OC (MAX) - REFER TO DETAIL 2/S-03 FOR SIM DETAIL
2. INSTALL TWO NOTED #7 HORIZ BARS @ TOP OF WALL (INSIDE OF VERT BARS) TO ACCOMODATE WALL TIES
3. ADDT'L CONT #7 HORIZ

SECTION THRU DIVIDER WALL AT FOUNDATION (2 / S-26, S-28, S-29)

12" 6" 0 1' 2' 3'
3/4"=1'-0"

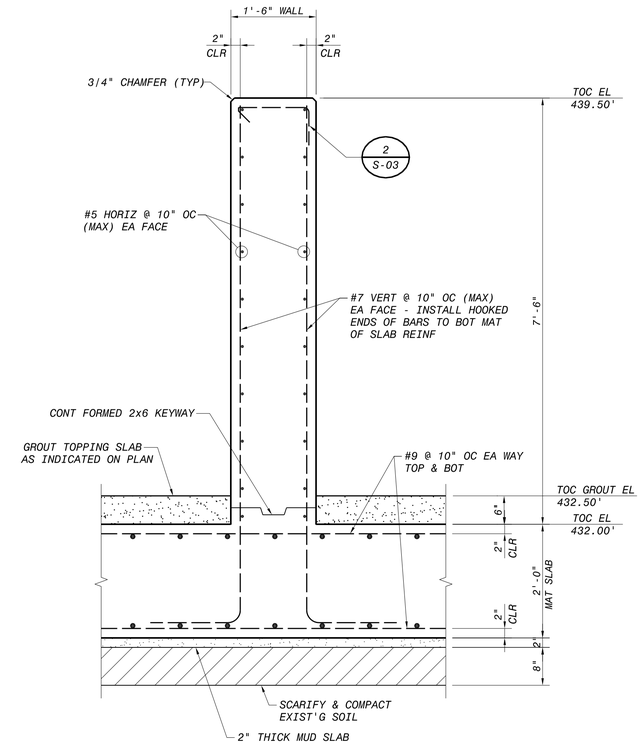

SECTION THRU FLOW DEFLECTION WALL (3 / S-26, S-28)

12" 6" 0 1' 2' 3'
3/4"=1'-0"

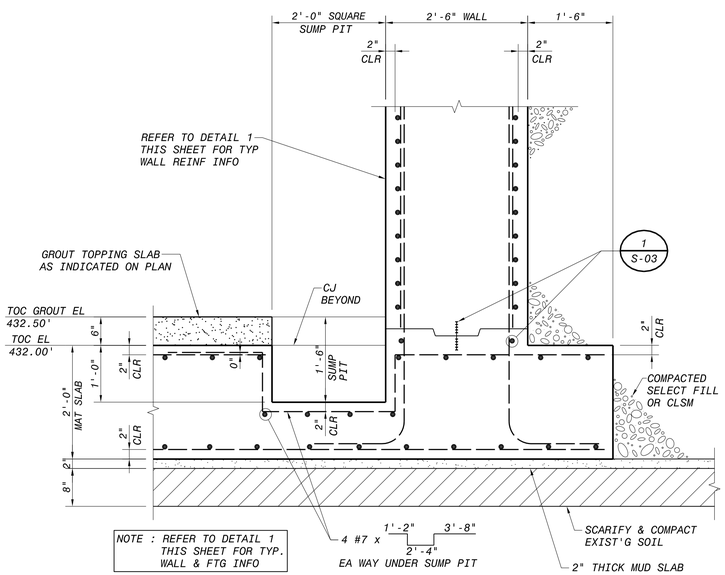

SECTION THRU SUMP PIT (4 / S-26)

12" 6" 0 1' 2' 3'
3/4"=1'-0"

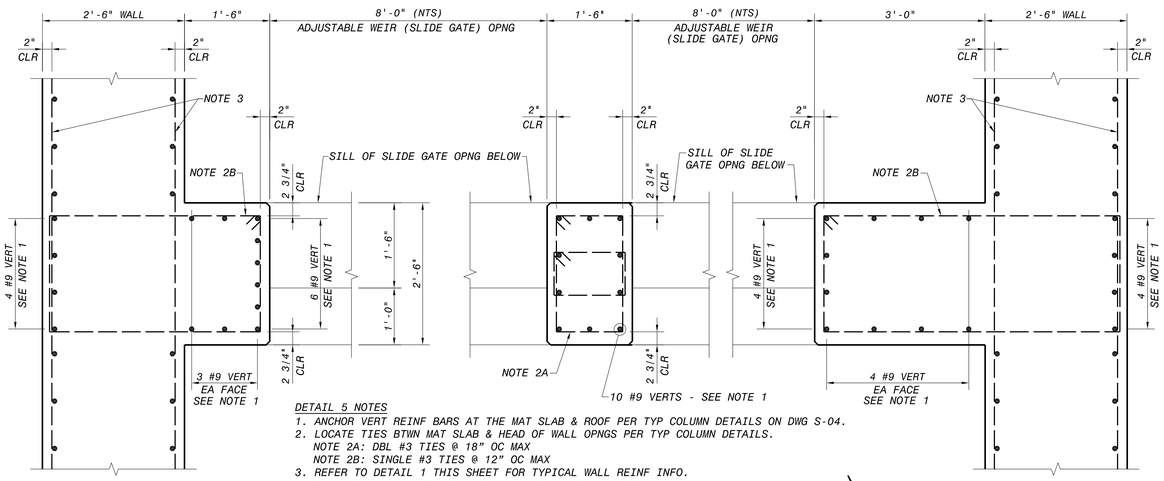

DETAIL 5 NOTES
1. ANCHOR VERT REINF BARS AT THE MAT SLAB & ROOF PER TYP COLUMN DETAILS ON DWG S-04.
2. LOCATE TIES BTWN MAT SLAB & HEAD OF WALL OPNGS PER TYP COLUMN DETAILS.
   NOTE 2A: DBL #3 TIES @ 18" OC MAX
   NOTE 2B: SINGLE #3 TIES @ 12" OC MAX
3. REFER TO DETAIL 1 THIS SHEET FOR TYPICAL WALL REINF INFO.
4. SLIDE GATE FRAMING NOT PICTURED - SEE MECH'L DWGS.

SECTION THRU SLIDE GATE OPENINGS - PLAN VIEW (5 / S-29)

12" 6" 0 1' 2' 3'
3/4"=1'-0"

TRUE NORTH

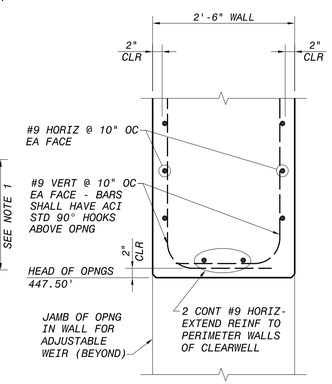

SECTION THRU HEAD OF SLIDE GATE OPENINGS (6 / S-28, S-29)

12" 6" 0 1' 2' 3'
3/4"=1'-0"

NO.	DR	CK	DATE	DESCRIPTION

REVISIONS

BLACK & VEATCH Building a world of difference.
Black & Veatch Corporation
Registered Firm F-253
Austin, Texas

Jose I. Guerra, Inc.
Consulting Engineers
2000 South IH-35, Suite 210
Austin, Texas 78704
(512) 445-2090
Mechanical • Electrical • Civil
TBPE FIRM # F-3

STATE OF TEXAS
BRANDON M. GOODLOE
92456
LICENSED PROFESSIONAL ENGINEER
9-24-2014

Walnut Creek WWTP - Tertiary Filter Rehabilitation Project
CIP ID No. 3023.025

Austin WATER

STRUCTURAL
NORTHWEST CLEARWELL
SECTIONS & DETAILS

DESIGNED BY:	BG
DRAWN BY:	RH
REVIEWED BY:	LP
APPROVED BY:	JL
PROJECT NO.:	168622
DATE:	09/24/2014
SCALE:	3/4" = 1'-0"
REVISION:	
DISCIPLINE NO.	S-30
DWG. NO.	90 OF 273

FD168622
D168622
Filed: F:\12047 Walnut Creek WWTP Filter Improvements\DRAWINGS\CAD\S-30.dwg Layout: S-30 Plotted: 7/29/2013
SAVED:
CYGNET ID:

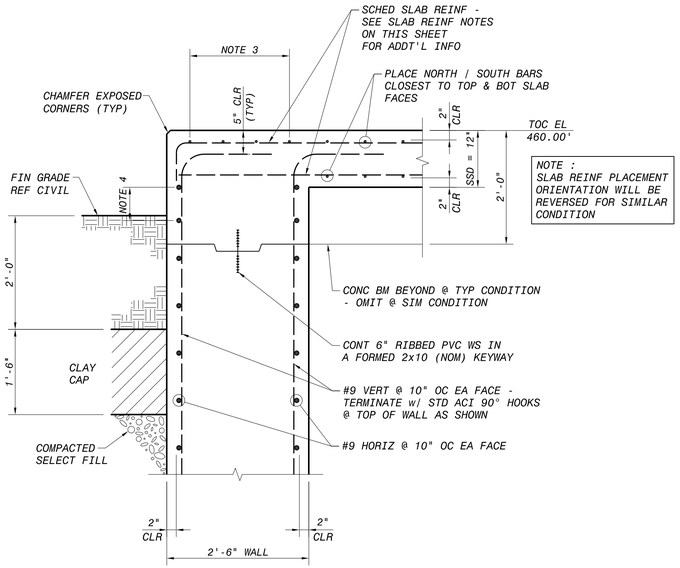

SECTION AT ROOF PERIMETER (1 / S-27, S-28, S-29)

3/4"=1'-0"

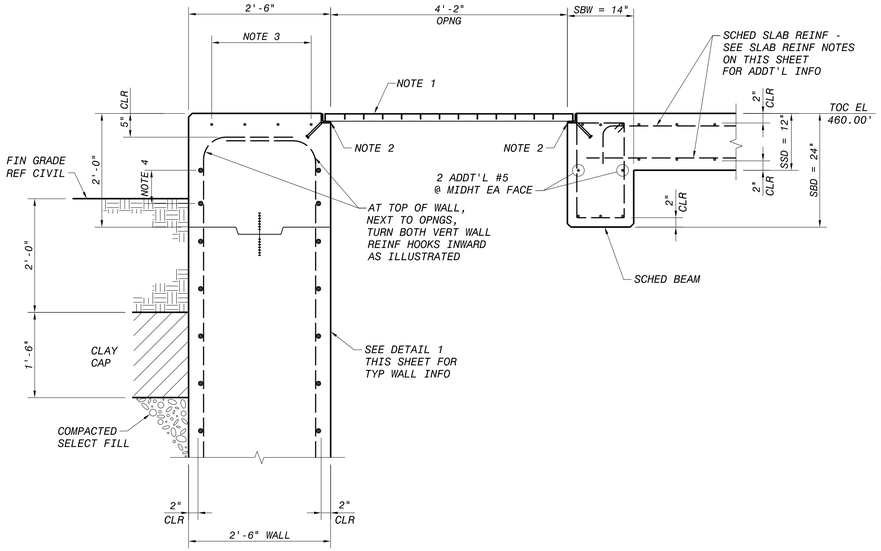

SECTION AT REMOVABLE GRATING PLATFORM (2 / S-27)

3/4"=1'-0"

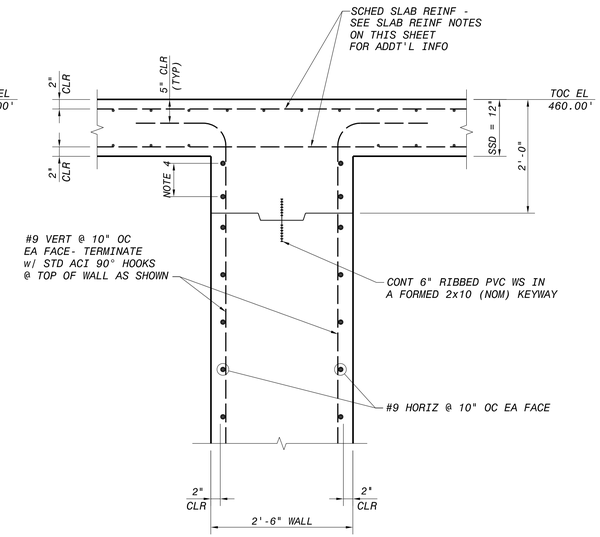

SECTION THRU ROOF AT DIVIDER WALL (3 / S-27, S-28, S-29)

3/4"=1'-0"

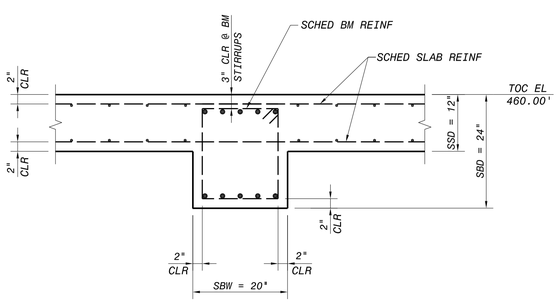

SECTION THRU ROOF BEAM (4 / S-27, S-28)

3/4"=1'-0"

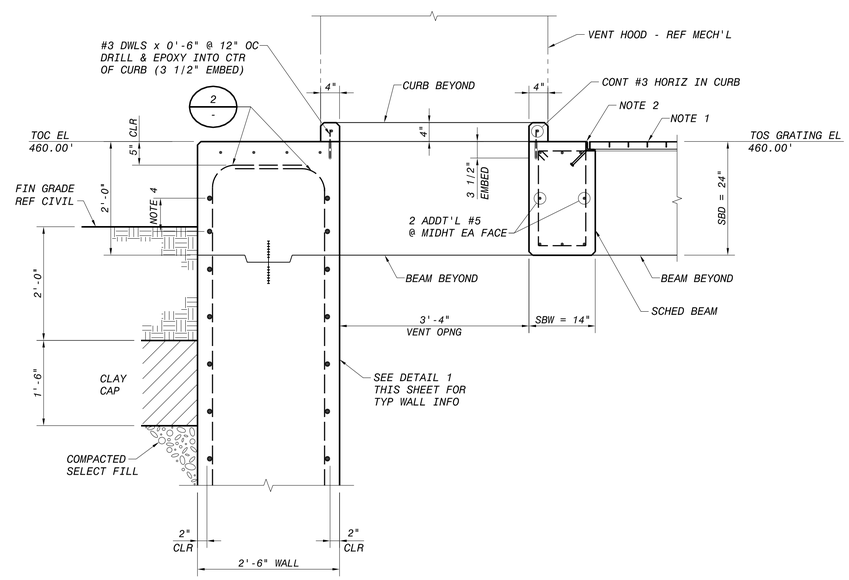

SECTION AT VENT HOOD OPENING (5 / S-27)

3/4"=1'-0"

SHEET NOTES (KEYED)

1. REMOVABLE SS GRATING - REFER TO PLAN FOR GRATING DESIGNATIONS AND GRATING PANEL SIZES.
2. SS GRATING SUPPORT EMBED ANGLE - REFER TO DETAIL 2 ON DWG S-06 FOR ADDT'L INFO.
3. PROVIDE 4 ADDITIONAL #5 TOP HORIZONTAL BARS ABOVE AND PARALLEL WITH THE CONCRETE WALL BELOW. SEE DETAILS 1 2 & 5 THIS SHEET. WHERE THE WALL IS ADJACENT TO AN OPNG & DOESN'T HAVE SLAB STEEL TO SUPPORT THESE BARS, PROVIDE SUPPLEMENTAL REINF SUPPORTS.
4. 2 CONT #7 HORIZ AT EACH FACE OF WALL - LOCATE BARS EQUALLY BELOW THE SLAB REINFORCING AND ABOVE THE CJ.

NORTHWEST CLEARWELL SLAB REINFORCING NOTES

1. LOCATE REINFORCING BARS RUNNING NORTH/SOUTH CLOSEST TO THE TOP & BOTTOM FACES OF THE SLAB (WITH 2-INCHES CLEAR COVER).
2. PROVIDE ADEQUATE STANDEES OR HIGH CHAIRS TO INSURE THAT THE TOP LAYER OF SLAB REINFORCING IS IN THE CORRECT POSITION.
3. EXTEND ALL SLAB REINFORCEMENT TO THE PERIMETER EDGES OF THE ROOF. TERMINATE ALL TOP BARS WITH 90-DEGREE STD ACI HOOKS AT ROOF EDGES, INCLUDING THE EDGES OF OPENINGS.

NO.	DR	CK	DATE	DESCRIPTION

REVISIONS

BLACK & VEATCH Building a world of difference.
Black & Veatch Corporation
Registration No. F-253
Austin, Texas

Jose I. Guerra, Inc.
Consulting Engineers
2401 South IH-35 Suite 210
Austin, Texas 78704
(512) 445-2090
Civil • Structural • Mechanical • Electrical
TBPE FIRM # F-3

Walnut Creek WWTP - Tertiary Filter Rehabilitation Project

CIP ID No. 3023.025

Austin WATER

STRUCTURAL
NORTHWEST CLEARWELL
SECTIONS & DETAILS

DESIGNED BY:	BG
DRAWN BY:	RH
REVIEWED BY:	LP
APPROVED BY:	JL
PROJECT NO.:	168622
DATE:	09/24/2014
SCALE:	3/4" = 1'-0"

REVISION:

DISCIPLINE NO.
S-31

DWG. NO.
91 OF 273

FD168622
D168622
File: F:\12047 Walnut Creek WWTP Filter Improvements\DRAWINGS\CAD\S-31.dwg Layout: S-31 Plotted: 7/29/2013
SAVED:
CYONET ID:

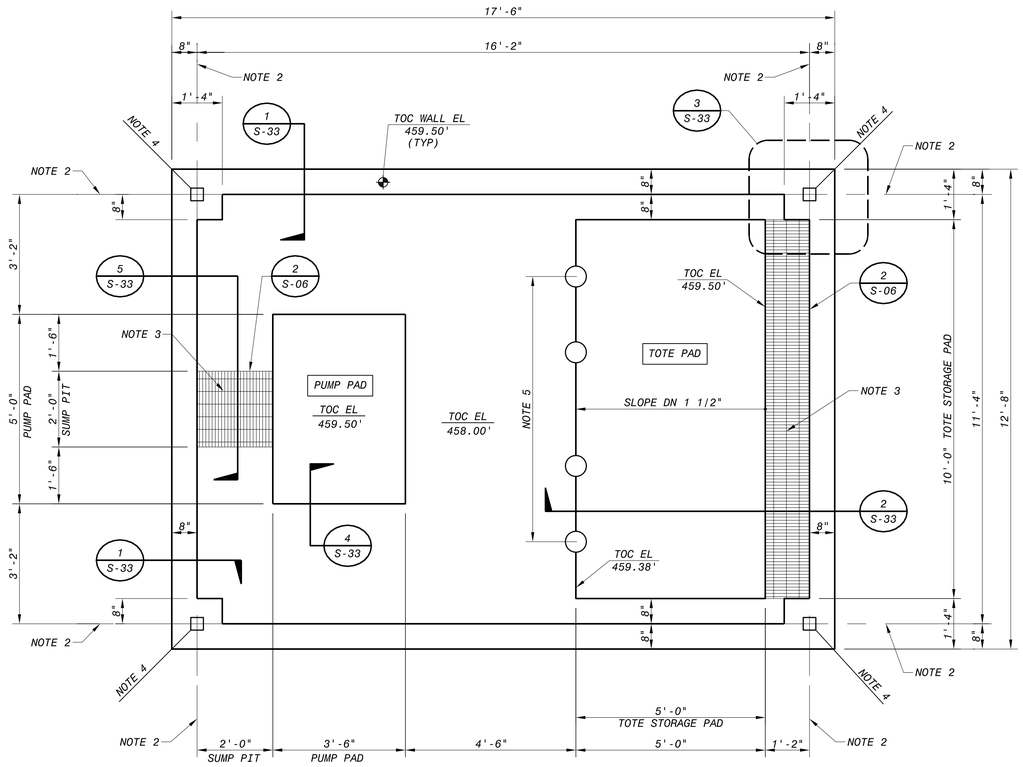

FOUNDATION PLAN (1 / -)

12" 6" 0 1' 2' 3' 4' 5'

1/2"=1'-0"

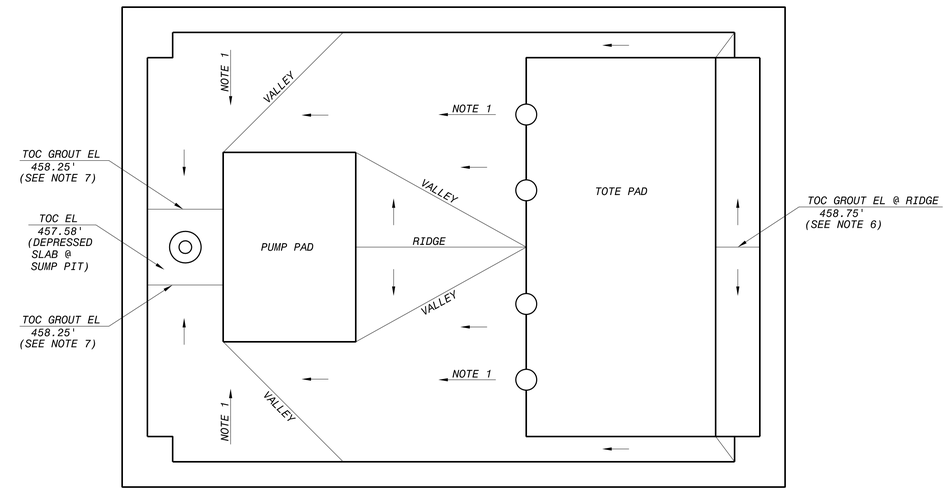

GROUT TOPPING PLAN (2 / -)

12" 6" 0 1' 2' 3' 4' 5'

1/2"=1'-0"

SHEET NOTES:

1. THE FLOOR OF THIS FACILITY SHALL RECEIVE A SLOPED GROUT TOPPING. UNIFORMLY SLOPE 6" DN TO THE DRAIN AS INDICATED ON DETAIL 2. THE ARROWS INDICATE A DOWNWARD SLOPE, WHICH SHALL MAINTAIN A MIN 1/4" PER FT RATE.

   THE GROUT TOPPING SHALL BE REINFORCED WITH FILBRILLTED POLYPROPYLENE FIBERS COMPLYING WITH CoA SPECIFICATIONS ITEM 407S (FIBROUS CONCRETE) AND ASTM C1116, TYPE III.
2. THE NOTED DIMENSION LINES REPRESENT BOTH THE CENTERLINE OF THE STEEL COLUMNS AND THE INSIDE FACE OF THE PERIMETER CONTAINMENT WALLS.
3. PRESSURE-LOCKED RECTANGULAR BAR GRATING MARK P-19-4 (1 1/4 x 1/8) TYPE 316 STAINLESS STEEL. REFER TO DETAIL 2 ON SHEET S-06 FOR GRATING SUPPORT DETAILS AND INFO.
4. CANOPY COLUMNS BY PRE-ENGINEERED MTL BLDG MFR (4 TOTAL).
5. BOLLARDS AT TOTE PAD (4 TOTAL) - CL OF BOLLARDS AT EDGE OF TOTE PAD. REF MECH FOR BOLLARD DETAIL.
6. THE NOTED RIDGE REPRESENTS THE HIGH PT OF THE SLOPED TOPPING GROUT. AT THIS POINT THE GROUT IS AT ITS MAX THICKNESS (=9").
7. THE NOTED NORTH & SOUTH EDGES OF THE SUMP PIT REPRESENT THE LOW POINTS OF THE SLOPED TOPPING GROUT. AT THIS POINT THE GROUT IS AT ITS MIN THICKNESS (=3").

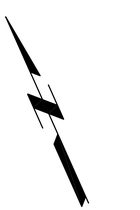

NO.	DR	CK	DATE	DESCRIPTION

REVISIONS

BLACK & VEATCH Building a world of difference.
Black & Veatch Corporation
Registered Firm F-253
Austin, Texas

Jose I. Guerra, Inc.
Consulting Engineers
2201 Spillman Drive, Suite 210
Austin, Texas 78744
(512) 445-2090
(512) 445-2091 Civil • Mechanical • Electrical
TBPE FIRM F-3

REGISTERED PROFESSIONAL ENGINEER BRANDON M. GOODLOE 92456 STATE OF TEXAS
9-24-2014

AUSTIN WATER
Walnut Creek WWTP - Tertiary Filter Rehabilitation Project
CIP ID No. 3023.025

STRUCTURAL
SODIUM BISULFITE FACILITY
FOUNDATION PLANS

DESIGNED BY:	BG
DRAWN BY:	RH
REVIEWED BY:	LP
APPROVED BY:	JL
PROJECT NO.:	168622
DATE:	09/24/2014
SCALE:	AS INDICATED

REVISION:

DISCIPLINE NO. S-32

DWG. NO. 92 OF 273

FD168622 168622 SAVED: CTONET ID: File: F:\12047 Walnut Creek WWTP Filter Improvements\DRAWINGS\CAD\S-32.dwg Layout: S-32 Plotted: 7/29/2013

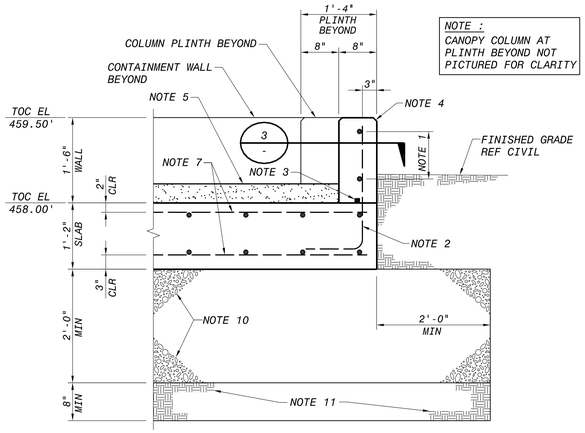

NOTE : CANOPY COLUMN AT PLINTH BEYOND NOT PICTURED FOR CLARITY

SECTION THRU PERIMETER WALL (1 / S-32)

12" 6" 0 1' 2' 3'
3/4"=1'-0"

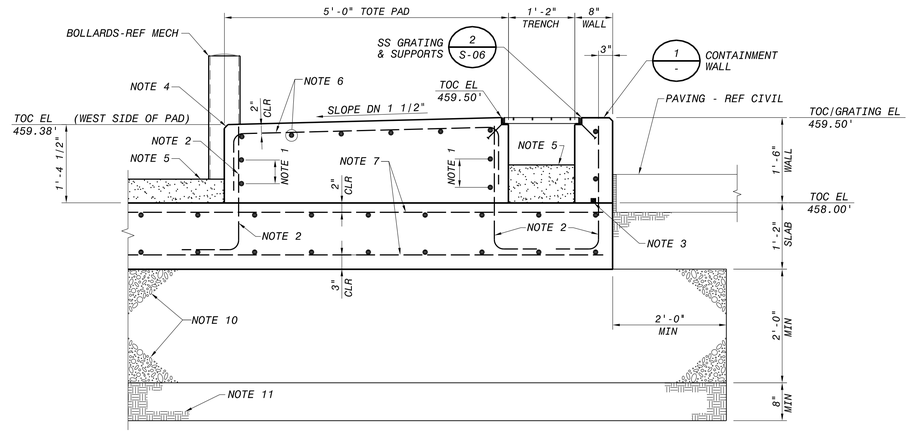

SECTION THRU TOTE PAD & CONTAINMENT WALL
VIEW LOOKING NORTH (2 / S-32)

12" 6" 0 1' 2' 3'
3/4"=1'-0"

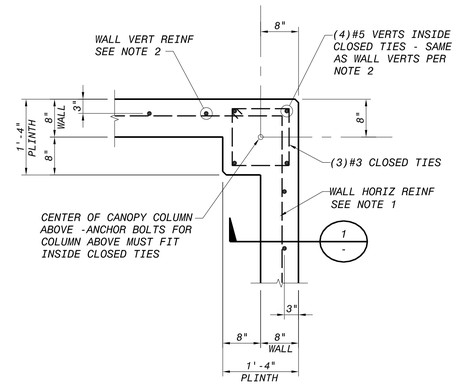

PLAN SECTION AT COLUMN PLINTH (3 / S-32)

12" 6" 0 1' 2' 3'
3/4"=1'-0"

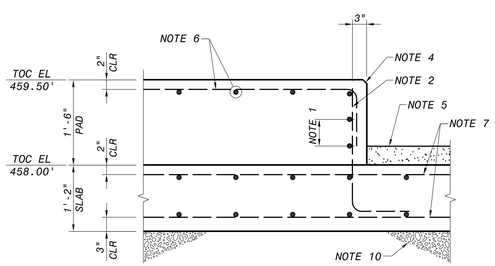

SECTION AT PUMP PAD (4 / S-32)

12" 6" 0 1' 2' 3'
3/4"=1'-0"

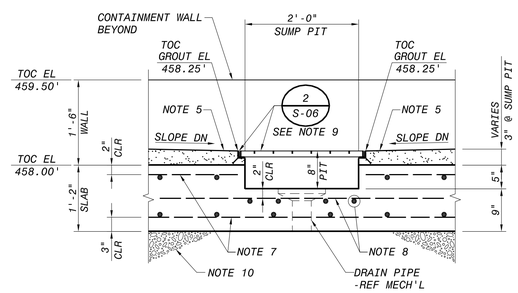

SECTION AT SUMP PIT
VIEW LOOKING WEST (5 / S-32)

12" 6" 0 1' 2' 3'
3/4"=1'-0"

SHEET NOTES

1. (2) #5 CONT HORIZ AT CONTAINMENT WALLS & PERIMETERS OF PADS, AS SHOWN - LAP ALL BARS 24-INCHES MIN WHERE REQUIRED. PROVIDE 24" x 24" CORNER BARS TO MATCH HORIZ BAR SPACING AT CORNERS.

   26"

2. #5 VERTS x 12" @ 12" OC AT CONTAINMENT WALLS & PERIMETERS OF PADS, AS SHOWN - INSTALL W/HOOKED ENDS EMBEDDED TO THE BOT MAT OF THE SLAB REIFORCING. AT THE CONTRACTOR'S OPTION, STRAIGHT DWLS MAY BE DRILLED & EPOXIED INTO THE SLAB IN LIEU OF CAST-IN-PLACE DWLS (7" EMBED).
3. CONT SELF-EXPANDING STRIP WS - REFER TO STRUCT GENERAL NOTES FOR ADDITIONAL INFO. INSTALL THE WS AT THE CENTER OF THE CONTAINMENT WALL.
4. PROVIDE A 3/4-INCH CHAMFER AT ALL EXPOSED CORNERS OF CONCRETE.
5. GROUT TOPPING - SLOPE TO DRAIN AT SUMP PIT AS INDICATED ON PLAN DWG 2/S-32.
6. REINF TOP OF TOTE & PUMP PADS WITH #5 @ 12" OC EA WAY - TERMINATE BARS WITH ACI STD 90-DEGREE HOOKS AT EACH EDGE OF PAD (TYP).
7. REINFORCE THE MAT FOUNDATION SLAB WITH #5 @ 12" OC EA WAY, TOP & BOTTOM. LAP BARS 24" MIN WHERE REQ'D.
8. INSTALL (4) ADDT'L #5 EACH WAY UNDER THE SUMP PIT IN THE TOP MAT, AS SHOWN ON DETAIL 5.
9. THE GRATING OVER THE SUMP PIT WILL HAVE SUPPORTS AT THE NORTH & SOUTH BEARING SIDES ONLY. BECAUSE OF THE SHALLOW 3-INCH DEPTH OF THE GROUT TOPPING AT THE SUMP PIT, THE TYP HCA'S PER 2/S-06 WILL NOT FIT. IN LIEU OF THE TYP ANCHORS, PROVIDE (3) 1/4" x 1-1/2" LONG HCA'S PER EMBED ANGLE AT THIS LOCATION.
10. INSTALL A PAD OF SELECT FILL MATERIAL BELOW THE CONCRETE SLAB AS ILLUSTRATED ON DETAILS 1 & 2. MATERIAL & COMPACTION REQUIREMENTS SHALL BE IN ACCORDANCE WITH THE "BACKFILL AT BELOW-GROUND WALLS AND ABOVE THE SOUTHSIDE CLEARWELL ROOF" GENERAL NOTES ON DWG S-01.
11. SCARIFY & RECOMPACT THE EXIST SOIL BELOW THE SELECT FILL PAD IN ACCORDANCE WITH THE "FOUNDATION NOTES FOR CLEARWELL MAT SLABS" GENERAL NOTES ON DWG S-01. THIS WORK SHALL EXTEND 2'-0" OUTSIDE OF THE FOUNDATION PERIMETER.

NO.	DR	CK	DATE	DESCRIPTION

REVISIONS

BLACK & VEATCH Building a world of difference.
Black & Veatch Corporation
Registered Firm F-253
Austin, Texas

Jose I. Guerra, Inc.
Consulting Engineers
2000 S. IH-35, Suite 210
Austin, Texas 78704
(512) 445-2090
Civil • Structural • Mechanical • Electrical
TBPE FIRM F-3

Walnut Creek WWTP - Tertiary Filter Rehabilitation Project

CIP ID No. 3023.025

AUSTIN WATER

STRUCTURAL
SODIUM BISULFITE FACILITY
FOUNDATION DETAILS

DESIGNED BY:	BG
DRAWN BY:	RH
REVIEWED BY:	LP
APPROVED BY:	JL
PROJECT NO.:	168622
DATE:	09/24/2014
SCALE:	3/4" = 1'-0"

REVISION:

DISCIPLINE NO.
S-33

DWG. NO.
93 OF 273

FD168622
D168622
File: F:\12047 Walnut Creek WWTP Filter Improvements\DRAWINGS\CAD\S-33.dwg Layout: S-33 Plotted: 7/29/2013
SAVED:
CYONET ID:

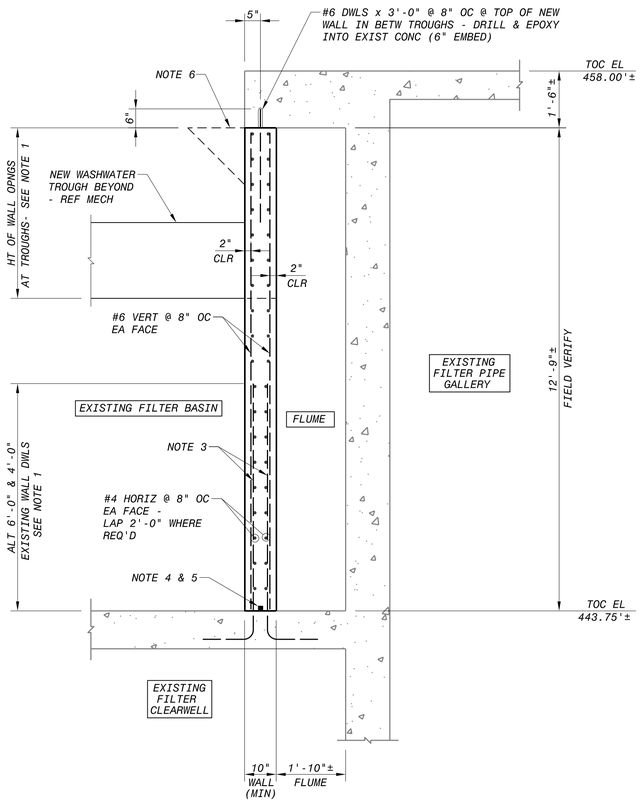

NEW FLUME WALL AT FILTER BASINS 1 THRU 4 (1 / M-09)

12" 6" 0 1' 2' 3' 4' 5'
1/2"=1'-0"

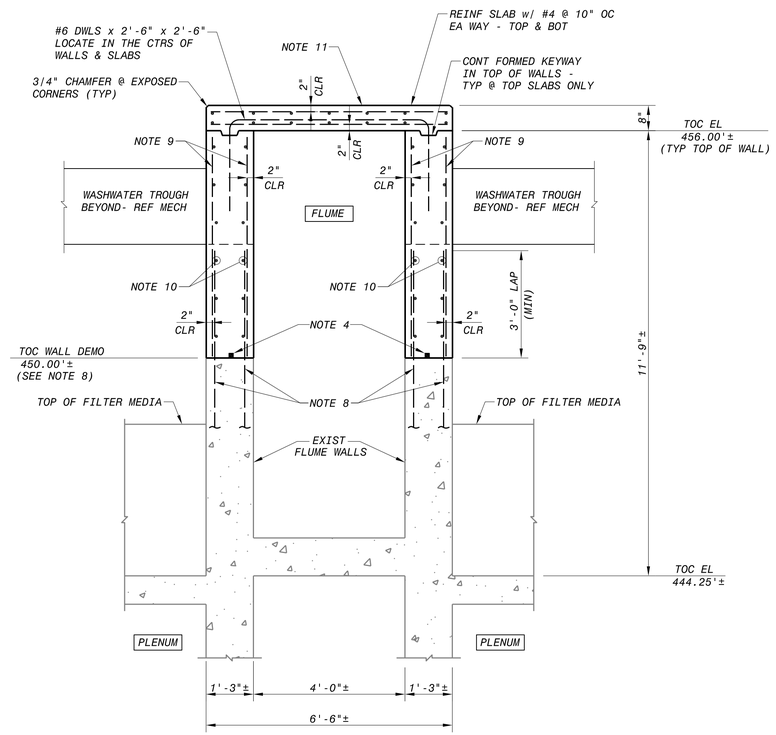

MODIFICATIONS TO EXIST FLUME WALLS AT FILTER BASINS 5 THRU 10 (3 / M-01, M-09)

12" 6" 0 1' 2' 3' 4' 5'
1/2"=1'-0"

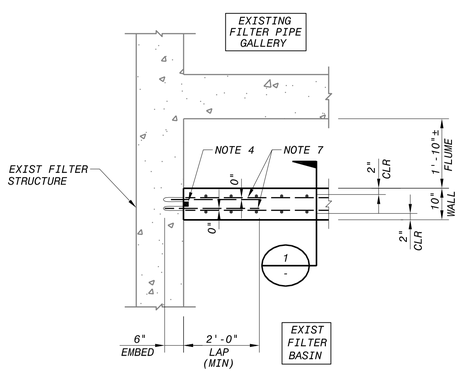

NEW FLUME WALL AT FILTER BASINS 1-4
PLAN VIEW AT WALL TERMINATIONS (2 / M-09)

12" 6" 0 1' 2' 3' 4' 5'
1/2"=1'-0"

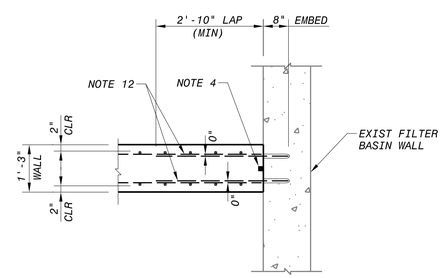

NEW FLUME WALL AT FILTER BASINS 5-10
PLAN VIEW AT WALL TERMINATIONS (4 / M-09)

12" 6" 0 1' 2' 3' 4' 5'
1/2"=1'-0"

SHEET NOTES

1. THE NEW 10" THICK WALLS AT BASINS 1-4 REPLACE EXIST 10" THICK WALLS THAT CURRENTLY SEPARATE THE FLUME & BASIN AREAS. THESE WALLS ALSO SUPPORT THE FILL END OF THE WASHWATER TROUGHS. THE TOP PORTION OF THESE WALLS WILL HAVE OPNGS, ABOVE THE TROUGH BOTTOM AND FOR THE WIDTH OF EACH TROUGH. THESE OPNGS CAN BE USED FOR CONSTRUCTION ACCESS INTO THE FLUME AREA. REFER TO MECH DWGS FOR ADDTL INFO ABOUT THIS CONSTRUCTION.
2. ALL EXIST WALL REINF EXPOSED BY THE DEMO OF THE EXIST WALL SHALL BE COATED PER THE ANTI-CORROSION COATING GENERAL NOTES ON S-02.
3. WHEN DEMOLISHING THE EXISTING FLUME WALL, PRESERVE THE EXIST DWLS AT THE BASE OF THE WALL. ACCORDING TO RECORD DWGS, THE DWLS ARE #8 BARS AT 12" OC AT EACH FACE OF THE WALL & ALTERNATE IN HEIGHT AS INDICATED ON DETAIL 1.
4. CONT SELF-EXPANDING STRIP WS - REFER TO STRUCT GENERAL NOTES FOR ADDITIONAL INFO. INSTALL THE WS AT THE CENTER OF THE WALL WITH AT LEAST A 4" DISTANCE FROM THE EDGES OF THE NEW WALL. THE WATERSTOP IS ONLY REQUIRED AT THE BOT & SIDES OF THE NEW WALLS AND MAY STOP 6" FROM THE TOP OF THE WALLS.
5. IF EXIST WATERSTOP IS FOUND AT THE BASE OF THE EXIST WALL, MAKE AN EFFORT TO PRESERVE IT. IN ADDITION, INSTALL A NEW WS AS DESCRIBED IN THE NOTE 4 ABOVE.
6. PROVIDE TEMPORARY "BIRDMOUTH" FORMS AT THE TOP OF THE NEW WALL FOR CONC PLACEMENT & CONSOLIDATION.
7. DRILL & EPOXY #4 DWLS x 2'-4" AT 12" OC EA FACE. LOCATE IN THE SAME PLANE AS THE NEW HORIZ WALL REINF. IN LIEU OF DRILLING & EPOXYING NEW DWLS AT THESE T-INTERSECTION LOCATIONS, THE CONTRACTOR MAY PRESERVE THE EXISTING WALL DWLS, PROVIDED THEY MATCH THE NEW DWL'S INTENDED LAP LENGTH, QUANTITY, AND SPACING.
8. THE EXIST PAIRS OF WALLS AT THE FLUMES IN BASINS 6 THRU 10 SHALL BE DEMOLISHED DOWN TO AN EL OF ABOUT 450.00' IN ORDER TO REMOVE THE EXIST WASHWATER TROUGHS AND EXPOSE THE EXIST WALL REINF. PRESERVE THE EXIST WALL REINF AND DEMO ENOUGH OF THE WALL TO LEAVE AT LEAST 36-INCH LONG VERT BARS PROTRUDING AS DWLS, AS SHOWN ON DETAIL 3. ACCORDING TO RECORD DWGS, THE WALL VERTS ARE #6 BARS AT 10" OC AT EACH FACE OF THE WALL.
9. INSTALL #6 VERTS @ 10" OC EA FACE IN THE NEW WALL EXTENSIONS AT BASINS 5 THRU 10. THESE BARS SHOULD MATCH THE EXIST WALL REINF/DWLS.
10. INSTALL #6 HORIZ @ 12" OC EA FACE IN THE NEW WALL EXTENSIONS AT BASINS 5 THRU 10. THESE BARS SHOULD MATCH THE EXIST WALL REINF OR DWLS AT WALL INTERSECTIONS.
11. THE TOP OF THE FLUME WALLS AT FILTER BASINS 5 THRU 10 WILL BE TIED-TOGETHER WITH TOP SLABS AS SHOWN ON DETAIL 3. THE SLABS ARE NOT CONT & WILL ONLY OCCUR AT THE AREAS BTWN WASHWATER TROUGH OPNGS (3 SLABS REQ'D PER BASIN). SEE MECH DWGS FOR AN ILLUSTRATION OF THE SLAB LOCATIONS.
12. DRILL & EPOXY #6 DWLS x 3'-6" AT 12" OC EA FACE. LOCATE IN THE SAME PLANE AS THE NEW HORIZ WALL REINF.

NO.	DR	CK	DATE	DESCRIPTION

REVISIONS

BLACK & VEATCH
Building a world of difference.
Black & Veatch Corporation
Registered Firm F-253
Austin, Texas

Jose I. Guerra, Inc.
Consulting Engineers
2500 Wallingwood Drive, Suite 210
Austin, Texas 78704
(512) 445-2090
Electrical • Civil • Mechanical • Electrical
TBPE FIRM F-3

Walnut Creek WWTP - Tertiary Filter Rehabilitation Project
CIP ID No. 3023.025

STRUCTURAL
EXISTING FILTER BASINS
MODIFICATIONS TO EXISTING WALLS

DESIGNED BY:	BG
DRAWN BY:	RH
REVIEWED BY:	LP
APPROVED BY:	JL
PROJECT NO.:	168622
DATE:	09/24/2014
SCALE:	1/2" = 1'-0"
REVISION:	
DISCIPLINE NO.	S-34
DWG. NO.	94 OF 273

FD168622
168622
SAVED:
CYONET ID:
File: F:\12047 Walnut Creek WWTP Filter Improvements\DRAWINGS\CAD\S-34.dwg Layout: S-34 Plotted: 7/29/2013

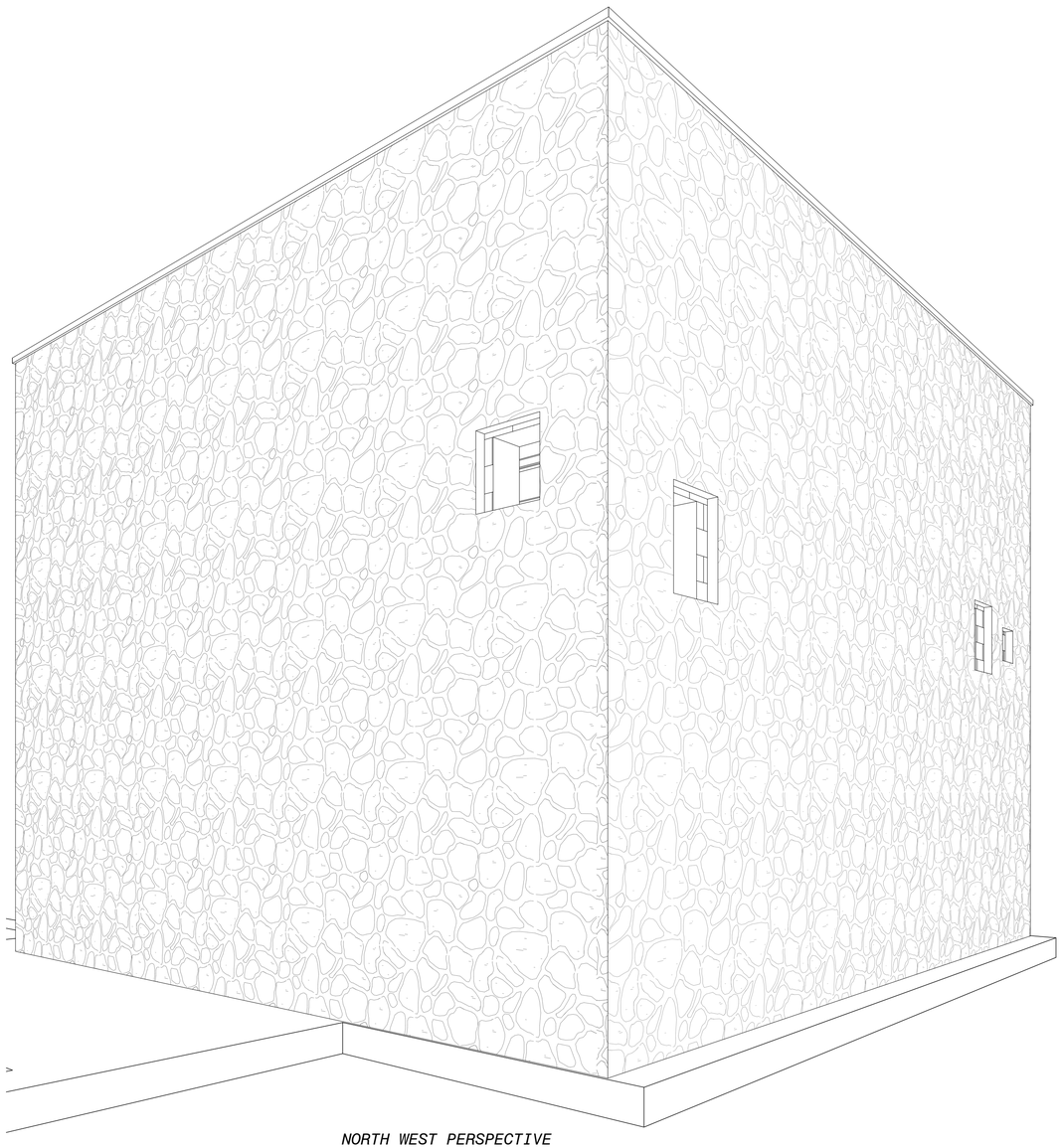

NORTH WEST PERSPECTIVE

NO SCALE

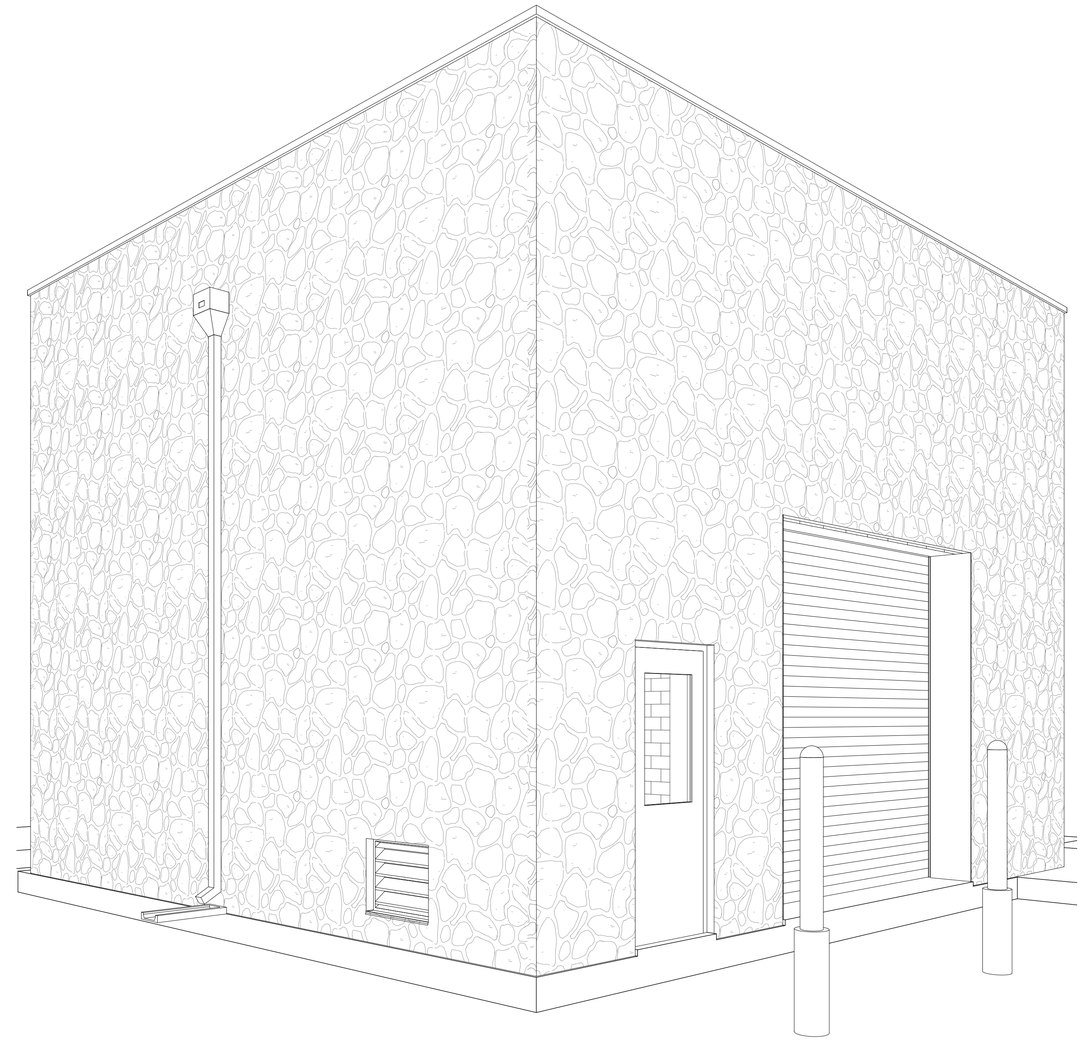

SOUTH EAST PERSPECTIVE

NO SCALE

NO.	DR	CK	DATE	DESCRIPTION
				REVISION

BLACK & VEATCH
Building a world of difference.

Black & Veatch Corporation
Registered Firm F-255
Austin, Texas

REGISTERED ARCHITECT
STATE OF TEXAS
F7241
4/4/2014

Austin WATER

Walnut Creek WWTP - Tertiary Filter Rehanilitation Project

CIP ID No. 3023.25

ARCHITECTURAL
BLOWER BUILDING
BUILDING PERSPECTIVES

DESIGNED BY:	DSD
DRAWN BY:	ANH
REVIEWED BY:	KJK
APPROVED BY:	TSD
PROJECT NO:	168622
DATE:	4/4/14
SCALE:	

REVISION

DISCIPLINE NO.
A-01

DWG. NO.
95 273

D168622 04/03/2014 3:17:54 PM c:\pw_working\cngpw\d0871647\3D-A-BLRBLDG.rvt

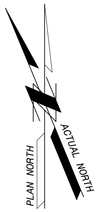

BUILDING CODE ANALYSIS - BLOWER BUILDING									
DESIGN CODE : 2012 INTERNATIONAL BUILDING CODE									
OCCUPANCY CLASSIFICATION: F-2 (NOTE 1)						TYPE OF CONSTRUCTION: TYPE II-B (NOTE 2)			
BUILDING AREA (SF) : 875 ALLOWABLE ARE (SF) : 23,000			BUILDING HEIGHT (FT) : 23 +/- ALLOWABLE HEIGHT (FT) : 55					NUMBER OF STORIES : 1 ALLOWABLE STORIES : 3	
ROOM NAME	OCCUPANCY	HAZARDOUS MATERIALS	ADA ACCESS	FIRE PROTECTION	ROOM AREA (SF)	OCC LOAD (NOTE 3)	EXITS PROVIDED (NOTE 4)	EXITS REQUIRED (NOTE 5)	REMARKS
BLOWER ROOM	F-2	NONE	NOT REQUIRED	NONE	875	9	1	1	

NOTES:

1. COMPLIES WITH SECTION 302 OF THE BUILDING CODE.
2. COMPLIES WITH SECTION 602 OF THE BUILDING CODE.
3. COMPLIES WITH SECTION 1004 OF THE BUILDING CODE.
4. COMPLIES WITH SECTION 1020.1 OF THE BUILDING CODE.
5. COMPLIES WITH SECTION 1015.1 OF THE BUILDING CODE.

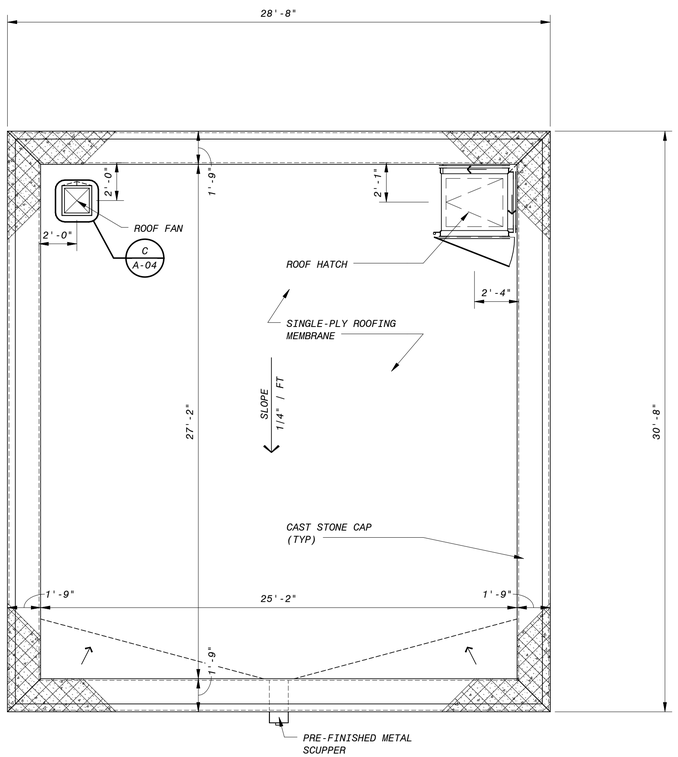

ROOF PLAN

1/4" = 1'-0"

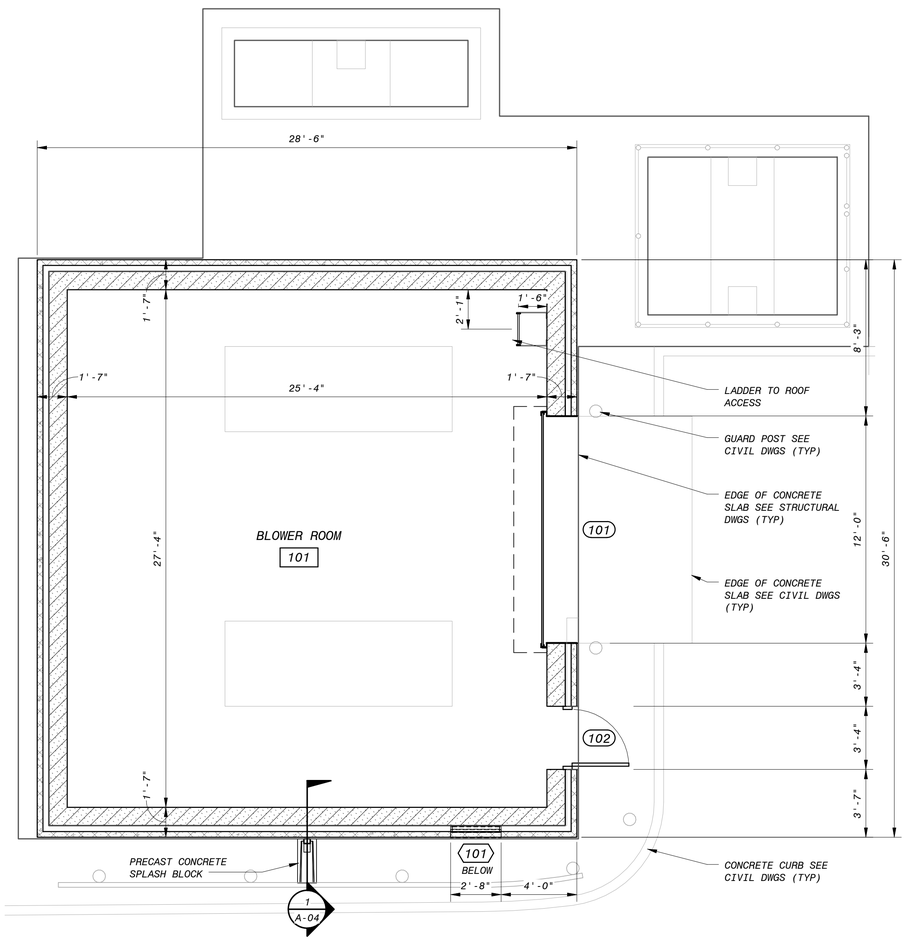

OPERATING FLOOR

1/4" = 1'-0"

GENERAL NOTES:

1. PROVIDE 1/4" PER FOOT MINIMUM ROOF SLOPE
2. SEE WALL SECTIONS FOR MINIMUM R-VALUE

4' 2' 0' 4' 8'

1/4" = 1'-0"

NO.	DR	CK	DATE	REVISION DESCRIPTION

BLACK & VEATCH
Building a world of difference.
Black & Veatch Corporation
Registration No. F-255
Austin, Texas

REGISTERED ARCHITECT
F-7241
STATE OF TEXAS
4/4/2014

Austin WATER
Walnut Creek WWTP - Tertiary Filter Renanilitation Project
CIP ID No. 3023.25

ARCHITECTURAL
BLOWER BUILDING
OPERATING FLOOR AND ROOF PLANS

DESIGNED BY:	DSD
DRAWN BY:	ANH
REVIEWED BY:	KJK
APPROVED BY:	TSD
PROJECT NO:	168622
DATE:	4/4/14
SCALE:	As indicated
REVISION	
DISCIPLINE NO.	A-02
DWG. NO.	96 273

D168622 04/03/2014 7:18:19 PM c:\pw_working\cngpw\d0671647\3D-A-BLRBLDG.rvt

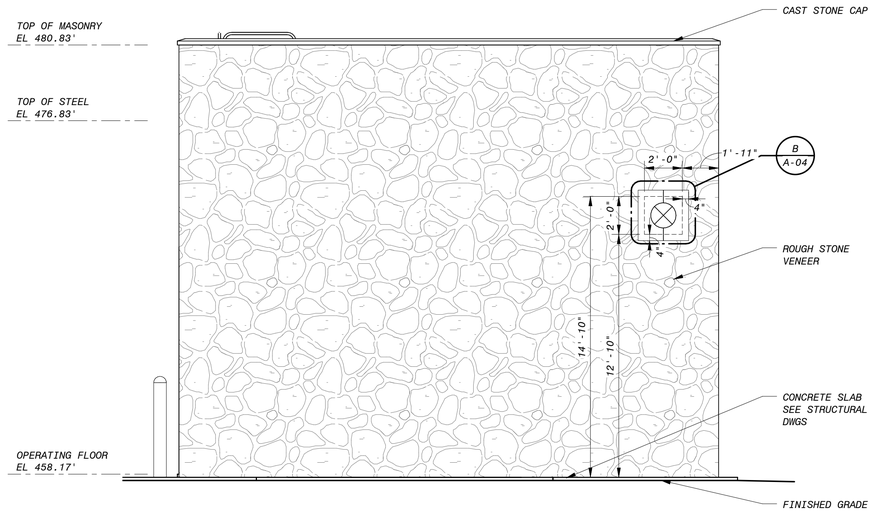

NORTH ELEVATION

1/4" = 1'-0"

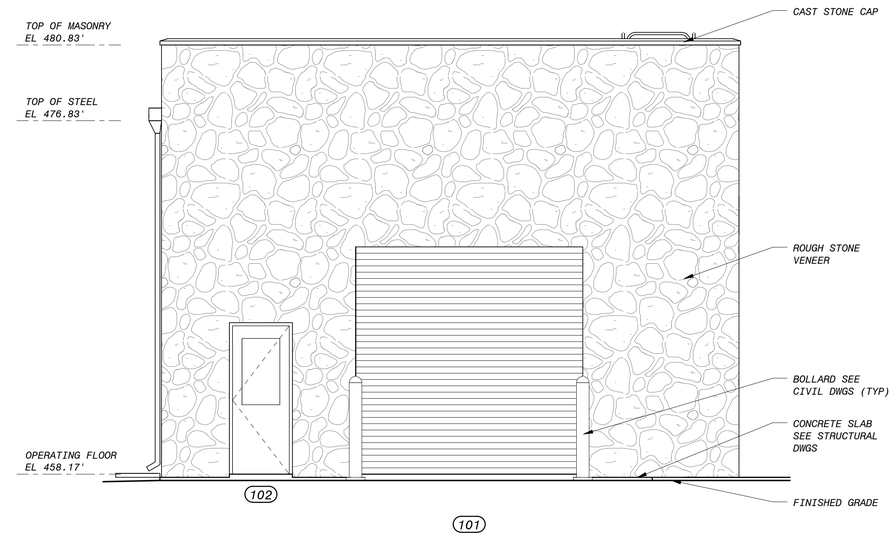

EAST ELEVATION

1/4" = 1'-0"

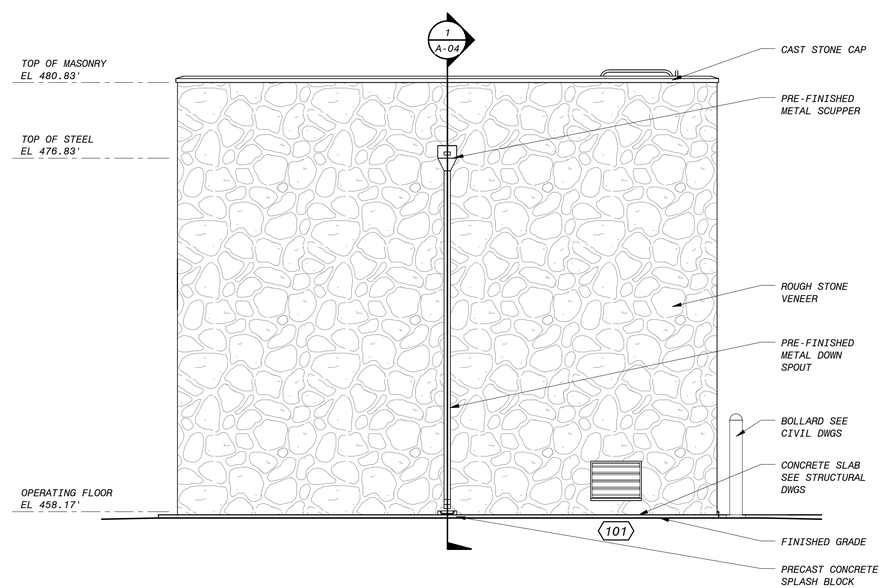

SOUTH ELEVATION

1/4" = 1'-0"

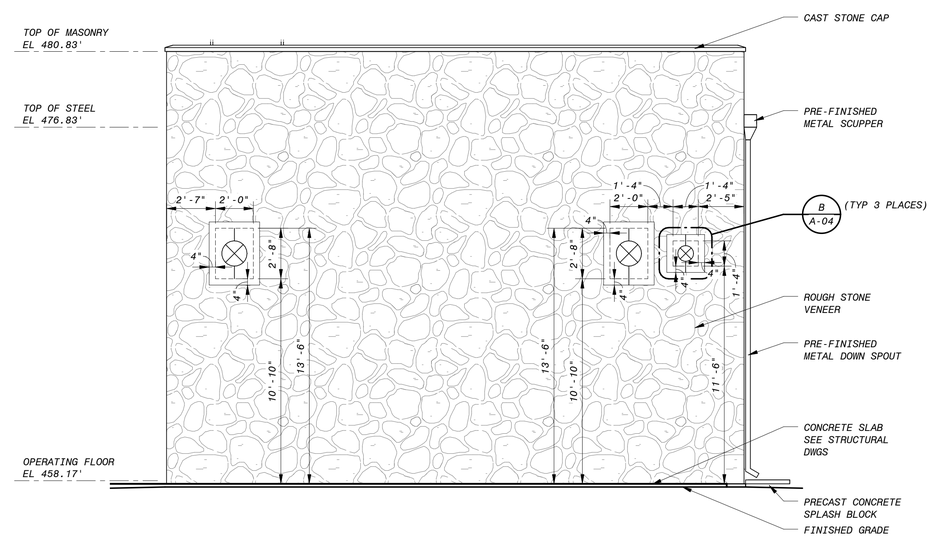

WEST ELEVATION

1/4" = 1'-0"

4' 2' 0' 4' 8'

1/4" = 1'-0"

NO.	DR	CK	DATE	REVISION DESCRIPTION

BLACK & VEATCH
Building a world of difference.
Black & Veatch Corporation
Registration No. F-253
Austin, Texas

REGISTERED ARCHITECT
STATE OF TEXAS
21241
4/4/2014

Austin WATER
Walnut Creek WWTP - Tertiary Filter Renanilitation Project
CIP ID No. 3023.25

ARCHITECTURAL
BLOWER BUILDING
BUILDING ELEVATIONS

DESIGNED BY:	DSD
DRAWN BY:	ANH
REVIEWED BY:	KJK
APPROVED BY:	TSD
PROJECT NO:	168622
DATE:	4/4/14
SCALE:	1/4" = 1'-0"

REVISION

DISCIPLINE NO.
A-03

DWG. NO.
97 273

D168622 04/03/2014 3:18:55 PM c:\pw_working\cngpw\d0671647\3D-A-BLRBLDG.rvt

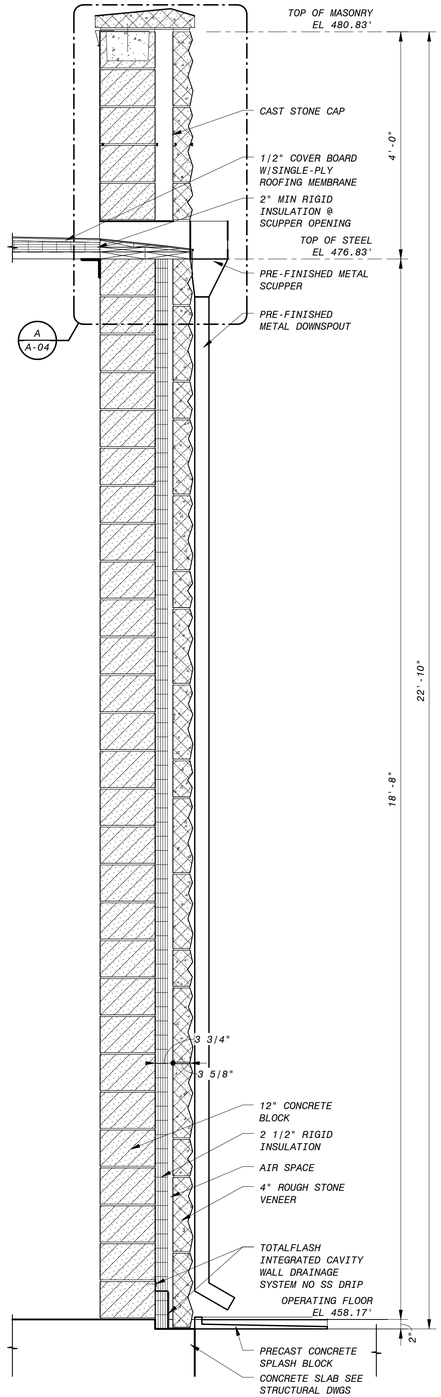

1 A-02 WALL SECTION
3/4" = 1'-0"

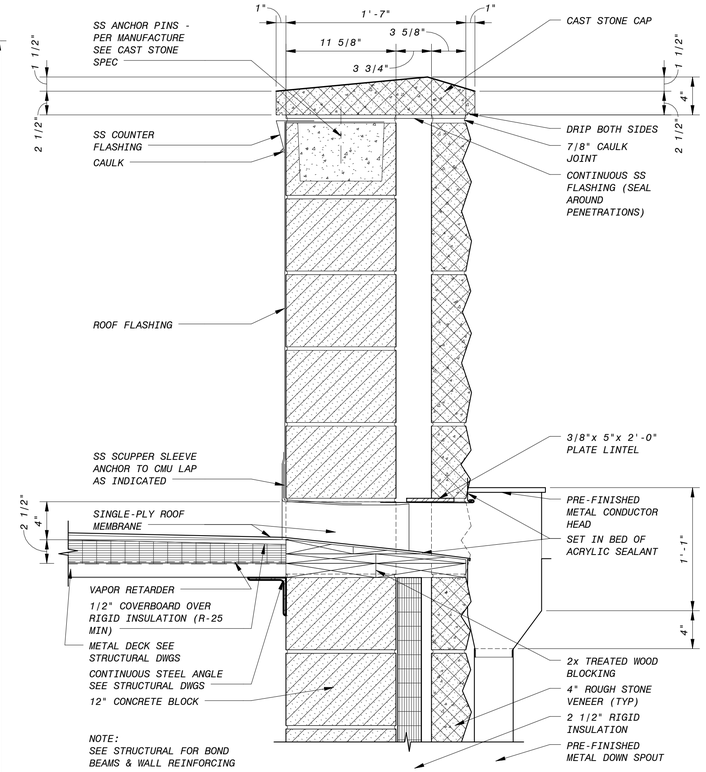

SECTION

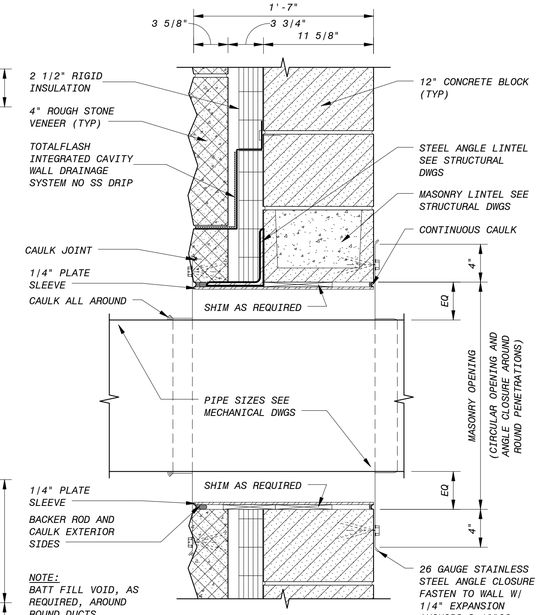

B A-03 DETAIL
1 1/2" = 1'-0"

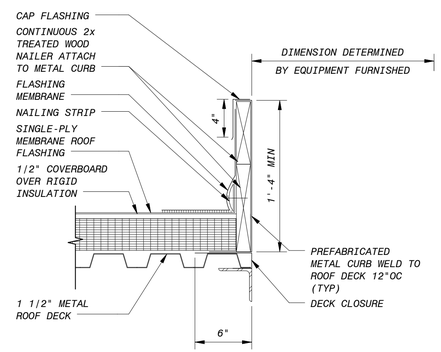

C A-02 DETAIL
1 1/2" = 1'-0"

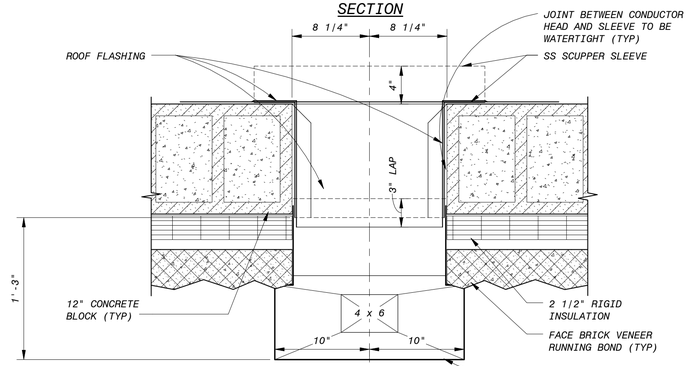

PLAN

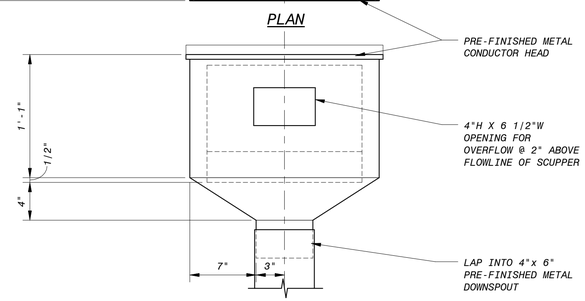

ELEVATION

A A-04 SCUPPER DETAIL
1 1/2" = 1'-0"

GENERAL NOTES:

1. SEE STRUCTURAL DRAWINGS FOR VERTICAL REINFORCING AND BOND BEAMS IN MASONRY DESIGN.
2. SEE SPECIFICATION SECTION 04200 FOR HORIZONTAL JOINT REINFORCING.

12" 9" 6" 3" 0' 1'
1 1/2" = 1'-0"
12" 6" 0' 1' 2' 3'
3/4" = 1'-0"

NO.	DR	CK	DATE	REVISION	DESCRIPTION

BLACK & VEATCH
Building a world of difference.
Black & Veatch Corporation
Registration No. F-253
Austin, Texas

REGISTERED ARCHITECT
STATE OF TEXAS
21241
4/4/2014

Austin WATER
Walnut Creek WWTP - Tertiary Filter Rehanilitation Project
CIP ID No. 3023.25

ARCHITECTURAL
BLOWER BUILDING
WALL SECTIONS AND DETAILS

DESIGNED BY:	DSD
DRAWN BY:	ANH
REVIEWED BY:	KJK
APPROVED BY:	TSD
PROJECT NO:	168622
DATE:	4/4/14
SCALE:	As indicated

REVISION

DISCIPLINE NO.
A-04

DWG. NO.
98 273

D168622 04/03/2014 3:19:04 PM c:\pw_working\cngpw\d0871647\3D-A-BLRBLDG.rvt

ROOM FINISH SCHEDULE

BUILDING	ROOM No.	ROOM NAME	FLOOR MATRL	FLOOR FINISH	NORTH MATRL	NORTH FINISH	NORTH BASE	EAST MATRL	EAST FINISH	EAST BASE	SOUTH MATRL	SOUTH FINISH	SOUTH BASE	WEST MATRL	WEST FINISH	WEST BASE	CEILING MATRL	CEILING FINISH	CEILING HEIGHT	REMARKS
BLOWER BUILDING	101	BLOWER ROOM	CO	FS	CB	EP	NO	CB	EP	NO	CB	EP	NO	CB	EP	NO	EXP	PT	18'-8"	
FILTER BUILDING 1	701	WEST ROOM	EXT-CO	RF	EXT-CB	PT	RB	EXT-CB	PT	RB	EXT-CB	PT	RB	EXT-CB	PT	RB	SB	FF	10'-0"	NOTE 6
FILTER BUILDING 1	702	FORMER LAB AREA	EXT-CO	RF	EXT-CB	PT	RB	EXT-CB	PT	RB	EXT-CB	EXT-CT	EXT-CT	EXT-CB	PT	RB	SB	FF	10'-0"	NOTE 6
FILTER BUILDING 1	703	RESTROOM	EXT-CO	RF	EXT-CB	PT	RB	EXT-CB	PT	RB	EXT-CB	PT	RB	EXT-CB	EXT-CT	EXT-CT	EXT-GWB	PT	10'-0"	
FILTER BUILDING 1	704	MECHANICAL ROOM	EXT-CO	RF	EXT-CB	PT	RB	EXT-CB	PT	RB	EXT-CB	PT	RB	EXT-CB	PT	RB	EXT-GWB	PT	10'-0"	
FILTER BUILDING 1	705	STAIR	EXT-CO	EXT	EXT-CB	EXT	EXT	EXT-CB	EXT	EXT	EXT-CB	EXT	EXT	EXT-CB	EXT	EXT	EXT-GWB	EXT	10'-0"	EXISTING FINISH TO REMAIN
FILTER BUILDING 1	706	CONTROL ROOM	EXT-CO	RF	EXT-CB	PT	RB	EXT-CB	PT	RB	EXT-CB	PT	RB	EXT-CB	PT	RB	SB	FF	10'-0"	NOTE 6
FILTER BUILDING 1	707	TRANSFORMER ROOM	EXT-CO	EXT-FS	EXT-CB	PT	NO	EXT-CB	PT	NO	EXT-CB	PT	NO	EXT-CB	PT	NO	EXT-GWB	PT	10'-0"	
FILTER BUILDING 2	100	CONTROL ROOM	EXT-CO	VCT	EXT-CB	PT	RB	EXT-CB	PT	RB	EXT-CB	PT	RB	EXT-CB	PT	RB	SB	FF	8'-6"	NOTE 6

DOOR SCHEDULE

BUILDING	No. (D)	DOOR SIZE	WIDTH	HEIGHT	DOOR MATERIAL	HEAD	JAMB	SILL	TYPE (D)	HDWR	RATING	FRAME MATERIAL	DEPTH	REMARKS
BLOWER BUILDING	101		12'-0"	12'-0"	RA	4	5	6	-	-	-	RA	0"	MOTOR OPERATED
BLOWER BUILDING	102		3'-0"	7'-10"	FRP	1	2	3	A	1	-	FRP	5 3/4"	
FILTER BUILDING 1	700		3'-0"	7'-0"	AL	-	-	-	-	-	-	AL	5 3/4"	EXISTING TO REMAIN
FILTER BUILDING 1	701		3'-0"	7'-10"	HM	-	-	-	-	-	-	HM	5 3/4"	NOTE 3 AND 5
FILTER BUILDING 1	702		3'-0"	7'-0"	AL	-	-	-	-	-	-	AL	5 3/4"	EXISTING TO REMAIN
FILTER BUILDING 1	703		3'-0"	7'-0"	AL	-	-	-	-	-	-	AL	5 3/4"	EXISTING TO REMAIN
FILTER BUILDING 1	704		2'-4"	7'-2"	HM	-	-	-	-	-	-	HM	5 3/4"	NOTE 3 AND 5
FILTER BUILDING 1	705		2'-4"	7'-2"	HM	-	-	-	-	-	-	HM	5 3/4"	NOTE 3 AND 5
FILTER BUILDING 1	706		3'-0"	7'-10"	HM	-	-	-	-	-	-	HM	5 3/4"	NOTE 3 AND 5
FILTER BUILDING 1	707		2'-8"	7'-2"	HM	-	-	-	-	-	-	HM	5 3/4"	NOTE 3 AND 5
FILTER BUILDING 1	708	PR	7'-8"	9'-2"	FRP	-	-	-	-	-	-	FRP	5 3/4"	NOTE 4 AND 5

LOUVER SCHEDULE

No. (L)	OPENING WIDTH	OPENING HEIGHT	LOUVER TYPE	LOUVER HEAD	LOUVER JAMB	LOUVER SILL	LOUVER TOP ELEV	REMARKS
101	2'-8"	2'-0"	AL	7	8	9		

GENERAL NOTES:

1. SEE STRUCTURAL DRAWINGS FOR VERTICAL REINFORCING AND BOND BEAMS IN MASONRY DESIGN.
2. SEE SPECIFICATION SECTION 04200 FOR HORIZONTAL JOINT REINFORCING.
3. MATCH EXISTING SIZE, TYPE, MATERIAL AND HARDWARE.
4. MATCH EXISTING SIZE, TYPE AND HARDWARE. DOOR AND FRAME MATERIAL TO BE REVISED PER SCHEDULE.
5. PROVIDE NEW ANCHORAGE AS REQUIRED TO INSTALL NEW DOOR AND FRAME IN EXISTING WALL ROUGH OPENING.
6. PROVIDE BATT INSULATION ABOVE CEILING PER SPECIFICATIONS.

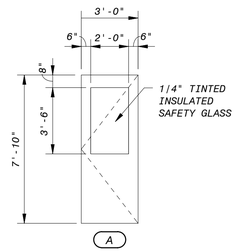

DOOR ELEVATION

SCHEDULE LEGEND

AL - ALUMINUM
CB - CONCRETE BLOCK
CO - CONCRETE
CT - CERAMIC TILE (WALL)
EXP - EXPOSED CONSTRUCTION
EXT - EXISTING
FF - FACTORY FINISH
FRP - FIBER REINFORCED PLASTIC
FS - FLOOR SEALER
GWB - GYPSUM WALLBOARD
HM - HOLLOW METAL
NO - NONE
PT - PAINTED
RA - ROLLING ALUMINUM DOOR
RB - RUBBER BASE
RF - RESILIENT FLOOR TILE
SB - SUSPENDED ACOUSTICAL PANEL (48"x 48")

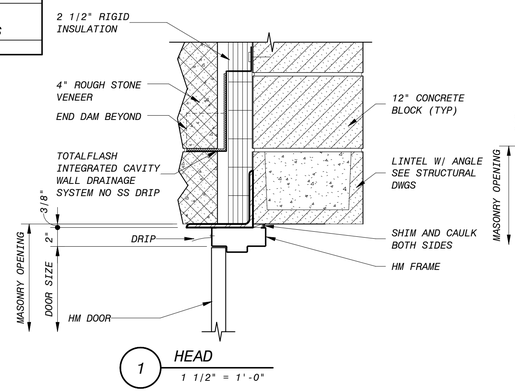

1 HEAD
1 1/2" = 1'-0"

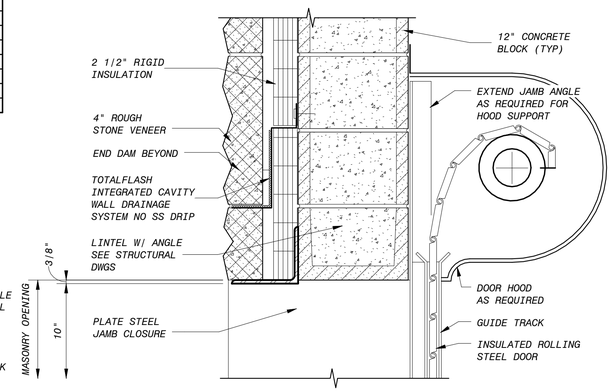

4 HEAD
1 1/2" = 1'-0"

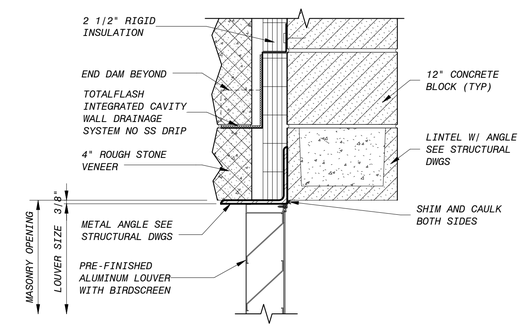

7 HEAD
1 1/2" = 1'-0"

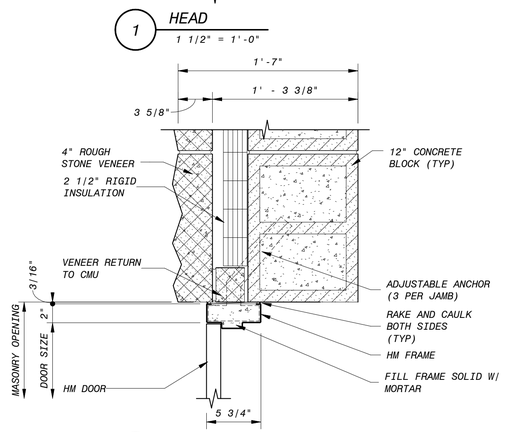

2 JAMB
1 1/2" = 1'-0"

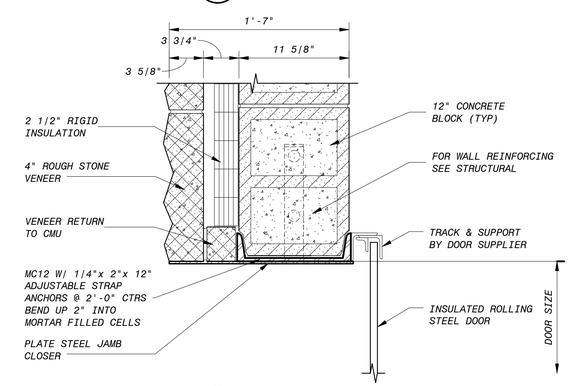

5 JAMB
1 1/2" = 1'-0"

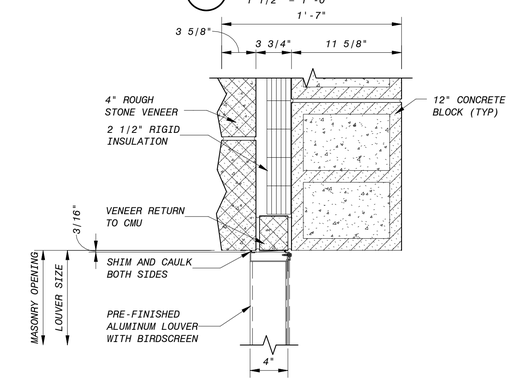

8 JAMB
1 1/2" = 1'-0"

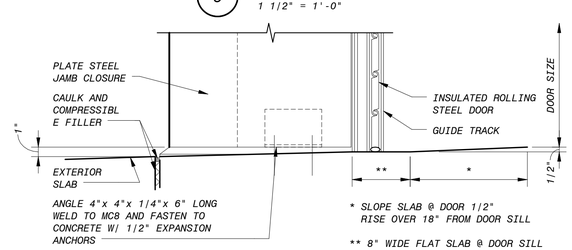

6 SILL
1 1/2" = 1'-0"

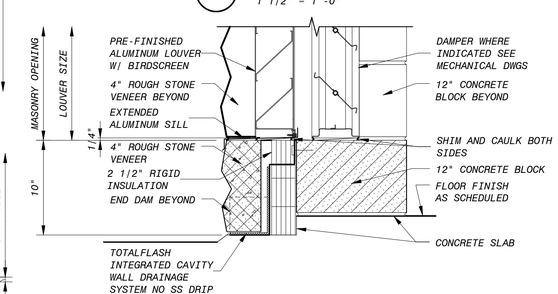

9 SILL
1 1/2" = 1'-0"

3 SILL
1 1/2" = 1'-0"

12" 9" 6" 3" 0' 1'
1 1/2" = 1'-0"

NO.	DR	CK	DATE	REVISION DESCRIPTION

BLACK & VEATCH
Building a world of difference.
Black & Veatch Corporation
Registration No. F-253
Austin, Texas

REGISTERED ARCHITECT STATE OF TEXAS 27241
4/4/2014

Austin WATER
Walnut Creek WWTP - Tertiary Filter Rehanilitation Project
CIP ID No. 3023.25

ARCHITECTURAL
BLOWER BUILDING
ROOM FINISH, DOOR AND LOUVER SCHEDULES

DESIGNED BY:	DSD
DRAWN BY:	ANH
REVIEWED BY:	KJK
APPROVED BY:	TSD
PROJECT NO:	168622
DATE:	4/4/14
SCALE:	As indicated

REVISION

DISCIPLINE NO.
A-05
DWG. NO.
99 273

D168622 04/03/2014 3:19:12 PM c:\pw_working\cngpw\d0871647\3D-A-BLRBLDG.rvt

BACKGROUND INFORMATION NOTE:
BACKGROUND IMAGES USED ON THIS SHEET ARE FROM AS-BUILT DRAWINGS FROM PREVIOUS CONTRACTS THAT WERE PREPARED BASED ON INFORMATION PROVIDED BY OTHERS. ALL ITEMS SHOWN IN THE BACKGROUND AND ALL NEW ITEMS RELYING ON BACKGROUND INFORMATION SHALL BE VERIFIED BY THE CONTRACTOR FOR ACCURACY BEFORE APPLYING THIS INFORMATION FOR ANY PURPOSE. BACKGROUND IMAGES ON THIS SHEET ARE FROM WALNUT CREEK WASTEWATER PLANT CONTRACT 4, SHEET F-4, AND CONTRACT 6, SHEET S-27.

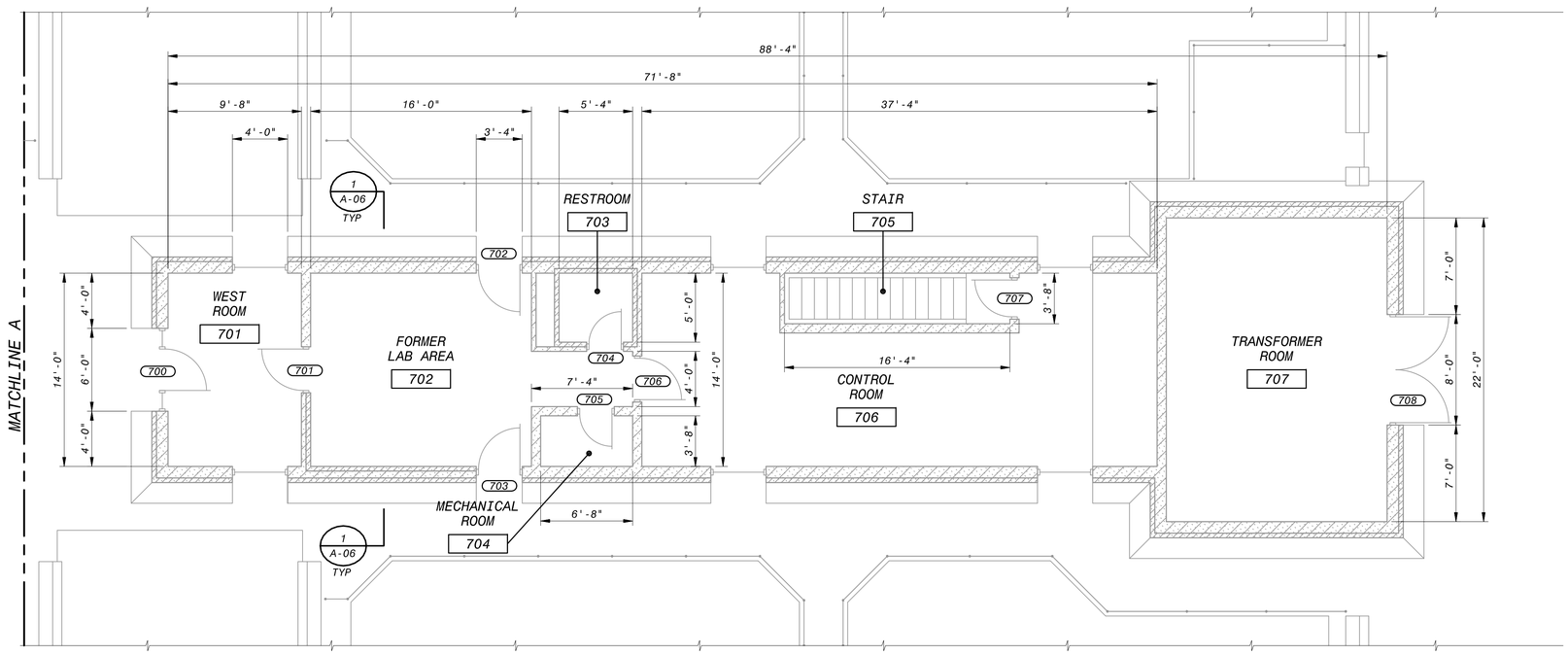

FILTER BUILDING 1 FLOOR PLAN

6' 4' 2' 0 5' 10'
3/16"=1'-0"

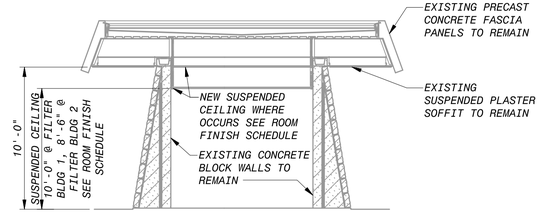

SECTION 1/A-06

3/16" = 1'-0"

6' 4' 2' 0 5' 10'
3/16"=1'-0"

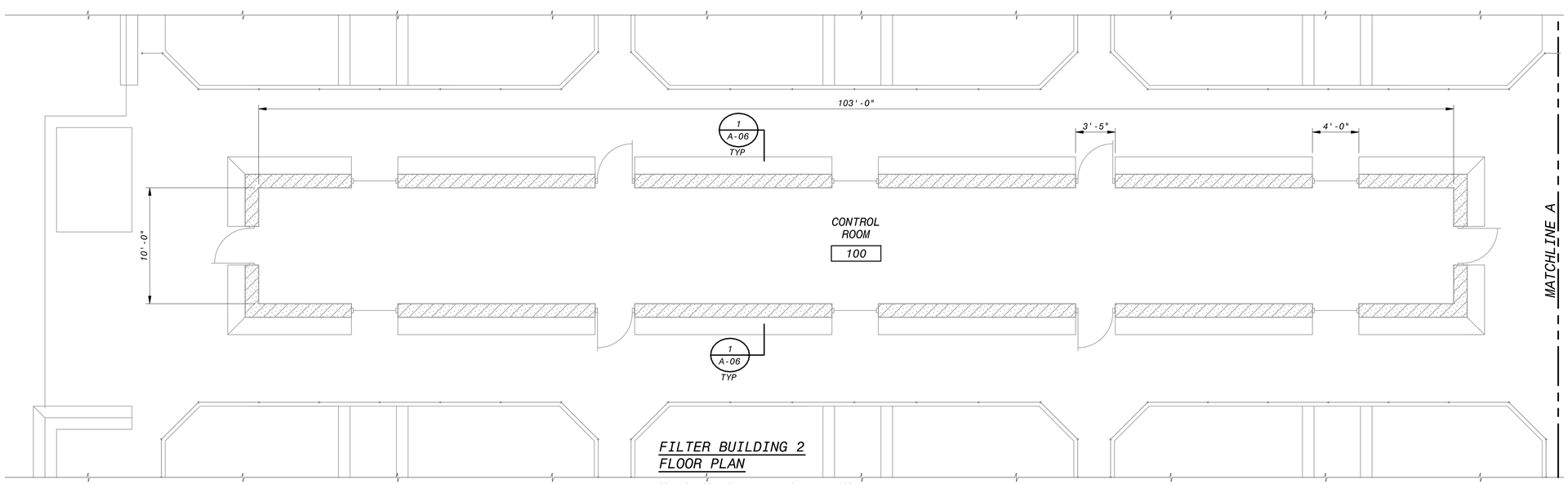

FILTER BUILDING 2 FLOOR PLAN

6' 4' 2' 0 5' 10'
3/16"=1'-0"

NO.	DR	CK	DATE	DESCRIPTION

REVISIONS

BLACK & VEATCH
Building a world of difference.
Black & Veatch Corporation
Registration No. F-253
Austin, Texas

REGISTERED ARCHITECT 21241 STATE OF TEXAS
4/4/2014

Austin WATER
Walnut Creek WWTP - Tertiary Filter Rehabilitation Project
CIP ID No. 3023.025

ARCHITECTURAL
FILTER BUILDING
REHABILITATION FLOOR PLANS

DESIGNED BY:	DSD
DRAWN BY:	ANH
REVIEWED BY:	KJK
APPROVED BY:	TSD
PROJECT NO.:	168622
DATE:	4/4/14
SCALE:	AS INDICATED

REVISION:

DISCIPLINE NO.
A-06

DWG. NO.
100 OF 273

FD168622
D168622
SAVED: HERS1010, 04/03/2014 11:50:54 AM
PW_FILDR:D168622...109.8040 - Architectural Drawings
File: C:\pw_working\unpw\00671645\A-06.dwg Layout: Work Plotted: 4/3/2014 3:23:11 PM

MECHANICAL SYMBOL LIST

- SUPPLY AIR GRILLE
- RETURN AIR GRILLE
- TEMPERATURE THERMOSTAT
- DUCT SMOKE DETECTOR
- CEILING MOUNTED SMOKE DETECTOR
- F/50 COMBINATION FIRE/SMOKE DAMPER

PROVIDED BY FIRE ALARM CONTRACTOR

- FLEXIBLE DUCT WORK
- MANUAL DAMPER
- A/XXX DIFFUSER TYPE / CFM
- CONNECT TO EXISTING

FLEX DUCT SCHEDULE

AIRFLOW (CFM)	NECK SIZE
0 TO 125	6
126 TO 200	8
201 TO 275	10
276 TO 375	12
376 TO 475	14
476 TO 600	16

MECHANICAL GENERAL NOTES

1. ALL DUCT SIZES SHOWN ARE INSIDE CLEAR DIMENSIONS.
2. DRAWINGS ARE DIAGRAMATIC ONLY. DO NOT SCALE DRAWINGS FOR EXACT LOCATION OF ITEMS SHOWN. COORDINATE WITH STRUCTURE AND OTHER TRADES IN THE FIELD.
3. MECHANICAL CONTRACTOR SHALL COORDINATE ALL CUTTINGS AND PENETRATIONS WITH GENERAL CONTRACTOR. MAKE ALL PENETRATIONS WITH A CUTTING TOOL. COORDINATE ALL ROOFING WORK WITH ROOFING CONTRACTOR.
4. SUPPLY AND RETURN AIR DUCTWORK SHALL BE RECTANGULAR GALVANIZED SHEET METAL DUCT (OR AS NOTES ON PLAN), R=8 INSULATING RATING. DUCT SHALL BE INSTALLED PER SMACNA STANDARDS FOR SHEET METAL DUCT, 2" PRESSURE CLASS. ALL RUNOUTS TO REGISTERS AND GRILLES TO BE INSULATED FLEX DUCT WITH VAPOR BARRIER, MAXIMUM 8 FEET LENGTH.
5. COORDINATE EXACT LOCATION OF CEILING DIFFUSERS AND GRILLES W/ OWNER AND REFLECTED CEILING PLAN.
6. COORDINATE ANY ROOF PENETRATION WITH ROOFING CONTRACTOR, ROOF SYSTEM MANUFACTURER AND ARCHITECT.
7. MOUNT THERMOSTAT @ 48" A.F.F., NEXT TO LIGHT SWITCH, WHERE BOTH OCCUR IN SAME LOCATION. CONFIRM EXACT LOCATION WITH OWNER BEFORE ROUGH-IN.
8. COORDINATE FINAL LOCATION OF DUCTWORK WITH STRUCTURAL MEMBERS.
9. ALL WORK SHALL BE COORDINATED WITH ROOF SYSTEM MANUFACTURER ,OWNER AND ARCHITECT.
10. PROVIDE MANUAL BALANCING DAMPER IN EACH BRANCH DUCT TAKE-OFF.
11. FLEXIBLE DUCTS SHALL BE MAXIMUM 8'-0" LONG, INSTALLED WITH NO SHARP BENDS, AND PROPERLY SUPPORTED.
12. COORDINATE CONDENSATE DRAIN ROUTING WITH PLUMBING CONTRACTOR.
13. ALL EQUIPMENT LOCATED OUTSIDE BUILDING SHALL BE WATERPROOF CONSTRUCTION AND SHALL HAVE WATERPROOF JOINTS AND PAINT COLOR AS SELECTED BY ARCHITECT.
14. PROVIDE FIRE DAMPERS AT SUPPLY AIR AND RETURN AIR DUCT PENETRATIONS THRU RATED CEILING AND WALLS.
15. ALL ROOF PENETRATIONS SHALL BE REVIEWED AND APRROVED BY ROOF SYSTEM MANUFACTURER TO COMPLIANCE ROOFING WARRANTY.

MECHANICAL MANUFACTURER EQUIVALENT

EQUIPMENT	EQUIVALENT MANUFACTURER	REMARK
CONDENSING UNIT / HEAT PUMP	- CARRIER - LENNOX	
FAN	- GREENHECK - A.C.M.E. - COOK - PENN	
DIFFUSER & GRILLE	- TITUS - KRUEGER - TUTTLE & BAILEY	

NOTES:
1. COORDINATE EXACT SPACE AND CLEARANCE REQUIREMENT WITH SCHEDULED UNIT BEFORE PURCHASE APPROVED SUBTITUTION UNIT.

NO.	DR	CK	DATE	DESCRIPTION

REVISIONS

BLACK & VEATCH
Building a world of difference.
Black & Veatch Corporation
Registration No. F-258
Austin, Texas
ENGOTECH
ENGINEERING CONSULTANTS
8500 Bluffstone Cove, B-103 • Austin, Texas 78759 • (512) 338-1101
TBPE Firm No. 14814 • www.engineeringconsulting.com

STATE OF TEXAS
LYNN C. BROWN
55248
LICENSED
PROFESSIONAL ENGINEER
09/26/2014

Austin WATER
Walnut Creek WWTP - Tertiary Filter Rehabilitation Project
CIP ID No. 3023.025

HVAC
NOTES & SYMBOLS

DESIGNED BY:	ZA
DRAWN BY:	ZA
REVIEWED BY:	DBM
APPROVED BY:	DBM
PROJECT NO.:	
DATE:	4/4/2014
SCALE:	AS SHOWN
REVISION:	
DISCIPLINE NO.	H-01
DWG. NO.	101 OF 273

F0168622 SAVED:
D1686222 CYGNET ID:
File: J:\ACTIVE PROJECTS\Black & Veatch\COA Walnut Creek WWTP Filter Improvements\MEP\F - CAD Files (Work in Progress)\WCWWTP-H-01.dwg Layout: MH-01 Plotted: 9/26/2014 8:29:27 AM

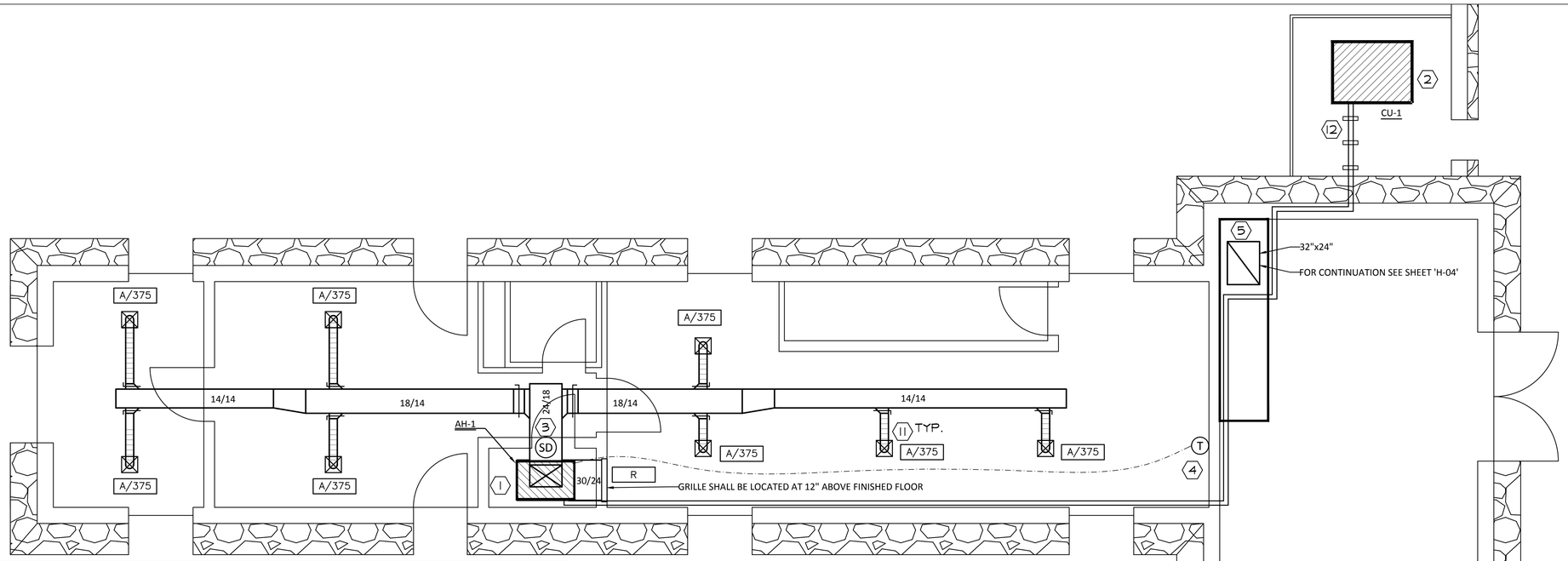

PLAN KEYED NOTES

1. VERTICAL AIR HANDLER UNIT SHALL BE MOUNTED ON 3" CONCRETE HOUSEKEEPING PAD WITH R.I.S. VIBRATION ISOLATORS AND SECONDARY DRAIN PAN. SECONDARY DRAIN PAN SHALL INCLUDE OVERFLOW SWITCH, MOUNTED TO PAN WITH STEEL SCREW, TO INTERRUPT CONTROL POWER TO SPLIT SYSTEM, BEFORE PAN OVERFLOWS. ROUTE INSULATED CONDENSATE DRAIN PIPING TO 1" ABOVE RIM OF EXISTING FLOOR DRAIN. REFER TO DETAIL 5 ON SHEET H-08 FOR MORE INFORMATION.
2. CONDENSING UNIT SHALL BE MOUNTED ON CONCRETE HOUSEKEEPING PAD WITH RUBBER-IN-SHEAR VIBRATION ISOLATION PADS. PAINT ALL EXPOSED PIPING INSULATION WITH 2 COATS UV RESISTANT PAINT PER MANUFACTURER'S REQUIREMENTS. SEAL PENETRATION INTO BUILDING WITH EXPANDABLE FOAM.
3. PROVIDE AND INSTALL DUCT SMOKE DETECTOR IN SUPPLY AIR DUCTWORK.
4. PROVIDE AND INSTALL THERMOSTAT ON WALL, MOUNTED AT 48" ABOVE FINISHED FLOOR.
5. PROVIDE AND INSTALL LOW PROFILE ROOF INTAKE FOR FILTER #2. ROUTE DUCT IN THRU FLOOR. SEE SHEET H-04 FOR CONTINUATION.
6. EXISTING CONDENSING UNIT TO BE DEMOLISHED. CONTRACTOR SHALL PROPERLY RECOVER AND DISPOSE OF ALL REFRIGERANT.
7. DEMOLISH EXISTING OUTDOOR AIR DUCTWORK AND ASSOCIATED AIR DEVICES FOR EXISTING AIR HANDLER IN PIPE GALLERY. REFER TO SHEET H-06 FOR MORE INFORMATION.
8. DEMOLISH EXISTING SUPPLY AIR DUCTWORK AND ASSOCIATED AIR DEVICES FROM EXISTING AIR HANDLER IN PIPE GALLERY. REFER TO SHEET H-06 FOR MORE INFORMATION.
9. DEMOLISH EXISTING RETURN AIR DUCTWORK AND ASSOCIATED AIR DEVICES FROM EXISTING AIR HANDLER IN PIPE GALLERY. REFER TO SHEET H-06 FOR MORE INFORMATION.
10. COORDINATE WITH GENERAL CONTRACTOR TO REVERSE DOOR SWING.
11. COORDINATE EXACT LOCATION IN CEILING GRID, IN FIELD.
12. SUPPORT PIPING ON UNISTRUT, MOUNTED TO CONCRETE PAD. CLAMP PIPING TO UNISTRUT WITH LOOSE FITTING CLAMP.

1 HVAC PLAN - FILTER BUILDING 1
SCALE: 1/4" = 1'-0"

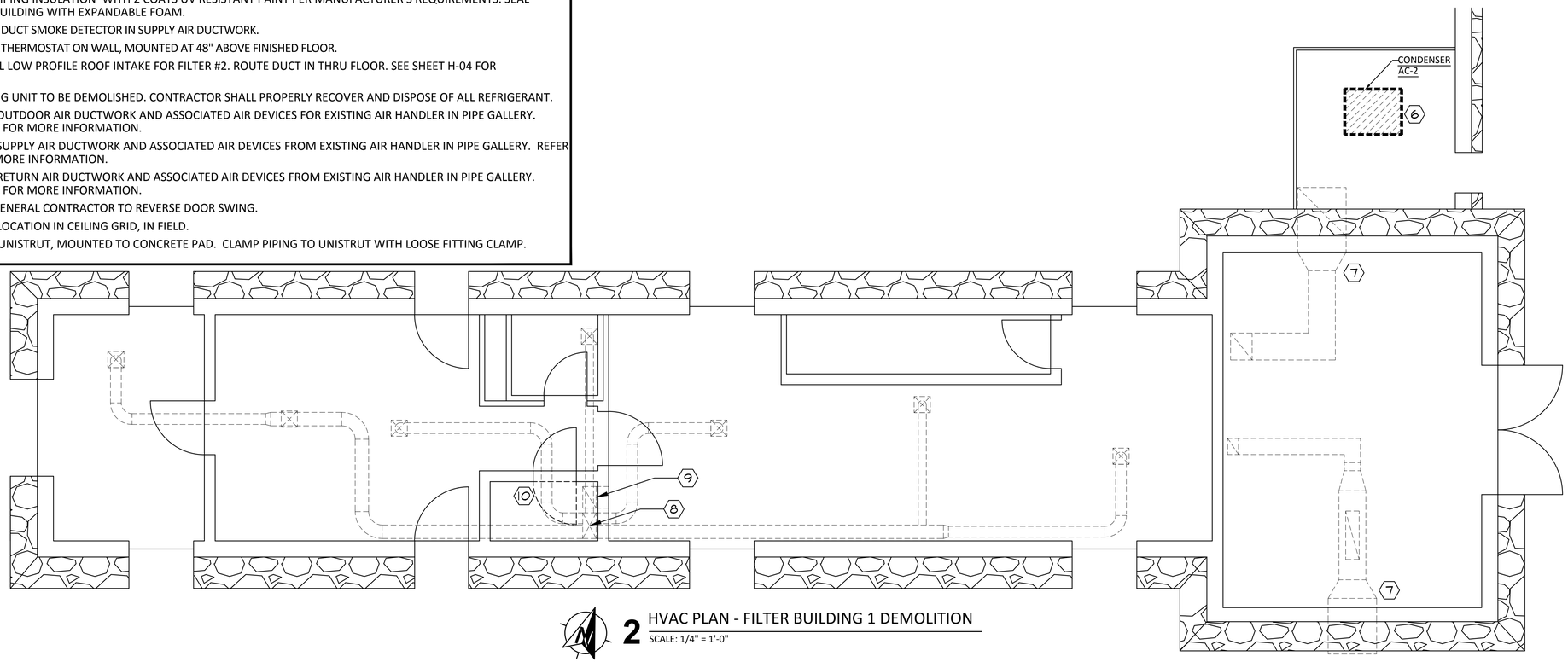

2 HVAC PLAN - FILTER BUILDING 1 DEMOLITION
SCALE: 1/4" = 1'-0"

NO.	DR	CK	DATE	DESCRIPTION

REVISIONS

BLACK & VEATCH
Building a world of difference.
Black & Veatch Corporation
Registration No. F-258
Austin, Texas
ENGOTECH
ENGINEERING CONSULTANTS
8500 Bluffstone Cove, B-103 • Austin, Texas 78759 • (512) 338-1101
TBPE Firm No. 14911 • www.engotech.engineering.com

STATE OF TEXAS
LYNN C. BROWN
55248
LICENSED PROFESSIONAL ENGINEER
09/26/2014

Austin Water
Walnut Creek WWTP - Tertiary Filter Rehabilitation Project
CIP ID No. 3023.025

HVAC
FILTER BUILDING NO. 1
DUCTWORK AND MECHANICAL UNITS PLAN

DESIGNED BY:	ZA
DRAWN BY:	ZA
REVIEWED BY:	DBM
APPROVED BY:	DBM
PROJECT NO.:	
DATE:	4/4/2014
SCALE:	AS SHOWN
REVISION:	
DISCIPLINE NO.	H-02
DWG. NO.	102 OF 273

FD168822 SAVED:
D168822 CYGNET ID:
File: J:\ACTIVE PROJECTS\Black & Veatch\COA Walnut Creek WWTP Filter Improvements\MEP\F - CAD Files (Work in Progress)\WCWWTP-H-02.dwg Layout: MH-02 Plotted: 9/26/2014 8:34:13 AM

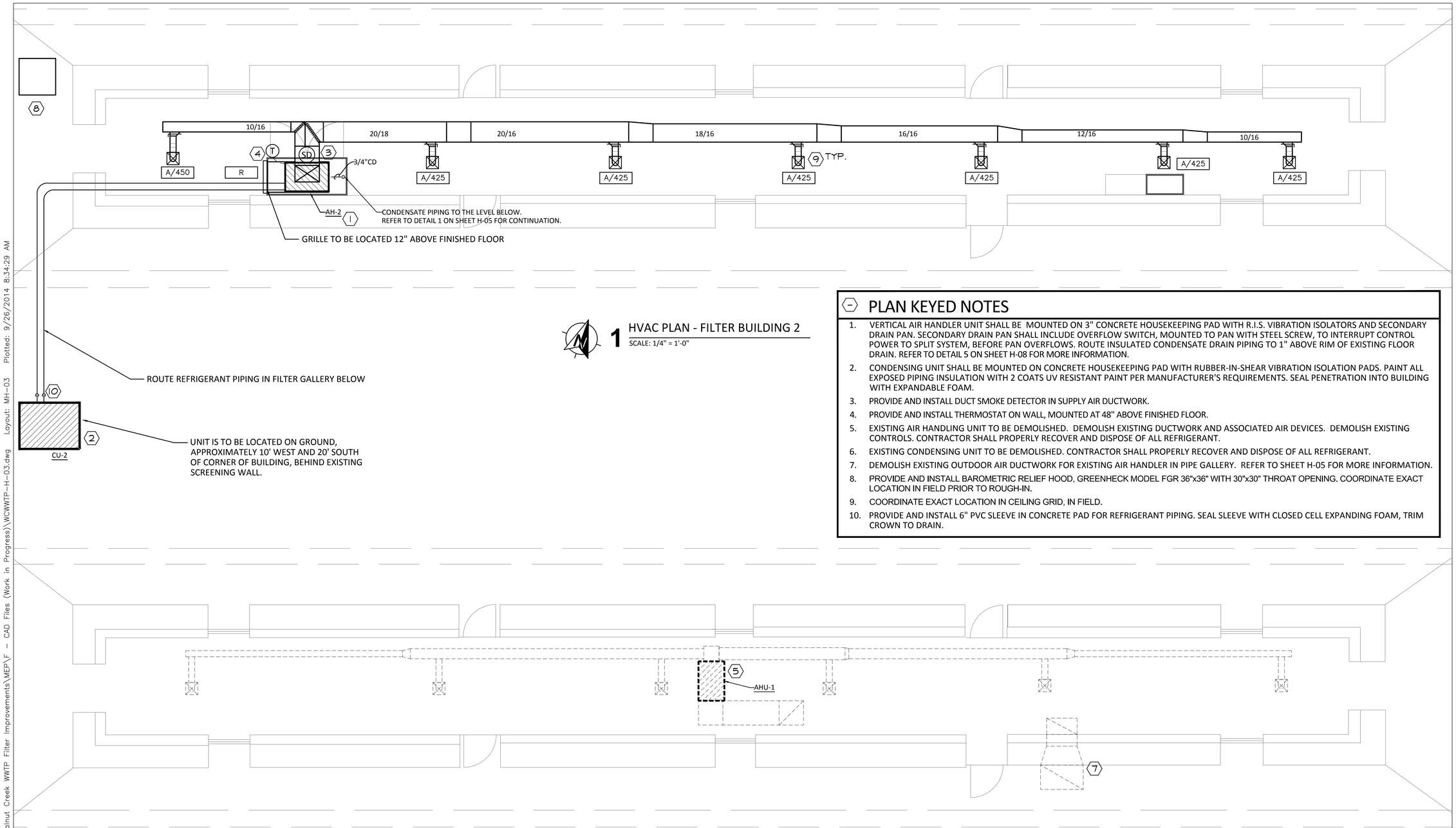

1 HVAC PLAN - FILTER BUILDING 2

SCALE: 1/4" = 1'-0"

PLAN KEYED NOTES

1. VERTICAL AIR HANDLER UNIT SHALL BE MOUNTED ON 3" CONCRETE HOUSEKEEPING PAD WITH R.I.S. VIBRATION ISOLATORS AND SECONDARY DRAIN PAN. SECONDARY DRAIN PAN SHALL INCLUDE OVERFLOW SWITCH, MOUNTED TO PAN WITH STEEL SCREW, TO INTERRUPT CONTROL POWER TO SPLIT SYSTEM, BEFORE PAN OVERFLOWS. ROUTE INSULATED CONDENSATE DRAIN PIPING TO 1" ABOVE RIM OF EXISTING FLOOR DRAIN. REFER TO DETAIL 5 ON SHEET H-08 FOR MORE INFORMATION.
2. CONDENSING UNIT SHALL BE MOUNTED ON CONCRETE HOUSEKEEPING PAD WITH RUBBER-IN-SHEAR VIBRATION ISOLATION PADS. PAINT ALL EXPOSED PIPING INSULATION WITH 2 COATS UV RESISTANT PAINT PER MANUFACTURER'S REQUIREMENTS. SEAL PENETRATION INTO BUILDING WITH EXPANDABLE FOAM.
3. PROVIDE AND INSTALL DUCT SMOKE DETECTOR IN SUPPLY AIR DUCTWORK.
4. PROVIDE AND INSTALL THERMOSTAT ON WALL, MOUNTED AT 48" ABOVE FINISHED FLOOR.
5. EXISTING AIR HANDLING UNIT TO BE DEMOLISHED. DEMOLISH EXISTING DUCTWORK AND ASSOCIATED AIR DEVICES. DEMOLISH EXISTING CONTROLS. CONTRACTOR SHALL PROPERLY RECOVER AND DISPOSE OF ALL REFRIGERANT.
6. EXISTING CONDENSING UNIT TO BE DEMOLISHED. CONTRACTOR SHALL PROPERLY RECOVER AND DISPOSE OF ALL REFRIGERANT.
7. DEMOLISH EXISTING OUTDOOR AIR DUCTWORK FOR EXISTING AIR HANDLER IN PIPE GALLERY. REFER TO SHEET H-05 FOR MORE INFORMATION.
8. PROVIDE AND INSTALL BAROMETRIC RELIEF HOOD, GREENHECK MODEL FGR 36"x36" WITH 30"x30" THROAT OPENING. COORDINATE EXACT LOCATION IN FIELD PRIOR TO ROUGH-IN.
9. COORDINATE EXACT LOCATION IN CEILING GRID, IN FIELD.
10. PROVIDE AND INSTALL 6" PVC SLEEVE IN CONCRETE PAD FOR REFRIGERANT PIPING. SEAL SLEEVE WITH CLOSED CELL EXPANDING FOAM, TRIM CROWN TO DRAIN.

2 HVAC PLAN - FILTER BUILDING 2 DEMOLITION

SCALE: 1/4" = 1'-0"

NO.	DR	CK	DATE	DESCRIPTION

REVISIONS

BLACK & VEATCH
Building a world of difference.
Black & Veatch Corporation
Registration No. F-258
Austin, Texas
ENGOTECH
ENGINEERING CONSULTANTS
8300 Bluffstone Cove, B-103 • Austin, Texas 78759 • (512) 338-1101
TBPE Firm No. 14814 • www.engineeringconsultants.com

STATE OF TEXAS
LYNN C. BROWN
55248
LICENSED
PROFESSIONAL ENGINEER
09/26/2014

Austin WATER
Walnut Creek WWTP - Tertiary Filter Rehabilitation Project
CIP ID No. 3023.025

HVAC
FILTER BUILDING NO. 2
DUCTWORK AND MECHANICAL UNITS PLAN

DESIGNED BY:	ZA
DRAWN BY:	ZA
REVIEWED BY:	DBM
APPROVED BY:	DBM
PROJECT NO.:	
DATE:	4/4/2014
SCALE:	AS SHOWN
REVISION:	
DISCIPLINE NO.	H-03
DWG. NO.	103 OF 273

F0166622 SAVED:
D168622 CYGNET ID:
File: J:\ACTIVE PROJECTS\Black & Veatch\COA Walnut Creek WWTP Filter Improvements\MEP\F - CAD Files (Work in Progress)\WCWWTP-H-03.dwg Layout: MH-03 Plotted: 9/26/2014 8:34:29 AM

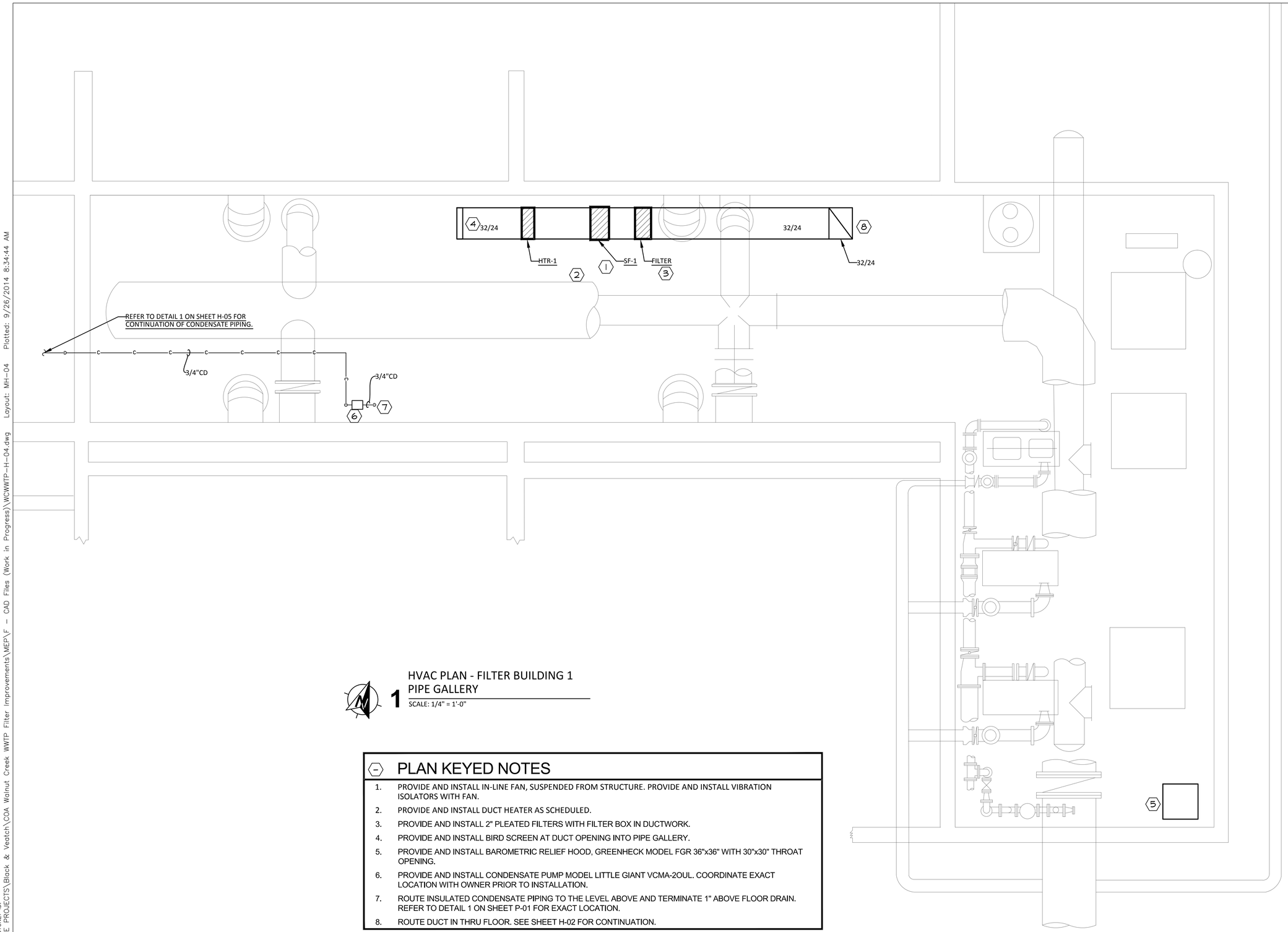

1 HVAC PLAN - FILTER BUILDING 1 PIPE GALLERY

SCALE: 1/4" = 1'-0"

PLAN KEYED NOTES

1. PROVIDE AND INSTALL IN-LINE FAN, SUSPENDED FROM STRUCTURE. PROVIDE AND INSTALL VIBRATION ISOLATORS WITH FAN.
2. PROVIDE AND INSTALL DUCT HEATER AS SCHEDULED.
3. PROVIDE AND INSTALL 2" PLEATED FILTERS WITH FILTER BOX IN DUCTWORK.
4. PROVIDE AND INSTALL BIRD SCREEN AT DUCT OPENING INTO PIPE GALLERY.
5. PROVIDE AND INSTALL BAROMETRIC RELIEF HOOD, GREENHECK MODEL FGR 36"x36" WITH 30"x30" THROAT OPENING.
6. PROVIDE AND INSTALL CONDENSATE PUMP MODEL LITTLE GIANT VCMA-2OUL. COORDINATE EXACT LOCATION WITH OWNER PRIOR TO INSTALLATION.
7. ROUTE INSULATED CONDENSATE PIPING TO THE LEVEL ABOVE AND TERMINATE 1" ABOVE FLOOR DRAIN. REFER TO DETAIL 1 ON SHEET P-01 FOR EXACT LOCATION.
8. ROUTE DUCT IN THRU FLOOR. SEE SHEET H-02 FOR CONTINUATION.

NO.	DR	CK	DATE	DESCRIPTION

REVISIONS

BLACK & VEATCH
Building a world of difference.
Black & Veatch Corporation
Registration No. F-258
Austin, Texas

ENGOTECH
ENGINEERING CONSULTANTS
8500 Bluffstone Cove, B-103 • Austin, Texas 78759 • (512) 338-1101
BME Firm No. 1101 • www.engotech-engineering.com

STATE OF TEXAS
LYNN C. BROWN
55248
LICENSED
PROFESSIONAL ENGINEER
09/26/2014

Austin WATER
Walnut Creek WWTP - Tertiary Filter Rehabilitation Project
CIP ID No. 3023.025

HVAC
PIPE GALLERY - FILTER BUILDING 1
DUCTWORK AND MECHANICAL UNITS PLAN

DESIGNED BY:	ZA
DRAWN BY:	ZA
REVIEWED BY:	DBM
APPROVED BY:	DBM
PROJECT NO.:	
DATE:	4/4/2014
SCALE:	AS SHOWN
REVISION:	
DISCIPLINE NO.	H-04
DWG. NO.	104 OF 273

Plotted: 9/26/2014 8:34:44 AM Layout: MH-04
File: J:\ACTIVE PROJECTS\Black & Veatch\COA Walnut Creek WWTP Filter Improvements\MEP\F - CAD Files (Work in Progress)\WCWWTP-H-04.dwg
SAVED: CYGNET ID: D168622 FD168622

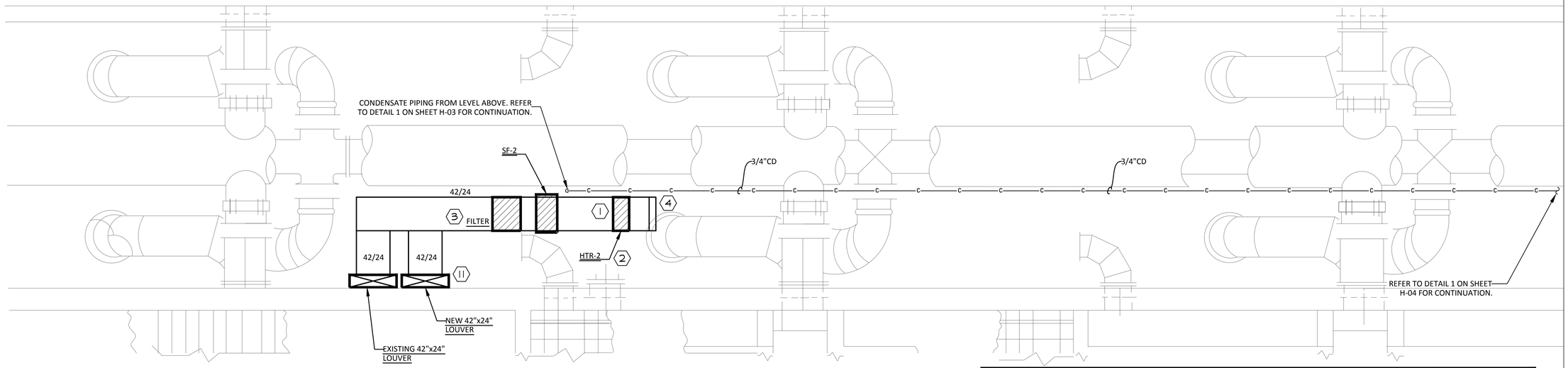

1 HVAC PLAN - FILTER BUILDING 2
PIPE GALLERY
SCALE: 1/4" = 1'-0"

PLAN KEYED NOTES

1. PROVIDE AND INSTALL IN-LINE FAN, SUSPENDED FROM STRUCTURE. PROVIDE AND INSTALL VIBRATION ISOLATORS WITH FAN.
2. PROVIDE AND INSTALL DUCT HEATER AS SCHEDULED.
3. PROVIDE AND INSTALL 2" PLEATED FILTERS WITH FILTER BOX IN DUCTWORK.
4. PROVIDE AND INSTALL BIRD SCREEN AT DUCT OPENING INTO PIPE GALLERY.
5. EXISTING AIR HANDLING UNIT TO BE DEMOLISHED. DEMOLISH EXISTING DUCTWORK AND ASSOCIATED AIR DEVICES. DEMOLISH EXISTING CONTROLS. CONTRACTOR SHALL PROPERLY RECOVER AND DISPOSE OF ALL REFRIGERANT.
6. DEMOLISH EXISTING OUTDOOR AIR DUCTWORK FROM FILTER BUILDING ABOVE SERVING EXISTING AIR HANDLER. REFER TO SHEET H-03 FOR MORE INFORMATION.
7. DEMOLISH EXISTING HEATING SUPPLY AND HEATING RETURN PIPING.
8. DEMOLISH EXISTING HEATING SUPPLY AND HEATING RETURN PIPING. REFER TO SHEET H-06 FOR CONTINUATION OF PIPING.
9. EXISTING HVAC UNIT TO BE DEMOLISHED. DEMOLISH EXISTING PIPING AND ASSOCIATED DEVICES.
10. CAP AND SEAL PIPING IN WALL.
11. PROVIDE AND INSTALL LOUVER IN WALL TO MATCH EXISTING.

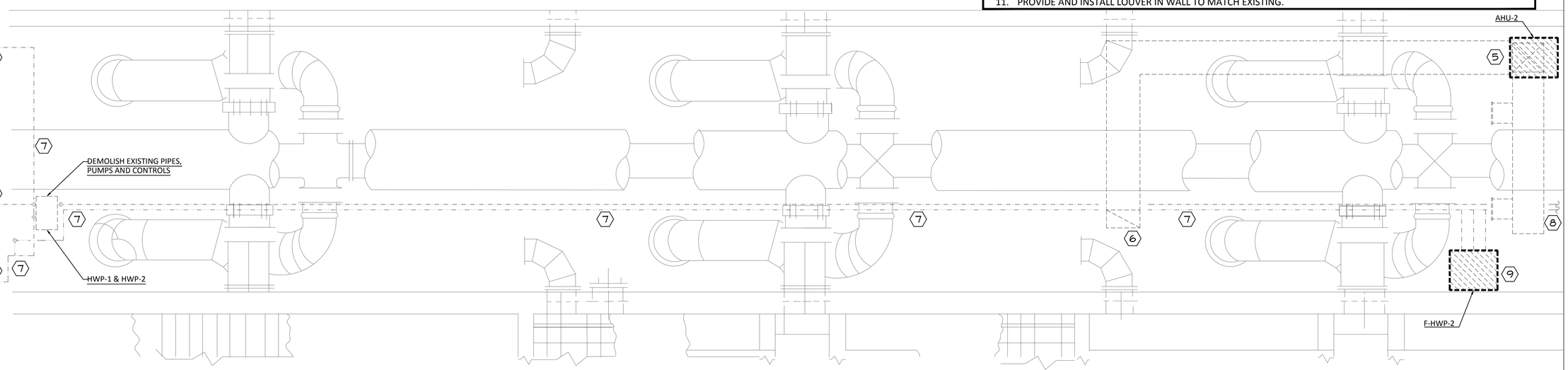

1 HVAC PLAN - FILTER BUILDING 2
PIPE GALLERY DEMOLITION
SCALE: 1/4" = 1'-0"

NO.	DR	CK	DATE	DESCRIPTION

REVISIONS

BLACK & VEATCH
Building a world of difference.
Black & Veatch Corporation
Registration No. F-258
Austin, Texas

ENCOTECH
ENGINEERING CONSULTANTS
8500 Bluffstone Cove, B-103 • Austin, Texas 78759 • (512) 338-1101
BBF Firm No. 14141 • www.encotechengineering.com

STATE OF TEXAS
LYNN C. BROWN
55248
LICENSED PROFESSIONAL ENGINEER
09/26/2014

Walnut Creek WWTP - Tertiary Filter Rehabilitation Project
CIP ID No. 3023.025
Austin WATER

HVAC
PIPE GALLERY - FILTER BUILDING 2
DUCTWORK AND MECHANICAL UNITS PLAN

DESIGNED BY:	ZA
DRAWN BY:	ZA
REVIEWED BY:	DBM
APPROVED BY:	DBM
PROJECT NO.:	
DATE:	4/4/2014
SCALE:	AS SHOWN
REVISION:	
DISCIPLINE NO.	H-05
DWG. NO.	105 OF 273

F0168622 SAVED:
D168622 CYGNET ID:
File: J:\ACTIVE PROJECTS\Black & Veatch\COA Walnut Creek WWTP Filter Improvements\MEP\F - CAD Files (Work in Progress)\WCWWTP-H-05.dwg Layout: MH-05 Plotted: 9/26/2014 8:34:57 AM

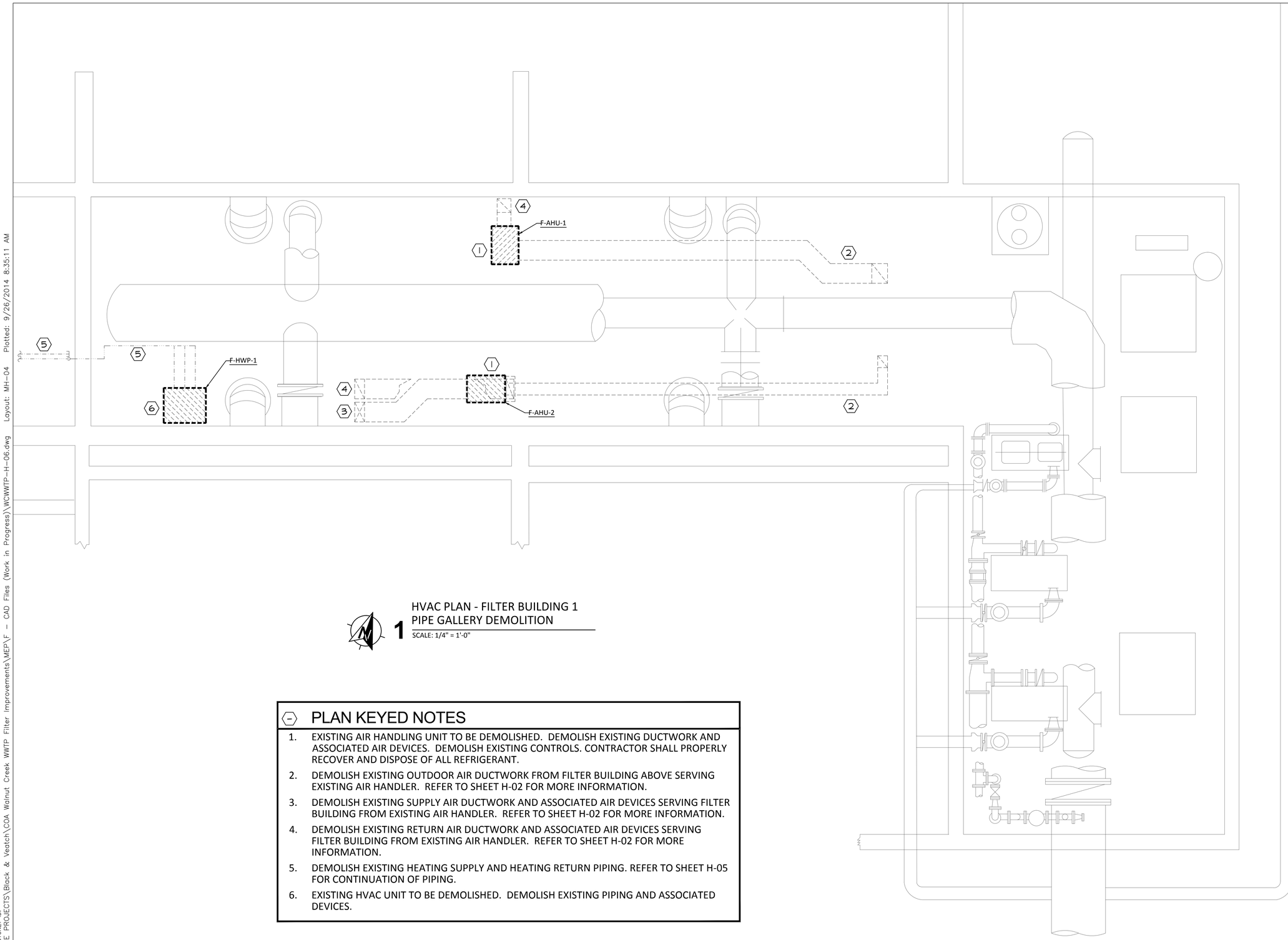

1 HVAC PLAN - FILTER BUILDING 1 PIPE GALLERY DEMOLITION

SCALE: 1/4" = 1'-0"

PLAN KEYED NOTES

1. EXISTING AIR HANDLING UNIT TO BE DEMOLISHED. DEMOLISH EXISTING DUCTWORK AND ASSOCIATED AIR DEVICES. DEMOLISH EXISTING CONTROLS. CONTRACTOR SHALL PROPERLY RECOVER AND DISPOSE OF ALL REFRIGERANT.
2. DEMOLISH EXISTING OUTDOOR AIR DUCTWORK FROM FILTER BUILDING ABOVE SERVING EXISTING AIR HANDLER. REFER TO SHEET H-02 FOR MORE INFORMATION.
3. DEMOLISH EXISTING SUPPLY AIR DUCTWORK AND ASSOCIATED AIR DEVICES SERVING FILTER BUILDING FROM EXISTING AIR HANDLER. REFER TO SHEET H-02 FOR MORE INFORMATION.
4. DEMOLISH EXISTING RETURN AIR DUCTWORK AND ASSOCIATED AIR DEVICES SERVING FILTER BUILDING FROM EXISTING AIR HANDLER. REFER TO SHEET H-02 FOR MORE INFORMATION.
5. DEMOLISH EXISTING HEATING SUPPLY AND HEATING RETURN PIPING. REFER TO SHEET H-05 FOR CONTINUATION OF PIPING.
6. EXISTING HVAC UNIT TO BE DEMOLISHED. DEMOLISH EXISTING PIPING AND ASSOCIATED DEVICES.

NO.	DR	CK	DATE	DESCRIPTION

REVISIONS

BLACK & VEATCH
Building a world of difference.
Black & Veatch Corporation
Registration No. F-258
Austin, Texas
ENGOTECH
ENGINEERING CONSULTANTS
8500 Bluffstone Cove, B-103 • Austin, Texas 78759 • (512) 338-1101
TBPE Firm No. 14911 • www.engotech.engineering.com

STATE OF TEXAS
LYNN C. BROWN
55248
LICENSED PROFESSIONAL ENGINEER
09/26/2014

Austin WATER
Walnut Creek WWTP - Tertiary Filter Rehabilitation Project
CIP ID No. 3023.025

HVAC
PIPE GALLERY - FILTER BUILDING 1
DUCTWORK AND MECHANICAL UNITS PLAN

DESIGNED BY:	ZA
DRAWN BY:	ZA
REVIEWED BY:	DBM
APPROVED BY:	DBM
PROJECT NO.:	
DATE:	4/4/2014
SCALE:	AS SHOWN
REVISION:	
DISCIPLINE NO.	H-06
DWG. NO.	106 OF 273

FD168622 SAVED:
D168622 CYGNET ID:
File: J:\ACTIVE PROJECTS\Black & Veatch\COA Walnut Creek WWTP Filter Improvements\MEP\F - CAD Files (Work in Progress)\WCWWTP-H-06.dwg Layout: MH-04 Plotted: 9/26/2014 8:35:11 AM

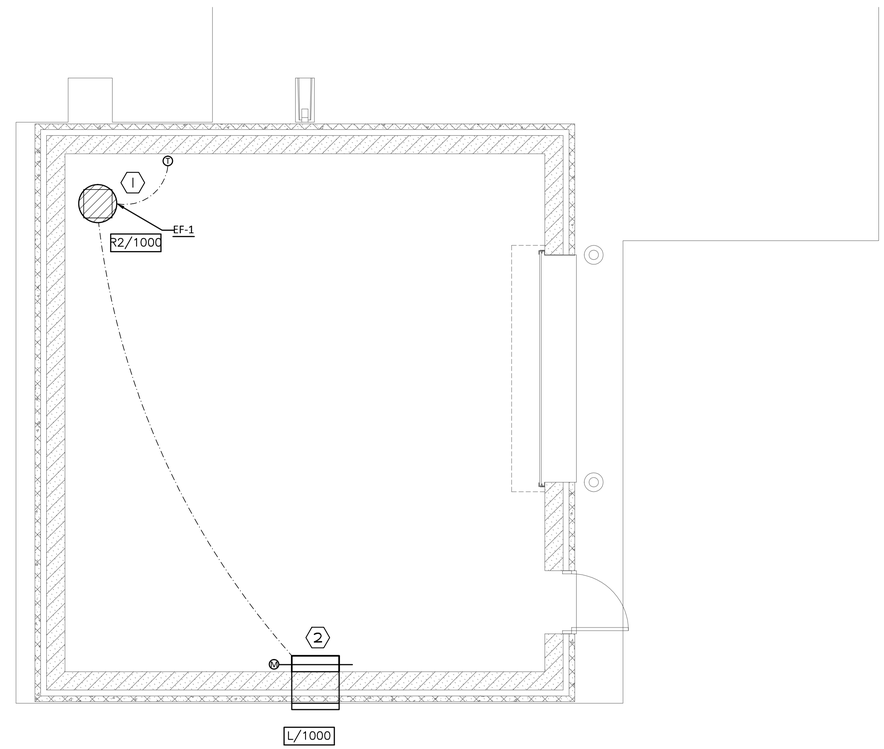

1 HVAC PLAN - BLOWER BUILDING

SCALE: 1/4" = 1'-0"

PLAN KEYED NOTES

1. PROVIDE AND INSTALL ROOF FAN MOUNTED ON ROOF CURB, TO BE CONTROLLED BY THERMOSTAT. PROVIDE AND INSTALL NEW RETURN AIR GRILLE IN CEILING WITH 16"X14" EXHAUST AIR DUCT TO FAN. COORDINATE WITH ROOFING CONTRACTOR TO SEAL ROOF CURB AT CONNECTION TO ROOFING MATERIAL.
2. PROVIDE AND INSTALL DAMPER WITH MOTORIZED LOUVER. DAMPER SHALL NORMALLY BE CLOSED, AND SHALL BE INTERLOCKED WITH FAN. WHEN FAN IS OPERATING, DAMPER SHALL OPEN FULL. MOUNT DAMPER IN DUCT SLEEVE, SAME SIZE AS LOUVER. PROVIDE AND INSTALL BIRDSCREEN AT LOUVER.

NO.	DR	CK	DATE	DESCRIPTION

REVISIONS

BLACK & VEATCH
Building a world of difference.
Black & Veatch Corporation
Registration No. F-258
Austin, Texas

ENGOTECH
ENGINEERING CONSULTANTS
8500 Bluffstone Cove, B-103 • Austin, Texas 78759 • (512) 338-1101
TBPE Firm No. 14911 • www.engotech-engineering.com

STATE OF TEXAS
LYNN C. BROWN
55248
LICENSED PROFESSIONAL ENGINEER
09/26/2014

Austin WATER

Walnut Creek WWTP - Tertiary Filter Rehabilitation Project

CIP ID No. 3023.025

HVAC
AIR BLOWER
BUILDING VENTILATION PLAN

DESIGNED BY:	ZA
DRAWN BY:	ZA
REVIEWED BY:	DBM
APPROVED BY:	DBM
PROJECT NO.:	
DATE:	4/4/2014
SCALE:	AS SHOWN
REVISION:	
DISCIPLINE NO.	H-07
DWG. NO.	107 OF 273

FD168622 SAVED:
D168622 CYONET ID:
File: J:\ACTIVE PROJECTS\Black & Veatch\COA Walnut Creek WWTP Filter Improvements\MEP\F - CAD Files (Work in Progress)\WCWWTP-H-07.dwg Layout: MH-06 Plotted: 9/26/2014 8:35:27 AM

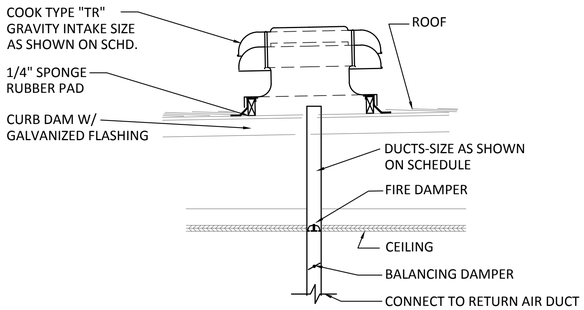

1 OUTSIDE AIR VENTING
NOT TO SCALE

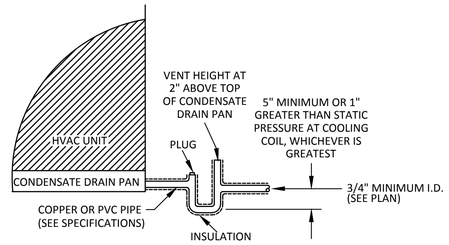

NOTE: ROUTE DRAIN TO AN APPROVED RECEPTOR, SUCH AS A DRAIN TAILPIECE AT NEAREST LAVATORY OR MOP SINK. SEE PLAN.

2 CONDENSATE DRAIN DETAIL
NOT TO SCALE

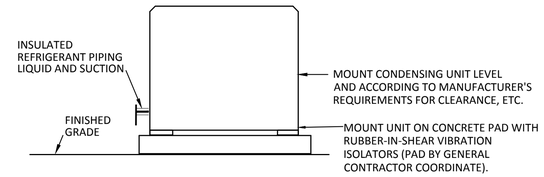

REFRIGERANT PIPING INSULATION NOTES
1. ALL CLOSED CELL POLYMER INSULATION SHALL HAVE GLUED JOINTS WITH COMPLETE COVERAGE OF ALL METAL SURFACES. ALL INSULATION EXPOSED TO EXTERIOR SHALL BE PAINTED WITH TWO COATS AS PER INSULATION MANUFACTURERS SPECIFICATIONS.
2. PROVIDE INSULATION SHIELD AT ALL SUPPORTS.

3 CONDENSING UNIT DETAIL
NOT TO SCALE

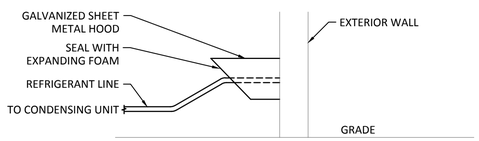

4 REFRIGERANT PENETRATION AT WALL
NOT TO SCALE

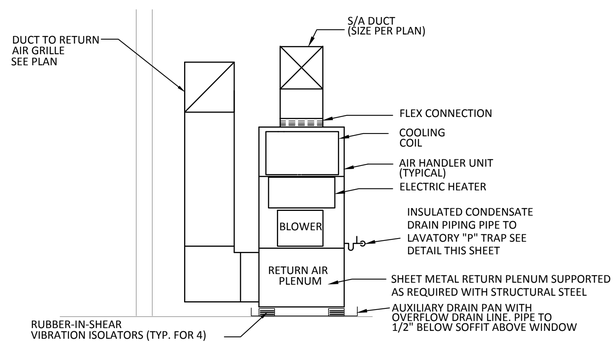

5 AIR HANDLER UNIT DETAIL
NOT TO SCALE

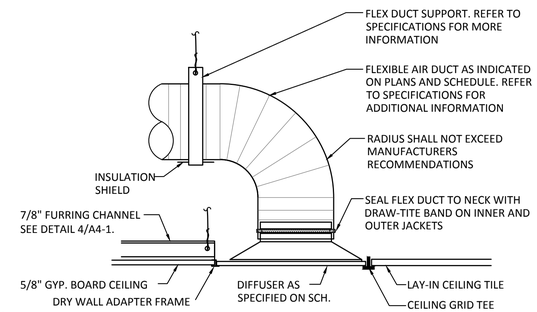

6 TYPICAL SUPPLY DIFFUSER
NOT TO SCALE

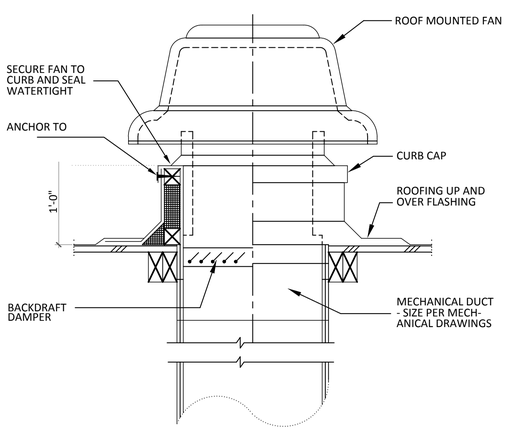

7 ROOF MOUNTED FAN DETAIL
NOT TO SCALE

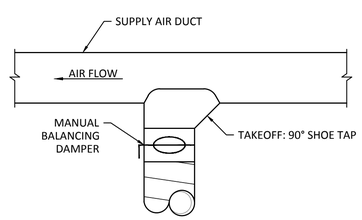

8 BRANCH DUCT DETAIL
NOT TO SCALE

NO.	DR	CK	DATE	DESCRIPTION

REVISIONS

BLACK & VEATCH
Building a world of difference.
Black & Veatch Corporation
Registration No. F-258
Austin, Texas
ENGOTECH
ENGINEERING CONSULTANTS
8500 Bluffstone Cove, B-103 • Austin, Texas 78759 • (512) 338-1101
BPE Firm No. 14141 • www.engineering-consulting.com

STATE OF TEXAS
LYNN C. BROWN
55248
LICENSED PROFESSIONAL ENGINEER
09/26/2014

Walnut Creek WWTP - Tertiary Filter Rehabilitation Project
CIP ID No. 3023.025

Austin WATER

HVAC DETAILS

DESIGNED BY:	ZA
DRAWN BY:	ZA
REVIEWED BY:	DBM
APPROVED BY:	DBM
PROJECT NO.:	
DATE:	4/4/2014
SCALE:	AS SHOWN
REVISION:	
DISCIPLINE NO.	H-08
DWG. NO.	108 OF 273

SAVED:
CYGNET ID:
F0168622
D168622
File: J:\ACTIVE PROJECTS\Black & Veatch\COA Walnut Creek WWTP Filter Improvements\MEP\F - CAD Files (Work in Progress)\WCWWTP-H-08.dwg Layout: MH-08 Plotted: 9/26/2014 8:35:43 AM

AIR HANDLER UNIT SCHEDULE

UNIT	AIR CAPACITY				UNIT TYPE	COOLING CAPACITY						ELECTRICAL DATA			EER	UNIT		
	TOTAL CFM	O/A CFM	MOTOR HP	E.S.P.		ENTER AIR		AMBIENT		MBH		MCA	MOCP	VOLT/ PHASE		MAKE	AIR HANDLER	ELECTRIC HEATER
						D.B.	W.B.	D.B.	W.B.	TOTAL	SENSIBLE							
AH-1	3000	0	2.4	0.6	VERTICAL	80	67	105	67	90.0	73.2	3.3	15	460/1Ø	10.6	CARRIER	40RM008	NOTE 4
AH-2	3000	0	2.4	0.6	VERTICAL	80	67	105	67	90.0	73.2	3.3	15	460/1Ø	10.6	CARRIER	40RM008	NOTE 4

NOTES:
1. EACH UNIT TO BE MOUNTED USING VIBRATION ISOLATORS.
2. ALL UNITS SHALL INCLUDE COOLING ONLY THERMOSTAT, HONEYWELL T-7300 OR APPROVED EQUIVALENT.
3. PROVIDE 2" PLEATED FILTERS FOR ALL UNITS, MERV 8.
4. UNITS ARE COOLING ONLY.

FAN SCHEDULE

UNIT	AREA SERVED	AIR CAPACITY			ELECTRICAL DATA		LOCATION	DRIVE	INTERLOCK	UNIT DETAIL				
		TOTAL CFM	S.P.	RPM	POWER (HP)	VOLT/ PHASE				MAKE	MODEL	TYPE	WEIGHT	FEATURES (NOTE 1)
SF-1	FILTER BUILDING 1 PIPE VAULT	6110	.5	1586	3	460/3Ø	DUCT	BELT	CONTINUOUS	GREENHECK	BSQ-180-30	INLINE FAN	267	BDD, BS, DISC
SF-2	FILTER BUILDING 2 PIPE VAULT	7150	.5	833	1.5	460/3Ø	DUCT	BELT	CONTINUOUS	GREENHECK	BSQ-240-15	INLINE FAN	387	BDD, BS, DISC
EF-1	BLOWER BUILDING	1000	.5	1725	0.25	120/1Ø	DUCT	DIRECT	THERMOSTAT	GREENHECK	G-099-A	CENTRIFUGAL ROOF DOWNBLAST FAN	46	BDD, BS, DISC

NOTES:
1. FEATURE NOTES: BS = BIRD SCREEN
DISC = DISCONNECT SWITCH
BDD = BACKDRAFT DAMPER

OUTDOOR CONDENSING UNIT / HEAT PUMP SCHEDULE

UNIT	NOMINAL CAPACITY (TONS)	ELECTRICAL DATA			EER	UNIT		
		MCA	MOCP	VOLT/ PHASE		MAKE	MODEL	WEIGHT (LBS)
CU-1	7.5	17.4	30	460/3Ø	12.7	CARRIER	38ARZ008	383
CU-2	7.5	17.4	30	460/3Ø	12.7	CARRIER	38ARZ008	383

NOTES:
1. PROVIDE DISCONNECT, TO BE FIELD MOUNTED BY ELECTRICAL CONTRACTOR.
2. EACH UNIT TO BE PROVIDED WITH LOW AMBIENT KIT, FOR OPERATION DOWN TO 40 DegF.
3. COMPRESSOR SHALL BE PROVIDED WITH 10 YEAR WARRANTY.

LOUVER SCHEDULE

TAG	NOMINAL SIZE	FREE AREA (FT2)	TYPE	MAKE	MODEL
L	30"x24"	2.18	DUAL DRAINAGE BLADE INTAKE LOUVER	EDJ	401

NOTES:
1. LOUVER SHALL BE SPACED TO FIT WITHIN CMU BLOCK WALL, WITH BOTTOM OF LOUVER 8" ABOVE GRADE. COORDINATE EXACT LOCATION AND MOUNTING HEIGHT OF LOUVER WITH ARCHITECTURAL ELEVATION.
2. COORDINATE FINISH WITH ARCHITECT.
3. AIR QUANTITIES AS NOTED ON MECHANICAL DRAWINGS.
4. SPECIFIED LOUVER IS GREENHECK. RUSKIN, ARRW UNIT AND AMERICAN WARMING AND VENTILATING ARE CONSIDERED APPROVED ALTERNATES.

DIFFUSER AND GRILLE SCHEDULE

TAG	NOMINAL SIZE	MOUNTING TYPE	TYPE	UNIT	
				MAKE	MODEL
A	24" x 24"	LAY-IN	FOUR WAY SUPPLY DIFFUSER WITH ROUND NECK ADAPTOR (WITH TYPE 3 O.B. DAMPER) SEE FLEXIBLE DUCT SCHEDULE FOR ROUND DUCT ADAPTER NECK SIZE	PRICE	22"x22"/24"x24"/AMD/ 36/4A/B12 SR3 ROUND NECK ADAPTOR
R	32" x 26"	SURFACE	LOUVERED FACE RETURN AIR GRILLE	PRICE	32"x26"/630/ F/L/A/B12
R2	18" x 18"	SURFACE	LOUVERED FACE RETURN AIR GRILLE	PRICE	18"x18"/630/ F/L/A/B12

NOTES:
1. COORDINATE EXACT LOCATION OF DIFFUSERS WITH ARCHITECTURAL REFLECTED CEILING PLAN.
2. NECK SIZES SHALL BE SIZED AS PER FLEX DUCT SCHEDULE, EXCEPT RETURN GRILLES, WHICH HAVE NOMINAL SIZE NECK.
3. AIRFLOW QUANTITIES AS NOTED ON MECHANICAL DRAWINGS.

DUCT HEATER SCHEDULE

UNIT	CFM	ELECTRIC HEAT		ELECTRICAL REQUIREMENT		UNIT				
		MBH	OUTPUT	AMPS.	VOLT/ PHASE	TYPE	MAKE	MODEL	WEIGHT	FEATURES
HTR-1	6110	170.65	50 KW	60.2	480/3Ø	ELECTRICAL DUCT HEATER	MARKEL	480-3-HF-50KW 32WX24H-24-3-HL-G	- LBS	-
HTR-2	7150	194.54	57 KW	68.6	480/3Ø	ELECTRICAL DUCT HEATER	MARKEL	480-3-HF-57KW 16WX16H-24-3-HR-G	- LBS	-

NOTES:
DUCT HEATER SHALL BE CONFIGURED FOR CONTROL FROM EXISTING THERMOSTAT.

NO.	DR	CK	DATE	DESCRIPTION

REVISIONS

BLACK & VEATCH
Building a world of difference.
Black & Veatch Corporation
Registration No. F-258
Austin, Texas
ENGOTECH
ENGINEERING CONSULTANTS
8500 Bluffstone Cove, B-103 • Austin, Texas 78759 • (512) 338-1101
TBPE Firm No. 14141 • www.engineeringconsultants.com

STATE OF TEXAS
LYNN C. BROWN
55248
LICENSED PROFESSIONAL ENGINEER
09/26/2014

Austin WATER
Walnut Creek WWTP - Tertiary Filter Rehabilitation Project
CIP ID No. 3023.025

HVAC SCHEDULES

DESIGNED BY:	ZA
DRAWN BY:	ZA
REVIEWED BY:	DBM
APPROVED BY:	DBM
PROJECT NO.:	
DATE:	4/4/2014
SCALE:	AS SHOWN
REVISION:	
DISCIPLINE NO.	H-09
DWG. NO.	109 OF 273

FD168622 SAVED:
D168622 CYGNET ID:
File: J:\ACTIVE PROJECTS\Black & Veatch\COA Walnut Creek WWTP Filter Improvements\MEP\F - CAD Files (Work in Progress)\WCWWTP-H-09.dwg Layout: MH-09 Plotted: 9/26/2014 8:35:59 AM

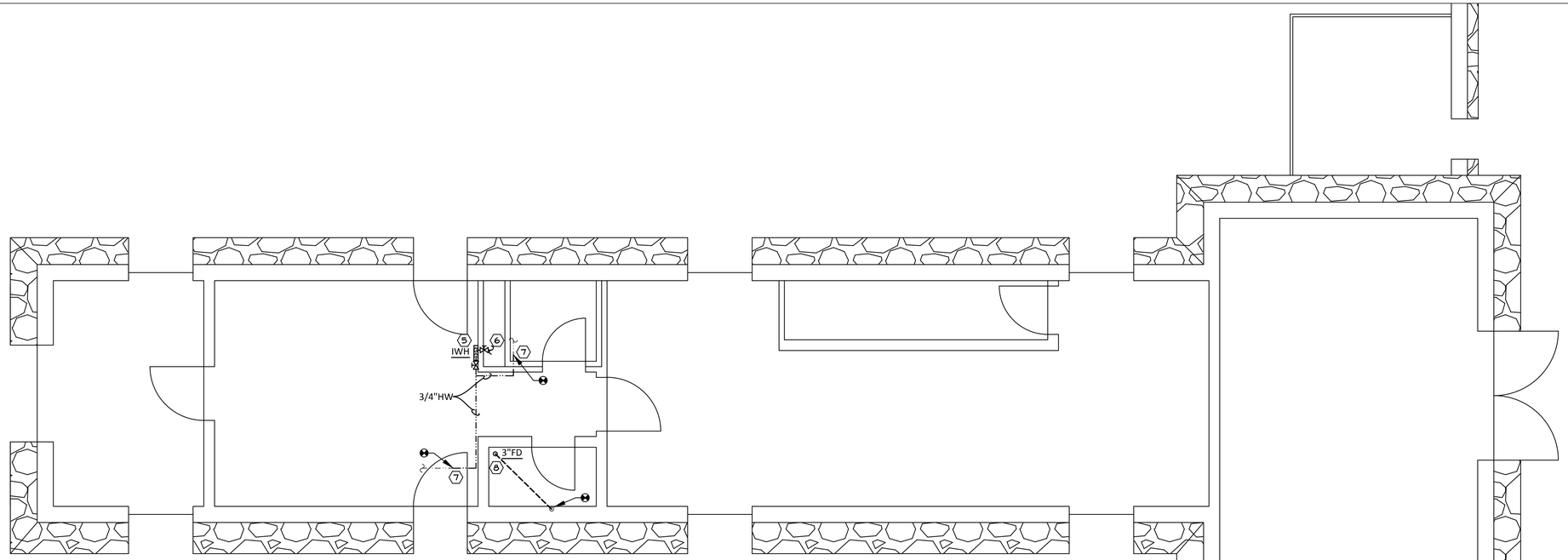

PLAN KEYED NOTES

1. DEMOLISH EXISTING WATER HEATER. DEMOLISH ALL PIPING PREVIOUSLY SERVING WATER HEATER. CAP AND SEAL ALL UNUSED PIPING ABOVE CEILING.
2. EXISTING HOT WATER PIPING TO REMAIN.
3. EXISTING COLD WATER PIPING TO REMAIN.
4. DEMOLISH FLOOR DRAIN BACK TO VENT AT WALL. REFER TO DETAIL 1 ON THIS SHEET FOR NEW WORK.
5. PROVIDE AND INSTALL NEW TANKLESS WATER HEATER ON WALL. CONFIRM LOCATION WITH OWNER PRIOR TO ROUGH-IN.
6. PROVIDE AND INSTALL NEW COLD WATER PIPING AND CONNECT TO EXISTING COLD WATER PIPING. VERIFY EXACT LOCATION IN FIELD.
7. PROVIDE AND INSTALL NEW HOT WATER PIPING AND CONNECT TO EXISTING HOT WATER PIPING. VERIFY EXACT LOCATION IN FIELD.
8. PROVIDE AND INSTALL NEW FLOOR DRAIN AND TRAP. CONNECT TO EXISTING WASTE WATER AND VENT PIPING. PROVIDE AND INSTALL TRAP PRIMER WITH ACCESSIBLE SHUT-OFF VALVE IN WALL.

1 PLUMBING PLAN - FILTER BUILDING 1
SCALE: 1/4" = 1'-0"

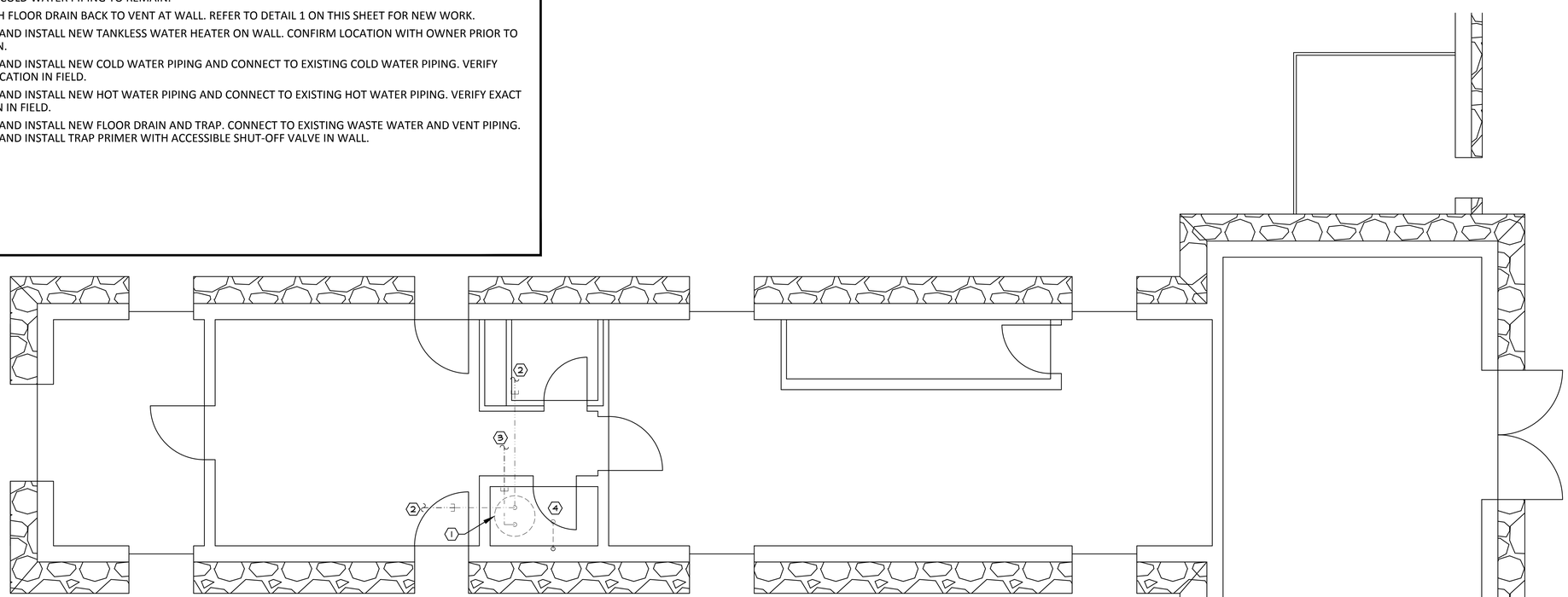

2 PLUMBING PLAN - FILTER BUILDING 1 DEMOLITION
SCALE: 1/4" = 1'-0"

NO.	DR	CK	DATE	DESCRIPTION

REVISIONS

BLACK & VEATCH
Building a world of difference.
Black & Veatch Corporation
Registration No. F-258
Austin, Texas

ENGOTECH
ENGINEERING CONSULTANTS
8500 Bluffstone Cove, B-103 • Austin, Texas 78759 • (512) 338-1101
TBPE Firm No. 14911 • www.engotech-engineering.com

STATE OF TEXAS
LYNN C. BROWN
55248
LICENSED PROFESSIONAL ENGINEER
09/26/2014

Austin WATER
Walnut Creek WWTP - Tertiary Filter Rehabilitation Project
CIP ID No. 3023.025

PLUMBING PLAN
FILTER BUILDING
FLOOR DRAINS AND WATER HEATER

DESIGNED BY:	ZA
DRAWN BY:	ZA
REVIEWED BY:	DBM
APPROVED BY:	DBM
PROJECT NO.:	
DATE:	4/4/2014
SCALE:	AS SHOWN
REVISION:	
DISCIPLINE NO.	P-01
DWG. NO.	110 OF 273

FD168622 SAVED:
D168622 CYGNET ID:
File: J:\ACTIVE PROJECTS\Black & Veatch\COA Walnut Creek WWTP Filter Improvements\MEP\F - CAD Files (Work in Progress)\WCWWTP-P-01.dwg Layout: MH-02 Plotted: 9/26/2014 8:36:11 AM

PLAN KEYED NOTES

1. PROVIDE AND INSTALL FREEZE PROTECTED COMBINATION SHOWER AND EYE/FACE WASH UNIT WRAPPED WITH HEAT TRACE. COORDINATE WITH ELECTRICAL CONTRACTOR TO PROVIDE POWER TO HEAT TRACE. COORDINATE WITH OWNER FOR EXACT LOCATION AND REQUIREMENTS. PER OWNERS REQUEST, PROVIDE OPERATION AND MAINTENANCE MANUALS AND SPARE PARTS AS REQUIRED. ROUTE WATER PIPING UNDERGROUND UP THROUGH SLAB TO UNIT.
2. PROVIDE AND INSTALL SHUT-OFF VALVE IN RECESSED IN GROUND VALVE BOX. PIPING AND VALVE IN VALVE BOX SHALL HAVE A MINIMUM OF R-4 INSULATION.

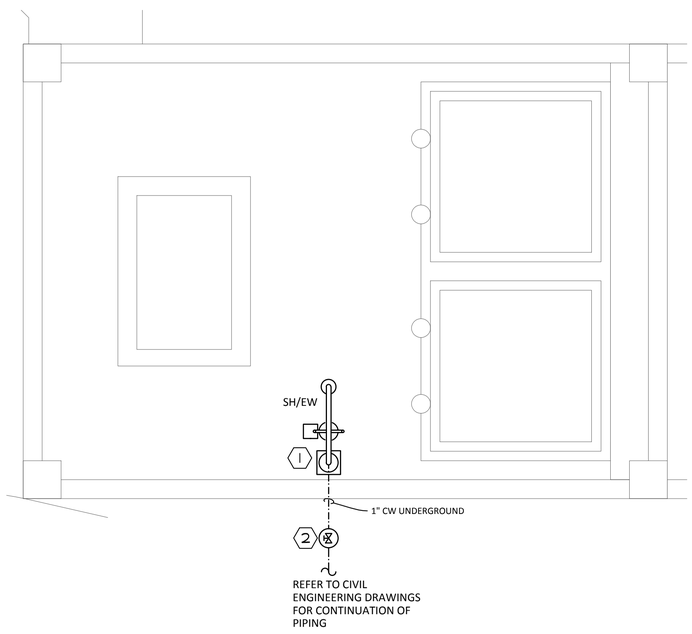

1 ENLARGED PLUMBING PLAN - SODIUM BISULFITE FEED AREA
SCALE: 1/2" = 1'-0"

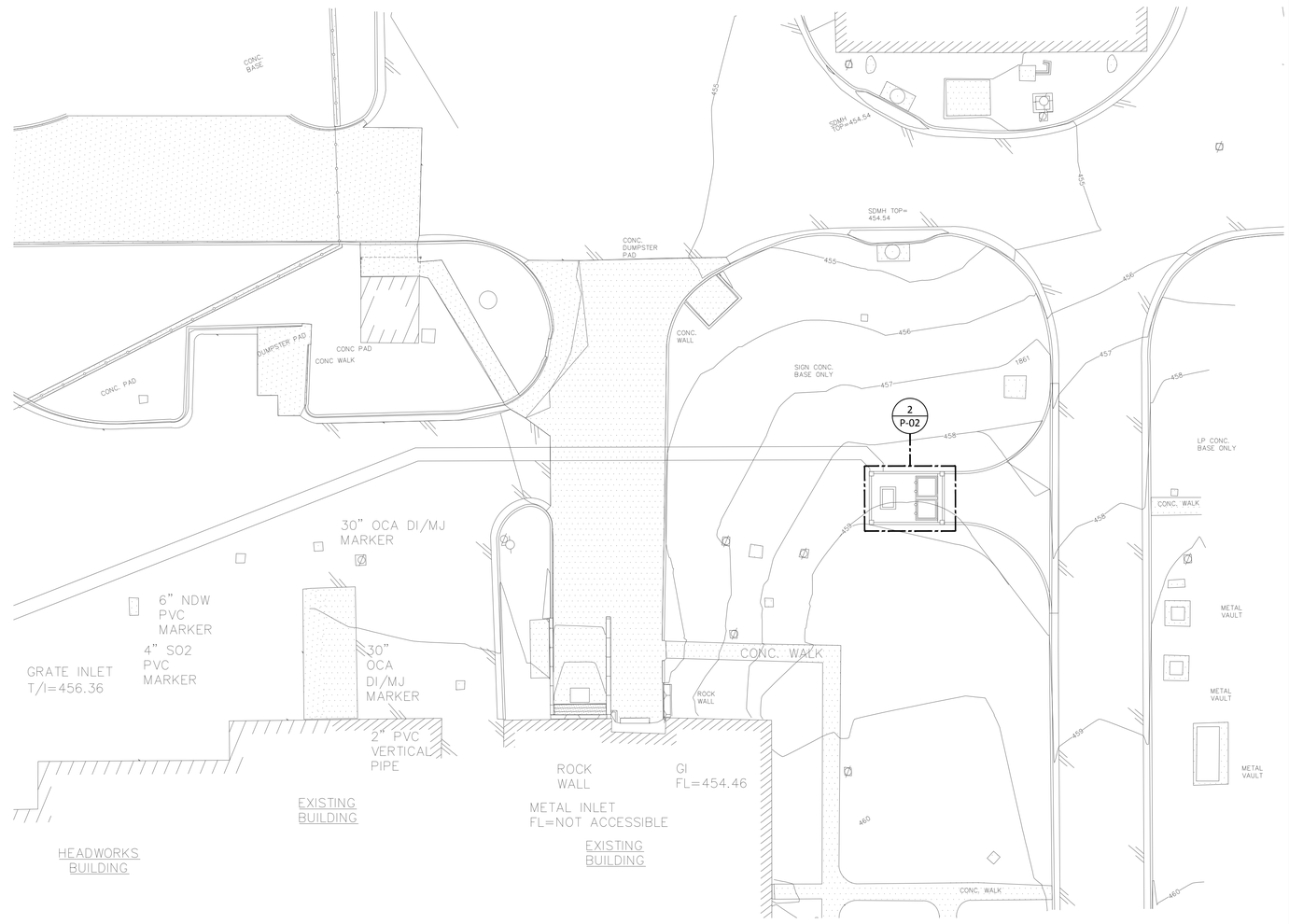

1 PLUMBING PLAN - SODIUM BISULFITE FEED AREA
SCALE: 1/16" = 1'-0"

NO.	DR	CK	DATE	DESCRIPTION

REVISIONS

BLACK & VEATCH
Building a world of difference.
Black & Veatch Corporation
Registration No. F-258
Austin, Texas

ENGOTECH
ENGINEERING CONSULTANTS
8500 Bluffstone Cove, B-103 • Austin, Texas 78759 • (512) 338-1101
BME Firm No. 14141 • www.engotech-engineering.com

STATE OF TEXAS
LYNN C. BROWN
55248
LICENSED PROFESSIONAL ENGINEER
09/26/2014

Austin WATER
Walnut Creek WWTP - Tertiary Filter Rehabilitation Project
CIP ID No. 3023.025

PLUMBING PLAN
SODIUM BISULFITE FEED AREA
EMERGENCY SHOWER AND EYEWASH

DESIGNED BY:	ZA
DRAWN BY:	ZA
REVIEWED BY:	DBM
APPROVED BY:	DBM
PROJECT NO.:	
DATE:	4/4/2014
SCALE:	AS SHOWN
REVISION:	
DISCIPLINE NO.	P-02
DWG. NO.	111 OF 273

F0168622 SAVED:
D168622 CYGNET ID:
File: J:\ACTIVE PROJECTS\Black & Veatch\COA Walnut Creek WWTP Filter Improvements\MEP\F - CAD Files (Work in Progress)\WCWWTP-P-02.dwg Layout: MH-09 Plotted: 9/26/2014 8:36:29 AM

PLUMBING LEGEND		
SYMBOL	ABBREVIATION	DESCRIPTION
— — — — — — — — — —	WW	DRAIN OR WASTE - PLAN
— — — — — — — —	VENT	VENT PIPING
—·—·—·—·—·—·—	CW	COLD WATER
—··—··—··—··—	HW	HOT WATER
○	FD	FLOOR DRAIN
⊕		CONNECT TO EXISTING

MARK	MODEL NUMBER				DESCRIPTION	
	CW	HW	VENT	S&W		
IWH	1/4"	1/4"	-	-	TANKLESS WATER HEATER: CHRONOMITE MODEL: E-30	3.0 KW, 240, 1Ø, 15 AMP MOCP INSTANT-TEMP TANKLESS ELECTRIC WATER HEATER.
FD	3/8"	-	2"	*	FLOOR DRAIN: SMITH MODEL: 2005	FLOOR DRAIN, 6" DIAMETER, NICKEL-BRONZE ADJUSTABLE STRAINER HEAD. ALL FLOOR DRAINS TO BE EQUIPPED WITH TRAP PRIMERS.
SH/EW	1"	-	-	-	DRENCH SHOWER & EYEWASH UNIT: SPEAKMAN MODEL: SE-7000	HEAT TRACED COMBINATION DRENCH SHOWER AND EYEWASH UNIT, 120V/1Ø, SHOWER HAS 1" NPT STAY-OPEN VALVE, EYEWASH HAS 1/2" NPT STAY-OPEN VALVE, HAND OPERATED BY A LARGE, HIGHLY VISIBLE STAINLESS STEEL PUSH HANDLE.

NOTE:
1) PLUMBING FIXTURES, ACCESSORIES AND INSTALLATION SHALL MEET ALL FEDERAL, STATE, ADA AND LOCAL REQUIREMENTS.
* SEE PLAN FOR SIZING.

PLUMBING MANUFACTURER EQUIVALENT		
EQUIPMENT	EQUIVALENT MANUFACTURER	REMARK
FLOOR CLEAN OUT FLOOR DRAIN HUB DRAIN FLOOR SINK	- SMITH - JOSAM - WADE - ZURN	
DRENCH SHOWER AND EYEWASH	-ENSCO	

PLUMBING GENERAL NOTES

1. VERIFY ALL DIMENSIONS AT JOBSITE.
2. PLUMBING CONTRACTOR SHALL COMPLY WITH ALL FEDERAL, STATE AND LOCAL CODES AND AUTHORITIES HAVING JURISDICTION, AND MAKE FINAL CONNECTIONS TO FIXTURES AND EQUIPMENT.
3. INSULATE ALL DOMESTIC WATER PIPING SUBJECTED TO FREEZING TEMPERATURE.
4. INSULATE HOT WATER LINES WITH 1" MOLDED FIBERGLASS INSULATION.
5. DO NOT SCALE DRAWINGS. REFER TO ARCHITECTURAL DOCUMENTS FOR EXACT LOCATION OF FIXTURES, EQUIPMENT.
6. ALL WALL HUNG PLUMBING FIXTURES ARE TO BE SUPPORTED BY MEANS OF A CARRIER AS MANUFACTURED BY J.R. SMITH, JOSAM, OR ZURN.
7. PLUMBING CONTRACTOR SHALL COORDINATE ALL PIPING AND EQUIPMENT WITH OTHER TRADES PRIOR TO INSTALLATION OF ANY PIPING OR EQUIPMENT.
8. PLUMBING CONTRACTOR SHALL VERIFY THE EXACT SIZE, LOCATION, DEPTH AND PRESSURE OF ALL EXISTING LINES BEFORE COMMENCING WORK.
9. VENT PIPING TO BE 2" UNLESS OTHERWISE NOTED.
10. VENT PENETRATIONS THROUGH ROOF TO HAVE CLEARANCE OF 10 FEET, MINIMUM, FROM ANY INTAKE FOR FRESH AIR.
11. CONTRACTOR SHALL VERIFY THE EXISTING DEPTH, SLOPE, AND PRESSURE OF EXISTING UTILITY LINE BEING TAPPED.
12. COORDINATE ALL WORK WITH OWNER OR REPRESENTATIVES.
13. ALL PIPING SHALL BE RUN CONCEALED UNLESS OTHERWISE NOTED.
14. PLUMBING CONTRACTOR SHALL FURNISH AND INSTALL ALL GAS PIPING AND MAKE ALL FINAL CONNECTIONS. GAS PIPING SHALL BE SCHEDULE 40 BLACK STEEL PIPE AND BANDED MALLEABLE IRON FITTINGS.
15. ALL UNDERGROUND WATER LINES SHALL BE TYPE "K" COPPER TUBING WITH 1/2" ARMAFLEX INSULATION.
16. PROVIDE BACKFLOW PREVENTER AT THE LOCATIONS REQUIRED BY CODE, AND ALL GOVERNING AUTHORITIES.
17. REFERENCE ARCHITECTURAL DRAWINGS FOR DIMENSIONS AFFECTING THIS WORK.
18. ALL WORK SHALL BE SUBJECT TO THE APPROVAL OF THE ARCHITECT.

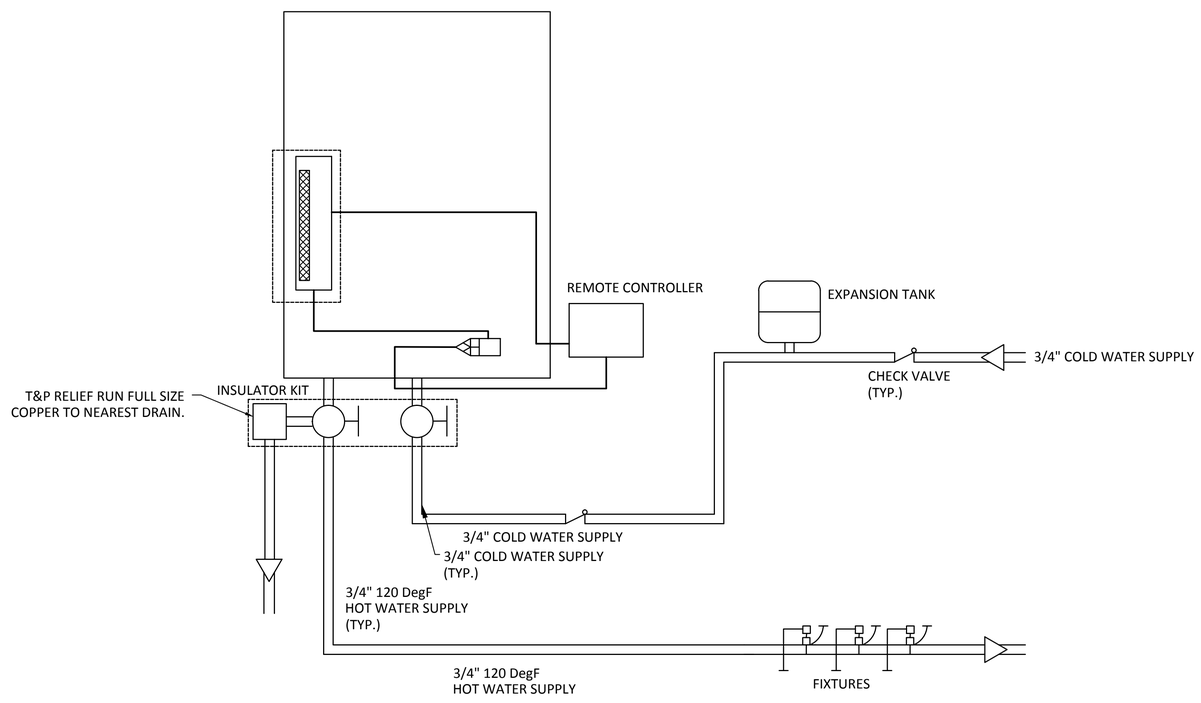

1 TANKLESS HOT WATER HEATER DETAIL
NOT TO SCALE

NO.	DR	CK	DATE	DESCRIPTION

REVISIONS

BLACK & VEATCH
Building a world of difference.
Black & Veatch Corporation
Registration No. F-258
Austin, Texas
ENGOTECH
ENGINEERING CONSULTANTS
8500 Bluffstone Cove, B-103 • Austin, Texas 78759 • (512) 338-1101
TBPE Firm No. 14011 • www.engineeringconsulting.com

STATE OF TEXAS
LYNN C. BROWN
55248
LICENSED
PROFESSIONAL ENGINEER
09/26/2014

Austin WATER
Walnut Creek WWTP - Tertiary Filter Rehabilitation Project
CIP ID No. 3023.025

PLUMBING
SCHEDULE AND NOTES

DESIGNED BY:	ZA
DRAWN BY:	ZA
REVIEWED BY:	DBM
APPROVED BY:	DBM
PROJECT NO.:	
DATE:	4/4/2014
SCALE:	AS SHOWN
REVISION:	
DISCIPLINE NO.	P-03
DWG. NO.	112 OF 273

F0168622 SAVED:
D168622 CYGNET ID:
File: J:\ACTIVE PROJECTS\Black & Veatch\COA Walnut Creek WWTP Filter Improvements\MEP\F - CAD Files (Work in Progress)\WCWWTP-P-03.dwg Layout: P-03 Plotted: 9/26/2014 8:36:45 AM

ELECTRICAL ONE-LINE DRAWING SYMBOLS

"CH-XFMR-01A"
3Ø
2500KVA OA △12470V
3500KVA FA Y↓4160V

POWER TRANSFORMER (2500KVA OA, 3500KVA FA, 3Ø, 12470V DELTA:4160V WYE GROUNDED TURN RATIO, TAGGED "CH-XFMR-01A" SHOWN)

"CT-MCC1A" 1000/5 3

WINDOW TYPE SINGLE-RATIO PHASE CURRENT TRANSFORMER (CT), RATIO AS INDICATED. NUMBER AT LOWER RIGHT INDICATES QUANTITY REQUIRED (1000:5 TURN RATIO, QUANTITY 3, TAGGED "CT-MCC1A" SHOWN)

"CT-B1-G" 50/5 1

WINDOW TYPE GROUND CURRENT TRANSFORMER, RATIO AS INDICATED. NUMBER AT LOWER RIGHT INDICATES QUANTITY. (50:5 TURN RATIO, QUANTITY 1, TAGGED "CT-B1-G" SHOWN)

"PT-MCC1A-1"
120V 4160V 2

POTENTIAL TRANSFORMER (PT) NUMBER INDICATES QUANTITY. (4160V:120V TURN RATIO, QUANTITY 2, TAGGED "PT-MCC1A-1" SHOWN)

PROPOSED SHIELDED ULTRA ISOLATION TRANSFORMER
"SUB1-XFMR-CPP1"
30kVA △240V
3Ø Y↓208/120V

SHIELDED ULTRA-ISOLATION TRANSFORMER. (30KVA, 3Ø, 240V DELTA:120/208V WYE GROUNDED TURN RATIO, TAGGED "SUB1-XFMR-CPP1" SHOWN)

4

FUSE, NUMBER AT LOWER RIGHT INDICATES QUANTITY REQUIRED (4 SHOWN)

DRAW OUT DISCONNECTS

SUB1-SWGR1A-F1

ELECTRICAL CONDUIT TAG. REFER TO CONDUIT SCHEMATICS AND CONDUIT/WIRE SCHEDULE (TAGGED "SUB1-SWGR1A-F1")

6.3KVA

ELECTRICAL LOAD (6.3KVA SHOWN)

MICROPROCESSOR BASED PROTECTIVE RELAY FUNCTION SEE PROTECTIVE RELAY ABBREVIATIONS

CB
3P-100A
"CB-GP6"

THERMAL/MAGNETIC MOLDED CASE CIRCUIT BREAKER (3 POLE, 100A, TAGGED "CB-GP6" SHOWN)

MCP
3P-15A
"MCP-GP6"

MAGNETIC CIRCUIT PROTECTOR, (3 POLE, 15A MOTOR CIRCUIT PROTECTOR, TAGGED "MCP-GP6" SHOWN)

FUSE (DRAWOUT)

3

MOTOR
HORSEPOWER AS INDICATED
(3HP SHOWN)

HV

MOTOR HIGH VOLTAGE TERMINATION BOX

LV

MOTOR LOW VOLTAGE TERMINATION CABINET

SH

SPACE HEATER TERMINATION CABINET

V.O.

VALVE OPERATOR TERMINATION BOX

SPD
"XX-XXX-XXX"

SURGE PROTECTIVE DEVICE (SPD) (TAGGED "SPD-MT1" SHOWN)

"STB-MCC1A"
STB

TAP CHANGING/SHORTING TERMINAL BLOCK (TAGGED "STB-MCC1A")

PMU

POWER MONITORING UNIT

CONNECTION TO EQUIPMENT GROUND BUS (EARTH GROUND)

"SC-MCC1A"
S.C.

SURGE CAPACITOR (TAGGED "SC-MCC1A")

"LA-MCC1A"
L.A.

LIGHTNING ARRESTOR (TAGGED "LA-MCC1A")

49
GP6

OVERLOAD RELAY (TAGGED 49/GP6)

CONDUIT CAP

LUGS

FEEDER CABLE TERMINATION LUGS

METAL ENCLOSED BUS DUCT

1A02B

TYPICAL CONNECTION TO MOTOR CONTROL CENTER BUS "1A02B" DENOTES MOTOR CONTROL CENTER SECTION NUMBER. REFER TO APPLICABLE MOTOR CONTROL CENTER ELEVATION DRAWING.

AUTOMATIC TRANSFER SWITCH
"SUB1-ATS-001"
240V, 800A, 3P, 4W
42,000 A.I.C
N E L

AUTOMATIC TRANSFER SWITCH. (3P, 4 WIRE, 800 AMPERE, 240 VOLT, 42,000 A.I.C. INTERRUPT RATING, TAGGED "SUB1-ATS-001" SHOWN)

"SUB1-DS-ACU1"
3P-60A

NON-FUSED DISCONNECT SWITCH. (TAGGED "SUB1-DS-ACU1", RATED 3 PHASE, 60A AMPERE)

"NLBS-BWP1"

NON-LOAD BREAK ISOLATION SWITCH

ELECTRICAL ONE-LINE DRAWING SYMBOLS

CI
BKR-1A
I-64

MULTI-FUNCTION CONTROL SYSTEM INTERLOCK FOR EQUIPMENT (TAGGED "BKR-1A"). REFER TO THE CONTROL LOGIC WIRING SCHEMATICS SHOWN ON THE INSTRUMENTATION AND CONTROL SYSTEM SERIES OF DRAWINGS (DRAWING I-64 SHOWN) FOR ADDITIONAL INFORMATION CONCERNING CONTROL RELAYS, TIMING RELAYS, PILOT LIGHTS, PUSHBUTTONS, ETC., AND THEIR ASSOCIATED INTERLOCK WIRING REQUIRED FOR THIS PROJECT BUT NOT SHOWN ON THE ONE-LINE DIAGRAMS.

INDICATES MULTI-FUNCTION CONTROL SYSTEM INTERLOCK

INDICATES NEMA SIZE (SIZE 1 SHOWN)

MCP
3P-15A
"BRK-GP6"
1
M
GP6
49
GP6

480V 3-POLE COMBINATION STARTER WITH MAGNETIC CIRCUIT PROTECTOR (TAGGED "BRK-GP6", RATED 3P-15A), FULL VOLTAGE NON-REVERSING (FVNR), NEMA SIZE 1 STARTER (TAGGED M/GP6) AND THERMAL OVERLOAD RELAY (TAGGED 49/GP6).

1
400A
400MVA
M
BWP1

4160V, NON-REVERSING, 400 AMPERE, 400 MVA INTERRUPT RATING, FULL VOLTAGE STARTER (TAGGED M/BWP1).

100KVAR

THREE PHASE POWER FACTOR CORRECTION CAPACITOR BANK WITH RATING AS INDICATED (100KVAR SHOWN).

MCP
3P-300A
"BKR-NPW1"
5
R
NPW1
5
S1
NPW1
5
S2
NPW1

480V COMBINATION TYPE, NON-REVERSING, NEMA SIZE 5, REDUCED VOLTAGE AUTO TRANSFORMER STARTER WITH MAGNETIC CIRCUIT PROTECTOR.

"SUB1-CPP-001"
208/120V
3Ø, 4W
225A BUS
100 MCB
42 POLE
10,000 A.I.C.

LIGHTING PANEL. (TAGGED "SUB1-CPP-001", RATED 208/120 VOLT, 3 PHASE, 4 WIRE, 225A AMPERE, 10,000 A.I.C. INTERRUPT RATING, WITH 42 POLES AND 100 AMPERE MAIN CIRCUIT PROTECTOR)

K1-MCC1A
K2-MCC1A
K3-MCC1B

KEY INTERLOCK TAG. TAG IS UNIQUE PER KEY INTERLOCK.

KEY INTERLOCK. KEY REQUIRED TO UNLOCK INTERLOCK. KEY CAN BE REMOVED FROM INTERLOCK ONLY AFTER INTERLOCK IS LOCKED.

DENOTES OTHER KEY INTERLOCKS WHICH ARE INTERLOCKED WITH THIS KEY INTERLOCK. (KEY INTERLOCK TAGGED "K2-MCC1A" IS INTERLOCKED WITH KEY INTERLOCKS TAGGED "K1-MCC1A" AND "K3-MCC1B")

This document, and the designs incorporated herein, is an instrument of professional service that has been developed, designed and prepared by Harutunian Engineering, Inc., and is not to be used, in whole or in part, for any other project without giving written notice to Harutunian Engineering, Inc.

NO.	DR	CK	DATE	DESCRIPTION

REVISIONS

BLACK & VEATCH
Building a world of difference.
Black & Veatch Corporation
Registration No. F-565
Austin, Texas

HARUTUNIAN ENGINEERING, INC.
305 E Hunland Dr., Ste 500, Austin, TX 78752
TBPE Firm Registration No. F-2408

STATE OF TEXAS
K. A. HARUTUNIAN
68185
REGISTERED PROFESSIONAL ENGINEER
4/4/2014

Austin WATER
Walnut Creek WWTP - Tertiary Filter Rehabilitation Project
CIP ID No. 3023.025

ELECTRICAL SYMBOLS LEGEND (SHEET 1 OF 2)

DESIGNED BY:	HEI
DRAWN BY:	HEI
REVIEWED BY:	HEI
APPROVED BY:	HEI
PROJECT NO.:	168622
DATE:	4/4/2014
SCALE:	AS SHOWN

REVISION:

DISCIPLINE NO.
E-01

DWG. NO.
SHEET 113 OF 273

ELECTRICAL DRAWING SYMBOLS

LP-1,3 — HOMERUN TO PANEL. CIRCUIT NUMBERS INDICATED.

3/4"-3#10(P), 1#10(G) — CONDUIT AND WIRE DESIGNATION. E.G. 3/4" CONDUIT, 3#10 POWER WIRES, 1#10 GROUND WIRE.
(P) POWER (N) NEUTRAL
(G) GROUND (SH) SPACE HEATER
(C) CONTROL (IG) ISOLATED GROUND
(I) INSTRUMENTATION
(SP) SPARE

GROUND ROD
(3/4" DIA. X 10'-0" LG.)

GROUND WIRE

CONDUIT RUN CONCEALED IN CEILING, WALLS, SLAB, UNDERGROUND OR UNDER SLAB (WHEN CONDUIT IS LARGER THAN 1/3 OF SLAB THICKNESS OR CANNOT BE PLACED IN CENTER OF SLAB).

CONDUIT RUN EXPOSED

CONDUIT TURNING DOWN

CONDUIT TURNING UP

STUB UP, VERTICAL CONDUIT RUN

FLEXIBLE CONDUIT

CONDUIT CAPPED FOR FUTURE USE

SYMBOL FOR UNOCCUPIED CONDUIT

TYPICAL DUCT BANK SECTIONAL VIEW.
PARTIALLY FILLED CIRCLE REPRESENTS AN OCCUPIED CONDUIT. HOLLOW CIRCLE REPRESENTS AN EMPTY CONDUIT. DO NOT INFER EXACT WIRE COUNT FROM THE SYMBOL SHOWN FOR OCCUPIED CONDUIT. REFER TO APPROPRIATE CONDUIT/WIRE SCHEDULE.

SYMBOL FOR OCCUPIED CONDUIT

CONDUIT SEALING FITTING

ELECTRICAL DRAWING SYMBOLS

7 / +36 — DUPLEX CONVENIENCE RECEPTACLE
"7" INDICATES CIRCUIT NUMBER,
MOUNTING HEIGHT AS INDICATED
(36" SHOWN)

18 / +44 — QUADPLEX RECEPTACLE
"18" INDICATES CIRCUIT NUMBER,
MOUNTING HEIGHT AS INDICATED
(44" SHOWN)

SINGLE POLE SWITCH

B / 10'-0" / 6 — WALL OR BRACKET MOUNTED LIGHTING FIXTURE. "B" INDICATES TYPE, "6" INDICATES CIRCUIT NUMBER.
MOUNTING HEIGHT AS INDICATED
(10'-0" SHOWN)

B / 30'-0" / 6 — POLE MOUNTED LIGHTING FIXTURE. "B" INDICATES TYPE, "6" INDICATES CIRCUIT NUMBER.
MOUNTING HEIGHT AS INDICATED
(30'-0" SHOWN)

2 b A — LINEAR LIGHTING FIXTURE.
"A" INDICATES TYPE, "b" INDICATES WHICH SWITCH CONTROLS,
"2" INDICATES CIRCUIT NUMBER.

A +96" — WALL MOUNTED EMERGENCY LIGHTING FIXTURE. "A" INDICATES TYPE.
MOUNTING HEIGHT AS
INDICATED (+96" SHOWN).

B / 6 — EMERGENCY EXIT WALL OR BRACKET MOUNTED LIGHTING FIXTURE. "B" INDICATES TYPE, "6" INDICATES CIRCUIT NUMBER. ARROW INDICATES ORIENTATION OF FIXTURE DIRECTIONAL ARROW

B / 10'-0" / 6 — CEILING OR SUSPENDED MOUNTED LIGHTING FIXTURE. "B" INDICATES TYPE, "6" INDICATES CIRCUIT NUMBER.
MOUNTING HEIGHT AS INDICATED
(10'-0" SHOWN)

WALL
LIGHTING/AUXILIARY POWER PANEL-SURFACE MOUNTED
PANEL

WALL
DISTRIBUTION POWER PANEL-SURFACE MOUNTED
PANEL

J OR (J) — JUNCTION BOX

PB OR (PB) — PULL BOX

CONDUIT RUN OR ITEM DEMOLISHED

DISCONNECT SWITCH OR ENCLOSED CIRCUIT BREAKER

COMBINATION MOTOR STARTER

PHOTOCELL

3/4 — MOTOR
HORSEPOWER AS INDICATED
(3/4HP SHOWN)

PROTECTIVE RELAY ABBREVIATIONS

A	CURRENT DISPLAY	50	INSTANTANEOUS OVERCURRENT
PF	POWER FACTOR DISPLAY	51	TIMED OVERCURRENT
RS	PROTECTIVE RELAY STATUS DISPLAY	50/46	INSTANTANEOUS NEGATIVE SEQUENCE OVERCURRENT
VAR	REACTIVE POWER DISPLAY	50/51	INSTANTANEOUS PHASED OVERCURRENT UNIT
V	VOLTAGE DISPLAY	50N/51N	INSTANTANEOUS NEUTRAL OVERCURRENT UNIT
W	REAL POWER DISPLAY	51/46	TIMED NEGATIVE SEQUENCE OVERCURRENT UNIT
WH	WATT-HOUR DISPLAY	50G	INSTANTANEOUS GROUND OVERCURRENT UNIT
27	UNDER VOLTAGE UNIT	51G	TIMED GROUND OVERCURRENT UNIT
37	UNDERCURRENT UNIT	59	OVERVOLTAGE UNIT
38	BEARING PROTECTIVE DEVICE (TEMPERATURE)	74	ALARM RELAY OUTPUT
46	NEGATIVE SEQUENCE OVER CURRENT UNIT	86	LOCKOUT UNIT
48	INCOMPLETE SEQUENCE UNIT	87	DIFFERENTIAL OVERCURRENT UNIT

This document, and the designs incorporated herein, is an instrument of professional service that has been developed, designed and prepared by Harutunian Engineering, Inc., and is not to be used, in whole or in part, for any other project without giving written notice to Harutunian Engineering, Inc.

NO.	DR	CK	DATE	DESCRIPTION

REVISIONS

BLACK & VEATCH
Building a world of difference.
Black & Veatch Corporation
Registration No. F-253
Austin, Texas

HARUTUNIAN ENGINEERING, INC.
305 E Hunland Dr., Ste 500, Austin, TX 78752
TBPE Firm Registration No. F-2408

STATE OF TEXAS
K. A. HARUTUNIAN
61815
REGISTERED PROFESSIONAL ENGINEER
4/4/2014

Walnut Creek WWTP - Tertiary Filter Rehabilitation Project
CIP ID No. 3023.025
Austin WATER

ELECTRICAL
SYMBOLS LEGEND
(SHEET 2 OF 2)

DESIGNED BY:	HEI
DRAWN BY:	HEI
REVIEWED BY:	HEI
APPROVED BY:	HEI
PROJECT NO.:	168622
DATE:	4/4/2014
SCALE:	AS SHOWN

REVISION:

DISCIPLINE NO.
E-02

DWG. NO.
SHEET 114 OF 273

GENERAL NOTES:

1. ALL EQUIPMENT SHOWN ON THE DEMOLITION DRAWINGS ARE EXISTING.

2. CROSS-HATCHED LINEWORK SHOWN ON THE DEMOLITION DRAWINGS DENOTES EQUIPMENT TO BE DEMOLISHED UNLESS OTHERWISE NOTED. ALL DEMOLITION ACTIVITIES SHALL ALSO BE FULLY COORDINATED WITH MECHANICAL|STRUCTURAL|CIVIL|ETC. AND SHALL SUPPORT THE OPERATIONAL REQUIREMENTS OF THE WASTEWATER TREATMENT PLANT DURING ALL PHASES OF CONSTRUCTION. ALL DEMOLISHED ITEMS SHALL REMAIN THE PROPERTY OF THE OWNER. RELOCATE ALL DEMOLISHED ITEMS TO LOCATION(S) SPECIFIED BY OWNER AT NO ADDITIONAL COST TO THE OWNER.

3. EQUIPMENT|CONDUIT TAGS|NAMES HAVE BEEN ARBITRARILY ASSIGNED TO AID IN THE DRAWINGS. SOME EXISTING TAGS|NAMES HAVE BEEN USED WHERE POSSIBLE. CONTRACTOR SHALL MAKE EXTENSIVE VERIFICATION OF EXISTING EQUIPMENT PRIOR TO COMMENCING FULL SCALE DEMOLITION|RENOVATION ACTIVITIES.

4. SHOULD A POWER OUTAGE TO A FACILITY BE REQUIRED, THE CONTRACTOR SHALL REQUEST SUCH AN OUTAGE IN WRITING NO LESS THAN NINETY-SIX (96) HOURS IN ADVANCE. CONTRACTOR'S WRITTEN REQUEST SHALL IDENTIFY THE DESIRED DATE, TIME, DURATION, AND PURPOSE OF THE REQUESTED DAY UNLESS HE|SHE OBTAINS A WRITTEN APPROVAL FROM THE OWNER AUTHORIZING THE OUTAGE. THE OWNER RESERVES THE RIGHT TO MODIFY OR REJECT ANY REQUEST FOR SUCH AN OUTAGE. MODIFICATION OR REJECTION OF THE CONTRACTORS OUTAGE REQUEST BY THE OWNER SHALL NOT BE CONSIDERED REASON FOR DELAYS IN THE CONSTRUCTION SCHEDULE. UNLESS OTHERWISE NOTED, THE DURATION OF THE OUTAGE SHALL BE LIMITED TO FOUR (4) HOURS OR LESS. THE OWNER RESERVES THE RIGHT TO LIMIT THE DURATION OF THE OUTAGE TO LESS THAN 4 HOURS. MODIFICATION OF THE OUTAGE DURATION BY THE OWNER SHALL NOT BE CONSIDERED REASON FOR DELAYS IN THE CONSTRUCTION SCHEDULE.

5. VERIFY LOCATION OF EXISTING FACILITIES PRIOR TO CONSTRUCTION OF FACILITIES PROPOSED IN THIS CONTRACT. TAKE CARE TO AVOID DAMAGE TO EXISTING FACILITIES. REPAIR ANY FACILITY DAMAGED IN THE COURSE OF CONSTRUCTION OF ANY PART OF THIS CONTRACT TO ITS ORIGINAL OPERATING CONDITION IMMEDIATELY, WITH REPAIR CREWS WORKING 24 HOURS PER DAY UNTIL THE DAMAGE IS REPAIRED (NO SEPARATE PAY).

6. THE CONTRACTOR SHALL BE AWARE THAT WHEN ANY EXISTING EQUIPMENT IS DISCONNECTED, REMOVED, RELOCATED OR OTHERWISE MODIFIED, THE POSSIBILITY MAY EXIST FOR SUCH ACTION TO LEAD TO INTERRUPTION OF OPERATION OF THE WASTEWATER TREATMENT PLANT IF EXTREME CARE, VERIFICATION, AND VALIDATION IS NOT CAREFULLY EXERCISED PRIOR TO COMMENCEMENT OF SUCH ACTIVITY. THE CONTRACTOR SHALL KNOW THAT ANY INTERRUPTION TO THE CONTINUITY OF THE TREATMENT PLANT OPERATION AT ITS RATED CAPACITY IS UNACCEPTABLE DURING THE CONSTRUCTION COURSE OF THIS PROJECT. HOWEVER, SHOULD ANY INTERRUPTION TO THE TREATMENT PLANT OPERATION OCCUR FOR ANY UNFORESEEN REASON, WHETHER TOTALLY ACCIDENTAL OR DUE TO IMPROPER FIELD INVESTIGATION AND IMPROPER PLANNING PRIOR TO COMMENCEMENT OF THE ELECTRICAL DEMOLITION|RENOVATION EFFORT, THE RESPONSIBLE CONTRACTOR SHALL DETERMINE THE PROBLEM, CORRECT IT, AND START UP THE INTERRUPTED EQUIPMENT WITHIN A CERTAIN TIME PERIOD AS DETERMINED BY THE OWNER AT NO ADDITIONAL COST TO THE OWNER. THE CONTRACTOR SHALL PROVIDE CONTINUOUS, 24-HOUR, LABOR, EQUIPMENT, MATERIAL, AND ACCESSORIES UNTIL SUCH TIME THAT ANY EFFECTED EQUIPMENT OPERATES AS PREVIOUSLY OPERATED, AT NO ADDITIONAL COST TO THE OWNER AND TO THE OWNER'S SATISFACTION.

7. THE CONTRACTOR IS RESPONSIBLE FOR VERIFYING THE APPLICABLE CONDUIT|WIRING TO EXISTING EQUIPMENT WHETHER SHOWN HERE OR NOT. THE CONTRACTOR SHALL EXERCISE EVERY PRECAUTION TO ELIMINATE HAZARDS IN DISCONNECTING ANY DEVICE FROM AN ELECTRICAL CIRCUIT. THE CONTRACTOR MUST TAKE GREAT CARE FOR THERE ARE NO AVAILABLE AS BUILT RECORDS ACCURATELY AND COMPLETELY IDENTIFYING THE EXISTING ROUTING OF ALL DUCTBANK|CONDUIT BETWEEN THE VARIOUS EXISTING EQUIPMENT AND THEIR COORDINATION WITH THE EXISTING ELECTRICAL SYSTEM. THEREFORE THE CONTRACTOR IS TO EXERCISE EXTREME CARE, VERIFY THE ROUTING OF EXISTING DUCTBANK|CONDUIT PRIOR TO FULL SCALE DEMOLITION OR RENOVATION ACTIVITIES. FOLLOWING THE DISCOVERY VERIFICATION OF THE EXISTING FIELD CONDITIONS, SHOULD ADJUSTMENTS BECOME A NECESSITY TO THE EXISTING OR PROPOSED SYSTEM (AS APPLICABLE), THE EXISTING DISCOVERED FIELD CONDITIONS MUST BE BROUGHT TO THE OWNERS ATTENTION FOR EXECUTION OF THE NECESSARY ADJUSTMENTS|MODIFICATIONS.

8. THE INTENT IS TO KEEP THE EXISTING FACILITIES OPERATIONAL AT ALL TIMES. COORDINATE WITH THE OWNER FOR SCHEDULING OF EQUIPMENT|POWER|AND PROCESS|ETC. OUTAGES REQUIRED PRIOR TO COMMENCING DEMOLITION|MODIFICATION ACTIVITIES.

9. SHOULD PROBLEMS OCCUR UPON THE ACTIVATION OF POWER, CORRECTION SHALL BE MADE PROMPTLY AT NO EXPENSE TO THE OWNER.

10. ALL ELECTRICAL SWITCHING, DE-ENERGIZATION OF LOADS, ENERGIZATION OF LOADS, ETC., SHALL BE PERFORMED IN THE PRESENCE OF, AND WITH THE CONSENT OF, THE OWNER.

11. NOT ALL REQUIREMENTS ASSOCIATED WITH THE INSTALLATION OF THE PROPOSED ELECTRICAL SYSTEM ARE SHOWN ON THE DEMOLITION DRAWINGS. REFER TO OTHER PROPOSED CONTRACT DOCUMENTS FOR ADDITIONAL REQUIREMENTS.

12. THE OWNER'S EXISTING EQUIPMENT IS IN PERFECT WORKING CONDITION. SHOULD THE EXISTING EQUIPMENT, ITS ASSOCIATED INTERCONNECT CONDUIT|WIRE, ETC., AS APPLICABLE, BE DAMAGED OR BECOME OTHERWISE UNUSABLE DURING THE CONSTRUCTION COURSE OF THIS PROJECT, THE RESPONSIBLE CONTRACTOR SHALL DETERMINE THE PROBLEM, CORRECT IT, AND FURNISH AND INSTALL ALL NECESSARY WIRING|HARDWARE|ETC., TO MATCH EXISTING AND MAKE ALL FINAL CONNECTIONS SUCH THAT ALL AFFECTED EQUIPMENT OPERATES AS PREVIOUSLY OPERATED TO THE OWNERS SATISFACTION AT NO ADDITIONAL COST TO THE OWNER.

13. REFER TO THE CONSTRUCTION SEQUENCING REQUIREMENTS ELSEWHERE IN THE CONTRACT DOCUMENTS FOR ADDITIONAL REQUIREMENTS.

GENERAL NOTES (CONTINUED):

14. PROPOSED ITEMS SHOWN ON THE PROPOSED|RENOVATION|MODIFICATION DRAWINGS ARE SHOWN IN DARK LINEWORK. EXISTING AND FUTURE ITEMS ARE SHOWN IN LIGHT LINEWORK, UNLESS NOTED OTHERWISE.

15. THE ACTUAL REQUIRED SIZE OF CONDUIT ENTRANCE AREAS TO BE DETERMINED BY THE MANUFACTURER. THE LOCATION AND SIZE OF THE CONDUIT ENTRANCE AREAS FOR THE MOTOR CONTROL CENTER, TRANSFORMER, ETC., AS APPLICABLE, SHALL BE COORDINATED WITH THE APPLICABLE STRUCTURE PLANS. REFER TO THE APPLICABLE CIVIL|STRUCTURAL| MECHANICAL|ELECTRICAL, ETC. DRAWINGS.

16. LOCATIONS AND SIZES OF ELECTRICAL EQUIPMENT ARE APPROXIMATE. CONTRACTOR SHALL FIELD VERIFY ACTUAL CONDITIONS AND ALL POINTS OF CONNECTION PRIOR TO INSTALLATION OF PROPOSED COMPONENTS.

17. NOT ALL ELECTRICAL|MECHANICAL|STRUCTURAL|CIVIL|ETC. COMPONENTS ARE SHOWN ON EACH DRAWING. REFER TO THE CIVIL|MECHANICAL|STRUCTURAL DRAWINGS FOR MANY OF THE GENERAL LOCATIONS, QUANTITY, AND TYPES OF PROPOSED EQUIPMENT, ETC., TO BE INSTALLED. IN ADDITION, REFER TO THE APPLICABLE ELECTRICAL DRAWINGS AND MAKE ALL FINAL CONNECTIONS.

18. CONTRACTOR SHALL COORDINATE ROUTE OF PROPOSED CONDUIT|WIRE WITH PROPOSED CIVIL|MECHANICAL| STRUCTURAL|ELECTRICAL SYSTEMS|COMPONENTS| EQUIPMENT|UTILITIES, ETC.

19. CONTRACTOR SHALL SIZE ALL PULL|JUNCTION BOXES PER, AND IN ACCORDANCE WITH, THE REQUIREMENTS OF THE NATIONAL ELECTRICAL CODE (N.E.C.).

20. EXACT LOCATIONS OF MECHANICAL|STRUCTURAL|CIVIL COMPONENTS ARE NOT SHOWN ON THE ELECTRICAL DRAWINGS. REFER TO MECHANICAL|STRUCTURAL|CIVIL DRAWINGS FOR EXACT LOCATIONS OF MECHANICAL|STRUCTURAL|CIVIL ITEMS.

21. EXTREME CARE MUST BE TAKEN FOR THE INSTALLATION OF THE ELECTRICAL DUCT BANKS SINCE THERE ARE NO AVAILABLE AS BUILT RECORDS OF PROFILES IDENTIFYING THE LOCATION AND INVERT ELEVATIONS OF EXISTING UNDERGROUND ELECTRICAL SYSTEM (CONDUITS, DUCT BANK, GROUNDING NETWORK, ETC.) AND UNDERGROUND MECHANICAL PIPING. ROUTING OF NEW DUCT BANK SHOWN IS BASED ON SCHEMATIC KNOWLEDGE OF THE SIZE OF MECHANICAL PIPING AND THEIR APPROXIMATE SIZE AND|OR LOCATION. NO DATA IS AVAILABLE PERTAINING TO EXISTING UNDERGROUND ELECTRICAL DUCT BANK SYSTEM AND ITS COORDINATION WITH THE UNDERGROUND MECHANICAL SYSTEM. THEREFORE THE CONTRACTOR IS TO EXERCISE EXTREME CARE, VERIFY LOCATION|ROUTING|ELEVATION OF EXISTING UNDERGROUND UTILITIES PRIOR TO COMMENCING FULL SCALE INSTALLATION PROCESS OF THE PROPOSED DUCT BANK SYSTEM. FOLLOWING THE DISCOVERY VERIFICATION OF EXISTING UNDERGROUND UTILITIES, SHOULD ADJUSTMENT|MODIFICATIONS BECOME A NECESSITY TO EITHER THE EXISTING OR PROPOSED SYSTEM (AS APPLICABLE), THE EXISTING DISCOVERED FIELD CONDITIONS MUST BE BROUGHT TO THE OWNER'S ATTENTION FOR EXECUTION OF THE NECESSARY ADJUSTMENTS|MODIFICATIONS.

22. CONDUIT SYSTEM CORRIDORS SHOWN REPRESENT MINIMUM SPACE REQUIRED FOR THE CONDUIT|WIRE SHOWN ON THE APPLICABLE CONDUIT|WIRE SCHEDULES AND PANELBOARD SCHEDULES. SHOULD ADDITIONAL CONDUIT|WIRE NOT SHOWN ON THE CONDUIT|WIRE SCHEDULES AND|OR PANELBOARD SCHEDULES BE ROUTED IN THE CONDUIT SYSTEM CORRIDORS (I.E., CONDUIT|WIRE DEDICATED FOR INTERCONNECTION OF HVAC, ELECTRICAL, INSTRUMENTATION|CONTROL, AS APPLICABLE, CONDUIT|WIRE DEDICATED FOR INTERCONNECTION BETWEEN INDIVIDUAL HVAC, ELECTRICAL, INSTRUMENTATION|CONTROL, ETC.), THE CONTRACTOR SHALL DETERMINE AND MAKE ANY NECESSARY ADJUSTMENTS TO THE CONDUIT CORRIDOR SIZE|ROUTING REQUIRED, ANY ASSOCIATED PULLBOX SIZE ADJUSTMENTS REQUIRED, ANY ASSOCIATED CONDUIT SUPPORT|RACKING ADJUSTMENTS REQUIRED, FURNISH AND INSTALL ALL OF THE NECESSARY MATERIALS|PULLBOXES|HARDWARE|ETC., TO FACILITATE ANY SUCH ADJUSTMENTS, AND FULLY COORDINATE ANY SUCH ADJUSTMENTS WITH ALL MECHANICAL|HVAC| STRUCTURAL|ETC., UTILITIES|EQUIPMENT|WALL PENETRATIONS|CEILING PENETRATIONS|ETC., AS APPLICABLE, AND MAKE ALL FINAL CONNECTIONS, TO THE SATISFACTION OF THE OWNER AT NO ADDITIONAL COST TO THE OWNER

23. THE MAJORITY OF THE CONDUIT|WIRE ROUTES SHOWN ON THE DRAWINGS ARE SHOWN PARTIALLY (WITH 'HOMERUNS"). ADDITIONALLY, CERTAIN SPECIFIC CONDUIT|WIRE|PULLBOX|ETC., LOCATION|ROUTING REQUIREMENTS ARE SHOWN ON THE DRAWINGS. THE CONTRACTOR SHALL DETERMINE THE EXACT LOCATION|ROUTING FOR, FURNISH, AND INSTALL THE ENTIRE LENGTH OF THE PROPOSED CONDUIT|WIRE, REQUIRED INTERMEDIATE PULLBOXES, RELATED FITTINGS, AND ALL REQUIRED MOUNTING HARDWARE AND MAKE ALL FINAL CONNECTIONS. THE CONTRACTOR SHALL SIZE ALL NECESSARY REQUIRED PULLBOXES TO FACILITATE THE PROPOSED CONDUIT|WIRE INSTALLATION. ALSO REFER TO THE APPLICABLE CONDUIT|WIRE SCHEDULE, ONE-LINE DIAGRAMS, FLOOR PLAN DRAWINGS, ETC., TO AIDE IN THE LOCATION|ROUTING OF THE PROPOSED CONDUIT|WIRE|PULLBOXES|MOUNTING HARDWARE|ETC. THE CONTRACTOR SHALL COORDINATE THE INSTALLATION OF THE PROPOSED ELECTRICAL EQUIPMENT WITH THE INSTALLATION OF THE PROPOSED CIVIL|MECHANICAL|STRUCTURAL|ETC. UTILITIES, AND THE EXISTING CIVIL|MECHANICAL|STRUCTURAL|ETC. UTILITIES.

24. REFER TO THE APPLICABLE EQUIPMENT LOCATION PLAN FOR TAGGING OF MAJOR ELECTRICAL EQUIPMENT ASSOCIATED WITH EACH PROCESS AREA.

GENERAL NOTES (CONTINUED):

25. THE EQUIPMENT LOCATION PLAN DRAWINGS ARE INTENDED, IN PART, TO PROVIDE THE APPROXIMATE LOCATION AND CORRESPONDING EQUIPMENT TAGGING FOR MAJOR PIECES OF ELECTRICAL EQUIPMENT INSIDE OF THE ASSOCIATED BUILDING. REFER TO THE PLANS FOR SPECIFIC ADDITIONAL WORK ACTIVITIES RELATED TO THE EQUIPMENT SHOWN AND FOR ADDITIONAL REQUIREMENTS.

26. ANY MODIFICATION TO ANY EXISTING ROADWAY|CURBING|SIDEWALK|ETC., WHETHER SHOWN ON THE PLANS OR NOT, SHALL BE REPAIRED TO MATCH EXISTING TO THE OWNER'S SATISFACTION AT NO ADDITIONAL COST TO THE OWNER UPON COMPLETION OF RENOVATION ACTIVITIES.

27. CERTAIN SECTIONS OF THE DIVISION 16 SPECIFICATIONS CONTAIN ATTACHMENTS. THESE ATTACHMENTS INCLUDE, BUT ARE NOT LIMITED TO THE FOLLOWING:

    A. PANEL SCHEDULE
    B. LIGHTING FIXTURE SCHEDULE

THE CONTRACTOR IS REMINDED THAT ALTHOUGH THESE ATTACHMENTS ARE PRESENTED IN THE CONTRACT SPECIFICATIONS, THEY SHALL BE CONTINUALLY MAINTAINED, I.E. "BLUE-LINED" AS DESCRIBED IN SECTION 01300, BY THE CONTRACTOR ALONG WITH THE OTHER CONTRACT DOCUMENTS AS RECORD DRAWINGS THROUGHOUT THE ENTIRE PROJECT DURATION AND SUBMITTED AS PART OF THE "RECORD" DRAWINGS. ALSO REFER TO THE SPECIFICATIONS.

ALL GENERAL NOTES LISTED HERE ARE APPLICABLE FOR ALL ELECTRICAL DRAWINGS IN ADDITION TO ANY GENERAL NOTES SHOWN ON EACH INDIVIDUAL DRAWING.

This document, and the designs incorporated herein, is an instrument of professional service that has been developed, designed and prepared by Harutunian Engineering, Inc., and is not to be used, in whole or in part, for any other project without giving written notice to Harutunian Engineering, Inc.

NO.	DR	CK	DATE	DESCRIPTION

REVISIONS

BLACK & VEATCH
Building a world of difference.
Black & Veatch Corporation
Registration No. F-653
Austin, Texas

HARUTUNIAN ENGINEERING, INC.
305 E Hunland Dr., Ste 500, Austin, TX 78752
TBPE Firm Registration No. F-2408

STATE OF TEXAS
K. A. HARUTUNIAN
51981
REGISTERED PROFESSIONAL ENGINEER
4/4/2014

Austin WATER
Walnut Creek WWTP - Tertiary Filter Rehabilitation Project
CIP ID No. 3023.025

ELECTRICAL GENERAL NOTES

DESIGNED BY:	HEI
DRAWN BY:	HEI
REVIEWED BY:	HEI
APPROVED BY:	HEI
PROJECT NO.:	168622
DATE:	4/4/2014
SCALE:	AS SHOWN

REVISION:

DISCIPLINE NO.
E-03

DWG. NO.
SHEET 115 OF 273

KEY NOTES

6. CUT EXISTING ROAD/CURB/SIDEWALK TO FACILITATE DEMOLITION ACTIVITIES. REPAIR ROAD/CURB/SIDEWALK TO MATCH EXISTING TO THE SATISFACTION OF THE OWNER PER CIVIL DRAWING DETAILS.

7. INSIDE MANHOLE "MH-1", DISCONNECT AND REMOVE WIRE GUTTER ENCLOSING WIRES CONTAINED IN THE CONDUIT TAGGED "DB-9E/1-LV1" AS SHOWN ON DRAWING NO. E-05. QUANTITY AND SIZE OF WIRES INSIDE GUTTER IS UNKNOWN. PROPOSED GUTTER AND SUPPORTS WILL BE FURNISHED AND INSTALLED DURING RENOVATION.

8. AT THE CONTRACTOR'S DISCRETION, IN LIEU OF CUTTING THE EXISTING WIRES, FURNISHING NEW WIRES OF LIKE KIND BETWEEN CUT POINTS, AND PERFORMING SUBMERGENCE RATED SPLICES AT EACH END OF EACH PROPOSED WIRE SEGMENT, THE CONTRACTOR MAY ELECT TO FIELD VERIFY SOURCE, DESTINATION, AND ROUTE OF WIRES, DISCONNECT AND REMOVE THE WIRES IN THEIR ENTIRETY FROM SOURCE TO DESTINATION, FURNISH AND INSTALL NEW WIRES OF LIKE KIND FROM SOURCE TO DESTINATION, AND MAKE ALL FINAL CONNECTIONS AT SOURCE AND DESTINATION AT NO ADDITIONAL COST TO THE OWNER.

KEY NOTES

9. EXISTING SERVICE TRANSFORMERS TO REMAIN. DISCONNECT AND REMOVE SECONDARY CIRCUIT BREAKER IN ITS ENTIRETY. DISCONNECT AND REMOVE POWER SERVICE FEEDER FIELD INTERCONNECT WIRING BETWEEN SECONDARIES OF TRANSFORMERS AND EXISTING MOTOR CONTROL CENTERS. EXISTING DUCT BANK WILL REMAIN AND BE REUSED DURING RENOVATION ACTIVITIES. REFER TO DRAWING NO. E-12 AND DEMOLITION ONE LINE DRAWINGS.

10. EXISTING EMERGENCY GENERATOR TO REMAIN. DISCONNECT AND REMOVE POWER, LIGHTING AND AUXILIARY FIELD INTERCONNECT WIRING FROM DUCT BANK BETWEEN GENERATOR/GENERATOR BUILDING AND EXISTING MOTOR CONTROL CENTER AND MINI POWER CENTER. EXISTING DUCT BANK WILL REMAIN AND BE REUSED DURING RENOVATION ACTIVITIES. REFER TO DRAWING NO. E-12 AND DEMOLITION ONE LINE DRAWINGS.

11. ALTHOUGH NOT SHOWN, DISCONNECT AND REMOVE POLE-MOUNTED LIGHT FIXTURE AND RECEPTACLE ADJACENT TO CHEMICAL FEED SYSTEM, AND ALL ASSOCIATED POWER CONDUIT/WIRE AND RELATED RACEWAY SUPPORT SYSTEM IN ITS ENTIRETY. CAP OFF CONDUIT(S) AT SLAB AND AT ENTRY POINT INTO FILTER GALLERY.

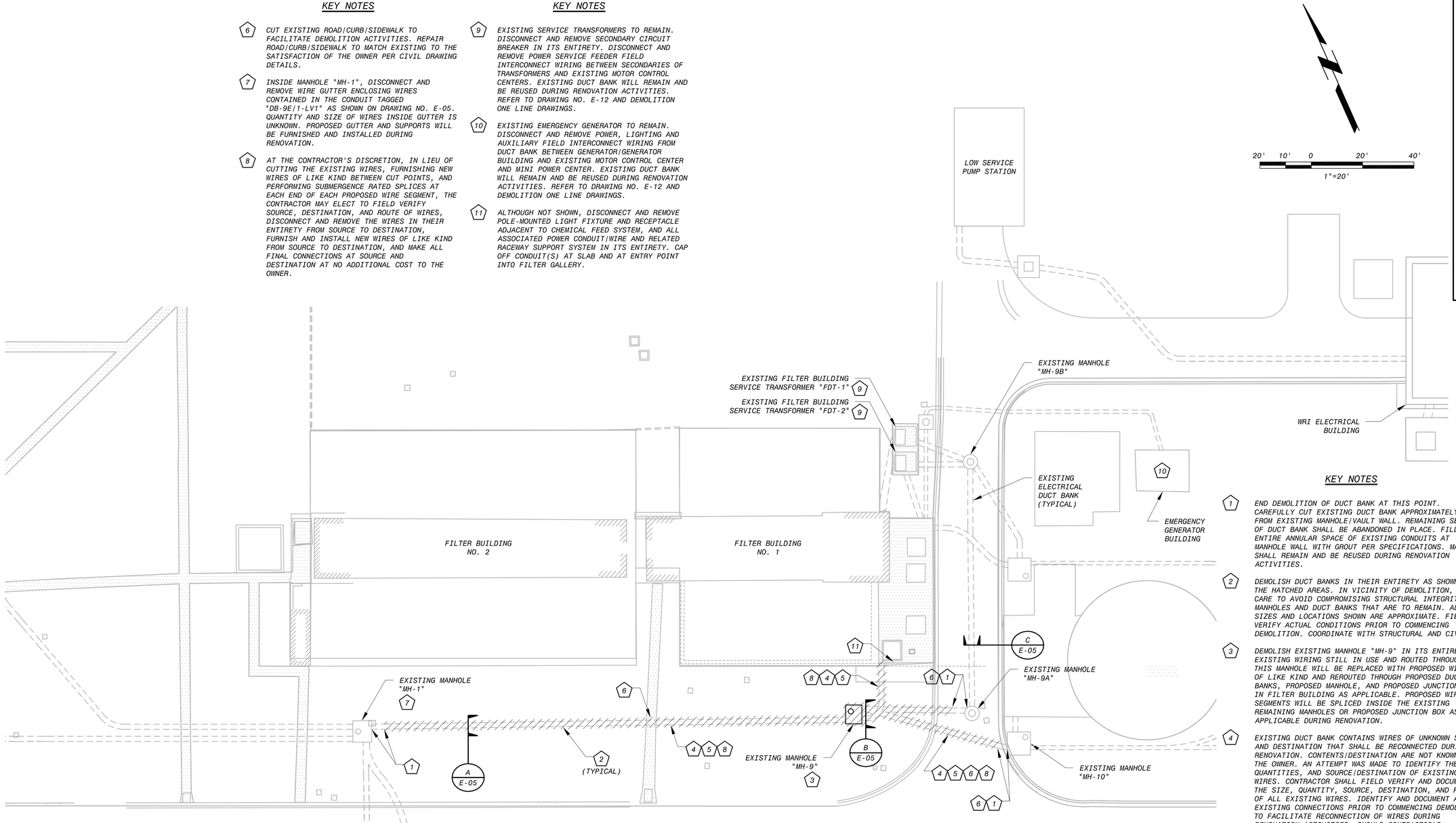

GENERAL NOTES

1. COORDINATE WITH THE CONSTRUCTION SEQUENCING REQUIREMENTS OF THE PROJECT.
2. REFER TO THE IC/CIVIL DRAWINGS FOR INSTRUMENTATION/CONTROL SYSTEM DUCT BANK REQUIREMENTS.

ELECTRICAL SITE PLAN - DEMOLITION

SCALE: 1" = 20'

1 / E-58 1 / E-59

KEY NOTES

1. END DEMOLITION OF DUCT BANK AT THIS POINT. CAREFULLY CUT EXISTING DUCT BANK APPROXIMATELY 6' FROM EXISTING MANHOLE/VAULT WALL. REMAINING SECTION OF DUCT BANK SHALL BE ABANDONED IN PLACE. FILL ENTIRE ANNULAR SPACE OF EXISTING CONDUITS AT MANHOLE WALL WITH GROUT PER SPECIFICATIONS. MANHOLE SHALL REMAIN AND BE REUSED DURING RENOVATION ACTIVITIES.
2. DEMOLISH DUCT BANKS IN THEIR ENTIRETY AS SHOWN IN THE HATCHED AREAS. IN VICINITY OF DEMOLITION, TAKE CARE TO AVOID COMPROMISING STRUCTURAL INTEGRITY OF MANHOLES AND DUCT BANKS THAT ARE TO REMAIN. ALL SIZES AND LOCATIONS SHOWN ARE APPROXIMATE. FIELD VERIFY ACTUAL CONDITIONS PRIOR TO COMMENCING DEMOLITION. COORDINATE WITH STRUCTURAL AND CIVIL.
3. DEMOLISH EXISTING MANHOLE "MH-9" IN ITS ENTIRETY. EXISTING WIRING STILL IN USE AND ROUTED THROUGH THIS MANHOLE WILL BE REPLACED WITH PROPOSED WIRING OF LIKE KIND AND REROUTED THROUGH PROPOSED DUCT BANKS, PROPOSED MANHOLE, AND PROPOSED JUNCTION BOX IN FILTER BUILDING AS APPLICABLE. PROPOSED WIRING SEGMENTS WILL BE SPLICED INSIDE THE EXISTING REMAINING MANHOLES OR PROPOSED JUNCTION BOX AS APPLICABLE DURING RENOVATION.
4. EXISTING DUCT BANK CONTAINS WIRES OF UNKNOWN SOURCE AND DESTINATION THAT SHALL BE RECONNECTED DURING RENOVATION. CONTENTS/DESTINATION ARE NOT KNOWN BY THE OWNER. AN ATTEMPT WAS MADE TO IDENTIFY THE SIZE, QUANTITIES, AND SOURCE/DESTINATION OF EXISTING WIRES. CONTRACTOR SHALL FIELD VERIFY AND DOCUMENT THE SIZE, QUANTITY, SOURCE, DESTINATION, AND PATH OF ALL EXISTING WIRES. IDENTIFY AND DOCUMENT ALL EXISTING CONNECTIONS PRIOR TO COMMENCING DEMOLITION TO FACILITATE RECONNECTION OF WIRES DURING RENOVATION ACTIVITIES. SHOULD CONTRACTOR'S INVESTIGATION REVEAL THE EXISTENCE OF ANY ABANDONED WIRES, THESE WIRES SHALL BE DISCONNECTED AND REMOVED IN THEIR ENTIRETY AT NO ADDITIONAL COST TO THE OWNER. COORDINATE WITH THE OWNER.
5. CUT EXISTING WIRES IN THIS DUCT BANK BETWEEN MANHOLE "MH-1" ON ONE END AND MANHOLE "MH-10" OR FILTER BUILDING PIPE GALLERY ON THE OTHER END AS APPLICABLE. REMOVE WIRE(S) FROM DUCT BANK. FOR EACH EXISTING WIRE, CONTRACTOR SHALL LEAVE SUFFICIENT WIRE REMAINING IN MANHOLE TO FACILITATE SPLICING DURING RENOVATION ACTIVITIES. REFER TO DUCT BANK DEMOLITION SECTIONAL VIEWS ON DRAWING NO. E-05 FOR ADDITIONAL REQUIREMENTS.

This document, and the designs incorporated herein, is an instrument of professional service that has been developed, designed and prepared by Harutunian Engineering, Inc., and is not to be used, in whole or in part, for any other project without giving written notice to Harutunian Engineering, Inc.

NO.	DR	CK	DATE	DESCRIPTION

REVISIONS

BLACK & VEATCH
Building a world of difference.
Black & Veatch Corporation
Registration No. F-653
Austin, Texas

HARUTUNIAN ENGINEERING, INC.
305 E Hunland Dr., Ste 500, Austin, TX 78752
TBPE Firm Registration No. F-2408

STATE OF TEXAS
K. A. HARUTUNIAN
59181
REGISTERED PROFESSIONAL ENGINEER
4/4/2014

Austin WATER
Walnut Creek WWTP - Tertiary Filter Rehabilitation Project
CIP ID No. 3023.025

ELECTRICAL
SITE ELECTRICAL PLAN
- DEMOLITION

DESIGNED BY:	HEI
DRAWN BY:	HEI
REVIEWED BY:	HEI
APPROVED BY:	HEI
PROJECT NO.:	168622
DATE:	4/4/2014
SCALE:	AS SHOWN

REVISION:

DISCIPLINE NO.
E-04

DWG. NO.
SHEET 116 OF 273

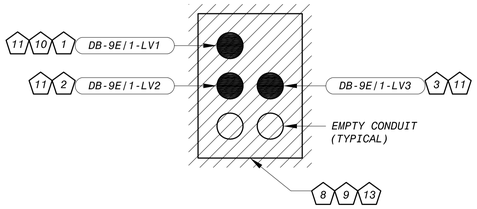

DEMOLITION
DUCT BANK SECTION (A / E-04)
SCALE: N.T.S.

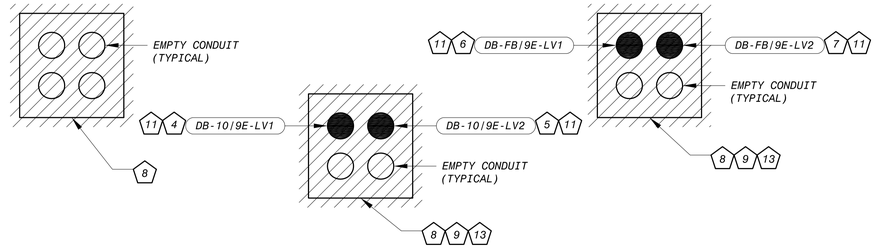

DEMOLITION
DUCT BANK SECTION (B / E-04)
SCALE: N.T.S.

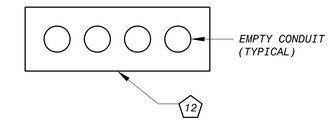

DEMOLITION
DUCT BANK SECTION (C / E-04)
SCALE: N.T.S.

GENERAL NOTES

1. COORDINATE WITH THE CONSTRUCTION SEQUENCING REQUIREMENTS OF THE PROJECT.
2. ALL ITEMS SHOWN ON THIS DRAWING ARE EXISTING UNLESS NOTED OTHERWISE.
3. DARKENED SOLID CIRCLES INDICATE CONDUITS WITH INSTALLED CONDUCTORS OR CABLES. UNDARKENED CIRCLES INDICATE EXISTING EMPTY CONDUITS DESIGNATED AS "SPARES" FOR SERVICE TO FUTURE PROJECTS.
4. CONDUIT TAGS/NAMES HAVE BEEN ARBITRARILY ASSIGNED TO AID IN THE DRAWINGS. SOME EXISTING TAGS/NAMES HAVE BEEN USED WHERE POSSIBLE. CONTRACTOR SHALL MAKE EXTENSIVE VERIFICATION OF EXISTING EQUIPMENT PRIOR TO COMMENCING FULL SCALE DEMOLITION/RENOVATION ACTIVITIES.
5. EXISTING CONDUITS ROUTING TO/FROM EXISTING MANHOLE "MH-9" USE "9E" IN CONDUIT TAG. PROPOSED CONDUITS ROUTING TO/FROM THE PROPOSED REPLACEMENT MANHOLE "MH-9" USE "9" IN CONDUIT TAG.

KEY NOTES

1. EXISTING 3" TRADE SIZE CONDUIT WITH PAGING SYSTEM CABLES.
2. EXISTING 3" TRADE SIZE CONDUIT WITH 3 #8AWG, 1 #10AWG WIRES.
3. EXISTING 3" TRADE SIZE CONDUIT WITH 10 #12AWG WIRES.
4. EXISTING 1" TRADE SIZE CONDUIT WITH 2 #12AWG WIRES.
5. EXISTING 1" TRADE SIZE CONDUIT WITH 2 BELDEN CABLES.
6. EXISTING 2" TRADE SIZE CONDUIT CONTAINING WIRING ENCLOSED IN GUTTER IN MANHOLE. REFER TO SITE PLANS.
7. EXISTING 2" TRADE SIZE CONDUIT WITH 12 #12AWG WIRES.
8. DEMOLISH DUCT BANK IN ITS ENTIRETY TO THE EXTENTS AS SHOWN IN THE HATCHED AREAS ON THE ELECTRICAL DEMOLITION SITE PLAN. FIELD VERIFY ACTUAL CONDITIONS PRIOR TO COMMENCING DEMOLITION. COORDINATE WITH STRUCTURAL AND CIVIL.
9. EXISTING DUCT BANK CONTAINS WIRES OF UNKNOWN SOURCE AND DESTINATION THAT SHALL BE RECONNECTED DURING RENOVATION. CONTENTS/DESTINATION ARE NOT KNOWN BY THE OWNER. AN ATTEMPT WAS MADE TO IDENTIFY THE SIZE, QUANTITIES, AND SOURCE/DESTINATION OF EXISTING WIRES. CONTRACTOR SHALL FIELD VERIFY AND DOCUMENT THE SIZE, QUANTITY, SOURCE, DESTINATION, AND PATH OF ALL EXISTING WIRES. IDENTIFY AND DOCUMENT ALL EXISTING CONNECTIONS PRIOR TO COMMENCING DEMOLITION TO FACILITATE RECONNECTION OF WIRES DURING RENOVATION ACTIVITIES. SHOULD CONTRACTOR'S INVESTIGATION REVEAL THE EXISTENCE OF ANY ABANDONED WIRES, THESE WIRES SHALL BE DISCONNECTED AND REMOVED IN THEIR ENTIRETY AT NO ADDITIONAL COST TO THE OWNER. COORDINATE WITH THE OWNER.
10. INSIDE MANHOLE "MH-1", DISCONNECT AND REMOVE WIRE GUTTER WHICH ENCLOSES WIRES CONTAINED IN THIS CONDUIT. QUANTITY AND SIZE OF WIRES INSIDE GUTTER IS UNKNOWN. PROPOSED GUTTER AND SUPPORTS WILL BE FURNISHED AND INSTALLED DURING RENOVATION.
11. CUT EXISTING WIRES IN THIS CONDUIT BETWEEN MANHOLE "MH-1" ON ONE END AND MANHOLE "MH-10" OR FILTER BUILDING PIPE GALLERY ON THE OTHER END AS APPLICABLE. REMOVE WIRE(S) FROM DUCT BANK. FOR EACH EXISTING WIRE, CONTRACTOR SHALL LEAVE SUFFICIENT WIRE REMAINING IN MANHOLE TO FACILITATE SPLICING DURING RENOVATION ACTIVITIES. REFER TO ELECTRICAL DEMOLITION SITE PLAN ON DRAWING NO. E-04.
12. NO DEMOLITION ACTIVITIES ARE REQUIRED FOR THIS DUCT BANK. DUCT BANK WILL BE MODIFIED DURING RENOVATION ACTIVITIES.
13. AT THE CONTRACTOR'S DISCRETION, IN LIEU OF CUTTING THE EXISTING WIRES, FURNISHING NEW WIRES OF LIKE KIND BETWEEN CUT POINTS, AND PERFORMING SUBMERGENCE RATED SPLICES AT EACH END OF EACH PROPOSED WIRE SEGMENT, THE CONTRACTOR MAY ELECT TO FIELD VERIFY SOURCE, DESTINATION, AND ROUTE OF WIRES, DISCONNECT AND REMOVE THE WIRES IN THEIR ENTIRETY FROM SOURCE TO DESTINATION, FURNISH AND INSTALL NEW WIRES OF LIKE KIND FROM SOURCE TO DESTINATION, AND MAKE ALL FINAL CONNECTIONS AT SOURCE AND DESTINATION AT NO ADDITIONAL COST TO THE OWNER.

This document, and the designs incorporated herein, is an instrument of professional service that has been developed, designed and prepared by Harutunian Engineering, Inc., and is not to be used, in whole or in part, for any other project without giving written notice to Harutunian Engineering, Inc.

NO.	DR	CK	DATE	DESCRIPTION

REVISIONS

BLACK & VEATCH
Building a world of difference.
Black & Veatch Corporation
Registration No. F-135
Austin, Texas

HARUTUNIAN ENGINEERING, INC.
305 E Hunland Dr., Ste 500; Austin, TX 78752
TBPE Firm Registration No. F-2408

STATE OF TEXAS
K. A. HARUTUNIAN
51818
REGISTERED PROFESSIONAL ENGINEER
4/4/2014

Austin WATER
Walnut Creek WWTP - Tertiary Filter Rehabilitation Project
CIP ID No. 3023.025

ELECTRICAL
SITE ELECTRICAL DUCT BANK
SECTION VIEWS - DEMOLITION

DESIGNED BY:	HEI
DRAWN BY:	HEI
REVIEWED BY:	HEI
APPROVED BY:	HEI
PROJECT NO.:	168622
DATE:	4/4/2014
SCALE:	AS SHOWN

REVISION:

DISCIPLINE NO.
E-05

DWG. NO.
SHEET 117 OF 273

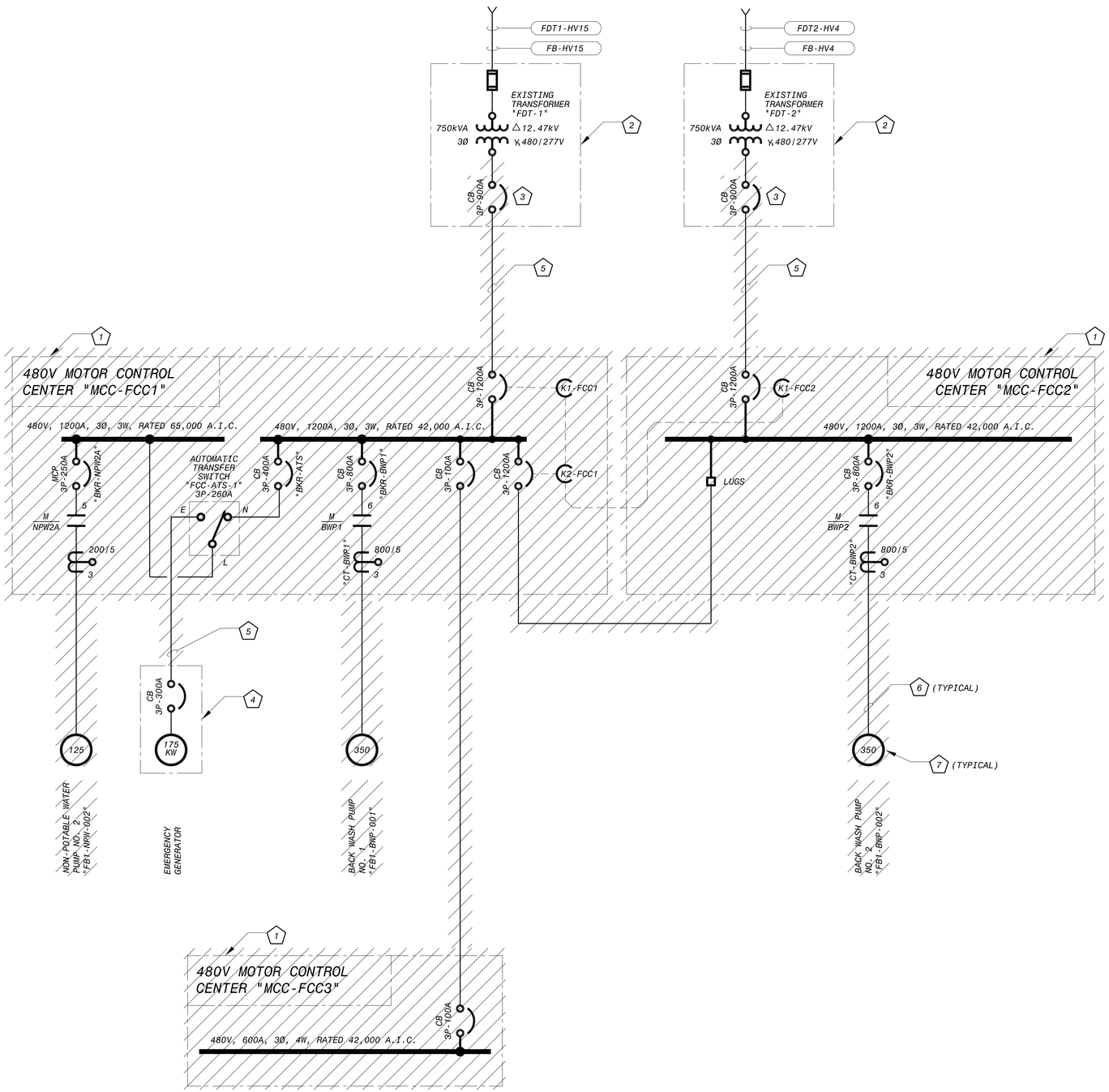

EXISTING 480V OVERALL
ONE-LINE DIAGRAM - DEMOLITION
NO SCALE

7 E-60 | 7 E-61 | 7 E-62 | 7 E-63

KEY NOTES

1. DISCONNECT AND REMOVE THE EXISTING 480V MOTOR CONTROL CENTER IN ITS ENTIRETY.
2. EXISTING TRANSFORMER TO REMAIN.
3. DISCONNECT AND REMOVE EXISTING SECONDARY CIRCUIT BREAKER.
4. EXISTING GENERATOR TO REMAIN.
5. DISCONNECT AND REMOVE WIRING FROM EXISTING CONDUIT. A PORTION OF THE CONDUIT WILL BE REUSED DURING RENOVATION ACTIVITIES. REFER TO THE PLAN DRAWINGS.
6. DISCONNECT AND REMOVE EXISTING CONDUIT/WIRE IN ITS ENTIRETY.
7. DISCONNECT AND REMOVE EXISTING EQUIPMENT IN ITS ENTIRETY.

GENERAL NOTES

1. THIS DRAWING IS INTENDED TO REPRESENT AN OVERVIEW OF THE POWER DISTRIBUTION SYSTEM. ONLY MAJOR EQUIPMENT AND LOADS HAVE BEEN SHOWN FOR CLARITY.
2. COORDINATE WITH THE CONSTRUCTION SEQUENCING REQUIREMENTS OF THE PROJECT.

This document, and the designs incorporated herein, is an instrument of professional service that has been developed, designed and prepared by Harutunian Engineering, Inc., and is not to be used, in whole or in part, for any other project without giving written notice to Harutunian Engineering, Inc.

NO.	DR	CK	DATE	DESCRIPTION

REVISIONS

BLACK & VEATCH
Building a world of difference.
Black & Veatch Corporation
Registration No. F-253
Austin, Texas

HARUTUNIAN ENGINEERING, INC.
305 E Hunland Dr., Ste 500, Austin, TX 78752
TBPE Firm Registration No. F-2408

STATE OF TEXAS
K. A. HARUTUNIAN
61815
REGISTERED PROFESSIONAL ENGINEER
4/4/2014

Austin WATER
Walnut Creek WWTP - Tertiary Filter Rehabilitation Project
CIP ID No. 3023.025

ELECTRICAL
FB1/FB2 480V OVERALL ONE-LINE DIAGRAM - DEMOLITION

DESIGNED BY:	HEI
DRAWN BY:	HEI
REVIEWED BY:	HEI
APPROVED BY:	HEI
PROJECT NO.:	168622
DATE:	4/4/2014
SCALE:	AS SHOWN

REVISION:

DISCIPLINE NO. E-06

DWG. NO.

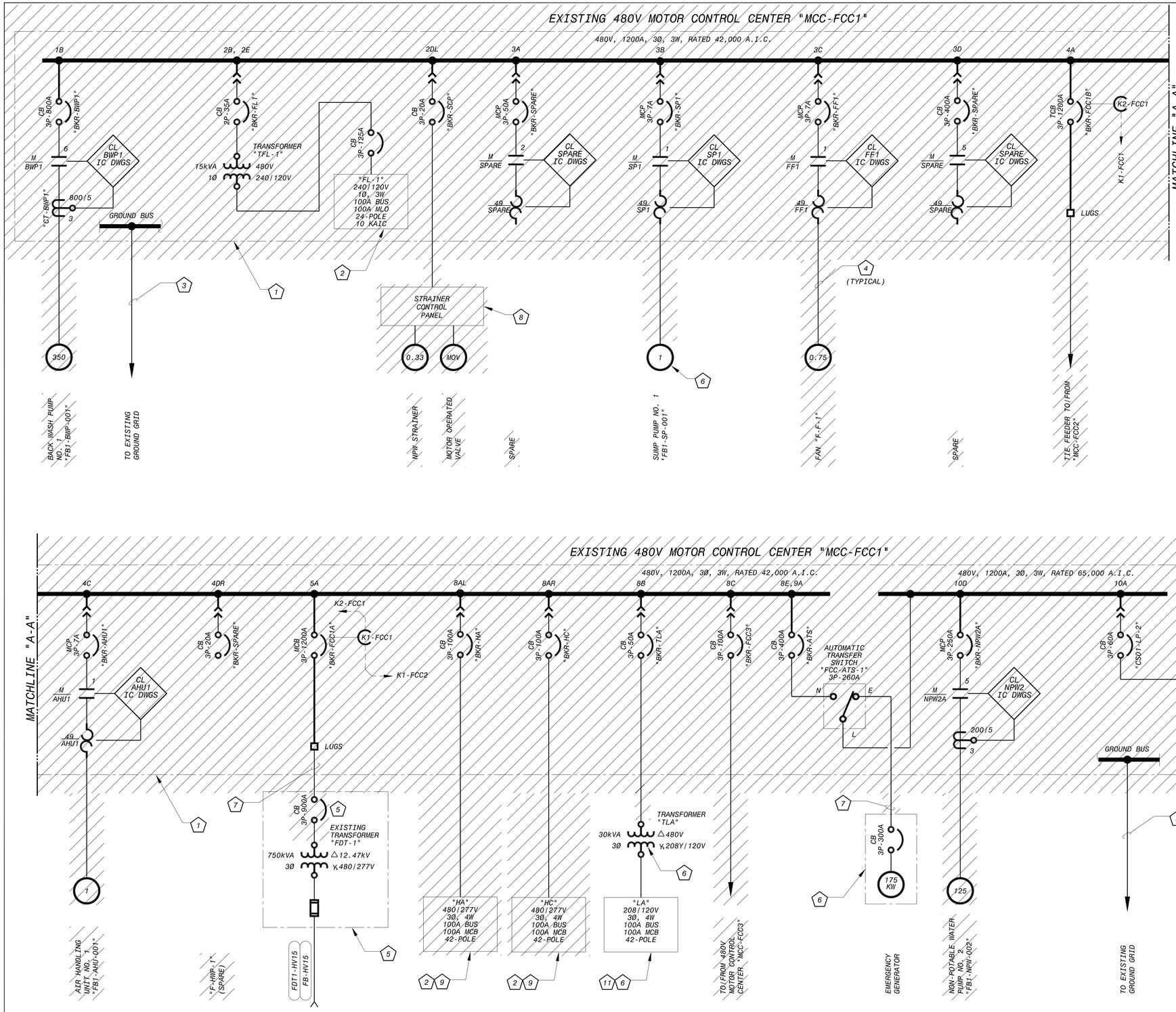

KEY NOTES

1. DISCONNECT AND REMOVE THE EXISTING 480V MOTOR CONTROL CENTER IN ITS ENTIRETY.
2. CONTRACTOR SHALL FURNISH AND INSTALL NECESSARY MEANS TO MAINTAIN CONTINUITY OF ELECTRICAL SERVICE TO PANELBOARD LOADS DURING ALL PHASES OF CONSTRUCTION.
3. DISCONNECT EXISTING GROUNDING. GROUNDING WILL BE RECONNECTED DURING RENOVATION ACTIVITIES.
4. DISCONNECT AND REMOVE CONDUIT/WIRE. REFER TO THE PLAN DRAWINGS.
5. EXISTING TRANSFORMER TO REMAIN. DISCONNECT AND REMOVE EXISTING SECONDARY CIRCUIT BREAKER.
6. EXISTING EQUIPMENT TO REMAIN.
7. DISCONNECT AND REMOVE WIRING FROM EXISTING CONDUIT. A PORTION OF THE CONDUIT WILL BE REUSED DURING RENOVATION ACTIVITIES. REFER TO THE PLAN DRAWINGS.
8. REFER TO I&C DRAWING FOR DEMOLITION OF EXISTING CONTROL PANEL.
9. DISCONNECT AND REMOVE PANELBOARD, ASSOCIATED POWER FIELD INTERCONNECT CONDUIT/WIRE, BRANCH CIRCUITING CONDUIT/WIRE, AND RELATED RACEWAY SUPPORT SYSTEMS IN THEIR ENTIRETY.
10. DISCONNECT AND REMOVE MINI POWER CENTER, ASSOCIATED POWER FIELD INTERCONNECT CONDUIT/WIRE, AND RELATED RACEWAY SUPPORT SYSTEMS IN THEIR ENTIRETY. CERTAIN BRANCH CIRCUITING CONDUITS WILL REMAIN AND BE REUSED DURING RENOVATION. REFER TO DRAWING NO. E-32.
11. FIELD VERIFY EXISTING BRANCH CIRCUITING AND LOADS. SHOULD CONTRACTOR'S INVESTIGATION REVEAL EXISTENCE OF ANY ABANDONED CIRCUITING, DISCONNECT AND REMOVE APPLICABLE BRANCH CIRCUITING CONDUIT/WIRE AND RELATED RACEWAY SUPPORT SYSTEMS IN THEIR ENTIRETY AT NO ADDITIONAL COST TO THE OWNER. REFER TO PROPOSED LIGHTING PANELBOARD SCHEDULES AND COORDINATE WITH THE OWNER.

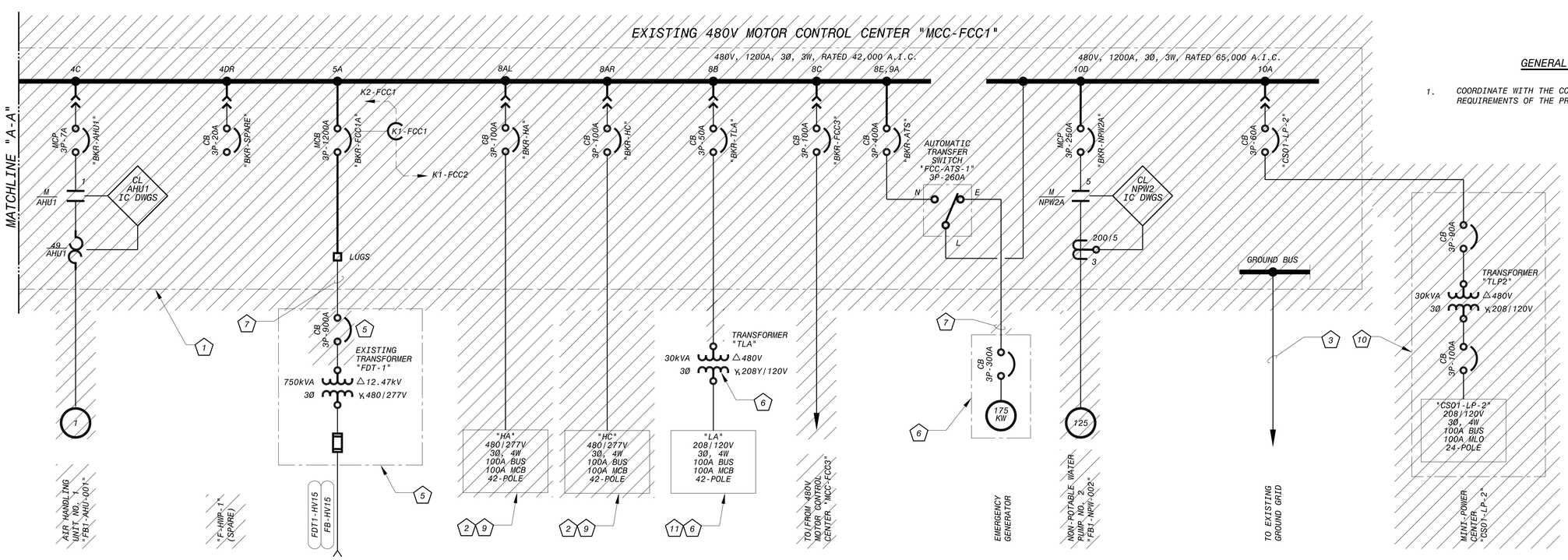

GENERAL NOTES

1. COORDINATE WITH THE CONSTRUCTION SEQUENCING REQUIREMENTS OF THE PROJECT.

EXISTING 480V "MCC-FCC1"
ONE-LINE DIAGRAM - DEMOLITION (1 E-60) (1 E-61) (1 E-62)
NO SCALE

This document, and the designs incorporated herein, is an instrument of professional service that has been developed, designed and prepared by Harutunian Engineering, Inc., and is not to be used, in whole or in part, for any other project without giving written notice to Harutunian Engineering, Inc.

NO.	DR	CK	DATE	DESCRIPTION

REVISIONS

BLACK & VEATCH
Building a world of difference.
Black & Veatch Corporation
Registration No. F-135
Austin, Texas

HARUTUNIAN ENGINEERING, INC.
305 E Hunland Dr., Ste 500; Austin, TX 78752
TBPE Firm Registration No. F-2408

K.A. Harutunian
STATE OF TEXAS
K. A. HARUTUNIAN
59181
REGISTERED PROFESSIONAL ENGINEER
4/4/2014

Austin WATER
Walnut Creek WWTP - Tertiary Filter Rehabilitation Project
CIP ID No. 3023.025

ELECTRICAL
FB1/FB2 480V ONE-LINE DIAGRAM
- DEMOLITION (SHEET 1 OF 3)

DESIGNED BY:	HEI
DRAWN BY:	HEI
REVIEWED BY:	HEI
APPROVED BY:	HEI
PROJECT NO.:	168622
DATE:	4/4/2014
SCALE:	AS SHOWN

REVISION:

DISCIPLINE NO.
E-07

DWG. NO.
SHEET 119 OF 273

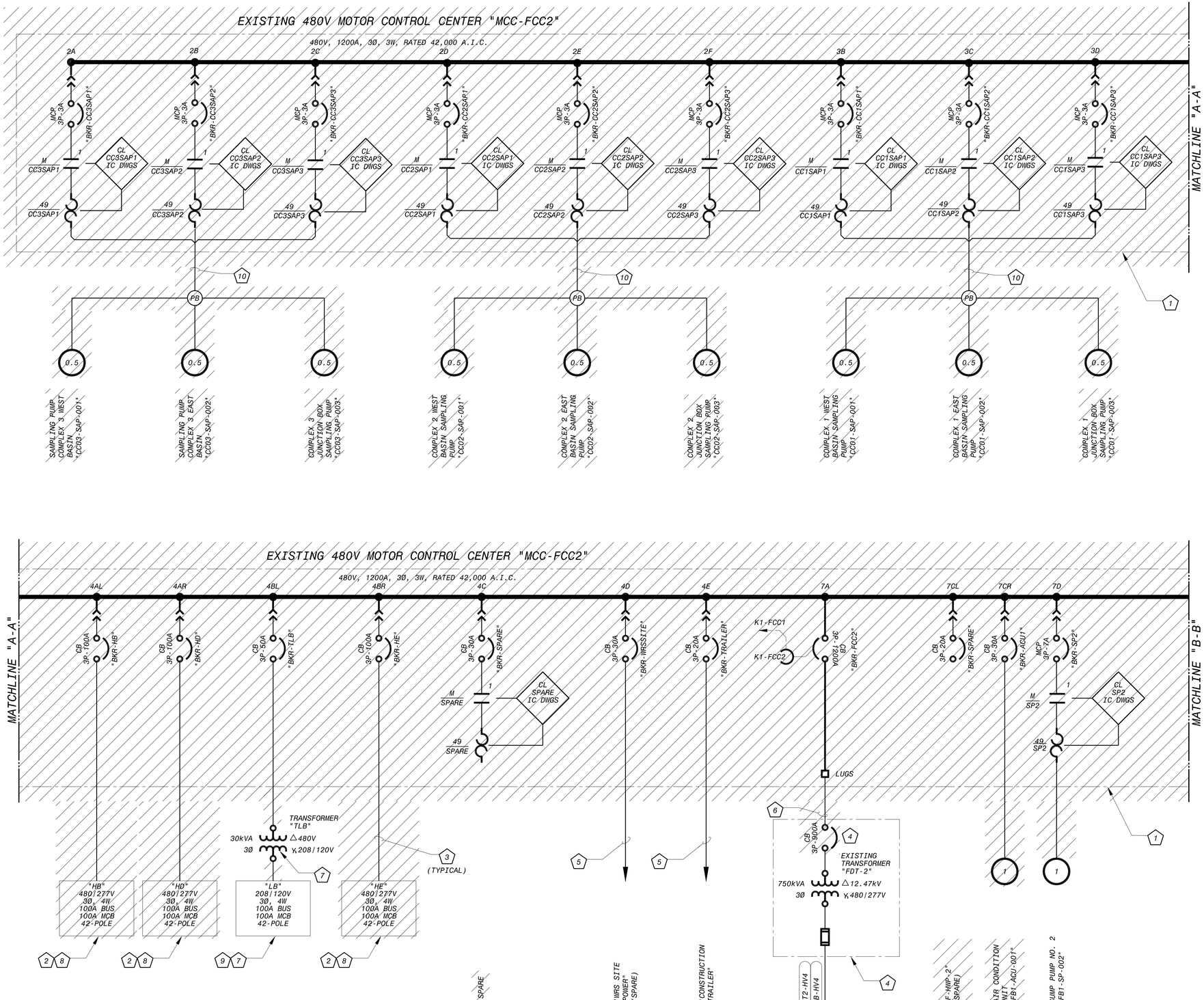

KEY NOTES

1. DISCONNECT AND REMOVE THE EXISTING 480V MOTOR CONTROL CENTER IN ITS ENTIRETY.
2. CONTRACTOR SHALL FURNISH AND INSTALL NECESSARY MEANS TO MAINTAIN CONTINUITY OF ELECTRICAL SERVICE TO PANELBOARD LOADS DURING ALL PHASES OF CONSTRUCTION.
3. DISCONNECT AND REMOVE CONDUIT/WIRE. REFER TO THE PLAN DRAWINGS.
4. EXISTING TRANSFORMER TO REMAIN. DISCONNECT AND REMOVE EXISTING SECONDARY CIRCUIT BREAKER.
5. DISCONNECT WIRING FROM EXISTING CIRCUIT BREAKER. EXISTING CONDUIT/WIRE TO REMAIN AND BE RECONNECTED DURING RENOVATION ACTIVITIES.
6. DISCONNECT AND REMOVE WIRING FROM EXISTING CONDUIT. A PORTION OF THE CONDUIT WILL BE REUSED DURING RENOVATION ACTIVITIES. REFER TO THE PLAN DRAWINGS.
7. EXISTING EQUIPMENT TO REMAIN.
8. DISCONNECT AND REMOVE PANELBOARD, ASSOCIATED POWER FIELD INTERCONNECT CONDUIT/WIRE, BRANCH CIRCUITING CONDUIT/WIRE, AND RELATED RACEWAY SUPPORT SYSTEMS IN THEIR ENTIRETY.
9. FIELD VERIFY EXISTING BRANCH CIRCUITING AND LOADS. SHOULD CONTRACTOR'S INVESTIGATION REVEAL EXISTENCE OF ANY ABANDONED CIRCUITING, DISCONNECT AND REMOVE APPLICABLE BRANCH CIRCUITING CONDUIT/WIRE AND RELATED RACEWAY SUPPORT SYSTEMS IN THEIR ENTIRETY AT NO ADDITIONAL COST TO THE OWNER. REFER TO PROPOSED LIGHTING PANELBOARD SCHEDULES AND COORDINATE WITH THE OWNER.
10. DISCONNECT AND REMOVE WIRING FROM EXISTING CONDUIT. A PORTION OF THE CONDUIT WILL REMAIN AND BE CAPPED OFF FOR FUTURE USE. REFER TO DRAWING NO. E-12. FOR BIDDING PURPOSES ASSUME TOTAL CONDUIT LENGTH BETWEEN EXISTING MCC AND SAMPLING PUMPS IS 300', 600', AND 900' FOR COMPLEX 1, 2, AND 3 RESPECTIVELY.

This document, and the designs incorporated herein, is an instrument of professional service that has been developed, designed and prepared by Harutunian Engineering, Inc., and is not to be used, in whole or in part, for any other project without giving written notice to Harutunian Engineering, Inc.

EXISTING 480V "MCC-FCC2"
ONE-LINE DIAGRAM - DEMOLITION
NO SCALE

2 E-60 | 2 E-61 | 2 E-62

GENERAL NOTES

1. COORDINATE WITH THE CONSTRUCTION SEQUENCING REQUIREMENTS OF THE PROJECT.

NO.	DR	CK	DATE	DESCRIPTION

REVISIONS

BLACK & VEATCH
Building a world of difference.
Black & Veatch Corporation
Registration No. F-253
Austin, Texas

HARUTUNIAN ENGINEERING, INC.
305 E Huntland Dr, Ste 500, Austin, TX 78752
TBPE Firm Registration No. F-2408

STATE OF TEXAS
K. A. HARUTUNIAN
59181
REGISTERED PROFESSIONAL ENGINEER
4/4/2014

Austin WATER
Walnut Creek WWTP - Tertiary Filter Rehabilitation Project
CIP ID No. 3023.025

ELECTRICAL
FB1/FB2 480V ONE-LINE DIAGRAM - DEMOLITION (SHEET 2 OF 3)

DESIGNED BY:	HEI
DRAWN BY:	HEI
REVIEWED BY:	HEI
APPROVED BY:	HEI
PROJECT NO.:	168622
DATE:	4/4/2014
SCALE:	AS SHOWN
REVISION:	

DISCIPLINE NO.
E-08

DWG. NO.
SHEET 120 OF 273

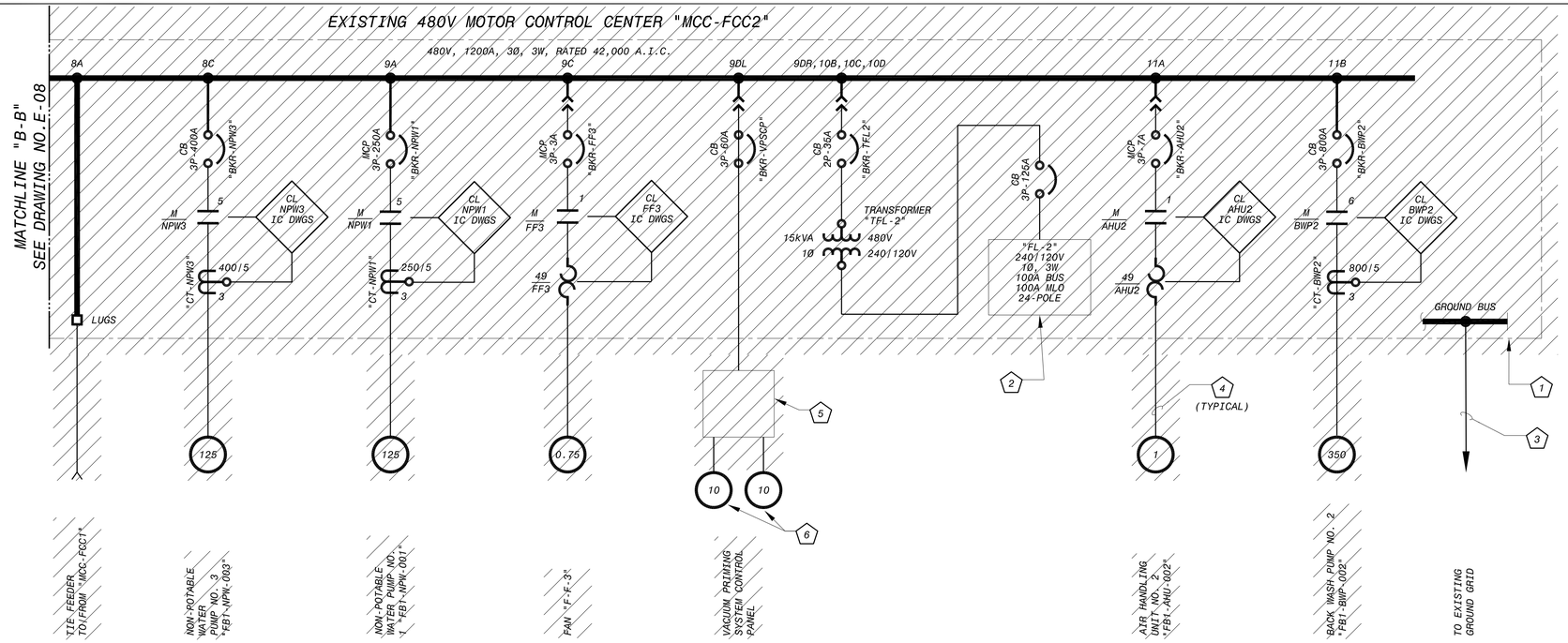

EXISTING 480V "MCC-FCC2"
ONE-LINE DIAGRAM - DEMOLITION (2 / E-60) (2 / E-61) (2 / E-62)
NO SCALE

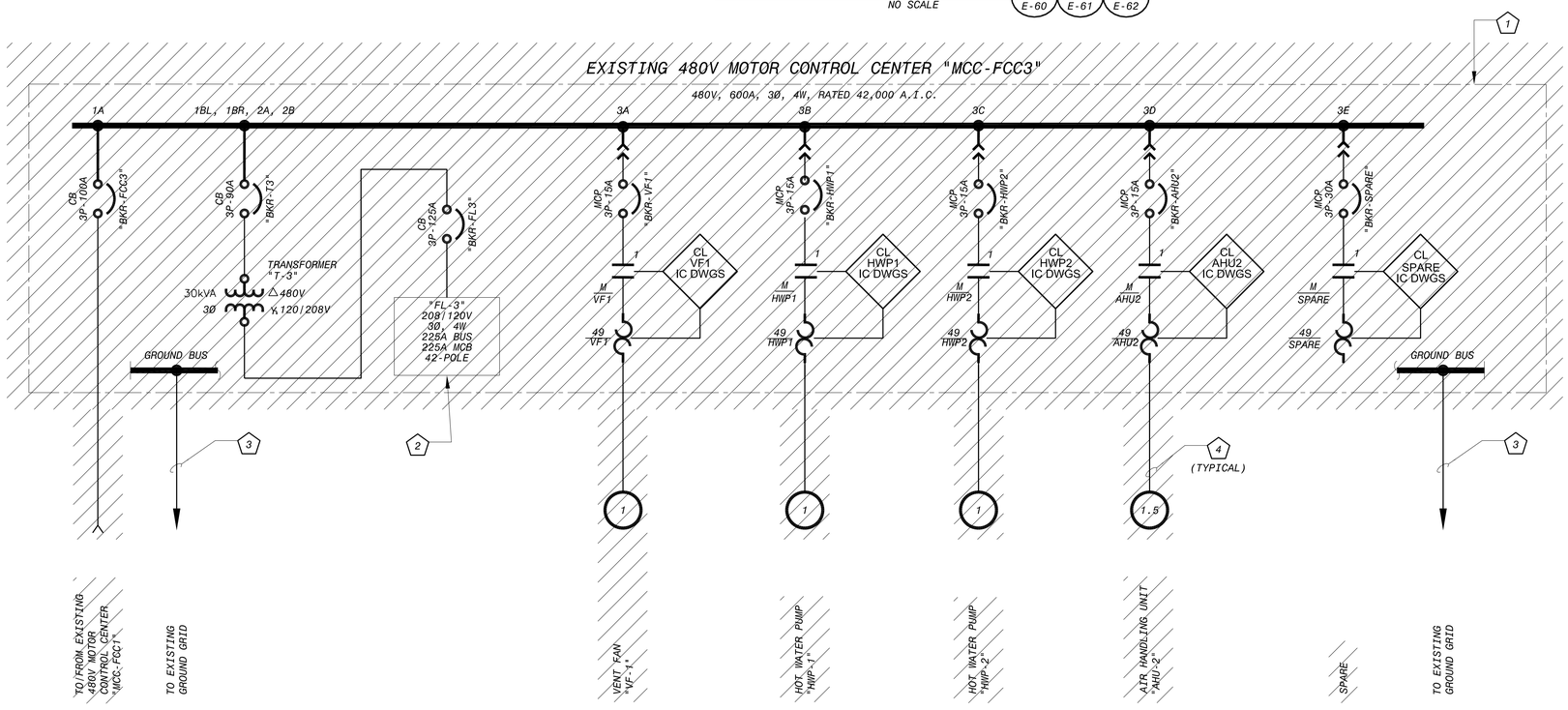

EXISTING 480V "MCC-FCC3"
ONE-LINE DIAGRAM - DEMOLITION (5 / E-63)
NO SCALE

KEY NOTES

1. DISCONNECT AND REMOVE THE EXISTING 480V MOTOR CONTROL CENTER IN ITS ENTIRETY.
2. CONTRACTOR SHALL FURNISH AND INSTALL NECESSARY MEANS TO MAINTAIN CONTINUITY OF ELECTRICAL SERVICE TO PANELBOARD LOADS DURING ALL PHASES OF CONSTRUCTION.
3. DISCONNECT EXISTING GROUNDING. GROUNDING WILL BE RECONNECTED DURING RENOVATION ACTIVITIES.
4. DISCONNECT AND REMOVE CONDUIT/WIRE. REFER TO THE PLAN DRAWINGS.
5. REFER TO I&C DRAWING FOR DEMOLITION OF EXISTING CONTROL PANEL.
6. EXISTING EQUIPMENT TO REMAIN.

GENERAL NOTES

1. COORDINATE WITH THE CONSTRUCTION SEQUENCING REQUIREMENTS OF THE PROJECT.

This document, and the designs incorporated herein, is an instrument of professional service that has been developed, designed and prepared by Harutunian Engineering, Inc., and is not to be used, in whole or in part, for any other project without giving written notice to Harutunian Engineering, Inc.

NO.	DR	CK	DATE	DESCRIPTION

REVISIONS

BLACK & VEATCH
Building a world of difference.
Black & Veatch Corporation
Registration No. F-253
Austin, Texas

HARUTUNIAN ENGINEERING, INC.
305 E Hunland Dr. Ste 500; Austin, TX 78752
TBPE Firm Registration No. F-1408

STATE OF TEXAS — K. A. HARUTUNIAN — REGISTERED PROFESSIONAL ENGINEER
4/4/2014

Austin WATER
Walnut Creek WWTP - Tertiary Filter Rehabilitation Project
CIP ID No. 3023.025

ELECTRICAL
FB1/FB2 480V ONE-LINE DIAGRAM
- DEMOLITION (SHEET 3 OF 3)

DESIGNED BY:	HEI
DRAWN BY:	HEI
REVIEWED BY:	HEI
APPROVED BY:	HEI
PROJECT NO.:	168622
DATE:	4/4/2014
SCALE:	AS SHOWN

REVISION:

DISCIPLINE NO.
E-09

DWG. NO.
SHEET 121 OF 273

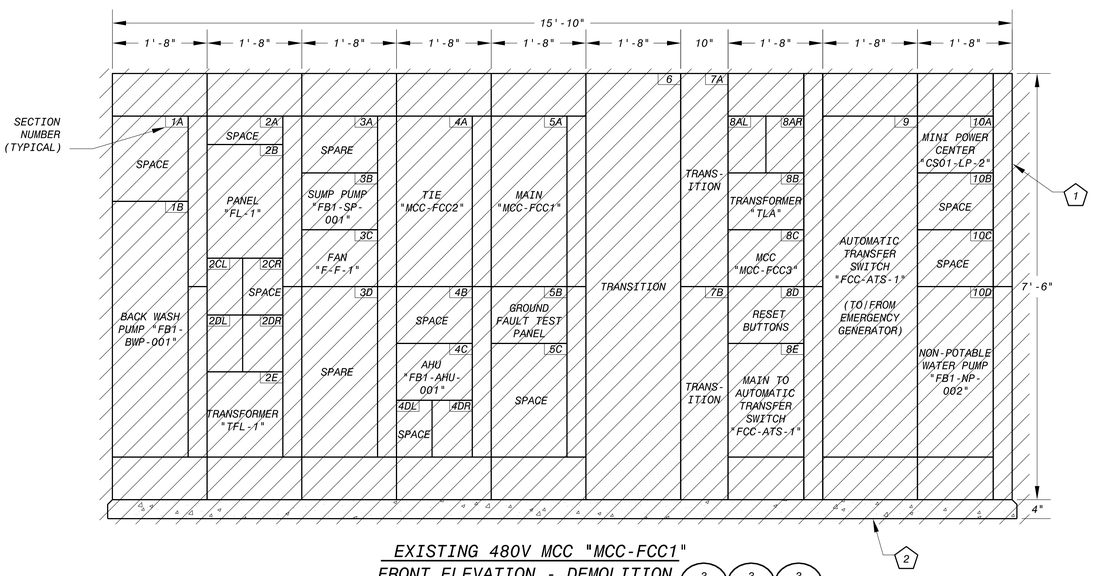

EXISTING 480V MCC "MCC-FCC1"
FRONT ELEVATION - DEMOLITION (3 / E-60) (3 / E-61) (3 / E-62)
NO SCALE

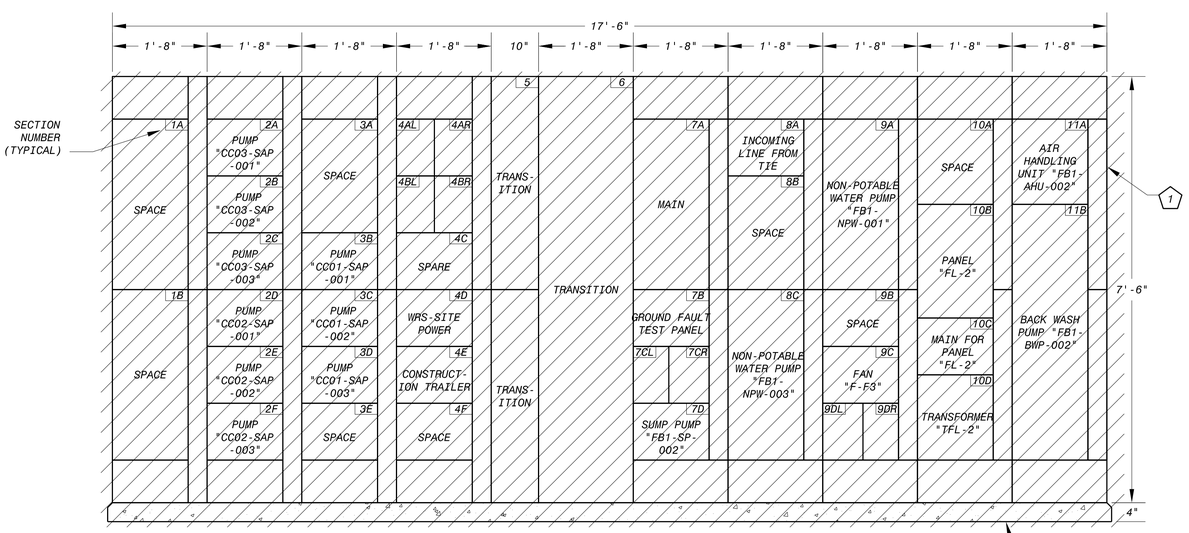

EXISTING 480V MCC "MCC-FCC2"
FRONT ELEVATION - DEMOLITION (4 / E-60) (4 / E-61) (4 / E-62)
NO SCALE

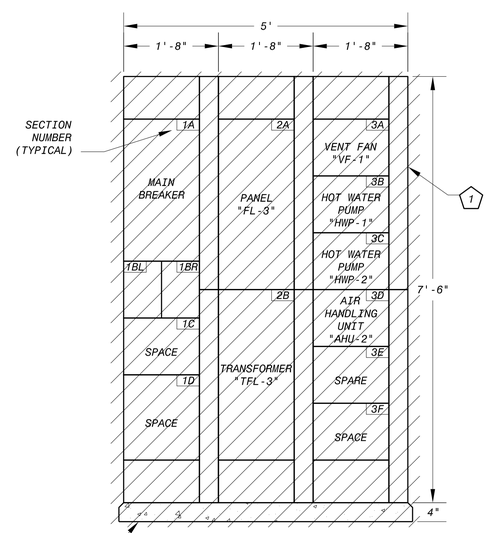

EXISTING 480V MCC "MCC-FCC3"
FRONT ELEVATION - DEMOLITION (6 / E-63)
NO SCALE

EQUIPMENT IDENTIFICATION TABLE

MCC	SECTION NUMBER	DESCRIPTION
MCC-FCC1	2CL	MAIN FOR PANEL "FL-1"
	2DL	NPW STRAINER
	2DR	MAIN FOR TRANSFORMER "TFL-1"
	4DR	HEATING WATER PUMP "F-HWP-1"
	8AL	MAIN FOR PANEL "HA"
	8AR	MAIN FOR PANEL "HC"
MCC-FCC2	4AL	MAIN FOR PANEL "HB"
	4AR	MAIN FOR PANEL "HD"
	4BL	MAIN FOR TRANSFORMER "TLB"
	4BR	MAIN FOR PANEL "HE"
	7CL	HEATING WATER PUMP "F-HWP-2"
	7CR	AIR CONDITIONER "FB1-ACU-001"
	9DL	VACUUM PRIMING SYSTEM CONTROL PANEL
	9DR	MAIN FOR TRANSFORMER "TFL-2"
MCC-FCC3	1BL	TRANSFORMER "TFL-3"
	1BR	MAIN FOR PANEL "FL-3"

KEY NOTES

1. DISCONNECT AND REMOVE THE EXISTING 480V MOTOR CONTROL CENTER IN ITS ENTIRETY.
2. DISCONNECT AND REMOVE EXISTING EQUIPMENT PAD IN ITS ENTIRETY.

GENERAL NOTES

1. CROSS-REFERENCE SECTION CONTENTS SHOWN ON THE ELEVATION DRAWING WITH THE DESCRIPTIONS SHOWN IN THE 'EQUIPMENT IDENTIFICATION TABLE' SHOWN ON THIS DRAWING.
2. COORDINATE WITH THE CONSTRUCTION SEQUENCING REQUIREMENTS OF THE PROJECT.

This document, and the designs incorporated herein, is an instrument of professional service that has been developed, designed and prepared by Harutunian Engineering, Inc., and is not to be used, in whole or in part, for any other project without giving written notice to Harutunian Engineering, Inc.

NO.	DR	CK	DATE	DESCRIPTION

REVISIONS

BLACK & VEATCH
Building a world of difference.
Black & Veatch Corporation
Registration No. F-653
Austin, Texas

HARUTUNIAN ENGINEERING, INC.
305 E Huntland Dr, Ste 500; Austin, TX 78752
TBPE Firm Registration No. F-2408

STATE OF TEXAS
K. A. HARUTUNIAN
61815
REGISTERED PROFESSIONAL ENGINEER
4/4/2014

Austin WATER
Walnut Creek WWTP - Tertiary Filter Rehabilitation Project
CIP ID No. 3023.025

ELECTRICAL
FB1/FB2 DISTRIBUTION EQUIPMENT
FRONT ELEVATIONS - DEMOLITION

DESIGNED BY:	HEI
DRAWN BY:	HEI
REVIEWED BY:	HEI
APPROVED BY:	HEI
PROJECT NO.:	168622
DATE:	4/4/2014
SCALE:	AS SHOWN

REVISION:

DISCIPLINE NO.
E-10

DWG. NO.
SHEET 122 OF 273

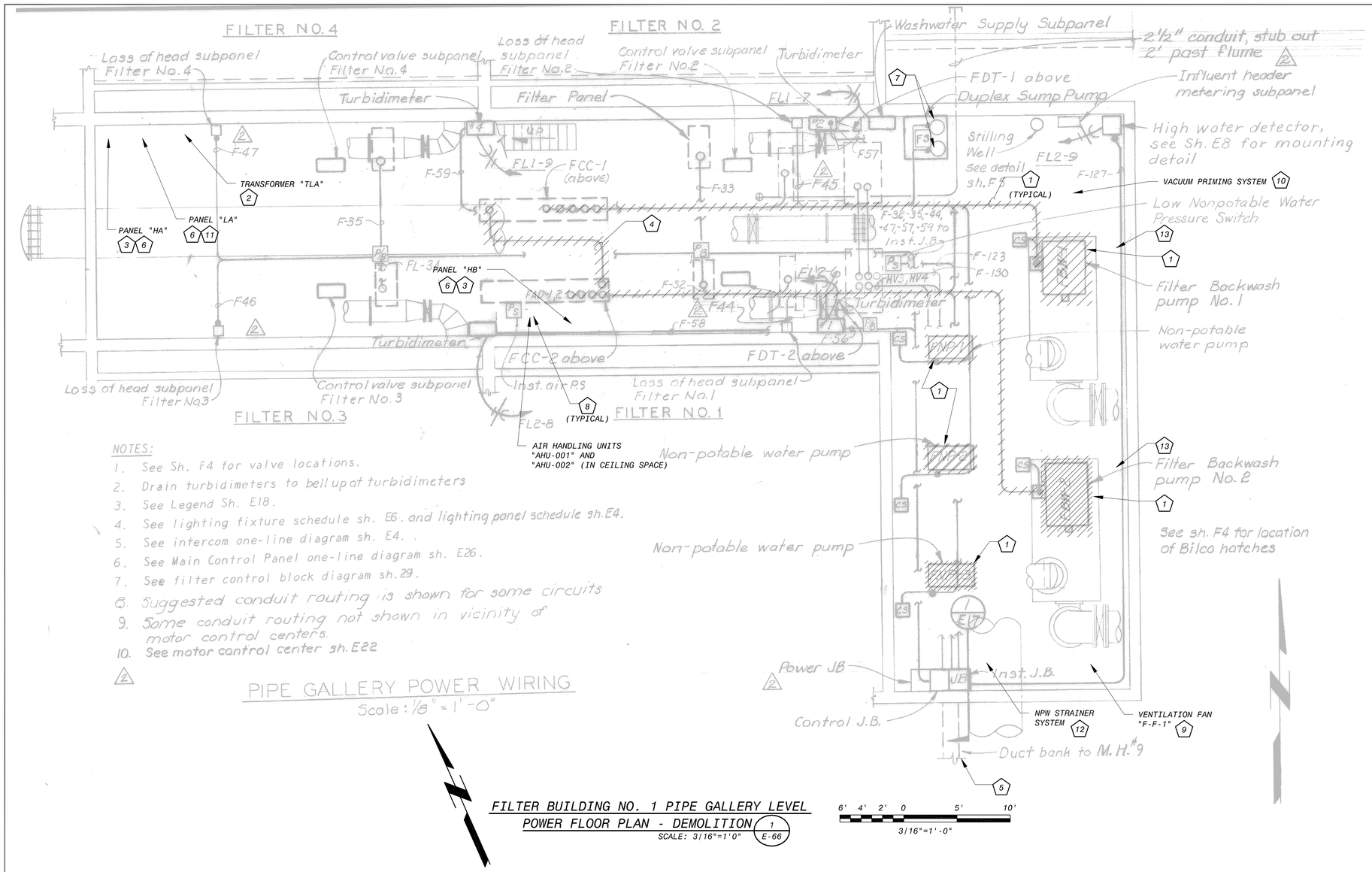

NOTES:

1. See Sh. F4 for valve locations.
2. Drain turbidimeters to bell up at turbidimeters
3. See Legend Sh. E18.
4. See lighting fixture schedule sh. E6. and lighting panel schedule sh. E4.
5. See intercom one-line diagram sh. E4.
6. See Main Control Panel one-line diagram sh. E26.
7. See filter control block diagram sh. 29.
8. Suggested conduit routing is shown for some circuits
9. Some conduit routing not shown in vicinity of motor control centers.
10. See motor control center sh. E22

PIPE GALLERY POWER WIRING
Scale: 1/8" = 1'-0"

FILTER BUILDING NO. 1 PIPE GALLERY LEVEL
POWER FLOOR PLAN - DEMOLITION (1 / E-66)
SCALE: 3/16"=1'0"

6' 4' 2' 0 5' 10'
3/16"=1'-0"

GENERAL NOTES

1. COORDINATE WITH THE CONSTRUCTION SEQUENCING REQUIREMENTS OF THE PROJECT.

KEY NOTES

(1) DISCONNECT AND REMOVE EXISTING MOTOR, ASSOCIATED PUMPING UNIT POWER FIELD INTERCONNECT CONDUIT/WIRE AND RELATED RACEWAY SUPPORT SYSTEMS IN THEIR ENTIRETY.

(2) ALTHOUGH NOT SHOWN, EXISTING TRANSFORMER TO REMAIN AND BE RELOCATED DURING RENOVATION ACTIVITIES. DISCONNECT AND REMOVE EXISTING TRANSFORMER FEEDER CONDUIT/WIRE AND RELATED RACEWAY SUPPORT SYSTEMS IN THEIR ENTIRETY.

(3) ALTHOUGH NOT SHOWN, DISCONNECT AND REMOVE EXISTING 480V PANELBOARD, ASSOCIATED PANELBOARD POWER FIELD INTERCONNECT CONDUIT/WIRE, BRANCH CIRCUITING CONDUIT/WIRE, AND RELATED RACEWAY SUPPORT SYSTEMS IN THEIR ENTIRETY.

(4) DISCONNECT AND REMOVE EXISTING MOTOR CONTROL CENTER TIE FEEDER CONDUIT/WIRE AND RELATED RACEWAY SUPPORT SYSTEM IN ITS ENTIRETY.

(5) DISCONNECT AND REMOVE WIRING FROM EXISTING DUCT BANK. SAW CUT EXISTING DUCT BANK ADJACENT TO WALL AND ABANDON IN PLACE. FILL/PACK ENTIRE ANNULAR SPACE OF CONDUIT WITH NON-SHRINK GROUT. REFER TO THE SITE DRAWINGS.

(6) CONTRACTOR SHALL FURNISH AND INSTALL NECESSARY MEANS TO MAINTAIN CONTINUITY OF ELECTRICAL SERVICE TO PANELBOARD LOADS DURING ALL PHASES OF CONSTRUCTION.

KEY NOTES

(7) EXISTING SUMP PUMP MOTORS SHALL REMAIN. DISCONNECT AND REMOVE EXISTING ASSOCIATED SUMP PUMPING UNIT POWER FIELD INTERCONNECT CONDUIT/WIRE AND RELATED RACEWAY SUPPORT SYSTEMS IN THEIR ENTIRETY.

(8) ALTHOUGH NOT SHOWN, DISCONNECT AND REMOVE EXISTING AIR HANDLING UNIT MOTOR, ASSOCIATED AIR HANDLING UNIT POWER FIELD INTERCONNECT CONDUIT/WIRE AND RELATED RACEWAY SUPPORT SYSTEMS IN THEIR ENTIRETY.

(9) ALTHOUGH NOT SHOWN, DISCONNECT AND REMOVE EXISTING VENTILATION FAN "F-F-1" MOTOR, ASSOCIATED POWER FIELD INTERCONNECT CONDUIT/WIRE AND RELATED RACEWAY SUPPORTS IN THEIR ENTIRETY

(10) ALTHOUGH NOT SHOWN, EXISTING VACUUM PRIMING SYSTEM PUMP MOTORS SHALL REMAIN. DISCONNECT AND REMOVE EXISTING PUMPING UNIT POWER FIELD INTERCONNECT CONDUIT/WIRE AND RELATED RACEWAY SUPPORT SYSTEMS IN THEIR ENTIRETY. DISCONNECT AND REMOVE EXISTING CONTROL PANEL POWER FIELD INTERCONNECT CONDUIT/WIRE AND RELATED RACEWAY SUPPORT SYSTEMS IN THEIR ENTIRETY. REFER TO I&C DRAWINGS FOR DEMOLITION OF CONTROL PANEL.

KEY NOTES

(11) ALTHOUGH NOT SHOWN, EXISTING 120/208V PANELBOARD SHALL REMAIN. FIELD VERIFY EXISTING BRANCH CIRCUITING AND LOADS. SHOULD CONTRACTOR'S INVESTIGATION REVEAL EXISTENCE OF ANY ABANDONED CIRCUITING, DISCONNECT AND REMOVE APPLICABLE BRANCH CIRCUITING CONDUIT/WIRE AND RELATED RACEWAY SUPPORT SYSTEMS IN THEIR ENTIRETY AT NO ADDITIONAL COST TO THE OWNER. REFER TO PROPOSED LIGHTING PANELBOARD SCHEDULES AND COORDINATE WITH THE OWNER.

(12) ALTHOUGH NOT SHOWN, DISCONNECT AND REMOVE EXISTING NPW STRAINER SYSTEM MOTORS, ASSOCIATED STRAINER AND STRAINER CONTROL PANEL POWER FIELD INTERCONNECT CONDUIT/WIRE AND RELATED RACEWAY SUPPORT SYSTEMS IN THEIR ENTIRETY.

(13) ALTHOUGH NOT SHOWN, DISCONNECT AND REMOVE EXISTING BACKWASH PUMP MOTOR POWER FACTOR CORRECTION CAPACITOR LOCATED ON WALL. DISCONNECT AND REMOVE ALL ASSOCIATED POWER FIELD INTERCONNECT CONDUIT/WIRE AND RELATED RACEWAY SUPPORT SYSTEMS IN THEIR ENTIRETY.

This document, and the designs incorporated herein, is an instrument of professional service that has been developed, designed and prepared by Harutunian Engineering, Inc., and is not to be used, in whole or in part, for any other project without giving written notice to Harutunian Engineering, Inc.

NO.	DR	CK	DATE	DESCRIPTION

REVISIONS

BLACK & VEATCH
Building a world of difference.
Black & Veatch Corporation
Registration No. F-653
Austin, Texas

HARUTUNIAN ENGINEERING, INC.
305 E Huntland Dr., Ste 500, Austin, TX 78752
TBPE Firm Registration No. F-2408

STATE OF TEXAS
K. A. HARUTUNIAN
68185
REGISTERED PROFESSIONAL ENGINEER
4/4/2014

Austin WATER
Walnut Creek WWTP - Tertiary Filter Rehabilitation Project
CIP ID No. 3023.025

ELECTRICAL
FB1/FB2 POWER FLOOR PLANS
- DEMOLITION (SHEET 1 OF 3)

DESIGNED BY:	HEI
DRAWN BY:	HEI
REVIEWED BY:	HEI
APPROVED BY:	HEI
PROJECT NO.:	168622
DATE:	4/4/2014
SCALE:	AS SHOWN
REVISION:	
DISCIPLINE NO.	E-11
DWG. NO.	SHEET 123 OF 273

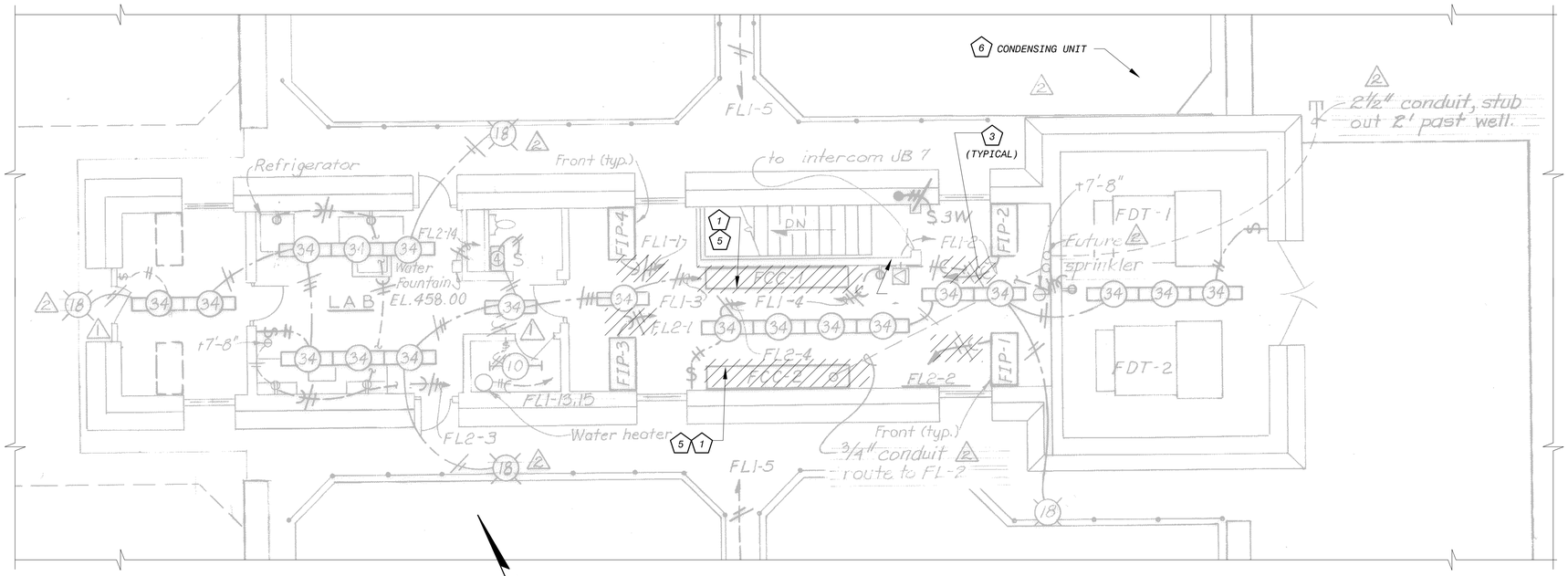

FILTER BUILDING NO. 1 CONTROL ROOM LEVEL
POWER FLOOR PLAN - DEMOLITION (2 / E-66)
SCALE: 3/16"=1'0"

6' 4' 2' 0 5' 10'
3/16"=1'-0"

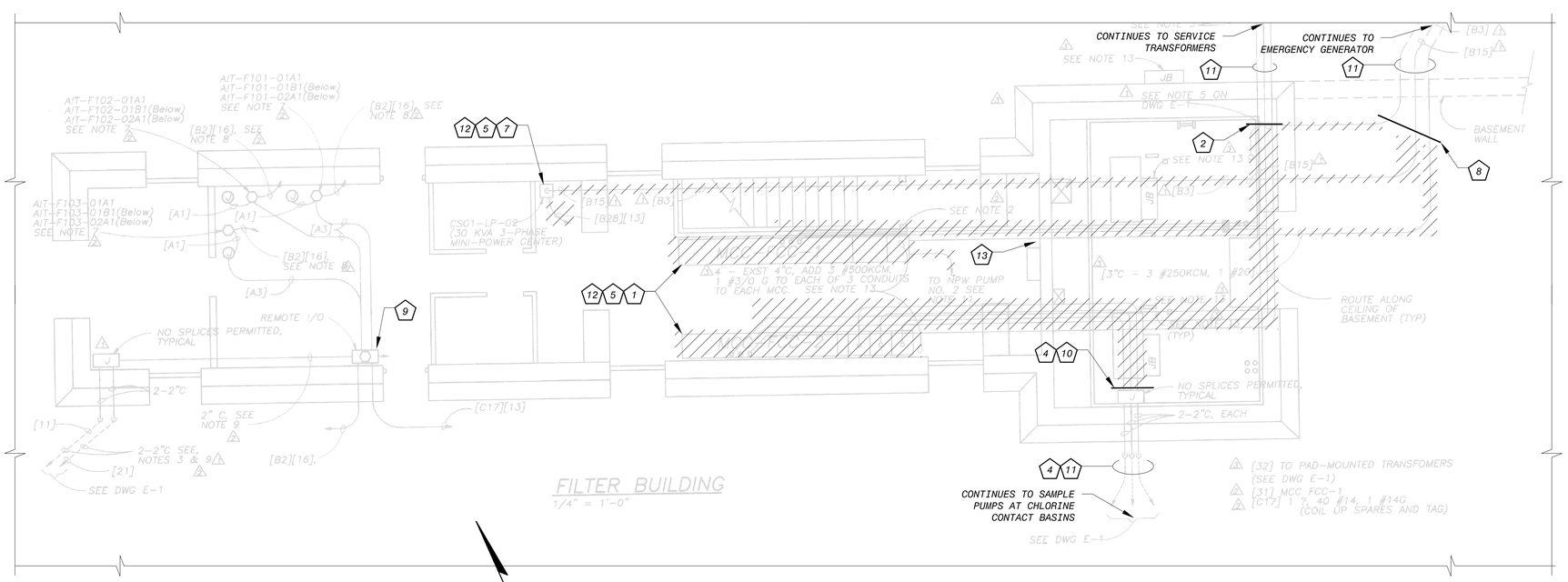

FILTER BUILDING NO. 1 CONTROL ROOM LEVEL
POWER FLOOR PLAN - DEMOLITION (3 / E-67)
SCALE: 3/16"=1'0"

6' 4' 2' 0 5' 10'
3/16"=1'-0"

KEY NOTES

1. DISCONNECT AND REMOVE EXISTING MOTOR CONTROL CENTER AND EQUIPMENT PAD IN ITS ENTIRETY. DISCONNECT AND REMOVE EXISTING MOTOR CONTROL CENTER SERVICE FEEDER WIRING FROM EXISTING RACEWAY SYSTEM.
2. CUT EXISTING MOTOR CONTROL CENTER SERVICE FEEDER CONDUITS INSIDE THE PIPE GALLERY LEVEL. DISCONNECT AND REMOVE RACEWAY SYSTEM AND RELATED SUPPORTS BETWEEN THIS CUT LOCATION AND EXISTING MCC. CONDUITS BETWEEN THIS CUT LOCATION AND EXISTING TRANSFORMER SHALL BE REUSED DURING RENOVATION ACTIVITIES. PROPOSED CONDUITS WILL CONNECT TO EXISTING RACEWAY SYSTEM. FIELD VERIFY CUT LOCATION PRIOR TO COMMENCING DEMOLITION ACTIVITIES.
3. DISCONNECT AND REMOVE FILTER CONTROL PANEL POWER SERVICE CONDUIT/WIRE AND RELATED RACEWAY SUPPORT SYSTEM IN ITS ENTIRETY.
4. FOR BIDDING PURPOSES ASSUME TOTAL CONDUIT LENGTH BETWEEN EXISTING MCC AND SAMPLING PUMPS IS 400', 700', AND 1000' FOR COMPLEX 1, 2, AND 3 RESPECTIVELY.
5. CONTRACTOR SHALL FURNISH AND INSTALL NECESSARY MEANS TO MAINTAIN CONTINUITY OF ELECTRICAL SERVICE TO PANELBOARD LOADS DURING ALL PHASES OF CONSTRUCTION.
6. ALTHOUGH NOT SHOWN, DISCONNECT AND REMOVE EXISTING CONDENSING UNIT ASSOCIATED POWER FIELD INTERCONNECT CONDUIT/WIRE AND RELATED RACEWAY SUPPORT SYSTEMS IN THEIR ENTIRETY. FIELD VERIFY POWER SOURCE PRIOR TO COMMENCING DEMOLITION.
7. DISCONNECT AND REMOVE EXISTING MINI-POWER CENTER "CS01-LP-2", POWER FIELD INTERCONNECT CONDUIT/WIRE AND RELATED RACEWAY SUPPORT SYSTEMS IN THEIR ENTIRETY. CERTAIN BRANCH CIRCUITING CONDUITS ASSOCIATED WITH EMERGENCY GENERATOR WILL REMAIN AND BE REUSED DURING RENOVATION. REFER TO DRAWING NO. E-32.
8. CUT EXISTING GENERATOR ASSOCIATED FEEDER AND BRANCH CIRCUITING CONDUITS INSIDE THE PIPE GALLERY LEVEL. DISCONNECT AND REMOVE RACEWAY SYSTEM AND RELATED SUPPORTS BETWEEN THIS CUT LOCATION AND EXISTING AUTOMATIC TRANSFER SWITCH AND MINI-POWER CENTER "CS01-LP-2". CONDUITS BETWEEN THIS CUT LOCATION AND EXISTING GENERATOR SHALL BE REUSED DURING RENOVATION ACTIVITIES. PROPOSED CONDUITS WILL CONNECT TO EXISTING RACEWAY SYSTEM IN PIPE GALLERY LEVEL. FIELD VERIFY CUT LOCATION PRIOR TO COMMENCING DEMOLITION ACTIVITIES.
9. ALTHOUGH NOT SHOWN, DISCONNECT AND REMOVE POWER BRANCH CIRCUIT HOMERUN BETWEEN THIS PANEL AND EXISTING MINI-POWER CENTER "CS01-LP-2". THIS PANEL WILL BE RE-SERVED DURING RENOVATION ACTIVITIES.
10. DUCT BANK PENETRATES WALL IN PIPE GALLERY LEVEL. CUT EXISTING SAMPLE PUMP ASSOCIATED FEEDER AND BRANCH CIRCUITING CONDUITS AT WALL INSIDE PIPE GALLERY LEVEL. DISCONNECT AND REMOVE RACEWAY SYSTEM AND RELATED SUPPORTS BETWEEN THIS CUT LOCATION AND EXISTING MOTOR CONTROL CENTERS. DISCONNECT AND REMOVE EXISTING WIRING FROM RACEWAY SYSTEM. CAP EXISTING CONDUITS AT WALL FOR FUTURE USE. FIELD VERIFY CUT LOCATION PRIOR TO COMMENCING DEMOLITION ACTIVITIES.
11. EXISTING DUCT BANK TO REMAIN. DISCONNECT AND REMOVE WIRING WIRING.
12. FIELD VERIFY EXISTING PANELBOARD BRANCH CIRCUITING AND LOADS. SHOULD CONTRACTOR'S INVESTIGATION REVEAL EXISTENCE OF ANY ABANDONED CIRCUITING, DISCONNECT AND REMOVE APPLICABLE BRANCH CIRCUITING CONDUIT/WIRE AND RELATED RACEWAY SUPPORT SYSTEMS IN THEIR ENTIRETY AT NO ADDITIONAL COST TO THE OWNER. REFER TO PROPOSED LIGHTING PANELBOARD SCHEDULES AND COORDINATE WITH THE OWNER.
13. ALTHOUGH NOT SHOWN, IRRIGATION CONTROL PANEL SHALL BE RELOCATED FROM THIS LOCATION. REFER TO I&C DRAWINGS FOR LOCATION. DISCONNECT AND REMOVE POWER FIELD INTERCONNECT CONDUIT/WIRE, RACEWAY SYSTEM AND SUPPORTS BETWEEN PANELBOARD AND CONTROL PANEL.

GENERAL NOTES

1. COORDINATE WITH THE CONSTRUCTION SEQUENCING REQUIREMENTS OF THE PROJECT.

This document, and the designs incorporated herein, is an instrument of professional service that has been developed, designed and prepared by Harutunian Engineering, Inc., and is not to be used, in whole or in part, for any other project without giving written notice to Harutunian Engineering, Inc.

NO.	DR	CK	DATE	DESCRIPTION

REVISIONS

BLACK & VEATCH
Building a world of difference.
Black & Veatch Corporation
Registration No. F-653
Austin, Texas

HARUTUNIAN ENGINEERING, INC.
305 E Huntland Dr., Ste 500; Austin, TX 78752
TBPE Firm Registration No. F-2408

STATE OF TEXAS
K. A. HARUTUNIAN
59181
REGISTERED PROFESSIONAL ENGINEER
4/4/2014

Austin WATER
Walnut Creek WWTP - Tertiary Filter Rehabilitation Project
CIP ID No. 3023.025

ELECTRICAL
FB1/FB2 POWER FLOOR PLANS
- DEMOLITION (SHEET 2 OF 3)

DESIGNED BY:	HEI
DRAWN BY:	HEI
REVIEWED BY:	HEI
APPROVED BY:	HEI
PROJECT NO.:	168622
DATE:	4/4/2014
SCALE:	AS SHOWN

REVISION:

DISCIPLINE NO.
E-12

DWG. NO.
SHEET 124 OF 273

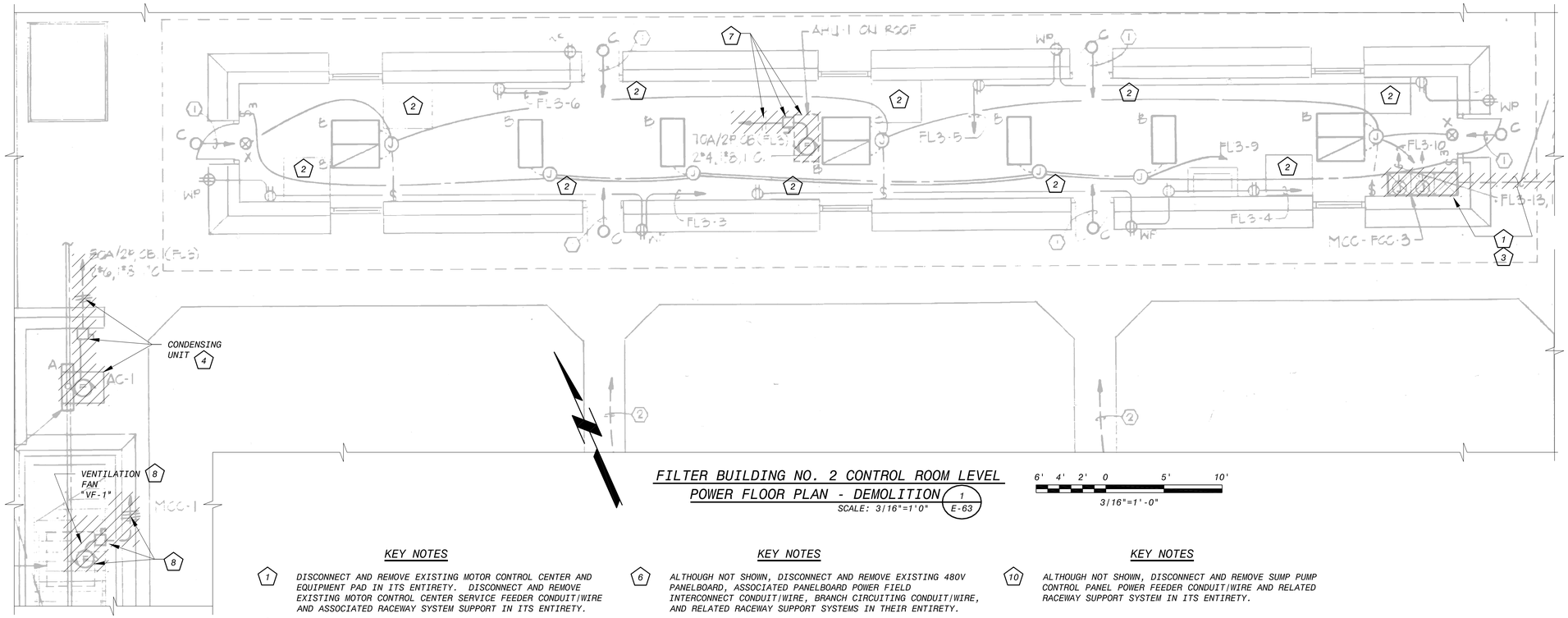

FILTER BUILDING NO. 2 CONTROL ROOM LEVEL POWER FLOOR PLAN - DEMOLITION

(1 / E-63)

SCALE: 3/16"=1'0"

6' 4' 2' 0 5' 10'

3/16"=1'-0"

KEY NOTES

1. DISCONNECT AND REMOVE EXISTING MOTOR CONTROL CENTER AND EQUIPMENT PAD IN ITS ENTIRETY. DISCONNECT AND REMOVE EXISTING MOTOR CONTROL CENTER SERVICE FEEDER CONDUIT/WIRE AND ASSOCIATED RACEWAY SYSTEM SUPPORT IN ITS ENTIRETY.
2. ALTHOUGH NOT SHOWN, DISCONNECT AND REMOVE FILTER CONTROL PANEL POWER SERVICE CONDUIT/WIRE AND RELATED RACEWAY SUPPORT SYSTEM IN ITS ENTIRETY.
3. CONTRACTOR SHALL FURNISH AND INSTALL NECESSARY MEANS TO MAINTAIN CONTINUITY OF ELECTRICAL SERVICE TO PANELBOARD LOADS DURING ALL PHASES OF CONSTRUCTION.
4. DISCONNECT AND REMOVE EXISTING CONDENSING UNIT ASSOCIATED POWER FIELD INTERCONNECT CONDUIT/WIRE AND RELATED RACEWAY SUPPORT SYSTEMS IN THEIR ENTIRETY.
5. DISCONNECT AND REMOVE EXISTING HOT WATER PUMP MOTOR, ASSOCIATED PUMPING UNIT POWER FIELD INTERCONNECT CONDUIT/WIRE AND RELATED RACEWAY SUPPORT SYSTEMS IN THEIR ENTIRETY.

KEY NOTES

6. ALTHOUGH NOT SHOWN, DISCONNECT AND REMOVE EXISTING 480V PANELBOARD, ASSOCIATED PANELBOARD POWER FIELD INTERCONNECT CONDUIT/WIRE, BRANCH CIRCUITING CONDUIT/WIRE, AND RELATED RACEWAY SUPPORT SYSTEMS IN THEIR ENTIRETY.
7. DISCONNECT AND REMOVE EXISTING AIR HANDLING UNIT MOTOR, ASSOCIATED AIR HANDLING UNIT POWER FIELD INTERCONNECT CONDUIT/WIRE AND RELATED RACEWAY SUPPORT SYSTEMS IN THEIR ENTIRETY.
8. DISCONNECT AND REMOVE EXISTING VENTILATION FAN "VF-1" MOTOR, ASSOCIATED POWER FIELD INTERCONNECT CONDUIT/WIRE AND RELATED RACEWAY SUPPORT SYSTEMS IN THEIR ENTIRETY.
9. ALTHOUGH NOT SHOWN, EXISTING TRANSFORMER TO REMAIN AND BE RELOCATED DURING RENOVATION ACTIVITIES. DISCONNECT AND REMOVE EXISTING TRANSFORMER FEEDER CONDUIT/WIRE AND RELATED RACEWAY SUPPORT SYSTEMS IN THEIR ENTIRETY.

KEY NOTES

10. ALTHOUGH NOT SHOWN, DISCONNECT AND REMOVE SUMP PUMP CONTROL PANEL POWER FEEDER CONDUIT/WIRE AND RELATED RACEWAY SUPPORT SYSTEM IN ITS ENTIRETY.

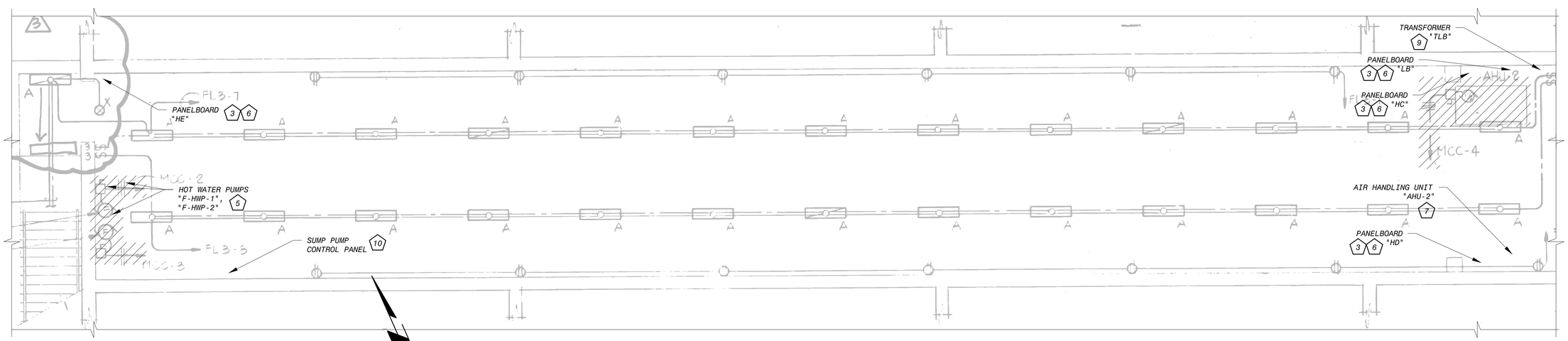

FILTER BUILDING NO. 2 PIPE GALLERY LEVEL POWER FLOOR PLAN - DEMOLITION

(2 / E-63)

SCALE: 3/16"=1'0"

6' 4' 2' 0 5' 10'

3/16"=1'-0"

GENERAL NOTES

1. COORDINATE WITH THE CONSTRUCTION SEQUENCING REQUIREMENTS OF THE PROJECT.

This document, and the designs incorporated herein, is an instrument of professional service that has been developed, designed and prepared by Harutunian Engineering, Inc., and is not to be used, in whole or in part, for any other project without giving written notice to Harutunian Engineering, Inc.

NO.	DR	CK	DATE	DESCRIPTION

REVISIONS

BLACK & VEATCH
Building a world of difference.
Black & Veatch Corporation
Registration No. F-653
Austin, Texas

HARUTUNIAN ENGINEERING, INC.
305 E Hunland Dr., Ste 500; Austin, TX 78752
TBPE Firm Registration No. F-2408

STATE OF TEXAS
K. A. HARUTUNIAN
REGISTERED
PROFESSIONAL ENGINEER
4/4/2014

Austin WATER

Walnut Creek WWTP - Tertiary Filter Rehabilitation Project

CIP ID No. 3023.025

ELECTRICAL
FB1/FB2 POWER FLOOR PLANS
- DEMOLITION (SHEET 3 OF 3)

DESIGNED BY:	HEI
DRAWN BY:	HEI
REVIEWED BY:	HEI
APPROVED BY:	HEI
PROJECT NO.:	168622
DATE:	4/4/2014
SCALE:	AS SHOWN

REVISION:

DISCIPLINE NO.
E-13

DWG. NO.
SHEET 125 OF 273

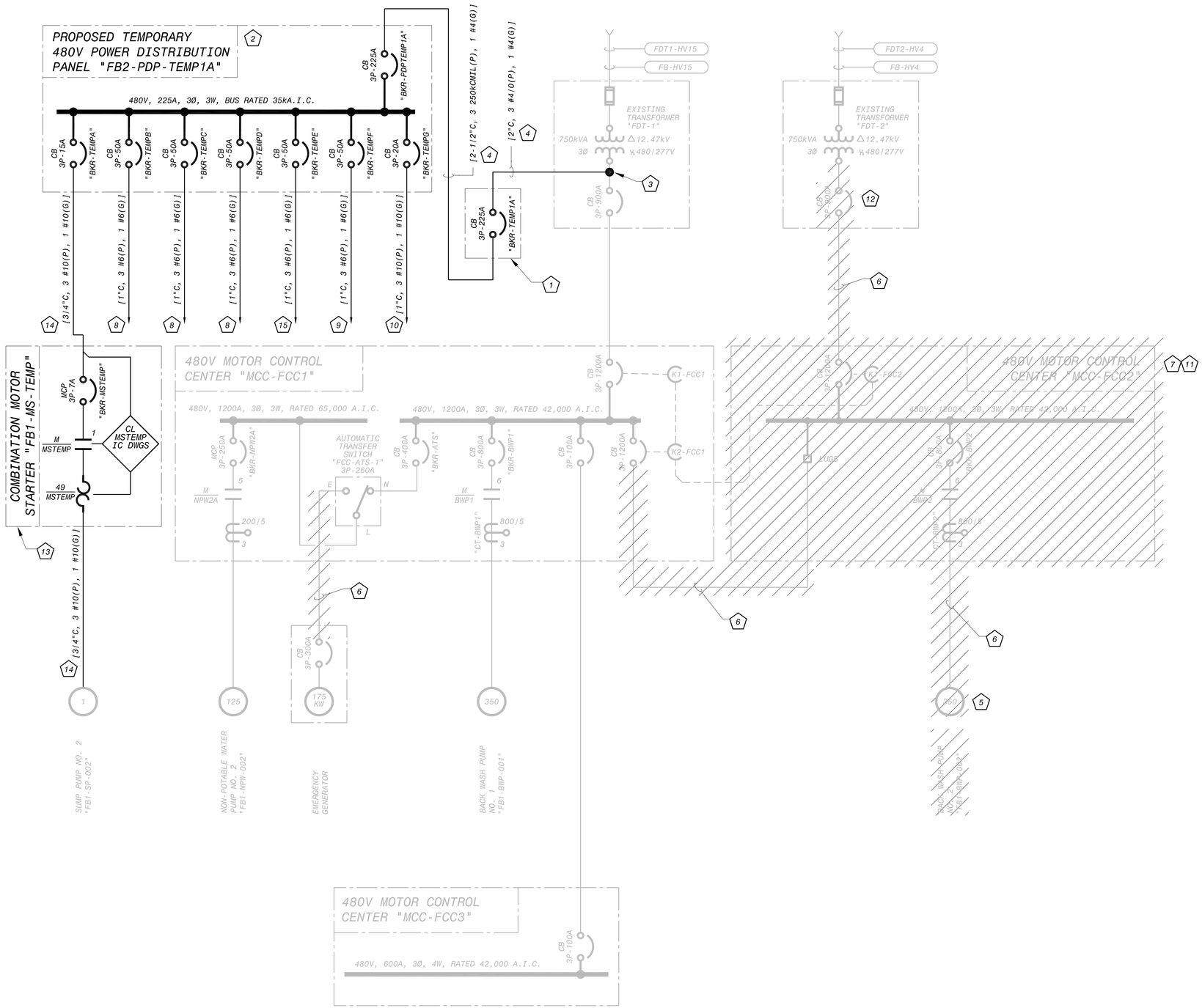

KEY NOTES

1. SUGGESTION: FURNISH AND INSTALL TEMPORARY ENCLOSED CIRCUIT BREAKER WITH MINIMUM INTERRUPTING RATING OF 35kA ON OUTDOOR ENCLOSURE SUPPORT RACK. FURNISH AND INSTALL OUTDOOR EQUIPMENT PAD, RACK, AND ENCLOSED BREAKER WHERE INDICATED ON RENOVATION SITE PLAN ON DRAWING NO. E-20.
2. SUGGESTION: FURNISH AND INSTALL TEMPORARY 480V POWER DISTRIBUTION PANELBOARD TO PROVIDE TEMPORARY SERVICE TO VARIOUS LOADS DURING CONSTRUCTION. SURFACE MOUNT TO WALL OF PIPE GALLERY WHERE INDICATED ON DRAWING NO. E-31.
3. SUGGESTION: FURNISH AND INSTALL MEANS TO CONNECT PROPOSED TEMPORARY CONDUIT/WIRE TO SECONDARY OF EXISTING SERVICE TRANSFORMER "FDT-1".
4. SUGGESTION: FURNISH AND INSTALL TEMPORARY CONDUIT/WIRE TO SERVE THE TEMPORARY PANELBOARD.
5. SUGGESTION: DISCONNECT AND REMOVE EXISTING CONDUIT/WIRE TO BACK WASH PUMP "FB1-BWP-002". DEMOLISH EXISTING 480V MOTOR. FURNISH AND INSTALL PROPOSED STARTER, MOTOR, AND CONDUIT/WIRE TO/FROM BACKWASH PUMP FROM "WRI-MCC-1R".
6. SUGGESTION: DISCONNECT AND REMOVE FEEDER CONDUIT/WIRE AS SHOWN.
7. SUGGESTION: DISCONNECT AND REMOVE LOADS FROM "MCC-FCC2" AS SHOWN ON DEMOLITION ONE-LINE DIAGRAM ON DRAWING NOS. E-08 AND E-09.
8. SUGGESTION: FURNISH AND INSTALL TEMPORARY SERVICE TO EXISTING 480V PANELBOARDS "HB", "HD", AND "HE".
9. SUGGESTION: ALTHOUGH NOT SHOWN HERE, RELOCATE TRANSFORMER "TLB" ABOVE FLOOR PER PLANS AND PROVIDE TEMPORARY ELECTRICAL SERVICE.
10. SUGGESTION: FURNISH AND INSTALL TEMPORARY SERVICE TO THE BACKWASH CONTROLLER.
11. PROVIDE NECESSARY MEANS TO MAINTAIN CONTINUOUS ELECTRICAL SERVICE TO THE EXISTING LOADS SERVED FROM PANELBOARDS "LB" AND "FL-2" DURING ALL PHASES OF CONSTRUCTION.
12. SUGGESTION: DISCONNECT AND REMOVE CIRCUIT BREAKER ON SECONDARY OF SERVICE TRANSFORMER.
13. SUGGESTION: FURNISH AND INSTALL TEMPORARY COMBINATION MOTOR STARTER FOR EXISTING SUMP PUMP "FB1-SP-002". PROVIDE SUPPORT STRUCTURE FOR INSTALLATION AS REQUIRED.
14. SUGGESTION: FURNISH AND INSTALL TEMPORARY CONDUIT/WIRE TO SERVE TEMPORARY COMBINATION STARTER AND EXISTING SUMP "FB1-SP-002" FED FROM EXISTING MCC "FB1-MCC-FCC2".
15. SUGGESTION: FURNISH AND INSTALL TEMPORARY SERVICE TO EXISTING MINI POWER CENTER "CSO1-LP-02".

This document, and the designs incorporated herein, is an instrument of professional service that has been developed, designed and prepared by Harutunian Engineering, Inc., and is not to be used, in whole or in part, for any other project without giving written notice to Harutunian Engineering, Inc.

NO.	DR	CK	DATE	DESCRIPTION

REVISIONS

BLACK & VEATCH
Building a world of difference.
Black & Veatch Corporation
Registration No. F-135
Austin, Texas

HARUTUNIAN ENGINEERING, INC.
305 E Hunland Dr., Ste 500, Austin, TX 78752
TBPE Firm Registration No. F-2408

STATE OF TEXAS
K. A. HARUTUNIAN
51981
REGISTERED PROFESSIONAL ENGINEER
4/4/2014

Austin WATER
Walnut Creek WWTP - Tertiary Filter Rehabilitation Project
CIP ID No. 3023.025

ELECTRICAL
FB1/FB2 480V OVERALL ONE-LINE DIAGRAM SUGGESTED INTERIM STAGE 1

DESIGNED BY:	HEI
DRAWN BY:	HEI
REVIEWED BY:	HEI
APPROVED BY:	HEI
PROJECT NO.:	168622
DATE:	4/4/2014
SCALE:	AS SHOWN

REVISION:

DISCIPLINE NO.
E-14

DWG. NO.

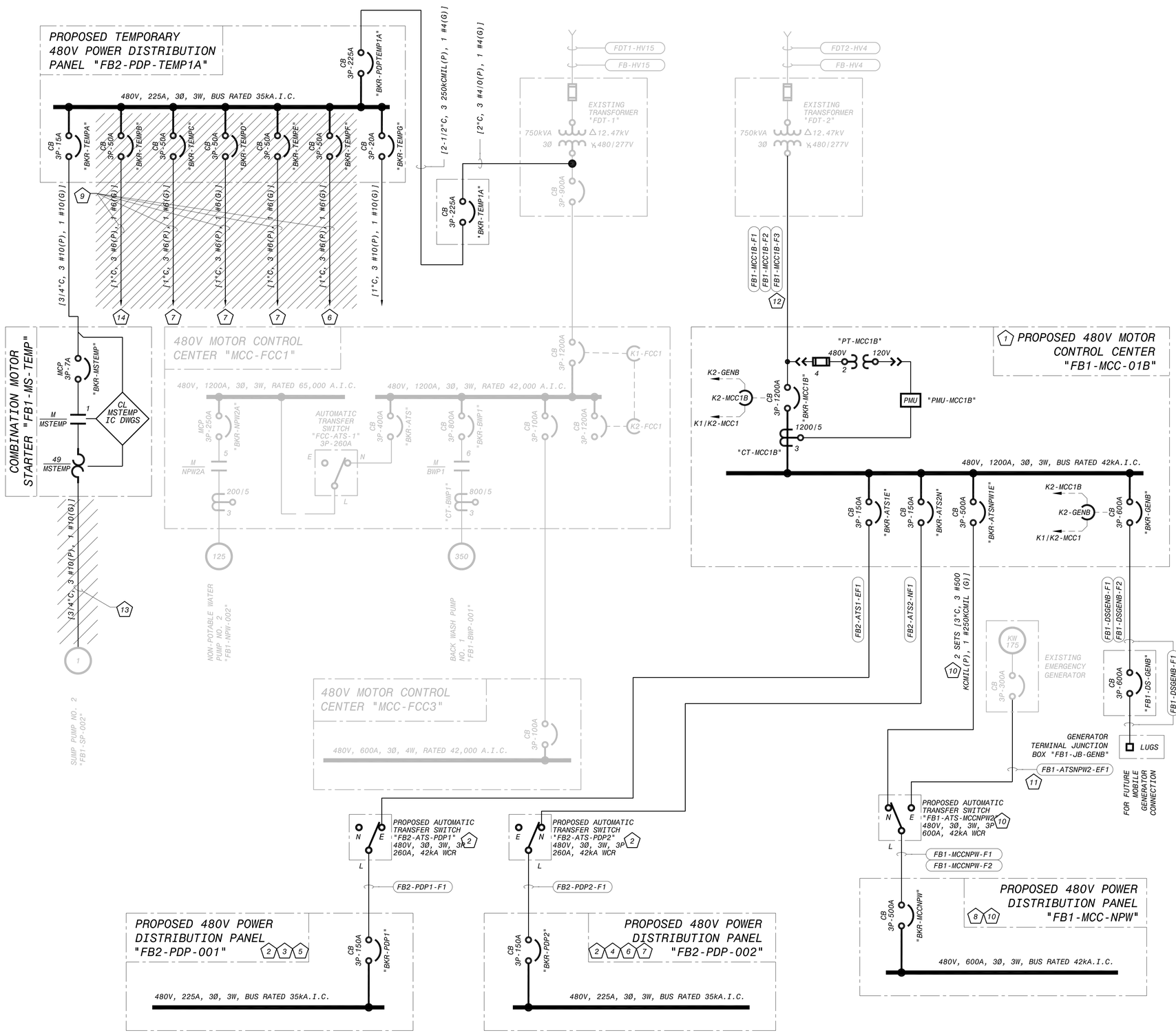

KEY NOTES

1. SUGGESTION: FURNISH AND INSTALL MOTOR CONTROL CENTER AND ASSOCIATED ELECTRICAL SERVICE. FURNISH AND INSTALL ALL LOADS SERVED FROM MOTOR CONTROL CENTER AND ASSOCIATED ELECTRICAL SERVICE.
2. SUGGESTION: FURNISH AND INSTALL AUTOMATIC TRANSFER SWITCH, POWER DISTRIBUTION PANEL AND ASSOCIATED ELECTRICAL SERVICE AS SHOWN.
3. SUGGESTION: FURNISH AND INSTALL PANELBOARDS "FB2-VPP-1", "FB2-VPP-3", AND "FB2-VPP-5", AND ASSOCIATED ELECTRICAL SERVICE TO/FROM "FB2-PDP-001". FURNISH AND INSTALL CONDUIT/WIRE AND MAKE ALL TERMINATIONS TO PANELBOARD LOADS.
4. SUGGESTION: FURNISH AND INSTALL PANELBOARDS "FB1-VPP-0", "FB1-VPP-2", "FB2-VPP-4", AND "FB2-VPP6", AND ASSOCIATED ELECTRICAL SERVICE TO/FROM "FB2-PDP-002". FURNISH AND INSTALL CONDUIT/WIRE AND MAKE ALL TERMINATIONS TO PANELBOARD LOADS.
5. SUGGESTION: RELOCATE TRANSFORMER "TLA" ABOVE FLOOR PER PLANS AND FURNISH AND INSTALL ASSOCIATED ELECTRICAL SERVICE TO/FROM "FB2-PDP-001". FURNISH AND INSTALL ELECTRICAL SERVICE TO PANELBOARD "LA".
6. SUGGESTION: DISCONNECT AND REMOVE TEMPORARY SERVICE TO TRANSFORMER "TLB". FURNISH AND INSTALL CONDUIT/WIRE TO/FROM "FB2-PDP-002" AND "TLB".
7. SUGGESTION: DISCONNECT AND REMOVE TEMPORARY SERVICES TO EXISTING PANELBOARDS "HB", "HD", AND "HE". ALTHOUGH NOT SHOWN HERE, DISCONNECT AND REMOVE EXISTING PANELBOARDS "HA", "HB", "HC", "HD", AND "HE".
8. SUGGESTION: FURNISH AND INSTALL ELECTRICAL SERVICE TO ALL LOADS TO BE SERVED FROM MOTOR CONTROL CENTER "FB1-MCC-NPW"
9. SUGGESTION: DISCONNECT AND REMOVE FEEDER CONDUIT/WIRE AS SHOWN.
10. SUGGESTION: FURNISH AND INSTALL AUTOMATIC TRANSFER SWITCH, MOTOR CONTROL CENTER AND TEMPORARY ELECTRICAL SERVICE AS SHOWN. THOUGH NOT SHOWN HERE, DISCONNECT EXISTING ELECTRICAL SERVICE TO NON-POTABLE WATER PUMPS "FB1-NPW-001" AND "FB1-NPW-003" AND FURNISH AND INSTALL PROPOSED ELECTRICAL SERVICE.
11. SUGGESTION: FURNISH AND INSTALL PROPOSED WIRE IN EXISTING AND PROPOSED CONDUITS AND MAKE ALL TERMINATIONS BETWEEN EXISTING GENERATOR AND "FB1-ATS-MCCNPW2".
12. SUGGESTION: FURNISH AND INSTALL PROPOSED FEEDERS IN EXISTING AND PROPOSED CONDUITS AND MAKE ALL FINAL TERMINATIONS AT MCC AND TRANSFORMER.
13. SUGGESTION: DISCONNECT AND REMOVE TEMPORARY FEEDER TO SUMP PUMP. FURNISH AND INSTALL PERMANENT CONDUIT/WIRE TO/FROM MCC "FB1-MCC-FCC2".
14. SUGGESTION: DISCONNECT AND REMOVE TEMPORARY SERVICE TO EXISTING MINI POWER CENTER "CS01-LP-002". ALTHOUGH NOT SHOWN HERE, DISCONNECT AND REMOVE MINI POWER CENTER, FURNISH AND INSTALL CONDUIT/WIRE TO EXTEND BETWEEN EXISTING CONDUITS AND PROPOSED PANELBOARD "FB2-CPP-001", TRANSFER APPLICABLE LOADS TO "FB2-CPP-001", AND MAKE ALL FINAL CONNECTIONS.

This document, and the designs incorporated herein, is an instrument of professional service that has been developed, designed and prepared by Harutunian Engineering, Inc., and is not to be used, in whole or in part, for any other project without giving written notice to Harutunian Engineering, Inc.

NO.	DR	CK	DATE	DESCRIPTION

REVISIONS

BLACK & VEATCH
Building a world of difference.
Black & Veatch Corporation
Registration No. F-253
Austin, Texas

HARUTUNIAN ENGINEERING, INC.
305 E Hunland Dr., Ste 500, Austin, TX 78752
TBPE Firm Registration No. F-2408

STATE OF TEXAS
K. A. HARUTUNIAN
51981
REGISTERED PROFESSIONAL ENGINEER
8/22/2016

Austin WATER
Walnut Creek WWTP - Tertiary Filter Rehabilitation Project
CIP ID No. 3023.025

ELECTRICAL
FB1/FB2 480V OVERALL ONE-LINE DIAGRAM SUGGESTED INTERIM STAGE 2

DESIGNED BY:	HEI
DRAWN BY:	HEI
REVIEWED BY:	HEI
APPROVED BY:	HEI
PROJECT NO.:	168622
DATE:	4/4/2014
SCALE:	AS SHOWN
REVISION:	
DISCIPLINE NO.	E-15
DWG. NO.	

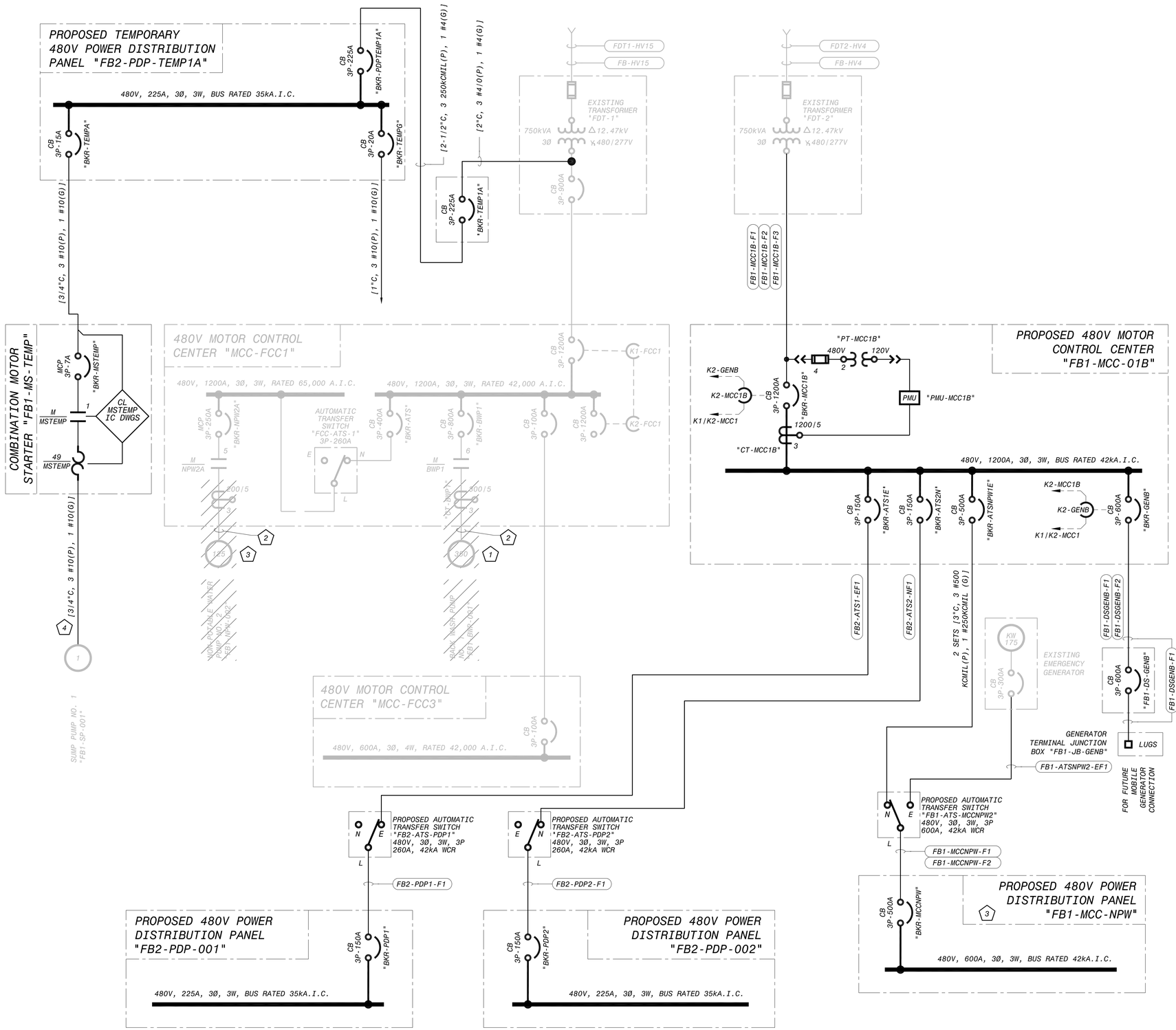

KEY NOTES

1. SUGGESTION: DISCONNECT AND REMOVE EXISTING CONDUIT/WIRE TO BACKWASH PUMP "FB1-BWP-001". DEMOLISH EXISTING 480V MOTOR. FURNISH AND INSTALL PROPOSED STARTER, MOTOR, AND CONDUIT/WIRE TO/FROM BACKWASH PUMP FROM "WRI-MCC-1L".
2. SUGGESTION: DISCONNECT AND REMOVE FEEDER CONDUIT/WIRE AS SHOWN.
3. SUGGESTION: DISCONNECT EXISTING ELECTRICAL SERVICE TO NON-POTABLE WATER PUMP "FB1-NPW-002" AND FURNISH AND INSTALL PROPOSED ELECTRICAL SERVICE.
4. SUGGESTION: FURNISH AND INSTALL TEMPORARY CONDUIT/WIRE TO SERVE EXISTING SUMP "FB1-SP-001" FED FROM EXISTING MCC "FB1-MCC-FCC1".

This document, and the designs incorporated herein, is an instrument of professional service that has been developed, designed and prepared by Harutunian Engineering, Inc., and is not to be used, in whole or in part, for any other project without giving written notice to Harutunian Engineering, Inc.

NO.	DR	CK	DATE	DESCRIPTION

REVISIONS

BLACK & VEATCH Building a world of difference.
Black & Veatch Corporation
Registration No. F-253
Austin, Texas

HARUTUNIAN ENGINEERING, INC.
305 E Hunland Dr., Ste 500, Austin, TX 78752
TBPE Firm Registration No. F-2408

STATE OF TEXAS
K. A. HARUTUNIAN
68181
REGISTERED PROFESSIONAL ENGINEER
4/4/2014

AUSTIN WATER
Walnut Creek WWTP - Tertiary Filter Rehabilitation Project
CIP ID No. 3023.025

ELECTRICAL
FB1/FB2 480V OVERALL ONE-LINE DIAGRAM SUGGESTED INTERIM STAGE 3

DESIGNED BY:	HEI
DRAWN BY:	HEI
REVIEWED BY:	HEI
APPROVED BY:	HEI
PROJECT NO.:	168622
DATE:	4/4/2014
SCALE:	AS SHOWN

REVISION:

DISCIPLINE NO.
E-16

DWG. NO.
SHEET 128 OF 273

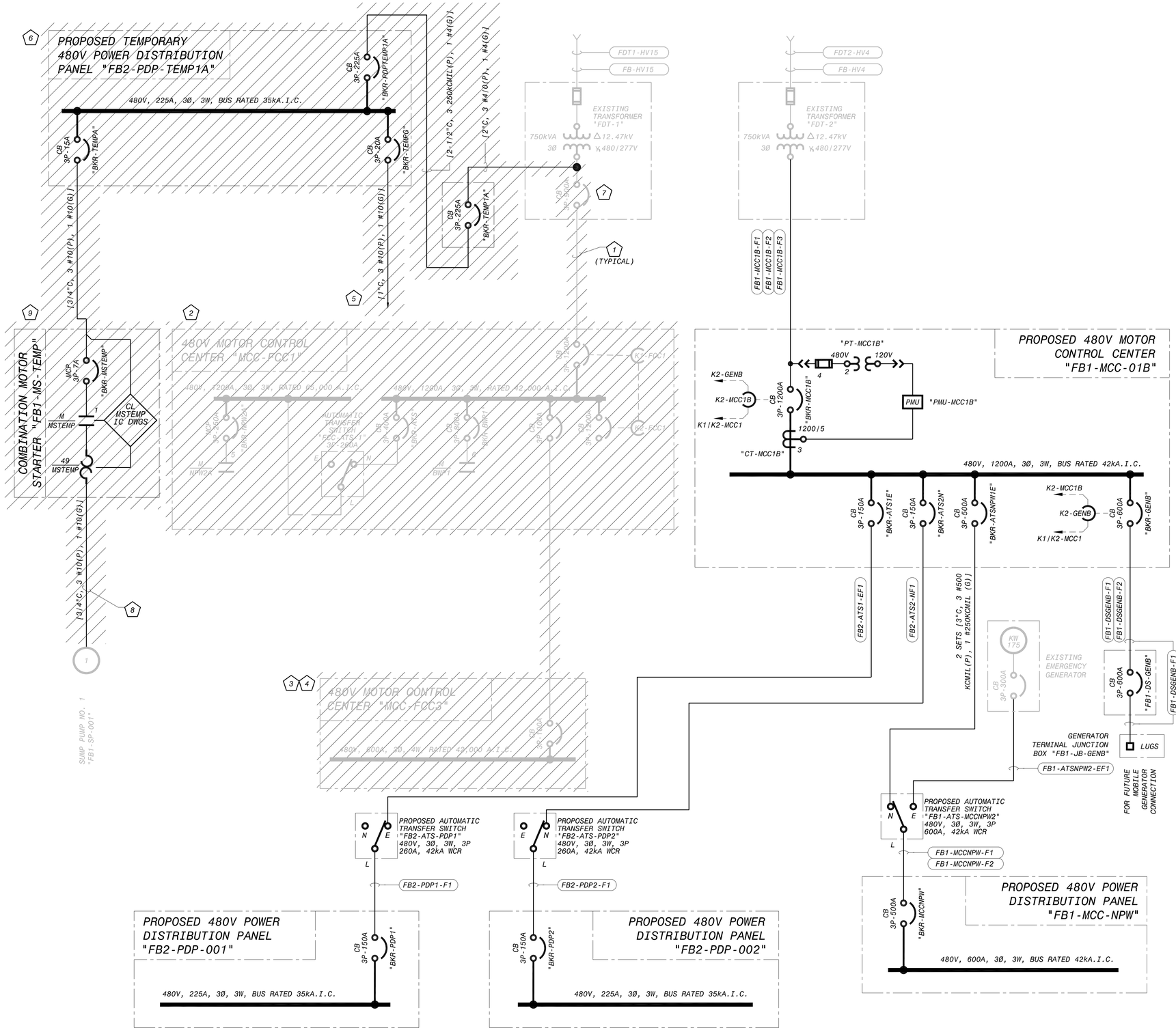

KEY NOTES

1. SUGGESTION: DISCONNECT AND REMOVE FEEDER CONDUIT/WIRE AS SHOWN.
2. SUGGESTION: DISCONNECT AND REMOVE "MCC-FCC1" AND RELATED LOADS AS SHOWN ON DEMOLITION ONE-LINE DIAGRAM ON DRAWING NO. E-07.
3. SUGGESTION: DISCONNECT AND REMOVE "MCC-FCC3" AND RELATED LOADS AS SHOWN ON DEMOLITION ONE-LINE DIAGRAM ON DRAWING NO. E-09.
4. PROVIDE NECESSARY MEANS TO MAINTAIN CONTINUOUS ELECTRICAL SERVICE TO THE EXISTING LOADS SERVED FROM PANELBOARD "FL-3" (NOT SHOWN) DURING ALL PHASES OF CONSTRUCTION.
5. SUGGESTION: DISCONNECT AND REMOVE TEMPORARY ELECTRICAL SERVICE TO BACKWASH CONTROLLER.
6. SUGGESTION: DISCONNECT AND REMOVE TEMPORARY POWER DISTRIBUTION PANELBOARD, ENCLOSED CIRCUIT BREAKER AND ASSOCIATED SUPPORT STRUCTURE, TRANSFORMER SECONDARY TAP, AND ALL ASSOCIATED CONDUIT/WIRE.
7. SUGGESTION: DISCONNECT AND REMOVE CIRCUIT BREAKER ON SECONDARY OF SERVICE TRANSFORMER.
8. SUGGESTION: DISCONNECT AND REMOVE TEMPORARY FEEDER TO SUMP PUMP. FURNISH AND INSTALL PERMANENT CONDUIT/WIRE TO/FROM MCC "FB1-MCC-FCC1".
9. SUGGESTION: DISCONNECT AND REMOVE TEMPORARY COMBINATION STARTER, ALL ASSOCIATED SUPPORT STRUCTURE AND CONDUIT/WIRE.

This document, and the designs incorporated herein, is an instrument of professional service that has been developed, designed and prepared by Harutunian Engineering, Inc., and is not to be used, in whole or in part, for any other project without giving written notice to Harutunian Engineering, Inc.

NO.	DR	CK	DATE	DESCRIPTION

REVISIONS

BLACK & VEATCH
Building a world of difference.
Black & Veatch Corporation
Registration No. F-253
Austin, Texas

HARUTUNIAN ENGINEERING, INC.
305 E Huntland Dr., Ste 500, Austin, TX 78752
TBPE Firm Registration No. F-2408

STATE OF TEXAS
K. A. HARUTUNIAN
68185
REGISTERED PROFESSIONAL ENGINEER
9/23/2014

AUSTIN WATER

Walnut Creek WWTP - Tertiary Filter Rehabilitation Project

CIP ID No. 3023.025

ELECTRICAL
FB1/FB2 480V OVERALL ONE-LINE DIAGRAM SUGGESTED INTERIM STAGE 4

DESIGNED BY:	HEI
DRAWN BY:	HEI
REVIEWED BY:	HEI
APPROVED BY:	HEI
PROJECT NO.:	168622
DATE:	4/4/2014
SCALE:	AS SHOWN
REVISION:	
DISCIPLINE NO.	E-17
DWG. NO.	SHEET 129 OF 273

KEY NOTES

1. SUGGESTION: FURNISH AND INSTALL MOTOR CONTROL CENTER AND ASSOCIATED ELECTRICAL SERVICE. FURNISH AND INSTALL ALL LOADS SERVED FROM MOTOR CONTROL CENTER AND ASSOCIATED ELECTRICAL SERVICE.
2. SUGGESTION: FURNISH AND INSTALL AUTOMATIC TRANSFER SWITCH AND ASSOCIATED ELECTRICAL SERVICE AS SHOWN.
3. SUGGESTION: FURNISH AND INSTALL CONDUIT/WIRE AND MAKE ALL TERMINATIONS.
4. SUGGESTION: DISCONNECT AND REMOVE TEMPORARY CONDUIT/WIRE.
5. SUGGESTION: FURNISH AND INSTALL PROPOSED FEEDERS IN EXISTING AND PROPOSED CONDUITS AND MAKE ALL FINAL TERMINATIONS AT MCC AND TRANSFORMER.

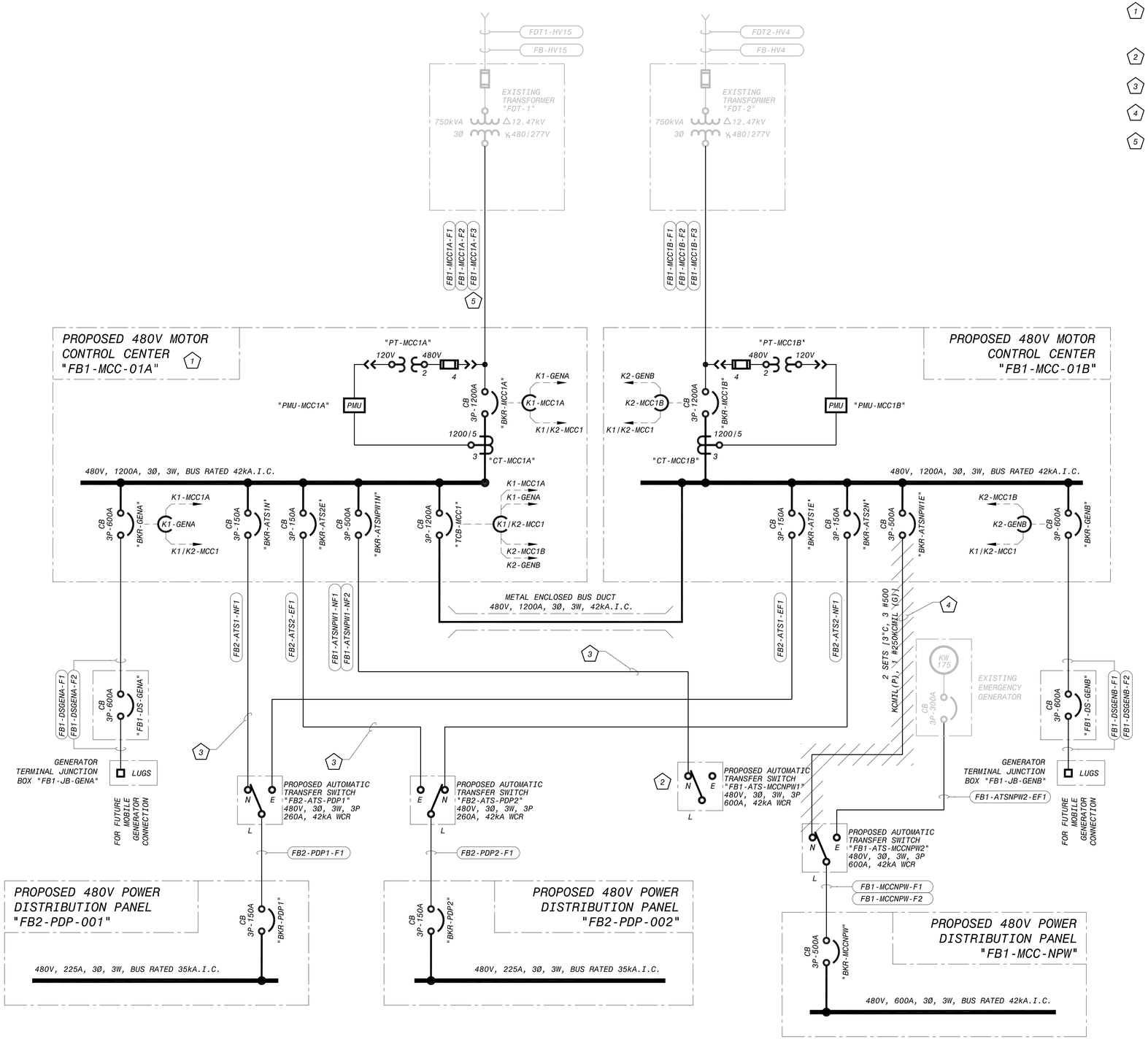

This document, and the designs incorporated herein, is an instrument of professional service that has been developed, designed and prepared by Harutunian Engineering, Inc., and is not to be used, in whole or in part, for any other project without giving written notice to Harutunian Engineering, Inc.

NO.	DR	CK	DATE	DESCRIPTION

REVISIONS

BLACK & VEATCH
Building a world of difference.
Black & Veatch Corporation
Registration No. F-653
Austin, Texas

HARUTUNIAN ENGINEERING, INC.
305 E Hunland Dr., Ste 500, Austin, TX 78752
TBPE Firm Registration No. F-2408

STATE OF TEXAS
K. A. HARUTUNIAN
61918
REGISTERED PROFESSIONAL ENGINEER
4/4/2014

AUSTIN WATER

Walnut Creek WWTP - Tertiary Filter Rehabilitation Project
CIP ID No. 3023.025

ELECTRICAL
FB1/FB2 480V OVERALL ONE-LINE DIAGRAM SUGGESTED INTERIM STAGE 5

DESIGNED BY:	HEI
DRAWN BY:	HEI
REVIEWED BY:	HEI
APPROVED BY:	HEI
PROJECT NO.:	168622
DATE:	4/4/2014
SCALE:	AS SHOWN

REVISION:

DISCIPLINE NO.
E-18

DWG. NO.
SHEET 130 OF 273

KEY NOTES

1. SUGGESTION: FURNISH AND INSTALL AUTOMATIC TRANSFER SWITCH AND ASSOCIATED ELECTRICAL SERVICE AS SHOWN.

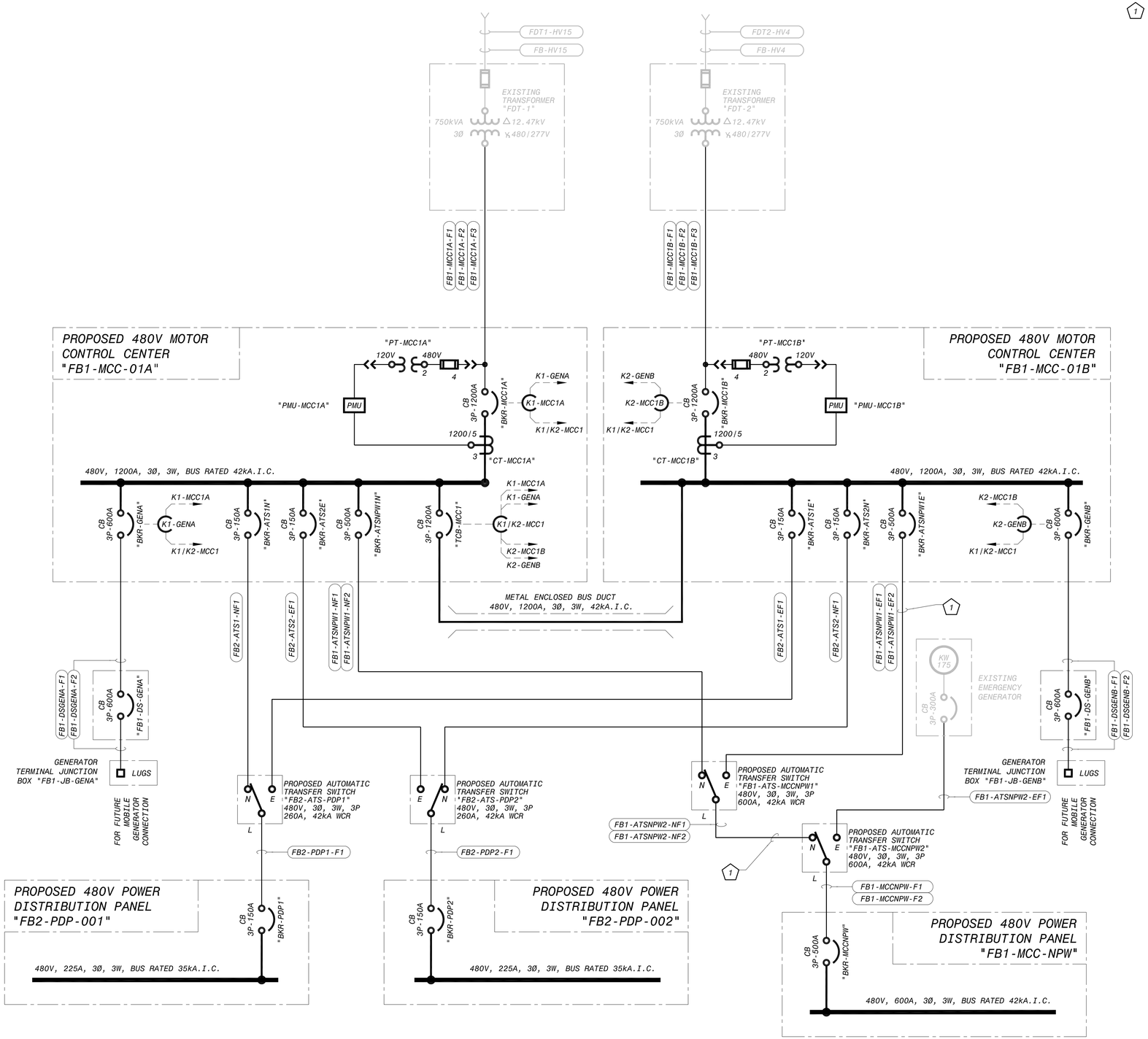

This document, and the designs incorporated herein, is an instrument of professional service that has been developed, designed and prepared by Harutunian Engineering, Inc., and is not to be used, in whole or in part, for any other project without giving written notice to Harutunian Engineering, Inc.

NO.	DR	CK	DATE	DESCRIPTION

REVISIONS

BLACK & VEATCH
Building a world of difference.
Black & Veatch Corporation
Registration No. F-653
Austin, Texas

HARUTUNIAN ENGINEERING, INC.
305 E Hunland Dr., Ste 500, Austin, TX 78752
TBPE Firm Registration No. F-2408

STATE OF TEXAS
K. A. HARUTUNIAN
61981
REGISTERED PROFESSIONAL ENGINEER
4/4/2014

Austin WATER
Walnut Creek WWTP - Tertiary Filter Rehabilitation Project
CIP ID No. 3023.025

ELECTRICAL
FB1/FB2 480V OVERALL ONE-LINE DIAGRAM SUGGESTED INTERIM STAGE 6

DESIGNED BY:	HEI
DRAWN BY:	HEI
REVIEWED BY:	HEI
APPROVED BY:	HEI
PROJECT NO.:	168622
DATE:	4/4/2014
SCALE:	AS SHOWN

REVISION:

DISCIPLINE NO.
E-19

DWG. NO.
SHEET 131 OF 273

KEY NOTES

9. PROPOSED DUCT BANK LOCATED ON TOP OF EXISTING DUCT BANK. REFER TO SECTION VIEW ON DRAWING NO. E-21. INTERCONNECT PROPOSED DUCT BANK WITH EXISTING PER STRUCTURAL.

10. FURNISH AND INSTALL GROUNDING NETWORK FOR EXISTING MANHOLE PER DETAIL 1 ON DRAWING NO. E-55.

11. PROPOSED DUCT BANK TURNS UP BENEATH PROPOSED PULLBOX AND TERMINATES. REFER TO DRAWING NO. E-45 FOR CONTINUATION.

12. IT IS PREFERABLE TO LOCATE PROPOSED DUCT BANK BETWEEN LOW SERVICE PUMP STATION AND FENCE (NOT SHOWN). TO AVOID DAMAGE TO EXISTING LOW SERVICE PUMP STATION, THE PROPOSED DUCT BANK MAY BE LOCATED ON NORTH SIDE OF FENCE. REPAIR FENCE TO EXISTING CONDITION TO THE SATISFACTION OF THE OWNER AT NO ADDITIONAL COST.

13. INSIDE MANHOLE "MH-1", FURNISH AND INSTALL PROPOSED WIRE GUTTER TO MATCH EXISTING. PROPOSED GUTTER ENCLOSES WIRES CONTAINED IN CONDUIT TAGGED "DB-9|1-LV1" AS SHOWN ON DRAWING NO. E-21. QUANTITY AND SIZE OF WIRES TO BE ENCLOSED IN PROPOSED GUTTER IS UNKNOWN. FURNISH AND INSTALL ALL REQUIRED SUPPORTS AND HARDWARE AS REQUIRED TO SAFELY AND SECURELY INSTALL THE PROPOSED WIRE GUTTER.

14. FOR EACH PROPOSED WIRE ENTERING MANHOLE, FURNISH AND INSTALL SUBMERGENCE RATED SPLICE KITS AND SPLICE EACH PROPOSED WIRE SEGMENT WITH THE CORRESPONDING EXISTING WIRE SEGMENT REMAINING FROM DEMOLITION.

KEY NOTES

15. FOR EACH PROPOSED WIRE ENTERING FILTER BUILDING PIPE GALLERY LEVEL, SPLICE WITH THE CORRESPONDING EXISTING WIRE SEGMENT REMAINING FROM DEMOLITION. PERFORM SPLICES IN PROPOSED JUNCTION BOX "FB1-JBSITE-LV1". REFER TO FILTER BUILDING CONDUIT CORRIDOR PLAN AND PIPE GALLERY POWER PLAN ON DRAWING NOS. E-35 AND E-32 FOR ADDITIONAL INFORMATION.

16. AT THE CONTRACTOR'S DISCRETION, IN LIEU OF CUTTING THE EXISTING WIRES, FURNISHING NEW WIRES OF LIKE KIND BETWEEN CUT POINTS, AND PERFORMING SUBMERGENCE RATED SPLICES AT EACH END OF EACH PROPOSED WIRE SEGMENT, THE CONTRACTOR MAY ELECT TO FIELD VERIFY SOURCE, DESTINATION, AND ROUTE OF WIRES, DISCONNECT AND REMOVE THE WIRES IN THEIR ENTIRETY FROM SOURCE TO DESTINATION, FURNISH AND INSTALL NEW WIRES OF LIKE KIND FROM SOURCE TO DESTINATION, AND MAKE ALL FINAL CONNECTIONS AT SOURCE AND DESTINATION AT NO ADDITIONAL COST TO THE OWNER.

17. FURNISH AND INSTALL PROPOSED WIRING IN EXISTING DUCT BANK AND PROPOSED CONDUITS IN FILTER PIPE GALLERY BETWEEN EXISTING SERVICE TRANSFORMERS AND PROPOSED MCCs AND MAKE ALL FINAL CONNECTIONS.

18. FURNISH AND INSTALL PROPOSED WIRING IN EXISTING DUCT BANK AND PROPOSED CONDUITS IN FILTER PIPE GALLERY BETWEEN EXISTING EMERGENCY GENERATOR/BUILDING AND PROPOSED ATS AND CONTROL POWER PANELBOARD AND MAKE ALL FINAL CONNECTIONS.

19. PROPOSED DUCT BANK LOCATED ABOVE EXISTING FILTER INFLUENT PIPE (NOT SHOWN) IN THIS VICINITY. COORDINATE WITH CIVIL, STRUCTURAL AND MECHANICAL.

KEY NOTES

20. PROPOSED DUCT BANK TRANSITIONS TO LOWER ELEVATION IMMEDIATELY BEFORE PENETRATION INTO PIPE GALLERY.

21. GROUND ALL CLEARWELL ROOF VENTILATION EQUIPMENT PER DETAIL 7 ON DRAWING NO. E-55. REFER TO BLOWER BUILDING ENLARGED PLANS FOR GROUNDING OF SOUTH CLEARWELL.

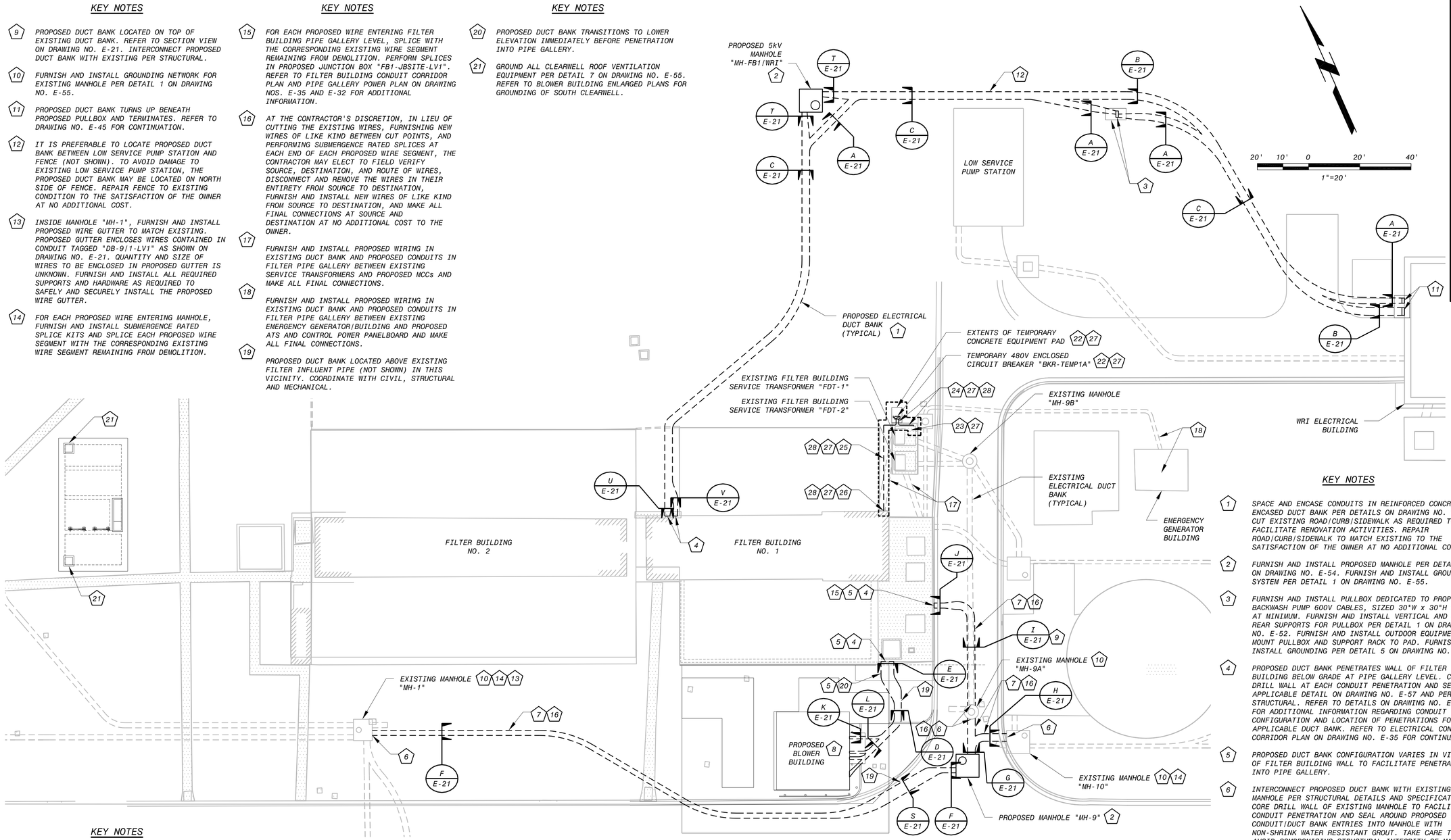

KEY NOTES

22. SUGGESTION: FURNISH AND INSTALL TEMPORARY ENCLOSED CIRCUIT BREAKER WITH MINIMUM INTERRUPTING RATING OF 35kA ON OUTDOOR ENCLOSURE SUPPORT RACK. FURNISH AND INSTALL OUTDOOR EQUIPMENT PAD, RACK, AND ENCLOSED BREAKER PER DETAIL 1 ON DRAWING NO. E-52.

23. SUGGESTION: FURNISH AND INSTALL MEANS TO CONNECT PROPOSED TEMPORARY CONDUIT/WIRE TO SECONDARY OF EXISTING SERVICE TRANSFORMER "FDT-1".

24. SUGGESTION: FURNISH AND INSTALL TEMPORARY EXPOSED CONDUIT/WIRE SURFACE MOUNTED TO PROPOSED AND EXISTING CONCRETE PADS.

25. SUGGESTION: FURNISH AND INSTALL TEMPORARY CONDUIT/WIRE BELOW GRADE ENCASED IN CONCRETE PER DETAIL 4 ON DRAWING NO. E-49. ALTHOUGH REQUIRED OTHERWISE BY DETAILS AND SPECIFICATIONS, AT THIS LOCATION ONLY, REBAR REINFORCEMENT NOT REQUIRED. BURY CONCRETE ENCASED CONDUIT WITH MINIMAL COVER PER NEC.

KEY NOTES

26. SUGGESTION: CONCRETE ENCASED TEMPORARY CONDUIT/WIRE TURNS UP ALONG EXTERIOR WALL OF FILTER BUILDING DIRECTLY ADJACENT TO EXISTING COMMUNICATIONS PULLBOX. CONDUIT/WIRE ROUTES SURFACE MOUNTED ALONG WALL TO ROOF SOFFIT AND PENETRATES WALL INTO CEILING SPACE OF FILTER BUILDING INTERIOR. CORE DRILL AND SEAL PER DETAIL 5 ON DRAWING NO. E-53. TEMPORARY CONDUIT/WIRE CONTINUES FIELD ROUTED TO/FROM TEMPORARY PANELBOARD "FB2-PDP-TEMP1A". REFER TO SUGGESTED CONSTRUCTION SEQUENCE/STAGING DRAWINGS AND TO ELECTRICAL EQUIPMENT LOCATION PLAN ON DRAWING NO. E-31 FOR ADDITIONAL INFORMATION.

27. TEMPORARY DISCONNECT AND CONDUIT/WIRE SHOWN ON THIS DRAWING BUT ARE NOT PART OF PERMANENT WORK. DISCONNECT AND REMOVE ENCLOSED CIRCUIT BREAKER AND ALL ASSOCIATED CONDUIT/WIRE AT COMPLETION OF CONSTRUCTION ACTIVITIES.

KEY NOTES

28. FURNISH AND INSTALL MEANS TO PROTECT TEMPORARY CONDUIT/WIRE DURING CONSTRUCTION.

GENERAL NOTES

1. COORDINATE WITH THE CONSTRUCTION SEQUENCING REQUIREMENTS OF THE PROJECT.
2. REFER TO THE IC/CIVIL DRAWINGS FOR INSTRUMENTATION/CONTROL SYSTEM DUCT BANK REQUIREMENTS.

ELECTRICAL SITE PLAN - RENOVATION (2 / E-58) (2 / E-59)

SCALE: 1" = 20'

KEY NOTES

1. SPACE AND ENCASE CONDUITS IN REINFORCED CONCRETE ENCASED DUCT BANK PER DETAILS ON DRAWING NO. E-49. CUT EXISTING ROAD/CURB/SIDEWALK AS REQUIRED TO FACILITATE RENOVATION ACTIVITIES. REPAIR ROAD/CURB/SIDEWALK TO MATCH EXISTING TO THE SATISFACTION OF THE OWNER AT NO ADDITIONAL COST.

2. FURNISH AND INSTALL PROPOSED MANHOLE PER DETAIL 3 ON DRAWING NO. E-54. FURNISH AND INSTALL GROUNDING SYSTEM PER DETAIL 1 ON DRAWING NO. E-55.

3. FURNISH AND INSTALL PULLBOX DEDICATED TO PROPOSED BACKWASH PUMP 600V CABLES, SIZED 30"W x 30"H x 12"D AT MINIMUM. FURNISH AND INSTALL VERTICAL AND ANGLED REAR SUPPORTS FOR PULLBOX PER DETAIL 1 ON DRAWING NO. E-52. FURNISH AND INSTALL OUTDOOR EQUIPMENT PAD. MOUNT PULLBOX AND SUPPORT RACK TO PAD. FURNISH AND INSTALL GROUNDING PER DETAIL 5 ON DRAWING NO. E-52.

4. PROPOSED DUCT BANK PENETRATES WALL OF FILTER BUILDING BELOW GRADE AT PIPE GALLERY LEVEL. CORE DRILL WALL AT EACH CONDUIT PENETRATION AND SEAL PER APPLICABLE DETAIL ON DRAWING NO. E-57 AND PER STRUCTURAL. REFER TO DETAILS ON DRAWING NO. E-57 FOR ADDITIONAL INFORMATION REGARDING CONDUIT CONFIGURATION AND LOCATION OF PENETRATIONS FOR EACH APPLICABLE DUCT BANK. REFER TO ELECTRICAL CONDUIT CORRIDOR PLAN ON DRAWING NO. E-35 FOR CONTINUATION.

5. PROPOSED DUCT BANK CONFIGURATION VARIES IN VICINITY OF FILTER BUILDING WALL TO FACILITATE PENETRATION INTO PIPE GALLERY.

6. INTERCONNECT PROPOSED DUCT BANK WITH EXISTING MANHOLE PER STRUCTURAL DETAILS AND SPECIFICATIONS. CORE DRILL WALL OF EXISTING MANHOLE TO FACILITATE CONDUIT PENETRATION AND SEAL AROUND PROPOSED CONDUIT/DUCT BANK ENTRIES INTO MANHOLE WITH NON-SHRINK WATER RESISTANT GROUT. TAKE CARE TO AVOID COMPROMISING STRUCTURAL INTEGRITY OF MANHOLE AND DUCT BANKS THAT ARE TO REMAIN.

7. EXISTING DUCT BANKS REMOVED DURING DEMOLITION ACTIVITIES CONTAINED WIRES OF UNKNOWN QUANTITY, SOURCE AND DESTINATION THAT SHALL BE RECONNECTED DURING RENOVATION. CONTENTS/DESTINATION NOT KNOWN BY THE OWNER. BASED ON THE RESULTS OF THE FIELD VERIFICATION PERFORMED DURING DEMOLITION ACTIVITIES, FURNISH AND INSTALL PROPOSED WIRING SEGMENTS TO MATCH THE EXISTING BETWEEN SPLICE POINTS AT NO ADDITIONAL COST TO THE OWNER. REFER TO DUCT BANK SECTIONAL VIEWS ON DRAWING NO. E-21 FOR ADDITIONAL INFORMATION AND REQUIREMENTS.

8. PROPOSED DUCT BANKS CONTINUE UNDER BLOWER BUILDING FLOOR SLAB. REFER TO DRAWING NO. E-41 FOR CONTINUATION.

This document, and the designs incorporated herein, is an instrument of professional service that has been developed, designed and prepared by Harutunian Engineering, Inc., and is not to be used, in whole or in part, for any other project without giving written notice to Harutunian Engineering, Inc.

NO.	DR	CK	DATE	DESCRIPTION

REVISIONS

BLACK & VEATCH
Building a world of difference.
Black & Veatch Corporation
Registration No. F-653
Austin, Texas

HARUTUNIAN ENGINEERING, INC.
305 E Hunland Dr., Ste 500, Austin, TX 78752
TBPE Firm Registration No. F-2408

STATE OF TEXAS — K. A. HARUTUNIAN — 18185 — REGISTERED PROFESSIONAL ENGINEER — 4/4/2014

Walnut Creek WWTP - Tertiary Filter Rehabilitation Project
CIP ID No. 3023.025

ELECTRICAL SITE ELECTRICAL PLAN - RENOVATION

DESIGNED BY:	HEI
DRAWN BY:	HEI
REVIEWED BY:	HEI
APPROVED BY:	HEI
PROJECT NO.:	168622
DATE:	4/4/2014
SCALE:	AS SHOWN
REVISION:	
DISCIPLINE NO.	E-20
DWG. NO.	SHEET 132 OF 273

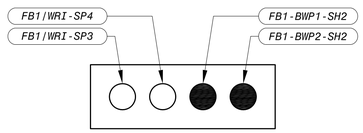

PROPOSED DUCT BANK SECTION (A / E-20)
SCALE: N.T.S.

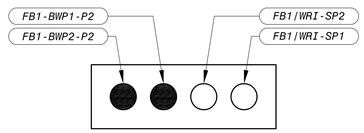

PROPOSED DUCT BANK SECTION (B / E-20)
SCALE: N.T.S.

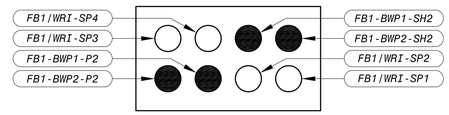

PROPOSED DUCT BANK SECTION (C / E-20)
SCALE: N.T.S.

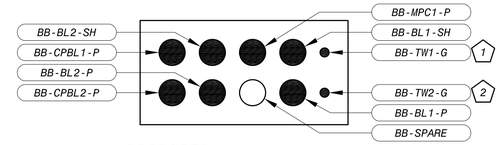

PROPOSED DUCT BANK SECTION (D / E-20)
SCALE: N.T.S.

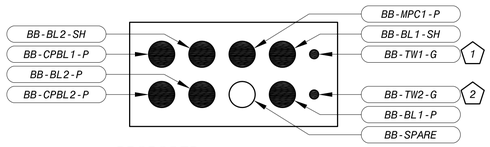

PROPOSED DUCT BANK SECTION (E / E-20)
SCALE: N.T.S.

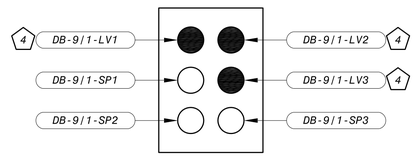

PROPOSED DUCT BANK SECTION (F / E-20)
SCALE: N.T.S.

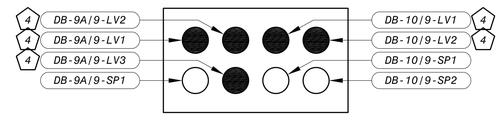

PROPOSED DUCT BANK SECTION (G / E-20)
SCALE: N.T.S.

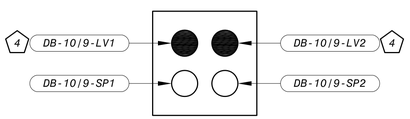

PROPOSED DUCT BANK SECTION (H / E-20)
SCALE: N.T.S.

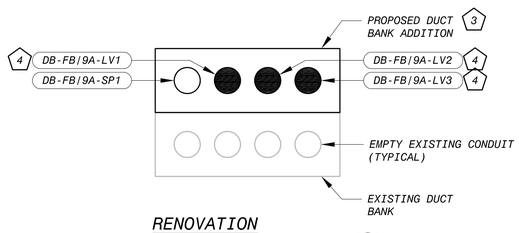

RENOVATION DUCT BANK SECTION (I / E-20)
SCALE: N.T.S.

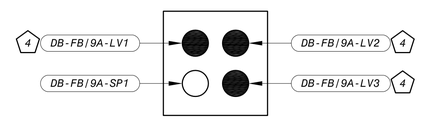

PROPOSED DUCT BANK SECTION (J / E-20)
SCALE: N.T.S.

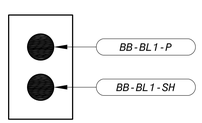

PROPOSED DUCT BANK SECTION (K / E-20)
SCALE: N.T.S.

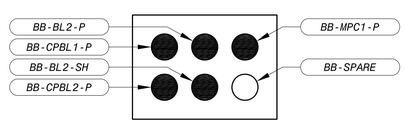

PROPOSED DUCT BANK SECTION (L / E-20)
SCALE: N.T.S.

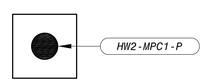

PROPOSED DUCT BANK SECTION (M / E-22)
SCALE: N.T.S.

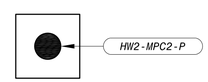

PROPOSED DUCT BANK SECTION (N / E-22)
SCALE: N.T.S.

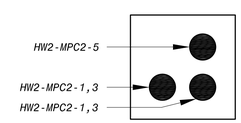

PROPOSED DUCT BANK SECTION (O / E-22)
SCALE: N.T.S.

PROPOSED DUCT BANK SECTION (P / E-22)
SCALE: N.T.S.

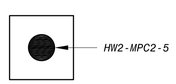

PROPOSED DUCT BANK SECTION (Q / E-22)
SCALE: N.T.S.

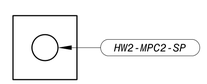

PROPOSED DUCT BANK SECTION (R / E-22)
SCALE: N.T.S.

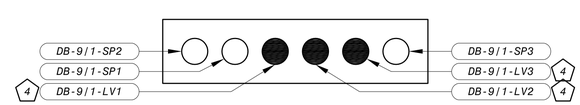

PROPOSED DUCT BANK SECTION (S / E-20)
SCALE: N.T.S.

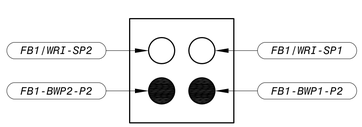

PROPOSED DUCT BANK SECTION (T / E-20)
SCALE: N.T.S.

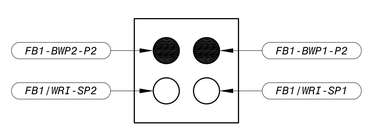

PROPOSED DUCT BANK SECTION (U / E-20)
SCALE: N.T.S.

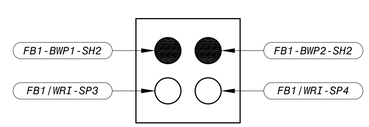

PROPOSED DUCT BANK SECTION (V / E-20)
SCALE: N.T.S.

CONDUIT/DUCT BANK SECTION DIMENSION TABLE

LEGEND:

NOTE: DIMENSIONS SHOWN IN TABLE ARE MAXIMUM DIMENSIONS IN INCHES.

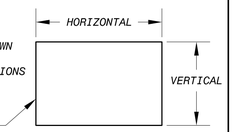

SECTION IDENTIFIER	HORIZONTAL (INCHES)	VERTICAL (INCHES)
A	30"	12"
B	36"	18"
C	36"	24"
D	36"	18"
E	60"	24"
F	24"	30"
G	36"	24"
H	24"	24"
I (ADDITION)	36"	18"
J	24"	24"
K	12"	18"
L	24"	18"
M	12"	12"
N	12"	12"
O	18"	18"
P	12"	12"
Q	12"	12"
R	12"	12"
S	54"	12"
T	24"	24"
U	24"	24"
V	18"	18"

KEY NOTES

1. 1-1/2" CONDUIT WITH 250KCMIL INSULATED GROUND CONDUCTOR INTERCONNECTING GROUND TEST WELL "BB-TW-001" AT PROPOSED BLOWER BUILDING WITH PROPOSED MOTOR CONTROL CENTER "FB1-MCC-01A" GROUND BUS.
2. 1-1/2" CONDUIT WITH 250KCMIL INSULATED GROUND CONDUCTOR INTERCONNECTING GROUND TEST WELL "BB-TW-002" AT PROPOSED BLOWER BUILDING WITH PROPOSED MOTOR CONTROL CENTER "FB1-MCC-01B" GROUND BUS.
3. PROPOSED DUCT BANK LOCATED ON TOP OF EXISTING DUCT BANK. INTERCONNECT PROPOSED DUCT BANK WITH EXISTING PER STRUCTURAL.
4. EXISTING DUCT BANKS REMOVED DURING DEMOLITION ACTIVITIES CONTAINED WIRES OF UNKNOWN QUANTITY, SOURCE AND DESTINATION THAT SHALL BE RECONNECTED DURING RENOVATION. CONTENTS/DESTINATION NOT KNOWN BY THE OWNER. BASED ON THE RESULTS OF THE FIELD VERIFICATION PERFORMED DURING DEMOLITION ACTIVITIES, FURNISH AND INSTALL PROPOSED WIRING SEGMENTS TO MATCH THE EXISTING BETWEEN SPLICE POINTS AT NO ADDITIONAL COST TO THE OWNER. REFER TO SITE DEMOLITION PLAN ON DRAWING NO. E-04. AT THE CONTRACTOR'S DISCRETION, IN LIEU OF CUTTING THE EXISTING WIRES, FURNISHING NEW WIRES OF LIKE KIND BETWEEN CUT POINTS, AND PERFORMING SUBMERGENCE RATED SPLICES AT EACH END OF EACH PROPOSED WIRE SEGMENT, THE CONTRACTOR MAY ELECT TO FIELD VERIFY SOURCE, DESTINATION, AND ROUTE OF WIRES, DISCONNECT AND REMOVE THE WIRES IN THEIR ENTIRETY FROM SOURCE TO DESTINATION, FURNISH AND INSTALL NEW WIRES OF LIKE KIND FROM SOURCE TO DESTINATION, AND MAKE ALL FINAL CONNECTIONS AT SOURCE AND DESTINATION AT NO ADDITIONAL COST TO THE OWNER.

GENERAL NOTES

1. COORDINATE WITH THE CONSTRUCTION SEQUENCING REQUIREMENTS OF THE PROJECT.
2. DARK LINE WORK DENOTES PROPOSED ITEMS; LIGHT LINE WORK DENOTES EXISTING ITEMS, UNLESS NOTED OTHERWISE.
3. DARKENED SOLID CIRCLES INDICATE CONDUITS WITH INSTALLED CONDUCTORS OR CABLES. UNDARKENED CIRCLES INDICATE EMPTY CONDUITS DESIGNATED AS "SPARES" FOR SERVICE TO FUTURE PROJECTS.
4. CONDUIT TAGS/NAMES HAVE BEEN ARBITRARILY ASSIGNED TO AID IN THE DRAWINGS. SOME EXISTING TAGS/NAMES HAVE BEEN USED WHERE POSSIBLE. CONTRACTOR SHALL MAKE EXTENSIVE VERIFICATION OF EXISTING EQUIPMENT PRIOR TO COMMENCING FULL SCALE DEMOLITION/RENOVATION ACTIVITIES.
5. EXISTING CONDUITS ROUTING TO/FROM EXISTING MANHOLE "MH-9" USE "9E" IN CONDUIT TAG. PROPOSED CONDUITS ROUTING TO/FROM THE PROPOSED REPLACEMENT MANHOLE "MH-9" USE "9" IN CONDUIT TAG.

This document, and the designs incorporated herein, is an instrument of professional service that has been developed, designed and prepared by Harutunian Engineering, Inc., and is not to be used, in whole or in part, for any other project without giving written notice to Harutunian Engineering, Inc.

NO.	DR	CK	DATE	DESCRIPTION

REVISIONS

BLACK & VEATCH
Building a world of difference.
Black & Veatch Corporation
Registration No. F-653
Austin, Texas

HARUTUNIAN ENGINEERING, INC.
305 E Hunland Dr, Ste 500; Austin, TX 78752
TBPE Firm Registration No. F-2408

STATE OF TEXAS — K. A. HARUTUNIAN — 59181 — REGISTERED PROFESSIONAL ENGINEER — 4/4/2014

Austin WATER
Walnut Creek WWTP - Tertiary Filter Rehabilitation Project
CIP ID No. 3023.025

ELECTRICAL
SITE ELECTRICAL DUCT BANK SECTION VIEWS - RENOVATION

DESIGNED BY:	HEI
DRAWN BY:	HEI
REVIEWED BY:	HEI
APPROVED BY:	HEI
PROJECT NO.:	168622
DATE:	4/4/2014
SCALE:	AS SHOWN
REVISION:	

DISCIPLINE NO. E-21

DWG. NO.

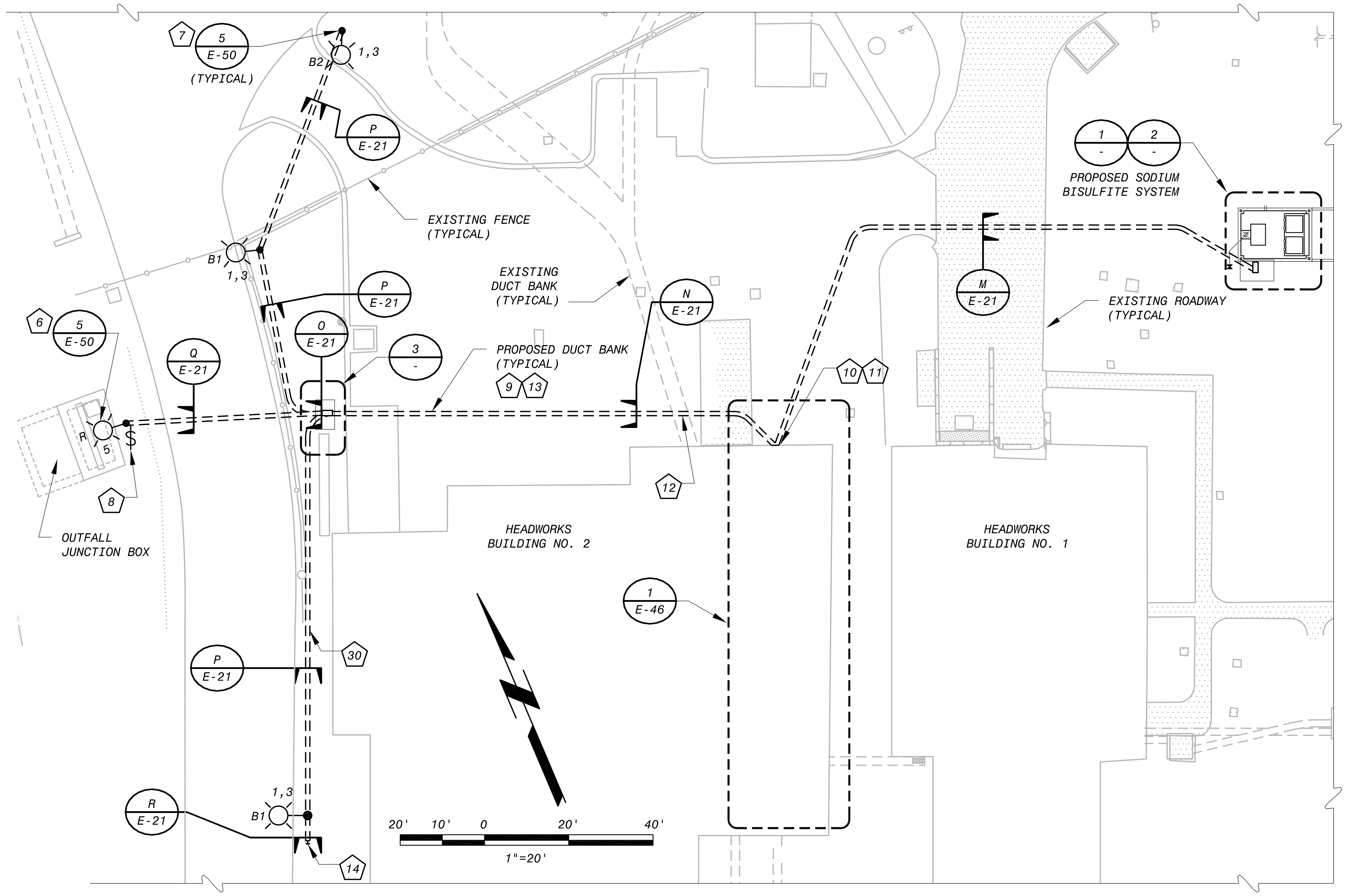

HEADWORKS NO. 2 VICINITY ELECTRICAL SITE PLAN - RENOVATION (1/E-72, 1/E-73)

SCALE: 1" = 20'

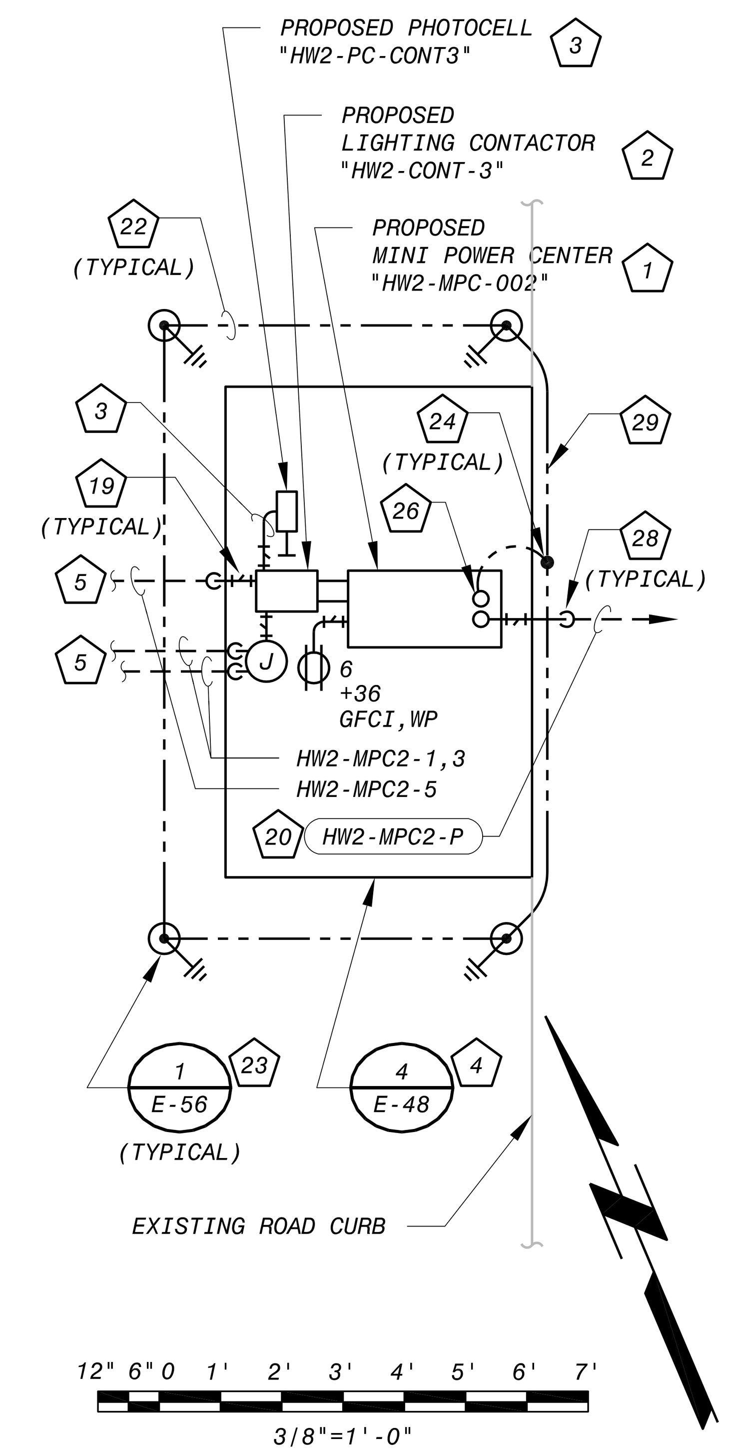

HEADWORKS AREA MINI POWER CENTER ENLARGED PLAN (3/-)

SCALE: 3/8"=1'0"

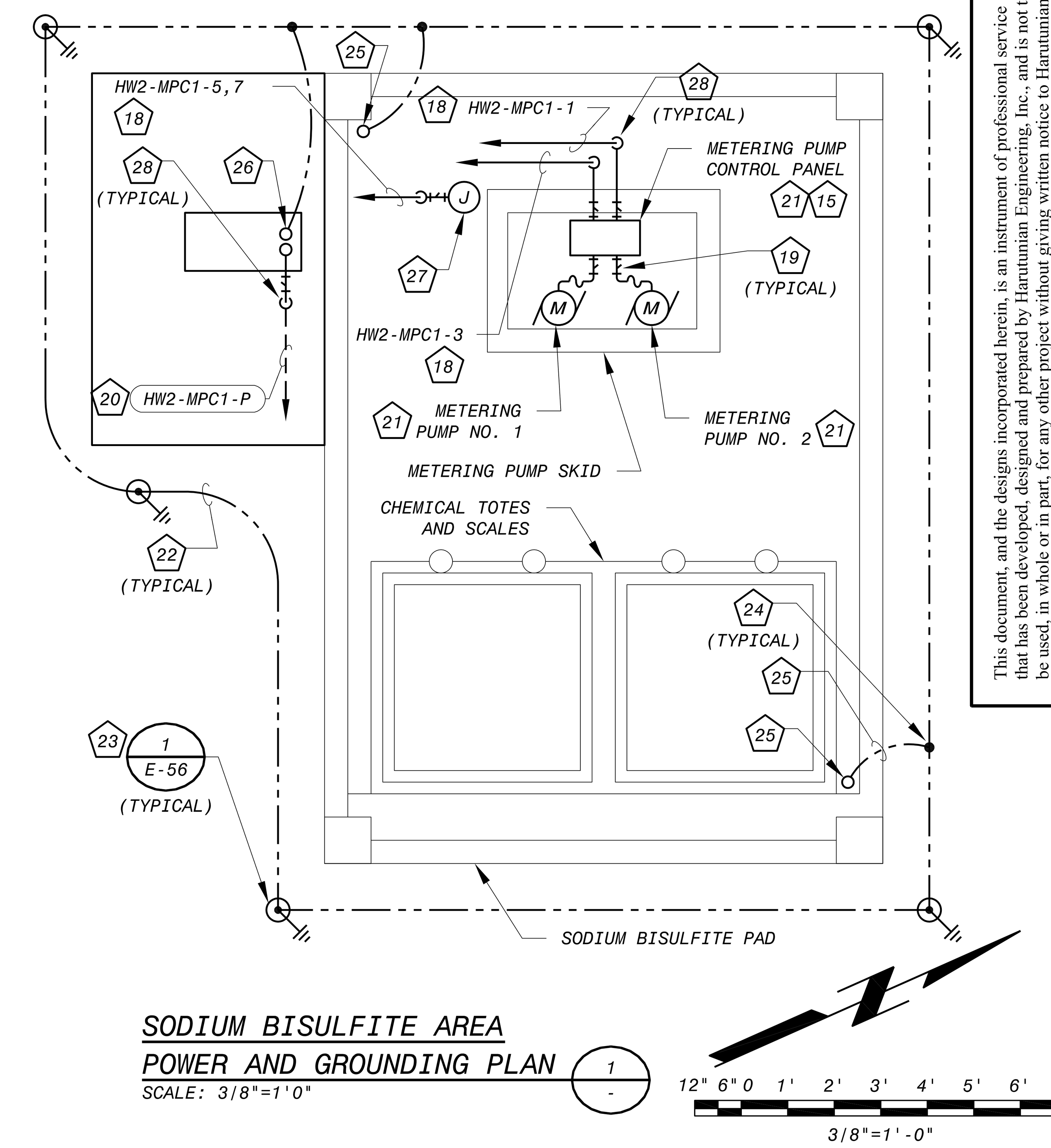

SODIUM BISULFITE AREA POWER AND GROUNDING PLAN (1/-)

SCALE: 3/8"=1'0"

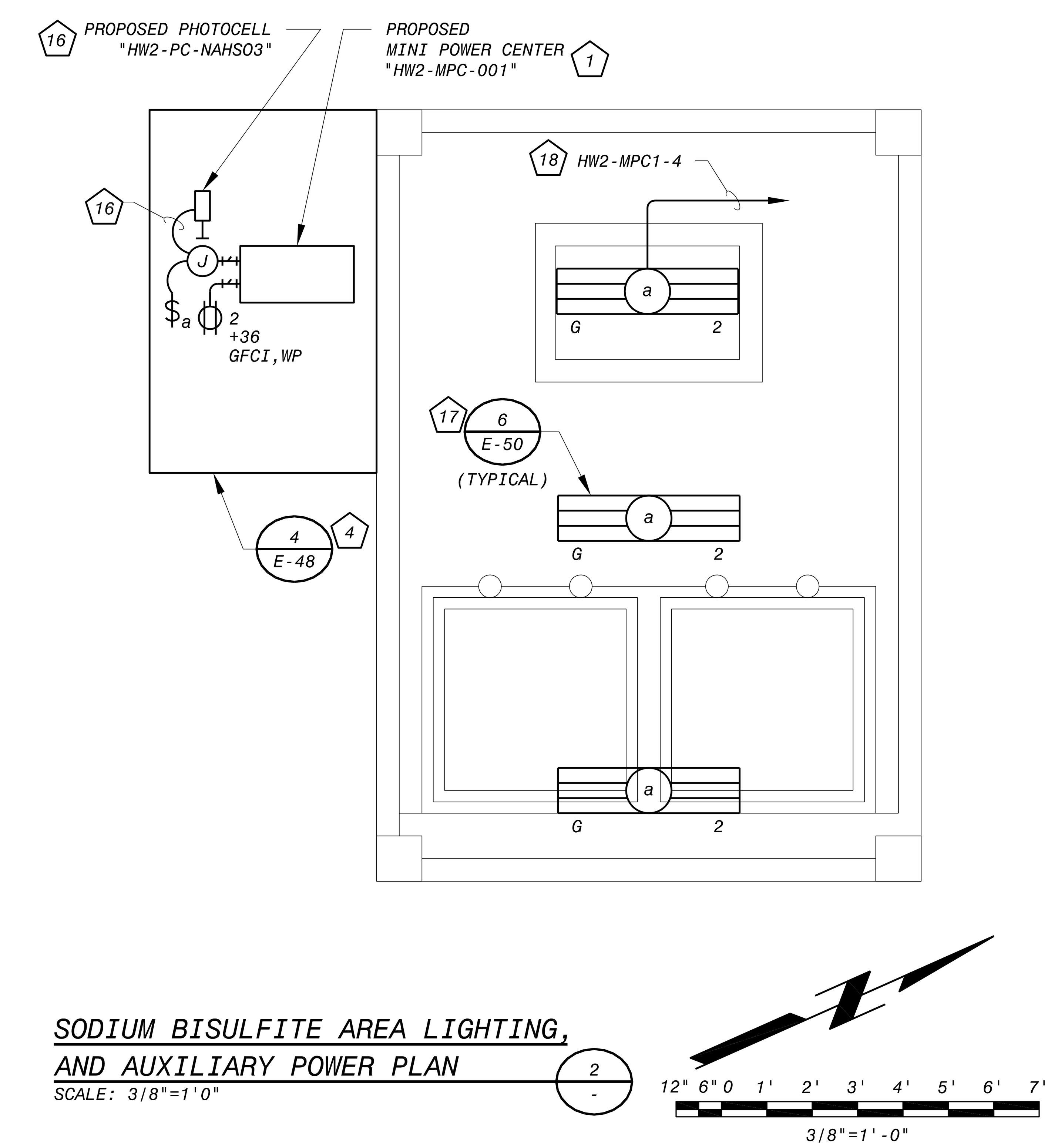

SODIUM BISULFITE AREA LIGHTING, AND AUXILIARY POWER PLAN (2/-)

SCALE: 3/8"=1'0"

KEY NOTES

1. FURNISH AND INSTALL MINI POWER CENTER AND SURGE PROTECTIVE DEVICE.
2. FURNISH AND INSTALL ELECTRICAL LIGHTING CONTACTOR DEDICATED TO SWITCHING OF TYPE "R" FIXTURE AT OUTFALL JUNCTION BOX, AND TYPE "B1" AND "B2" ROADWAY FIXTURES.
3. FURNISH AND INSTALL PHOTOCELL IN NEMA 4X WEATHERPROOF OUTLET BOX WITH GASKETED COVERPLATE. MOUNT TO ENCLOSURE SUPPORT RACK. ORIENT AND MAKE ALL FINAL CONNECTIONS PER MANUFACTURER'S INSTRUCTIONS. CONNECT PHOTOCELL WIRING TO LIGHTING CONTACTOR SUCH THAT PHOTOCELL CONTROLS OPERATION OF LIGHTS WHEN "HAND-OFF-AUTO" SWITCH ON FACE OF LIGHTING CONTACTOR IS IN "AUTO" POSITION.
4. FURNISH AND INSTALL OUTDOOR EQUIPMENT PAD AND ENCLOSURE SUPPORT RACK PER DETAIL 4 ON DRAWING NO. E-48.
5. LIGHTING CIRCUITS CONTINUE IN UNDERGROUND DUCT BANK. REFER TO SITE PLAN THIS SHEET FOR CONTINUATION.
6. FURNISH AND INSTALL POLE-MOUNTED LIGHT FIXTURE AND SWITCH WITH DEDICATED FOUNDATION. SWITCH SHOWN APART FROM POLE FOR CLARITY. INSTALL FIXTURE AT +10'-0" ABOVE FINISHED GRADE TO BOTTOM OF FIXTURE. TYPICAL FOR ALL TYPE "R" POLE-MOUNTED FIXTURES.
7. FURNISH AND INSTALL POLE-MOUNTED LIGHT FIXTURE WITH DEDICATED FOUNDATION. INSTALL FIXTURE AT +25'-0" ABOVE FINISHED GRADE TO BOTTOM OF FIXTURE. TYPICAL FOR ALL TYPE "B1" AND "B2" POLE-MOUNTED FIXTURES.
8. CIRCUIT LIGHT SWITCH TO CONTROL OUTFALL JUNCTION BOX FIXTURE SUCH THAT LIGHT MAY BE TURNED OFF AT NIGHT.
9. SPACE AND ENCASE CONDUITS IN REINFORCED CONCRETE ENCASED DUCT BANK PER DETAILS ON DRAWING NO. E-49. SAW CUT EXISTING ROAD/CURB/SIDEWALK/FENCE, ETC. AS REQUIRED, WHETHER SHOWN HERE OR NOT, TO FACILITATE DUCT BANK INSTALLATION. REPAIR ROAD/CURB/SIDEWALK/FENCE, ETC. TO MATCH EXISTING TO THE SATISFACTION OF THE OWNER AT NO ADDITIONAL COST TO THE OWNER.
10. PROPOSED DUCT BANK RISES/DECENDS ALONG WALL OF HEADWORKS NO. 2 BUILDING AND CONNECTS TO PULLBOX MOUNTED ON WALL (NOT SHOWN). REFER TO ELECTRICAL CONDUIT CORRIDOR PLAN ON DRAWING NO. E-46 FOR CONTINUATION.
11. INTERCONNECT PROPOSED DUCT BANK WITH EXISTING BUILDING STRUCTURE PER STRUCTURAL DETAILS AND SPECIFICATIONS.
12. HAND EXCAVATE IN VICINITY OF EXISTING DUCT BANK. PROPOSED DUCT BANK PASSES UNDERNEATH EXISTING DUCT BANK. SUPPORT EXISTING DUCT BANK AS REQUIRED.
13. SAW CUT EXISTING ROAD/DRIVEWAY/FENCE MOW STRIP, ETC. TO FACILITATE DUCT BANK INSTALLATION. REPAIR EXISTING ROAD/DRIVEWAY/FENCE/ MOWSTRIP, ETC. PER CIVIL DETAILS TO THE SATISFACTION OF THE OWNER AT NO ADDITIONAL COST TO THE OWNER.
14. STUB OUT CONDUIT SIX FEET FROM POLE BASE AND CAP OFF FOR FUTURE USE. CIRCUIT HW2-MPC2-1,3 WILL BE EXTENDED IN THE FUTURE BY OTHERS.
15. THE PROPOSED CONTROL PANEL IS FURNISHED BY THE EQUIPMENT MANUFACTURER. SIZE, FURNISH, AND INSTALL ALL CONDUIT/WIRE AND ALL NECESSARY RELATED HARDWARE TO INTERCONNECT ALL EQUIPMENT PACKAGED SYSTEM SUB-COMPONENTS WITH THE PROPOSED CONTROL PANEL, FURNISH AND INSTALL SUITABLE SUPPORT CHANNELS/CONCRETE EQUIPMENT PAD AS REQUIRED TO SUPPORT THE CONTROL PANEL, INSTALL THE CONTROL PANEL, AND MAKE ALL FINAL ELECTRICAL POWER CONNECTIONS PER THE RECOMMENDATIONS AND WIRING DIAGRAMS PROVIDED BY THE EQUIPMENT MANUFACTURER. ALSO ADHERE TO THE REQUIREMENTS OF THE NATIONAL ELECTRICAL CODE (N.E.C.) AND THE SPECIFICATIONS. SHOULD ADDITIONAL ELECTRICAL POWER FIELD INTERCONNECT WIRING BE REQUIRED TO FACILITATE THE FUNCTIONAL OPERATION OF THE PACKAGED CONTROL SYSTEM, THE CONTRACTOR SHALL SIZE, FURNISH, AND INSTALL THE ADDITIONAL CONDUIT/WIRE, FIELD ROUTE THE PROPOSED CONDUIT/WIRE PER THE SPECIFICATIONS, ADD ALL NECESSARY TERMINAL BLOCKS, ETC., COMPLETE WITH ALL NECESSARY WIRING TO FACILITATE A COMPLETE AND FUNCTIONAL INSTALLATION, AND MAKE ALL FINAL CONNECTIONS PER THE MANUFACTURER'S RECOMMENDATIONS, THE MANUFACTURER'S WIRING DIAGRAMS, AND PERFORM ALL ASPECTS OF THE WORK TO THE SATISFACTION OF THE OWNER AT NO ADDITIONAL COST TO THE OWNER.
16. FURNISH AND INSTALL PHOTOCELL IN NEMA 4X WEATHERPROOF OUTLET BOX WITH GASKETED COVERPLATE. MOUNT TO ENCLOSURE SUPPORT RACK. ORIENT AND MAKE ALL FINAL CONNECTIONS PER MANUFACTURER'S INSTRUCTIONS. CONNECT PHOTOCELL WIRING TO LIGHT SWITCH SUCH THAT LIGHTS MAY BE TURNED OFF AT NIGHT.
17. SURFACE MOUNT FIXTURE TO CANOPY CEILING. MOUNT FIXTURE AT +10'-0" ABOVE FINISHED FLOOR/GRADE TO BOTTOM OF FIXTURE UNLESS NOTED OTHERWISE. TYPICAL FOR ALL TYPE "G" LIGHT FIXTURES.
18. SURFACE MOUNT CONDUIT/WIRE TO CANOPY CEILING SIMILAR TO DETAIL 6 ON DRAWING NO. E-50. MOUNT CONDUITS TO SUPPORT CHANNEL PER DETAIL 3 ON DRAWING NO. E-51.
19. FURNISH AND INSTALL CONDUIT SEALING FITTINGS ON ALL CONDUIT/ WIRE CONNECTIONS TO ELECTRICAL EQUIPMENT, WHETHER SHOWN HERE OR NOT. SEALS SHOWN AWAY FROM EQUIPMENT FOR CLARITY. LOCATE SEAL ADJACENT TO OR BELOW EQUIPMENT.
20. UNDERGROUND CONCRETE ENCASED DUCT BANK CONTINUES. REFER TO SITE PLAN FOR CONTINUATION.
21. MOUNTED ON PUMP SKID. REFER TO PROCESS/MECHANICAL DRAWINGS.
22. 1 - 250kCMIL BARE GROUNDING CONDUCTOR DIRECT BURIED AT MINIMAL DEPTH OF 30 INCHES BELOW FINISHED GRADE. TYPICAL BETWEEN ALL PERIMETER GROUNDING ELECTRODES.
23. FURNISH AND INSTALL GROUND ELECTRODE PLATE PER DETAILS ON DRAWING NO. E-56. THE LAYOUT/PLACEMENT OF GROUND ELECTRODES IS SHOWN FOR REPRESENTATION ONLY. CONTRACTOR SHALL COORDINATE FINAL GROUNDING SYSTEM LAYOUT WITH ALL OTHER TRADES TO AVOID CONFLICTS. MAINTAIN A MINIMUM SPACING OF 10'-0" AND A MAXIMUM SPACING OF 20'-0" CENTER TO CENTER BETWEEN ALL GROUNDING ELECTRODES. MINIMUM BURIAL DEPTH SHALL BE 30 INCHES BELOW FINISHED GRADE. FURNISH AND INSTALL ELECTRODES AT INCREASED DEPTH AS REQUIRED TO AVOID CONFLICTS.
24. MAKE ALL CONNECTIONS TO GROUNDING ELECTRODES AND GROUNDING GRID BY MEANS OF EXOTHERMIC WELD EXCEPT WHERE SHOWN OTHERWISE.
25. 1 - 250 KCMIL INSULATED GROUNDING CONDUCTOR IN 1-1/2" PVC CONDUIT, DIRECT BURIED AT MINIMUM 30" BELOW FINISHED GRADE. CONDUIT/WIRE TURNS UP THROUGH FLOOR SLAB IMMEDIATELY ADJACENT TO STRUCTURAL GRADE BEAM. CONDUIT/WIRE CONTINUES SURFACE MOUNTED TO WALL IN ROUTE TO CEILING SPACE OF SODIUM BISULFITE SYSTEM PAD. BOND GROUNDING CONDUCTOR TO CANOPY STRUCTURAL STEEL AND ROOF DECKING PER DETAIL 4 ON DRAWING NO. E-56.
26. 1 - #1 AWG INSULATED GROUNDING CONDUCTOR IN 1" PVC CONDUIT, DIRECT BURIED AT MINIMUM 30" BELOW FINISHED GRADE. CONDUIT/WIRE TURNS UP THROUGH FLOOR SLAB AND CONNECTS TO MINI POWER CENTER GROUND BUS.
27. FURNISH AND INSTALL JUNCTION BOX DEDICATED TO SPLICING OF MINI POWER CENTER CIRCUITS TO EACH REQUIRED HEAT TRACE SYSTEM. FURNISH AND INSTALL ALL REQUIRED CONDUIT/WIRE, SUPPORTS, WIRING DEVICES, ETC. AS REQUIRED BETWEEN JUNCTION BOX AND EACH HEAT TRACE SYSTEM (NOT SHOWN). MOUNT JUNCTION BOX TO ENCLOSURE SUPPORT RACK PER DETAIL 2 ON DRAWING NO. E-52. COORDINATE INSTALLATION WITH MECHANICAL AND MAKE ALL FINAL CONNECTIONS.
28. CONDUITS SHOWN SCHEMATICALLY FOR CLARITY. MOUNT CONDUITS TO RACK AND STUB UP CONDUITS BENEATH EQUIPMENT.
29. CONCRETE EQUIPMENT PAD LOCATED DIRECTLY ADJACENT TO EXISTING ROAD CURB. GROUND WIRE SHOWN OUTSIDE PAD FOR CLARITY. LOCATE UNDER PAD.
30. PROPOSED DUCT BANK ROUTES ADJACENT TO EXISTING FENCE. EXISTING FENCE IS NOT SHOWN IN ITS ENTIRETY. FIELD VERIFY FENCE LOCATION.

GENERAL NOTES

1. COORDINATE WITH THE CONSTRUCTION SEQUENCING REQUIREMENTS OF THE PROJECT.
2. REFER TO THE IC/CIVIL DRAWINGS FOR INSTRUMENTATION/CONTROL SYSTEM DUCT BANK REQUIREMENTS.

This document, and the designs incorporated herein, is an instrument of professional service that has been developed, designed and prepared by Harutunian Engineering, Inc., and is not to be used, in whole or in part, for any other project without giving written notice to Harutunian Engineering, Inc.

REVISIONS

NO.	DR	CK	DATE	DESCRIPTION

BLACK & VEATCH Building a world of difference.
Black & Veatch Corporation
Registration No. F-258
Austin, Texas

HARUTUNIAN ENGINEERING, INC.
305 E Huntland Dr, Ste 500; Austin, TX 78752
TBPE Firm Registration No. F-2408

K. A. Harutunian
STATE OF TEXAS — K. A. HARUTUNIAN — 59181 — REGISTERED PROFESSIONAL ENGINEER
4/4/2014

Austin WATER
Walnut Creek WWTP - Tertiary Filter Rehabilitation Project
CIP ID No. 3023.025

ELECTRICAL
HW2 VICINITY SITE ELECTRICAL PLAN AND ENLARGED DETAILS - RENOVATION

DESIGNED BY:	HEI
DRAWN BY:	HEI
REVIEWED BY:	HEI
APPROVED BY:	HEI
PROJECT NO.:	168622
DATE:	4/4/2014
SCALE:	AS SHOWN
REVISION:	

DISCIPLINE NO.
E-22
DWG. NO.

GENERAL NOTES

1. THIS DRAWING IS INTENDED TO REPRESENT AN OVERVIEW OF THE POWER DISTRIBUTION SYSTEM. ONLY MAJOR EQUIPMENT AND LOADS HAVE BEEN SHOWN FOR CLARITY.

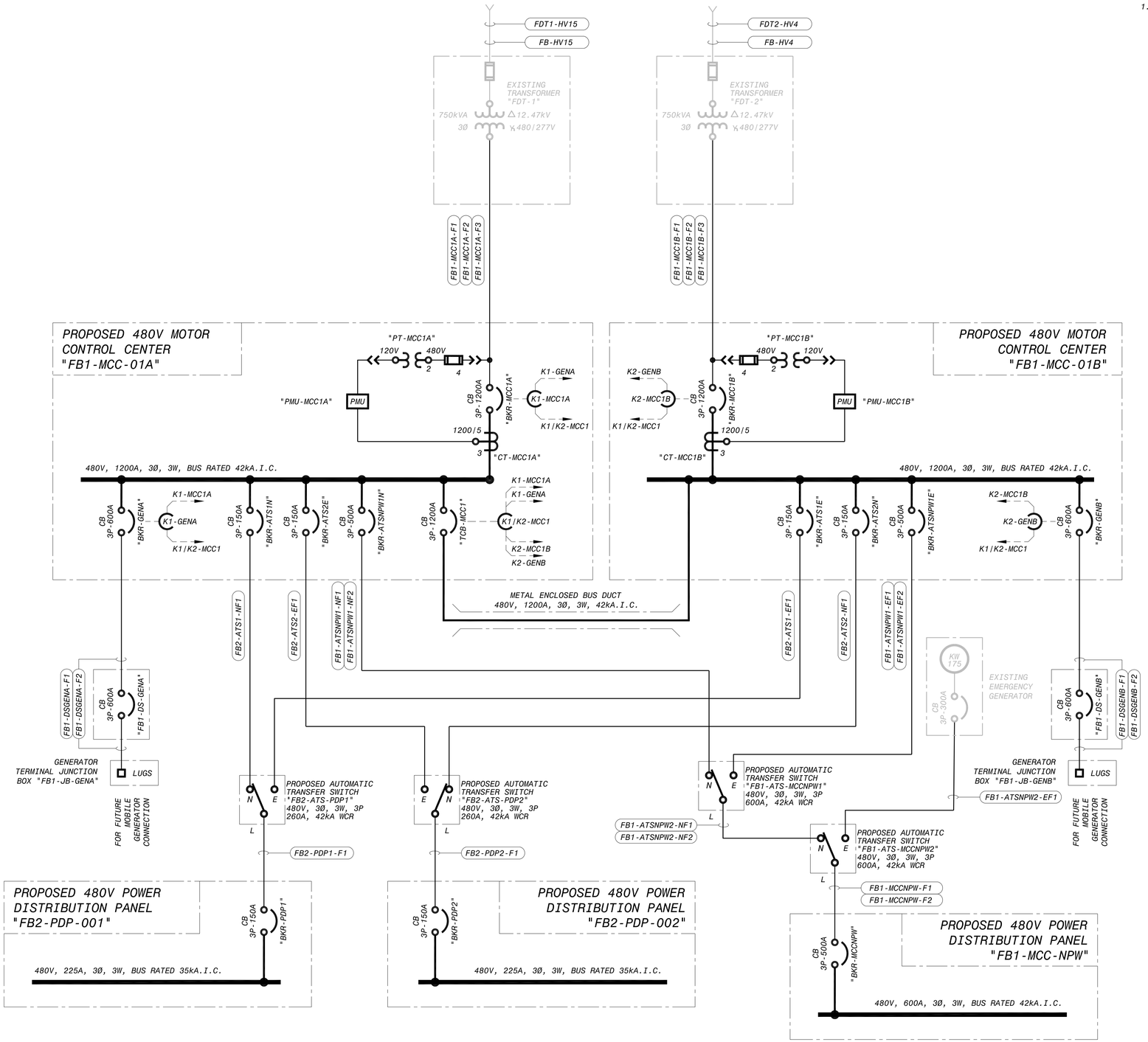

ELEMENTARY LOAD ASSESSMENT TABLE

PROPOSED LOAD		
LOAD CATEGORY	kVA	A
PROCESS MOTOR LOADS	454.9	547.2
AIR CONDITIONING	20.2	24.3
ELECTRIC HEATING	107.0	128.7
VENTILATION FANS	8.6	10.3
AUXILIARY	66.0	79.4
SUBTOTAL	656.7	789.9
FUTURE LOAD		
LOAD CATEGORY	kVA	A
PROCESS MOTOR LOADS	130.0	156.4
SUBTOTAL	130.0	156.4
COMBINED PROPOSED AND FUTURE LOAD		
LOAD CATEGORY	kVA	A
GRAND TOTAL	786.7	946.3

NOTE: THE "ELEMENTARY LOAD ASSESSMENT TABLE" ON THIS DRAWING IS INCLUDED FOR PHASE I INFORMATION PURPOSES ONLY AND EXCLUDES THE LOAD INRUSH CURRENT AND OTHER SYSTEM BEHAVIORAL TYPE OF ASSESSMENTS. THE FUTURE LOAD IS A REDUNDANT PUMP.

This document, and the designs incorporated herein, is an instrument of professional service that has been developed, designed and prepared by Harutunian Engineering, Inc., and is not to be used, in whole or in part, for any other project without giving written notice to Harutunian Engineering, Inc.

NO.	DR	CK	DATE	DESCRIPTION

REVISIONS

BLACK & VEATCH
Building a world of difference.
Black & Veatch Corporation
Registration No. F-253
Austin, Texas

HARUTUNIAN ENGINEERING, INC.
305 E Huntland Dr., Ste 500, Austin, TX 78752
TBPE Firm Registration No. F-2408

STATE OF TEXAS
K. A. HARUTUNIAN
REGISTERED PROFESSIONAL ENGINEER
4/4/2014

Walnut Creek WWTP - Tertiary Filter Rehabilitation Project
CIP ID No. 3023.025

AUSTIN WATER

ELECTRICAL
FB1/FB2 480V OVERALL ONE-LINE DIAGRAM - RENOVATION

DESIGNED BY:	HEI
DRAWN BY:	HEI
REVIEWED BY:	HEI
APPROVED BY:	HEI
PROJECT NO.:	168622
DATE:	4/4/2014
SCALE:	AS SHOWN

REVISION:

DISCIPLINE NO.
E-23

DWG. NO.

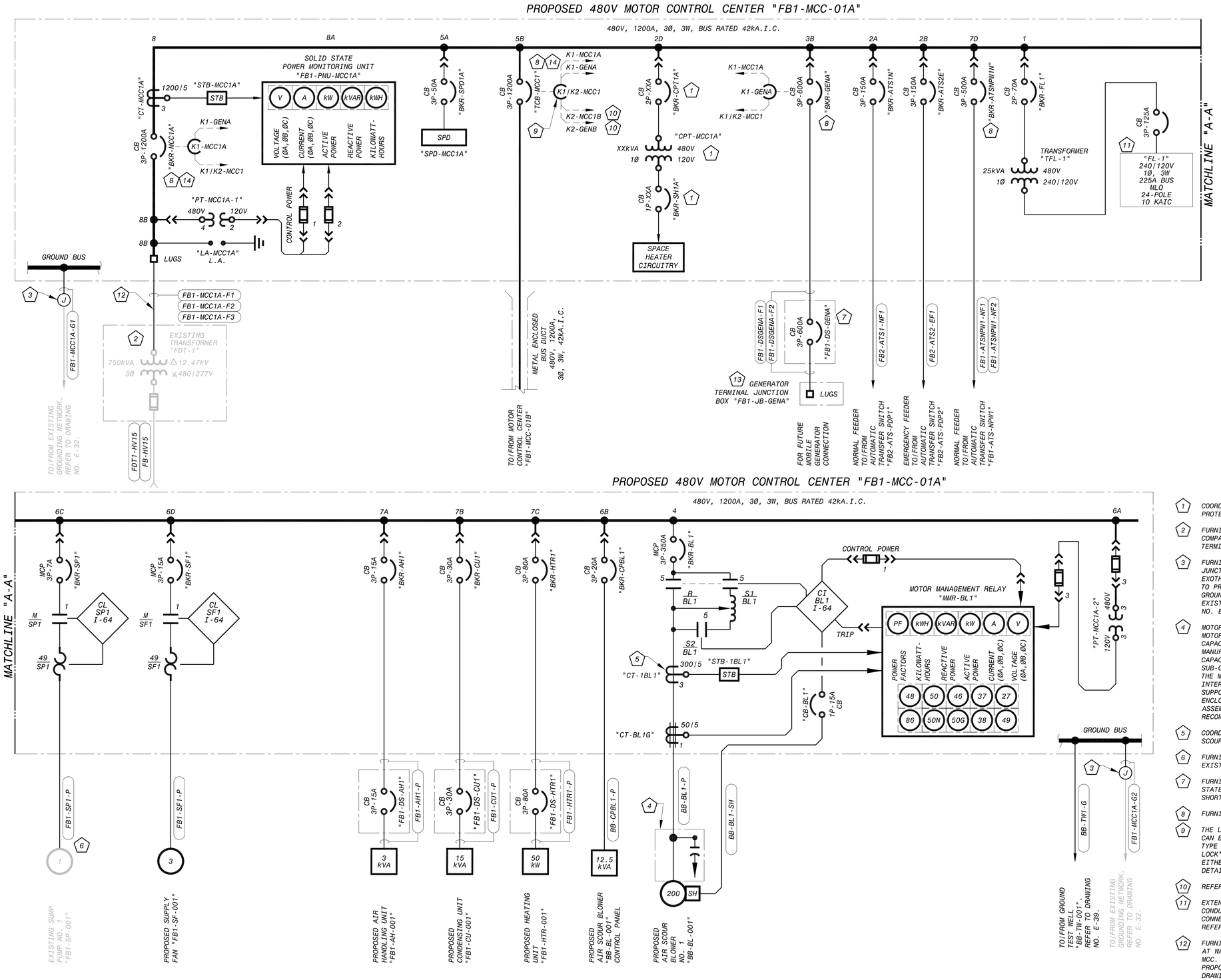

KEY NOTES

1. COORDINATE CONTROL POWER TRANSFORMER, PRIMARY AND SECONDARY PROTECTION DEVICE RATINGS WITH MANUFACTURER.
2. FURNISH AND INSTALL TERMINATION LUGS IN SECONDARY COMPARTMENT OF DISTRIBUTION TRANSFORMER TO FACILITATE TERMINATION OF PROPOSED FEEDER CABLES/WIRES.
3. FURNISH AND INSTALL PROPOSED GROUNDING CONDUIT/WIRE AND JUNCTION BOX. CONNECT PROPOSED WIRE TO EXISTING BY EXOTHERMIC WELD INSIDE JUNCTION BOX AND EXTEND CONDUIT/WIRE TO PROPOSED MCC. TERMINATE PROPOSED GROUND CABLE TO MCC GROUND BUS. EXISTING CONDUIT/WIRE CONTINUES TO/FROM EXISTING FILTER BUILDING GROUNDING GRID. REFER TO DRAWING NO. E-32 FOR ADDITIONAL REQUIREMENTS.
4. MOTOR LOW VOLTAGE TERMINATION ENCLOSURE FURNISHED BY THE MOTOR MANUFACTURER, COMPLETE WITH POWER FACTOR CORRECTION CAPACITORS MOUNTED INSIDE THE ENCLOSURE. THE MOTOR MANUFACTURER SHALL SIZE THE POWER FACTOR CORRECTION CAPACITORS ENCLOSURE, I.E. THE ENCLOSURE AND ALL SUB-COMPONENTS. THE CONTRACTOR SHALL FULLY COORDINATE WITH THE MOTOR/BLOWER MANUFACTURER, FURNISH AND INSTALL ALL INTERCONNECT CONDUIT/WIRE, FURNISH AND INSTALL SUITABLE SUPPORT CHANNEL ASSEMBLY TO SUPPORT THE LOW VOLTAGE ENCLOSURE ASSEMBLY, INSTALL THE LOW VOLTAGE ENCLOSURE ASSEMBLY, AND MAKE ALL FINAL CONNECTIONS PER THE RECOMMENDATIONS OF THE BLOWER/MOTOR MANUFACTURER.
5. COORDINATE CURRENT TRANSFORMER REQUIREMENTS WITH THE AIR SCOUR BLOWER MANUFACTURER.
6. FURNISH AND INSTALL PROPOSED CONDUIT/WIRE TO CONNECT TO EXISTING LOAD.
7. FURNISH AND INSTALL ENCLOSED CIRCUIT BREAKER WITH SOLID STATE ELECTRONIC TRIP UNIT. BREAKER SHALL HAVE MINIMUM SHORT CIRCUIT INTERRUPTING RATING OF 42KA AT 480VAC.
8. FURNISH WITH SOLID STATE ELECTRONIC TRIP.
9. THE LOCK CYLINDER ASSOCIATED WITH CIRCUIT BREAKER "TCB-MCC1" CAN BE UNLOCKED USING EITHER THE "K1" OR THE "K2" KEY. THIS TYPE OF LOCK IS SOMETIMES REFERRED TO AS AN "APARTMENT LOCK". TIE BREAKER "TCB-MCC1" CAN THEREFORE BE CLOSED USING EITHER KEY. REFER TO DRAWING NO. E-28 FOR ADDITIONAL DETAILS AND REQUIREMENTS.
10. REFER TO DRAWING NO. E-25.
11. EXTEND AND RECONNECT ALL EXISTING BRANCH CIRCUIT CONDUITS/WIRE TO PROPOSED MCC "FB1-MCC-01A". REMAKE ALL CONNECTIONS OF EXISTING WIRING TO PROPOSED PANELBOARD. REFER TO DRAWING NO. E-32 FOR ADDITIONAL REQUIREMENTS.
12. FURNISH AND INSTALL PROPOSED CONDUIT FROM EXISTING CONDUIT AT WALL PENETRATION REMAINING FROM DEMOLITION AND EXTEND TO MCC. FURNISH AND INSTALL PROPOSED WIRING IN EXISTING AND PROPOSED CONDUITS FROM SOURCE TO DESTINATION. REFER TO DRAWING NO. E-32 FOR ADDITIONAL REQUIREMENTS.
13. FURNISH AND INSTALL PER DETAILS ON DRAWING E-54 AND PER SPECIFICATION SECTION 16250.
14. FURNISH AND INSTALL 1100A RATING PLUG.

This document, and the designs incorporated herein, is an instrument of professional service that has been developed, designed and prepared by Harutunian Engineering, Inc., and is not to be used, in whole or in part, for any other project without giving written notice to Harutunian Engineering, Inc.

NO.	DR	CK	DATE	DESCRIPTION

REVISIONS

BLACK & VEATCH Building a world of difference.
Black & Veatch Corporation
Registration No. F-653
Austin, Texas

HARUTUNIAN ENGINEERING, INC.
305 E Hunland Dr, Ste 500; Austin, TX 78752
TBPE Firm Registration No. F-2408

STATE OF TEXAS — K. A. HARUTUNIAN — 59981 — REGISTERED PROFESSIONAL ENGINEER
4/4/2014

AUSTIN WATER
Walnut Creek WWTP - Tertiary Filter Rehabilitation Project
CIP ID No. 3023.025

ELECTRICAL
FB1/FB2 480V ONE-LINE DIAGRAMS - RENOVATION (SHEET 1 OF 4)

DESIGNED BY:	HEI
DRAWN BY:	HEI
REVIEWED BY:	HEI
APPROVED BY:	HEI
PROJECT NO.:	168622
DATE:	4/4/2014
SCALE:	AS SHOWN

REVISION:

DISCIPLINE NO.
E-24

DWG. NO.
SHEET 136 OF 273

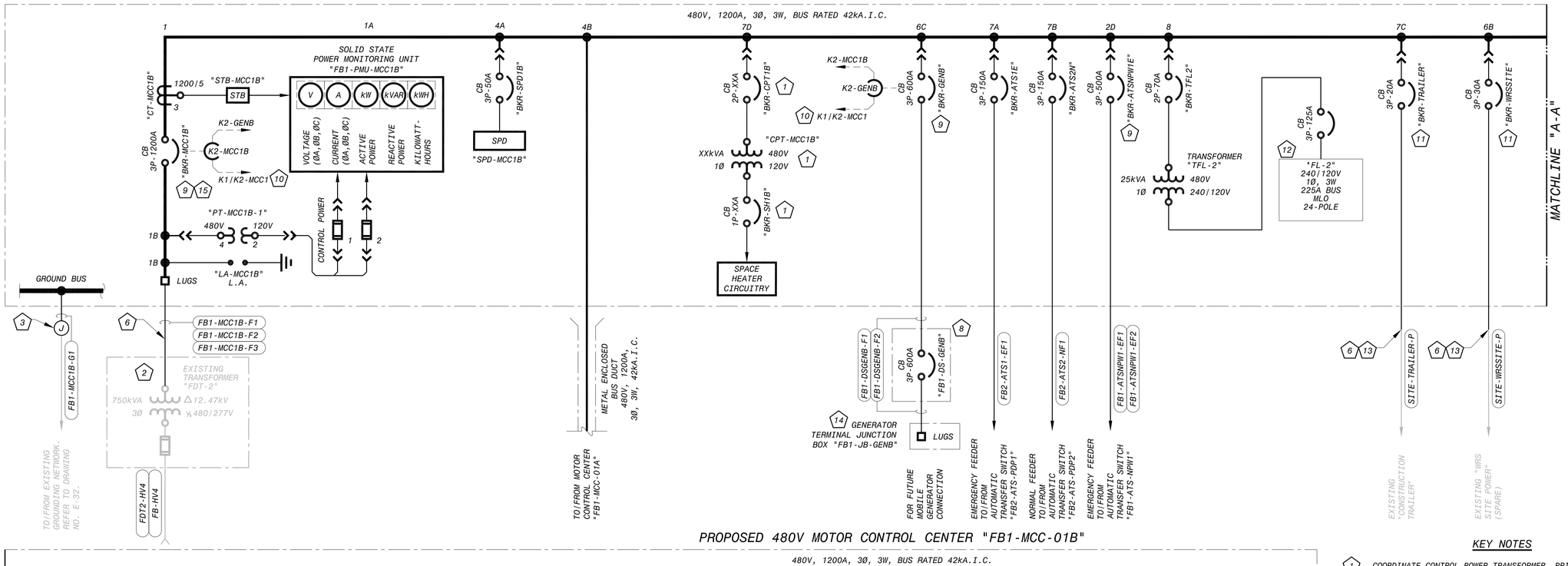

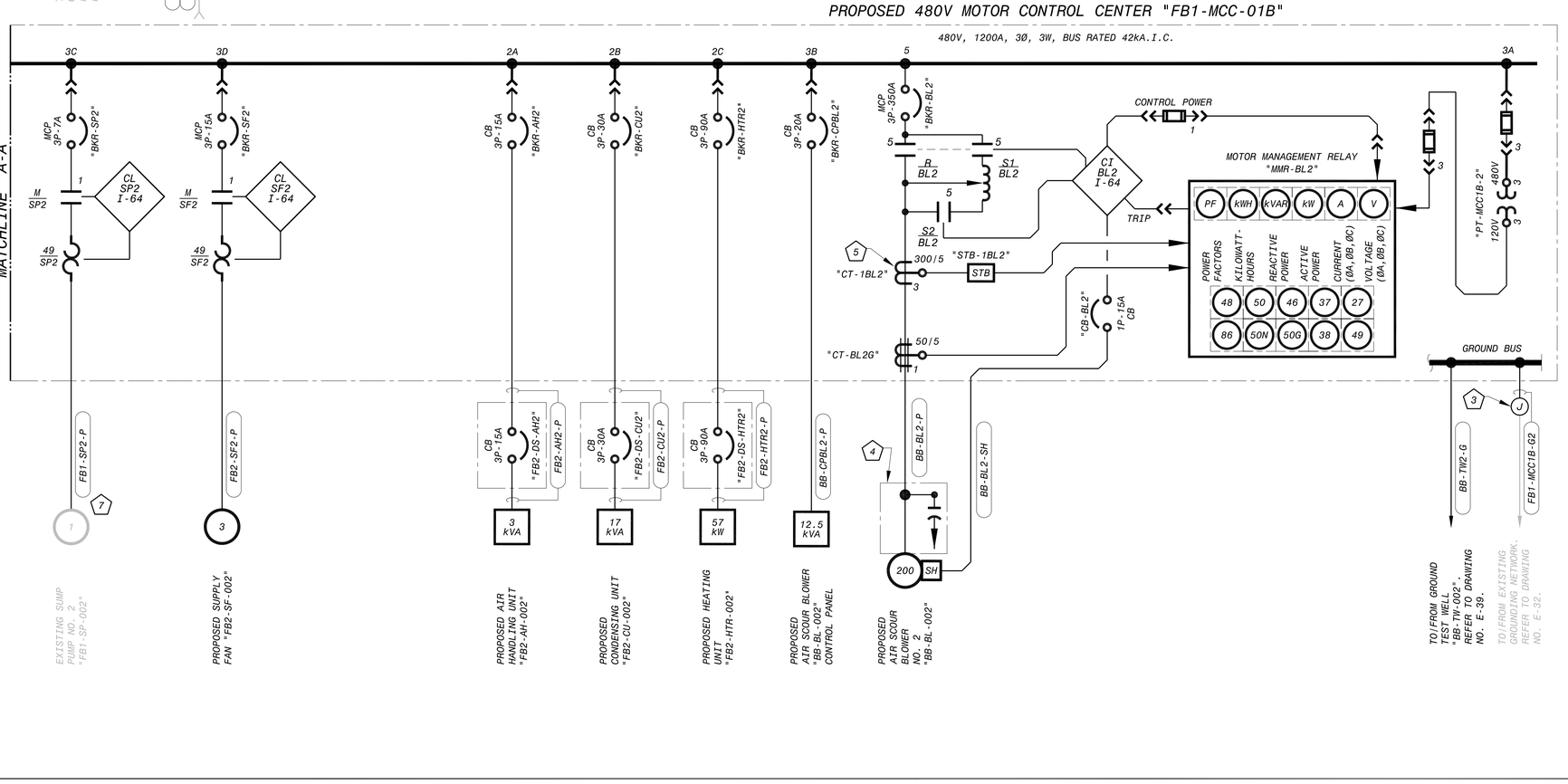

KEY NOTES

1. COORDINATE CONTROL POWER TRANSFORMER, PRIMARY AND SECONDARY PROTECTION DEVICE RATINGS WITH MANUFACTURER.
2. FURNISH AND INSTALL TERMINATION LUGS IN SECONDARY COMPARTMENT OF DISTRIBUTION TRANSFORMER TO FACILITATE TERMINATION OF PROPOSED FEEDER CABLES/WIRES.
3. FURNISH AND INSTALL PROPOSED GROUNDING CONDUIT/WIRE AND JUNCTION BOX. CONNECT PROPOSED WIRE TO EXISTING BY EXOTHERMIC WELD INSIDE JUNCTION BOX AND EXTEND CONDUIT/WIRE TO PROPOSED MCC. TERMINATE PROPOSED GROUND CABLE TO MCC GROUND BUS. EXISTING CONDUIT/WIRE CONTINUES TO/FROM EXISTING FILTER BUILDING GROUNDING GRID. REFER TO DRAWING NO. E-32 FOR ADDITIONAL REQUIREMENTS.
4. MOTOR LOW VOLTAGE TERMINATION ENCLOSURE FURNISHED BY THE MOTOR MANUFACTURER, COMPLETE WITH POWER FACTOR CORRECTION CAPACITORS MOUNTED INSIDE THE ENCLOSURE. THE MOTOR MANUFACTURER SHALL SIZE THE POWER FACTOR CORRECTION CAPACITORS ENCLOSURE, I.E. THE ENCLOSURE AND ALL SUB-COMPONENTS. THE CONTRACTOR SHALL FULLY COORDINATE WITH THE MOTOR/BLOWER MANUFACTURER, FURNISH AND INSTALL ALL INTERCONNECT CONDUIT/WIRE, FURNISH AND INSTALL SUITABLE SUPPORT CHANNEL ASSEMBLY TO SUPPORT THE LOW VOLTAGE ENCLOSURE ASSEMBLY, INSTALL THE LOW VOLTAGE ENCLOSURE ASSEMBLY, AND MAKE ALL FINAL CONNECTIONS PER THE RECOMMENDATIONS OF THE BLOWER/MOTOR MANUFACTURER.
5. COORDINATE CURRENT TRANSFORMER REQUIREMENTS WITH THE AIR SCOUR BLOWER MANUFACTURER.
6. FURNISH AND INSTALL PROPOSED CONDUIT FROM EXISTING CONDUIT AT WALL PENETRATION REMAINING FROM DEMOLITION AND EXTEND TO MCC. FURNISH AND INSTALL PROPOSED WIRING IN EXISTING AND PROPOSED CONDUITS FROM SOURCE TO DESTINATION. REFER TO DRAWING NO. E-32 FOR ADDITIONAL REQUIREMENTS.
7. FURNISH AND INSTALL PROPOSED CONDUIT/WIRE TO CONNECT TO EXISTING LOAD.
8. FURNISH AND INSTALL ENCLOSED CIRCUIT BREAKER WITH SOLID STATE ELECTRONIC TRIP UNIT. BREAKER SHALL HAVE MINIMUM SHORT CIRCUIT INTERRUPTING RATING OF 42KA AT 480VAC.
9. FURNISH WITH SOLID STATE ELECTRONIC TRIP.
10. REFER TO DRAWING NO. E-24.
11. FURNISH BREAKER IN PROPOSED MCC TO MATCH SIZE OF PREVIOUS BREAKER IN DEMOLISHED "MCC-FCC2" AT NO ADDITIONAL COST TO THE OWNER.
12. EXTEND AND RECONNECT ALL EXISTING BRANCH CIRCUIT CONDUITS/WIRE TO PROPOSED MCC "FB1-MCC-01B". REMAKE ALL CONNECTIONS OF EXISTING WIRING TO PROPOSED PANELBOARD. REFER TO DRAWING NO. E-32 FOR ADDITIONAL REQUIREMENTS.
13. SIZE AND QUANTITY OF PROPOSED WIRING LISTED IN CONDUIT/WIRE SCHEDULE IS FOR BIDDING PURPOSES. PROPOSED WIRING SHALL BE OF LIKE QUANTITY AND SIZE AS EXISTING. FIELD VERIFY AND INCREASE CONDUIT/WIRE SIZE AS REQUIRED AT NO ADDITIONAL COST TO OWNER.
14. FURNISH AND INSTALL PER DETAILS ON DRAWING E-54 AND PER SPECIFICATION SECTION 16250.
15. FURNISH AND INSTALL 1100A RATING PLUG.

This document, and the designs incorporated herein, is an instrument of professional service that has been developed, designed and prepared by Harutunian Engineering, Inc., and is not to be used, in whole or in part, for any other project without giving written notice to Harutunian Engineering, Inc.

NO.	DR	CK	DATE	DESCRIPTION

REVISIONS

BLACK & VEATCH
Building a world of difference.
Black & Veatch Corporation
Registration No. F-439
Austin, Texas

HARUTUNIAN ENGINEERING, INC.
305 E Hunland Dr, Ste 500; Austin, TX 78752
TBPE Firm Registration No. F-2408

STATE OF TEXAS
K. A. HARUTUNIAN
59981
REGISTERED PROFESSIONAL ENGINEER
4/4/2014

Walnut Creek WWTP - Tertiary Filter Rehabilitation Project
CIP ID No. 3023.025

AUSTIN WATER

ELECTRICAL
FB1/FB2 480V ONE-LINE DIAGRAMS
- RENOVATION (SHEET 2 OF 4)

DESIGNED BY:	HEI
DRAWN BY:	HEI
REVIEWED BY:	HEI
APPROVED BY:	HEI
PROJECT NO.:	168622
DATE:	4/4/2014
SCALE:	AS SHOWN
REVISION:	
DISCIPLINE NO.	E-25
DWG. NO.	SHEET 137 OF 273

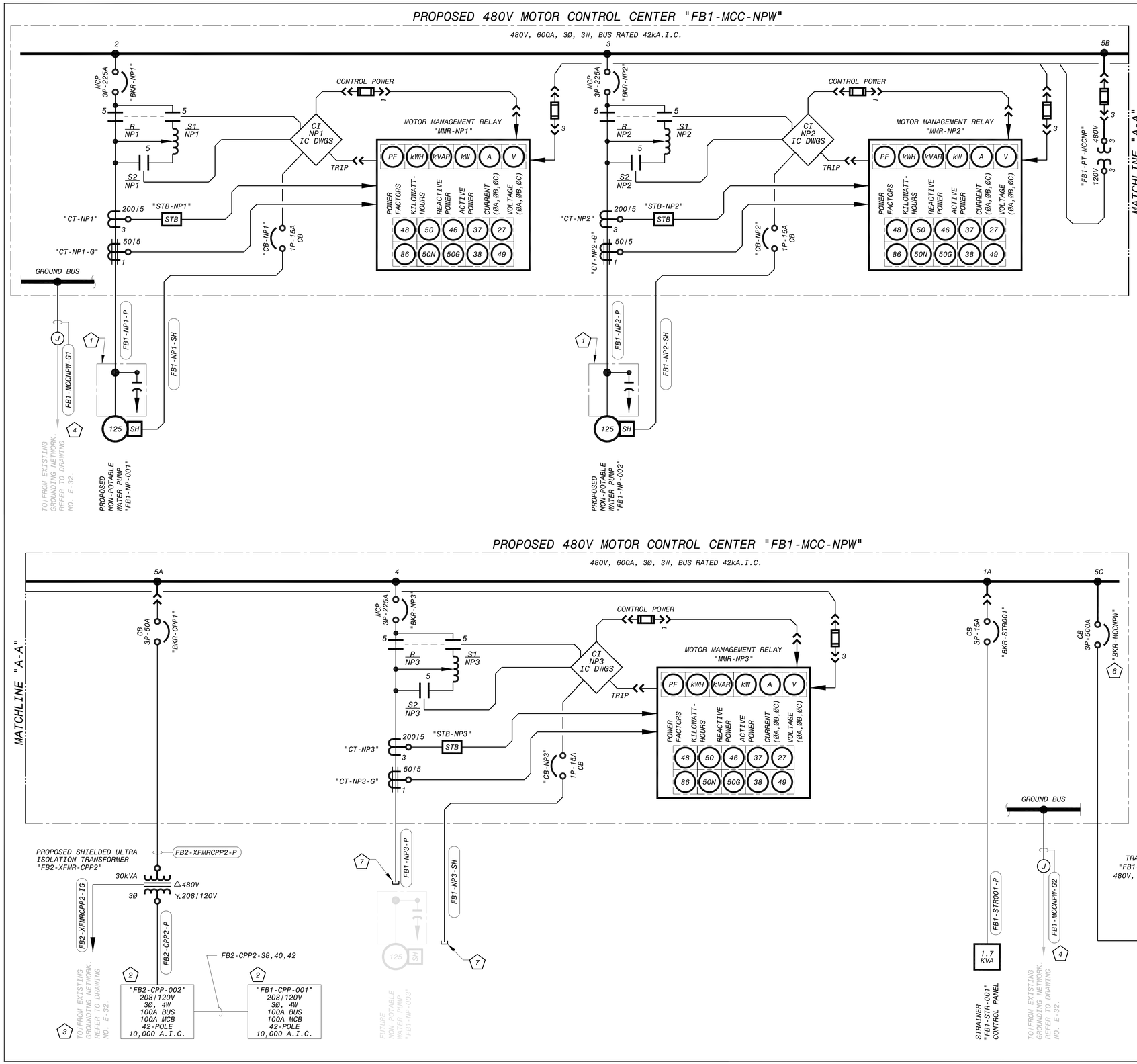

KEY NOTES

1. MOTOR LOW VOLTAGE TERMINATION ENCLOSURE FURNISHED BY THE PUMP MOTOR MANUFACTURER, COMPLETE WITH POWER FACTOR CORRECTION CAPACITORS MOUNTED INSIDE THE ENCLOSURE. THE MOTOR MANUFACTURER SHALL SIZE THE POWER FACTOR CORRECTION CAPACITORS ENCLOSURE, I.E., THE ENCLOSURE AND ALL SUB-COMPONENTS. THE CONTRACTOR SHALL FULLY COORDINATE WITH THE MOTOR/PUMP MANUFACTURER, FURNISH AND INSTALL ALL INTERCONNECT CONDUIT/WIRE, FURNISH AND INSTALL SUITABLE SUPPORT CHANNEL ASSEMBLY TO SUPPORT THE LOW VOLTAGE ENCLOSURE ASSEMBLY, INSTALL THE LOW VOLTAGE ENCLOSURE ASSEMBLY, AND MAKE ALL FINAL CONNECTIONS PER THE RECOMMENDATIONS OF THE PUMP/MOTOR MANUFACTURER.
2. FURNISH A SECOND GROUND BAR IN PROPOSED PANELBOARD IN ADDITION TO THE EQUIPMENT GROUND BUS BAR AS REQUIRED PER THE SPECIFICATIONS.
3. FURNISH AND INSTALL CONDUIT/WIRE TO CONNECT ISOLATED GROUND TO EXISTING GROUND MAT. REFER TO DRAWING NO. E-32 FOR ADDITIONAL REQUIREMENTS.
4. FURNISH AND INSTALL PROPOSED GROUNDING CONDUIT/WIRE AND JUNCTION BOX. CONNECT PROPOSED WIRE TO EXISTING BY EXOTHERMIC WELD INSIDE JUNCTION BOX AND EXTEND CONDUIT/WIRE TO PROPOSED MCC. TERMINATE PROPOSED GROUND CABLE TO MCC GROUND BUS. EXISTING CONDUIT/WIRE CONTINUES TO/FROM EXISTING FILTER BUILDING GROUNDING GRID. REFER TO DRAWING NO. E-32 FOR ADDITIONAL REQUIREMENTS.
5. FURNISH AND INSTALL PROPOSED CONDUIT FROM EXISTING CONDUIT AT WALL PENETRATION REMAINING FROM DEMOLITION AND EXTEND TO ATS. FURNISH AND INSTALL PROPOSED WIRING IN EXISTING AND PROPOSED CONDUITS FROM SOURCE TO DESTINATION. REFER TO DRAWING NO. E-32 FOR ADDITIONAL REQUIREMENTS.
6. FURNISH WITH SOLID STATE ELECTRONIC TRIP.
7. PUMP NO. 3 WILL BE ADDED IN THE FUTURE BY OTHERS. ROUTE PROPOSED CONDUIT FOR PUMP NO. 3 IN COMMENSURATE LOCATIONS TO THAT OF THE PROPOSED NPW PUMPS AND CAP-OFF. CONDUITS WILL BE EXTENDED IN THE FUTURE BY OTHERS. REFER TO THE FLOOR PLAN DRAWINGS.

This document, and the designs incorporated herein, is an instrument of professional service that has been developed, designed and prepared by Harutunian Engineering, Inc., and is not to be used, in whole or in part, for any other project without giving written notice to Harutunian Engineering, Inc.

NO.	DR	CK	DATE	DESCRIPTION

REVISIONS

BLACK & VEATCH
Building a world of difference.
Black & Veatch Corporation
Registration No. F-653
Austin, Texas

HARUTUNIAN ENGINEERING, INC.
305 E Huntland Dr., Ste 500, Austin, TX 78752
TBPE Firm Registration No. F-2408

STATE OF TEXAS
K. A. HARUTUNIAN
59181
REGISTERED PROFESSIONAL ENGINEER
4/4/2014

Walnut Creek WWTP - Tertiary Filter Rehabilitation Project
CIP ID No. 3023.025

ELECTRICAL
FB1/FB2 480V ONE-LINE DIAGRAMS
- RENOVATION (SHEET 3 OF 4)

DESIGNED BY:	HEI
DRAWN BY:	HEI
REVIEWED BY:	HEI
APPROVED BY:	HEI
PROJECT NO.:	168622
DATE:	4/4/2014
SCALE:	AS SHOWN

REVISION:

DISCIPLINE NO.
E-26

DWG. NO.
SHEET 138 OF 273

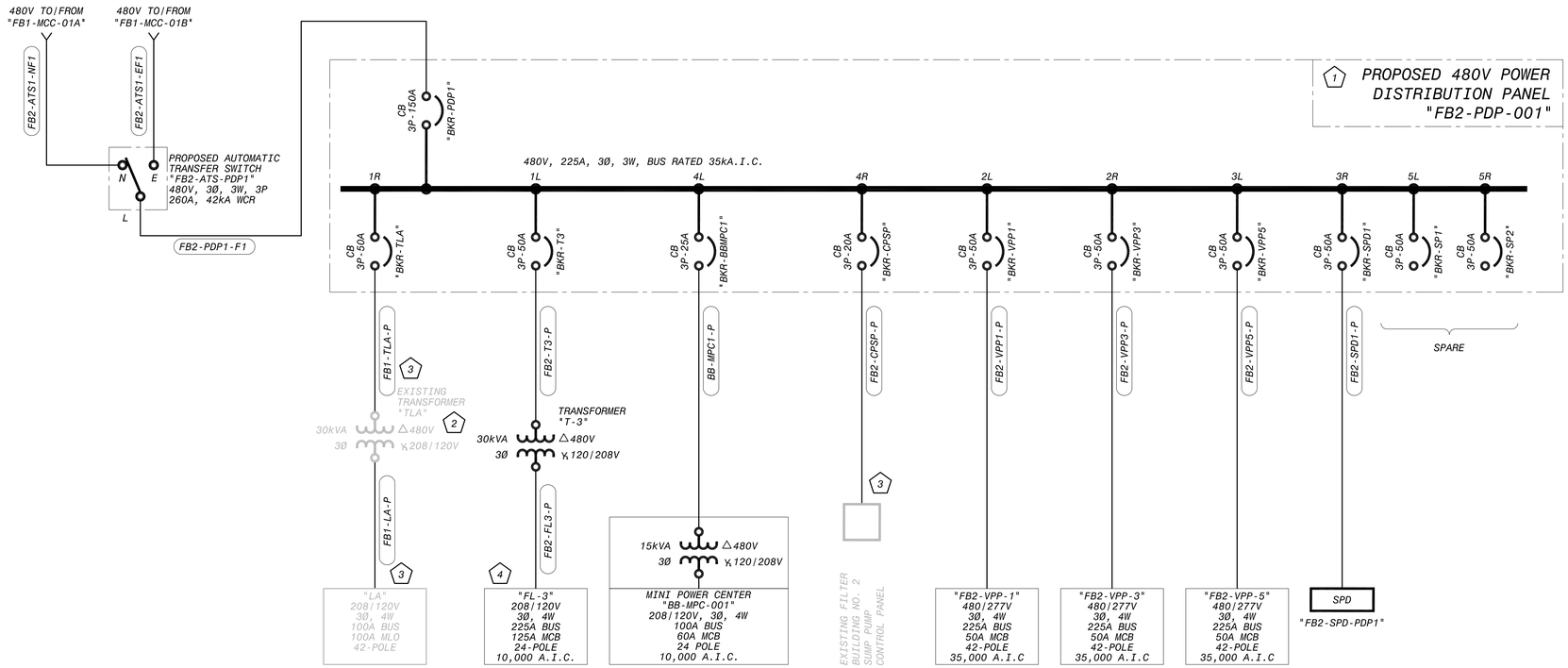

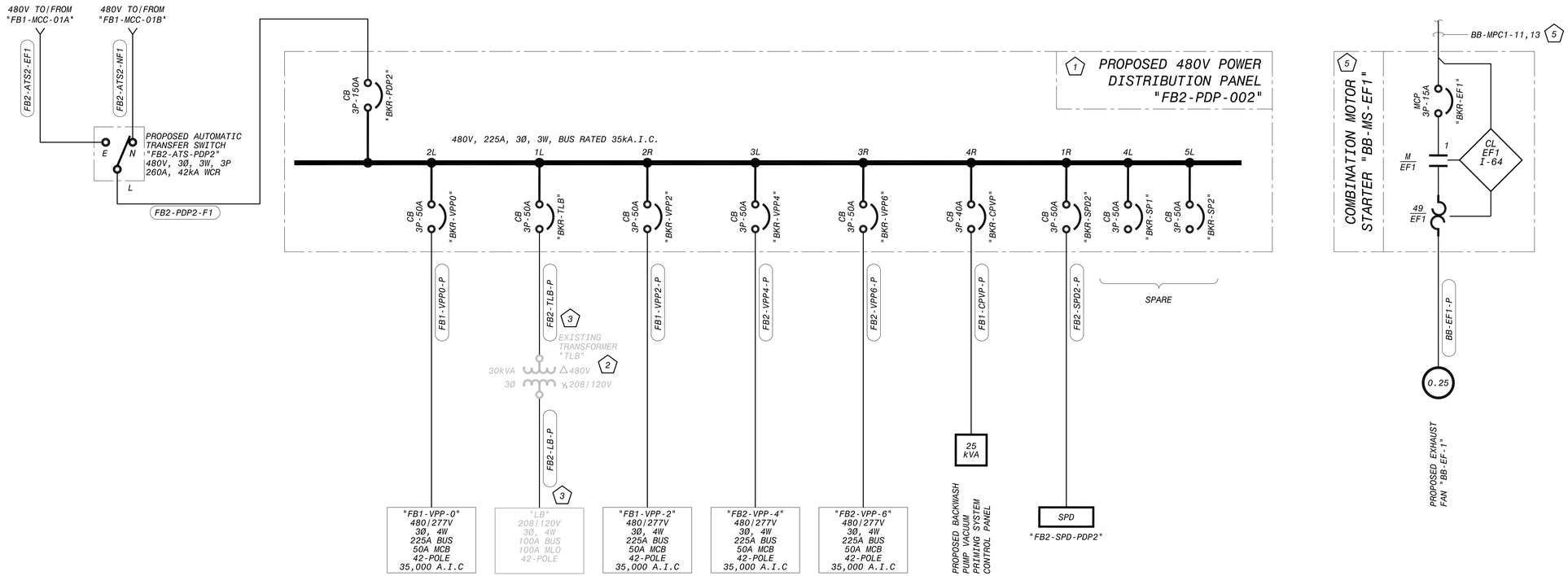

KEY NOTES

1. FURNISH AND INSTALL MECHANICAL LOCKOUT MECHANISM (PADLOCK ATTACHMENT) FOR EACH CIRCUIT BREAKER IN THIS PROPOSED PANELBOARD.
2. RELOCATE EXISTING TRANSFORMER TO AN ELEVATION ABOVE FINISHED FLOOR OF PIPE GALLERY. FURNISH AND INSTALL WALL SUPPORTS AND MOUNT TO WALL. REFER TO DRAWING NO. E-33.
3. FURNISH AND INSTALL PROPOSED CONDUIT/WIRE TO CONNECT TO EXISTING LOAD. FIELD VERIFY LOAD AND ADJUST BREAKER SIZE AND CONDUIT/WIRE AS REQUIRED AT NO ADDITIONAL COST TO OWNER.
4. REFER TO PLAN DRAWING NO. E-32 FOR ADDITIONAL INFORMATION.
5. FURNISH AND INSTALL COMBINATION MOTOR STARTER WITH MINIMUM SYMMETRICAL SHORT CIRCUIT INTERRUPTING RATING OF 10,000A AT 208V. TWO 120V CIRCUITS SERVE THE MOTOR AND CONTROL POWER REQUIREMENTS OF THE STARTER. CONTROL POWER TRANSFORMER IS NOT REQUIRED FOR THIS STARTER. REFER TO DRAWING NO. E-39.

This document, and the designs incorporated herein, is an instrument of professional service that has been developed, designed and prepared by Harutunian Engineering, Inc., and is not to be used, in whole or in part, for any other project without giving written notice to Harutunian Engineering, Inc.

NO.	DR	CK	DATE	DESCRIPTION

REVISIONS

BLACK & VEATCH Building a world of difference.
Black & Veatch Corporation
Registration No. F-653
Austin, Texas

HARUTUNIAN ENGINEERING, INC.
305 E Hunland Dr., Ste 500, Austin, TX 78752
TBPE Firm Registration No. F-2408

STATE OF TEXAS K. A. HARUTUNIAN 59181 REGISTERED PROFESSIONAL ENGINEER
4/4/2014

Austin WATER
Walnut Creek WWTP - Tertiary Filter Rehabilitation Project
CIP ID No. 3023.025

ELECTRICAL
FB1/FB2 480V ONE-LINE DIAGRAMS - RENOVATION (SHEET 4 OF 4)

DESIGNED BY:	HEI
DRAWN BY:	HEI
REVIEWED BY:	HEI
APPROVED BY:	HEI
PROJECT NO.:	168622
DATE:	4/4/2014
SCALE:	AS SHOWN

REVISION:

DISCIPLINE NO.
E-27

DWG. NO.
SHEET 139 OF 273

480V MOTOR CONTROL CENTER "FB1-MCC-01A" AND "FB1-MCC-01B" TABLE OF SPECIFIC OPERATING SCENARIOS WITH CORRESPONDING CIRCUIT BREAKER AND KEY INTERLOCK POSITIONS

SCENARIO NUMBER	CIRCUIT BREAKER POSITION					KEY INTERLOCK POSITION				
	BKR-MCC1A	BKR-GENA	TCB-MCC1	BKR-MCC1B	BKR-GENB	K1-MCC1A	K1-GENA	K1/K2-MCC1A	K2-MCC1B	K2-GENB
1	CLOSED	OPEN	OPEN	CLOSED	OPEN	UNLOCKED	LOCKED	LOCKED	UNLOCKED	LOCKED
2	CLOSED	OPEN	CLOSED	OPEN	OPEN	UNLOCKED	LOCKED	UNLOCKED	LOCKED	LOCKED
3	OPEN	OPEN	CLOSED	CLOSED	OPEN	LOCKED	LOCKED	UNLOCKED	UNLOCKED	LOCKED
4	OPEN	CLOSED	OPEN	CLOSED	OPEN	LOCKED	UNLOCKED	LOCKED	UNLOCKED	LOCKED
5	CLOSED	OPEN	OPEN	OPEN	CLOSED	UNLOCKED	LOCKED	LOCKED	LOCKED	UNLOCKED
6	OPEN	CLOSED	CLOSED	OPEN	OPEN	LOCKED	UNLOCKED	UNLOCKED	LOCKED	LOCKED
7	OPEN	OPEN	CLOSED	OPEN	CLOSED	LOCKED	LOCKED	UNLOCKED	LOCKED	UNLOCKED

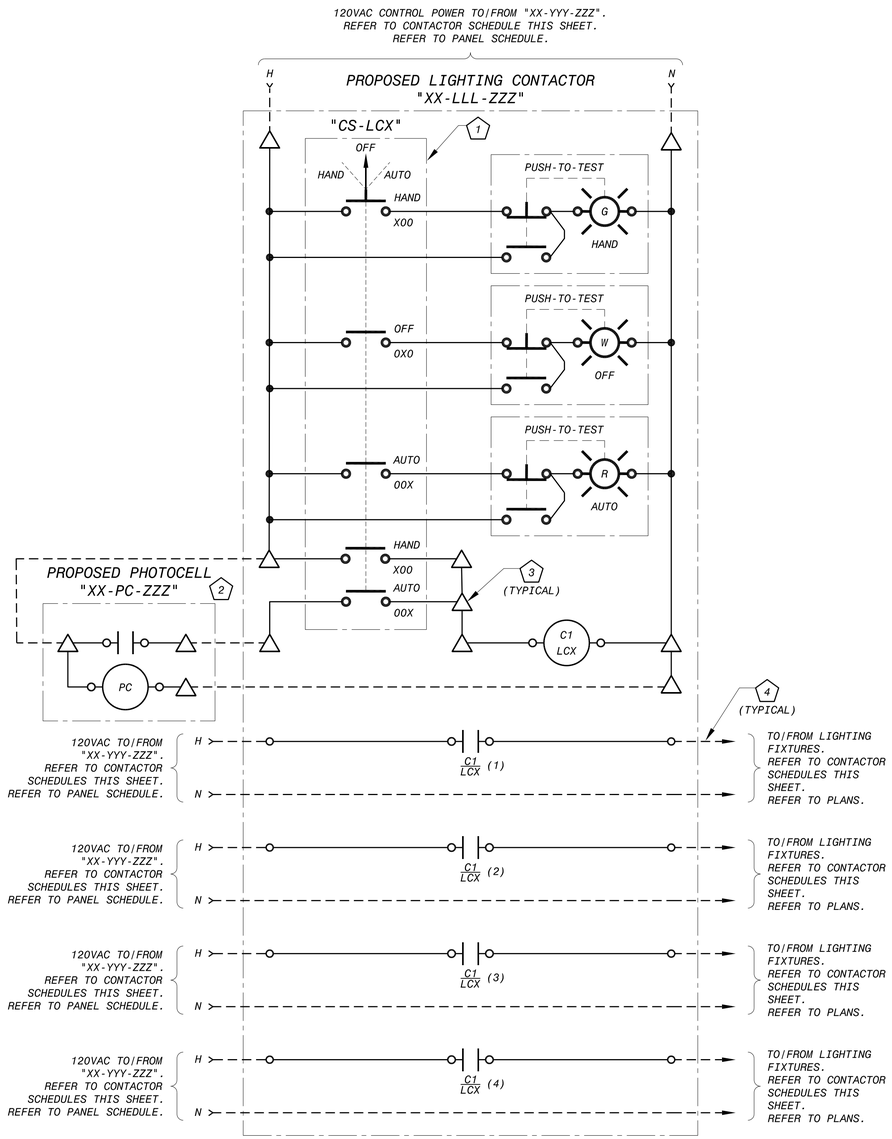

TYPICAL LIGHTING CONTACTOR FIELD INTERFACE WIRING SCHEMATIC 6

SCALE: NONE

TABLE OF SPECIFIC OPERATING SCENARIOS HEADINGS LEGEND

HEADING	INTERPRETATION
SCENARIO NUMBER	UNIQUE SCENARIO IDENTIFYING NUMBER CORRESPONDING TO THE CIRCUIT BREAKER POSITIONS SHOWN
CIRCUIT BREAKER POSITION	CIRCUIT BREAKER POSITION ASSOCIATED WITH THE OPERATING SCENARIO. "OPEN" INDICATES CIRCUIT BREAKER IS OPEN. "CLOSED" INDICATES CIRCUIT BREAKER IS CLOSED. ASSOCIATED KEY INTERLOCK MUST BE UNLOCKED WITH APPROPRIATE KEY BEFORE BREAKER CAN BE CLOSED.
KEY INTERLOCK POSITION	KEY INTERLOCK POSITION ASSOCIATED WITH THE OPERATING SCENARIO. "UNLOCKED" INDICATES KEY INTERLOCK CYLINDER IS UNLOCKED, BREAKER CAN BE CLOSED, AND KEY IS HELD IN LOCK CYLINDER. "LOCKED" INDICATES KEY INTERLOCK CYLINDER IS LOCKED, BREAKER CANNOT BE CLOSED, AND KEY MAY BE REMOVED FROM LOCK CYLINDER.

KEY NOTES

1. CONTRACTOR SHALL FURNISH AND INSTALL CONTROL STATION, "CS-LCX". CONTRACTOR SHALL FLUSH MOUNT THE ENTIRE CONTROL STATION ASSEMBLY ON THE FRONT OF THE ENCLOSURE HOUSING OF ELECTRICAL LIGHTING CONTACTOR. CONTRACTOR SHALL FURNISH AND INSTALL ALL NECESSARY MOUNTING HARDWARE TO INSURE SECURE INSTALLATION. CONTROL STATION SHALL BE FURNISHED WITH NAMEPLATE INSCRIBED WITH THE WORDS "BLOWER BUILDING EXTERIOR BUILDING AND VICINITY LIGHTING CONTROL" NAMEPLATE TO BE SECURED TO CONTROL STATION PER SPECIFICATIONS. THE "HAND/OFF/AUTO" SELECTOR SWITCH NAMEPLATE PROVIDED BY THE SELECTOR SWITCH MANUFACTURER SHALL ALSO BE DISPLAYED ON THE FACE OF THE PROPOSED CONTROL STATION.
2. PROPOSED PHOTOCELL SHALL BE LOCATED PER THE ELECTRICAL PLANS. EXTEND CONDUIT/WIRE AS NECESSARY TO/FROM LIGHTING CONTACTOR AND MAKE ALL FINAL CONNECTIONS/TERMINATIONS.
3. TERMINAL BLOCK IS FURNISHED AND INSTALLED BY LIGHTING CONTACTOR MANUFACTURER.
4. FIELD WIRING NOT REQUIRED FOR UNUSED CONTACTS/POLES.
5. ALTHOUGH NOT SHOWN ON WIRING SCHEMATIC, 208V CIRCUITS UTILIZE TWO POLES OF CONTACTOR AND DO NOT REQUIRE NEUTRAL WIRING.
6. THIS DRAWING IS TYPICAL FOR MULTIPLE EQUIPMENT. THE ACTUAL TAGS FOR EACH EQUIPMENT WILL DIFFER FROM THOSE SHOWN HERE. REFER TO LIGHTING CONTACTOR SCHEDULES ON THIS SHEET FOR APPLICABLE TAGS.

XX-LLL-ZZZ	XX-PC-ZZZ	LCX	CONTROL POWER
BB-ELC-001	BB-PC-001	LC1	"BB-MPC-001", CIRCUIT NO. 10

CONTACT NO.	208/120VAC FROM "XX-YYY-ZZZ"	CIRCUIT NO.	FIXTURE DESCRIPTION	REFER TO DRAWING NO.
1	BB-MPC-001	7	TYPE J BLOWER BUILDING EXTERIOR PERIMETER LIGHTING	E-40
2	BB-MPC-001	5	TYPE R EXTERIOR TASK LIGHTING	E-34, E-40
3			NOT USED 4	
4			NOT USED 4	

LIGHTING CONTACTOR "BB-ELC-001" SCHEDULE

XX-LLL-ZZZ	XX-PC-ZZZ	LCX	CONTROL POWER
HW2-CONT-3	HW2-PC-CONT3	CONT3	"HW2-MPC-002", CIRCUIT NO. 4

CONTACT NO.	208/120VAC FROM "XX-YYY-ZZZ"	CIRCUIT NO.	FIXTURE DESCRIPTION	REFER TO DRAWING NO.
1,2	HW2-MPC-002	1,3	HW2 AREA ROADWAY LIGHTING 5	E-22
3	HW2-MPC-002	5	OUTFALL JUNCTION BOX TASK LIGHTING	E-22
4			NOT USED 4	

LIGHTING CONTACTOR "HW2-CONT-3" SCHEDULE

GENERAL NOTES FOR KEY INTERLOCK OPERATION:

1. A MOTOR CONTROL CENTER BUS SHALL NOT BE SERVED BY TWO INDEPENDENT SOURCES SIMULTANEOUSLY DURING NORMAL OPERATION OR ANY PART OF THE SOURCE TRANSFER TRANSITION PROCESS. WHEN THE TIE CIRCUIT BREAKER IS CLOSED, ONLY ONE SOURCE OF POWER SHALL BE IN SERVICE.
2. FOR EACH CIRCUIT BREAKER AND ASSOCIATED LOCK CYLINDER AS SHOWN IN THE TABLE ON THIS DRAWING AND AS SHOWN ON THE ONE-LINE DRAWINGS:
   - A. TO CLOSE A CIRCUIT BREAKER, THE KEY MUST BE INSERTED INTO THE ASSOCIATED LOCK CYLINDER, AND THE LOCK CYLINDER MUST BE TURNED TO THE UNLOCKED POSITION. THE KEY IS NOW HELD IN THE LOCK AND CANNOT BE REMOVED. THE CIRCUIT BREAKER MAY NOW BE CLOSED (OR OPENED).
   - B. TO REMOVE A KEY, THE CIRCUIT BREAKER MUST FIRST BE OPENED. AFTER OPENING THE CIRCUIT BREAKER, THE LOCK CYLINDER MAY NOW BE RETURNED TO THE LOCKED POSITION, ALLOWING THE KEY TO BE WITHDRAWN. THE CIRCUIT BREAKER IS NOW LOCKED IN THE OPEN POSITION.
3. FOR CLARITY, THE RELATIONSHIP BETWEEN LOCK CYLINDERS, KEY INTERLOCKS, AND KEYS AS SHOWN IN THE TABLE ON THIS DRAWING AND AS SHOWN ON THE ONE-LINE DRAWINGS IS FURTHER DESCRIBED AS FOLLOWS:
   - A. EACH CIRCUIT BREAKER IS EQUIPPED WITH ONE LOCK CYLINDER.
   - B. EACH LOCK CYLINDER IS TAGGED INDICATING ITS OPERATING KEY AND ITS ASSOCIATED CIRCUIT BREAKER. FOR EXAMPLE, KEY INTERLOCK "K1-MCC1A" USES KEY "K1" AND IS LOCATED AT BREAKER "BKR-MCC1A".
   - C. CIRCUIT BREAKERS "BKR-MCC1A" AND "BKR-GENA" CAN ONLY BE CLOSED USING THE "K1" KEY. ONLY ONE "K1" KEY IS PROVIDED.
   - D. CIRCUIT BREAKERS "BKR-MCC1B" AND "BKR-GENB" CAN ONLY BE CLOSED USING THE "K2" KEY. ONLY ONE "K2" KEY IS PROVIDED.
   - E. THE LOCK CYLINDER ASSOCIATED WITH CIRCUIT BREAKER "TCB-MCC1" CAN BE UNLOCKED USING EITHER THE "K1" OR THE "K2" KEY AND IS LABELED "K1/K2-MCC1". THIS TYPE OF LOCK IS SOMETIMES REFERRED TO AS AN "APARTMENT LOCK". TIE BREAKER "TCB-MCC1" CAN THEREFORE BE CLOSED USING EITHER KEY.
4. THE ONE-LINE DRAWINGS AND THIS TABLE DEPICT THE MINIMUM QUANTITY OF KEY INTERLOCKS AND ASSOCIATED LOCK CYLINDERS THAT ARE REQUIRED, AND THE REQUIRED KEY INTERLOCK FUNCTIONALITY. ADDITIONAL LOCK CYLINDERS PROPOSED BY THE MOTOR CONTROL CENTER MANUFACTURER WILL BE CONSIDERED FOR APPROVAL. CLEARLY DEPICT/DESCRIBE THE QUANTITY OF KEY INTERLOCKS AND THE INTERLOCKS OPERATION IN THE PRODUCT SUBMITTALS AND OPERATION AND MAINTENANCE SUBMITTALS. REFER TO THE CONTRACT SPECIFICATIONS FOR ADDITIONAL INFORMATION.

LIGHTING PANEL WIRING AND TERMINAL DEVICE LEGEND:

- DEVICE WIRING TERMINAL.
- TERMINAL BLOCK LOCATED INSIDE LIGHTING PANEL, AS APPLICABLE. ANY DEVICE SHOWN WITH DEVICE WIRING TERMINALS CONNECTED DIRECTLY TO THESE SYMBOLS WITH SOLID LINES IS ALSO LOCATED INSIDE LIGHTING PANEL, AS APPLICABLE.
- WIRING BETWEEN LIGHTING PANELS OR WIRING TO A FIELD MOUNTED DEVICE.
- WIRING BETWEEN DEVICES INSIDE LIGHTING PANEL.
- C1 LCX (1) — RELAY CONTACT (NORMALLY OPEN)
- C1 LCX — RELAY
- WIRE JUMPER
- PUSH-TO-TEST G HAND — PUSH TO TEST PILOT LIGHT. COLOR AND LEGEND PLATE INSCRIPTION AS INDICATED, GREEN LENS WITH "HAND" LEGEND PLATE INSCRIPTION SHOWN. LENS COLOR DESIGNATIONS ARE AS FOLLOWS: G=GREEN, R=RED, W=WHITE.

This document, and the designs incorporated herein, is an instrument of professional service that has been developed, designed and prepared by Harutunian Engineering, Inc., and is not to be used, in whole or in part, for any other project without giving written notice to Harutunian Engineering, Inc.

NO.	DR	CK	DATE	DESCRIPTION

REVISIONS

BLACK & VEATCH Building a world of difference.
Black & Veatch Corporation
Registration No. F-2565
Austin, Texas

HARUTUNIAN ENGINEERING, INC.
305 E Hunland Dr., Ste 500, Austin, TX 78752
TBPE Firm Registration No. F-2408

STATE OF TEXAS — K. A. HARUTUNIAN — 38185 — REGISTERED PROFESSIONAL ENGINEER
4/4/2014

Austin WATER
Walnut Creek WWTP - Tertiary Filter Rehabilitation Project
CIP ID No. 3023.025

ELECTRICAL
FB1/FB2 KEY INTERLOCK SCHEME AND LIGHTING CONTACTOR SCHEMATICS

DESIGNED BY:	HEI
DRAWN BY:	HEI
REVIEWED BY:	HEI
APPROVED BY:	HEI
PROJECT NO.:	168622
DATE:	4/4/2014
SCALE:	AS SHOWN

REVISION:

DISCIPLINE NO.
E-28

DWG. NO.
SHEET 140 OF 273

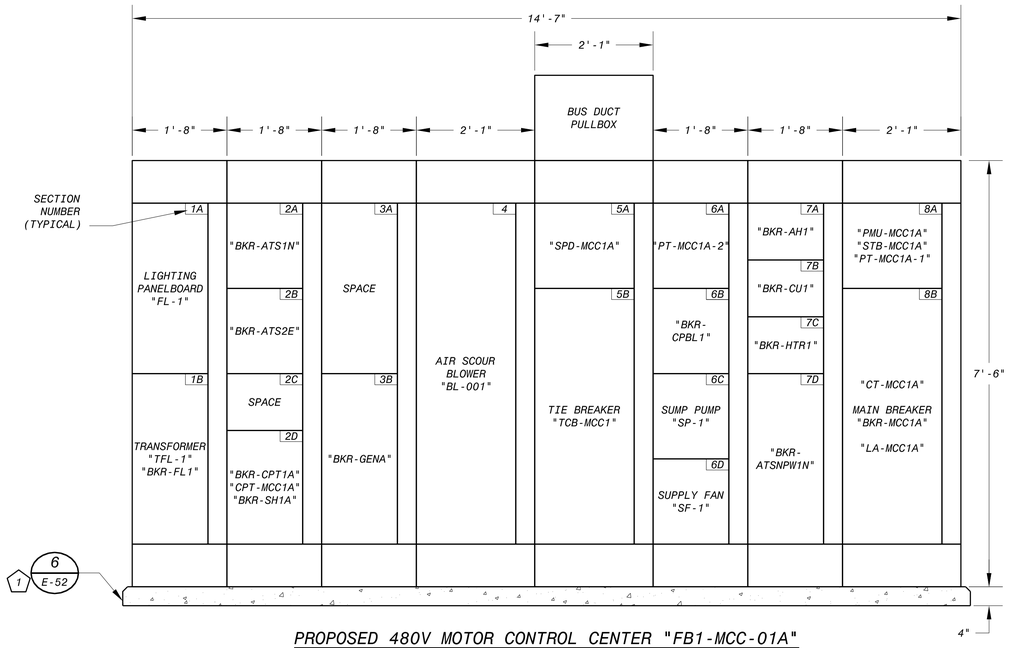

PROPOSED 480V MOTOR CONTROL CENTER "FB1-MCC-01A"
FRONT ELEVATION
NO SCALE

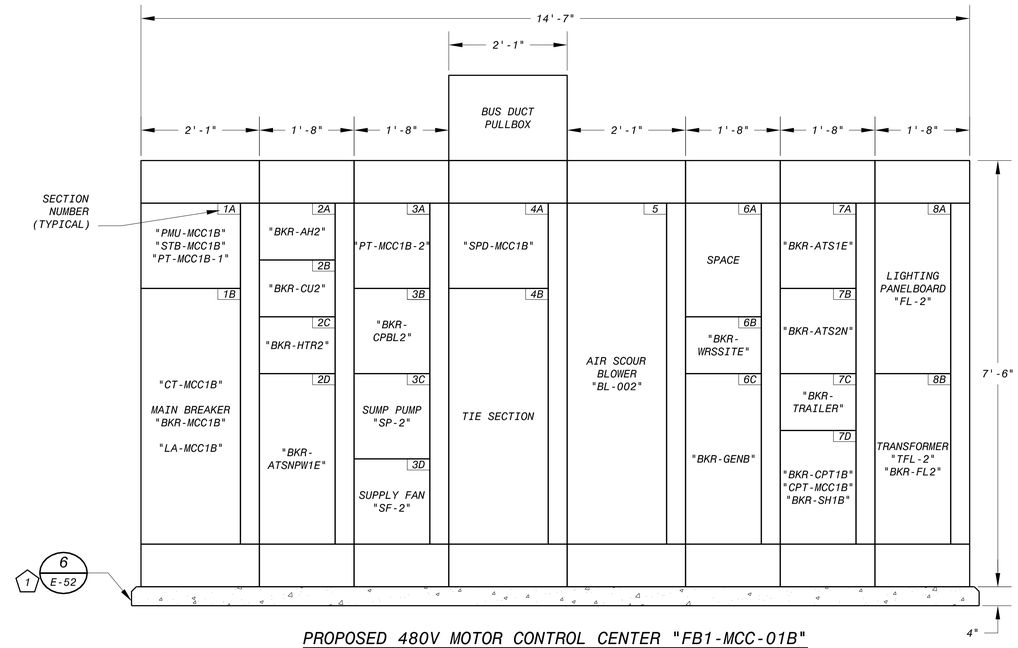

PROPOSED 480V MOTOR CONTROL CENTER "FB1-MCC-01B"
FRONT ELEVATION
NO SCALE

KEY NOTES

1. FURNISH AND INSTALL REINFORCED CONCRETE EQUIPMENT PAD PER THE DETAILS ON DRAWING NO. E-52.

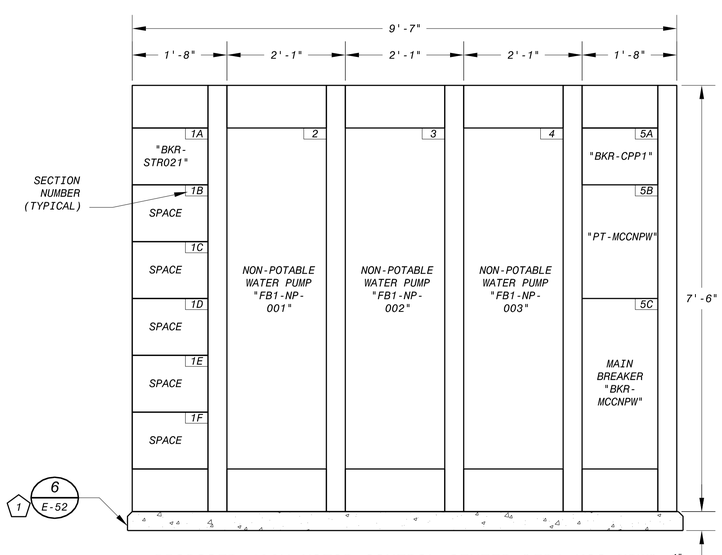

PROPOSED 480V MOTOR CONTROL CENTER "FB1-MCC-NPW"
FRONT ELEVATION
NO SCALE

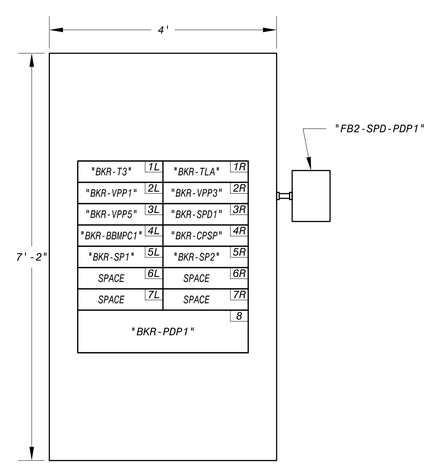

PROPOSED 480V POWER DISTRIBUTION PANELBOARD
"FB2-PDP-001" FRONT ELEVATION
NO SCALE

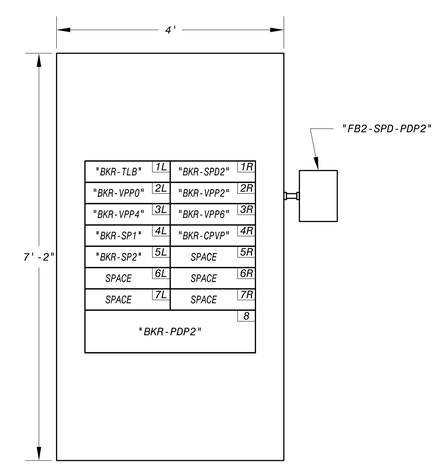

PROPOSED 480V POWER DISTRIBUTION PANELBOARD
"FB2-PDP-002" FRONT ELEVATION
NO SCALE

This document, and the designs incorporated herein, is an instrument of professional service that has been developed, designed and prepared by Harutunian Engineering, Inc., and is not to be used, in whole or in part, for any other project without giving written notice to Harutunian Engineering, Inc.

NO.	DR	CK	DATE	DESCRIPTION

REVISIONS

BLACK & VEATCH
Building a world of difference.
Black & Veatch Corporation
Registration No. F-653
Austin, Texas

HARUTUNIAN ENGINEERING, INC.
305 E Hunland Dr., Ste 500; Austin, TX 78752
TBPE Firm Registration No. F-2408

STATE OF TEXAS
K. A. HARUTUNIAN
59181
REGISTERED PROFESSIONAL ENGINEER
4/4/2014

Walnut Creek WWTP - Tertiary Filter Rehabilitation Project
CIP ID No. 3023.025

ELECTRICAL
FB1/FB2 DISTRIBUTION EQUIPMENT
FRONT ELEVATIONS - PROPOSED

DESIGNED BY:	HEI
DRAWN BY:	HEI
REVIEWED BY:	HEI
APPROVED BY:	HEI
PROJECT NO.:	168622
DATE:	4/4/2014
SCALE:	AS SHOWN

REVISION:

DISCIPLINE NO.
E-29

DWG. NO.
SHEET 141 OF 273

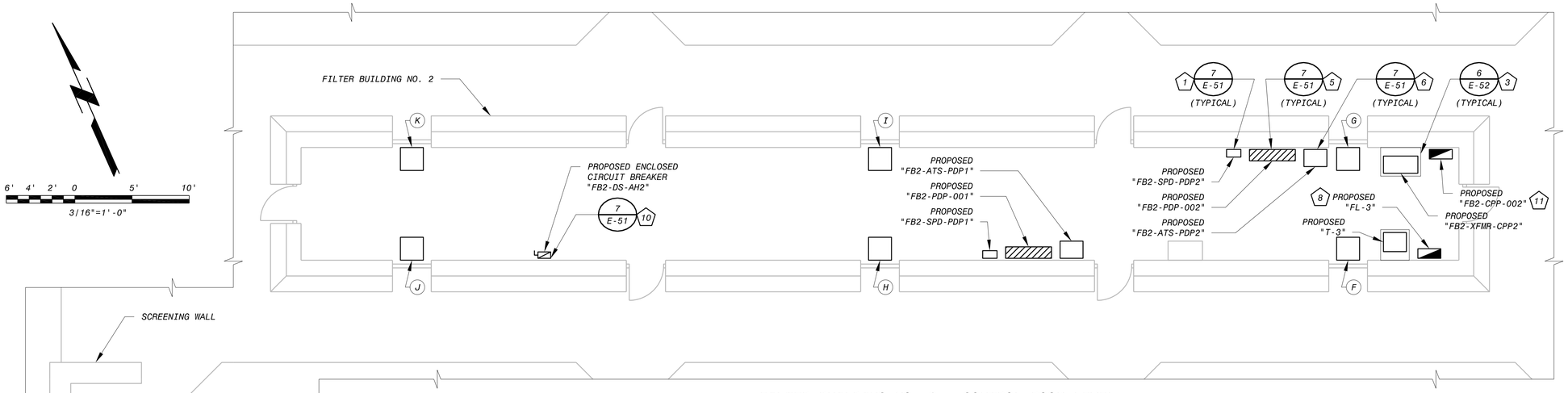

FILTER BUILDING NO. 2 - CONTROL ROOM LEVEL EQUIPMENT LOCATION PLAN - RENOVATION

8 E-63 2 E-65

SCALE: 3/16" = 1'-0"

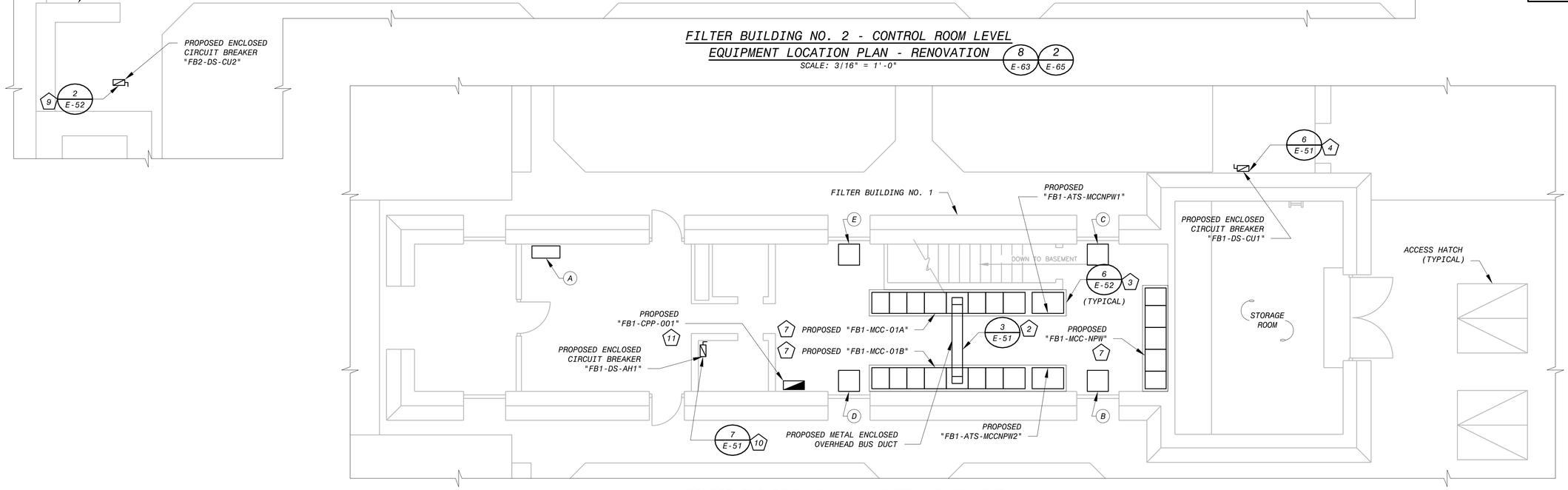

FILTER BUILDING NO. 1 - CONTROL ROOM LEVEL EQUIPMENT LOCATION PLAN - RENOVATION

1 E-64 3 E-66 4 E-67

SCALE: 3/16" = 1'-0"

PROCESS/MECHANICAL EQUIPMENT IDENTIFICATION TABLE

MARK	DESCRIPTION/TAG
A	FILTER MASTER CONTROL PANEL
B	FILTER NO. 1 LOCAL CONTROL PANEL
C	FILTER NO. 2 LOCAL CONTROL PANEL
D	FILTER NO. 3 LOCAL CONTROL PANEL
E	FILTER NO. 4 LOCAL CONTROL PANEL
F	FILTER NO. 5 LOCAL CONTROL PANEL
G	FILTER NO. 6 LOCAL CONTROL PANEL
H	FILTER NO. 7 LOCAL CONTROL PANEL
I	FILTER NO. 8 LOCAL CONTROL PANEL
J	FILTER NO. 9 LOCAL CONTROL PANEL
K	FILTER NO. 10 LOCAL CONTROL PANEL

NOTE:

CROSS-REFERENCE MARKS SHOWN ON THE PLAN DRAWING WITH THE TAGS/DESCRIPTIONS SHOWN IN THE TABLE ABOVE. REFER TO MECHANICAL AND I&C DRAWINGS.

KEY NOTES

1. SURFACE MOUNT TO WALL +48" ABOVE FINISHED FLOOR/WALKWAY. TYPICAL FOR ALL SURGE PROTECTIVE DEVICES.
2. FURNISH AND INSTALL SUPPORTS FOR METAL ENCLOSED OVERHEAD BUS DUCT PER BUS DUCT MANUFACTURER'S RECOMMENDATIONS AT NO ADDITIONAL COST TO THE OWNER. AT A MINIMUM, FURNISH AND INSTALL SUPPORTS EVERY FOUR FEET AND AT EVERY CHANGE IN DIRECTION. SECURE SUPPORTS TO STRUCTURAL CEILING. BUS DUCT ROUTES AT AN ELEVATION JUST BELOW DROP CEILING. SHOULD FINAL LOCATION OF BUS DUCT BE LOCATED WITHIN 6" OF ANY LIGHT FIXTURE, FIXTURE SHALL BE RELOCATED TO AN ADJACENT CELL TO PREVENT BUS DUCT FROM CASTING SHADOWS.
3. FURNISH AND INSTALL REINFORCED HOUSEKEEPING/EQUIPMENT PAD FOR PROPOSED EQUIPMENT.
4. SURFACE MOUNT ENCLOSED CIRCUIT BREAKER TO ANGLED EXTERIOR WALL WITH CENTER OF OPERATING HANDLE +48" ABOVE FINISHED WALKWAY. ENCLOSURE AND CONDUIT/WIRE SHALL BE SURFACE MOUNTED PARALLEL TO WALL SIMILAR TO EXISTING ADJACENT PULLBOX AT CORNER OF BUILDING. COORDINATE EXACT LOCATION OF ENCLOSED CIRCUIT BREAKER WITH HVAC AND CONDENSING UNIT MANUFACTURER. LOCATE ENCLOSED CIRCUIT BREAKER AND ASSOCIATED CONDUIT/WIRE TO OPTIMIZE CLEARANCES AND MAINTENANCE ACCESS TO UNIT.

KEY NOTES

5. SURFACE MOUNT PROPOSED PANELBOARD TO WALL AT AN ELEVATION SUCH THAT TOPMOST BREAKER DOES NOT EXCEED 6'-0" ABOVE FINISHED FLOOR TO CENTER OF OPERATING HANDLE. TYPICAL FOR ALL PANELBOARDS.
6. SURFACE MOUNT PROPOSED AUTOMATIC TRANSFER SWITCH AT AN ELEVATION SUCH THAT OPERATING HANDLE, KEYPAD, AND DISPLAY DO NOT EXCEED 6'-0" ABOVE FINISHED FLOOR. TYPICAL FOR AUTOMATIC TRANSFER SWITCHES IN FILTER BUILDING NO. 2.
7. FIELD VERIFY LOCATIONS OF STRUCTURAL BEAMS BELOW FLOOR SLAB, LOCATIONS OF EXISTING CONDUIT BLOCKOUTS THROUGH SLAB AS APPLICABLE, LOCATIONS OF PROPOSED AND EXISTING CONDUIT PENETRATIONS THROUGH FLOOR SLAB INTO PROPOSED MOTOR CONTROL CENTER, AND LOCATIONS OF EXISTING CONDUITS TO BE RECONNECTED TO TOP OF PROPOSED MOTOR CONTROL CENTER AS APPLICABLE. ADJUST LOCATION OF PROPOSED MOTOR CONTROL CENTER AND MAKE ALL OTHER ADJUSTMENTS TO INSTALLATION AS REQUIRED AT NO ADDITIONAL COST TO THE OWNER.
8. FIELD VERIFY LOCATIONS OF EXISTING CONDUITS/WIRE THAT PREVIOUSLY TERMINATED IN MOTOR CONTROL CENTER "FCC-3". ADJUST POSITIONING OF PROPOSED PANELBOARD AND MAKE ANY OTHER ADJUSTMENTS TO INSTALLATION AS REQUIRED TO FACILITATE EXTENSION AND RECONNECTION OF CONDUITS/WIRE TO PROPOSED PANELBOARD AT NO ADDITIONAL COST TO THE OWNER.

KEY NOTES

9. FURNISH AND INSTALL ENCLOSURE SUPPORT RACK. MOUNT PROPOSED ENCLOSED CIRCUIT BREAKER TO SUPPORT RACK WITH CENTER OF OPERATING HANDLE +48" ABOVE FINISHED WALKWAY. COORDINATE EXACT LOCATION OF ENCLOSED CIRCUIT BREAKER WITH HVAC AND CONDENSING UNIT MANUFACTURER. LOCATE ENCLOSED CIRCUIT BREAKER AND ASSOCIATED CONDUIT/WIRE TO OPTIMIZE CLEARANCES AND MAINTENANCE ACCESS TO UNIT.
10. SURFACE MOUNT PROPOSED ENCLOSED CIRCUIT BREAKER TO WALL WITH CENTER OF OPERATING HANDLE +48" ABOVE FINISHED FLOOR. COORDINATE EXACT LOCATION WITH HVAC.
11. FURNISH AND INSTALL PULLBOX/WIRE GUTTER BELOW PANELBOARD TO FACILITATE CONDUIT/WIRE TERMINATIONS. SURFACE MOUNT TO WALL.

This document, and the designs incorporated herein, is an instrument of professional service that has been developed, designed and prepared by Harutunian Engineering, Inc., and is not to be used, in whole or in part, for any other project without giving written notice to Harutunian Engineering, Inc.

NO.	DR	CK	DATE	DESCRIPTION

REVISIONS

BLACK & VEATCH
Building a world of difference.
Black & Veatch Corporation
Registration No. F-653
Austin, Texas

HARUTUNIAN ENGINEERING, INC.
305 E Huntland Dr., Ste 500; Austin, TX 78752
TBPE Firm Registration No. F-2408

STATE OF TEXAS
K. A. HARUTUNIAN
39181
REGISTERED PROFESSIONAL ENGINEER
4/4/2014

Austin WATER
Walnut Creek WWTP - Tertiary Filter Rehabilitation Project
CIP ID No. 3023.025

ELECTRICAL
FB1/FB2 EQUIPMENT LOCATION PLAN
CONTROL ROOM LEVEL - RENOVATION

DESIGNED BY:	HEI
DRAWN BY:	HEI
REVIEWED BY:	HEI
APPROVED BY:	HEI
PROJECT NO.:	168622
DATE:	4/4/2014
SCALE:	AS SHOWN

REVISION:

DISCIPLINE NO.
E-30

DWG. NO.
SHEET 142 OF 273

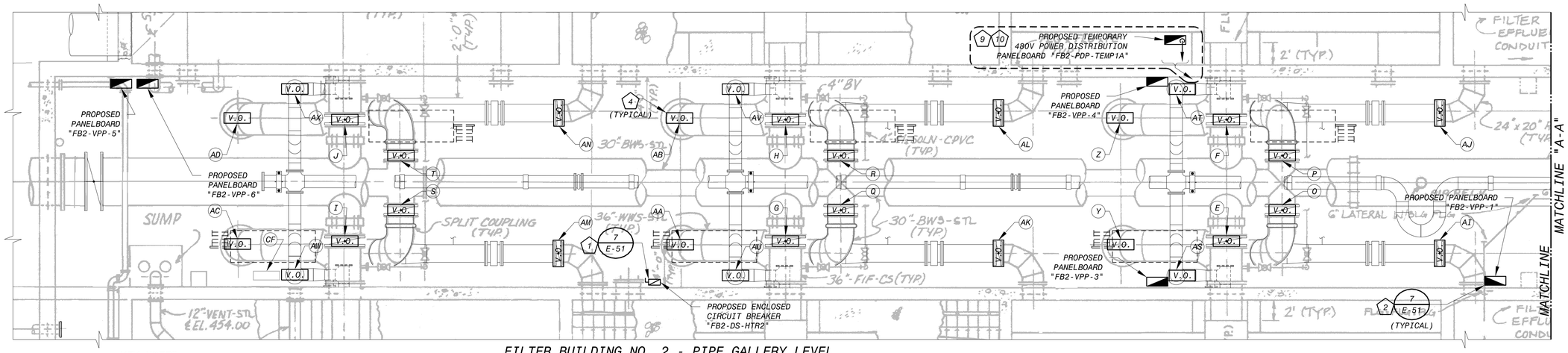

FILTER BUILDING NO. 2 - PIPE GALLERY LEVEL EQUIPMENT LOCATION PLAN - RENOVATION

SCALE: 3/16" = 1'-0"

3 / E-63

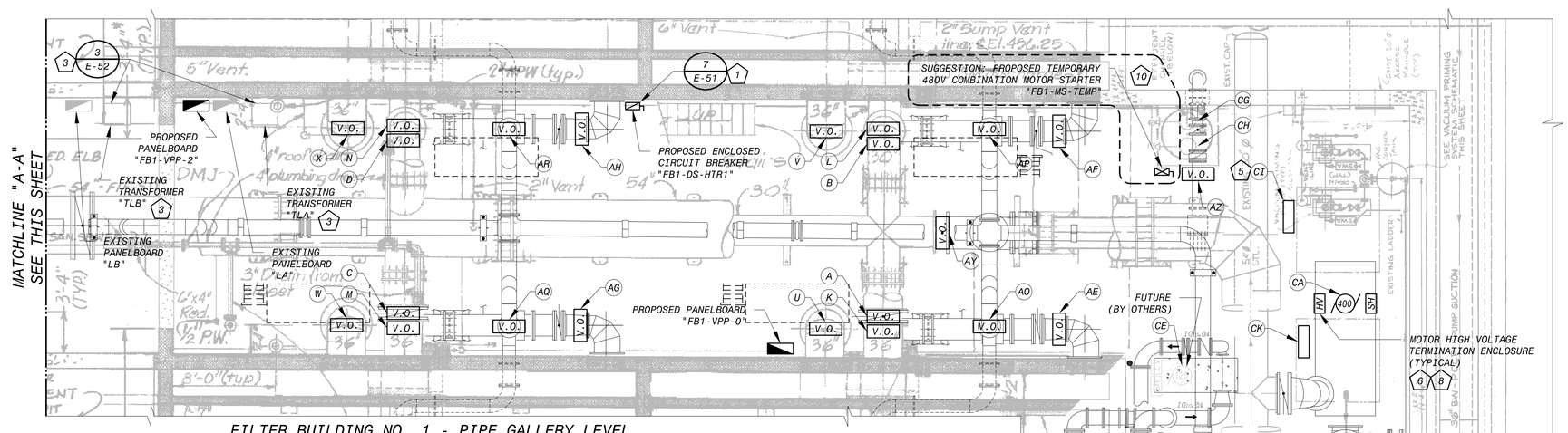

FILTER BUILDING NO. 1 - PIPE GALLERY LEVEL EQUIPMENT LOCATION PLAN - RENOVATION

SCALE: 3/16" = 1'-0"

2 / E-64 4 / E-66

KEY NOTES

1. SURFACE MOUNT PROPOSED ENCLOSED CIRCUIT BREAKER TO WALL WITH CENTER OF OPERATING HANDLE +48" ABOVE FINISHED FLOOR. COORDINATE EXACT LOCATION WITH HVAC.
2. SURFACE MOUNT PROPOSED PANELBOARD TO WALL AT AN ELEVATION SUCH THAT TOPMOST BREAKER DOES NOT EXCEED 6'-0" ABOVE FINISHED FLOOR TO CENTER OF OPERATING HANDLE. TYPICAL FOR ALL PROPOSED PANELBOARDS IN PIPE GALLERY LEVEL UNLESS NOTED OTHERWISE.
3. EXISTING TRANSFORMER RELOCATED ABOVE FLOOR. MOUNT TO WALL PER DETAIL.
4. SOME VALVES ARE NOT VISIBLE IN PLAN VIEW BUT HAVE BEEN SHOWN HERE FOR CLARITY. REFER TO MECHANICAL DRAWINGS FOR EXACT LOCATION. TYPICAL FOR MULTIPLE VALVES IN PIPE GALLERY LEVEL.
5. THE PROPOSED CONTROL PANEL IS FURNISHED BY THE EQUIPMENT MANUFACTURER. SIZE, FURNISH, AND INSTALL ALL CONDUIT/WIRE AND ALL NECESSARY RELATED HARDWARE TO INTERCONNECT ALL EQUIPMENT PACKAGED SYSTEM SUB-COMPONENTS WITH THE PROPOSED CONTROL PANEL, FURNISH AND INSTALL SUITABLE SUPPORT CHANNELS/ CONCRETE EQUIPMENT PAD AS REQUIRED TO SUPPORT THE CONTROL PANEL, INSTALL THE CONTROL PANEL, AND MAKE ALL FINAL ELECTRICAL POWER CONNECTIONS PER THE RECOMMENDATIONS AND WIRING DIAGRAMS PROVIDED BY THE EQUIPMENT MANUFACTURER. ALSO ADHERE TO THE REQUIREMENTS OF THE NATIONAL ELECTRICAL CODE (N.E.C.) AND THE SPECIFICATIONS. SHOULD ADDITIONAL ELECTRICAL POWER FIELD INTERCONNECT WIRING BE REQUIRED TO FACILITATE THE FUNCTIONAL OPERATION OF THE PACKAGED CONTROL SYSTEM, THE CONTRACTOR SHALL SIZE, FURNISH, AND INSTALL THE ADDITIONAL CONDUIT/ WIRE, FIELD ROUTE THE PROPOSED CONDUIT/WIRE PER THE SPECIFICATIONS, ADD ALL NECESSARY TERMINAL BLOCKS, ETC., COMPLETE WITH ALL NECESSARY WIRING TO FACILITATE A COMPLETE AND FUNCTIONAL INSTALLATION, AND MAKE ALL FINAL CONNECTIONS PER THE MANUFACTURER'S RECOMMENDATIONS, THE MANUFACTURER'S WIRING DIAGRAMS, AND PERFORM ALL ASPECTS OF THE WORK TO THE SATISFACTION OF THE OWNER AT NO ADDITIONAL COST TO THE OWNER.
6. LOCATION SHOWN IS APPROXIMATE.
7. REFER TO I&C DRAWINGS FOR CONTROL PANEL LOCATION.
8. MOTOR TERMINATION ENCLOSURE FURNISHED BY THE PUMP MOTOR MANUFACTURER. REFER TO ONE LINE DRAWINGS FOR ADDITIONAL REQUIREMENTS.
9. SUGGESTION: FURNISH AND INSTALL TEMPORARY 480V POWER DISTRIBUTION PANELBOARD TO SERVE VARIOUS LOADS DURING CONSTRUCTION. SURFACE MOUNT TO WALL ADJACENT TO PROPOSED PANELBOARD "FB2-VPP-4". FURNISH AND INSTALL TEMPORARY CONDUIT/WIRE TO/FROM TEMPORARY ENCLOSED CIRCUIT BREAKER LOCATED OUTSIDE ADJACENT TO EXISTING SERVICE TRANSFORMER "FDT-1". REFER TO SUGGESTED CONSTRUCTION SEQUENCE/STAGING DRAWINGS AND TO RENOVATION SITE PLAN ON DRAWING NO. E-20 FOR ADDITIONAL INFORMATION.
10. TEMPORARY EQUIPMENT AND CONDUIT/WIRE ARE SHOWN ON THIS DRAWING BUT ARE NOT PART OF PERMANENT WORK. DISCONNECT AND REMOVE TEMPORARY EQUIPMENT AND ALL ASSOCIATED CONDUIT/WIRE AT COMPLETION OF CONSTRUCTION ACTIVITIES.

6' 4' 2' 0 5' 10'

3/16"=1'-0"

PROCESS/MECHANICAL VALVE IDENTIFICATION TABLE

MARK	TAG	MARK	TAG	MARK	TAG	MARK	TAG
A	"FB1-BFV-029"	O	"FB2-BFV-049"	AC	"FB2-BFV-082"	AQ	"FB1-BFV-049"
B	"FB1-BFV-031"	P	"FB2-BFV-050"	AD	"FB1-BFV-083"	AR	"FB1-BFV-050"
C	"FB1-BFV-039"	Q	"FB2-BFV-061"	AE	"FB1-BFV-024"	AS	"FB2-BFV-053"
D	"FB1-BFV-041"	R	"FB2-BFV-062"	AF	"FB1-BFV-025"	AT	"FB2-BFV-054"
E	"FB2-BFV-051"	S	"FB2-BFV-073"	AG	"FB1-BFV-035"	AU	"FB2-BFV-065"
F	"FB2-BFV-052"	T	"FB2-BFV-074"	AH	"FB1-BFV-036"	AV	"FB2-BFV-066"
G	"FB2-BFV-063"	U	"FB1-BFV-033"	AI	"FB2-BFV-047"	AW	"FB2-BFV-077"
H	"FB2-BFV-064"	V	"FB1-BFV-034"	AJ	"FB2-BFV-048"	AX	"FB2-BFV-078"
I	"FB2-BFV-075"	W	"FB1-BFV-043"	AK	"FB2-BFV-059"	AY	"FB1-BFV-026"
J	"FB2-BFV-076"	X	"FB1-BFV-044"	AL	"FB2-BFV-060"	AZ	"FB1-BFV-110"
K	"FB1-BFV-030"	Y	"FB2-BFV-057"	AM	"FB2-BFV-071"		
L	"FB1-BFV-032"	Z	"FB2-BFV-058"	AN	"FB2-BFV-072"		
M	"FB1-BFV-040"	AA	"FB2-BFV-069"	AO	"FB1-BFV-047"		
N	"FB1-BFV-042"	AB	"FB2-BFV-070"	AP	"FB1-BFV-048"		

NOTE:

CROSS-REFERENCE MARKS SHOWN ON THE PLAN DRAWING WITH THE TAGS/DESCRIPTIONS SHOWN IN THE TABLE ABOVE. REFER TO MECHANICAL AND I&C DRAWINGS.

PROCESS/MECHANICAL EQUIPMENT IDENTIFICATION TABLE

MARK	DESCRIPTION/TAG
CA	BACKWASH PUMP NO. 1 "FB1-BWP-001"
CB	BACKWASH PUMP NO. 2 "FB1-BWP-002"
CC	NON-POTABLE WATER PUMP NO. 1 "FB1-NP-001"
CD	NON-POTABLE WATER PUMP NO. 2 "FB1-NP-002"
CE	FUTURE NON-POTABLE WATER PUMP NO. 3 "FB1-NP-003"
CF	EXISTING SUMP PUMP CONTROL PANEL
CG	EXISTING SUMP PUMP NO. 1
CH	EXISTING SUMP PUMP NO. 2
CI	PROPOSED VACUUM PRIMING SYSTEM CONTROL PANEL (5)
CJ	STRAINER CONTROL PANEL "FB1-STR-001"
CK	PROPOSED BACKWASH PUMP NO. 1 CONTROL PANEL
CL	PROPOSED BACKWASH PUMP NO. 2 CONTROL PANEL

NOTE:

CROSS-REFERENCE MARKS SHOWN ON THE PLAN DRAWING WITH THE TAGS/DESCRIPTIONS SHOWN IN THE TABLE ABOVE. REFER TO MECHANICAL AND I&C DRAWINGS.

This document, and the designs incorporated herein, is an instrument of professional service that has been developed, designed and prepared by Harutunian Engineering, Inc., and is not to be used, in whole or in part, for any other project without giving written notice to Harutunian Engineering, Inc.

NO.	DR	CK	DATE	DESCRIPTION

REVISIONS

BLACK & VEATCH
Building a world of difference.
Black & Veatch Corporation
Registration No. F-653
Austin, Texas

HARUTUNIAN ENGINEERING, INC.
305 E Hunland Dr. Ste 500; Austin, TX 78752
TBPE Firm Registration No. F-2408

STATE OF TEXAS
K. A. HARUTUNIAN
59861
REGISTERED PROFESSIONAL ENGINEER
4/4/2014

Austin WATER

Walnut Creek WWTP - Tertiary Filter Rehabilitation Project

CIP ID No. 3023.025

ELECTRICAL
FB1/FB2 EQUIPMENT LOCATION PLAN
PIPE GALLERY LEVEL - RENOVATION

DESIGNED BY:	HEI
DRAWN BY:	HEI
REVIEWED BY:	HEI
APPROVED BY:	HEI
PROJECT NO.:	168622
DATE:	4/4/2014
SCALE:	AS SHOWN

REVISION:

DISCIPLINE NO. E-31

DWG. NO.

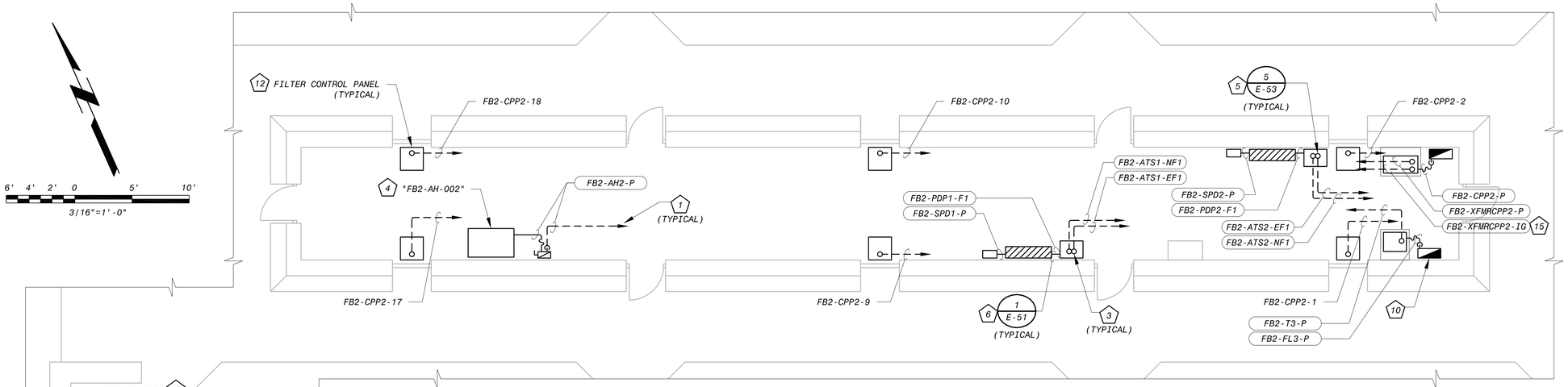

FILTER BUILDING NO. 2 - CONTROL ROOM LEVEL ELECTRICAL POWER PLAN - RENOVATION

(8 E-63) (2 E-65)

SCALE: 3/16" = 1'-0"

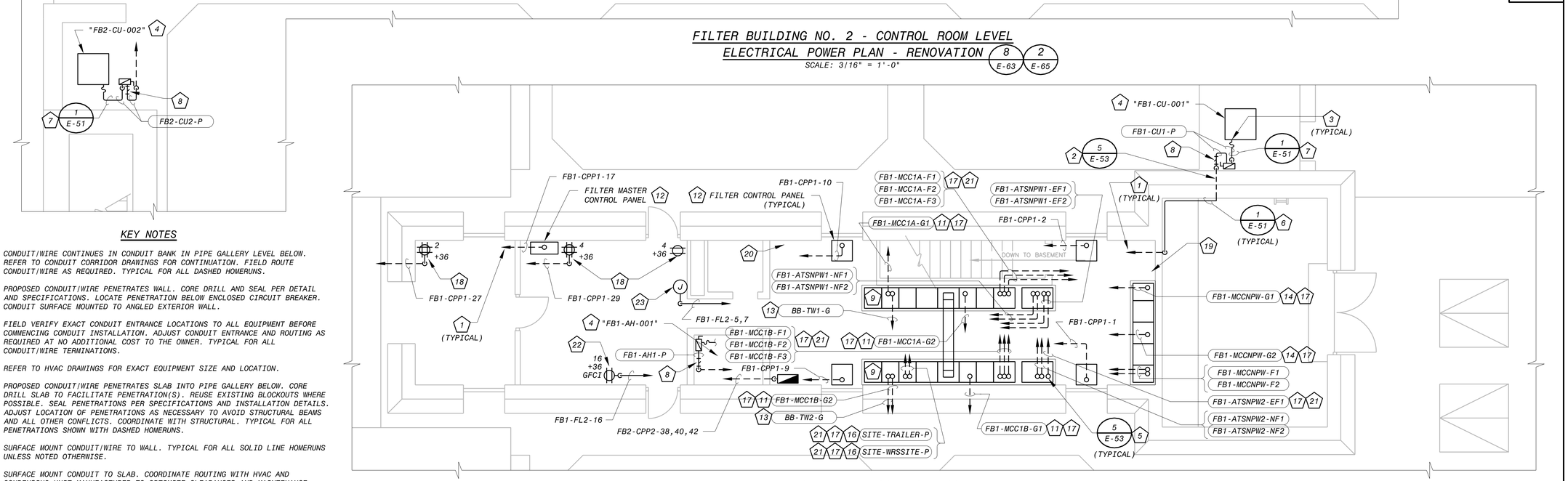

FILTER BUILDING NO. 1 - CONTROL ROOM LEVEL ELECTRICAL POWER PLAN - RENOVATION

(1 E-64) (3 E-66) (4 E-67)

SCALE: 3/16" = 1'-0"

KEY NOTES

1. CONDUIT/WIRE CONTINUES IN CONDUIT BANK IN PIPE GALLERY LEVEL BELOW. REFER TO CONDUIT CORRIDOR DRAWINGS FOR CONTINUATION. FIELD ROUTE CONDUIT/WIRE AS REQUIRED. TYPICAL FOR ALL DASHED HOMERUNS.
2. PROPOSED CONDUIT/WIRE PENETRATES WALL. CORE DRILL AND SEAL PER DETAIL AND SPECIFICATIONS. LOCATE PENETRATION BELOW ENCLOSED CIRCUIT BREAKER. CONDUIT SURFACE MOUNTED TO ANGLED EXTERIOR WALL.
3. FIELD VERIFY EXACT CONDUIT ENTRANCE LOCATIONS TO ALL EQUIPMENT BEFORE COMMENCING CONDUIT INSTALLATION. ADJUST CONDUIT ENTRANCE AND ROUTING AS REQUIRED AT NO ADDITIONAL COST TO THE OWNER. TYPICAL FOR ALL CONDUIT/WIRE TERMINATIONS.
4. REFER TO HVAC DRAWINGS FOR EXACT EQUIPMENT SIZE AND LOCATION.
5. PROPOSED CONDUIT/WIRE PENETRATES SLAB INTO PIPE GALLERY BELOW. CORE DRILL SLAB TO FACILITATE PENETRATION(S). REUSE EXISTING BLOCKOUTS WHERE POSSIBLE. SEAL PENETRATIONS PER SPECIFICATIONS AND INSTALLATION DETAILS. ADJUST LOCATION OF PENETRATIONS AS NECESSARY TO AVOID STRUCTURAL BEAMS AND ALL OTHER CONFLICTS. COORDINATE WITH STRUCTURAL. TYPICAL FOR ALL PENETRATIONS SHOWN WITH DASHED HOMERUNS.
6. SURFACE MOUNT CONDUIT/WIRE TO WALL. TYPICAL FOR ALL SOLID LINE HOMERUNS UNLESS NOTED OTHERWISE.
7. SURFACE MOUNT CONDUIT TO SLAB. COORDINATE ROUTING WITH HVAC AND CONDENSING UNIT MANUFACTURER TO OPTIMIZE CLEARANCES AND MAINTENANCE ACCESS TO UNIT.
8. FURNISH AND INSTALL SEALING FITTING. FITTING SHOWN HORIZONTALLY IN PLAN VIEW FOR CLARITY BUT SHALL BE INSTALLED IN VERTICAL SECTION OF CONDUIT BEFORE ENTRY INTO BUILDING.
9. EXISTING CONDUITS/WIRE THAT PREVIOUSLY TERMINATED IN PANELBOARD IN DEMOLISHED MOTOR CONTROL CENTER ARE LOCATED IN THIS VICINITY. EXTEND AND RECONNECT EXISTING BRANCH CIRCUIT CONDUITS/WIRE (NOT SHOWN) TO PROPOSED MCC. FURNISH AND INSTALL JUNCTION BOXES AND EXTEND WIRING AS REQUIRED, AND REMAKE CONNECTIONS OF EXISTING WIRING TO PROPOSED PANELBOARD IN MCC AT NO ADDITIONAL COST TO THE OWNER. REFER TO ONE LINE DRAWINGS AND PANELBOARD SCHEDULES.
10. EXISTING CONDUITS/WIRE THAT PREVIOUSLY TERMINATED IN PANELBOARD IN DEMOLISHED MOTOR CONTROL CENTER ARE LOCATED IN THIS VICINITY. EXTEND AND RECONNECT EXISTING BRANCH CIRCUIT CONDUITS/WIRE (NOT SHOWN) TO PROPOSED PANELBOARD. FURNISH AND INSTALL JUNCTION BOXES AND EXTEND WIRING AS REQUIRED, AND REMAKE CONNECTIONS OF EXISTING WIRING TO PROPOSED PANELBOARD AT NO ADDITIONAL COST TO THE OWNER. REFER TO ONE LINE DRAWINGS AND PANELBOARD SCHEDULE.
11. GROUND CONDUIT/WIRE CONTINUES TO PROPOSED JUNCTION BOX. FURNISH AND INSTALL JUNCTION BOX AT END OF EXISTING CONDUIT REMAINING FROM DEMOLITION AND EXTEND PROPOSED CONDUIT TO MCC. FURNISH AND INSTALL GROUNDING CONDUCTOR OF LIKE KIND IN PROPOSED CONDUIT AND SPLICE TO EXISTING GROUND CONDUCTOR BY EXOTHERMIC WELD. EXISTING CONDUIT/WIRE CONTINUES TO EXISTING FILTER BUILDING GROUNDING GRID. TERMINATE PROPOSED GROUND CABLE TO MCC GROUND BUS. CONDUIT STUB UP SHOWN FOR REPRESENTATION ONLY. FIELD VERIFY LOCATION OF EXISTING MCC GROUNDING CONDUIT/CONDUCTOR AND GROUNDING GRID. FIELD ROUTE PROPOSED SECTION OF GROUNDING CONDUIT/WIRE AT NO ADDITIONAL COST TO THE OWNER.
12. REFER TO I&C DRAWINGS FOR EXACT EQUIPMENT SIZE AND LOCATION.
13. TERMINATE PROPOSED GROUND CONDUCTOR TO MCC GROUND BUS BAR. PROPOSED CONDUIT/WIRE CONTINUES TO GROUND TEST WELL AT BLOWER BUILDING. REFER TO BLOWER BUILDING GROUNDING PLAN ON DRAWING NO. E-41 AND TO RENOVATION SITE PLAN ON DRAWING NO. E-20.
14. TERMINATE PROPOSED GROUND CONDUCTOR TO MCC GROUND BUS BAR. PROPOSED CONDUIT/WIRE CONTINUES TO EXISTING FILTER BUILDING GROUNDING SYSTEM. FIELD VERIFY LOCATION OF EXISTING GROUNDING, FIELD ROUTE CONDUIT/WIRE, FURNISH AND INSTALL JUNCTION BOX AND SUPPORTS AS REQUIRED, AND BOND PROPOSED GROUND CONDUCTOR TO EXISTING GROUNDING SYSTEM BY EXOTHERMIC WELD AT NO ADDITIONAL COST TO THE OWNER.
15. FIELD VERIFY LOCATION OF EXISTING FILTER BUILDING GROUNDING GRID. FIELD ROUTE PROPOSED ISOLATED GROUND CONDUIT/WIRE, FURNISH AND INSTALL JUNCTION BOX AND SUPPORTS AS REQUIRED, AND BOND TO EXISTING GRID BY EXOTHERMIC WELD AT NO ADDITIONAL COST TO THE OWNER.
16. CONNECT PROPOSED CONDUIT TO EXISTING CONDUIT REMAINING FROM DEMOLITION AND EXTEND TO MCC. FURNISH AND INSTALL PROPOSED WIRING IN EXISTING AND PROPOSED CONDUITS FROM SOURCE TO DESTINATION. SIZE AND QUANTITY OF PROPOSED WIRING LISTED IN CONDUIT/WIRE SCHEDULE IS FOR BIDDING PURPOSES. PROPOSED WIRING SHALL BE OF LIKE QUANTITY AND SIZE AS EXISTING. FIELD VERIFY AND INCREASE CONDUIT/WIRE SIZE AS REQUIRED AT NO ADDITIONAL COST TO OWNER. PROPOSED CONDUIT/WIRE SHOWN WITH BOTTOM ENTRY INTO MCC FOR REPRESENTATION ONLY. FIELD VERIFY DESTINATION AND LOCATION OF EXISTING CONDUIT/WIRE AND ADJUST PROPOSED CONDUIT/WIRE INSTALLATION ACCORDINGLY.
17. FURNISH AND INSTALL CONDUIT SEALING FITTINGS AT PENETRATION OF EXISTING CONDUIT THROUGH WALL INTO FILTER GALLERY. REFER TO DRAWING NOS. E-35 AND E-33 FOR APPROXIMATE LOCATION. FIELD VERIFY LOCATION OF EXISTING CONDUIT PENETRATIONS AS APPLICABLE.
18. COORDINATE FINAL LOCATION WITH THE OWNER AND LOCATION OF CONTROL PANEL. REFER TO I&C DRAWINGS.
19. EXISTING BRANCH CIRCUIT SERVING RELOCATED SPRINKLER CONTROLLERS TERMINATES IN THIS VICINITY. CONNECT PROPOSED CONDUIT TO EXISTING CONDUIT REMAINING FROM DEMOLITION AND EXTEND TO RELOCATED SPRINKLER CONTROLLERS. FIELD VERIFY CIRCUITING AND FIELD ROUTE PROPOSED CONDUIT/WIRE. FURNISH AND INSTALL PROPOSED WIRING MATCHING EXISTING FROM SOURCE TO DESTINATION IN EXISTING AND PROPOSED CONDUITS AND MAKE ALL FINAL CONNECTIONS AT NO ADDITIONAL COST TO THE OWNER. REFER TO I&C DRAWINGS FOR LOCATION OF RELOCATED CONTROLLERS.
20. MULTIPLE BRANCH CIRCUITS SERVING THE LIGHTING, RECEPTACLE, AND AUXILIARY POWER NEEDS OF THE GENERATOR PREVIOUSLY TERMINATED AT DEMOLISHED MINI POWER CENTER "CS01-LP-02" IN THIS VICINITY. CONNECT PROPOSED CONDUITS TO EXISTING CONDUITS REMAINING FROM DEMOLITION AND EXTEND TO PROPOSED PANELBOARD "FB1-CPP-001". FIELD VERIFY EXISTING CIRCUITING AND FIELD ROUTE PROPOSED CONDUIT/WIRE. FURNISH AND INSTALL PROPOSED WIRING MATCHING EXISTING FROM SOURCE TO DESTINATION IN EXISTING AND PROPOSED CONDUITS. MAKE ALL FINAL CONNECTIONS. REFER TO "FB1-CPP-001" PANELBOARD SCHEDULE. CIRCUITING SHOWN IN SCHEDULE FOR REPRESENTATION ONLY. FIELD VERIFY REQUIRED QUANTITY/SIZES OF BREAKERS AND PROVIDE ANY ADDITIONAL CIRCUIT BREAKERS AND ASSOCIATED CONDUIT/WIRE AS REQUIRED AT NO ADDITIONAL COST TO THE OWNER.
21. FURNISH AND INSTALL PROPOSED CONDUCTORS IN PROPOSED AND EXISTING CONDUITS FROM SOURCE TO DESTINATION AND MAKE ALL FINAL CONNECTIONS.
22. FURNISH AND INSTALL CONVENIENCE RECEPTACLE DEDICATED TO REFRIGERATOR. CONNECT TO PANELBOARD "FL-2" IN PROPOSED MCC. COORDINATE WITH OWNER FOR FINAL LOCATION OF RECEPTACLE.
23. FURNISH AND INSTALL JUNCTION BOX DEDICATED TO SPLICING OF WATER HEATER CIRCUIT WIRING. SURFACE MOUNT TO WALL ABOVE WATER HEATER. FURNISH AND INSTALL CONDUIT/WIRE TO/FROM WATER HEATER AND INSTALL PER WATER HEATER MANUFACTURER'S INSTRUCTIONS. CONDUIT/WIRE ROUTES IN CEILING SPACE TO/FROM PANELBOARD.

GENERAL NOTES

1. INSTRUMENT POWER HOMERUNS NOT SHOWN FOR CLARITY. REFER TO PANELBOARD SCHEDULES AND I&C FLOOR PLANS.

This document, and the designs incorporated herein, is an instrument of professional service that has been developed, designed and prepared by Harutunian Engineering, Inc., and is not to be used, in whole or in part, for any other project without giving written notice to Harutunian Engineering, Inc.

NO.	DR	CK	DATE	DESCRIPTION

REVISIONS

BLACK & VEATCH
Building a world of difference.
Black & Veatch Corporation
Registration No. F-135
Austin, Texas

HARUTUNIAN ENGINEERING, INC.
305 E Hunland Dr., Ste 500; Austin, TX 78752
TBPE Firm Registration No. F-2408

STATE OF TEXAS
K. A. HARUTUNIAN
59981
REGISTERED PROFESSIONAL ENGINEER
4/4/2014

Austin WATER
Walnut Creek WWTP - Tertiary Filter Rehabilitation Project
CIP ID No. 3023.025

ELECTRICAL
FB1/FB2 ELECTRICAL POWER PLAN
CONTROL ROOM LEVEL - RENOVATION

DESIGNED BY:	HEI
DRAWN BY:	HEI
REVIEWED BY:	HEI
APPROVED BY:	HEI
PROJECT NO.:	168622
DATE:	4/4/2014
SCALE:	AS SHOWN
REVISION:	
DISCIPLINE NO.	E-32
DWG. NO.	SHEET 144 OF 273

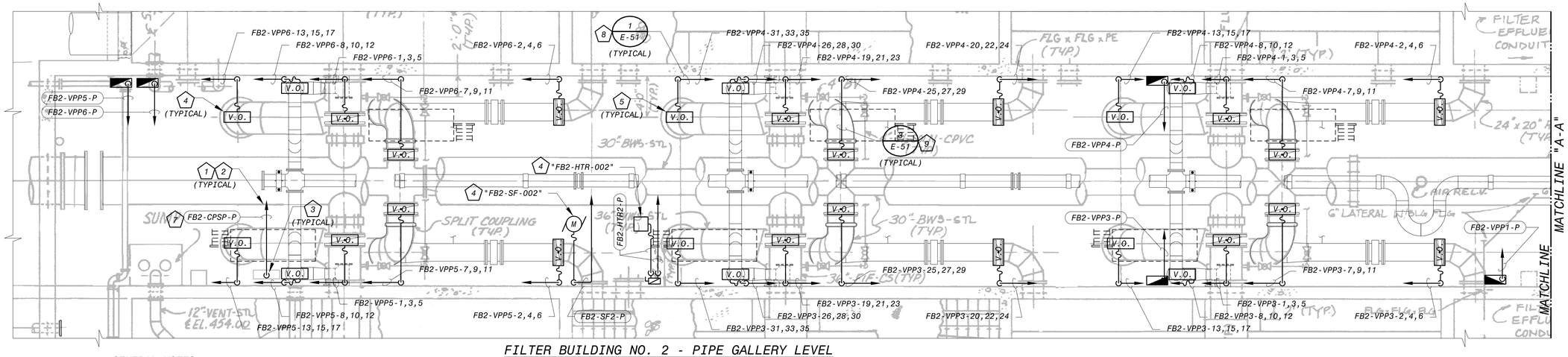

FILTER BUILDING NO. 2 - PIPE GALLERY LEVEL
ELECTRICAL POWER PLAN - RENOVATION (3 / E-63)

SCALE: 3/16" = 1'-0"

GENERAL NOTES

1. INSTRUMENT POWER HOMERUNS NOT SHOWN FOR CLARITY. REFER TO PANELBOARD SCHEDULES AND I&C FLOOR PLANS.

KEY NOTES

(20) NOT ALL HOMERUNS AND CONDUIT SEALING FITTINGS HAVE BEEN SHOWN HERE FOR CLARITY. CONDUITS|WIRE TAGGED "BB-BL1-P", "BB-BL2-P", "BB-BL1-SH", "BB-BL2-SH", "BB-CPBL1-P", "BB-CPBL2-P", "BB-MPC1-P", "BB-TW1-G", AND "BB-TW2-G" ROUTE TO/FROM PROPOSED BLOWER BUILDING VIA SITE DUCT BANK, THROUGH PULLBOX, AND HOMERUN TO/FROM SOURCE. SPARE EMPTY CONDUIT "BB-SPARE" ROUTED TO/FROM BLOWER BUILDING TERMINATES AT PULLBOX. CONDUITS|WIRE "BB-TW1-G" AND "BB-TW2-G" INTERCONNECT PROPOSED BLOWER BUILDING GROUNDING GRID WITH GROUND BUSES OF "FB1-MCC-01A" AND "FB1-MCC-01B" RESPECTIVELY. FURNISH AND INSTALL SEALING FITTINGS ON EACH CONDUIT TERMINATING AT PULLBOX FROM SITE DUCT BANK.

(21) ROUTE PROPOSED CONDUIT ALONG WALL TO HEIGHT APPROXIMATELY 48" ABOVE FINISHED FLOOR COMMENSURATE TO THAT OF PROPOSED NPW PUMPS AND CAP OFF PER DETAIL 7 ON DRAWING NO. E-53. CONDUIT WILL BE EXTENDED IN FUTURE BY OTHERS TO THE FUTURE NPW PUMP "FB1-NP-003".

(22) FURNISH AND INSTALL RECEPTACLE ON WALL DEDICATED TO HVAC CONDENSATE PUMP. COORDINATE LOCATION WITH HVAC. FURNISH AND INSTALL CONDUIT/WIRE TO CONNECT TO EXISTING RECEPTACLE CIRCUIT AS INDICATED.

(23) FURNISH AND INSTALL PROPOSED CONDUCTORS IN PROPOSED AND EXISTING CONDUITS FROM SOURCE TO DESTINATION AND MAKE ALL FINAL CONNECTIONS.

(24) SURFACE MOUNT CONDUITS/WIRE TO VERTICAL CONDUIT SUPPORT CHANNELS TO/FROM CEILING SPACE CORRIDOR, SIMILAR TO CONDUIT MOUNTING SHOWN ON DETAIL 2 ON DRAWING NO. E-52.

(25) CONDUITS/WIRE CONTINUE TO PULLBOX "FB2-PBBWP-HV2".

(26) CONDUITS/WIRE CONTINUE TO PULLBOX "FB2-PBBWP-LV1".

(27) UTILIZE 2 PARALLEL SETS OF CONDUCTORS FOR SPACE HEATER. TERMINATE 4 NO. 12 AWG WIRES FROM SHIELDED MULTI-CONDUCTOR CABLE TO TERMINALS IN SPACE HEATER TERMINATION ENCLOSURE.

(28) FURNISH AND INSTALL PULLBOX SURFACE MOUNTED TO WALL, SIZED 20"W x 30"H x 10"D AT MINIMUM. LOCATION SHOWN IS APPROXIMATE. FIELD VERIFY CONDITIONS ALONG WALL AND MOUNT IN ACCESSIBLE LOCATION.

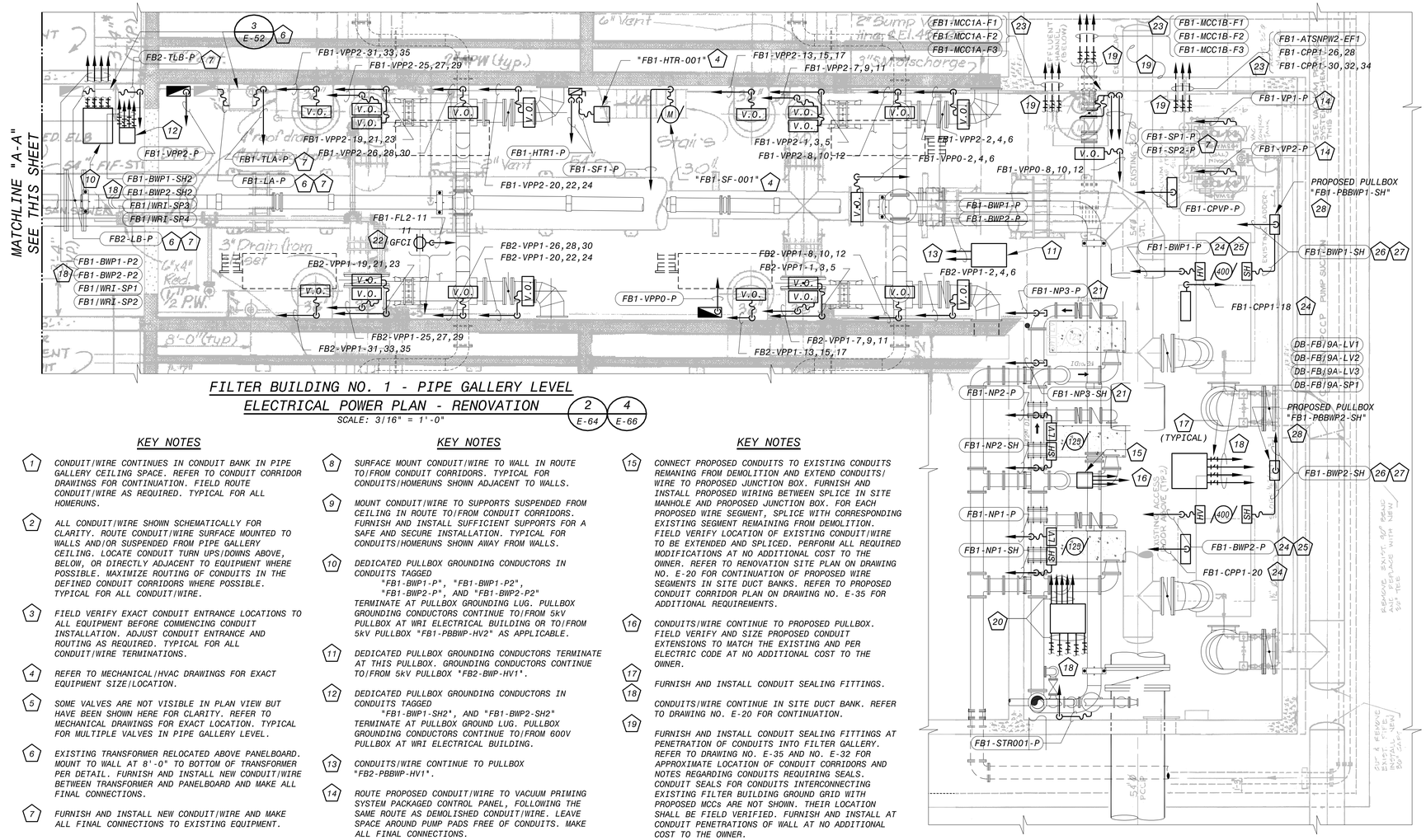

FILTER BUILDING NO. 1 - PIPE GALLERY LEVEL
ELECTRICAL POWER PLAN - RENOVATION (2 / E-64) (4 / E-66)

SCALE: 3/16" = 1'-0"

KEY NOTES

(1) CONDUIT/WIRE CONTINUES IN CONDUIT BANK IN PIPE GALLERY CEILING SPACE. REFER TO CONDUIT CORRIDOR DRAWINGS FOR CONTINUATION. FIELD ROUTE CONDUIT/WIRE AS REQUIRED. TYPICAL FOR ALL HOMERUNS.

(2) ALL CONDUIT/WIRE SHOWN SCHEMATICALLY FOR CLARITY. ROUTE CONDUIT/WIRE SURFACE MOUNTED TO WALLS AND/OR SUSPENDED FROM PIPE GALLERY CEILING. LOCATE CONDUIT TURN UPS/DOWNS ABOVE, BELOW, OR DIRECTLY ADJACENT TO EQUIPMENT WHERE POSSIBLE. MAXIMIZE ROUTING OF CONDUITS IN THE DEFINED CONDUIT CORRIDORS WHERE POSSIBLE. TYPICAL FOR ALL CONDUIT/WIRE.

(3) FIELD VERIFY EXACT CONDUIT ENTRANCE LOCATIONS TO ALL EQUIPMENT BEFORE COMMENCING CONDUIT INSTALLATION. ADJUST CONDUIT ENTRANCE AND ROUTING AS REQUIRED. TYPICAL FOR ALL CONDUIT/WIRE TERMINATIONS.

(4) REFER TO MECHANICAL/HVAC DRAWINGS FOR EXACT EQUIPMENT SIZE/LOCATION.

(5) SOME VALVES ARE NOT VISIBLE IN PLAN VIEW BUT HAVE BEEN SHOWN HERE FOR CLARITY. REFER TO MECHANICAL DRAWINGS FOR EXACT LOCATION. TYPICAL FOR MULTIPLE VALVES IN PIPE GALLERY LEVEL.

(6) EXISTING TRANSFORMER RELOCATED ABOVE PANELBOARD. MOUNT TO WALL AT 8'-0" TO BOTTOM OF TRANSFORMER PER DETAIL. FURNISH AND INSTALL NEW CONDUIT/WIRE BETWEEN TRANSFORMER AND PANELBOARD AND MAKE ALL FINAL CONNECTIONS.

(7) FURNISH AND INSTALL NEW CONDUIT/WIRE AND MAKE ALL FINAL CONNECTIONS TO EXISTING EQUIPMENT.

KEY NOTES

(8) SURFACE MOUNT CONDUIT/WIRE TO WALL IN ROUTE TO/FROM CONDUIT CORRIDORS. TYPICAL FOR CONDUITS/HOMERUNS SHOWN ADJACENT TO WALLS.

(9) MOUNT CONDUIT/WIRE TO SUPPORTS SUSPENDED FROM CEILING IN ROUTE TO/FROM CONDUIT CORRIDORS. FURNISH AND INSTALL SUFFICIENT SUPPORTS FOR A SAFE AND SECURE INSTALLATION. TYPICAL FOR CONDUITS/HOMERUNS SHOWN AWAY FROM WALLS.

(10) DEDICATED PULLBOX GROUNDING CONDUCTORS IN CONDUITS TAGGED "FB1-BWP1-P", "FB1-BWP1-P2", "FB1-BWP2-P", AND "FB1-BWP2-P2" TERMINATE AT PULLBOX GROUNDING LUG. PULLBOX GROUNDING CONDUCTORS CONTINUE TO/FROM 5kV PULLBOX AT WRI ELECTRICAL BUILDING OR TO/FROM 5kV PULLBOX "FB1-PBBWP-HV2" AS APPLICABLE.

(11) DEDICATED PULLBOX GROUNDING CONDUCTORS TERMINATE AT THIS PULLBOX. GROUNDING CONDUCTORS CONTINUE TO/FROM 5kV PULLBOX "FB2-BWP-HV1".

(12) DEDICATED PULLBOX GROUNDING CONDUCTORS IN CONDUITS TAGGED "FB1-BWP1-SH2", AND "FB1-BWP2-SH2" TERMINATE AT PULLBOX GROUND LUG. PULLBOX GROUNDING CONDUCTORS CONTINUE TO/FROM 600V PULLBOX AT WRI ELECTRICAL BUILDING.

(13) CONDUITS/WIRE CONTINUE TO PULLBOX "FB2-PBBWP-HV1".

(14) ROUTE PROPOSED CONDUIT/WIRE TO VACUUM PRIMING SYSTEM PACKAGED CONTROL PANEL, FOLLOWING THE SAME ROUTE AS DEMOLISHED CONDUIT/WIRE. LEAVE SPACE AROUND PUMP PADS FREE OF CONDUITS. MAKE ALL FINAL CONNECTIONS.

KEY NOTES

(15) CONNECT PROPOSED CONDUITS TO EXISTING CONDUITS REMAINING FROM DEMOLITION AND EXTEND CONDUITS/WIRE TO PROPOSED JUNCTION BOX. FURNISH AND INSTALL PROPOSED WIRING BETWEEN SPLICE IN SITE MANHOLE AND PROPOSED JUNCTION BOX. FOR EACH PROPOSED WIRE SEGMENT, SPLICE WITH CORRESPONDING EXISTING SEGMENT REMAINING FROM DEMOLITION. FIELD VERIFY LOCATION OF EXISTING CONDUIT/WIRE TO BE EXTENDED AND SPLICED. PERFORM ALL REQUIRED MODIFICATIONS AT NO ADDITIONAL COST TO THE OWNER. REFER TO RENOVATION SITE PLAN ON DRAWING NO. E-20 FOR CONTINUATION OF PROPOSED WIRE SEGMENTS IN SITE DUCT BANKS. REFER TO PROPOSED CONDUIT CORRIDOR PLAN ON DRAWING NO. E-35 FOR ADDITIONAL REQUIREMENTS.

(16) CONDUITS/WIRE CONTINUE TO PROPOSED PULLBOX. FIELD VERIFY AND SIZE PROPOSED CONDUIT EXTENSIONS TO MATCH THE EXISTING AND PER ELECTRIC CODE AT NO ADDITIONAL COST TO THE OWNER.

(17) FURNISH AND INSTALL CONDUIT SEALING FITTINGS.

(18) CONDUITS/WIRE CONTINUE IN SITE DUCT BANK. REFER TO DRAWING NO. E-20 FOR CONTINUATION.

(19) FURNISH AND INSTALL CONDUIT SEALING FITTINGS AT PENETRATION OF CONDUITS INTO FILTER GALLERY. REFER TO DRAWING NO. E-35 AND NO. E-32 FOR APPROXIMATE LOCATION OF CONDUIT CORRIDORS AND NOTES REGARDING CONDUITS REQUIRING SEALS. CONDUIT SEALS FOR CONDUITS INTERCONNECTING EXISTING FILTER BUILDING GROUND GRID WITH PROPOSED MCCs ARE NOT SHOWN. THEIR LOCATION SHALL BE FIELD VERIFIED. FURNISH AND INSTALL AT CONDUIT PENETRATIONS OF WALL AT NO ADDITIONAL COST TO THE OWNER.

6' 4' 2' 0 5' 10'

3/16"=1'-0"

This document, and the designs incorporated herein, is an instrument of professional service that has been developed, designed and prepared by Harutunian Engineering, Inc., and is not to be used, in whole or in part, for any other project without giving written notice to Harutunian Engineering, Inc.

NO.	DR	CK	DATE	DESCRIPTION

REVISIONS

BLACK & VEATCH
Building a world of difference.
Black & Veatch Corporation
Registration No. F-253
Austin, Texas

HARUTUNIAN ENGINEERING, INC.
305 E Hunland Dr., Ste 500, Austin, TX 78752
TBPE Firm Registration No. F-1408

STATE OF TEXAS
K. A. HARUTUNIAN
REGISTERED PROFESSIONAL ENGINEER
4/4/2014

AUSTIN WATER

Walnut Creek WWTP - Tertiary Filter Rehabilitation Project

CIP ID No. 3023.025

ELECTRICAL
FB1/FB2 ELECTRICAL POWER PLAN
PIPE GALLERY LEVEL - RENOVATION

DESIGNED BY:	HEI
DRAWN BY:	HEI
REVIEWED BY:	HEI
APPROVED BY:	HEI
PROJECT NO.:	168622
DATE:	4/4/2014
SCALE:	AS SHOWN

REVISION:

DISCIPLINE NO.
E-33

DWG. NO.
SHEET 145 OF 273

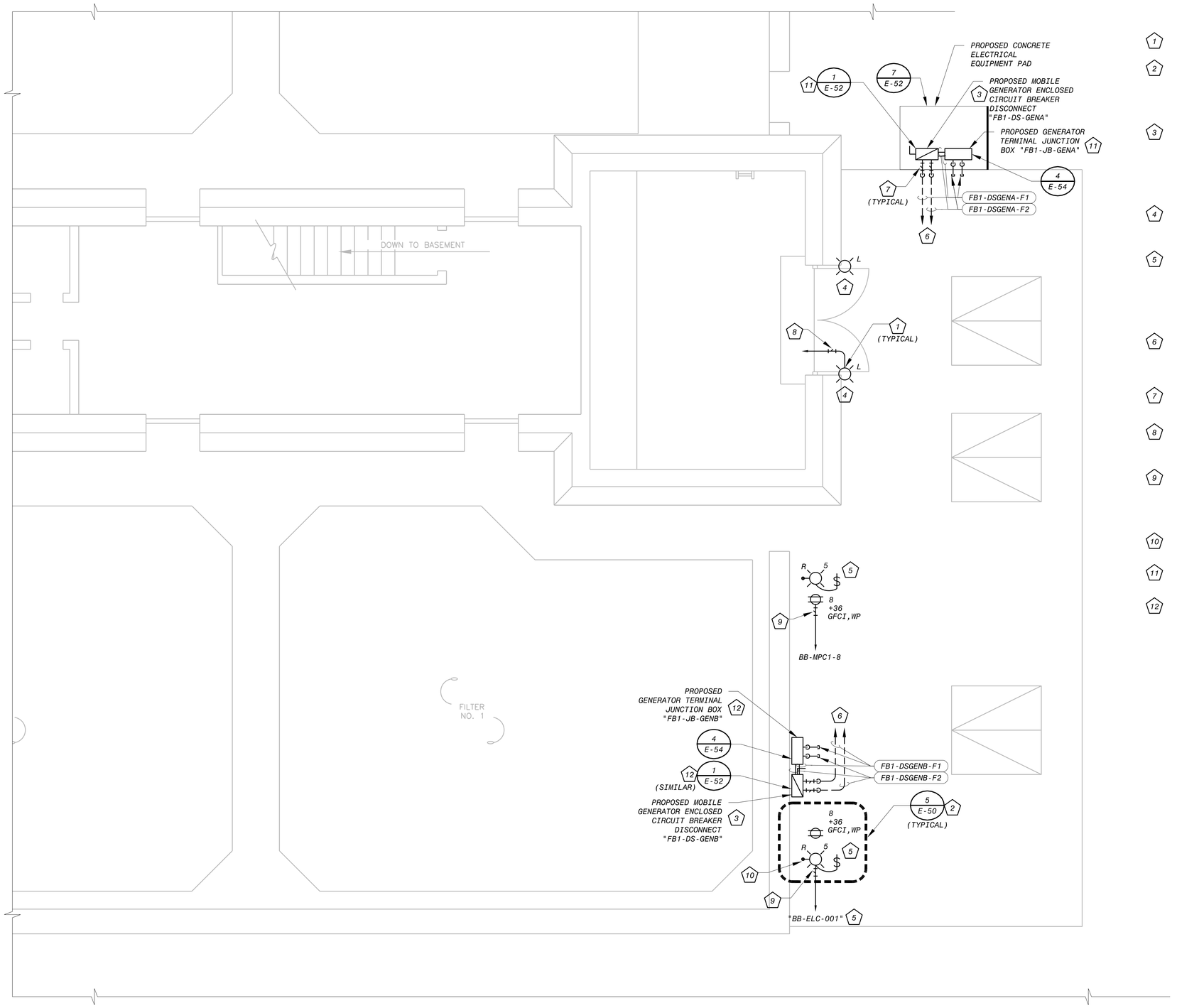

FILTER BUILDING EXTERIOR
LIGHTING, AUXILIARY AND POWER PLAN - MODIFICATIONS

3 / E-64

SCALE: 1/4" = 1'-0"

KEY NOTES

1. FURNISH AND INSTALL LIGHT FIXTURE RECESSED MOUNTED IN EAVE. TYPICAL FOR ALL TYPE "L" LIGHT FIXTURES.
2. FURNISH AND INSTALL POLE-MOUNTED LIGHT FIXTURE, SWITCH, AND RECEPTACLE IMMEDIATELY ADJACENT TO EXISTING WALL. SWITCH AND RECEPTACLE SHOWN APART FROM POLE FOR CLARITY. INSTALL FIXTURE AT +10'-0" ABOVE FINISHED GRADE TO BOTTOM OF FIXTURE. TYPICAL FOR ALL TYPE "R" POLE-MOUNTED FIXTURES.
3. FURNISH AND INSTALL 3P-600A ENCLOSED CIRCUIT BREAKER WITH ELECTRONIC TRIP UNIT DEDICATED FOR CONNECTION TO FUTURE MOBILE GENERATOR. MOUNT TO ENCLOSURE SUPPORT RACK. FIELD VERIFY LOCATION OF STRUCTURAL BEAMS AND ADJUST LOCATION OF ENCLOSED BREAKER, SUPPORT RACK, AND CONDUIT PENETRATIONS INTO PIPE GALLERY AS REQUIRED. COORDINATE WITH OWNER FOR FINAL LOCATION.
4. WIRE PROPOSED FIXTURES TO CIRCUIT FL2-4 SERVING EXISTING FIXTURES LOCATED IN STORAGE ROOM. FIELD VERIFY THE CIRCUIT NUMBERS TO WHICH THE EXISTING FIXTURES ARE CONNECTED.
5. ALL TYPE "R" POLE-MOUNTED FIXTURES ARE ON THE SAME CIRCUIT, BB-MPC1-5, AND ARE CONTROLLED BY ELECTRICAL LIGHTING CONTACTOR "BB-ELC-001" LOCATED IN PROPOSED BLOWER BUILDING. REFER TO DRAWING NO. E-40 FOR ADDITIONAL TYPE "R" FIXTURES ON THIS CIRCUIT. POLE-MOUNTED SWITCH SHALL BE WIRED SUCH THAT FIXTURE CAN BE TURNED OFF, OVERRIDING THE ELECTRICAL LIGHTING CONTACTOR.
6. PROPOSED CONDUIT|WIRE PENETRATES SLAB. CORE DRILL AND SEAL PER DETAILS AND SPECIFICATIONS. CONDUIT|WIRE CONTINUES IN CONDUIT BANK IN PIPE GALLERY LEVEL BELOW. REFER TO CONDUIT CORRIDOR DRAWINGS FOR CONTINUATION. FIELD ROUTE CONDUIT|WIRE AS REQUIRED.
7. FURNISH AND INSTALL SEALING FITTING. FITTING SHOWN HORIZONTALLY IN PLAN VIEW FOR CLARITY BUT SHALL BE INSTALLED IN VERTICAL SECTION OF CONDUIT.
8. FURNISH AND INSTALL CONDUIT SEALING FITTING IN EAVE ABOVE LIGHT FIXTURE. LOCATE ON PROPOSED SECTION OF CONDUIT BETWEEN PROPOSED FIXTURE AND JUNCTION BOX FOR SPLICING TO EXISTING CIRCUITING.
9. FURNISH AND INSTALL CONDUIT SEALING FITTING ON FINAL CONDUIT|WIRE HOMERUN TO BLOWER BUILDING. SEAL SHOWN ADJACENT TO RECEPTACLE|FIXTURE FOR REPRESENTATION ONLY. LOCATE SEAL AT BLOWER BUILDING BEFORE ENTRANCE INTO INTERIOR OF BUILDING. REFER TO DRAWING NO. E-40.
10. COORDINATE FINAL LOCATION OF POLE WITH PROPOSED MECHANICAL AIR SCOUR PIPE IN THIS VICINITY.
11. MOUNT "FB1-DS-GENA" AND "FB1-JB-GENA" ON COMMON EQUIPMENT RACK. RACK SHALL HAVE A MINIMUM OF THREE VERTICAL SUPPORTS (NOT SHOWN).
12. MOUNT "FB1-DS-GENB" AND "FB1-JB-GENB" ON COMMON EQUIPMENT RACK. RACK SHALL HAVE A MINIMUM OF THREE VERTICAL SUPPORTS (NOT SHOWN). SECURE ANGLE BRACES TO ADJACENT ROCK WALL. EQUIPMENT PAD SHOWN IN DETAIL IS NOT REQUIRED AT THIS LOCATION.

4' 2' 0 4' 8'

1/4"=1'-0"

This document, and the designs incorporated herein, is an instrument of professional service that has been developed, designed and prepared by Harutunian Engineering, Inc., and is not to be used, in whole or in part, for any other project without giving written notice to Harutunian Engineering, Inc.

NO.	DR	CK	DATE	DESCRIPTION

REVISIONS

BLACK & VEATCH
Building a world of difference.
Black & Veatch Corporation
Registration No. F-653
Austin, Texas

HARUTUNIAN ENGINEERING, INC.
305 E Hunland Dr., Ste 500; Austin, TX 78752
TBPE Firm Registration No. F-2408

STATE OF TEXAS
K. A. HARUTUNIAN
59181
REGISTERED PROFESSIONAL ENGINEER
4/4/2014

Austin WATER
Walnut Creek WWTP - Tertiary Filter Rehabilitation Project
CIP ID No. 3023.025

ELECTRICAL
FB1 EXTERIOR POWER, LIGHTING, AND AUXILIARY PLAN MODIFICATIONS

DESIGNED BY:	HEI
DRAWN BY:	HEI
REVIEWED BY:	HEI
APPROVED BY:	HEI
PROJECT NO.:	168622
DATE:	4/4/2014
SCALE:	AS SHOWN

REVISION:

DISCIPLINE NO.
E-34

DWG. NO.
SHEET 146 OF 273

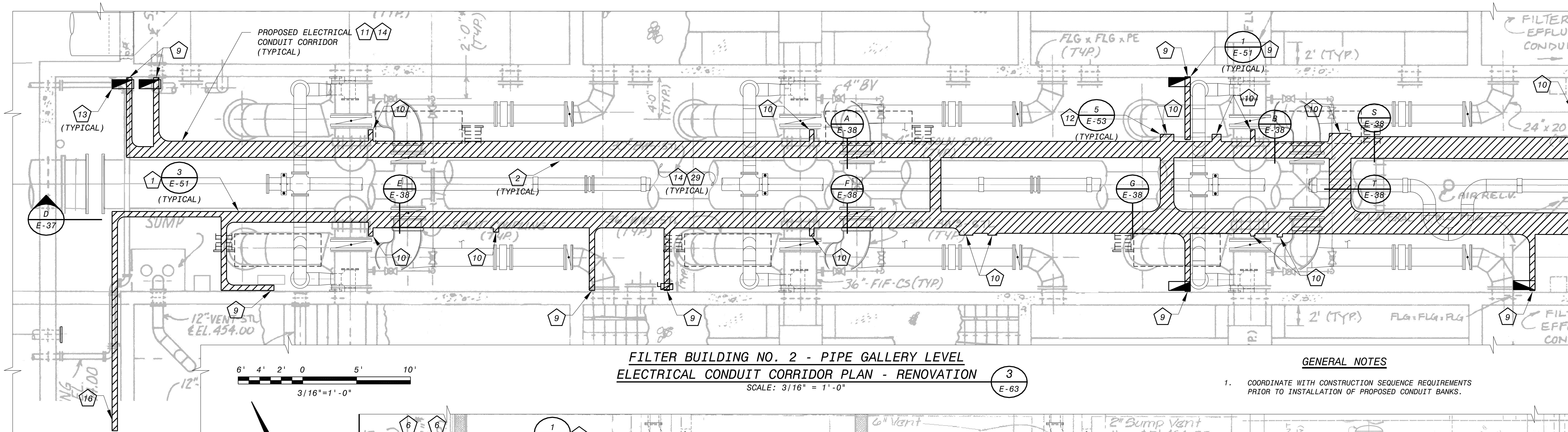

FILTER BUILDING NO. 2 - PIPE GALLERY LEVEL
ELECTRICAL CONDUIT CORRIDOR PLAN - RENOVATION (3/E-63)

SCALE: 3/16" = 1'-0"

GENERAL NOTES

1. COORDINATE WITH CONSTRUCTION SEQUENCE REQUIREMENTS PRIOR TO INSTALLATION OF PROPOSED CONDUIT BANKS.

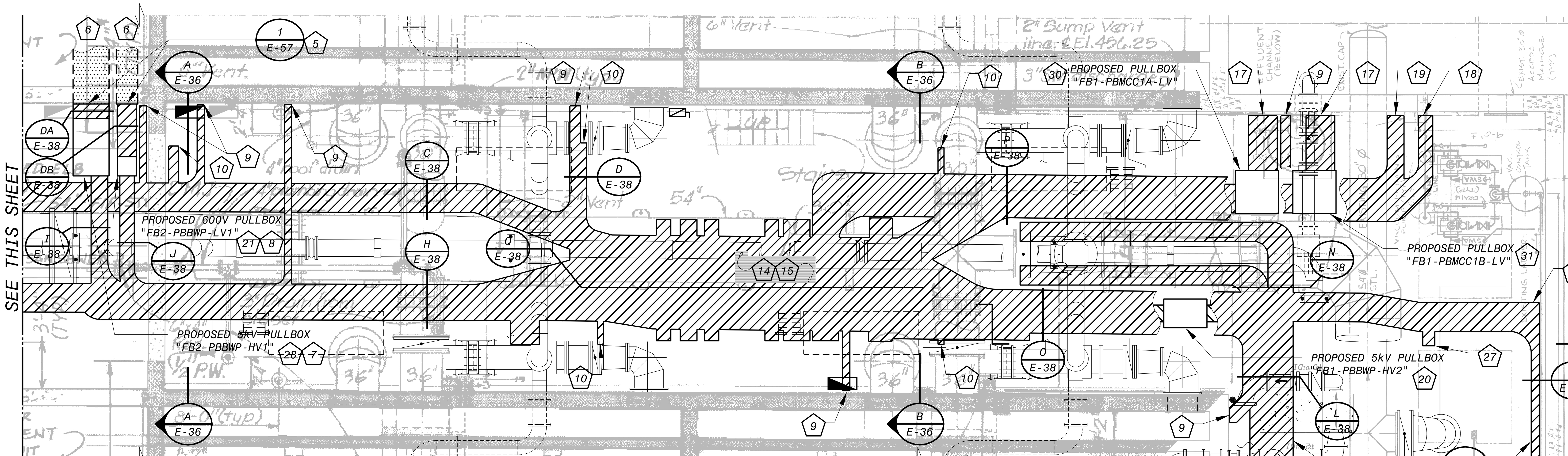

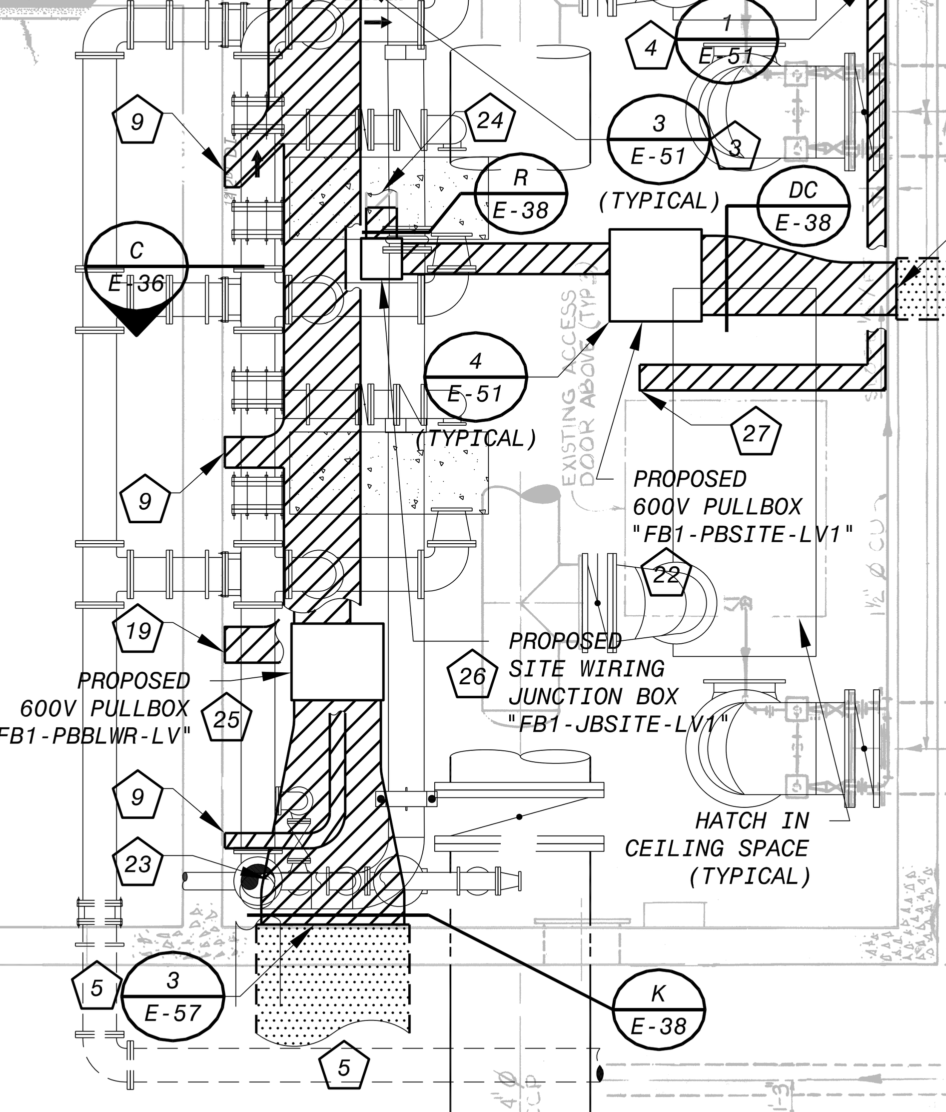

FILTER BUILDING NO. 1 - PIPE GALLERY LEVEL
ELECTRICAL CONDUIT CORRIDOR PLAN - RENOVATION (2/E-64) (4/E-66)

SCALE: 3/16" = 1'-0"

KEY NOTES

1. SUSPEND PROPOSED CONDUIT BANKS FROM PIPE GALLERY CEILING AT AN ELEVATION BELOW PROPOSED AIR PIPING AND ABOVE EXISTING INFLUENT PIPING.
2. FIELD VERIFY LOCATION OF EXISTING VERTICAL PIPE SUPPORTS/HANGERS. MINIMUM OF 2" SEPARATION REQUIRED BETWEEN SUPPORTS/HANGERS AND EDGE OF CONDUIT BANKS. ADJUST SIZE AND LOCATION OF CONDUIT BANKS AS REQUIRED.
3. SUSPEND PROPOSED CONDUIT BANKS FROM PIPE GALLERY CEILING AT AN ELEVATION BELOW PROPOSED AIR PIPING. ADJUST ROUTE AS REQUIRED TO AVOID CONFLICTS.
4. SURFACE MOUNT PROPOSED CONDUIT BANK TO PIPE GALLERY WALL AT AN ELEVATION BELOW PROPOSED AIR PIPING. FIELD ROUTE AS REQUIRED TO AVOID CONFLICTS.
5. PROPOSED UNDERGROUND REINFORCED CONCRETE ENCASED DUCT BANK PENETRATES WALL IN GALLERY LEVEL AND TRANSITIONS TO EXPOSED RIGID CONDUIT. CORE DRILL WALL AND SEAL PER THE APPLICABLE DETAIL ON DRAWING NO. E-57 AND PER STRUCTURAL. ADJUST ELEVATION/LOCATION OF PENETRATIONS AS REQUIRED TO AVOID CONFLICTS.
6. DUCT BANKS CONTAINING CONDUITS TAGGED "FB1-BWP1-P2", "FB1-BWP2-P2", "FB1-BWP1-SH2", "FB1-BWP2-SH2","FB1/WRI-SP1", "FB1/WIR-SP2", "FB1/WRI-SP3", AND "FB1/WRI-SP4" CONTINUE TO WRI ELECTRICAL BUILDING. REFER TO SITE PLAN ON DRAWING NO. E-20 FOR CONTINUATION.
7. INSIDE PULLBOX, PROPOSED WIRING TRANSITIONS TO SMALLER CONDUITS TAGGED "FB1-BWP1-P", AND "FB1-BWP2-P" CONTINUING TO/FROM TERMINATION AT BACKWASH PUMPS.
8. INSIDE PULLBOX, PROPOSED WIRING TRANSITIONS TO SMALLER CONDUITS TAGGED "FB1-BWP1-SH", AND "FB1-BWP2-SH" CONTINUING TO/FROM TERMINATION AT BACKWASH PUMPS.
9. PROPOSED CONDUIT BANK TURNS DOWN ALONG PIPE GALLERY WALL IN ROUTE TO/FROM EQUIPMENT BELOW. SURFACE MOUNT CONDUIT TO WALL. FIELD ROUTE ALONG WALL AS REQUIRED.
10. PROPOSED CONDUIT BANK TURNS UP AND PENETRATES CEILING INTO CONTROL ROOM LEVEL. CORE DRILL SLAB AND SEAL PER DETAILS AND SPECIFICATIONS.
11. ELEVATION AND CONFIGURATION OF CONDUIT BANKS WILL VARY TO AVOID CONFLICTS AND TO FACILITATE CONNECTION TO EQUIPMENT. FIELD VERIFY LOCATION OF PROPOSED AND EXISTING STRUCTURES, PIPES, CONDUITS, EQUIPMENT, ETC. BEFORE BEGINNING INSTALLATION AND ADJUST INSTALLATION AS REQUIRED AT NO ADDITIONAL COST TO OWNER. COORDINATE WITH OWNER AND PROCESS/MECHANICAL TO OPTIMIZE WORKING CLEARANCES AND TO AVOID INTERFERENCE BETWEEN SYSTEM COMPONENTS. TYPICAL FOR ALL CONDUIT/WIRE BANKS.
12. CORE DRILL SLAB TO FACILITATE PENETRATIONS. REUSE EXISTING PENETRATIONS WHERE POSSIBLE. SEAL PENETRATIONS PER SPECIFICATIONS AND INSTALLATION DETAILS. ADJUST LOCATION OF PENETRATIONS AS NECESSARY TO AVOID STRUCTURAL BEAMS AND ALL OTHER CONFLICTS. COORDINATE WITH STRUCTURAL. TYPICAL FOR ALL CONDUIT/WIRE BANK SLAB PENETRATIONS.
13. CORRIDORS FOR VALVE POWER PANELBOARD BRANCH CIRCUITS ROUTED TO FILTER VALVE OPERATORS NOT SHOWN FOR CLARITY. FIELD ROUTE CONDUIT/WIRE.
14. CONDUIT BANKS CROSSING BETWEEN EQUIPMENT OR TRANSITIONING BETWEEN CONDUIT BANKS MAY BE LOCATED IN SPACE BETWEEN STRUCTURAL CEILING BEAMS IF REQUIRED TO MAINTAIN ADEQUATE CLEARANCE BETWEEN ADJACENT CONDUIT BANKS AND PIPES.

KEY NOTES

15. NUMEROUS CONDUITS STUB UP INTO PROPOSED MOTOR CONTROL CENTERS AND TRANSFER SWITCHES. USE EXISTING BLOCKOUTS WHERE POSSIBLE. OTHERWISE, CORE DRILL SLAB TO FACILITATE PENETRATIONS. SEAL ALL PENETRATIONS PER DETAILS AND SPECIFICATIONS. REFER TO PROPOSED EQUIPMENT ELEVATIONS FOR LOCATION OF CONDUIT/WIRE DESTINATION. COORDINATE WITH MANUFACTURERS FOR AVAILABLE CONDUIT ENTRANCE AREAS AND INTERNAL DEVICE LAYOUTS. ADJUST LOCATION OF CONDUIT STUB UPS TO MINIMIZE USE OF BOTTOM WIREWAYS.
16. PROPOSED CONDUIT BANK TURNS UP AND PENETRATES SLAB IN ROUTE TO/FROM ENCLOSED CIRCUIT BREAKER MOUNTED TO SCREENING WALL OUTSIDE.
17. EXISTING CONDUITS PENETRATE WALL AND CONTINUE TO SERVICE TRANSFORMER AT THIS APPROXIMATE LOCATION. CONNECT PROPOSED CONDUITS TO EXISTING CONDUITS AT WALL AND EXTEND TO PROPOSED MOTOR CONTROL CENTER "FB1-MCC-01A" OR "FB1-MCC-01B" AS APPLICABLE. FURNISH AND INSTALL PROPOSED CONDUCTORS IN EXISTING AND PROPOSED CONDUITS BETWEEN SERVICE TRANSFORMER AND PROPOSED MOTOR CONTROL CENTER AND MAKE ALL FINAL CONNECTIONS.
18. EXISTING CONDUITS PENETRATE WALL AND CONTINUE TO EMERGENCY GENERATOR BUILDING AT THIS APPROXIMATE LOCATION. CONNECT PROPOSED CONDUITS TO EXISTING CONDUITS AT WALL AND EXTEND TO PROPOSED AUTOMATIC TRANSFER SWITCH "FB1-ATS-MCCNPW2" OR PANELBOARD "FB1-CPP-001" AS APPLICABLE. FURNISH AND INSTALL PROPOSED CONDUCTORS IN EXISTING AND PROPOSED CONDUITS FROM SOURCE TO DESTINATION AND MAKE ALL FINAL CONNECTIONS.
19. PROPOSED CONDUIT BANK TURNS UP AND PENETRATES CEILING SLAB TO BUILDING EXTERIOR IN ROUTE TO/FROM PROPOSED EMERGENCY GENERATOR DISCONNECT. CORE DRILL SLAB AND SEAL PER DETAILS AND SPECIFICATIONS. COORDINATE WITH OWNER FOR FINAL LOCATION.

KEY NOTES

20. FURNISH AND INSTALL PULLBOX DEDICATED TO PROPOSED BACKWASH PUMP 5kV POWER CABLES, SIZED 24"W x 36"H x 10"D AT MINIMUM. SUSPEND FROM CEILING AT BOTTOM LAYER OF CONDUIT BANKS TO FACILITATE ACCESS TO BOTTOM DOOR OF ENCLOSURE.
21. FURNISH AND INSTALL PULLBOX DEDICATED TO PROPOSED BACKWASH PUMP 600V CABLES, SIZED 16"W x 16"H x 12"D AT MINIMUM. SUSPEND FROM CEILING AT BOTTOM LAYER OF CONDUIT BANKS TO FACILITATE ACCESS TO BOTTOM DOOR OF ENCLOSURE.
22. FURNISH AND INSTALL PULLBOX SUSPENDED FROM CEILING, SIZED 30"W x 30"H x 12"D AT MINIMUM. LOCATION SHOWN IS APPROXIMATE.
23. CONDUIT BANK CONFIGURATION CHANGES IN THIS VICINITY TO AVOID CONFLICT WITH EXISTING VALVE ACTUATOR.
24. EXISTING CONDUITS/WIRE CONTINUE TO DESTINATION.
25. FURNISH AND INSTALL PULLBOX, SIZED 36"W x 30"H x 12"D AT MINIMUM. LOCATION SHOWN IS APPROXIMATE. LOCATE BETWEEN EQUIPMENT TO FACILITATE ACCESS. SUSPEND FROM CEILING AT BOTTOM LAYER OF CONDUIT BANKS TO FACILITATE ACCESS TO BOTTOM DOOR OF ENCLOSURE.
26. FURNISH AND INSTALL JUNCTION BOX SUSPENDED FROM CEILING DEDICATED TO SPLICING OF PROPOSED WIRE FROM SITE WITH THE CORRESPONDING EXISTING CONDUIT/WIRE REMAINING FROM DEMOLITION. CONNECT PROPOSED CONDUITS TO EXISTING CONDUITS REMAINING FROM DEMOLITION, EXTEND TO JUNCTION BOX AND PERFORM SPLICES. LOCATION SHOWN IS APPROXIMATE. ADJUST LOCATION TO AVOID CONFLICTS AND TO ALLOW UNOBSTRUCTED ACCESS TO INTERIOR FROM BELOW. FIELD VERIFY LOCATION OF EXISTING CONDUIT/WIRE TO BE EXTENDED. REFER TO DEMOLITION AND RENOVATION SITE PLANS FOR ADDITIONAL REQUIREMENTS.

KEY NOTES

27. CONDUIT BANK TURNS DOWN TO HIGH VOLTAGE TERMINATION ENCLOSURE AND LOCAL CONTROL PANEL. SURFACE MOUNT CONDUIT BANK TO VERTICAL CONDUIT SUPPORT CHANNELS, SIMILAR TO MOUNTING SHOWN ON DETAIL 2 ON DRAWING NO. E-52. DO NOT OBSTRUCT AREA BELOW ACCESS HATCH.
28. FURNISH AND INSTALL PULLBOX DEDICATED TO PROPOSED BACKWASH PUMP 5kV POWER CABLES, SIZED 30"W x 48"H x 20"D AT MINIMUM. SUSPEND FROM CEILING AT BOTTOM LAYER OF CONDUIT BANKS TO FACILITATE ACCESS TO BOTTOM DOOR OF ENCLOSURE. SPARE CONDUITS FROM SITE TERMINATE AT PULLBOX ON LOWER ROW TO FACILITATE FUTURE USE AND ACCESS FROM BELOW.
29. BRANCH POWER CIRCUIT CONDUITS TO INSTRUMENTS AND CONTROLS NOT SHOWN HERE. REFER TO I&C DRAWINGS.
30. FURNISH AND INSTALL PULLBOX DEDICATED TO PROPOSED 480V MCC "FB1-MCC-01A" SERVICE CONDUITS/WIRE, SIZED 36"W x 36"H x 10"D AT MINIMUM. SUSPEND FROM CEILING AT AN ELEVATION BELOW "FB1-MCC-01B" SERVICE CONDUITS.
31. FURNISH AND INSTALL PULLBOX DEDICATED TO PROPOSED 480V MCC "FB1-MCC-01B" SERVICE CONDUITS/WIRE, SIZED 36"W x 36"H x 10"D AT MINIMUM. SUSPEND PULLBOX AND CONDUITS FROM CEILING AS HIGH AS POSSIBLE TO FACILITATE INSTALLATION PRIOR TO "FB1-MCC-01A" SERVICE CONDUITS.

This document, and the designs incorporated herein, is an instrument of professional service that has been developed, designed and prepared by Harutunian Engineering, Inc., and is not to be used, in whole or in part, for any other project without giving written notice to Harutunian Engineering, Inc.

NO.	DR	CK	DATE	DESCRIPTION
				REVISIONS

BLACK & VEATCH Building a world of difference.
Black & Veatch Corporation
Registration No. F-258
Austin, Texas

HARUTUNIAN ENGINEERING, INC.
305 E Huntland Dr, Ste 500; Austin, TX 78752
TBPE Firm Registration No. F-2408

K. A. Harutunian 4/4/2014
STATE OF TEXAS — K. A. HARUTUNIAN — 59181 — REGISTERED PROFESSIONAL ENGINEER

Austin WATER
Walnut Creek WWTP - Tertiary Filter Rehabilitation Project
CIP ID No. 3023.025

ELECTRICAL
FB1/FB2 ELECTRICAL CONDUIT CORRIDORS PLAN PIPE GALLERY LEVEL - RENOVATION

DESIGNED BY:	HEI
DRAWN BY:	HEI
REVIEWED BY:	HEI
APPROVED BY:	HEI
PROJECT NO.:	168622
DATE:	4/4/2014
SCALE:	AS SHOWN
REVISION:	

DISCIPLINE NO.
E-35
DWG. NO.

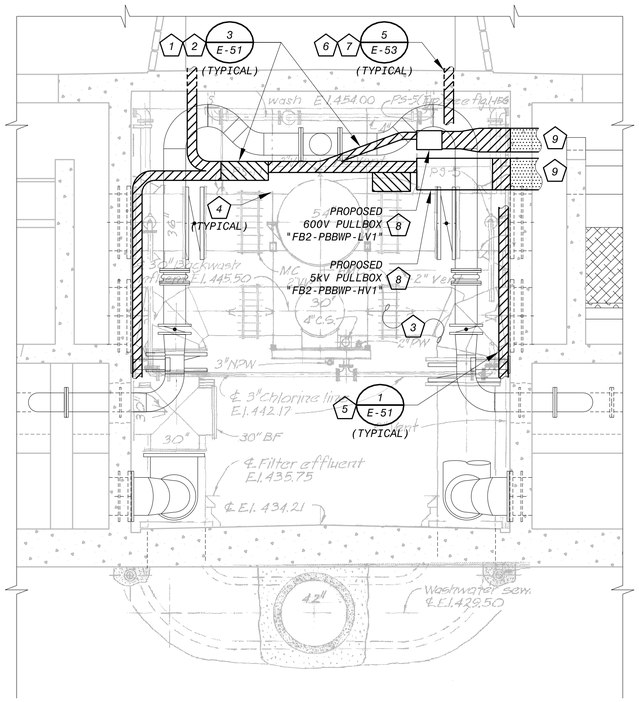

SECTION A E-35
1/4" = 1'-0"

4' 2' 0 4' 8'
1/4"=1'-0"

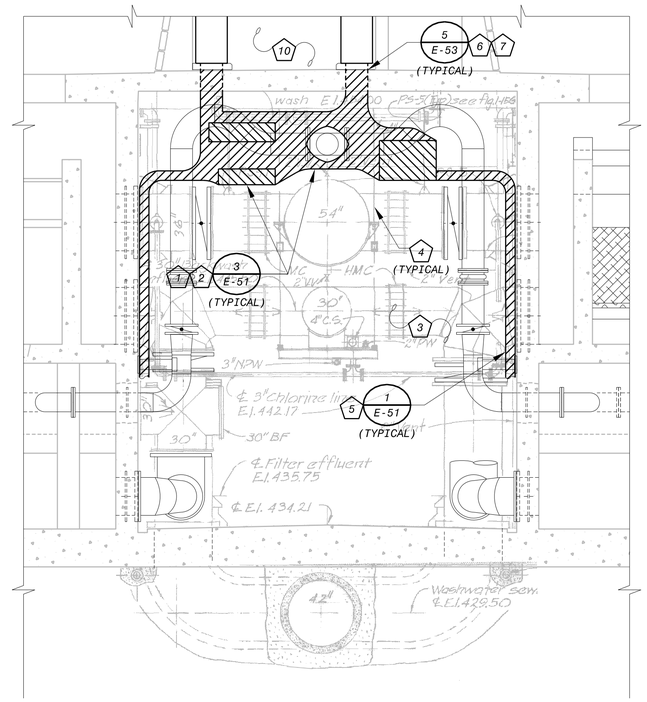

SECTION B E-35
1/4" = 1'-0"

4' 2' 0 4' 8'
1/4"=1'-0"

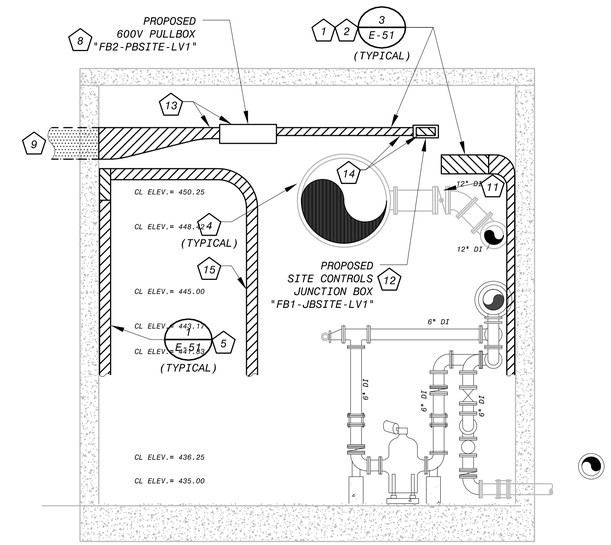

SECTION C E-35
1/4" = 1'-0"

4' 2' 0 4' 8'
1/4"=1'-0"

KEY NOTES

1. SUSPEND PROPOSED CONDUIT BANKS FROM PIPE GALLERY CEILING AT AN ELEVATION BELOW PROPOSED AIR PIPING AND ABOVE EXISTING INFLUENT PIPING.

2. ELEVATION AND CONFIGURATION OF CONDUIT BANKS WILL VARY TO AVOID CONFLICTS AND TO FACILITATE CONNECTION TO EQUIPMENT. FIELD VERIFY LOCATION OF PROPOSED AND EXISTING STRUCTURE, PIPES, CONDUITS, EQUIPMENT, ETC. BEFORE BEGINNING INSTALLATION AND ADJUST INSTALLATION AS REQUIRED AT NO ADDITIONAL COST TO THE OWNER. COORDINATE WITH OWNER AND PROCESS/MECHANICAL TO OPTIMIZE WORKING CLEARANCES AND TO AVOID INTERFERENCE BETWEEN SYSTEM COMPONENTS. TYPICAL FOR ALL CONDUIT/WIRE BANKS. CONDUIT BANKS CROSSING BETWEEN EQUIPMENT OR TRANSITIONING BETWEEN CONDUIT BANKS MAY BE LOCATED IN SPACE BETWEEN STRUCTURAL CEILING BEAMS IF REQUIRED TO MAINTAIN ADEQUATE CLEARANCE BETWEEN ADJACENT CONDUIT BANKS AND PIPES.

3. CORRIDORS FOR VALVE POWER PANELBOARD BRANCH CIRCUITS ROUTED TO VALVE OPERATORS NOT SHOWN FOR CLARITY. FIELD ROUTE CONDUIT/WIRE.

4. FIELD VERIFY LOCATION OF EXISTING VERTICAL PIPE SUPPORTS/HANGERS. MINIMUM OF 2" SEPARATION REQUIRED BETWEEN SUPPORTS/HANGERS AND EDGE OF CONDUIT BANKS. ADJUST SIZE AND LOCATION OF CONDUIT BANKS AS REQUIRED.

5. SURFACE MOUNT CONDUIT/WIRE TO WALL. FIELD ROUTE AS REQUIRED TO AVOID CONFLICTS.

6. PROPOSED CONDUIT BANK TURNS UP AND PENETRATES SLAB IN ROUTE TO/FROM EQUIPMENT IN CONTROL ROOM ABOVE. COORDINATE PENETRATION WITH EQUIPMENT IN CONTROL ROOM AND ADJUST THE PENETRATION LOCATION AS REQUIRED.

7. CORE DRILL SLAB TO FACILITATE PENETRATIONS. REUSE EXISTING BLOCKOUTS WHERE POSSIBLE, ENLARGE AS NECESSARY, AND SEAL PER SPECIFICATIONS AND INSTALLATION DETAILS. ADJUST LOCATION OF PENETRATIONS AS NECESSARY TO AVOID STRUCTURAL BEAMS AND ALL OTHER CONFLICTS. COORDINATE WITH STRUCTURAL. TYPICAL FOR ALL CONDUIT/WIRE BANK SLAB PENETRATIONS.

8. SUSPEND PULLBOX FROM CEILING. FIELD VERIFY LOCATION OF ALL EXISTING PIPES, STRUCTURES, CONDUIT BANKS, ETC. COORDINATE FINAL LOCATION AND ELEVATION WITH PROPOSED DUCT BANK PENETRATION, OTHER EXISTING AND PROPOSED CONDUIT BANKS, PIPES, ETC. AND ADJUST LOCATION AND ELEVATION OF PULLBOX AS REQUIRED. REFER TO PROPOSED CONDUIT CORRIDOR PLAN ON DRAWING NO. E-35 FOR ADDITIONAL REQUIREMENTS.

9. PROPOSED UNDERGROUND REINFORCED CONCRETE ENCASED DUCT BANKS PENETRATE WALL IN GALLERY LEVEL AND TRANSITION TO EXPOSED RIGID CONDUIT. REFER TO PROPOSED CONDUIT CORRIDOR PLAN ON DRAWING NO. E-35 FOR ADDITIONAL REQUIREMENTS.

10. NUMEROUS CONDUITS STUB UP INTO PROPOSED MOTOR CONTROL CENTERS AND TRANSFER SWITCHES. USE EXISTING BLOCKOUTS WHERE POSSIBLE. OTHERWISE, CORE DRILL SLAB TO FACILITATE PENETRATIONS. SEAL ALL PENETRATIONS PER DETAILS AND SPECIFICATIONS. REFER TO PROPOSED EQUIPMENT ELEVATIONS FOR LOCATION OF CONDUIT/WIRE DESTINATION. COORDINATE WITH MANUFACTURERS FOR AVAILABLE CONDUIT ENTRANCE AREAS AND INTERNAL DEVICE LAYOUTS. ADJUST LOCATION OF CONDUIT STUB UPS TO MINIMIZE USE OF BOTTOM WIREWAYS.

11. CONDUIT BANK CONFIGURATION CHANGES IN THIS VICINITY TO AVOID CONFLICT WITH EXISTING VALVE ACTUATOR. FIELD ROUTE AS REQUIRED.

12. FURNISH AND INSTALL JUNCTION BOX SUSPENDED FROM CEILING DEDICATED TO SPLICING OF PROPOSED WIRE SEGMENTS FROM SITE WITH THE CORRESPONDING EXISTING CONDUIT/WIRE REMAINING FROM DEMOLITION. CONNECT PROPOSED CONDUITS TO EXISTING CONDUITS REMAINING FROM DEMOLITION, EXTEND TO JUNCTION BOX AND PERFORM SPLICES. LOCATION SHOWN IS APPROXIMATE. ADJUST LOCATION TO AVOID CONFLICTS AND TO ALLOW UNOBSTRUCTED ACCESS TO INTERIOR FROM BELOW. FIELD VERIFY LOCATION OF EXISTING CONDUIT/WIRE TO BE EXTENDED. REFER TO DEMOLITION AND RENOVATION SITE PLANS FOR ADDITIONAL REQUIREMENTS.

13. CONDUITS FROM SITE REARRANGE INTO ONE ROW AND TERMINATE AT PULLBOX. INSIDE PULLBOX, PROPOSED WIRING SEGMENTS FROM SITE DUCT BANKS TRANSITION TO SMALLER CONDUITS IN ROUTE TO SPLICE POINTS IN JUNCTION BOX.

14. SIZE OF EXISTING CONDUITS AND SIZE/QUANTITY OF ENCLOSED CONDUCTORS IS UNKNOWN. FIELD VERIFY AND SIZE PROPOSED CONDUIT EXTENSIONS TO MATCH THE EXISTING AND PER ELECTRIC CODE AT NO ADDITIONAL COST TO THE OWNER.

15. CONDUIT BANK TURNS DOWN TO HIGH VOLTAGE TERMINATION ENCLOSURE AND LOCAL CONTROL PANEL. SURFACE MOUNT CONDUIT BANK TO VERTICAL CONDUIT SUPPORT CHANNELS, SIMILAR TO MOUNTING SHOWN ON DETAIL 2 ON DRAWING NO. E-52. DO NOT OBSTRUCT AREA BELOW ACCESS HATCH.

This document, and the designs incorporated herein, is an instrument of professional service that has been developed, designed and prepared by Harutunian Engineering, Inc., and is not to be used, in whole or in part, for any other project without giving written notice to Harutunian Engineering, Inc.

NO.	DR	CK	DATE	DESCRIPTION

REVISIONS

BLACK & VEATCH
Building a world of difference.
Black & Veatch Corporation
Registration No. F-253
Austin, Texas

HARUTUNIAN ENGINEERING, INC.
305 E Hunland Dr. Ste 500; Austin, TX 78752
TBPE Firm Registration No. F-2408

STATE OF TEXAS
K. A. HARUTUNIAN
59181
REGISTERED PROFESSIONAL ENGINEER
4/4/2014

Austin WATER
Walnut Creek WWTP - Tertiary Filter Rehabilitation Project
CIP ID No. 3023.025

ELECTRICAL
FB1/FB2 ELECTRICAL CONDUIT CORRIDORS SECTIONS - RENOVATION (SHEET 1 OF 2)

DESIGNED BY:	HEI
DRAWN BY:	HEI
REVIEWED BY:	HEI
APPROVED BY:	HEI
PROJECT NO.:	168622
DATE:	4/4/2014
SCALE:	AS SHOWN

REVISION:

DISCIPLINE NO.
E-36

DWG. NO.
SHEET 148 OF 273

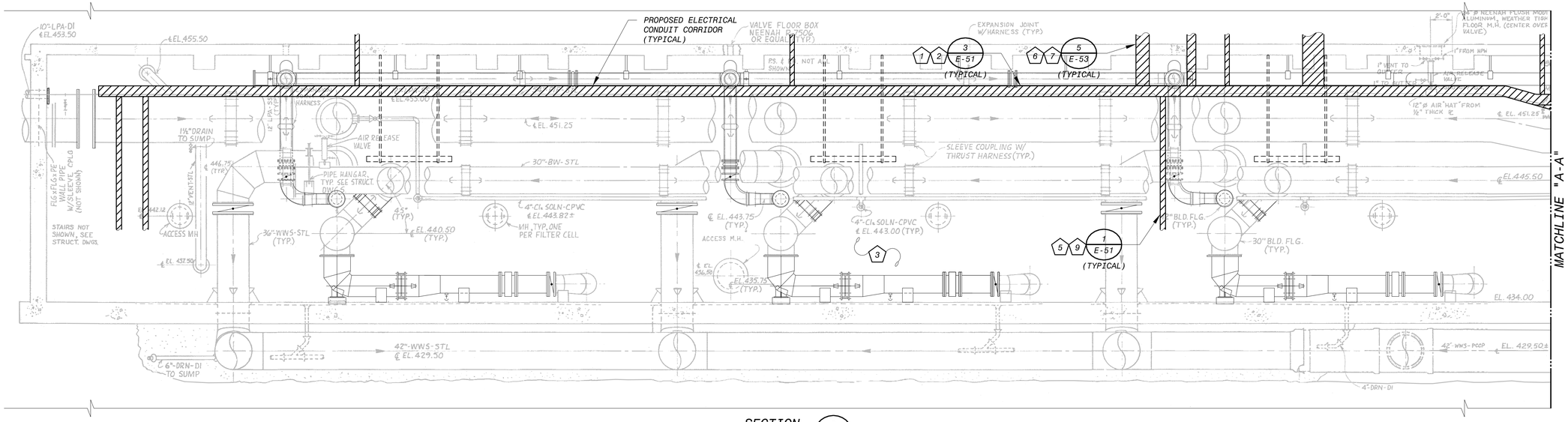

SECTION D/E-35
3/16" = 1'-0"

6' 4' 2' 0 5' 10'
3/16"=1'-0"

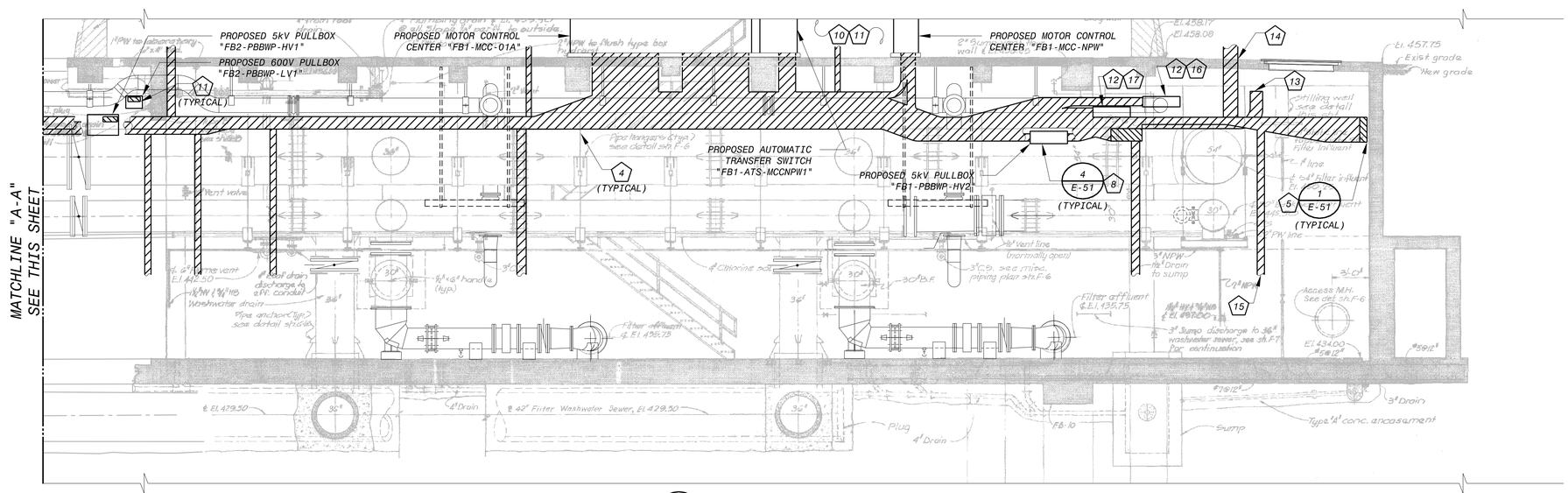

SECTION D/E-35
3/16" = 1'-0"

KEY NOTES

1. SUSPEND PROPOSED CONDUIT BANKS FROM PIPE GALLERY CEILING AT AN ELEVATION BELOW PROPOSED AIR PIPING AND ABOVE EXISTING INFLUENT PIPING.
2. ELEVATION AND CONFIGURATION OF CONDUIT BANKS WILL VARY TO AVOID CONFLICTS AND TO FACILITATE CONNECTION TO EQUIPMENT. FIELD VERIFY LOCATION OF PROPOSED AND EXISTING STRUCTURE, PIPES, CONDUITS, EQUIPMENT, ETC. BEFORE BEGINNING INSTALLATION AND ADJUST INSTALLATION AS REQUIRED AT NO ADDITIONAL COST TO THE OWNER. COORDINATE WITH OWNER AND PROCESS/MECHANICAL TO OPTIMIZE WORKING CLEARANCES AND TO AVOID INTERFERENCE BETWEEN SYSTEM COMPONENTS. TYPICAL FOR ALL CONDUIT/WIRE BANKS. CONDUIT BANKS CROSSING BETWEEN EQUIPMENT OR TRANSITIONING BETWEEN CONDUIT BANKS MAY BE LOCATED IN SPACE BETWEEN STRUCTURAL CEILING BEAMS IF REQUIRED TO MAINTAIN ADEQUATE CLEARANCE BETWEEN ADJACENT CONDUIT BANKS AND PIPES.
3. CORRIDORS FOR VALVE POWER PANELBOARD BRANCH CIRCUITS ROUTED TO VALVE OPERATORS NOT SHOWN FOR CLARITY. FIELD ROUTE CONDUIT/WIRE.
4. FIELD VERIFY LOCATION OF EXISTING VERTICAL PIPE SUPPORTS/HANGERS. MINIMUM OF 2" SEPARATION REQUIRED BETWEEN SUPPORTS/HANGERS AND EDGE OF CONDUIT BANKS. ADJUST SIZE AND LOCATION OF CONDUIT BANKS AS REQUIRED.
5. SURFACE MOUNT CONDUIT/WIRE TO WALL. FIELD ROUTE AS REQUIRED TO AVOID CONFLICTS.
6. PROPOSED CONDUIT BANK TURNS UP AND PENETRATES SLAB IN ROUTE TO/FROM EQUIPMENT IN CONTROL ROOM ABOVE. COORDINATE PENETRATION WITH EQUIPMENT IN CONTROL ROOM AND ADJUST THE PENETRATION LOCATION AS REQUIRED.
7. CORE DRILL SLAB TO FACILITATE PENETRATIONS. REUSE EXISTING BLOCKOUTS WHERE POSSIBLE, ENLARGE AS NECESSARY, AND SEAL PER SPECIFICATIONS AND INSTALLATION DETAILS. ADJUST LOCATION OF PENETRATIONS AS NECESSARY TO AVOID STRUCTURAL BEAMS AND ALL OTHER CONFLICTS. COORDINATE WITH STRUCTURAL. TYPICAL FOR ALL CONDUIT/WIRE BANK SLAB PENETRATIONS.
8. SUSPEND PULLBOX FROM CEILING. FIELD VERIFY LOCATION OF ALL EXISTING PIPES, STRUCTURES, CONDUIT BANKS, ETC. COORDINATE FINAL LOCATION AND ELEVATION WITH PROPOSED DUCT BANK PENETRATION, OTHER EXISTING AND PROPOSED CONDUIT BANKS, PIPES, ETC. AND ADJUST LOCATION AND ELEVATION OF PULLBOX AS REQUIRED. SUSPEND FROM CEILING AT BOTTOM LAYER OF CONDUIT BANKS TO FACILITATE ACCESS TO BOTTOM DOOR OF ENCLOSURE. REFER TO PROPOSED CONDUIT CORRIDOR PLAN ON DRAWING NO. E-35 FOR ADDITIONAL REQUIREMENTS.
9. PROPOSED CONDUIT BANK TURNS DOWN ALONG PIPE GALLERY WALL IN ROUTE TO/FROM EQUIPMENT BELOW. FIELD ROUTE CONDUITS/WIRE TO DESTINATION. SURFACE MOUNT CONDUIT TO WALL.

KEY NOTES

10. NUMEROUS CONDUITS STUB UP INTO PROPOSED MOTOR CONTROL CENTERS AND TRANSFER SWITCHES. USE EXISTING BLOCKOUTS WHERE POSSIBLE. OTHERWISE, CORE DRILL SLAB TO FACILITATE PENETRATIONS. SEAL ALL PENETRATIONS PER DETAILS AND SPECIFICATIONS. REFER TO PROPOSED EQUIPMENT ELEVATIONS FOR LOCATION OF CONDUIT/WIRE DESTINATION. COORDINATE WITH MANUFACTURERS FOR AVAILABLE CONDUIT ENTRANCE AREAS AND INTERNAL DEVICE LAYOUTS. ADJUST LOCATION OF CONDUIT STUB UPS TO MINIMIZE USE OF BOTTOM WIREWAYS.
11. CONDUIT BANKS CROSSING BETWEEN EQUIPMENT OR TRANSITIONING BETWEEN CONDUIT BANKS MAY BE LOCATED IN SPACE BETWEEN STRUCTURAL CEILING BEAMS IF REQUIRED TO MAINTAIN ADEQUATE CLEARANCE BETWEEN ADJACENT CONDUIT BANKS AND PIPES.

KEY NOTES

12. PULLBOX DEDICATED TO SERVICE CONDUITS/WIRE TO/FROM MOTOR CONTROL CENTER. EXISTING CONDUITS AT WALL BEYOND PROPOSED PULLBOX PENETRATE WALL AND CONTINUE TO SERVICE TRANSFORMER AT THIS APPROXIMATE LOCATION. CONNECT PROPOSED CONDUITS TO EXISTING CONDUITS AT WALL AND EXTEND TO PROPOSED PULLBOX. CONDUITS/WIRE CONTINUE TO MOTOR CONTROL CENTER "FB1-MCC-01A" OR "FB1-MCC-01B" AS APPLICABLE. FURNISH AND INSTALL PROPOSED CONDUCTORS IN EXISTING AND PROPOSED CONDUITS BETWEEN SERVICE TRANSFORMER AND PROPOSED MOTOR CONTROL CENTER AND MAKE ALL FINAL CONNECTIONS.
13. EXISTING CONDUIT PENETRATES WALL AND CONTINUES TO EMERGENCY GENERATOR AT THIS APPROXIMATE LOCATION. CONNECT PROPOSED CONDUITS TO EXISTING CONDUITS AT WALL AND EXTEND TO PROPOSED AUTOMATIC TRANSFER SWITCH "FB1-ATS-MCCNPW2". FURNISH AND INSTALL PROPOSED CONDUCTORS IN EXISTING AND PROPOSED CONDUITS BETWEEN EMERGENCY GENERATOR AND PROPOSED AUTOMATIC TRANSFER SWITCH AND MAKE ALL FINAL CONNECTIONS.

KEY NOTES

14. PROPOSED CONDUIT BANK TURNS UP AND PENETRATES CEILING SLAB TO BUILDING EXTERIOR IN ROUTE TO/FROM PROPOSED EMERGENCY GENERATOR DISCONNECT. CORE DRILL SLAB AND SEAL PER DETAILS AND SPECIFICATIONS. COORDINATE WITH OWNER FOR FINAL LOCATION.
15. SURFACE MOUNT CONDUIT BANK TO VERTICAL CONDUIT SUPPORT CHANNELS TO/FROM CEILING SPACE CORRIDOR, SIMILAR TO CONDUIT MOUNTING SHOWN ON DETAIL 2 ON DRAWING NO. E-52. CONDUIT BANK CONTINUES TO BACKWASH PUMP HIGH VOLTAGE TERMINATION ENCLOSURE AND CONTROL PANEL. DO NOT OBSTRUCT AREA BELOW ACCESS HATCH.
16. SUSPEND PULLBOX AND CONDUITS FROM CEILING AS HIGH AS POSSIBLE TO FACILITATE INSTALLATION PRIOR TO "FB1-MCC-01A" SERVICE CONDUITS.
17. SUSPEND FROM CEILING AT AN ELEVATION BELOW "FB1-MCC-01B" SERVICE CONDUITS.

This document, and the designs incorporated herein, is an instrument of professional service that has been developed, designed and prepared by Harutunian Engineering, Inc., and is not to be used, in whole or in part, for any other project without giving written notice to Harutunian Engineering, Inc.

NO.	DR	CK	DATE	DESCRIPTION

REVISIONS

BLACK & VEATCH
Building a world of difference.
Black & Veatch Corporation
Registration No. F-653
Austin, Texas

HARUTUNIAN ENGINEERING, INC.
305 E Huntland Dr., Ste 500; Austin, TX 78752
TBPE Firm Registration No. F-2408

STATE OF TEXAS
K. A. HARUTUNIAN
REGISTERED PROFESSIONAL ENGINEER
4/4/2014

Austin WATER
Walnut Creek WWTP - Tertiary Filter Rehabilitation Project
CIP ID No. 3023.025

ELECTRICAL
FB1/FB2 ELECTRICAL CONDUIT CORRIDORS SECTIONS - RENOVATION (SHEET 2 OF 2)

DESIGNED BY:	HEI
DRAWN BY:	HEI
REVIEWED BY:	HEI
APPROVED BY:	HEI
PROJECT NO.:	168622
DATE:	4/4/2014
SCALE:	AS SHOWN

REVISION:

DISCIPLINE NO.
E-37

DWG. NO.
SHEET 149 OF 273

CONDUIT BANK SECTION DIMENSION TABLE

LEGEND:

NOTE: DIMENSIONS SHOWN ON TABLE ARE MAXIMUM DIMENSIONS IN INCHES.

TYPICAL CONDUIT BANK SECTION

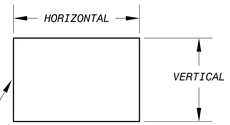

SECTION IDENTIFIER	HORIZONTAL (INCHES)	VERTICAL (INCHES)	DRAWING NO.	CONDUIT IDENTIFIERS			
A	18	12	E-35	FB2-CPP2-10	FB2-CPP2-18	FB2-VPP5-P	FB2-VPP6-P
B	18	12	E-35	FB1-CPVP-P FB2-ATS2-NF1 FB2-TLB-P	FB1-VPPO-P FB2-CPP2-10	FB1-VPP2-P FB2-CPP2-18	FB2-ATS2-EF1 FB2-CPP2-2
C	24	12	E-35	FB1-CPP1-17 FB2-ATS2-EF1	FB1-CPP1-27,29 FB2-ATS2-NF1	FB1-CPVP-P FB2-XFMRCPP2-IG	FB1-VPPO-P FB2-XFMRCPP2-P
D	15	5	E-35	FB1-CPP1-10	FB1-HTR1-P	FB1-SF1-P	
E	18	5	E-35	FB2-CPP2-17	FB2-CPSP-P	FB2-CU2-P	
F	18	12	E-35	FB2-AH2-P FB2-CU2-P	FB2-CPP2-17 FB2-HTR2-P	FB2-CPP2-9 FB2-SF2-P	FB2-CPSP-P
G	24	12	E-35	BB-MPC1-P FB2-ATS1-NF1 FB2-HTR2-P	FB1-TLA-P FB2-CPP2-17 FB2-SF2-P	FB2-AH2-P FB2-CPP2-9 FB2-T3-P	FB2-ATS1-EF1 FB2-CU2-P FB2-VPP1-P
H	30	12	E-35	BB-MPC1-P FB1-BWP2-SH FB2-CPP2-38,40,42	FB1-BWP1-P FB2-AH2-P FB2-CU2-P	FB1-BWP1-SH FB2-ATS1-EF1 FB2-HTR2-P	FB1-BWP2-P FB2-ATS1-NF1 FB2-SF2-P
I	16	7	E-35	FB1-BWP1-P	FB1-BWP2-P		
J	12	5	E-35	FB1-BWP1-SH	FB1-BWP2-SH		
K	36	24	E-35	BB-BL1-P BB-CPBL1-P BB-TW1-G	BB-BL1-SH BB-CPBL2-P BB-TW2-G	BB-BL2-P BB-MPC1-P	BB-BL2-SH BB-SPARE
L	30	24	E-35	BB-BL1-P BB-CPBL1-P BB-TW2-G FB1-NP1-SH FB1-NP3-SH	BB-BL1-SH BB-CPBL2-P FB1-DSGENB-F1 FB1-NP2-P FB1-STR001-P	BB-BL2-P BB-MPC1-P FB1-DSGENB-F2 FB1-NP2-SH	BB-BL2-SH BB-TW1-G FB1-NP1-P FB1-NP3-P
M	7	24	E-35	FB1-BWP1-SH	FB1-BWP2-P	FB1-BWP2-SH	FB1-CPP1-20
N	18	12	E-35	FB1-NP1-P FB1-NP3-P	FB1-NP1-SH FB1-NP3-SH	FB1-NP2-P FB1-STR001-P	FB1-NP2-SH
O	36	24	E-35	BB-BL1-P BB-CPBL1-P BB-TW2-G FB1-BWP2-P FB1-DSGENB-F1	BB-BL1-SH BB-CPBL2-P FB1-AH1-P FB1-BWP2-SH FB1-DSGENB-F2	BB-BL2-P BB-MPC1-P FB1-BWP1-P FB1-CPP1-18 FB1-VPPO-2,4,6	BB-BL2-SH BB-TW1-G FB1-BWP1-SH FB1-CPP1-20
P	42	24	E-35	FB1-ATSNPW2-EF1 FB1-CU1-P FB1-MCC1A-F2 FB1-MCC1B-F3	FB1-CPP1-26,28 FB1-DSGENA-F1 FB1-MCC1A-F3 FB1-SP1-P	FB1-CPP1-30,32,34 FB1-DSGENA-F2 FB1-MCC1B-F1 FB1-SP2-P	FB1-CPVP-P FB1-MCC1A-F1 FB1-MCC1B-F2 FB1-VPPO-8,10,12
Q (1)	VARIES	VARIES	E-35	BB-BL1-P BB-CPBL1-P BB-TW2-G FB1-ATSNPW1-NF1 FB1-ATSNPW2-NF2 FB1-BWP2-SH FB1-CPP1-18 FB1-CPP1-27,29 FB1-CU1-P FB1-DSGENB-F2 FB1-MCC1A-F3 FB1-MCC1B-F2 FB1-MCCNPW-F1 FB1-SF1-P FB1-VPPO-P FB2-ATS2-EF1 FB2-SF2-P SITE-WRSSITE-P	BB-BL1-SH BB-CPBL2-P FB1-AH1-P FB1-ATSNPW1-NF2 FB1-BWP1-P FB1-CPP1-1 FB1-CPP1-2 FB1-CPP1-30,32,34 FB1-DSGENA-F1 FB1-HTR1-P FB1-MCC1A-G1 FB1-MCC1B-F3 FB1-MCCNPW-F2 FB1-SP1-P FB2-AH2-P FB2-ATS2-NF1 FB2-XFMRCPP2-IG	BB-BL2-P BB-MPC1-P FB1-ATSNPW1-EF1 FB1-ATSNPW2-EF1 FB1-BWP1-SH FB1-CPP1-10 FB1-CPP1-20 FB1-CPP1-9 FB1-DSGENA-F2 FB1-MCC1A-F1 FB1-MCC1A-G2 FB1-MCC1B-G1 FB1-MCCNPW-G1 FB1-SP2-P FB2-ATS1-EF1 FB2-CU2-P FB2-XFMRCPP2-P	BB-BL2-SH BB-TW1-G FB1-ATSNPW1-EF2 FB1-ATSNPW2-NF1 FB1-BWP2-P FB1-CPP1-17 FB1-CPP1-26,28 FB1-CPVP-P FB1-DSGENB-F1 FB1-MCC1A-F2 FB1-MCC1B-F1 FB1-MCC1B-G2 FB1-MCCNPW-G2 FB1-VPPO-8,10,12 FB2-ATS1-NF1 FB2-HTR2-P SITE-TRAILER-P
R (2)	FIELD VERIFY	FIELD VERIFY	E-35	EXISTING CABLES			
S	24	12	E-35	FB1-CPVP-P FB2-ATS2-NF1	FB1-VPPO-P FB2-TLB-P	FB1-VPP2-P FB2-XFMRCPP2-IG	FB2-ATS2-EF1 FB2-XFMRCPP2-P
T	24	5	E-35	FB2-CPP2-1	FB2-CPP2-17	FB2-CPP2-38,40,42	FB2-CPP2-9

CONDUIT BANK SECTION DIMENSION TABLE

LEGEND:

NOTE: DIMENSIONS SHOWN ON TABLE ARE MAXIMUM DIMENSIONS IN INCHES.

TYPICAL CONDUIT BANK SECTION

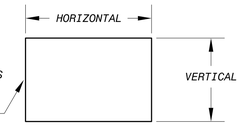

SECTION IDENTIFIER	HORIZONTAL (INCHES)	VERTICAL (INCHES)	DRAWING NO.	CONDUIT IDENTIFIERS			
BA	6	18	E-41	BB-MPC1-1,3 BB-MPC1-5,7,10	BB-MPC1-11,13 BB-MPC1-6,8	BB-MPC1-12,14 BB-MPC1-9	BB-MPC1-2,4
BB	6	18	E-41	BB-MPC1-1,3	BB-MPC1-2,4	BB-MPC1-5,7,10	BB-MPC1-9
CA	16	7	E-45	FB1-BWP1-P	FB1-BWP2-P		
CB	12	5	E-45	FB1-BWP1-SH	FB1-BWP2-SH		
DA	30	8	E-35	FB1/WRI-SP1	FB1/WRI-SP2	FB1-BWP1-P2	FB1-BWP2-P
DB	16	6	E-35	FB1/WRI-SP3	FB1/WRI-SP4	FB1-BWP1-SH2	FB1-BWP2-SH2
DC	30	8	E-35	DB-FB/9A-LV1	DB-FB/9A-LV2	DB-FB/9A-LV3	DB-FB/9A-SP

KEY NOTES

(1) THIS CONDUIT BANK CORRIDOR SECTION HAS BEEN INCLUDED IN TABLE AND ON PLANS TO INDICATE WHICH CONDUITS ARE PASSING THROUGH OR STUBBING UP INTO THE PROPOSED MOTOR CONTROL CENTERS AND AUTOMATIC TRANSFER SWITCHES IN THE VICINITY. CONDUIT BANK DIMENSIONS WILL VARY THROUGHOUT THE AREA UNDERNEATH THE EQUIPMENT.

(2) FIELD VERIFY SIZE, QUANTITY, AND LAYOUT OF EXISTING CONDUITS/WIRE IN THE PIPE GALLERY LEVEL. SOURCE AND DESTINATION OF CONDUITS IS UNKNOWN. CONNECT PROPOSED CONDUITS TO THE EXISTING CONDUITS AND EXTEND TO PROPOSED JUNCTION BOX. REFER TO PLAN DRAWING FOR ADDITIONAL REQUIREMENTS.

This document, and the designs incorporated herein, is an instrument of professional service that has been developed, designed and prepared by Harutunian Engineering, Inc., and is not to be used, in whole or in part, for any other project without giving written notice to Harutunian Engineering, Inc.

NO.	DR	CK	DATE	DESCRIPTION

REVISIONS

BLACK & VEATCH Building a world of difference.
Black & Veatch Corporation
Registration No. F-253
Austin, Texas

HARUTUNIAN ENGINEERING, INC.
305 E Hunland Dr., Ste 500; Austin, TX 78752
TBPE Firm Registration No. F-2408

STATE OF TEXAS
K. A. HARUTUNIAN
86185
REGISTERED PROFESSIONAL ENGINEER
4/4/2014

Austin WATER
Walnut Creek WWTP - Tertiary Filter Rehabilitation Project
CIP ID No. 3023.025

ELECTRICAL
FB1/FB2/BB ELECTRICAL CONDUIT CORRIDOR SECTION TABLE - RENOVATION

DESIGNED BY:	HEI
DRAWN BY:	HEI
REVIEWED BY:	HEI
APPROVED BY:	HEI
PROJECT NO.:	168622
DATE:	4/4/2014
SCALE:	AS SHOWN

REVISION:

DISCIPLINE NO.
E-38

DWG. NO.
SHEET 150 OF 273

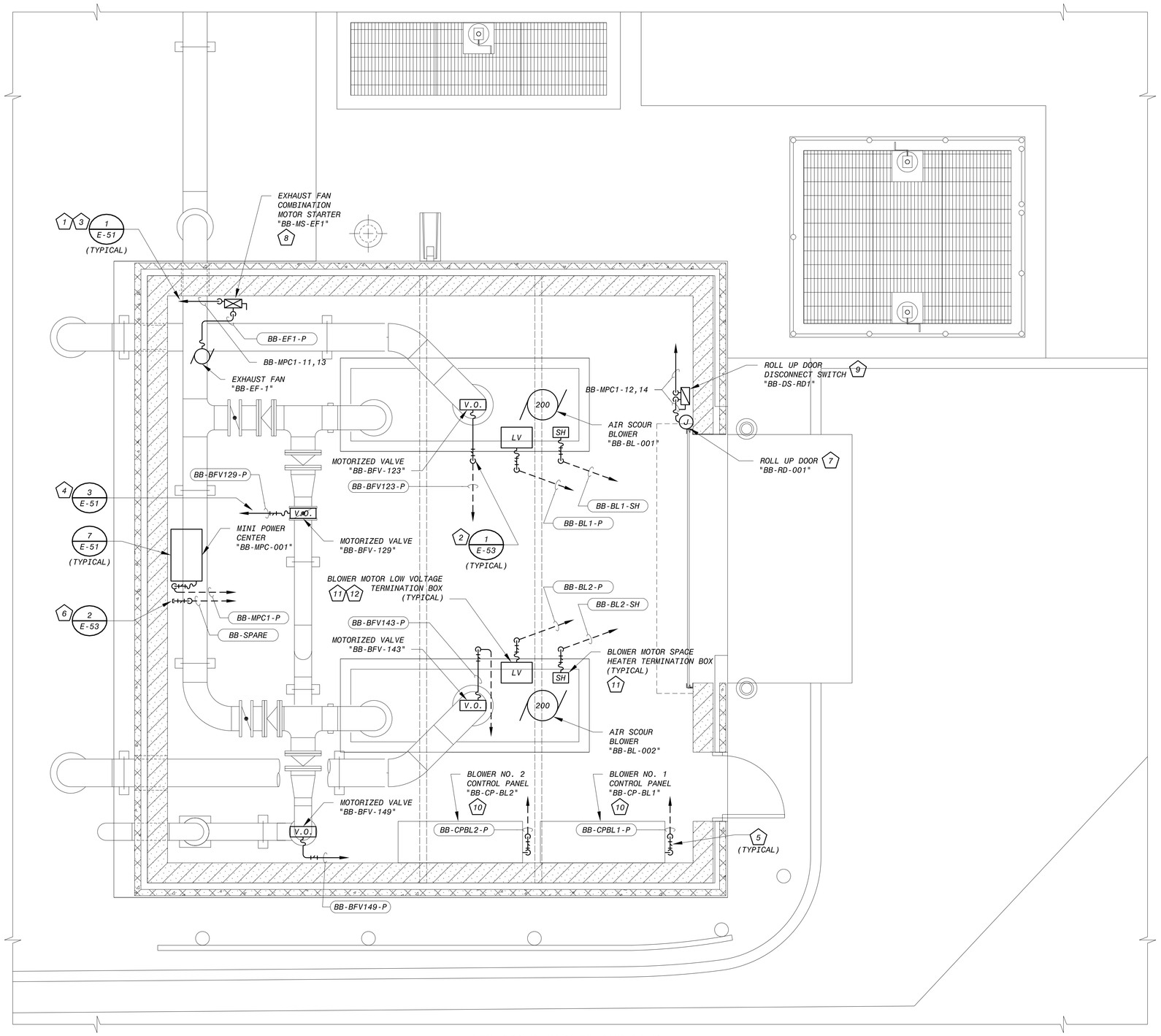

AIR SCOUR BLOWER BUILDING ELECTRICAL POWER PLAN - PROPOSED

SCALE: 3/8" = 1'0"

KEY NOTES

1. CONDUIT/WIRE CONTINUES IN EXPOSED CONDUIT BANK. REFER TO CONDUIT CORRIDOR DRAWING FOR CONTINUATION. FIELD ROUTE CONDUIT/WIRE AS REQUIRED. TYPICAL FOR ALL SOLID HOMERUNS.
2. CONDUIT/WIRE PENETRATES FLOOR SLAB AND CONTINUES IN CONCRETE ENCASED UNDERGROUND DUCT BANK BELOW SLAB. COORDINATE LOCATION OF PENETRATION WITH EQUIPMENT MANUFACTURER AND ADJUST FINAL PENETRATION LOCATION AS REQUIRED. REFER TO CONDUIT CORRIDOR DRAWING FOR CONTINUATION. FIELD ROUTE CONDUIT/WIRE AS REQUIRED. TYPICAL FOR ALL DASHED HOMERUNS.
3. SURFACE MOUNT CONDUIT/WIRE TO WALL. TYPICAL FOR ALL EXPOSED CONDUIT UNLESS NOTED OTHERWISE.
4. SUSPEND CONDUIT/WIRE FROM CEILING.
5. FURNISH AND INSTALL SEALING FITTING. FITTING SHOWN HORIZONTALLY IN PLAN VIEW FOR CLARITY BUT SHALL BE INSTALLED IN VERTICAL SECTION OF CONDUIT ABOVE FLOOR.
6. STUB UP CONDUIT THROUGH FLOOR SLAB AND CAP FOR FUTURE USE. CAP SHOWN HORIZONTALLY FOR CLARITY.
7. COORDINATE LOCATION OF CONNECTION TO EQUIPMENT STARTER/CONTROL PANEL WITH EQUIPMENT MANUFACTURER. THE PROPOSED CONTROL PANEL IS FURNISHED BY THE EQUIPMENT MANUFACTURER. SIZE, FURNISH, AND INSTALL ALL CONDUIT/WIRE AND ALL NECESSARY RELATED HARDWARE TO INTERCONNECT ALL EQUIPMENT PACKAGED SYSTEM SUB-COMPONENTS WITH THE PROPOSED CONTROL PANEL. INSTALL THE CONTROL PANEL, AND MAKE ALL FINAL CONNECTIONS PER THE RECOMMENDATIONS AND WIRING DIAGRAMS PROVIDED BY THE EQUIPMENT MANUFACTURER. ALSO ADHERE TO THE REQUIREMENTS OF THE NEC AND THE SPECIFICATIONS.
8. FURNISH AND INSTALL COMBINATION MOTOR STARTER SURFACE MOUNTED TO WALL +42" ABOVE FINISHED FLOOR. REFER TO ONE-LINE DRAWINGS FOR ADDITIONAL REQUIREMENTS.
9. FURNISH AND INSTALL 2P-30A NON-FUSED DISCONNECT SWITCH. SURFACE MOUNT PROPOSED DISCONNECT SWITCH TO WALL WITH CENTER OF OPERATING HANDLE +48" ABOVE FINISHED FLOOR. COORDINATE EXACT LOCATION WITH EQUIPMENT MANUFACTURER.
10. THE PROPOSED CONTROL PANEL IS FURNISHED BY THE EQUIPMENT MANUFACTURER. SIZE, FURNISH, AND INSTALL ALL CONDUIT/WIRE AND ALL NECESSARY RELATED HARDWARE TO INTERCONNECT ALL EQUIPMENT PACKAGED SYSTEM SUB-COMPONENTS WITH THE PROPOSED CONTROL PANEL, FURNISH AND INSTALL SUITABLE SUPPORT CHANNELS/ CONCRETE EQUIPMENT PAD AS REQUIRED TO SUPPORT THE CONTROL PANEL, INSTALL THE CONTROL PANEL, AND MAKE ALL FINAL ELECTRICAL POWER CONNECTIONS PER THE RECOMMENDATIONS AND WIRING DIAGRAMS PROVIDED BY THE EQUIPMENT MANUFACTURER. ALSO ADHERE TO THE REQUIREMENTS OF THE NATIONAL ELECTRICAL CODE (N.E.C.) AND THE SPECIFICATIONS. SHOULD ADDITIONAL ELECTRICAL POWER FIELD INTERCONNECT WIRING BE REQUIRED TO FACILITATE THE FUNCTIONAL OPERATION OF THE PACKAGED CONTROL SYSTEM, THE CONTRACTOR SHALL SIZE, FURNISH, AND INSTALL THE ADDITIONAL CONDUIT/ WIRE, FIELD ROUTE THE PROPOSED CONDUIT/WIRE PER THE SPECIFICATIONS, ADD ALL NECESSARY TERMINAL BLOCKS, ETC., COMPLETE WITH ALL NECESSARY WIRING TO FACILITATE A COMPLETE AND FUNCTIONAL INSTALLATION, AND MAKE ALL FINAL CONNECTIONS PER THE MANUFACTURER'S RECOMMENDATIONS, THE MANUFACTURER'S WIRING DIAGRAMS, AND PERFORM ALL ASPECTS OF THE WORK TO THE SATISFACTION OF THE OWNER AT NO ADDITIONAL COST TO THE OWNER.
11. LOCATION SHOWN IS APPROXIMATE.
12. MOTOR TERMINATION ENCLOSURE FURNISHED BY THE PUMP MOTOR MANUFACTURER COMPLETE WITH POWER FACTOR CORRECTION CAPACITORS MOUNTED INSIDE THE ENCLOSURE. REFER TO ONE LINE DRAWINGS FOR ADDITIONAL REQUIREMENTS.

12" 6" 0 1' 2' 3' 4' 5' 6' 7'

3/8"=1'-0"

This document, and the designs incorporated herein, is an instrument of professional service that has been developed, designed and prepared by Harutunian Engineering, Inc., and is not to be used, in whole or in part, for any other project without giving written notice to Harutunian Engineering, Inc.

NO.	DR	CK	DATE	DESCRIPTION

REVISIONS

BLACK & VEATCH
Building a world of difference.
Black & Veatch Corporation
Registration No. F-253
Austin, Texas

HARUTUNIAN ENGINEERING, INC.
305 E Hunland Dr., Ste 500, Austin, TX 78752
TBPE Firm Registration No. F-2408

STATE OF TEXAS
K. A. HARUTUNIAN
59101
REGISTERED PROFESSIONAL ENGINEER
4/4/2014

Austin WATER

Walnut Creek WWTP - Tertiary Filter Rehabilitation Project

CIP ID No. 3023.025

ELECTRICAL
BLOWER BUILDING
ELECTRICAL POWER PLAN

DESIGNED BY:	HEI
DRAWN BY:	HEI
REVIEWED BY:	HEI
APPROVED BY:	HEI
PROJECT NO.:	168622
DATE:	4/4/2014
SCALE:	AS SHOWN

REVISION:

DISCIPLINE NO.
E-39

DWG. NO.
SHEET 151 OF 273

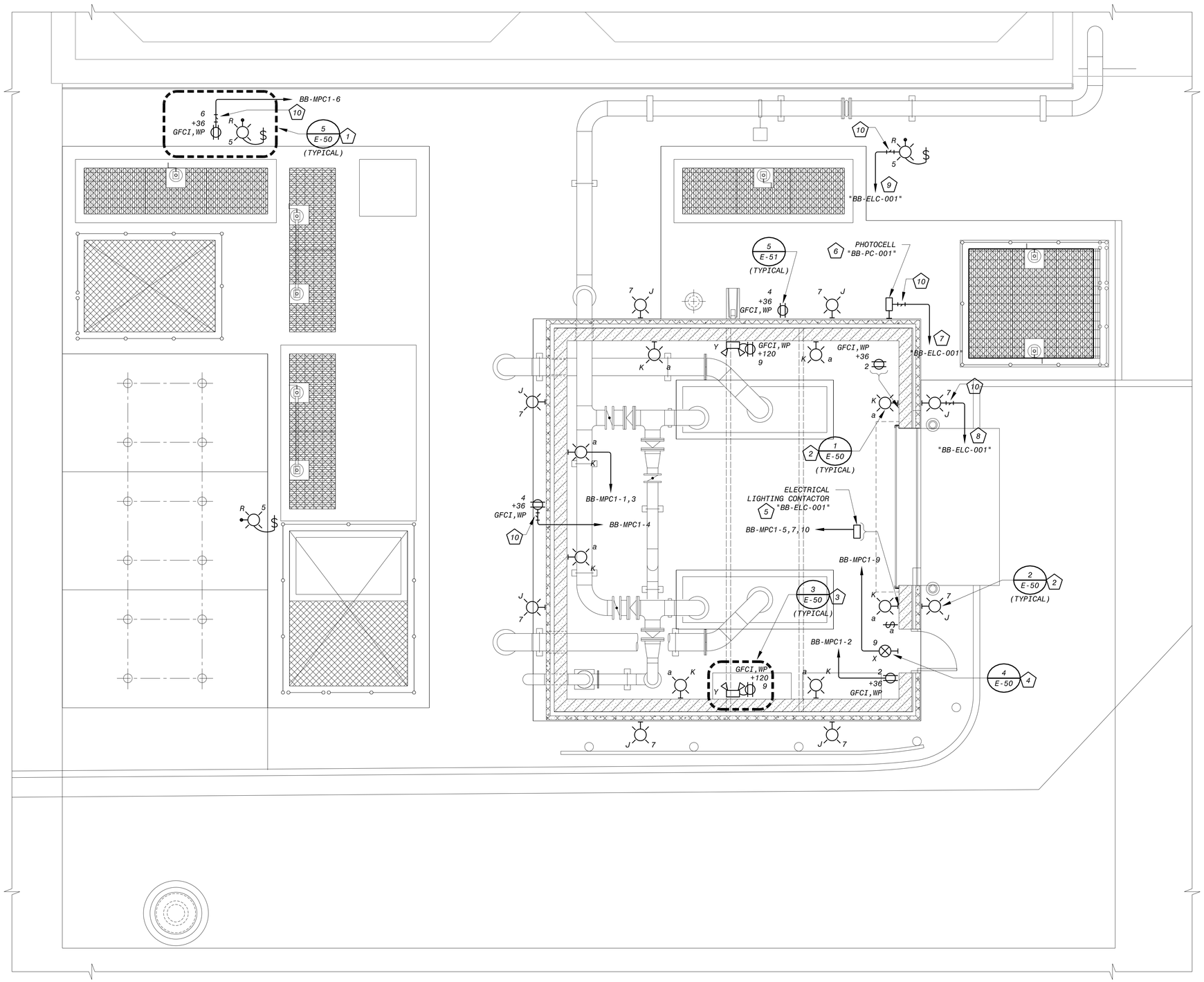

BLOWER BUILDING
LIGHTING AND AUXILIARY PLAN - PROPOSED
SCALE: 1/4" = 1'0"

KEY NOTES

1. FURNISH AND INSTALL POLE-MOUNTED LIGHT FIXTURE, SWITCH, AND RECEPTACLE AS APPLICABLE, WITH DEDICATED FOUNDATION. SWITCH AND RECEPTACLE SHOWN APART FROM POLE FOR CLARITY. INSTALL FIXTURE AT +10'-0" ABOVE FINISHED GRADE TO BOTTOM OF FIXTURE. TYPICAL FOR ALL TYPE "R" POLE-MOUNTED FIXTURES.
2. SURFACE MOUNT FIXTURE TO WALL. MOUNT FIXTURE AT +10'-0" ABOVE FINISHED FLOOR/GRADE TO BOTTOM OF FIXTURE UNLESS NOTED OTHERWISE. TYPICAL FOR ALL TYPE "J" AND "K" FIXTURES.
3. FURNISH AND INSTALL EMERGENCY LIGHT FIXTURE WITH DEDICATED CONVENIENCE RECEPTACLE. SURFACE MOUNT FIXTURE TO WALL AT +96" ABOVE FINISHED FLOOR TO BOTTOM OF FIXTURE. TYPICAL FOR ALL TYPE "Y" FIXTURES.
4. SURFACE MOUNT EMERGENCY EXIT LIGHT FIXTURE TO WALL ABOVE DOOR.
5. FURNISH AND INSTALL ELECTRICAL LIGHTING CONTACTOR DEDICATED TO SWITCHING OF TYPE "J" AND TYPE "R" FIXTURES. SHOWN AWAY FROM WALL FOR CLARITY. SURFACE MOUNT TO WALL BELOW FIXTURE. REFER TO DRAWING NO. E-34 FOR LOCATION OF ADDITIONAL TYPE "R" FIXTURES CONTROLLED BY THIS CONTACTOR.
6. FURNISH AND INSTALL PHOTOCELL IN NEMA 4X WEATHERPROOF OUTLET BOX WITH GASKETED COVERPLATE. MOUNT TO EXTERIOR OF BLOWER BUILDING NEAR ROOF. ORIENT AND MAKE ALL FINAL CONNECTIONS PER MANUFACTURER'S INSTRUCTIONS.
7. CONDUIT PENETRATES WALL IN ROUTE TO/FROM ELECTRICAL LIGHTING CONTACTOR "BB-ELC-001" INSIDE BLOWER BUILDING. CORE DRILL WALL AND SEAL PER DETAILS AND SPECIFICATIONS. CONDUIT CONTAINS 3 #10 AWG WIRES. MINIMIZE EXPOSED CONDUIT ON PERIMETER OF BUILDING. CONNECT PHOTOCELL WIRING TO LIGHTING CONTACTOR SUCH THAT PHOTOCELL CONTROLS OPERATION OF LIGHTS WHEN "HAND-OFF-AUTO" SWITCH ON FACE OF LIGHTING CONTACTOR IS IN "AUTO" POSITION.
8. ALL TYPE "J" FIXTURES ON PERIMETER OF BLOWER BUILDING ARE ON THE SAME CIRCUIT, BB-MPC1-7, AND ARE CONTROLLED BY ELECTRICAL LIGHTING CONTACTOR "BB-ELC-001".
9. ALL TYPE "R" POLE-MOUNTED FIXTURES ARE ON THE SAME CIRCUIT, BB-MPC1-5, AND ARE CONTROLLED BY ELECTRICAL LIGHTING CONTACTOR "BB-ELC-001" LOCATED IN PROPOSED BLOWER BUILDING. REFER TO DRAWING NO. E-34 FOR ADDITIONAL TYPE "R" FIXTURES ON THIS CIRCUIT. POLE-MOUNTED SWITCH SHALL BE WIRED SUCH THAT FIXTURE CAN BE TURNED OFF, OVERRIDING THE ELECTRICAL LIGHTING CONTACTOR.
10. FURNISH AND INSTALL CONDUIT SEALING FITTING ON FINAL CONDUIT/WIRE HOMERUN TO BLOWER BUILDING. SEAL SHOWN ADJACENT TO RECEPTACLE/FIXTURE FOR REPRESENTATION ONLY. LOCATE SEAL AT BLOWER BUILDING BEFORE ENTRANCE INTO INTERIOR OF BUILDING.

This document, and the designs incorporated herein, is an instrument of professional service that has been developed, designed and prepared by Harutunian Engineering, Inc., and is not to be used, in whole or in part, for any other project without giving written notice to Harutunian Engineering, Inc.

NO.	DR	CK	DATE	DESCRIPTION

REVISIONS

BLACK & VEATCH
Building a world of difference.
Black & Veatch Corporation
Registration No. F-253
Austin, Texas

HARUTUNIAN ENGINEERING, INC.
305 E Hunland Dr., Ste 500, Austin, TX 78752
TBPE Firm Registration No. F-2408

STATE OF TEXAS
K. A. HARUTUNIAN
REGISTERED PROFESSIONAL ENGINEER
4/4/2014

Austin WATER
Walnut Creek WWTP - Tertiary Filter Rehabilitation Project
CIP ID No. 3023.025

ELECTRICAL
BLOWER BUILDING
LIGHTING AND AUXILIARY PLAN

4' 2' 0 4' 8'
1/4"=1'-0"

DESIGNED BY:	HEI
DRAWN BY:	HEI
REVIEWED BY:	HEI
APPROVED BY:	HEI
PROJECT NO.:	168622
DATE:	4/4/2014
SCALE:	AS SHOWN
REVISION:	
DISCIPLINE NO.	E-40
DWG. NO.	SHEET 152 OF 273

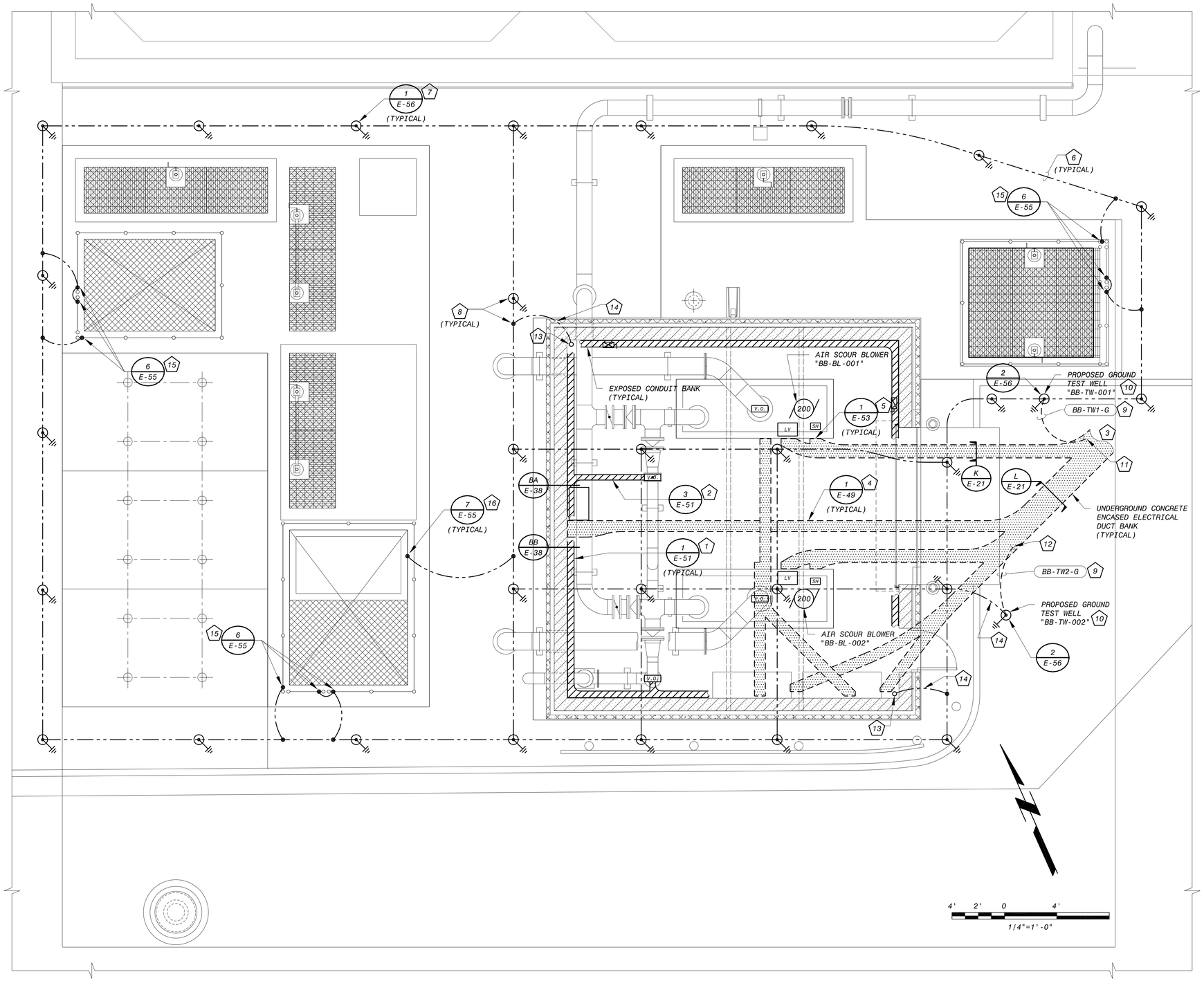

AIR SCOUR BLOWER BUILDING
CONDUIT CORRIDOR AND GROUNDING PLAN - PROPOSED

SCALE: 1/4" = 1'0"

KEY NOTES

1. SURFACE MOUNT CONDUIT BANK TO WALL WITH BOTTOM OF CONDUIT BANK AT 11'-0" ABOVE FINISHED FLOOR.
2. SUSPEND CONDUIT BANK FROM CEILING AT 11'-0" ABOVE FINISHED FLOOR.
3. UNDERGROUND CONCRETE ENCASED DUCT BANK CONTINUES TO/FROM FILTER BUILDING. REFER TO SITE PLAN ON DRAWING NO. E-20 FOR CONTINUATION.
4. UNDERGROUND CONCRETE ENCASED DUCT BANK LOCATED BELOW BLOWER BUILDING SLAB.
5. UNDERGROUND CONCRETE ENCASED DUCT BANK TURNS UP AND PENETRATES FLOOR SLAB. REFER TO POWER PLAN FOR CONTINUATION OF CONDUITS/WIRE.
6. 1 - 250kCMIL BARE GROUNDING CONDUCTOR DIRECT BURIED AT MINIMAL DEPTH OF 30 INCHES BELOW FINISHED GRADE. TYPICAL BETWEEN ALL PERIMETER GROUNDING ELECTRODES.
7. FURNISH AND INSTALL GROUND ELECTRODE PLATE PER DETAILS ON DRAWING NO. E-56. THE LAYOUT/PLACEMENT OF GROUND ELECTRODES IS SHOWN FOR REPRESENTATION ONLY. CONTRACTOR SHALL COORDINATE FINAL GROUNDING SYSTEM LAYOUT WITH ALL OTHER TRADES TO AVOID CONFLICTS. MAINTAIN A MINIMUM SPACING OF 10'-0" AND A MAXIMUM SPACING OF 15'-0" CENTER TO CENTER BETWEEN ALL GROUNDING ELECTRODES. MINIMUM BURIAL DEPTH SHALL BE 30 INCHES BELOW BLOWER BUILDING SLAB/FINISHED GRADE AS APPLICABLE. FURNISH AND INSTALL ELECTRODES AT INCREASED DEPTH AS REQUIRED TO AVOID CONFLICTS.
8. MAKE ALL CONNECTIONS TO GROUNDING ELECTRODES AND GROUNDING GRID BY MEANS OF EXOTHERMIC WELD EXCEPT WHERE SHOWN OTHERWISE.
9. 1 - 250kCMIL INSULATED GROUNDING CONDUCTOR IN 1-1/2" PVC CONDUIT, DIRECT BURIED AT MINIMUM 30" BELOW FINISHED GRADE. ALTHOUGH REQUIRED OTHERWISE BY THE SPECIFICATIONS, DIRECT BURY CONDUIT WITHOUT DUCT BANK CONCRETE ENCASEMENT.
10. FURNISH AND INSTALL TEST WELL PER DETAILS ON DRAWING NO. E-56. LOCATION IS APPROXIMATE. ADJUST FINAL LOCATION AS NECESSARY TO AVOID CONFLICTS. ATTACH GROUNDING CONDUCTOR FROM FILTER BUILDING TO TEST WELL BY MECHANICAL MEANS TO FACILITATE ISOLATION OF THE BLOWER BUILDING GROUND SYSTEM.
11. CONDUIT/WIRE CONTINUES IN DUCT BANK TO/FROM FILTER BUILDING. REFER TO SITE PLAN ON DRAWING NO. E-20 FOR CONTINUATION. INSIDE PIPE GALLERY LEVEL OF FILTER BUILDING, GROUNDING CONDUIT/WIRE CONTINUES TO/FROM PROPOSED MOTOR CONTROL CENTER "FB1-MCC-01A". CONDUIT/WIRE TURNS UP INTO BOTTOM OF MCC. TERMINATE GROUND WIRE TO MCC GROUND BUS.
12. CONDUIT/WIRE CONTINUES IN DUCT BANK TO/FROM FILTER BUILDING. REFER TO SITE PLAN ON DRAWING NO. E-20 FOR CONTINUATION. INSIDE PIPE GALLERY LEVEL OF FILTER BUILDING, GROUNDING CONDUIT/WIRE CONTINUES TO/FROM PROPOSED MOTOR CONTROL CENTER "FB1-MCC-01B". CONDUIT/WIRE TURNS UP INTO BOTTOM OF MCC. TERMINATE GROUND WIRE TO MCC GROUND BUS.
13. 1 - #1/0 AWG INSULATED GROUNDING CONDUCTOR IN 1-1/2" PVC CONDUIT, DIRECT BURIED AT MINIMUM 30" BELOW FINISHED GRADE. CONDUIT/WIRE TURNS UP THROUGH FLOOR SLAB IMMEDIATELY ADJACENT TO STRUCTURAL GRADE BEAM. CONDUIT/WIRE CONTINUES SURFACE MOUNTED TO WALL IN ROUTE TO CEILING SPACE OF BLOWER BUILDING. BOND GROUNDING CONDUCTOR TO STRUCTURAL STEEL AND ROOF DECKING PER DETAIL 3 ON DRAWING NO. E-56.
14. AT A LOCATION AT LEAST 18" FROM TURN UP INTO TEST WELL OR THROUGH BUILDING SLAB AS APPLICABLE, DIRECT BURIED GROUNDING CONDUCTOR FROM PERIMETER GROUNDING SYSTEM SHALL TRANSITION INTO DIRECT BURIED 1-1/2" PVC CONDUIT. ALTHOUGH REQUIRED OTHERWISE BY SPECIFICATIONS, DIRECT BURY CONDUIT WITHOUT CONCRETE ENCASEMENT.
15. GROUND ALL HANDRAILS PER DETAIL 6 ON DRAWING NO. E-55.
16. GROUND ALL CLEARWELL ROOF VENTILATION EQUIPMENT PER DETAIL 7 ON DRAWING NO. E-55.

This document, and the designs incorporated herein, is an instrument of professional service that has been developed, designed and prepared by Harutunian Engineering, Inc., and is not to be used, in whole or in part, for any other project without giving written notice to Harutunian Engineering, Inc.

NO.	DR	CK	DATE	DESCRIPTION

REVISIONS

BLACK & VEATCH
Building a world of difference.
Black & Veatch Corporation
Registration No. F-2565
Austin, Texas

HARUTUNIAN ENGINEERING, INC.
305 E Hunland Dr, Ste 500; Austin, TX 78752
TBPE Firm Registration No. F-2408

STATE OF TEXAS · K. A. HARUTUNIAN · 59981 · REGISTERED PROFESSIONAL ENGINEER
4/4/2014

AUSTIN WATER
Walnut Creek WWTP - Tertiary Filter Rehabilitation Project
CIP ID No. 3023.025

ELECTRICAL
BLOWER BUILDING
CONDUIT CORRIDOR AND GROUNDING PLAN

DESIGNED BY:	HEI
DRAWN BY:	HEI
REVIEWED BY:	HEI
APPROVED BY:	HEI
PROJECT NO.:	168622
DATE:	4/4/2014
SCALE:	AS SHOWN
REVISION:	
DISCIPLINE NO.	E-41
DWG. NO.	SHEET 153 OF 273

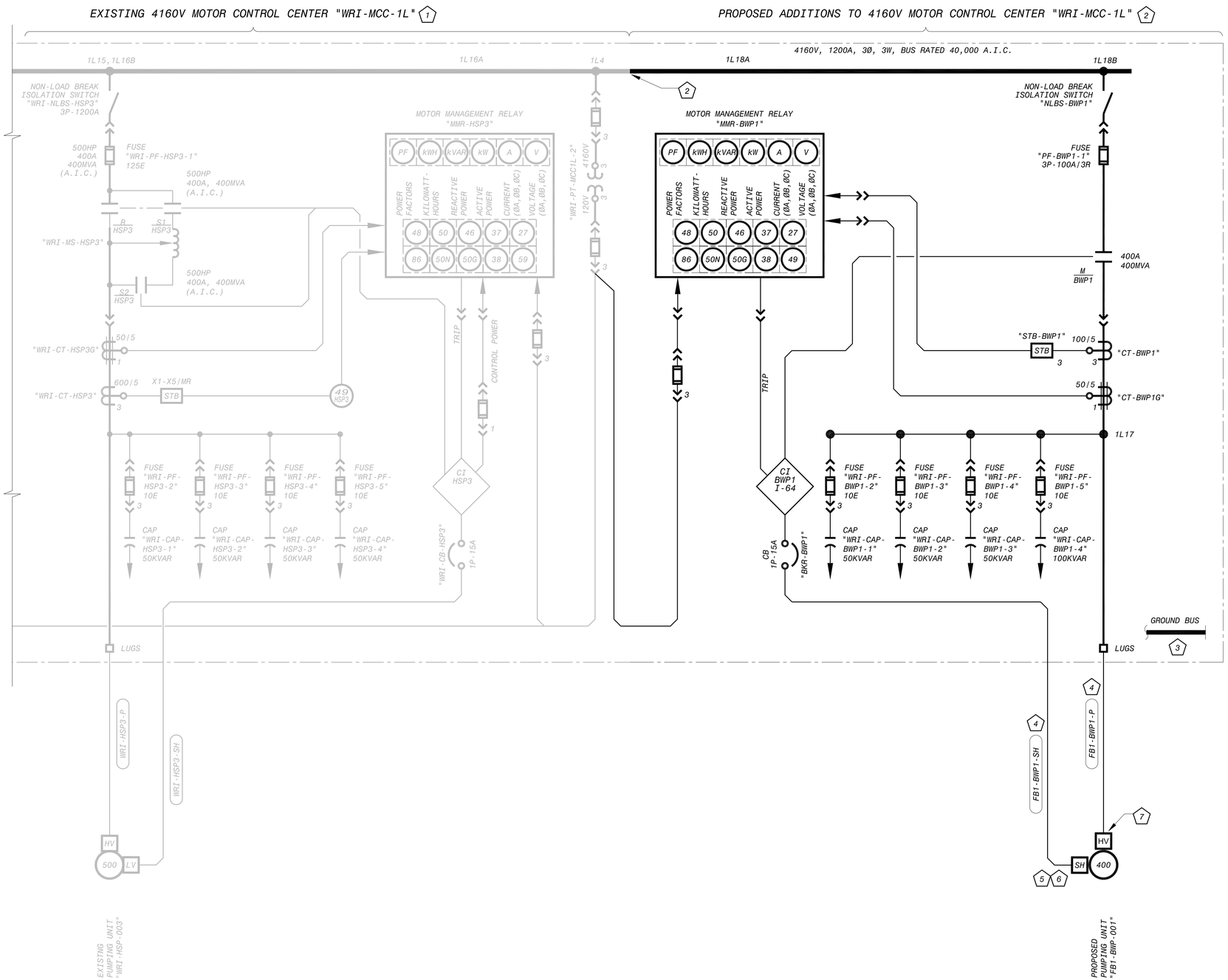

4160V MCC "WRI-MCC-1L"
ONE-LINE DIAGRAM - MODIFICATIONS (1 / E-68)
NO SCALE

KEY NOTES

1. THE EXISTING 4160V MOTOR CONTROL CENTER (MCC) TO REMAIN. THE EXISTING MCC WAS MANUFACTURED BY "CUTLER-HAMMER" (EATON) IN JANUARY 2001 AND HAS THE FOLLOWING ORDER/TRACKING NUMBERS:
   G.O.: MUX01769-001
   P.O.: 5665288788
2. FURNISH AND INSTALL PROPOSED MOTOR CONTROL CENTER STARTER, CLOSE-COUPLE TO EXISTING MOTOR CONTROL CENTER, FIELD VERIFY POINT OF CONNECTION TO EXISTING BUSING, POTENTIAL TRANSFORMER WIRING, ETC. AND MAKE ALL FINAL CONNECTIONS. THE PROPOSED MOTOR CONTROL CENTER SECTIONS SHALL LINE-UP WITH AND MATCH THE EXISTING MOTOR CONTROL CENTER. COORDINATE ALL REQUIREMENTS WITH THE EXISTING MOTOR CONTROL CENTER MANUFACTURER AND MAKE ALL FINAL CONNECTIONS PER THE MOTOR CONTROL CENTER MANUFACTURER'S RECOMMENDATIONS AND WIRING DIAGRAMS.
3. CONNECT PROPOSED GROUND BUS TO EXISTING GROUND BUS.
4. PROPOSED CONDUIT CHANGES TO LARGER SIZE IN SITE DUCT BANK BETWEEN PULLBOXES AT WRI ELECTRICAL BUILDING AND FILTER BUILDING. REFER TO SITE PLAN ON DRAWING NO. E-20.
5. NOT ALL REQUIREMENTS FOR TERMINATION OF SPACE HEATER CONDUIT/WIRING SHOWN HERE. REFER TO PIPE GALLERY LEVEL POWER PLAN ON DRAWING NO. E-33.
6. UTILIZE 2 PARALLEL SETS OF CONDUCTORS FOR SPACE HEATER. TERMINATE 4 NO. 12 AWG WIRES FROM SHIELDED MULTI-CONDUCTOR CABLE TO TERMINALS IN SPACE HEATER TERMINATION ENCLOSURE.
7. MOTOR HIGH VOLTAGE TERMINATION ENCLOSURE FURNISHED BY PUMP MOTOR MANUFACTURER. MOTOR MANUFACTURER SHALL SIZE THE ENCLOSURE. CONTRACTOR SHALL FULLY COORDINATE WITH MOTOR/PUMP MANUFACTURER, FURNISH AND INSTALL ALL INTERCONNECT CONDUIT/WIRE, FURNISH AND INSTALL SUITABLE SUPPORT CHANNEL ASSEMBLY TO SUPPORT HIGH VOLTAGE ENCLOSURE ASSEMBLY, INSTALL HIGH VOLTAGE ENCLOSURE ASSEMBLY, AND MAKE ALL FINAL CONNECTIONS PER RECOMMENDATIONS OF THE MOTOR/PUMP MANUFACTURER.

This document, and the designs incorporated herein, is an instrument of professional service that has been developed, designed and prepared by Harutunian Engineering, Inc., and is not to be used, in whole or in part, for any other project without giving written notice to Harutunian Engineering, Inc.

NO.	DR	CK	DATE	DESCRIPTION

REVISIONS

BLACK & VEATCH. Building a world of difference.
Black & Veatch Corporation
Registration No. F-2566
Austin, Texas

HARUTUNIAN ENGINEERING, INC.
305 E Hunland Dr, Ste 500; Austin, TX 78752
TBPE Firm Registration No. F-2408

STATE OF TEXAS
K. A. HARUTUNIAN
61918
REGISTERED PROFESSIONAL ENGINEER
4/4/2014

AUSTIN WATER

Walnut Creek WWTP - Tertiary Filter Rehabilitation Project
CIP ID No. 3023.025

ELECTRICAL
WRI 4160V ONE-LINE DIAGRAM
- MODIFICATIONS (SHEET 1 OF 2)

DESIGNED BY:	HEI
DRAWN BY:	HEI
REVIEWED BY:	HEI
APPROVED BY:	HEI
PROJECT NO.:	168622
DATE:	4/4/2014
SCALE:	AS SHOWN
REVISION:	

DISCIPLINE NO.
E-42
DWG. NO.
SHEET 154 OF 273

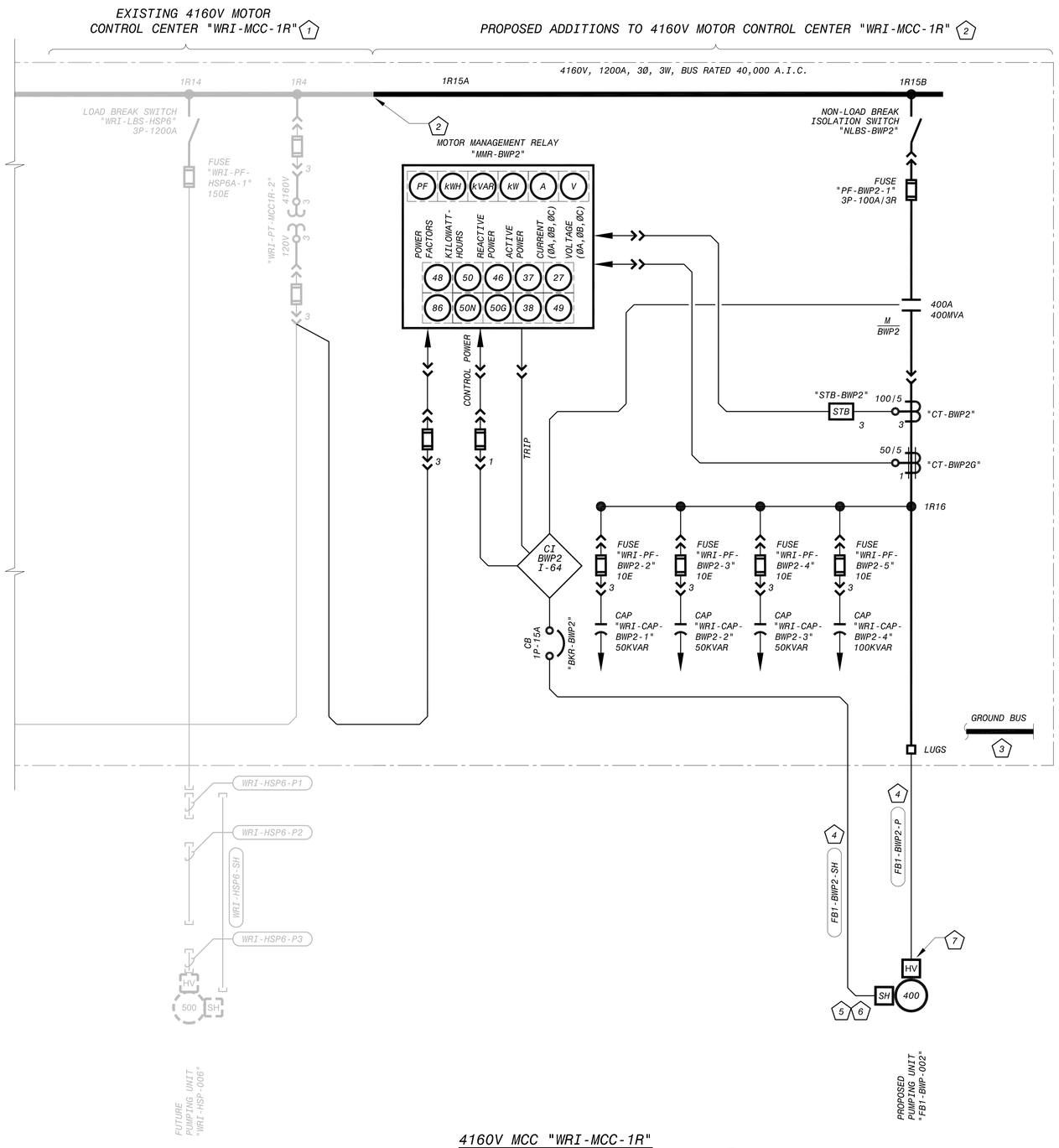

4160V MCC "WRI-MCC-1R"
ONE-LINE DIAGRAM - MODIFICATIONS (1 / E-69)
NO SCALE

KEY NOTES

1. THE EXISTING 4160V MOTOR CONTROL CENTER (MCC) TO REMAIN. THE EXISTING MCC WAS MANUFACTURED BY "CUTLER-HAMMER" (EATON) IN JANUARY 2001 AND HAS THE FOLLOWING ORDER/TRACKING NUMBERS:
   G.O.: MUX01769-002
   P.O.: 5665288788
2. FURNISH AND INSTALL PROPOSED MOTOR CONTROL CENTER STARTER, CLOSE-COUPLE TO EXISTING MOTOR CONTROL CENTER, FIELD VERIFY POINT OF CONNECTION TO EXISTING BUSING, POTENTIAL TRANSFORMER WIRING, ETC. AND MAKE ALL FINAL CONNECTIONS. THE PROPOSED MOTOR CONTROL CENTER SECTIONS SHALL LINE-UP WITH AND MATCH THE EXISTING MOTOR CONTROL CENTER. COORDINATE ALL REQUIREMENTS WITH THE EXISTING MOTOR CONTROL CENTER MANUFACTURER AND MAKE ALL FINAL CONNECTIONS PER THE MOTOR CONTROL CENTER MANUFACTURER'S RECOMMENDATIONS AND WIRING DIAGRAMS.
3. CONNECT PROPOSED GROUND BUS TO EXISTING GROUND BUS.
4. PROPOSED CONDUIT CHANGES TO LARGER SIZE IN SITE DUCT BANK BETWEEN PULLBOXES AT WRI ELECTRICAL BUILDING AND FILTER BUILDING. REFER TO SITE PLAN ON DRAWING NO. E-20.
5. NOT ALL REQUIREMENTS FOR TERMINATION OF SPACE HEATER CONDUIT/WIRING SHOWN HERE. REFER TO PIPE GALLERY LEVEL POWER PLAN ON DRAWING NO. E-33.
6. UTILIZE 2 PARALLEL SETS OF CONDUCTORS FOR SPACE HEATER. TERMINATE 4 NO. 12 AWG WIRES FROM SHIELDED MULTI-CONDUCTOR CABLE TO TERMINALS IN SPACE HEATER TERMINATION ENCLOSURE.
7. MOTOR HIGH VOLTAGE TERMINATION ENCLOSURE FURNISHED BY PUMP MOTOR MANUFACTURER. MOTOR MANUFACTURER SHALL SIZE THE ENCLOSURE. CONTRACTOR SHALL FULLY COORDINATE WITH MOTOR/PUMP MANUFACTURER, FURNISH AND INSTALL ALL INTERCONNECT CONDUIT/WIRE, FURNISH AND INSTALL SUITABLE SUPPORT CHANNEL ASSEMBLY TO SUPPORT HIGH VOLTAGE ENCLOSURE ASSEMBLY, INSTALL HIGH VOLTAGE ENCLOSURE ASSEMBLY, AND MAKE ALL FINAL CONNECTIONS PER RECOMMENDATIONS OF THE MOTOR/PUMP MANUFACTURER.

This document, and the designs incorporated herein, is an instrument of professional service that has been developed, designed and prepared by Harutunian Engineering, Inc., and is not to be used, in whole or in part, for any other project without giving written notice to Harutunian Engineering, Inc.

NO.	DR	CK	DATE	DESCRIPTION

REVISIONS

BLACK & VEATCH. Building a world of difference.
Black & Veatch Corporation
Registration No. F-653
Austin, Texas

HARUTUNIAN ENGINEERING, INC.
305 E Hunland Dr., Ste 500, Austin, TX 78752
TBPE Firm Registration No. F-2408

STATE OF TEXAS
K. A. HARUTUNIAN
86815
REGISTERED PROFESSIONAL ENGINEER
4/4/2014

AUSTIN WATER
Walnut Creek WWTP - Tertiary Filter Rehabilitation Project
CIP ID No. 3023.025

ELECTRICAL
WRI 4160V ONE-LINE DIAGRAM
- MODIFICATIONS (SHEET 2 OF 2)

DESIGNED BY:	HEI
DRAWN BY:	HEI
REVIEWED BY:	HEI
APPROVED BY:	HEI
PROJECT NO.:	168622
DATE:	4/4/2014
SCALE:	AS SHOWN
REVISION:	
DISCIPLINE NO.	E-43
DWG. NO.	SHEET 155 OF 273

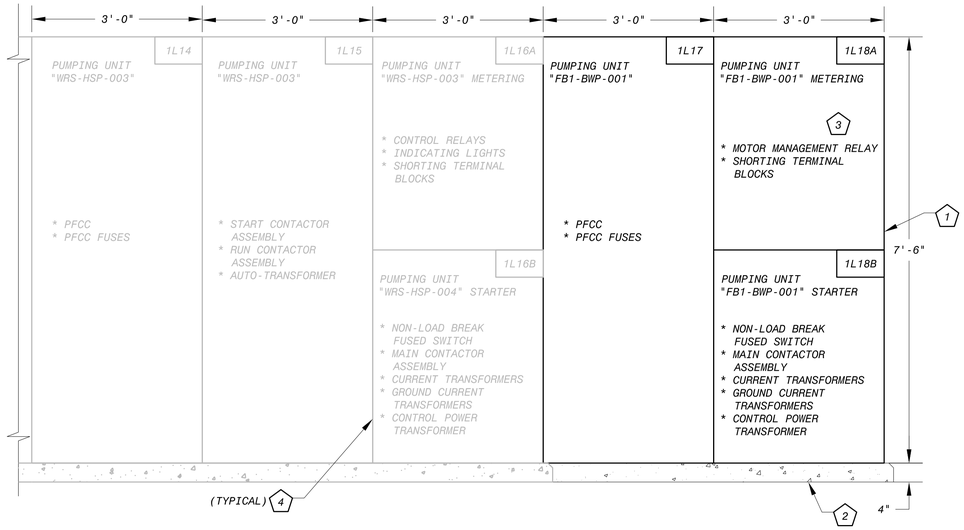

PROPOSED ADDITIONS TO 4160V MOTOR CONTROL CENTER "WRI-MCC-1L" - PARTIAL FRONT ELEVATION (1 / E-70)

NO SCALE

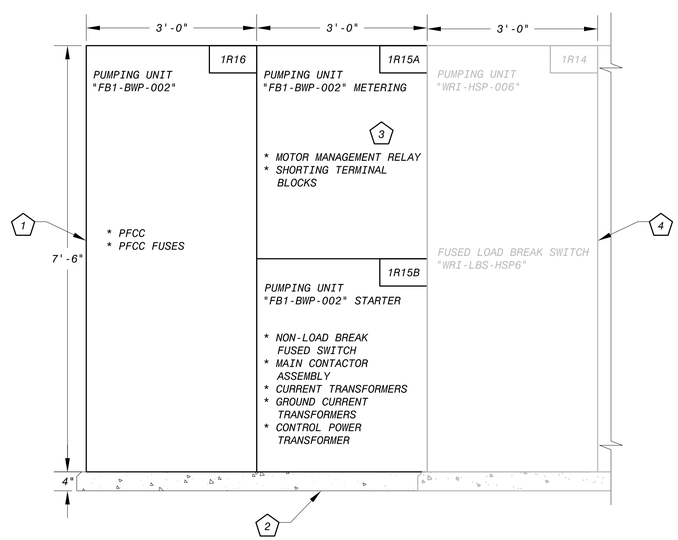

PROPOSED ADDITIONS TO 4160V MOTOR CONTROL CENTER "WRI-MCC-1R" - PARTIAL FRONT ELEVATION (2 / E-70)

NO SCALE

KEY NOTES

1. FURNISH AND INSTALL PROPOSED MOTOR CONTROL CENTER SECTIONS CLOSE-COUPLED TO THE EXISTING MOTOR CONTROL CENTER. THE PROPOSED MOTOR CONTROL CENTER SECTIONS SHALL LINE-UP WITH AND MATCH THE EXISTING MOTOR CONTROL CENTER. COORDINATE ALL REQUIREMENTS WITH THE EXISTING MOTOR CONTROL CENTER MANUFACTURER AND MAKE ALL FINAL CONNECTIONS PER THE MOTOR CONTROL CENTER MANUFACTURER'S RECOMMENDATIONS AND WIRING DIAGRAMS.
2. FURNISH AND INSTALL PROPOSED REINFORCED CONCRETE HOUSEKEEPING/EQUIPMENT PAD EXTENSION FOR THE PROPOSED MOTOR CONTROL CENTER STARTER AND PFCC SECTIONS. THE PROPOSED HOUSEKEEPING/EQUIPMENT PAD SHALL MATCH THE EXISTING HOUSEKEEPING/ EQUIPMENT PAD DIMENSIONS/CLEARANCES AND FINISH. REFER TO DETAIL 6 ON DRAWING NO. E-52.
3. MAXIMUM MOUNTING HEIGHT OF MOTOR MANAGEMENT RELAY MEASURED TO TOP OF MOTOR MANAGEMENT RELAY SHALL NOT EXCEED 6'-0" ABOVE FINISHED GRADE. INCLUDE MOUNTING HEIGHT IN EQUIPMENT SUBMITTALS. MOTOR MANAGEMENT RELAY TO BE MOUNTED IN UPPER MOST PART OF COMPARTMENT AS POSSIBLE.
4. EXISTING MOTOR CONTROL CENTER TO REMAIN.

This document, and the designs incorporated herein, is an instrument of professional service that has been developed, designed and prepared by Harutunian Engineering, Inc., and is not to be used, in whole or in part, for any other project without giving written notice to Harutunian Engineering, Inc.

NO.	DR	CK	DATE	DESCRIPTION

REVISIONS

BLACK & VEATCH
Building a world of difference.
Black & Veatch Corporation
Registration No. F-653
Austin, Texas

HARUTUNIAN ENGINEERING, INC.
305 E Hunland Dr., Ste 500; Austin, TX 78752
TBPE Firm Registration No. F-2408

STATE OF TEXAS
K. A. HARUTUNIAN
59181
REGISTERED PROFESSIONAL ENGINEER
4/4/2014

Austin WATER
Walnut Creek WWTP - Tertiary Filter Rehabilitation Project
CIP ID No. 3023.025

ELECTRICAL
WRI DISTRIBUTION EQUIPMENT FRONT ELEVATIONS - MODIFICATIONS

DESIGNED BY:	HEI
DRAWN BY:	HEI
REVIEWED BY:	HEI
APPROVED BY:	HEI
PROJECT NO.:	168622
DATE:	4/4/2014
SCALE:	AS SHOWN

REVISION:

DISCIPLINE NO.
E-44

DWG. NO.
SHEET 156 OF 273

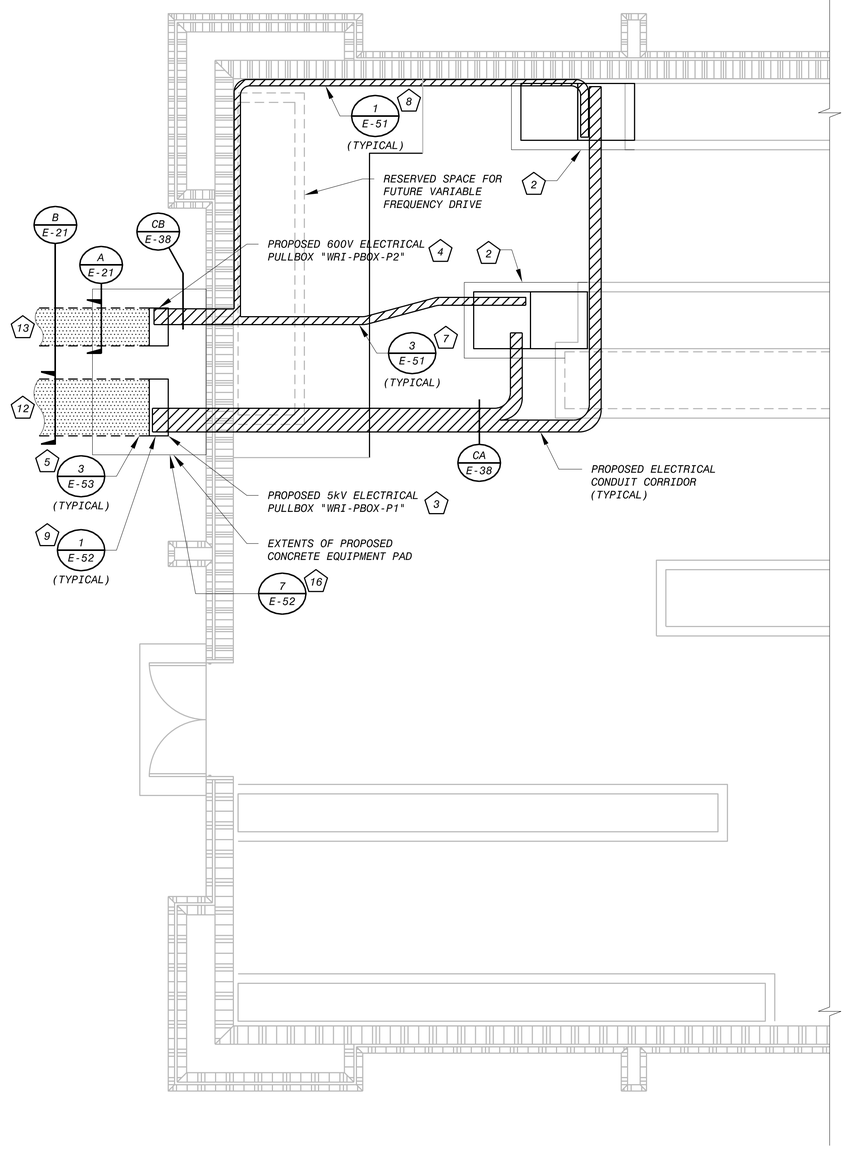

WRI ELECTRICAL BUILDING
ELECTRICAL CONDUIT CORRIDOR PLAN - MODIFICATIONS (1 / E-71)

SCALE: 1/4" = 1'-0"

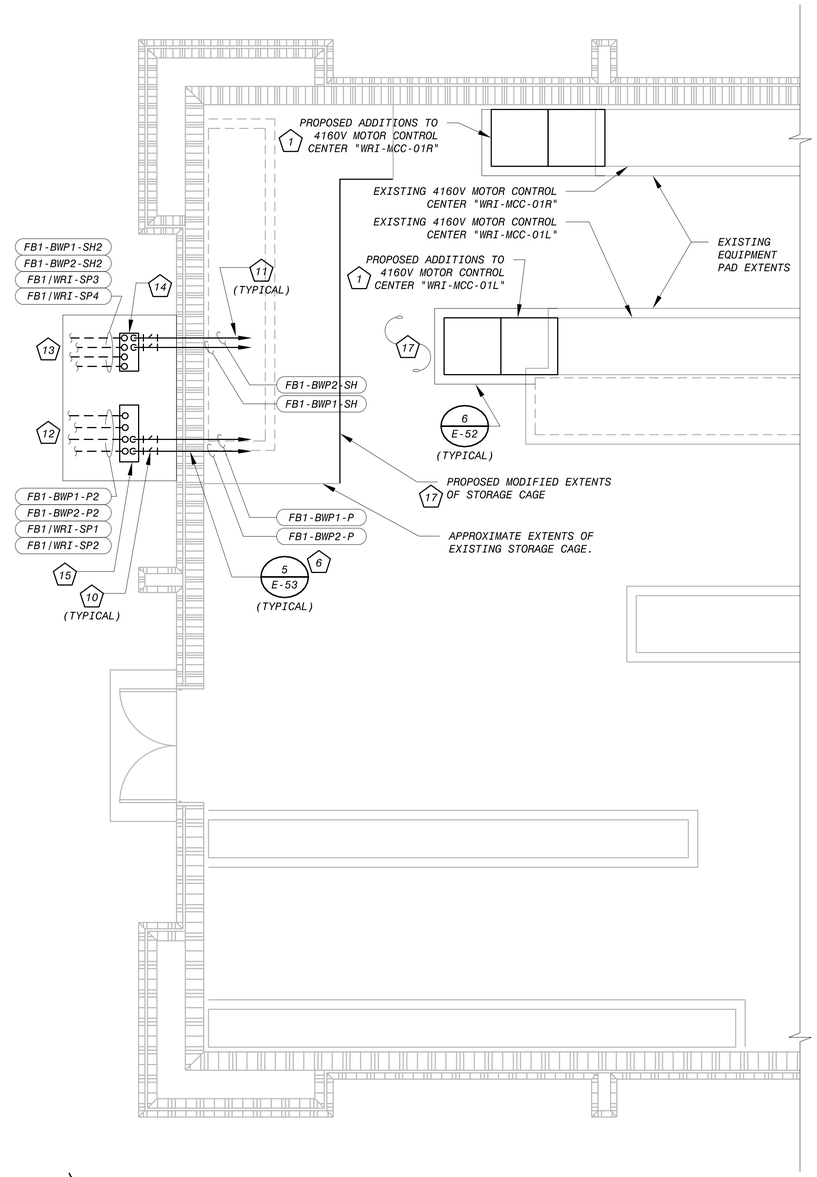

WRI ELECTRICAL BUILDING
ELECTRICAL POWER PLAN - MODIFICATIONS (1 / E-71)

SCALE: 1/4" = 1'-0"

4' 2' 0 4' 8'

1/4"=1'-0"

KEY NOTES

1. FURNISH AND INSTALL PROPOSED MOTOR CONTROL CENTER SECTIONS CLOSE-COUPLED TO THE EXISTING MOTOR CONTROL CENTER. THE PROPOSED MOTOR CONTROL CENTER SECTIONS SHALL LINEUP WITH AND MATCH THE EXISTING MOTOR CONTROL CENTER. COORDINATE ALL REQUIREMENTS WITH THE EXISTING MOTOR CONTROL CENTER MANUFACTURER AND MAKE ALL FINAL CONNECTIONS PER THE MOTOR CONTROL CENTER MANUFACTURER'S RECOMMENDATIONS AND WIRING DIAGRAMS.
2. FURNISH AND INSTALL PROPOSED REINFORCED CONCRETE HOUSEKEEPING/EQUIPMENT PAD EXTENSION FOR THE PROPOSED MOTOR CONTROL CENTER STARTER SECTION. THE PROPOSED HOUSEKEEPING/EQUIPMENT PAD SHALL MATCH EXISTING HOUSEKEEPING/EQUIPMENT PAD DIMENSIONS, CLEARANCES AND FINISH. REFER TO DETAIL 6 ON DRAWING NO. E-52.
3. FURNISH AND INSTALL PULLBOX DEDICATED TO PROPOSED BACKWASH PUMP 5kV POWER CABLES, SIZED 30"W x 48"H x 12"D AT MINIMUM.
4. FURNISH AND INSTALL PULLBOX DEDICATED TO PROPOSED BACKWASH PUMP 600V CABLES, SIZED 24"W x 24"H x 12"D AT MINIMUM.
5. PROPOSED UNDERGROUND CONCRETE ENCASED DUCT BANK TURNS UP BENEATH PULLBOX AND TERMINATES. EXPOSED CONDUIT BANK CONTINUES VERTICALLY FROM TOP OF PULLBOX AND PENETRATES BUILDING NEAR ROOF.
6. CORE DRILL WALL AND SEAL PER DETAIL AND SPECIFICATIONS.
7. SUSPEND PROPOSED CONDUIT BANK FROM CEILING AT MINIMUM ELEVATION OF 14' ABOVE FINISHED FLOOR.
8. SURFACE MOUNT PROPOSED CONDUIT BANK TO WALL AT MINIMUM ELEVATION OF 14' ABOVE FINISHED FLOOR.
9. FURNISH AND INSTALL VERTICAL AND ANGLED REAR SUPPORTS FOR PULLBOXES AND VERTICALLY ALIGNED CONDUIT BANKS.
10. FURNISH AND INSTALL SEALING FITTING. FITTING SHOWN HORIZONTALLY IN PLAN VIEW FOR CLARITY BUT SHALL BE INSTALLED IN VERTICAL SECTION OF CONDUIT ABOVE PULLBOX.
11. CONDUIT/WIRE CONTINUES IN CONDUIT BANK IN CEILING SPACE OF ELECTRICAL ROOM. REFER TO CONDUIT CORRIDOR DRAWING ON THIS SHEET FOR CONTINUATION.
12. UNDERGROUND CONCRETE ENCASED DUCT BANK CONTAINING CONDUITS TAGGED
    "FB1-BWP1-P2", "FB1-BWP2-P2",
    "FB1|WRI-SP1", AND "FB1|WRI-SP2"
    CONTINUE TO/FROM FILTER BUILDING AND TERMINATE AT PULLBOX "FB2-PBBWP-HV1" IN CEILING SPACE OF PIPE GALLERY LEVEL. REFER TO SITE PLAN ON DRAWING NO. E-20 FOR CONTINUATION.
13. UNDERGROUND CONCRETE ENCASED DUCT BANK CONTAINING CONDUITS TAGGED
    "FB1-BWP1-SH2", "FB1-BWP2-SH2",
    "FB1-BWP1-SP3", AND "FB1-BWP2-SP4"
    CONTINUE TO/FROM FILTER BUILDING AND TERMINATE AT PULLBOX "FB2-PBBWP-LV1" IN CEILING SPACE OF PIPE GALLERY LEVEL. REFER TO SITE PLAN ON DRAWING NO. E-20 FOR CONTINUATION.
14. DEDICATED PULLBOX GROUNDING CONDUCTORS IN CONDUITS TAGGED
    "FB1-BWP1-P", "FB1-BWP1-P2",
    "FB1-BWP2-P", AND "FB1-BWP2-P2"
    TERMINATE AT PULLBOX GROUNDING LUG. DEDICATED PULLBOX GROUND CONDUCTORS CONTINUE TO/FROM 4160V MOTOR CONTROL CENTER GROUND BUSES AND TO/FROM PULLBOX "FB2-PBBWP-HV1" IN FILTER BUILDING PIPE GALLERY.
15. DEDICATED PULLBOX GROUNDING CONDUCTORS IN CONDUITS TAGGED
    "FB1-BWP1-SH", "FB1-BWP1-SH2",
    "FB1-BWP2-SH", AND "FB1-BWP2-SH2"
    TERMINATE AT PULLBOX GROUNDING LUG. DEDICATED PULLBOX GROUND CONDUCTORS CONTINUE TO/FROM 4160V MOTOR CONTROL CENTER GROUND BUSES AND TO/FROM PULLBOX "FB2-PBBWP-LV1" IN FILTER BUILDING PIPE GALLERY.
16. FURNISH AND INSTALL OUTDOOR EQUIPMENT PAD. MOUNT PULLBOXES AND SUPPORT RACKS TO PAD.
17. APPROXIMATE EXTENTS OF MODIFICATIONS TO EXISTING STORAGE CAGE. MODIFY EXISTING STORAGE CAGE AS REQUIRED TO PROVIDE A MINIMUM OF 60" CLEAR SPACE REQUIRED BETWEEN MODIFIED CAGE AND CURB OF PROPOSED MCC EQUIPMENT PAD EXTENSION. RELOCATE STORAGE CAGE GATE/DOOR TO ALIGN WITH WALKWAY SUCH TO FACILITATE FULL SWING OF STORAGE CAGE GATE/DOOR. CAGE GATE/DOOR IS NOT SHOWN HERE. COORDINATE ALL MODIFICATIONS WITH THE OWNER AND PERFORM ALL CAGE MODIFICATIONS TO MATCH EXISTING TO THE SATISFACTION OF THE OWNER AT NO ADDITIONAL COST TO THE OWNER.

This document, and the designs incorporated herein, is an instrument of professional service that has been developed, designed and prepared by Harutunian Engineering, Inc., and is not to be used, in whole or in part, for any other project without giving written notice to Harutunian Engineering, Inc.

NO.	DR	CK	DATE	DESCRIPTION

REVISIONS

BLACK & VEATCH
Building a world of difference.
Black & Veatch Corporation
Registration No. F-253
Austin, Texas

HARUTUNIAN ENGINEERING, INC.
305 E Huntland Dr., Ste 500, Austin, TX 78752
TBPE Firm Registration No. F-2408

STATE OF TEXAS
K. A. HARUTUNIAN
19981
REGISTERED PROFESSIONAL ENGINEER
4/4/2014

Austin WATER
Walnut Creek WWTP - Tertiary Filter Rehabilitation Project
CIP ID No. 3023.025

ELECTRICAL
WRI ELECTRICAL BUILDING
POWER PLAN - MODIFICATIONS

DESIGNED BY:	HEI
DRAWN BY:	HEI
REVIEWED BY:	HEI
APPROVED BY:	HEI
PROJECT NO.:	168622
DATE:	4/4/2014
SCALE:	AS SHOWN

REVISION:

DISCIPLINE NO.
E-45

DWG. NO.
SHEET 157 OF 273

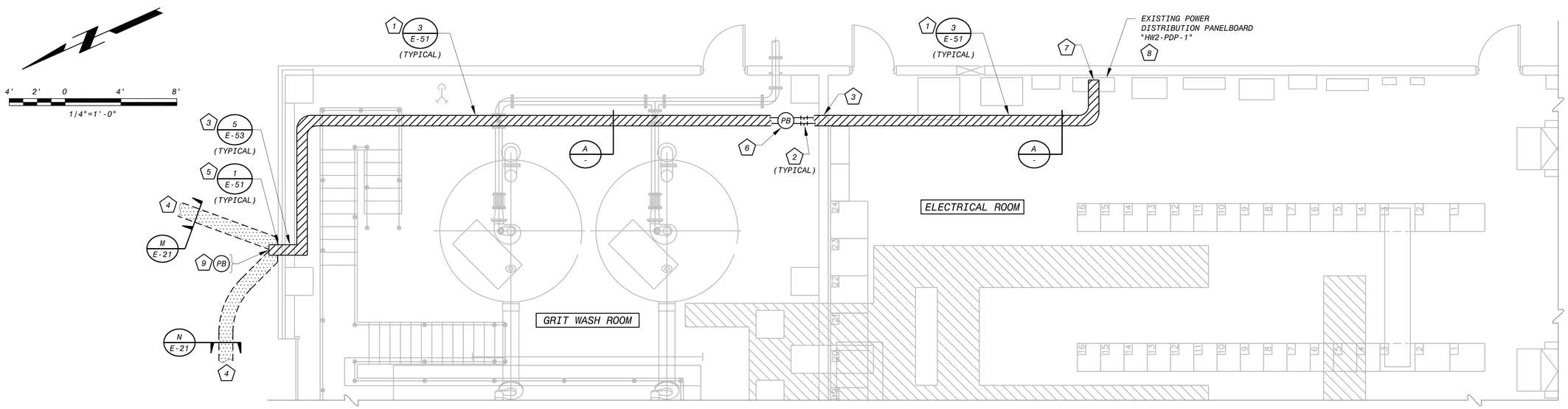

GRIT WASH AND ELECTRICAL ROOM
CONDUIT CORRIDOR PLAN - MODIFICATIONS (1 E-76) (2 E-75) (3 E-77)
SCALE: 1/4"=1'0"

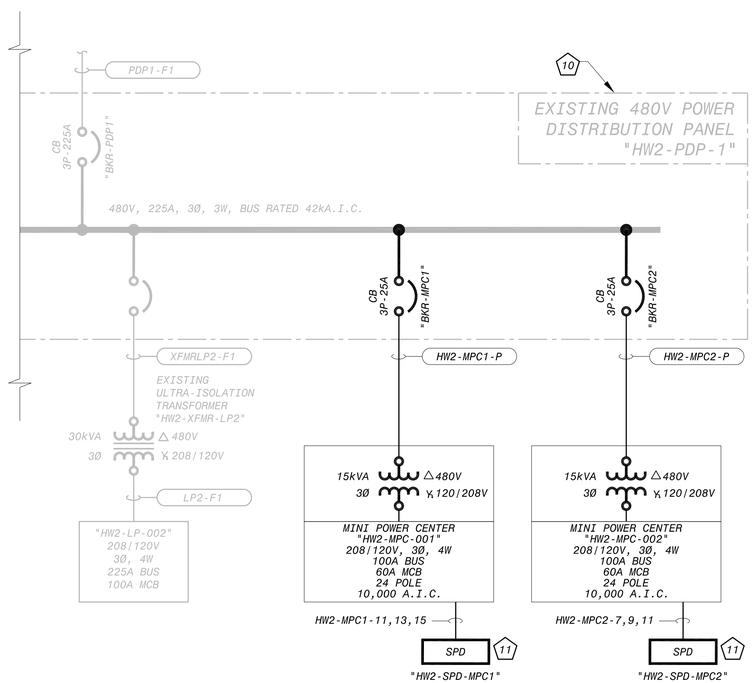

MODIFICATIONS TO EXISTING POWER DISTRIBUTION PANELBOARD "HW2-PDP-1" ONE-LINE DIAGRAM (4 E-74)
SCALE: NO SCALE

CONDUIT BANK SECTION DIMENSION TABLE

LEGEND:

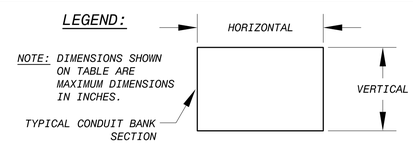

SECTION IDENTIFIER	HORIZONTAL (INCHES)	VERTICAL (INCHES)	DRAWING NO.	CONDUIT IDENTIFIERS
A	9	6	E-46	HW2-MPC1-P, HW2-MPC2-P

MODIFICATIONS TO EXISTING POWER DISTRIBUTION PANELBOARD SCHEDULE "HW2-PDP-1"

VOLTS: 480V BUS: 225A MAIN: 225A PHASE/WIRE: 3Ø/3W

CKT. NO.	LOAD DESCRIPTIONS	CKT. NO.	LOAD DESCRIPTIONS
1	SPACE	2	SPACE
3	SPACE	4	SPACE
5	MPC-001 (8)	6	MPC-002 (8)
7	PPU-01	8	AHU-001/F1
9	CU-02	10	AHU-002/F2
11	XFMR-LP2	12	CU-01
13	MAIN BREAKER	14	XFMR-LP1

MODIFICATIONS TO EXISTING POWER DISTRIBUTION PANELBOARD "HW2-PDP-1" SCHEDULE (5 E-74)
SCALE: NO SCALE

KEY NOTES

1. SUSPEND CONDUIT/WIRE FROM CEILING PER DETAILS ON DRAWING NO. E-51. LOCATE AS HIGH AS POSSIBLE IN ROOM.
2. FURNISH AND INSTALL SEALING FITTING FOR EACH CONDUIT/WIRE.
3. CORE DRILL EXISTING WALL AND PERFORM CONDUIT/WIRE PENETRATION PER DETAILS ON DRAWING NO. E-53
4. PROPOSED DUCT BANK CONTINUES. REFER TO SITE PLAN ON DRAWING NO. E-22 FOR CONTINUATION.
5. PROPOSED CONDUIT BANK TURNS DOWN ALONG EXTERIOR WALL. SURFACE MOUNT CONDUIT TO WALL.
6. FURNISH AND INSTALL PULLBOX. SUSPEND FROM CEILING PER DETAILS ON DRAWING NO. E-51.
7. TERMINATE PROPOSED CONDUIT/WIRE TO EXISTING POWER DISTRIBUTION PANELBOARD AND MAKE ALL FINAL CONNECTIONS.
8. FURNISH AND INSTALL PROPOSED BRANCH CIRCUIT BREAKERS IN EXISTING POWER DISTRIBUTION PANELBOARD AND MAKE ALL FINAL CONNECTIONS. PROPOSED CIRCUIT BREAKERS SHALL BE OF SAME MANUFACTURER AS EXISTING PANELBOARD, NO EQUAL.
9. FURNISH AND INSTALL PULLBOX/CONDUIT BODY IN VERTICAL SECTION OF CONDUIT BANK.
10. THE EXISTING 480V POWER DISTRIBUTION PANELBOARD (PDP) TO REMAIN. THE EXISTING PDP WAS MANUFACTURED BY "SQUARE D" (SCHNEIDER ELECTRIC) AND HAS THE FOLLOWING EQUIPMENT NUMBERS:
    MODEL: I-LINE HCWM
    CATALOG NO.: 12162029990120001
    CONTRACT NO.: 0590-30361
    EQUIPMENT (Q2C) NO.: 16202999-021
11. FURNISH AND INSTALL SURGE PROTECTIVE DEVICE. REFER TO SITE PLAN ON DRAWING NO. E-22.

This document, and the designs incorporated herein, is an instrument of professional service that has been developed, designed and prepared by Harutunian Engineering, Inc., and is not to be used, in whole or in part, for any other project without giving written notice to Harutunian Engineering, Inc.

NO.	DR	CK	DATE	DESCRIPTION

REVISIONS

BLACK & VEATCH Building a world of difference.
Black & Veatch Corporation
Registration No. F-253
Austin, Texas

HARUTUNIAN ENGINEERING, INC.
305 E Hunland Dr., Ste 500; Austin, TX 78752
TBPE Firm Registration No. F-2408

STATE OF TEXAS K. A. HARUTUNIAN 59181 REGISTERED PROFESSIONAL ENGINEER
4/4/2014

Austin WATER
Walnut Creek WWTP - Tertiary Filter Rehabilitation Project
CIP ID No. 3023.025

ELECTRICAL
HW2 ONE-LINE AND ELECTRICAL CONDUIT CORRIDOR PLAN - MODIFICATIONS

DESIGNED BY:	HEI
DRAWN BY:	HEI
REVIEWED BY:	HEI
APPROVED BY:	HEI
PROJECT NO.:	168622
DATE:	4/4/2014
SCALE:	AS SHOWN

REVISION:

DISCIPLINE NO. E-46

DWG. NO.

CONDUIT/WIRE SCHEDULE

CONDUIT TAG	SIZE	CABLE/WIRE DESCRIPTION
BB-BL1-P	3"	3 500 kCMIL (P),1 #2 (G)
BB-BL1-SH	1"	2 #10 (SH),1 #10 (G)
BB-BL2-P	3"	3 500 kCMIL (P),1 #2 (G)
BB-BL2-SH	1"	2 #10 (SH),1 #10 (G)
BB-BFV123-P	1"	3 #10 (P),1 #10 (G)
BB-BFV129-P	3/4"	3 #10 (P),1 #10 (G)
BB-BFV143-P	1"	3 #10 (P),1 #10 (G)
BB-BFV149-P	3/4"	3 #10 (P),1 #10 (G)
BB-CPBL1-P	1"	3 #10 (P),1 #10 (G)
BB-CPBL2-P	1"	3 #10 (P),1 #10 (G)
BB-EF1-P	3/4"	2 #10 (P),1 #10 (G)
BB-MPC1-P	1"	3 #8 (P),1 #10 (G)
BB-SPARE	1"	EMPTY
BB-TW1-G	1-1/2"	1 250 kCMIL (G)
BB-TW2-G	1-1/2"	1 250 kCMIL (G)
DB-10/9-LV1	4"	PROPOSED REPLACEMENT CABLES 1
DB-10/9-LV2	4"	PROPOSED REPLACEMENT CABLES 1
DB-10/9-SP1	4"	EMPTY
DB-10/9-SP2	4"	EMPTY
DB-9/1-LV1	4"	PROPOSED REPLACEMENT CABLES 1
DB-9/1-LV2	4"	PROPOSED REPLACEMENT CABLES 1
DB-9/1-LV3	4"	PROPOSED REPLACEMENT CABLES 1
DB-9/1-SP1	4"	EMPTY
DB-9/1-SP2	4"	EMPTY
DB-9/1-SP3	4"	EMPTY
DB-9A/9-LV1	4"	PROPOSED REPLACEMENT CABLES 1
DB-9A/9-LV2	4"	PROPOSED REPLACEMENT CABLES 1
DB-9A/9-LV3	4"	PROPOSED REPLACEMENT CABLES 1
DB-9A/9-SP1	4"	EMPTY
DB-FB/9A-LV1	4"	PROPOSED REPLACEMENT CABLES 1
DB-FB/9A-LV2	4"	PROPOSED REPLACEMENT CABLES 1
DB-FB/9A-LV3	4"	PROPOSED REPLACEMENT CABLES 1
DB-FB/9A-SP1	4"	EMPTY
FB1/WRI-SP1	4"	EMPTY
FB1/WRI-SP2	4"	EMPTY
FB1/WRI-SP3	2"	EMPTY
FB1/WRI-SP4	2"	EMPTY
FB1-AH1-P	3/4"	3 #10 (P),1 #10 (G)
FB1-ATSNPW1-EF1	2-1/2"	3 250 kCMIL (P),1 #2 (G)
FB1-ATSNPW1-EF2	2-1/2"	3 250 kCMIL (P),1 #2 (G)
FB1-ATSNPW1-NF1	2-1/2"	3 250 kCMIL (P),1 #2 (G)
FB1-ATSNPW1-NF2	2-1/2"	3 250 kCMIL (P),1 #2 (G)
FB1-ATSNPW2-EF1	3"	3 500 kCMIL (P),1 #2 (G)
FB1-ATSNPW2-NF1	2-1/2"	3 250 kCMIL (P),1 #2 (G)
FB1-ATSNPW2-NF2	2-1/2"	3 250 kCMIL (P),1 #2 (G)
FB1-BWP1-P	2-1/2"	3 #4 5kV RATED SHIELDED CABLE (P),2 #6 (G)
FB1-BWP1-P2	4"	3 #4 5kV RATED SHIELDED CABLE (P),2 #6 (G)
FB1-BWP1-SH	1-1/2"	1 #12 7-CONDUCTOR SHIELDED CABLE (SH),1 #10 (G)
FB1-BWP1-SH2	2"	1 #12 7-CONDUCTOR SHIELDED CABLE (SH),1 #10 (G)
FB1-BWP2-P	2-1/2"	3 #4 5kV RATED SHIELDED CABLE (P),2 #6 (G)
FB1-BWP2-P2	4"	3 #4 5kV RATED SHIELDED CABLE (P),2 #6 (G)
FB1-BWP2-SH	1-1/2"	1 #12 7-CONDUCTOR SHIELDED CABLE (SH),1 #10 (G)
FB1-BWP2-SH2	2"	1 #12 7-CONDUCTOR SHIELDED CABLE (SH),1 #10 (G)
FB1-CPVP-P	3/4"	3 #6 (P),1 #10 (G)
FB1-CU1-P	3/4"	3 #10 (P),1 #10 (G)
FB1-DSGENA-F1	3"	3 500 kCMIL (P),1 #1 (G)
FB1-DSGENA-F2	3"	3 500 kCMIL (P),1 #1 (G)

CONDUIT/WIRE SCHEDULE

CONDUIT TAG	SIZE	CABLE/WIRE DESCRIPTION
FB1-DSGENB-F1	3"	3 500 kCMIL (P),1 #1 (G)
FB1-DSGENB-F2	3"	3 500 kCMIL (P),1 #1 (G)
FB1-HTR1-P	1-1/4"	3 #2 (P),1 #8 (G)
FB1-LA-P	1-1/2"	4 #1 (P),1 #6 (G)
FB1-MCC1A-F1	3-1/2"	3 500 kCMIL (P),2 250 kCMIL (G)
FB1-MCC1A-F2	3-1/2"	3 500 kCMIL (P),2 250 kCMIL (G)
FB1-MCC1A-F3	3-1/2"	3 500 kCMIL (P),2 250 kCMIL (G)
FB1-MCC1A-G1	1-1/2"	1 250 kCMIL (G)
FB1-MCC1A-G2	1-1/2"	1 250 kCMIL (G)
FB1-MCC1B-F1	3-1/2"	3 500 kCMIL (P),2 250 kCMIL (G)
FB1-MCC1B-F2	3-1/2"	3 500 kCMIL (P),2 250 kCMIL (G)
FB1-MCC1B-F3	3-1/2"	3 500 kCMIL (P),2 250 kCMIL (G)
FB1-MCC1B-G1	1-1/2"	1 250 kCMIL (G)
FB1-MCC1B-G2	1-1/2"	1 250 kCMIL (G)
FB1-MCCNPW-F1	2-1/2"	3 250 kCMIL (P),1 #2 (G)
FB1-MCCNPW-F2	2-1/2"	3 250 kCMIL (P),1 #2 (G)
FB1-MCCNPW-G1	1-1/2"	1 250 kCMIL (G)
FB1-MCCNPW-G2	1-1/2"	1 250 kCMIL (G)
FB1-NP1-P	2"	3 #4/0 (P),1 #4 (G)
FB1-NP1-SH	3/4"	2 #10 (SH),1 #10 (G)
FB1-NP2-P	2"	3 #4/0 (P),1 #4 (G)
FB1-NP2-SH	3/4"	2 #10 (SH),1 #10 (G)
FB1-NP3-P	2"	EMPTY
FB1-NP3-SH	3/4"	EMPTY
FB1-SF1-P	3/4"	3 #10 (P),1 #10 (G)
FB1-SP1-P	3/4"	3 #10 (P),1 #10 (G)
FB1-SP2-P	3/4"	3 #10 (P),1 #10 (G)
FB1-STR001-P	3/4"	3 #10 (P),1 #10 (G)
FB1-TLA-P	1"	3 #6 (P),1 #6 (G)
FB1-VP1-P	3/4"	3 #8 (P),1 #10 (G)
FB1-VP2-P	3/4"	3 #8 (P),1 #10 (G)
FB1-VPP0-P	3/4"	3 #6 (P),1 #10 (G)
FB1-VPP2-P	3/4"	3 #6 (P),1 #10 (G)
FB2-AH2-P	3/4"	3 #10 (P),1 #10 (G)
FB2-ATS1-EF1	1-1/2"	3 #2/0 (P),1 #6 (G)
FB2-ATS1-NF1	1-1/2"	3 #2/0 (P),1 #6 (G)
FB2-ATS2-EF1	1-1/2"	3 #2/0 (P),1 #6 (G)
FB2-ATS2-NF1	1-1/2"	3 #2/0 (P),1 #6 (G)
FB2-CPP2-P	2"	4 #1 (P),1 #6 (G),1 #1 (IG)
FB2-CPSP-P	3/4"	3 #10 (P),1 #10 (G)
FB2-CU2-P	3/4"	3 #8 (P),1 #10 (G)
FB2-FL3-P	1-1/2"	4 #1 (P),1 #6 (G)
FB2-HTR2-P	1-1/4"	3 #2 (P),1 #8 (G)
FB2-LB-P	1-1/2"	4 #1 (P),1 #6 (G)
FB2-PDP1-F1	1-1/2"	3 #2/0 (P),1 #6 (G)
FB2-PDP2-F1	1-1/2"	3 #2/0 (P),1 #6 (G)
FB2-SF2-P	3/4"	3 #10 (P),1 #10 (G)
FB2-SPD1-P	1"	3 #4 (P),1 #8 (G)
FB2-SPD2-P	1"	3 #4 (P),1 #8 (G)
FB2-T3-P	1"	3 #6 (P),1 #6 (G)
FB2-TLB-P	1"	3 #6 (P),1 #6 (G)
FB2-VPP1-P	3/4"	3 #6 (P),1 #10 (G)
FB2-VPP3-P	3/4"	3 #6 (P),1 #10 (G)
FB2-VPP4-P	3/4"	3 #6 (P),1 #10 (G)
FB2-VPP5-P	3/4"	3 #6 (P),1 #10 (G)
FB2-VPP6-P	3/4"	3 #6 (P),1 #10 (G)
FB2-XFMRCPP2-IG	1"	1 #1 (IG)

CONDUIT/WIRE SCHEDULE

CONDUIT TAG	SIZE	CABLE/WIRE DESCRIPTION
FB2-XFMRCPP2-P	1"	3 #6 (P),1 #6 (G)
HW2-MPC1-P	1"	3 #8 (P),1 #10 (G)
HW2-MPC2-P	1"	3 #8 (P),1 #10 (G)
HW2-MPC2-SP	1"	EMPTY
SITE-TRAILER-P	1"	3 #6 (P),1 #10 (G)
SITE-WRSSITE-P	1"	3 #6 (P),1 #10 (G)

KEY NOTES

1. EXISTING DUCT BANKS REMOVED DURING DEMOLITION ACTIVITIES CONTAINED WIRES OF UNKNOWN QUANTITY, SOURCE AND DESTINATION THAT SHALL BE RECONNECTED DURING RENOVATION. CONTENTS/DESTINATION NOT KNOWN BY THE OWNER. BASED ON THE RESULTS OF THE FIELD VERIFICATION PERFORMED DURING DEMOLITION ACTIVITIES, FURNISH AND INSTALL PROPOSED WIRING TO MATCH THE EXISTING BETWEEN SPLICE POINTS AT NO ADDITIONAL COST TO THE OWNER. REFER TO SITE DEMOLITION PLAN ON DRAWING NO. E-04. AT THE CONTRACTOR'S DISCRETION, IN LIEU OF CUTTING THE EXISTING WIRES, FURNISHING NEW WIRES OF LIKE KIND BETWEEN CUT POINTS, AND PERFORMING SUBMERGENCE RATED SPLICES AT EACH END OF EACH PROPOSED WIRE SEGMENT, THE CONTRACTOR MAY ELECT TO FIELD VERIFY SOURCE, DESTINATION, AND ROUTE OF WIRES, DISCONNECT AND REMOVE THE EXISTING WIRES IN THEIR ENTIRETY FROM SOURCE TO DESTINATION, FURNISH AND INSTALL NEW WIRES OF LIKE KIND FROM SOURCE TO DESTINATION, AND MAKE ALL FINAL CONNECTIONS AT SOURCE AND DESTINATION AT NO ADDITIONAL COST TO THE OWNER.

GENERAL NOTES

1. REFER TO THE I&C DRAWINGS/SPECIFICATIONS FOR ADDITIONAL CONDUIT/WIRE REQUIREMENTS, WIRE DESIGNATIONS, ETC.

This document, and the designs incorporated herein, is an instrument of professional service that has been developed, designed and prepared by Harutunian Engineering, Inc., and is not to be used, in whole or in part, for any other project without giving written notice to Harutunian Engineering, Inc.

NO.	DR	CK	DATE	DESCRIPTION

REVISIONS

BLACK & VEATCH Building a world of difference.
Black & Veatch Corporation
Registration No. F-253
Austin, Texas

HARUTUNIAN ENGINEERING, INC.
305 E Hunland Dr. Ste 500; Austin, TX 78752
TBPE Firm Registration No. F-2408

STATE OF TEXAS · K. A. HARUTUNIAN · 59181 · REGISTERED PROFESSIONAL ENGINEER
4/4/2014

Austin WATER
Walnut Creek WWTP - Tertiary Filter Rehabilitation Project
CIP ID No. 3023.025

ELECTRICAL
PROPOSED ELECTRICAL CONDUIT/WIRE SCHEDULE

DESIGNED BY:	HEI
DRAWN BY:	HEI
REVIEWED BY:	HEI
APPROVED BY:	HEI
PROJECT NO.:	168622
DATE:	4/4/2014
SCALE:	AS SHOWN

REVISION:

DISCIPLINE NO.
E-47

DWG. NO.
SHEET 159 OF 273

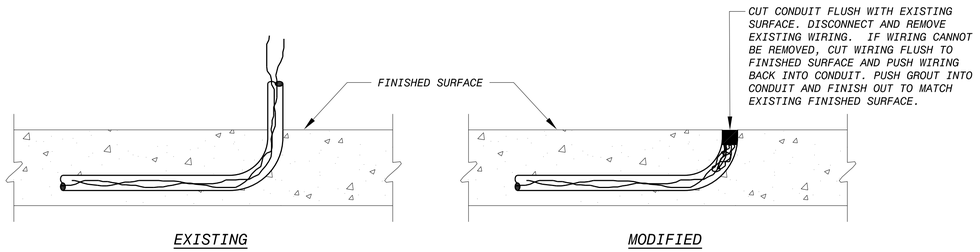

MODIFICATION TO EXISTING CONDUIT STUB-UPS (1 / -)

SCALE: N.T.S.

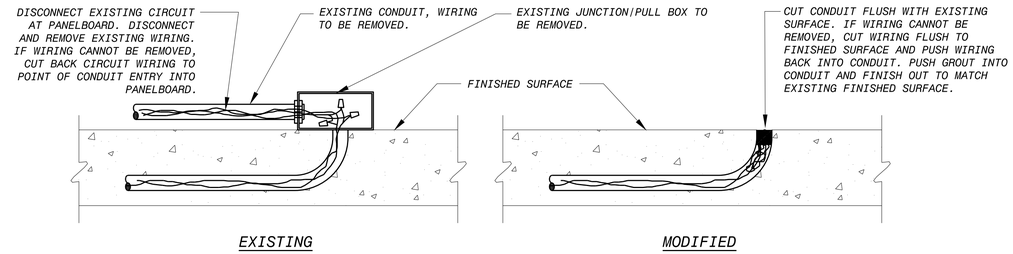

MODIFICATION TO EXISTING CONDUIT STUB-UP TO SURFACE MOUNTED BOX (2 / -)

SCALE: N.T.S.

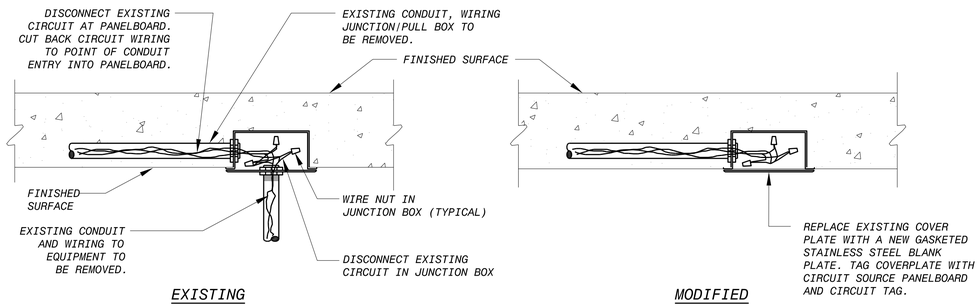

MODIFICATION TO RECESSED ELECTRICAL JUNCTION/PULL BOX (3 / -)

SCALE: N.T.S.

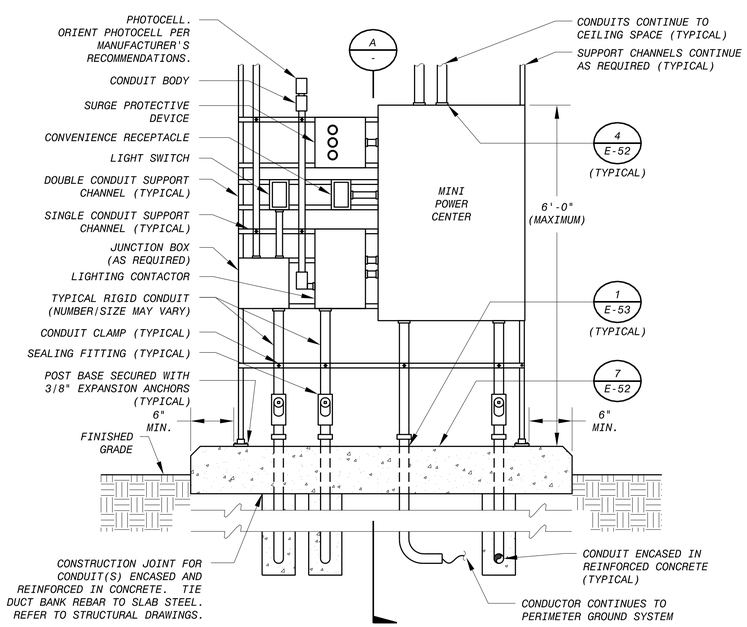

SODIUM BISULFITE AREA EQUIPMENT RACK FRONT VIEW - INSTALLATION DETAIL (4 / -)

NO SCALE

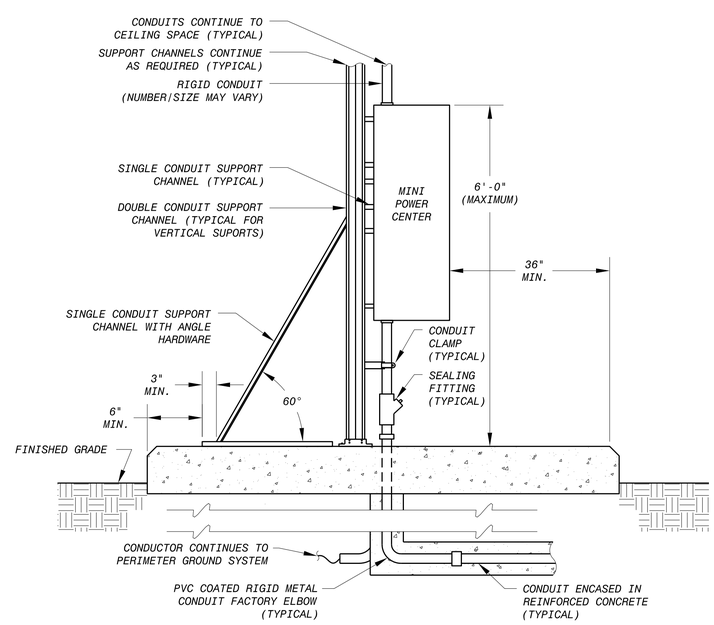

SODIUM BISULFITE AREA EQUIPMENT RACK SIDE VIEW - INSTALLATION DETAIL (A / -)

NO SCALE

This document, and the designs incorporated herein, is an instrument of professional service that has been developed, designed and prepared by Harutunian Engineering, Inc., and is not to be used, in whole or in part, for any other project without giving written notice to Harutunian Engineering, Inc.

NO.	DR	CK	DATE	DESCRIPTION

REVISIONS

BLACK & VEATCH
Building a world of difference.
Black & Veatch Corporation
Registration No. F-253
Austin, Texas

HARUTUNIAN ENGINEERING, INC.
305 E Hunland Dr., Ste 500; Austin, TX 78752
TBPE Firm Registration No. F-2408

STATE OF TEXAS — K. A. HARUTUNIAN — 19981 — REGISTERED PROFESSIONAL ENGINEER — 9/23/2014

Austin WATER
Walnut Creek WWTP - Tertiary Filter Rehabilitation Project
CIP ID No. 3023.025

ELECTRICAL
TYPICAL ELECTRICAL DETAILS
(SHEET 1 OF 10)

DESIGNED BY:	HEI
DRAWN BY:	HEI
REVIEWED BY:	HEI
APPROVED BY:	HEI
PROJECT NO.:	168622
DATE:	4/4/2014
SCALE:	AS SHOWN
REVISION:	
DISCIPLINE NO.	E-48
DWG. NO.	SHEET 160 OF 273

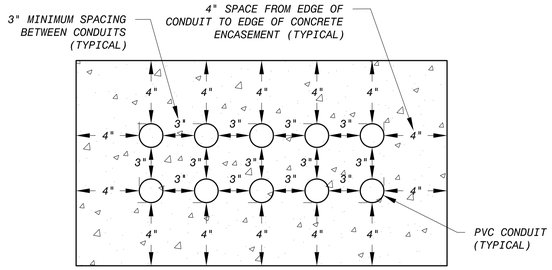

MULTI-LAYER DUCT/CONDUIT BANK-SPACING DETAIL FOR REINFORCED AND CONCRETE ENCASED DUCT/CONDUIT BANKS

SCALE: N.T.S.

1

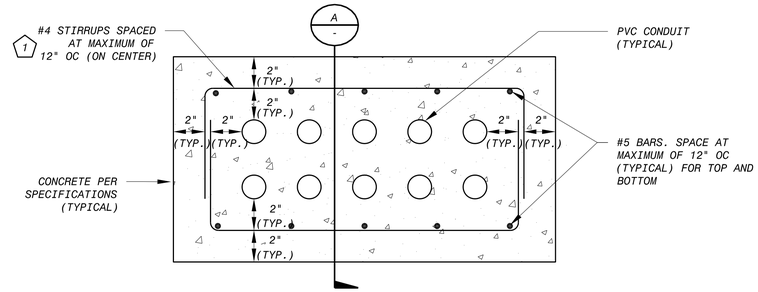

MULTI-LAYER DUCT/CONDUIT BANK REINFORCEMENT AND CONCRETE BANK ENCASEMENT DETAIL

SCALE: N.T.S.

2

KEY NOTES

1. #4 STIRRUPS SHALL BE SPACED AT A MAXIMUM OF TWELVE INCHES (12") ON CENTER (O.C.). HOWEVER, THE MAXIMUM SPACING REQUIREMENT FOR THE STIRRUPS SHALL BE REDUCED WHEN THE UNDERGROUND DUCT/CONDUIT BANK IS A CERTAIN DISTANCE, AS DENOTED ON THE STRUCTURAL DRAWINGS, FROM THE WALL OF A MANHOLE/STRUCTURE/BUILDING/ETC. (I.E. THE CONTRACTOR SHALL INSTALL MORE STIRRUPS WHEN THE UNDERGROUND DUCT/CONDUIT BANK IS WITHIN A CERTAIN DISTANCE, AS DENOTED ON THE STRUCTURAL DRAWINGS, FROM A WALL OF A MANHOLE/BUILDING/STRUCTURE/ETC.).
2. PROVIDE MINIMUM OF 24 INCHES OF COVER WHERE EXISTING SITE CONDITIONS PERMIT, OTHERWISE, PROVIDE MINIMUM COVER PER THE REQUIREMENTS OF THE NATIONAL ELECTRICAL CODE. INCREASE COVER AS NEEDED PER THE REQUIREMENTS OF THE SITE PLANS/DUCT BANK PLAN/PROFILE DRAWINGS AND THE NATIONAL ELECTRICAL CODE.

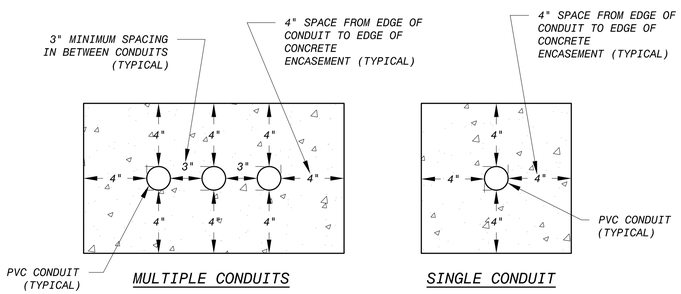

SINGLE-LAYER DUCT/CONDUIT BANK-SPACING DETAIL FOR REINFORCED AND CONCRETE ENCASED DUCT/CONDUIT BANKS

SCALE: N.T.S.

3

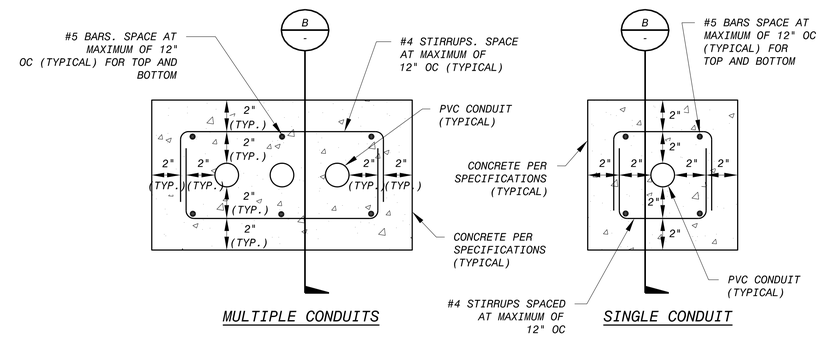

TYPICAL SINGLE-LAYER DUCT/CONDUIT BANK REINFORCEMENT AND CONCRETE BANK ENCASEMENT DETAIL

SCALE: N.T.S.

4

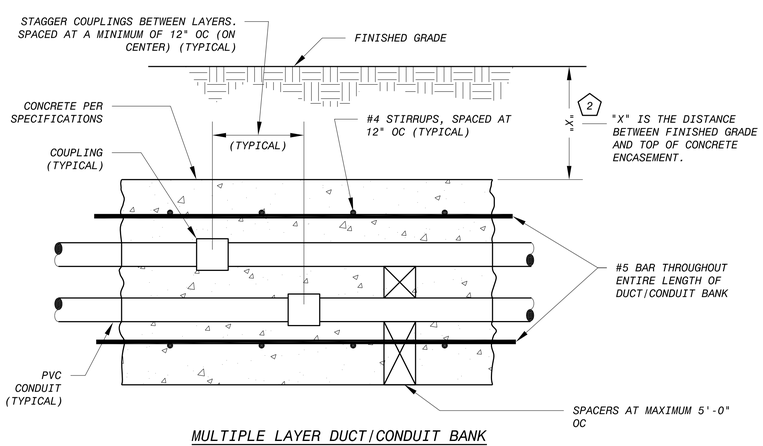

REINFORCEMENT AND CONCRETE ENCASEMENT LONGITUDINAL SECTION- "A"

SCALE: N.T.S.

5

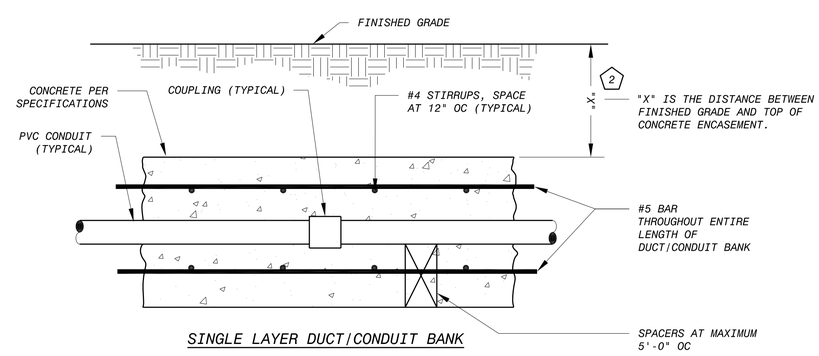

SINGLE-LAYER DUCT/CONDUIT BANK REINFORCEMENT AND CONCRETE ENCASEMENT LONGITUDINAL SECTION- "B"

SCALE: N.T.S.

6

This document, and the designs incorporated herein, is an instrument of professional service that has been developed, designed and prepared by Harutunian Engineering, Inc., and is not to be used, in whole or in part, for any other project without giving written notice to Harutunian Engineering, Inc.

NO.	DR	CK	DATE	DESCRIPTION

REVISIONS

BLACK & VEATCH
Building a world of difference.
Black & Veatch Corporation
Registration No. F-253
Austin, Texas

HARUTUNIAN ENGINEERING, INC.
305 E Hunland Dr., Ste 500; Austin, TX 78752
TBPE Firm Registration No. F-2408

STATE OF TEXAS
K. A. HARUTUNIAN
59181
REGISTERED PROFESSIONAL ENGINEER
9/23/2014

Austin WATER
Walnut Creek WWTP - Tertiary Filter Rehabilitation Project
CIP ID No. 3023.025

ELECTRICAL
TYPICAL ELECTRICAL DETAILS
(SHEET 2 OF 10)

DESIGNED BY:	HEI
DRAWN BY:	HEI
REVIEWED BY:	HEI
APPROVED BY:	HEI
PROJECT NO.:	168622
DATE:	4/4/2014
SCALE:	AS SHOWN
REVISION:	

DISCIPLINE NO.
E-49

DWG. NO.
SHEET 161 OF 273

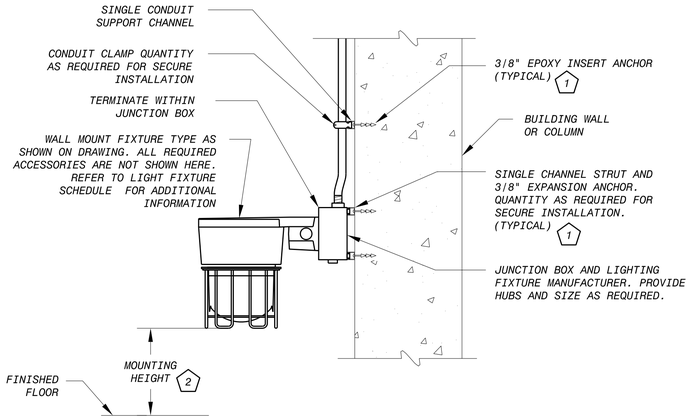

LIGHT FIXTURE TYPICAL COLUMN/WALL MOUNTING DETAIL 1 -

SCALE: N.T.S.

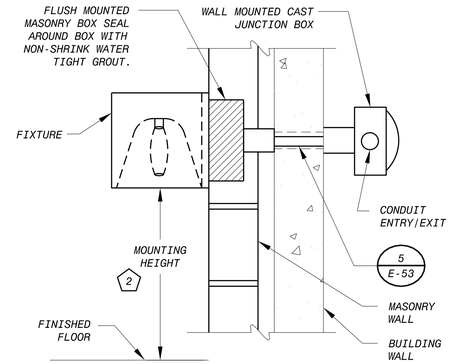

EXTERIOR LIGHT FIXTURE WALL PENETRATION MOUNTING DETAIL 2 -

SCALE: N.T.S.

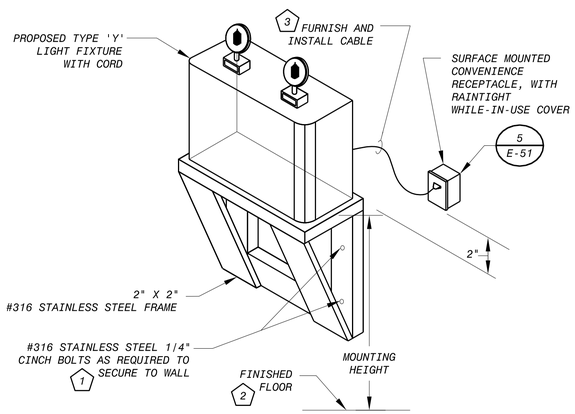

EMERGENCY LIGHTING MOUNTING DETAIL 3 -

SCALE: N.T.S.

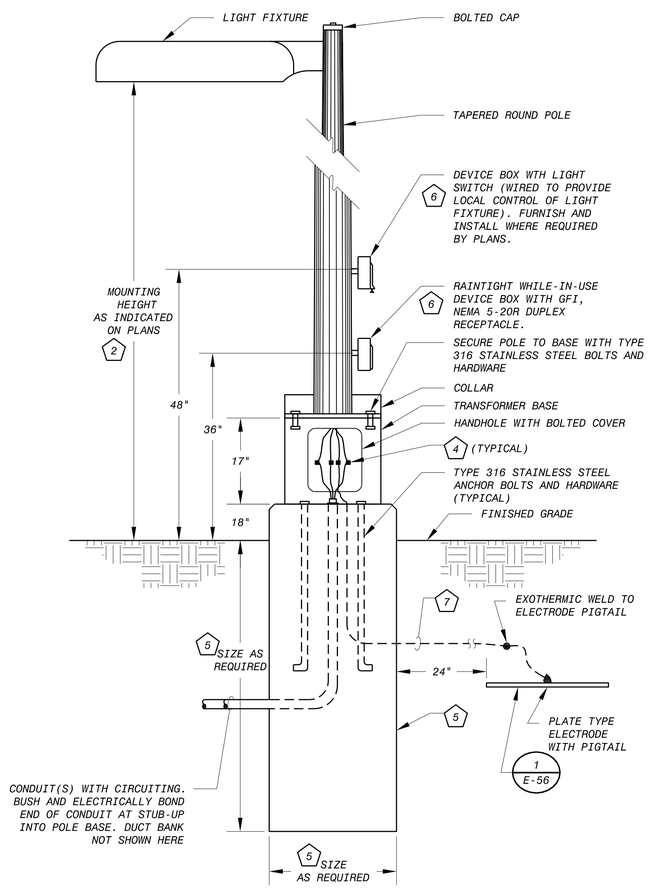

POLE/BASE LIGHT FIXTURE MOUNTING DETAIL 5 -

SCALE: N.T.S.

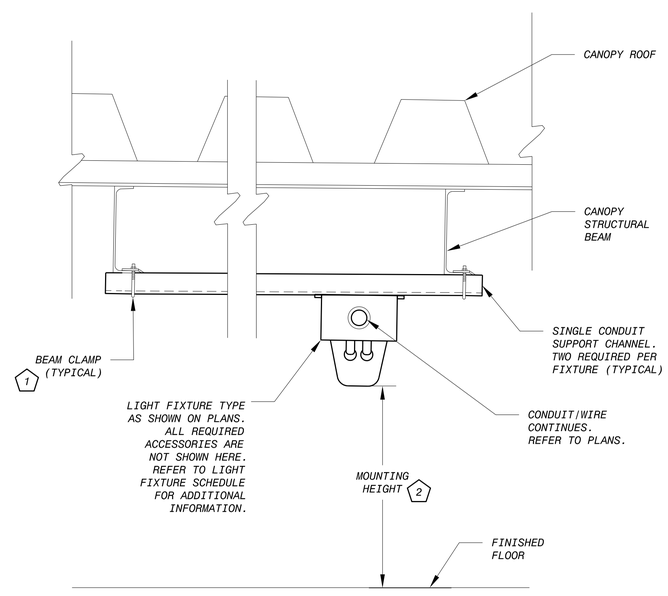

TYPICAL CANOPY CEILING MOUNTED LIGHT FIXTURE DETAIL 6 -

SCALE: N.T.S.

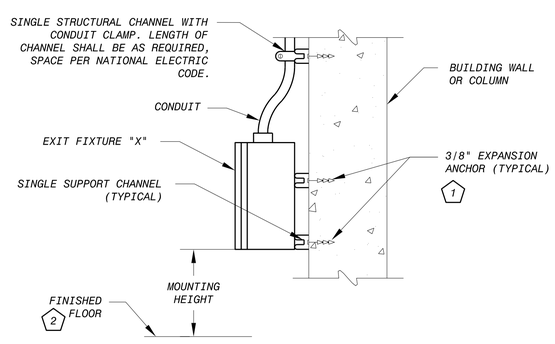

EXIT LIGHT FIXTURE WALL MOUNTING DETAIL 4 -

SCALE: N.T.S.

KEY NOTES (CONTINUED):

1. THE STRUCTURE TYPE TO WHICH EQUIPMENT AND/OR SUPPORT SYSTEMS SHALL BE MOUNTED MAY VARY. THE EQUIPMENT ANCHOR TYPE SHALL CORRESPOND TO THE TYPE OF STRUCTURE TO WHICH THE EQUIPMENT AND/OR SUPPORT SYSTEMS ARE ATTACHED. THE DRAWING REFLECTS A SPECIFIC STRUCTURE TYPE WITH CORRESPONDING ANCHOR TYPE AND IS TYPICAL FOR THE STRUCTURE TYPE SHOWN. TO ATTACH EQUIPMENT/SUPPORT SYSTEMS TO PRE-CAST/CAST-IN-PLACE CONCRETE WALL/FLOOR SLAB STRUCTURE TYPES, FURNISH AND INSTALL BOLT WITH EXPANSION ANCHOR. TO ATTACH EQUIPMENT/SUPPORT SYSTEMS TO A CONCRETE MASONRY UNIT (CMU)/BRICK WALL STRUCTURE TYPE, FURNISH AND INSTALL BOLT WITH EXPANSION ANCHOR. TO ATTACH EQUIPMENT/SUPPORT SYSTEMS TO STEEL STRUCTURE TYPE, FURNISH AND INSTALL BOLTING ASSEMBLY. COORDINATE ATTACHMENT REQUIREMENTS WITH STRUCTURAL AND SPECIFICATIONS.
2. MOUNTING HEIGHT AS SHOWN ON LIGHTING PLANS.
3. FURNISH AND INSTALL 3-CONDUCTOR #16 TYPE SO MULTI-CONDUCTOR CABLE BETWEEN RECEPTACLE AND LIGHT FIXTURE. FURNISH AND INSTALL CORD/CABLE FITTING (NOT SHOWN) TO TERMINATE CABLE TO FIXTURE. FURNISH AND INSTALL 1P-20A NEMA PLUG TO TERMINATE CABLE TO RECEPTACLE.
4. EXTEND CIRCUITING INSIDE THE BASE AND TERMINATE WIRING INSIDE OF BASE WITH SUBMERSIBLE ROADWAY LIGHTING CONNECTOR BLOCKS PER SPECIFICATIONS.
5. FURNISH AND INSTALL DEDICATED FOUNDATION FOR EACH POLE. REFER TO CIVIL/STRUCTURAL DRAWINGS FOR FOUNDATION REQUIREMENTS.
6. WHERE REQUIRED BY THE PLANS, FURNISH AND INSTALL DEVICE ENCLOSURE FOR LIGHT SWITCH/RECEPTACLE AS APPLICABLE. DRILL AND TAP A MINIMUM OF TWO HOLES IN SIDE OF POLE FOR MOUNTING DEVICE ENCLOSURE AND BOLT ENCLOSURE TO EXTERIOR FACE OF POLE WITH TYPE 316 STAINLESS STEEL HARDWARE. FURNISH AND INSTALL SWITCH WIRING THROUGH REAR OF BOX THROUGH PIPE NIPPLE WELDED TO POLE BY POLE MANUFACTURER. COORDINATE WITH THE POLE MANUFACTURER. FINISH DEVICE ENCLOSURE TO MATCH POLE FINISH COLOR.
7. #2/O GROUND WIRE. ROUTE IN 1" CONDUIT (NOT SHOWN) TO GROUND POLE.

This document, and the designs incorporated herein, is an instrument of professional service that has been developed, designed and prepared by Harutunian Engineering, Inc., and is not to be used, in whole or in part, for any other project without giving written notice to Harutunian Engineering, Inc.

NO.	DR	CK	DATE	DESCRIPTION

REVISIONS

BLACK & VEATCH Building a world of difference.
Black & Veatch Corporation
Registration No. F-253
Austin, Texas

HARUTUNIAN ENGINEERING, INC.
305 E Hunland Dr. Ste 500, Austin, TX 78752
TBPE Firm Registration No. F-2408

STATE OF TEXAS — K. A. HARUTUNIAN — 18965 — REGISTERED PROFESSIONAL ENGINEER
9/23/2014

Austin WATER
Walnut Creek WWTP - Tertiary Filter Rehabilitation Project
CIP ID No. 3023.025

ELECTRICAL
TYPICAL ELECTRICAL DETAILS
(SHEET 3 OF 10)

DESIGNED BY:	HEI
DRAWN BY:	HEI
REVIEWED BY:	HEI
APPROVED BY:	HEI
PROJECT NO.:	168622
DATE:	4/4/2014
SCALE:	AS SHOWN
REVISION:	
DISCIPLINE NO.	E-50
DWG. NO.	SHEET 162 OF 273

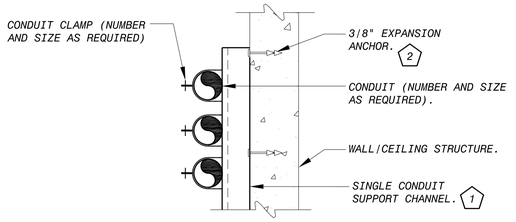

WALL/CEILING/FLOOR CONDUIT SUPPORT DETAIL 1

SCALE: N.T.S.

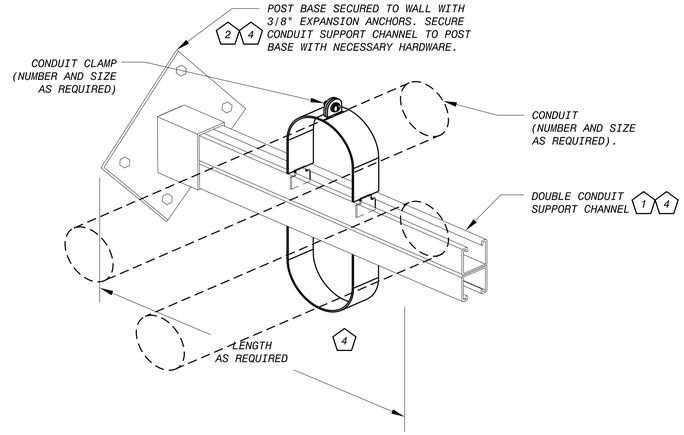

CONDUIT SUPPORT DETAIL 2

SCALE: N.T.S.

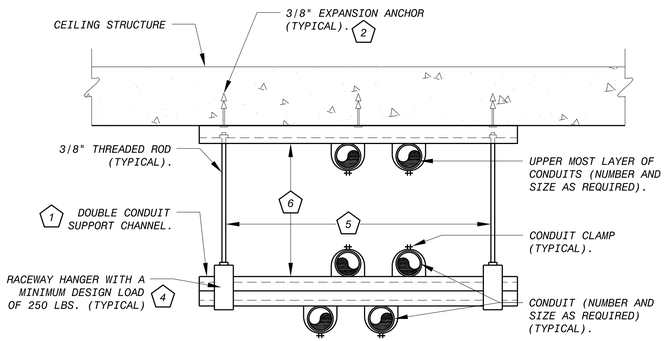

CONDUIT SUPPORT CEILING DETAIL 3

SCALE: N.T.S.

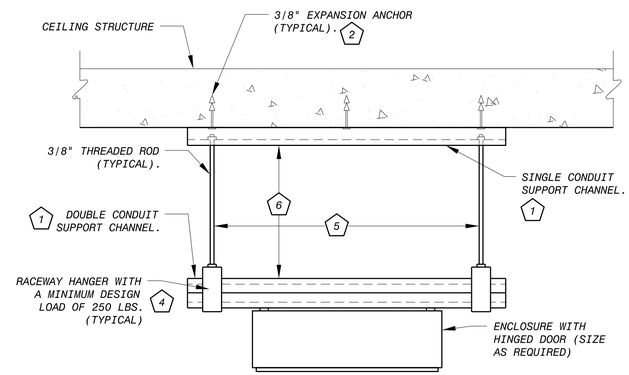

CEILING ENCLOSURE SUPPORT DETAIL 4

SCALE: N.T.S.

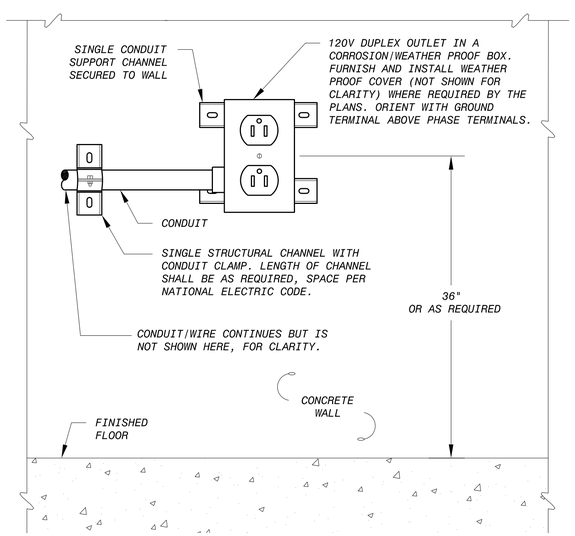

SURFACE/WALL MOUNTED CONVENIENCE RECEPTACLE DETAIL 5

SCALE: N.T.S.

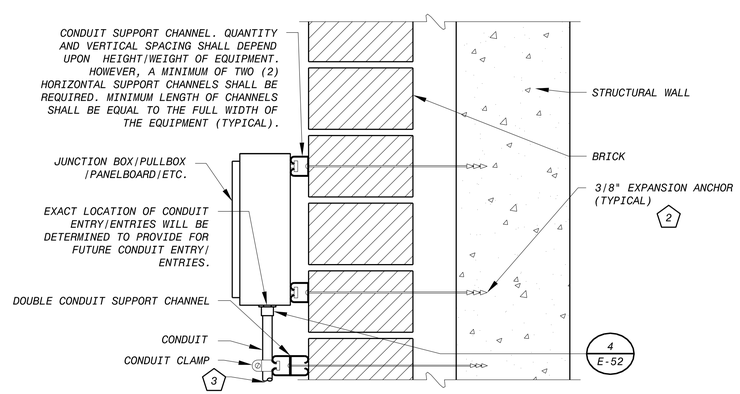

BRICK MOUNTED ELECTRICAL EQUIPMENT INSTALLATION DETAIL 6

SCALE: N.T.S.

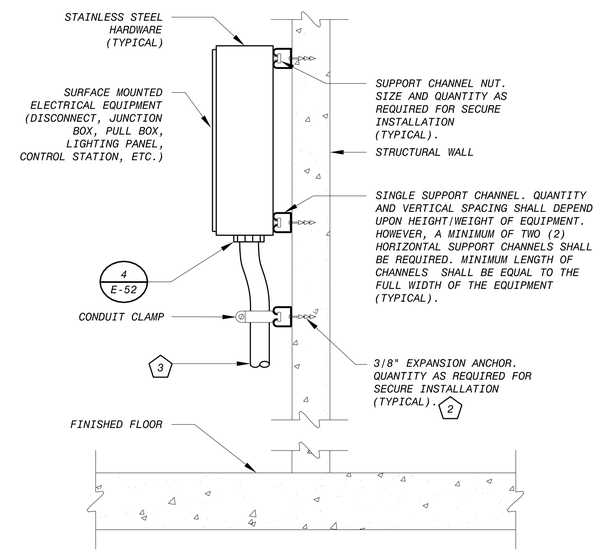

SIDE ELEVATION SURFACE/WALL MOUNTED ELECTRICAL EQUIPMENT INSTALLATION DETAIL 7

SCALE: N.T.S.

KEY NOTES

1. LENGTH OF CHANNEL SHALL BE AS REQUIRED.
2. THE STRUCTURE TYPE TO WHICH EQUIPMENT AND/OR SUPPORT SYSTEMS SHALL BE MOUNTED MAY VARY. THE EQUIPMENT ANCHOR TYPE SHALL CORRESPOND TO THE TYPE OF STRUCTURE TO WHICH EQUIPMENT AND/OR SUPPORT SYSTEMS ARE ATTACHED. THE DRAWING REFLECTS A SPECIFIC STRUCTURE TYPE WITH CORRESPONDING ANCHOR TYPE AND IS TYPICAL FOR STRUCTURE TYPE SHOWN. TO ATTACH EQUIPMENT/SUPPORT SYSTEMS TO PRE-CAST/CAST-IN-PLACE CONCRETE WALL/FLOOR SLAB STRUCTURE TYPES, FURNISH AND INSTALL BOLT WITH EXPANSION ANCHOR. TO ATTACH EQUIPMENT/SUPPORT SYSTEMS TO CONCRETE MASONRY UNIT (CMU)/BRICK WALL STRUCTURE TYPE, FURNISH AND INSTALL BOLT WITH EXPANSION ANCHOR. TO ATTACH EQUIPMENT/SUPPORT SYSTEMS TO STEEL STRUCTURE TYPE, FURNISH AND INSTALL BOLTING ASSEMBLY. COORDINATE ATTACHMENT REQUIREMENTS WITH STRUCTURAL/ARCHITECTURAL/METAL BUILDING SYSTEM MANUFACTURER AS APPLICABLE AND SPECIFICATION SECTION 05120.
3. CONDUIT/WIRE CONTINUES AS SHOWN ON PLAN DRAWINGS. FURNISH AND INSTALL CONDUIT SEAL WHERE INDICATED ON DRAWINGS.
4. COORDINATE/CALCULATE TOTAL WEIGHT LOAD OF CONDUIT/WIRE/CABLES/ETC. AT EACH LOCATION OF SUPPORT. FURNISH AND INSTALL ADDITIONAL SUPPORT AS NECESSARY AT EACH LOCATION, IN ORDER TO MAINTAIN A MAXIMUM OF 50 PERCENT OF MANUFACTURER'S STATED WEIGHT SUPPORT CAPACITY.
5. MAINTAIN MAXIMUM DISTANCE BETWEEN ADJACENT THREADED SUPPORT RODS OF 4'-0".
6. COORDINATE SUPPORT ROD LENGTH (AND CORRESPONDING CONDUIT/WIRE SUPPORT/RACK ELEVATION) WITH PLANS. SUPPORT ROD LENGTH MAY VARY.

This document, and the designs incorporated herein, is an instrument of professional service that has been developed, designed and prepared by Harutunian Engineering, Inc., and is not to be used, in whole or in part, for any other project without giving written notice to Harutunian Engineering, Inc.

NO.	DR	CK	DATE	DESCRIPTION

REVISIONS

BLACK & VEATCH
Building a world of difference.
Black & Veatch Corporation
Registration No. F-253
Austin, Texas

HARUTUNIAN ENGINEERING, INC.
305 E Hunland Dr., Ste 500, Austin, TX 78752
TBPE Firm Registration No. F-2408

STATE OF TEXAS
K. A. HARUTUNIAN
68185
REGISTERED PROFESSIONAL ENGINEER
9/23/2014

Austin WATER
Walnut Creek WWTP - Tertiary Filter Rehabilitation Project
CIP ID No. 3023.025

ELECTRICAL
TYPICAL ELECTRICAL DETAILS
(SHEET 4 OF 10)

DESIGNED BY:	HEI
DRAWN BY:	HEI
REVIEWED BY:	HEI
APPROVED BY:	HEI
PROJECT NO.:	168622
DATE:	4/4/2014
SCALE:	AS SHOWN

REVISION:

DISCIPLINE NO.
E-51

DWG. NO.
SHEET 163 OF 273

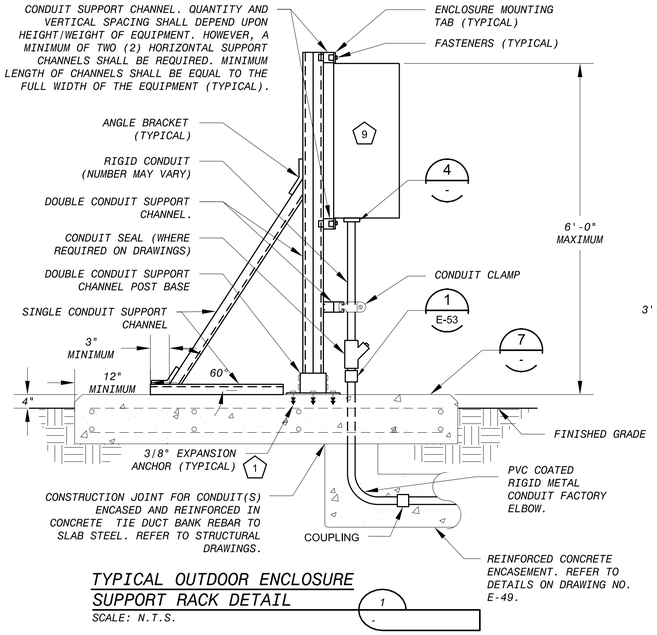

TYPICAL OUTDOOR ENCLOSURE SUPPORT RACK DETAIL (1)
SCALE: N.T.S.

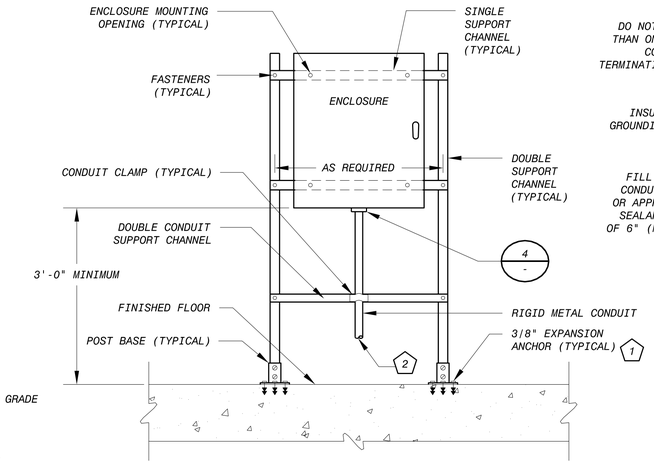

TYPICAL FRONT ELEVATION ENCLOSURE RACK DETAIL (2)
SCALE: N.T.S.

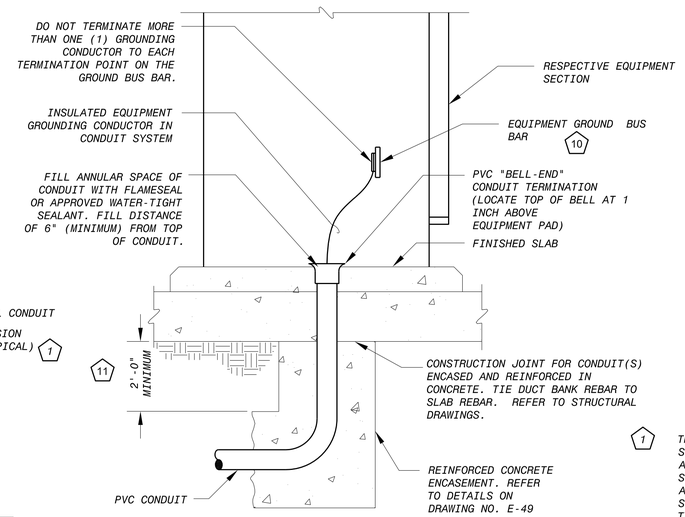

TYPICAL CONDUIT ENTRANCE TO PAD MOUNTED EQUIPMENT DETAIL (8)
SCALE: N.T.S.

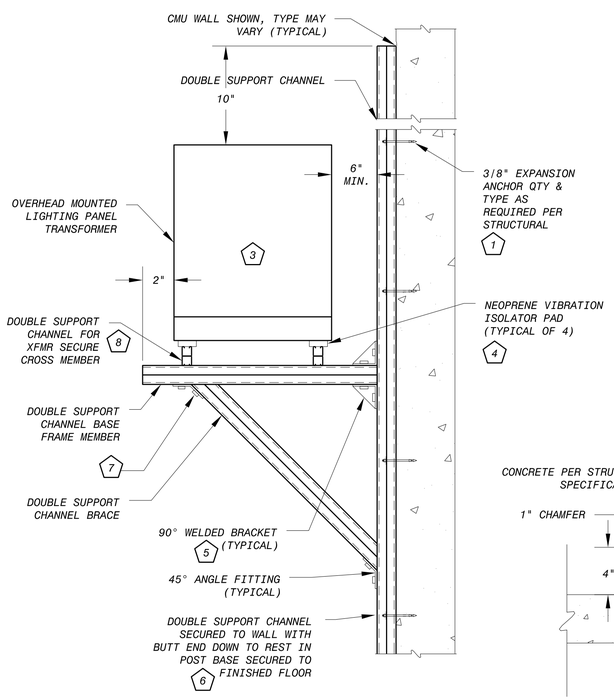

TYPICAL OVERHEAD TRANSFORMER MOUNTING/INSTALLATION DETAIL (3)
SCALE: N.T.S.

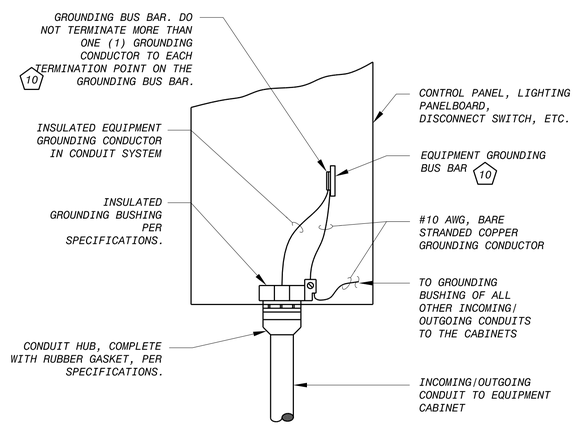

TYPICAL FOR BOTTOM AND TOP CONDUIT ENTRY TO EQUIPMENT-INDOOR (4)
SCALE: N.T.S.

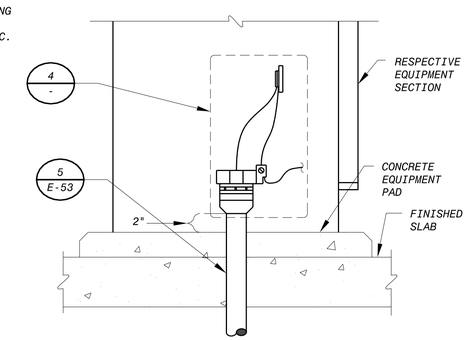

CONDUIT ENTRANCE TO PAD MOUNTED EQUIPMENT DETAIL (5)
SCALE: N.T.S.

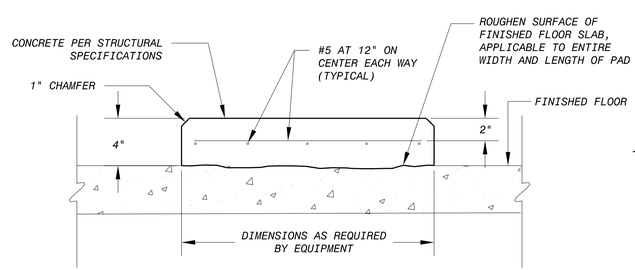

TYPICAL INDOOR ELECTRICAL EQUIPMENT PAD CONCRETE SLAB DETAIL (6)
SCALE: N.T.S.

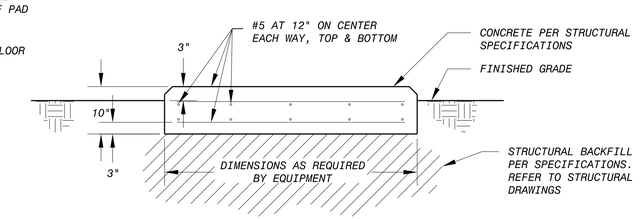

TYPICAL OUTDOOR ELECTRICAL EQUIPMENT PAD CONCRETE SLAB DETAIL (7)
SCALE: N.T.S.

KEY NOTES

1. THE STRUCTURE TYPE TO WHICH EQUIPMENT AND/OR SUPPORT SYSTEMS SHALL BE MOUNTED MAY VARY. THE EQUIPMENT ANCHOR TYPE SHALL CORRESPOND TO THE TYPE OF STRUCTURE TO WHICH EQUIPMENT AND/OR SUPPORT SYSTEMS ARE ATTACHED. THE DRAWING REFLECTS A SPECIFIC STRUCTURE TYPE WITH CORRESPONDING ANCHOR TYPE AND IS TYPICAL FOR STRUCTURE TYPE SHOWN. TO ATTACH EQUIPMENT/SUPPORT SYSTEMS TO PRE-CAST/CAST-IN-PLACE CONCRETE WALL/FLOOR SLAB STRUCTURE TYPES, FURNISH AND INSTALL BOLT WITH EXPANSION ANCHOR. TO ATTACH EQUIPMENT/ SUPPORT SYSTEMS TO CONCRETE MASONRY UNIT (CMU)/BRICK WALL STRUCTURE TYPE, FURNISH AND INSTALL BOLT WITH EXPANSION ANCHOR.
2. CONDUIT/WIRE CONTINUES AS SHOWN ON PLAN DRAWINGS. FURNISH AND INSTALL CONDUIT SEAL WHERE REQUIRED ON DRAWINGS.
3. CONDUIT/WIRE CONNECTIONS TO TRANSFORMER ARE NOT SHOWN FOR CLARITY. TERMINATE CONDUIT TO BOTTOM OR SIDE OF TRANSFORMER, AS APPLICABLE, USING LIQUID-TIGHT FLEXIBLE CONDUIT/FITTINGS PER SPECIFICATIONS.
4. FURNISH AND INSTALL ISOLATION PADS WITH ONE-INCH MINIMUM THICKNESS. ATTACH ISOLATION PADS AND CROSS MEMBERS TO TRANSFORMER WITH APPROPRIATE HARDWARE (NOT SHOWN). ATTACHMENT HARDWARE SHALL BE SEPARATE FROM HARDWARE FASTENING CROSS MEMBERS TO BASE FRAME MEMBERS (NOT SHOWN).
5. FURNISH AND INSTALL BRACKET FITTINGS OF UNISTRUT CORPORATION TYPE P1593 OR P2484W, OR EQUAL, FASTENED TO ALL SUPPORT CHANNEL MEMBERS WITH APPROPRIATE HARDWARE. UTILIZE ALL AVAILABLE POINTS OF CONNECTION (I.E. IF FOUR HOLES, USE ALL FOUR, IF SIX, USE ALL SIX, ETC.)
6. DOUBLE CONDUIT SUPPORT CHANNEL SHALL BE ONE CONTINUOUS PIECE FROM FINISHED FLOOR TO TOP OF CHANNEL. DO NOT USE CHANNEL COUPLINGS TO FASTEN TWO VERTICAL PIECES TOGETHER. SECURE SUPPORT CHANNEL IN PLACE WITH APPROPRIATE HARDWARE, ANCHORS AND FITTINGS, AS APPLICABLE FOR A SECURE/SOUND INSTALLATION. COORDINATE WITH STRUCTURAL/ARCHITECTURAL FOR ADDITIONAL INFORMATION/REQUIREMENTS. WHERE PRACTICAL, ALSO UTILIZE SUPPORT RACK ASSEMBLY FOR SUPPORT OF LIGHTING PANELS AND ASSOCIATED CONDUIT/WIRE SYSTEM, ETC.
7. IN LIEU OF HARDWARE, CONTRACTOR MAY CONTINUOUSLY WELD FITTINGS, BRACKETS AND SUPPORT CHANNEL TOGETHER INTO A FABRICATED ASSEMBLY. HOWEVER, EXACT SIZE/LOCATION OF EQUIPMENT IS NOT SHOWN AND MAY VARY WITH MANUFACTURER AND ACTUAL EQUIPMENT SELECTED. ASSEMBLY DIMENSIONS WILL VARY AS WELL DUE TO ATTACHMENT VARIATIONS BASED ON INSTALLATION LOCATION, HEIGHT, CONFIGURATION, ETC. COORDINATE EACH TRANSFORMER SUPPORT RACK WITH TRANSFORMER MANUFACTURER, AND THE PROPOSED INSTALLATION LOCATION PRIOR TO ASSEMBLY. DO NOT WELD CROSS MEMBERS TO BASE FRAME SUPPORT MEMBERS.
8. THE LENGTH OF CROSS MEMBER CHANNELS MUST BE 4" MORE THAN WIDTH OF TRANSFORMER (2" PER SIDE).
9. FOR OUTDOOR ENCLOSURES, REFER TO PULLBOX GROUNDING DETAIL ON DRAWING NO. E-55.
10. GROUND BUS BAR NOT NECESSARILY IN LOCATION SHOWN AND IS DEPICTED IN THIS MANNER FOR PURPOSES OF CLARITY. CONTRACTOR SHALL FURNISH AND INSTALL SUFFICIENT LENGTH OF ALL GROUNDING CONDUCTORS TO ROUTE THROUGH DESIGNATED WIRING AREAS OF EQUIPMENT TO/FROM ACTUAL LOCATION OF EQUIPMENT GROUND BUS BAR.
11. PROVIDE MINIMUM OF 6" CLEAR BETWEEN TOP OF ENCASEMENT AND BOTTOM OF GRADE BEAMS

This document, and the designs incorporated herein, is an instrument of professional service that has been developed, designed and prepared by Harutunian Engineering, Inc., and is not to be used, in whole or in part, for any other project without giving written notice to Harutunian Engineering, Inc.

NO.	DR	CK	DATE	DESCRIPTION

REVISIONS

BLACK & VEATCH
Building a world of difference.
Black & Veatch Corporation
Registration No. F-253
Austin, Texas

HARUTUNIAN ENGINEERING, INC.
305 E Huntland Dr., Ste 500, Austin, TX 78752
TBPE Firm Registration No. F-2408

STATE OF TEXAS
K. A. HARUTUNIAN
59181
REGISTERED PROFESSIONAL ENGINEER
9/13/2014

Austin WATER
Walnut Creek WWTP - Tertiary Filter Rehabilitation Project
CIP ID No. 3023.025

ELECTRICAL
TYPICAL ELECTRICAL DETAILS
(SHEET 5 OF 10)

DESIGNED BY:	HEI
DRAWN BY:	HEI
REVIEWED BY:	HEI
APPROVED BY:	HEI
PROJECT NO.:	168622
DATE:	4/4/2014
SCALE:	AS SHOWN

REVISION:

DISCIPLINE NO.
E-52

DWG. NO.
SHEET 164 OF 273

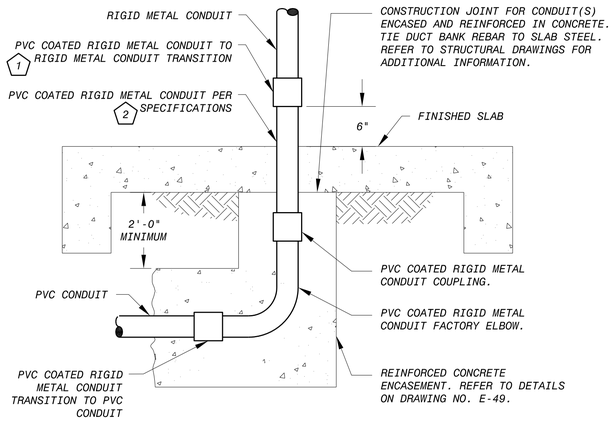

FINISHED INDOOR CONDUIT STUB-UP DETAIL

1

SCALE: N.T.S.

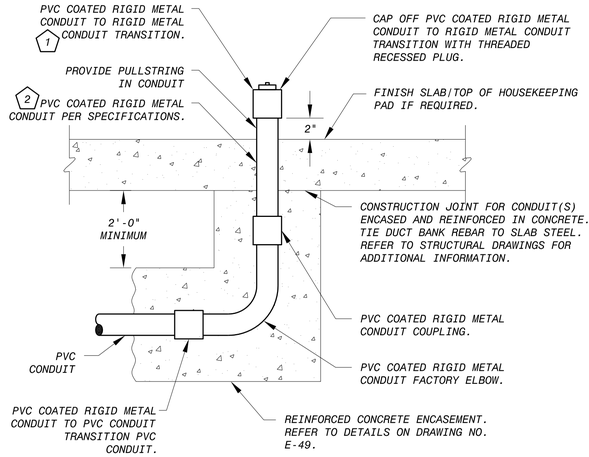

FUTURE CONDUIT STUB-UP AT FINISHED AREA DETAIL

2

SCALE: N.T.S.

KEY NOTES

1. FURNISH AND INSTALL ALUMINUM COUPLING AT THIS LOCATION TO INTERCONNECT FEMALE PVC COATED RIGID METAL CONDUIT TO RIGID METAL CONDUIT SYSTEM. THOROUGHLY COAT THREADS PRIOR TO ASSEMBLY PER SPECIFICATIONS.
2. ALTHOUGH SHOWN EXPOSED AND REQUIRED OTHERWISE BY SPECIFICATIONS, FURNISH AND INSTALL PER THE REQUIREMENTS OF THE "UNDERGROUND CONDUIT IN DUCT BANK SYSTEM" SUBSECTION OF SECTION 16150 OF THE CONTRACT SPECIFICATIONS.
3. MAINTAIN A MINIMUM OF 2 INCHES CLEARANCE IN ALL DIRECTIONS FROM THE OUTSIDE OF EACH CONDUIT TO ANY OTHER SURFACE. AFTER INSTALLATION OF FINAL CONDUIT THROUGH RESERVED ELECTRICAL WINDOW IN SLAB, SEAL/FILL REMAINING SPACE COMPLETELY AROUND CONDUITS WITH WATERPROOF, 50 YEAR NON-SHRINK GROUT. PIPE TAPE AND BITUMASTIC COATING FOR CONDUIT IS NOT SHOWN FOR CLARITY.

This document, and the designs incorporated herein, is an instrument of professional service that has been developed, designed and prepared by Harutunian Engineering, Inc., and is not to be used, in whole or in part, for any other project without giving written notice to Harutunian Engineering, Inc.

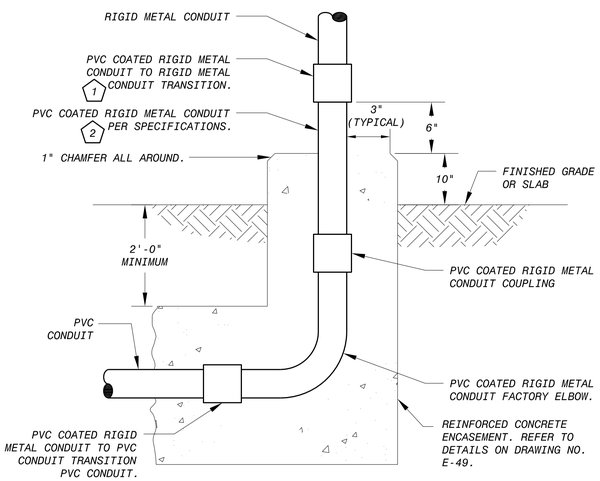

FINISHED OUTDOOR CONDUIT STUB-UP DETAIL

3

SCALE: N.T.S.

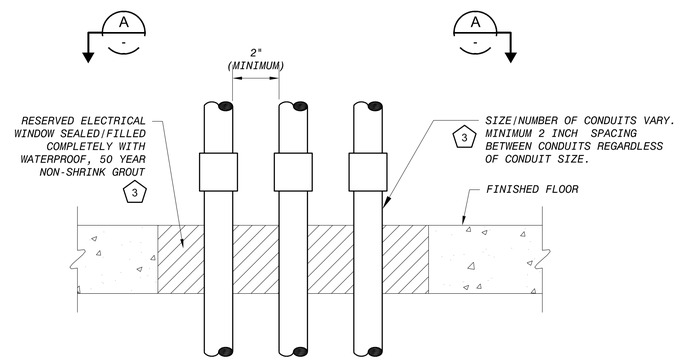

CONDUIT BLOCKOUT PENETRATION OF CONCRETE FLOOR DETAIL

4

SCALE: N.T.S.

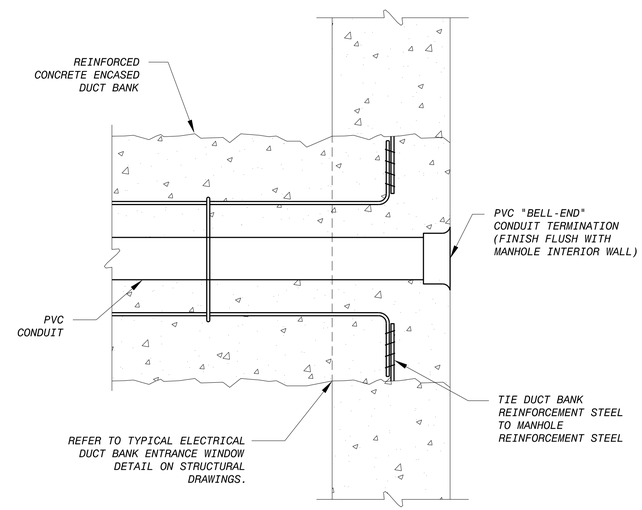

CONDUIT ENTRY INTO EXTERIOR MANHOLE

6

SCALE: N.T.S.

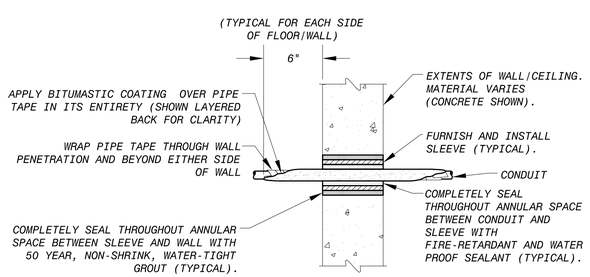

CONDUIT PENETRATION DETAIL

5

SCALE: N.T.S.

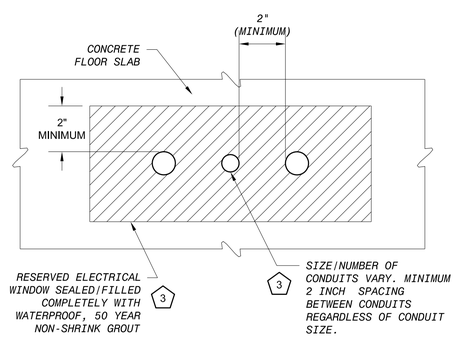

SECTION

A

SCALE: N.T.S.

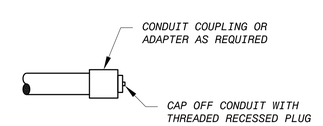

TERMINATION OF CONDUIT FOR FUTURE USE DETAIL

7

SCALE: N.T.S.

NO.	DR	CK	DATE	DESCRIPTION

REVISIONS

BLACK & VEATCH Building a world of difference.
Black & Veatch Corporation
Registration No. F-253
Austin, Texas

HARUTUNIAN ENGINEERING, INC.
305 E Hunland Dr., Ste 500; Austin, TX 78752
TBPE Firm Registration No. F-2408

STATE OF TEXAS · K. A. HARUTUNIAN · 68815 · REGISTERED PROFESSIONAL ENGINEER
9/23/2014

Austin WATER
Walnut Creek WWTP - Tertiary Filter Rehabilitation Project
CIP ID No. 3023.025

ELECTRICAL
TYPICAL ELECTRICAL DETAILS
(SHEET 6 OF 10)

DESIGNED BY:	HEI
DRAWN BY:	HEI
REVIEWED BY:	HEI
APPROVED BY:	HEI
PROJECT NO.:	168622
DATE:	4/4/2014
SCALE:	AS SHOWN

REVISION:

DISCIPLINE NO.
E-53

DWG. NO.
SHEET 165 OF 273

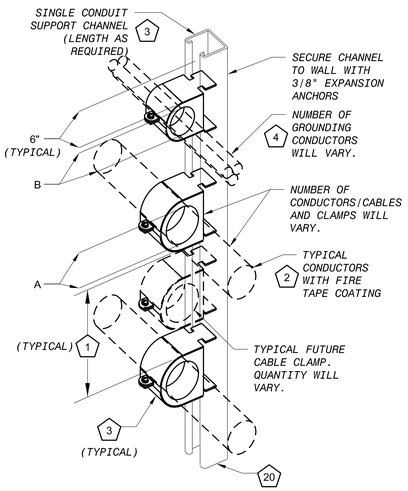

WALL MOUNTED MANHOLE OR HANDHOLE CABLE RACK DETAIL

1 5

SCALE: N.T.S.

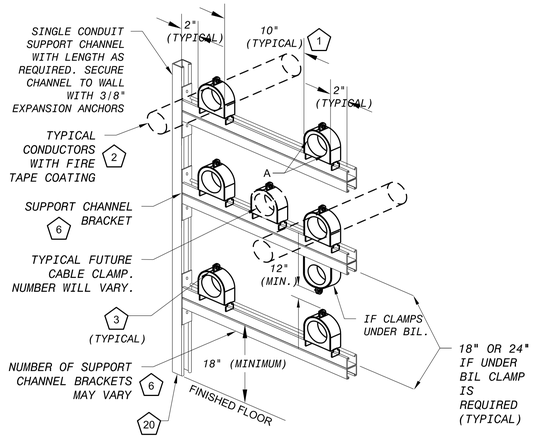

WALL MOUNTED MANHOLE CABLE RACK DETAIL

2 5

SCALE: N.T.S.

KEY NOTES

1. PROVIDE MINIMUM 10" SPACE BETWEEN CABLE CLAMPS FOR INSTALLATION OF FUTURE CABLE CLAMP.
2. FASTEN WITH PORCELAIN CABLE CLAMP SIZED WITH DIMENSION "A" SUITABLE TO FIT ALL APPLICABLE CONDUCTORS AND ASSOCIATED INSULATED GROUND CONDUCTOR GROUPED TOGETHER AND WRAPPED WITH FIRE TAPE COATING. REFER TO CONDUIT/WIRE SCHEDULE FOR CONDUCTOR SIZES.
3. REFER TO DETAILS ON DRAWING NO. E-55 FOR SUPPORT CHANNEL AND CABLE CLAMP GROUNDING.
4. FOR GROUNDING CONDUCTORS, FASTEN WITH PORCELAIN CABLE CLAMP WITH DIMENSION "B" SUITABLE FOR (3) BARE #250 kCMIL GROUNDING CONDUCTORS AND (4) BARE #6 AWG GROUNDING CONDUCTORS.
5. CALCULATE TOTAL WEIGHT LOAD OF CONDUIT/WIRE/CABLES/ETC. AT EACH LOCATION OF SUPPORT. FURNISH AND INSTALL ADDITIONAL SUPPORT AS NECESSARY, IN ORDER TO MAINTAIN A MAXIMUM OF 50 PERCENT OF MANUFACTURER'S STATED WEIGHT SUPPORT CAPACITY.
6. SUPPORT CHANNEL BRACKET IS OF 12GA CONSTRUCTION FOR A MINIMUM UNIFORM DESIGN LOAD OF 300 LBS.
7. COORDINATE LOCATION OF FINISHED GRADE (PARKING LOT/SIDEWALK/ETC.) WITH SITE/CIVIL DRAWINGS. SLOPE FINISHED GRADE AWAY FROM LID/PAD TO PREVENT WATER ACCUMULATION IN VICINITY OF LID/PAD.
8. THE PROPOSED HANDHOLE/MANHOLE SHALL BE MADE OF STEEL REINFORCED CONCRETE WITH 4500 POUNDS PER SQUARE INCH DESIGN STRENGTH MEASURED AT 28 DAYS AND CONCRETE STEEL REINFORCEMENT SHALL COMPLY WITH ASTM A-615 GRADE 60 AT MINIMUM. FURNISH AND INSTALL MANHOLE/HANDHOLE WITH MINIMUM DIMENSIONS AS SHOWN IN THE "PRE-CAST HANDHOLE/MANHOLE MINIMUM DIMENSION IDENTIFICATION TABLE" SHOWN ON THIS DRAWING. MANHOLE/HANDHOLE SHALL BE FURNISHED WITH HEAVY TRAFFIC RATED LID AND OTHER FEATURES AS SHOWN. PROPOSED MANHOLE/HANDHOLE SHALL BE AS MANUFACTURED BY OLDCASTLE OR APPROVED EQUAL. SUBMIT SHOP DRAWINGS AND O&M MANUALS PER SECTION 16150.
9. PROPOSED DUCT BANK SHOWN ONLY FOR PURPOSES OF CLARITY. PROPOSED DUCT BANK QUANTITY/SIZE/LOCATION MAY VARY. REFER TO SITE PLAN FOR CONTINUATION AND ADDITIONAL INFORMATION. SPACE AND ENCASE IN REINFORCED CONCRETE PER THE DETAILS ON DRAWING E-49. FILL/SEAL ALL VOIDS BETWEEN ALL CONDUIT ENTRIES AND BETWEEN CONDUITS AND MANHOLE/HANDHOLE STRUCTURE WITH 50 YEAR NON-SHRINK WATER TIGHT GROUT.
10. INTERFACE PROPOSED DUCT BANK WITH STRUCTURAL WALL PER STRUCTURAL DRAWINGS/SPECIFICATIONS. STRUCTURAL REBAR NOT SHOWN. CONTRACTOR SHALL TIE STRUCTURAL REBAR OF MANHOLE/HANDHOLE TO DUCT BANK REINFORCING STEEL SYSTEM. COORDINATE WITH STRUCTURAL.
11. WINDOW SIZE AND LOCATION SHOWN HERE ARE CONCEPTUAL. SOME WINDOWS CAN BE LOCATED NEAR ADJACENT WALLS. CONTRACTOR SHALL ADJUST SIZE AND LOCATION OF WINDOW ALONG WALL AS NEEDED TO ACCOUNT FOR FIELD CONDITIONS. PULLING IRONS SHALL BE TREATED LIKEWISE. CLOSELY AND CAREFULLY COORDINATE CONDUIT ENTRY WINDOW LOCATIONS WITH THE DUCT BANK BURIAL DEPTH AND MANHOLE/HANDHOLE MANUFACTURER. ALIGNMENT AND ORIENTATION OF WINDOWS AND CABLES SHALL ALLOW FOR AN UNOBSTRUCTED PERSONNEL LANDING AREA INSIDE OF MANHOLE/HANDHOLE AND SHALL BE COORDINATED WITH ACCESS LID/HATCH. MANHOLE/HANDHOLE SHALL BE PROVIDED WITH A MINIMUM OF ONE WINDOW KNOCKOUT PER SIDE FOR PRESENT OR FUTURE USE. ALL PROPOSED WINDOWS MAY NOT BE USED IN THIS CONTRACT.
12. FURNISH AND INSTALL GROUNDING NETWORK FOR MANHOLE/HANDHOLE PER DETAIL 1 ON DRAWING NO. E-55. GROUNDING NOT SHOWN FOR CLARITY.
13. FURNISH AND INSTALL 36" BED OF 3/8" WASHED GRAVEL ACROSS THE FULL WIDTH AND DEPTH OF MANHOLE/HANDHOLE.
14. EXACT MANHOLE ELEVATION IS NOT SHOWN HERE. COORDINATE ELEVATION OF MANHOLE WITH THE CIVIL/STRUCTURAL/AND ELECTRICAL DRAWINGS, ETC. FURNISH AND INSTALL MANHOLE ACCESS NECK AS REQUIRED TO ACCOMMODATE FOR THE ACTUAL MANHOLE ELEVATION. REFER TO SPECIFICATIONS FOR REQUIRED DUCT BANK SLOPE.
15. NECK OF MANHOLE IS 24" UNLESS CONDITIONS ARE SUCH THAT LENGTH MUST VARY. SHOULD THE NECK LENGTH INCREASE, MANHOLE ENTRANCE DIAMETER SHALL BE INCREASED AS NECESSARY TO PERMIT A MAN WITH A LADDER TO SAFETY ENTER THE MANHOLE. IN RESIZING NECK AND COVER DIAMETERS, CONSIDERATION MUST BE GIVEN TO A SAFE LADDER ANGLE TO PERMIT AN UNOBSTRUCTED ENTRANCE BY AN INDIVIDUAL. ASSUME LADDER LEGS AT CONTACT TO FLOOR ARE SET NO LESS THAN 36" FROM BACK WALL OR 12" FROM FRONT EDGE OF CABLE RACKING IN MANHOLE SUCH THAT AN INDIVIDUAL CAN EASILY BACK OFF OR GO UP THE LADDER. ADDITIONALLY, LENGTH AND WIDTH OF MANHOLE SHALL BE INCREASED TO FACILITATE SAFE PLACEMENT OF LADDER.
16. ROUTE AND SECURE GROUND CABLE ALONG WALL 6" BELOW MANHOLE/HANDHOLE CEILING AND CONTINUE TO TERMINATION AT GROUND BUS.
17. CONDUCTORS/CABLES ROUTED THROUGH MANHOLE/HANDHOLE SHALL BE TAGGED IN MANHOLE/HANDHOLE PER SPECIFICATIONS WITH TAG NAME DESIGNATED ON DRAWINGS.
18. BENDING RADIUS OF CABLES SHALL NOT BE LESS THAN CABLE MANUFACTURES RECOMMENDATION.
19. SUPPORT CHANNELS AND CABLE CLAMPS NOT SHOWN FOR CLARITY. CONFIGURATION OF CABLE SUPPORT SYSTEM WILL VARY DEPENDING ON QUANTITY AND ROUTING OF CABLES/CONDUCTORS. SECURE SUPPORT CHANNELS TO WALL MANHOLE/HANDHOLE WITH 3/8" EPOXY ANCHORS PER SPECIFICATIONS.
20. WALL-MOUNTED SUPPORT CHANNEL SHALL REST ON MANHOLE/HANDHOLE FLOOR.
21. FURNISH AND INSTALL FACTORY BELL-END FITTINGS ON ALL CONDUIT ENTRIES INTO MANHOLE/HANDHOLE.
22. CONTRACTOR SHALL FURNISH AND INSTALL GENERATOR TERMINAL JUNCTION BOX PER SPECIFICATION SECTION 16250. MINIMUM ENCLOSURE SIZE IS 48"H X 24"W X 8"D. CONTRACTOR SHALL FURNISH AND INSTALL ENCLOSURE, ITS CONTENTS, AND ALL RELATED HARDWARE. CONTRACTOR SHALL SIZE ENCLOSURE PER, AND IN ACCORDANCE WITH, THE REQUIREMENTS OF THE NATIONAL ELECTRICAL CODE (N.E.C.). CONFIGURATION OF GENERATOR TERMINAL JUNCTION BOX, AND QUANTITY/CONFIGURATION OF CORRESPONDING INTERCONNECT CONDUIT/WIRE MAY VARY. REFER TO PLANS.
23. INTERNAL LAYOUT SHOWN IS CONCEPTUAL. NOT ALL INTERNAL COMPONENTS OF TERMINAL JUNCTION BOX ARE SHOWN HERE. REFER TO OTHER CONTRACT DOCUMENTS FOR ADDITIONAL REQUIREMENTS. DO NOT INFER EXACT QUANTITIES OF TERMINAL BLOCKS FROM THIS DRAWING. SIZE THE BOX AND LOCATE INTERNAL COMPONENTS TO PERMIT BENDING OF THE MOBILE GENERATOR FIELD WIRING INSIDE OF THE BOX WITHOUT VIOLATING THE CABLE BENDING RADIUS.
24. MOBILE GENERATOR FIELD WIRING (2 SETS OF 500 KCMIL PER PHASE) SHALL BE FURNISHED AND INSTALLED BY THE OWNER IN THE FUTURE.

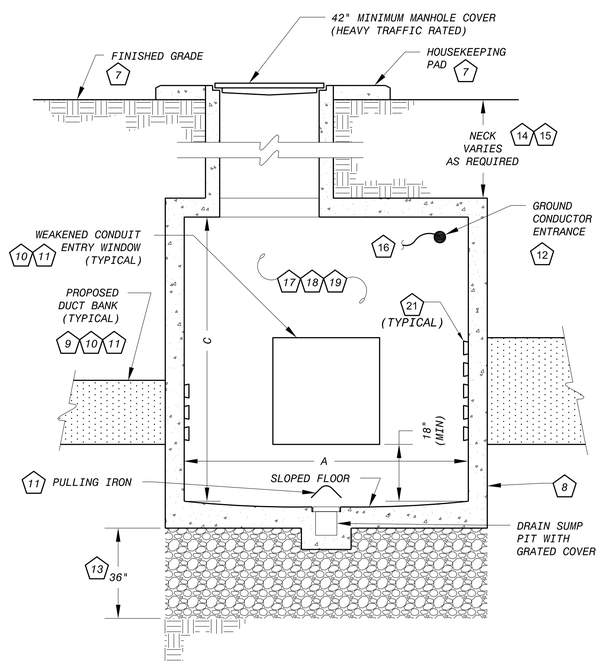

TYPICAL MANHOLE ELEVATION INSTALLATION DETAIL

3

SCALE: N.T.S.

PRE-CAST MANHOLE MINIMUM DIMENSION IDENTIFICATION TABLE (22)			
TAG	DIMENSION (INCHES)		
	A	B	C
"MH-9"	96"	96"	84"
"MH-FB1/WRI"	96"	96"	84"

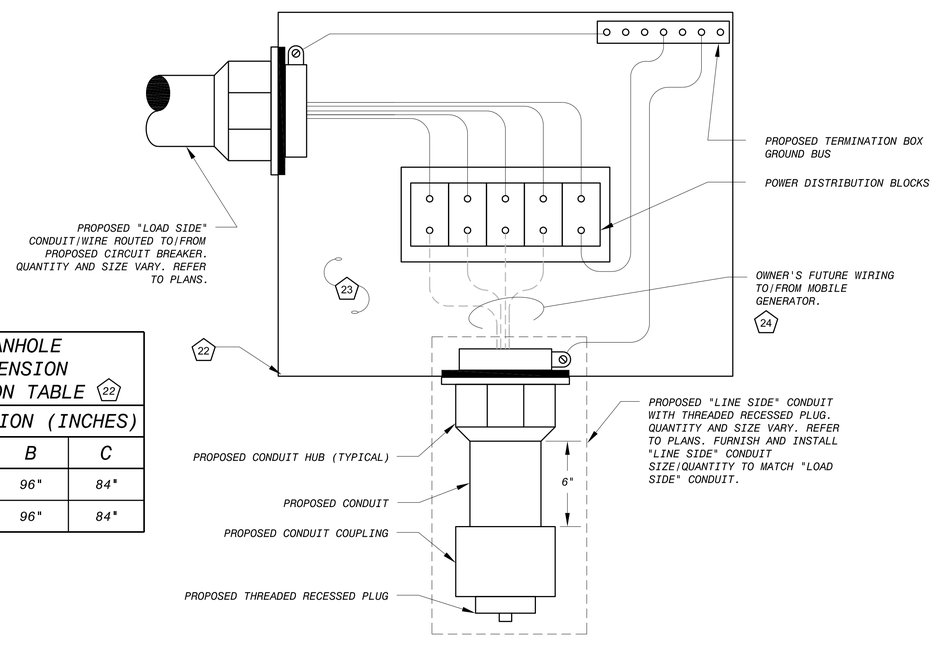

TYPICAL GENERATOR TERMINAL JUNCTION BOX INSTALLATION DETAIL

4

SCALE: N.T.S.

This document, and the designs incorporated herein, is an instrument of professional service that has been developed, designed and prepared by Harutunian Engineering, Inc., and is not to be used, in whole or in part, for any other project without giving written notice to Harutunian Engineering, Inc.

NO.	DR	CK	DATE	DESCRIPTION

REVISIONS

BLACK & VEATCH Building a world of difference.
Black & Veatch Corporation
Registration No. F-253
Austin, Texas

HARUTUNIAN ENGINEERING, INC.
305 E Hunland Dr, Ste 500, Austin, TX 78752
TBPE Firm Registration No. F-2408

STATE OF TEXAS
K. A. HARUTUNIAN
68181
REGISTERED PROFESSIONAL ENGINEER
9/23/2014

Austin WATER
Walnut Creek WWTP - Tertiary Filter Rehabilitation Project
CIP ID No. 3023.025

ELECTRICAL
TYPICAL ELECTRICAL DETAILS
(SHEET 7 OF 10)

DESIGNED BY:	HEI
DRAWN BY:	HEI
REVIEWED BY:	HEI
APPROVED BY:	HEI
PROJECT NO.:	168622
DATE:	4/4/2014
SCALE:	AS SHOWN

REVISION:

DISCIPLINE NO.
E-54

DWG. NO.
SHEET 166 OF 273

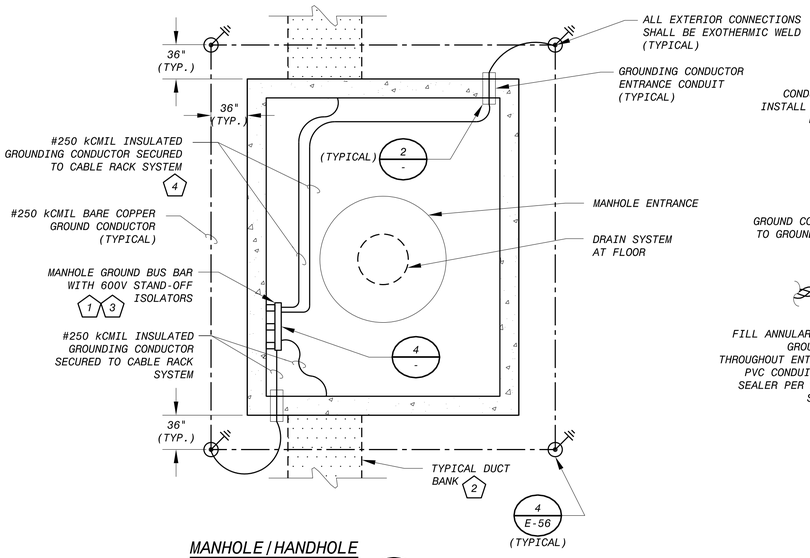

MANHOLE/HANDHOLE GROUNDING SYSTEM 1 -

SCALE: N.T.S.

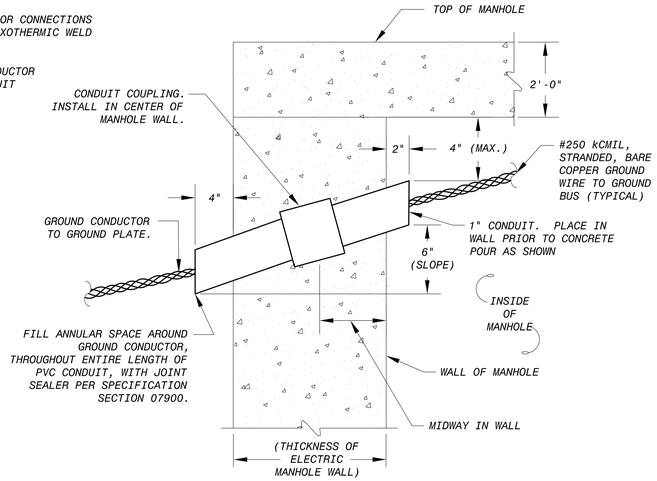

MANHOLE/HANDHOLE GROUNDING CONDUCTOR ENTRANCE DETAIL 2 -

SCALE: N.T.S.

KEY NOTES

12. SECURE EXPOSED INSULATED GROUND CONDUCTOR TO HAND RAIL POST.
13. FURNISH AND INSTALL A MINIMUM OF 2 SEPARATE GROUNDING CONNECTIONS FROM HANDRAIL TO UNDERGROUND GROUNDING SYSTEM. WHERE THERE IS AN INTERRUPTION IN ELECTRICAL CONTINUITY OF HANDRAIL, FURNISH AND INSTALL SUPPLEMENTAL GROUND CONNECTIONS.
14. STUB UP CONDUIT/WIRE ADJACENT TO OUTSIDE EDGE OF CURB. BUSH END OF CONDUIT AND SEAL WATER TIGHT.
15. BOND USING DETACHABLE MECHANICAL CONNECTOR TO FACILITATE REMOVAL OF VENTILATION HOOD.

KEY NOTES

1. LOCATE GROUNDING BUS BAR WITHIN 18" OF CEILING. CLOSELY AND CAREFULLY COORDINATE LOCATION OF GROUNDING BUS BAR WITH CORRESPONDING MANHOLE PLAN/ELEVATION DRAWING, AS APPLICABLE.
2. LOCATION AND SIZES OF DUCT BANK PENETRATIONS WILL VARY.
3. LOCATE GROUNDING BUS BAR WITHIN 18" OF CEILING. CLOSELY AND CAREFULLY COORDINATE LOCATION OF GROUNDING BUS BAR WITH CORRESPONDING MANHOLE/HANDHOLE PLAN/ELEVATION DRAWING, AS APPLICABLE.
4. #250 kCMIL GROUNDING CONDUCTOR (NUMBER OF CONDUCTORS VARY) CONTINUES AROUND PERIMETER OF MANHOLE/HANDHOLE TO/FROM GROUNDING BUS BAR ASSEMBLY.
5. 1-#6 AWG GROUNDING CONDUCTOR, WITH DAISY CHAIN TERMINATION CONFIGURATION, CONTINUES TO/FROM NEXT CABLE INSULATOR/CLAMP ASSEMBLY AND/OR MANHOLE/HANDHOLE GROUNDING BUS BAR ASSEMBLY. EACH CABLE/CIRCUIT TO HAVE A SEPARATE AND DEDICATED GROUNDING CONDUCTOR TERMINATED AT GROUNDING BUS.
6. CABLE SUPPORT CHANNEL GROUNDING CONDUCTOR CONTINUES TO/FROM EACH SEPARATE CABLE SUPPORT CHANNEL WITHIN CONFINES OF MANHOLE/HANDHOLE, THEN TO/FROM GROUNDING BUS BAR.
7. NUMBER OF GROUNDING CONDUCTORS AND COMPRESSION TERMINALS ATTACHED TO CABLE CLAMP WILL VARY.
8. COPPER GROUNDING PLATE/ROD AS APPLICABLE. FURNISH AND INSTALL COPPER ROD TYPE GROUNDING ELECTRODES UNLESS NOTED OTHERWISE ON THE DRAWINGS. MINIMUM OF (3) ELECTRODES ARE REQUIRED. REFER TO TYPICAL GROUND PLATE/ROD INSTALLATION DETAILS ON DRAWING NO. E-56.
9. STUB UP CONDUIT/WIRE ADJACENT TO HANDRAIL POST. DO NOT BLOCK ACCESS TO REMOVABLE SECTION. BUSH END OF CONDUIT AND SEAL WATER TIGHT.
10. BOND BY EXOTHERMIC WELD.
11. DAISY-CHAIN INSULATED GROUND CONDUCTOR TO POST OF REMOVABLE SECTION. BOND USING DETACHABLE MECHANICAL CONNECTOR TO FACILITATE REMOVAL OF HANDRAIL SECTION.

This document, and the designs incorporated herein, is an instrument of professional service that has been developed, designed and prepared by Harutunian Engineering, Inc., and is not to be used, in whole or in part, for any other project without giving written notice to Harutunian Engineering, Inc.

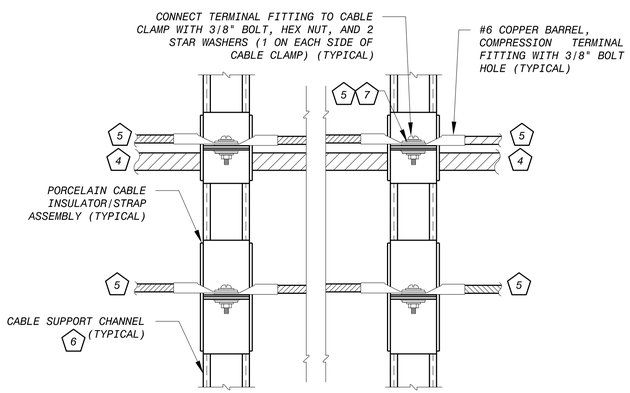

MANHOLE/HANDHOLE CABLE RACK GROUNDING DETAIL 3 -

SCALE: N.T.S.

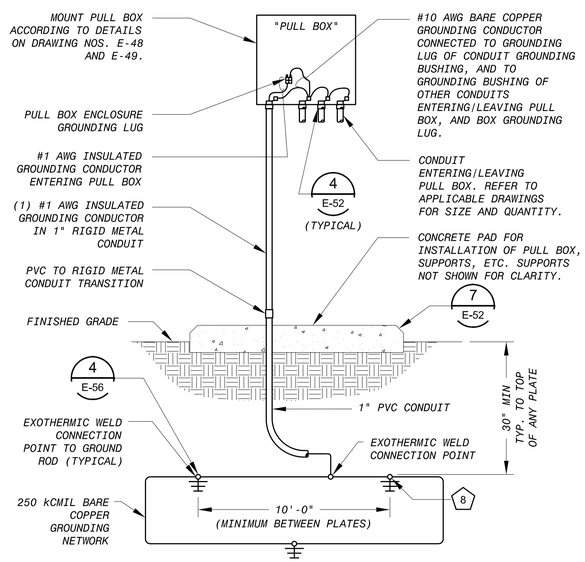

PULLBOX GROUNDING DETAIL 5 -

SCALE: N.T.S.

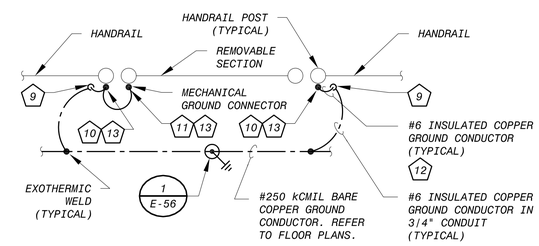

HANDRAIL GROUNDING DETAIL 6 -

SCALE: N.T.S.

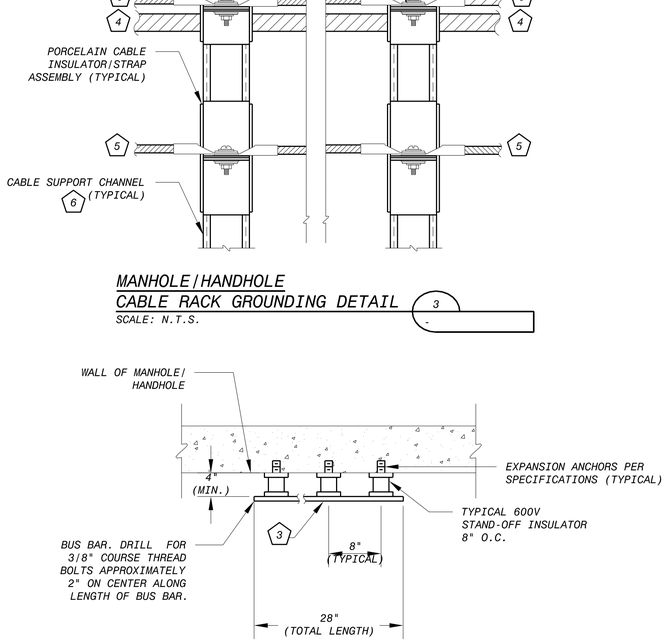

MANHOLE/HANDHOLE GROUND BUS ASSEMBLY DETAIL 4 -

SCALE: N.T.S.

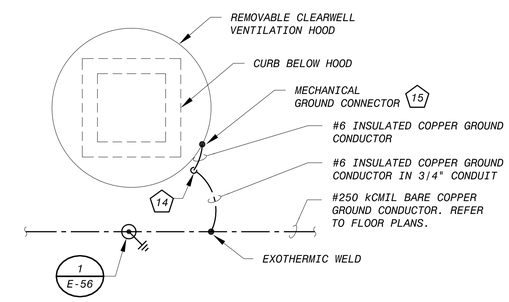

VENTILATION HOOD GROUNDING DETAIL 7 -

SCALE: N.T.S.

NO.	DR	CK	DATE	DESCRIPTION

REVISIONS

BLACK & VEATCH Building a world of difference.
Black & Veatch Corporation
Registration No. F-253
Austin, Texas

HARUTUNIAN ENGINEERING, INC.
305 E Huntland Dr., Ste 500, Austin, TX 78752
TBPE Firm Registration No. F-2408

STATE OF TEXAS
K. A. HARUTUNIAN
61815
REGISTERED PROFESSIONAL ENGINEER
9/23/2014

Austin WATER
Walnut Creek WWTP - Tertiary Filter Rehabilitation Project
CIP ID No. 3023.025

ELECTRICAL
TYPICAL ELECTRICAL DETAILS
(SHEET 8 OF 10)

DESIGNED BY:	HEI
DRAWN BY:	HEI
REVIEWED BY:	HEI
APPROVED BY:	HEI
PROJECT NO.:	168622
DATE:	4/4/2014
SCALE:	AS SHOWN
REVISION:	
DISCIPLINE NO.	E-55
DWG. NO.	SHEET 167 OF 273

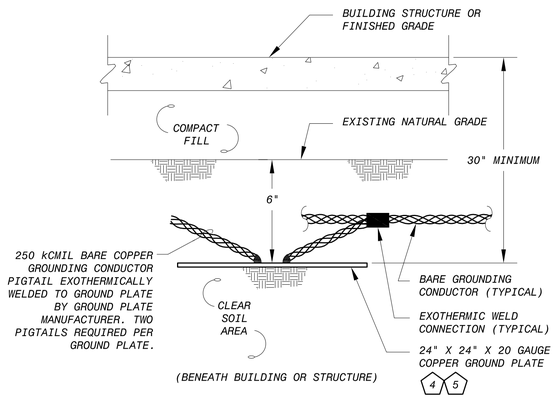

TYPICAL GROUND PLATE INSTALLATION DETAIL

SCALE: N.T.S.

1

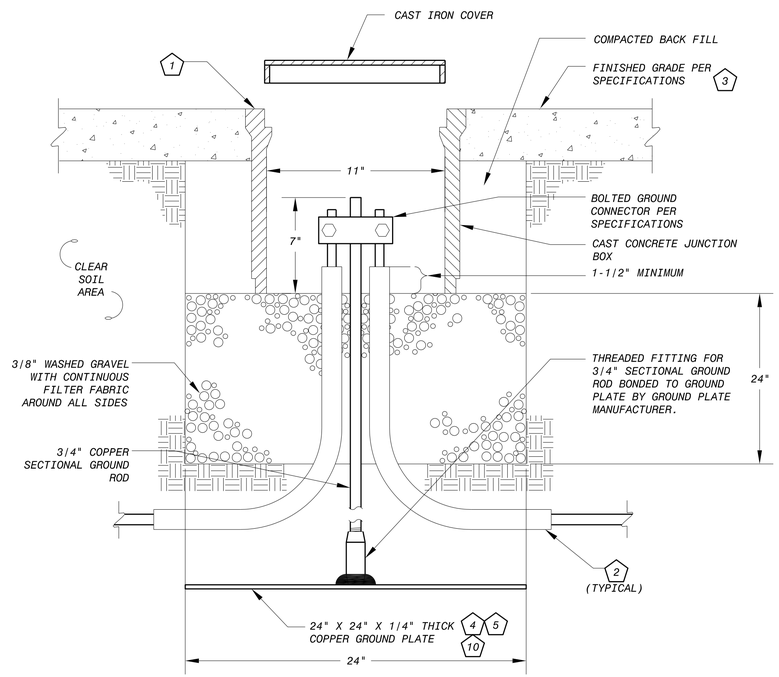

TYPICAL GROUND TEST WELL INSTALLATION DETAIL

SCALE: N.T.S.

2

KEY NOTES:

1. FURNISH AND INSTALL PRECAST CONCRETE PULLBOX COMPLETE WITH LID. BOX SHALL HAVE MINIMUM INTERIOR DIMENSIONS OF 11" WIDE X 14 1/4" DEEP AND 11" TALL. SUBMIT SHOP DRAWINGS AND O&M MANUALS PER SECTION 16550 OF THE CONTRACT SPECIFICATIONS. BOX SHALL BE AS MANUFACTURED BY OLD CASTLE OR APPROVED EQUAL. OLDCASTLE PRODUCTS PART NUMBERS ARE:

   A. NUMBER 36T CAST IRON COVER-#01701430.

   B. REINFORCED CONCRETE BODY #9700086

   C. PULL BOX SIZE; INSIDE DIMENSIONS 10-1/2"X17"X12" (MINIMUM)

2. 250 KCMIL STRANDED COPPER GROUNDING CONDUCTOR IN 1-1/2" PVC CONDUIT, DIRECT BURIED A MINIMUM OF 30 INCHES BELOW FINISHED GRADE (NOT CONCRETE ENCASED). EACH PVC CONDUIT SHALL EXTEND A MINIMUM OF 12 INCHES HORIZONTALLY FROM THE OUTSIDE EDGE OF THE TEST WELL CONCRETE CAST JUNCTION BOX.

3. COORDINATE LOCATION OF FINISHED GRADE (PARKING LOT/SIDEWALK/NATURAL GRADE/ETC.) WITH SITE/CIVIL DRAWINGS. SLOPE FINISHED GRADE AWAY FROM TEST WELL LID TO PREVENT WATER ACCUMULATION IN VICINITY OF WELL LID.

4. CONTRACTOR SHALL COORDINATE THE INSTALLATION OF, AND PROTECTION OF, THE ENTIRE GROUNDING NETWORK (GROUND ELECTRODES AND ASSOCIATED GROUNDING CONDUCTORS IN AND AROUND THE STRUCTURE) WITH CIVIL/STRUCTURAL/MECHANICAL DRAWINGS/CONTRACTORS DURING ALL PHASES OF CONSTRUCTION.

5. COORDINATE THE LOCATION/INSTALLATION OF EACH GROUND ELECTRODE WITH CIVIL/STRUCTURAL/MECHANICAL/ELECTRICAL DRAWINGS/CONTRACTORS TO AVOID CONFLICTS. SLIGHT RELOCATION OF GROUND ELECTRODES AND/OR GROUNDING CONDUCTORS FROM THAT SHOWN ON GROUNDING PLAN MAY BE NECESSARY TO AVOID CONFLICTS. ARRANGE/INSTALL GROUND ELECTRODES IN ORDER TO MAINTAIN A MINIMUM DISTANCE OF 10'-0" FROM ANY OTHER GROUND ELECTRODE.

6. PROPOSED 1-1/2" CONDUIT WITH #250 KcMIL HOMERUN. CONDUIT CONTINUES TO/FROM GROUNDING JUNCTION BOX SURFACE MOUNTED ON CANOPY STRUCTURE. REFER TO PLANS.

7. #1/0 AWG GROUNDING CONDUCTOR IS DAISY-CHAINED BETWEEN ADJACENT STRUCTURAL FRAME MEMBERS.

8. SIZE, FURNISH, AND INSTALL JUNCTION BOX. GROUNDING CONDUCTORS SHALL BE EXOTHERMIC WELDED INSIDE JUNCTION BOX. REFER TO SPECIFICATIONS FOR ADDITIONAL INFORMATION.

9. ATTACH CHANNEL TO CANOPY STRUCTURE USING BEAM CLAMPS (NOT SHOWN).

10. WHERE SITE CONDITIONS PERMIT, FURNISH AND INSTALL 3/4" X 10'-0" GROUND ROD IN LIEU OF GROUND PLATE. COORDINATE WITH FIELD CONDITIONS AND THE OWNER.

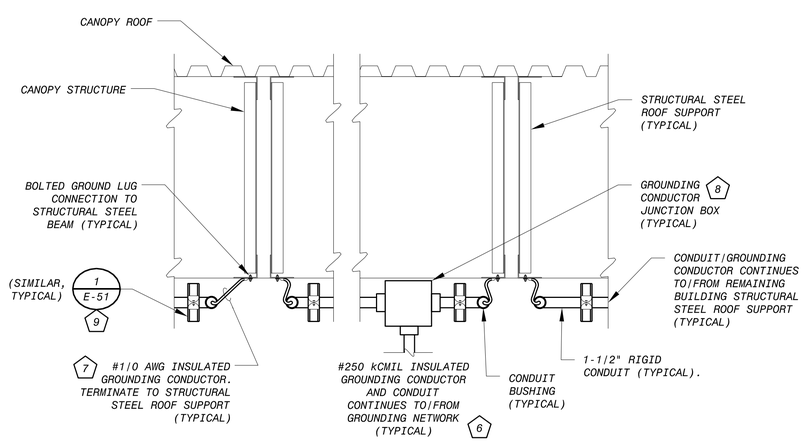

CANOPY STRUCTURE GROUNDING INSTALLATION DETAIL

SCALE: N.T.S.

3

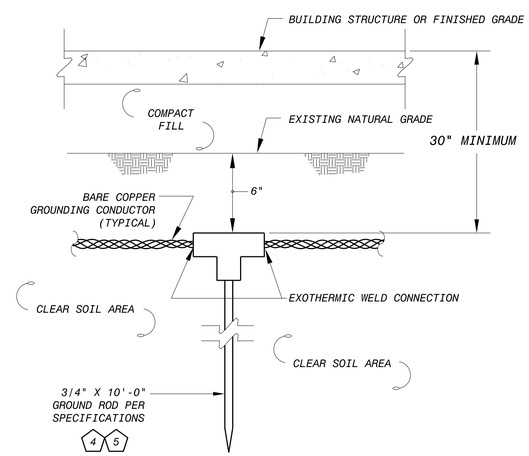

TYPICAL GROUND ROD INSTALLATION DETAIL

SCALE: N.T.S.

4

This document, and the designs incorporated herein, is an instrument of professional service that has been developed, designed and prepared by Harutunian Engineering, Inc., and is not to be used, in whole or in part, for any other project without giving written notice to Harutunian Engineering, Inc.

NO.	DR	CK	DATE	DESCRIPTION

REVISIONS

BLACK & VEATCH
Building a world of difference.
Black & Veatch Corporation
Registration No. F-253
Austin, Texas

HARUTUNIAN ENGINEERING, INC.
305 E Hunland Dr., Ste 500, Austin, TX 78752
TBPE Firm Registration No. F-2408

STATE OF TEXAS
K. A. HARUTUNIAN
68185
REGISTERED PROFESSIONAL ENGINEER
9/23/2014

Austin WATER
Walnut Creek WWTP - Tertiary Filter Rehabilitation Project
CIP ID No. 3023.025

ELECTRICAL
TYPICAL ELECTRICAL DETAILS
(SHEET 9 OF 10)

DESIGNED BY:	HEI
DRAWN BY:	HEI
REVIEWED BY:	HEI
APPROVED BY:	HEI
PROJECT NO.:	168622
DATE:	4/4/2014
SCALE:	AS SHOWN
REVISION:	

DISCIPLINE NO.
E-56

DWG. NO.
SHEET 168 OF 273

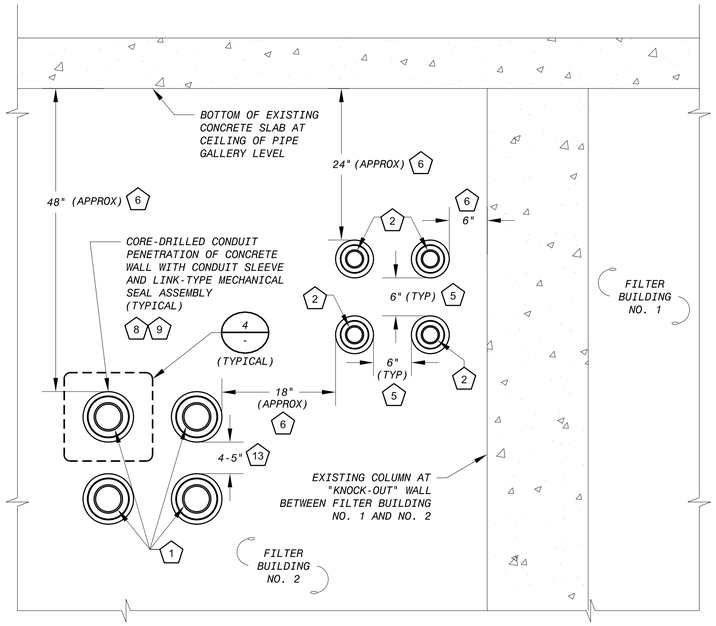

PROPOSED UNDERGROUND CONDUIT BANK PENETRATION OF NORTH WALL VIEW FACING NORTH

SCALE: N.T.S.

1 7 -

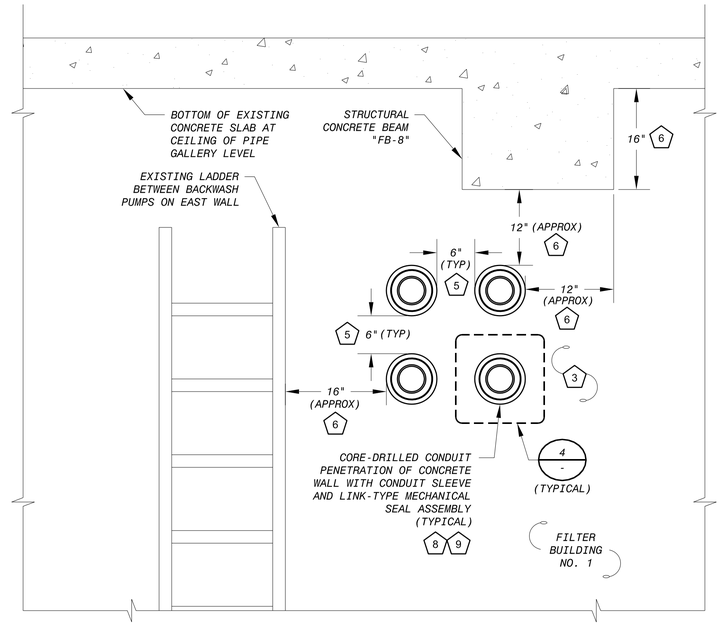

PROPOSED UNDERGROUND CONDUIT BANK PENETRATION OF EAST WALL VIEW FACING EAST

SCALE: N.T.S.

2 7 -

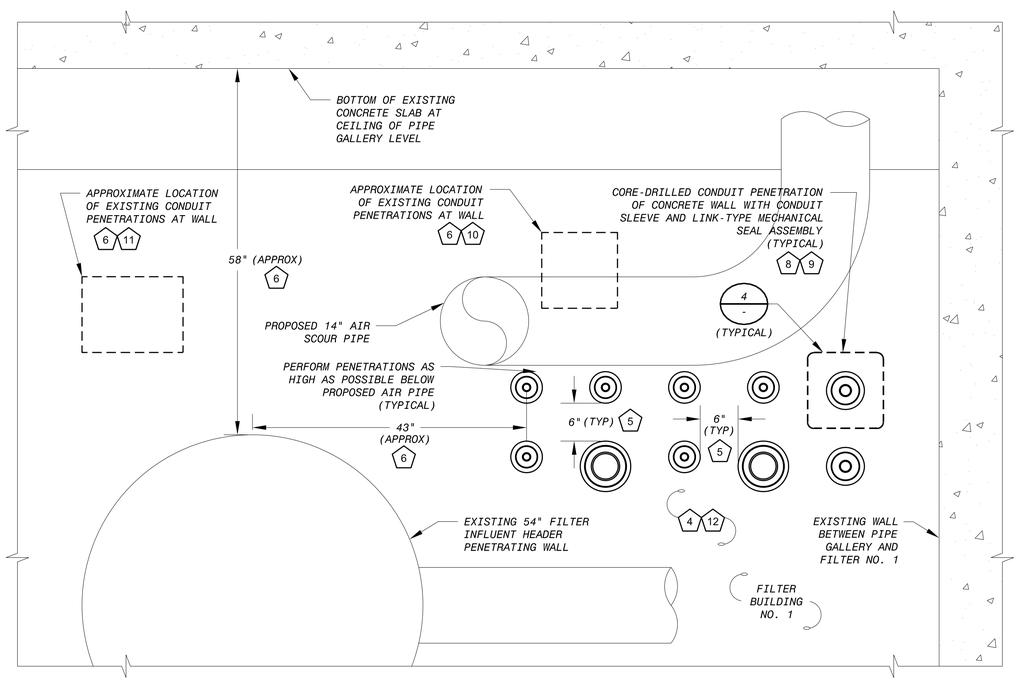

PROPOSED UNDERGROUND CONDUIT BANK PENETRATION OF SOUTH WALL VIEW FACING SOUTH

SCALE: N.T.S.

3 7 12 -

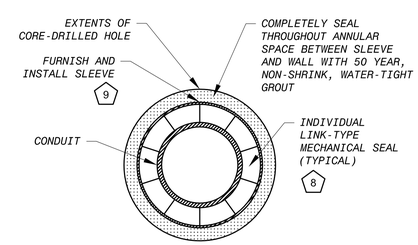

PROPOSED UNDERGROUND CONDUIT PENETRATION OF CONCRETE WALL TYPICAL INSTALLATION DETAIL

SCALE: N.T.S.

4 -

KEY NOTES

1. PROPOSED BACKWASH PUMP 5kV CONDUITS/WIRE TAGGED "FB1-BWP1-P2", "FB1-BWP2-P2", "FB1/WRI-SP1", AND "FB1/WRI-SP2" PENETRATE CONCRETE WALL OF LOWER PIPE GALLERY BELOW GRADE AND TRANSITION TO CONCRETE ENCASED DUCT BANK. EMPTY CONDUITS LOCATED ON BOTTOM ROW. REFER TO CONDUIT/WIRE SCHEDULE ON DRAWING NO. E-47 AND DUCT BANK SECTIONAL VIEWS ON DRAWING NO. E-21.
2. PROPOSED BACKWASH PUMP 600V CONDUITS/WIRE TAGGED "FB1-BWP1-SH2", "FB1-BWP2-SH2", "FB1/WRI-SP3", AND "FB1/WRI-SP4" PENETRATE CONCRETE WALL OF LOWER PIPE GALLERY BELOW GRADE AND TRANSITION TO CONCRETE ENCASED DUCT BANK. REFER TO CONDUIT/WIRE SCHEDULE. EMPTY CONDUITS LOCATED ON BOTTOM ROW. REFER TO CONDUIT/WIRE SCHEDULE ON DRAWING NO. E-47 AND DUCT BANK SECTIONAL VIEWS ON DRAWING NO. E-21.
3. PROPOSED CONDUITS/WIRE TAGGED "DB-FB/9A-LV1", "DB-FB/9A-LV1", "DB-FB/9A-LV1", AND "DB-FB/9A-SP1" PENETRATE CONCRETE WALL OF LOWER PIPE GALLERY BELOW GRADE AND TRANSITION TO CONCRETE ENCASED DUCT BANK. REFER TO CONDUIT/WIRE SCHEDULE.
4. PROPOSED CONDUITS/WIRE TAGGED "BB-ASB1-P", "BB-ASB2-P", "BB-ASB1-SH", "BB-ASB2-SH", "BB-CPASB1-P", "BB-CPASB2-P", "BB-MPC1-P", "BB-SPARE", "BB-TW1-G", AND "BB-TW2-G" PENETRATE CONCRETE WALL OF LOWER PIPE GALLERY BELOW GRADE AND TRANSITION TO CONCRETE ENCASED DUCT BANK. REFER TO CONDUIT/WIRE SCHEDULE.
5. TYPICAL DISTANCE BETWEEN OUTSIDE EDGES OF CORE DRILLED HOLES. FIELD VERIFY LOCATION OF EXISTING REBAR AND ALL OTHER CONFLICTS. ADJUST PENETRATION LOCATION ACCORDINGLY. COORDINATE WITH STRUCTURAL.
6. LOCATION/DISTANCE SHOWN IS APPROXIMATE. FIELD VERIFY EXISTING CONDITIONS, COORDINATE WITH PROPOSED DUCT BANK ROUTES, ELEVATION OF CONDUIT BANKS AND PULLBOXES IN PIPE GALLERY, AND ALL OTHER CONFLICTS. ADJUST PENETRATION LOCATION ACCORDINGLY. COORDINATE WITH STRUCTURAL.
7. REFER TO PROPOSED SITE PLAN RENOVATIONS ON DRAWING NO. E-20 AND DUCT BANK SECTIONAL VIEWS ON DRAWING NO. E-21 FOR LOCATION AND CONFIGURATION OF CONDUITS AT PENETRATION OF FILTER BUILDING FROM SITE INTO PIPE GALLERY LEVEL. REFER TO PIPE GALLERY LEVEL ELECTRICAL CONDUIT CORRIDOR RENOVATIONS PLAN ON DRAWING NO. E-35 FOR LOCATION OF CONDUIT BANKS INSIDE FILTER BUILDING.
8. FURNISH AND INSTALL LINK-TYPE MECHANICAL SEAL ASSEMBLY, CONSISTING OF MULTIPLE LINKED SEALS INSTALLED IN THE ANNULAR SPACE BETWEEN CONDUIT AND SLEEVE. QUANTITY AND TYPE OF SEALS WILL VARY DEPENDING ON SIZE OF CONDUIT AND SLEEVE. COORDINATE SIZE OF CONDUIT AND SLEEVE WITH LINK-TYPE MECHANICAL SEAL MANUFACTURER TO DETERMINE QUANTITY AND SIZE OF SEALS REQUIRED FOR EACH PENETRATION.
9. FURNISH AND INSTALL SLEEVE INSIDE CORE-DRILLED HOLE OF CONCRETE WALL AND SEAL ANNULAR SPACE BETWEEN WALL AND SLEEVE WITH 50 YEAR, NON-SHRINK, WATER-TIGHT GROUT. COORDINATE WITH LINK-TYPE MECHANICAL SEAL MANUFACTURER TO DETERMINE SLEEVE SIZE REQUIRED FOR EACH CONDUIT SIZE.
10. TO BE DEMOLISHED. REFER TO DEMOLITION FLOOR PLANS.
11. TO BE CUT AT WALL AND CAPPED FOR FUTURE USE. REFER TO DEMOLITION FLOOR PLANS.
12. CLEARANCES ARE LIMITED IN VICINITY AROUND PROPOSED DISTRIBUTION CHAMBER AND EXISTING FILTER INFLUENT PIPE ON SOUTH SIDE OF FILTER BUILDING. CAREFULLY PLAN AND COORDINATE ROUTE OF PROPOSED SITE DUCT BANK BETWEEN FILTER BUILDING AND PROPOSED BLOWER BUILDING BEFORE COMMENCING PENETRATIONS OF WALL. FIELD VERIFY LOCATIONS OF ALL EXISTING STRUCTURES AND PIPES. COORDINATE WITH STRUCTURAL AND MECHANICAL.
13. COORDINATE SPACING OF CONDUIT PENETRATIONS WITH LOCATION AND SIZE OF 5kV PULLBOX "FB2-PBBWP-HV1". ALTHOUGH REQUIRED OTHERWISE ON THIS DETAIL, REDUCE SPACE BETWEEN UPPER AND LOWER ROWS OF 4" CONDUITS AT THIS LOCATION AS REQUIRED TO FACILITATE TERMINATION OF CONDUITS AT PULLBOX.

This document, and the designs incorporated herein, is an instrument of professional service that has been developed, designed and prepared by Harutunian Engineering, Inc., and is not to be used, in whole or in part, for any other project without giving written notice to Harutunian Engineering, Inc.

NO.	DR	CK	DATE	DESCRIPTION

REVISIONS

BLACK & VEATCH
Building a world of difference.
Black & Veatch Corporation
Registration No. F-253
Austin, Texas

HARUTUNIAN ENGINEERING, INC.
305 E Hunland Dr., Ste 500, Austin, TX 78752
TBPE Firm Registration No. F-2408

STATE OF TEXAS
K. A. HARUTUNIAN
68185
REGISTERED PROFESSIONAL ENGINEER
9/23/2014

Walnut Creek WWTP - Tertiary Filter Rehabilitation Project
CIP ID No. 3023.025
AUSTIN WATER

ELECTRICAL
TYPICAL ELECTRICAL DETAILS
(SHEET 10 OF 10)

DESIGNED BY:	HEI
DRAWN BY:	HEI
REVIEWED BY:	HEI
APPROVED BY:	HEI
PROJECT NO.:	168622
DATE:	4/4/2014
SCALE:	AS SHOWN

REVISION:

DISCIPLINE NO.
E-57

DWG. NO.
SHEET 169 OF 273

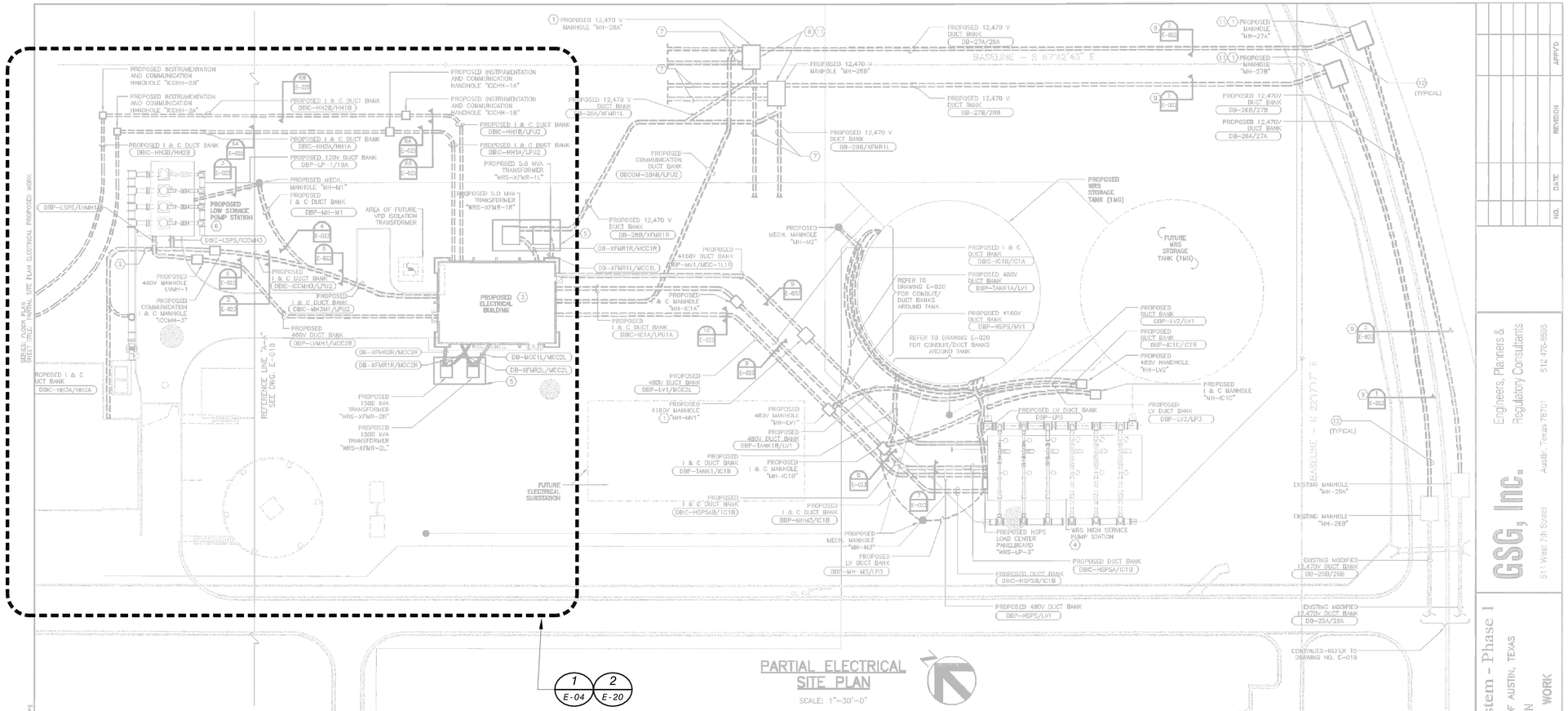

KEY NOTES:

1. REFER TO APPLICABLE STRUCTURAL DRAWING FOR MANHOLE CONSTRUCTION.
2. REFER TO "PARTIAL SITE PLAN ELECTRICAL–PROPOSED WORK," DRAWING NO. E-018 FOR CONTINUATION OF DUCT BANK.
3. REFER TO DRAWINGS NO. E-027 AND E-028 FOR CONDUIT/DUCT BANK ENTRIES INTO BUILDING.
4. REFER TO "HIGH SERVICE PUMP STATION FLOOR PLAN–POWER," DRAWING NO. E-033 AND "HIGH SERVICE PUMP STATION FLOOR PLAN–I & C," DRAWING NO. E-034 FOR CONDUIT/DUCT BANK CONNECTIONS.
5. REFER TO "TYPICAL TRANSFORMER GROUNDING DETAIL" ON DRAWING NO. E-162.
6. REFER TO "LOW SERVICE PUMP STATION POWER AND I & C FLOOR PLAN" DRAWING NO. E-037 FOR CONDUIT/DUCT BANK CONNECTIONS.
7. TYPICAL CONDUIT/DUCT BANK STUB-OUT.
8. REFER TO "ENLARGED AREA PLAN AROUND MANHOLES "MH-28A" AND "MH-28B," DRAWING NO. E-019
9. EXTEND PROPOSED #250MCM INSULATED GROUND CABLES THROUGH PROPOSED MANHOLES/DUCTBANKS. CONNECT TO EXISTING GROUND CABLES IN EXISTING MANHOLES "MH-26A, MH-26B". REFER TO "TYPICAL PROPOSED MANHOLE/HANDHOLE GROUNDING SYSTEM DETAILS" ON DRAWING NO. E-162.
10. FOR SAKE OF CLARITY THE EXISTING FENCE IS NOT SHOWN. HOWEVER THE PROPOSED HANDHOLES "ICCHH-1A, ICCHH-1B, ICCHH2A & ICCHH-2B" ARE LOCATED NORTH OF FENCE. REFER TO DRAWING NO. E-019.
11. REFER TO DRAWING NO. E-162 FOR MANHOLE COVER HOUSEKEEPING PAD AND FOR GROUNDING.
12. UPON INSTALLATION OF DUCT BANK THE CONTRACTOR SHALL REPAIR STREET AND CURBING TO MATCH EXISTING TO OWNERS' SATISFACTION.

GENERAL NOTES:

1. EXTREME CARE MUST BE TAKEN FOR THE INSTALLATION OF THE ELECTRICAL DUCT BANKS SINCE THERE ARE NO AVAILABLE AS BUILT RECORDS OF PROFILES IDENTIFYING LOCATION AND INVERT ELEVATIONS OF EXISTING UNDERGROUND ELECTRICAL SYSTEM (CONDUITS, ETC.) AND UNDERGROUND MECHANICAL PIPING. ROUTING OF NEW DUCT BANK SHOWN IS BASED ON SCHEMATIC KNOWLEDGE OF THE SIZE OF MECHANICAL PIPING AND THEIR APPROXIMATE AND/OR ASSUMED ROUTING AREA AND/OR LOCATION. NO DATA IS AVAILABLE PERTAINING TO EXISTING UNDERGROUND ELECTRICAL DUCT BANK SYSTEM AND ITS COORDINATION WITH THE UNDERGROUND MECHANICAL SYSTEM. THEREFORE THE CONTRACTOR IS TO EXERCISE EXTREME CARE, VERIFY LOCATION/ROUTING/ELEVATION OF EXISTING UNDERGROUND UTILITIES PRIOR TO COMMENCING FULL SCALE INSTALLATION PROCESS OF THE PROPOSED DUCT BANK SYSTEM. FOLLOWING THE DISCOVERY VERIFICATION OF EXISTING UNDERGROUND UTILITIES ADJUSTMENT/MODIFICATIONS BECOME A NECESSITY TO EITHER THE EXISTING OR PROPOSED SYSTEM (AS APPLICABLE). THE EXISTING DISCOVERED FIELD CONDITIONS MUST BE BROUGHT TO THE ENGINEER'S ATTENTION FOR THE EXECUTION OF THE NECESSARY ADJUSTMENTS/MODIFICATIONS.
2. NOT ALL MANHOLES ARE SHOWN. ONLY THE MANHOLES ASSOCIATED WITH THIS WORK OR LOCATED CLOSE BY (FOR PURPOSES OF REFERENCE ARE SHOWN.)
3. DARK, HEAVY LINE WORK DENOTES PROPOSED AND LIGHT LINE WORK IS EXISTING TO REMAIN.
4. FOR PRECAST HANDHOLE/MANHOLE DIMENSIONS REFER TO DRAWING NO. E-161.

THE SEAL APPEARING ON THIS DOCUMENT WAS AUTHORIZED BY K.A. HARUTUNIAN P.E. 59181 ON APRIL 20, 2000

RECORD DRAWINGS
These record drawings have been prepared using information provided by the construction contractor and/or owner. The seal and signature herein only signify that the plans have been revised in accordance with the information provided and does not guarantee that the plans accurately show every detail of the constructed project.

STATE OF TEXAS K. A. HARUTUNIAN 59181 REGISTERED PROFESSIONAL ENGINEER

REUSE OF DOCUMENTS
This document and the ideas and designs incorporated herein as an instrument of professional service has been developed, designed and prepared by Harutunian Engineering, Inc. and is not to be used, in whole or part, for any other project without the written authorization of the City of Austin and Harutunian Engineering, Inc. ©2000

STATE OF TEXAS K. A. HARUTUNIAN 59181 REGISTERED PROFESSIONAL ENGINEER

HARUTUNIAN ENGINEERING INCORPORATED
ENGINEERING AND ENVIRONMENTAL CONSULTANTS
305 EAST HUNTLAND DRIVE SUITE 500
AUSTIN, TEXAS 78752

DESIGNED:	HEI
APPROVED:	HEI
JOB NO.:	9938
DATE:	APRIL 12, 2000
DWG. NO:	E-017
SHT.	OF

GENERAL NOTES

1. *THE EXISTING INFORMATION SHOWN ON THIS DRAWING WAS OBTAINED FROM THE PROJECT ENTITLED "WATER RECLAMATION INITIATIVE - PHASE I WATER RECLAMATION FACILITY WALNUT CREEK WWTP" DATED APRIL 20, 2000. THIS DRAWING IS PROVIDED FOR REFERENCE PURPOSES ONLY AND MAY NOT EXACTLY REFLECT THE EXISTING CONDITIONS. THEREFORE, THE CONTRACTOR IS TO EXERCISE EXTREME CARE AND FIELD VERIFY THE EXISTING CONDITIONS PRIOR TO COMMENCING FULL SCALE DEMOLITION OR RENOVATION ACTIVITIES. FOLLOWING THE DISCOVERY VERIFICATION OF THE EXISTING FIELD CONDITIONS, SHOULD ADJUSTMENTS BECOME A NECESSITY TO THE EXISTING OR PROPOSED SYSTEM (AS APPLICABLE), THE EXISTING DISCOVERED FIELD CONDITIONS MUST BE BROUGHT TO THE OWNER'S ATTENTION FOR EXECUTION OF THE NECESSARY ADJUSTMENTS/MODIFICATIONS.*

This document, and the designs incorporated herein, is an instrument of professional service that has been developed, designed and prepared by Harutunian Engineering, Inc., and is not to be used, in whole or in part, for any other project without giving written notice to Harutunian Engineering, Inc.

NO.	DATE	REVISION	APP'D

NO.	DR	CK	DATE	DESCRIPTION

REVISIONS

BLACK & VEATCH
Building a world of difference.
Black & Veatch Corporation
Registration No. F-653
Austin, Texas

HARUTUNIAN ENGINEERING, INC.
305 E Huntland Dr., Ste 500, Austin, TX 78752
TBPE Firm Registration No. F-2408

STATE OF TEXAS K. A. HARUTUNIAN 59181 REGISTERED PROFESSIONAL ENGINEER
4/14/2014

Austin WATER
Walnut Creek WWTP - Tertiary Filter Rehabilitation Project
CIP ID No. 3023.025

ELECTRICAL REFERENCE DRAWING - FB1/FB2/WRI VICINITY SITE
ELECTRICAL PLAN (SHEET 1 OF 2)

DESIGNED BY:	HEI
DRAWN BY:	HEI
REVIEWED BY:	HEI
APPROVED BY:	HEI
PROJECT NO.:	168622
DATE:	4/4/2014
SCALE:	AS SHOWN
REVISION:	
DISCIPLINE NO.	E-58
DWG. NO.	SHEET 170 OF 273

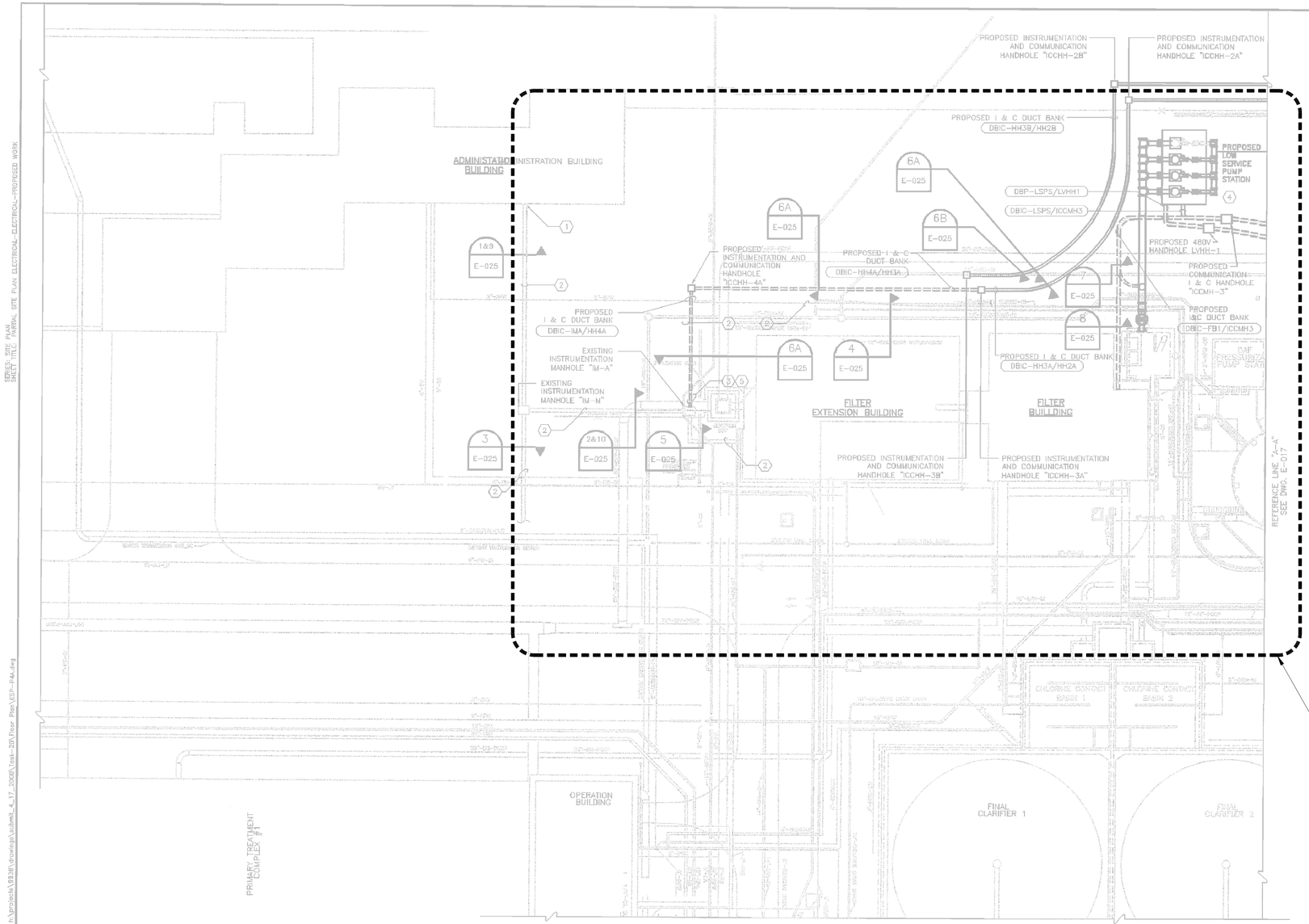

PARTIAL SITE PLAN ELECTRICAL

SCALE: 1"=30'-0"

KEY NOTES:

1. REFER TO DRAWING NO. E-026 FOR ELECTRICAL MODIFICATIONS IN EXISTING BUILDING.
2. EXISTING I & C DUCT BANK TO REMAIN.
3. ROUTE PROPOSED DUCT BANK ABOVE OR BELOW EXISTING DUCT BANK TO MAKE ENTRY IN MANHOLE "IM-A".
4. REFER TO "LOW SERVICE PUMP STATION POWER AND I & C FLOOR PLAN," DRAWING NO. E-037 FOR CONDUIT/DUCT BANK CONNECTIONS.
5. USE MOISTURE RESISTANT NONSHRINK GROUT AROUND CONDUIT ENTRY INTO MANHOLE.

GENERAL NOTES:

1. NOT ALL MANHOLES ARE SHOWN. ONLY THE MANHOLES ASSOCIATED WITH THIS WORK OR LOCATED CLOSE BY (FOR PURPOSES OF REFERENCE) ARE SHOWN.
2. LIGHT LINE WORK IS EXISTING TO REMAIN UNLESS NOTED OTHERWISE.
3. REFER TO DRAWING NO. E-160 FOR DIMENSIONS OF PRECAST HANDHOLES/MANHOLES.
4. EXTREME CARE MUST BE TAKEN FOR THE INSTALLATION OF THE ELECTRICAL DUCT BANKS SINCE THERE ARE NO AVAILABLE AS BUILT RECORDS OF PROFILES IDENTIFYING LOCATION AND INVERT ELEVATIONS OF EXISTING UNDERGROUND ELECTRICAL SYSTEM (CONDUITS, ETC.) AND UNDERGROUND MECHANICAL PIPING. ROUTING OF NEW DUCT BANK SHOWN IS BASED ON SCHEMATIC KNOWLEDGE OF THE SIZE OF MECHANICAL PIPING AND THEIR APPROXIMATE AND/OR ASSUMED ROUTING AREA AND/OR LOCATION. NO DATA IS AVAILABLE PERTAINING TO EXISTING UNDERGROUND ELECTRICAL DUCT BANK SYSTEM AND ITS COORDINATION WITH THE UNDERGROUND MECHANICAL SYSTEM. THEREFORE THE CONTRACTOR IS TO EXERCISE EXTREME CARE. VERIFY LOCATION/ROUTING/ELEVATION OF EXISTING UNDERGROUND UTILITIES PRIOR TO COMMENCING FULL SCALE INSTALLATION PROCESS OF THE PROPOSED DUCT BANK SYSTEM. FOLLOWING THE DISCOVERY VERIFICATION OF EXISTING UNDERGROUND UTILITIES ADJUSTMENT/MODIFICATIONS BECOME A NECESSITY TO EITHER THE EXISTING OR PROPOSED SYSTEM (AS APPLICABLE), THE EXISTING DISCOVERED FIELD CONDITIONS MUST BE BROUGHT TO THE ENGINEER'S ATTENTION FOR THE EXECUTION OF THE NECESSARY ADJUSTMENTS/MODIFICATIONS.

NO.	DATE	REVISION	APPV'D

GSG, Inc. — Engineers, Planners & Regulatory Consultants
511 West 7th Street Austin, Texas 78701 512-476-6595

Water Reclamation System - Phase 1
C.I.P. NO. 3990-227-7843 CITY OF AUSTIN, TEXAS
PARTIAL SITE PLAN
ELECTRICAL-PROPOSED WORK

THE SEAL APPEARING ON THIS DOCUMENT WAS AUTHORIZED BY K.A. HARUTUNIAN P.E. 59181 ON APRIL 22, 2000

RECORD DRAWINGS
These record drawings have been prepared using information provided by the construction contractor and/or owner. The seal and signature herein only signify that the plans have been revised in accordance with the information provided and does not guarantee that the plans accurately show every detail of the constructed project.

REUSE OF DOCUMENTS
This document and the ideas and designs incorporated herein as an instrument of professional service has been developed, designed and prepared by Harutunian Engineering, Inc. and is not to be used, in whole or part, for any other project without the written authorization of the City of Austin and Harutunian Engineering, Inc. ©2000

HARUTUNIAN ENGINEERING INCORPORATED
ENGINEERING AND ENVIRONMENTAL CONSULTANTS
305 EAST HUNTLAND DRIVE SUITE 500
AUSTIN, TEXAS 78752

DESIGNED: HEI
APPROVED: HEI
JOB NO.: 9938
DATE: APRIL 12, 2000
DWG. NO: E-018
SHT. OF

EDIT DATE: 4/15/2000 FILE NAME: h:\projects\9938\drawings\submit_4_17_2000\task-20\Floor Plan\ESP-F44.dwg
SERIES: SITE PLAN
SHEET TITLE: PARTIAL SITE PLAN ELECTRICAL-ELECTRICAL-PROPOSED WORK

GENERAL NOTES

1. THE EXISTING INFORMATION SHOWN ON THIS DRAWING WAS OBTAINED FROM THE PROJECT ENTITLED "WATER RECLAMATION INITIATIVE - PHASE I WATER RECLAMATION FACILITY WALNUT CREEK WWTP" DATED APRIL 20, 2000. THIS DRAWING IS PROVIDED FOR REFERENCE PURPOSES ONLY AND MAY NOT EXACTLY REFLECT THE EXISTING CONDITIONS. THEREFORE, THE CONTRACTOR IS TO EXERCISE EXTREME CARE AND FIELD VERIFY THE EXISTING CONDITIONS PRIOR TO COMMENCING FULL SCALE DEMOLITION OR RENOVATION ACTIVITIES. FOLLOWING THE DISCOVERY VERIFICATION OF THE EXISTING FIELD CONDITIONS, SHOULD ADJUSTMENTS BECOME A NECESSITY TO THE EXISTING OR PROPOSED SYSTEM (AS APPLICABLE), THE EXISTING DISCOVERED FIELD CONDITIONS MUST BE BROUGHT TO THE OWNER'S ATTENTION FOR EXECUTION OF THE NECESSARY ADJUSTMENTS/MODIFICATIONS.

This document, and the designs incorporated herein, is an instrument of professional service that has been developed, designed and prepared by Harutunian Engineering, Inc., and is not to be used, in whole or in part, for any other project without giving written notice to Harutunian Engineering, Inc.

NO.	DR	CK	DATE	DESCRIPTION

REVISIONS

BLACK & VEATCH
Building a world of difference.
Black & Veatch Corporation
Registration No. F-653
Austin, Texas

HARUTUNIAN ENGINEERING, INC.
305 E Huntland Dr., Ste 500, Austin, TX 78752
TBPE Firm Registration No. F-2408

STATE OF TEXAS — K. A. HARUTUNIAN 59181 — REGISTERED PROFESSIONAL ENGINEER
4/14/2014

Austin WATER
Walnut Creek WWTP - Tertiary Filter Rehabilitation Project
CIP ID No. 3023.025

ELECTRICAL REFERENCE DRAWING - FB1/FB2/WRI VICNITY SITE ELECTRICAL PLAN (SHEET 2 OF 2)

DESIGNED BY:	HEI
DRAWN BY:	HEI
REVIEWED BY:	HEI
APPROVED BY:	HEI
PROJECT NO.:	168622
DATE:	4/4/2014
SCALE:	AS SHOWN
REVISION:	
DISCIPLINE NO.	E-59
DWG. NO.	SHEET 171 OF 273

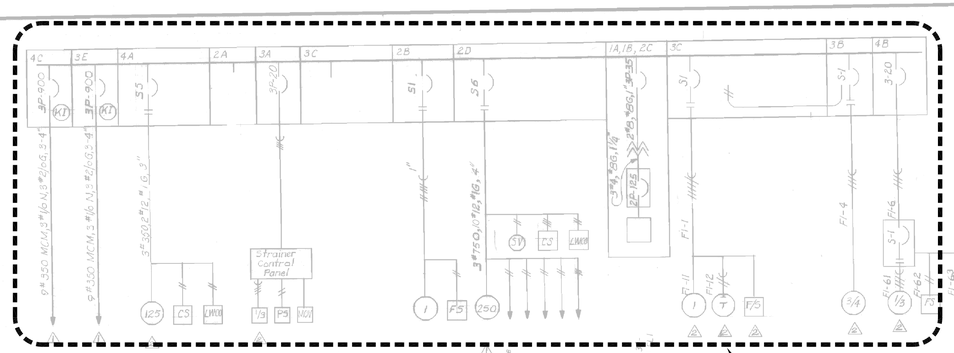

MOTOR CONTROL CENTER FCC-1 ONE-LINE
(Filter Building)

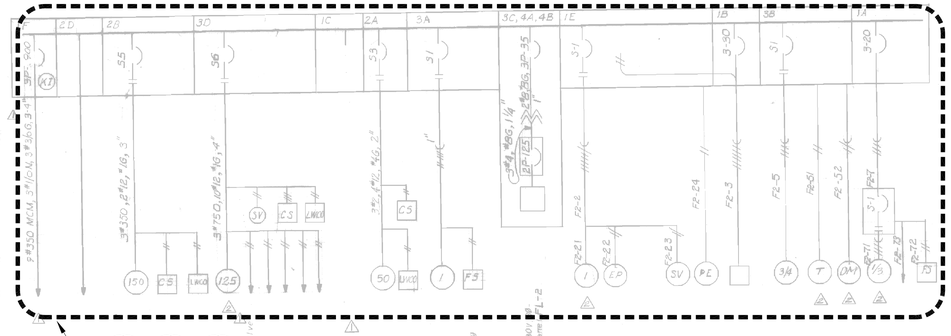

MOTOR CONTROL CENTER FCC-2 ONE-LINE
(Filter Building)

MOTOR CONTROL CENTER DATA

MOTOR CONTROL CENTER NO.	ENCLOSURE: NEMA 1 INDOOR	ARRANGEMENT: FRONT MOUNTED UNITS	SECTIONS CONTAINING NON-NORMAL BUS*	MAIN BUS LOCATION	INCOMING FEEDER ENTRY	OUTGOING FEEDER ENTRY	ELECTRICAL CHARACTERISTICS: VOLTAGE & PHASE	MAIN BUS RATING	BUS FAULT RATING	NEMA CLASS WIRING
SECTION I: OCC-1	X	X	1&2	TOP	BOTTOM	BOTH	480-3	1200A	22,000	2B
OCC-2	X	X	1,2&11	TOP	BOTTOM	BOTH	480-3	1200A	22,000	2B
BCC-1	X	X	9&5	BOTTOM	TOP	TOP	480-3	600A	22,000	2B
FCC-1 ⚠	X	X	3&4	TOP	BOTTOM	BOTTOM	480-3	1200A	22,000	2B
FCC-2 ⚠	X	X	1&2	TOP	BOTTOM	BOTTOM	480-3	1200A	22,000	2B
SECTION I: HCC-1	X	X	1&2	TOP	BOTTOM	BOTTOM	480-3	600A	22,000	2B
ACC-1	X	X	1,2&3	TOP	BOTTOM	BOTH	480-3	1200A	22,000	2B

NOTE: *Neutral bus shall be sized for half capacity of main bus and furnished only in sections noted.

MOTOR CONTROL CENTER CHARACTERISTICS

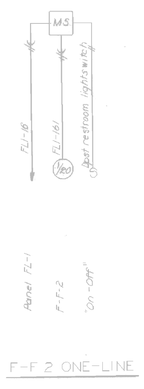

F-F 2 ONE-LINE

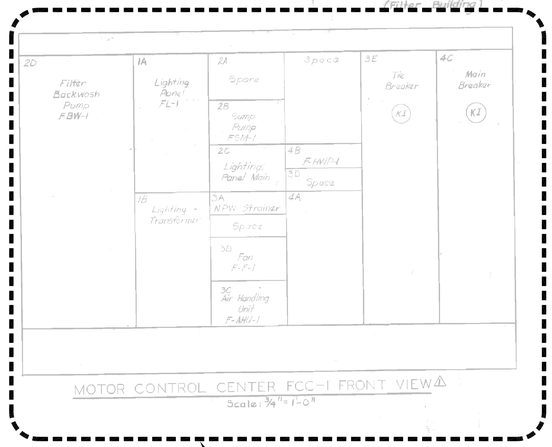

MOTOR CONTROL CENTER FCC-1 FRONT VIEW ⚠
Scale: 3/4" = 1'-0"

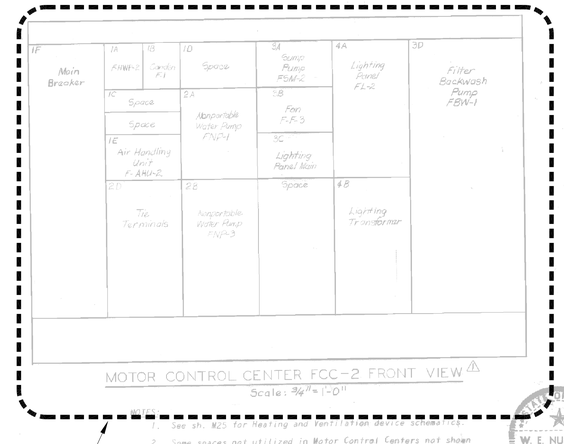

MOTOR CONTROL CENTER FCC-2 FRONT VIEW ⚠
Scale: 3/4" = 1'-0"

NOTES:
1. See sh. M25 for heating and ventilation equipment.
2. Some spaces not utilized in Motor Control Centers not shown on one-line
3. See legend sh. E18.
4. See functional one-line diagram sh. E-19
5. See lighting panel schedule sh. E-4

⚠ Conformed to Construction Records	JSM	3-1-79
⚠ General	RTM	9-7-74
REVISION	BY	DATE

AUSTIN, TEXAS
WALNUT CREEK WASTEWATER TREATMENT PLANT

MOTOR CONTROL CENTERS FCC-1 AND 2

BLACK & VEATCH CONSULTING ENGINEERS DALLAS, TEXAS

S. A. GARZA ENGINEERS INC. AUSTIN TEXAS

DESIGNED KGM DETAILED RSK, CDC, JMC CHECKED D.M.D. APPROVED DATE

SHEET E22 194 OF 202

GENERAL NOTES

1. THE EXISTING INFORMATION SHOWN ON THIS DRAWING WAS OBTAINED FROM THE PROJECT ENTITLED "WALNUT CREEK WASTEWATER TREATMENT PLANT" DATED MARCH 1, 1979. THIS DRAWING IS PROVIDED FOR REFERENCE PURPOSES ONLY AND MAY NOT EXACTLY REFLECT THE EXISTING CONDITIONS. THEREFORE, THE CONTRACTOR IS TO EXERCISE EXTREME CARE AND FIELD VERIFY THE EXISTING CONDITIONS PRIOR TO COMMENCING FULL SCALE DEMOLITION OR RENOVATION ACTIVITIES. FOLLOWING THE DISCOVERY VERIFICATION OF THE EXISTING FIELD CONDITIONS, SHOULD ADJUSTMENTS BECOME A NECESSITY TO THE EXISTING OR PROPOSED SYSTEM (AS APPLICABLE), THE EXISTING DISCOVERED FIELD CONDITIONS MUST BE BROUGHT TO THE OWNER'S ATTENTION FOR EXECUTION OF THE NECESSARY ADJUSTMENTS/MODIFICATIONS.

This document, and the designs incorporated herein, is an instrument of professional service that has been developed, designed and prepared by Harutunian Engineering, Inc., and is not to be used, in whole or in part, for any other project without giving written notice to Harutunian Engineering, Inc.

NO.	DR	CK	DATE	DESCRIPTION

REVISIONS

BLACK & VEATCH
Building a world of difference.
Black & Veatch Corporation
Registration No. F-253
Austin, Texas

HARUTUNIAN ENGINEERING, INC.
305 E Hunland Dr., Ste 500, Austin, TX 78752
TBPE Firm Registration No. F-2408

STATE OF TEXAS
K. A. HARUTUNIAN
59981
REGISTERED PROFESSIONAL ENGINEER
4/4/2014

Austin WATER
Walnut Creek WWTP - Tertiary Filter Rehabilitation Project
CIP ID No. 3023.025

ELECTRICAL REFERENCE DRAWING - FILTER BUILDING ONE-LINE DIAGRAMS (SHEET 1 OF 4)

DESIGNED BY:	HEI
DRAWN BY:	HEI
REVIEWED BY:	HEI
APPROVED BY:	HEI
PROJECT NO.:	168622
DATE:	4/4/2014
SCALE:	AS SHOWN
REVISION:	
DISCIPLINE NO.	E-60
DWG. NO.	SHEET 172 OF 273

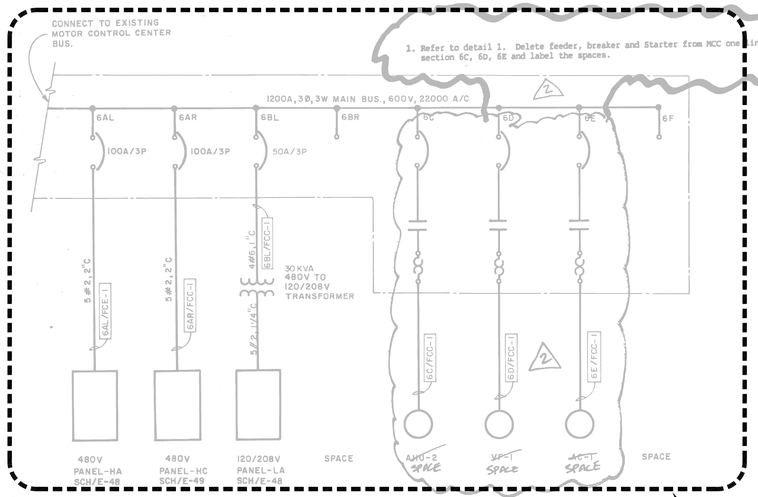

1 MOTOR CONTROL CENTER FCC-1 ONE LINE DIAGRAM ADDITION

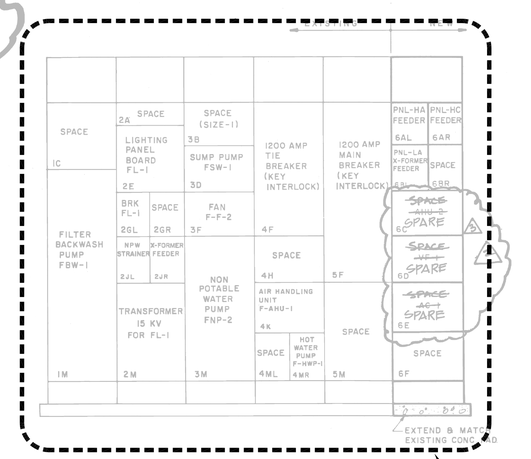

3 MOTOR CONTROL CENTER FCC-1 ADDITION

REFER TO SHT. E-46 & E-47 FOR LOCATION

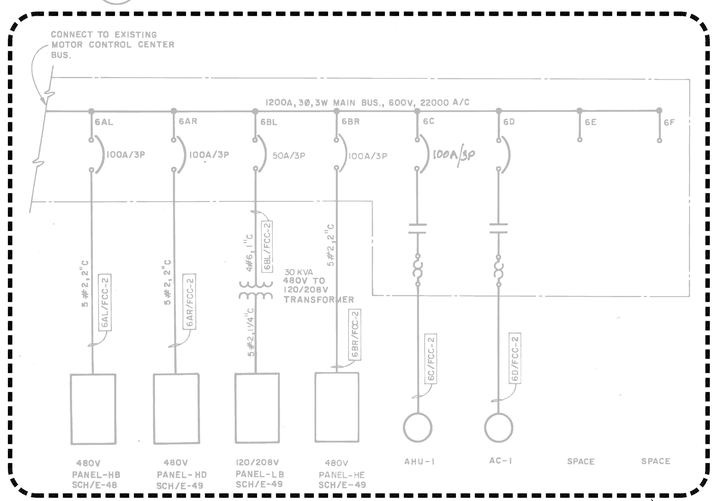

2 MOTOR CONTROL CENTER FCC-2 ONE LINE DIAGRAM ADDITION

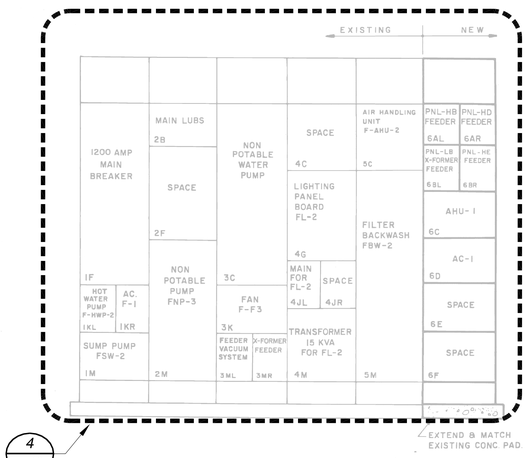

4 MOTOR CONTROL CENTER FCC-2 ADDITION

REFER TO SHT. E-46 & E-47 FOR LOCATION

3. Refer to detail #2. delete feeder, breakers, and starter from MCC one line section 6C & 6DD. Add a 100A/3P breaker in section 6C, label feeder to MCC FCC-3, Ref sheet E-65. Add the wire size to the one line as : 5#2 in 1 1/2"C.

4. Refer to detail #C. Change 6C cubicle to read feeder to FCC #3 and cubicle 6D to space.

5. Panel HA, & HB change 450/277V to 480/277V.

6. Refer to Panel LA. Change panel schedule as following.
   a. circuit 16,17. Pressure transmitter, 20/1 breaker, #12 wire, 3/4"c.
   b. circuit 18,19. air compressors 20/1 breaker, #12 wire, 3/4"c.
   c. circuit 20-30, spare, 20/1 breaker.
   d. circuit 31-36, space.

PANEL HB (EXISTING FILTERS)
450 V/277 V. 3 Ø, 4 W.
SURFACE MOUNTED
100 A/3P, MAIN BREAKER.

CIRCUIT	SERVES	C/B	WIRE	COND
1, 3, 5	FILTER #1 EFFULENT	20/3	12	3/4
2, 4, 6	FILTER #3 EFFULENT	20/3	12	3/4
7, 9, 11	FILTER #1 INFULENT	20/3	12	3/4
8, 10, 12	FILTER #3 INFULENT	20/3	12	3/4
13, 15, 17	FILTER #1 BACK WASH	20/3	12	3/4
14, 16, 18	FILTER #3 BACK WASH	20/3	12	3/4
19, 21, 23	FILTER #1 SURFACE WASH	20/3	12	3/4
20, 22, 24	FILTER #3 SURFACE WASH	20/3	12	3/4
25, 27, 29	FILTER #1 DRAIN	20/3	12	3/4
26, 28, 30	FILTER #3 DRAIN	20/3	12	3/4
31, 33, 35	BACK WASH CONTROLLER	20/3	12	3/4
32, 34, 36	SPARE	20/3	---	---
37, 39, 41	SPARE	20/3	---	---
38, 40, 42	SPACE	---	---	---

PANEL HA (EXISTING FILTERS)
450 V/277 V. 3 Ø, 4 W.
SURFACE MOUNTED.
100 A/3P, MAIN BREAKER.

CIRCUIT	SERVES	C/B	WIRE	COND
1, 3, 5	FILTER #2 EFFULENT	20/3	12	3/4
2, 4, 6	FILTER #4 EFFULENT	20/3	12	3/4
7, 9, 11	FILTER #2 INFULENT	20/3	12	3/4
8, 10, 12	FILTER #4 INFULENT	20/3	12	3/4
13, 15, 17	FILTER #2 BACK WASH	20/3	12	3/4
14, 16, 18	FILTER #4 BACK WASH	20/3	12	3/4
19, 21, 23	FILTER #2 SURFACE WASH	20/3	12	3/4
20, 22, 24	FILTER #4 SURFACE WASH	20/3	12	3/4
25, 27, 29	FILTER #2 DRAIN	20/3.	12	3/4
26, 28, 30	FILTER #4 DRAIN	20/3	12	3/4
31, 33, 35	SPARE	20/3	---	---
32, 34, 36	SPARE	20/3	---	---
37-42	SPACE	---	---	---

PANEL LA (EXISTING FILTERS)
120 V/208 V. 3 Ø, 4 W.
SURFACE MOUNTED.
100 A/3P, MAIN BREAKER.

CIRCUIT	SERVES	C/B	WIRE	COND
1, 3, 5	~~FILTER #1 INFL~~ SPARE	20/1	12	3/4
2, 4	~~FILTER #2 INFL~~ "	20/1	12	3/4
5, 7	~~FILTER #3 INFL~~ "	20/1	12	3/4
6, 8	~~FILTER #4 INFL~~ "	20/1	12	3/4
11, 15	~~FILTER #2 A LEVEL~~ "	20/1	12	3/4
13, 14	~~FILTER #1, 3 LEVEL~~ "	20/1	12	3/4
10	INFULENT LEVEL	20/1	12	3/4
12	CLEAR WELL LEVEL	20/1	12	3/4
~~16, 18~~ AIR COMPRESSOR	~~LIGHTS PIPE GALLERY (NEW)~~	20/1	12	3/4
~~17, 19~~ FLOW INDICATOR	~~RECEPTACLES (NEW)~~	20/1	12	3/4
20, 22 SPARE	~~LIGHTS (1ST FLOOR) (NEW)~~	20/1	12	3/4
21, 23 SPARE	~~RECP. (1ST FLOOR) (NEW)~~	20/1	12	3/4
24-36	SPARE	20/1	---	---
37-42	SPACE	---	---	---

PANEL NOTES:

1. ALL BREAKERS SHALL BE 20A/1P UNLESS OTHERWISE NOTED.
2. ALL WIRES SHALL BE #12 UNLESS OTHERWISE NOTED.
3. ALL CIRCUITS SHALL HAVE A INDIVIDUAL NEUTRAL WIRE.
4. PANEL SHALL BE EQUIPPED WITH GROUND BUS. ALL CIRCUITS SHALL BE GROUNDED.
5. NOT MORE THAN 3- LIGHTING OR POWER CIRCUITS SHALL BE INSTALLED IN ONE CONDUITS.

Date	Chk'd.	Revision
7/07		△ AS BUILT
		△ ADDENDUM #2

Designed by: V.K.G.
Drawn by: S.H.
Checked by: G.K.J.
Approved by: R.D.G.
Date: MAY 1987
Scale: NONE

CITY OF AUSTIN, TEXAS
WALNUT CREEK WASTEWATER TREATMENT PLANT
CONTRACT NO. 6

EXISTING FILTERS - MCC ADDITIONS AND PANEL SCHEDULES

CAMP DRESSER & McKEE INC.
9442 Capital of Texas Highway North
Arboretum Plaza Two, Suite 400
Austin, Texas 78759
CDM
environmental engineers, scientists planners, & management consultants

SHEET NO. E-48

PROJECT MANAGER | PROJECT ENGINEER | PLUMBING | HVAC | INSTRUMENTATION | ELECTRICAL | STRUCTURAL | ARCHITECTURAL
Approved by: Date:

GENERAL NOTES

1. THE EXISTING INFORMATION SHOWN ON THIS DRAWING WAS OBTAINED FROM THE PROJECT ENTITLED "WALNUT CREEK WASTEWATER TREATMENT PLANT CONTRACT NO. 6" DATED AUGUST 29, 1990. THIS DRAWING IS PROVIDED FOR REFERENCE PURPOSES ONLY AND MAY NOT EXACTLY REFLECT THE EXISTING CONDITIONS. THEREFORE, THE CONTRACTOR IS TO EXERCISE EXTREME CARE AND FIELD VERIFY THE EXISTING CONDITIONS PRIOR TO COMMENCING FULL SCALE DEMOLITION OR RENOVATION ACTIVITIES. FOLLOWING THE DISCOVERY VERIFICATION OF THE EXISTING FIELD CONDITIONS, SHOULD ADJUSTMENTS BECOME A NECESSITY TO THE EXISTING OR PROPOSED SYSTEM (AS APPLICABLE), THE EXISTING DISCOVERED FIELD CONDITIONS MUST BE BROUGHT TO THE OWNER'S ATTENTION FOR EXECUTION OF THE NECESSARY ADJUSTMENTS/MODIFICATIONS.

This document, and the designs incorporated herein, is an instrument of professional service that has been developed, designed and prepared by Harutunian Engineering, Inc., and is not to be used, in whole or in part, for any other project without giving written notice to Harutunian Engineering, Inc.

NO.	DR	CK	DATE	DESCRIPTION

REVISIONS

BLACK & VEATCH
Building a world of difference.
Black & Veatch Corporation
Registration No. F-253
Austin, Texas

HARUTUNIAN ENGINEERING, INC.
305 E Hunland Dr., Ste 500, Austin, TX 78752
TBPE Firm Registration No. F-2408

STATE OF TEXAS
K. A. HARUTUNIAN
59981
REGISTERED PROFESSIONAL ENGINEER
4/4/2014

Walnut Creek WWTP - Tertiary Filter Rehabilitation Project
CIP ID No. 3023.025

ELECTRICAL REFERENCE DRAWING - FILTER BUILDING ONE-LINE DIAGRAMS (SHEET 2 OF 4)

DESIGNED BY:	HEI
DRAWN BY:	HEI
REVIEWED BY:	HEI
APPROVED BY:	HEI
PROJECT NO.:	168622
DATE:	4/4/2014
SCALE:	AS SHOWN
REVISION:	
DISCIPLINE NO.	E-61
DWG. NO.	SHEET 173 OF 273

03-14-94 field-e5.dwg

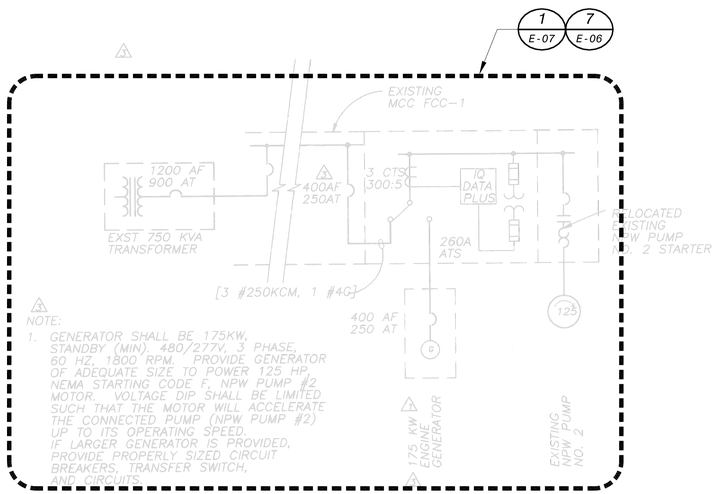

NOTE:
1. GENERATOR SHALL BE 175KW, STANDBY (MIN) 480/277V, 3 PHASE, 60 HZ, 1800 RPM. PROVIDE GENERATOR OF ADEQUATE SIZE TO POWER 125 HP, NEMA STARTING CODE F, NPW PUMP #2 MOTOR. VOLTAGE DIP SHALL BE LIMITED SUCH THAT THE MOTOR WILL ACCELERATE THE CONNECTED PUMP (NPW PUMP #2) UP TO ITS OPERATING SPEED. IF LARGER GENERATOR IS PROVIDED, PROVIDE PROPERLY SIZED CIRCUIT BREAKERS, TRANSFER SWITCH, AND CIRCUITS.
2. RELOCATED LIGHT TIMER AND RESET SWITCHES ON END OF MCC TO THIS BUCKET.

MOTOR CONTROL CENTER FCC-1 EXTENSION ONE-LINE
NTS

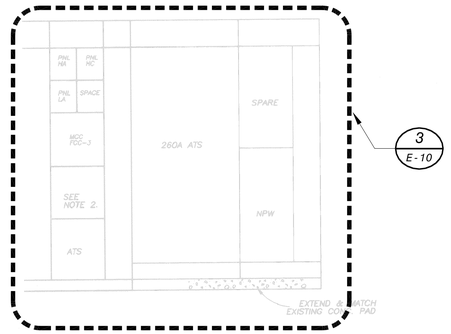

MOTOR CONTROL CENTER FCC-1 EXTENSION ONE-LINE
NTS

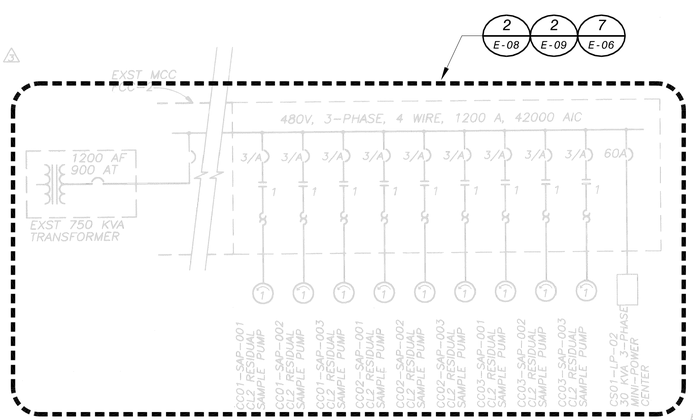

MOTOR CONTROL CENTER FCC-2 EXTENSION ONE-LINE
NTS

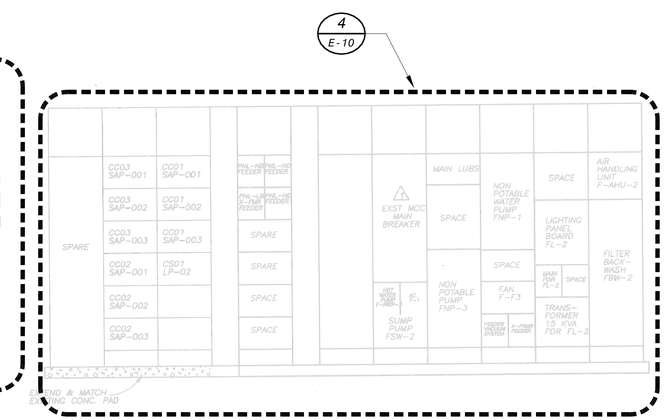

MOTOR CONTROL CENTER FCC-2
NTS

STATE OF TEXAS
JOSEPH H. JENKINS
68717
11-13-96

RECORD DRAWINGS

THIS DOCUMENT IS FOR RECORD PURPOSES ONLY AND IS NOT TO BE USED FOR CONSTRUCTION, BIDDING OR PERMITTING. THIS RECORD DRAWING HAS BEEN PREPARED BASED ON THE CONTRACTOR'S AS-BUILT DOCUMENTS REFLECTING FIELD CHANGES TO THIS CONTRACT DOCUMENT DRAWING. THE ENGINEER SEALING THIS DRAWING HAS REVIEWED THE DOCUMENTS AND ASCERTAINED TO THE BEST OF HIS KNOWLEDGE AND BELIEF THAT THE REFLECTED FIELD CHANGES ARE COMPLETE AND CORRECT. THIS ORIGINALLY ISSUED AND SUBSEQUENTLY OFFICIALLY AMENDED CONTRACT DOCUMENT DRAWING WAS SEALED AND SIGNED BY: ROBERT A. WILLIAMS, JR., TEXAS P.E. NO. 55304, ON 6/21/93.

CH2M HILL	DSGN R WILLIAMS	5	5-95	AS-BUILTS	DM FR	REUSE OF DOCUMENTS	WALNUT CREEK WWTP DECHLORINATION AND ASSOCIATED IMPROVEMENTS WATER AND WASTEWATER UTILITY CITY OF AUSTIN AUSTIN, TEXAS
	DR L DILLARD	4	3-94	REV 1 TO CHANGE ORDER NO.2	RAW JWJ	THIS DOCUMENT, AND THE IDEAS AND DESIGNS INCORPORATED HEREIN, AS AN INSTRUMENT OF PROFESSIONAL SERVICE, IS THE PROPERTY OF CH2M HILL AND IS NOT TO BE USED, IN WHOLE OR IN PART, FOR ANY OTHER PROJECT WITHOUT THE WRITTEN AUTHORIZATION OF CH2M HILL. ©CH2M HILL	
	CHK J TURNER	2	2-94	CHANGE ORDER NO.2	RAW JWJ		
	APVD J JENKINS	1	7-93	ADDENDUM NO. 3	RAW JWJ		
		NO.	DATE	REVISION	BY APVD		

USE SCALE BAR IS ONE INCH ON ORIGINAL DRAWING 0 1" IF NOT ONE INCH ON THIS SHEET, ADJUST SCALES ACCORDINGLY.

ELECTRICAL
MOTOR CONTROL CENTER

SHEET 60
DWG NO. E-7A
DATE JUN 93
PROJ NO. TEX33544.A1

GENERAL NOTES

1. THE EXISTING INFORMATION SHOWN ON THIS DRAWING WAS OBTAINED FROM THE PROJECT ENTITLED "WALNUT CREEK WWTP DECHLORINATION AND ASSOCIATED IMPROVEMENTS" DATED JUNE 21, 1993. THIS DRAWING IS PROVIDED FOR REFERENCE PURPOSES ONLY AND MAY NOT EXACTLY REFLECT THE EXISTING CONDITIONS. THEREFORE, THE CONTRACTOR IS TO EXERCISE EXTREME CARE AND FIELD VERIFY THE EXISTING CONDITIONS PRIOR TO COMMENCING FULL SCALE DEMOLITION OR RENOVATION ACTIVITIES. FOLLOWING THE DISCOVERY VERIFICATION OF THE EXISTING FIELD CONDITIONS, SHOULD ADJUSTMENTS BECOME A NECESSITY TO THE EXISTING OR PROPOSED SYSTEM (AS APPLICABLE), THE EXISTING DISCOVERED FIELD CONDITIONS MUST BE BROUGHT TO THE OWNER'S ATTENTION FOR EXECUTION OF THE NECESSARY ADJUSTMENTS/MODIFICATIONS.

This document, and the designs incorporated herein, is an instrument of professional service that has been developed, designed and prepared by Harutunian Engineering, Inc., and is not to be used, in whole or in part, for any other project without giving written notice to Harutunian Engineering, Inc.

NO.	DR	CK	DATE	DESCRIPTION

REVISIONS

BLACK & VEATCH
Building a world of difference.
Black & Veatch Corporation
Registration No. F-295
Austin, Texas

HARUTUNIAN ENGINEERING, INC.
305 E Hunland Dr., Ste 500, Austin, TX 78752
TBPE Firm Registration No. F-2408

K. A. HARUTUNIAN
59181
STATE OF TEXAS
REGISTERED PROFESSIONAL ENGINEER
4/4/2014

Austin WATER
Walnut Creek WWTP - Tertiary Filter Rehabilitation Project
CIP ID No. 3023.025

ELECTRICAL REFERENCE DRAWING - FILTER BUILDING ONE-LINE DIAGRAMS (SHEET 3 OF 4)

DESIGNED BY:	HEI
DRAWN BY:	HEI
REVIEWED BY:	HEI
APPROVED BY:	HEI
PROJECT NO.:	168622
DATE:	4/4/2014
SCALE:	AS SHOWN

REVISION:

DISCIPLINE NO.
E-62

DWG. NO.
SHEET 174 OF 273

ELECTRICAL SCHEDULE

SYMBOL	DESCRIPTION
A	FLUORESCENT LIGHT FIXTURE, CONNX. W/FLEX., TYPE NOTED, ON EMER. SYS.
E	LIGHT FIXTURE, CONNX. W/FLEX., TYPE NOTED
F	WALL MOUNTED LIGHT FIXTURE, TYPE NOTED
(D)	EXIT LIGHT, ARROWS AS SHOWN, ("D" DENOTES DOUBLE FACE)
(WP)	120V. DUPLEX WALL RECEPTACLE, WATERPROOF(WP)
C	CLOCK OUTLET AT 7'-6"
	POWER OUTLET
	FLOOR RECEPTACLE, 120 V.
	SINGLE POLE SWITCH
3	SWITCH- 3-WAY
1	CIRCUIT INDICATING HOME RUN B PANEL NO., (3-WIRE)
	SWITCHED INDICATION
	CIRCUIT RUN UNDER FLOOR OR UNDERGROUND
	CONDUIT UP
	CONDUIT DOWN
	CONDUIT STUB OUT
	BRANCH CIRCUIT, LINES DENOTE NO OF WIRES IF NOT THREE
	PANELBOARD
	POWER OR DISTRIBUTION PANEL
	CABINET AS NOTED
	MOTOR, HP NOTED ("F" IF FRACTIONAL)
	MOTOR CONTROLLER
	DISCONNECT (UNFUSED UNLESS NOTED OR REQUIRED)
	JUNCTION BOX (SIZE AND MOUNTING AS NOTED OR REQUIRED)
	EQUIPMENT CONNECTION
	TRANSFORMER
	CIRCUIT BREAKER

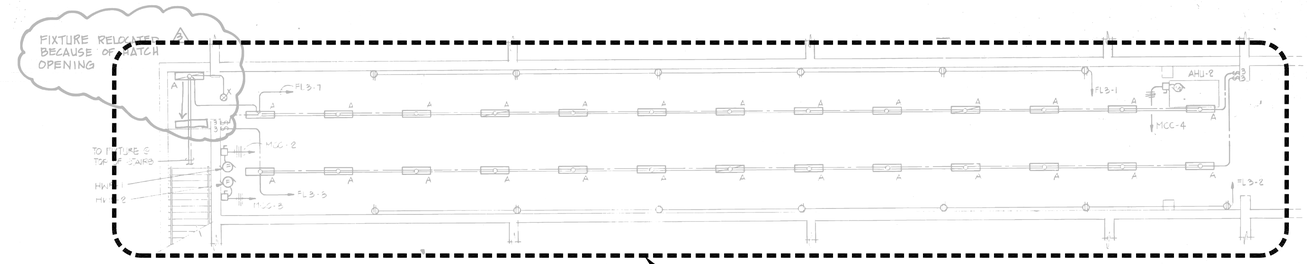

2 PIPE GALLERY FLOOR PLAN - ELECTRICAL

SCALE: 1/8"=1'-0"

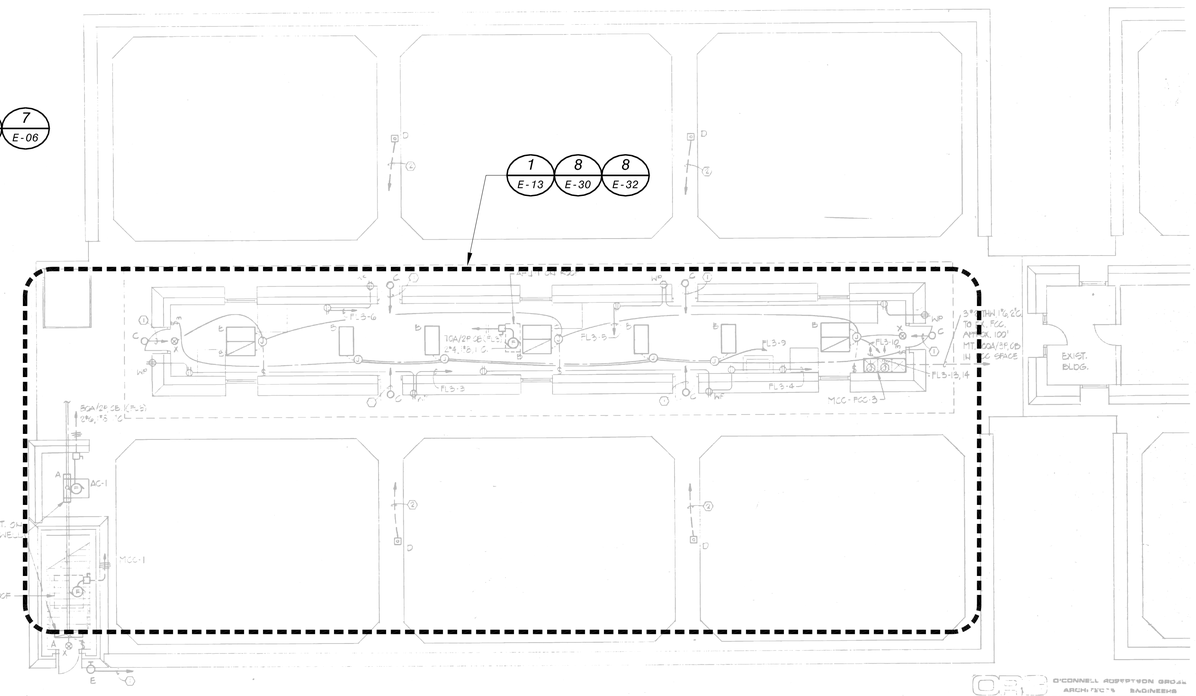

1 FILTER BUILDING FLOOR PLAN - ELECTRICAL

SCALE: 1/8"=1'-0"

NOTES:
1. CIRCUIT FL3-11 THRU TIMER.
2. CIRCUIT FL3-12 THRU TIMER.

MOTOR CONTROL CENTER

BUS: 225 AMPS, 3 PHASE, 4 WIRE, 480 VOLTS
U.L. SHORT CIRCUIT RATING 22,000 RMS SYM. AMPS.
[redacted]/MAIN CKT. BKR./[redacted] 125 AMPS
MOUNTING FLOOR, NEMA 1 ENCLOSURE

CKT NO.	SERVES	KW	H.P.	SWITCH/M.C.B. TYP	SWITCH/M.C.B. FRAME	SWITCH/M.C.B. POLE	SWITCH/M.C.B. FUSE/TRIP	STARTER SIZE	STARTER TYPE	MODIFICATIONS PB	MODIFICATIONS HOA	MODIFICATIONS IND LITE	FEEDER NO. & SIZE OF WIRE	FEEDER COND
1	VF-1		2/3	KC		3	15	6-0	FVNR	—	+	R/G	4#12	3/4
2	HW-1		1/6											
3	HWP-2		3/4											
4	AHU-2		1 1/2											
5	TRANSF TO PANEL FL-3	3.0	—			1	50	—	—	—	—	—	3#6, 1#8	
6	SPARE		—				30	5-1	FVNR	—	+	R/G	—	—
7	SPACE		—				—	—	—	—	—	—	—	—
8	SPACE		—				—	—	—	—	—	—	—	—

NOTES:
1. TRANSFORMER TO SHALL BE 30KVA, 480V x 120/208V, 3φ, PANEL MOUNTED (MCC)
2. PANEL FL3 SHALL BE 225A BF 4W, 42K MTG IN MCC, 125A MCB, 20A/1P CB 3φ & 3φ-G, (LTG OUTLETS, CONTROLS SPARES) 1-20A 1P 4W 1, 1-15A/1P (AS), PANEL FEEDER FROM T3, 4#1 THW, 1"ø, 21'C

LIGHTING FIXTURE SCHEDULE

TYPE	DESCRIPTION	VOLTS	LAMPS PER FIXTURE NO.	LAMPS PER FIXTURE TYPE	LAMPS PER FIXTURE WATTS	MOUNTING TYPE	MOUNTING HEIGHT	MANUFACTURER & CATALOG NO.
A	1x4 INDUSTRIAL W/WIRE GUARD	120	2	F40CW	34	SURFACE	CLG.	LITHONIA AFIG 240-120
B	2x4 GRID TROFFER	120	2	F40CW	34	RECESSED	CLG.	LITHONIA [illegible] 240-120
C	DOWN LIGHT	120	1	LUM/C/MED	70	RECESSED	CLG.	LITHONIA HL-5-120
D	POLE LIGHT	120	1	LU50/L	150	POLE	12'	HI-TEK TAA 1055-120-DLM, HI-TEK SSL2-B-15-[illegible] POLE
E	EXT. WALL BKT.	120	1	LU35D/G/MED	50	WALL	8'	HI-TEK TALL SCN LP-120-DME
X	EXIT LIGHT	120	2	LED6	2.0	SURFACE	CLG.	LITHONIA ESIR-120

"Lighting fixtures and lighting fixture schedule shown on this sheet is applicable to this sheet only."

2

Date	Ch'k'd.	Revision
7/07		2 AS BUILT
		1 ADDENDUM #2

Designed by: ZWB
Drawn by: REM
Checked by: ZWB
Approved by:
Date: APRIL 1987
Scale: AS NOTED

DWM DAILEY WANN AND MICHAEL Architects and Planners

CITY OF AUSTIN, TEXAS
WALNUT CREEK WASTEWATER TREATMENT PLANT
CONTRACT NO. 6

FILTER BUILDING - ELECTRICAL
LIGHTING & POWER

CAMP DRESSER & McKEE INC.
3445 Executive Center Drive, Suite 220
Austin, Texas 78731
CDM environmental engineers, scientists, planners, & management consultants

SHEET NO. E-65

O'CONNELL ROBERTSON GROUP ARCHITECTS ENGINEERS

GENERAL NOTES

1. THE EXISTING INFORMATION SHOWN ON THIS DRAWING WAS OBTAINED FROM THE PROJECT ENTITLED "WALNUT CREEK WASTEWATER TREATMENT PLANT CONTRACT NO. 6" DATED AUGUST 29, 1990. THIS DRAWING IS PROVIDED FOR REFERENCE PURPOSES ONLY AND MAY NOT EXACTLY REFLECT THE EXISTING CONDITIONS. THEREFORE, THE CONTRACTOR IS TO EXERCISE EXTREME CARE AND FIELD VERIFY THE EXISTING CONDITIONS PRIOR TO COMMENCING FULL SCALE DEMOLITION OR RENOVATION ACTIVITIES. FOLLOWING THE DISCOVERY VERIFICATION OF THE EXISTING FIELD CONDITIONS, SHOULD ADJUSTMENTS BECOME A NECESSITY TO THE EXISTING OR PROPOSED SYSTEM (AS APPLICABLE), THE EXISTING DISCOVERED FIELD CONDITIONS MUST BE BROUGHT TO THE OWNER'S ATTENTION FOR EXECUTION OF THE NECESSARY ADJUSTMENTS/MODIFICATIONS.

This document, and the designs incorporated herein, is an instrument of professional service that has been developed, designed and prepared by Harutunian Engineering, Inc., and is not to be used, in whole or in part, for any other project without giving written notice to Harutunian Engineering, Inc.

NO.	DR	CK	DATE	DESCRIPTION

REVISIONS

BLACK & VEATCH Building a world of difference.
Black & Veatch Corporation
Registration No. F-253
Austin, Texas

HARUTUNIAN ENGINEERING, INC.
305 E Huntland Dr., Ste 500, Austin, TX 78752
TBPE Firm Registration No. F-2408

STATE OF TEXAS — K. A. HARUTUNIAN — 19181 — REGISTERED PROFESSIONAL ENGINEER — 4/4/2014

Austin WATER
Walnut Creek WWTP - Tertiary Filter Rehabilitation Project
CIP ID No. 3023.025

ELECTRICAL REFERENCE DRAWING - FILTER BUILDING ONE-LINE DIAGRAMS (SHEET 4 OF 4)

DESIGNED BY:	HEI
DRAWN BY:	HEI
REVIEWED BY:	HEI
APPROVED BY:	HEI
PROJECT NO.:	168622
DATE:	4/4/2014
SCALE:	AS SHOWN
REVISION:	
DISCIPLINE NO.	E-63
DWG. NO.	SHEET 175 OF 273

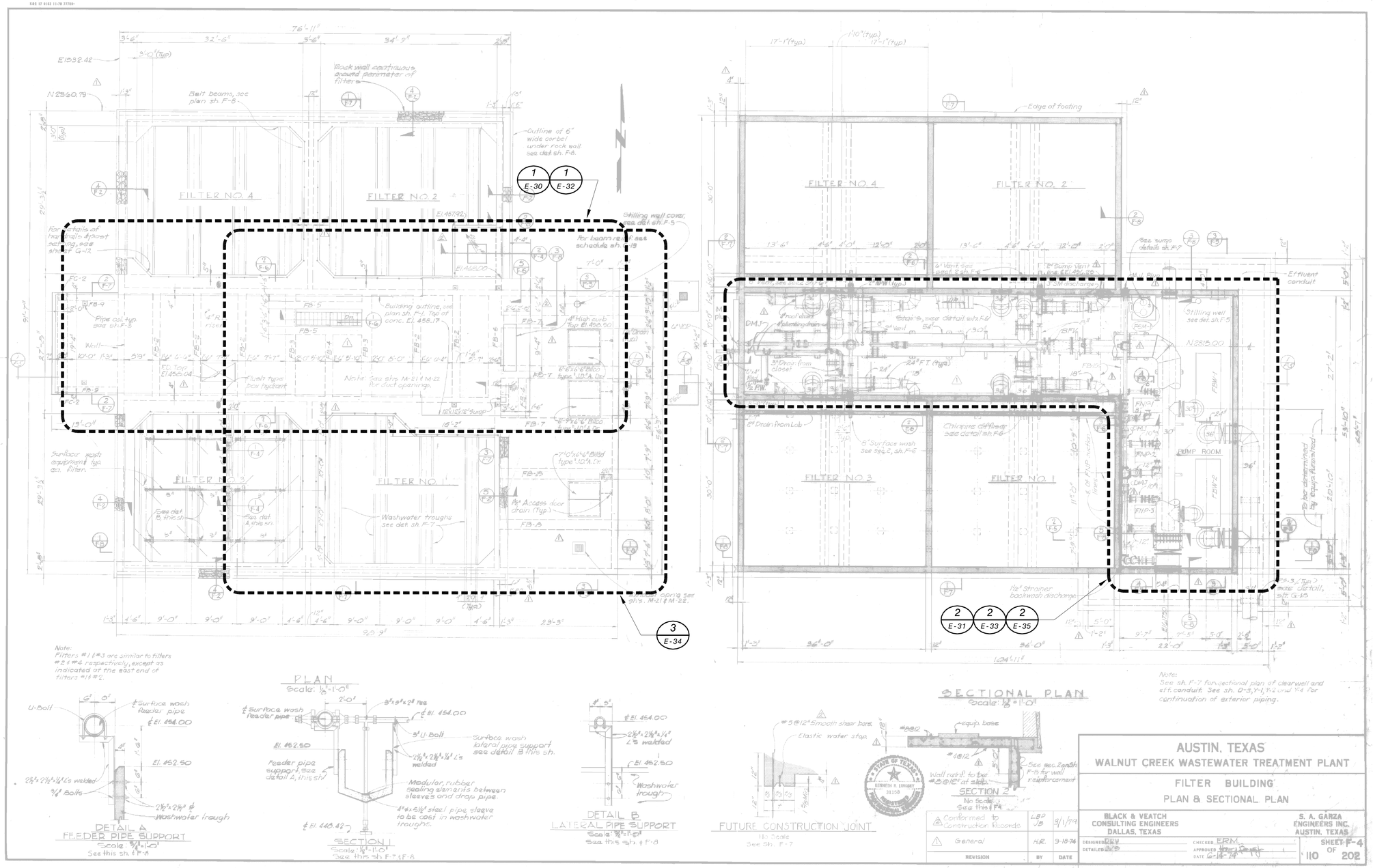

GENERAL NOTES

1. THE EXISTING INFORMATION SHOWN ON THIS DRAWING WAS OBTAINED FROM THE PROJECT ENTITLED "WALNUT CREEK WASTEWATER TREATMENT PLANT CONTRACT IV - SECTIONS I AND II TREATMENT FACILITIES" DATED MARCH, 1979. THIS DRAWING IS PROVIDED FOR REFERENCE PURPOSES ONLY AND MAY NOT EXACTLY REFLECT THE EXISTING CONDITIONS. THEREFORE, THE CONTRACTOR IS TO EXERCISE EXTREME CARE AND FIELD VERIFY THE EXISTING CONDITIONS PRIOR TO COMMENCING FULL SCALE DEMOLITION OR RENOVATION ACTIVITIES. FOLLOWING THE DISCOVERY VERIFICATION OF THE EXISTING FIELD CONDITIONS, SHOULD ADJUSTMENTS BECOME A NECESSITY TO THE EXISTING OR PROPOSED SYSTEM (AS APPLICABLE), THE EXISTING DISCOVERED FIELD CONDITIONS MUST BE BROUGHT TO THE OWNER'S ATTENTION FOR EXECUTION OF THE NECESSARY ADJUSTMENTS/MODIFICATIONS.

This document, and the designs incorporated herein, is an instrument of professional service that has been developed, designed and prepared by Harutunian Engineering, Inc., and is not to be used, in whole or in part, for any other project without giving written notice to Harutunian Engineering, Inc.

NO.	DR	CK	DATE	DESCRIPTION

REVISIONS

BLACK & VEATCH
Building a world of difference.
Black & Veatch Corporation
Registration No. F-253
Austin, Texas

HARUTUNIAN ENGINEERING, INC.
305 E Hunland Dr., Ste 500, Austin, TX 78752
TBPE Firm Registration No. F-2408

STATE OF TEXAS
K. A. HARUTUNIAN
31981
REGISTERED PROFESSIONAL ENGINEER
4/4/2014

Austin WATER
Walnut Creek WWTP - Tertiary Filter Rehabilitation Project
CIP ID No. 3023.025

ELECTRICAL REFERENCE DRAWING - FILTER BUILDING NO. 1 PLAN AND SECTIONAL PLAN

DESIGNED BY:	HEI
DRAWN BY:	HEI
REVIEWED BY:	HEI
APPROVED BY:	HEI
PROJECT NO.:	168622
DATE:	4/4/2014
SCALE:	AS SHOWN

REVISION:

DISCIPLINE NO.
E-64

DWG. NO.
SHEET 176 OF 273

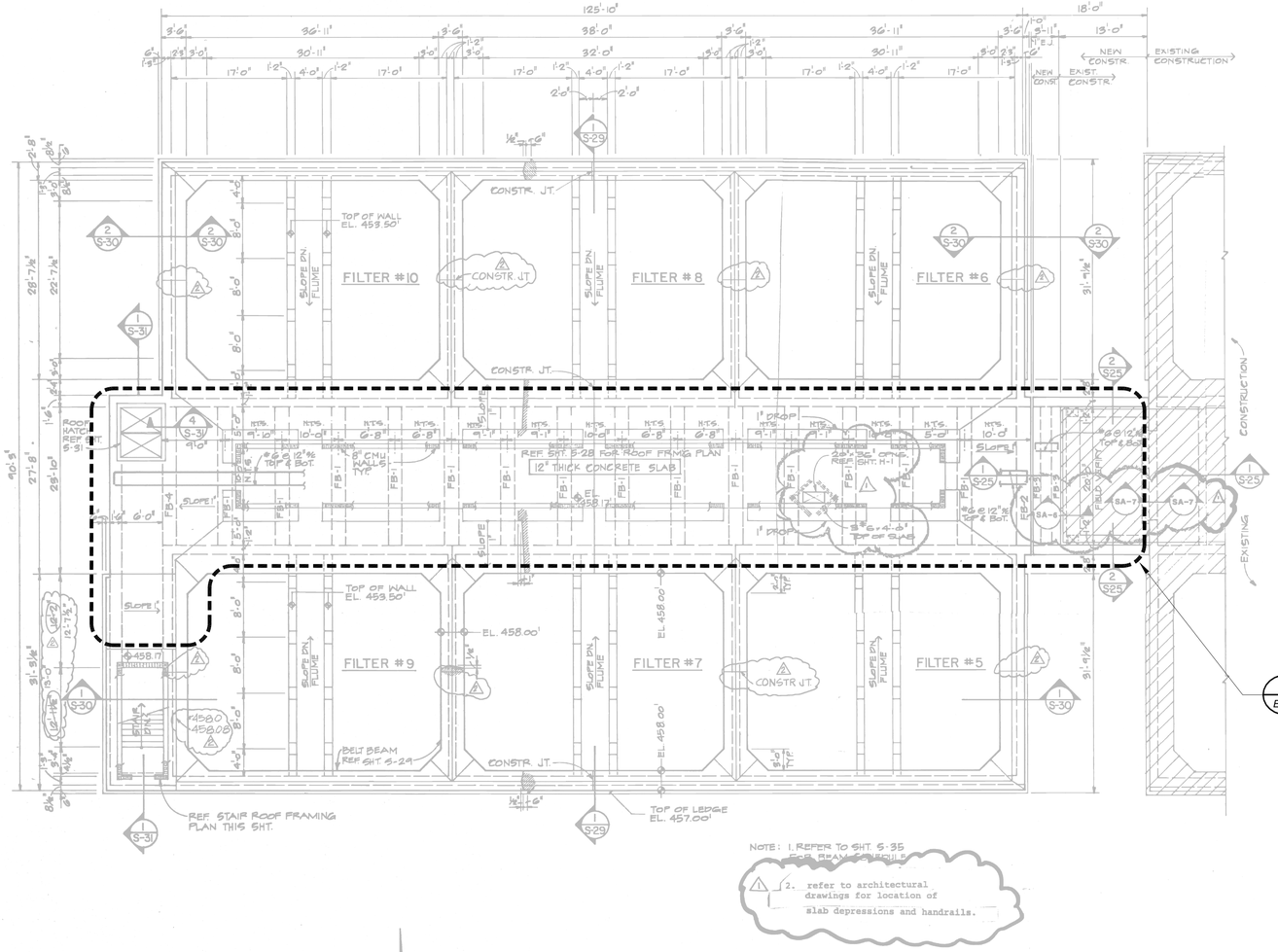

FILTER BLDG.
STRUCTURAL UPPER LEVEL PLAN 1/8" = 1'-0"

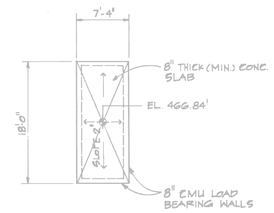

STAIR ROOF FRAMING PLAN
SCALE: 1/8" = 1'-0"

NOTE: 1. REFER TO SHT. S-35 FOR BEAM SCHEDULE
2. refer to architectural drawings for location of slab depressions and handrails.

JOSE I. GUERRA, INC.
CONSULTING STRUCTURAL ENGINEERS
512 476-4867
CEDAR STREET COURT
212 W. 4TH STREET
AUSTIN, TEXAS 78701

CITY OF AUSTIN, TEXAS
WALNUT CREEK WASTEWATER TREATMENT PLANT
CONTRACT NO.6

FINAL FILTERS
STRUCTURAL UPPER LEVER PLAN

Date	Ch'k'd.	Revision
6/90		△ AS BUILT
7/87		△ ADDENDUM #1

Designed by: RL
Drawn by: FS
Checked by: DOB
Approved by: [illegible]
Date: MAY, 1987
Scale: 1/8" = 1'-0"

JOB NO. 8627

CAMP DRESSER & McKEE INC.
3445 Executive Center Drive, Suite 220
Austin, Texas 78731
CDM
environmental engineers, scientists, planners, & management consultants

SHEET NO. S-27

GENERAL NOTES

1. THE EXISTING INFORMATION SHOWN ON THIS DRAWING WAS OBTAINED FROM THE PROJECT ENTITLED "WALNUT CREEK WASTEWATER TREATMENT PLANT CONTRACT NO.6" DATED AUGUST, 1990. THIS DRAWING IS PROVIDED FOR REFERENCE PURPOSES ONLY AND MAY NOT EXACTLY REFLECT THE EXISTING CONDITIONS. THEREFORE, THE CONTRACTOR IS TO EXERCISE EXTREME CARE AND FIELD VERIFY THE EXISTING CONDITIONS PRIOR TO COMMENCING FULL SCALE DEMOLITION OR RENOVATION ACTIVITIES. FOLLOWING THE DISCOVERY VERIFICATION OF THE EXISTING FIELD CONDITIONS, SHOULD ADJUSTMENTS BECOME A NECESSITY TO THE EXISTING OR PROPOSED SYSTEM (AS APPLICABLE), THE EXISTING DISCOVERED FIELD CONDITIONS MUST BE BROUGHT TO THE OWNER'S ATTENTION FOR EXECUTION OF THE NECESSARY ADJUSTMENTS/MODIFICATIONS.

This document, and the designs incorporated herein, is an instrument of professional service that has been developed, designed and prepared by Harutunian Engineering, Inc., and is not to be used, in whole or in part, for any other project without giving written notice to Harutunian Engineering, Inc.

NO.	DR	CK	DATE	DESCRIPTION

REVISIONS

BLACK & VEATCH
Building a world of difference.
Black & Veatch Corporation
Registration No. F-653
Austin, Texas

HARUTUNIAN ENGINEERING, INC.
305 E Hunland Dr., Ste 500, Austin, TX 78752
TBPE Firm Registration No. F-2408

STATE OF TEXAS
K. A. HARUTUNIAN
59181
REGISTERED PROFESSIONAL ENGINEER
4/4/2014

Austin WATER
Walnut Creek WWTP - Tertiary Filter Rehabilitation Project
CIP ID No. 3023.025

ELECTRICAL REFERENCE DRAWING - FILTER BUILDING NO.2
STRUCTURAL UPPER LEVEL PLAN

DESIGNED BY:	HEI
DRAWN BY:	HEI
REVIEWED BY:	HEI
APPROVED BY:	HEI
PROJECT NO.:	168622
DATE:	4/4/2014
SCALE:	AS SHOWN
REVISION:	
DISCIPLINE NO.	E-65
DWG. NO.	SHEET 177 OF 273

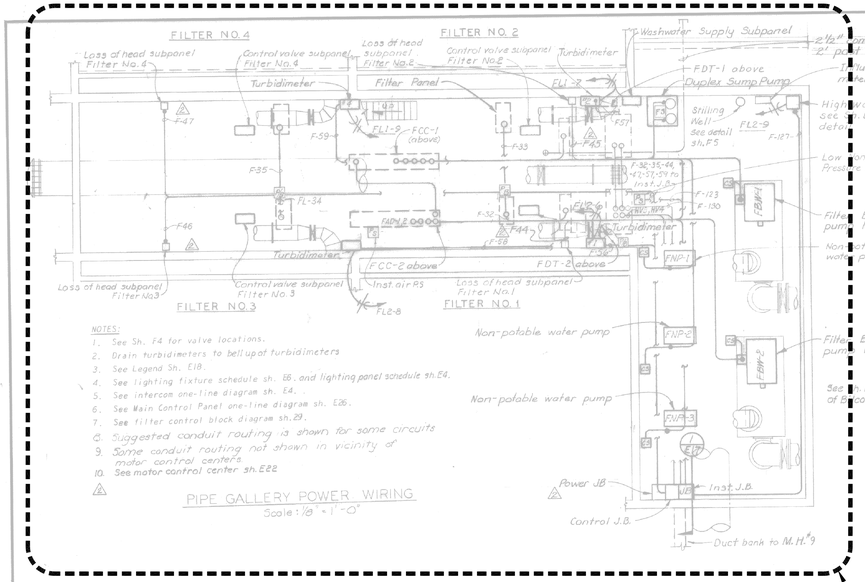

PIPE GALLERY POWER WIRING
Scale: 1/8" = 1'-0"

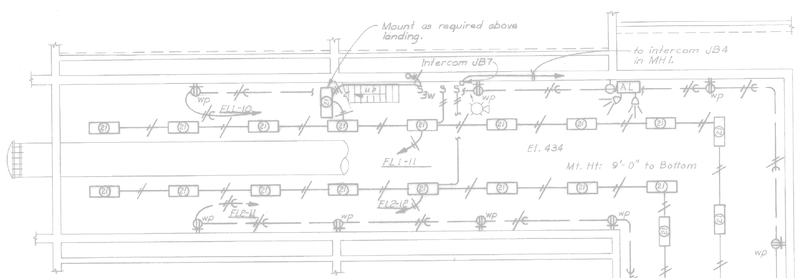

PIPE GALLERY LIGHTING
Scale: 1/8" = 1'-0"

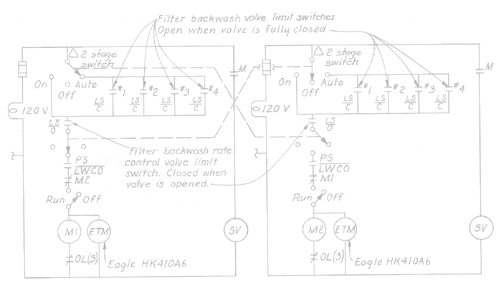

FILTER BACKWASH PUMP FBW-1

FILTER BACKWASH PUMP FBW-2

SECTION 1

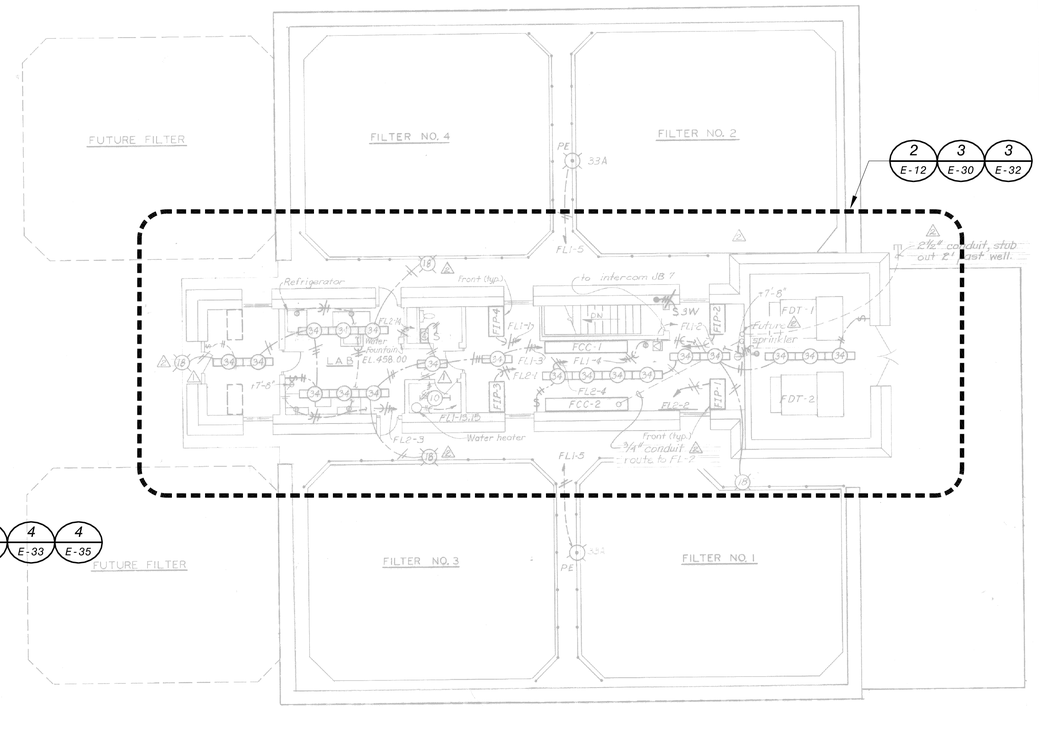

OPERATING FLOOR PLAN
Scale: 1/8" = 1'-0"

Conformed to Construction Records	JSM	3-1-79
General	H.R	9-9-78
REVISION	BY	DATE

AUSTIN, TEXAS
WALNUT CREEK WASTEWATER TREATMENT PLANT
FILTER BUILDING
LIGHTING AND POWER WIRING

BLACK & VEATCH CONSULTING ENGINEERS DALLAS, TEXAS

S. A. GARZA ENGINEERS INC. AUSTIN TEXAS

DESIGNED RGM
DETAILED RGM, G.L.C., D.H., J.M., T.J.
CHECKED D.M.D.
APPROVED
DATE 6/12/74

SHEET E17
189 OF 202

GENERAL NOTES

1. THE EXISTING INFORMATION SHOWN ON THIS DRAWING WAS OBTAINED FROM THE PROJECT ENTITLED "WALNUT CREEK WASTEWATER TREATMENT PLANT" DATED MARCH 1, 1979. THIS DRAWING IS PROVIDED FOR REFERENCE PURPOSES ONLY AND MAY NOT EXACTLY REFLECT THE EXISTING CONDITIONS. THEREFORE, THE CONTRACTOR IS TO EXERCISE EXTREME CARE AND FIELD VERIFY THE EXISTING CONDITIONS PRIOR TO COMMENCING FULL SCALE DEMOLITION OR RENOVATION ACTIVITIES. FOLLOWING THE DISCOVERY VERIFICATION OF THE EXISTING FIELD CONDITIONS, SHOULD ADJUSTMENTS BECOME A NECESSITY TO THE EXISTING OR PROPOSED SYSTEM (AS APPLICABLE), THE EXISTING DISCOVERED FIELD CONDITIONS MUST BE BROUGHT TO THE OWNER'S ATTENTION FOR EXECUTION OF THE NECESSARY ADJUSTMENTS/MODIFICATIONS.

This document, and the designs incorporated herein, is an instrument of professional service that has been developed, designed and prepared by Harutunian Engineering, Inc., and is not to be used, in whole or in part, for any other project without giving written notice to Harutunian Engineering, Inc.

NO.	DR	CK	DATE	DESCRIPTION

REVISIONS

BLACK & VEATCH
Building a world of difference.
Black & Veatch Corporation
Registration No. F-253
Austin, Texas

HARUTUNIAN ENGINEERING, INC.
305 E Huntland Dr., Ste 500; Austin, TX 78752
TBPE Firm Registration No. F-2408

STATE OF TEXAS
K. A. HARUTUNIAN
68181
REGISTERED PROFESSIONAL ENGINEER
4/4/2014

Austin WATER
Walnut Creek WWTP - Tertiary Filter Rehabilitation Project
CIP ID No. 3023.025

ELECTRICAL REFERENCE DRAWING - FILTER BUILDING NO.1 EXISTING POWER FLOOR PLANS (SHEET 1 OF 2)

DESIGNED BY:	HEI
DRAWN BY:	HEI
REVIEWED BY:	HEI
APPROVED BY:	HEI
PROJECT NO.:	168622
DATE:	4/4/2014
SCALE:	AS SHOWN
REVISION:	
DISCIPLINE NO.	E-66
DWG. NO.	SHEET 178 OF 273

02-13-95 field-e3.dwg

STATE OF TEXAS — JOSEPH V. JENKINS 68717 — REGISTERED PROFESSIONAL ENGINEER — 11-13-96

RECORD DRAWINGS

THIS DOCUMENT IS FOR RECORD PURPOSES ONLY AND IS NOT TO BE USED FOR CONSTRUCTION, BIDDING OR PERMITTING. THIS RECORD DRAWING HAS BEEN PREPARED BASED ON THE CONTRACTOR'S AS-BUILT DOCUMENTS REFLECTING FIELD CHANGES TO THIS CONTRACT DOCUMENT DRAWING. THE ENGINEER SEALING THIS DRAWING HAS REVIEWED THE DOCUMENTS AND ASCERTAINED TO THE BEST OF HIS KNOWLEDGE AND BELIEF THAT THE REFLECTED FIELD CHANGES ARE COMPLETE AND CORRECT. THIS ORIGINALLY ISSUED AND SUBSEQUENTLY OFFICIALLY AMENDED CONTRACT DOCUMENT DRAWING WAS SEALED AND SIGNED BY: ROBERT A. WILLIAMS, JR., TEXAS P.E. NO. 55304, ON 7/27/93.

NOTES:

1. TO GENERATOR, SEE E-1.
2. RELOCATE PHONE AS REQUIRED.
3. ROUTE IN REINFORCED CONCRETE ENCASED DUCT BANK.
4. ROUTE IN REINFORCED CONCRETE DUCT BANK TO RESPECTIVE SAMPLE PUMPS AND LOCAL HAND SWITCHES. PROVIDE 3'x3'x3' HANDHOLES AS SHOWN.
5. PROVIDE ONE SPARE 4" C
6. PROVIDE 3 SPARE 2" C, ONE EACH BASIN.
7. PROVIDE [A1] FROM EACH AIT. EACH CONNECTION POINT REPRESENTS 3 CONNECTION POINTS.
8. PROVIDE SEPERATE 120V CIRCUIT TO EACH AIT. DO NOT COMBINE WITH [A1]. 120V HOME RUNS MAY BE ROUTED THROUGH A J-BOX AND COMBINED.
9. PROVIDE 4 PLC REMOTE I/O DATA HIGHWAY CABLES, 2 ACTIVE, 2 SPARES IN EACH OF TWO CONDUITS. PROVIDE 2" CONDUITS. COORDINATE WITH PLC SUPPLIER. CABLE MUST BE RATED FOR WET LOCATION.
10. ENTIRE AREA SHOWN INDOORS IS DRY AREA. OUTDOOR AREA SHALL BE CONSIDERED WET AND CORROSIVE. BASEMENT IS A DAMP AREA.
11. MOVE EXISTING NPW PUMP NO. 2 STARTER TO NEW MCC SECTION. RE-USE EXISTING CONDUIT. RE-ROUTE FROM EXISTING STARTER LOCATION TO NEW STARTER LOCATION. PROVIDE NEW POWER CONDUCTORS FROM STARTER TO MOTOR. PROVIDE NEW DOOR WITH PILOT DEVICES IN NEW MCC SECTION FOR THE RELOCATED STARTER. PROVIDE NEW BLANK DOOR IN EXISTING MCC WHERE STARTER WAS LOCATED. PROVIDE NEW CONTROL CONDUCTORS AND EXTEND CONTROL CONDUITS TO NEW STARTER LOCATION. GENERATOR IS FOR NPW PUMP ONLY. NEW MCC SECTION SHOULD NOT HAVE FULL HEIGHT BUS.
12. RELOCATE LIGHT TIMER AND RESET SWITCHES ON END OF MCC TO THIS BUCKET.
13. REMOVE EXISTING CIRCUIT BREAKERS, INTERIOR AND EXTERIOR JUNCTION BOXES, CABLE, AND CONDUIT AND CONDUIT SUPPORTS AS REQUIRED. RE-USE AS MUCH OF THE EXISTING CONDUIT AS POSSIBLE. PROVIDED RE-USED CONDUIT IS NOT CORRODED OR DAMAGED. REMOVE MCC FEEDER CONDUCTORS, AND PROVIDE NEW CONDUCTORS.
14. AT EXISTING 750 KVA TRANSFORMERS. PROVIDE NEW CIRCUIT BREAKERS MOUNTED IN SECONDARY COMPARTMENT. (TYP OF 2)
15. RE-USE EXISTING CONDUIT UNDER TRANSFORMER SLAB.

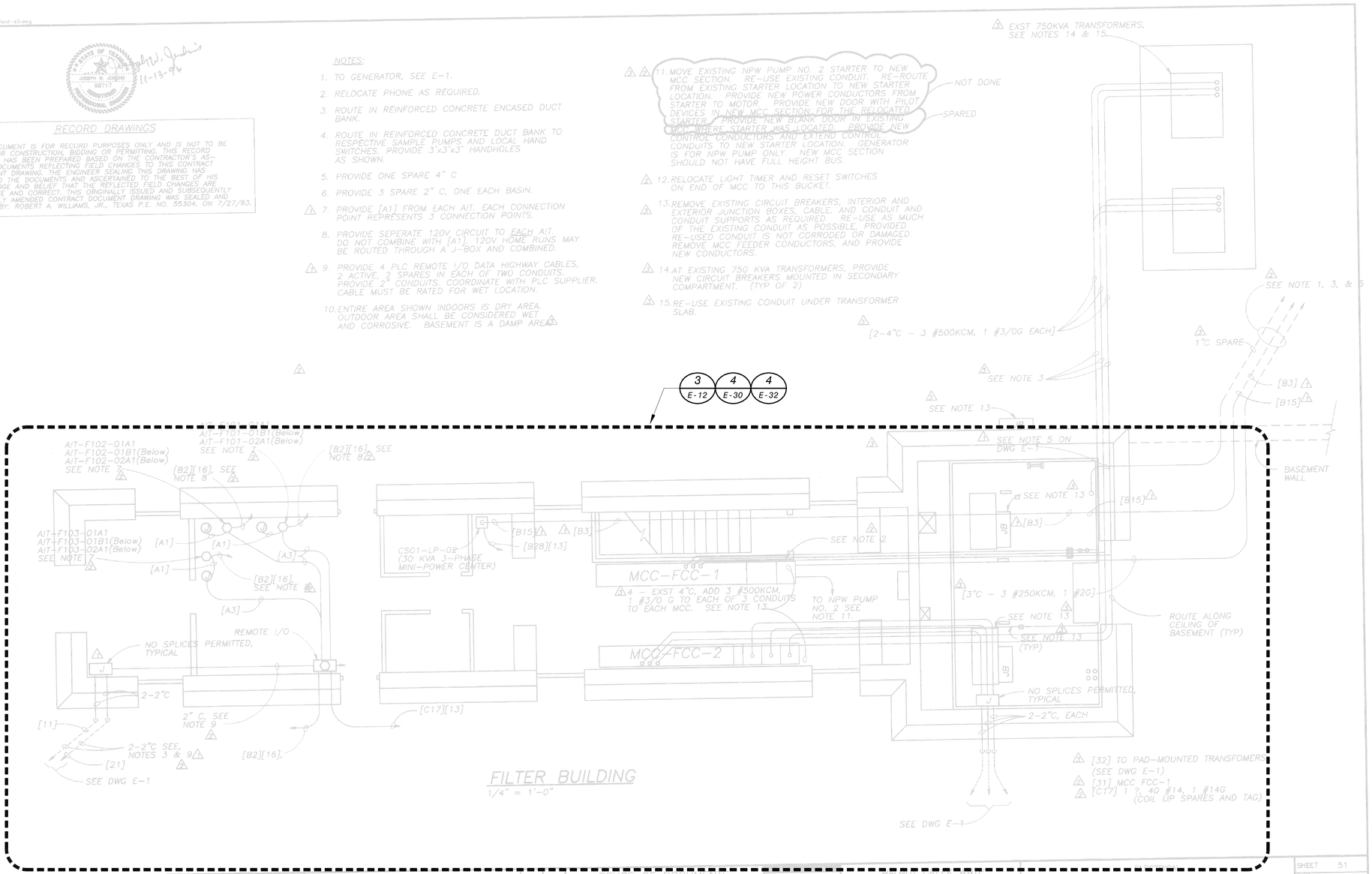

CH2M HILL	DSGN R WILLIAMS	5-95	AS-BUILTS	DM	FR
	DR L DILLARD	2-94	REV 1 TO CHANGE ORDER NO.2	RAW	JWJ
	CHK J TURNER	2-94	CHANGE ORDER NO.2	RAW	JWJ
	APVD J JENKINS	7-93	ADDENDUM NO. 3	RAW	JWJ
		NO.	DATE — REVISION	BY	APVD

REUSE OF DOCUMENTS: THIS DOCUMENT, AND THE IDEAS AND DESIGNS INCORPORATED HEREIN, AS AN INSTRUMENT OF PROFESSIONAL SERVICE, IS THE PROPERTY OF CH2M HILL AND IS NOT TO BE USED, IN WHOLE OR IN PART, FOR ANY OTHER PROJECT WITHOUT THE WRITTEN AUTHORIZATION OF CH2M HILL. © CH2M HILL

BAR IS ONE INCH ON ORIGINAL DRAWING. 0 1" IF NOT ONE INCH ON THIS SHEET, ADJUST SCALES ACCORDINGLY.

DECHLORINATION AND ASSOCIATED IMPROVEMENTS
WATER AND WASTEWATER UTILITY
CITY OF AUSTIN
AUSTIN, TEXAS

FILTER BUILDING

SHEET 51
DWG NO. E-7
DATE JUN 93
PROJ NO. TEX33544.A1

GENERAL NOTES

1. THE EXISTING INFORMATION SHOWN ON THIS DRAWING WAS OBTAINED FROM THE PROJECT ENTITLED "WALNUT CREEK WWTP DECHLORINATION AND ASSOCIATED IMPROVEMENTS" DATED JUNE 21, 1993. THIS DRAWING IS PROVIDED FOR REFERENCE PURPOSES ONLY AND MAY NOT EXACTLY REFLECT THE EXISTING CONDITIONS. THEREFORE, THE CONTRACTOR IS TO EXERCISE EXTREME CARE AND FIELD VERIFY THE EXISTING CONDITIONS PRIOR TO COMMENCING FULL SCALE DEMOLITION OR RENOVATION ACTIVITIES. FOLLOWING THE DISCOVERY VERIFICATION OF THE EXISTING FIELD CONDITIONS, SHOULD ADJUSTMENTS BECOME A NECESSITY TO THE EXISTING OR PROPOSED SYSTEM (AS APPLICABLE), THE EXISTING DISCOVERED FIELD CONDITIONS MUST BE BROUGHT TO THE OWNER'S ATTENTION FOR EXECUTION OF THE NECESSARY ADJUSTMENTS/MODIFICATIONS.

This document, and the designs incorporated herein, is an instrument of professional service that has been developed, designed and prepared by Harutunian Engineering, Inc., and is not to be used, in whole or in part, for any other project without giving written notice to Harutunian Engineering, Inc.

NO.	DR	CK	DATE	DESCRIPTION

REVISIONS

BLACK & VEATCH. Building a world of difference.
Black & Veatch Corporation
Registration No. F-653
Austin, Texas

HARUTUNIAN ENGINEERING, INC.
305 E Hunland Dr., Ste 500; Austin, TX 78752
TBPE Firm Registration No. F-2408

STATE OF TEXAS — K. A. HARUTUNIAN — 51981 — REGISTERED PROFESSIONAL ENGINEER — 4/4/2014

Austin WATER
Walnut Creek WWTP - Tertiary Filter Rehabilitation Project
CIP ID No. 3023.025

ELECTRICAL REFERENCE DRAWING - FILTER BUILDING NO.1 EXISTING POWER FLOOR PLANS (SHEET 2 OF 2)

DESIGNED BY:	HEI
DRAWN BY:	HEI
REVIEWED BY:	HEI
APPROVED BY:	HEI
PROJECT NO.:	168622
DATE:	4/4/2014
SCALE:	AS SHOWN
REVISION:	
DISCIPLINE NO.	E-67
DWG. NO.	SHEET 179 OF 273

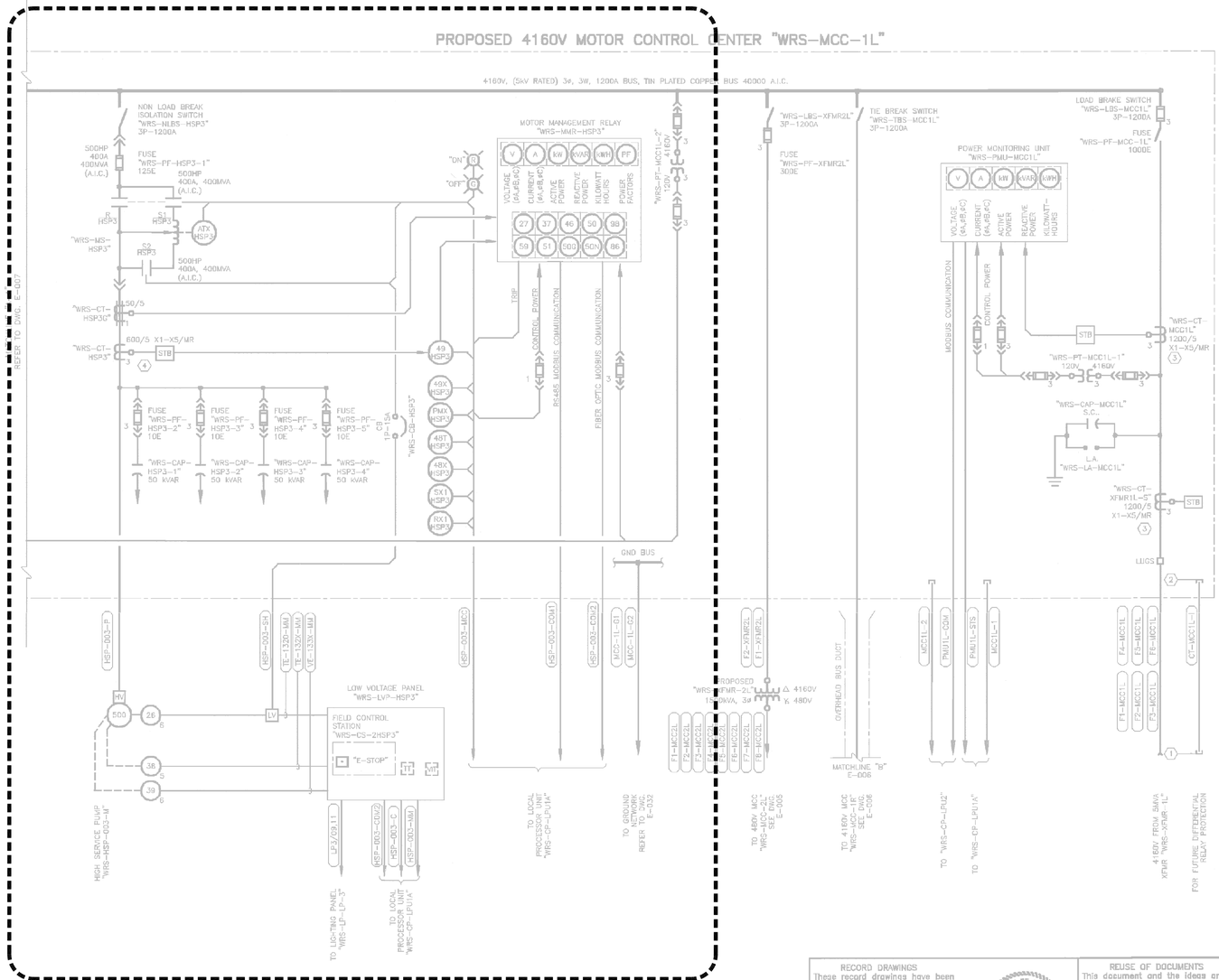

KEY NOTES:

1. EXTEND EMPTY CONDUIT BEYOND EDGE OF WATER RECLAMATION SYSTEM'S ELECTRICAL BUILDING PER CONDUIT SITE PLAN AND CAP OFF FOR FUTURE CONNECTION. REFER TO DWG. E-027 AND E-158.

2. STUB UP EMPTY CONDUIT AT CURRENT TRANSFORMER "WRS-CT-XFMR1L-S" LOCATION AND CAP-OFF FOR FUTURE CONNECTION TO FUTURE DIFFERENTIAL RELAY E-158.

3. 1200/5 MULTI-RATIO, WINDOW TYPE CURRENT TRANSFORMER WITH THE FOLLOWING AVAILABLE RATIOS:

   A. 100/5: X2-X3 F. 600/5: X2-X4
   B. 200/5: X1-X2 G. 800/5: X1-X4
   C. 300/5: X1-X3 H. 900/5: X3-X5
   D. 400/5: X4-X5 I. 1000/5: X2-X5
   E. 500/5: X3-X4 J. 1200/5: X1-X5

   CONNECT ALL TERMINALS TO THE CORRESPONDING TAP CHANGING/SHORTING TERMINAL BLOCK (STB). SET TAPS AT STB FOR RATIO INDICATED IN "CT-RATIO SETTING TABLE" ON DWG. E-003.

4. 600/5 MULTI-RATIO, WINDOW TYPE CURRENT TRANSFORMER WITH THE FOLLOWING AVAILABLE RATIOS:

   A. 50/5: X2-X3 F. 300/5: X2-X4
   B. 100/5: X1-X2 G. 400/5: X1-X4
   C. 150/5: X1-X3 H. 450/5: X3-X5
   D. 200/5: X4-X5 I. 500/5: X2-X5
   E. 250/5: X3-X4 J. 600/5: X1-X5

   CONNECT ALL TERMINALS TO THE CORRESPONDING TAP CHANGING/SHORTING TERMINAL BLOCK (STB). SET TAPS AT STB FOR THE RATIO INDICATED IN "CT-RATIO SETTING TABLE" ON DWG. E-003.

NO.	DATE	REVISION	APPV'D

GSG, Inc.
Engineers, Planners & Regulatory Consultants
511 West 7th Street Austin, Texas 78701 512 476-6525

Water Reclamation System - Phase 1
C.I.P. NO. 3990-227-7843 CITY OF AUSTIN, TEXAS
4160V SYSTEM ELECTRICAL ONE-LINE DIAGRAM
(SHEET 2 OF 4)

RECORD DRAWINGS
These record drawings have been prepared using information provided by the construction contractor and/or owner. The seal and signature herein only signify that the plans have been revised in accordance with the information provided and does not guarantee that the plans accurately show every detail of the constructed project.

STATE OF TEXAS K. A. HARUTUNIAN 39181 REGISTERED PROFESSIONAL ENGINEER

REUSE OF DOCUMENTS
This document and the ideas and designs incorporated herein as an instrument of professional service has been developed, designed and prepared by Harutunian Engineering, Inc. and is not to be used, in whole or part, for any other project without the written authorization of the City of Austin and Harutunian Engineering, Inc. ©2000

THE SEAL APPEARING ON THIS DOCUMENT WAS AUTHORIZED BY K.A. HARUTUNIAN P.E. 39181 ON APRIL 20, 2000

STATE OF TEXAS K. A. HARUTUNIAN 39181 REGISTERED PROFESSIONAL ENGINEER

HARUTUNIAN ENGINEERING INCORPORATED
ENGINEERING AND ENVIRONMENTAL CONSULTANTS
305 EAST HUNTLAND DRIVE SUITE 500
AUSTIN, TEXAS 78752

DESIGNED: HEI
APPROVED: HEI
JOB NO.: 9838
DATE: APRIL 12, 2000
DWG. NO: E-004
SHT. OF

This document, and the designs incorporated herein, is an instrument of professional service that has been developed, designed and prepared by Harutunian Engineering, Inc., and is not to be used, in whole or in part, for any other project without giving written notice to Harutunian Engineering, Inc.

NO.	DR	CK	DATE	DESCRIPTION

REVISIONS

BLACK & VEATCH
Building a world of difference.
Black & Veatch Corporation
Registration No. F-253
Austin, Texas

HARUTUNIAN ENGINEERING, INC.
305 E Huntland Dr, Ste 500, Austin, TX 78752
TBPE Firm Registration No. F-2408

STATE OF TEXAS K. A. HARUTUNIAN 39181 REGISTERED PROFESSIONAL ENGINEER
4/4/2014

Austin WATER
Walnut Creek WWTP - Tertiary Filter Rehabilitation Project
CIP ID No. 3023.025

ELECTRICAL REFERENCE DRAWING - WRI BUILDING 4160V ONE-LINE DIAGRAM (SHEET 1 OF 2)

DESIGNED BY:	HEI
DRAWN BY:	HEI
REVIEWED BY:	HEI
APPROVED BY:	HEI
PROJECT NO.:	168622
DATE:	4/4/2014
SCALE:	AS SHOWN
REVISION:	
DISCIPLINE NO.	E-68
DWG. NO.	SHEET 180 OF 273

GENERAL NOTES

1. THE EXISTING INFORMATION SHOWN ON THIS DRAWING WAS OBTAINED FROM THE PROJECT ENTITLED "WATER RECLAMATION SYSTEM - PHASE 1" DATED APRIL 12, 2000. THIS DRAWING IS PROVIDED FOR REFERENCE PURPOSES ONLY AND MAY NOT EXACTLY REFLECT THE EXISTING CONDITIONS. THEREFORE, THE CONTRACTOR IS TO EXERCISE EXTREME CARE AND FIELD VERIFY THE EXISTING CONDITIONS PRIOR TO COMMENCING FULL SCALE DEMOLITION OR RENOVATION ACTIVITIES. FOLLOWING THE DISCOVERY VERIFICATION OF THE EXISTING FIELD CONDITIONS, SHOULD ADJUSTMENTS BECOME A NECESSITY TO THE EXISTING OR PROPOSED SYSTEM (AS APPLICABLE), THE EXISTING DISCOVERED FIELD CONDITIONS MUST BE BROUGHT TO THE OWNER'S ATTENTION FOR EXECUTION OF THE NECESSARY ADJUSTMENTS/MODIFICATIONS.

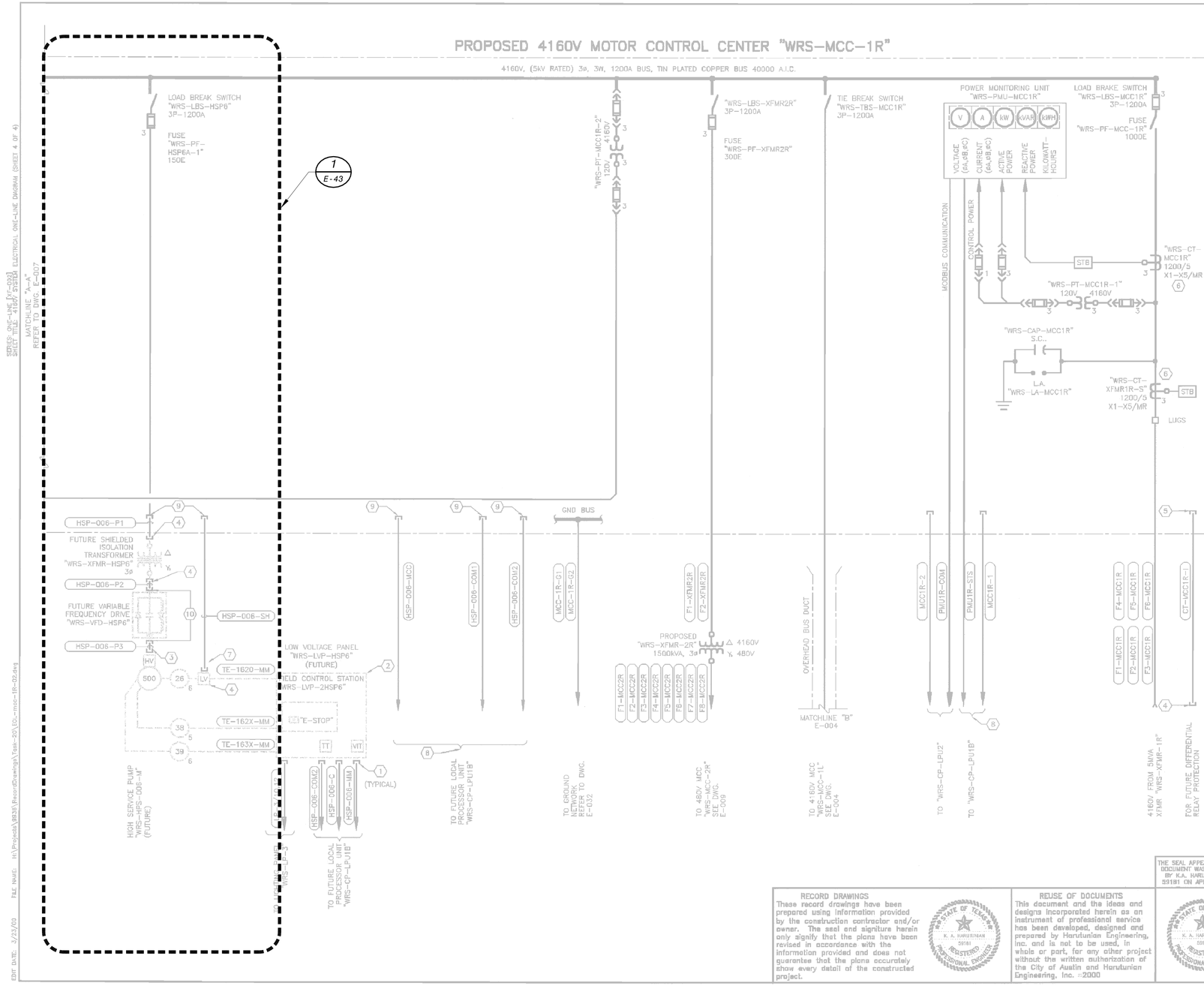

KEY NOTES:

1. STUB UP EMPTY CONDUIT AT LOW VOLTAGE PANEL'S LOCATION AND CAP-OFF FOR FUTURE CONNECTION TO FUTURE LOW VOLTAGE PANEL. REFER TO DETAIL ON DWG. E-158.
2. PROPOSED FUTURE EQUIPMENT
3. STUB-UP EMPTY CONDUIT AT MOTOR'S HIGH VOLTAGE BOX LOCATION AND CAP-OFF FOR FUTURE CONNECTION TO FUTURE HIGH SERVICE PUMP MOTOR. REFER TO DETAIL ON DWG E-158.
4. EXTEND EMPTY CONDUIT BEYOND EDGE OF WATER RECLAMATION SYSTEM'S ELECTRICAL BUILDING PER CONDUIT SITE PLAN AND CAP-OFF FOR FUTURE CONNECTION. REFER TO DWG E-158.
5. STUB-UP EMPTY CONDUIT AT CURRENT TRANSFORMER "WRS-CT-XFMR1R-S" LOCATION AND CAP-OFF FOR FUTURE CONNECTION TO FUTURE DIFFERENTIAL RELAY PROTECTION. REFER TO DWG E-158.
6. 1200/5 MULTI-RATIO, WINDOW TYPE CURRENT TRANSFORMER WITH THE FOLLOWING AVAILABLE RATIOS:

   A. 100/5: X2-X3 F. 600/5: X2-X4
   B. 200/5: X1-X2 G. 800/5: X1-X4
   C. 300/5: X1-X3 H. 900/5: X3-X5
   D. 400/5: X5-X4 I. 1000/5: X2-X5
   E. 500/5: X3-X4 J. 1200/5: X1-X5

   CONNECT ALL TERMINALS TO THE CORRESPONDING TAP CHANGING/SHORTING TERMINAL BLOCK (STB). SET TAPS AT STB FOR THE RATIO INDICATED IN "CT RATIO SETTING TABLE" ON DWG. E-003.
7. STUB-UP EMPTY CONDUIT AT MOTOR'S LOW VOLTAGE BOX LOCATION AND CAP-OFF FOR FUTURE CONNECTION TO FUTURE HIGH SERVICE PUMP MOTOR. REFER TO FUTURE CONDUIT STUB-UP DETAIL E-158.
8. STUB-UP EMPTY CONDUITS AT FUTURE LOCAL PROCESSOR UNITS LOCATION AND CAP-OFF FOR FUTURE CONNECTION TO FUTURE LOCAL PROCESSOR UNIT. REFER TO ELECTRICAL BUILDING PLAN AND FUTURE CONDUIT STUB-UP DETAIL E-158.
9. STUB-UP CONDUITS INTO MOTOR CONTROL CENTER SECTION CONTAINING "WRS-LBS-HSP6" AND CAP-OFF. SEE FUTURE CONDUIT STUB-UP DETAIL E-158.
10. STUB-UP CONDUIT INTO WRS ELECTAICAL BUILDING AND CAP-OFF PER ELECTRICAL BUILDING PLAN AND FUTURE CONDUIT STUB-UP DETAIL E-158.

GENERAL NOTES:

1. ITEMS REPRESENTED BY LIGHT LINEWORK ARE FUTURE. ALL OTHER ITEMS SHOWN ON THIS DRAWING ARE PROPOSED UNLESS SPECIFICALLY NOTED AS FUTURE.

NO.	DATE	REVISION	APPV'D

GSG, Inc.
Engineers, Planners & Regulatory Consultants
511 West 7th Street Austin, Texas 78701 512 476-5595

Water Reclamation System - Phase 1
C.I.P. NO. 3990-227-7843 CITY OF AUSTIN, TEXAS
4160V SYSTEM ELECTRICAL ONE-LINE DIAGRAM
(SHEET 4 OF 4)

THE SEAL APPEARING ON THIS DOCUMENT WAS AUTHORIZED BY K.A. HARUTUNIAN P.E. 59181 ON APRIL 20, 2000

RECORD DRAWINGS
These record drawings have been prepared using information provided by the construction contractor and/or owner. The seal and signature herein only signify that the plans have been revised in accordance with the information provided and does not guarantee that the plans accurately show every detail of the constructed project.

STATE OF TEXAS K. A. HARUTUNIAN 59181 REGISTERED PROFESSIONAL ENGINEER

REUSE OF DOCUMENTS
This document and the ideas and designs incorporated herein as an instrument of professional service has been developed, designed and prepared by Harutunian Engineering, Inc. and is not to be used, in whole or part, for any other project without the written authorization of the City of Austin and Harutunian Engineering, Inc. ©2000

STATE OF TEXAS K. A. HARUTUNIAN 59181 REGISTERED PROFESSIONAL ENGINEER

HARUTUNIAN ENGINEERING INCORPORATED
ENGINEERING AND ENVIRONMENTAL CONSULTANTS
305 EAST HUNTLAND DRIVE SUITE 500
AUSTIN, TEXAS 78752

DESIGNED: HEI
APPROVED: HEI
JOB NO.: 9938
DATE: APRIL 12, 2000
DWG. NO: E-006
SHT. OF

GENERAL NOTES

1. *THE EXISTING INFORMATION SHOWN ON THIS DRAWING WAS OBTAINED FROM THE PROJECT ENTITLED "WATER RECLAMATION SYSTEM - PHASE 1" DATED APRIL 12, 2000. THIS DRAWING IS PROVIDED FOR REFERENCE PURPOSES ONLY AND MAY NOT EXACTLY REFLECT THE EXISTING CONDITIONS. THEREFORE, THE CONTRACTOR IS TO EXERCISE EXTREME CARE AND FIELD VERIFY THE EXISTING CONDITIONS PRIOR TO COMMENCING FULL SCALE DEMOLITION OR RENOVATION ACTIVITIES. FOLLOWING THE DISCOVERY VERIFICATION OF THE EXISTING FIELD CONDITIONS, SHOULD ADJUSTMENTS BECOME A NECESSITY TO THE EXISTING OR PROPOSED SYSTEM (AS APPLICABLE), THE EXISTING DISCOVERED FIELD CONDITIONS MUST BE BROUGHT TO THE OWNER'S ATTENTION FOR EXECUTION OF THE NECESSARY ADJUSTMENTS/MODIFICATIONS.*

This document, and the designs incorporated herein, is an instrument of professional service that has been developed, designed and prepared by Harutunian Engineering, Inc., and is not to be used, in whole or in part, for any other project without giving written notice to Harutunian Engineering, Inc.

NO.	DR	CK	DATE	DESCRIPTION

REVISIONS

BLACK & VEATCH
Building a world of difference.
Black & Veatch Corporation
Registration No. F-253
Austin, Texas

HARUTUNIAN ENGINEERING, INC.
305 E Huntland Dr., Ste 500, Austin, TX 78752
TBPE Firm Registration No. F-2408

STATE OF TEXAS K. A. HARUTUNIAN 59181 REGISTERED PROFESSIONAL ENGINEER
4/4/2014

Austin WATER
Walnut Creek WWTP - Tertiary Filter Rehabilitation Project
CIP ID No. 3023.025

ELECTRICAL REFERENCE DRAWING - WRI BUILDING 4160V ONE-LINE DIAGRAM (SHEET 2 OF 2)

DESIGNED BY:	HEI
DRAWN BY:	HEI
REVIEWED BY:	HEI
APPROVED BY:	HEI
PROJECT NO.:	168622
DATE:	4/4/2014
SCALE:	AS SHOWN
REVISION:	
DISCIPLINE NO.	E-69
DWG. NO.	SHEET 181 OF 273

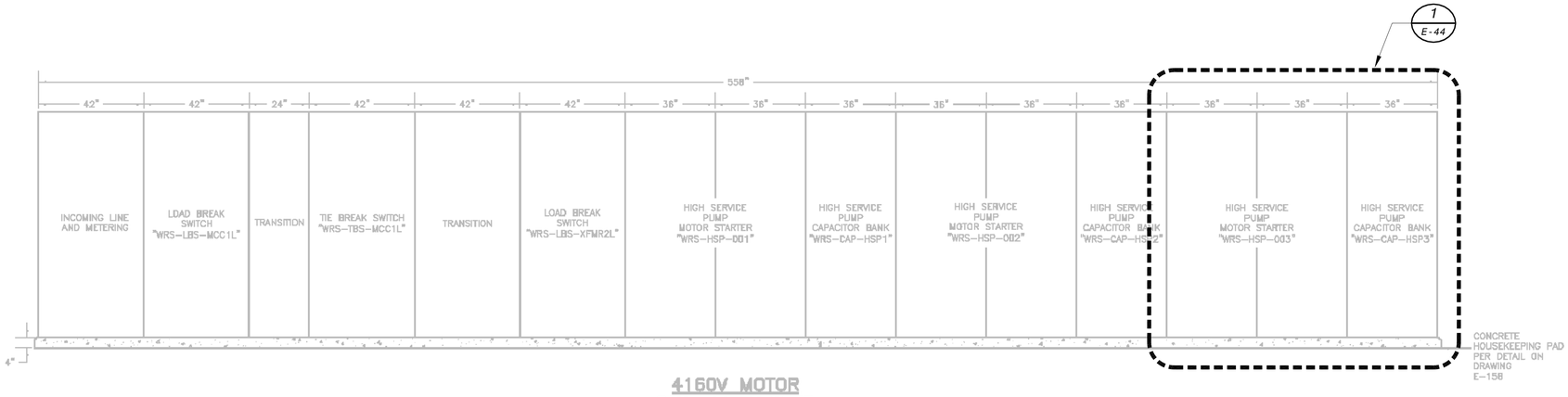

4160V MOTOR CONTROL CENTER "WRS-MCC-1L" FRONT ELEVATION

N.T.S.

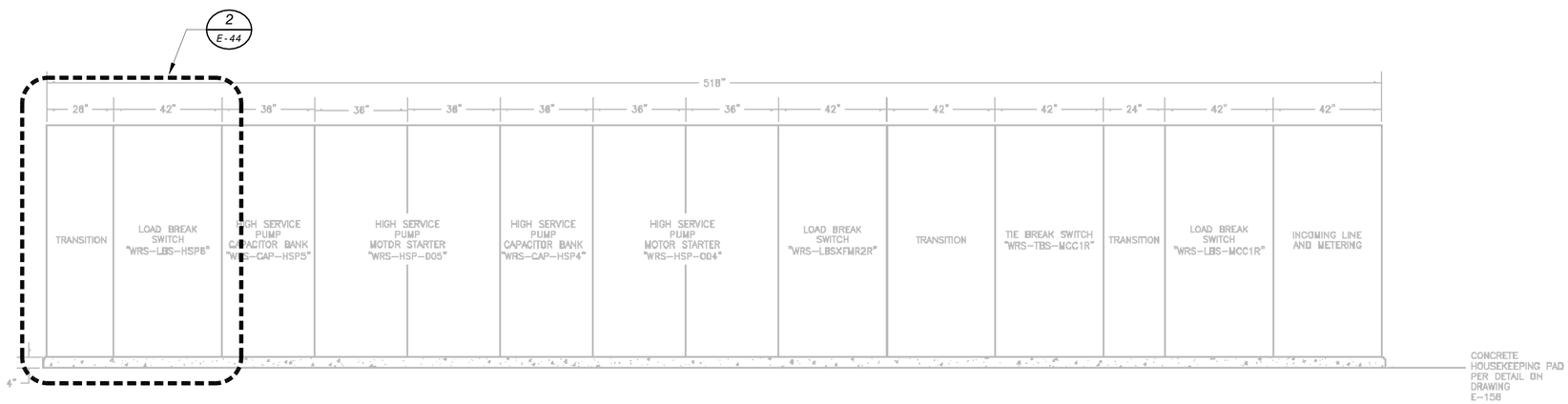

4160V MOTOR CONTROL CENTER "WRS-MCC-1R" FRONT ELEVATION

N.T.S.

SERIES: ELEVATIONS
SHEET TITLE: PROPOSED 4160V MOTOR CONTROL CENTER ELEVATIONS (SHEET 1 OF 1)

EXT DATE: 2/09/2000 FILE NAME: H:\Projects\9938\Record Drawings\Task-20\EP-MCC-01-01.dwg

NO.	DATE	REVISION	APPV'D

GSG, Inc.
Engineers, Planners & Regulatory Consultants
511 West 7th Street Austin, Texas 78701 512 476 6986

Water Reclamation System - Phase 1
C.I.P. NO. 3990-227-7843 CITY OF AUSTIN, TEXAS
PROPOSED 4160V MOTOR CONTROL CENTER ELEVATIONS (SHEET 1 OF 1)

THE SEAL APPEARING ON THIS DOCUMENT WAS AUTHORIZED BY K.A. HARUTUNIAN P.E. 58181 ON APRIL 20, 2000

THE SEAL APPEARING ON THIS DOCUMENT WAS AUTHORIZED BY K.A. HARUTUNIAN P.E. 58181 ON NOVEMBER 20, 2003

STATE OF TEXAS K. A. HARUTUNIAN 58181 REGISTERED PROFESSIONAL ENGINEER

RECORD DRAWINGS
These record drawings have been prepared using information provided by the construction contractor and/or owner. The seal and signature herein only signify that the plans have been revised in accordance with the information provided and does not guarantee that the plans accurately show every detail of the constructed project. This document is for information and references in connection with the owner's use and occupancy of the project and is not intended for bid, permit, construction, or other uses not related to the project.

REUSE OF DOCUMENTS
This document and the ideas and designs incorporated herein as an instrument of professional service has been developed, designed and prepared by Harutunian Engineering, Inc. and is not to be used, in whole or part, for any other project without the written authorization of the City of Austin and Harutunian Engineering, Inc. ©2000

HARUTUNIAN ENGINEERING INCORPORATED
ENGINEERING AND ENVIRONMENTAL CONSULTANTS
305 EAST HUNTLAND DRIVE SUITE 500
AUSTIN, TEXAS 78752

DESIGNED: HEI
APPROVED: HEI
JOB NO.: 9938
DATE: APRIL 12, 2000
DWG. NO: E-013
SHT. OF

GENERAL NOTES

1. THE EXISTING INFORMATION SHOWN ON THIS DRAWING WAS OBTAINED FROM THE PROJECT ENTITLED "WATER RECLAMATION SYSTEM - PHASE 1" DATED APRIL 12, 2000. THIS DRAWING IS PROVIDED FOR REFERENCE PURPOSES ONLY AND MAY NOT EXACTLY REFLECT THE EXISTING CONDITIONS. THEREFORE, THE CONTRACTOR IS TO EXERCISE EXTREME CARE AND FIELD VERIFY THE EXISTING CONDITIONS PRIOR TO COMMENCING FULL SCALE DEMOLITION OR RENOVATION ACTIVITIES. FOLLOWING THE DISCOVERY VERIFICATION OF THE EXISTING FIELD CONDITIONS, SHOULD ADJUSTMENTS BECOME A NECESSITY TO THE EXISTING OR PROPOSED SYSTEM (AS APPLICABLE), THE EXISTING DISCOVERED FIELD CONDITIONS MUST BE BROUGHT TO THE OWNER'S ATTENTION FOR EXECUTION OF THE NECESSARY ADJUSTMENTS/MODIFICATIONS.

This document, and the designs incorporated herein, is an instrument of professional service that has been developed, designed and prepared by Harutunian Engineering, Inc., and is not to be used, in whole or in part, for any other project without giving written notice to Harutunian Engineering, Inc.

NO.	DR	CK	DATE	DESCRIPTION

REVISIONS

BLACK & VEATCH
Building a world of difference.
Black & Veatch Corporation
Registration No. F-253
Austin, Texas

HARUTUNIAN ENGINEERING, INC.
305 E Huntland Dr, Ste 500, Austin, TX 78752
TBPE Firm Registration No. F-2408

STATE OF TEXAS K. A. HARUTUNIAN 58181 REGISTERED PROFESSIONAL ENGINEER 4/4/2014

Austin WATER
Walnut Creek WWTP - Tertiary Filter Rehabilitation Project
CIP ID No. 3023.025

ELECTRICAL REFERENCE DRAWING - WRI BUILDING
4160V MCC FRONT ELEVATIONS

DESIGNED BY:	HEI
DRAWN BY:	HEI
REVIEWED BY:	HEI
APPROVED BY:	HEI
PROJECT NO.:	168622
DATE:	4/4/2014
SCALE:	AS SHOWN
REVISION:	
DISCIPLINE NO.	E-70
DWG. NO.	SHEET 182 OF 273

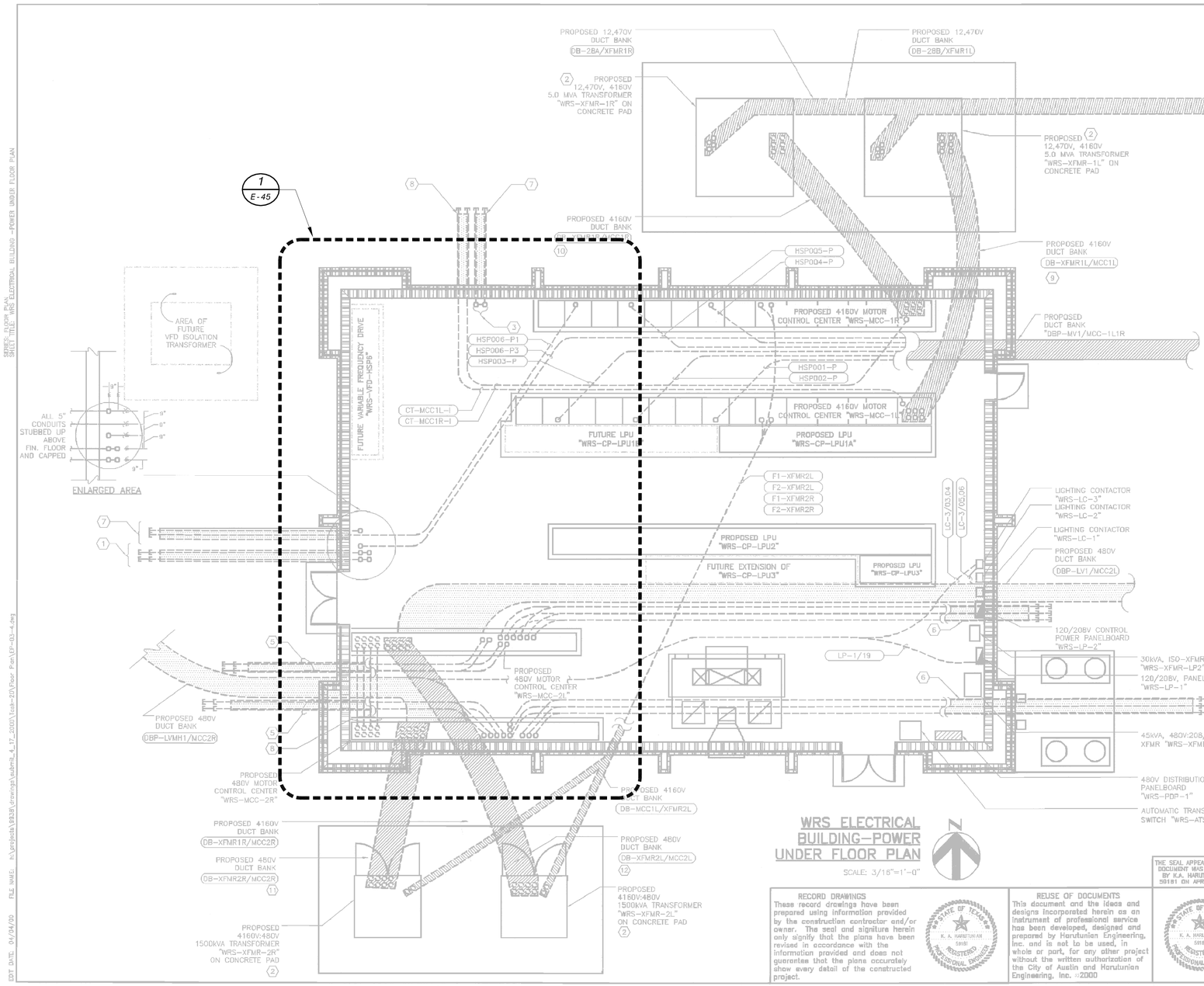

WRS ELECTRICAL BUILDING—POWER UNDER FLOOR PLAN

SCALE: 3/16"=1'-0"

KEY NOTES:

1. STUB-OUT (4) 5"C AND CAP 20'-0" FROM BUILDING.
2. TRANSFORMER SIZE AND CONDUIT ENTRY WINDOW LOCATIONS MAY VARY.
3. (2) 5" CONDUITS STUBBED UP ABOVE FINISHED FLOOR WITH CONDUIT CENTER LINE 6" FROM WALL.
4. STUB-OUT (6) 5"C AND CAP 8'-0" FROM BUILDING.
5. STUB-OUT (4) 1-1/2"C AND CAP 8'-0" FROM BUILDING ENCASED IN CONCRETE.
6. STUB-OUT (6) 1/2"C AND CAP 20'-0" FROM BUILDING ENCASED IN CONCRETE.
7. STUB-OUT (2)5"C AND CAP 6'-0" FROM BUILDING ENCASED IN CONCRETE.
8. STUB-OUT EMPTY CONDUITS AND CAP 6'-0" FROM BUILDING ENCASED IN CONCRETE.
9. PROPOSED DUCT BANK CONTAINS FEEDERS; "F1-MCC1L, F2-MCC1L, F3-MCC1L, F4-MCC1L, F5-MCC1L, AND F6-MCC1L."
10. PROPOSED DUCT BANK CONTAINS FEEDERS; "F1-MCC1R, F2-MCC1R, F3-MCC1R, F4-MCC1R, F5-MCC1R AND F6-MCC1R."
11. PROPOSED DUCT BANK CONTAINS FEEDERS; "F1-MCC2R, F2-MCC2R, F3-MCC2R, F4-MCC2R, F5-MCC2R, F6-MCC2R, F7-MCC2R AND F8-MCC2R."
12. PROPOSED DUCT BANK CONTAINS FEEDERS; "F1-MCC2L, F2-MCC2L, F3-MCC2L, F4-MCC2L, F5-MCC2L, F6-MCC2L, F7-MCC2L AND F8-MCC2L."

GENERAL NOTES:

1. EXTREME CARE MUST BE TAKEN FOR THE INSTALLATION OF THE ELECTRICAL DUCT BANKS SINCE THERE ARE NO AVAILABLE AS BUILT RECORDS OF PROFILES IDENTIFYING LOCATION AND INVERT ELEVATIONS OF EXISTING UNDERGROUND ELECTRICAL SYSTEM (CONDUITS, ETC.) AND UNDERGROUND MECHANICAL PIPING. ROUTING OF NEW DUCT BANK SHOWN IS BASED ON SCHEMATIC KNOWLEDGE OF THE SIZE OF MECHANICAL PIPING AND THEIR APPROXIMATE AND/OR ASSUMED ROUTING AREA AND/OR LOCATION. NO DATA IS AVAILABLE PERTAINING TO EXISTING UNDERGROUND ELECTRICAL DUCT BANK SYSTEM AND ITS COORDINATION WITH THE UNDERGROUND MECHANICAL SYSTEM. THEREFORE THE CONTRACTOR IS TO EXERCISE EXTREME CARE, VERIFY LOCATION/ROUTING/ELEVATION OF EXISTING UNDERGROUND UTILITIES PRIOR TO COMMENCING FULL SCALE INSTALLATION PROCESS OF THE PROPOSED DUCT BANK SYSTEM. FOLLOWING THE DISCOVERY VERIFICATION OF EXISTING UNDERGROUND UTILITIES ADJUSTMENT/MODIFICATIONS BECOME A NECESSITY TO EITHER THE EXISTING OR PROPOSED SYSTEM (AS APPLICABLE), THE EXISTING DISCOVERED FIELD CONDITIONS MUST BE BROUGHT TO THE ENGINEER'S ATTENTION FOR THE EXECUTION OF THE NECESSARY ADJUSTMENTS/MODIFICATIONS.

NO.	DATE	REVISION	APPV'D

GSG, Inc.
Engineers, Planners & Regulatory Consultants
511 West 7th Street Austin, Texas 78701 512 476-6565

Water Reclamation System - Phase 1
C.I.P. NO. 3990-227-7843 CITY OF AUSTIN, TEXAS
PROPOSED WRS ELECTRICAL BUILDING-POWER DUCT BANK UNDER FLOOR PLAN

THE SEAL APPEARING ON THIS DOCUMENT WAS AUTHORIZED BY H.A. HARUTUNIAN P.E. 59181 ON APRIL 20, 2000

RECORD DRAWINGS
These record drawings have been prepared using information provided by the construction contractor and/or owner. The seal and signiture herein only signify that the plans have been revised in accordance with the information provided and does not guarantee that the plans accurately show every detail of the constructed project.

STATE OF TEXAS — K. A. HARUTUNIAN 59181 — REGISTERED PROFESSIONAL ENGINEER

REUSE OF DOCUMENTS
This document and the ideas and designs incorporated herein as an instrument of professional service has been developed, designed and prepared by Harutunian Engineering, Inc. and is not to be used, in whole or part, for any other project without the written authorization of the City of Austin and Harutunian Engineering, Inc. ©2000

STATE OF TEXAS — K. A. HARUTUNIAN 59181 — REGISTERED PROFESSIONAL ENGINEER

HARUTUNIAN ENGINEERING INCORPORATED
ENGINEERING AND ENVIRONMENTAL CONSULTANTS
305 EAST HUNTLAND DRIVE SUITE 500
AUSTIN, TEXAS 78752

DESIGNED:	HEI
APPROVED:	HEI
JOB NO.:	9938
DATE:	APRIL 12, 2000
DWG. NO:	E-027
SHT.	OF

This document, and the designs incorporated herein, is an instrument of professional service that has been developed, designed and prepared by Harutunian Engineering, Inc., and is not to be used, in whole or in part, for any other project without giving written notice to Harutunian Engineering, Inc.

NO.	DR	CK	DATE	DESCRIPTION

REVISIONS

BLACK & VEATCH
Building a world of difference.
Black & Veatch Corporation
Registration No. F-253
Austin, Texas

HARUTUNIAN ENGINEERING, INC.
305 E Huntland Dr, Ste 500, Austin, TX 78752
TBPE Firm Registration No. F-2408

STATE OF TEXAS — K. A. HARUTUNIAN 59181 — REGISTERED PROFESSIONAL ENGINEER
4/4/2014

Austin WATER
Walnut Creek WWTP - Tertiary Filter Rehabilitation Project
CIP ID No. 3023.025

ELECTRICAL REFERENCE DRAWING - WRI BUILDING POWER PLAN

DESIGNED BY:	HEI
DRAWN BY:	HEI
REVIEWED BY:	HEI
APPROVED BY:	HEI
PROJECT NO.:	168622
DATE:	4/4/2014
SCALE:	AS SHOWN
REVISION:	
DISCIPLINE NO.	E-71
DWG. NO.	SHEET 183 OF 273

GENERAL NOTES

1. THE EXISTING INFORMATION SHOWN ON THIS DRAWING WAS OBTAINED FROM THE PROJECT ENTITLED "WATER RECLAMATION SYSTEM - PHASE 1" DATED APRIL 12, 2000. THIS DRAWING IS PROVIDED FOR REFERENCE PURPOSES ONLY AND MAY NOT EXACTLY REFLECT THE EXISTING CONDITIONS. THEREFORE, THE CONTRACTOR IS TO EXERCISE EXTREME CARE AND FIELD VERIFY THE EXISTING CONDITIONS PRIOR TO COMMENCING FULL SCALE DEMOLITION OR RENOVATION ACTIVITIES. FOLLOWING THE DISCOVERY VERIFICATION OF THE EXISTING FIELD CONDITIONS, SHOULD ADJUSTMENTS BECOME A NECESSITY TO THE EXISTING OR PROPOSED SYSTEM (AS APPLICABLE), THE EXISTING DISCOVERED FIELD CONDITIONS MUST BE BROUGHT TO THE OWNER'S ATTENTION FOR EXECUTION OF THE NECESSARY ADJUSTMENTS/MODIFICATIONS.

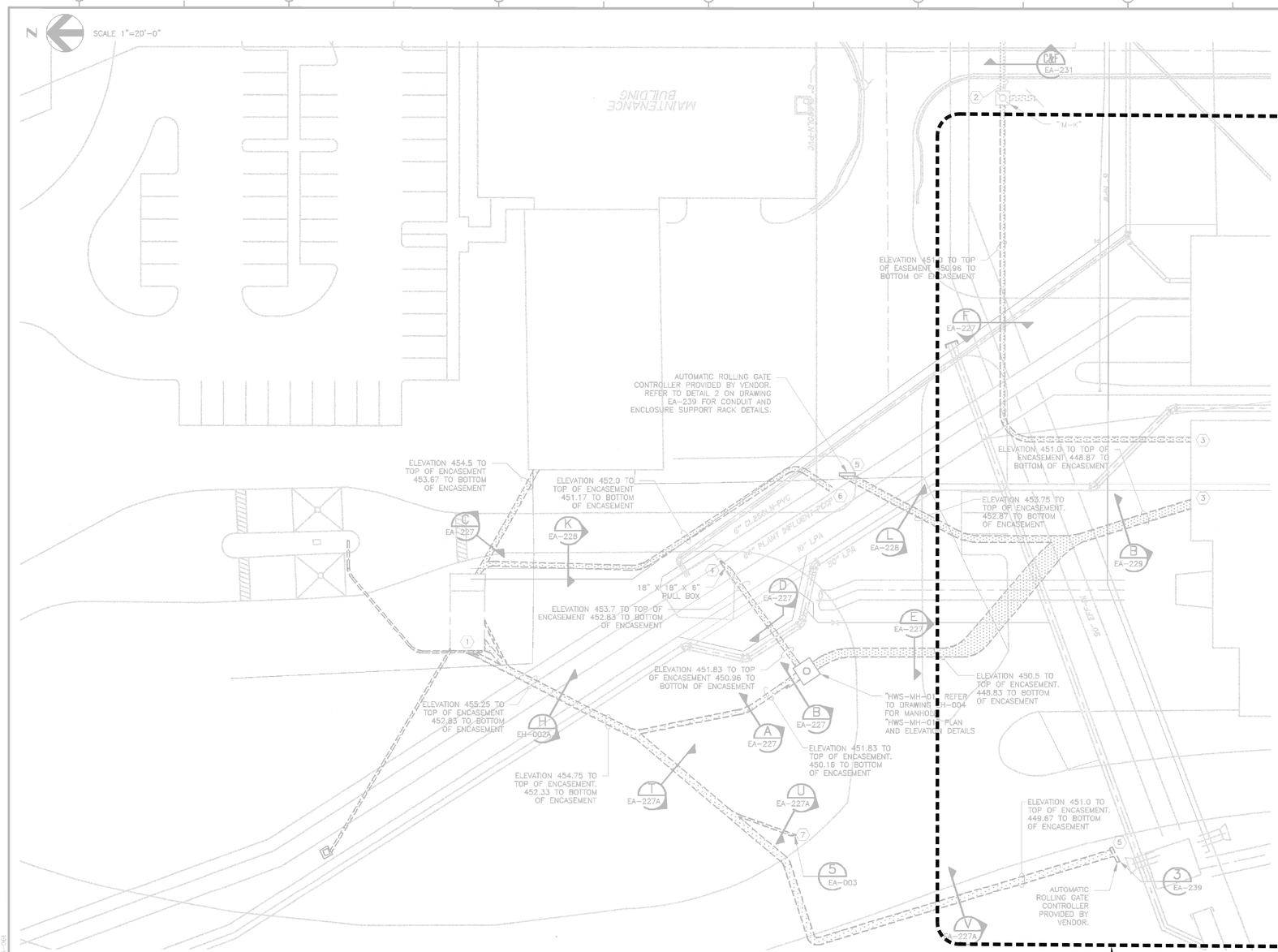

KEY NOTES:

1. SEE DETAIL 1 ON DRAWING EH-002A FOR CONDUIT STUB UP ARRANGEMENT AT HAULED WASTE STATION.
2. FOR CONTINUATION OF DUCT BANK SEE DRAWING EA-060.
3. FOR CONTINUATION OF DUCT BANK SEE DRAWING EA-065.
4. REFER TO TYPICAL SLIDE GATE CONDUIT AND FIELD CONTROL STATION SUPPORT RACK DETAIL 1 ON DRAWING EA-239.
5. CONTRACTOR SHALL INSTALL CONDUIT AND WIRING TO AUTOMATIC ROLLING GATE CONTROLLER. GATE CONTROLLER AND APPURTENANCES SHALL BE FURNISHED BY GATE MANUFACTURER. CONTRACTOR SHALL COORDINATE WITH GATE CONTRACTOR AND/OR MANUFACTURER FOR EXACT SIZE OF CONTROLLER AND LOCATION OF CONDUIT STUB-UPS.
6. STUB UP 18" (INCHES) INSIDE CURB AND CAP CONDUIT "HWS-TEL3" FOR FUTURE USE. REFER TO FINISHED OUTDOOR CONDUIT STUB-UP DETAIL ON DRAWING EF-002.
7. TERMINATE AND CAP CONDUIT "GATE-LTG" 6' (FEET) INSIDE CURB FOR FUTURE CONNECTION TO POLE MOUNTED OUTDOOR LIGHTING FIXTURE. REFER TO DETAIL 5 ON DRAWING NO. EF-003 FOR ADDITIONAL INFORMATION.

GENERAL NOTES:

1. EXTREME CARE MUST BE TAKEN FOR THE INSTALLATION OF THE ELECTRICAL DUCT BANKS SINCE THERE ARE NO AVAILABLE AS BUILT RECORDS OF PROFILES IDENTIFYING THE LOCATION AND INVERT ELEVATIONS OF EXISTING UNDERGROUND ELECTRICAL SYSTEM (CONDUITS, TRANSFORMER GROUNDING NETWORK, ETC.) AND UNDERGROUND MECHANICAL PIPING. ROUTING OF NEW DUCT BANK SHOWN IS BASED ON SCHEMATIC KNOWLEDGE OF THE SIZE OF MECHANICAL PIPING AND THEIR APPROXIMATE SIZE AND/OR LOCATION. NO DATA IS AVAILABLE PERTAINING TO EXISTING UNDERGROUND ELECTRICAL DUCT BANK SYSTEM AND ITS COORDINATION WITH THE UNDERGROUND MECHANICAL SYSTEM. THEREFORE THE CONTRACTOR IS TO EXERCISE EXTREME CARE, VERIFY LOCATION/ROUTING/ELEVATION OF EXISTING UNDERGROUND UTILITIES PRIOR TO COMMENCING FULL SCALE INSTALLATION PROCESS OF THE PROPOSED DUCT BANK SYSTEM. FOLLOWING THE DISCOVERY VERIFICATION OF EXISTING UNDERGROUND UTILITIES, SHOULD ADJUSTMENT/MODIFICATIONS BECOME A NECESSITY TO EITHER THE EXISTING OR PROPOSED SYSTEM (AS APPLICABLE), THE EXISTING DISCOVERED FIELD CONDITIONS MUST BE BROUGHT TO THE ENGINEER'S ATTENTION FOR EXECUTION OF THE NECESSARY ADJUSTMENTS/MODIFICATIONS.
2. THE LOCATION/ROUTING OF PROPOSED UNDERGROUND CONDUIT/DUCT BANK SYSTEMS SHALL BE CLOSELY AND CAREFULLY COORDINATED WITH THE ABOVE GROUND AND UNDERGROUND ELECTRICAL CONDUIT/DUCT BANK/PULL BOX SYSTEM AND ALL APPLICABLE MECHANICAL, STRUCTURAL, AND CIVIL SYSTEMS IN THE VICINITY. REFER TO THE CIVIL/STRUCTURAL/MECHANICAL DRAWINGS, AS APPLICABLE TO AIDE IN THIS COORDINATION, VERIFYING ALL POINTS OF CONNECTION PRIOR TO COMMENCING FULL SCALE DEMOLITION/MODIFICATION/INSTALLATION ACTIVITIES.
3. REFERENCE ELECTRICAL DUCT BANK PROFILE DRAWINGS FOR ADDITIONAL INFORMATION ON UNDERGROUND PIPING, FOUNDATIONS, AND DUCT BANK.
4. REFERENCE TYPICAL CONDUIT STUB-UP DETAILS ON DRAWINGS EF-002 AND EF-003.
5. LOCATION AND SIZES OF ELECTRICAL EQUIPMENT SHOWN ARE APPROXIMATE.
6. SPACE, REINFORCE AND CONCRETE ENCASE ALL CONDUIT ON THIS DRAWING IN ACCORDANCE WITH THE SPECIFICATIONS AND PER THE DETAILS SHOWN ON DRAWING NO. EF-008.

RECORD DRAWINGS
These record drawings have been prepared using information provided by the construction contractor and/or owner. The seal and signature herein only signify that the plans have been revised in accordance with the information provided and does not guarantee that the plans accurately show every detail of the constructed project. This document is for information and references in connection with the owner's use and occupancy of the project and is not intended for bid, permit, construction, or other uses not related to the project.

THE SEAL APPEARING ON THIS DOCUMENT WAS AUTHORIZED BY K.A. HARUTUNIAN P.E. 59181 ON APRIL 3, 2006

STATE OF TEXAS K. A. HARUTUNIAN 59181 REGISTERED PROFESSIONAL ENGINEER

REUSE OF DOCUMENTS
This document and the ideas and designs incorporated herein as an instrument of professional service has been developed, designed and prepared by Harutunian Engineering, Inc. and is not to be used, in whole or part, for any other project without the written authorization of the City of Austin and Harutunian Engineering, Inc.
(C) 2002

STATE OF TEXAS K. A. HARUTUNIAN 59181 REGISTERED PROFESSIONAL ENGINEER

THE SEAL APPEARING ON THIS DOCUMENT WAS AUTHORIZED BY K.A. HARUTUNIAN P.E. 59181 ON JANUARY 21, 2002

HARUTUNIAN ENGINEERING INCORPORATED
ENGINEERING AND ENVIRONMENTAL CONSULTANTS
305 EAST HUNTLAND DRIVE
SUITE 900
AUSTIN, TEXAS
78752

PROJECT No 30361
FILE NAME: EA-061

SHEET No
EA-061

REV. NO.	DATE	DRWN	CHKD	REMARKS

DESIGNED BY: HEI
DRAWN BY: HEI
SHEET CHK'D BY: HEI
CROSS CHK'D BY: HEI
APPROVED BY: HEI
DATE: JANUARY 2002

CAMP DRESSER & McKEE INC.
environmental engineers, scientists, planners, & management consultants
CDM

CITY OF AUSTIN, TEXAS
WALNUT CREEK WASTEWATER TREATMENT PLANT 75 MGD UPGRADE

HEADWORKS OVERALL ELECTRICAL UNDERGROUND (SHEET 2 OF 3)

1 / E-22

GENERAL NOTES

1. *THE EXISTING INFORMATION SHOWN ON THIS DRAWING WAS OBTAINED FROM THE PROJECT ENTITLED "WALNUT CREEK WASTEWATER TREATMENT PLANT 75 MGD UPGRADE" DATED SEPTEMBER, 2006. THIS DRAWING IS PROVIDED FOR REFERENCE PURPOSES ONLY AND MAY NOT EXACTLY REFLECT THE EXISTING CONDITIONS. THEREFORE, THE CONTRACTOR IS TO EXERCISE EXTREME CARE AND FIELD VERIFY THE EXISTING CONDITIONS PRIOR TO COMMENCING FULL SCALE DEMOLITION OR RENOVATION ACTIVITIES. FOLLOWING THE DISCOVERY VERIFICATION OF THE EXISTING FIELD CONDITIONS, SHOULD ADJUSTMENTS BECOME A NECESSITY TO THE EXISTING OR PROPOSED SYSTEM (AS APPLICABLE), THE EXISTING DISCOVERED FIELD CONDITIONS MUST BE BROUGHT TO THE OWNER'S ATTENTION FOR EXECUTION OF THE NECESSARY ADJUSTMENTS/MODIFICATIONS.*

This document, and the designs incorporated herein, is an instrument of professional service that has been developed, designed and prepared by Harutunian Engineering, Inc., and is not to be used, in whole or in part, for any other project without giving written notice to Harutunian Engineering, Inc.

NO.	DR	CK	DATE	DESCRIPTION

REVISIONS

BLACK & VEATCH
Building a world of difference.
Black & Veatch Corporation
Registration No. F-653
Austin, Texas

HARUTUNIAN ENGINEERING, INC.
305 E Huntland Dr., Ste 900, Austin, TX 78752
TBPE Firm Registration No. F-2408

STATE OF TEXAS K. A. HARUTUNIAN 59181 REGISTERED PROFESSIONAL ENGINEER
4/4/2014

Austin WATER
Walnut Creek WWTP - Tertiary Filter Rehabilitation Project
CIP ID No. 3023.025

ELECTRICAL REFERENCE DRAWING - HEADWORKS NO. 2 VICINITY SITE ELECTRICAL PLAN (SHEET 1 OF 2)

DESIGNED BY:	HEI
DRAWN BY:	HEI
REVIEWED BY:	HEI
APPROVED BY:	HEI
PROJECT NO.:	168622
DATE:	4/4/2014
SCALE:	AS SHOWN
REVISION:	
DISCIPLINE NO.	E-72
DWG. NO.	SHEET 184 OF 273

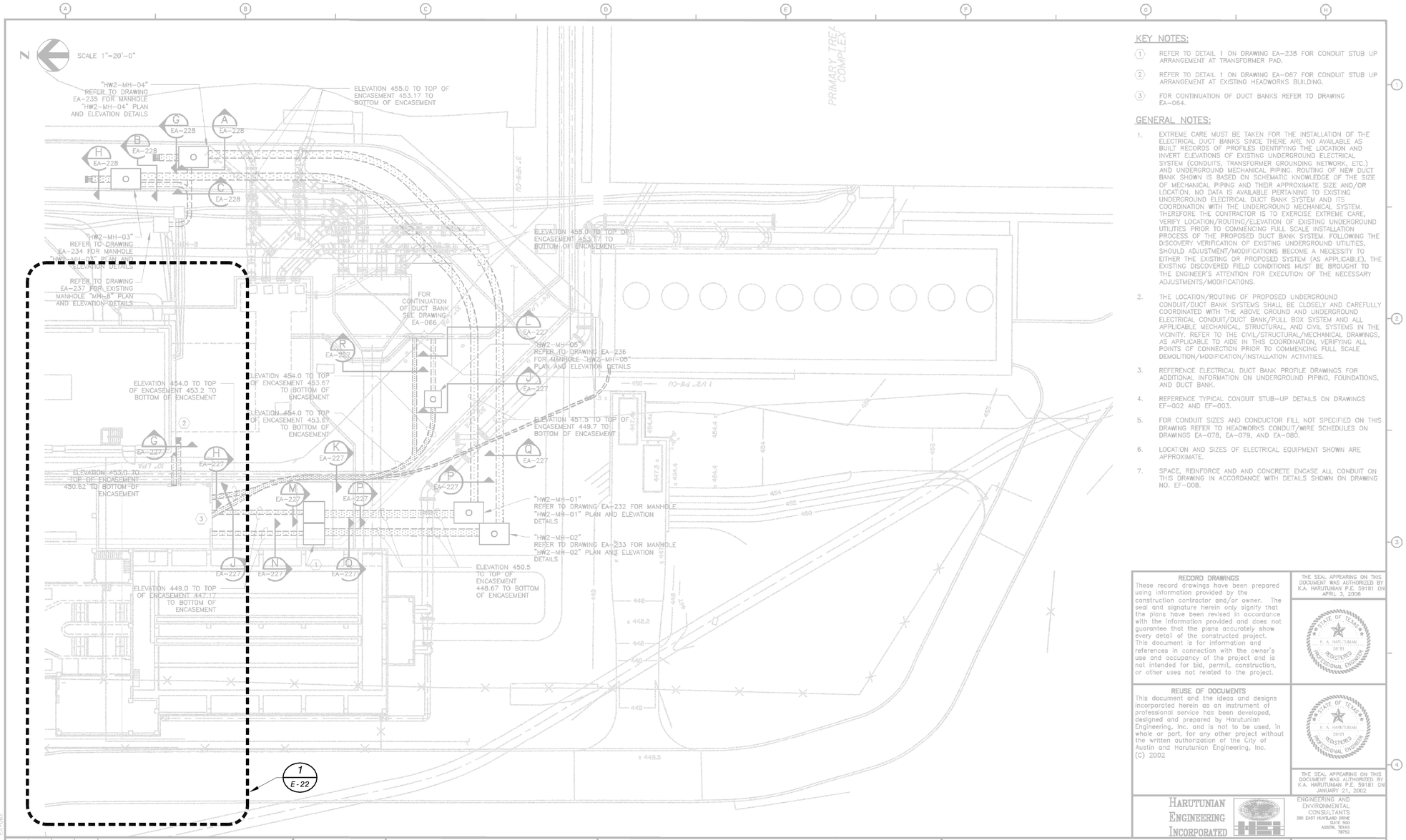

KEY NOTES:

1. REFER TO DETAIL 1 ON DRAWING EA-238 FOR CONDUIT STUB UP ARRANGEMENT AT TRANSFORMER PAD.
2. REFER TO DETAIL 1 ON DRAWING EA-067 FOR CONDUIT STUB UP ARRANGEMENT AT EXISTING HEADWORKS BUILDING.
3. FOR CONTINUATION OF DUCT BANKS REFER TO DRAWING EA-064.

GENERAL NOTES:

1. EXTREME CARE MUST BE TAKEN FOR THE INSTALLATION OF THE ELECTRICAL DUCT BANKS SINCE THERE ARE NO AVAILABLE AS BUILT RECORDS OF PROFILES IDENTIFYING THE LOCATION AND INVERT ELEVATIONS OF EXISTING UNDERGROUND ELECTRICAL SYSTEM (CONDUITS, TRANSFORMER GROUNDING NETWORK, ETC.) AND UNDERGROUND MECHANICAL PIPING. ROUTING OF NEW DUCT BANK SHOWN IS BASED ON SCHEMATIC KNOWLEDGE OF THE SIZE OF MECHANICAL PIPING AND THEIR APPROXIMATE SIZE AND/OR LOCATION. NO DATA IS AVAILABLE PERTAINING TO EXISTING UNDERGROUND ELECTRICAL DUCT BANK SYSTEM AND ITS COORDINATION WITH THE UNDERGROUND MECHANICAL SYSTEM. THEREFORE THE CONTRACTOR IS TO EXERCISE EXTREME CARE, VERIFY LOCATION/ROUTING/ELEVATION OF EXISTING UNDERGROUND UTILITIES PRIOR TO COMMENCING FULL SCALE INSTALLATION PROCESS OF THE PROPOSED DUCT BANK SYSTEM. FOLLOWING THE DISCOVERY VERIFICATION OF EXISTING UNDERGROUND UTILITIES, SHOULD ADJUSTMENT/MODIFICATIONS BECOME A NECESSITY TO EITHER THE EXISTING OR PROPOSED SYSTEM (AS APPLICABLE), THE EXISTING DISCOVERED FIELD CONDITIONS MUST BE BROUGHT TO THE ENGINEER'S ATTENTION FOR EXECUTION OF THE NECESSARY ADJUSTMENTS/MODIFICATIONS.
2. THE LOCATION/ROUTING OF PROPOSED UNDERGROUND CONDUIT/DUCT BANK SYSTEMS SHALL BE CLOSELY AND CAREFULLY COORDINATED WITH THE ABOVE GROUND AND UNDERGROUND ELECTRICAL CONDUIT/DUCT BANK/PULL BOX SYSTEM AND ALL APPLICABLE MECHANICAL, STRUCTURAL, AND CIVIL SYSTEMS IN THE VICINITY. REFER TO THE CIVIL/STRUCTURAL/MECHANICAL DRAWINGS, AS APPLICABLE TO AIDE IN THIS COORDINATION, VERIFYING ALL POINTS OF CONNECTION PRIOR TO COMMENCING FULL SCALE DEMOLITION/MODIFICATION/INSTALLATION ACTIVITIES.
3. REFERENCE ELECTRICAL DUCT BANK PROFILE DRAWINGS FOR ADDITIONAL INFORMATION ON UNDERGROUND PIPING, FOUNDATIONS, AND DUCT BANK.
4. REFERENCE TYPICAL CONDUIT STUB-UP DETAILS ON DRAWINGS EF-002 AND EF-003.
5. FOR CONDUIT SIZES AND CONDUCTOR FILL NOT SPECIFIED ON THIS DRAWING REFER TO HEADWORKS CONDUIT/WIRE SCHEDULES ON DRAWINGS EA-078, EA-079, AND EA-080.
6. LOCATION AND SIZES OF ELECTRICAL EQUIPMENT SHOWN ARE APPROXIMATE.
7. SPACE, REINFORCE AND AND CONCRETE ENCASE ALL CONDUIT ON THIS DRAWING IN ACCORDANCE WITH DETAILS SHOWN ON DRAWING NO. EF-008.

RECORD DRAWINGS

These record drawings have been prepared using information provided by the construction contractor and/or owner. The seal and signature herein only signify that the plans have been revised in accordance with the information provided and does not guarantee that the plans accurately show every detail of the constructed project. This document is for information and references in connection with the owner's use and occupancy of the project and is not intended for bid, permit, construction, or other uses not related to the project.

THE SEAL APPEARING ON THIS DOCUMENT WAS AUTHORIZED BY K.A. HARUTUNIAN P.E. 59181 ON APRIL 3, 2006

REUSE OF DOCUMENTS

This document and the ideas and designs incorporated herein as an instrument of professional service has been developed, designed and prepared by Harutunian Engineering, Inc. and is not to be used, in whole or part, for any other project without the written authorization of the City of Austin and Harutunian Engineering, Inc. (C) 2002

THE SEAL APPEARING ON THIS DOCUMENT WAS AUTHORIZED BY K.A. HARUTUNIAN P.E. 59181 ON JANUARY 21, 2002

HARUTUNIAN ENGINEERING INCORPORATED

ENGINEERING AND ENVIRONMENTAL CONSULTANTS
305 EAST HUNTLAND DRIVE
SUITE 500
AUSTIN, TEXAS
78752

REV. NO.	DATE	DRWN	CHKD	REMARKS

DESIGNED BY: HEI
DRAWN BY: HEI
SHEET CHKD BY: HEI
CROSS CHK'D BY: HEI
APPROVED BY: HEI
DATE: JANUARY 2002

CAMP DRESSER & McKEE INC.
environmental engineers, scientists, planners, & management consultants
CDM

CITY OF AUSTIN, TEXAS
WALNUT CREEK WASTEWATER TREATMENT PLANT
75 MGD UPGRADE

HEADWORKS
OVERALL ELECTRICAL UNDERGROUND
(SHEET 3 OF 3)

PROJECT No 30361
FILE NAME: EA-062

SHEET No
EA-062

GENERAL NOTES

1. THE EXISTING INFORMATION SHOWN ON THIS DRAWING WAS OBTAINED FROM THE PROJECT ENTITLED "WALNUT CREEK WASTEWATER TREATMENT PLANT 75 MGD UPGRADE" DATED SEPTEMBER, 2006. THIS DRAWING IS PROVIDED FOR REFERENCE PURPOSES ONLY AND MAY NOT EXACTLY REFLECT THE EXISTING CONDITIONS. THEREFORE, THE CONTRACTOR IS TO EXERCISE EXTREME CARE AND FIELD VERIFY THE EXISTING CONDITIONS PRIOR TO COMMENCING FULL SCALE DEMOLITION OR RENOVATION ACTIVITIES. FOLLOWING THE DISCOVERY VERIFICATION OF THE EXISTING FIELD CONDITIONS, SHOULD ADJUSTMENTS BECOME A NECESSITY TO THE EXISTING OR PROPOSED SYSTEM (AS APPLICABLE), THE EXISTING DISCOVERED FIELD CONDITIONS MUST BE BROUGHT TO THE OWNER'S ATTENTION FOR EXECUTION OF THE NECESSARY ADJUSTMENTS/MODIFICATIONS.

This document, and the designs incorporated herein, is an instrument of professional service that has been developed, designed and prepared by Harutunian Engineering, Inc., and is not to be used, in whole or in part, for any other project without giving written notice to Harutunian Engineering, Inc.

NO.	DR	CK	DATE	DESCRIPTION

REVISIONS

BLACK & VEATCH
Building a world of difference.
Black & Veatch Corporation
Registration No. F-253
Austin, Texas

HARUTUNIAN ENGINEERING, INC.
305 E Huntland Dr., Ste 500, Austin, TX 78752
TBPE Firm Registration No. F-2408

STATE OF TEXAS
K. A. HARUTUNIAN
59181
REGISTERED PROFESSIONAL ENGINEER
4/4/2014

Walnut Creek WWTP - Tertiary Filter Rehabilitation Project
CIP ID No. 3023.025

Austin WATER

ELECTRICAL REFERENCE DRAWING - HEADWORKS NO. 2 VICINITY SITE ELECTRICAL PLAN (SHEET 2 OF 2)

DESIGNED BY:	HEI
DRAWN BY:	HEI
REVIEWED BY:	HEI
APPROVED BY:	HEI
PROJECT NO.:	168622
DATE:	4/4/2014
SCALE:	AS SHOWN

REVISION:

DISCIPLINE NO.
E-73

DWG. NO.
SHEET 185 OF 273

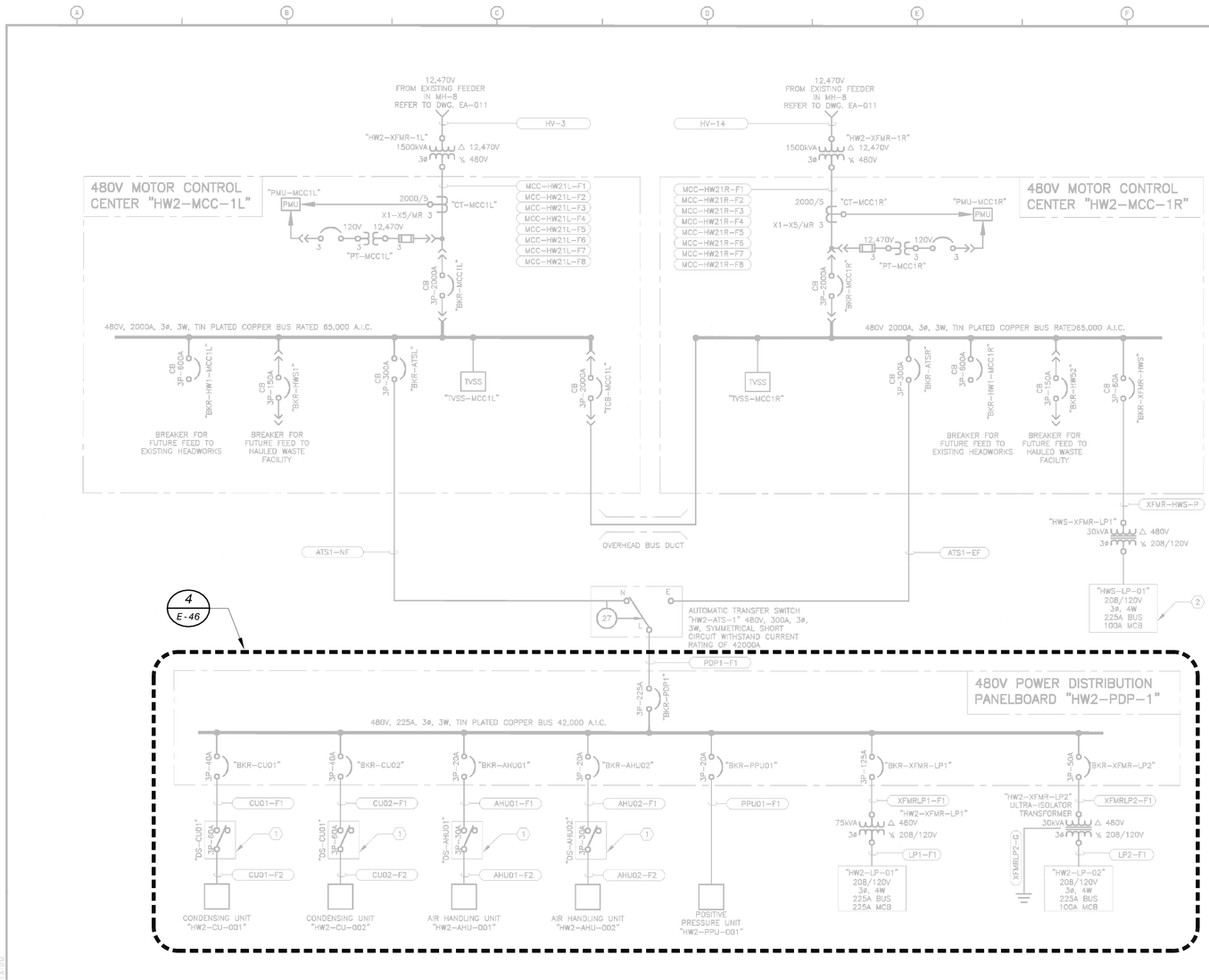

KEY NOTES:

1. FURNISH AND INSTALL THE NON-FUSED DISCONNECT SWITCH IN A NEMA 4X #316 STAINLESS STEEL ENCLOSURE.
2. CONTRACTOR SHALL FURNISH AND INSTALL INNOVATIVE TECHNOLOGY TRANSIENT VOLTAGE SURGE SUPPRESSOR, MODEL # ORN-3Y, 120/208V WITH A PEAK SURGE CURRENT VALUE OF 120kA PER PHASE, OPERATING AT 3ø, 4W, 120/208V IN NEMA 4X ENCLOSURE. SURGE SUPPRESSOR IS MOUNTED ADJACENT TO PROPOSED LIGHTING PANEL. SURGE SUPPRESSOR IS CONNECTED TO PROPOSED LIGHTING PANEL MAIN BUS VIA CIRCUIT BREAKER IN PROPOSED LIGHTING PANEL. REFER TO LIGHTING PANEL SCHEDULE ON DRAWING EH-006 FOR ADDITIONAL INFORMATION.

GENERAL NOTES:

1. ALL EQUIPMENT DEPICTED ON THIS DRAWING IS PROPOSED.
2. THIS DRAWING IS INTENDED TO REPRESENT AN OVERVIEW OF THE PROPOSED POWER DISTRIBUTION SYSTEM. ONLY MAJOR ELECTRICAL EQUIPMENT HAS BEEN SHOWN FOR CLARITY.
3. REFER TO CONDUIT & WIRE SCHEDULES ON DRAWINGS EA-078 & EA-079 FOR CONDUIT & WIRE SIZES AND QUANTITIES.

5
E-46

HW2/POWER DISTRIBUTION PANEL
CIRCUIT BREAKER PANEL SCHEDULE "PDP"
VOLTS: 480V

CKT. NO.	LOAD DESCRIPTIONS	CKT. NO.	LOAD DESCRIPTIONS
1	SPARE	2	SPARE
3	SPARE	4	SPARE
5	SPARE	6	SPARE
7	PPU-01	8	AHU-002/F1
9	CU-02	10	AHU-002/F2
11	XFMR-LP2	12	CU-01
13	MAIN BREAKER	14	XFMR-LP1

RECORD DRAWINGS
These record drawings have been prepared using information provided by the construction contractor and/or owner. The seal and signature herein only signify that the plans have been revised in accordance with the information provided and does not guarantee that the plans accurately show every detail of the constructed project. This document is for information and references in connection with the owner's use and occupancy of the project and is not intended for bid, permit, construction, or other uses not related to the project.

THE SEAL APPEARING ON THIS DOCUMENT WAS AUTHORIZED BY K.A. HARUTUNIAN P.E. 59181 ON APRIL 3, 2006

STATE OF TEXAS K. A. HARUTUNIAN 59181 REGISTERED PROFESSIONAL ENGINEER

REUSE OF DOCUMENTS
This document and the ideas and designs incorporated herein as an instrument of professional service has been developed, designed and prepared by Harutunian Engineering, Inc. and is not to be used, in whole or part, for any other project without the written authorization of the City of Austin and Harutunian Engineering, Inc. (C) 2002

STATE OF TEXAS K. A. HARUTUNIAN 59181 REGISTERED PROFESSIONAL ENGINEER

THE SEAL APPEARING ON THIS DOCUMENT WAS AUTHORIZED BY K.A. HARUTUNIAN P.E. 59181 ON JANUARY 21, 2002

HARUTUNIAN ENGINEERING INCORPORATED

ENGINEERING AND ENVIRONMENTAL CONSULTANTS
305 EAST HUNTLAND DRIVE
SUITE 500
AUSTIN, TEXAS
78752

REV. NO.	DATE	DRWN	CHKD	REMARKS

DESIGNED BY: HEI
DRAWN BY: HEI
SHEET CHK'D BY: HEI
CROSS CHK'D BY: HEI
APPROVED BY: HEI
DATE: JANUARY 2002

CAMP DRESSER & McKEE INC.
environmental engineers, scientists, planners, & management consultants
CDM

CITY OF AUSTIN, TEXAS
WALNUT CREEK WASTEWATER TREATMENT PLANT
75 MGD UPGRADE

ONE-LINE DIAGRAM
OVERALL SYSTEM

PROJECT No 30361
FILE NAME: EA-012

SHEET No
EA-012

EA-012

GENERAL NOTES

1. THE EXISTING INFORMATION SHOWN ON THIS DRAWING WAS OBTAINED FROM THE PROJECT ENTITLED "WALNUT CREEK WASTEWATER TREATMENT PLANT 75 MGD UPGRADE" DATED SEPTEMBER, 2006. THIS DRAWING IS PROVIDED FOR REFERENCE PURPOSES ONLY AND MAY NOT EXACTLY REFLECT THE EXISTING CONDITIONS. THEREFORE, THE CONTRACTOR IS TO EXERCISE EXTREME CARE AND FIELD VERIFY THE EXISTING CONDITIONS PRIOR TO COMMENCING FULL SCALE DEMOLITION OR RENOVATION ACTIVITIES. FOLLOWING THE DISCOVERY VERIFICATION OF THE EXISTING FIELD CONDITIONS, SHOULD ADJUSTMENTS BECOME A NECESSITY TO THE EXISTING OR PROPOSED SYSTEM (AS APPLICABLE), THE EXISTING DISCOVERED FIELD CONDITIONS MUST BE BROUGHT TO THE OWNER'S ATTENTION FOR EXECUTION OF THE NECESSARY ADJUSTMENTS/MODIFICATIONS.

This document, and the designs incorporated herein, is an instrument of professional service that has been developed, designed and prepared by Harutunian Engineering, Inc., and is not to be used, in whole or in part, for any other project without giving written notice to Harutunian Engineering, Inc.

NO.	DR	CK	DATE	DESCRIPTION

REVISIONS

BLACK & VEATCH
Building a world of difference.
Black & Veatch Corporation
Registration No. F-135
Austin, Texas

HARUTUNIAN ENGINEERING, INC.
305 E Huntland Dr., Ste 500, Austin, TX 78752
TBPE Firm Registration No. F-2408

STATE OF TEXAS K. A. HARUTUNIAN 59181 REGISTERED PROFESSIONAL ENGINEER
4/4/2014

AUSTIN WATER
Walnut Creek WWTP - Tertiary Filter Rehabilitation Project
CIP ID No. 3023.025

ELECTRICAL REFERENCE DRAWING - HEADWORKS NO. 2
480V ONE-LINE DIAGRAM

DESIGNED BY:	HEI
DRAWN BY:	HEI
REVIEWED BY:	HEI
APPROVED BY:	HEI
PROJECT NO.:	168622
DATE:	4/4/2014
SCALE:	AS SHOWN
REVISION:	
DISCIPLINE NO.	E-74
DWG. NO.	SHEET 186 OF 273

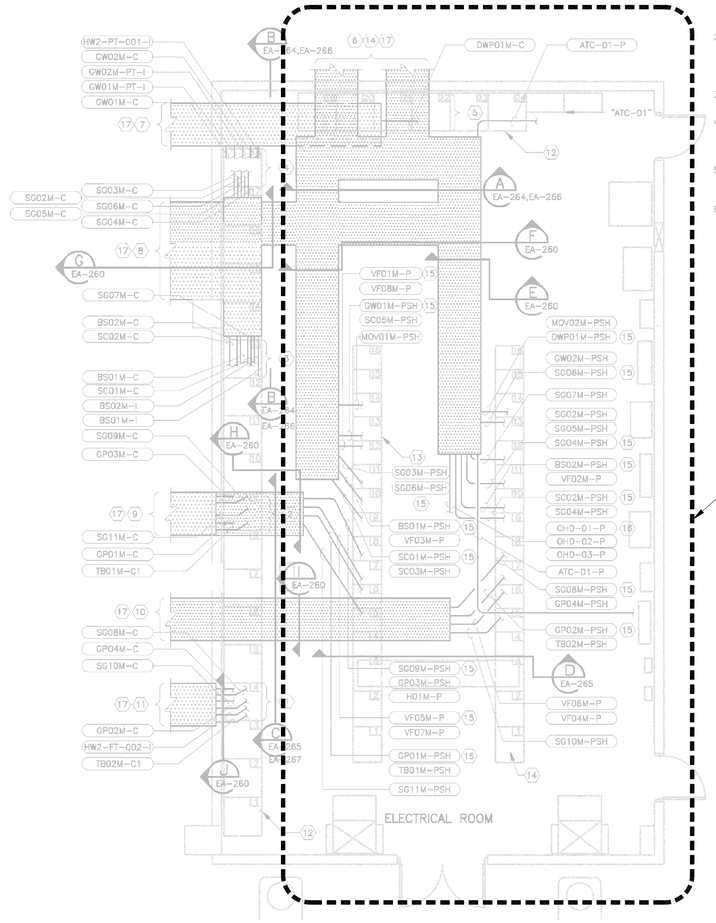

ELECTRICAL ROOM CONDUIT BANK ROUTING PLAN

SCALE: 1/4"=1'-0"

GENERAL NOTES:

1. LOCATION AND SIZES OF ALL MECHANICAL EQUIPMENT SHOWN ON THE PLAN DRAWINGS ARE APPROXIMATE. EXACT LOCATION OF MECHANICAL EQUIPMENT TO BE AS SHOWN ON THE APPLICABLE MECHANICAL DRAWINGS. THE CONTRACTOR SHALL FIELD VERIFY CONDITIONS AND COORDINATE WITH MECHANICAL CONTRACTOR BEFORE COMMENCING CONSTRUCTION.
2. CONTRACTOR SHALL REFER TO THE APPLICABLE MOUNTING AND INSTALLATION DETAIL REFERENCED IN THE INSTRUMENTATION AND CONTROLS STANDARD DETAILS SECTION OF THE DRAWING PACKAGE FOR ALL INSTRUMENTATION AND CONTROL EQUIPMENT SHOWN ON THIS DRAWING.
3. SEAL ALL CONDUIT WHERE CONDUIT SEALS ARE SHOWN ON THE PLAN DRAWINGS OR SHOWN ON THE INSTALLATION DETAILS.
4. REFER TO THE APPLICABLE CONDUIT PENETRATION DETAIL FOR ALL CONDUIT PENETRATIONS THROUGH THE FLOOR SLAB OR WALL REFERENCED IN THE ELECTRICAL DETAILS SECTION OF THIS DRAWING PACKAGE.
5. SOME MECHANICAL PIPING HAS BEEN OMITTED FOR THE PURPOSE OF CLARITY. CONTRACTOR SHALL REFER TO MECHANICAL DRAWINGS FOR MECHANICAL INSTALLATION DETAILS.
6. REFER TO CONDUIT & WIRE SCHEDULES ON DRAWINGS EA-078, EA-079 & EA-080 FOR CONDUIT & WIRE SIZES AND QUANTITIES.

KEY NOTES:

1. "HW2-CP-LPU1" CABLE ENTRY SECTION 4. REFER TO DRAWING EA-048 FOR CONDUIT CONTINUATION.
2. "HW2-CP-LPU1" CABLE ENTRY SECTION 9. REFER TO DRAWING EA-048 FOR CONDUIT CONTINUATION.
3. "HW2-CP-LPU1" CABLE ENTRY SECTION 13. REFER TO DRAWING EA-048 FOR CONDUIT CONTINUATION.
4. "HW2-CP-LPU1" CABLE ENTRY SECTION 18. REFER TO DRAWING EA-048 FOR CONDUIT CONTINUATION.
5. "HW2-CP-LPU1" CABLE ENTRY SECTION 22. REFER TO DRAWING EA-048 FOR CONDUIT CONTINUATION.
6. CONDUIT BANK FOR POWER SHALL CONTINUE ROUTE INTO GRIT WASH ROOM. REFER TO DRAWING EA-054 FOR DESTINATION OF CONDUIT BANK. SEE ALSO APPLICABLE SECTION DRAWING EA-263 FOR ADDITIONAL INFORMATION.
7. CONDUIT BANK FOR CONTROLS SHALL CONTINUE ROUTE INTO GRIT WASH ROOM. REFER TO DRAWING EA-054 FOR DESTINATION OF CONDUIT BANK. SEE ALSO APPLICABLE SECTION DRAWING EA-263 FOR ADDITIONAL INFORMATION.
8. CONDUIT BANK FOR POWER AND CONTROLS SHALL CONTINUE ROUTE INTO BAR SCREEN ROOM. REFER TO DRAWING EA-054 FOR CONTINUATION OF CONDUIT BANK AND DRAWING EA-055 FOR DESTINATION OF CONDUIT BANK. SEE ALSO APPLICABLE SECTION DRAWING EA-263 FOR ADDITIONAL INFORMATION.
9. CONDUIT BANK FOR POWER AND CONTROLS SHALL CONTINUE ROUTE INTO GRIT WASH ROOM. REFER TO DRAWING EA-056 FOR DESTINATION OF CONDUIT BANK. SEE ALSO APPLICABLE SECTION DRAWING EA-261 FOR ADDITIONAL INFORMATION.
10. CONDUIT BANK FOR POWER SHALL CONTINUE ROUTE INTO GRIT CHANNEL ROOM. REFER TO DRAWING EA-056 FOR DESTINATION OF CONDUIT BANK. SEE ALSO APPLICABLE SECTION DRAWING EA-261 FOR ADDITIONAL INFORMATION.
11. CONDUIT BANK FOR CONTROLS SHALL CONTINUE ROUTE INTO GRIT CHANNEL ROOM. REFER TO DRAWING EA-054 FOR DESTINATION OF CONDUIT BANK. SEE ALSO APPLICABLE SECTION DRAWING EA-261 FOR ADDITIONAL INFORMATION.
12. CONTROL PANEL "HW2-CP-LPU1". REFER TO DRAWINGS EA-269 THROUGH EA-271 FOR FRONT ELEVATIONS. REFER TO DRAWINGS EA-272 THROUGH EA-276 FOR BACKPLANE ELEVATIONS.
13. MOTOR CONTROL CENTER "HW2-MCC-1L". REFER TO DRAWING EA-023 FOR FRONT ELEVATION.
14. MOTOR CONTROL CENTER "HW2-MCC-1R". REFER TO DRAWING EA-024 FOR FRONT ELEVATION.
15. CONDUITS/LOADS SHOWN ARE GROUPED INTO SINGLE CONDUIT. REFER TO CONDUIT SCHEMATIC, DRAWING EA-069, THROUGH EA-076 FOR MORE INFORMATION.
16. OVERHEAD DOOR CONDUITS ARE ROUTED SEPARATELY TO THEIR RESPECTIVE LOADS, REFER TO CONDUIT SCHEMATIC/SCHEDULE DRAWINGS EA-077, EA-079, AND EA-079.
17. ALL CONDUITS ENTERING/EXITING THE ELECTRICAL ROOM, TO/FROM PROCESS AREAS SHALL HAVE SEALS PER NEC ARTICLE 501.

RECORD DRAWINGS

These record drawings have been prepared using information provided by the construction contractor and/or owner. The seal and signature herein only signify that the plans have been revised in accordance with the information provided and does not guarantee that the plans accurately show every detail of the constructed project. This document is for information and references in connection with the owner's use and occupancy of the project and is not intended for bid, permit, construction, or other uses not related to the project.

THE SEAL APPEARING ON THIS DOCUMENT WAS AUTHORIZED BY K.A. HARUTUNIAN P.E. 59181 ON APRIL 3, 2008

STATE OF TEXAS — K. A. HARUTUNIAN — 59181 — REGISTERED PROFESSIONAL ENGINEER

REUSE OF DOCUMENTS

This document and the ideas and designs incorporated herein as an instrument of professional service has been developed, designed and prepared by Harutunian Engineering, Inc. and is not to be used, in whole or part, for any other project without the written authorization of the City of Austin and Harutunian Engineering, Inc. (C) 2002

STATE OF TEXAS — K. A. HARUTUNIAN — 59181 — REGISTERED PROFESSIONAL ENGINEER

THE SEAL APPEARING ON THIS DOCUMENT WAS AUTHORIZED BY K.A. HARUTUNIAN P.E. 59181 ON JANUARY 21, 2002

HARUTUNIAN ENGINEERING INCORPORATED — ENGINEERING AND ENVIRONMENTAL CONSULTANTS — 305 EAST HUNTLAND DRIVE SUITE 300 AUSTIN, TEXAS 78752

REV. NO.	DATE	DRWN	CHKD	REMARKS

DESIGNED BY: HEI
DRAWN BY: HEI
SHEET CHK'D BY: HEI
CROSS CHK'D BY: HEI
APPROVED BY: HEI
DATE: JANUARY 2002

CAMP DRESSER & McKEE INC.
environmental engineers, scientists, planners, & management consultants
CDM

CITY OF AUSTIN, TEXAS
WALNUT CREEK WASTEWATER TREATMENT PLANT
75 MGD UPGRADE

HEADWORKS
CONDUIT BANK ROUTING PLAN
(SHEET 1 OF 5)

PROJECT No 30361
FILE NAME: EA-053

SHEET No
EA-053

This document, and the designs incorporated herein, is an instrument of professional service that has been developed, designed and prepared by Harutunian Engineering, Inc., and is not to be used, in whole or in part, for any other project without giving written notice to Harutunian Engineering, Inc.

NO.	DR	CK	DATE	DESCRIPTION

REVISIONS

BLACK & VEATCH
Building a world of difference.
Black & Veatch Corporation
Registration No. F-542
Austin, Texas

HARUTUNIAN ENGINEERING, INC.
305 E. Huntland Dr., Ste 300, Austin, TX 78752
TBPE Firm Registration No. F-2408

STATE OF TEXAS — K. A. HARUTUNIAN — 59181 — REGISTERED PROFESSIONAL ENGINEER
4/4/2014

Walnut Creek WWTP - Tertiary Filter Rehabilitation Project
CIP ID No. 3023.025

ELECTRICAL REFERENCE DRAWING - HEADWORKS NO. 2 FLOOR PLAN (SHEET 1 OF 3)

DESIGNED BY:	HEI
DRAWN BY:	HEI
REVIEWED BY:	HEI
APPROVED BY:	HEI
PROJECT NO.:	168622
DATE:	4/4/2014
SCALE:	AS SHOWN
REVISION:	
DISCIPLINE NO.	E-75
DWG. NO.	SHEET 187 OF 273

GENERAL NOTES

1. THE EXISTING INFORMATION SHOWN ON THIS DRAWING WAS OBTAINED FROM THE PROJECT ENTITLED "WALNUT CREEK WASTEWATER TREATMENT PLANT 75 MGD UPGRADE" DATED SEPTEMBER, 2006. THIS DRAWING IS PROVIDED FOR REFERENCE PURPOSES ONLY AND MAY NOT EXACTLY REFLECT THE EXISTING CONDITIONS. THEREFORE, THE CONTRACTOR IS TO EXERCISE EXTREME CARE AND FIELD VERIFY THE EXISTING CONDITIONS PRIOR TO COMMENCING FULL SCALE DEMOLITION OR RENOVATION ACTIVITIES. FOLLOWING THE DISCOVERY VERIFICATION OF THE EXISTING FIELD CONDITIONS, SHOULD ADJUSTMENTS BECOME A NECESSITY TO THE EXISTING OR PROPOSED SYSTEM (AS APPLICABLE), THE EXISTING DISCOVERED FIELD CONDITIONS MUST BE BROUGHT TO THE OWNER'S ATTENTION FOR EXECUTION OF THE NECESSARY ADJUSTMENTS/MODIFICATIONS.

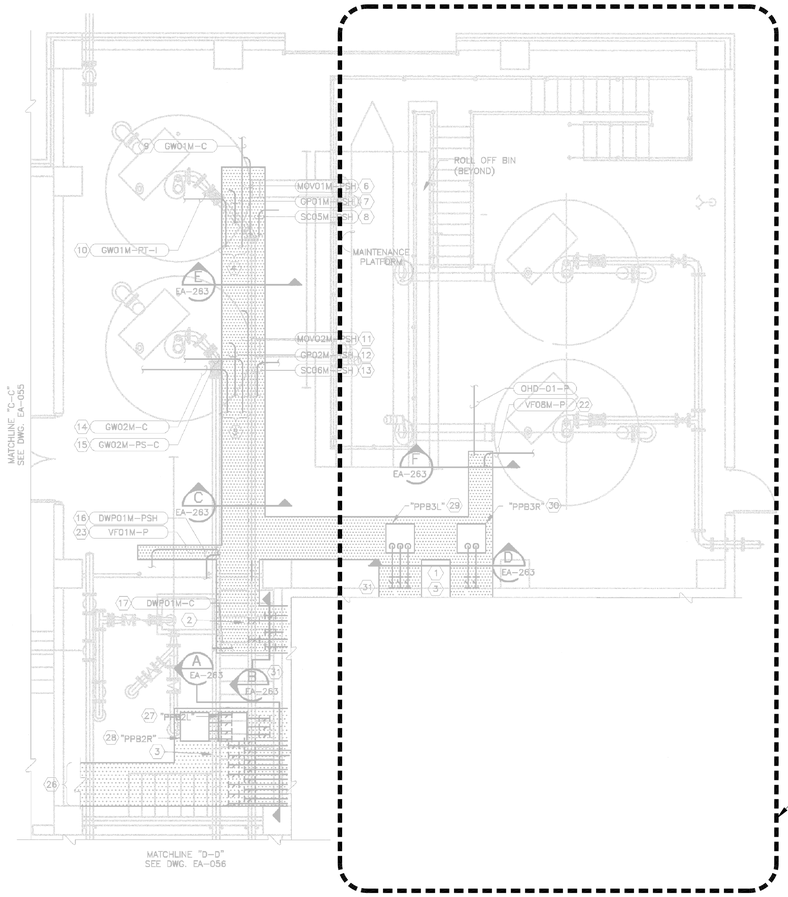

GRIT WASH ROOM CONDUIT BANK ROUTING PLAN

SCALE: 1/4"=1'-0"

KEY NOTES:

1. CONDUIT BANK FOR POWER SHALL BE ROUTED FROM ELECTRICAL ROOM. REFER TO DRAWING EA-053 FOR CONTINUATION OF CONDUIT BANK.
2. CONDUIT BANK FOR CONTROLS SHALL BE ROUTED FROM ELECTRICAL ROOM. REFER TO DRAWING EA-053 FOR CONTINUATION OF CONDUIT BANK.
3. CONDUIT BANK FOR POWER AND CONTROLS SHALL BE ROUTED FROM ELECTRICAL ROOM. REFER TO DRAWING EA-053 FOR CONTINUATION OF CONDUIT BANK.
4. CONDUITS FOR "GW01M" SYSTEM CONTROLS SHALL ORIGINATE FROM LPU CABINET IN ELECTRIC ROOM AND SHALL BE ROUTED VIA CONDUIT BANK. REFER TO DRAWING EA-053 FOR ORIGINATION OF CONDUIT BANK.
5. CONDUITS FOR "GW02M" SYSTEM CONTROLS SHALL ORIGINATE FROM LPU CABINET IN ELECTRIC ROOM AND SHALL BE ROUTED VIA CONDUIT BANK. REFER TO DRAWING EA-053 FOR ORIGINATION OF CONDUIT BANK.
6. CONDUIT FOR "MOV01M" POWER SHALL ORIGINATE FROM PULL BOX "PPB3L" AND TERMINATE AT THE RESPECTIVE MOTOR. REFER TO DRAWING EA-042 FOR DESTINATION AND DETAILS, KEY NOTE 29 FOR PULL BOX INFORMATION.
7. CONDUIT FOR "CP01M" POWER SHALL ORIGINATE FROM PULL BOX "PPB3L" AND TERMINATE AT THE RESPECTIVE MOTOR. REFER TO DRAWING EA-042 FOR DESTINATION AND DETAILS, KEY NOTE 29 FOR PULL BOX INFORMATION.
8. CONDUIT FOR "SC05M" POWER SHALL ORIGINATE FROM PULL BOX "PPB3L" AND TERMINATE AT THE RESPECTIVE MOTOR. REFER TO DRAWING EA-042 FOR DESTINATION AND DETAILS, KEY NOTE 29 FOR PULL BOX INFORMATION.
9. CONDUIT FOR "GW01M" CONTROLS SHALL ORIGINATE FROM CONDUIT BANK AND TERMINATE AT THE RESPECTIVE PULL BOX. REFER TO DRAWING EA-049 FOR DESTINATION AND DETAILS.
10. CONDUIT FOR "GW01M" PRESSURE TRANSMITTER CONTROL WIRES SHALL ORIGINATE FROM CONDUIT BANK AND TERMINATE AT THE PRESSURE SWITCH ENCLOSURE. REFER TO DRAWING EA-049 FOR DESTINATION AND DETAILS.
11. CONDUIT FOR "MOV02M" POWER SHALL ORIGINATE FROM PULL BOX "PPB3R" AND TERMINATE AT THE RESPECTIVE MOTOR. REFER TO DRAWING EA-042 FOR DESTINATION AND DETAILS, KEY NOTE 30 FOR PULL BOX INFORMATION.
12. CONDUIT FOR "CP02M" POWER SHALL ORIGINATE FROM PULL BOX "PPB3R" AND TERMINATE AT THE RESPECTIVE MOTOR. REFER TO DRAWING EA-042 FOR DESTINATION AND DETAILS, KEY NOTE 30 FOR PULL BOX INFORMATION.
13. CONDUIT FOR "SC06M" POWER SHALL ORIGINATE FROM PULL BOX "PPB3R" AND TERMINATE AT THE RESPECTIVE MOTOR. REFER TO DRAWING EA-042 FOR DESTINATION AND DETAILS, KEY NOTE 30 FOR PULL BOX INFORMATION.
14. CONDUIT FOR "GW02M" CONTROLS SHALL ORIGINATE FROM CONDUIT BANK AND TERMINATE AT THE RESPECTIVE PULL BOX. REFER TO DRAWING EA-049 FOR DESTINATION AND DETAILS.
15. CONDUIT FOR "GW02M" PRESSURE TRANSMITTER CONTROL WIRES SHALL ORIGINATE FROM CONDUIT BANK AND TERMINATE AT THE PRESSURE SWITCH ENCLOSURE. REFER TO DRAWING EA-049 FOR DESTINATION AND DETAILS.
16. CONDUIT FOR "DWP01M" POWER SHALL ORIGINATE FROM PULL BOX "PPB3L" AND TERMINATE AT THE DEWATERING PUMP MOTOR. REFER TO DRAWING EA-042 FOR DESTINATION AND DETAILS OF CONDUIT.
17. CONDUIT FOR "DWP01M" CONTROLS SHALL ORIGINATE FROM THE LPU CABINET IN ELECTRIC ROOM AND TERMINATE AT THE DEWATERING PUMP CONTROL STATION. REFER TO DRAWING EA-053 FOR ORIGINATION AND DRAWING EA-049 FOR DESTINATION AND DETAILS OF CONDUIT.
18. NOT USED

KEY NOTES:(CONTINUED)

22. CONDUIT FOR "VF08M" POWER SHALL ORIGINATE FROM PULL BOX "PPB3L" AND TERMINATE AT THE RESPECTIVE MOTOR. REFER TO DRAWING EA-042 FOR DESTINATION AND DETAILS.
23. CONDUIT FOR "VF01M" POWER SHALL ORIGINATE FROM PULL BOX "PPB3L" AND TERMINATE AT THE RESPECTIVE MOTOR. REFER TO DRAWING EA-042 FOR DESTINATION AND DETAILS.
24. NOT USED
26. CONDUIT BANK FOR POWER AND CONTROLS SHALL CONTINUE ROUTE INTO BAR SCREEN ROOM. REFER TO DRAWING EA-055 FOR DESTINATION OF CONDUIT BANK.
27. 24" X 24" X 12" PULL BOX "PPB2L" FOR POWER, MOUNTED ON ENCLOSURE SUPPORT RACK. REFER TO THE APPLICABLE DETAIL DRAWING EA-263 FOR ADDITIONAL CONDUIT INFORMATION.
28. 24" X 24" X 12" PULL BOX "PPB2R" FOR POWER, MOUNTED ON ENCLOSURE SUPPORT RACK. REFER TO THE APPLICABLE DETAIL DRAWING EA-263 FOR ADDITIONAL CONDUIT INFORMATION.
29. 24" X 24" X 12" PULL BOX "PPB3L" FOR POWER, MOUNTED ON ENCLOSURE SUPPORT RACK. REFER TO THE APPLICABLE DETAIL DRAWING EA-263 FOR ADDITIONAL CONDUIT INFORMATION.
30. 24" X 24" X 12" PULL BOX "PPB3R" FOR POWER, MOUNTED ON ENCLOSURE SUPPORT RACK. REFER TO THE APPLICABLE DETAIL DRAWING EA-263 FOR ADDITIONAL CONDUIT INFORMATION.
31. ALL CONDUITS ENTERING/EXITING THE ELECTRICAL ROOM TO/FROM THE PROCESS AREAS SHALL HAVE SEALS PER NEC ARTICLE 501.

GENERAL NOTES:

1. LOCATION AND SIZES OF ALL MECHANICAL EQUIPMENT SHOWN ON THE PLAN DRAWINGS ARE APPROXIMATE. EXACT LOCATION OF MECHANICAL EQUIPMENT TO BE AS SHOWN ON THE APPLICABLE MECHANICAL DRAWINGS. THE CONTRACTOR SHALL FIELD VERIFY CONDITIONS AND COORDINATE WITH MECHANICAL CONTRACTOR BEFORE COMMENCING CONSTRUCTION.
2. CONTRACTOR SHALL REFER TO THE APPLICABLE MOUNTING AND INSTALLATION DETAIL REFERENCED IN THE INSTRUMENTATION AND CONTROLS STANDARD DETAILS SECTION OF THE DRAWING PACKAGE FOR ALL INSTRUMENTATION AND CONTROL EQUIPMENT SHOWN ON THIS DRAWING.
3. SEAL ALL CONDUIT WHERE CONDUIT SEALS ARE SHOWN ON THE PLAN DRAWINGS OR SHOWN ON THE INSTALLATION DETAILS.
4. REFER TO THE APPLICABLE CONDUIT PENETRATION DETAIL FOR ALL CONDUIT PENETRATIONS THROUGH THE FLOOR SLAB OR WALL REFERENCED IN THE ELECTRICAL DETAILS SECTION OF THIS DRAWING PACKAGE.
5. SOME MECHANICAL PIPING HAS BEEN OMITTED FOR THE PURPOSE OF CLARITY. CONTRACTOR SHALL REFER TO MECHANICAL DRAWINGS FOR MECHANICAL INSTALLATION DETAILS.
6. REFER TO CONDUIT & WIRE SCHEDULES ON DRAWINGS EA-078, EA-079 & EA-080 FOR CONDUIT & WIRE SIZES AND QUANTITIES.

THE SEAL APPEARING ON THIS DOCUMENT WAS AUTHORIZED BY K.A. HARUTUNIAN P.E. 59181 ON APRIL 3, 2006

STATE OF TEXAS K.A. HARUTUNIAN 59181 REGISTERED PROFESSIONAL ENGINEER

RECORD DRAWINGS

These record drawings have been prepared using information provided by the construction contractor and/or owner. The seal and signature herein only signify that the plans have been revised in accordance with the information provided and does not guarantee that the plans accurately show every detail of the constructed project. This document is for information and references in connection with the owner's use and occupancy of the project and is not intended for bid, permit, construction, or other uses not related to the project.

THE SEAL APPEARING ON THIS DOCUMENT WAS AUTHORIZED BY K.A. HARUTUNIAN P.E. 59181 ON JANUARY 21, 2006

STATE OF TEXAS K.A. HARUTUNIAN 59181 REGISTERED PROFESSIONAL ENGINEER

REUSE OF DOCUMENTS

This document and the ideas and designs incorporated herein as an instrument of professional service has been developed, designed and prepared by Harutunian Engineering, Inc. and is not to be used, in whole or part, for any other project without the written authorization of the City of Austin and Harutunian Engineering, Inc. (C) 2002

HARUTUNIAN ENGINEERING INCORPORATED

ENGINEERING AND ENVIRONMENTAL CONSULTANTS
365 EAST HARTLAND DRIVE
SUITE 800
AUSTIN, TEXAS
78753

REV. NO.	DATE	DRWN	CHKD	REMARKS

DESIGNED BY: HEI
DRAWN BY: HEI
SHEET CHK'D BY: HEI
CROSS CHK'D BY: HEI
APPROVED BY: HEI
DATE: JANUARY 2002

CAMP DRESSER & McKEE INC.
environmental engineers, scientists, planners, & management consultants
CDM

CITY OF AUSTIN, TEXAS
WALNUT CREEK WASTEWATER TREATMENT PLANT
75 MGD UPGRADE

HEADWORKS
CONDUIT BANK ROUTING PLAN
(SHEET 2 OF 5)

PROJECT No 30361
FILE NAME: EA-054

SHEET No
EA-054

GRIT WASH ROOM CONDUIT BANK PLAN

EA-054

GENERAL NOTES

1. *THE EXISTING INFORMATION SHOWN ON THIS DRAWING WAS OBTAINED FROM THE PROJECT ENTITLED "WALNUT CREEK WASTEWATER TREATMENT PLANT 75 MGD UPGRADE" DATED SEPTEMBER, 2006. THIS DRAWING IS PROVIDED FOR REFERENCE PURPOSES ONLY AND MAY NOT EXACTLY REFLECT THE EXISTING CONDITIONS. THEREFORE, THE CONTRACTOR IS TO EXERCISE EXTREME CARE AND FIELD VERIFY THE EXISTING CONDITIONS PRIOR TO COMMENCING FULL SCALE DEMOLITION OR RENOVATION ACTIVITIES. FOLLOWING THE DISCOVERY VERIFICATION OF THE EXISTING FIELD CONDITIONS, SHOULD ADJUSTMENTS BECOME A NECESSITY TO THE EXISTING OR PROPOSED SYSTEM (AS APPLICABLE), THE EXISTING DISCOVERED FIELD CONDITIONS MUST BE BROUGHT TO THE OWNER'S ATTENTION FOR EXECUTION OF THE NECESSARY ADJUSTMENTS/MODIFICATIONS.*

This document, and the designs incorporated herein, is an instrument of professional service that has been developed, designed and prepared by Harutunian Engineering, Inc., and is not to be used, in whole or in part, for any other project without giving written notice to Harutunian Engineering, Inc.

NO.	DR	CK	DATE	DESCRIPTION

REVISIONS

BLACK & VEATCH
Building a world of difference.
Black & Veatch Corporation
Registration No. F-253
Austin, Texas

HARUTUNIAN ENGINEERING, INC.
365 E Hartland Dr., Ste 800, Austin, TX 78753
TBPE Firm Registration No. F-2408

STATE OF TEXAS K.A. HARUTUNIAN 59181 REGISTERED PROFESSIONAL ENGINEER
4/4/2014

Austin WATER
Walnut Creek WWTP - Tertiary Filter Rehabilitation Project
CIP ID No. 3023.025

ELECTRICAL REFERENCE DRAWING - HEADWORKS NO. 2 FLOOR PLAN (SHEET 2 OF 3)

DESIGNED BY:	HEI
DRAWN BY:	HEI
REVIEWED BY:	HEI
APPROVED BY:	HEI
PROJECT NO.:	168622
DATE:	4/4/2014
SCALE:	AS SHOWN

REVISION:

DISCIPLINE NO.
E-76

DWG. NO.
SHEET 188 OF 273

GENERAL NOTES:

1. ALL EQUIPMENT SHOWN ON THIS DRAWING IS PROPOSED.
2. FOR DESCRIPTION OF LPU SECTIONS, SEE DWG. EA-269 THROUGH EA-271 AND EA-272 THROUGHT EA-276.

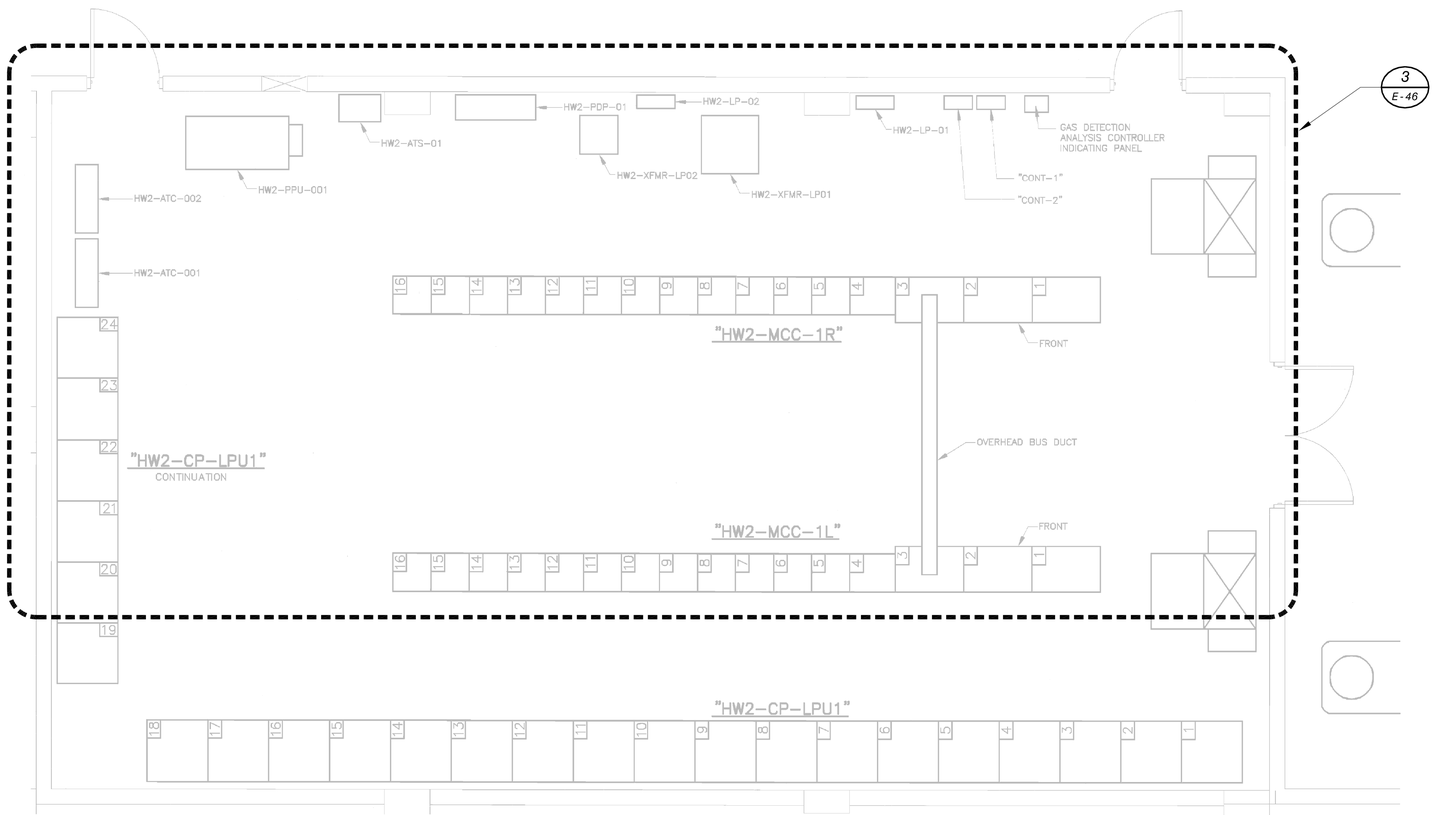

ELECTRICAL ROOM
EQUIPMENT ARRANGEMENT PLAN
SCALE: 3/8"=1'-0"

RECORD DRAWINGS
These record drawings have been prepared using information provided by the construction contractor and/or owner. The seal and signature herein only signify that the plans have been revised in accordance with the information provided and does not guarantee that the plans accurately show every detail of the constructed project. This document is for information and references in connection with the owner's use and occupancy of the project and is not intended for bid, permit, construction, or other uses not related to the project.

THE SEAL APPEARING ON THIS DOCUMENT WAS AUTHORIZED BY K.A. HARUTUNIAN P.E. 59181 ON APRIL 3, 2006

REUSE OF DOCUMENTS
This document and the ideas and designs incorporated herein as an instrument of professional service has been developed, designed and prepared by Harutunian Engineering, Inc. and is not to be used, in whole or part, for any other project without the written authorization of the City of Austin and Harutunian Engineering, Inc.
(C) 2002

THE SEAL APPEARING ON THIS DOCUMENT WAS AUTHORIZED BY K.A. HARUTUNIAN P.E. 59181 ON JANUARY 21, 2002

HARUTUNIAN ENGINEERING INCORPORATED

ENGINEERING AND ENVIRONMENTAL CONSULTANTS
305 EAST HUNTLAND DRIVE
SUITE 500
AUSTIN, TEXAS
78752

REV. NO.	DATE	DRWN	CHKD	REMARKS

DESIGNED BY: HEI
DRAWN BY: HEI
SHEET CHK'D BY: HEI
CROSS CHK'D BY: HEI
APPROVED BY: HEI
DATE: JANUARY 2002

CAMP DRESSER & McKEE INC.
environmental engineers, scientists, planners, & management consultants
CDM

CITY OF AUSTIN, TEXAS
WALNUT CREEK WASTEWATER TREATMENT PLANT
75 MGD UPGRADE

HEADWORKS
ELECTRICAL ROOM
EQUIPMENT ARRANGEMENT PLAN

PROJECT No 30361
FILE NAME: EA-028

SHEET No
EA-028

EA-028

GENERAL NOTES

1. THE EXISTING INFORMATION SHOWN ON THIS DRAWING WAS OBTAINED FROM THE PROJECT ENTITLED "WALNUT CREEK WASTEWATER TREATMENT PLANT 75 MGD UPGRADE" DATED SEPTEMBER, 2006. THIS DRAWING IS PROVIDED FOR REFERENCE PURPOSES ONLY AND MAY NOT EXACTLY REFLECT THE EXISTING CONDITIONS. THEREFORE, THE CONTRACTOR IS TO EXERCISE EXTREME CARE AND FIELD VERIFY THE EXISTING CONDITIONS PRIOR TO COMMENCING FULL SCALE DEMOLITION OR RENOVATION ACTIVITIES. FOLLOWING THE DISCOVERY VERIFICATION OF THE EXISTING FIELD CONDITIONS, SHOULD ADJUSTMENTS BECOME A NECESSITY TO THE EXISTING OR PROPOSED SYSTEM (AS APPLICABLE), THE EXISTING DISCOVERED FIELD CONDITIONS MUST BE BROUGHT TO THE OWNER'S ATTENTION FOR EXECUTION OF THE NECESSARY ADJUSTMENTS/MODIFICATIONS.

This document, and the designs incorporated herein, is an instrument of professional service that has been developed, designed and prepared by Harutunian Engineering, Inc., and is not to be used, in whole or in part, for any other project without giving written notice to Harutunian Engineering, Inc.

NO.	DR	CK	DATE	DESCRIPTION

REVISIONS

BLACK & VEATCH
Building a world of difference.
Black & Veatch Corporation
Registration No. F-653
Austin, Texas

HARUTUNIAN ENGINEERING, INC.
305 E Huntland Dr, Ste 500, Austin, TX 78752
TBPE Firm Registration No. F-2408

STATE OF TEXAS
K. A. HARUTUNIAN
59181
REGISTERED PROFESSIONAL ENGINEER
4/4/2014

Austin WATER
Walnut Creek WWTP - Tertiary Filter Rehabilitation Project
CIP ID No. 3023.025

ELECTRICAL REFERENCE DRAWING - HEADWORKS NO. 2 FLOOR PLAN (SHEET 3 OF 3)

DESIGNED BY:	HEI
DRAWN BY:	HEI
REVIEWED BY:	HEI
APPROVED BY:	HEI
PROJECT NO.:	168622
DATE:	4/4/2014
SCALE:	AS SHOWN

REVISION:

DISCIPLINE NO.
E-77

DWG. NO.
SHEET 189 OF 273

EQUIPMENT IDENTIFICATION DESCRIPTION

SSS - FFF - 999

- SSS: AREA CODE - DENOTES ASSOCIATED SYSTEM STREAM
- FFF: EQUIPMENT CODE - DENOTES ASSOCIATED EQUIPMENT ABBREVIATION
- 999: SEQUENCE CODE - UNIQUE ALPHA-NUMERIC IDENTIFIER

PIPELINE IDENTIFICATION DESCRIPTION

SSS - PPP - 999 - MTL - INS - THK - SPL

- SSS: PIPE SIZE - INCHES UNLESS OTHERWISE NOTED
- PPP: PROCESS CODE - DENOTES ASSOCIATED PROCESS STREAM
- 999: SEQUENCE NUMBER - DENOTES PIPE NUMBER
- MTL: MATERIAL CODE - DENOTES ASSOCIATED MATERIAL ABBREVIATION
- INS: INSULATION MATERIAL CODE - DENOTES ASSOCIATED INSULATION MATERIAL
- THK: INSULATION THICKNESS - DENOTES INSULATION THICKNESS
- SPL: SPECIAL CODE

LINE SYMBOLS

- MAJOR PROCESS PIPING OR FLOW CHANNEL
- SECONDARY PROCESS PIPING
- MISCELLANEOUS PIPING
- SCREENED LINE DENOTES EXISTING PIPE OR EQUIPMENT
- DASHED LINE DENOTES FUTURE PIPE AND EQUIPMENT
- ELECTRIC SIGNAL
- HYDRAULIC SIGNAL
- PNEUMATIC SIGNAL
- SIGNAL CONNECTION POINT
- INTERNAL SYSTEM SIGNAL LINK (SOFTWARE OR DATA LINK)
- B PI-4: SIGNAL LINE GOING TO ANOTHER SHEET
- B PI-4: SIGNAL LINE FROM ANOTHER SHEET (MATCH LETTERS)
- FLOW ARROW FOR PROCESS PIPING
- B PI-45: PROCESS LINE GOING TO ANOTHER SHEET
- MATCH SHEET NO. IDENTIFIER
- MATCH LINE NO.
- B PI-45: PROCESS LINE COMING FROM ANOTHER SHEET
- PROCESS LINES CROSSING (NOT CONNECTED)

MECHANICAL EQUIPMENT SYMBOLS

- VAPORIZER: WATER BATH
- VAPORIZER: AMBIENT
- PARTICULATE FILTER
- AIR STRIPPER OR PACKED TOWER
- MIXER
- AIR FILTER
- WATER FILTER: CARTRIDGE TYPE
- WATER FILTER: MEMBRANE TYPE
- FLOCCULATION MIXER
- COMPRESSOR
- VALVE: MATERIAL HANDLING ROTARY
- AIR REGULATOR
- HEAT EXCHANGER: TYPE 1
- HEAT EXCHANGER: TYPE 2
- HEAT EXCHANGER: FINNED TUBE
- HEAT EXCHANGER: SHELL & TUBE
- HEAT EXCHANGER: PLATE & FRAME
- HEAT EXCHANGER: SPIRAL
- HEAT EXCHANGER: TUBE-IN-TUBE
- HEAT EXCHANGER: AIR
- BOILER
- PACKAGED AIR COMPRESSOR SYSTEM
- COOLING TOWER
- AFTERCOOLER
- STATIC MIXER
- WATER HEATER
- FILTER SEPARATOR
- SILENCER
- SWIVEL
- DAMPER
- DAMPER: PARALLEL BLADE
- DAMPER: OPPOSITE BLADE

PUMP & BLOWER SYMBOLS

- CENTRIFUGAL PUMP OR OTHER TYPE NOT SPECIFIED
- SUBMERGED CENTRIFUGAL PUMP
- SCREW (LIFT) PUMP
- ROTARY PUMP
- PROGRESSING CAVITY PUMP
- POSITIVE DISPLACEMENT PUMP
- PLUNGER PUMP
- VERTICAL PUMP
- SUMP PUMP
- CENTRIFUGAL FAN
- METERING PUMP
- TURBINE COMPRESSOR
- STEAM COMPRESSOR
- GAS TURBINE ENGINE
- CENTRIFUGAL BLOWER
- POSITIVE DISPLACEMENT BLOWER
- COMPRESSOR: RECIPROCATING
- COMPRESSOR: ROTARY SCREW
- COMPRESSOR: LIQUID RING
- DIAPHRAGM METERING PUMP
- SOLENOID PUMP
- PERISTALTIC PUMP
- DRUM PUMP
- DOUBLE DIAPHRAGM
- TURBINE
- SUMP PUMP
- BELL MOUNTED PUMP

PRIMARY ELEMENT & FITTING SYMBOLS

- DIAPHRAGM SEAL
- PRIMARY FLOW ELEMENT: ORIFICE PLATE
- PRIMARY FLOW ELEMENT: FLUME
- PRIMARY FLOW ELEMENT: TURBINE OR PROPELLER-TYPE
- PRIMARY FLOW ELEMENT: ELECTROMAGNETIC
- THERMAL DISPERSION TYPE FLOW ELEMENT
- PRIMARY FLOW ELEMENT: TRANSIT-TIME ULTRASONIC
- TE: TEMPERATURE ELEMENT WITH THERMOWELL
- LE: ELECTRODE TYPE LEVEL SWITCH
- ANNULAR TYPE DIAPHRAGM SEAL
- PRIMARY FLOW ELEMENT: POSITIVE DISPLACEMENT
- PRIMARY FLOW ELEMENT: VENTURI TUBE
- PRIMARY FLOW ELEMENT: WEIR
- PRIMARY FLOW ELEMENT: PITOT TUBE
- PRIMARY FLOW ELEMENT: CORIOLIS
- FE: PRIMARY ELEMENT: ROTAMETER
- LE: ULTRASONIC LEVEL ELEMENT
- LE: RADAR LEVEL SENSOR
- PRIMARY FLOW ELEMENT: DOPPLER TYPE ULTRASONIC
- REDUCER - CONCENTRIC
- REDUCER - ECCENTRIC
- FLANGE
- DRAIN - BELL-UP
- DRAIN - FUNNEL
- FLEXIBLE CONNECTION
- CAP
- PLUG
- TRAP
- FLAME CHECK
- SURGE CHAMBER
- FLAME ARRESTER
- SEDIMENT TRAP
- UNION
- HOSE CONNECTION
- STRAINER - Y TYPE
- STRAINER - BASKET
- QUICK CONNECT
- VENT
- VENT - SCREENED
- COUPLING
- SIGHTGLASS
- MOISTURE SEPARATOR
- END CAP
- EXPANSION LOOP

CHEMICAL FEED EQUIPMENT SYMBOLS

- DIFFUSER: TANK
- DIFFUSER: CHANNEL
- INJECTOR
- RUPTURE DISK
- PULSATION DAMPNER
- CHEMICAL INDUCTION UNIT
- CHLORINE CYLINDER
- VAPOR SUPERHEATER
- PRESSURE BUILDING COIL
- SPECTACLE, BLIND, CLOSED
- CALIBRATION COLUMN
- EXPANSION TANK OR FUNNEL
- WEIGH SCALE
- DRIP LEG HEATER
- SCALE
- TOTE: TOTE
- AS: AUTOMATIC SWITCHOVER
- SPECTACLE, BLIND, OPEN
- GAS FEEDER
- EVAPORATOR
- DRY CHEMICAL FEEDER
- TON CONTAINER
- POLYMER BLENDER FEEDER
- POLYMER BLENDER FEEDER
- MIXER PADDLE
- FERRIC STIRRER
- PASTE TYPE LIME SLAKER
- POLYMER ACTIVATION CHAMBER: POLYMER ACTIVATION CHAMBER
- PIPELINE DIFFUSER
- POLYMER INJECTION RING
- ACTIVATION CHAMBER
- DIFFUSER
- EDUCTOR
- CO2 VAPORIZOR
- COMBINATION SHOWER/EYEWASH FOUNTAIN
- DIFFUSER - PLAN
- EYEWASH FOUNTAIN
- PLATFORM WEIGHER
- SHOWER
- SUSPENDED WEIGHER
- BRIDGE WEIGHER
- WEIGHING MACHINE

VALVE & GATE SYMBOLS

- SLU: GATE: SLU=SLUICE, SLD= SLIDE
- VALVE: GATE OR OTHER IN-LINE TYPE NOT OTHERWISE IDENTIFIED
- VALVE: BALL, AWWA=AMERICAN WATER WORKS ASSCIATION
- VALVE: GLOBE
- VALVE: BUTTERFLY, DAMPER OR LOUVER: IND=INDUSTRIAL, AWWA=AMERICAN WATER WORKS ASSOCIATION, SS=STAINLESS STEEL
- VALVE: PLUG
- VALVE: THREE WAY
- VALVE: FOUR WAY
- VALVE: CHECK
- VALVE: CHLORINE
- VALVE: CHLORINE WITH YOKE
- VALVE: DIAPHRAGM
- VALVE: VPORT BALL
- VALVE: PRESSURE REDUCING
- VALVE: PRESSURE SUSTAINING
- VALVE: PRESSURE REDUCING (SELF ACTUATING TYPE)
- VALVE: PRESSURE SUSTAINING (SELF ACTUATING TYPE)
- VALVE: PILOT
- VALVE: VACUUM RELIEF
- VALVE: PRESSURE RELIEF
- VALVE: PRESSURE/VACUUM RELIEF
- VALVE: FOUR FUNCTION
- VALVE: ANGLE
- VALVE: SET STOP
- VALVE: PINCH
- VALVE: AIR-VACUUM
- VALVE: AIR RELEASE
- VALVE: THERMAL SHUTOFF
- VALVE: MUD
- VALVE: SLEEVE
- VALVE: KNIFE GATE
- CHLORINE VACUUM REGULATOR
- BACKFLOW PREVENTER
- GATE: FLAP
- VACUUM BREAKER
- EXPLOSION RELIEF
- OVERFLOW WEIR
- VALVE: NEEDLE
- VALVE: TELESCOPING

VALVE AND GATE ACTUATOR SYMBOLS

- H HW: HANDWHEEL ACTUATOR
- H CW: CHAINWHEEL ACTUATOR
- H WN: WRENCH NUT ACTUATOR
- H L: LEVER ACTUATOR
- M SM: SMALL MOTOR ACTUATOR
- P: PNEUMATIC ACTUATOR
- M: STANDARD ELECTRIC
- M N: NETWORKED ELECTRIC
- E/H: ELECTRIC-HYDRAULIC
- M P: PROGRAMMABLE ELECTRIC
- H: HYDRAULIC
- S: SOLENOID
- P/O: AIR-OIL
- P DA: PNEUMATIC ACTUATOR DOUBLE ACTING
- P SC: PNEUMATIC ACTUATOR SPRING CLOSE
- P SO: PNEUMATIC ACTUATOR SPRING OPEN
- DIAPHRAGM VALVE
- QUICK OPENING VALVE
- QUICK CLOSING VALVE
- WEIGHT LOADED VALVE
- FLOAT OPERATED VALVE
- SPRING LOADED VALVE
- LOADING/BACK PRESSURE VALVE

THE FOLLOWING ADDITIONAL DESIGNATIONS MAY BE UTILIZED ADJACENT TO SOME VALVE OR GATE SYMBOLS.

NC NORMALLY CLOSED
NO NORMALLY OPEN
FC FAILS CLOSED
FO FAILS OPEN
FIP FAILS IN LAST POSITION

MATERIAL HANDLING EQUIPMENT SYMBOLS

- CYCLONE SEPARATER
- BIN: LIVE BOTTOM
- BIN: SLIDING FRAME
- SCREEN: SINGLE VIBRATORY
- SCREEN: DOUBLE VIBRATORY
- GRINDER
- PELLETIZER
- BIN - OPEN TOP
- HOPPER
- HORIZONTAL BAR SCREEN
- BIN - CLOSED TOP
- CONVEYOR: SCREW
- CONVEYOR: BUCKET
- CONVEYOR: BELT
- CONVEYOR: VIBRATORY
- PISTON CAKE PUMP: SINGLE
- PISTON CAKE PUMP: DOUBLE
- MIXER: PUGMILL
- MIXER: BLENDER
- DUST HOPPER

GENERAL NOTES

1. IN GENERAL, THE P&ID SYMBOLS AND DEVICE IDENTIFICATIONS ARE BASED ON INTERNATIONAL SOCIETY OF AUTOMATION, STANDARD PRACTICE ISA-S5.1 (1988). SOME MODIFICATIONS, ADDITIONS, AND ALTERATIONS HAVE BEEN MADE AS NEEDED TO ACCOMMODATE THE PROJECT REQUIREMENTS.
2. SOME CONTROL AND INTERLOCK REQUIREMENTS WHICH CAN BE MORE CLEARLY ILLUSTRATED ON SCHEMATIC DRAWINGS HAVE BEEN OMITTED FROM THE P&ID DRAWINGS.
3. THIS IS A GENERAL LEGEND SHEET. SOME SYMBOLS AND ABBREVIATIONS MAY NOT BE UTILIZED ON THIS SPECIFIC PROJECT.
4. PIPING AND EQUIPMENT LEGEND APPLIES TO P&ID SHEETS ONLY AND MAY DIFFER FROM LEGENDS FOR OTHER SHEETS.

REVISIONS				
NO.	DR	CK	DATE	DESCRIPTION

BLACK & VEATCH
Building a world of difference.
Black & Veatch Corporation
Registration No. F-439
Austin, Texas

Carlos Ornelas 6/17/2016

CHARLES E. MORRIS 106414 LICENSED PROFESSIONAL ENGINEER TEXAS 9/23/2014

Austin WATER
Walnut Creek WWTP - Tertiary Filter Rehabilitation Project
CIP ID No. 3023.025

PROCESS AND INSTRUMENTATION DIAGRAM
LEGENDS AND ABBREVIATIONS
SHEET 1 OF 3

DESIGNED BY:	KWS
DRAWN BY:	KWS
REVIEWED BY:	CEM
APPROVED BY:	TLS
PROJECT NO.:	168622
DATE:	4/4/2014
SCALE:	NOT TO SCALE
REVISION:	
DISCIPLINE NO.	PID-01
DWG. NO.	190 OF 273

FD7000_PW SAVED:6/13/2016, 4/8/2014 8:13:43 AM
D168622 CREATED:Instrumentation Drawings
File: C:\PWBatchPDF\Process\168622 - Austin Walnut Creek WWTP Filter Rehab\PID_01.dwg Layout: Layout1 Plotted: 6/13/2016 1:23:45 PM

INSTRUMENT TAG NUMBERS
MEANINGS OF IDENTIFICATION LETTERS

LETTER	FIRST LETTER: MEASURED OR INITIATING VARIABLE	FIRST LETTER: MODIFIER	SUCCEEDING LETTERS: READOUT OR PASSIVE FUNCTION	SUCCEEDING LETTERS: OUTPUT FUNCTION	SUCCEEDING LETTERS: MODIFIER
A	ANALYSIS		ALARM		
B	BURNER, COMBUSTION		USER'S CHOICE	USER'S CHOICE	USER'S CHOICE
C	CONDUCTIVITY (ELECTRICAL)			CONTROL	CLOSED
D	DENSITY (MASS) OR SPECIFIC GRAVITY	DIFFERENTIAL			
E	VOLTAGE (EMF)		PRIMARY ELEMENT		
F	FLOW RATE	RATIO (FRACTION)			
G	USER'S CHOICE		GLASS		
H	HAND (MANUALLY INITIATED)				HIGH
I	CURRENT (ELECTRICAL)		INDICATE		
J	POWER	SCAN			
K	TIME OR TIME-SCHEDULE	TIME RATE OF CHANGE		CONTROL STATION	
L	LEVEL		LIGHT (PILOT)		LOW
M	MOISTURE OR HUMIDITY	MOMENTARY			MIDDLE OR INTER-MEDIATE
N	USER'S CHOICE		USER'S CHOICE	USER'S CHOICE	USER'S CHOICE
O	USER'S CHOICE		ORIFICE (RESTRICTION)		OPEN
P	PRESSURE OR VACUUM		POINT (TEST CONNECTION)		
Q	QUANTITY	INTEGRATE OR TOTALIZE	INTEGRATE OR TOTALIZE		
R	RADIATION		RECORD OR PRINT		
S	SPEED OR FREQUENCY	SAFETY		SWITCH	
T	TEMPERATURE			TRANSMIT	
U	MULTIVARIABLE		MULTIFUNCTION	MULTIFUNCTION	MULTIFUNCTION
V	VIBRATION			VALVE, DAMPER, OR LOUVER	
W	WEIGHT OR FORCE		WELL		
X	UNCLASSIFIED		UNCLASSIFIED	UNCLASSIFIED	UNCLASSIFIED
Y	EVENT, STATE, OR PRESENCE			RELAY OR COMPUTE	
Z	POSITION, DIMENSION			DRIVE, ACTUATOR OR UNCLASSIFIED FINAL CONTROL ELEMENT	

GENERAL INSTRUMENT SYMBOLS

- FIELD MOUNTED INSTRUMENT
- INSTRUMENT MOUNTED ON FACE OF PANEL
- INSTRUMENT MOUNTED BEHIND OR INSIDE OF PANEL
- INSTRUMENT MOUNTED ON FACE OF LOCAL PANEL
- INSTRUMENT MOUNTED BEHIND OR INSIDE OF LOCAL PANEL
- SINGLE INSTRUMENT HOUSING CONTAINING TWO (OR MORE) INSTRUMENTATION FUNCTIONS
- I — CONTROL INTERLOCK FUNCTION, SEE SCHEMATICS AND SYSTEM SPECIFICATIONS FOR SPECIFIC FUNCTION

TAG NUMBERS AND ADDITIONAL DESIGNATIONS

TRC 31-1

- FIRST LETTER
- SUCCEEDING LETTERS
- NUMBER AFTER DASH (-1, -2, ETC) DENOTES MULTIPLE DEVICES USED IN IDENTICAL DUPLICATE SYSTEMS.
- A LETTER AFTER THE LOOP NUMBER (31A, 31B, ETC) IS USED TO DISTINQUISH MULTIPLE SIMILAR DEVICES IN THE SAME INSTRUMENT LOOP.
- LOOP DESIGNATION NUMBER

pH 2

- SEE INSTRUMENT FUNCTIONAL DESIGNATIONS AND ABBREVIATIONS.
- PANEL REFERENCE NUMBER AS FOLLOWS:
  1=
  2=
  3=
  4=

DIGITAL SYSTEMS INTERFACE SYMBOLS

NOTE: REFER TO DETAILED SYSTEM SPECIFICATIONS FOR FUNCTIONAL DESCRIPTION. ALSO SEE I/O SCHEDULES FOR COMPLETE INPUT AND OUTPUT LISTINGS.

- COMPUTER, DISTRIBUTED CONTROL SYSTEM, OR DISPLAY FUNCTION BLOCK
- LETTERS, TAG NUMBERS, ABBREVIATIONS AND OTHER ANNOTATIONS ARE SIMILAR TO THE GENERAL INSTRUMENT LEGEND

AC 130

- PROGRAMMABLE LOGIC CONTROLLER SYSTEM FUNCTION BLOCK
- "CB" NUMBER REFERS TO SOFTWARE CONTROL BLOCK DESCRIPTION IN THE SPECIFICATIONS.

2

- DIGITAL SYSTEM I/O INTERFACE DIRECTION OF ARROW DENOTES WHETHER INPUT OR OUTPUT
- ▽ 2 DISCRETE I/O
- ▲ 2 ANALOG I/O
- SYSTEM REFERENCE NUMBER, AS FOLLOWS:
  1=
  2=
  3=
  3A=
  3B=

GENERAL NOTES

1. IN GENERAL, THE P&ID SYMBOLS AND DEVICE IDENTIFICATIONS ARE BASED ON INTERNATIONAL SOCIETY OF AUTOMATION, STANDARD PRACTICE ISA-S5.1 (1988). SOME MODIFICATIONS, ADDITIONS, AND ALTERATIONS HAVE BEEN MADE AS NEEDED TO ACCOMMODATE THE PROJECT REQUIREMENTS.
2. SOME CONTROL AND INTERLOCK REQUIREMENTS WHICH CAN BE MORE CLEARLY ILLUSTRATED ON SCHEMATIC DRAWINGS HAVE BEEN OMITTED FROM P&ID DRAWINGS.
3. THIS IS A GENERAL LEGEND SHEET. SOME SYMBOLS AND ABBREVIATIONS MAY NOT BE UTILIZED ON THIS SPECIFIC PROJECT. PIPING AND EQUIPMENT LEGEND APPLIES TO P&ID SHEETS.
4. PIPING AND EQUIPMENT LEGEND APPLIES TO P&ID SHEETS ONLY AND MAY DIFFER FROM LEGENDS FOR OTHER SHEETS.

PIPELINE MATERIAL CODE ABBREVIATIONS

PCCP	SECTION 02612, PRESTRESSED CONCRETE CYLINDER PIPE
CBWS	SECTION 02614, CONCRETE BAR-WRAPPED, STEEL CYLINDER PIPE
LHCPP	SECTION 02616, LOW HEAD CONCRETE PRESSURE PIPE
RCP	SECTION 02618, CONCRETE PIPE
PVC	SECTION 15061, POLYVINYL CHLORIDE PIPE
DIP	SECTION 15061, DUCTILE IRON PIPE
SP	SECTION 15062, STEEL PIPE
LWS-XX	SECTION 15063, LIGHT WALL STEEL PIPE
SS-XX1	SECTION 15064, STAINLESS STEEL PIPE, TUBING, AND ACCESSORIES
CSG-XX	SECTION 15065, MISCELLANEOUS STEEL PIPE, TUBING, AND ACCESSORIES
CS-XX	SECTION 15065, MISCELLANEOUS STEEL PIPE, TUBING, AND ACCESSORIES
FRPE-XX	SECTION 15066, FIBERGLASS REINFORCED PLASTIC PIPE (EXHAUST AIR SERVICE)
FRP-XX	SECTION 15067, MISCELLANEOUS PLASTIC PIPE, TUBING, AND ACCESSORIES
PVC-XX	SECTION 15067, MISCELLANEOUS PLASTIC PIPE, TUBING, AND ACCESSORIES
CPVC-XX	SECTION 15067, MISCELLANEOUS PLASTIC PIPE, TUBING, AND ACCESSORIES
PE-XX	SECTION 15067, MISCELLANEOUS PLASTIC PIPE, TUBING, AND ACCESSORIES
PP-XX	SECTION 15067, MISCELLANEOUS PLASTIC PIPE, TUBING, AND ACCESSORIES
PVDF-XX	SECTION 15067, MISCELLANEOUS PLASTIC PIPE, TUBING, AND ACCESSORIES
RPT-XX	SECTION 15067, MISCELLANEOUS PLASTIC PIPE, TUBING, AND ACCESSORIES
SS	SECTION 15068, AWWA STAINLESS STEEL PIPE
CI-XX	SECTION 15069, CAST IRON SOIL PIPE AND ACCESSORIES
CU-XX	SECTION 15070, COPPER TUBING AND ACCESSORIES
BR-XX	SECTION 15060, MISCELLANEOUS PIPING AND PIPE ASSEMBLY
HS-XX	SECTION 15060, MISCELLANEOUS PIPING AND PIPE ASSEMBLY
TG-XX	SECTION 15060, MISCELLANEOUS PIPING AND PIPE ASSEMBLY
CRP-XX	SECTION 15060, MISCELLANEOUS PIPING AND PIPE ASSEMBLY

1. XX= numbers 01-20

FUNCTION DESIGNATIONS AND ABBREVIATIONS

INSTRUMENT DESIGNATIONS

K	GAIN OR ATTENUATE (INPUT:OUTPUT)
-K	GAIN AND REVERSE
Σ	ADD OR SUM (ADD AND SUBTRACT)
Δ	SUBTRACT (DIFFERENCE)
√	EXTRACT SQUARE ROOT
÷	DIVIDE
F(X)	CHARACTERIZE SIGNAL
>	HIGH-SELECT
<	LOW-SELECT
×	MULTIPLY
∫	INTEGRATE (TIME INTEGRAL)
CH_4	METHANE
CL_2	CHLORINE RESIDUAL
CO_2	CARBON DIOXIDE
DO	DISSOLVED OXYGEN
LEL	LOWER EXPLOSIVE LIMIT
MCC	MOTOR CONTROL CENTER
MLSS	MIXED LIQUOR SUSPENDED SOLIDS
O_2	OXYGEN (PURITY)
pH	pH CELL
TURB	TURBIDITY

HAND SWITCH DESIGNATIONS

HOA	HAND-OFF-AUTO
LR	LOCAL REMOTE
OC	OPEN-CLOSE
OO	ON-OFF
LOR	LOCAL-OFF-REMOTE
OOA	ON-OFF-AUTO
OCR	OPEN-CLOSE-REMOTE
OOR	ON-OFF-REMOTE
FR	FORWARD-REVERSE
JOA	JOG-OFF-AUTO

TRANSDUCER & CONVERTER DESIGNATION

E	VOLTAGE
FSK	FREQUENCY SHIFT KEYING
H	HYDRAULIC
I	CURRENT
P	PNEUMATIC PULSE
PD	PULSE DURATION
PF	PULSE FREQUENCY
R	RESISTANCE (ELECTRICAL)

EXAMPLE: I/P = CURRENT TO PNEUMATIC TRANSDUCER

POWER SUPPLY ABBREVIATIONS

AS	AIR SUPPLY
ES	ELECTRIC SUPPLY
GS	GAS SUPPLY
HS	HYDRAULIC SUPPLY
NS	NITROGEN SUPPLY
SS	STEAM SUPPLY
WS	WATER SUPPLY

AS — POWER SUPPLY SOURCE LABEL. USED ONLY WHERE NECESSARY TO HELP CLARIFY AN INSTRUMENT OR SYSTEM FUNCTION.

NO.	BY	CK	DATE	DESCRIPTION

REVISIONS

BLACK & VEATCH
Building a world of difference.
Black & Veatch Corporation
Registration No. F-859
Austin, Texas

STATE OF TEXAS — CARLOS M. CHAVEZ — 119722 — PROFESSIONAL ENGINEER — 6/7/2016

STATE OF TEXAS — CHARLES E. MORRIS — 106114 — PROFESSIONAL ENGINEER — 9/25/2014

Austin WATER
Walnut Creek WWTP - Tertiary Filter Rehabilitation Project
CIP ID No. 3023.025

PROCESS AND INSTRUMENTATION DIAGRAM
LEGENDS AND ABBREVIATIONS
SHEET 2 OF 3

DESIGNED BY:	KWS
DRAWN BY:	KWS
REVIEWED BY:	CEM
APPROVED BY:	TLS
PROJECT NO.:	168622
DATE:	4/4/2014
SCALE:	NOT TO SCALE
REVISION:	

DISCIPLINE NO. PID-02

DWG. NO. 191 OF 273

PDF000.PW SAVED: STM60325, 4/8/2014 8:15:39 AM
DWG NO. 168622 OPTIONS ID: Instrumentation Drawings
File: C:\PWBatchPDF\Process\168622 - Austin Walnut Creek WWTP Filter Rehab\PID_02.dwg Layout: Layout1 Plotted: 6/13/2016 1:23:56 PM

AREA CODE ABBREVIATIONS

ACETIC ACID	ACE
ACETYLENE	ACT
ACTIVATED CARBON - GRANULAR	GAC
ADMINISTRATION BUILDING	AD
AERATION AIR/PROCESS AIR	AIR
AERATION SYSTEM	AER
AIR WASH	ARW
ALUMINUM SULFATE	ALS
AMMONIUM SULFATE	NSO4
ANHYDROUS AMMONIA	NH3
ANTI-SEALANT	AS
AQUA AMMONIA	NHOH
ARGON	ARG
ASH	ASH
BACKWASH - MEMBRANE/FILTER	BWH
BALLASTED FLOCCULATION	BAL
BIOSOLIDS	BIO
BIOTOWER	BIT
BLENDED SLUDGE	BLS
BLOWER BUILDING	BB
BNR	BNR
BRINE	BRN
CALCIUM HYPOCHLORITE	CACL
CALCIUM THIOSULFATE	CATS
CARBON DIOXIDE	CO2
CARBON SLURRY	CAS
CARBONIC ACID	HCO3
CENTRATE	CEN
CHEMICAL ENHANCED BACKWASH - MEMBRANE	CEB
CHLORINE	CL2
CHLORINE DIOXIDE	CLO2
CITRIC ACID	CA
CLEAN IN PLACE	CIP
CLEARWELL	CW
COAGULATION	COA
COMPRESSED AIR - INSTRUMENT	CAI
COMPRESSED AIR - SERVICE	CMS
COPPER SULFATE	CUS
CORROSION INHIBITOR	CI
DECHLORINATION	DCL
DETERGENT	DET
DEWATERING	DWT
DIESEL FUEL	FUE
DIGESTER GAS	DGG
DIGESTER GAS MIXING	DGM
DIGESTER SLUDGE	DGS
DIGESTION - AEROBIC	DGA
DIGESTION - ANAEROBIC	DIG
DISINFECTION CONTACT BASIN	DCB
DISSOLVED AIR FLOTATION	DAF
DRAINAGE	DRN
EFFLUENT PUMPING	EFP
ENGINE EXHAUST	EXH
EQUALIZATION BASIN	EQB
FERRIC CHLORIDE	FEC
FERRIC SULFATE	FES
FERROUS CHLORIDE	FRC
FERROUS SULFATE	FRS
FILTER BUILDING 1	FB1
FILTER BUILDING 2	FB2
FLOCCULATION	FLC
GASEOUS OXYGEN	GOX
GASOLINE	GSL
GREASE	GRS
GRIT	GRT
HELIUM	HEL
HYDRAULIC FLUID	HFL
HYDROCHLORIC ACID	HCL
HYDROFLUOSILIC ACID	HFS
HYDROGEN	HYD
HYDROGEN PEROXIDE	PER
INCINERATION	INC
INFLUENT PUMPING	INFP
INTAKE	INT
LAGOON STORAGE	LAG
LAND APPLICATION	LAP
LIME - HYDRATED	CAH
LIME - QUICKLIME	CAO
LIME STABILIZATION	LIM
LIQUID OXYGEN	LOX
LP GAS OR PROPANE GAS	LPG
MAGNESIUM HYDROXIDE	MGOH
MEMBRANE	MEM
METHANE GAS	MEG
METHANOL	MTH
MIXED LIQUOR	MXL
NATURAL GAS	NG
NITROGEN	NIT
NITROUS OXIDE	NIO
ODOR CONTROL	ODC
OIL	OIL
OIL - FUEL	FO
OZONE	OZN
OZONE DESTRUCT	OZD
PHOSPHATE	PPP
PHOSPHORIC ACID	PO4
PIPE GALLERY	PG
POLYALUMINUM CHLORIDE	PCL
POLYMER	POLF
POTASSIUM PERMANGANATE	KMN
POWDERED ACTIVATE CARBON	PAC
PRE-AERATION	PAR
PRESEDIMENTATION	PSD
PRIMARY CLARIFICATION	PRC
PRIMARY SCUM	PSC
PRIMARY SLUDGE	PRS
RAW WASTEWATER PUMPING	WWP
RAW WATER PUMPING	RWP
RAW WATER STORAGE	RWS
RECIRCULATED SLUDGE	RCS
RECLAIMED WATER	RCW
REFRIGERANT	REF
RESIDUALS	RES
RETURN ACTIVATED SLUDGE	RAS
REVERSE OSMOSIS	ROS
SCREENINGS	SCR
SECONDARY CLARIFICATION	SCL
SECONDARY SCUM	SSC
SEPTAGE	SEP
SETTLED WATER	SET
SEWAGE	SEW
SODA ASH	NAC
SODIUM ALUMINATE	NAL
SODIUM ALUMINATE	NAM
SODIUM BICARBONATE	NBC
SODIUM BISULFITE	NHS
SODIUM CHLORIDE	NCL
SODIUM CHLORITE	NCL2
SODIUM FLUORIDE	NAF
SODIUM HEXAMETAPHOSPHATE	NAX
SODIUM HYDROXIDE	NAOH
SODIUM HYPOCHLORITE	NOCL
SODIUM SILICOFLUORIDE	NASF
STEAM	STM
STORM SEWER	STS
STORM WATER	STW
SULFUR DIOXIDE	SO2
SULFURIC ACID	HSO4
SURFACE WASH	SW
TERTIARY TREATMENT	TERT
THICKENED PRIMARY SLUDGE	TPRS
THICKENED WASTE ACTIVATED SLUDGE	TWAS
THICKENING	THCK
TREATED WATER	TW
TRICKLING FILTER	TF
ULTRAVIOLET	UV
VACUUM	VAC
WASH WATER	WW
WASTE ACTIVATED SLUDGE	WAS
WASTE WASH WATER	WWW
WATER - CONDENSATE	CDW
WATER - COOLING	COLW
WATER - DISTILLED WATER	DW
WATER - FIRE	FW
WATER - IRRIGATION	IRW
WATER - OZONATED	OZW
WATER - SEAL	SWT
WATER - WATER HEATING	HW
WATER DEIONIZED	DEIW
WATER NON-POTABLE	NPPW
WATER PLANT EFFLUENT	PEW
WATER POTABLE	PW
WATER RAW	RW
WET WEATHER TREATMENT	WWT
ZINC ORTHOPHOSPHATE	ZOP

PROCESS CODE ABBREVIATIONS

ACETIC ACID	ACE_X
ACETYLENE	ACT_X
ACTIVATED CARBON - GRANULAR	GAC_X
AERATION AIR/PROCESS AIR	AIR_X
AERATION SYSTEM	AER_X
AIR WASH	ARW_X
ALUMINUM SULFATE	ALS_X
AMMONIUM SULFATE	NSO4_X
ANHYDROUS AMMONIA	NH3_X
ANTI-SEALANT	AS_X
AQUA AMMONIA	NHOH_X
ARGON	ARG_X
ASH	ASH_X
BACKWASH - MEMBRANE/FILTER	BWH_X
BALLASTED FLOCCULATION	BAL_X
BIOSOLIDS	BNR_X
BIOTOWER	BIO_X
BLENDED SLUDGE	BIT_X
BNR	BLS_X
BRINE	BRN_X
CALCIUM HYPOCHLORITE	CACL_X
CALCIUM THIOSULFATE	CATS_X
CARBON DIOXIDE	CO2_X
CARBON SLURRY	CAS_X
CARBONIC ACID	HCO3_X
CENTRATE	CEN_X
CHEMICAL ENHANCED BACKWASH - MEMBRANE	CEB_X
CHLORINE	CL2_X
CHLORINE DIOXIDE	CLO2_X
CITRIC ACID	CA_X
CLEAN IN PLACE	CIP_X
COAGULATION	COA_X
COMPRESSED AIR - INSTRUMENT	CAI_X
COMPRESSED AIR - SERVICE	CMS_X
COPPER SULFATE	CUS_X
CORROSION INHIBITOR	CI_X
DECHLORINATION	DCL_X
DETERGENT	DET_X
DEWATERING	DWT_X
DIESEL FUEL	FUE_X
DIGESTER GAS	DGG_X
DIGESTER GAS MIXING	DGM_X
DIGESTER SLUDGE	DGS_X
DIGESTION - AEROBIC	DGA_X
DIGESTION - ANAEROBIC	DIG_X
DISINFECTION CONTACT BASIN	DCB_X
DISSOLVED AIR FLOTATION	DAF_X
DRAINAGE	DRN_X
EFFLUENT PUMPING	EFP_X
ENGINE EXHAUST	EXH_X
EQUALIZATION BASIN	EQB_X
FERRIC CHLORIDE	FEC_X
FERRIC SULFATE	FES_X
FERROUS CHLORIDE	FRC_X
FERROUS SULFATE	FRS_X
FILTRATION	FLT_X
FLOCCULATION	FLC_X
GASEOUS OXYGEN	GOX_X
GASOLINE	GSL_X
GREASE	GRS_X
GRIT	GRT_X
HELIUM	HEL_X
HYDRAULIC FLUID	HFL_X
HYDROCHLORIC ACID	HCL_X
HYDROFLUOSILIC ACID (FLUORIDE)	HFS_X
HYDROGEN	HYD_X
HYDROGEN PEROXIDE	PER_X
INCINERATION	INC_X
INFLUENT PUMPING	INFP_X
INTAKE	INT_X
LAGOON STORAGE	LAG_X
LAND APPLICATION	LAP_X
LIME - HYDRATED	CAH_X
LIME - QUICKLIME	CAO_X
LIME STABILIZATION	LIM_X
LIQUID OXYGEN	LOX_X
LP GAS OR PROPANE GAS	LPG_X
MAGNESIUM HYDROXIDE	MGOH_X
MEMBRANE	MEM_X
METHANE GAS	MEG_X
METHANOL	MTH_X
MIXED LIQUOR	MXL_X
NATURAL GAS	NG_X
NITROGEN	NIT_X
NITROUS OXIDE	NIO_X
ODOR CONTROL	ODC_X
OIL	FO_X
OIL - FUEL	OIL_X
OZONE	OZN_X
OZONE DESTRUCT	OZD_X
PHOSPHATE	PPP_X
PHOSPHORIC ACID	PO4_X
POLYALUMINUM CHLORIDE	PCL_X
POLYMER	POLF_X
POTASSIUM PERMANGANATE	KMN_X
POWDERED ACTIVATE CARBON	PAC_X
PRE-AERATION	PAR_X
PRESEDIMENTATION	PSD_X
PRIMARY CLARIFICATION	PRC_X
PRIMARY SCUM	PSC_X
PRIMARY SLUDGE	PRS_X
RAW WASTEWATER PUMPING	WWP_X
RAW WATER PUMPING	RWP_X
RAW WATER STORAGE	RWS_X
RECIRCULATED SLUDGE	RCS_X
RECLAIMED WATER	RCW_X
REFRIGERANT	REF_X
RESIDUALS	RES_X
RETURN ACTIVATED SLUDGE	RAS_X
REVERSE OSMOSIS	ROS_X
SCREENINGS	SCR_X
SECONDARY CLARIFICATION	SCL_X
SECONDARY SCUM	SSC_X
SEPTAGE	SEP_X
SETTLED WATER	SET_X
SEWAGE	SEW_X
SODA ASH	NAC_X
SODIUM ALUMINATE	NAL_X
SODIUM ALUMINATE	NAM_X
SODIUM BICARBONATE	NBC_X
SODIUM BISULFITE	NHS_X
SODIUM CHLORIDE	NCL_X
SODIUM CHLORITE	NCL2_X
SODIUM FLUORIDE	NAF_X
SODIUM HEXAMETAPHOSPHATE	NAX_X
SODIUM HYDROXIDE	NAOH_X
SODIUM HYPOCHLORITE	NOCL_X
SODIUM SILICOFLUORIDE	NASF_X
STEAM	STM_X
STORM SEWER	STS_X
STORM WATER	STW_X
SULFUR DIOXIDE	SO2_X
SULFURIC ACID	HSO4_X
SURFACE WASH	SW_X
TERTIARY TREATMENT	TERT_X
THICKENED PRIMARY SLUDGE	TPRS_X
THICKENED WASTE ACTIVATED SLUDGE	TWAS_X
THICKENING	THCK_X
TREATED WATER	TW_X
TRICKLING FILTER	TF_X
ULTRAVIOLET	UV_X
VACUUM	VAC_X
WASH WATER	WW_X
WASTE ACTIVATED SLUDGE	WAS_X
WASTE WASH WATER	WWW_X
WATER - CONDENSATE	CDW_X
WATER - COOLING	COLW_X
WATER - DISTILLED WATER	DW_X
WATER - FIRE	FW_X
WATER - IRRIGATION	IRW_X
WATER - OZONATED	OZW_X
WATER - SEAL	SWT_X
WATER - WATER HEATING	HW_X
WATER DEIONIZED	DEIW_X
WATER NON-POTABLE	NPW_X
WATER PLANT EFFLUENT	PEW_X
WATER POTABLE	PW_X
WATER RAW	RW_X
WET WEATHER TREATMENT	WWT_X
ZINC ORTHOPHOSPHATE	ZOP_X

X = PROCESS CODE SUFFIX USED TO FURTHER SPECIFY A PROCESS STREAM (I.E. CL2_G FOR CHLORINE GAS OR CL2_S FOR CHLORINE SOLUTION)

FUNCTION CODE ABBREVIATIONS

ACTIVATION CHAMBER	ACMB
ADJUSTABLE FREQUENCY DRIVE	AFD
AERATOR, COARSE BUBBLE DIFFUSED	ACD
AERATOR, FINE PORE DIFFUSED	AEFD
AERATOR, FLOATING SURFACE	AFS
AERATOR, SURFACE	AES
AFTERCOOLER	AFC
AIR COMPRESSOR	AC
AIR CONDITIONING UNIT	ACU
AIR DRYER	AD
AIR FILTER	AF
AIR HANDLING UNIT	AHU
AIR RECEIVER OR REGULATOR	AR
AIR SEPARATOR	AS
AIR STRIPPER	AST
BACKFLOW PREVENTER	BFP
BASIN, AERATION	BSNA
BASIN, ANOXIC/OXIC	BSNX
BASIN, BNR	BNR
BASIN, CHLORINE CONTACT	BSNC
BASIN, OXIC	BSNO
BASIN, RECTANGULAR SEDIMENTATION	RBSN
BELT FILTER PRESS	BFPS
BIN (STORAGE - ALL TYPES)	B
BIN ACTIVATOR	BA
BLOWER, CENTRIFUGAL	BLC
BLOWER, POSITIVE DISPLACEMENT	BL
BLOWER, PROCESS AIR	PAB
BOILER	BLR
BULLDOZER	BDZ
CALIBRATION COLUMN	CCLM
CENTRIFUGE	CFG
CHEMICAL FEEDER	CHF
CHLORINATOR	CL
CHLORINE GAS SCRUBBER	CGS
CHLORINE INJECTOR	CLI
CLARIFIER, PRIMARY	PCLR
CLARIFIER, SECONDARY	SCLR
CLASSIFIER, GRIT	CGR
CLEARWELL	CW
COMPRESSOR	CMP
COMPRESSOR, LIQUID RING	CMB
COMPRESSOR, ROTARY SCREW	CMR
COMPRESSOR, STEAM	CMPS
CONDENSER UNIT	CU
CONTAINER, PROCESS	CTR
CONVEYOR, BELT	COB
CONVEYOR, SCREW	COS
COVER, ALUMINUM DOME BASIN	CFA
COVER, FIXED DIGESTER	CFD
COVER, FLOATING DIGESTER	CFL
COVER, GAS HOLDER	DCG
COVER, MEMBRANE	DCM
CRANE	CRN
CRANE, GANTRY	CRG
CRANE, JIB	CRJ
CRANE, PORTABLE GANTRY	CRP
CRANE, TRAVELLING BRIDGE	CRT
CYLINDER, CHLORINE	CYL
CYLINDER, GAS	CYG
DEWATERING SCREW	DWS
DIAPHRAGM SEAL	DPS
DIFFUSER, CHANNEL	DIF
DIFFUSER BANK	DFB
DIFFUSER, PIPELINE	DIP
DIFFUSER, TANK	DIR
DIGESTER, AEROBIC	DGE
DIGESTER, ANAEROBIC PRIMARY	DGAP
DIGESTER, ANAEROBIC SECONDARY	DGAS
DISINFECTION UNIT, UV	DSUV
DISSOLVED AIR FLOTATION THICKENER	DAF
DUST COLLECTOR	DUC
EDUCTOR	EDC
ELECTRICAL EQUIPMENT, GENERAL	EQPE
EMERGENCY EYE WASH FOUNTAIN	EWSH
EMERGENCY SHOWER	ESHR
EMERGENCY SHOWER & EYEWASH	EMEW
EQUIPMENT, BUILDING SERVICES	EQPB
EQUIPMENT, GENERAL OR UNSPECIFIED	EQPT
EVAPORATOR	EV
EXPANSION CHAMBER	EXC
FAN, AXIAL FLOW	FAX
FAN, CENTRIFUGAL	FAN
FAN, VENTILATION	VF
FENCE STIRRER	FST
FILTER GAS PARTICULATE	FTSP
FILTER	F
FITTING, MISCELLANEOUS	FTTNG
FLAME ARRESTER	FAR
FLAME CHECK	FC
FLOCCULATOR, HORIZONTAL	FLCH
FLOCCULATOR, VERTICAL	FLCV
FLOOR DRAIN	FD
FLOW SPLITTER	FS
FLUME, PARSHALL	FE
FOAM SEPARATOR	FMSP
FORKLIFT	FL
GAS FEEDER	CHF
GAS FLARE	GF
GAS WATER HEATER	GWH
GATE, FLAP	GFL
GATE, SLIDE	SG
GATE, SLUICE	SLG
GATE, WEIR	G
GENERATOR, ENGINE (BACKUP POWER)	GEN
GRAVITY BELT THICKENER	GBT
GRAVITY THICKENER	GVT
GRINDER PULVERIZER	GRD
GRIT BASIN, VORTEX TYPE	GRB
GRIT SCREW CONCENTRATOR	GRV
HEAT EXCHANGER	HEX
HOIST	HST
HOIST, CHAIN	HSC
HOIST, WIRE ROPE	HSE
HYDRANT, FIRE	HYDF
HYDRANT, WALL	HYDW
HYDROCYCLONE	HYC
INJECTOR, CHEMICAL	INJ
INTERUPTING SWITCH	ISW
LIME SLAKER	LS
LIGHTS	LGHT
MEMBRANE	MFM
MEMBRANE, MICROFILTRATION	MBMF
MEMBRANE, NANOFILTRATION	MBNF
MEMBRANE, REVERSE OSMOSIS	MBRO
MEMBRANE, ULTRAFILTRATION	MBUF
MIXER, CARBON	MXC
MIXER, FLOCCULATION	FLM
MIXER, IN-LINE	MXI
MIXER, PUGMILL	MXPG
MIXER, RAPID	MXR
MIXER, STATIC	MXS
MIXER, SUBMERSIBLE, PROP OR BLENDER	MXP
MUFFIN MONSTER	MM
OVERFLOW ROOF DRAIN	ORD
OZONE DESTRUCT UNIT	ODU
OZONE GENERATOR	OGEN
OZONE POWER SUPPLY UNIT	PSU
PACKAGED PLANT	PP
PANEL, MOTOR CONTROL	MCC
PANEL, INSTRUMENTATION CONTROL	ICP
PARTICLE COUNTER	PCN
PELLETIZER	PLT
PENSTOCK	PS
PIPE	PIPE
PLATE SETTLER	PSE
POLYMER INJECTOR RING	INJ
PRESSURE BUILDING COIL	PBC
PULSATION DAMPNER	PD
PUMP, AIR DIAPHRAGM	PAD
PUMP, BACKWASH	BWP
PUMP, CENTRIFUGAL	PCL
PUMP, DIAPHRAGM METERING	PDM
PUMP, HEATING WATER	PHW
PUMP, HORIZONTAL END SUCTION	PHE
PUMP, HORIZONTAL SPLIT CASE	PSC
PUMP, NON-POTABLE WATER	NP
PUMP, PERISTALTIC	PPS
PUMP, PLUNGER	PPL
PUMP, PROGRESSING CAVITY	PPC
PUMP, SCREW ENCLOSED	PSE
PUMP, SCREW OPEN	PSE
PUMP, SUBMERSIBLE	PCL
PUMP, SUBMERSIBLE CHOPPER	PCH
PUMP, SUBMERSIBLE SUMP	PSS
PUMP, SUMP	PSP
PUMP, POSITIVE DISPLACEMENT, ROTARY, DRUM OR BELL MOUNTED	P
PUMP, VERTICAL DIFFUSION VANE	PVD
PUMP, VERTICAL END SUCTION	PVE
PUMP, VERTICAL WET PIT	PVW
RESERVOIR	RSV
RESIDUAL COLLECTOR	RCO
ROTAMETER	RM
RUPTURE DISK	RD
SAMPLER	SAMP
SCALE	SCL
SCALE, WEIGHT	SC
SCREEN, HORIZONTAL	SCRHT
SCREEN, INLINE SLUDGE	SCRI
SCREEN, MANUAL OR MECH CLEANED BAR	SCRA
SCREEN, STEP	SCRS
SCREEN, TRAVELLING WATER	SCT
SCREEN, VIBRATORY	SCR
SCRUBBER	SCU
SCUM COLLECTOR	SMC
SCUM WEIR - ROTATING	SCW
SEPARATOR, MOISTURE OR CYCLONE	SEP
SIGHT GLASS - TALL	SGT
SIGHT GAUGE	SG
SILENCER	SIL
SLUDGE COLLECTOR, CIRCULAR	SLC
SLUDGE COLLECTOR, CROSS	GCLR
SLUDGE COLLECTOR, FLOC-CLARIFYING	SFC
SLUDGE COLLECTOR, SEC CLARIFIERS	SCS
SLUDGE COLLECTOR, SOLIDS CONTACT	SSC
SLUDGE COLLECTOR, STRAIGHT LINE	SLCS
SLUDGE GRINDER, INLINE OR CHANNEL	GRD
SOLIDS BLENDER-INLINE	SBL
STRAINER	STR
STRAINER BASKET TYPE	STRB
STRAINER Y TYPE	STRY
SURGE CHAMBER	SRCH
TANK, ABOVE GROUND STORAGE	TSA
TANK, AMMONIA STORAGE	TCN
TANK, CRYOGENIC STORAGE	TCR
TANK, DOUBLE WALL	DWT
TANK, ELEVATED STORAGE	TSE
TANK, EXPANSION	TX
TANK, FRP CHEMICAL STORAGE	TNK
TANK, GENERAL OR UNSPECIFIED	TNK
TANK, METHANOL	TCP
TANK, SAMPLER	SMPT
TANK, CHLORINE CONTACTOR	TCS
TANK, FLAT TOP STEEL WATER	TSW
TRAP, DRIP	TRP
TRAP, SEDIMENT	TRPS
TRUCK	TRK
TURBINE	TB
TURBINE COMPRESSOR	TBC
TURBINE ENGINE	TBG
UNINTERRUPTABLE POWER SUPPLY	UPS
UV REACTOR	UVE
UV REACTOR, HORIZONTAL OR VERTICAL	UVL
VACUUM BREAK	VB
VACUUM REGULATOR	VRG
VALVE, AIR RELEASE	AVR
VALVE, AIR-VACUUM	AVRV
VALVE, ANGLE	VAG
VALVE, BALL	BV
VALVE, BUTTERFLY	BFV
VALVE, BACKFLOW PREVENTER	VBFP
VALVE, BALL MISCELLANEOUS	VBM
VALVE, CHECK	CV
VALVE, CONE	VCN
VALVE, DIAPHRAGM OPERATED	VDG
VALVE, DOUBLE DISC GATE	VGD
VALVE, ECCENTRIC PLUG	VPL
VALVE, EXPLOSION RELIEF	VER
VALVE, FOUR WAY	VFW
VALVE, GATE	GV
VALVE, GENERAL OR UNSPECIFIED	V
VALVE, GLOBE	GLV
VALVE, INDUSTRIAL BUTTERFLY	VBI
VALVE, KNIFE GATE	VKG
VALVE, MATERIAL HANDLING ROTARY	VMR
VALVE, MUD	VMD
VALVE, NEEDLE	VND
VALVE, PILOT	PTV
VALVE, PINCH	VPN
VALVE, PISTON OPERATED	VPO
VALVE, PLUG	VPL
VALVE, PRESSURE REDUCING	VPC
VALVE, PRESSURE SUSTAINING	VPC
VALVE, PRESSURE RELIEF	VSP
VALVE, PRESSURE/VACUUM RELIEF	VSPV
VALVE, PROCESS	VP
VALVE, RESILIENT SEATED GATE	VGR
VALVE, SAFETY	VS
VALVE, SLEEVE	VSLV
VALVE, SOLENOID	SV
VALVE, TELESCOPING	VTV
VALVE, THERMAL SHUTOFF	VTS
VALVE, THREE WAY	VTW
VALVE, VACUUM BREAKER	VVB
VALVE, VACUUM RELIEF	VSV
VALVE, V-PORT BALL	VVP
VAPORIZER	VAP
VESSEL, BOOT	VSLB
WEIR, CIPOLETTI	WC
WEIR, RECTANGULAR	WR
WEIR, V-NOTCH	WV
WELL, HORIZONTAL COLLECTOR	WLHC
WELL, VERTICAL	WLV

STATE OF TEXAS CARLOS A. CHAVEZ 119722 LICENSED PROFESSIONAL ENGINEER
Carlos Chavez 6/7/2016

REVISIONS

NO.	DR	CK	DATE	DESCRIPTION

BLACK & VEATCH
Building a world of difference.
Black & Veatch Corporation
Registration No. F-258
Austin, Texas

STATE OF TEXAS CHARLES E. MORRIS 106414 LICENSED PROFESSIONAL ENGINEER
9/25/2014

Austin WATER
Walnut Creek WWTP - Tertiary Filter Rehabilitation Project
CIP ID No. 3023.025

PROCESS AND INSTRUMENTATION DIAGRAM LEGENDS AND ABBREVIATIONS SHEET 3 OF 3

DESIGNED BY:	KWS
DRAWN BY:	KWS
REVIEWED BY:	CEM
APPROVED BY:	TLS
PROJECT NO.:	168622
DATE:	4/4/2014
SCALE:	NOT TO SCALE

REVISION:

DISCIPLINE NO.
PID-03

DWG. NO.

SAVED: SIM50325, 4/8/2014 8:16:33 AM
FD7000_PW D168622 09C5055 ID: Instrumentation Drawings
File: C:\PWBatchPDF\Process\168622 - Austin Walnut Creek WWTP Filter Rehab\PID_03.dwg Layout: Layout1 Plotted: 6/13/2016 1:24:08 PM

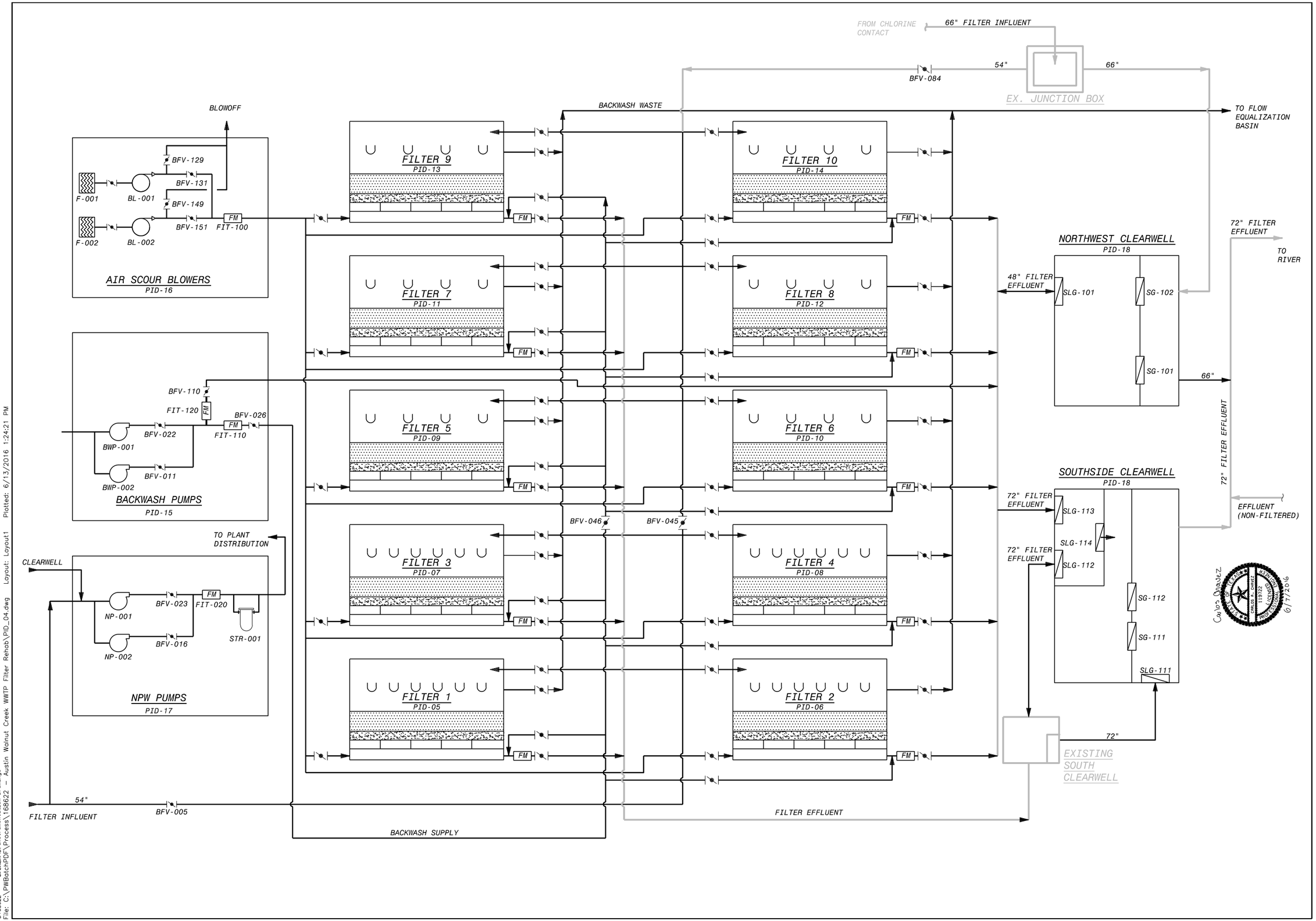

NO.	QR	CK	DATE	DESCRIPTION

REVISIONS

BLACK & VEATCH
Building a world of difference.
Black & Veatch Corporation
Registration No. F-439
Austin, Texas

TEXAS REGISTERED PROFESSIONAL ENGINEER
CHARLES E. MORRIS
106414
LICENSED
9/25/2014

Walnut Creek WWTP - Tertiary Filter Rehabilitation Project

Austin WATER

CIP ID No. 3023.025

PROCESS AND INSTRUMENTATION DIAGRAM
OVERALL PROCESS FLOW DIAGRAM

TEXAS REGISTERED PROFESSIONAL ENGINEER
CARLOS A. CHAVEZ
119722
LICENSED
6/17/2016

DESIGNED BY:	KWS
DRAWN BY:	KWS
REVIEWED BY:	CEM
APPROVED BY:	TLS
PROJECT NO.:	168622
DATE:	4/4/2014
SCALE:	NOT TO SCALE
REVISION:	
DISCIPLINE NO.	PID-04
DWG. NO.	193 OF 273

FD7000_PW SAVED: STM60205, 4/8/2014 8:17:57 AM
D168622 ORIGINAL SIZE: 36X24
File: C:\PWBatchPDF\Process\168622 - Austin Walnut Creek WWTP Filter Rehab\PID_04.dwg Layout: Layout1 Plotted: 6/13/2016 1:24:21 PM

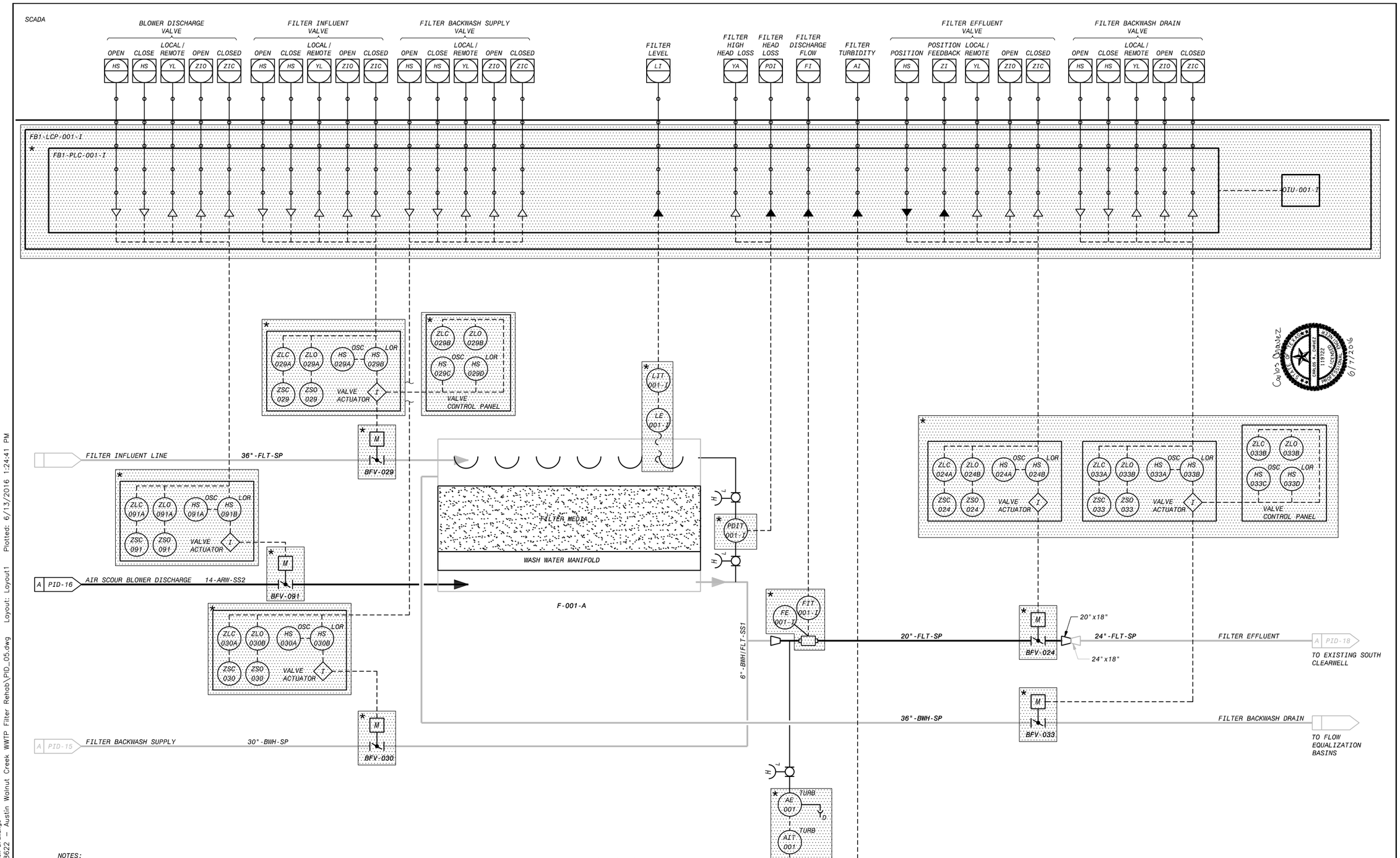

NOTES:
1. SEE LEGEND AND ABBREVIATIONS ON DRAWINGS PID-01, PID-02, AND PID-03.
2. AREA CODE IS FB1 UNLESS OTHERWISE NOTED.
3. LOCAL CONTROL DEVICES SUCH AS INDICATING LIGHTS AND SWITCHES, LOCATED ON MCCs OR AT EQUIPMENT, MAY NOT BE INDICATED ON THIS P&ID.
4. ALL VALVES, ACTUATORS, CONTROL PANELS, OR INSTRUMENTS MARKED BY A * ARE TO BE PROVIDED BY THE FCSS AND SHIPPED LOOSE TO BE INSTALLED BY THE INSTALLATION CONTRACTOR.
5. ALL REQUIRED VALVES AND PIPING MAY NOT BE SHOWN ON THIS P&ID.

FILTER NO. 1

REVISIONS

NO.	DR	CK	DATE	DESCRIPTION

BLACK & VEATCH
Building a world of difference.
Black & Veatch Corporation
Registration No. F-253
Austin, Texas

STATE OF TEXAS
CHARLES E. MORRIS
108414
LICENSED
PROFESSIONAL ENGINEER
9/23/2014

STATE OF TEXAS
CARLOS R. CHAVEZ
119322
LICENSED
PROFESSIONAL ENGINEER
6/17/2016

Walnut Creek WWTP - Tertiary Filter Rehabilitation Project
CIP ID No. 3023.025

Austin WATER

PROCESS AND INSTRUMENTATION DIAGRAM
FILTER NO. 1

DESIGNED BY:	KWS
DRAWN BY:	KWS
REVIEWED BY:	CEM
APPROVED BY:	TLS
PROJECT NO.:	168622
DATE:	4/4/2014
SCALE:	NOT TO SCALE

REVISION:

DISCIPLINE NO.
PID-05

DWG. NO.
194 OF 273

FD168622 SAVED: STM50025, 4/8/2014 8:19:51 AM
D168622 OPTIONS ID: Instrumentation Drawings
File: C:\PWBatchPDF\Process\168622 - Austin Walnut Creek WWTP Filter Rehab\PID_05.dwg Layout: Layout1 Plotted: 6/13/2016 1:24:41 PM

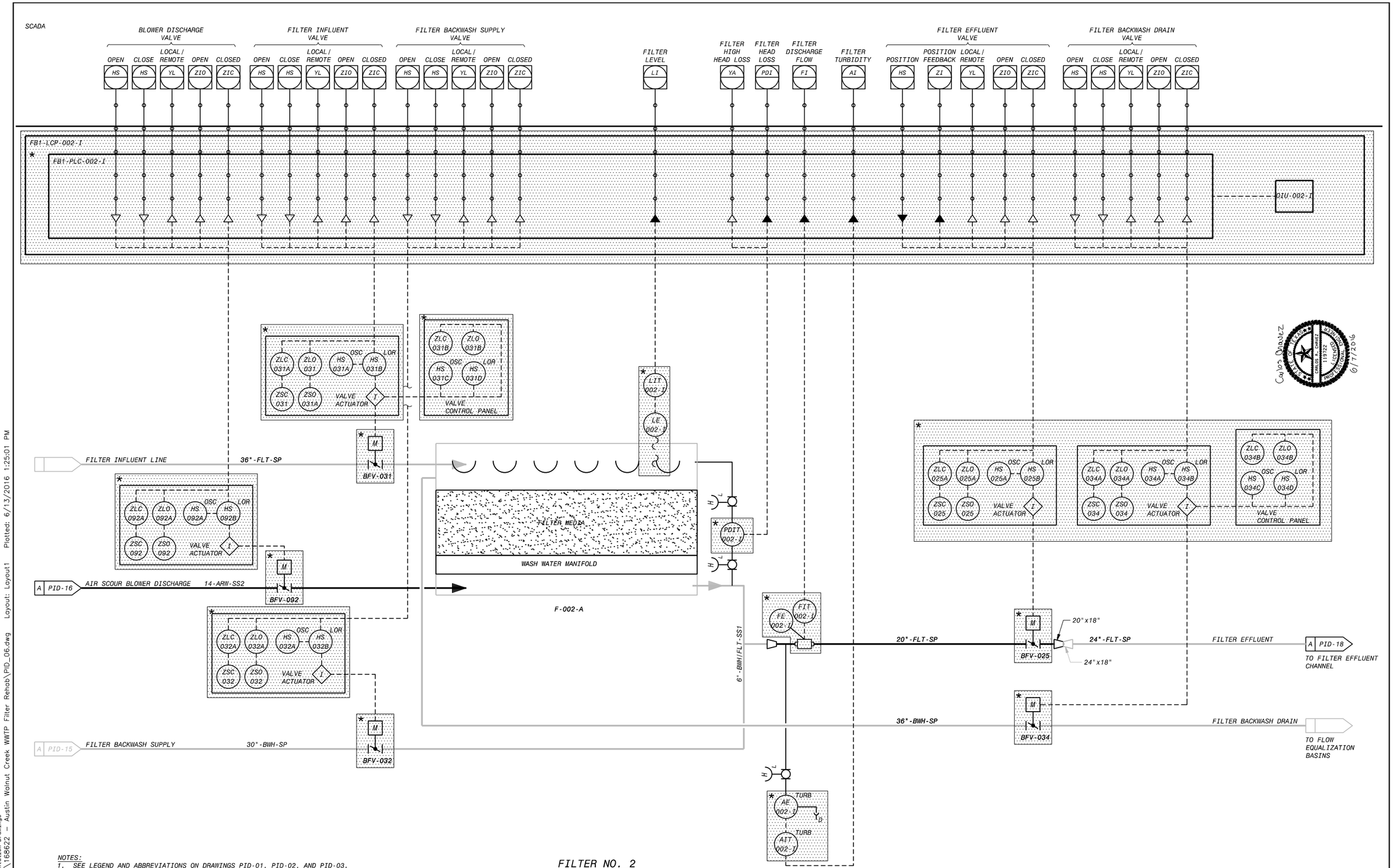

NOTES:
1. SEE LEGEND AND ABBREVIATIONS ON DRAWINGS PID-01, PID-02, AND PID-03.
2. AREA CODE IS FB1 UNLESS OTHERWISE NOTED.
3. LOCAL CONTROL DEVICES SUCH AS INDICATING LIGHTS AND SWITCHES, LOCATED ON MCCs OR AT EQUIPMENT, MAY NOT BE INDICATED ON THIS P&ID.
4. ALL VALVES, ACTUATORS, CONTROL PANELS, OR INSTRUMENTS MARKED BY A * ARE TO BE PROVIDED BY THE FCSS AND SHIPPED LOOSE TO BE INSTALLED BY THE INSTALLATION CONTRACTOR.
5. ALL REQUIRED VALVES AND PIPING MAY NOT BE SHOWN ON THIS P&ID.

FILTER NO. 2

NO.	DR	CK	DATE	DESCRIPTION

REVISIONS

BLACK & VEATCH
Building a world of difference.
Black & Veatch Corporation
Registration No. F-869
Austin, Texas

STATE OF TEXAS
CARLOS R. CHAVEZ
119722
LICENSED
PROFESSIONAL ENGINEER
6/13/2016

STATE OF TEXAS
CHARLES E. MORRIS
106414
LICENSED
PROFESSIONAL ENGINEER
9/23/2014

Walnut Creek WWTP - Tertiary Filter Rehabilitation Project
CIP ID No. 3023.025

Austin WATER

PROCESS AND INSTRUMENTATION DIAGRAM
FILTER NO. 2

DESIGNED BY:	KWS
DRAWN BY:	KWS
REVIEWED BY:	CEM
APPROVED BY:	TLS
PROJECT NO.:	168622
DATE:	4/4/2014
SCALE:	NOT TO SCALE
REVISION:	
DISCIPLINE NO.	PID-06
DWG. NO.	195 OF 273

FD168622 SAVED: SINGO326, 4/8/2014 8:20:46 AM
D168622 PLOTTED BY: Instrumentation Drawings
File: C:\PWBatchPDF\Process\168622 - Austin Walnut Creek WWTP Filter Rehab\PID_06.dwg Layout: Layout1 Plotted: 6/13/2016 1:25:01 PM

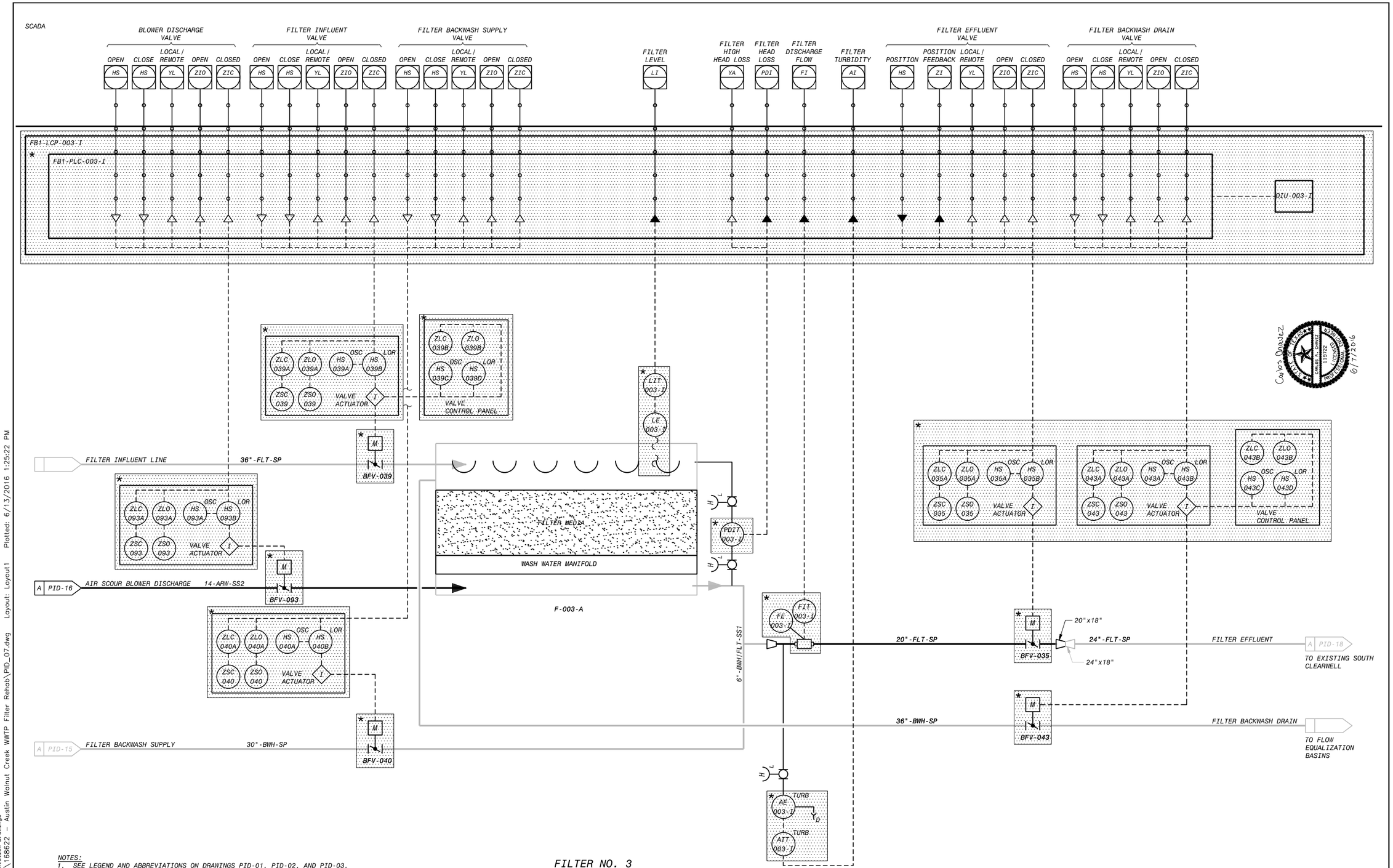

NOTES:
1. SEE LEGEND AND ABBREVIATIONS ON DRAWINGS PID-01, PID-02, AND PID-03.
2. AREA CODE IS FB1 UNLESS OTHERWISE NOTED.
3. LOCAL CONTROL DEVICES SUCH AS INDICATING LIGHTS AND SWITCHES, LOCATED ON MCCs OR AT EQUIPMENT, MAY NOT BE INDICATED ON THIS P&ID.
4. ALL VALVES, ACTUATORS, CONTROL PANELS, OR INSTRUMENTS MARKED BY A * ARE TO BE PROVIDED BY THE FCSS AND SHIPPED LOOSE TO BE INSTALLED BY THE INSTALLATION CONTRACTOR.
5. ALL REQUIRED VALVES AND PIPING MAY NOT BE SHOWN ON THIS P&ID.

FILTER NO. 3

NO.	DR	CK	DATE	DESCRIPTION

REVISIONS

BLACK & VEATCH
Building a world of difference.
Black & Veatch Corporation
Registration No. F-869
Austin, Texas

Walnut Creek WWTP - Tertiary Filter Rehabilitation Project
CIP ID No. 3023.025
Austin Water

PROCESS AND INSTRUMENTATION DIAGRAM
FILTER NO. 3

DESIGNED BY:	KWS
DRAWN BY:	KWS
REVIEWED BY:	CEM
APPROVED BY:	TLS
PROJECT NO.:	168622
DATE:	4/4/2014
SCALE:	NOT TO SCALE
REVISION:	

DISCIPLINE NO. PID-07

DWG. NO. 196 OF 273

FD168622 SAVED: SIMG026, 4/8/2014 8:21:47 AM
D168622 PLOTTED BY: Instrumentation Drawings
File: C:\PWBatchPDF\Process\168622 - Austin Walnut Creek WWTP Filter Rehab\PID_07.dwg Layout: Layout1 Plotted: 6/13/2016 1:25:22 PM

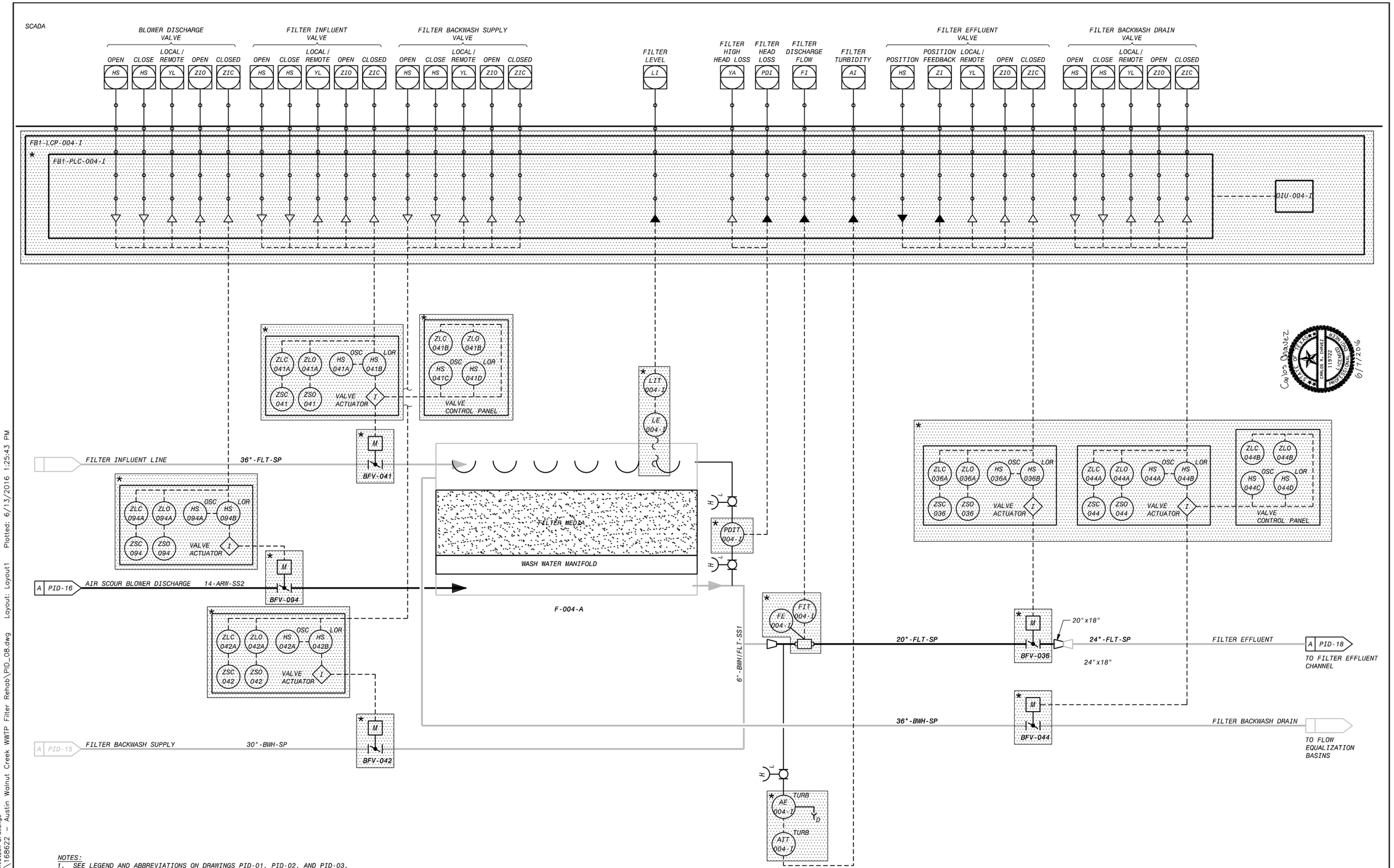

NOTES:
1. SEE LEGEND AND ABBREVIATIONS ON DRAWINGS PID-01, PID-02, AND PID-03.
2. AREA CODE IS FB1 UNLESS OTHERWISE NOTED.
3. LOCAL CONTROL DEVICES SUCH AS INDICATING LIGHTS AND SWITCHES, LOCATED ON MCCs OR AT EQUIPMENT, MAY NOT BE INDICATED ON THIS P&ID.
4. ALL VALVES, ACTUATORS, CONTROL PANELS, OR INSTRUMENTS MARKED BY A * ARE TO BE PROVIDED BY THE FCSS AND SHIPPED LOOSE TO BE INSTALLED BY THE INSTALLATION CONTRACTOR.
5. ALL REQUIRED VALVES AND PIPING MAY NOT BE SHOWN ON THIS P&ID.

FILTER NO. 4

NO.	BY	CK	DATE	DESCRIPTION

REVISIONS

BLACK & VEATCH
Building a world of difference.
Black & Veatch Corporation
Registration No. F-569
Austin, Texas

Carlos Gonzalez
CARLOS A. GONZALEZ
119722
LICENSED
PROFESSIONAL ENGINEER
STATE OF TEXAS
6/7/2016

CHARLES E. MORRIS
106414
LICENSED
PROFESSIONAL ENGINEER
STATE OF TEXAS
9/23/2014

Austin WATER

Walnut Creek WWTP - Tertiary Filter Rehabilitation Project
CIP ID No. 3023.025

PROCESS AND INSTRUMENTATION DIAGRAM
FILTER NO. 4

DESIGNED BY:	KWS
DRAWN BY:	KWS
REVIEWED BY:	CEM
APPROVED BY:	TLS
PROJECT NO.:	168622
DATE:	4/4/2014
SCALE:	NOT TO SCALE
REVISION:	
DISCIPLINE NO.	PID-08
DWG. NO.	197 OF 273

FD168622 SAVED: SIMGO326, 4/8/2014 8:22:37 AM
D168622 PLOTTED BY: Instrumentation Drawings
File: C:\PWBatchPDF\Process\168622 - Austin Walnut Creek WWTP Filter Rehab\PID_08.dwg Layout: Layout1 Plotted: 6/13/2016 1:25:43 PM

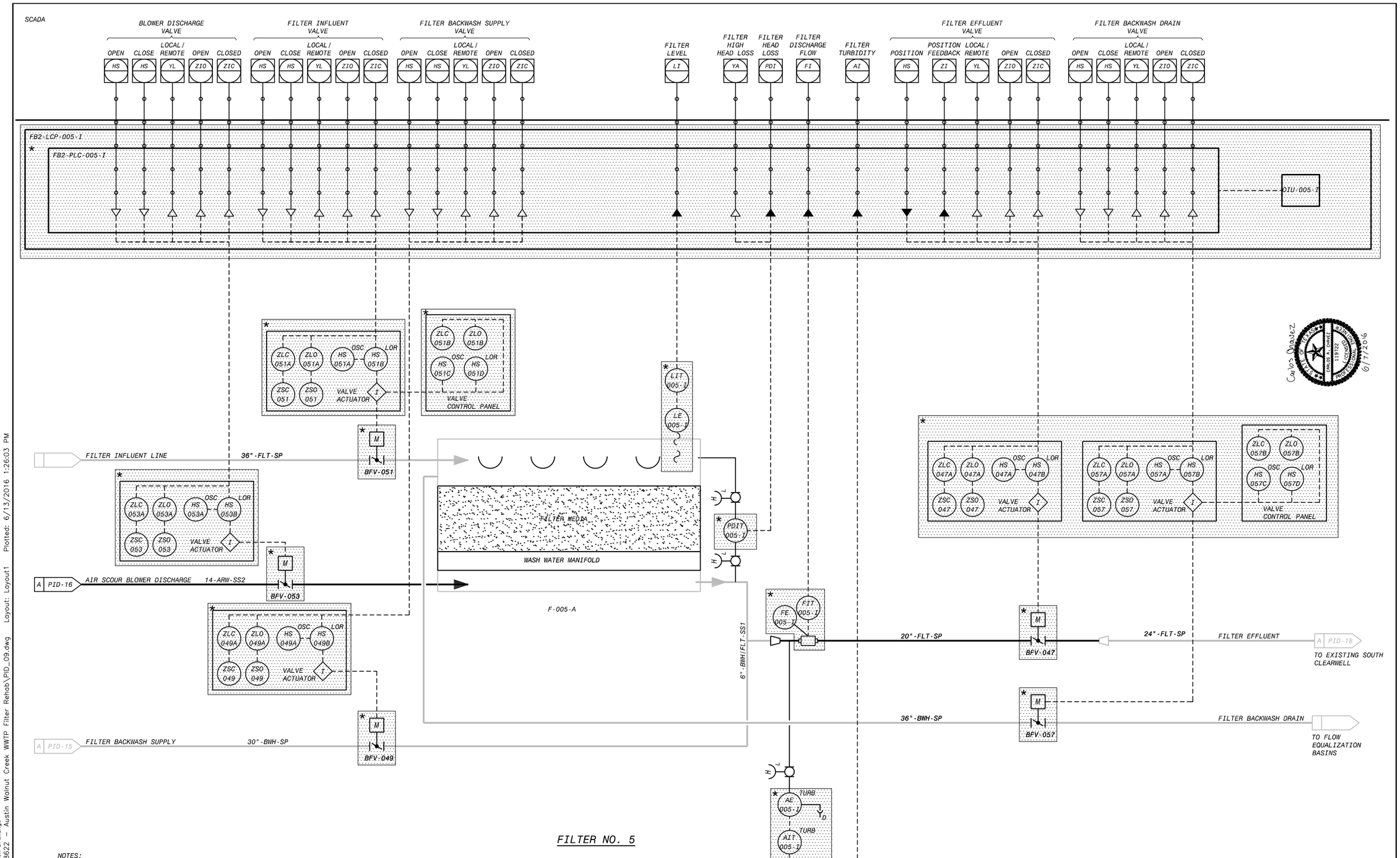

FILTER NO. 5

NOTES:
1. SEE LEGEND AND ABBREVIATIONS ON DRAWINGS PID-01, PID-02, AND PID-03.
2. AREA CODE IS FB2 UNLESS OTHERWISE NOTED.
3. LOCAL CONTROL DEVICES SUCH AS INDICATING LIGHTS AND SWITCHES, LOCATED ON MCCs OR AT EQUIPMENT, MAY NOT BE INDICATED ON THIS P&ID.
4. ALL VALVES, ACTUATORS, CONTROL PANELS, OR INSTRUMENTS MARKED BY A * ARE TO BE PROVIDED BY THE FCSS AND SHIPPED LOOSE TO BE INSTALLED BY THE INSTALLATION CONTRACTOR.
5. ALL REQUIRED VALVES AND PIPING MAY NOT BE SHOWN ON THIS P&ID.

REVISIONS

NO.	DR	CK	DATE	DESCRIPTION

BLACK & VEATCH
Building a world of difference.
Black & Veatch Corporation
Registration No. F-253
Austin, Texas

Walnut Creek WWTP - Tertiary Filter Rehabilitation Project
CIP ID No. 3023.025

PROCESS AND INSTRUMENTATION DIAGRAM
FILTER NO. 5

DESIGNED BY:	KWS
DRAWN BY:	KWS
REVIEWED BY:	CEM
APPROVED BY:	TLS
PROJECT NO.:	168622
DATE:	4/4/2014
SCALE:	NOT TO SCALE
REVISION:	

DISCIPLINE NO. PID-09

DWG. NO. 198 OF 273

FD168622 SAVED: STM50025, 4/8/2014 8:23:44 AM
D168622 DWG: PID-09 Instrumentation Drawings
File: C:\PWBatchPDF\Process\168622 - Austin Walnut Creek WWTP Filter Rehab\PID_09.dwg Layout: Layout1 Plotted: 6/13/2016 1:26:03 PM

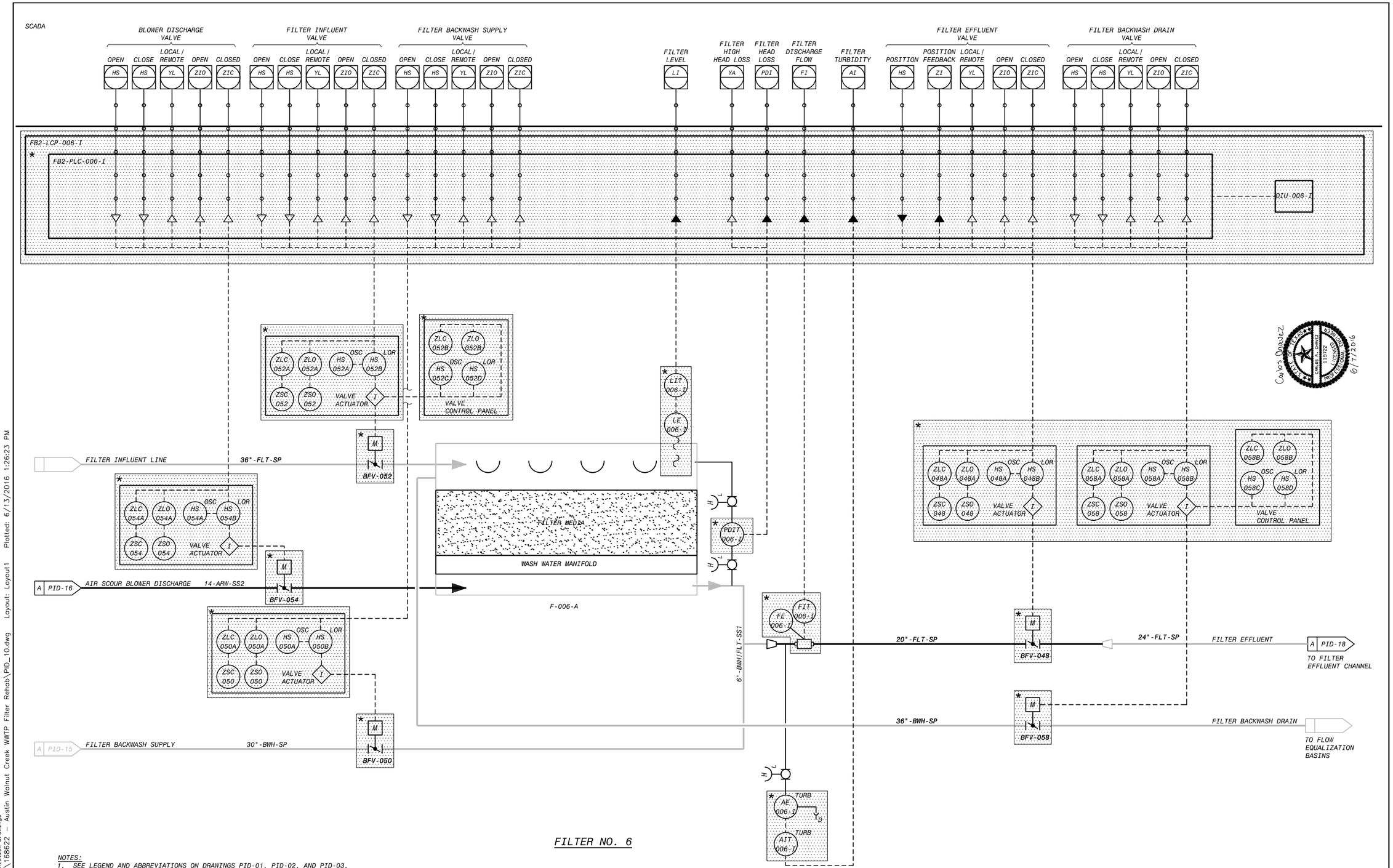

FILTER NO. 6

NOTES:
1. SEE LEGEND AND ABBREVIATIONS ON DRAWINGS PID-01, PID-02, AND PID-03.
2. AREA CODE IS FB2 UNLESS OTHERWISE NOTED.
3. LOCAL CONTROL DEVICES SUCH AS INDICATING LIGHTS AND SWITCHES, LOCATED ON MCCs OR AT EQUIPMENT, MAY NOT BE INDICATED ON THIS P&ID.
4. ALL VALVES, ACTUATORS, CONTROL PANELS, OR INSTRUMENTS MARKED BY A * ARE TO BE PROVIDED BY THE FCSS AND SHIPPED LOOSE TO BE INSTALLED BY THE INSTALLATION CONTRACTOR.
5. ALL REQUIRED VALVES AND PIPING MAY NOT BE SHOWN ON THIS P&ID.

NO.	DR	CK	DATE	DESCRIPTION

REVISIONS

BLACK & VEATCH
Building a world of difference.
Black & Veatch Corporation
Registration No. F-869
Austin, Texas

Walnut Creek WWTP - Tertiary Filter Rehabilitation Project
CIP ID No. 3023.025

Austin WATER

PROCESS AND INSTRUMENTATION DIAGRAM
FILTER NO. 6

DESIGNED BY:	KWS
DRAWN BY:	KWS
REVIEWED BY:	CEM
APPROVED BY:	TLS
PROJECT NO.:	168622
DATE:	4/4/2014
SCALE:	
REVISION:	
DISCIPLINE NO.	PID-10
DWG. NO.	199 OF 273

FD168622 SAVED: SIMG026, 4/8/2014 8:24:39 AM
D168622 PLOTTED BY: Instrumentation Drawings
File: C:\PWBatchPDF\Process\168622 - Austin Walnut Creek WWTP Filter Rehab\PID_10.dwg Layout: Layout1 Plotted: 6/13/2016 1:26:23 PM

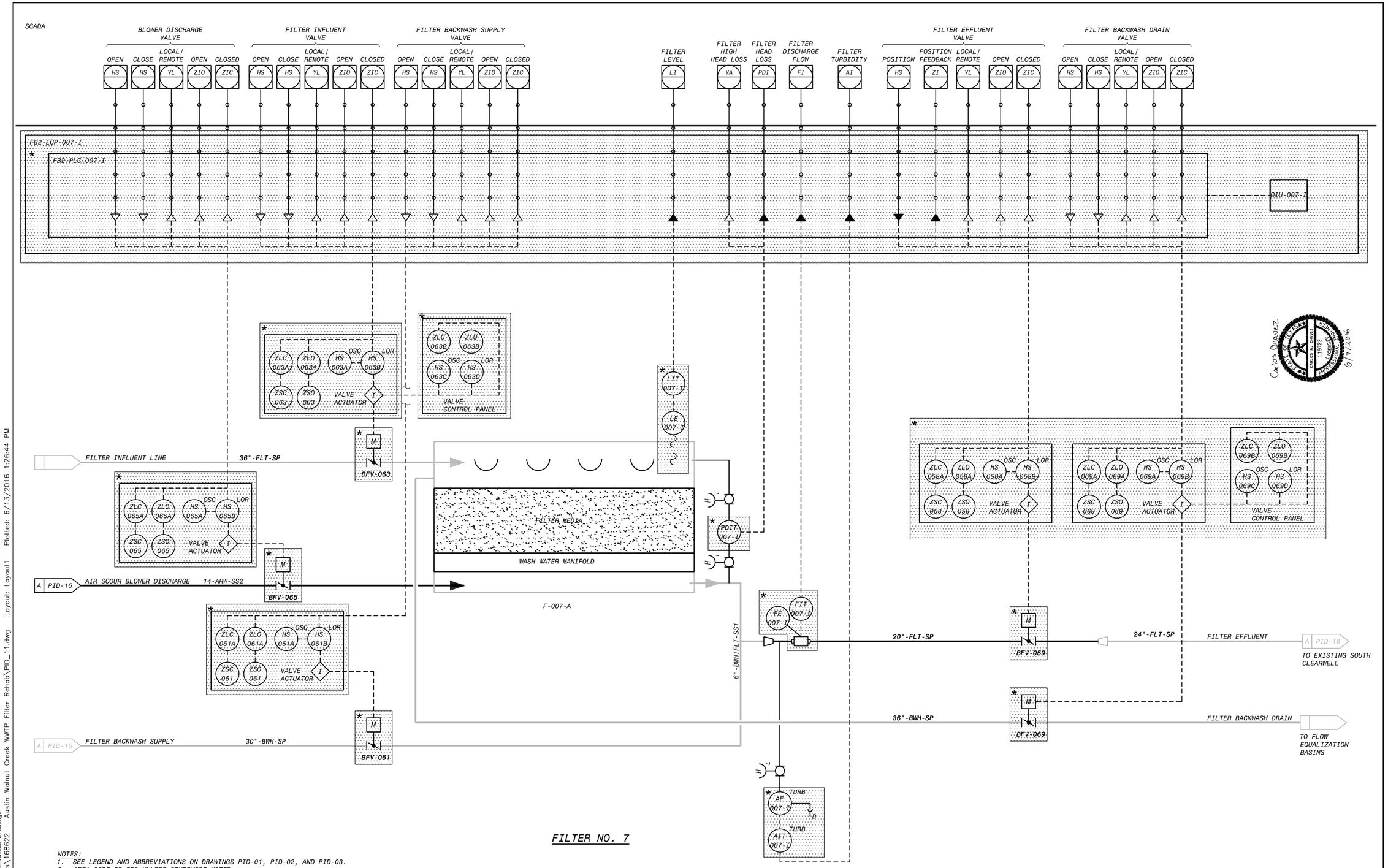

FILTER NO. 7

NOTES:
1. SEE LEGEND AND ABBREVIATIONS ON DRAWINGS PID-01, PID-02, AND PID-03.
2. AREA CODE IS FB2 UNLESS OTHERWISE NOTED.
3. LOCAL CONTROL DEVICES SUCH AS INDICATING LIGHTS AND SWITCHES, LOCATED ON MCCs OR AT EQUIPMENT, MAY NOT BE INDICATED ON THIS P&ID.
4. ALL VALVES, ACTUATORS, CONTROL PANELS, OR INSTRUMENTS MARKED BY A * ARE TO BE PROVIDED BY THE FCSS AND SHIPPED LOOSE TO BE INSTALLED BY THE INSTALLATION CONTRACTOR.
5. ALL REQUIRED VALVES AND PIPING MAY NOT BE SHOWN ON THIS P&ID.

NO.	DR	CK	DATE	DESCRIPTION

REVISIONS

BLACK & VEATCH
Building a world of difference.
Black & Veatch Corporation
Registration No. F-569
Austin, Texas

Carlos Ordonez
CARLOS M. ORDONEZ
119722
LICENSED
PROFESSIONAL ENGINEER
TEXAS
9/17/2014

CHARLES E. MORRIS
106414
LICENSED
PROFESSIONAL ENGINEER
TEXAS
9/23/2014

Austin WATER

Walnut Creek WWTP - Tertiary Filter Rehabilitation Project

CIP ID No. 3023.025

PROCESS AND INSTRUMENTATION DIAGRAM
FILTER NO. 7

DESIGNED BY:	KWS
DRAWN BY:	KWS
REVIEWED BY:	CEM
APPROVED BY:	TLS
PROJECT NO.:	168622
DATE:	4/4/2014
SCALE:	NOT TO SCALE
REVISION:	
DISCIPLINE NO.	PID-11
DWG. NO.	200 OF 273

FD168622 SAVED: SINGO326, 4/8/2014 8:26:07 AM
D168622 PW CACHE ID: Instrumentation Drawings
File: C:\PWBatchPDF\Process\168622 - Austin Walnut Creek WWTP Filter Rehab\PID_11.dwg Layout: Layout1 Plotted: 6/13/2016 1:26:44 PM

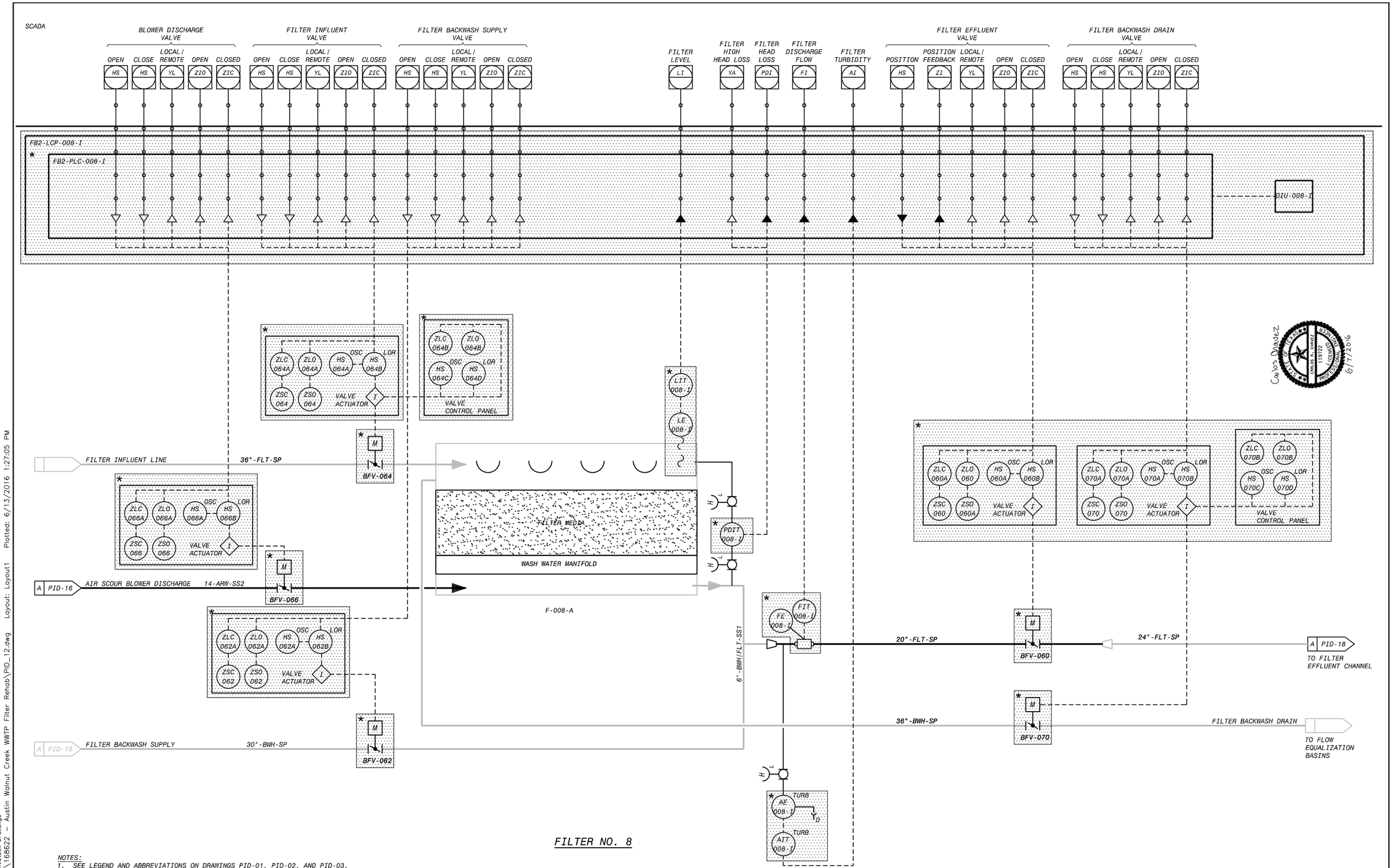

FILTER NO. 8

NOTES:
1. SEE LEGEND AND ABBREVIATIONS ON DRAWINGS PID-01, PID-02, AND PID-03.
2. AREA CODE IS FB2 UNLESS OTHERWISE NOTED.
3. LOCAL CONTROL DEVICES SUCH AS INDICATING LIGHTS AND SWITCHES, LOCATED ON MCCs OR AT EQUIPMENT, MAY NOT BE INDICATED ON THIS P&ID.
4. ALL VALVES, ACTUATORS, CONTROL PANELS, OR INSTRUMENTS MARKED BY A * ARE TO BE PROVIDED BY THE FCSS AND SHIPPED LOOSE TO BE INSTALLED BY THE INSTALLATION CONTRACTOR.
5. ALL REQUIRED VALVES AND PIPING MAY NOT BE SHOWN ON THIS P&ID.

NO.	DR	CK	DATE	DESCRIPTION

REVISIONS

BLACK & VEATCH
Building a world of difference.
Black & Veatch Corporation
Registration No. F-869
Austin, Texas

STATE OF TEXAS
CARLOS CHAVEZ
119172
LICENSED
PROFESSIONAL ENGINEER
6/7/2016

STATE OF TEXAS
CHARLES E. MORRIS
106414
LICENSED
PROFESSIONAL ENGINEER
9/23/2014

Austin WATER

Walnut Creek WWTP - Tertiary Filter Rehabilitation Project
CIP ID No. 3023.025

PROCESS AND INSTRUMENTATION DIAGRAM
FILTER NO. 8

DESIGNED BY:	KWS
DRAWN BY:	KWS
REVIEWED BY:	CEM
APPROVED BY:	TLS
PROJECT NO.:	168622
DATE:	4/4/2014
SCALE:	NOT TO SCALE
REVISION:	
DISCIPLINE NO.	PID-12
DWG. NO.	201 OF 273

FD168622 SAVED: SIMGO326, 4/8/2014 8:27:12 AM
D168622 PLOTTED BY: Instrumentation Drawings
File: C:\PWBatchPDF\Process\168622 - Austin Walnut Creek WWTP Filter Rehab\PID_12.dwg Layout: Layout1 Plotted: 6/13/2016 1:27:05 PM

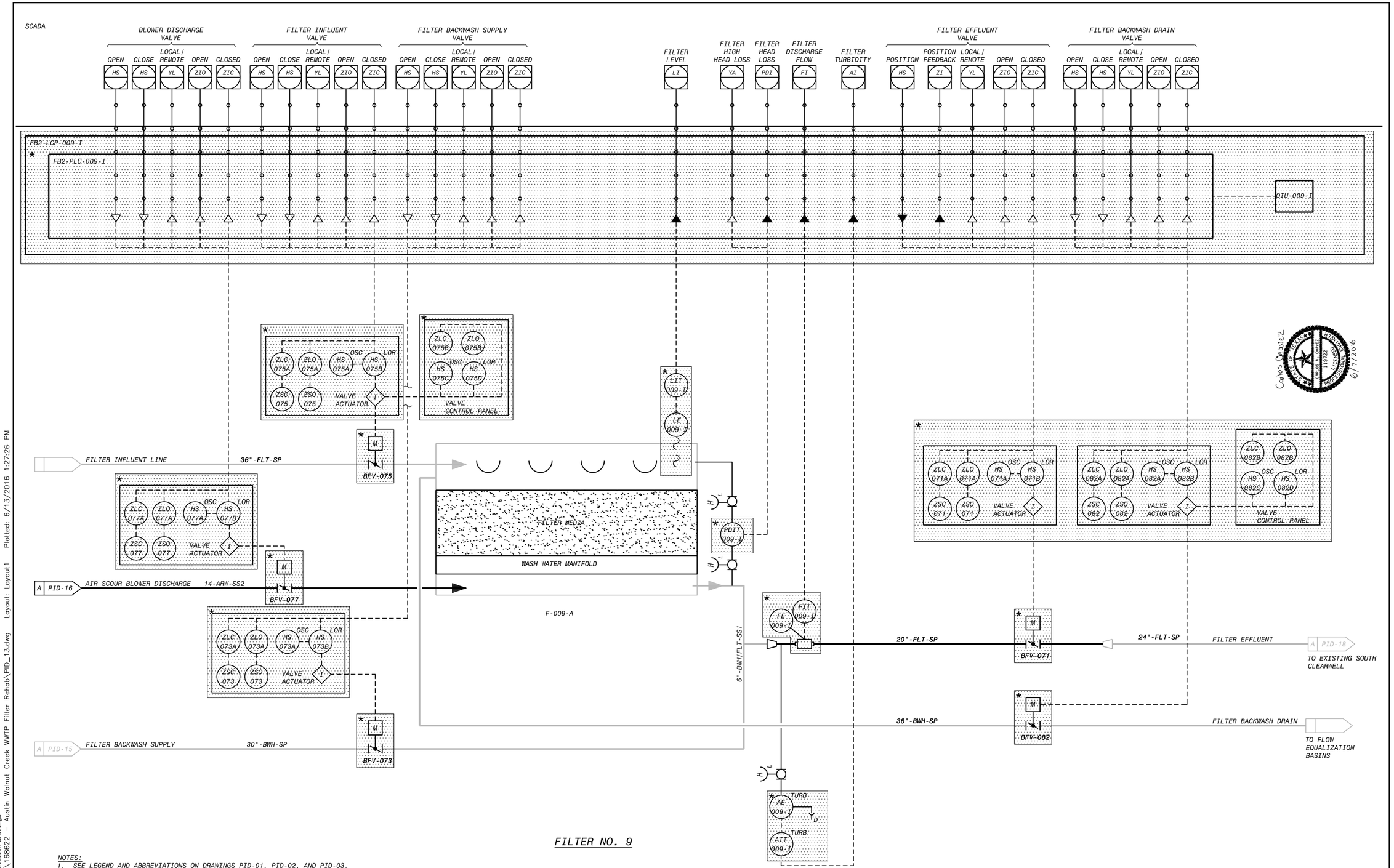

FILTER NO. 9

NOTES:
1. SEE LEGEND AND ABBREVIATIONS ON DRAWINGS PID-01, PID-02, AND PID-03.
2. AREA CODE IS FB2 UNLESS OTHERWISE NOTED.
3. LOCAL CONTROL DEVICES SUCH AS INDICATING LIGHTS AND SWITCHES, LOCATED ON MCCs OR AT EQUIPMENT, MAY NOT BE INDICATED ON THIS P&ID.
4. ALL VALVES, ACTUATORS, CONTROL PANELS, OR INSTRUMENTS MARKED BY A * ARE TO BE PROVIDED BY THE FCSS AND SHIPPED LOOSE TO BE INSTALLED BY THE INSTALLATION CONTRACTOR.
5. ALL REQUIRED VALVES AND PIPING MAY NOT BE SHOWN ON THIS P&ID.

NO.	BY	CK	DATE	DESCRIPTION

REVISIONS

BLACK & VEATCH
Building a world of difference.
Black & Veatch Corporation
Registration No. F-869
Austin, Texas

Carlos Ortiz
6/14/16

CHARLES E. MORRIS
106414
PROFESSIONAL ENGINEER
9/23/2014

Walnut Creek WWTP - Tertiary Filter Rehabilitation Project
CIP ID No. 3023.025

Austin WATER

PROCESS AND INSTRUMENTATION DIAGRAM
FILTER NO. 9

DESIGNED BY:	KWS
DRAWN BY:	KWS
REVIEWED BY:	CEM
APPROVED BY:	TLS
PROJECT NO.:	168622
DATE:	4/4/2014
SCALE:	NOT TO SCALE
REVISION:	
DISCIPLINE NO.	PID-13
DWG. NO.	202 OF 273

FD168622 SAVED: SINGO326, 4/8/2014 8:34:38 AM
D168622 PW WORKSPACE ID: Instrumentation Drawings
File: C:\PWBatchPDF\Process\168622 - Austin Walnut Creek WWTP Filter Rehab\PID_13.dwg Layout: Layout1 Plotted: 6/13/2016 1:27:26 PM

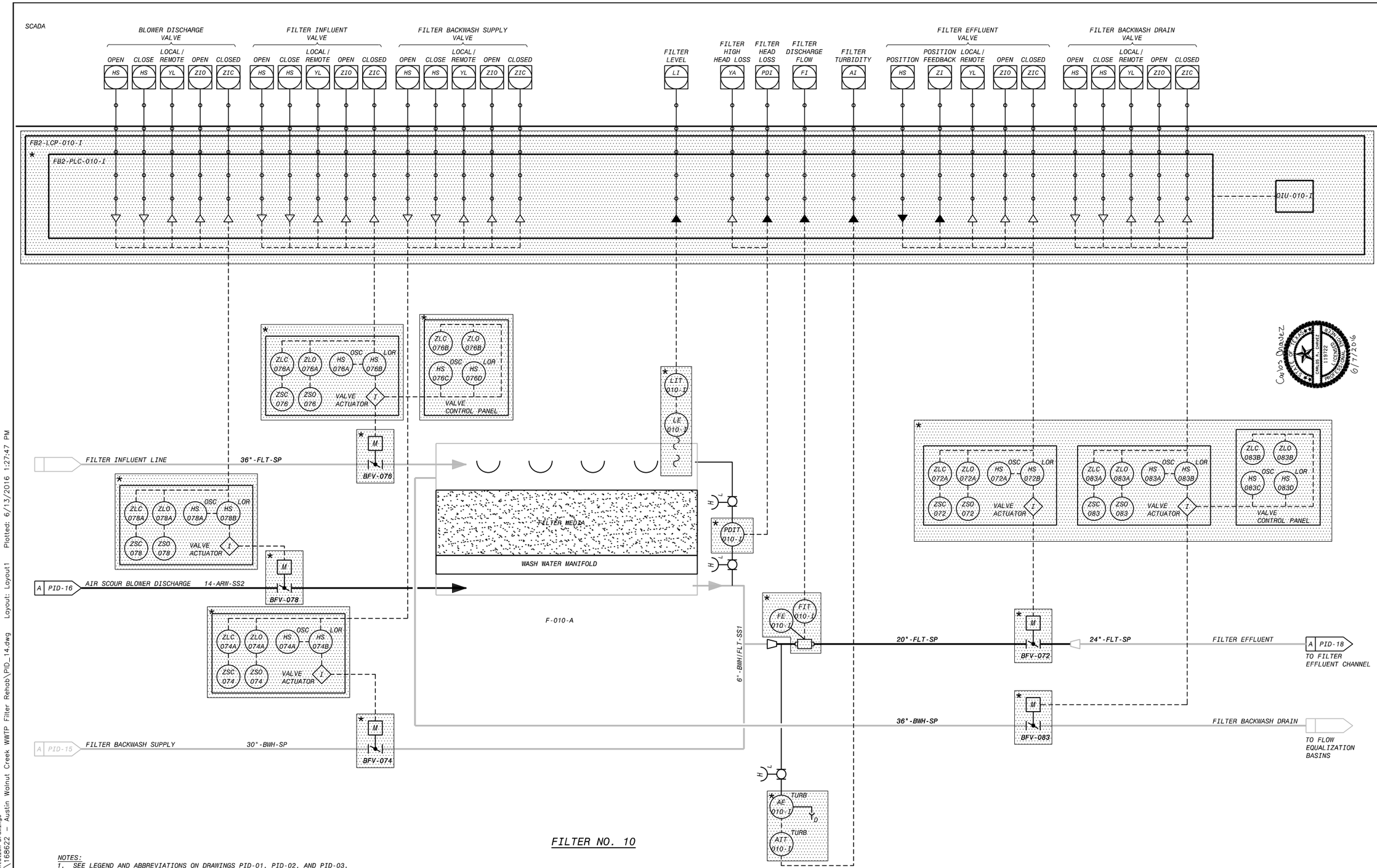

FILTER NO. 10

NOTES:
1. SEE LEGEND AND ABBREVIATIONS ON DRAWINGS PID-01, PID-02, AND PID-03.
2. AREA CODE IS FB2 UNLESS OTHERWISE NOTED.
3. LOCAL CONTROL DEVICES SUCH AS INDICATING LIGHTS AND SWITCHES, LOCATED ON MCCs OR AT EQUIPMENT, MAY NOT BE INDICATED ON THIS P&ID.
4. ALL VALVES, ACTUATORS, CONTROL PANELS, OR INSTRUMENTS MARKED BY A * ARE TO BE PROVIDED BY THE FCSS AND SHIPPED LOOSE TO BE INSTALLED BY THE INSTALLATION CONTRACTOR.
5. ALL REQUIRED VALVES AND PIPING MAY NOT BE SHOWN ON THIS P&ID.

NO.	DR	CK	DATE	DESCRIPTION

REVISIONS

BLACK & VEATCH
Building a world of difference.
Black & Veatch Corporation
Registration No. F-869
Austin, Texas

Walnut Creek WWTP - Tertiary Filter Rehabilitation Project
CIP ID No. 3023.025
Austin Water

PROCESS AND INSTRUMENTATION DIAGRAM
FILTER NO. 10

DESIGNED BY:	KWS
DRAWN BY:	KWS
REVIEWED BY:	CEM
APPROVED BY:	TLS
PROJECT NO.:	168622
DATE:	4/4/2014
SCALE:	NOT TO SCALE
REVISION:	
DISCIPLINE NO.	PID-14
DWG. NO.	203 OF 273

FD168622 SAVED: SIMG026, 4/8/2014 8:35:19 AM
D168622 CACHED ID: Instrumentation Drawings
File: C:\PWBatchPDF\Process\168622 - Austin Walnut Creek WWTP Filter Rehab\PID_14.dwg Layout: Layout1 Plotted: 6/13/2016 1:27:47 PM

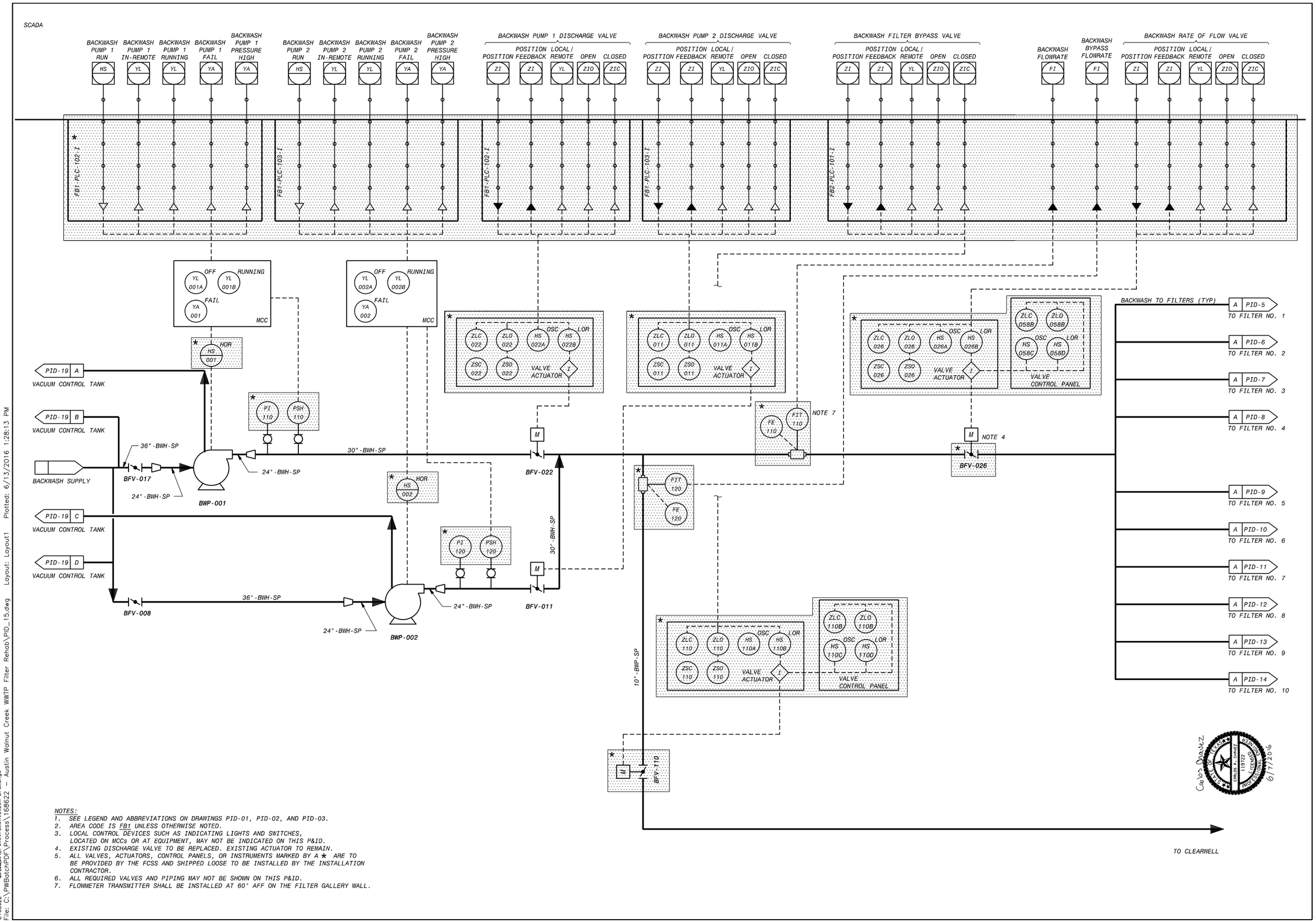

NOTES:
1. SEE LEGEND AND ABBREVIATIONS ON DRAWINGS PID-01, PID-02, AND PID-03.
2. AREA CODE IS FB1 UNLESS OTHERWISE NOTED.
3. LOCAL CONTROL DEVICES SUCH AS INDICATING LIGHTS AND SWITCHES, LOCATED ON MCCs OR AT EQUIPMENT, MAY NOT BE INDICATED ON THIS P&ID.
4. EXISTING DISCHARGE VALVE TO BE REPLACED. EXISTING ACTUATOR TO REMAIN.
5. ALL VALVES, ACTUATORS, CONTROL PANELS, OR INSTRUMENTS MARKED BY A * ARE TO BE PROVIDED BY THE FCSS AND SHIPPED LOOSE TO BE INSTALLED BY THE INSTALLATION CONTRACTOR.
6. ALL REQUIRED VALVES AND PIPING MAY NOT BE SHOWN ON THIS P&ID.
7. FLOWMETER TRANSMITTER SHALL BE INSTALLED AT 60" AFF ON THE FILTER GALLERY WALL.

NO.	BY	CK	DATE	DESCRIPTION

REVISIONS

BLACK & VEATCH
Building a world of difference.
Black & Veatch Corporation
Registration No. F-569
Austin, Texas

STATE OF TEXAS
CHARLES E. MORRIS
106114
LICENSED
PROFESSIONAL ENGINEER
9/23/2014

Walnut Creek WWTP - Tertiary Filter Rehabilitation Project
CIP ID No. 3023.025

Austin WATER

PROCESS AND INSTRUMENTATION DIAGRAM
FILTER BACKWASH PUMPS

STATE OF TEXAS
CARLOS A. CHAVEZ
113722
LICENSED
PROFESSIONAL ENGINEER
6/17/2016

DESIGNED BY:	KWS
DRAWN BY:	KWS
REVIEWED BY:	CEM
APPROVED BY:	TLS
PROJECT NO.:	168622
DATE:	4/4/2014
SCALE:	NOT TO SCALE
REVISION:	
DISCIPLINE NO.	PID-15
DWG. NO.	204 OF 273

FD168622 SAVED: STM60325, 4/8/2014 8:36:02 AM
D168622 CAD ID: Instrumentation Drawings
File: C:\PWBatchPDF\Process\168622 - Austin Walnut Creek WWTP Filter Rehab\PID_15.dwg Layout: Layout1 Plotted: 6/13/2016 1:28:13 PM

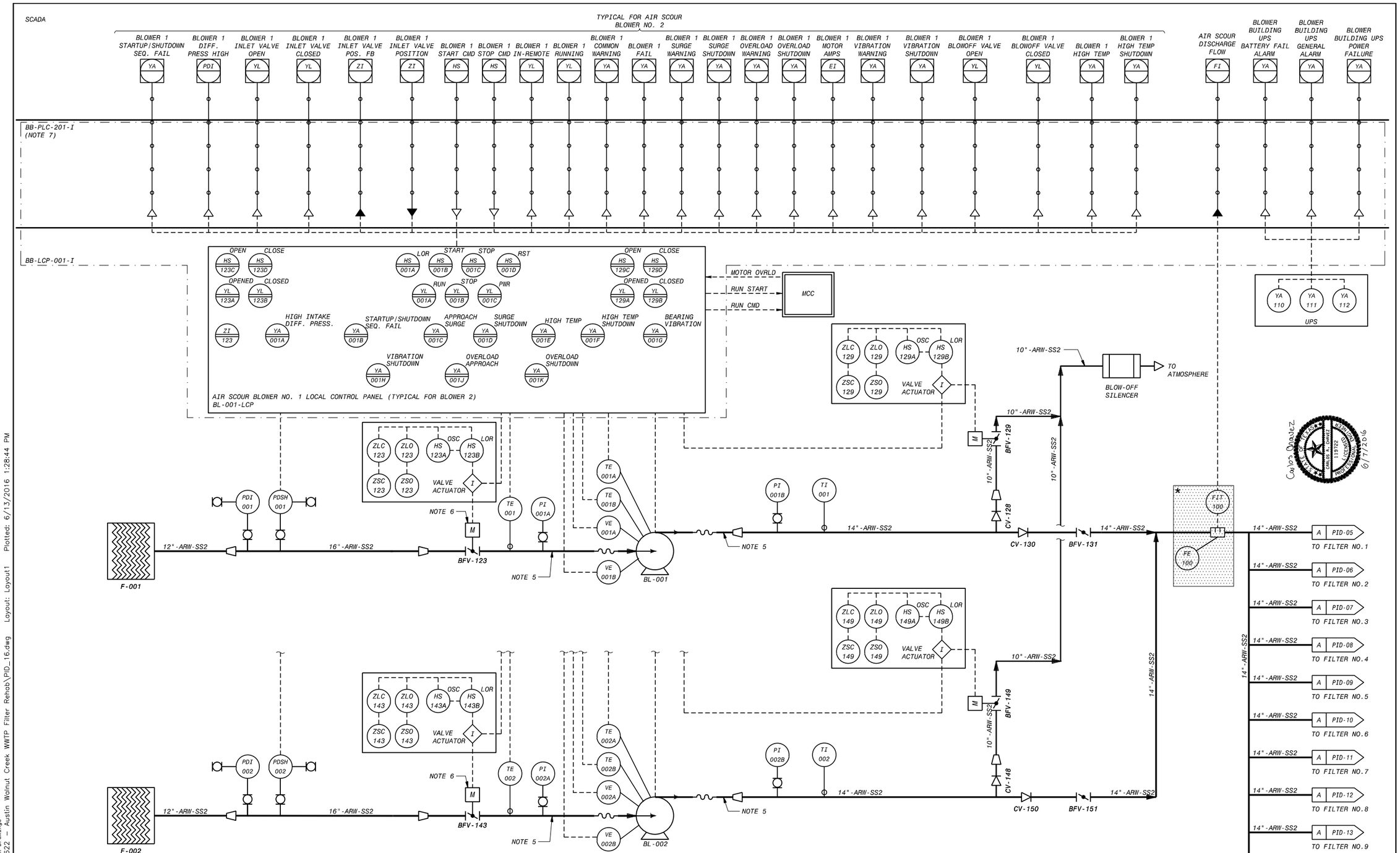

NOTES:

1. SEE LEGENDS AND ABBREVIATIONS ON DRAWINGS PID-01, PID-02 AND PID-03.
2. AREA CODE IS BB UNLESS OTHERWISE NOTED.
3. ALL LOCAL CONTROL DEVICES SUCH AS INDICATING LIGHTS AND SWITCHES, LOCATED AT MCCs, AFDs, LCPs, OR AT EQUIPMENT, MAY NOT BE INDICATED ON THIS P&ID.
4. ADDITIONAL INSTRUMENTATION AND CONTROLS REQUIREMENTS FOR THE FILTER AIR SCOUR BLOWERS SHALL BE PROVIDED AS SPECIFIED AND IN ACCORDANCE WITH SECION 11610, MULTISTAGE CENTRIFUGAL BLOWERS.
5. PIPE SIZES TO MATCH THE BLOWER INLET AND DISCHARGE FLANGE CONNECTIONS.
6. MODULATING INLET VALVE SIZE TO MATCH BLOWER INLET FLANGE CONNECTION.
7. AIR SCOUR BLOWER BL-002 WILL BE WIRED TO PLC-002.
8. IN LIEU OF BLOWER CONTROL PANEL, LOCAL HMI(OIU) WITH EQUIVELENT FUNCTIONALITY IS ACCEPTABLE.
9. AIR SCOUR BLOWER LOCAL CONTROL PANELS ARE SPECIFIED IN SECTION 11610.

FILTERS AIR SCOUR BLOWERS

REVISIONS

NO.	DR	CK	DATE	DESCRIPTION

BLACK & VEATCH
Building a world of difference.
Black & Veatch Corporation
Registration No. F-569
Austin, Texas

CHARLES E. MORRIS 106114 LICENSED PROFESSIONAL ENGINEER STATE OF TEXAS 9/23/2014

Carlos Ramirez 119721 LICENSED PROFESSIONAL ENGINEER STATE OF TEXAS 6/7/2016

Walnut Creek WWTP - Tertiary Filter Rehabilitation Project
CIP ID No. 3023.025

Austin Water

PROCESS AND INSTRUMENTATION DIAGRAM
FILTER BLOWERS

DESIGNED BY:	KWS
DRAWN BY:	KWS
REVIEWED BY:	CEM
APPROVED BY:	TLS
PROJECT NO.:	168622
DATE:	4/4/2014
SCALE:	NOT TO SCALE

REVISION:

DISCIPLINE NO. PID-16

DWG. NO. 205 OF 273

F0168622 SAVED: SIMS0325, 4/8/2014 8:37:22 AM
D168622 DRAWN ID: Instrumentation Drawings
File: C:\PWBatchPDF\Process\168622 - Austin Walnut Creek WWTP Filter Rehab\PID_16.dwg Layout: Layout1 Plotted: 6/13/2016 1:28:44 PM

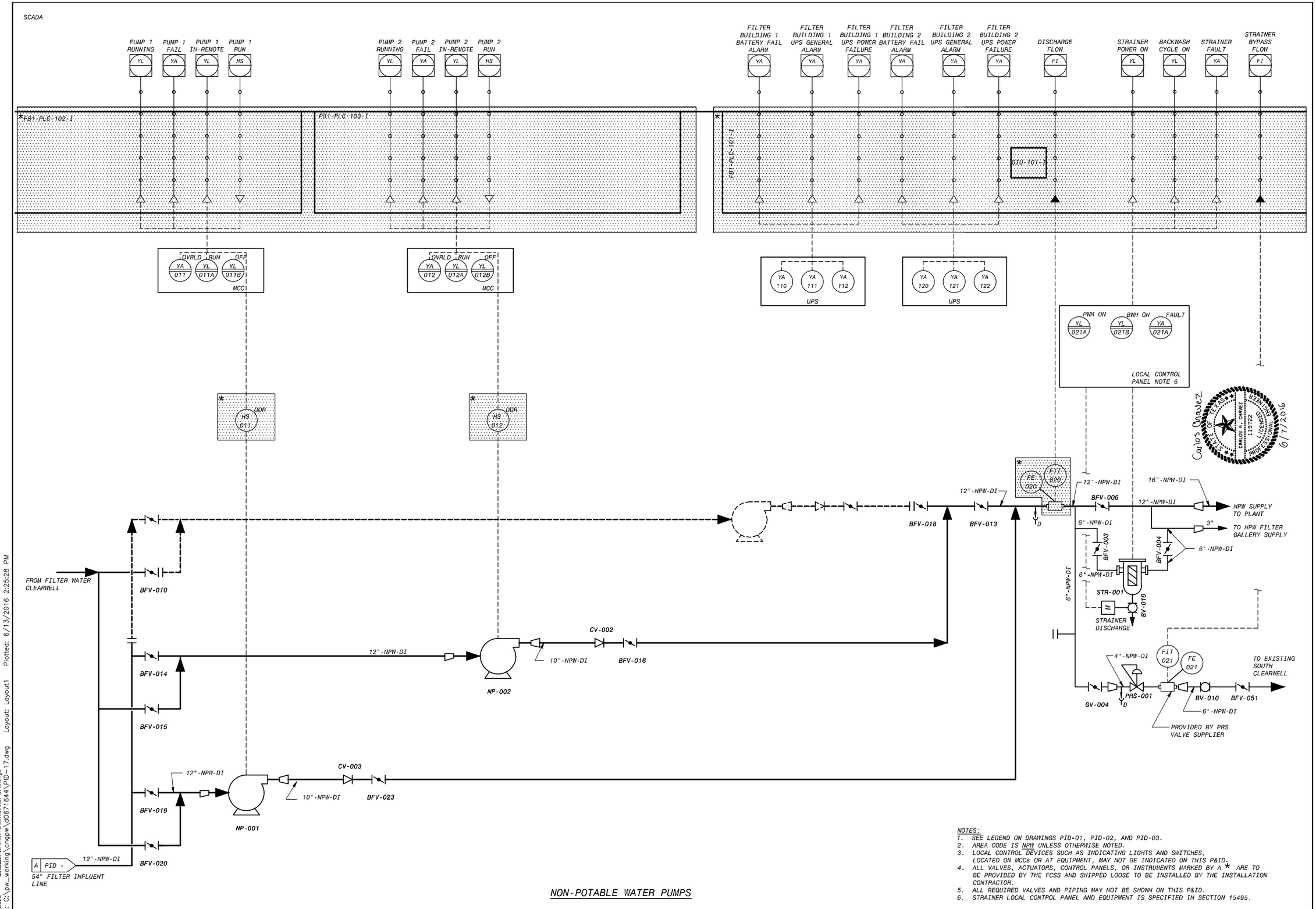

NON-POTABLE WATER PUMPS

NOTES:
1. SEE LEGEND ON DRAWINGS PID-01, PID-02, AND PID-03.
2. AREA CODE IS NPW UNLESS OTHERWISE NOTED.
3. LOCAL CONTROL DEVICES SUCH AS INDICATING LIGHTS AND SWITCHES, LOCATED ON MCCs OR AT EQUIPMENT, MAY NOT BE INDICATED ON THIS P&ID.
4. ALL VALVES, ACTUATORS, CONTROL PANELS, OR INSTRUMENTS MARKED BY A * ARE TO BE PROVIDED BY THE FCSS AND SHIPPED LOOSE TO BE INSTALLED BY THE INSTALLATION CONTRACTOR.
5. ALL REQUIRED VALVES AND PIPING MAY NOT BE SHOWN ON THIS P&ID.
6. STRAINER LOCAL CONTROL PANEL AND EQUIPMENT IS SPECIFIED IN SECTION 15495.

NO.	DR	CK	DATE	DESCRIPTION

REVISIONS

BLACK & VEATCH
Building a world of difference.
Black & Veatch Corporation
Registration No. F-253
Austin, Texas

Carlos Ornelas 6/7/2016

Charles E. Morris 9/25/2014

Austin Water
Walnut Creek WWTP - Tertiary Filter Rehabilitation Project
CIP ID No. 3023.025

PROCESS AND INSTRUMENTATION DIAGRAM
NPW PUMPS

DESIGNED BY:	KWS
DRAWN BY:	KWS
REVIEWED BY:	CEM
APPROVED BY:	TLS
PROJECT NO.:	168622
DATE:	9/25/2014
SCALE:	NOT TO SCALE

REVISION:

DISCIPLINE NO. PID-17

DWG. NO. 206 OF 273

F0168622 SAVED: STM50325, 9/25/2014 3:03:18 PM
D168622 CONTROL ID: Instrumentation Drawings
File: C:\pw_working\cngpw\d0671644\PID-17.dwg Layout: Layout1 Plotted: 6/13/2016 2:25:28 PM

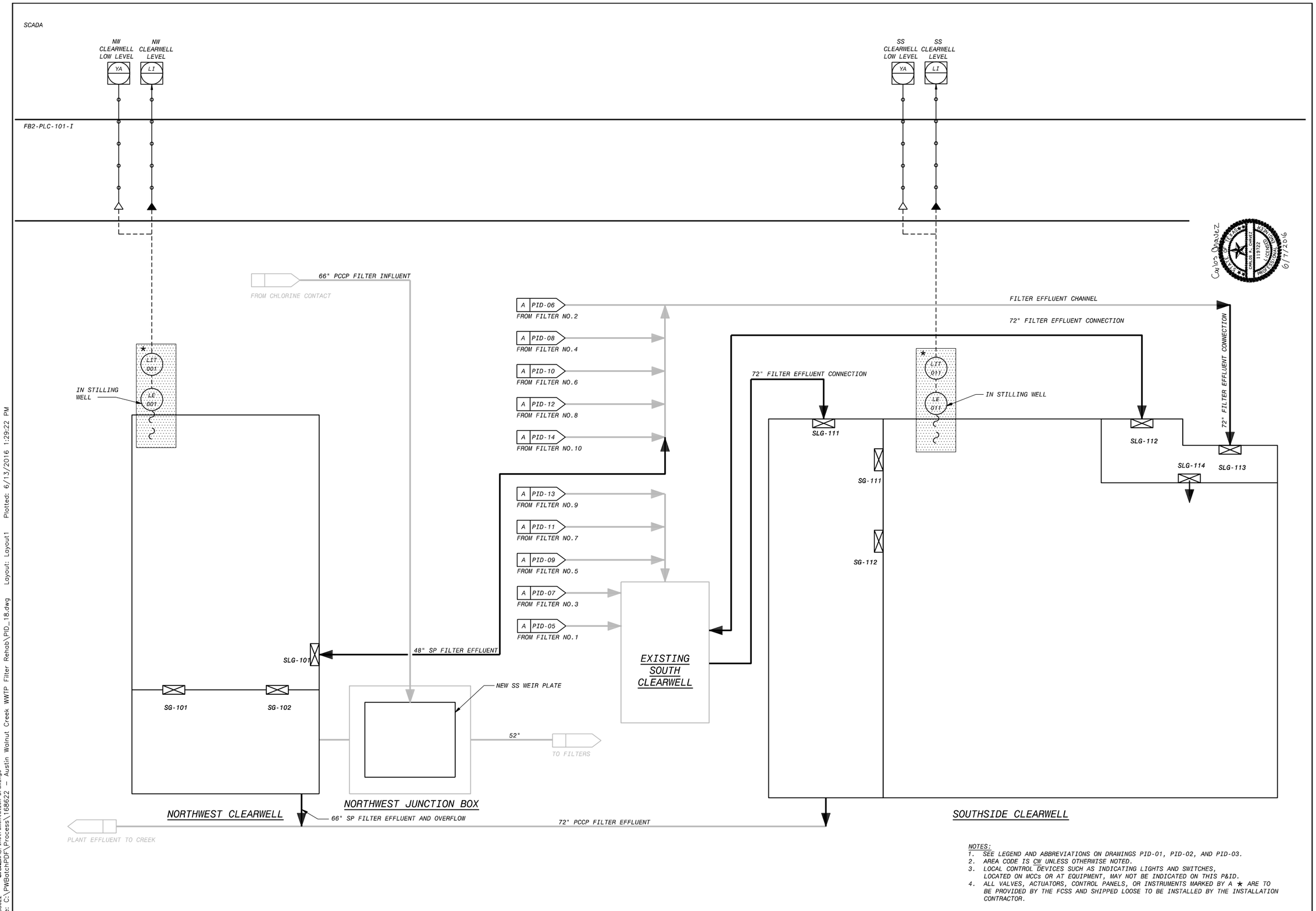

NOTES:
1. SEE LEGEND AND ABBREVIATIONS ON DRAWINGS PID-01, PID-02, AND PID-03.
2. AREA CODE IS CW UNLESS OTHERWISE NOTED.
3. LOCAL CONTROL DEVICES SUCH AS INDICATING LIGHTS AND SWITCHES, LOCATED ON MCCs OR AT EQUIPMENT, MAY NOT BE INDICATED ON THIS P&ID.
4. ALL VALVES, ACTUATORS, CONTROL PANELS, OR INSTRUMENTS MARKED BY A ★ ARE TO BE PROVIDED BY THE FCSS AND SHIPPED LOOSE TO BE INSTALLED BY THE INSTALLATION CONTRACTOR.

NO.	BY	CK	DATE	DESCRIPTION

REVISIONS

BLACK & VEATCH
Building a world of difference.
Black & Veatch Corporation
Registration No. F-869
Austin, Texas

STATE OF TEXAS
CHARLES E. MORRIS
106114
LICENSED
PROFESSIONAL ENGINEER
9/23/2014

Walnut Creek WWTP - Tertiary Filter Rehabilitation Project
CIP ID No. 3023.025

Austin WATER

PROCESS AND INSTRUMENTATION DIAGRAM
NORTHWEST AND SOUTHSIDE CLEARWELLS

DESIGNED BY:	KWS
DRAWN BY:	KWS
REVIEWED BY:	CEM
APPROVED BY:	TLS
PROJECT NO.:	168622
DATE:	4/4/2014
SCALE:	NOT TO SCALE
REVISION:	

DISCIPLINE NO.
PID-18
DWG. NO.
207 OF 273

FD168622 SAVED: STM60325, 4/8/2014 8:40:12 AM
D168622 ORCAD ID: Instrumentation Drawings
File: C:\PWBatchPDF\Process\168622 - Austin Walnut Creek WWTP Filter Rehab\PID_18.dwg Layout: Layout1 Plotted: 6/13/2016 1:29:22 PM

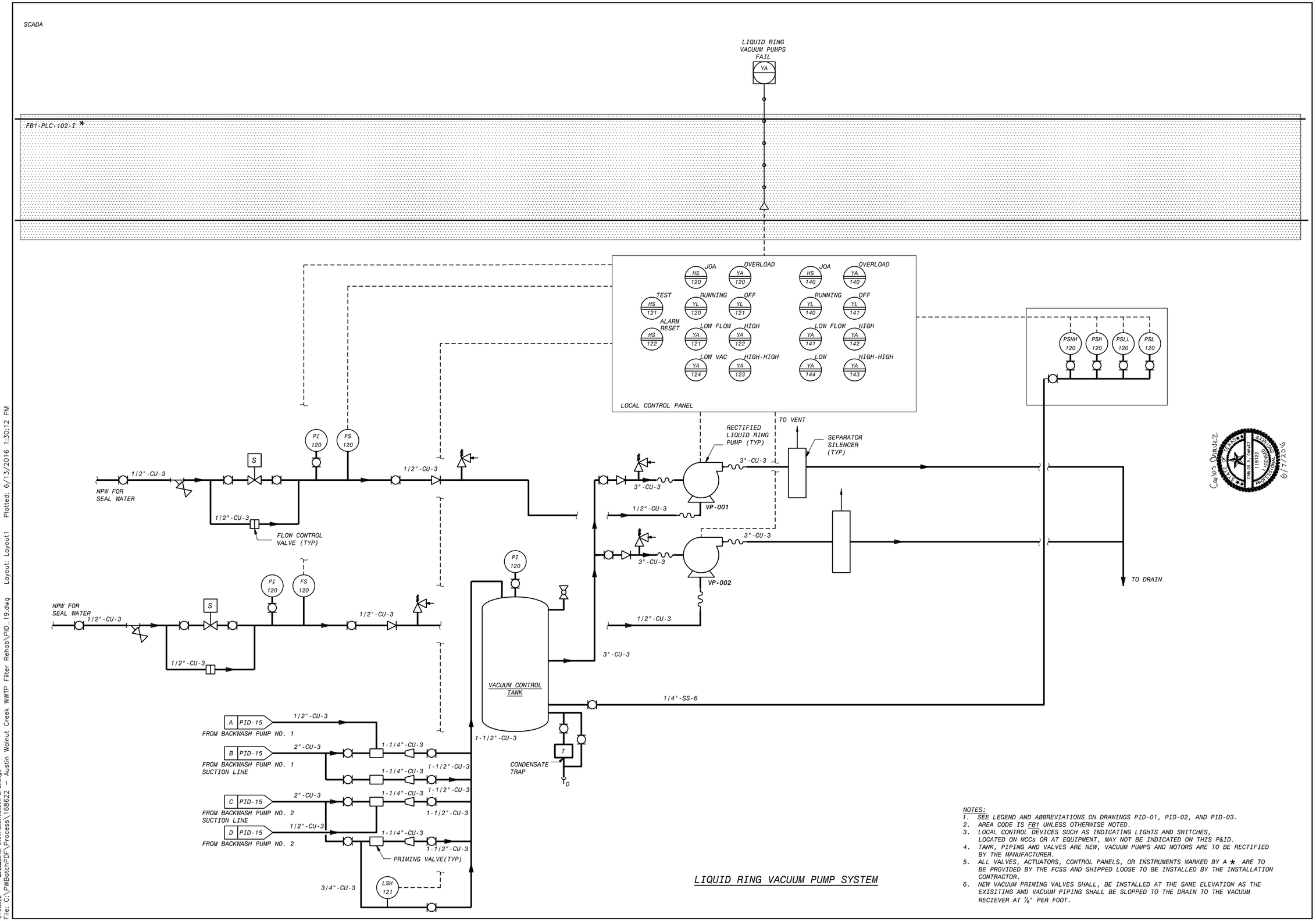

LIQUID RING VACUUM PUMP SYSTEM

NOTES:
1. SEE LEGEND AND ABBREVIATIONS ON DRAWINGS PID-01, PID-02, AND PID-03.
2. AREA CODE IS FB1 UNLESS OTHERWISE NOTED.
3. LOCAL CONTROL DEVICES SUCH AS INDICATING LIGHTS AND SWITCHES, LOCATED ON MCCs OR AT EQUIPMENT, MAY NOT BE INDICATED ON THIS P&ID.
4. TANK, PIPING AND VALVES ARE NEW, VACUUM PUMPS AND MOTORS ARE TO BE RECTIFIED BY THE MANUFACTURER.
5. ALL VALVES, ACTUATORS, CONTROL PANELS, OR INSTRUMENTS MARKED BY A ★ ARE TO BE PROVIDED BY THE FCSS AND SHIPPED LOOSE TO BE INSTALLED BY THE INSTALLATION CONTRACTOR.
6. NEW VACUUM PRIMING VALVES SHALL, BE INSTALLED AT THE SAME ELEVATION AS THE EXISITING AND VACUUM PIPING SHALL BE SLOPPED TO THE DRAIN TO THE VACUUM RECIEVER AT ⅛" PER FOOT.

NO.	BY	CK	DATE	DESCRIPTION

REVISIONS

BLACK & VEATCH
Building a world of difference.
Black & Veatch Corporation
Registration No. F-439
Austin, Texas

Carlos Ornelas 6/7/2016
CARLOS R. CHAVEZ 119722 REGISTERED PROFESSIONAL ENGINEER
9/25/2014
CHARLES E. MORRIS 106414 REGISTERED PROFESSIONAL ENGINEER

Walnut Creek WWTP - Tertiary Filter Rehabilitation Project
CIP ID No. 3023.025
Austin Water

LIQUID RING VACUUM PUMP

DESIGNED BY:	JAO
DRAWN BY:	JAO
REVIEWED BY:	CEM
APPROVED BY:	TLS
PROJECT NO.:	168622
DATE:	4/4/2014
SCALE:	NOT TO SCALE
REVISION:	
DISCIPLINE NO.	PID-19
DWG. NO.	208 OF 273

F0168622 SAVED: SIM50325, 4/8/2014 8:41:29 AM
D168622 PCSCHEMID: Instrumentation Drawings
File: C:\PWBatchPDF\Process\168622 - Austin Walnut Creek WWTP Filter Rehab\PID_19.dwg Layout: Layout1 Plotted: 6/13/2016 1:30:12 PM

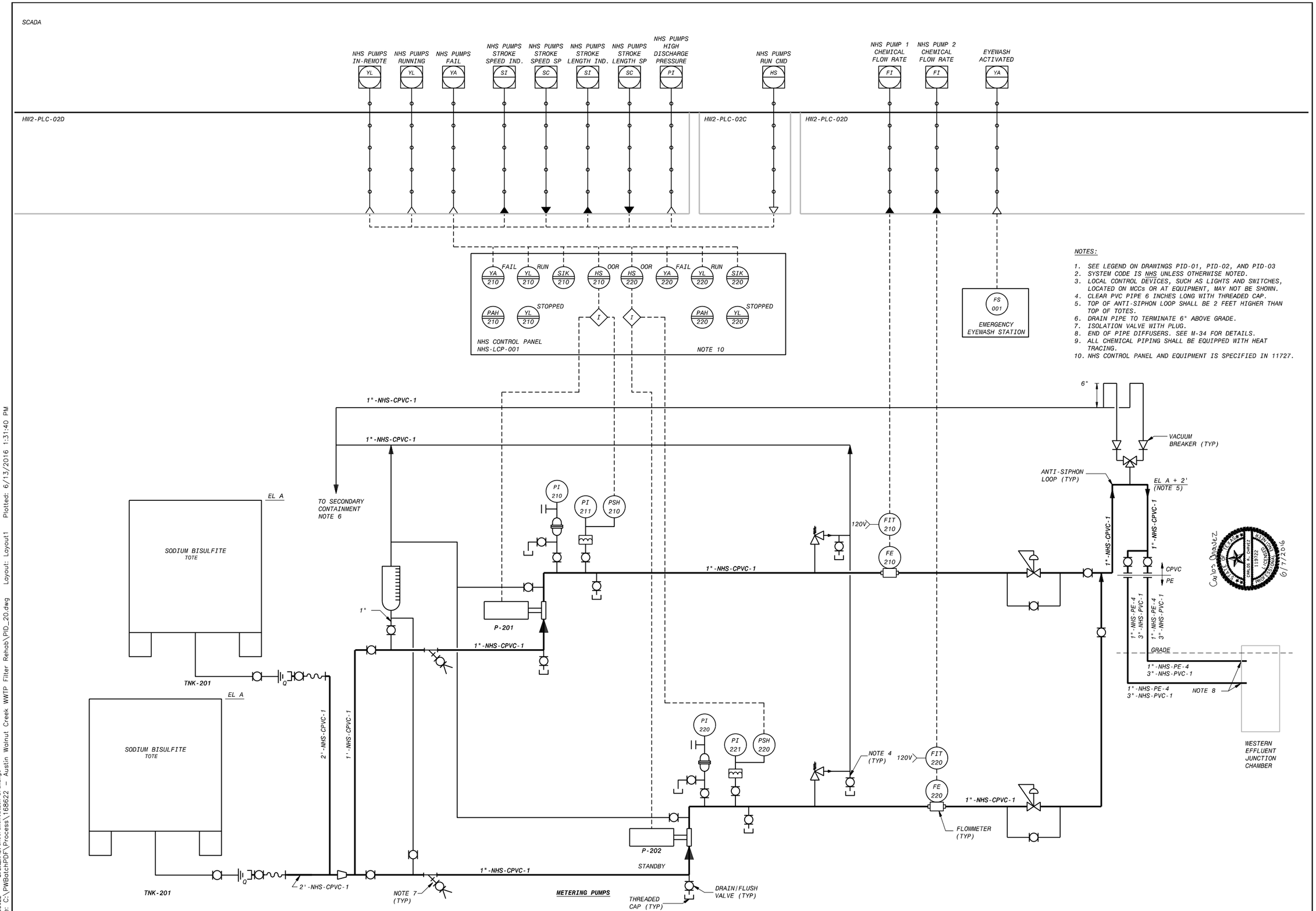

NOTES:

1. SEE LEGEND ON DRAWINGS PID-01, PID-02, AND PID-03
2. SYSTEM CODE IS NHS UNLESS OTHERWISE NOTED.
3. LOCAL CONTROL DEVICES, SUCH AS LIGHTS AND SWITCHES, LOCATED ON MCCs OR AT EQUIPMENT, MAY NOT BE SHOWN.
4. CLEAR PVC PIPE 6 INCHES LONG WITH THREADED CAP.
5. TOP OF ANTI-SIPHON LOOP SHALL BE 2 FEET HIGHER THAN TOP OF TOTES.
6. DRAIN PIPE TO TERMINATE 6" ABOVE GRADE.
7. ISOLATION VALVE WITH PLUG.
8. END OF PIPE DIFFUSERS. SEE M-34 FOR DETAILS.
9. ALL CHEMICAL PIPING SHALL BE EQUIPPED WITH HEAT TRACING.
10. NHS CONTROL PANEL AND EQUIPMENT IS SPECIFIED IN 11727.

REVISIONS

NO.	DR	CK	DATE	DESCRIPTION

BLACK & VEATCH
Building a world of difference.
Black & Veatch Corporation
Registration No. F-439
Austin, Texas

STATE OF TEXAS
CHARLES E. MORRIS
106114
LICENSED PROFESSIONAL ENGINEER
9/23/2014

STATE OF TEXAS
CARLOS ORDUNEZ
119122
LICENSED PROFESSIONAL ENGINEER
6/7/2016

Walnut Creek WWTP - Tertiary Filter Rehabilitation Project
CIP ID No. 3023.025
Austin WATER

INSTRUMENTATION
SODIUM BISULFITE FEED SYSTEM

DESIGNED BY:	JB
DRAWN BY:	JB
REVIEWED BY:	CEM
APPROVED BY:	TLS
PROJECT NO.:	168622
DATE:	4/4/2014
SCALE:	NOT TO SCALE
REVISION:	
DISCIPLINE NO.	PID-20
DWG. NO.	209 OF 273

FD168622 SAVED: STM0325, 4/8/2014 8:42:21 AM
D168622 CAD ID: Instrumentation Drawings
File: C:\PWBatchPDF\Process\168622 - Austin Walnut Creek WWTP Filter Rehab\PID_20.dwg Layout: Layout1 Plotted: 6/13/2016 1:31:40 PM

LEGEND

- LEVEL TRANSMITTER
- LEVEL TRANSDUCER
- FILTER LOCAL CONTROL PANEL

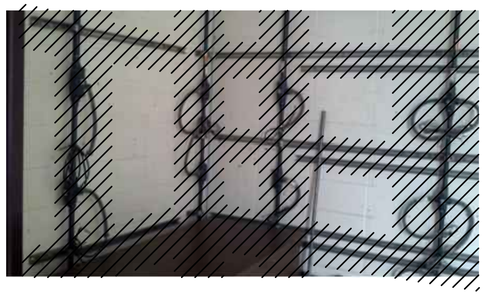

ABANDONED ANALYZER PIPING DEMOLITION

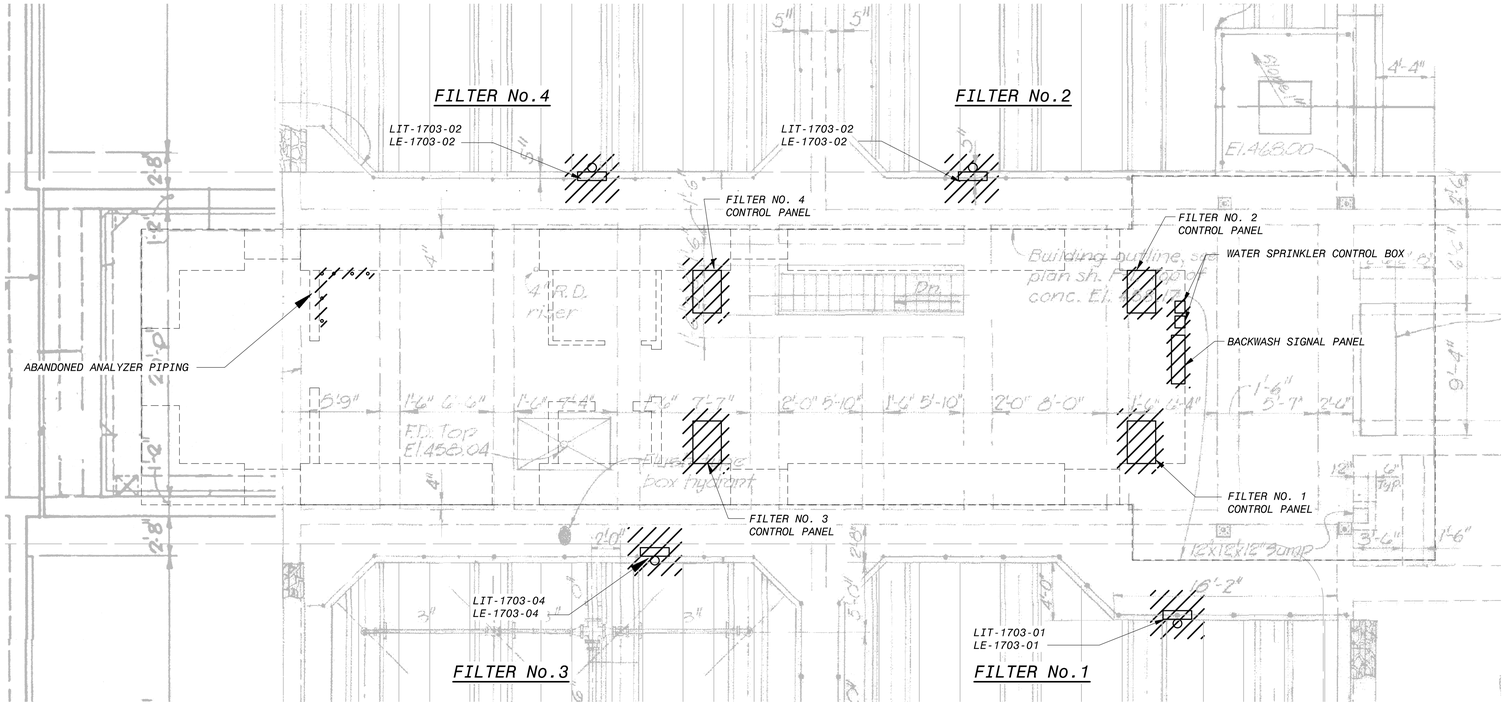

OVERALL FILTER BUILDING NO. 1
INSTRUMENTATION DEMOLITION TOP PLAN
3/16"=1'-0"

TYPICAL FILTER LEVEL TRANSMITTER AND STILLING WELL DEMOLITION

TYPICAL FILTER LEVEL TRANSMITTER DEMOLITION

TYPICAL FILTER LOCAL CONTROL PANEL DEMOLITION

BACKWASH SIGNAL PANEL DEMOLITION

NOTES:

1. CONTRACTOR TO DEMO AND REMOVE ALL EXISTING SIGNAL WIRING AND ASSOCIATED CONDUITS (NOT SHOWN ON DRAWING) FROM DEMOLISHED EQUIPMENT TO EQUIPMENT OF ORIGIN. CONTRACTOR TO VERIFY ALL CIRCUITS WITHIN CONDUITS ARE NOT NECESSARY BEFORE DEMOLITION.
2. ANY REMOVED INSTRUMENTS, PLC MODULES, SENSORS, AND ACCESSORIES SHALL BE TURNED OVER TO THE CITY.

BACKGROUND INFORMATION NOTE:

BACKGROUND IMAGES USED ON THIS SHEET ARE FROM AS-BUILT DRAWINGS FROM PREVIOUS CONTRACTS THAT WERE PREPARED BASED ON INFORMATION PROVIDED BY OTHERS. ALL ITEMS SHOWN IN THE BACKGROUND AND ALL NEW ITEMS RELYING ON BACKGROUND INFORMATION SHALL BE VERIFIED BY THE CONTRACTOR FOR ACCURACY BEFORE APPLYING THIS INFORMATION FOR ANY PURPOSE.

NO.	DR	CK	DATE	DESCRIPTION

REVISIONS

BLACK & VEATCH
Building a world of difference.
Black & Veatch Corporation
Registration No. F-258
Austin, Texas

STATE OF TEXAS
CHARLES E. MORRIS
108414
LICENSED
PROFESSIONAL ENGINEER

Austin Water
Walnut Creek WWTP - Tertiary Filter Rehabilitation Project
CIP ID No. 3023.025

INSTRUMENTATION
DEMOLITION FILTER BUILDING NO. 1
INSTRUMENTATION AND CONTROLS PLAN

DESIGNED BY:	KWS
DRAWN BY:	KWS
REVIEWED BY:	CEM
APPROVED BY:	TLS
PROJECT NO.:	168622
DATE:	4/4/2014
SCALE:	3/16"=1'-0"
REVISION:	
DISCIPLINE NO.	I-01
DWG. NO.	210 OF 273

FD168622 SAVED: LEROY100, 2/23/2013 5:44:06 PM
D168622 PW-FDR: D:\168622...\09.0005 - Instrumentation Drawings
File: C:\PWBatchPDF\Process\168622 - Austin Walnut Creek WWTP Filter Rehab\I_01.dwg Layout: Work Plotted: 4/4/2014 7:39:37 AM

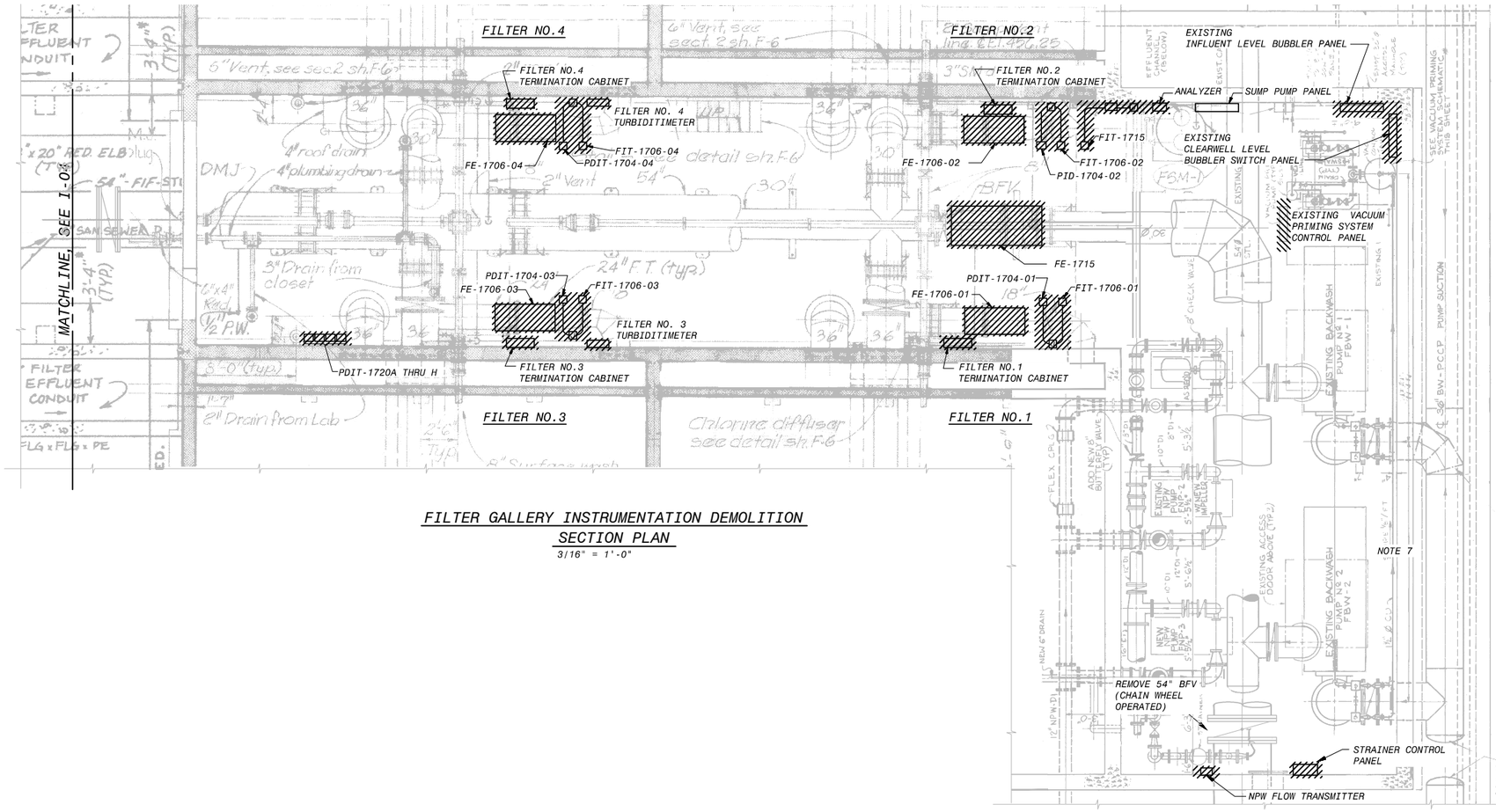

FILTER GALLERY INSTRUMENTATION DEMOLITION SECTION PLAN

3/16" = 1'-0"

LEGEND

- JUNCTION BOX
- FLOW, PRESSURE TRANSMITTER
- ANALYZER TRANSMITTER

NOTES:

1. CONTRACTOR TO DEMO AND REMOVE ALL EXISTING SIGNAL WIRING AND ASSOCIATED CONDUITS (NOT SHOWN ON DRAWING) FROM DEMOLISHED EQUIPMENT TO EQUIPMENT OF ORIGIN. CONTRACTOR TO VERIFY ALL CIRCUITS WITHIN CONDUITS ARE NOT NECESSARY BEFORE DEMOLITION.
2. ANY REMOVED INSTRUMENTATION SHALL BE TURNED OVER TO THE CITY.
3. EXISTING BUBBLER SYSTEM TO REMAIN.
4. EXISTING CLEARWELL BUBBLER SYSTEM TO REMAIN.
5. REMOVE ALL EXISING FLOW PRESSURE, LOSS OF HEAD TRANSMITTER. ALL EXISTING WIRING TO FILTER CONSOLES SHALL BE REMOVED.
6. ANY REMOVED INSTRUMENTS, PLC MODULES, SENSORS, AND ACCESSORIES SHALL BE TURNED OVER TO THE CITY.
7. BACKWASH PUMP PACKAGING FLUSH WATER SYSTEM SWITCHES AND SOLENOID VALVES MOUNTED ON EASTWALL SHALL BE REMOVED.

BACKGROUND INFORMATION NOTE:

BACKGROUND IMAGES USED ON THIS SHEET ARE FROM AS-BUILT DRAWINGS FROM PREVIOUS CONTRACTS THAT WERE PREPARED BASED ON INFORMATION PROVIDED BY OTHERS. ALL ITEMS SHOWN IN THE BACKGROUND AND ALL NEW ITEMS RELYING ON BACKGROUND INFORMATION SHALL BE VERIFIED BY THE CONTRACTOR FOR ACCURACY BEFORE APPLYING THIS INFORMATION FOR ANY PURPOSE.

REVISIONS

NO.	BY	CK	DATE	DESCRIPTION

BLACK & VEATCH
Building a world of difference.
Black & Veatch Corporation
Registration No. F-869
Austin, Texas

STATE OF TEXAS
CHARLES E. MORRIS
106414
LICENSED PROFESSIONAL ENGINEER
9/25/2014

Austin WATER
Walnut Creek WWTP - Tertiary Filter Rehabilitation Project
CIP ID No. 3023.025

INSTRUMENTATION
FILTER GALLERY DEMOLITION
PLAN AND SECTION - SHEET 1 OF 2

DESIGNED BY:	KWS
DRAWN BY:	KWS
REVIEWED BY:	CEM
APPROVED BY:	TLS
PROJECT NO.:	168622
DATE:	9/25/2014
SCALE:	3/16"=1'-0"
REVISION:	
DISCIPLINE NO.	I-02
DWG. NO.	211 OF 273

FD168622 SAVED: STM90305, 9/16/2013 3:41:52 PM
D168622 CAD ID: Instrumentation Drawings
File: C:\PWBatchPDF\Process\168622 - Austin Walnut Creek WWTP Filter Rehab_02.dwg Layout: Work Plotted: 9/25/2014 2:10:46 PM

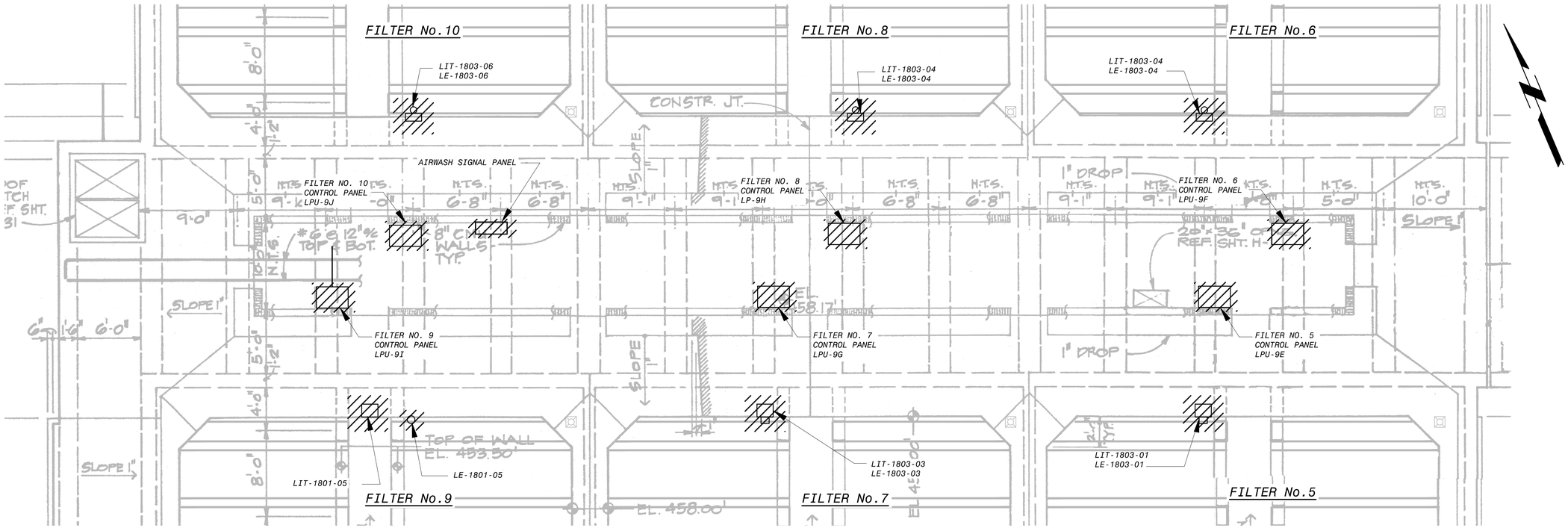

OVERALL FILTER BUILDING NO. 2 - INSTRUMENTATION DEMOLITION PLAN

3/16" = 1'-0"

TYPICAL FILTER CONTROL PANEL DEMOLITION

AIRWASH SIGNAL PANEL DEMOLITION

LEGEND

- LEVEL TRANSMITTER
- LEVEL TRANSDUCER
- FILTER LOCAL CONTROL PANEL

NOTES:

1. CONTRACTOR TO DEMO AND REMOVE ALL EXISTING SIGNAL WIRING AND ASSOCIATED CONDUITS (NOT SHOWN ON DRAWING) FROM DEMOLISHED EQUIPMENT TO EQUIPMENT OF ORIGIN. CONTRACTOR TO VERIFY ALL CIRCUITS WITHIN CONDUITS ARE NOT NECESSARY BEFORE DEMOLITION.
2. ANY REMOVED INSTRUMENTATION SHALL BE TURNED OVER TO THE CITY.
3. EXISTING BUBBLER SYSTEM TO REMAIN.
4. EXISTING CLEARWELL BUBBLER SYSTEM TO REMAIN.
5. REMOVE ALL EXISING FLOW PRESSURE, LOSS OF HEAD TRANSMITTER. ALL EXISTING WIRING TO FILTER CONSOLES SHALL BE REMOVED.
6. ANY REMOVED INSTRUMENTS, PLC MODULES, SENSORS, AND ACCESSORIES SHALL BE TURNED OVER TO THE CITY.

BACKGROUND INFORMATION NOTE:

BACKGROUND IMAGES USED ON THIS SHEET ARE FROM AS-BUILT DRAWINGS FROM PREVIOUS CONTRACTS THAT WERE PREPARED BASED ON INFORMATION PROVIDED BY OTHERS. ALL ITEMS SHOWN IN THE BACKGROUND AND ALL NEW ITEMS RELYING ON BACKGROUND INFORMATION SHALL BE VERIFIED BY THE CONTRACTOR FOR ACCURACY BEFORE APPLYING THIS INFORMATION FOR ANY PURPOSE.

NO.	DR	CK	DATE	DESCRIPTION

REVISIONS

BLACK & VEATCH
Building a world of difference.
Black & Veatch Corporation
Registration No. F-258
Austin, Texas

STATE OF TEXAS
CHARLES E. MORRIS
106414
LICENSED
PROFESSIONAL ENGINEER

Austin WATER
Walnut Creek WWTP - Tertiary Filter Rehabilitation Project
CIP ID No. 3023.025

INSTRUMENTATION
DEMOLITION FILTER BUILDING NO. 2
INSTRUMENTATION & CONTROL PLAN

DESIGNED BY:	KWS
DRAWN BY:	KWS
REVIEWED BY:	CEM
APPROVED BY:	TLS
PROJECT NO.:	168622
DATE:	4/4/2014
SCALE:	3/16"=1'-0"

REVISION:

DISCIPLINE NO.
I-03

DWG. NO.
212 OF 273

FD168622 SAVED: LEROY100, 2/23/2013 5:44:06 PM
D168622 PW:FEDR:D168622...\09.0005 - Instrumentation Drawings
File: C:\PWBatchPDF\Process\168622 - Austin Walnut Creek WWTP Filter Rehab_03.dwg Layout: Work Plotted: 4/4/2014 7:40:32 AM

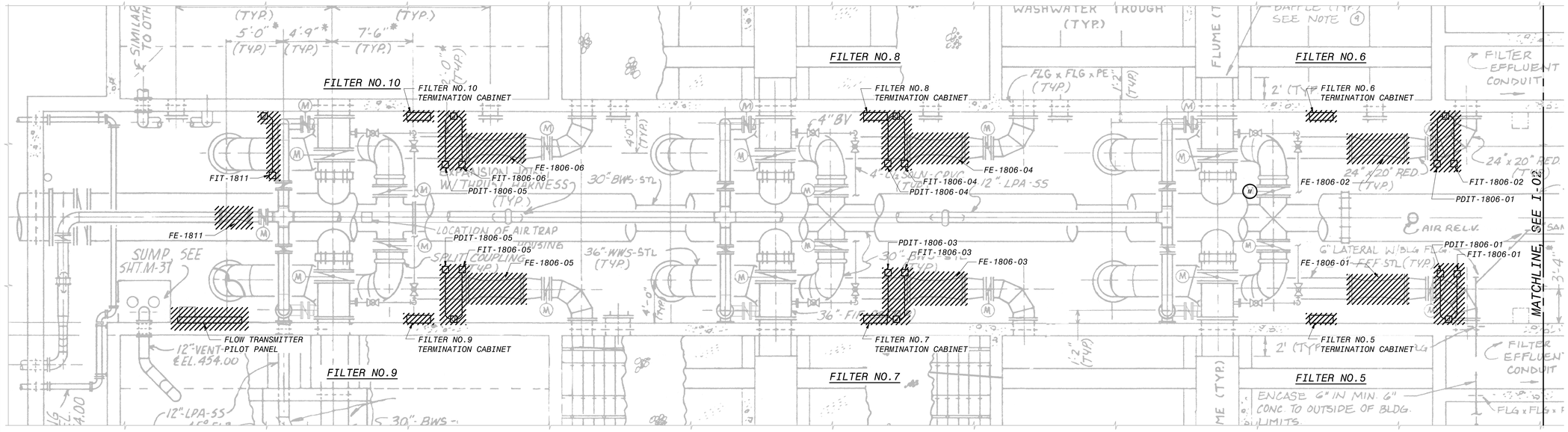

FLOW TRANSMITTER PILOT PANEL DEMOLITION

FILTERS 5-10 GALLERY - INSTRUMENTATION DEMOLITION SECTIONAL PLAN

3/16"=1'-0"

LEGEND

- JUNCTION BOX
- FLOW, PRESSURE TRANSMITTER
- ANALYZER TRANSMITTER

NOTES:

1. CONTRACTOR TO DEMO AND REMOVE ALL EXISTING SIGNAL WIRING AND ASSOCIATED CONDUITS (NOT SHOWN ON DRAWING) FROM DEMOLISHED EQUIPMENT TO EQUIPMENT OF ORIGIN. CONTRACTOR TO VERIFY ALL CIRCUITS WITHIN CONDUITS ARE NOT NECESSARY BEFORE DEMOLITION.
2. ANY REMOVED INSTRUMENTATION SHALL BE TURNED OVER TO THE CITY.
3. REMOVE ALL EXISING FLOW PRESSURE, LOSS OF HEAD TRANSMITTER.
4. ALL EXISTING WIRING TO FILTER CONSOLES SHALL BE REMOVED.

BACKGROUND INFORMATION NOTE:

BACKGROUND IMAGES USED ON THIS SHEET ARE FROM AS-BUILT DRAWINGS FROM PREVIOUS CONTRACTS THAT WERE PREPARED BASED ON INFORMATION PROVIDED BY OTHERS. ALL ITEMS SHOWN IN THE BACKGROUND AND ALL NEW ITEMS RELYING ON BACKGROUND INFORMATION SHALL BE VERIFIED BY THE CONTRACTOR FOR ACCURACY BEFORE APPLYING THIS INFORMATION FOR ANY PURPOSE.

NO.	DR	CK	DATE	DESCRIPTION

REVISIONS

BLACK & VEATCH
Building a world of difference.
Black & Veatch Corporation
Registration No. F-258
Austin, Texas

STATE OF TEXAS
CHARLES E. MORRIS
106414
LICENSED
PROFESSIONAL ENGINEER
4/4/2014

Austin WATER
Walnut Creek WWTP - Tertiary Filter Rehabilitation Project
CIP ID No. 3023.025

INSTRUMENTATION
DEMOLITION FILTER NO. 5-10 PIPE GALLERY INSTRUMENTATION & CONTROLS PLAN

DESIGNED BY:	KWS
DRAWN BY:	KWS
REVIEWED BY:	CEM
APPROVED BY:	TLS
PROJECT NO.:	168622
DATE:	4/4/2014
SCALE:	3/16"=1'-0"
REVISION:	
DISCIPLINE NO.	I-04
DWG. NO.	213 OF 273

FD168622 SAVED: STMK0025, 9/16/2013 3:34:39 PM
D168622 PW-FEDR D:\168622...\09.0005 - Instrumentation Drawings
File: C:\PWBatchPDF\Process\168622 - Austin Walnut Creek WWTP Filter Rehab\I_04.dwg Layout: Work Plotted: 4/4/2014 7:40:57 AM

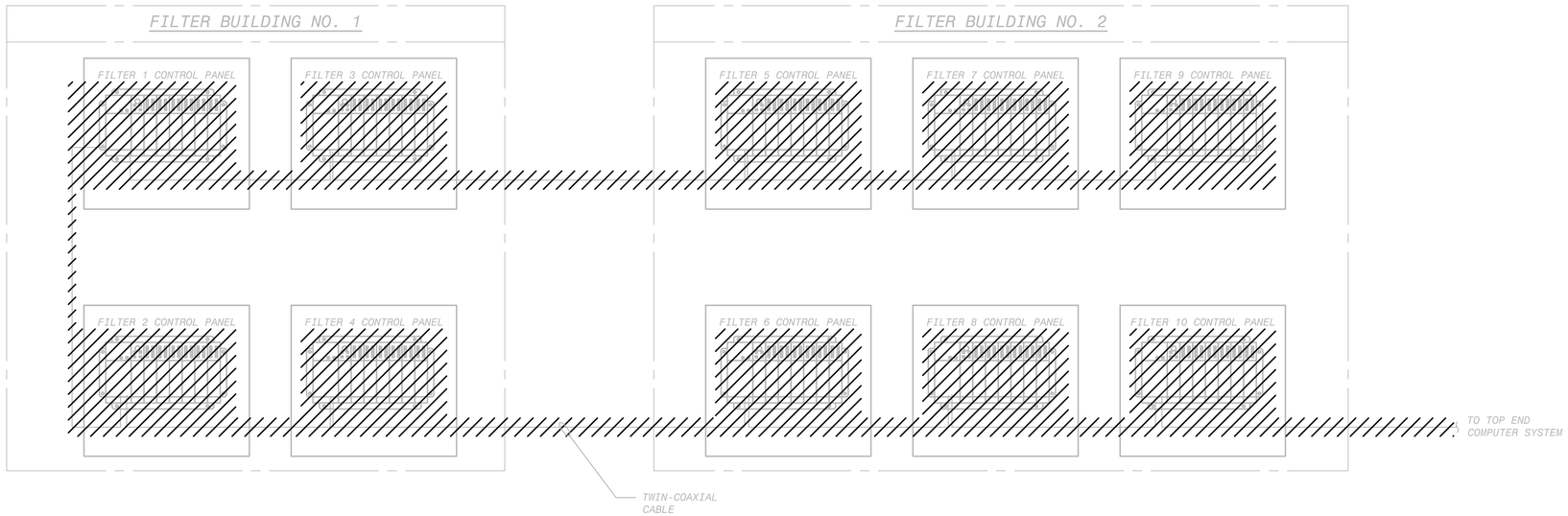

NOTES:

1. REMOVE EXISTING CONTROL PANELS, PLC, AND ASSOCIATED WIRING AND CONNECTIONS.
2. ANY REMOVED INSTRUMENTS, PLC MODULES, SENSORS, AND ACCESSORIES SHALL BE TURNED OVER TO THE CITY.

NO.	DR	CK	DATE	DESCRIPTION

REVISIONS

BLACK & VEATCH
Building a world of difference.
Black & Veatch Corporation
Registration No. F-258
Austin, Texas

STATE OF TEXAS
CHARLES E. MORRIS
108414
LICENSED
PROFESSIONAL ENGINEER

Austin WATER

Walnut Creek WWTP - Tertiary Filter Rehabilitation Project

CIP ID No. 3023.025

PROCESS AND INSTRUMENTATION DIAGRAM
FILTER BUILDINGS NO. 1, 2, AND SITE
PLC NET WORK

DESIGNED BY:	KWS
DRAWN BY:	KWS
REVIEWED BY:	CEM
APPROVED BY:	TLS
PROJECT NO.:	168622
DATE:	4/4/2014
SCALE:	NOT TO SCALE

REVISION:

DISCIPLINE NO.
I-05

DWG. NO.
214 OF 273

FD168622 SAVED: STIMS005, 11/4/2013 9:41:12 AM
D168622 PW-FUDP:D:\168622...\09.0005 - Instrumentation Drawings
File: C:\PWBatchPDF\Process\168622 - Austin Walnut Creek WWTP Filter Rehab\I_05.dwg Layout: Layout1 Plotted: 4/4/2014 7:41:17 AM

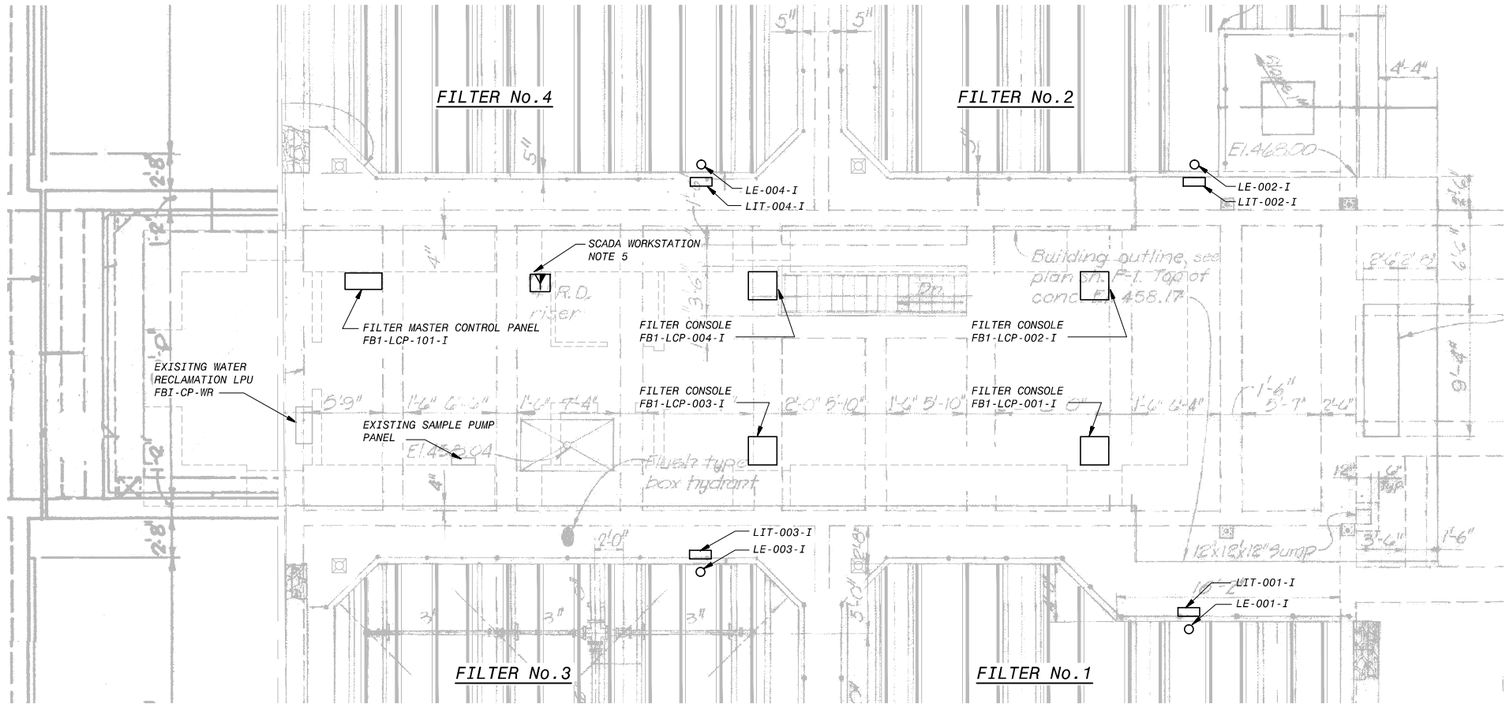

OVERALL FILTER BUILDING NO. 1
INSTRUMENTATION & CONTROLS PLAN

3/16" = 1'-0"

NOTES:

1. AREA CODE IS FB1 UNLESS OTHERWISE NOTED.
2. INSTALL NEW CONTROL PANEL AND CONCRETE PAD AS SHOWN.
3. LOCATION OF INSTRUMENTS AND PANELS AS SHOWN ARE APPROXIMATE. EXACT LOCATION SHALL BE COORDINATED IN FIELD.
4. FILTER LEVEL TRANSMITTER SHALL BE INSTALLED EQUAL DISTANCE BETWEEN FILTER TROUGHS AND SUPPORTS AWAY FROM FILTER WALL PER MANUFACTURERS RECOMMENDATIONS SO THAT THE WALL DOES NOT INTERFERE WITH TRANSMITTER SIGNAL.
5. PROVIDE ONE PLANT SCADA NETWORK CIRCUIT FROM FB1-PLC-ESWA AND FB1-PLC-ESWB NETWORK SWITCHES. TERMINATION SHALL BE RJ-45 DATA CONNECTOR.

BACKGROUND INFORMATION NOTE:

BACKGROUND IMAGES USED ON THIS SHEET ARE FROM AS-BUILT DRAWINGS FROM PREVIOUS CONTRACTS THAT WERE PREPARED BASED ON INFORMATION PROVIDED BY OTHERS. ALL ITEMS SHOWN IN THE BACKGROUND AND ALL NEW ITEMS RELYING ON BACKGROUND INFORMATION SHALL BE VERIFIED BY THE CONTRACTOR FOR ACCURACY BEFORE APPLYING THIS INFORMATION FOR ANY PURPOSE.

NO.	BY	CK	DATE	DESCRIPTION

REVISIONS

BLACK & VEATCH
Building a world of difference.
Black & Veatch Corporation
Registration No. F-869
Austin, Texas

STATE OF TEXAS
CHARLES E. MORRIS
106114
LICENSED
PROFESSIONAL ENGINEER
9/25/2014

Austin WATER
Walnut Creek WWTP - Tertiary Filter Rehabilitation Project
CIP ID No. 3023.025

INSTRUMENTATION
FILTER BUILDING NO.1
INSTRUMENTATION AND CONTROLS PLAN

DESIGNED BY:	KWS
DRAWN BY:	KWS
REVIEWED BY:	CEM
APPROVED BY:	TLS
PROJECT NO.:	168622
DATE:	9/25/2014
SCALE:	3/16"=1'-0"
REVISION:	
DISCIPLINE NO.	I-06
DWG. NO.	215 OF 273

FD168622 SAVED:SIM0325, 9/17/2013 8:44:31 AM
D168622 CAD CODE ID:Instrumentation Drawings
File: C:\PWBatchPDF\Process\168622 - Austin Walnut Creek WWTP Filter Rehab\I_06.dwg Layout: Work Plotted: 9/25/2014 2:11:15 PM

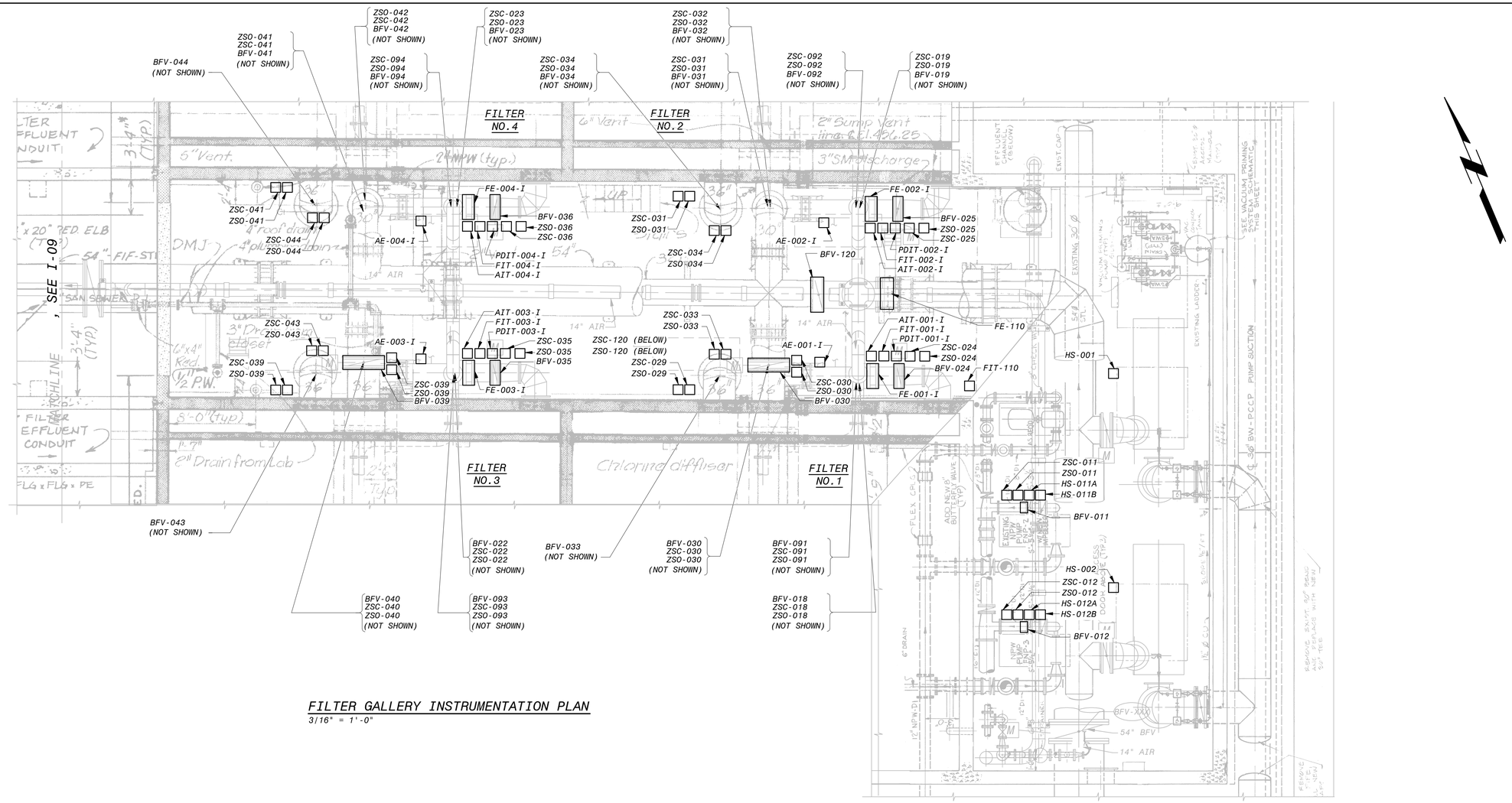

FILTER GALLERY INSTRUMENTATION PLAN

3/16" = 1'-0"

NOTES:

1. REFER TO MECHANICAL DRAWINGS FOR EXACT LOCATION OF VALVES AND THEIR ELEVATION.
2. ALL CONDUIT SHALL BE FIELD ROUTED.
3. LOCATION OF INSTRUMENT AS SHOWN ARE APPROXIMATE. FINAL LOCATION SHALL BE COORDINATED IN THE FIELD.

BACKGROUND INFORMATION NOTE:

BACKGROUND IMAGES USED ON THIS SHEET ARE FROM AS-BUILT DRAWINGS FROM PREVIOUS CONTRACTS THAT WERE PREPARED BASED ON INFORMATION PROVIDED BY OTHERS. ALL ITEMS SHOWN IN THE BACKGROUND AND ALL NEW ITEMS RELYING ON BACKGROUND INFORMATION SHALL BE VERIFIED BY THE CONTRACTOR FOR ACCURACY BEFORE APPLYING THIS INFORMATION FOR ANY PURPOSE.

NO.	DR	CK	DATE	DESCRIPTION

REVISIONS

BLACK & VEATCH
Building a world of difference.
Black & Veatch Corporation
Registration No. F-258
Austin, Texas

STATE OF TEXAS
CHARLES E. MORRIS
106414
LICENSED
PROFESSIONAL ENGINEER

Austin WATER

Walnut Creek WWTP - Tertiary Filter Rehabilitation Project
CIP ID No. 3023.025

INSTRUMENTATION
FILTERS NO. 1 - 4 PIPE GALLERY
INSTRUMENT & CONTROL PLAN

DESIGNED BY:	KWS
DRAWN BY:	KWS
REVIEWED BY:	CEM
APPROVED BY:	TLS
PROJECT NO.:	168622
DATE:	4/4/2014
SCALE:	3/16"=1'-0"
REVISION:	
DISCIPLINE NO.	I-07
DWG. NO.	216 OF 273

FD168622 SAVED: STMK0025, 9/18/2013 10:09:02 AM
D168622 PW-FEDR D:\168622...\09.0055 - Instrumentation Drawings
File: C:\PWBatchPDF\Process\168622 - Austin Walnut Creek WWTP Filter Rehab\I_07.dwg Layout: Work Plotted: 4/4/2014 7:42:11 AM

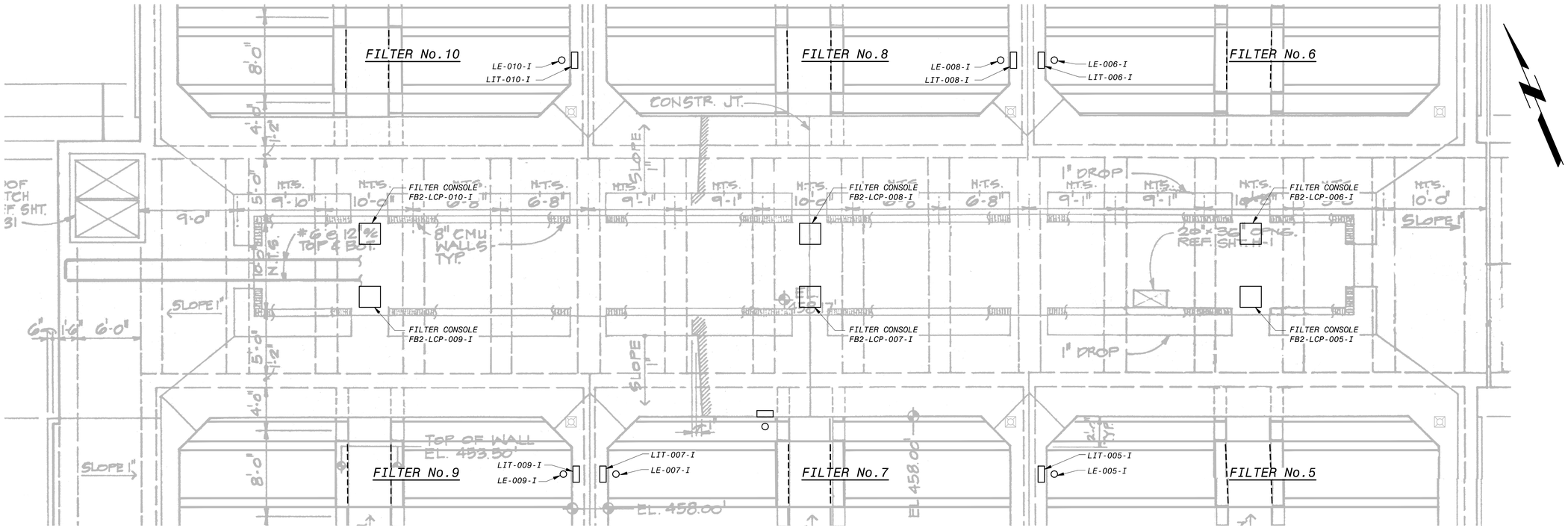

OVERALL FILTER BUILDING NO. 2
INSTRUMENTATION & CONTROLS PLAN

3/16" = 1'-0"

NOTES:

1. AREA CODE IS FB2 UNLESS OTHERWISE NOTED.
2. INSTALL NEW CONTROL PANEL AND CONCRETE PAD AS SHOWN.
3. LOCATION OF INSTRUMENTS AND PANELS AS SHOWN ARE APPROXIMATE. EXACT LOCATION SHALL BE COORDINATED IN FIELD.
4. FILTER LEVEL TRANSMITTER SHALL BE INSTALLED EQUAL DISTANCE BETWEEN FILTER TROUGHS AND SUPPORTS AWAY FROM FILTER WALL PER MANUFACTURERS RECOMMENDATIONS SO THAT THE WALL DOES NOT INTERFERES WITH TRANSMITTER SIGNAL.
5. PROVIDE ONE PLANT SCADA NETWORK CIRCUIT WITH ALL RJ-45 JACK AND 120VAC POWER CIRCUIT.

BACKGROUND INFORMATION NOTE:

BACKGROUND IMAGES USED ON THIS SHEET ARE FROM AS-BUILT DRAWINGS FROM PREVIOUS CONTRACTS THAT WERE PREPARED BASED ON INFORMATION PROVIDED BY OTHERS. ALL ITEMS SHOWN IN THE BACKGROUND AND ALL NEW ITEMS RELYING ON BACKGROUND INFORMATION SHALL BE VERIFIED BY THE CONTRACTOR FOR ACCURACY BEFORE APPLYING THIS INFORMATION FOR ANY PURPOSE.

NO.	DR	CK	DATE	DESCRIPTION

REVISIONS

BLACK & VEATCH
Building a world of difference.
Black & Veatch Corporation
Registration No. F-258
Austin, Texas

STATE OF TEXAS
CHARLES E. MORRIS
108414
LICENSED
PROFESSIONAL ENGINEER

Austin WATER
Walnut Creek WWTP - Tertiary Filter Rehabilitation Project
CIP ID No. 3023.025

INSTRUMENTATION
FILTER BUILDING NO. 2
INSTRUMENTATION & CONTROL PLAN

DESIGNED BY:	KWS
DRAWN BY:	KWS
REVIEWED BY:	CEM
APPROVED BY:	TLS
PROJECT NO.:	168622
DATE:	4/4/2014
SCALE:	3/16"=1-0"

REVISION:

DISCIPLINE NO.
I-08

DWG. NO.
217 OF 273

FD168622 SAVED: LE007100, 2/23/2013 5:44:06 PM
D168622 PW-FEDR: FD168622...\09.0005 - Instrumentation Drawings
File: C:\PWBatchPDF\Process\168622 - Austin Walnut Creek WWTP Filter Rehab\I_08.dwg Layout: Work Plotted: 4/4/2014 11:11:11 AM

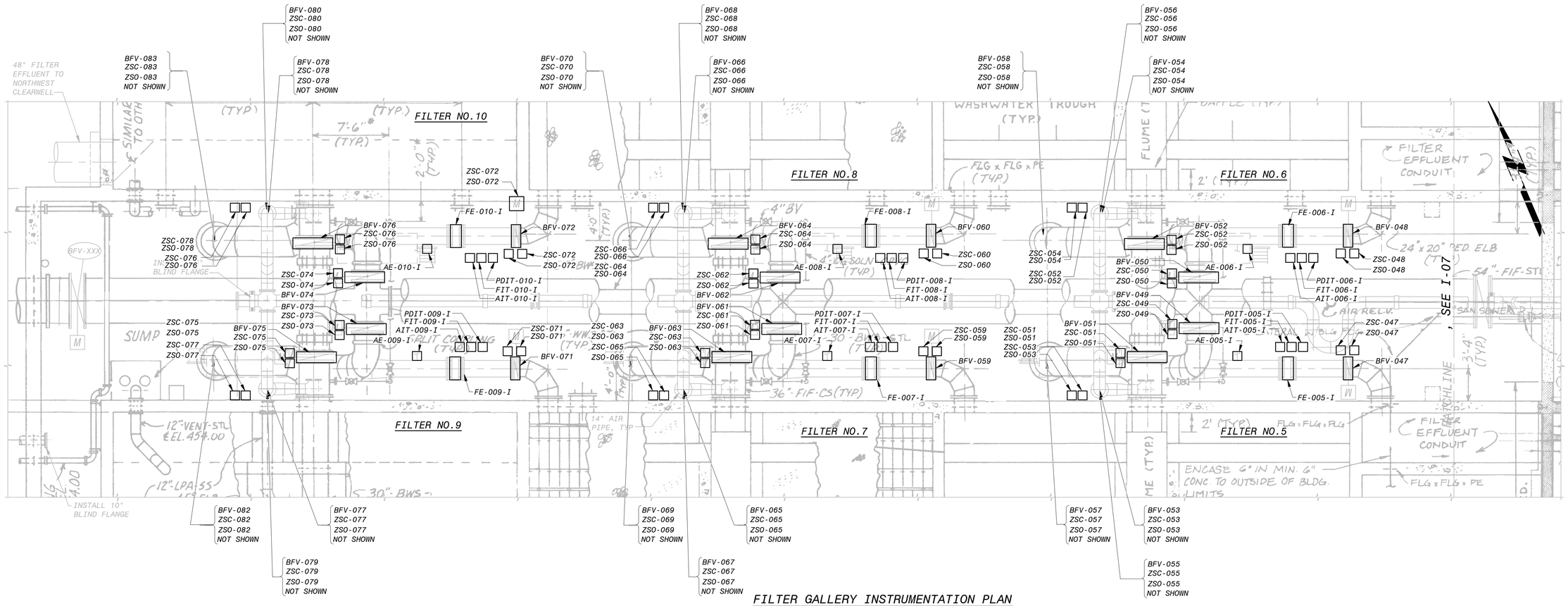

FILTER GALLERY INSTRUMENTATION PLAN

3/16" = 1'-0"

BACKGROUND INFORMATION NOTE:

BACKGROUND IMAGES USED ON THIS SHEET ARE FROM AS-BUILT DRAWINGS FROM PREVIOUS CONTRACTS THAT WERE PREPARED BASED ON INFORMATION PROVIDED BY OTHERS. ALL ITEMS SHOWN IN THE BACKGROUND AND ALL NEW ITEMS RELYING ON BACKGROUND INFORMATION SHALL BE VERIFIED BY THE CONTRACTOR FOR ACCURACY BEFORE APPLYING THIS INFORMATION FOR ANY PURPOSE.

NOTES:

1. REFER TO MECHANICAL DRAWINGS FOR EXACT LOCATION OF VALVES AND THEIR ELEVATION.
2. ALL CONDUIT SHALL BE FIELD ROUTED.
3. LOCATION OF INSTRUMENT AS SHOWN ARE APPROXIMATE. FINAL LOCATION SHALL BE COORDINATED IN THE FIELD.

NO.	DR	CK	DATE	DESCRIPTION

REVISIONS

BLACK & VEATCH
Building a world of difference.
Black & Veatch Corporation
Registration No. F-258
Austin, Texas

STATE OF TEXAS
CHARLES E. MORRIS
106414
LICENSED PROFESSIONAL ENGINEER
4/4/2014

Austin WATER
Walnut Creek WWTP - Tertiary Filter Rehabilitation Project
CIP ID No. 3023.025

INSTRUMENTATION
FILTERS NO. 5-10 PIPE GALLERY
INSTRUMENTATION & CONTROLS PLAN

DESIGNED BY:	KWS
DRAWN BY:	KWS
REVIEWED BY:	CEM
APPROVED BY:	TLS
PROJECT NO.:	168622
DATE:	4/4/2014
SCALE:	3/16"=1'-0"

REVISION:

DISCIPLINE NO.
I-09

DWG. NO.
218 OF 273

FD168622 SAVED: LEP07100, 2/21/2013 6:07:47 PM
D168622 PW:KEDR\D168622...\09.I005 - Instrumentation Drawings
File: C:\PWBatchPDF\Process\168622 - Austin Walnut Creek WWTP Filter Rehab\I_09.dwg Layout: Work Plotted: 4/4/2014 7:43:01 AM

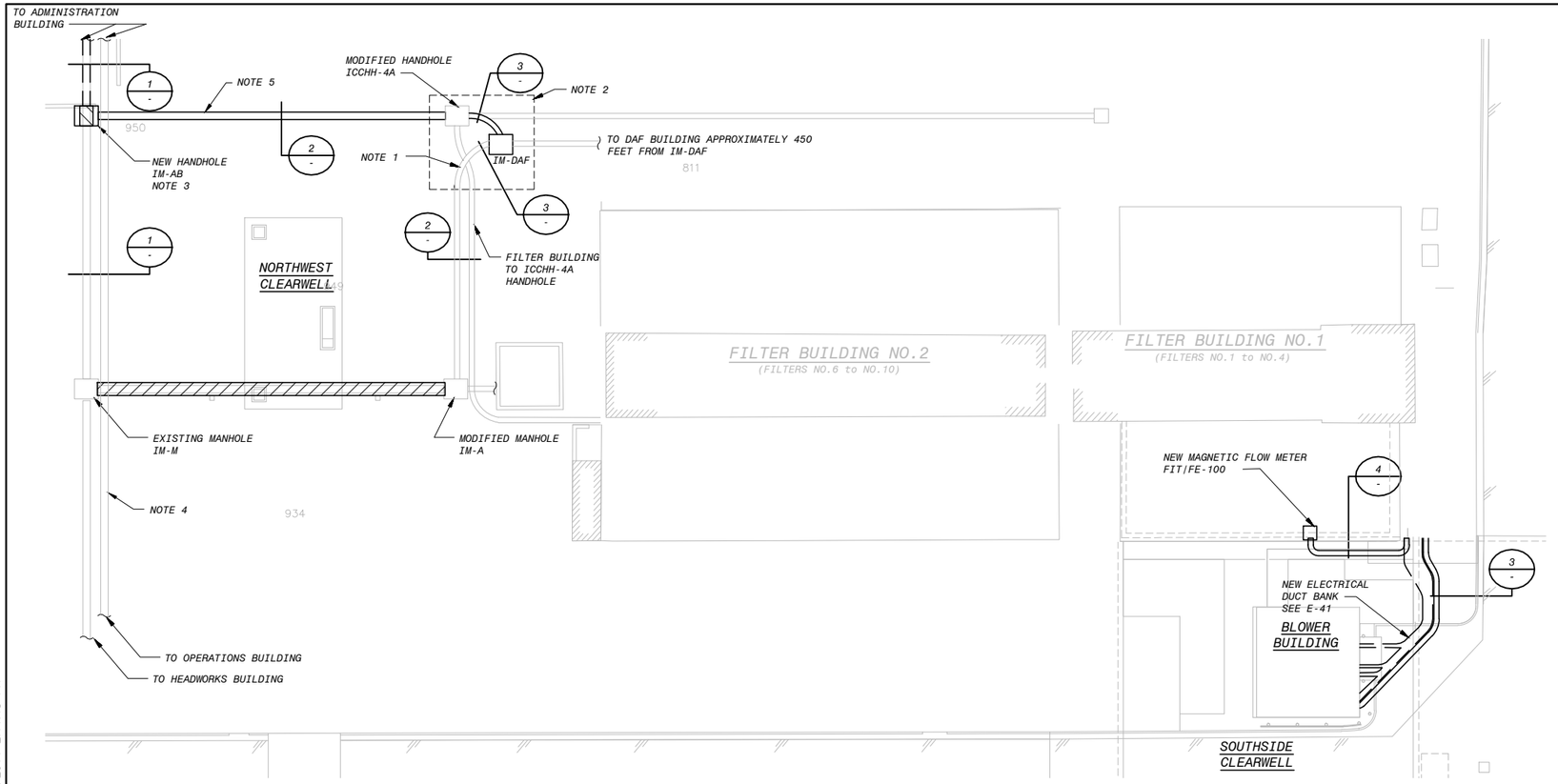

ENLARGED SITE PLAN

SCALE: 1"=20'

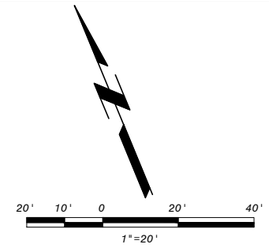

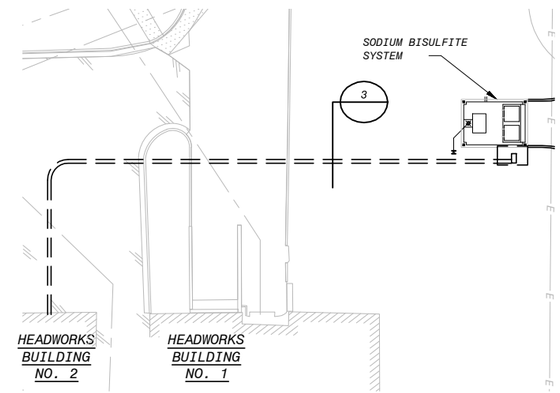

ENLARGED SODIUM BISULFITE PLAN

SCALE: 1"=20'

1 2 — 3 4 — EXISTING DUCT BANK NOTE 4

INSTRUMENTATION/COMMUNICATION DUCTBANK SECTION (1)

NOT TO SCALE
TYPICAL FOR DUCT BANKS:
ADMIN/IM-AB
IM-AB/IM-M

1 2 — 3 4

EXISTING INSTRUMENTATION/COMMUNICATION DUCTBANK SECTION (2)

NOT TO SCALE
TYPICAL FOR DUCT BANKS:
IM-AB/ICCHH-4A
ICCHH-4A/IM-A

1 2

MODIFIED EXISTING INSTRUMENTATION/COMMUNICATION DUCTBANK SECTION (3)

NOT TO SCALE
TYPICAL FOR DUCT BANKS:
DBIC-BB1A-FB1, DBIC-NHS-HW2, ICCHH-4A/IM-DAF, IM-DAF/DAF, IM-DAF/IM-A

1

PROPOSED INSTRUMENTATION/COMMUNICATION DUCTBANK SECTION (4)

NOT TO SCALE
TYPICAL FOR DUCT BANKS:
DBIC-FM-FB1

NOTES:

1. THE DUCT BANK BETWEEN INSTRUMENT MANHOLES IM-M AND IM-A SHALL BE DEMOLISHED PRIOR TO WORK ON THE NORTHWEST CLEARWELL. SCADA AND COMMUNICATION CIRCUITS CONTAINED IN THE DEMOLISHED DUCT BANK SHALL BE REPLACED BY THE CONTRACTOR. CONTRACTOR SHALL LOCATE EXISTING DUCT BANK, INTERCEPT EXISTING DUCT BANK, INSTALL NEW MANHOLES AND DUCT BANK AS INDICATED ON THE DRAWING. CONTRACTOR SHALL PULL NEW CABLE AND TERMINATE AS REQUIRED FOR A COMPLETE AND FUNCTIONING SYSTEM. EXISTING SCADA COMMUNICATION SHALL REMAIN IN SERVICE WHILE INSTRUMENT DUCT BANK IS MODIFIED.
2. CONTRACTOR SHALL LOCATE IM-A TO DAF BUILDING DUCT BANK SWEEP NEAR HANDHOLE ICCHH-4A. CONTRACTOR SHALL INTERCEPT DUCT BANK, PROVIDE ACCESS TO EXISTING CONDUIT, AND INSTALL NEW MANHOLE IM-DAF FOR NEW CABLE INSTALLATION. CONTRACTOR SHALL CORE THROUGH EXITING MANHOLE ICCHH-4A FOR NEW DUCT BANK BETWEEN THE NEW MANHOLE AND MANHOLE ICCHH-4A. CONDUITS SHALL HAVE BELL ENDS AND INSTALLED FLUSH WITH MANHOLE WALL. CONTRACTOR SHALL REPAIR MANHOLE AROUND CONDUIT WITH MORTAR.
3. CONTRACTOR SHALL LOCATE ADMINISTRATION BUILDING TO IM-M DUCT BANK. CONTRACTOR SHALL INTERCEPT DUCT BANK, PROVIDE ACCESS TO EXISTING CONDUIT, AND INSTALL NEW MANHOLE IM-AB FOR NEW CABLE INSTALLATION. CONDUITS SHALL HAVE BELL ENDS AND INSTALLED FLUSH WITH MANHOLE WALL. CONTRACTOR SHALL REPAIR MANHOLE AROUND CONDUIT WITH MORTAR.
4. EXISTING DUCTBANK BETWEEN THE ADMINISTRATION BUILDING AND OPERATIONS BUILDING SHALL NOT BE DISTURBED AND SHALL REMAIN IN SERVICE AT ALL TIMES THROUGHOUT CONSTRUCTION.
5. CONTRACTOR SHALL INSTALL NEW DUCT BANK BETWEEN NEW HANDHOLE IM-AB AND HANDHOLE ICCHH-4A.
6. CONTRACTOR SHALL INSTALL NEW SY/MAX COMMUNICATION CABLE FROM ADMINISTRATION BUILDING CONTROL ROOM TO THE DAF BUILDING PLC, AND FROM THE ADMINISTRATION BUILDING CONTROL ROOM TO THE FILTER BUILDING FILTER CONSOLE, AND FROM THE FILTER BUILDING FILTER CONSOLE TO THE DAF BUILDING PLC. SCADA SYSTEM SHALL REMAIN ONLINE AT ALL TIMES. CONTRACTOR SHALL RETERMINATE CABLES AT EACH END, TEST THE CABLES FROM CONNECTOR TO CONNECTOR PRIOR TO CONNECTION TO THE PLC. CONTRACTOR SHALL COORDINATE AND SCHEDULE WITH PLANT STAFF PRIOR TO COMMUNICATION CABLE SWITCHOVER. CABLE SHALL NOT BE SPLICED AT ANY TIME.
7. CONTRACTOR SHALL INSTALL NEW FIBER OPTIC COMMUNICATION CABLE FROM ADMINISTRATION BUILDING CONTROL ROOM TO THE FILTER BUILDING FIBER NETWORK PANEL. SCADA SYSTEM SHALL REMAIN ONLINE AT ALL TIMES. CONTRACTOR SHALL RETERMINATE CABLES AT EACH END, TEST THE CABLES FROM CONNECTOR TO CONNECTOR PRIOR TO CONNECTION TO THE PLC. CONTRACTOR SHALL COORDINATE AND SCHEDULE WITH PLANT STAFF PRIOR TO COMMUNICATION CABLE SWITCHOVER. CABLE SHALL NOT BE SPLICED AT ANY TIME.

INSTRUMENTATION CONDUIT/WIRE SCHEDULE FOR DUCT BANKS

DUCK TABNK SECTION NO.	CONDUIT NO.	CONDUIT SIZE	DESCRIPTION OF CONTENTS	ORIGIN	DESTINATION
ADMIN/IM-AB	1	4"	(1) FIBER OPTIC CABLE	ADMIN BLDG	HEADWORKS
ADMIN/IM-AB	2	4"	(2) FIBER OPTIC CABLE (1) SY/MAX SCADA CABLE (1) SY/MAX SCADA CABLE	ADMIN BLDG	FILTER BLDG FIBER NETWORK PANEL (FO) FILTER CONTROL CONSOLE (SY/MAX) DAF BUILDING PLC (SY/MAX)
ADMIN/IM-AB	3	4"	(2) SY/MAX SCADA CABLE	ADMIN BLDG	CHEMICAL BUILDING
ADMIN/IM-AB	4	4"	(1) FIBER OPTIC CABLE	ADMIN BLDG	HEADWORKS
IM-AB/ICCHH-4A	1	3"	(1) FIBER OPTIC CABLE	ADMIN BLDG	FILTER BLDG FIBER NETWORK PANEL
IM-AB/ICCHH-4A	2	3"	(1) FIBER OPTIC CABLE	ADMIN BLDG	FILTER BLDG FIBER NETWORK PANEL
IM-AB/ICCHH-4A	3	3"	(1) SY/MAX SCADA CABLE	ADMIN BLDG	FILTER CONTROL CONSOLE
IM-AB/ICCHH-4A	4	3"	(1) SY/MAX SCADA CABLE	ADMIN BLDG	DAF BUILDING PLC
ICCHH-4A/IM-DAF	1	3"	(1) SY/MAX SCADA CABLE	ADMIN BLDG	FILTER CONTROL CONSOLE
ICCHH-4A/IM-DAF	2	3"	(1) SY/MAX SCADA CABLE	ADMIN BLDG	DAF BUILDING PLC
ICCHH-4A/IM-A	3	3"	(1) FIBER OPTIC CABLE	ADMIN BLDG	FILTER BLDG FIBER NETWORK PANEL
ICCHH-4A/IM-A	4	3"	(1) FIBER OPTIC CABLE	ADMIN BLDG	FILTER BLDG FIBER NETWORK PANEL
IM-DAF/DAF	1	3"	(1) SY/MAX SCADA CABLE	ADMIN BLDG	DAF BUILDING PLC
IM-DAF/DAF	2	3"	(1) SY/MAX SCADA CABLE	DAF BUILDING PLC	FILTER CONTROL CONSOLE
IM-DAF/IM-A	1	3"	(1) SY/MAX SCADA CABLE	DAF BUILDING PLC	FILTER CONTROL CONSOLE
IM-DAF/IM-A	2	3"	(1) SY/MAX SCADA CABLE	ADMIN BLDG	FILTER CONTROL CONSOLE
IM-AB/IM-M	1	4"	(1) FIBER OPTIC CABLE	ADMIN BLDG	HEADWORKS (FIBER OPTIC)
IM-AB/IM-M	2	4"	(2) FIBER OPTIC CABLE	ADMIN BLDG	FILTER BLDG FIBER NETWORK PANEL
IM-AB/IM-M	3	4"	(2) SY/MAX SCADA CABLE	ADMIN BLDG	CHEMICAL BUILDING
IM-AB/IM-M	4	4"	(1) FIBER OPTIC CABLE	ADMIN BLDG	HEADWORKS (FIBER OPTIC)
DBIC-BB1-FB1	1	3"	(1) FIBER OPTIC CABLE	FILTER BLDG	AIR SCOUR PLC PANEL
DBIC-BB1-FB1	2	3"	SPARE	FILTER BLDG	AIR SCOUR PLC PANEL
DBIC-FM-FB1	1	3"	(1) 1PR#16S	FILTER BLDG	AIR SCOUR FLOW METER
DBIC-NHS-HW2	1	3"	HEADWORKS BLDG	HEADWORKS BLDG	SODIUM BISULFITE SYSTEM PLC
DBIC-NHS-HW2	2	3"	(1) FIBER OPTIC CABLE	HEADWORKS BLDG	SODIUM BISULFITE SYSTEM PLC

NO.	BY	CK	DATE	DESCRIPTION

REVISIONS

BLACK & VEATCH
Building a world of difference.
Black & Veatch Corporation
Registration No. F-439
Austin, Texas

STATE OF TEXAS
CHARLES E. MORRIS
106414
LICENSED
PROFESSIONAL ENGINEER
9/25/2014

Austin WATER
Walnut Creek WWTP - Tertiary Filter Rehabilitation Project
CIP ID No. 3023.025

INSTRUMENTATION DUCTBANK

DESIGNED BY:	CEM
DRAWN BY:	KWS
REVIEWED BY:	CEM
APPROVED BY:	TLS
PROJECT NO.:	168622
DATE:	9/25/2014
SCALE:	1"=20'

REVISION:

DISCIPLINE NO.
I-10

DWG. NO.
219 OF 273

F0168622 SAVED: SIM09325, 9/4/2014 2:50:39 PM
D168622 ORIGIN ID: Instrumentation Drawings
File: C:\PWBatchPDF\Process\168622 - Austin Walnut Creek WWTP Filter Rehab\I_10.dwg Layout: Layout1 Plotted: 9/25/2014 2:11:48 PM

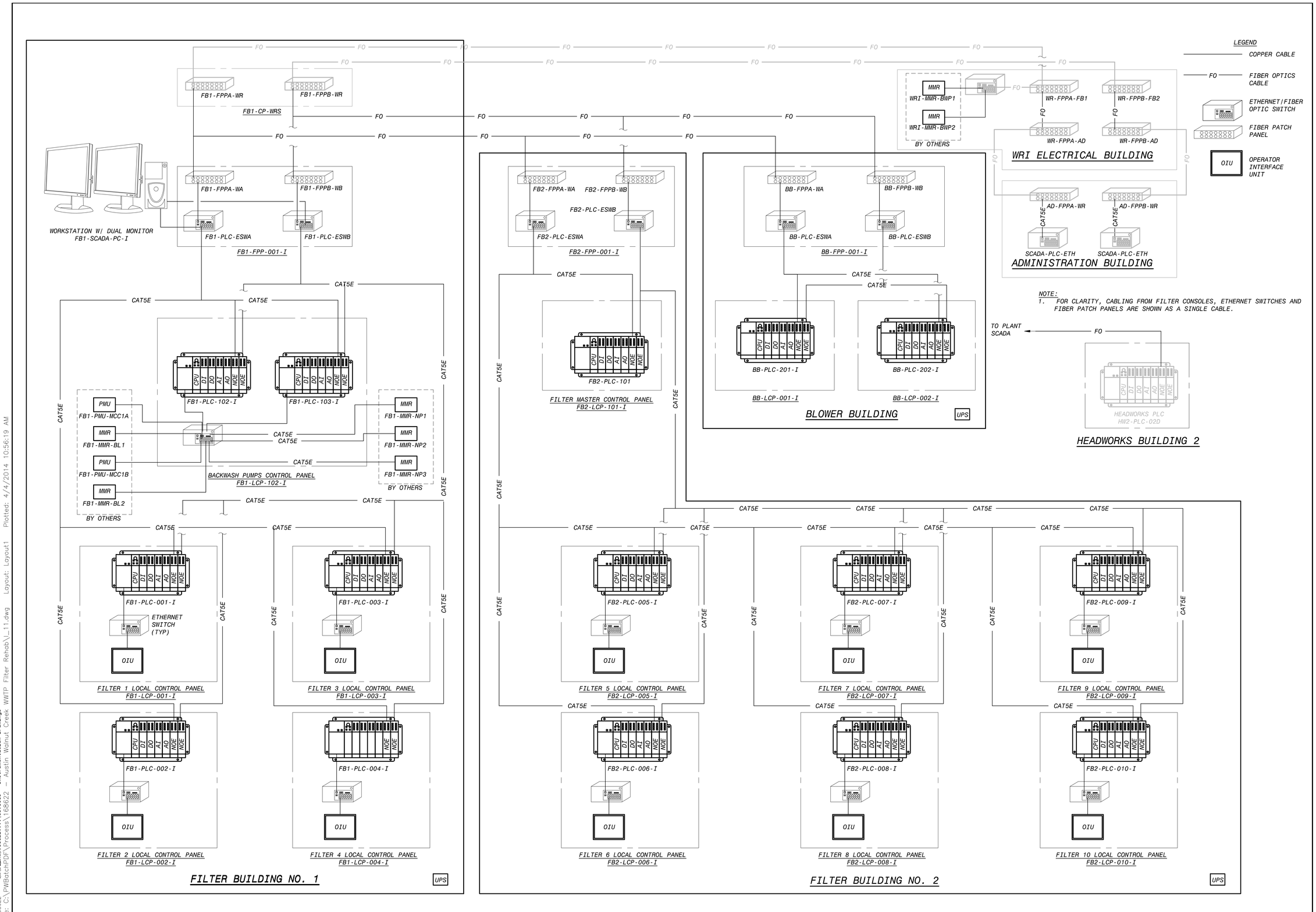

NO.	DR	CK	DATE	DESCRIPTION

REVISIONS

BLACK & VEATCH
Building a world of difference.
Black & Veatch Corporation
Registration No. F-258
Austin, Texas

STATE OF TEXAS
CHARLES E. MORRIS
106114
LICENSED
PROFESSIONAL ENGINEER

Walnut Creek WWTP - Tertiary Filter Rehabilitation Project
CIP ID No. 3023.025

Austin WATER

INSTRUMENTATION
CONTROL SYTEM BLOCK DIAGRAM

DESIGNED BY:	KWS
DRAWN BY:	KWS
REVIEWED BY:	CEM
APPROVED BY:	TLS
PROJECT NO.:	168622
DATE:	4/4/2014
SCALE:	NOT TO SCALE
REVISION:	
DISCIPLINE NO.	I-11
DWG. NO.	220 OF 273

FD168622 SAVED: STMK0205, 11/11/2013 3:17:34 PM
D168622 BW-FLDR:D:\168622...\109.5055 - Instrumentation Drawings
File: C:\PWBatchPDF\Process\168622 - Austin Walnut Creek WWTP Filter Rehab_I_11.dwg Layout: Layout1 Plotted: 4/4/2014 10:56:19 AM

FILTER CONSOLE NO. 1 PANEL LEGEND		
NO.	DEVICE TYPE	NAMEPLATE ENGRAVING
1	NAMEPLATE	FB2-LCP-101-I FILTER MASTER CONTROL PANEL

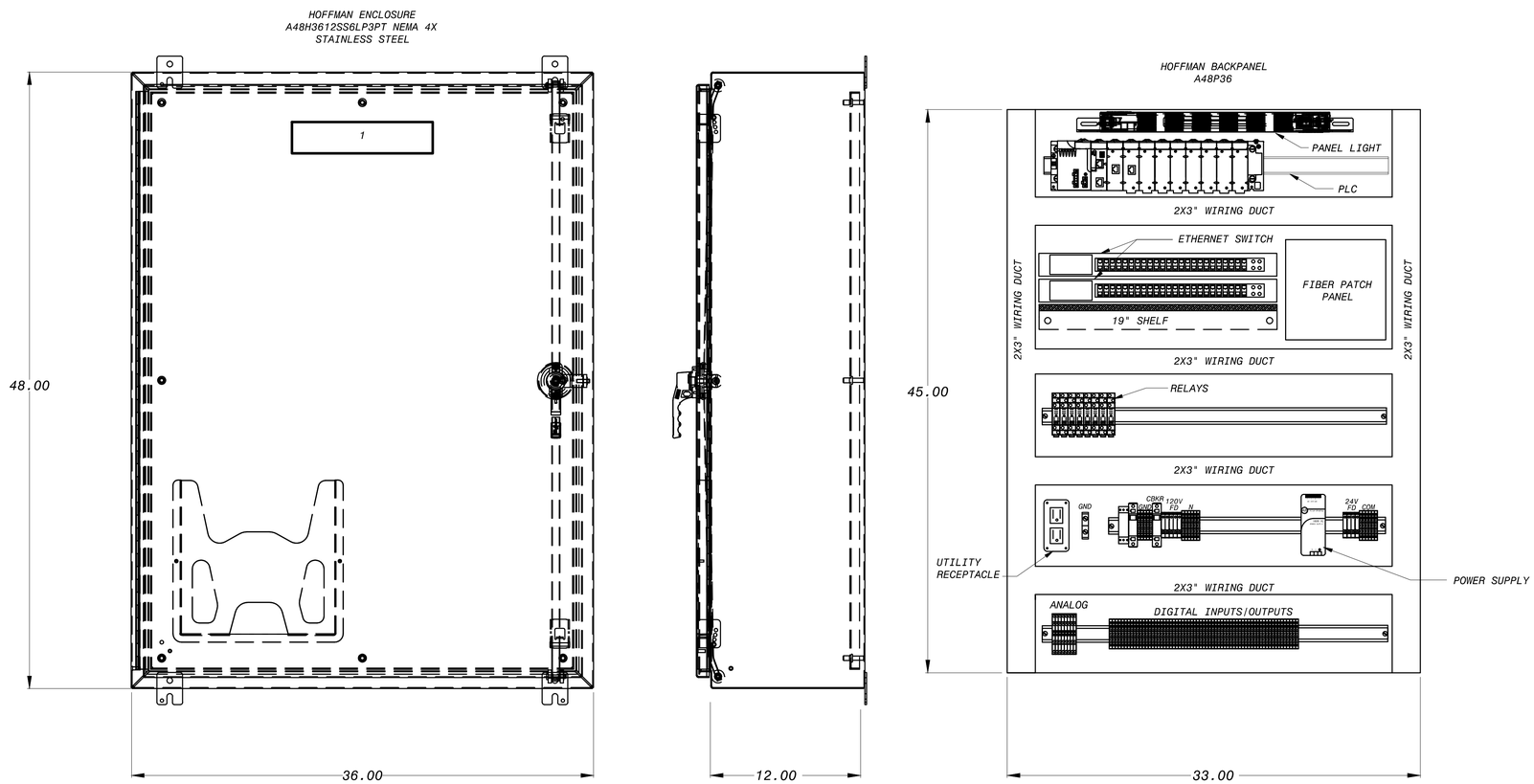

FILTER MASTER CONTROL PANEL

NOTES:
1. ACTUAL NUMBER OF TERMINALS SHALL BE DETERMINED BY FINAL DESIGN.
2. ENGRAVING SHALL BE BLACK WITH WHITE LETTERS.

NO.	DR	CK	DATE	DESCRIPTION

REVISIONS

BLACK & VEATCH
Building a world of difference.
Black & Veatch Corporation
Registration No. F-258
Austin, Texas

STATE OF TEXAS
CHARLES E. MORRIS
108414
LICENSED
PROFESSIONAL ENGINEER
4/4/2014

Austin Water
Walnut Creek WWTP - Tertiary Filter Rehabilitation Project
CIP ID No. 3023.025

INSTRUMENTATION
FILTER MASTER CONTROL PANEL DETAIL

DESIGNED BY:	KWS
DRAWN BY:	KWS
REVIEWED BY:	CEM
APPROVED BY:	TLS
PROJECT NO.:	168622
DATE:	4/4/2014
SCALE:	NOT TO SCALE
REVISION:	
DISCIPLINE NO.	I-12
DWG. NO.	221 OF 273

FD168622 SAVED: SIMS0205, 7/10/2013 9:55:01 AM
D168622 PW:KEDR:I:\168622...\06.5065 - Instrumentation Drawings
File: C:\PWBatchPDF\Process\168622 - Austin Walnut Creek WWTP Filter Rehab\I_12.dwg Layout: Layout1 Plotted: 4/4/2014 7:44:23 AM

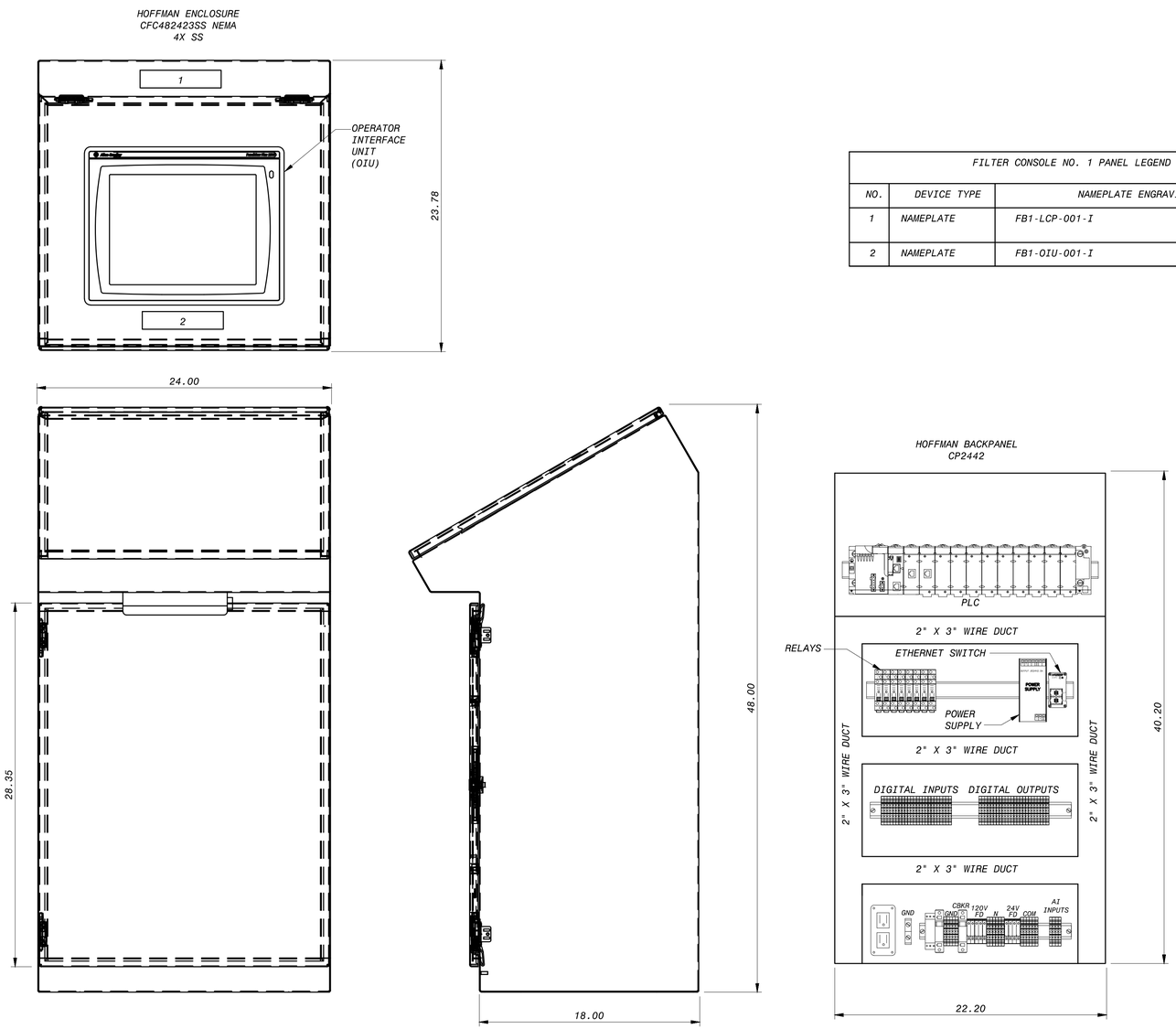

FILTER CONSOLE NO. 1 PANEL LEGEND		
NO.	DEVICE TYPE	NAMEPLATE ENGRAVING
1	NAMEPLATE	FB1-LCP-001-I
2	NAMEPLATE	FB1-OIU-001-I

NOTES:
1. ACTUAL NUMBER OF TERMINALS SHALL BE DETERMINED BY FINAL DESIGN.
2. ENGRAVING SHALL BE BLACK WITH WHITE LETTERS.

FILTER NO.1 CONSOLE

NO.	DR	CK	DATE	DESCRIPTION

REVISIONS

BLACK & VEATCH
Building a world of difference.
Black & Veatch Corporation
Registration No. F-258
Austin, Texas

STATE OF TEXAS
CHARLES E. MORRIS
108414
LICENSED
PROFESSIONAL ENGINEER

Austin WATER
Walnut Creek WWTP - Tertiary Filter Rehabilitation Project
CIP ID No. 3023.025

INSTRUMENTATION
FILTER CONSOLE NO. 1 PANEL DETAIL

DESIGNED BY:	KWS
DRAWN BY:	KWS
REVIEWED BY:	CEM
APPROVED BY:	TLS
PROJECT NO.:	168622
DATE:	4/4/2014
SCALE:	NOT TO SCALE

REVISION:

DISCIPLINE NO.
I-13

DWG. NO.
222 OF 273

FD168622 SAVED: STMK0025, 7/22/2013 11:35:22 AM
D168622 PW-FUDP:D:\168622...\109.0055 - Instrumentation Drawings
File: C:\PWBatchPDF\Process\168622 - Austin Walnut Creek WWTP Filter Rehab_I_13.dwg Layout: Layout1 Plotted: 4/4/2014 7:44:44 AM

HOFFMAN ENCLOSURE
CFC482423SS NEMA
4X SS

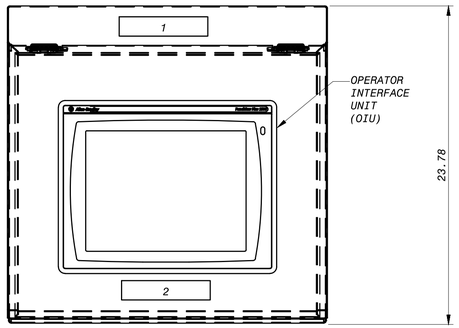

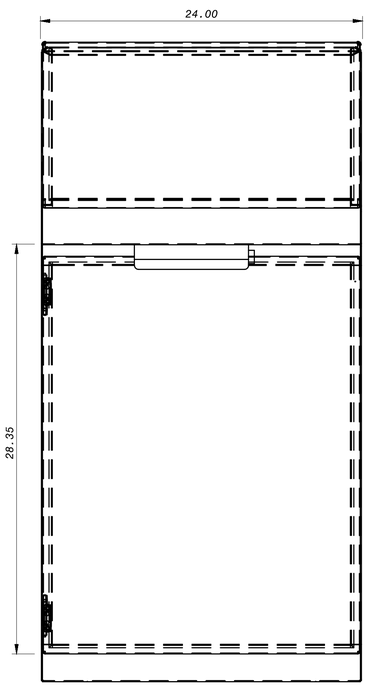

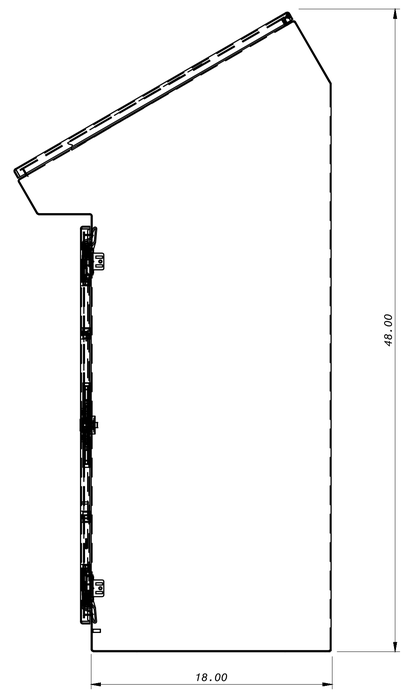

HOFFMAN BACKPANEL
CP2442

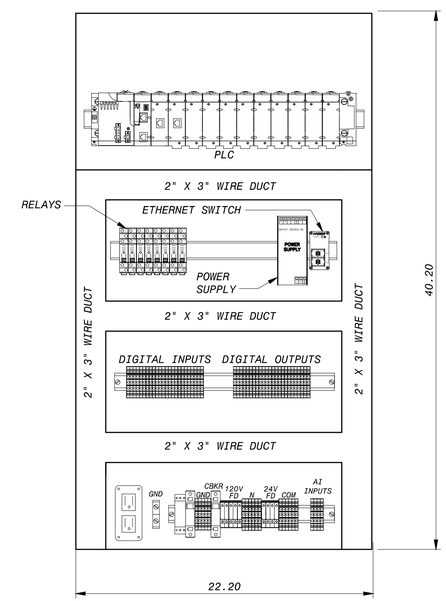

FILTER CONSOLE NO. 2 PANEL LEGEND		
NO.	DEVICE TYPE	NAMEPLATE ENGRAVING
1	NAMEPLATE	FB1-LCP-002-I
2	NAMEPLATE	FB1-OIU-002-I

NOTES:
1. ACTUAL NUMBER OF TERMINALS SHALL BE DETERMINED BY FINAL DESIGN.
2. ENGRAVING SHALL BE BLACK WITH WHITE LETTERS.

FILTER NO.2 CONSOLE

NO.	DR	CK	DATE	DESCRIPTION

REVISIONS

BLACK & VEATCH
Building a world of difference.
Black & Veatch Corporation
Registration No. F-258
Austin, Texas

STATE OF TEXAS
CHARLES E. MORRIS
108414
LICENSED
PROFESSIONAL ENGINEER

Austin WATER
Walnut Creek WWTP - Tertiary Filter Rehabilitation Project
CIP ID No. 3023.025

INSTRUMENTATION
FILTER CONSOLE NO. 2 DETAIL

DESIGNED BY:	KWS
DRAWN BY:	KWS
REVIEWED BY:	CEM
APPROVED BY:	TLS
PROJECT NO.:	168622
DATE:	4/4/2014
SCALE:	NOT TO SCALE

REVISION:

DISCIPLINE NO.
I-14

DWG. NO.
223 OF 273

FD168622 SAVED: STIMSON25, 7/22/2013 11:35:22 AM
D168622 PW:\\FDPW1D\D168622...\109.0055 - Instrumentation Drawings
File: C:\PWBatchPDF\Process\168622 - Austin Walnut Creek WWTP Filter Rehab_I-14.dwg Layout: Layout1 Plotted: 4/4/2014 7:45:04 AM

HOFFMAN ENCLOSURE
CFC482423SS NEMA
4X SS

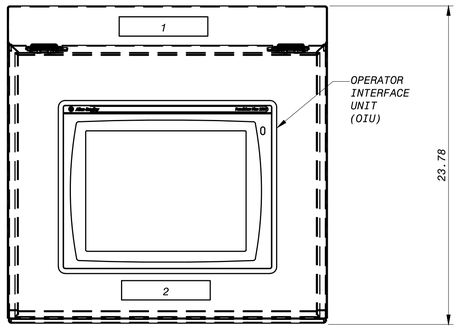

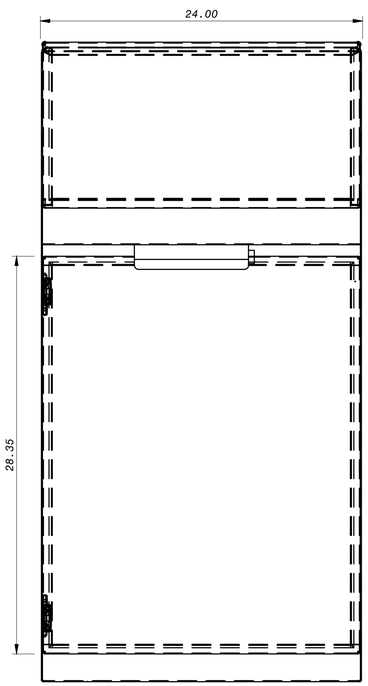

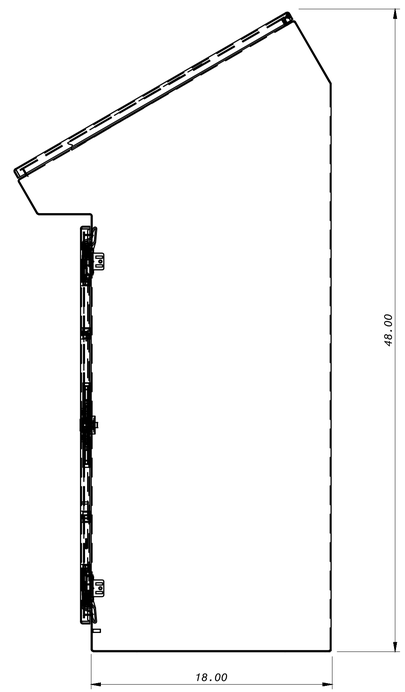

FILTER CONSOLE NO. 3 PANEL LEGEND		
NO.	DEVICE TYPE	NAMEPLATE ENGRAVING
1	NAMEPLATE	FB1-LCP-003-I
2	NAMEPLATE	FB1-OIU-003-I

HOFFMAN BACKPANEL
CP2442

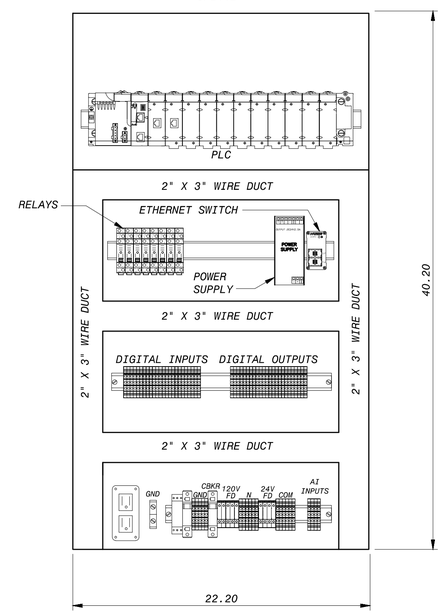

NOTES:
1. ACTUAL NUMBER OF TERMINALS SHALL BE DETERMINED BY FINAL DESIGN.
2. ENGRAVING SHALL BE BLACK WITH WHITE LETTERS.

FILTER NO.3 CONSOLE

NO.	DR	CK	DATE	DESCRIPTION

REVISIONS

BLACK & VEATCH
Building a world of difference.
Black & Veatch Corporation
Registration No. F-258
Austin, Texas

STATE OF TEXAS
CHARLES E. MORRIS
108414
LICENSED
PROFESSIONAL ENGINEER

Austin WATER
Walnut Creek WWTP - Tertiary Filter Rehabilitation Project
CIP ID No. 3023.025

INSTRUMENTATION
FILTER CONSOLE NO. 3 DETAIL

DESIGNED BY:	KWS
DRAWN BY:	KWS
REVIEWED BY:	CEM
APPROVED BY:	TLS
PROJECT NO.:	168622
DATE:	4/4/2014
SCALE:	NOT TO SCALE

REVISION:

DISCIPLINE NO.
I-15

DWG. NO.
224 OF 273

FD168622 SAVED: STMK0025, 7/22/2013 11:35:22 AM
D168622 PW-FLDR:D:\168622...\00.0055 - Instrumentation Drawings
File: C:\PWBatchPDF\Process\168622 - Austin Walnut Creek WWTP Filter Rehab_I_15.dwg Layout: Layout1 Plotted: 4/4/2014 7:45:25 AM

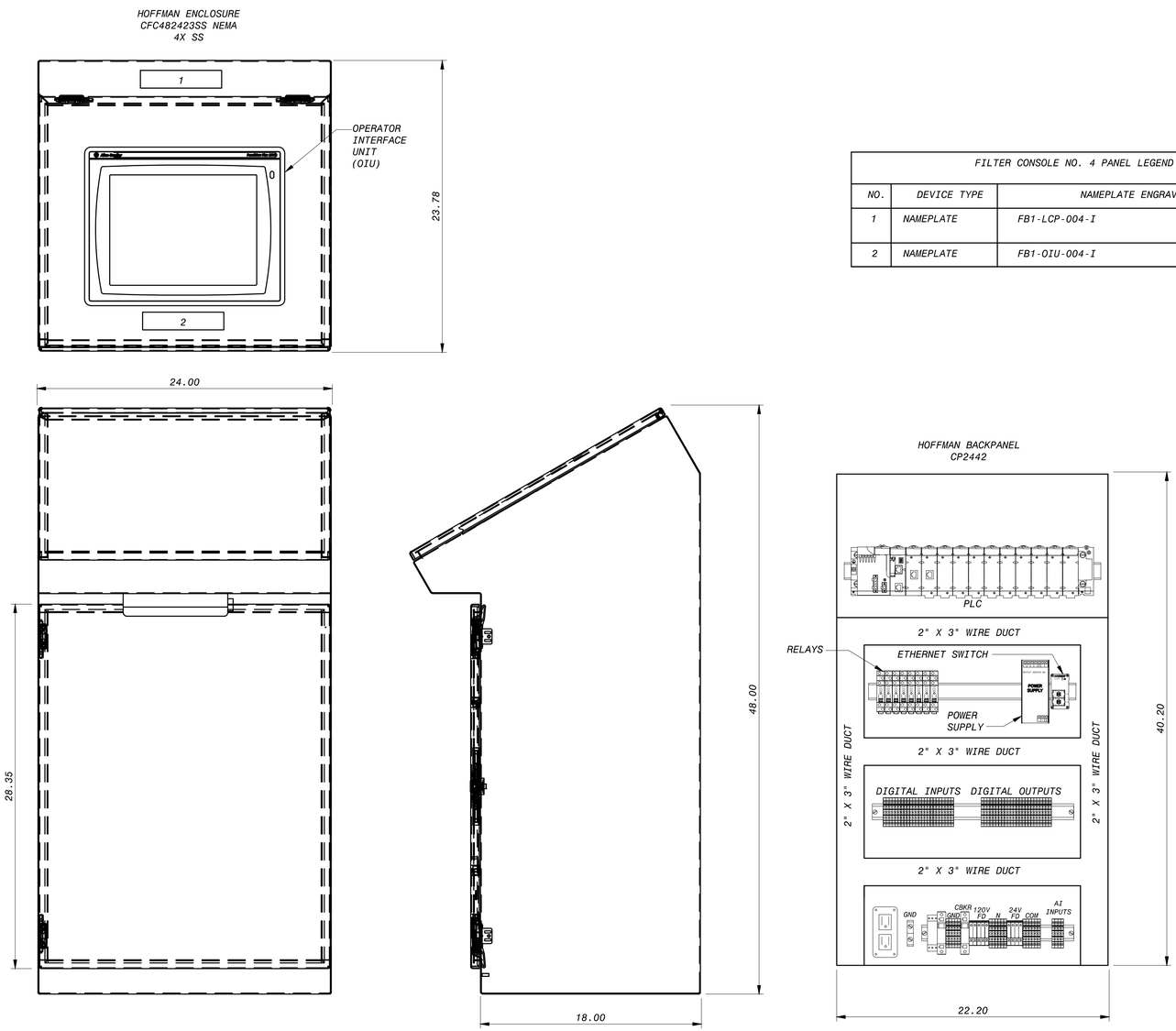

FILTER CONSOLE NO. 4 PANEL LEGEND		
NO.	DEVICE TYPE	NAMEPLATE ENGRAVING
1	NAMEPLATE	FB1-LCP-004-I
2	NAMEPLATE	FB1-OIU-004-I

NOTES:
1. ACTUAL NUMBER OF TERMINALS SHALL BE DETERMINED BY FINAL DESIGN.
2. ENGRAVING SHALL BE BLACK WITH WHITE LETTERS.

FILTER NO.4 CONSOLE

NO.	DR	CK	DATE	DESCRIPTION

REVISIONS

BLACK & VEATCH
Building a world of difference.
Black & Veatch Corporation
Registration No. F-258
Austin, Texas

STATE OF TEXAS
CHARLES E. MORRIS
108414
LICENSED
PROFESSIONAL ENGINEER

Austin WATER
Walnut Creek WWTP - Tertiary Filter Rehabilitation Project
CIP ID No. 3023.025

INSTRUMENTATION
FILTER CONSOLE NO. 4 DETAIL

DESIGNED BY:	KWS
DRAWN BY:	KWS
REVIEWED BY:	CEM
APPROVED BY:	TLS
PROJECT NO.:	168622
DATE:	4/4/2014
SCALE:	NOT TO SCALE

REVISION:

DISCIPLINE NO.
I-16

DWG. NO.
225 OF 273

FD168622 SAVED: STIMSON25, 7/22/2013 11:35:22 AM
D168622 PW:\\FSDPW\D168622...\109.0055 - Instrumentation Drawings
File: C:\PWBatchPDF\Process\168622 - Austin Walnut Creek WWTP Filter Rehab_I_16.dwg Layout: Layout1 Plotted: 4/4/2014 7:45:45 AM

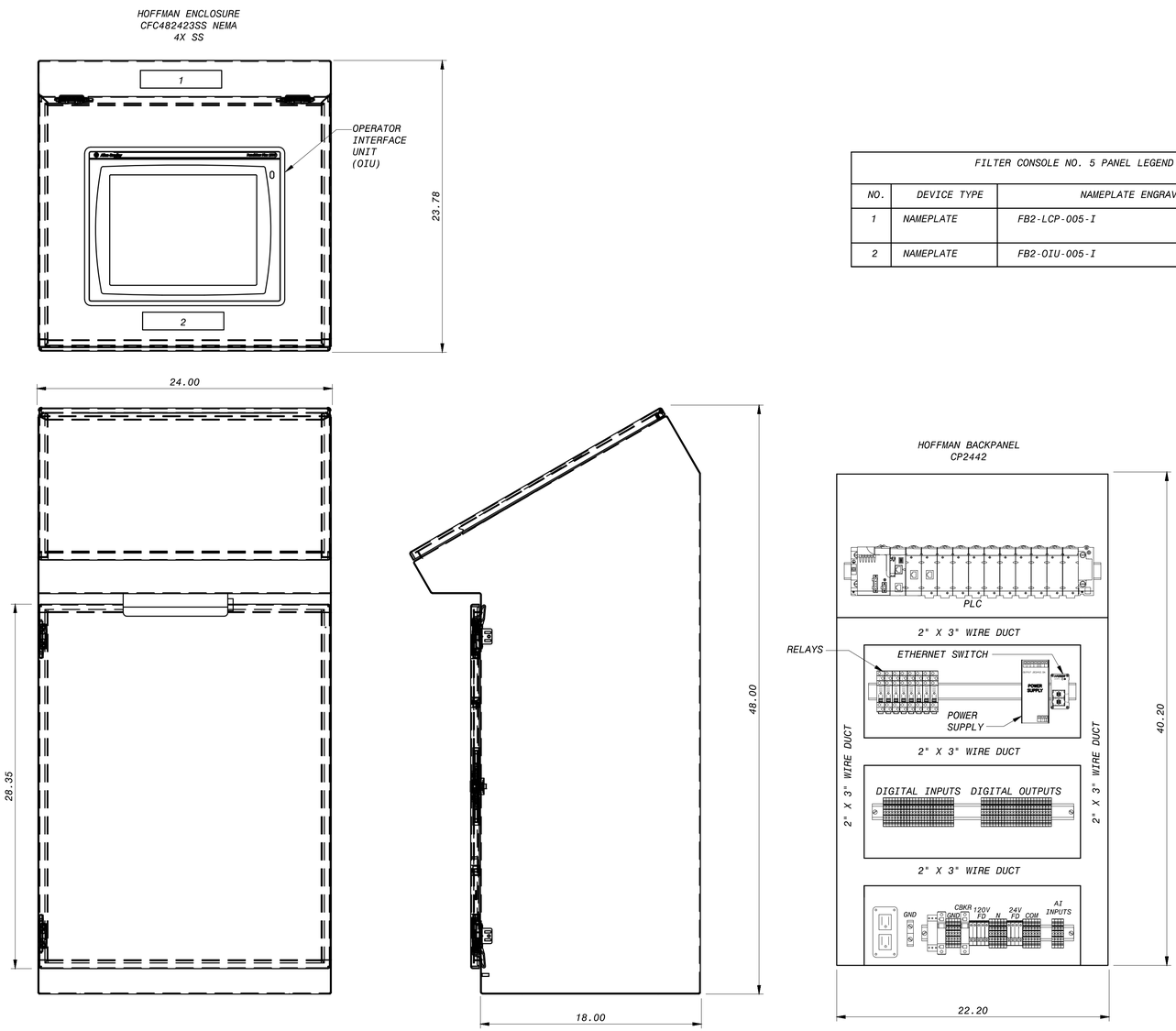

FILTER CONSOLE NO. 5 PANEL LEGEND		
NO.	DEVICE TYPE	NAMEPLATE ENGRAVING
1	NAMEPLATE	FB2-LCP-005-I
2	NAMEPLATE	FB2-OIU-005-I

NOTES:
1. ACTUAL NUMBER OF TERMINALS SHALL BE DETERMINED BY FINAL DESIGN.
2. ENGRAVING SHALL BE BLACK WITH WHITE LETTERS.

FILTER NO.5 CONSOLE

REVISIONS

NO.	DR	CK	DATE	DESCRIPTION

BLACK & VEATCH
Building a world of difference.
Black & Veatch Corporation
Registration No. F-258
Austin, Texas

TEXAS REGISTERED PROFESSIONAL ENGINEER
CHARLES E. MORRIS
108414

Austin WATER
Walnut Creek WWTP - Tertiary Filter Rehabilitation Project
CIP ID No. 3023.025

INSTRUMENTATION
FILTER CONSOLE NO. 5 DETAIL

DESIGNED BY:	KWS
DRAWN BY:	KWS
REVIEWED BY:	CEM
APPROVED BY:	TLS
PROJECT NO.:	168622
DATE:	4/4/2014
SCALE:	NOT TO SCALE

REVISION:

DISCIPLINE NO.
I-17

DWG. NO.
226 OF 273

FD168622 SAVED: STMK0025, 7/22/2013 11:35:22 AM
D168622 PW:\\FDPW1D\D168622...\109.0055 - Instrumentation Drawings
File: C:\PWBatchPDF\Process\168622 - Austin Walnut Creek WWTP Filter Rehab_I_17.dwg Layout: Layout1 Plotted: 4/4/2014 7:46:05 AM

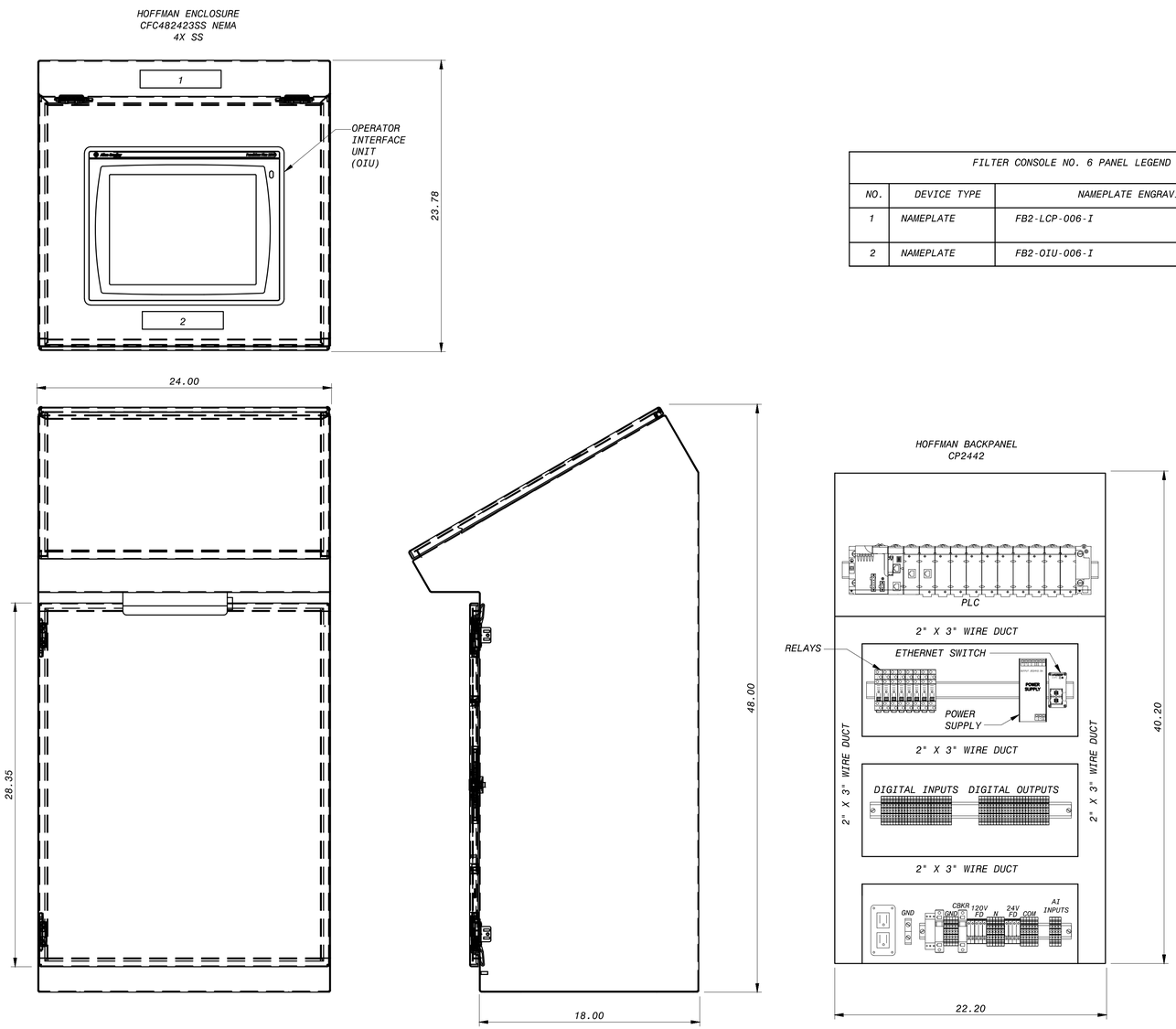

FILTER CONSOLE NO. 6 PANEL LEGEND		
NO.	DEVICE TYPE	NAMEPLATE ENGRAVING
1	NAMEPLATE	FB2-LCP-006-I
2	NAMEPLATE	FB2-OIU-006-I

NOTES:
1. ACTUAL NUMBER OF TERMINALS SHALL BE DETERMINED BY FINAL DESIGN.
2. ENGRAVING SHALL BE BLACK WITH WHITE LETTERS.

FILTER NO.6 CONSOLE

NO.	DR	CK	DATE	DESCRIPTION

REVISIONS

BLACK & VEATCH
Building a world of difference.
Black & Veatch Corporation
Registration No. F-258
Austin, Texas

Walnut Creek WWTP - Tertiary Filter Rehabilitation Project
CIP ID No. 3023.025

INSTRUMENTATION
FILTER CONSOLE NO. 6 DETAIL

DESIGNED BY:	KWS
DRAWN BY:	KWS
REVIEWED BY:	CEM
APPROVED BY:	TLS
PROJECT NO.:	168622
DATE:	4/4/2014
SCALE:	NOT TO SCALE

REVISION:

DISCIPLINE NO. I-18

DWG. NO. 227 OF 273

FD168622 SAVED: STIMSON25, 7/22/2013 11:35:22 AM
D168622 PW:\\FDPW01\D168622...\100.0055 - Instrumentation Drawings
File: C:\PWBatchPDF\Process\168622 - Austin Walnut Creek WWTP Filter Rehab_I-18.dwg Layout: Layout1 Plotted: 4/4/2014 7:46:26 AM

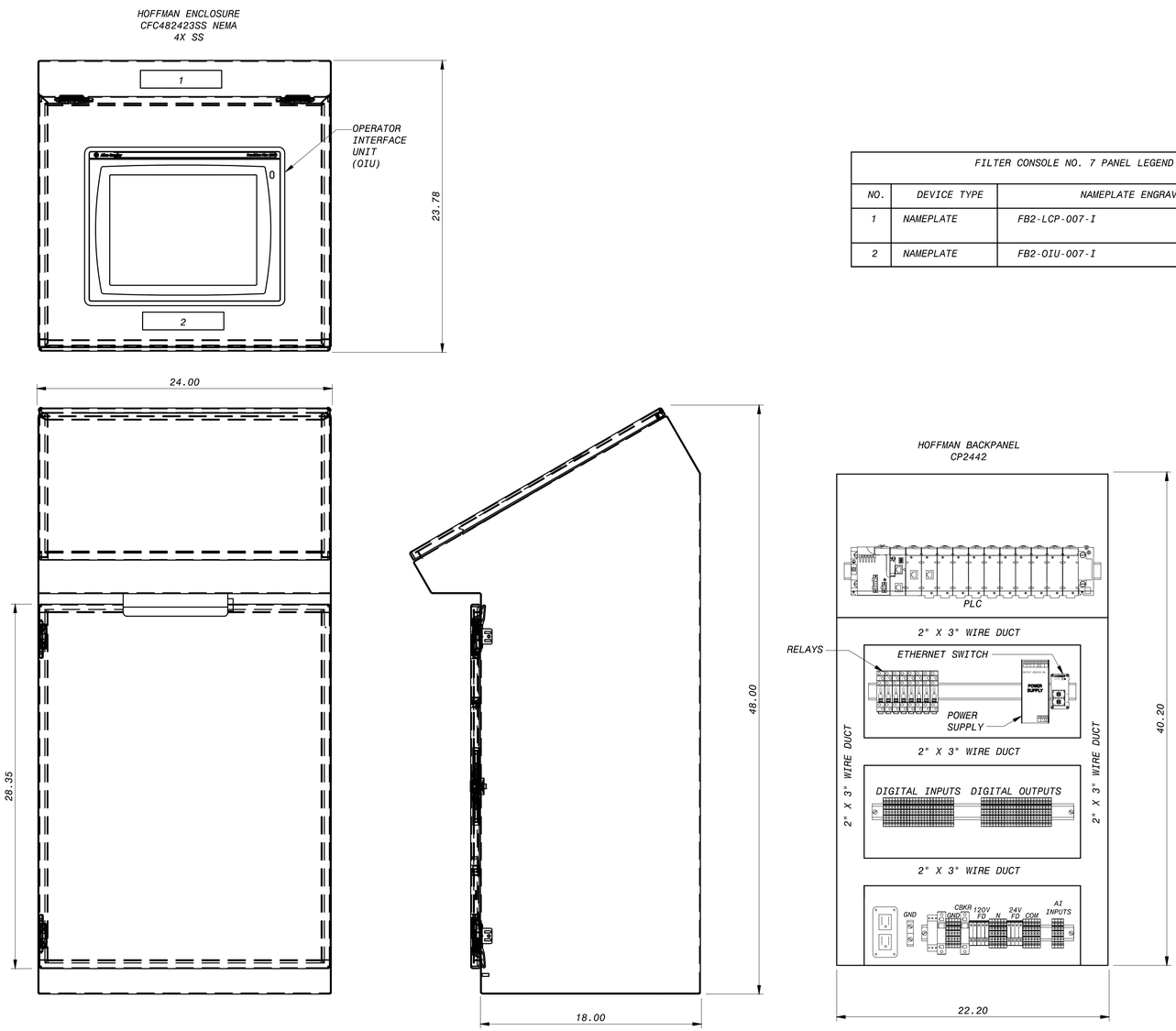

FILTER CONSOLE NO. 7 PANEL LEGEND		
NO.	DEVICE TYPE	NAMEPLATE ENGRAVING
1	NAMEPLATE	FB2-LCP-007-I
2	NAMEPLATE	FB2-OIU-007-I

NOTES:
1. ACTUAL NUMBER OF TERMINALS SHALL BE DETERMINED BY FINAL DESIGN.
2. ENGRAVING SHALL BE BLACK WITH WHITE LETTERS.

FILTER NO.7 CONSOLE

REVISIONS

NO.	DR	CK	DATE	DESCRIPTION

BLACK & VEATCH
Building a world of difference.
Black & Veatch Corporation
Registration No. F-258
Austin, Texas

TEXAS REGISTERED PROFESSIONAL ENGINEER
CHARLES E. MORRIS
108414

Austin WATER

Walnut Creek WWTP - Tertiary Filter Rehabilitation Project
CIP ID No. 3023.025

INSTRUMENTATION
FILTER CONSOLE NO. 7 DETAIL

DESIGNED BY:	KWS
DRAWN BY:	KWS
REVIEWED BY:	CEM
APPROVED BY:	TLS
PROJECT NO.:	168622
DATE:	4/4/2014
SCALE:	NOT TO SCALE

REVISION:

DISCIPLINE NO.
I-19

DWG. NO.
228 OF 273

FD168622 SAVED: STMK0025, 7/22/2013 11:35:22 AM
D168622 PW-FUDP:D:\168622...\00.0055 - Instrumentation Drawings
File: C:\PWBatchPDF\Process\168622 - Austin Walnut Creek WWTP Filter Rehab_I_19.dwg Layout: Layout1 Plotted: 4/4/2014 7:46:46 AM

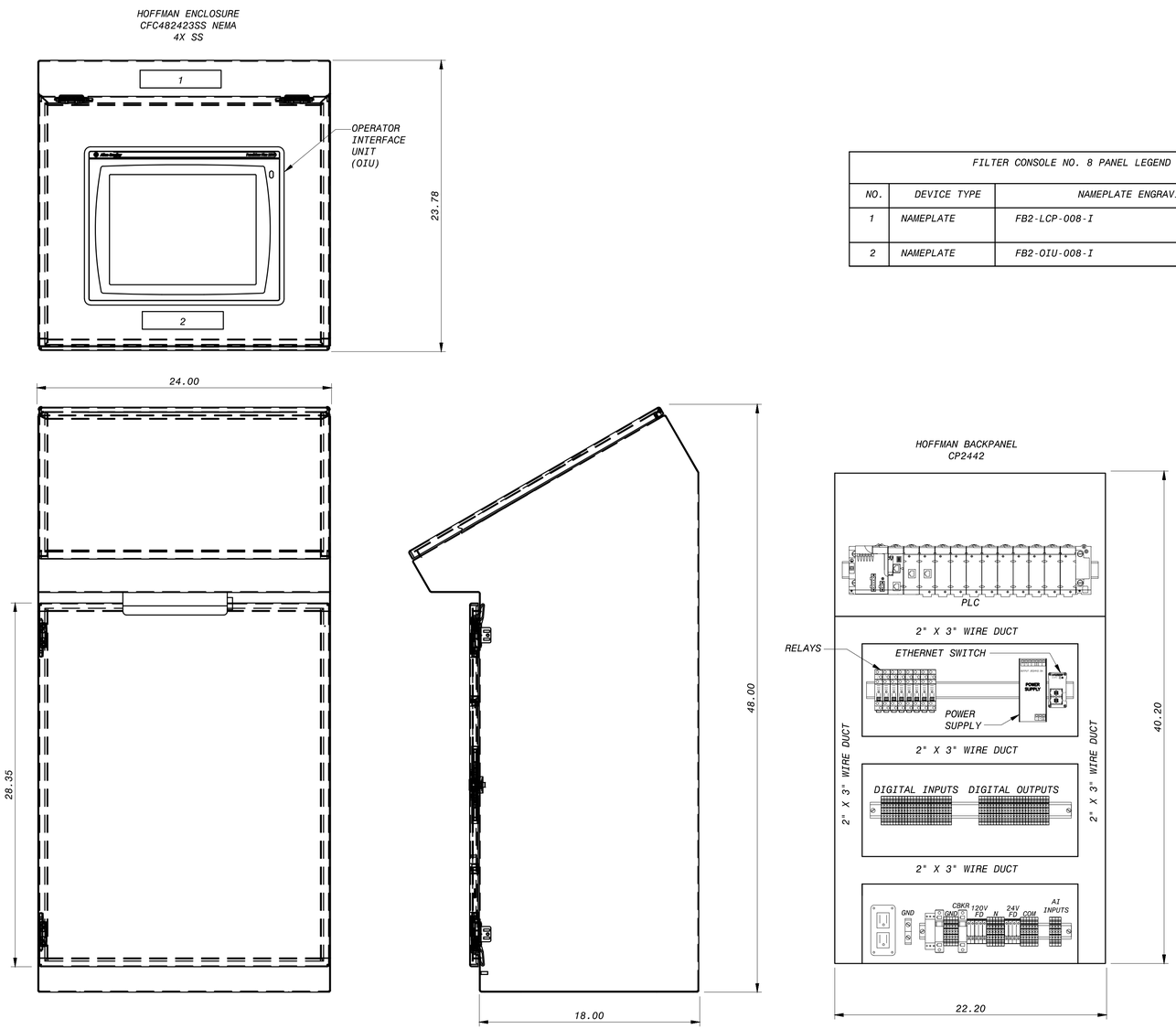

FILTER CONSOLE NO. 8 PANEL LEGEND		
NO.	DEVICE TYPE	NAMEPLATE ENGRAVING
1	NAMEPLATE	FB2-LCP-008-I
2	NAMEPLATE	FB2-OIU-008-I

NOTES:
1. ACTUAL NUMBER OF TERMINALS SHALL BE DETERMINED BY FINAL DESIGN.
2. ENGRAVING SHALL BE BLACK WITH WHITE LETTERS.

FILTER NO.8 CONSOLE

REVISIONS				
NO.	DR	CK	DATE	DESCRIPTION

BLACK & VEATCH
Building a world of difference.
Black & Veatch Corporation
Registration No. F-258
Austin, Texas

STATE OF TEXAS
CHARLES E. MORRIS
108414
LICENSED
PROFESSIONAL ENGINEER

Austin WATER
Walnut Creek WWTP - Tertiary Filter Rehabilitation Project
CIP ID No. 3023.025

INSTRUMENTATION
FILTER CONSOLE NO. 8 DETAIL

DESIGNED BY:	KWS
DRAWN BY:	KWS
REVIEWED BY:	CEM
APPROVED BY:	TLS
PROJECT NO.:	168622
DATE:	4/4/2014
SCALE:	NOT TO SCALE
REVISION:	
DISCIPLINE NO.	I-20
DWG. NO.	229 OF 273

FD168622 SAVED: STMK0025, 7/22/2013 11:35:22 AM
D168622 PW-FUDP:D:\168622...\00.0055 - Instrumentation Drawings
File: C:\PWBatchPDF\Process\168622 - Austin Walnut Creek WWTP Filter Rehab_20.dwg Layout: Layout1 Plotted: 4/4/2014 7:47:07 AM

HOFFMAN ENCLOSURE
CFC482423SS NEMA
4X SS

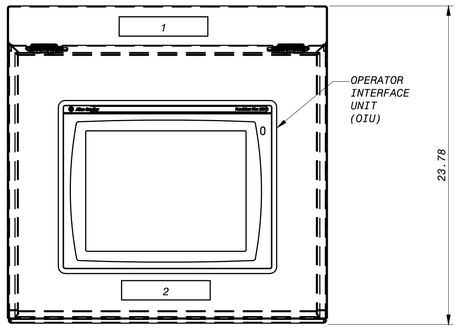

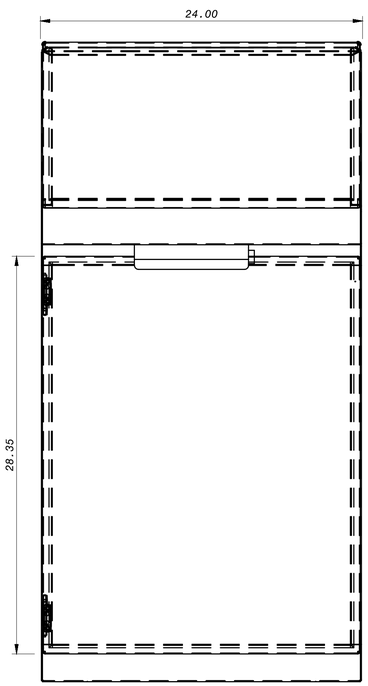

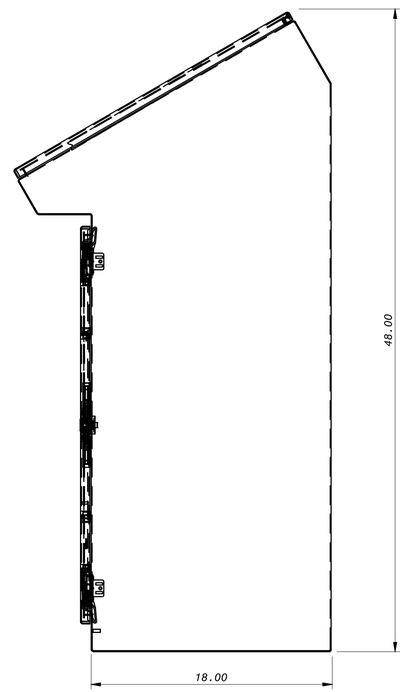

HOFFMAN BACKPANEL
CP2442

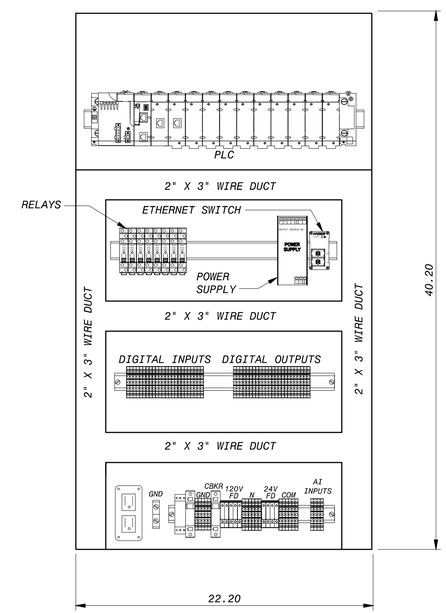

FILTER CONSOLE NO. 9 PANEL LEGEND		
NO.	DEVICE TYPE	NAMEPLATE ENGRAVING
1	NAMEPLATE	FB2-LCP-009-I
2	NAMEPLATE	FB2-OIU-009-I

NOTES:
1. ACTUAL NUMBER OF TERMINALS SHALL BE DETERMINED BY FINAL DESIGN.
2. ENGRAVING SHALL BE BLACK WITH WHITE LETTERS.

FILTER NO.9 CONSOLE

NO.	DR	CK	DATE	DESCRIPTION

REVISIONS

BLACK & VEATCH
Building a world of difference.
Black & Veatch Corporation
Registration No. F-258
Austin, Texas

STATE OF TEXAS
CHARLES E. MORRIS
108414
LICENSED
PROFESSIONAL ENGINEER

Austin WATER
Walnut Creek WWTP - Tertiary Filter Rehabilitation Project
CIP ID No. 3023.025

INSTRUMENTATION
FILTER CONSOLE NO. 9 DETAIL

DESIGNED BY:	KWS
DRAWN BY:	KWS
REVIEWED BY:	CEM
APPROVED BY:	TLS
PROJECT NO.:	168622
DATE:	4/4/2014
SCALE:	NOT TO SCALE

REVISION:

DISCIPLINE NO.
I-21

DWG. NO.
230 OF 273

FD168622 SAVED: STMK0025, 7/22/2013 11:35:22 AM
D168622 PW-FUDP:D:\168622...\00.0055 - Instrumentation Drawings
File: C:\PWBatchPDF\Process\168622 - Austin Walnut Creek WWTP Filter Rehab_21.dwg Layout: Layout1 Plotted: 4/4/2014 7:47:28 AM

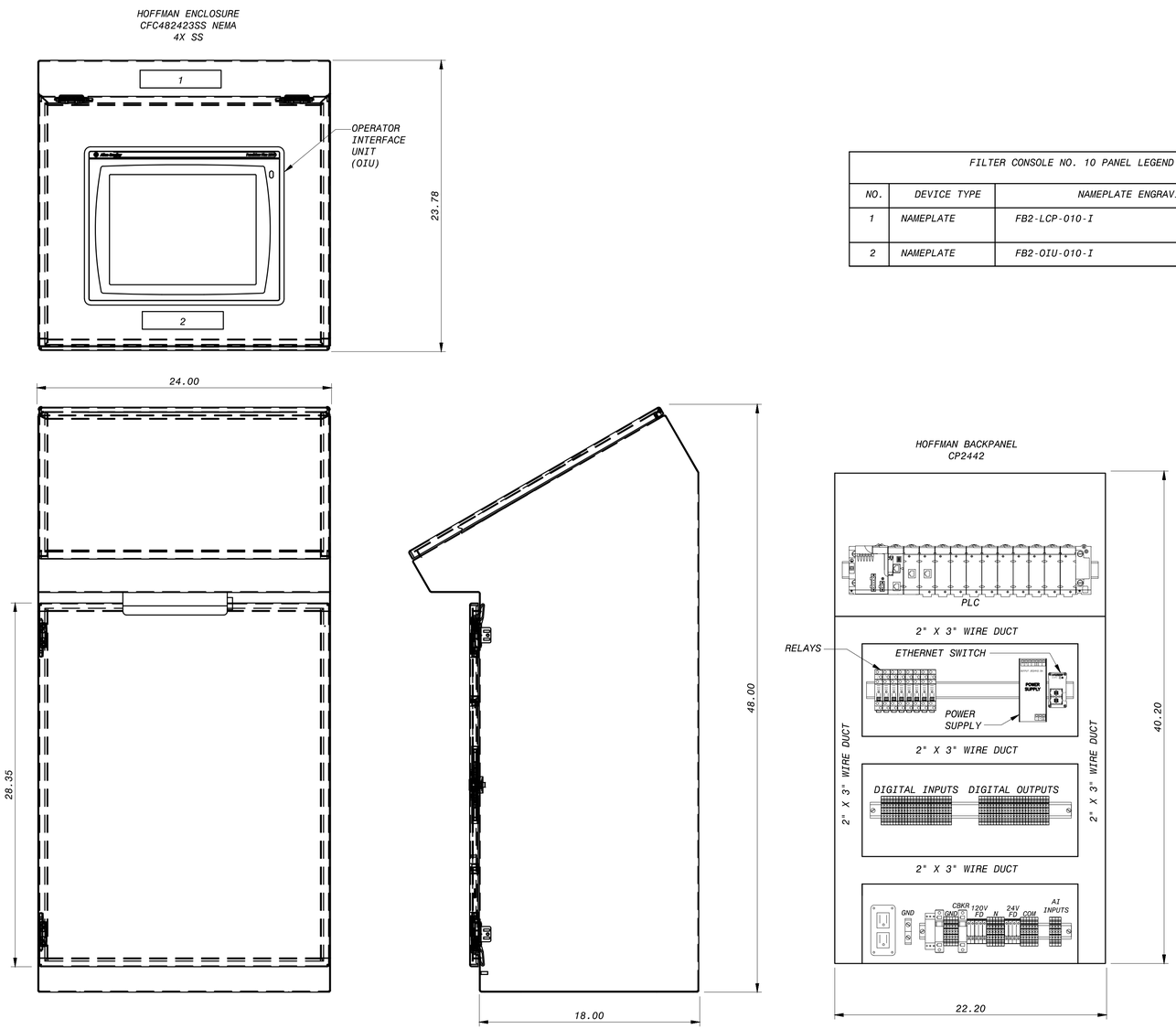

FILTER CONSOLE NO. 10 PANEL LEGEND		
NO.	DEVICE TYPE	NAMEPLATE ENGRAVING
1	NAMEPLATE	FB2-LCP-010-I
2	NAMEPLATE	FB2-OIU-010-I

NOTES:
1. ACTUAL NUMBER OF TERMINALS SHALL BE DETERMINED BY FINAL DESIGN.
2. ENGRAVING SHALL BE BLACK WITH WHITE LETTERS.

FILTER NO.10 CONSOLE

REVISIONS

NO.	DR	CK	DATE	DESCRIPTION

BLACK & VEATCH
Building a world of difference.
Black & Veatch Corporation
Registration No. F-258
Austin, Texas

TEXAS REGISTERED PROFESSIONAL ENGINEER
CHARLES E. MORRIS
108414
LICENSED

Austin WATER
Walnut Creek WWTP - Tertiary Filter Rehabilitation Project
CIP ID No. 3023.025

INSTRUMENTATION
FILTER CONSOLE NO. 10 DETAIL

DESIGNED BY:	KWS
DRAWN BY:	KWS
REVIEWED BY:	CEM
APPROVED BY:	TLS
PROJECT NO.:	168622
DATE:	4/4/2014
SCALE:	NOT TO SCALE

REVISION:

DISCIPLINE NO.
I-22

DWG. NO.
231 OF 273

FD168622 SAVED: STMK0025, 7/22/2013 11:35:22 AM
D168622 PW-FUDP:D:\168622...\00.0055 - Instrumentation Drawings
File: C:\PWBatchPDF\Process\168622 - Austin Walnut Creek WWTP Filter Rehab_22.dwg Layout: Layout1 Plotted: 4/4/2014 7:47:48 AM

FILTER 3 PLC ONE-LINE DIAGRAM

Device	Signal	Terminal
120 VAC	FB1-CPP1-9:	
FB1-PLC-ESWA	PLC-003-01:CAT-5:1"	
FB1-PLC-ESWB	PLC-003-02:CAT-5:1"	
480 VAC	FB2-VPP1-26,28,30:	
BLOWER DISCHARGE VALVE BFV-093	PLC-003-03:10#14,1"	MOV
480 VAC	FB2-VPP1-19,21,23:	
INFLUENT VALVE BFV-039	PLC-003-04:10#14,1"	MOV
CONTROL STATION BFV-039	CS-029-01:12#14:1"	CS
480 VAC	FB2-VPP1-25,27,29:	
FILTER BACKWASH SUPPLY VALVE BFV-040	PLC-003-05:10#14,1"	MOV
480 VAC	FB2-VPP1-20,22,24:	
FILTER EFFLUENT VALVE BFV-035	PLC-003-06:6#14:1" PLC-003-07:2X1PR#16S:3/4"	MOV
480 VAC	FB2-VPP1-31,33,35:	
FILTER BACKWASH DRAIN VALVE BFV-043	PLC-003-08:10#14,1"	MOV
CONTROL STATION BFV-043	CS-033-01:12#14:1"	CS
120 VAC	FB1-CPP1-11:	
LIT-003-I	PLC-003-09:1PR#16S:3/4"	LIT
LE-003-1	PLC-003-MFR:CABLE#:3/4"	LE
120 VAC	FB1-CPP1-13:	
FIT-003-I	PLC-003-10:1PR#16S:3/4"	FIT
FE-003-I	PLC-003-MFR:CABLE#:3/4"	FE
120 VAC	FB1-CPP1-15:	
AIT-003-I	PLC-003-11:1PR#16S:3/4"	AIT
AE-003-I	PLC-003-MFR:CABLE#:3/4"	AE
PDIT-003-I	PLC-003-12:1PR#16S:3/4"	PDIT

WC-FB1-PLC-003-I

FILTER 1 PLC ONE-LINE DIAGRAM

Device	Signal	Terminal
120 VAC	FB1-CPP1-1:	
FB1-PLC-ESWA	PLC-001-01:CAT-5:1"	
FB1-PLC-ESWB	PLC-001-02:CAT-5:1"	
480 VAC	FB2-VPP1-8,10,12:	
BLOWER DISCHARGE VALVE BFV-091	PLC-001-03:10#14,1"	MOV
480 VAC	FB2-VPP1-1,3,5:	
INFLUENT VALVE BFV-029	PLC-001-04:10#14,1"	MOV
CONTROL STATION BFV-029	CS-029-01:12#14:1"	CS
480 VAC	FB2-VPP1-7,9,11:	
FILTER BACKWASH SUPPLY VALVE BFV-030	PLC-001-05:10#14,1"	MOV
480 VAC	FB2-VPP1-2,4,6:	
FILTER EFFLUENT VALVE BFV-024	PLC-001-06:6#14:1" PLC-001-07:2X1PR#16S:3/4"	MOV
480 VAC	FB2-VPP1-13,15,17:	
FILTER BACKWASH DRAIN VALVE BFV-033	PLC-001-08:10#14,1"	MOV
CONTROL STATION BFV-024	CS-033-01:12#14:1"	CS
120 VAC	FB1-CPP1-3:	
LIT-001-I	PLC-001-09:1PR#16S:3/4"	LIT
LE-001-1	PLC-001-MFR:CABLE#:3/4"	LE
120 VAC	FB1-CPP1-5:	
FIT-001-I	PLC-001-10:1PR#16S:3/4"	FIT
FE-001-I	PLC-001-MFR:CABLE#:3/4"	FE
120 VAC	FB1-CPP1-7:	
AIT-001-I	PLC-001-11:1PR#16S:3/4"	AIT
AE-001-I	PLC-001-MFR:CABLE#:3/4"	AE
PDIT-001-I	PLC-001-12:1PR#16S:3/4"	PDIT

WC-FB1-PLC-001-I

FILTER 4 PLC ONE-LINE DIAGRAM

Device	Signal	Terminal
120 VAC	FB1-CPP1-10:	
FB1-PLC-ESWA	PLC-004-01:CAT-5:1"	
FB1-PLC-ESWB	PLC-004-02:CAT-5:1"	
480 VAC	FB2-VPP1-26,28,30:	
BLOWER DISCHARGE VALVE BFV-094	PLC-004-03:10#14,1"	MOV
480 VAC	FB2-VPP1-19,21,23:	
INFLUENT VALVE BFV-041	PLC-004-04:10#14,1"	MOV
CONTROL STATION BFV-041	CS-029-01:12#14:1"	CS
480 VAC	FB2-VPP1-25,27,29:	
FILTER BACKWASH SUPPLY VALVE BFV-042	PLC-004-05:10#14,1"	MOV
480 VAC	FB2-VPP1-20,22,24:	
FILTER EFFLUENT VALVE BFV-036	PLC-004-06:6#14:1" PLC-004-07:2X1PR#16S:3/4"	MOV
480 VAC	FB2-VPP1-31,33,35:	
FILTER BACKWASH DRAIN VALVE BFV-044	PLC-004-08:10#14,1"	MOV
CONTROL STATION BFV-044	CS-033-01:12#14:1"	CS
120 VAC	FB1-CPP1-12:	
LIT-004-I	PLC-004-09:1PR#16S:3/4"	LIT
LE-004-1	PLC-004-MFR:CABLE#:3/4"	LE
120 VAC	FB1-CPP1-14:	
FIT-004-I	PLC-004-10:1PR#16S:3/4"	FIT
FE-004-I	PLC-004-MFR:CABLE#:3/4"	FE
120 VAC	FB1-CPP1-16:	
AIT-004-I	PLC-004-11:1PR#16S:3/4"	AIT
AE-004-I	PLC-004-MFR:CABLE#:3/4"	AE
PDIT-004-I	PLC-004-12:1PR#16S:3/4"	PDIT

WC-FB1-PLC-004-I

FILTER 2 PLC ONE-LINE DIAGRAM

Device	Signal	Terminal
120 VAC	FB1-CPP1-2:	
FB1-PLC-ESWA	PLC-002-01:CAT-5:1"	
FB1-PLC-ESWB	PLC-002-02:CAT-5:1"	
480 VAC	FB2-VPP1-8,10,12:	
BLOWER DISCHARGE VALVE BFV-092	PLC-002-03:10#14,1"	MOV
480 VAC	FB2-VPP1-1,3,5:	
INFLUENT VALVE BFV-031	PLC-002-04:10#14,1"	MOV
CONTROL STATION BFV-031	CS-029-01:12#14:1"	CS
480 VAC	FB2-VPP1-7,9,11:	
FILTER BACKWASH SUPPLY VALVE BFV-032	PLC-002-05:10#14,1"	MOV
480 VAC	FB2-VPP1-2,4,6:	
FILTER EFFLUENT VALVE BFV-025	PLC-002-06:6#14:1" PLC-002-07:2X1PR#16S:3/4"	MOV
480 VAC	FB2-VPP1-13,15,17:	
FILTER BACKWASH DRAIN VALVE BFV-034	PLC-002-08:10#14,1"	MOV
CONTROL STATION BFV-034	CS-033-01:12#14:1"	CS
120 VAC	FB1-CPP1-4:	
LIT-002-I	PLC-002-09:1PR#16S:3/4"	LIT
LE-002-1	PLC-002-MFR:CABLE#:3/4"	LE
120 VAC	FB1-CPP1-6:	
FIT-002-I	PLC-002-10:1PR#16S:3/4"	FIT
FE-002-I	PLC-002-MFR:CABLE#:3/4"	FE
120 VAC	FB1-CPP1-8:	
AIT-002-I	PLC-002-11:1PR#16S:3/4"	AIT
AE-002-I	PLC-002-MFR:CABLE#:3/4"	AE
PDIT-002-I	PLC-002-12:1PR#16S:3/4"	PDIT

WC-FB1-PLC-002-I

NOTES:
1. REFER TO ELECTRICAL DRAWINGS FOR 120V AND 480V POWER CIRCUIT NUMBERS.
2. INSTALL CIRCUITS WITHIN CONDUIT CORRIDOR AS SHOWN ON ELECTRICAL PANELS.

DESIGNED BY:	V.JL
DRAWN BY:	KNS
REVIEWED BY:	CEM
APPROVED BY:	TLS
PROJECT NO.:	168622
DATE:	4/4/2014
SCALE:	NOT TO SCALE
REVISION:	

DISCIPLINE NO. I-23

DWG. NO. 232 OF 273

Austin WATER
Walnut Creek WWTP - Tertiary Filter Rehabilitation Project
CIP ID No. 3023.025

INSTRUMENTATION
FILTERS CONSOLES ONE-LINE DIAGRAMS
SHEET 1 OF 3

STATE OF TEXAS
CHARLES E. MORRIS
106414
LICENSED PROFESSIONAL ENGINEER
4/4/2014

BLACK & VEATCH
Building a world of difference.
Black & Veatch Corporation
Registration No. F-258
Austin, Texas

NO.	DR	CK	DATE	DESCRIPTION

REVISIONS

FILTER 7 PLC ONE-LINE DIAGRAM

Device	Signal	Terminal
120 VAC	FB2-CPP2-9:	
FB2-PLC-ESWA	PLC-007-01:CAT-5:1"	
FB2-PLC-ESWB	PLC-007-02:CAT-5:1"	
480 VAC	FB2-VPP1-26,28,30:	
BLOWER DISCHARGE VALVE BFV-065	PLC-007-03:10#14,1"	MOV
480 VAC	FB2-VPP1-19,21,23:	
INFLUENT VALVE BFV-063	PLC-007-04:10#14,1"	MOV
CONTROL STATION BFV-063	CS-029-01:12#14:1"	CS
480 VAC	FB2-VPP1-25,27,29:	
FILTER BACKWASH SUPPLY VALVE BFV-061	PLC-007-05:10#14,1"	MOV
480 VAC	FB2-VPP1-20,22,24:	
FILTER EFFLUENT VALVE BFV-059	PLC-007-06:6#14:1" PLC-007-07:2X1PR#16S:3/4"	MOV
480 VAC	FB2-VPP1-31,33,35:	
FILTER BACKWASH DRAIN VALVE BFV-069	PLC-007-08:10#14,1"	MOV
CONTROL STATION BFV-069	CS-033-01:12#14:1"	CS
120 VAC	FB2-CPP2-11:	
LIT-007-I	PLC-007-09:1PR#16S:3/4"	LIT
LE-007-1	PLC-007-MFR:CABLE#:3/4"	LE
120 VAC	FB2-CPP2-13:	
FIT-007-I	PLC-007-10:1PR#16S:3/4"	FIT
FE-007-I	PLC-007-MFR:CABLE#:3/4"	FE
120 VAC	FB2-CPP2-15:	
AIT-007-I	PLC-007-11:1PR#16S:3/4"	AIT
AE-007-I	PLC-007-MFR:CABLE#:3/4"	AE
PDIT-007-I	PLC-007-12:1PR#16S:3/4"	PDIT

WC-FB2-PLC-007-I

FILTER 5 PLC ONE-LINE DIAGRAM

Device	Signal	Terminal
120 VAC	FB2-CPP2-1:	
FB2-PLC-ESWA	PLC-005-01:CAT-5:1"	
FB2-PLC-ESWB	PLC-005-02:CAT-5:1"	
480 VAC	FB2-VPP3-8,10,12:	
BLOWER DISCHARGE VALVE BFV-053	PLC-005-03:10#14,1"	MOV
480 VAC	FB2-VPP3-1,3,5:	
INFLUENT VALVE BFV-051	PLC-005-04:10#14,1"	MOV
CONTROL STATION BFV-051	CS-029-01:12#14:1"	CS
480 VAC	FB2-VPP3-7,9,11:	
FILTER BACKWASH SUPPLY VALVE BFV-049	PLC-005-05:10#14,1"	MOV
480 VAC	FB2-VPP3-2,4,6:	
FILTER EFFLUENT VALVE BFV-047	PLC-005-06:6#14:1" PLC-005-07:2X1PR#16S:3/4"	MOV
480 VAC	FB2-VPP3-13,15,17:	
FILTER BACKWASH DRAIN VALVE BFV-057	PLC-005-08:10#14,1"	MOV
CONTROL STATION BFV-057	CS-033-01:12#14:1"	CS
120 VAC	FB2-CPP2-3:	
LIT-005-I	PLC-005-09:1PR#16S:3/4"	LIT
LE-005-1	PLC-005-MFR:CABLE#:3/4"	LE
120 VAC	FB2-CPP2-5:	
FIT-005-I	PLC-005-10:1PR#16S:3/4"	FIT
FE-005-I	PLC-005-MFR:CABLE#:3/4"	FE
120 VAC	FB2-CPP2-7:	
AIT-005-I	PLC-005-11:1PR#16S:3/4"	AIT
AE-005-I	PLC-005-MFR:CABLE#:3/4"	AE
PDIT-005-I	PLC-005-12:1PR#16S:3/4"	PDIT

WC-FB2-PLC-005-I

FILTER 8 PLC ONE-LINE DIAGRAM

Device	Signal	Terminal
120 VAC	FB2-CPP2-10:	
FB2-PLC-ESWA	PLC-008-01:CAT-5:1"	
FB2-PLC-ESWB	PLC-008-02:CAT-5:1"	
480 VAC	FB2-VPP1-26,28,30:	
BLOWER DISCHARGE VALVE BFV-066	PLC-008-03:10#14,1"	MOV
480 VAC	FB2-VPP1-19,21,23:	
INFLUENT VALVE BFV-064	PLC-008-04:10#14,1"	MOV
CONTROL STATION BFV-064	CS-029-01:12#14:1"	CS
480 VAC	FB2-VPP1-25,27,29:	
FILTER BACKWASH SUPPLY VALVE BFV-062	PLC-008-05:10#14,1"	MOV
480 VAC	FB2-VPP1-20,22,24:	
FILTER EFFLUENT VALVE BFV-060	PLC-008-06:6#14:1" PLC-008-07:2X1PR#16S:3/4"	MOV
480 VAC	FB2-VPP1-31,33,35:	
FILTER BACKWASH DRAIN VALVE BFV-070	PLC-008-08:10#14,1"	MOV
CONTROL STATION BFV-070	CS-033-01:12#14:1"	CS
120 VAC	FB2-CPP2-12:	
LIT-008-I	PLC-008-09:1PR#16S:3/4"	LIT
LE-008-1	PLC-008-MFR:CABLE#:3/4"	LE
120 VAC	FB2-CPP2-14:	
FIT-008-I	PLC-008-10:1PR#16S:3/4"	FIT
FE-008-I	PLC-008-MFR:CABLE#:3/4"	FE
120 VAC	FB2-CPP2-16:	
AIT-008-I	PLC-008-11:1PR#16S:3/4"	AIT
AE-008-I	PLC-008-MFR:CABLE#:3/4"	AE
PDIT-008-I	PLC-008-12:1PR#16S:3/4"	PDIT

WC-FB2-PLC-008-I

FILTER 6 PLC ONE-LINE DIAGRAM

Device	Signal	Terminal
120 VAC	FB2-CPP2-2:	
FB2-PLC-ESWA	PLC-006-01:CAT-5:1"	
FB2-PLC-ESWB	PLC-006-02:CAT-5:1"	
480 VAC	FB2-VPP1-8,10,12:	
BLOWER DISCHARGE VALVE BFV-054	PLC-006-03:10#14,1"	MOV
480 VAC	FB2-VPP1-1,3,5:	
INFLUENT VALVE BFV-052	PLC-006-04:10#14,1"	MOV
CONTROL STATION BFV-052	CS-029-01:12#14:1"	CS
480 VAC	FB2-VPP1-7,9,11:	
FILTER BACKWASH SUPPLY VALVE BFV-050	PLC-006-05:10#14,1"	MOV
480 VAC	FB2-VPP1-2,4,6:	
FILTER EFFLUENT VALVE BFV-048	PLC-006-06:6#14:1" PLC-006-07:2X1PR#16S:3/4"	MOV
480 VAC	FB2-VPP1-13,15,17:	
FILTER BACKWASH DRAIN VALVE BFV-058	PLC-006-08:10#14,1"	MOV
CONTROL STATION BFV-058	CS-033-01:12#14:1"	CS
120 VAC	FB2-CPP2-4:	
LIT-006-I	PLC-006-09:1PR#16S:3/4"	LIT
LE-006-1	PLC-006-MFR:CABLE#:3/4"	LE
120 VAC	FB2-CPP2-6:	
FIT-006-I	PLC-006-10:1PR#16S:3/4"	FIT
FE-006-I	PLC-006-MFR:CABLE#:3/4"	FE
120 VAC	FB2-CPP2-8:	
AIT-006-I	PLC-006-11:1PR#16S:3/4"	AIT
AE-006-I	PLC-006-MFR:CABLE#:3/4"	AE
PDIT-006-I	PLC-006-12:1PR#16S:3/4"	PDIT

WC-FB2-PLC-006-I

NOTES:
1. REFER TO ELECTRICAL DRAWINGS FOR 120V AND 480V POWER CIRCUIT NUMBERS.
2. INSTALL CIRCUITS WITHIN CONDUIT CORRIDOR AS SHOWN ON ELECTRICAL PANELS.

DESIGNED BY:	V.L
DRAWN BY:	KWS
REVIEWED BY:	CEM
APPROVED BY:	TLS
PROJECT NO.:	168622
DATE:	4/4/2014
SCALE:	NOT TO SCALE
REVISION:	

DISCIPLINE NO. I-24

DWG. NO. 233 OF 273

Austin WATER
Walnut Creek WWTP - Tertiary Filter Rehabilitation Project
CIP ID No. 3023.025

INSTRUMENTATION
FILTERS PLC ONE-LINE DIAGRAMS
SHEET 2 OF 3

STATE OF TEXAS
CHARLES E. MORRIS
106414
LICENSED PROFESSIONAL ENGINEER
4/4/2014

BLACK & VEATCH
Building a world of difference.
Black & Veatch Corporation
Registration No. F-258
Austin, Texas

NO.	DR	CK	DATE	DESCRIPTION

REVISIONS

FILTER MASTER PLC ONE-LINE DIAGRAM

WC-FB1-PLC-101-I

120 VAC		FB1-CPP1-17:
SW-A LINK A		PLC-101-02:CAT-5:1"
SW-B LINK B		PLC-101-03:CAT-5:1"
480 VAC BACKWASH RATE OF FLOW VALVE BFV-026	MOV	FB1-VPP0-2,4,6: PLC-101-04:6#14,1" PLC-101-05:2X1PR #16S:3/4"
480 VAC BACKWASH FILTER BYPASS VALVE BFV-110	MOV	FB1-VPP0-8,10,12: PLC-101-06:6#14,1" PLC-101-07:2X1PR #16S:3/4"
120 VAC FIT-110-I	FIT	FB1-CPP1-19: PLC-101-09:1PR #16S:3/4"
FE-110-I	FE	PLC-101-MFR:CABLE#:3/4"
120 VAC FIT-120-I	FIT	FB1-CPP1-21: PLC-101-11:1PR #16S:3/4"
FE-120-I	FE	PLC-101-MFR:CABLE#:3/4"
STRAINER STR-021 LOCAL CONTROL PANEL FB-LCP-021		PLC-101-12:6#14:1"
CLEARWELL FLOW SWITCH FS-001	FS	PLC-101-13A:2#14,#14G:3/4"
120 VAC NORTHWEST CLEARWELL LEVEL LIT-001-I	LIT	FB1-CPP1-23: PLC-101-15:1PR#16S:3/4"
LE-001-1	AE	PLC-101-MFR:CABLE#:3/4"
120 VAC SOUTHSIDE CLEARWELL LEVEL LIT-011-I	LIT	FB1-CPP1-25: PLC-101-17:1PR#16S:3/4"
LE-011-I	FE	PLC-101-MFR:CABLE#:3/4"
FILTER BUILDING 1 UPS	UPS	PLC-101-18:6#14,1"
FILTER BUILDING 2 UPS	UPS	PLC-101-19:6#14,1"
120 VAC FIT-020-I	FIT	FB1-CPP1-22: PLC-101-20:1PR #16S:3/4"
FE-020-I	FE	PLC-101-MFR:CABLE#:3/4"
120 VAC FIT-021-I	FIT	FB1-CPP1-24: PLC-101-21:1PR #16S:3/4"
FE-021-I	FE	PLC-101-MFR:CABLE#:3/4"

FILTER 9 PLC ONE-LINE DIAGRAM

WC-FB2-PLC-009-I

120 VAC		FB2-CPP2-17:
FB2-PLC-ESWA		PLC-009-01:CAT-5:1"
FB2-PLC-ESWB		PLC-009-02:CAT-5:1"
480 VAC BLOWER DISCHARGE VALVE BFV-077	MOV	FB2-VPP3-8,10,12: PLC-009-03:10#14,1"
480 VAC INFLUENT VALVE BFV-075	MOV	FB2-VPP3-1,3,5: PLC-009-04:10#14,1"
CONTROL STATION BFV-075	CS	CS-029-01:12#14:1"
480 VAC FILTER BACKWASH SUPPLY VALVE BFV-073	MOV	FB2-VPP3-7,9,11: PLC-009-05:10#14,1"
480 VAC FILTER EFFLUENT VALVE BFV-071	MOV	FB2-VPP3-2,4,6: PLC-009-06:6#14:1" PLC-009-07:2X1PR#16S:3/4"
480 VAC FILTER BACKWASH DRAIN VALVE BFV-082	MOV	FB2-VPP3-13,15,17: PLC-009-08:10#14,1"
CONTROL STATION BFV-082	CS	CS-033-01:12#14:1"
120 VAC LIT-009-I	LIT	FB2-CPP2-19: PLC-009-09:1PR#16S:3/4"
LE-009-1	LE	PLC-009-MFR:CABLE#:3/4"
120 VAC FIT-009-I	FIT	FB2-CPP2-21: PLC-009-10:1PR#16S:3/4"
FE-009-I	FE	PLC-009-MFR:CABLE#:3/4"
120 VAC AIT-009-I	AIT	FB2-CPP2-23: PLC-009-11:1PR#16S:3/4"
AE-009-I	AE	PLC-009-MFR:CABLE#:3/4"
PDIT-009-I	PDIT	PLC-009-12:1PR#16S:3/4"

FILTER 10 PLC ONE-LINE DIAGRAM

WC-FB2-PLC-010-I

120 VAC		FB2-CPP2-18:
FB2-PLC-ESWA		PLC-010-01:CAT-5:1"
FB2-PLC-ESWB		PLC-010-02:CAT-5:1"
480 VAC BLOWER DISCHARGE VALVE BFV-078	MOV	FB2-VPP1-8,10,12: PLC-010-03:10#14,1"
480 VAC INFLUENT VALVE BFV-076	MOV	FB2-VPP1-1,3,5: PLC-010-04:10#14,1"
CONTROL STATION BFV-076	CS	CS-029-01:12#14:1"
480 VAC FILTER BACKWASH SUPPLY VALVE BFV-074	MOV	FB2-VPP1-7,9,11: PLC-010-05:10#14,1"
480 VAC FILTER EFFLUENT VALVE BFV-072	MOV	FB2-VPP1-2,4,6: PLC-010-06:6#14:1" PLC-010-07:2X1PR#16S:3/4"
480 VAC FILTER BACKWASH DRAIN VALVE BFV-083	MOV	FB2-VPP1-13,15,17: PLC-010-08:10#14,1"
CONTROL STATION BFV-083	CS	CS-033-01:12#14:1"
120 VAC LIT-010-I	LIT	FB2-CPP2-20: PLC-010-09:1PR#16S:3/4"
LE-010-1	LE	PLC-010-MFR:CABLE#:3/4"
120 VAC FIT-010-I	FIT	FB2-CPP2-22: PLC-010-10:1PR#16S:3/4"
FE-010-I	FE	PLC-010-MFR:CABLE#:3/4"
120 VAC AIT-010-I	AIT	FB2-CPP2-24: PLC-010-11:1PR#16S:3/4"
AE-010-I	AE	PLC-010-MFR:CABLE#:3/4"
PDIT-010-I	PDIT	PLC-010-12:1PR#16S:3/4"

NOTES:
1. REFER TO ELECTRICAL DRAWINGS FOR 120V AND 480V POWER CIRCUIT NUMBERS.
2. INSTALL CIRCUITS WITHIN CONDUIT CORRIDOR AS SHOWN ON ELECTRICAL PANELS.

DESIGNED BY:	VJL
DRAWN BY:	KWS
REVIEWED BY:	CEM
APPROVED BY:	TLS
PROJECT NO.:	168622
DATE:	4/4/2014
SCALE:	NOT TO SCALE
REVISION:	
DISCIPLINE NO.	I-25
DWG. NO.	234 OF 273

Austin WATER
Walnut Creek WWTP - Tertiary Filter Rehabilitation Project
CIP ID No. 3023.025

INSTRUMENTATION
FILTERS PLC ONE-LINE DIAGRAMS
SHEET 3 OF 3

STATE OF TEXAS
CHARLES E. MORRIS
106414
LICENSED PROFESSIONAL ENGINEER
4/4/2014

BLACK & VEATCH
Building a world of difference.
Black & Veatch Corporation
Registration No. F-258
Austin, Texas

NO.	DR	CK	DATE	DESCRIPTION

REVISIONS

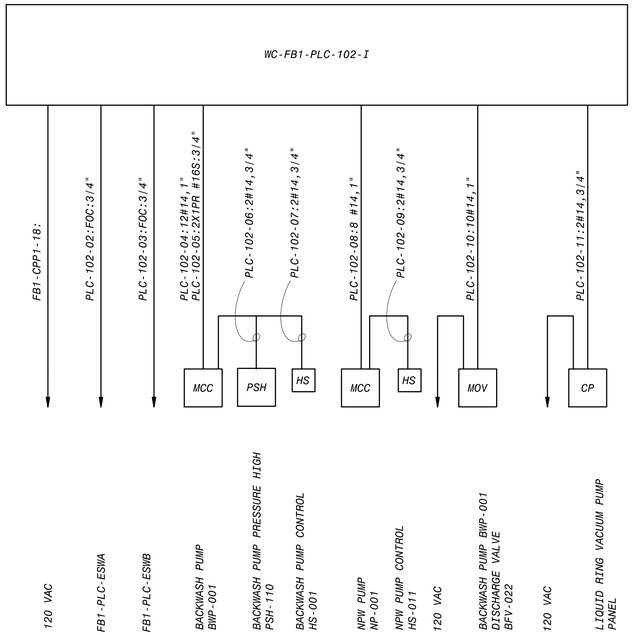

FILTER BACKWASH PUMP 1 PLC ONE-LINE DIAGRAM

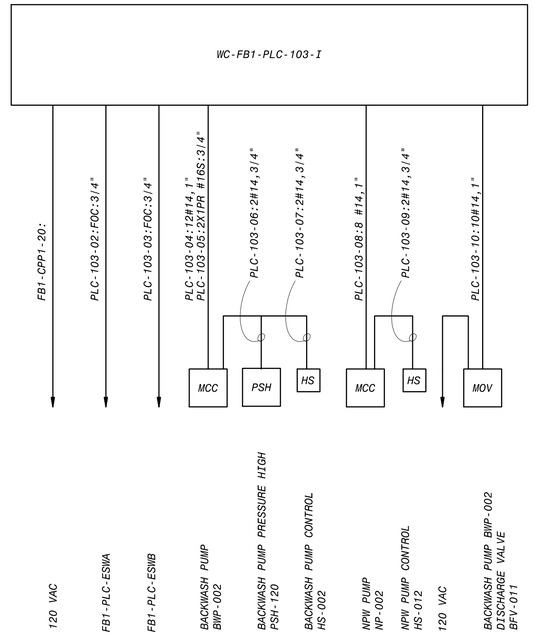

FILTER BACKWASH PUMP 2 PLC ONE-LINE DIAGRAM

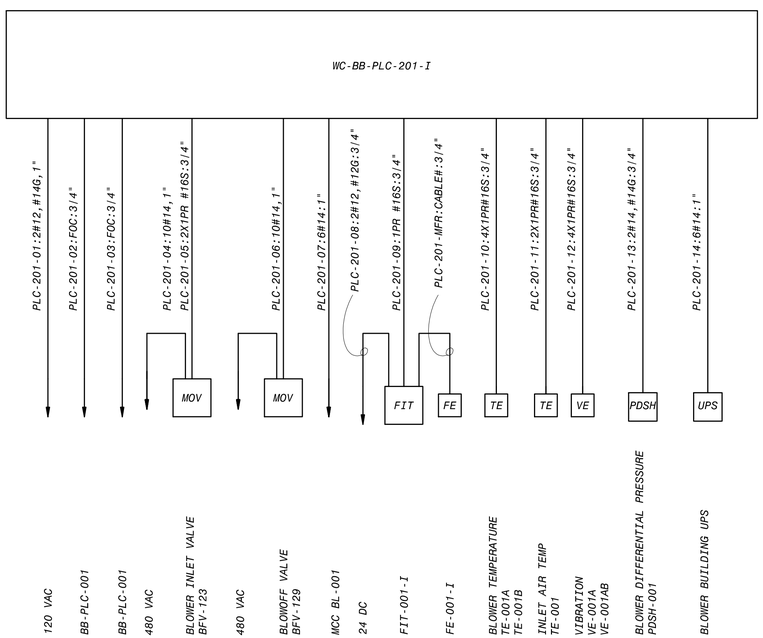

FILTER AIR SCOUR BLOWER 1 PLC ONE-LINE DIAGRAM

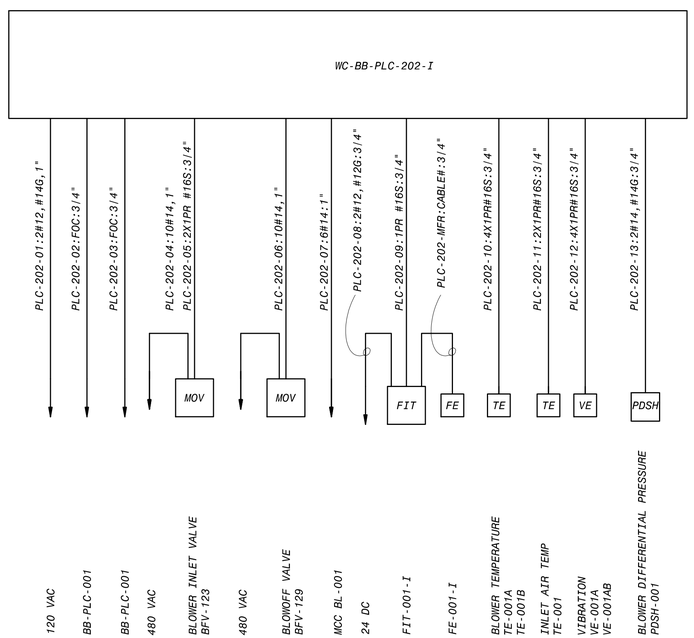

FILTER AIR SCOUR BLOWER 2 PLC ONE-LINE DIAGRAM

NOTES:
1. REFER TO ELECTRICAL DRAWINGS FOR 120V AND 480V POWER PANEL CIRCUIT NUMBERS.
2. INSTALL CIRCUITS WITHIN CONDUIT CORRIDOR AS SHOWN ON ELECTRICAL PANELS.

NO.	DR	CK	DATE	DESCRIPTION

REVISIONS

BLACK & VEATCH
Building a world of difference.
Black & Veatch Corporation
Registration No. F-258
Austin, Texas

STATE OF TEXAS
CHARLES E. MORRIS
108414
LICENSED
PROFESSIONAL ENGINEER

Austin WATER
Walnut Creek WWTP - Tertiary Filter Rehabilitation Project
CIP ID No. 3023.025

INSTRUMENTATION
MISCELLANOUS ONE-LINE DIAGRAMS
SHEET 1 OF 2

DESIGNED BY:	VJL
DRAWN BY:	KWS
REVIEWED BY:	CEM
APPROVED BY:	TLS
PROJECT NO.:	168622
DATE:	4/4/2014
SCALE:	NOT TO SCALE
REVISION:	
DISCIPLINE NO.	I-26
DWG. NO.	235 OF 273

FD168622 SAVED: YOUDS927, 8/27/2013 9:07:39 AM
D168622 PW-FCD:D:\168622...\09.5055 - Instrumentation Drawings
File: C:\PWBatchPDF\Process\168622 - Austin Walnut Creek WWTP Filter Rehab_26.dwg Layout: Layout1 Plotted: 4/4/2014 10:56:32 AM

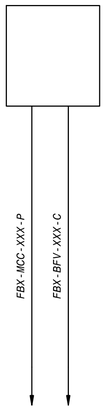

PROG. ELEC. ACTUATOR
ONE-LINE DIAGRAM

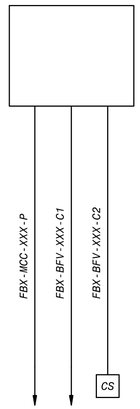

PROG. ELEC. ACTUATOR
W/REMOTE CONTROL
ONE-LINE DIAGRAM

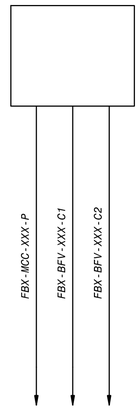

PROG. ELEC.
MODULATING ACTUATOR
ONE-LINE DIAGRAM

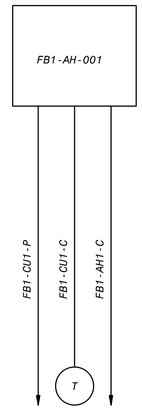

AIR HANDLING UNIT
ONE-LINE DIAGRAM

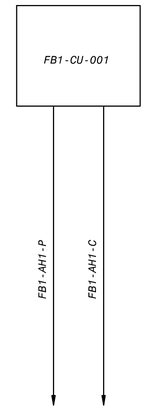

CONDENSING UNIT
ONE-LINE DIAGRAM

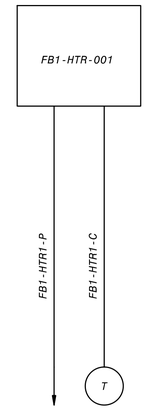

HEATER
ONE-LINE DIAGRAM

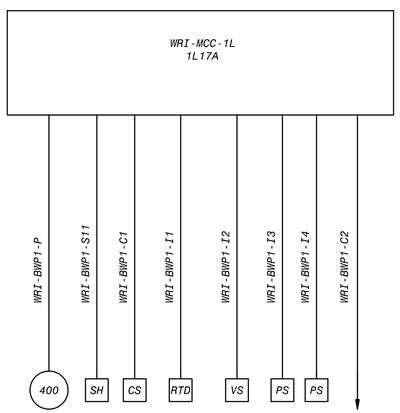

BACKWASH PUMP 1 ONE-LINE DIAGRAM

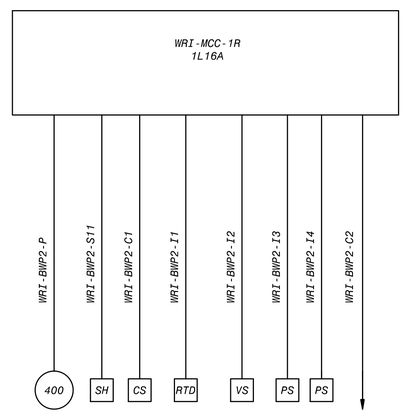

BACKWASH PUMP 2 ONE-LINE DIAGRAM

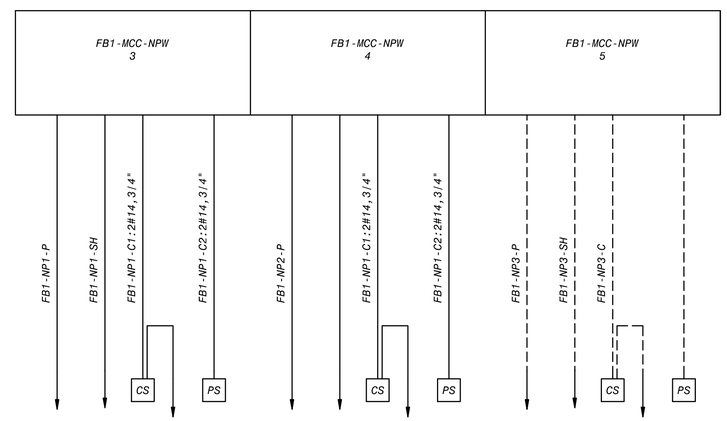

NPW PUMPS ONE-LINE DIAGRAM

NOTES:
1. REFER TO ELECTRICAL DRAWINGS FOR 120V POWER PANEL CIRCUIT NUMBERS.
2. INSTALL CIRCUITS WITHIN CONDUIT CORRIDOR AS SHOWN ON ELECTRICAL PANELS.

NO.	DR	CK	DATE	DESCRIPTION

REVISIONS

BLACK & VEATCH
Building a world of difference.
Black & Veatch Corporation
Registration No. F-258
Austin, Texas

STATE OF TEXAS
CHARLES E. MORRIS
108414
LICENSED
PROFESSIONAL ENGINEER

Austin WATER
Walnut Creek WWTP - Tertiary Filter Rehabilitation Project
CIP ID No. 3023.025

INSTRUMENTATION
MISCELLANOUS ONE-LINE DIAGRAMS
SHEET 2 OF 2

DESIGNED BY:	VJL
DRAWN BY:	KWS
REVIEWED BY:	CEM
APPROVED BY:	TLS
PROJECT NO.:	168622
DATE:	4/4/2014
SCALE:	NOT TO SCALE
REVISION:	
DISCIPLINE NO.	I-27
DWG. NO.	236 OF 273

FD168622 SAVED: YOUDS297, 8/27/2013 9:07:38 AM
D168622 PW:FCDR:D:\168622...\09.5055 - Instrumentation Drawings
File: C:\PWBatchPDF\Process\168622 - Austin Walnut Creek WWTP Filter Rehab_27.dwg Layout: Layout1 Plotted: 4/4/2014 7:49:30 AM

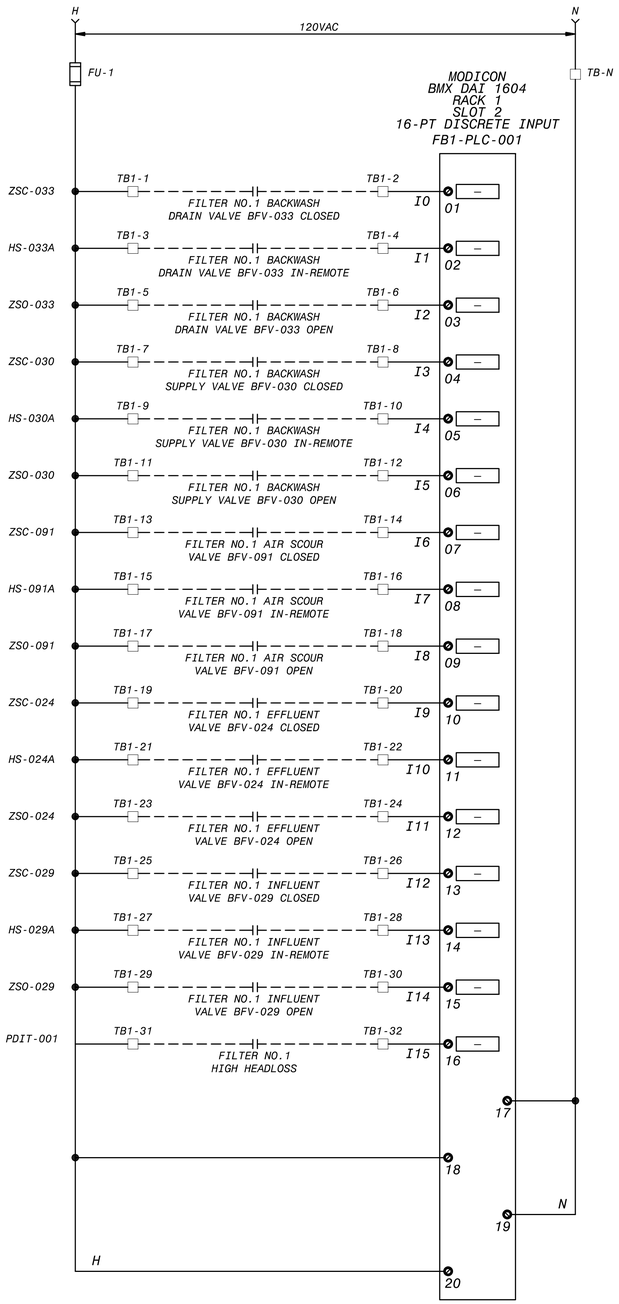

FB1-PLC-001 DIGITAL INPUT, SLOT 2
WIRING SCHEMATIC

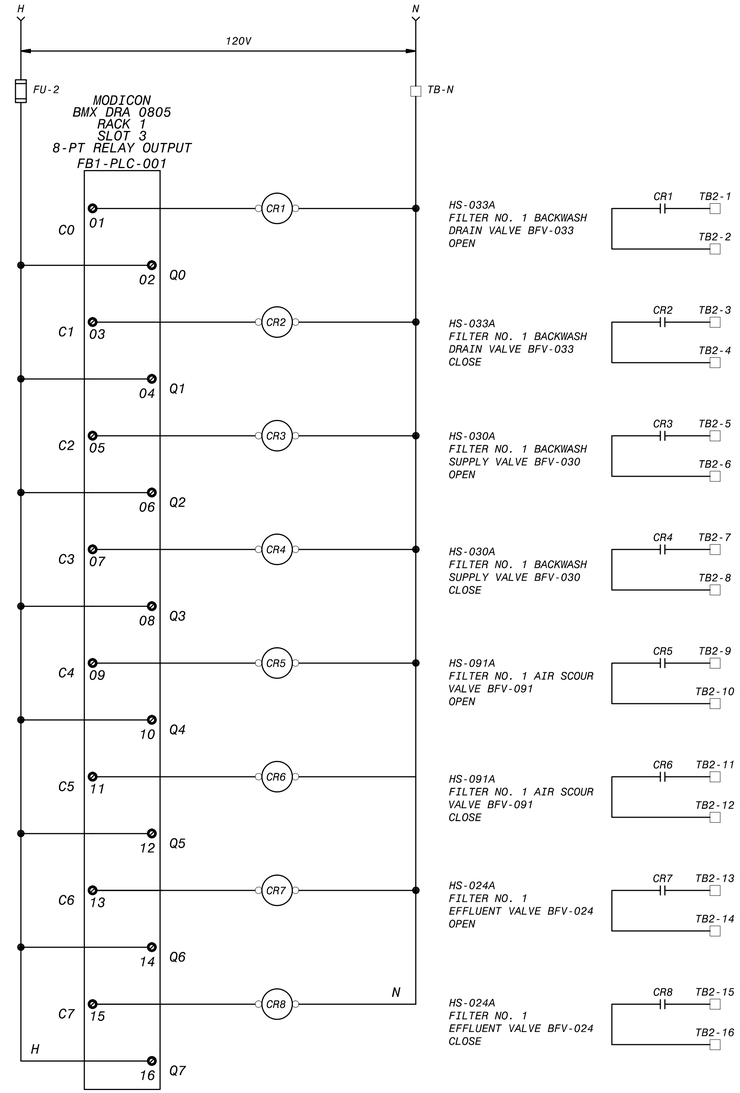

FB1-PLC-001 DIGITAL OUTPUT, SLOT 3
WIRING SCHEMATIC

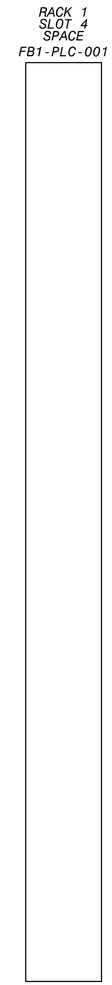

FB1-PLC-001 SPACE, SLOT 4
WIRING SCHEMATIC

WIRING AND TERMINAL DEVICE LEGEND

- + DEVICE WIRING TERMINAL

TERMINAL BLOCK LOCATED IN FILTER CONTROL PANEL

FIELD WIRING

NO.	DR	CK	DATE	DESCRIPTION

REVISIONS

BLACK & VEATCH
Building a world of difference.
Black & Veatch Corporation
Registration No. F-258
Austin, Texas

STATE OF TEXAS
CHARLES E. MORRIS
106414
LICENSED
PROFESSIONAL ENGINEER

Walnut Creek WWTP - Tertiary Filter Rehabilitation Project
CIP ID No. 3023.025

INSTRUMENTATION
FILTER CONSOLE NO. 1 PLC I/O POINT
WIRING SCHEMATIC SH. 1 OF 2

DESIGNED BY:	KWS
DRAWN BY:	KWS
REVIEWED BY:	CEM
APPROVED BY:	TLS
PROJECT NO.:	168622
DATE:	4/4/2014
SCALE:	NOT TO SCALE
REVISION:	
DISCIPLINE NO.	I-28
DWG. NO.	237 OF 273

FD168622 SAVED: STMK0205, 11/5/2013 10:06:10 AM
D168622 PW-FLDR:D:\168622...\09.0005 - Instrumentation Drawings
File: C:\PWBatchPDF\Process\168622 - Austin Walnut Creek WWTP Filter Rehab_28.dwg Layout: Layout1 Plotted: 4/4/2014 8:10:07 AM

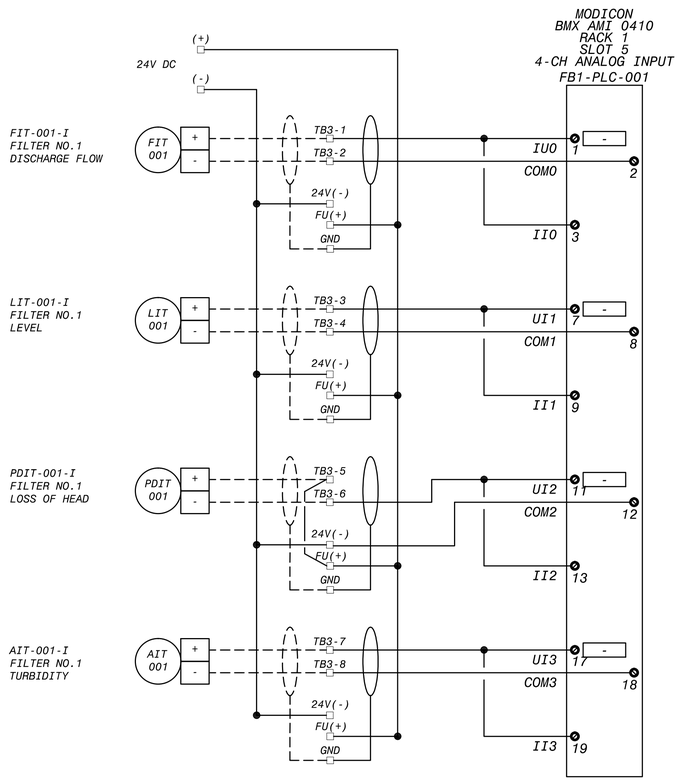

FB1-PLC-001 ANALOG INPUT, SLOT 5
WIRING SCHEMATIC

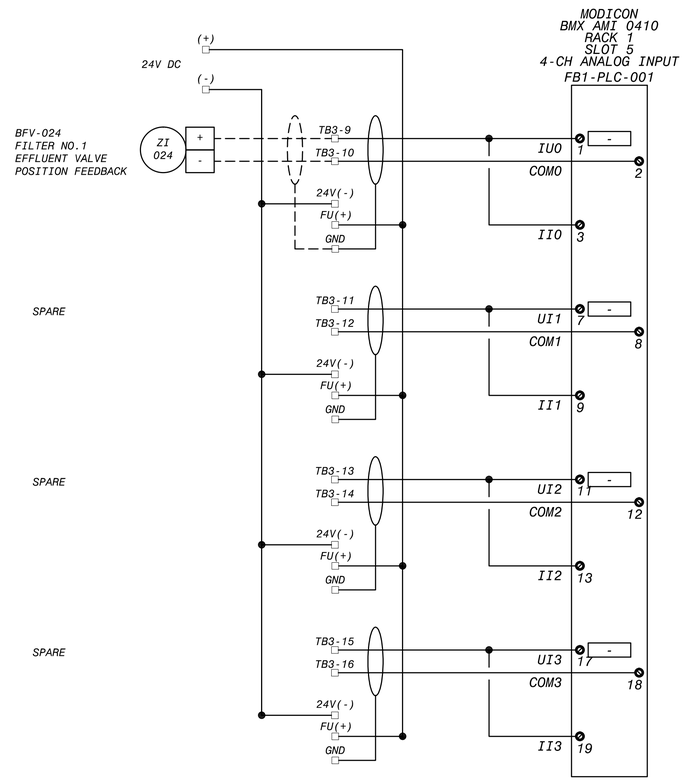

FB1-PLC-001 ANALOG INPUT, SLOT 6
WIRING SCHEMATIC

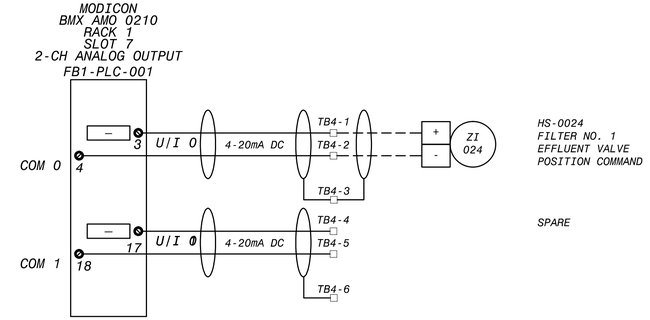

FB1-PLC-001 ANALOG OUTPUT, SLOT 7
WIRING SCHEMATIC

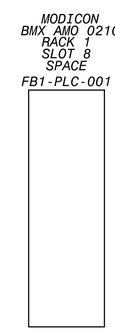

FB1-PLC-001 SPACE, SLOT 8
WIRING SCHEMATIC

WIRING AND TERMINAL DEVICE LEGEND

- + DEVICE WIRING TERMINAL

TERMINAL BLOCK LOCATED IN FILTER CONTROL PANEL

FIELD WIRING

REVISIONS				
NO.	DR	CK	DATE	DESCRIPTION

BLACK & VEATCH
Building a world of difference.
Black & Veatch Corporation
Registration No. F-258
Austin, Texas

STATE OF TEXAS
CHARLES E. MORRIS
108414
LICENSED
PROFESSIONAL ENGINEER
4/4/2014

Austin WATER

Walnut Creek WWTP - Tertiary Filter Rehabilitation Project
CIP ID No. 3023.025

INSTRUMENTATION
FILTER CONSOLE NO. 1 PLC I/O POINT
WIRING SCHEMATIC SH. 2 OF 2

DESIGNED BY:	KWS
DRAWN BY:	KWS
REVIEWED BY:	CEM
APPROVED BY:	TLS
PROJECT NO.:	168622
DATE:	4/4/2014
SCALE:	NOT TO SCALE
REVISION:	
DISCIPLINE NO.	I-29
DWG. NO.	238 OF 273

FD168622 SAVED: STMK0205, 11/5/2013 11:49:12 AM
D168622 PW/FEDD:D168622...\09.5055 - Instrumentation Drawings
File: C:\PWBatchPDF\Process\168622 - Austin Walnut Creek WWTP Filter Rehab_I-29.dwg Layout: Layout1 Plotted: 4/4/2014 7:50:09 AM

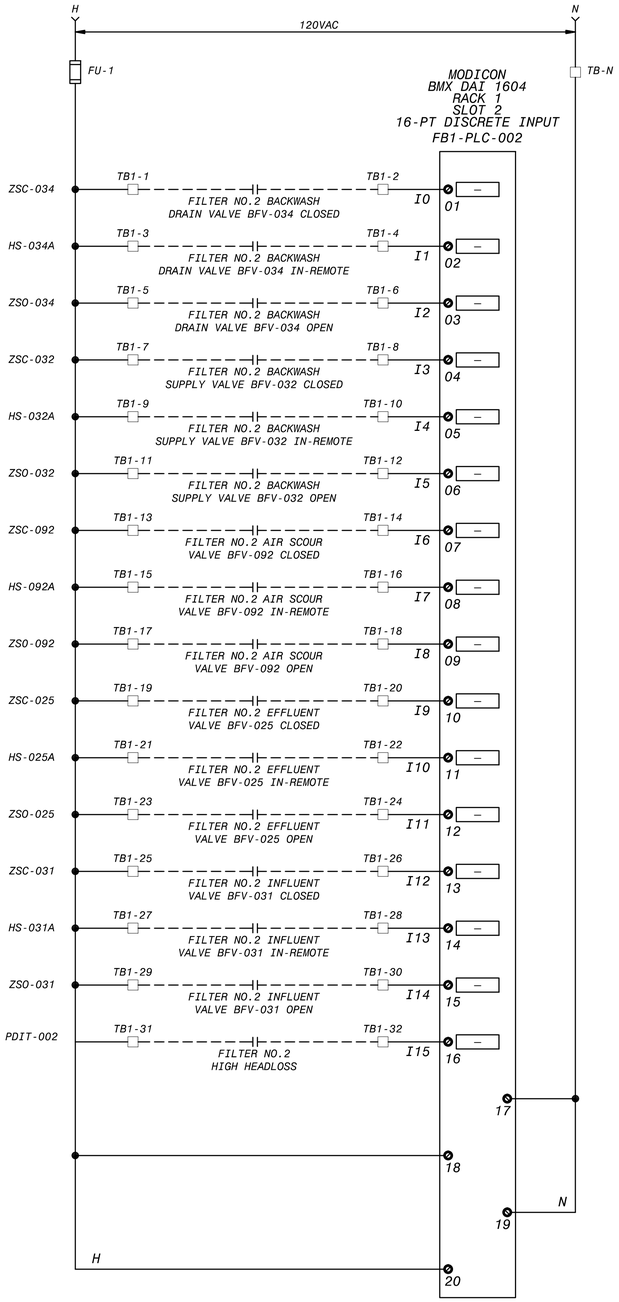

FB1-PLC-002 DIGITAL INPUT, SLOT 2
WIRING SCHEMATIC

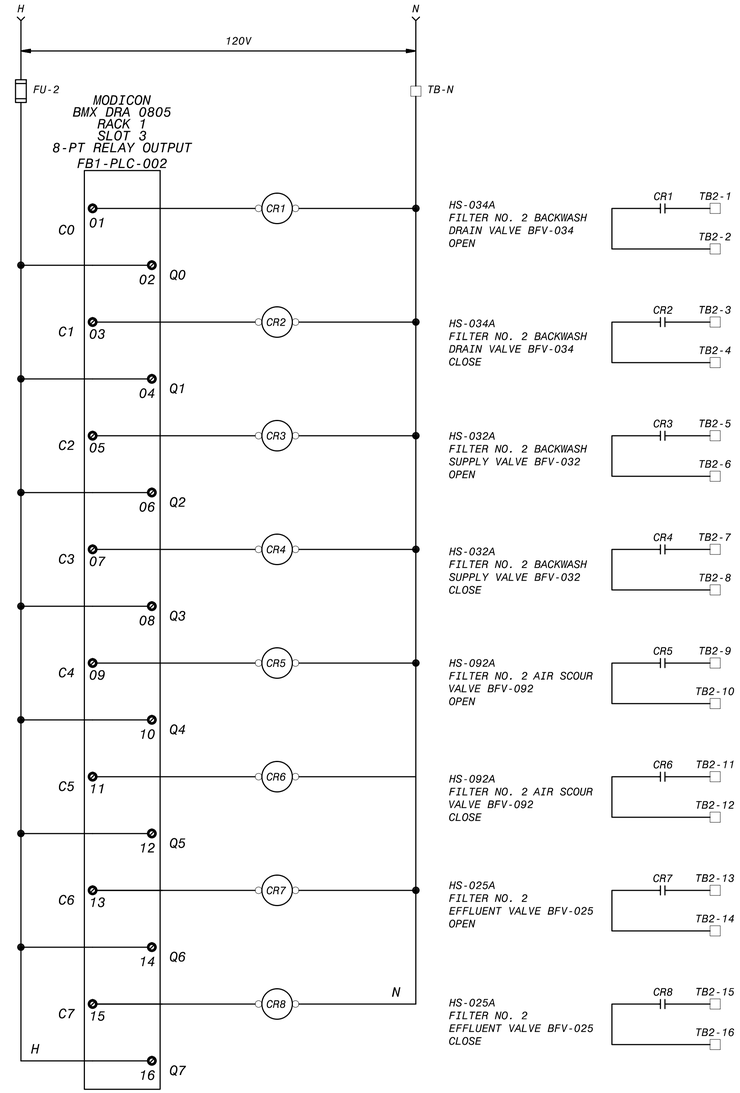

FB1-PLC-002 DIGITAL OUTPUT, SLOT 3
WIRING SCHEMATIC

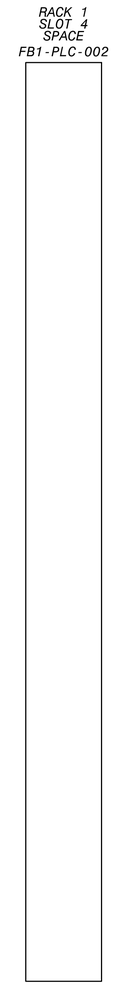

FB1-PLC-002 SPACE, SLOT 4
WIRING SCHEMATIC

WIRING AND TERMINAL DEVICE LEGEND

- + DEVICE WIRING TERMINAL

TERMINAL BLOCK LOCATED IN FILTER CONTROL PANEL

FIELD WIRING

NO.	DR	CK	DATE	DESCRIPTION

REVISIONS

BLACK & VEATCH
Building a world of difference.
Black & Veatch Corporation
Registration No. F-258
Austin, Texas

STATE OF TEXAS
CHARLES E. MORRIS
108414
LICENSED
PROFESSIONAL ENGINEER

Austin WATER
Walnut Creek WWTP - Tertiary Filter Rehabilitation Project
CIP ID No. 3023.025

INSTRUMENTATION
FILTER CONSOLE NO. 2 PLC I/O POINT
WIRING SCHEMATIC SH. 1 OF 2

DESIGNED BY:	KWS
DRAWN BY:	KWS
REVIEWED BY:	CEM
APPROVED BY:	TLS
PROJECT NO.:	168622
DATE:	4/4/2014
SCALE:	NOT TO SCALE
REVISION:	

DISCIPLINE NO. I-30

DWG. NO. 239 OF 273

FD168622 SAVED: STMC025, 9/3/2013 9:49:20 AM
D168622 PW-FEDR D:\168622...\09.5055 Instrumentation Drawings
File: C:\PWBatchPDF\Process\168622 - Austin Walnut Creek WWTP Filter Rehab_30.dwg Layout: Layout1 Plotted: 4/4/2014 7:50:28 AM

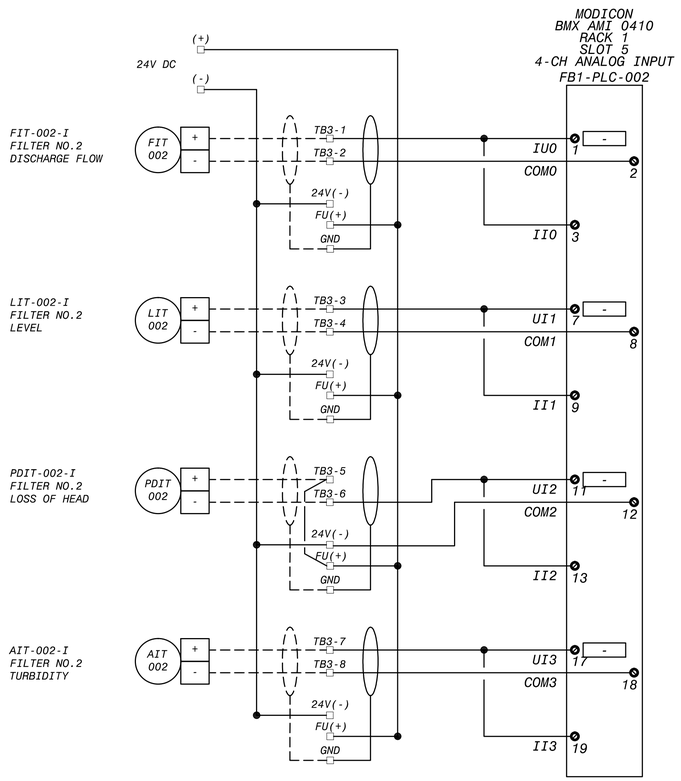

FB1-PLC-002 ANALOG INPUT, SLOT 5
WIRING SCHEMATIC

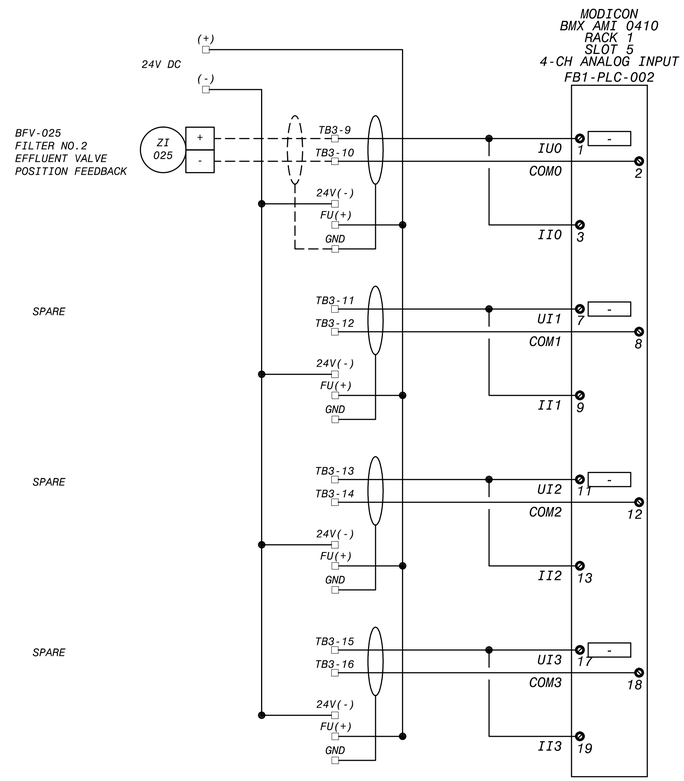

FB1-PLC-002 ANALOG INPUT, SLOT 6
WIRING SCHEMATIC

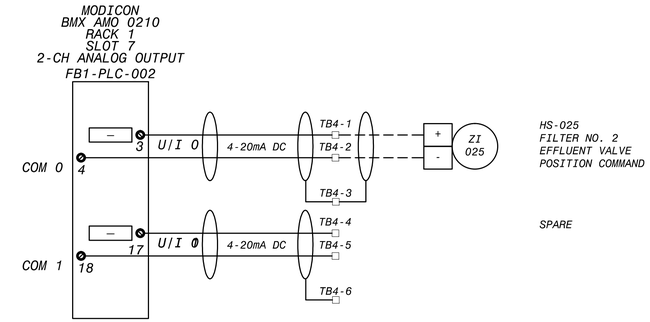

FB1-PLC-002 ANALOG OUTPUT, SLOT 7
WIRING SCHEMATIC

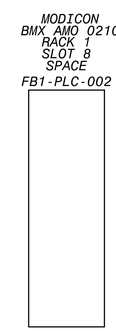

FB1-PLC-002 SPACE, SLOT 8
WIRING SCHEMATIC

WIRING AND TERMINAL DEVICE LEGEND

- + DEVICE WIRING TERMINAL

TERMINAL BLOCK LOCATED IN FILTER CONTROL PANEL

FIELD WIRING

REVISIONS				
NO.	DR	CK	DATE	DESCRIPTION

BLACK & VEATCH
Building a world of difference.
Black & Veatch Corporation
Registration No. F-258
Austin, Texas

STATE OF TEXAS
CHARLES E. MORRIS
108414
LICENSED
PROFESSIONAL ENGINEER
4/4/2014

Austin WATER

Walnut Creek WWTP - Tertiary Filter Rehabilitation Project
CIP ID No. 3023.025

INSTRUMENTATION
FILTER CONSOLE NO. 2 PLC I/O POINT
WIRING SCHEMATIC SH. 2 OF 2

DESIGNED BY:	KWS
DRAWN BY:	KWS
REVIEWED BY:	CEM
APPROVED BY:	TLS
PROJECT NO.:	168622
DATE:	4/4/2014
SCALE:	NOT TO SCALE
REVISION:	
DISCIPLINE NO.	I-31
DWG. NO.	240 OF 273

FD168622 SAVED: STMK0205, 6/12/2013 8:40:19 AM
D168622 PW\FEDR\D168622...\09.5005 - Instrumentation Drawings
File: C:\PWBatchPDF\Process\168622 - Austin Walnut Creek WWTP Filter Rehab_31.dwg Layout: Layout1 Plotted: 4/4/2014 7:53:44 AM

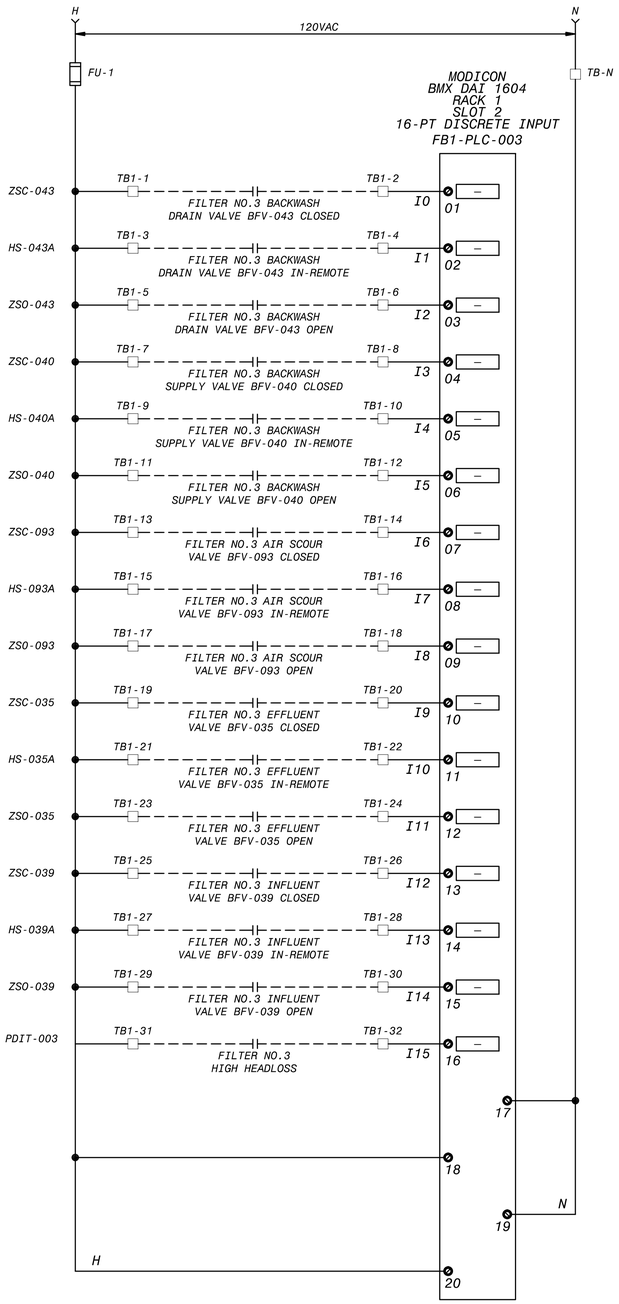

FB1-PLC-003 DIGITAL INPUT, SLOT 2
WIRING SCHEMATIC

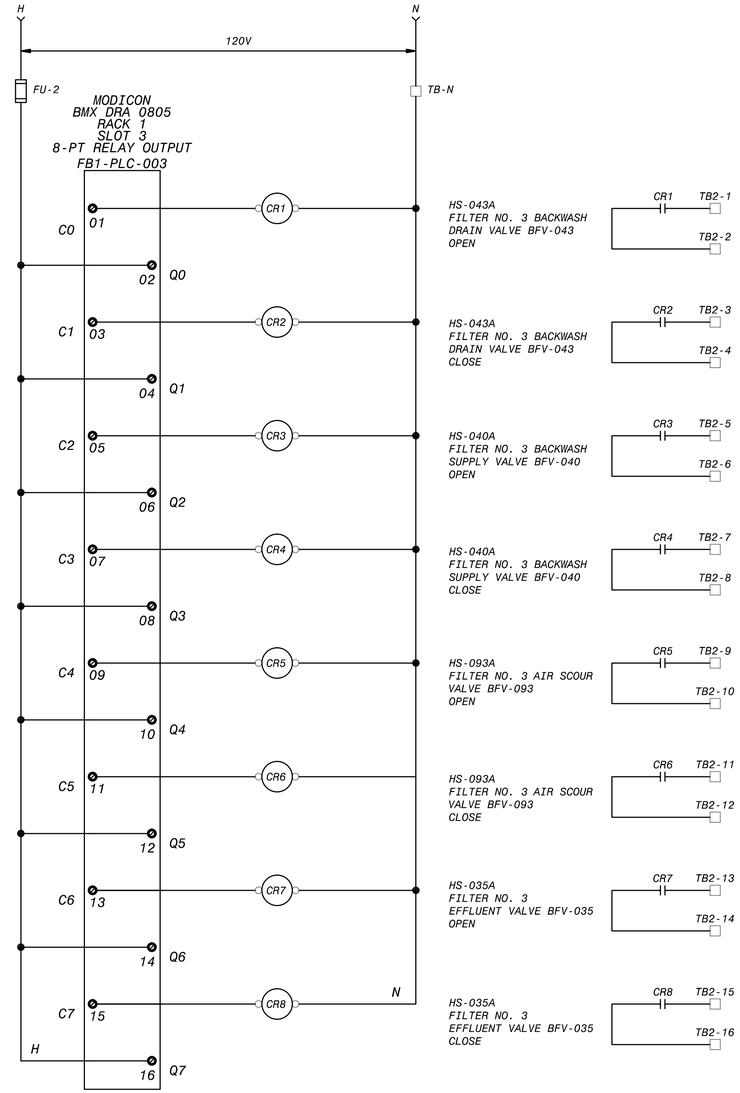

FB1-PLC-003 DIGITAL OUTPUT, SLOT 3
WIRING SCHEMATIC

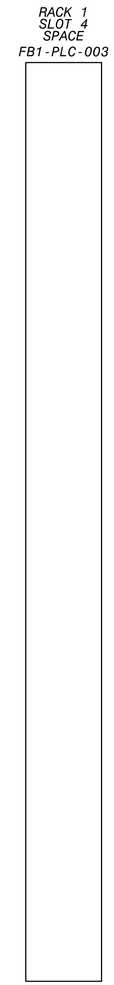

FB1-PLC-003 SPACE, SLOT 4
WIRING SCHEMATIC

WIRING AND TERMINAL DEVICE LEGEND

- | + DEVICE WIRING TERMINAL

TERMINAL BLOCK LOCATED IN FILTER CONTROL PANEL

FIELD WIRING

NO.	DR	CK	DATE	DESCRIPTION

REVISIONS

BLACK & VEATCH
Building a world of difference.
Black & Veatch Corporation
Registration No. F-258
Austin, Texas

STATE OF TEXAS
CHARLES E. MORRIS
108414
LICENSED
PROFESSIONAL ENGINEER

Austin WATER

Walnut Creek WWTP - Tertiary Filter Rehabilitation Project

CIP ID No. 3023.025

INSTRUMENTATION
FILTER CONSOLE NO. 3 PLC I/O POINT
WIRING SCHEMATIC SH. 1 OF 2

DESIGNED BY:	KWS
DRAWN BY:	KWS
REVIEWED BY:	CEM
APPROVED BY:	TLS
PROJECT NO.:	168622
DATE:	4/4/2014
SCALE:	NOT TO SCALE
REVISION:	

DISCIPLINE NO.
I-32

DWG. NO.
241 OF 273

FD168622 SAVED: STUBOADS, 6/12/2013 8:40:19 AM
D168622 BW-FEDR:D168622...\09-0005 - Instrumentation Drawings
File: C:\PWBatchPDF\Process\168622 - Austin Walnut Creek WWTP Filter Rehab_I_32.dwg Layout: Layout1 Plotted: 4/4/2014 7:53:55 AM

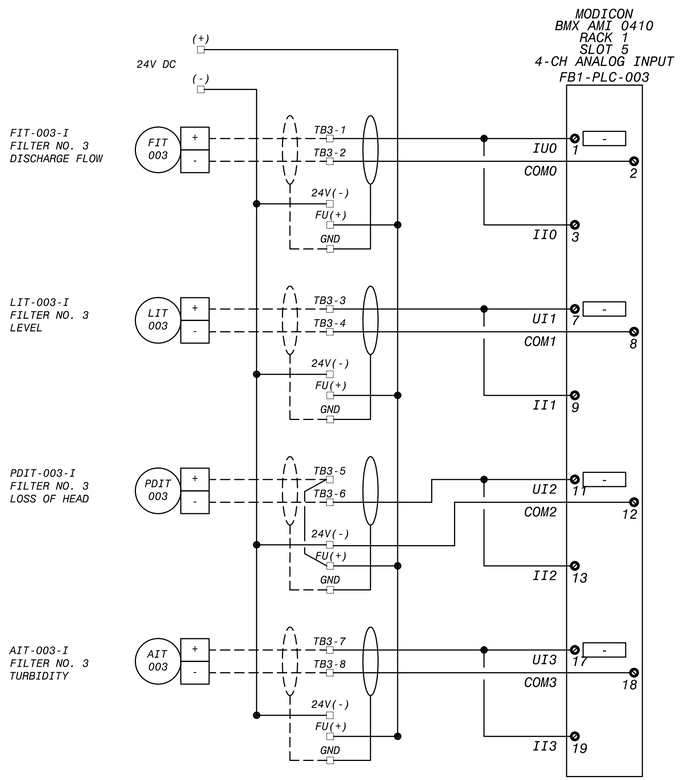

FB1-PLC-003 ANALOG INPUT, SLOT 5
WIRING SCHEMATIC

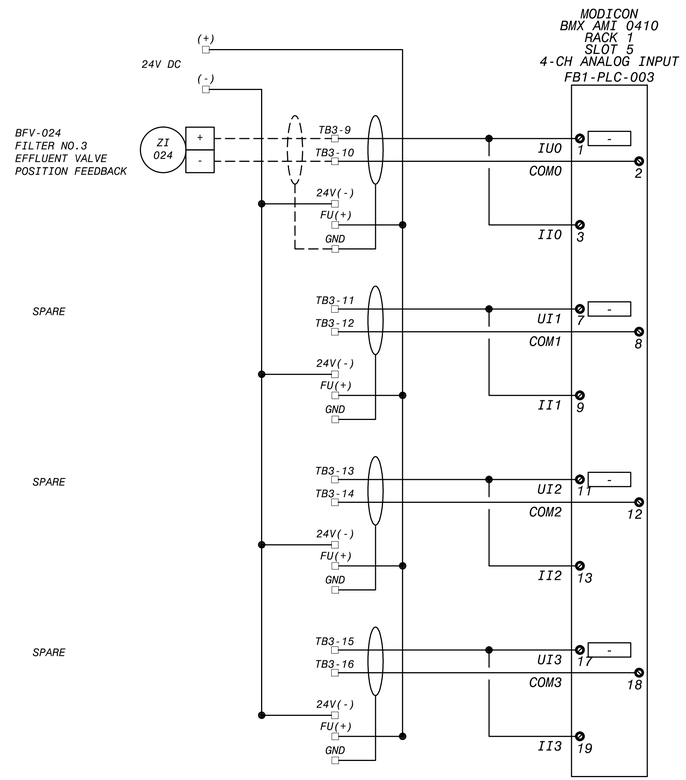

FB1-PLC-003 ANALOG INPUT, SLOT 6
WIRING SCHEMATIC

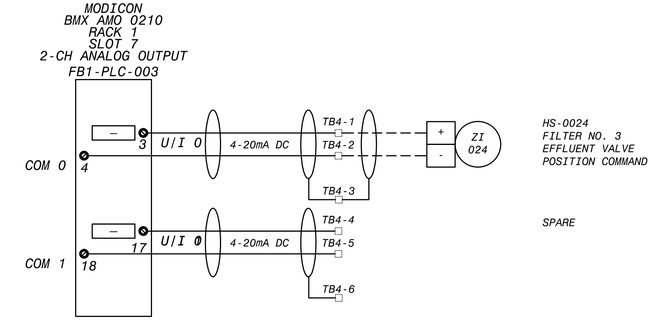

FB1-PLC-003 ANALOG OUTPUT, SLOT 7
WIRING SCHEMATIC

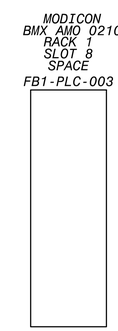

FB1-PLC-003 SPACE, SLOT 8
WIRING SCHEMATIC

WIRING AND TERMINAL DEVICE LEGEND

- + DEVICE WIRING TERMINAL
TERMINAL BLOCK LOCATED IN FILTER CONTROL PANEL
FIELD WIRING

NO.	DR	CK	DATE	DESCRIPTION

REVISIONS

BLACK & VEATCH
Building a world of difference.
Black & Veatch Corporation
Registration No. F-258
Austin, Texas

STATE OF TEXAS
CHARLES E. MORRIS
108114
LICENSED
PROFESSIONAL ENGINEER
4/4/2014

Walnut Creek WWTP - Tertiary Filter Rehabilitation Project
CIP ID No. 3023.025

INSTRUMENTATION
FILTER CONSOLE NO. 3 PLC I/O POINT
WIRING SCHEMATIC SH. 2 OF 2

DESIGNED BY:	KWS
DRAWN BY:	KWS
REVIEWED BY:	CEM
APPROVED BY:	TLS
PROJECT NO.:	168622
DATE:	4/4/2014
SCALE:	NOT TO SCALE

REVISION:

DISCIPLINE NO. I-33

DWG. NO. 242 OF 273

FD168622 SAVED: STIMOS05, 6/12/2013 8:40:19 AM
D168622 PW:FDPD:\168622...\09.0005 - Instrumentation Drawings
File: C:\PWBatchPDF\Process\168622 - Austin Walnut Creek WWTP Filter Rehab_33.dwg Layout: Layout1 Plotted: 4/4/2014 7:54:05 AM

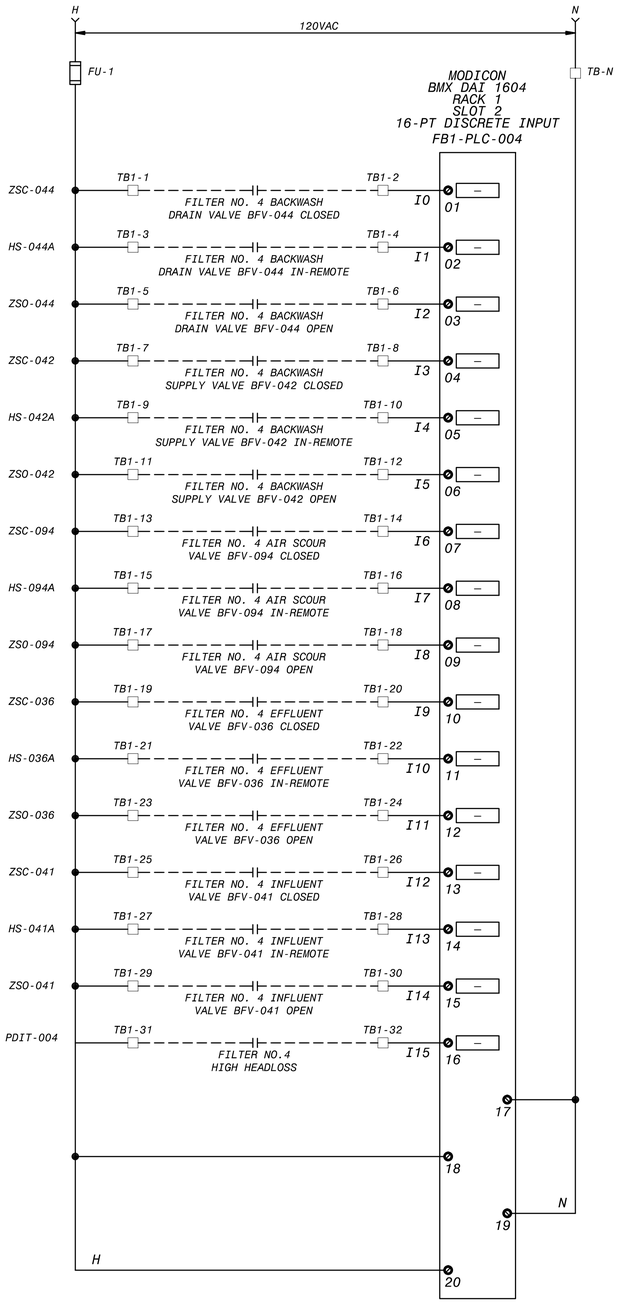

FB1-PLC-004 DIGITAL INPUT, SLOT 2
WIRING SCHEMATIC

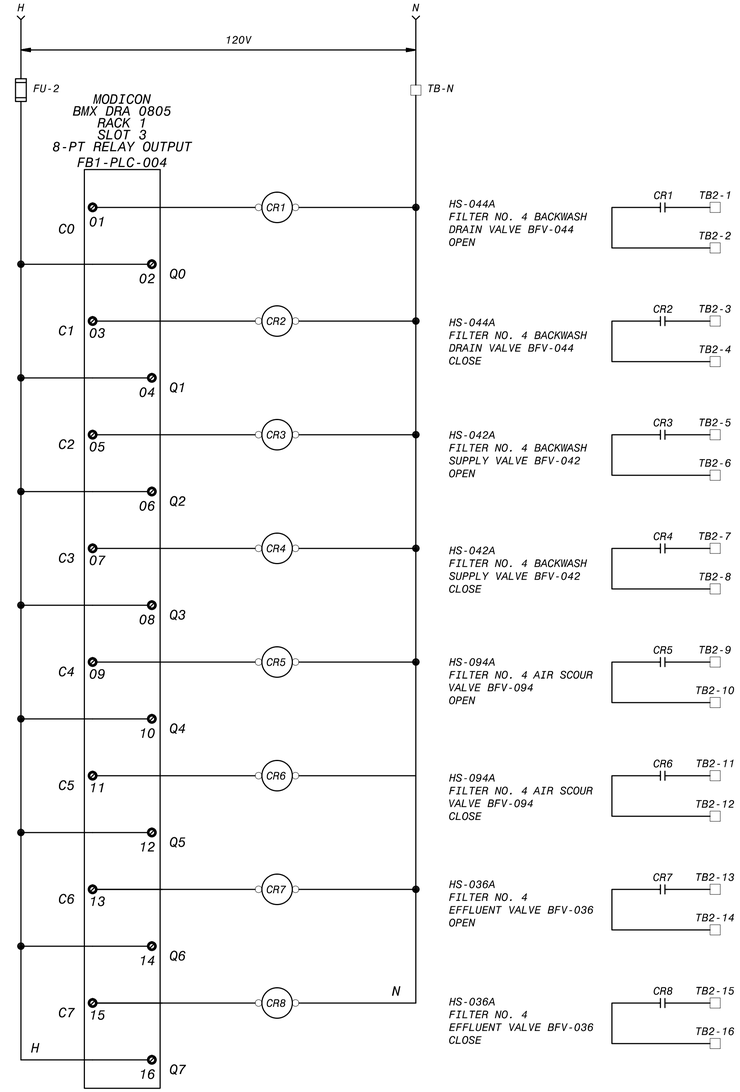

FB1-PLC-004 DIGITAL OUTPUT, SLOT 3
WIRING SCHEMATIC

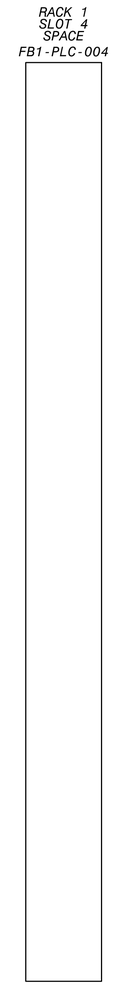

FB1-PLC-004 SPACE, SLOT 4
WIRING SCHEMATIC

WIRING AND TERMINAL DEVICE LEGEND

- + DEVICE WIRING TERMINAL

TERMINAL BLOCK LOCATED IN FILTER CONTROL PANEL

FIELD WIRING

NO.	DR	CK	DATE	DESCRIPTION

REVISIONS

BLACK & VEATCH
Building a world of difference.
Black & Veatch Corporation
Registration No. F-258
Austin, Texas

STATE OF TEXAS
CHARLES E. MORRIS
108414
LICENSED
PROFESSIONAL ENGINEER

Austin WATER
Walnut Creek WWTP - Tertiary Filter Rehabilitation Project
CIP ID No. 3023.025

INSTRUMENTATION
FILTER CONSOLE NO. 4 PLC I/O POINT
WIRING SCHEMATIC SH. 1 OF 2

DESIGNED BY:	KWS
DRAWN BY:	KWS
REVIEWED BY:	CEM
APPROVED BY:	TLS
PROJECT NO.:	168622
DATE:	4/4/2014
SCALE:	NOT TO SCALE
REVISION:	
DISCIPLINE NO.	I-34
DWG. NO.	243 OF 273

FD168622 SAVED: STMC025, 6/12/2013 8:40:19 AM
D168622 PW-FEDR(D)168622...\09-0005 - Instrumentation Drawings
File: C:\PWBatchPDF\Process\168622 - Austin Walnut Creek WWTP Filter Rehab_I_34.dwg Layout: Layout1 Plotted: 4/4/2014 7:54:16 AM

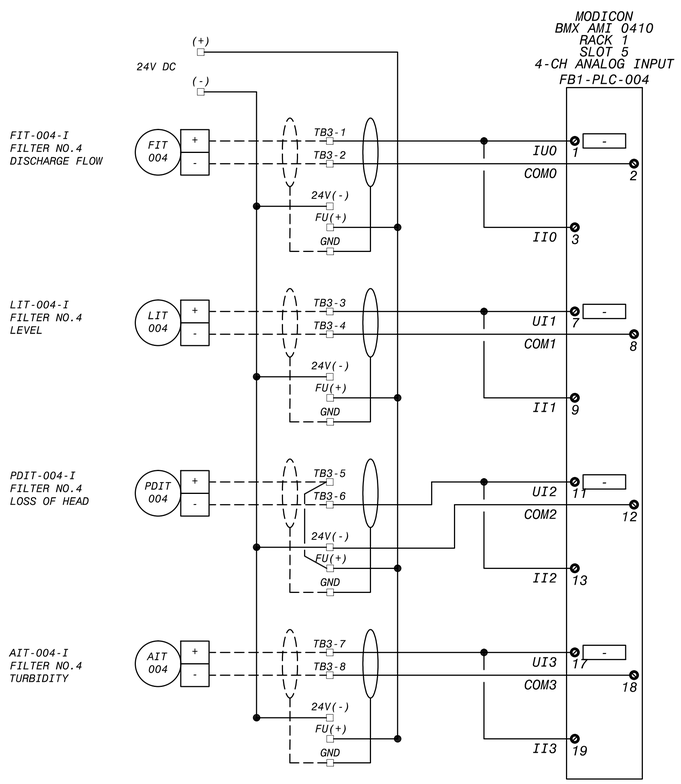

FB1-PLC-004 ANALOG INPUT, SLOT 5
WIRING SCHEMATIC

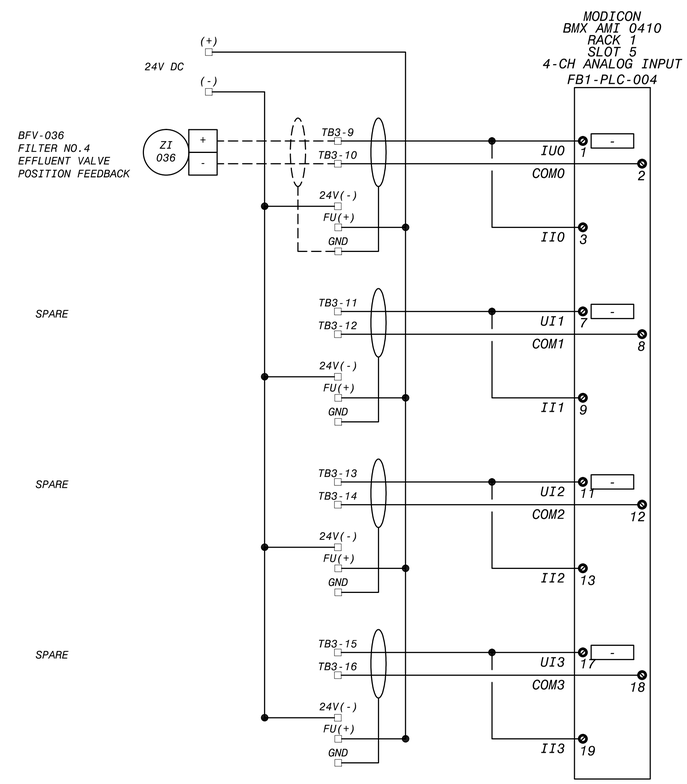

FB1-PLC-004 ANALOG INPUT, SLOT 6
WIRING SCHEMATIC

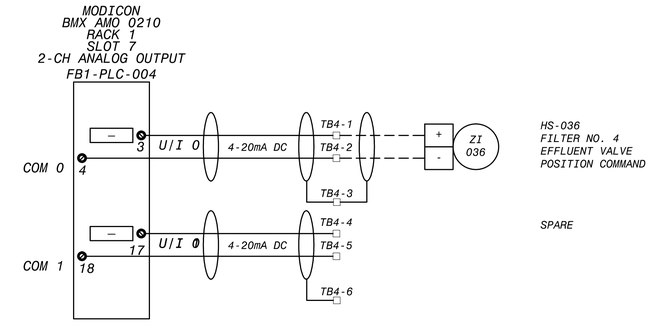

FB1-PLC-004 ANALOG OUTPUT, SLOT 7
WIRING SCHEMATIC

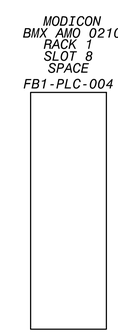

FB1-PLC-004 SPACE, SLOT 8
WIRING SCHEMATIC

WIRING AND TERMINAL DEVICE LEGEND

- + DEVICE WIRING TERMINAL
- TERMINAL BLOCK LOCATED IN FILTER CONTROL PANEL
- — — — FIELD WIRING

NO.	DR	CK	DATE	DESCRIPTION

REVISIONS

BLACK & VEATCH
Building a world of difference.
Black & Veatch Corporation
Registration No. F-258
Austin, Texas

STATE OF TEXAS
CHARLES E. MORRIS
108414
LICENSED
PROFESSIONAL ENGINEER
4/4/2014

Austin WATER
Walnut Creek WWTP - Tertiary Filter Rehabilitation Project
CIP ID No. 3023.025

INSTRUMENTATION
FILTER CONSOLE NO. 4 PLC I/O POINT
WIRING SCHEMATIC SH. 2 OF 2

DESIGNED BY:	KWS
DRAWN BY:	KWS
REVIEWED BY:	CEM
APPROVED BY:	TLS
PROJECT NO.:	168622
DATE:	4/4/2014
SCALE:	NOT TO SCALE

REVISION:

DISCIPLINE NO.
I-35

DWG. NO.
244 OF 273

FD168622 SAVED: SIMCOX6, 6/12/2013 8:40:10 AM
D168622 PWFEDD:D168622...109.5005.-Instrumentation Drawings
File: C:\PWBatchPDF\Process\168622 - Austin Walnut Creek WWTP Filter Rehab\I_35.dwg Layout: Layout1 Plotted: 4/4/2014 7:54:27 AM

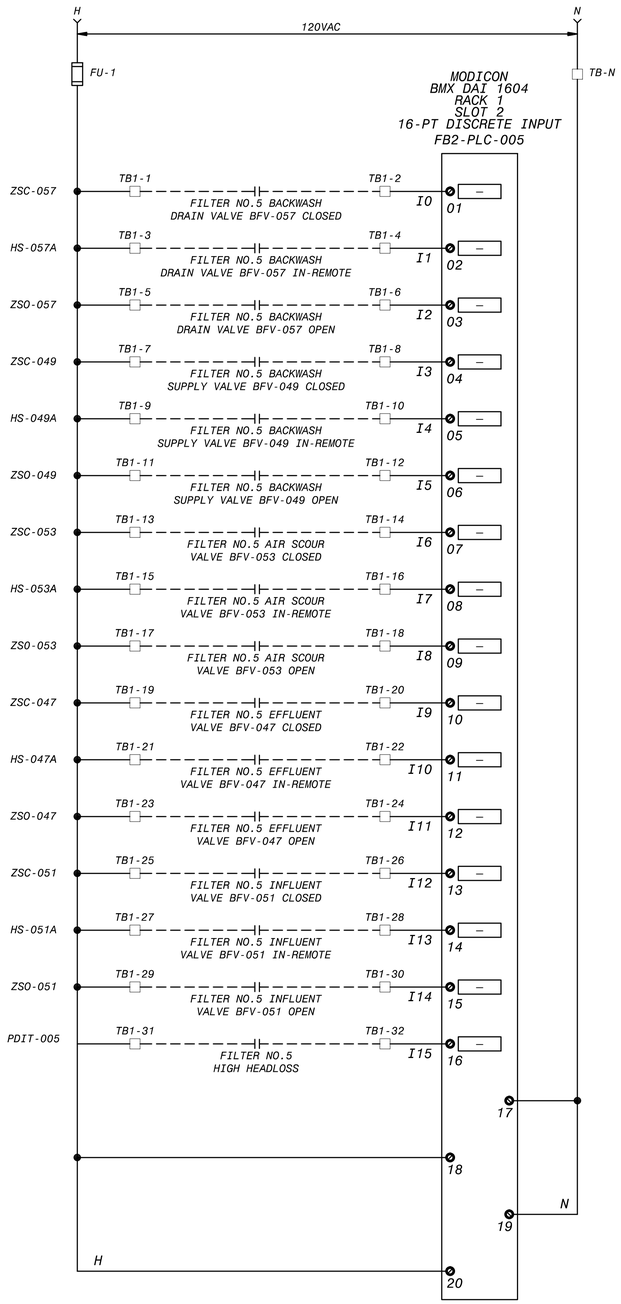

FB2-PLC-005 DIGITAL INPUT, SLOT 2
WIRING SCHEMATIC

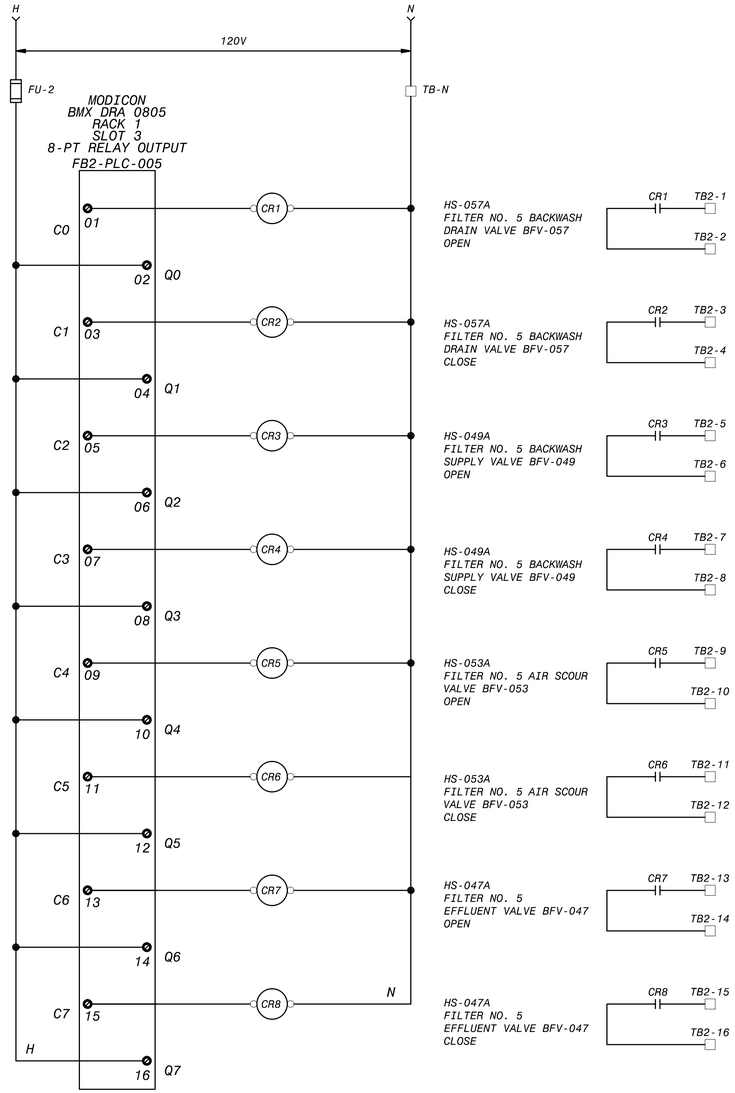

FB2-PLC-005 DIGITAL OUTPUT, SLOT 3
WIRING SCHEMATIC

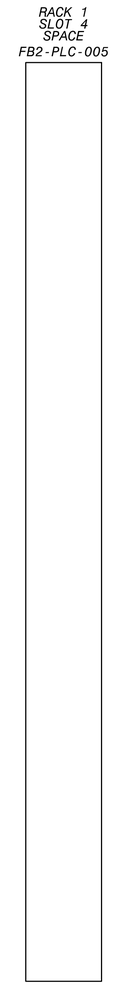

FB2-PLC-005 SPACE, SLOT 4
WIRING SCHEMATIC

WIRING AND TERMINAL DEVICE LEGEND

- + DEVICE WIRING TERMINAL

TERMINAL BLOCK LOCATED IN FILTER CONTROL PANEL

FIELD WIRING

NO.	DR	CK	DATE	DESCRIPTION

REVISIONS

BLACK & VEATCH
Building a world of difference.
Black & Veatch Corporation
Registration No. F-258
Austin, Texas

STATE OF TEXAS
CHARLES E. MORRIS
108414
LICENSED
PROFESSIONAL ENGINEER

Walnut Creek WWTP - Tertiary Filter Rehabilitation Project
Austin Water
CIP ID No. 3023.025

INSTRUMENTATION
FILTER CONSOLE NO. 5 PLC I/O POINT
WIRING SCHEMATIC SH. 1 OF 2

DESIGNED BY:	KWS
DRAWN BY:	KWS
REVIEWED BY:	CEM
APPROVED BY:	TLS
PROJECT NO.:	168622
DATE:	4/4/2014
SCALE:	NOT TO SCALE
REVISION:	
DISCIPLINE NO.	I-36
DWG. NO.	245 OF 273

FD168622 SAVED: STMK0205, 6/12/2013 8:40:19 AM
D168622 PW-FEDR D:\168622...\109.0005 - Instrumentation Drawings
File: C:\PWBatchPDF\Process\168622 - Austin Walnut Creek WWTP Filter Rehab_36.dwg Layout: Layout1 Plotted: 4/4/2014 7:54:37 AM

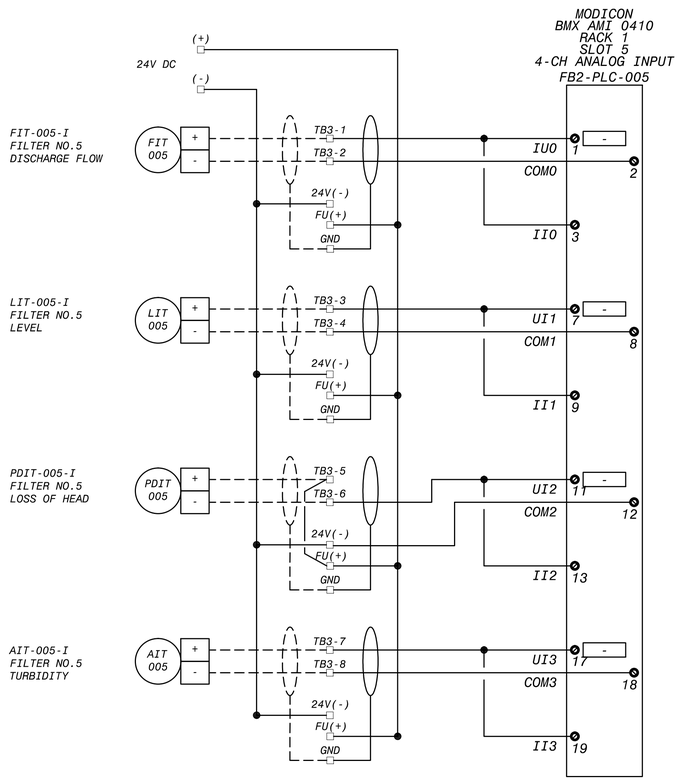

FB2-PLC-005 ANALOG INPUT, SLOT 5
WIRING SCHEMATIC

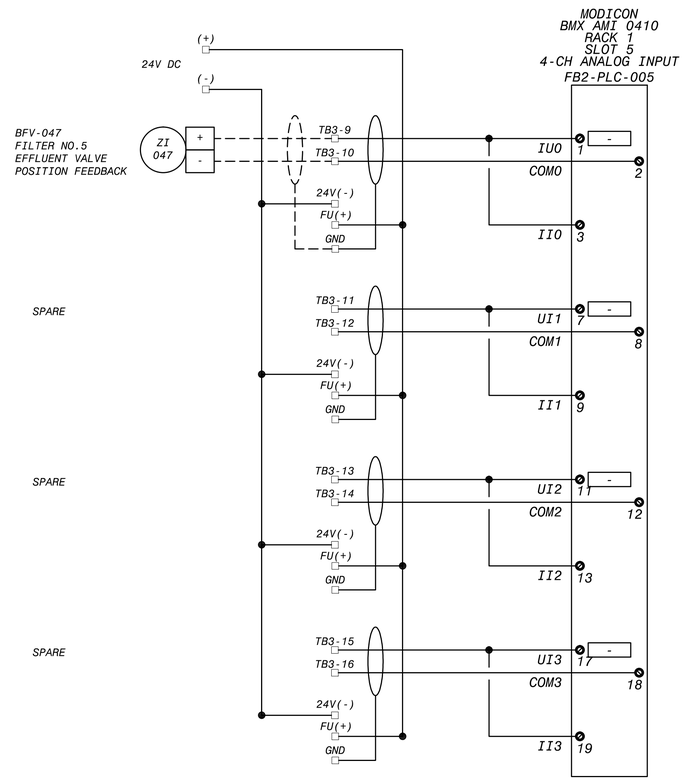

FB2-PLC-005 ANALOG INPUT, SLOT 6
WIRING SCHEMATIC

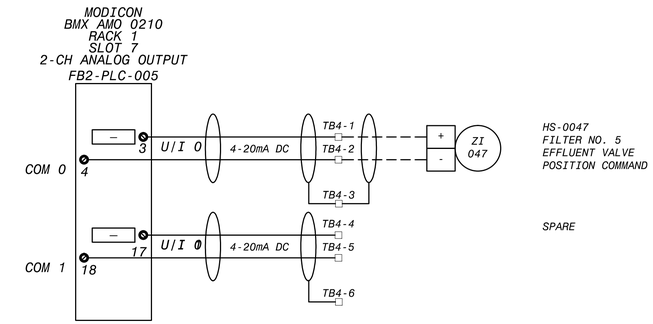

FB2-PLC-005 ANALOG OUTPUT, SLOT 7
WIRING SCHEMATIC

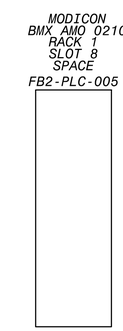

FB2-PLC-005 SPACE, SLOT 8
WIRING SCHEMATIC

WIRING AND TERMINAL DEVICE LEGEND

- + DEVICE WIRING TERMINAL

TERMINAL BLOCK LOCATED IN FILTER CONTROL PANEL

FIELD WIRING

NO.	DR	CK	DATE	DESCRIPTION

REVISIONS

BLACK & VEATCH
Building a world of difference.
Black & Veatch Corporation
Registration No. F-258
Austin, Texas

STATE OF TEXAS
CHARLES E. MORRIS
108414
LICENSED
PROFESSIONAL ENGINEER
4/4/2014

Walnut Creek WWTP - Tertiary Filter Rehabilitation Project
CIP ID No. 3023.025

INSTRUMENTATION
FILTER CONSOLE NO. 5 PLC I/O POINT
WIRING SCHEMATIC SH. 2 OF 2

DESIGNED BY:	KWS
DRAWN BY:	KWS
REVIEWED BY:	CEM
APPROVED BY:	TLS
PROJECT NO.:	168622
DATE:	4/4/2014
SCALE:	NOT TO SCALE

REVISION:

DISCIPLINE NO.
I-37

DWG. NO.
246 OF 273

FD168622 SAVED: STINKOJOS, 6/12/2013 9:40:19 AM
D168622 PW-FUDPD:D168622...\09.0005 - Instrumentation Drawings
File: C:\PWBatchPDF\Process\168622 - Austin Walnut Creek WWTP Filter Rehab_37.dwg Layout: Layout1 Plotted: 4/4/2014 7:54:48 AM

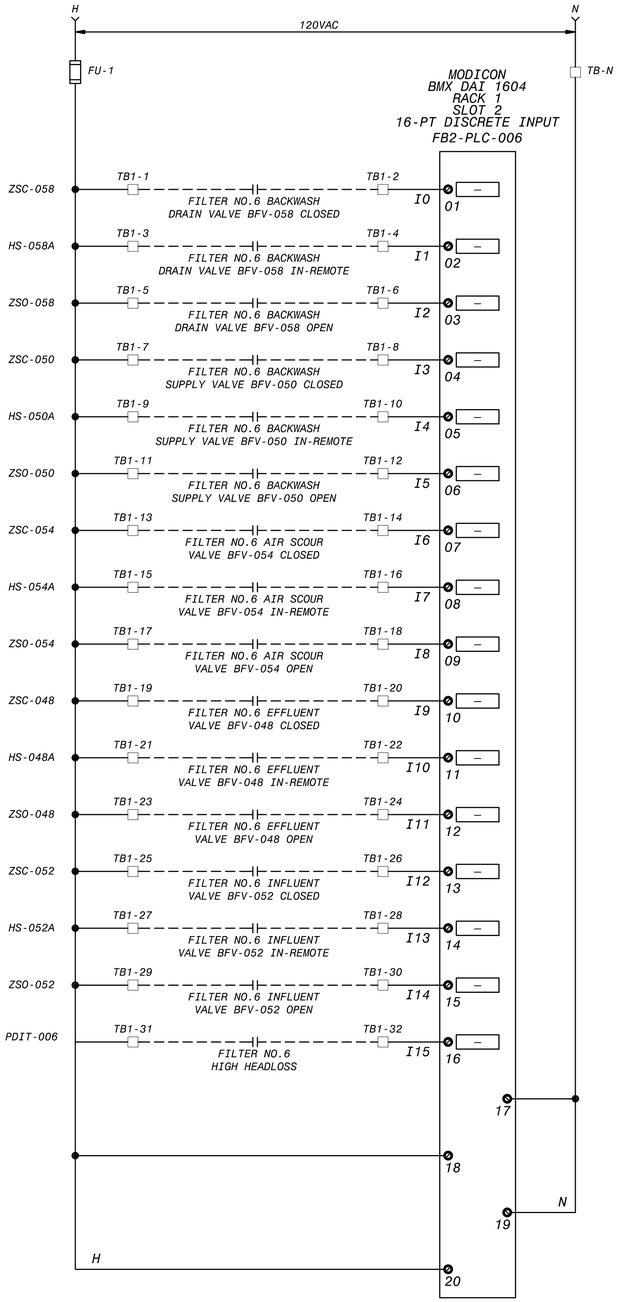

FB2-PLC-006 DIGITAL INPUT, SLOT 2
WIRING SCHEMATIC

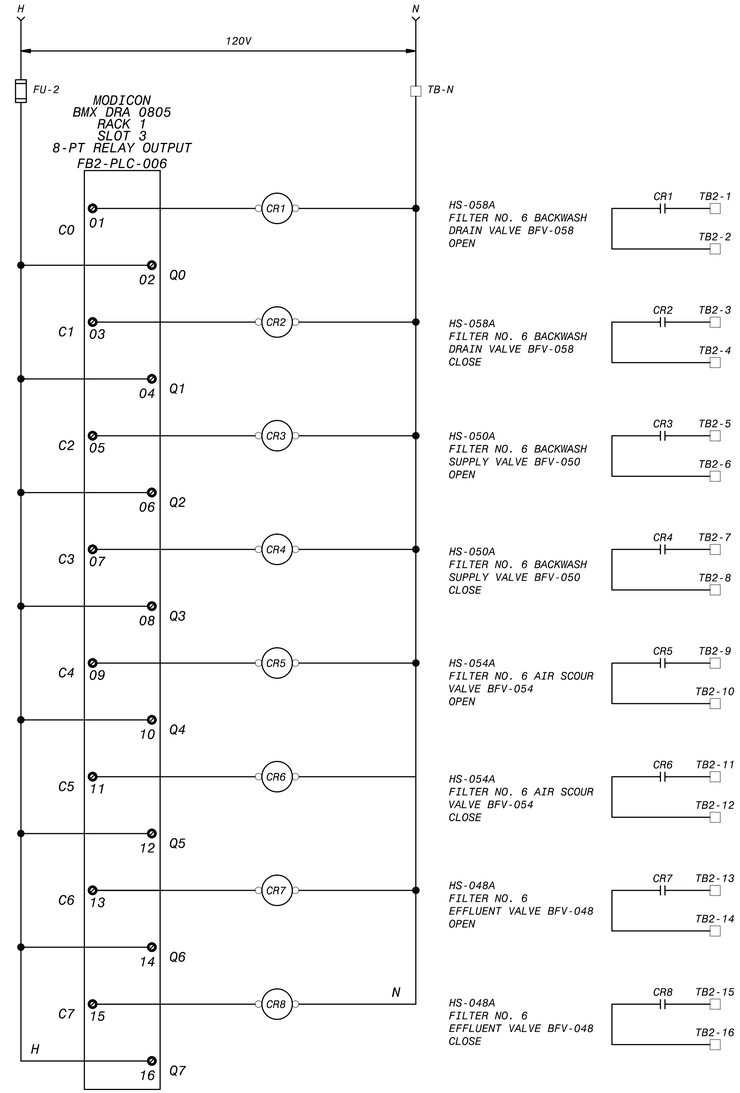

FB2-PLC-006 DIGITAL OUTPUT, SLOT 3
WIRING SCHEMATIC

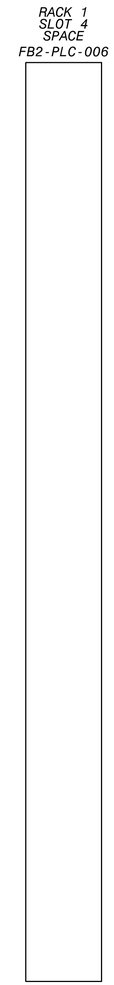

FB2-PLC-006 SPACE, SLOT 4
WIRING SCHEMATIC

WIRING AND TERMINAL DEVICE LEGEND

- | + DEVICE WIRING TERMINAL

TERMINAL BLOCK LOCATED IN FILTER CONTROL PANEL

— — — FIELD WIRING

NO.	DR	CK	DATE	DESCRIPTION

REVISIONS

BLACK & VEATCH
Building a world of difference.
Black & Veatch Corporation
Registration No. F-258
Austin, Texas

STATE OF TEXAS
CHARLES E. MORRIS
108414
LICENSED
PROFESSIONAL ENGINEER

Austin Water

Walnut Creek WWTP - Tertiary Filter Rehabilitation Project

CIP ID No. 3023.025

INSTRUMENTATION
FILTER CONSOLE NO. 6 PLC I/O POINT
WIRING SCHEMATIC SH. 1 OF 2

DESIGNED BY:	KWS
DRAWN BY:	KWS
REVIEWED BY:	CEM
APPROVED BY:	TLS
PROJECT NO.:	168622
DATE:	4/4/2014
SCALE:	NOT TO SCALE
REVISION:	
DISCIPLINE NO.	I-38
DWG. NO.	247 OF 273

FD168622 SAVED: STMK0205, 11/5/2013 10:06:10 AM
D168622 PW-FLDR:D:\168622...\09.0005 - Instrumentation Drawings
File: C:\PWBatchPDF\Process\168622 - Austin Walnut Creek WWTP Filter Rehab_38.dwg Layout: Layout1 Plotted: 4/4/2014 7:54:59 AM

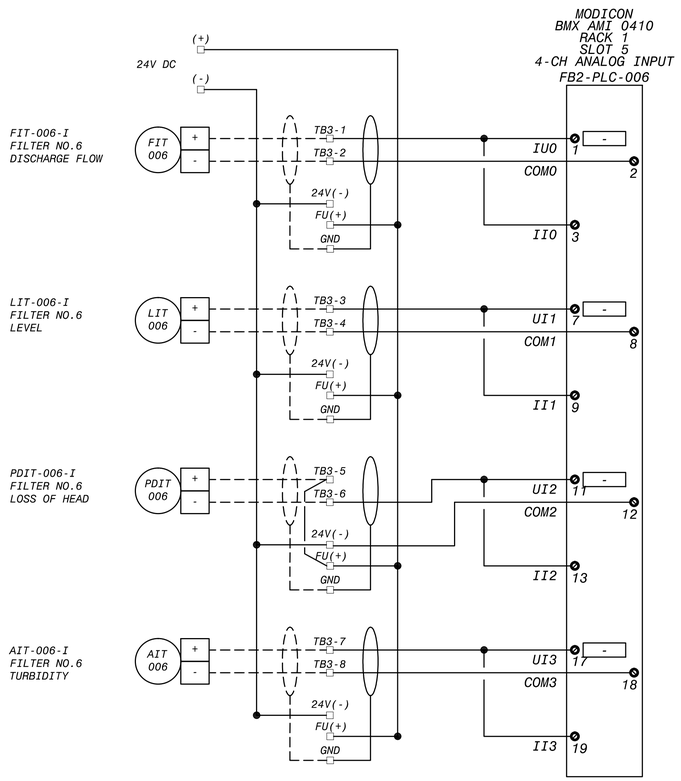

FB2-PLC-006 ANALOG INPUT, SLOT 5
WIRING SCHEMATIC

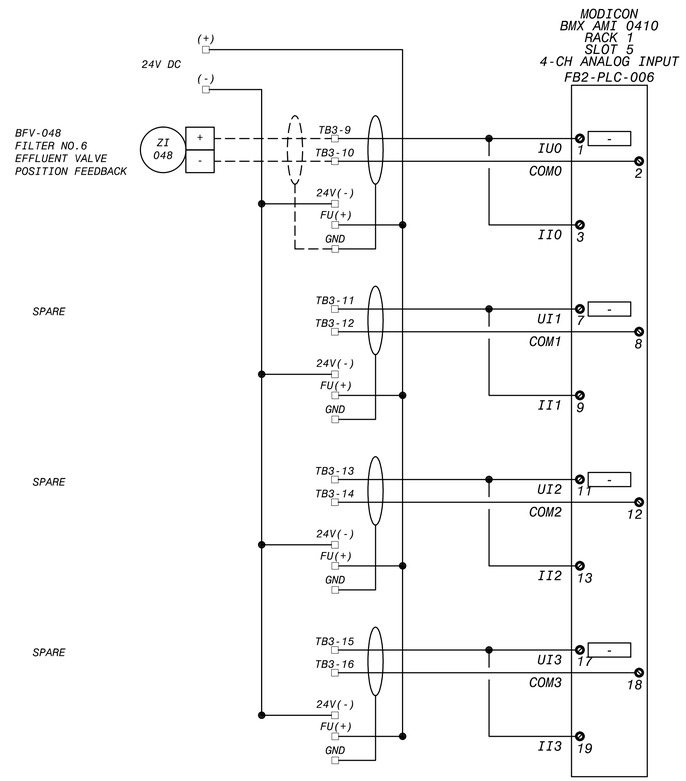

FB2-PLC-006 ANALOG INPUT, SLOT 6
WIRING SCHEMATIC

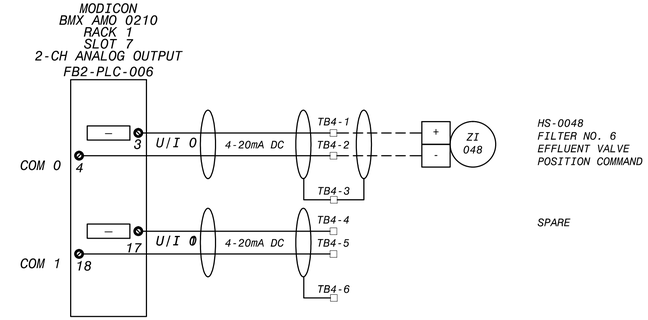

FB2-PLC-006 ANALOG OUTPUT, SLOT 7
WIRING SCHEMATIC

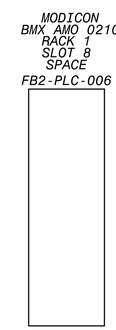

FB2-PLC-006 SPACE, SLOT 8
WIRING SCHEMATIC

WIRING AND TERMINAL DEVICE LEGEND

- + DEVICE WIRING TERMINAL

TERMINAL BLOCK LOCATED IN FILTER CONTROL PANEL

FIELD WIRING

REVISIONS				
NO.	DR	CK	DATE	DESCRIPTION

BLACK & VEATCH
Building a world of difference.
Black & Veatch Corporation
Registration No. F-258
Austin, Texas

STATE OF TEXAS
CHARLES E. MORRIS
108414
LICENSED
PROFESSIONAL ENGINEER
4/4/2014

Austin WATER

Walnut Creek WWTP - Tertiary Filter Rehabilitation Project
CIP ID No. 3023.025

INSTRUMENTATION
FILTER CONSOLE NO. 6 PLC I/O POINT
WIRING SCHEMATIC SH. 2 OF 2

DESIGNED BY:	KWS
DRAWN BY:	KWS
REVIEWED BY:	CEM
APPROVED BY:	TLS
PROJECT NO.:	168622
DATE:	4/4/2014
SCALE:	NOT TO SCALE
REVISION:	
DISCIPLINE NO.	I-39
DWG. NO.	248 OF 273

FD168622 SAVED: STMK0205, 11/5/2013 11:49:12 AM
D168622 PW/FEDD:D168622...\09.5055 - Instrumentation Drawings
File: C:\PWBatchPDF\Process\168622 - Austin Walnut Creek WWTP Filter Rehab_I-39.dwg Layout: Layout1 Plotted: 4/4/2014 7:55:10 AM

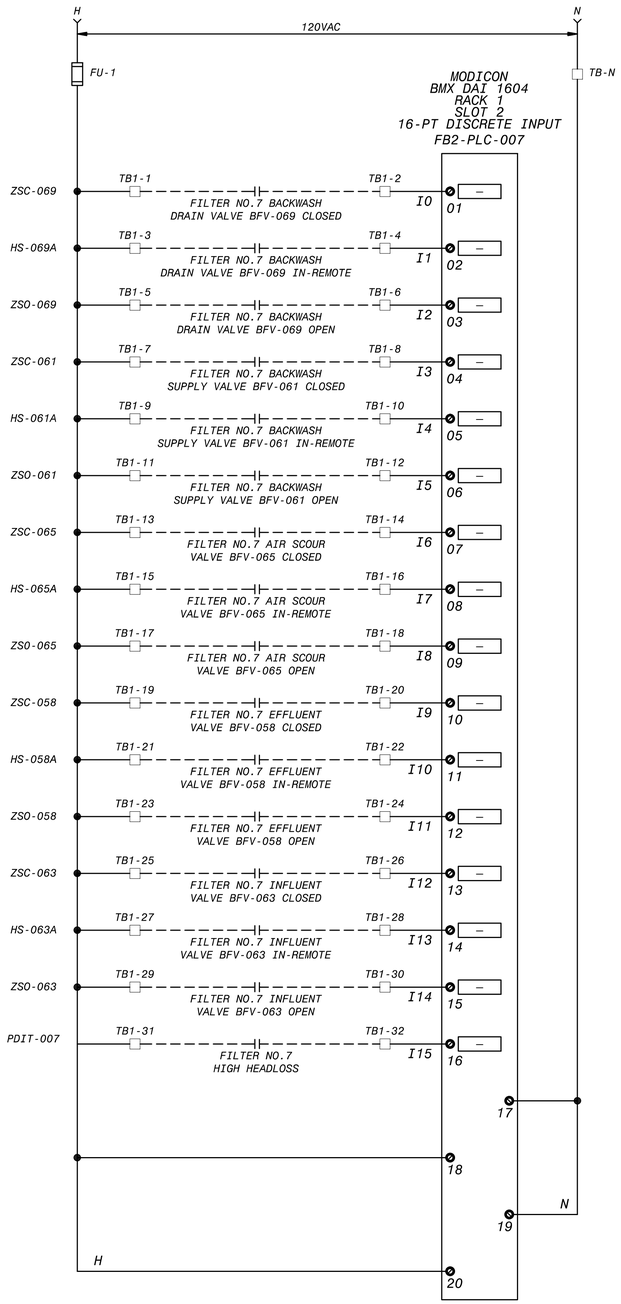

FB2-PLC-007 DIGITAL INPUT, SLOT 2
WIRING SCHEMATIC

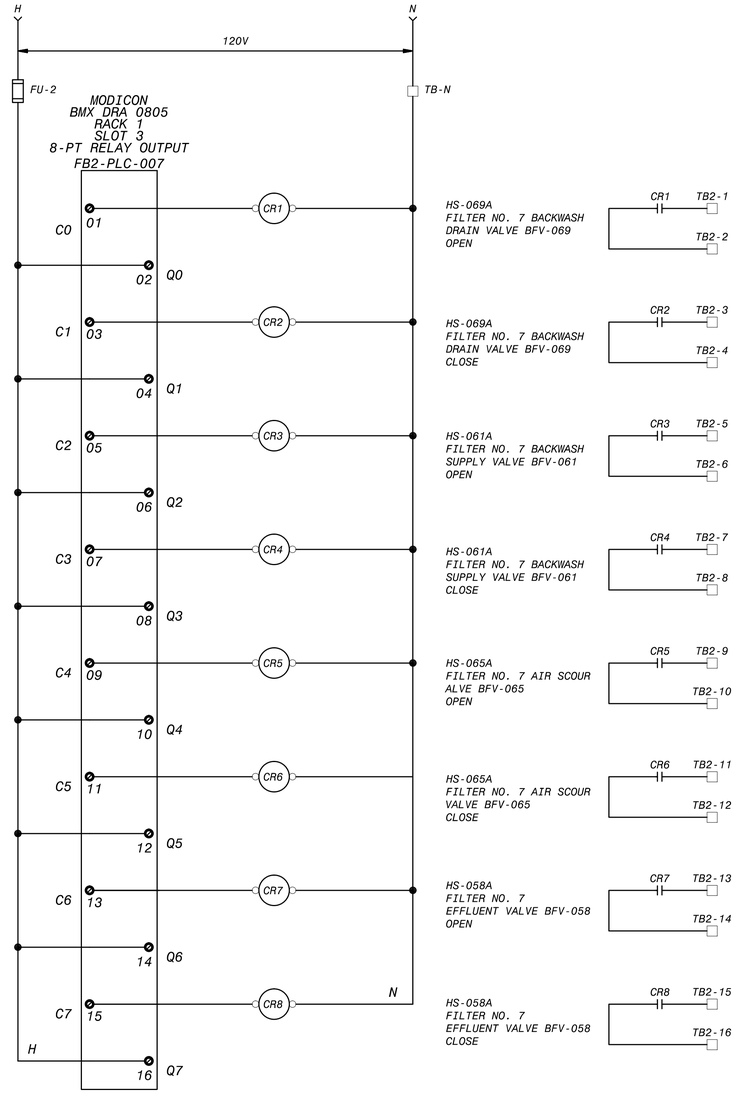

FB2-PLC-007 DIGITAL OUTPUT, SLOT 3
WIRING SCHEMATIC

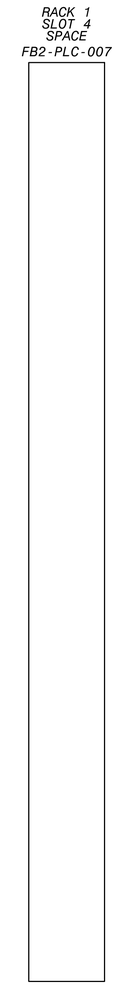

FB2-PLC-007 SPACE, SLOT 4
WIRING SCHEMATIC

WIRING AND TERMINAL DEVICE LEGEND

- + DEVICE WIRING TERMINAL

TERMINAL BLOCK LOCATED IN FILTER CONTROL PANEL

FIELD WIRING

NO.	DR	CK	DATE	DESCRIPTION

REVISIONS

BLACK & VEATCH
Building a world of difference.
Black & Veatch Corporation
Registration No. F-258
Austin, Texas

STATE OF TEXAS
CHARLES E. MORRIS
108414
LICENSED
PROFESSIONAL ENGINEER

Walnut Creek WWTP - Tertiary Filter Rehabilitation Project
CIP ID No. 3023.025

INSTRUMENTATION
FILTER CONSOLE NO. 7 PLC I/O POINT
WIRING SCHEMATIC SH. 1 OF 2

DESIGNED BY:	KWS
DRAWN BY:	KWS
REVIEWED BY:	CEM
APPROVED BY:	TLS
PROJECT NO.:	168622
DATE:	4/4/2014
SCALE:	NOT TO SCALE
REVISION:	
DISCIPLINE NO.	I-40
DWG. NO.	249 OF 273

FD168622 SAVED: STMK0205, 11/5/2013 10:06:10 AM
D168622 PW-FLDR:D:\168622...\09.0005 - Instrumentation Drawings
File: C:\PWBatchPDF\Process\168622 - Austin Walnut Creek WWTP Filter Rehab_40.dwg Layout: Layout1 Plotted: 4/4/2014 7:55:21 AM

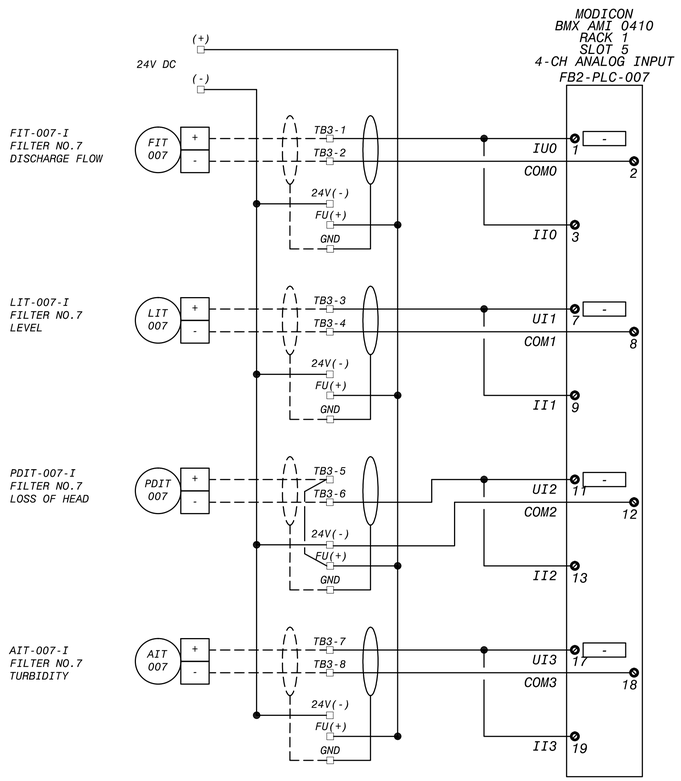

FB2-PLC-007 ANALOG INPUT, SLOT 5
WIRING SCHEMATIC

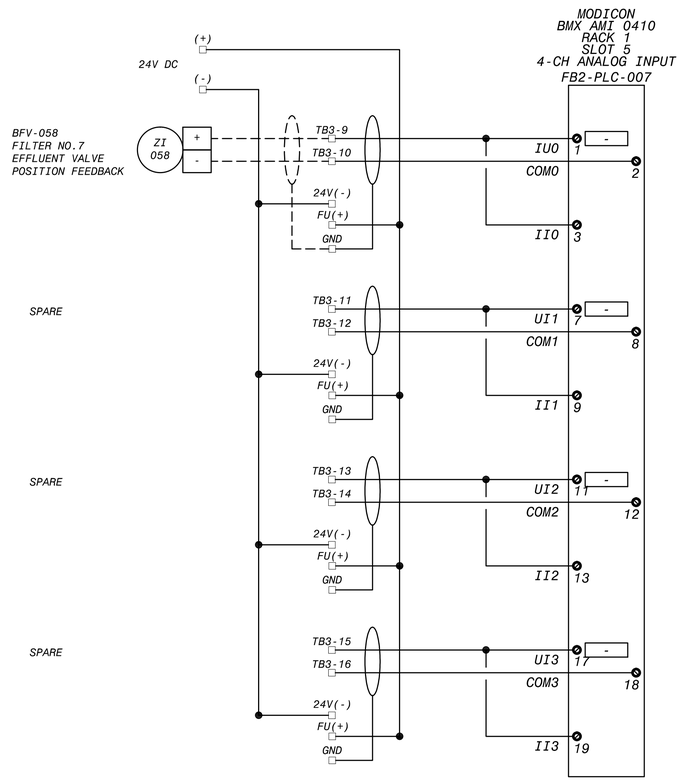

FB2-PLC-007 ANALOG INPUT, SLOT 6
WIRING SCHEMATIC

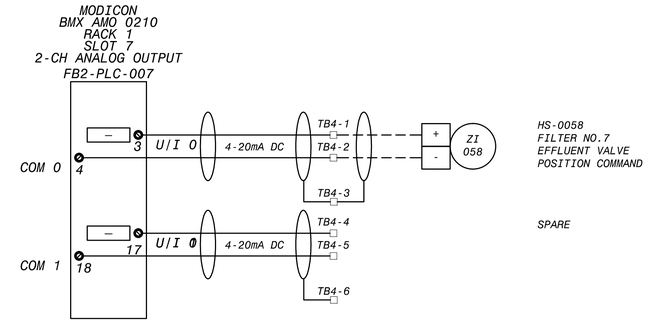

FB2-PLC-007 ANALOG OUTPUT, SLOT 7
WIRING SCHEMATIC

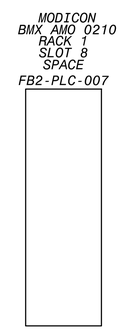

FB2-PLC-007 SPACE, SLOT 8
WIRING SCHEMATIC

WIRING AND TERMINAL DEVICE LEGEND

- + DEVICE WIRING TERMINAL

TERMINAL BLOCK LOCATED IN FILTER CONTROL PANEL

FIELD WIRING

REVISIONS				
NO.	DR	CK	DATE	DESCRIPTION

BLACK & VEATCH
Building a world of difference.
Black & Veatch Corporation
Registration No. F-258
Austin, Texas

STATE OF TEXAS
CHARLES E. MORRIS
108414
LICENSED
PROFESSIONAL ENGINEER
4/4/2014

Austin WATER

Walnut Creek WWTP - Tertiary Filter Rehabilitation Project
CIP ID No. 3023.025

INSTRUMENTATION
FILTER CONSOLE NO. 7 PLC I/O POINT
WIRING SCHEMATIC SH. 2 OF 2

DESIGNED BY:	KWS
DRAWN BY:	KWS
REVIEWED BY:	CEM
APPROVED BY:	TLS
PROJECT NO.:	168622
DATE:	4/4/2014
SCALE:	NOT TO SCALE
REVISION:	
DISCIPLINE NO.	I-41
DWG. NO.	250 OF 273

FD168622 SAVED: STMK0205, 11/5/2013 11:49:12 AM
D168622 PW/FEDR D:\168622...\V09.5055 - Instrumentation Drawings
File: C:\PWBatchPDF\Process\168622 - Austin Walnut Creek WWTP Filter Rehab_I-41.dwg Layout: Layout1 Plotted: 4/4/2014 7:55:32 AM

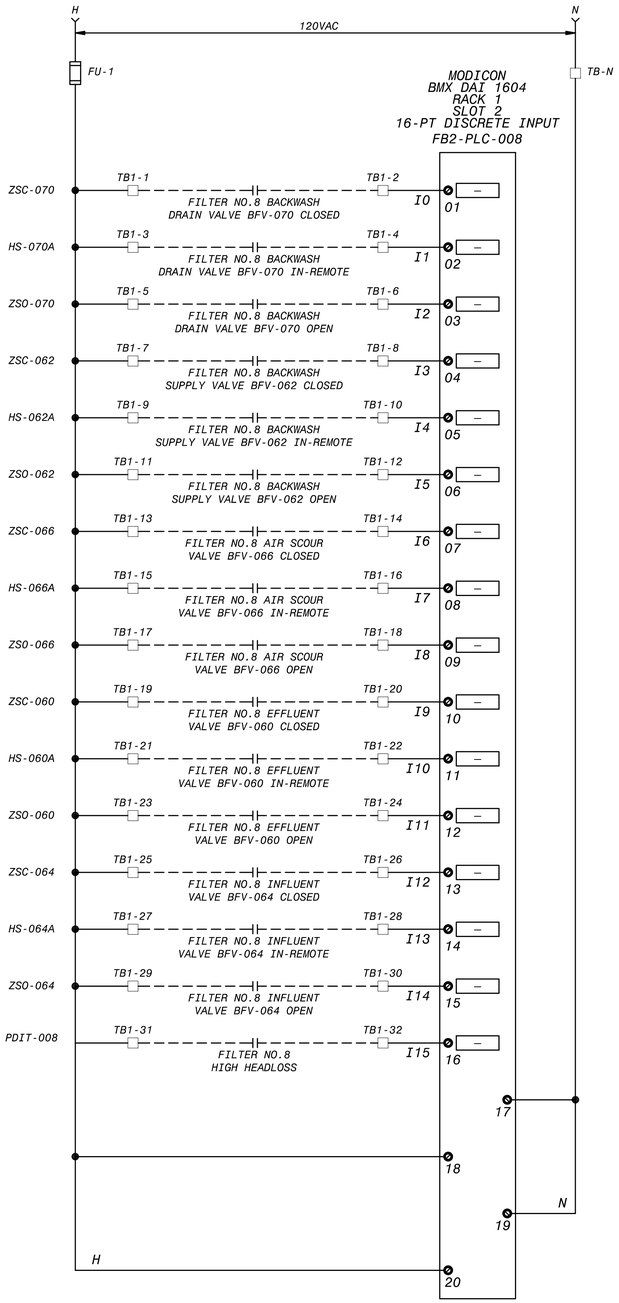

FB2-PLC-008 DIGITAL INPUT, SLOT 2
WIRING SCHEMATIC

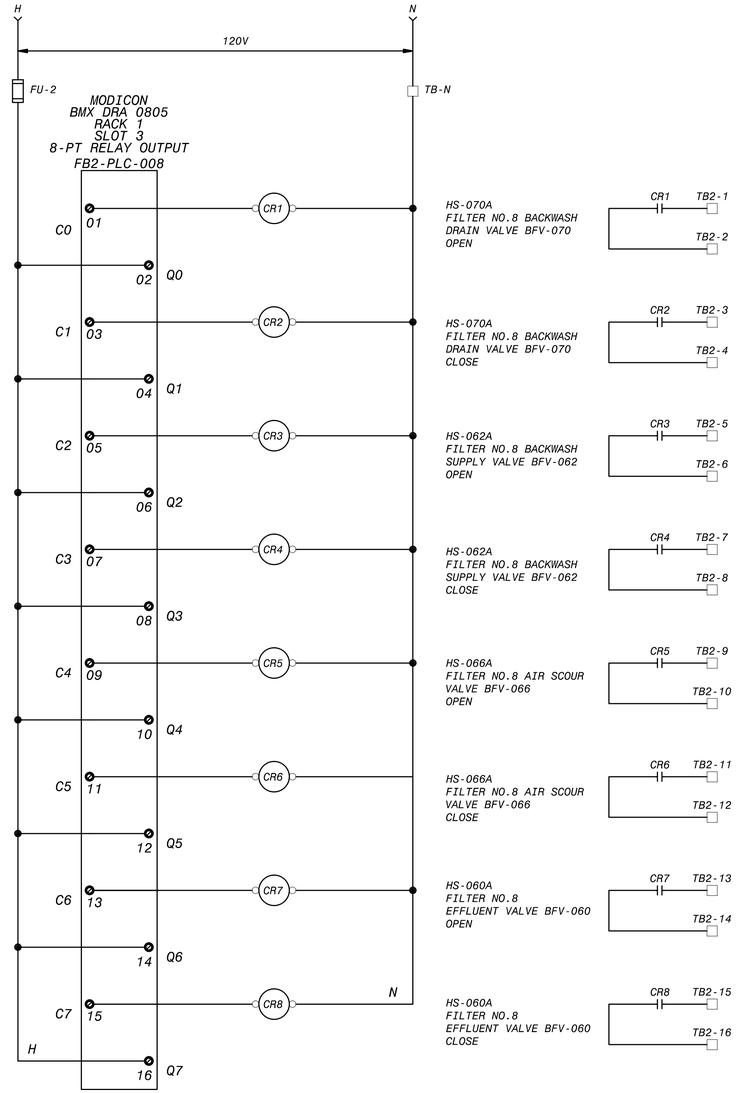

FB2-PLC-008 DIGITAL OUTPUT, SLOT 3
WIRING SCHEMATIC

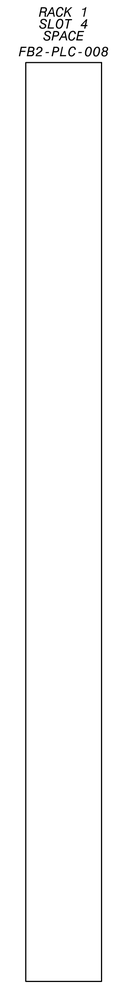

FB2-PLC-008 SPACE, SLOT 4
WIRING SCHEMATIC

WIRING AND TERMINAL DEVICE LEGEND

- + DEVICE WIRING TERMINAL

TERMINAL BLOCK LOCATED IN FILTER CONTROL PANEL

FIELD WIRING

NO.	DR	CK	DATE	DESCRIPTION

REVISIONS

BLACK & VEATCH
Building a world of difference.
Black & Veatch Corporation
Registration No. F-258
Austin, Texas

STATE OF TEXAS
CHARLES E. MORRIS
108414
LICENSED
PROFESSIONAL ENGINEER

Walnut Creek WWTP - Tertiary Filter Rehabilitation Project
CIP ID No. 3023.025

INSTRUMENTATION
FILTER CONSOLE NO. 8 PLC I/O POINT
WIRING SCHEMATIC SH. 1 OF 2

DESIGNED BY:	KWS
DRAWN BY:	KWS
REVIEWED BY:	CEM
APPROVED BY:	TLS
PROJECT NO.:	168622
DATE:	4/4/2014
SCALE:	NOT TO SCALE
REVISION:	
DISCIPLINE NO.	I-42
DWG. NO.	251 OF 273

FD168622 SAVED: STMK0205, 11/5/2013 10:06:10 AM
D168622 PW-FLDR:D:\168622...\09.0005 - Instrumentation Drawings
File: C:\PWBatchPDF\Process\168622 - Austin Walnut Creek WWTP Filter Rehab_42.dwg Layout: Layout1 Plotted: 4/4/2014 7:55:43 AM

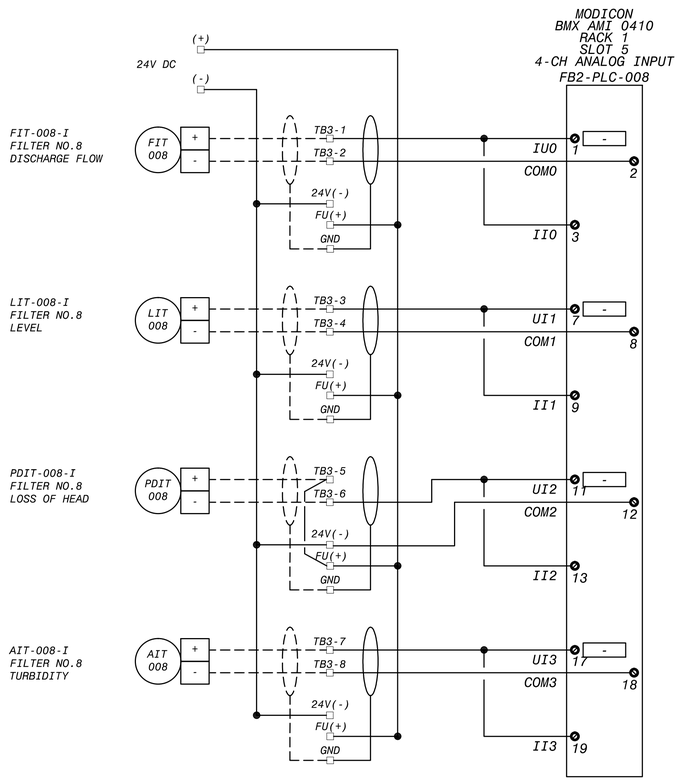

FB2-PLC-008 ANALOG INPUT, SLOT 5
WIRING SCHEMATIC

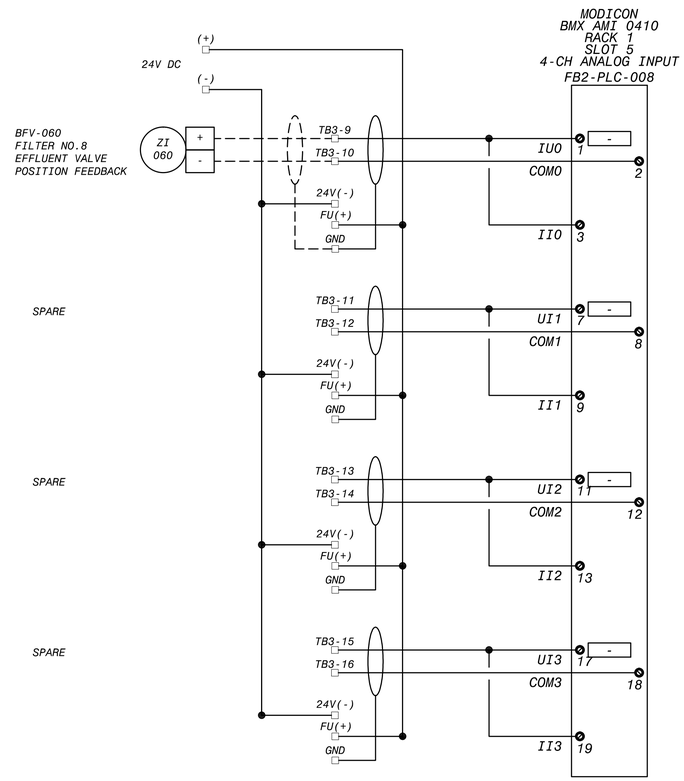

FB2-PLC-008 ANALOG INPUT, SLOT 6
WIRING SCHEMATIC

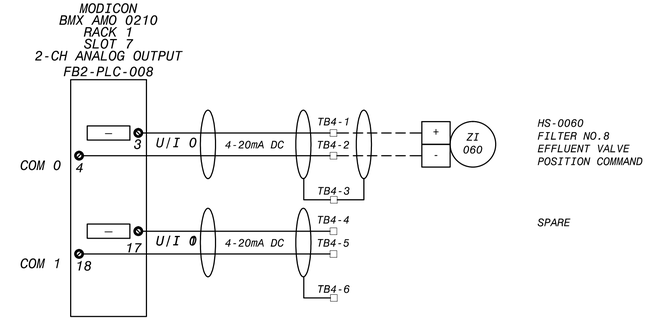

FB2-PLC-008 ANALOG OUTPUT, SLOT 7
WIRING SCHEMATIC

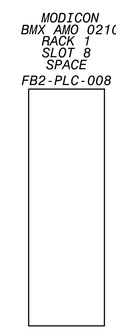

FB2-PLC-008 SPACE, SLOT 8
WIRING SCHEMATIC

WIRING AND TERMINAL DEVICE LEGEND

- | + DEVICE WIRING TERMINAL

TERMINAL BLOCK LOCATED IN FILTER CONTROL PANEL

FIELD WIRING

NO.	DR	CK	DATE	DESCRIPTION

REVISIONS

BLACK & VEATCH
Building a world of difference.
Black & Veatch Corporation
Registration No. F-258
Austin, Texas

STATE OF TEXAS
CHARLES E. MORRIS
108414
LICENSED
PROFESSIONAL ENGINEER
4/4/2014

Walnut Creek WWTP - Tertiary Filter Rehabilitation Project
CIP ID No. 3023.025

Austin WATER

INSTRUMENTATION
FILTER CONSOLE NO. 8 PLC I/O POINT
WIRING SCHEMATIC SH. 2 OF 2

DESIGNED BY:	KWS
DRAWN BY:	KWS
REVIEWED BY:	CEM
APPROVED BY:	TLS
PROJECT NO.:	168622
DATE:	4/4/2014
SCALE:	NOT TO SCALE
REVISION:	
DISCIPLINE NO.	I-43
DWG. NO.	252 OF 273

FD168622 SAVED: STMK0205, 11/5/2013 11:49:12 AM
D168622 PW:FEDR:D168622...\V09.5055 : Instrumentation Drawings
File: C:\PWBatchPDF\Process\168622 - Austin Walnut Creek WWTP Filter Rehab_43.dwg Layout: Layout1 Plotted: 4/4/2014 7:55:54 AM

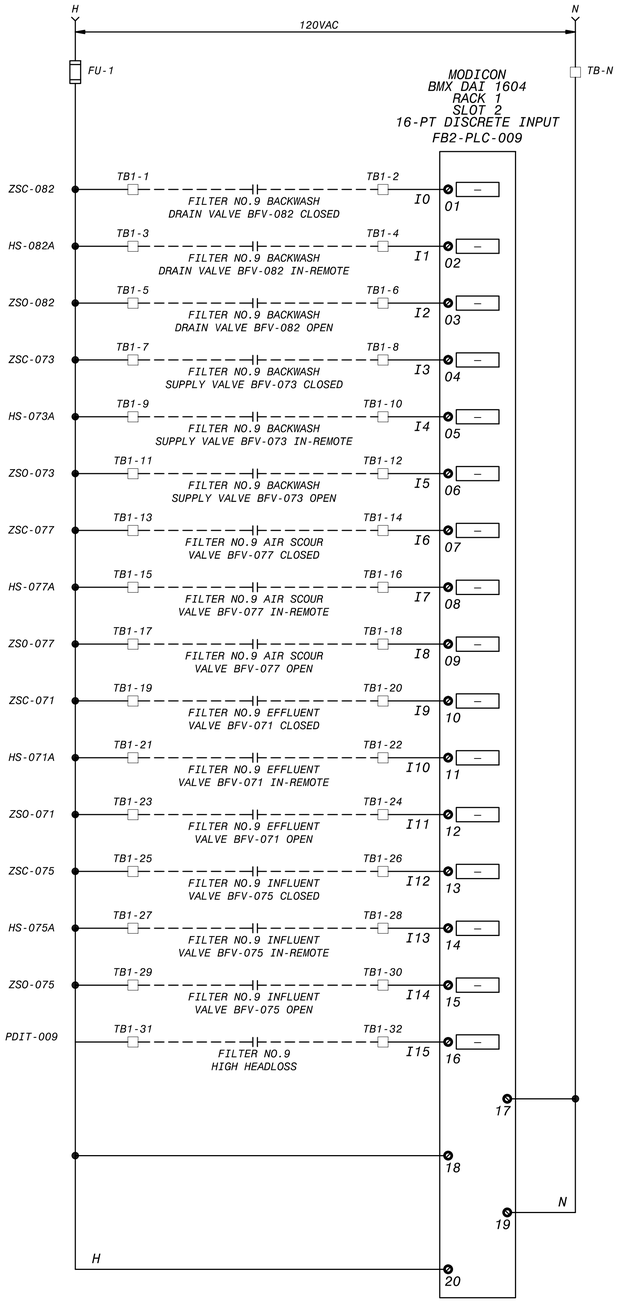

FB2-PLC-009 DIGITAL INPUT, SLOT 2
WIRING SCHEMATIC

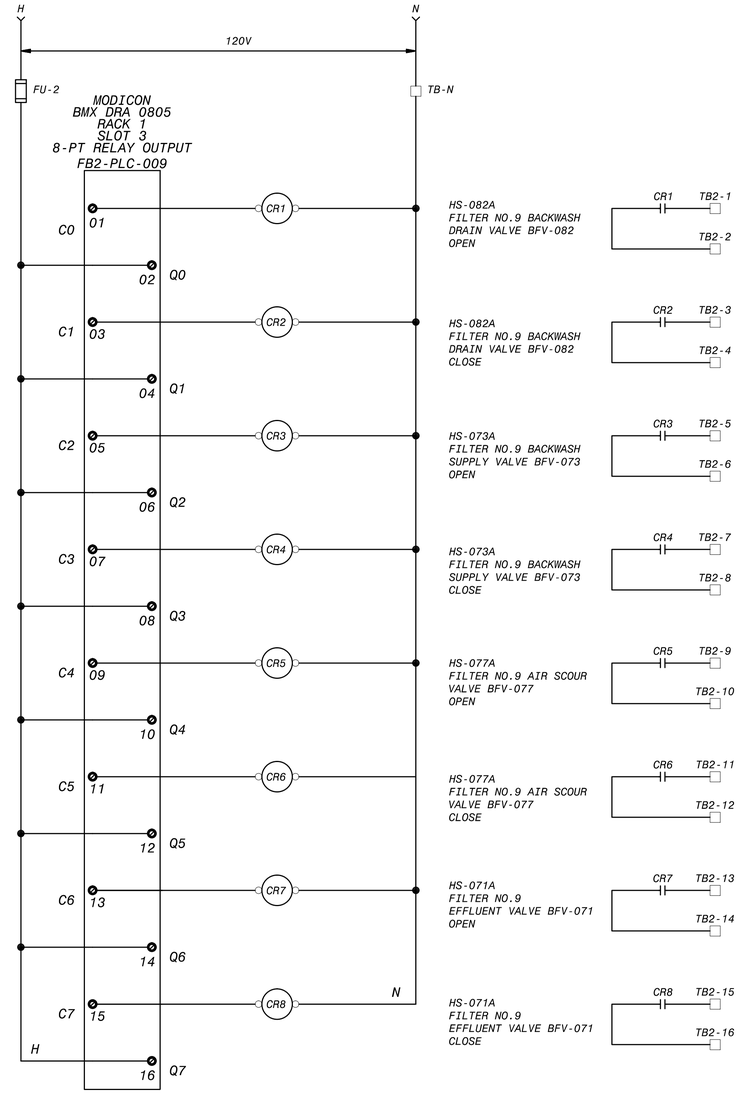

FB2-PLC-009 DIGITAL OUTPUT, SLOT 3
WIRING SCHEMATIC

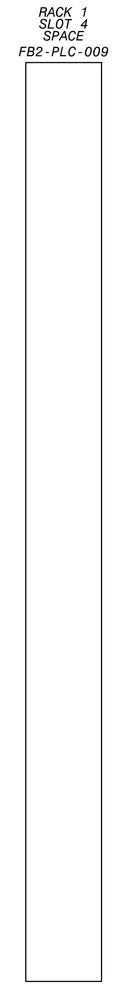

FB2-PLC-009 SPACE, SLOT 4
WIRING SCHEMATIC

WIRING AND TERMINAL DEVICE LEGEND

- + DEVICE WIRING TERMINAL

TERMINAL BLOCK LOCATED IN FILTER CONTROL PANEL

FIELD WIRING

NO.	DR	CK	DATE	DESCRIPTION

REVISIONS

BLACK & VEATCH
Building a world of difference.
Black & Veatch Corporation
Registration No. F-258
Austin, Texas

STATE OF TEXAS
CHARLES E. MORRIS
108414
LICENSED
PROFESSIONAL ENGINEER

Walnut Creek WWTP - Tertiary Filter Rehabilitation Project
Austin Water
CIP ID No. 3023.025

INSTRUMENTATION
FILTER CONSOLE NO. 9 PLC I/O POINT
WIRING SCHEMATIC SH. 1 OF 2

DESIGNED BY:	KWS
DRAWN BY:	KWS
REVIEWED BY:	CEM
APPROVED BY:	TLS
PROJECT NO.:	168622
DATE:	4/4/2014
SCALE:	NOT TO SCALE
REVISION:	
DISCIPLINE NO.	I-44
DWG. NO.	253 OF 273

FD168622 SAVED: STMK0205, 11/5/2013 10:06:10 AM
D168622 PW-FILDR:D:\168622...\09.0005 - Instrumentation Drawings
File: C:\PWBatchPDF\Process\168622 - Austin Walnut Creek WWTP Filter Rehab_44.dwg Layout: Layout1 Plotted: 4/4/2014 7:56:04 AM

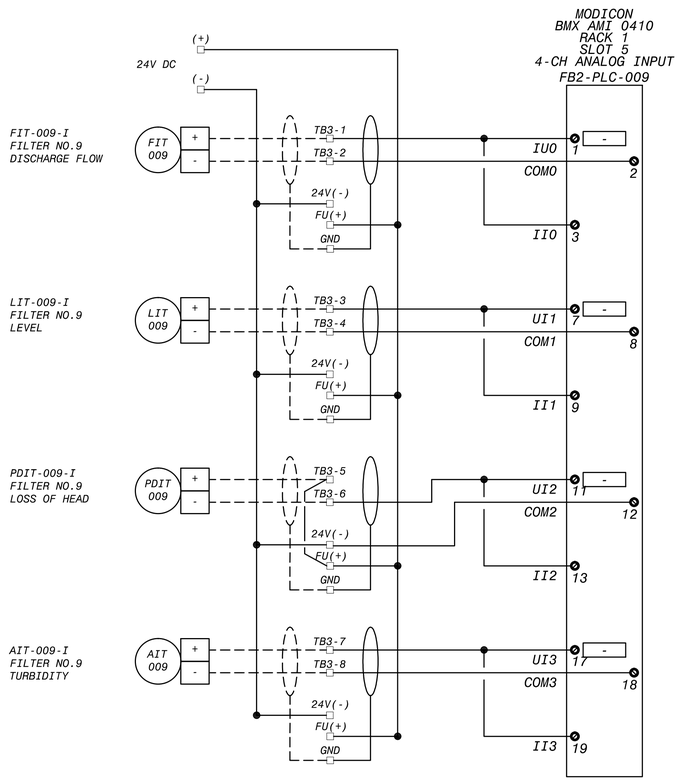

FB2-PLC-009 ANALOG INPUT, SLOT 5
WIRING SCHEMATIC

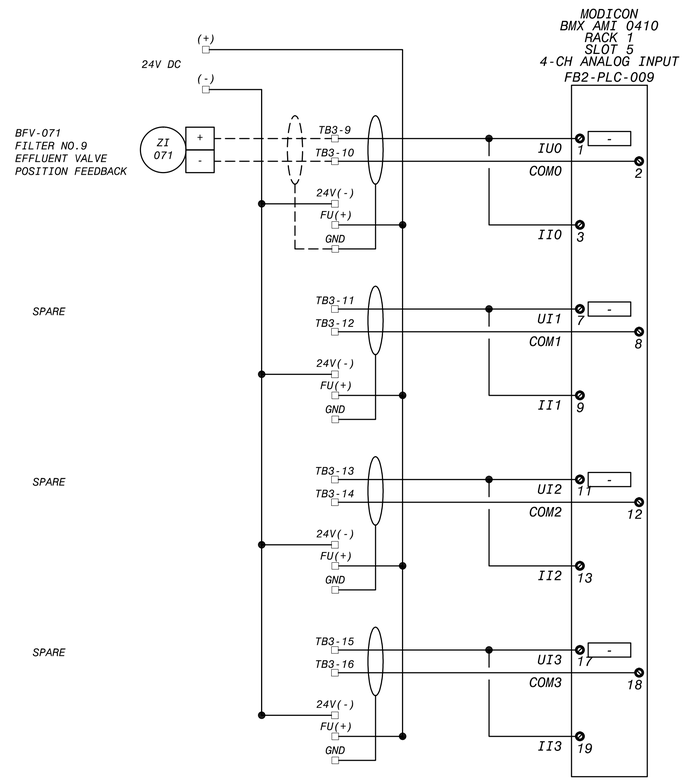

FB2-PLC-009 ANALOG INPUT, SLOT 6
WIRING SCHEMATIC

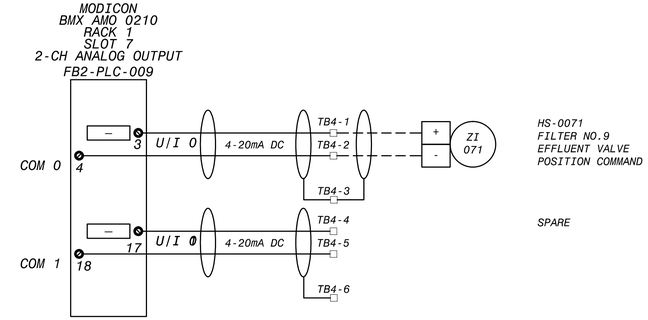

FB2-PLC-009 ANALOG OUTPUT, SLOT 7
WIRING SCHEMATIC

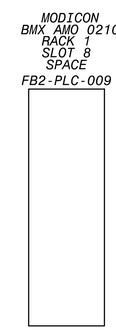

FB2-PLC-009 SPACE, SLOT 8
WIRING SCHEMATIC

WIRING AND TERMINAL DEVICE LEGEND

- + DEVICE WIRING TERMINAL
TERMINAL BLOCK LOCATED IN FILTER CONTROL PANEL
FIELD WIRING

REVISIONS				
NO.	DR	CK	DATE	DESCRIPTION

BLACK & VEATCH
Building a world of difference.
Black & Veatch Corporation
Registration No. F-258
Austin, Texas

Walnut Creek WWTP - Tertiary Filter Rehabilitation Project
CIP ID No. 3023.025

INSTRUMENTATION
FILTER CONSOLE NO. 9 PLC I/O POINT
WIRING SCHEMATIC SH. 2 OF 2

DESIGNED BY:	KWS
DRAWN BY:	KWS
REVIEWED BY:	CEM
APPROVED BY:	TLS
PROJECT NO.:	168622
DATE:	4/4/2014
SCALE:	NOT TO SCALE
REVISION:	
DISCIPLINE NO.	I-45
DWG. NO.	254 OF 273

FD168622 SAVED: STMK0205, 11/5/2013 11:49:12 AM
D168622 PW/FEDR:D:\168622...\V09.5055 - Instrumentation Drawings
File: C:\PWBatchPDF\Process\168622 - Austin Walnut Creek WWTP Filter Rehab_45.dwg Layout: Layout1 Plotted: 4/4/2014 7:56:16 AM

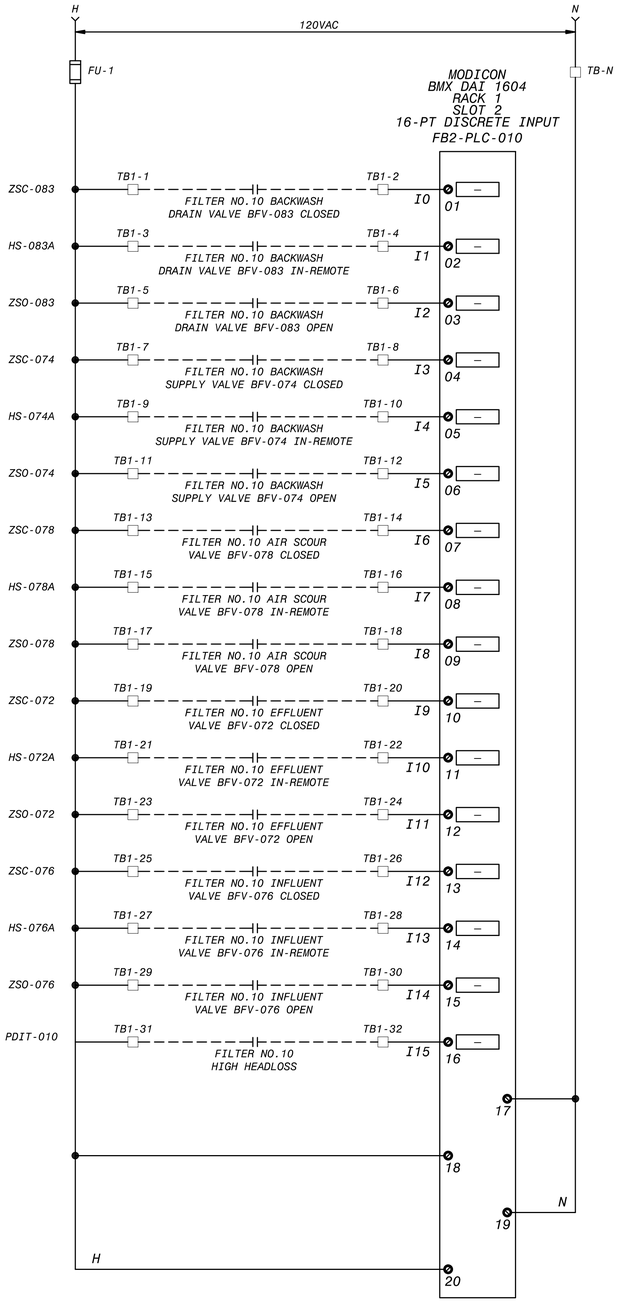

FB2-PLC-010 DIGITAL INPUT, SLOT 2
WIRING SCHEMATIC

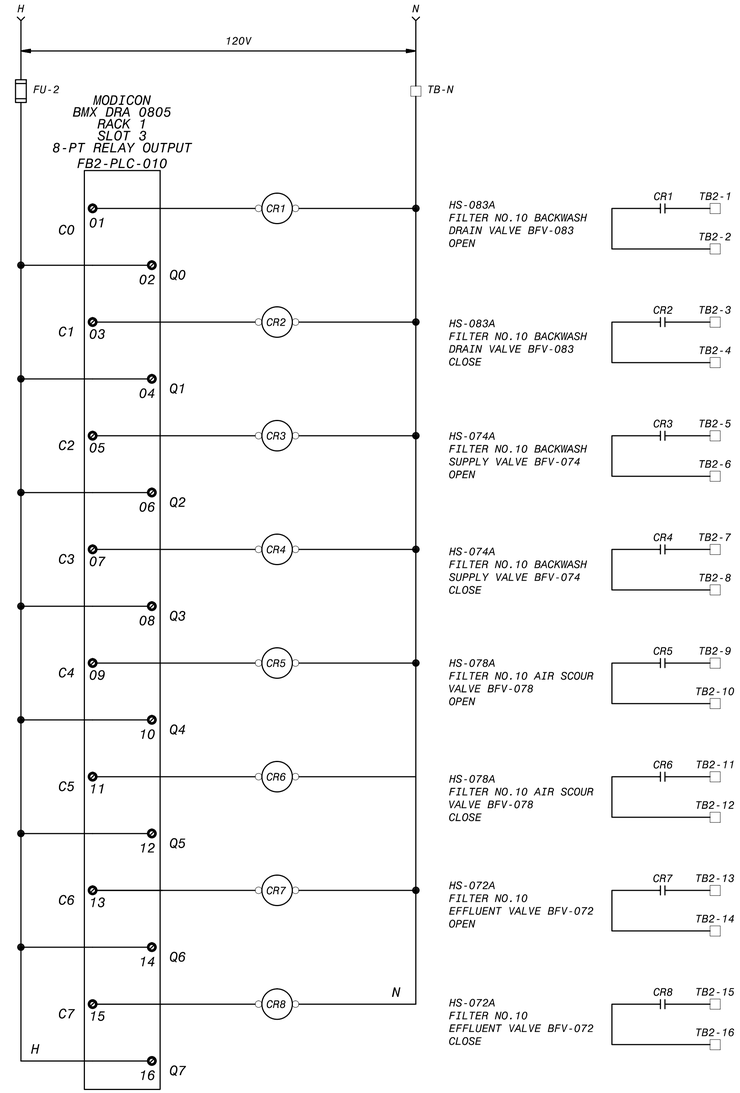

FB2-PLC-010 DIGITAL OUTPUT, SLOT 3
WIRING SCHEMATIC

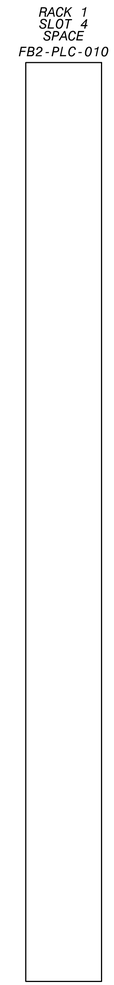

FB2-PLC-010 SPACE, SLOT 4
WIRING SCHEMATIC

WIRING AND TERMINAL DEVICE LEGEND

- + DEVICE WIRING TERMINAL

TERMINAL BLOCK LOCATED IN FILTER CONTROL PANEL

FIELD WIRING

NO.	DR	CK	DATE	DESCRIPTION

REVISIONS

BLACK & VEATCH
Building a world of difference.
Black & Veatch Corporation
Registration No. F-258
Austin, Texas

STATE OF TEXAS
CHARLES E. MORRIS
108414
LICENSED
PROFESSIONAL ENGINEER

Walnut Creek WWTP - Tertiary Filter Rehabilitation Project
CIP ID No. 3023.025

INSTRUMENTATION
FILTER CONSOLE NO.10 PLC I/O POINT
WIRING SCHEMATIC SH. 1 OF 2

DESIGNED BY:	KWS
DRAWN BY:	KWS
REVIEWED BY:	CEM
APPROVED BY:	TLS
PROJECT NO.:	168622
DATE:	4/4/2014
SCALE:	NOT TO SCALE
REVISION:	
DISCIPLINE NO.	I-46
DWG. NO.	255 OF 273

FD168622 SAVED: STMK0205, 11/5/2013 10:06:10 AM
D168622 PW-FLDR:D:\168622...\09.0005 - Instrumentation Drawings
File: C:\PWBatchPDF\Process\168622 - Austin Walnut Creek WWTP Filter Rehab_46.dwg Layout: Layout1 Plotted: 4/4/2014 7:56:27 AM

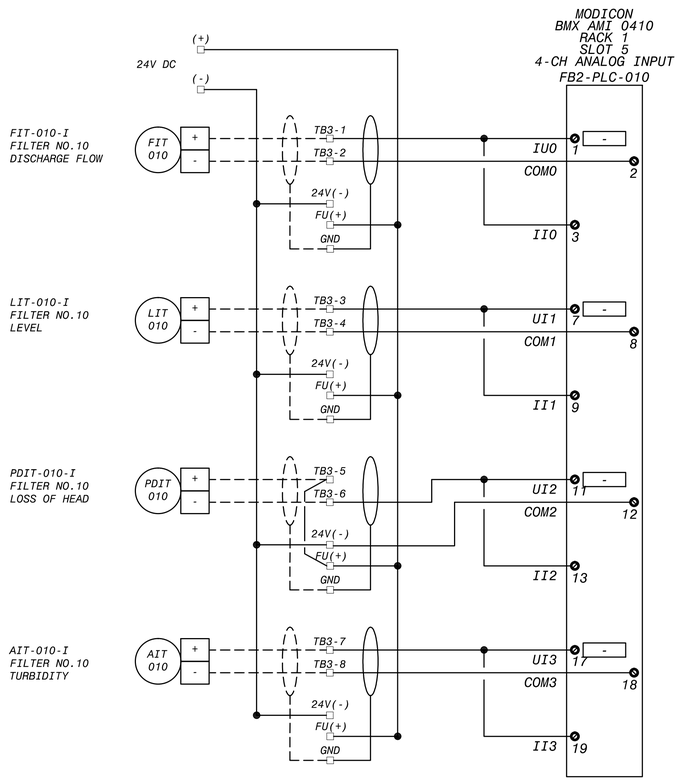

FB2-PLC-010 ANALOG INPUT, SLOT 5
WIRING SCHEMATIC

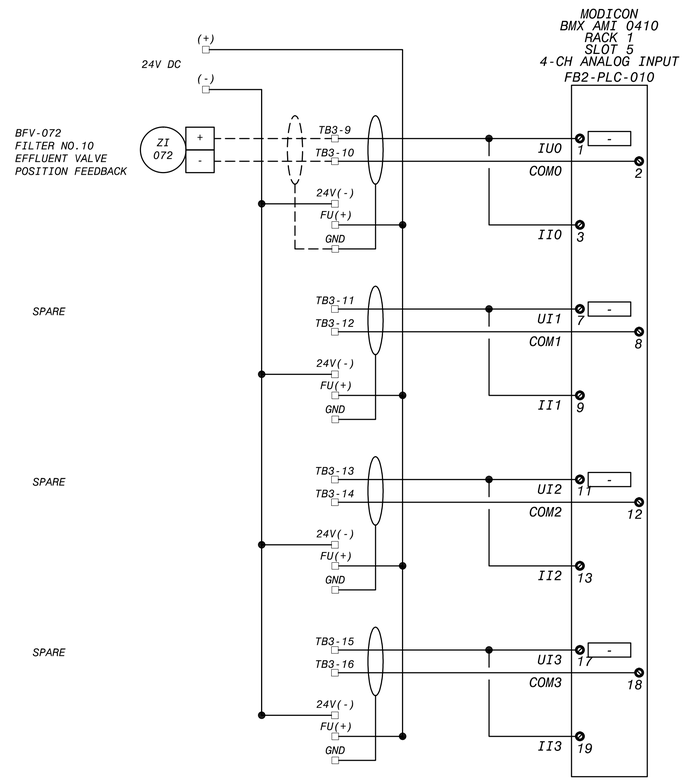

FB2-PLC-010 ANALOG INPUT, SLOT 6
WIRING SCHEMATIC

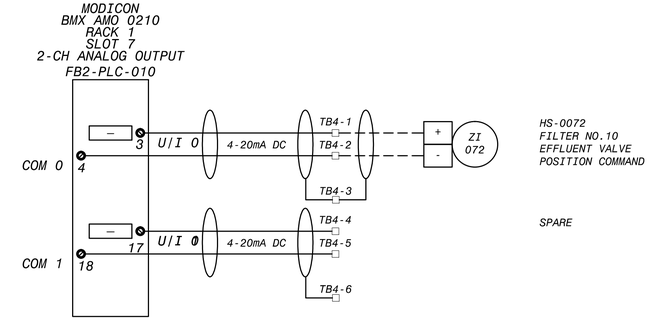

FB2-PLC-010 ANALOG OUTPUT, SLOT 7
WIRING SCHEMATIC

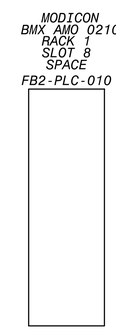

FB2-PLC-010 SPACE, SLOT 8
WIRING SCHEMATIC

WIRING AND TERMINAL DEVICE LEGEND

- + DEVICE WIRING TERMINAL

TERMINAL BLOCK LOCATED IN FILTER CONTROL PANEL

FIELD WIRING

NO.	DR	CK	DATE	DESCRIPTION

REVISIONS

BLACK & VEATCH
Building a world of difference.
Black & Veatch Corporation
Registration No. F-258
Austin, Texas

STATE OF TEXAS
CHARLES E. MORRIS
108414
LICENSED
PROFESSIONAL ENGINEER
4/4/2014

Walnut Creek WWTP - Tertiary Filter Rehabilitation Project
CIP ID No. 3023.025

Austin WATER

INSTRUMENTATION
FILTER CONSOLE NO.10 PLC I/O POINT
WIRING SCHEMATIC SH. 2 OF 2

DESIGNED BY:	KWS
DRAWN BY:	KWS
REVIEWED BY:	CEM
APPROVED BY:	TLS
PROJECT NO.:	168622
DATE:	4/4/2014
SCALE:	NOT TO SCALE
REVISION:	
DISCIPLINE NO.	I-47
DWG. NO.	256 OF 273

FD168622 SAVED: STWG0205, 11/5/2013 11:49:12 AM
D168622 PW:FEDR:D168622...\D0_5055 - Instrumentation Drawings
File: C:\PWBatchPDF\Process\168622 - Austin Walnut Creek WWTP Filter Rehab_47.dwg Layout: Layout1 Plotted: 4/4/2014 7:56:37 AM

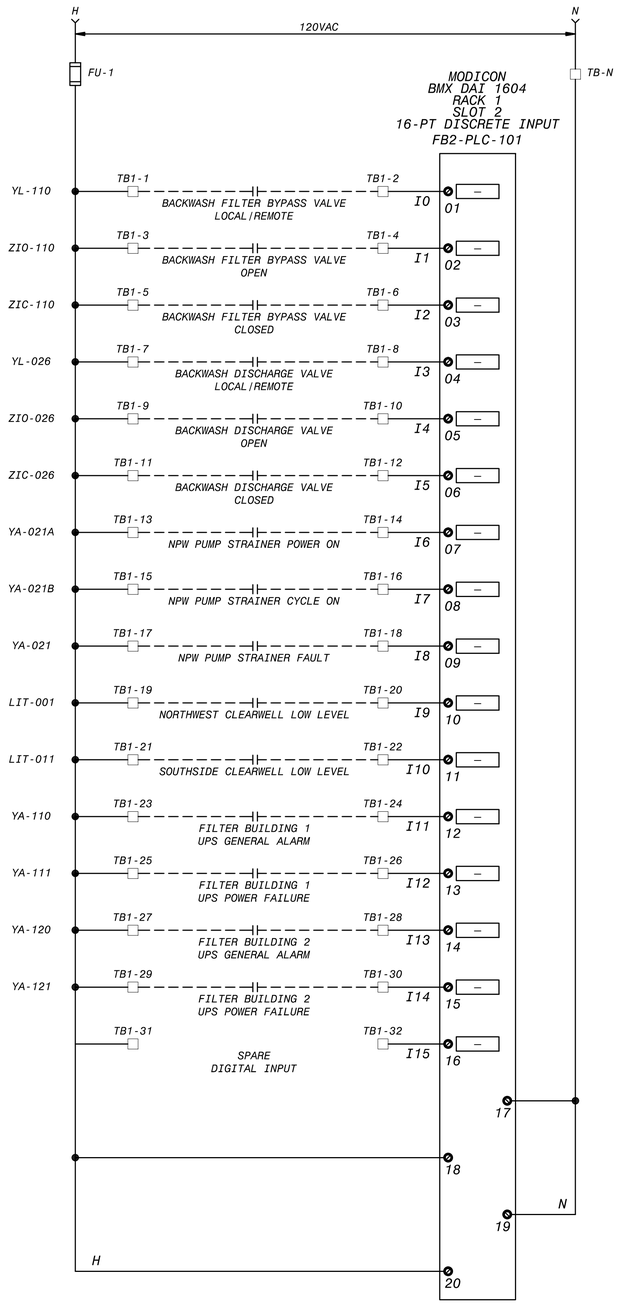

FB2-PLC-101 DIGITAL INPUT, SLOT 2
WIRING SCHEMATIC

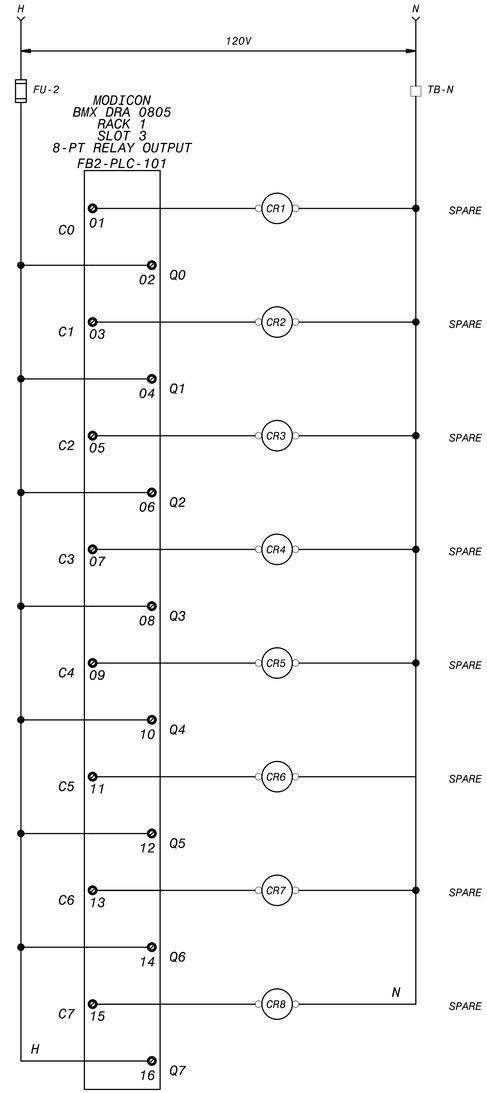

FB2-PLC-101 DIGITAL OUTPUT, SLOT 3
WIRING SCHEMATIC

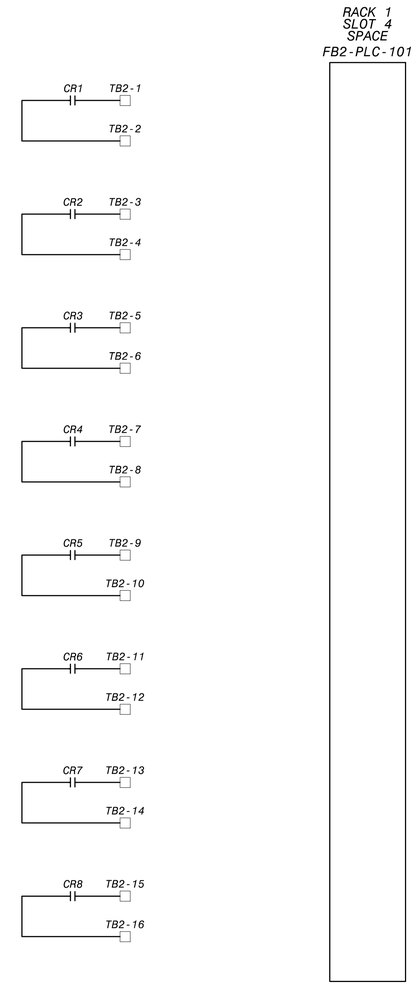

FB2-PLC-101 SPACE, SLOT 4
WIRING SCHEMATIC

WIRING AND TERMINAL DEVICE LEGEND

- + DEVICE WIRING TERMINAL
TERMINAL BLOCK LOCATED IN FILTER CONTROL PANEL
FIELD WIRING

NO.	DR	CK	DATE	DESCRIPTION

REVISIONS

BLACK & VEATCH
Building a world of difference.
Black & Veatch Corporation
Registration No. F-258
Austin, Texas

STATE OF TEXAS
CHARLES E. MORRIS
108414
LICENSED
PROFESSIONAL ENGINEER

Austin WATER
Walnut Creek WWTP - Tertiary Filter Rehabilitation Project
CIP ID No. 3023.025

INSTRUMENTATION
FILTER MASTER PLC I/O POINT
WIRING SCHEMATIC SH. 1 OF 3

DESIGNED BY:	KWS
DRAWN BY:	KWS
REVIEWED BY:	CEM
APPROVED BY:	TLS
PROJECT NO.:	168622
DATE:	4/4/2014
SCALE:	NOT TO SCALE

REVISION:

DISCIPLINE NO.
I-48

DWG. NO.
257 OF 273

FD168622 SAVED: STMK0025, 9/4/2013 9:41:39 AM
D168622 PW-FUDP:D:\168622...\109.0055 - Instrumentation Drawings
File: C:\PWBatchPDF\Process\168622 - Austin Walnut Creek WWTP Filter Rehab_48.dwg Layout: Layout1 Plotted: 4/4/2014 7:56:48 AM

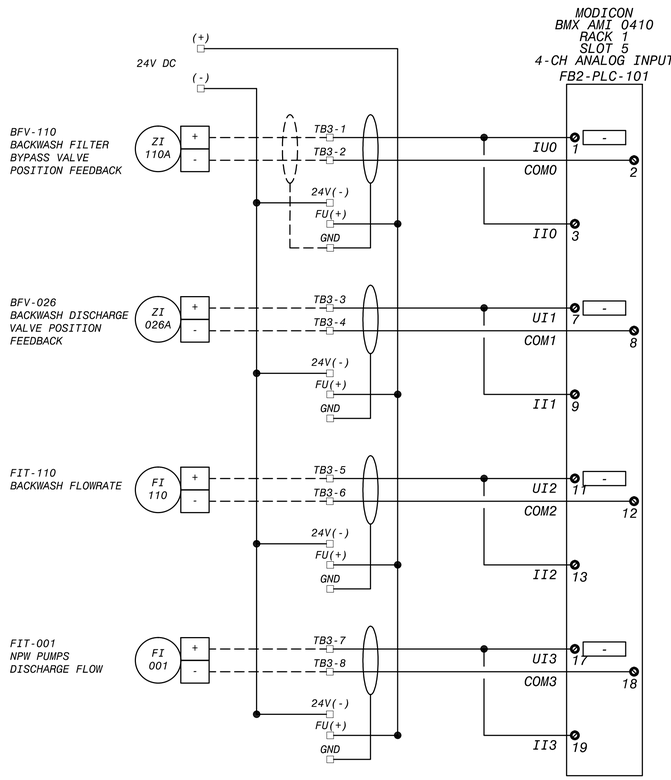

FB2-PLC-101 ANALOG INPUT, SLOT 5
WIRING SCHEMATIC

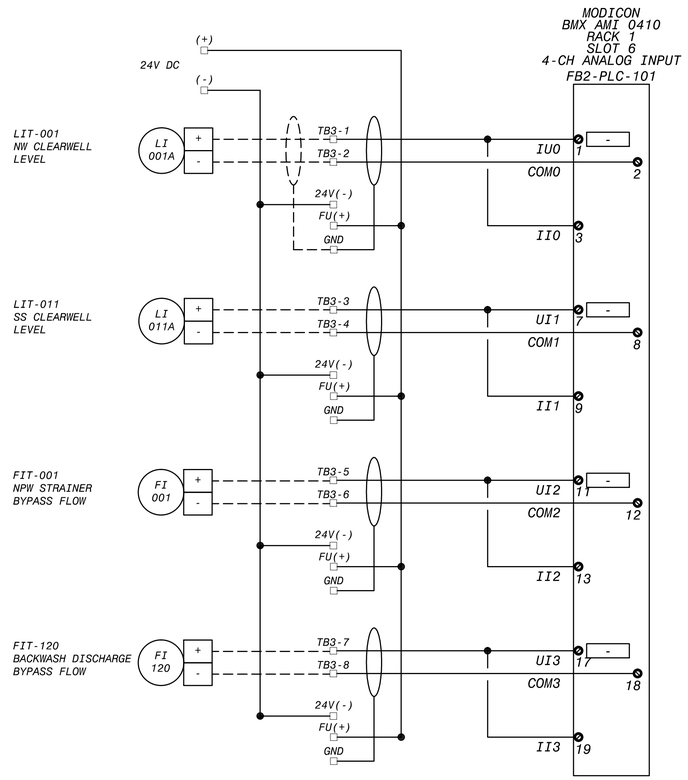

FB2-PLC-101 ANALOG INPUT, SLOT 6
WIRING SCHEMATIC

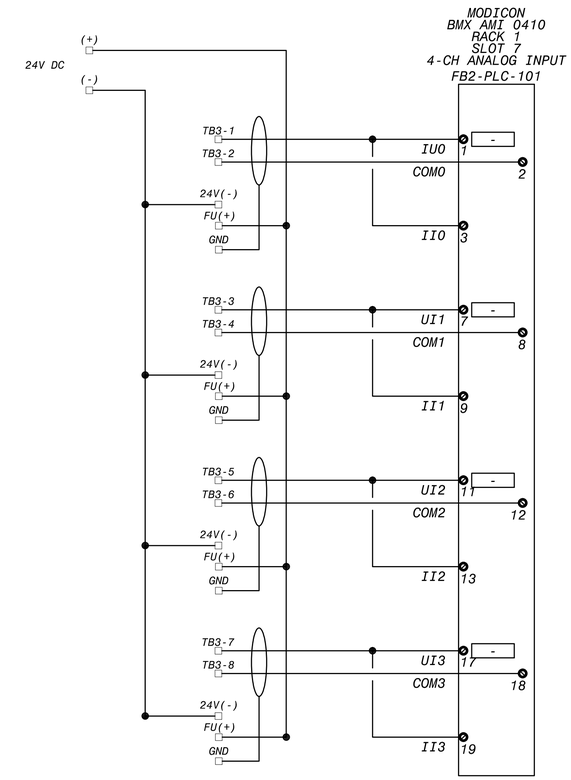

FB2-PLC-101 ANALOG INPUT, SLOT 7
WIRING SCHEMATIC

WIRING AND TERMINAL DEVICE LEGEND

- - + DEVICE WIRING TERMINAL
- TERMINAL BLOCK LOCATED IN FILTER CONTROL PANEL
- - - - FIELD WIRING

NO.	DR	CK	DATE	DESCRIPTION

REVISIONS

BLACK & VEATCH
Building a world of difference.
Black & Veatch Corporation
Registration No. F-258
Austin, Texas

STATE OF TEXAS
CHARLES E. MORRIS
108414
LICENSED
PROFESSIONAL ENGINEER
4/4/2014

Austin WATER

Walnut Creek WWTP - Tertiary Filter Rehabilitation Project
CIP ID No. 3023.025

INSTRUMENTATION
FILTER MASTER PLC I/O POINT
WIRING SCHEMATIC SH. 2 OF 3

DESIGNED BY:	KWS
DRAWN BY:	KWS
REVIEWED BY:	CEM
APPROVED BY:	TLS
PROJECT NO.:	168622
DATE:	4/4/2014
SCALE:	NOT TO SCALE
REVISION:	
DISCIPLINE NO.	I-49
DWG. NO.	258 OF 273

FD168622 SAVED: STMK0205, 9/4/2013 11:29:26 AM
D168622 PW FILE: D:\168622...\109.5055 - Instrumentation Drawings
File: C:\PWBatchPDF\Process\168622 - Austin Walnut Creek WWTP Filter Rehab_49.dwg Layout: Layout1 Plotted: 4/4/2014 7:56:59 AM

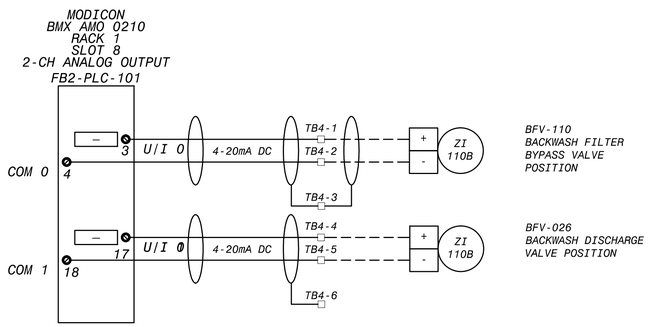

FB2-PLC-101 ANALOG OUTPUT, SLOT 8
WIRING SCHEMATIC

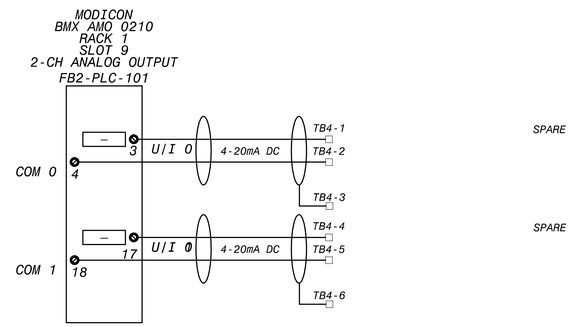

FB2-PLC-101 ANALOG INPUT, SLOT 6
WIRING SCHEMATIC

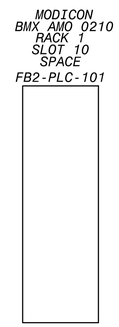

FB2-PLC-101 SPACE, SLOT 10
WIRING SCHEMATIC

WIRING AND TERMINAL DEVICE LEGEND

- + DEVICE WIRING TERMINAL

TERMINAL BLOCK LOCATED IN FILTER CONTROL PANEL

FIELD WIRING

NO.	DR	CK	DATE	DESCRIPTION

REVISIONS

BLACK & VEATCH
Building a world of difference.
Black & Veatch Corporation
Registration No. F-258
Austin, Texas

STATE OF TEXAS
CHARLES E. MORRIS
108414
LICENSED
PROFESSIONAL ENGINEER
4/4/14

Walnut Creek WWTP - Tertiary Filter Rehabilitation Project
CIP ID No. 3023.025

INSTRUMENTATION
FILTER MASTER PLC I/O POINT
WIRING SCHEMATIC SH. 3 OF 3

DESIGNED BY:	KWS
DRAWN BY:	KWS
REVIEWED BY:	CEM
APPROVED BY:	TLS
PROJECT NO.:	168622
DATE:	4/4/2014
SCALE:	NOT TO SCALE

REVISION:

DISCIPLINE NO.
I-50

DWG. NO.
259 OF 273

FD168622 SAVED: STIMO205, 9/4/2013 11:29:26 AM
D168622 PW:FEDPW:D:\168622...\109.0055 - Instrumentation Drawings
File: C:\PWBatchPDF\Process\168622 - Austin Walnut Creek WWTP Filter Rehab_50.dwg Layout: Layout1 Plotted: 4/4/2014 7:57:10 AM

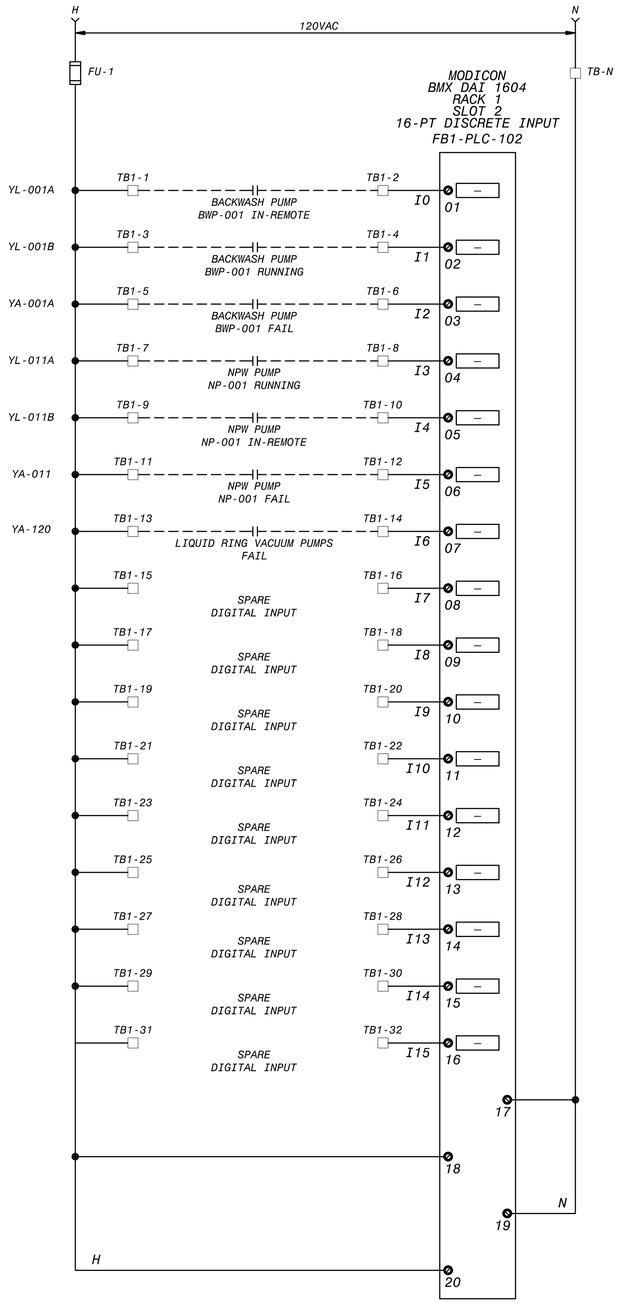

FB1-PLC-102 DIGITAL INPUT, SLOT 2
WIRING SCHEMATIC

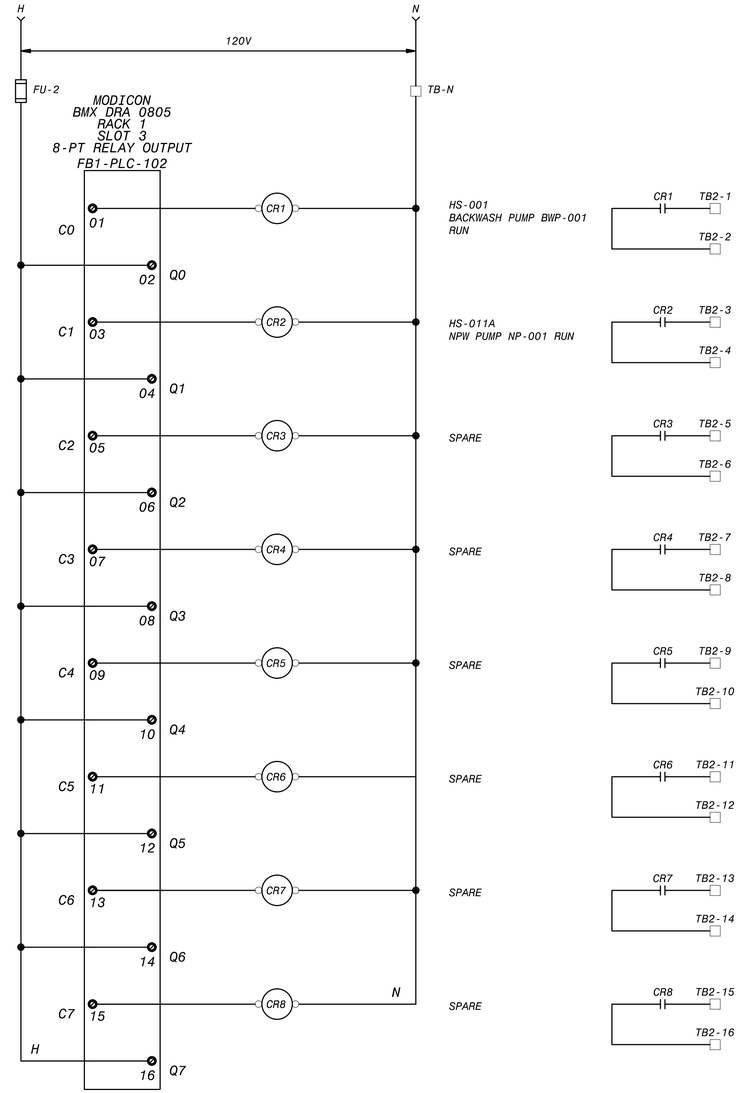

FB1-PLC-102 DIGITAL OUTPUT, SLOT 3
WIRING SCHEMATIC

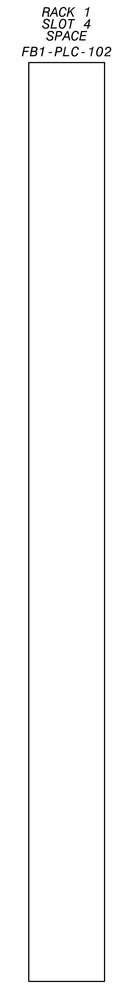

FB1-PLC-102 SPACE, SLOT 4
WIRING SCHEMATIC

WIRING AND TERMINAL DEVICE LEGEND

- + DEVICE WIRING TERMINAL

TERMINAL BLOCK LOCATED IN FILTER CONTROL PANEL

FIELD WIRING

NO.	DR	CK	DATE	DESCRIPTION

REVISIONS

BLACK & VEATCH
Building a world of difference.
Black & Veatch Corporation
Registration No. F-258
Austin, Texas

STATE OF TEXAS
CHARLES E. MORRIS
108414
LICENSED
PROFESSIONAL ENGINEER

Austin WATER

Walnut Creek WWTP - Tertiary Filter Rehabilitation Project
CIP ID No. 3023.025

INSTRUMENTATION
FILTER BACKWASH AND NPW PUMP PLC I/O POINT WIRING SCHEMATIC SH. 1 OF 4

DESIGNED BY:	KWS
DRAWN BY:	KWS
REVIEWED BY:	CEM
APPROVED BY:	TLS
PROJECT NO.:	168622
DATE:	4/4/2014
SCALE:	NOT TO SCALE

REVISION:

DISCIPLINE NO.
I-51

DWG. NO.
260 OF 273

FD168622 SAVED: STMK0025, 9/4/2013 9:41:39 AM
D168622 PW-FUDP:D:\168622...\109.0055 - Instrumentation Drawings
File: C:\PWBatchPDF\Process\168622 - Austin Walnut Creek WWTP Filter Rehab_I_51.dwg Layout: Layout1 Plotted: 4/4/2014 7:57:20 AM

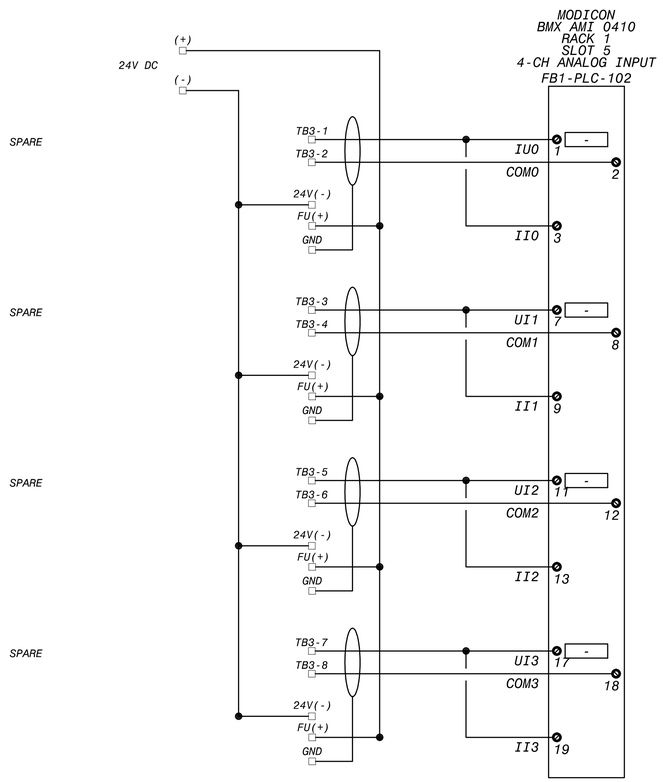

FB1-PLC-102 ANALOG INPUT, SLOT 5
WIRING SCHEMATIC

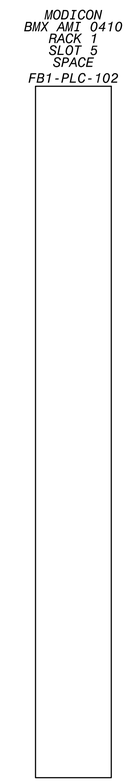

FB1-PLC-102 SPACE, SLOT 6
WIRING SCHEMATIC

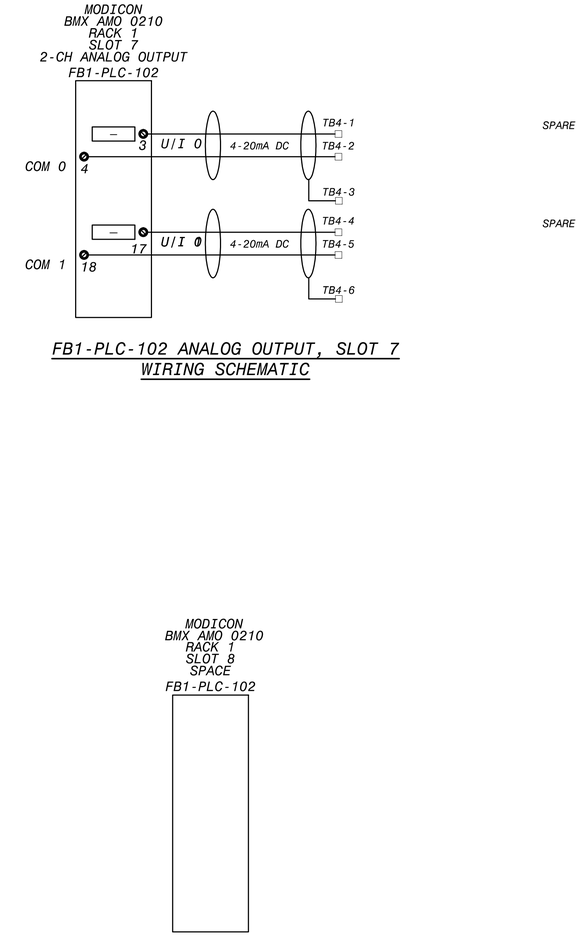

FB1-PLC-102 ANALOG OUTPUT, SLOT 7
WIRING SCHEMATIC

FB1-PLC-102 SPACE, SLOT 8
WIRING SCHEMATIC

WIRING AND TERMINAL DEVICE LEGEND

- \- + DEVICE WIRING TERMINAL
- ☐ TERMINAL BLOCK LOCATED IN FILTER CONTROL PANEL
- — — — — FIELD WIRING

NO.	DR	CK	DATE	DESCRIPTION

REVISIONS

BLACK & VEATCH
Building a world of difference.
Black & Veatch Corporation
Registration No. F-258
Austin, Texas

STATE OF TEXAS
CHARLES E. MORRIS
108414
LICENSED
PROFESSIONAL ENGINEER
4/4/14

Walnut Creek WWTP - Tertiary Filter Rehabilitation Project
CIP ID No. 3023.025

Austin WATER

INSTRUMENTATION
FILTER BACKWASH AND NPW PUMP PLC I/O POINT
WIRING SCHEMATIC SH. 2 OF 4

DESIGNED BY:	KWS
DRAWN BY:	KWS
REVIEWED BY:	CEM
APPROVED BY:	TLS
PROJECT NO.:	168622
DATE:	4/4/2014
SCALE:	NOT TO SCALE

REVISION:

DISCIPLINE NO.
I-52

DWG. NO.
261 OF 273

FD168622 SAVED: STIMO205, 9/4/2013 11:29:26 AM
D168622 PW-FUDP:D:\168622...\109.0055 - Instrumentation Drawings
File: C:\PWBatchPDF\Process\168622 - Austin Walnut Creek WWTP Filter Rehab_I-52.dwg Layout: Layout1 Plotted: 4/4/2014 7:57:31 AM

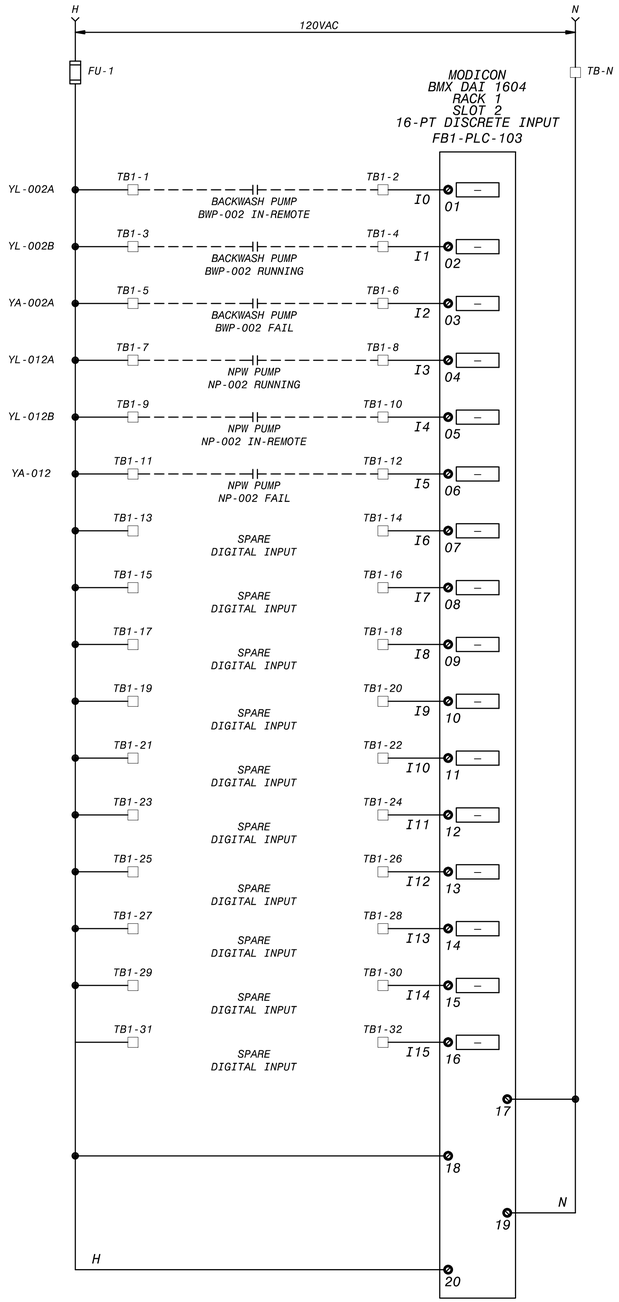

FB1-PLC-103 DIGITAL INPUT, SLOT 2
WIRING SCHEMATIC

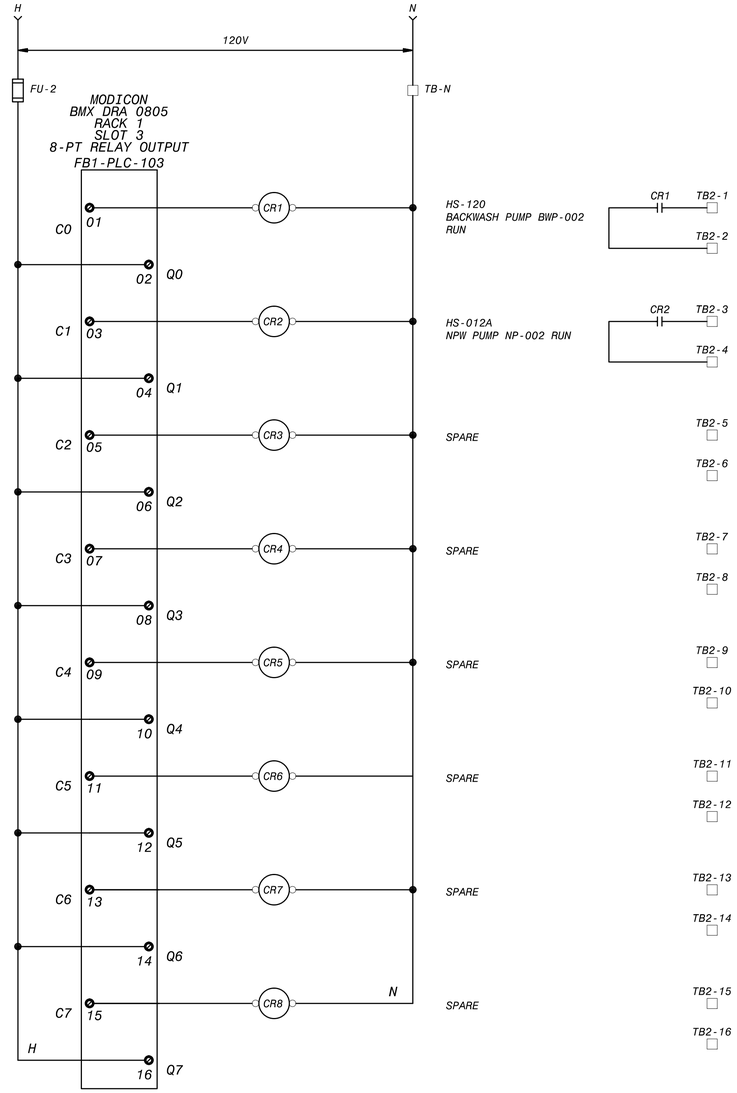

FB1-PLC-103 DIGITAL OUTPUT, SLOT 3
WIRING SCHEMATIC

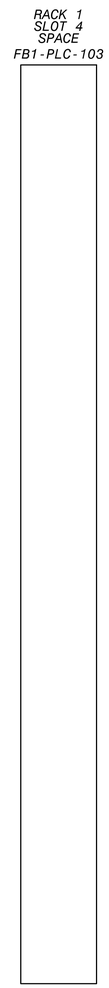

FB1-PLC-103 SPACE, SLOT 4
WIRING SCHEMATIC

WIRING AND TERMINAL DEVICE LEGEND

- + DEVICE WIRING TERMINAL

TERMINAL BLOCK LOCATED IN FILTER CONTROL PANEL

FIELD WIRING

NO.	DR	CK	DATE	DESCRIPTION

REVISIONS

BLACK & VEATCH
Building a world of difference.
Black & Veatch Corporation
Registration No. F-258
Austin, Texas

STATE OF TEXAS
CHARLES E. MORRIS
108414
LICENSED
PROFESSIONAL ENGINEER

Austin WATER
Walnut Creek WWTP - Tertiary Filter Rehabilitation Project
CIP ID No. 3023.025

INSTRUMENTATION
FILTER BACKWASH AND NPW PUMP PLC I/O POINT WIRING SCHEMATIC SH. 3 OF 4

DESIGNED BY:	KWS
DRAWN BY:	KWS
REVIEWED BY:	CEM
APPROVED BY:	TLS
PROJECT NO.:	168622
DATE:	4/4/2014
SCALE:	NOT TO SCALE

REVISION:

DISCIPLINE NO.
I-53

DWG. NO.
262 OF 273

FD168622 SAVED: STMK0205, 9/4/2013 2:51:30 PM
D168622 PW-FILE: D:\168622...\109.5055 - Instrumentation Drawings
File: C:\PWBatchPDF\Process\168622 - Austin Walnut Creek WWTP Filter Rehab_53.dwg Layout: Layout1 Plotted: 4/4/2014 7:57:41 AM

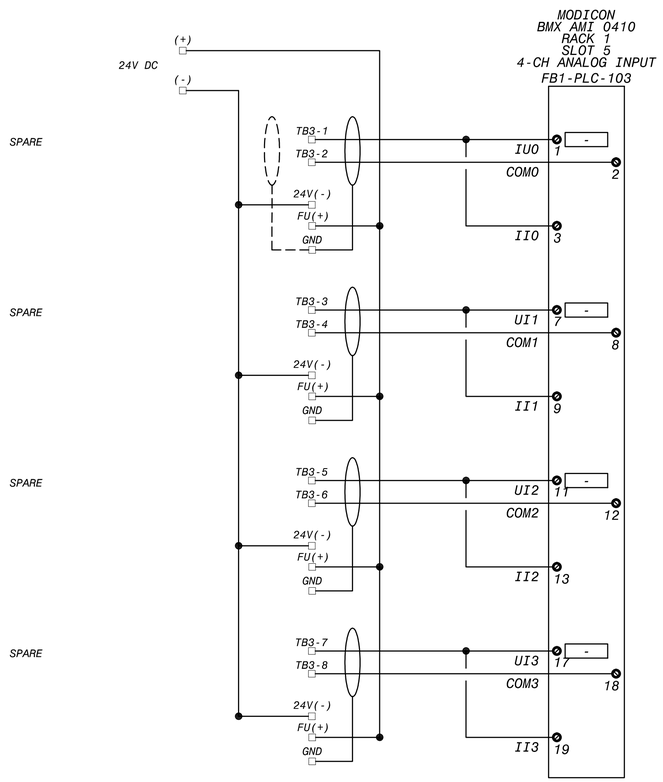

FB1-PLC-103 ANALOG INPUT, SLOT 5
WIRING SCHEMATIC

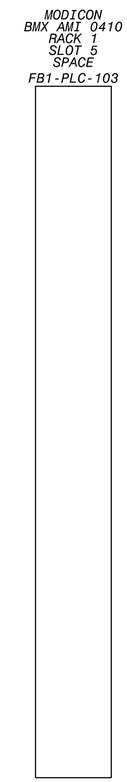

FB1-PLC-103 SPACE, SLOT 6
WIRING SCHEMATIC

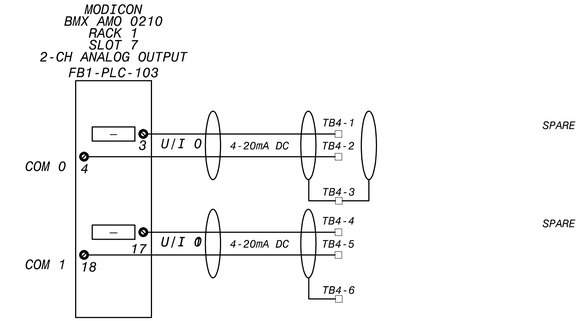

FB1-PLC-103 ANALOG OUTPUT, SLOT 7
WIRING SCHEMATIC

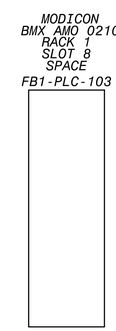

FB1-PLC-103 SPACE, SLOT 8
WIRING SCHEMATIC

WIRING AND TERMINAL DEVICE LEGEND

- DEVICE WIRING TERMINAL
- TERMINAL BLOCK LOCATED IN FILTER CONTROL PANEL
- FIELD WIRING

REVISIONS				
NO.	DR	CK	DATE	DESCRIPTION

BLACK & VEATCH
Building a world of difference.
Black & Veatch Corporation
Registration No. F-258
Austin, Texas

STATE OF TEXAS
CHARLES E. MORRIS
108414
LICENSED
PROFESSIONAL ENGINEER
4/4/14

Austin WATER

Walnut Creek WWTP - Tertiary Filter Rehabilitation Project
CIP ID No. 3023.025

INSTRUMENTATION
FILTER BACKWASH AND NPW PUMP PLC I/O POINT
WIRING SCHEMATIC SH. 4 OF 4

DESIGNED BY:	KWS
DRAWN BY:	KWS
REVIEWED BY:	CEM
APPROVED BY:	TLS
PROJECT NO.:	168622
DATE:	4/4/2014
SCALE:	NOT TO SCALE
REVISION:	
DISCIPLINE NO.	I-54
DWG. NO.	263 OF 273

FD168622 SAVED: STIMO025, 9/5/2013 9:54:50 AM
D168622 PW-FUDP:D:\168622...\09.0055 - Instrumentation Drawings
File: C:\PWBatchPDF\Process\168622 - Austin Walnut Creek WWTP Filter Rehab_54.dwg Layout: Layout1 Plotted: 4/4/2014 7:57:52 AM

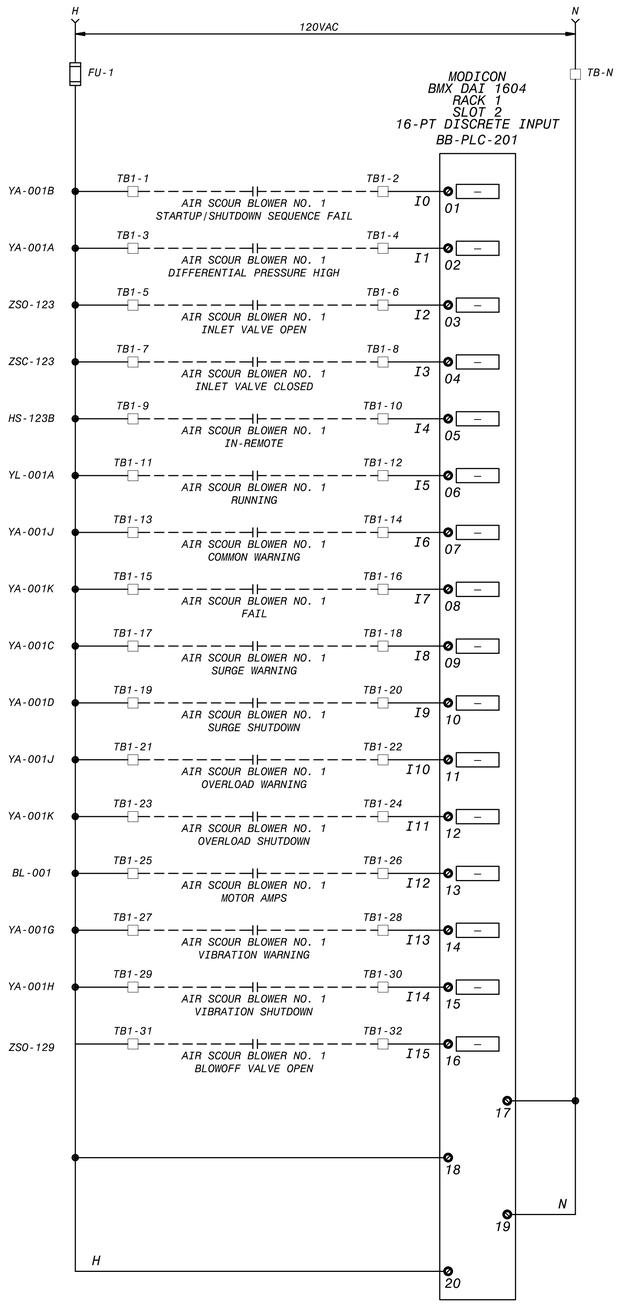

BB-PLC-201 DIGITAL INPUT, SLOT 2
WIRING SCHEMATIC

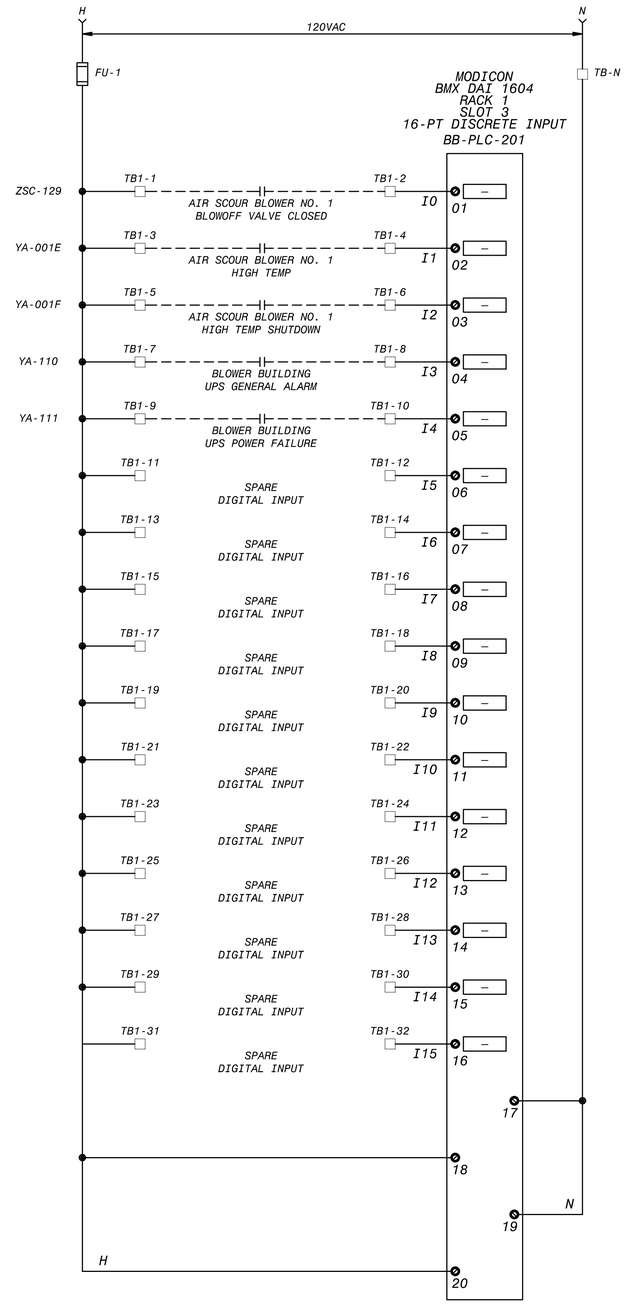

BB-PLC-201 DIGITAL OUTPUT, SLOT 3
WIRING SCHEMATIC

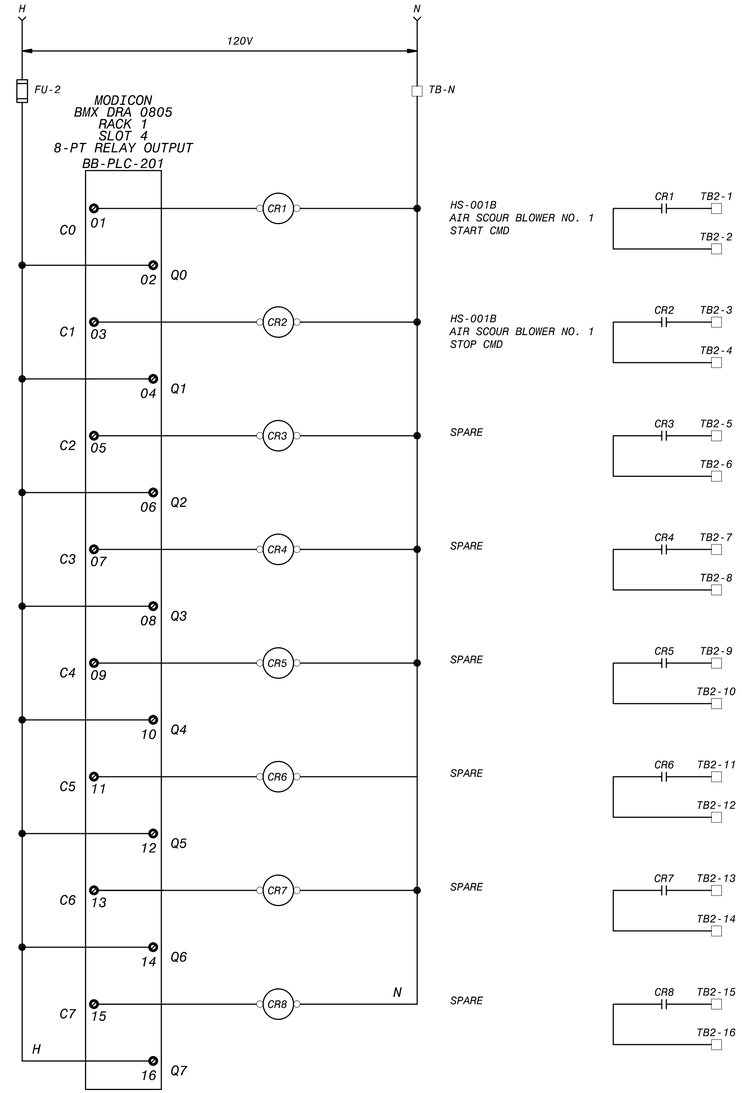

BB-PLC-201 SPACE, SLOT 4
WIRING SCHEMATIC

WIRING AND TERMINAL DEVICE LEGEND

- + DEVICE WIRING TERMINAL

TERMINAL BLOCK LOCATED IN FILTER CONTROL PANEL

FIELD WIRING

NO.	DR	CK	DATE	DESCRIPTION

REVISIONS

BLACK & VEATCH
Building a world of difference.
Black & Veatch Corporation
Registration No. F-258
Austin, Texas

STATE OF TEXAS
CHARLES E. MORRIS
108414
LICENSED
PROFESSIONAL ENGINEER

Austin WATER

Walnut Creek WWTP - Tertiary Filter Rehabilitation Project
CIP ID No. 3023.025

INSTRUMENTATION
AIR SCOUR BLOWER NO.1 PLC I/O POINT
WIRING SCHEMATIC SH. 1 OF 2

DESIGNED BY:	KWS
DRAWN BY:	KWS
REVIEWED BY:	CEM
APPROVED BY:	TLS
PROJECT NO.:	168622
DATE:	4/4/2014
SCALE:	NOT TO SCALE

REVISION:

DISCIPLINE NO.
I-55

DWG. NO.
264 OF 273

FD168622 SAVED: STMK0025, 11/6/2013 10:06:10 AM
D168622 PW-FUDP:D:\168622...\100.0005 - Instrumentation Drawings
File: C:\PWBatchPDF\Process\168622 - Austin Walnut Creek WWTP Filter Rehab_55.dwg Layout: Layout1 Plotted: 4/4/2014 7:58:03 AM

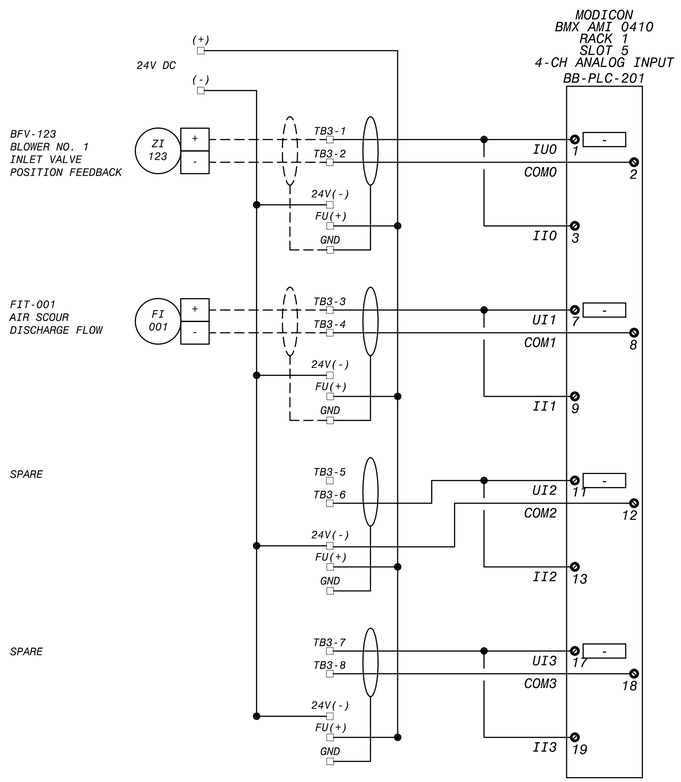

BB-PLC-201 ANALOG INPUT, SLOT 5
WIRING SCHEMATIC

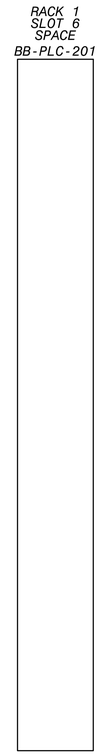

BB-PLC-201 SPACE, SLOT 6
WIRING SCHEMATIC

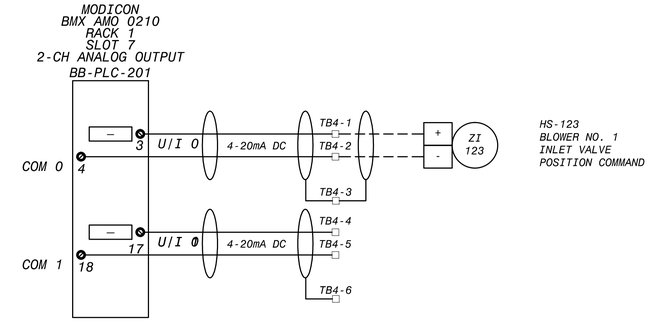

BB-PLC-201 ANALOG OUTPUT, SLOT 7
WIRING SCHEMATIC

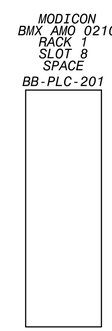

BB-PLC-201 SPACE, SLOT 8
WIRING SCHEMATIC

WIRING AND TERMINAL DEVICE LEGEND

- + DEVICE WIRING TERMINAL
TERMINAL BLOCK LOCATED IN FILTER CONTROL PANEL
FIELD WIRING

NO.	DR	CK	DATE	DESCRIPTION

REVISIONS

BLACK & VEATCH
Building a world of difference.
Black & Veatch Corporation
Registration No. F-258
Austin, Texas

STATE OF TEXAS
CHARLES E. MORRIS
108414
LICENSED
PROFESSIONAL ENGINEER

Walnut Creek WWTP - Tertiary Filter Rehabilitation Project
CIP ID No. 3023.025

INSTRUMENTATION
AIR SCOUR BLOWER NO. 1 PLC I/O POINT
WIRING SCHEMATIC SH. 2 OF 2

DESIGNED BY:	KWS
DRAWN BY:	KWS
REVIEWED BY:	CEM
APPROVED BY:	TLS
PROJECT NO.:	168622
DATE:	4/4/2014
SCALE:	NOT TO SCALE

REVISION:

DISCIPLINE NO.
I-56

DWG. NO.
265 OF 273

FD168622 SAVED: STIMO205, 11/6/2013 11:43:12 AM
D168622 PW-FUDP: D:\168622...\09.0055 - Instrumentation Drawings
File: C:\PWBatchPDF\Process\168622 - Austin Walnut Creek WWTP Filter Rehab_56.dwg Layout: Layout1 Plotted: 4/4/2014 7:58:15 AM

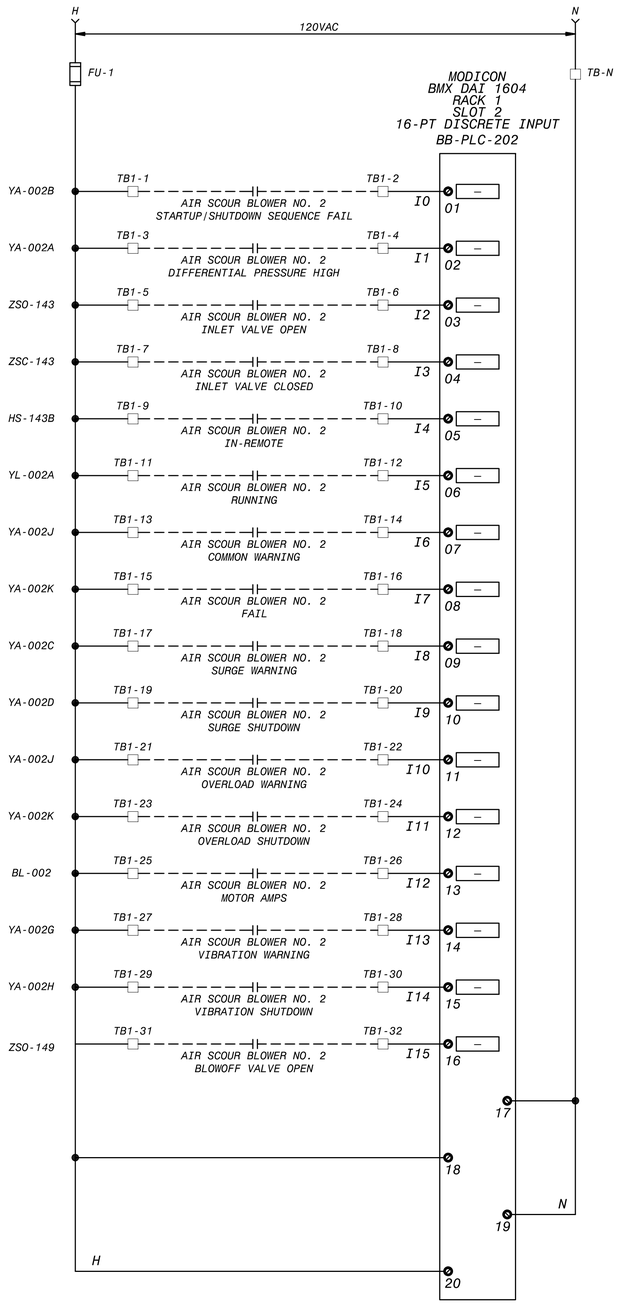

BB-PLC-202 DIGITAL INPUT, SLOT 2
WIRING SCHEMATIC

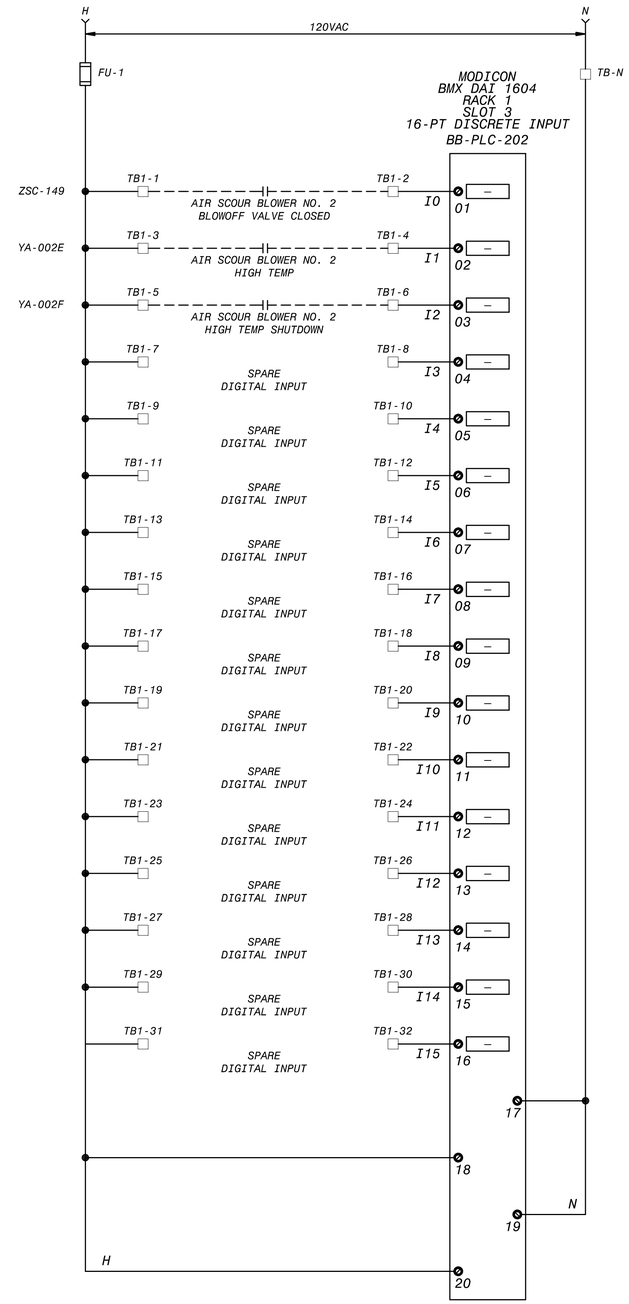

BB-PLC-202 DIGITAL OUTPUT, SLOT 3
WIRING SCHEMATIC

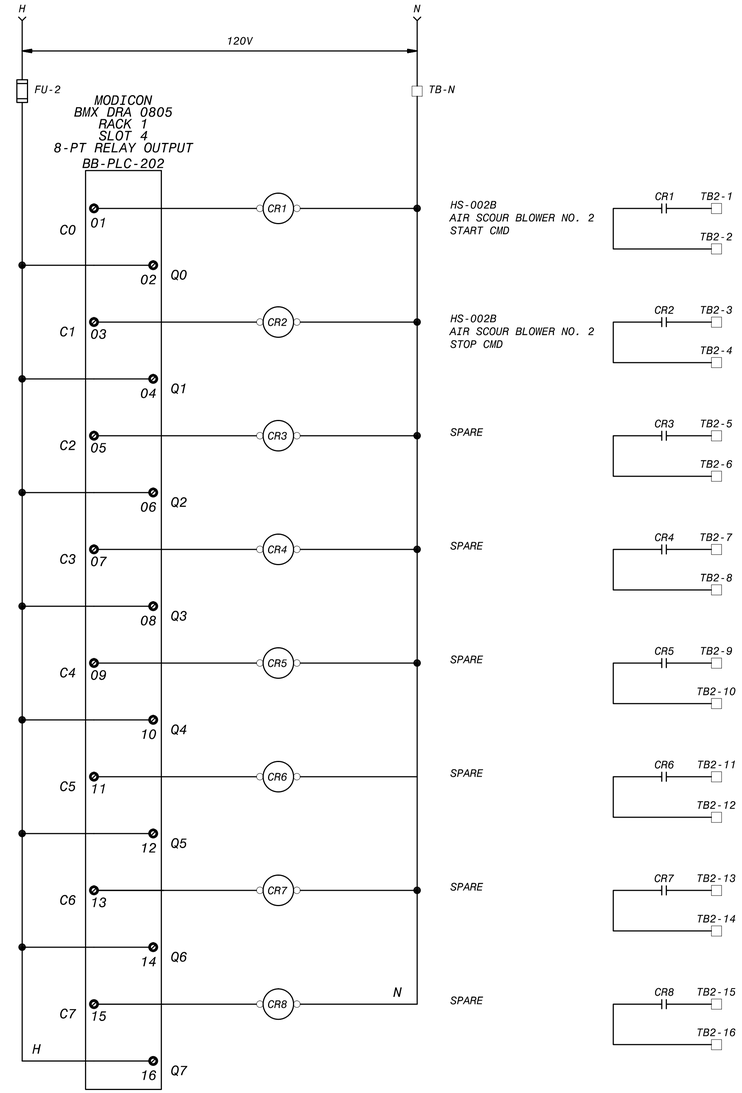

BB-PLC-202 SPACE, SLOT 4
WIRING SCHEMATIC

WIRING AND TERMINAL DEVICE LEGEND

- + DEVICE WIRING TERMINAL

TERMINAL BLOCK LOCATED IN FILTER CONTROL PANEL

FIELD WIRING

NO.	DR	CK	DATE	DESCRIPTION

REVISIONS

BLACK & VEATCH
Building a world of difference.
Black & Veatch Corporation
Registration No. F-258
Austin, Texas

STATE OF TEXAS
CHARLES E. MORRIS
108414
LICENSED
PROFESSIONAL ENGINEER

Austin WATER
Walnut Creek WWTP - Tertiary Filter Rehabilitation Project
CIP ID No. 3023.025

INSTRUMENTATION
AIR SCOUR BLOWER NO.2 PLC I/O POINT
WIRING SCHEMATIC SH. 1 OF 2

DESIGNED BY:	KWS
DRAWN BY:	KWS
REVIEWED BY:	CEM
APPROVED BY:	TLS
PROJECT NO.:	168622
DATE:	4/4/2014
SCALE:	NOT TO SCALE

REVISION:

DISCIPLINE NO.
I-57

DWG. NO.
266 OF 273

FD168622 SAVED: STMK0025, 11/6/2023 10:06:10 AM
D168622 PW:FUDP:D:\168622...\00.0005 - Instrumentation Drawings
File: C:\PWBatchPDF\Process\168622 - Austin Walnut Creek WWTP Filter Rehab_57.dwg Layout: Layout1 Plotted: 4/4/2014 7:58:26 AM

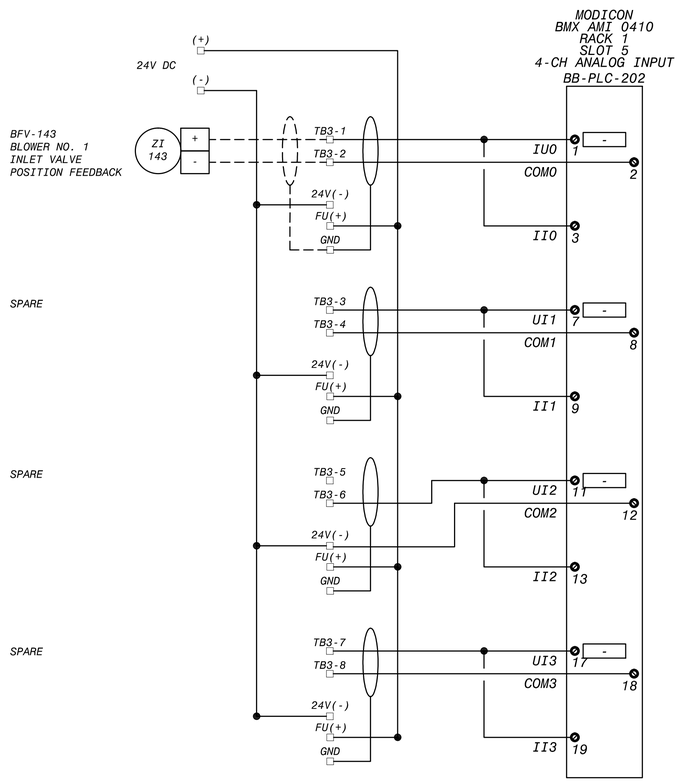

BB-PLC-202 ANALOG INPUT, SLOT 5
WIRING SCHEMATIC

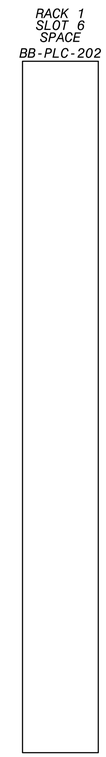

BB-PLC-202 SPACE, SLOT 6
WIRING SCHEMATIC

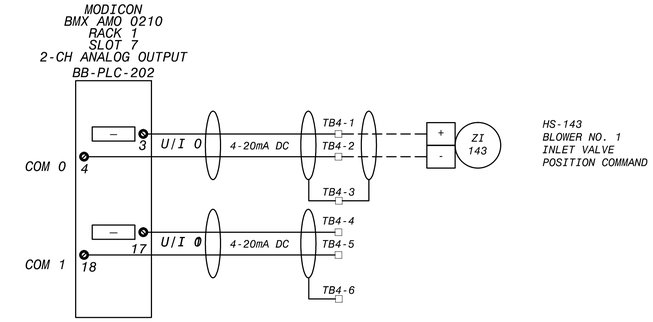

BB-PLC-202 ANALOG OUTPUT, SLOT 7
WIRING SCHEMATIC

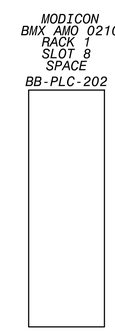

BB-PLC-202 SPACE, SLOT 8
WIRING SCHEMATIC

WIRING AND TERMINAL DEVICE LEGEND

- [- | +] DEVICE WIRING TERMINAL
- [ ] TERMINAL BLOCK LOCATED IN FILTER CONTROL PANEL
- — — — FIELD WIRING

NO.	DR	CK	DATE	DESCRIPTION

REVISIONS

BLACK & VEATCH
Building a world of difference.
Black & Veatch Corporation
Registration No. F-258
Austin, Texas

STATE OF TEXAS
CHARLES E. MORRIS
108414
LICENSED
PROFESSIONAL ENGINEER

Walnut Creek WWTP - Tertiary Filter Rehabilitation Project
CIP ID No. 3023.025

INSTRUMENTATION
AIR SCOUR BLOWER NO.2 PLC I/O POINT
WIRING SCHEMATIC SH. 2 OF 2

DESIGNED BY:	KWS
DRAWN BY:	KWS
REVIEWED BY:	CEM
APPROVED BY:	TLS
PROJECT NO.:	168622
DATE:	4/4/2014
SCALE:	NOT TO SCALE

REVISION:

DISCIPLINE NO. I-58

DWG. NO. 267 OF 273

FD168622 SAVED: STMK0205, 11/6/2023 11:43:12 AM
D168622 PW-FUDP:D:\168622...\09.5005 - Instrumentation Drawings
File: C:\PWBatchPDF\Process\168622 - Austin Walnut Creek WWTP Filter Rehab_I_58.dwg Layout: Layout1 Plotted: 4/4/2014 7:58:37 AM

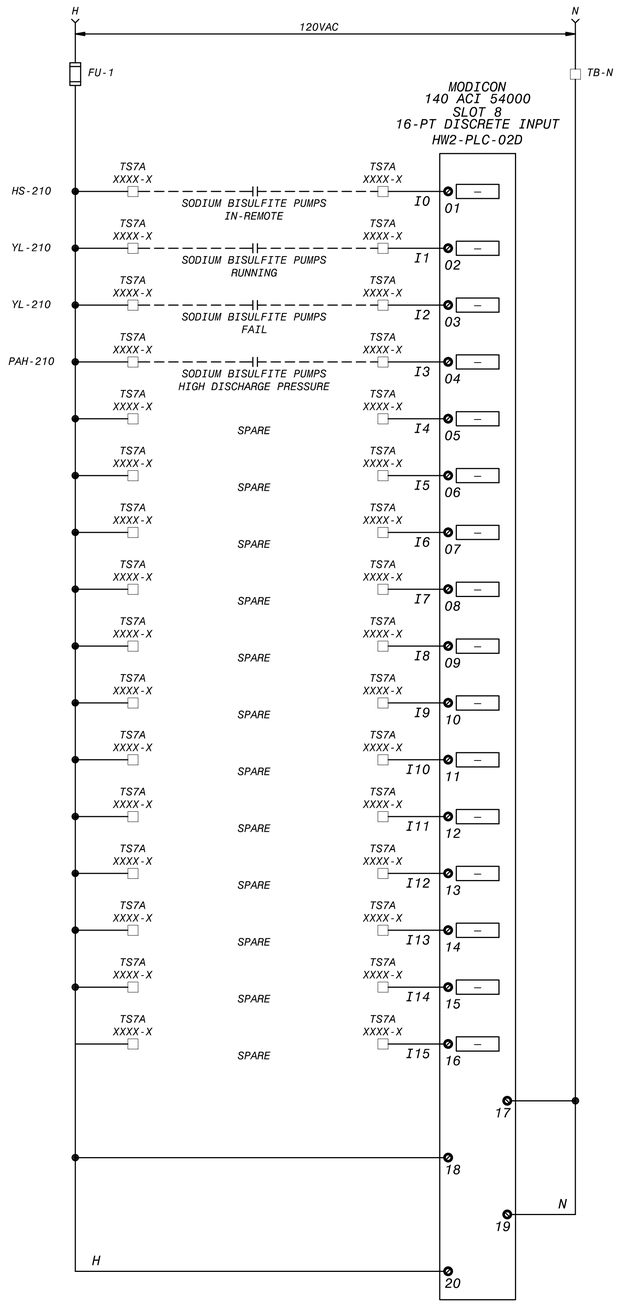

HW2-PLC-02D DIGITAL INPUT, SLOT 8
WIRING SCHEMATIC

HW2-PLC-02C DIGITAL OUTPUT, SLOT 10
WIRING SCHEMATIC

WIRING AND TERMINAL DEVICE LEGEND

- + DEVICE WIRING TERMINAL

TERMINAL BLOCK LOCATED IN FILTER CONTROL PANEL

FIELD WIRING

NO.	DR	CK	DATE	DESCRIPTION

REVISIONS

BLACK & VEATCH
Building a world of difference.
Black & Veatch Corporation
Registration No. F-258
Austin, Texas

STATE OF TEXAS
CHARLES E. MORRIS
108414
LICENSED
PROFESSIONAL ENGINEER

Austin WATER
Walnut Creek WWTP - Tertiary Filter Rehabilitation Project
CIP ID No. 3023.025

INSTRUMENTATION
SODIUM BISULFITE SYSTEM PLC I/O POINT
WIRING SCHEMATIC SH. 1 OF 2

DESIGNED BY:	KWS
DRAWN BY:	KWS
REVIEWED BY:	CEM
APPROVED BY:	TLS
PROJECT NO.:	168622
DATE:	4/4/2014
SCALE:	NOT TO SCALE

REVISION:

DISCIPLINE NO.
I-59

DWG. NO.
268 OF 273

FD168622 SAVED: STMK0025, 11/5/2013 10:36:10 AM
D168622 PW-FUDP:D:\168622...\109.0055 - Instrumentation Drawings
File: C:\PWBatchPDF\Process\168622 - Austin Walnut Creek WWTP Filter Rehab_59.dwg Layout: Layout1 Plotted: 4/4/2014 7:58:47 AM

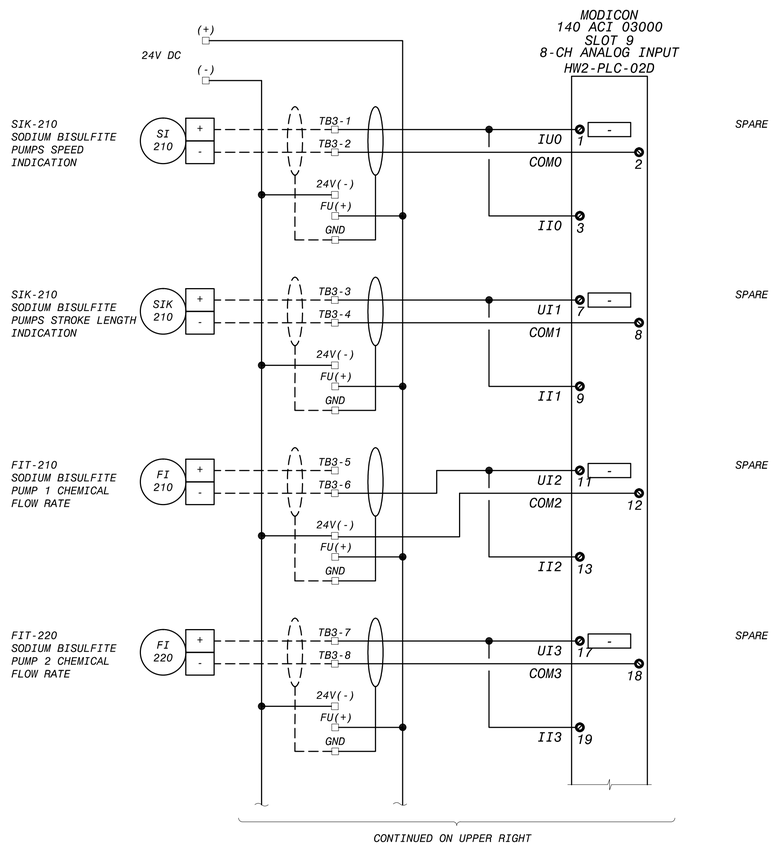

HW2-PLC-02D ANALOG INPUT, SLOT 9
WIRING SCHEMATIC

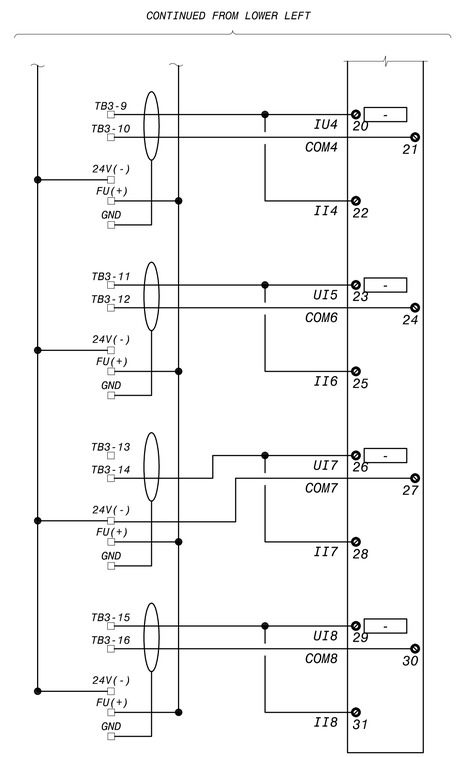

HW2-PLC-02D ANALOG INPUT, SLOT 9 (CONTINUED)
WIRING SCHEMATIC

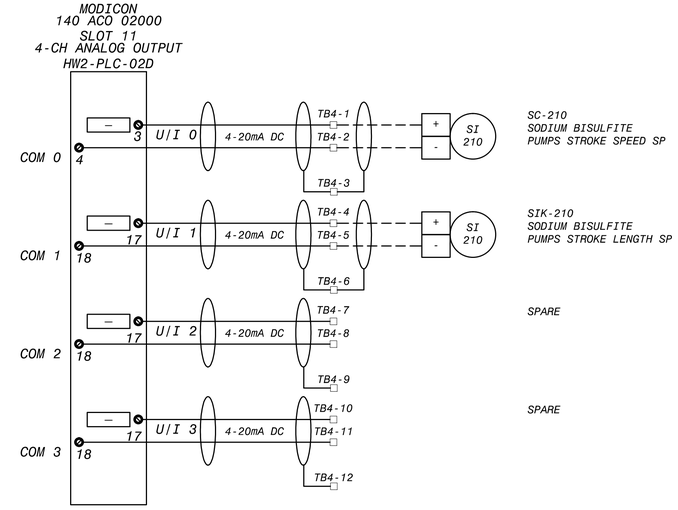

HW2-PLC-02D ANALOG OUTPUT, SLOT 10
WIRING SCHEMATIC

WIRING AND TERMINAL DEVICE LEGEND

- | + DEVICE WIRING TERMINAL

TERMINAL BLOCK LOCATED IN FILTER CONTROL PANEL

— — — — FIELD WIRING

NO.	DR	CK	DATE	DESCRIPTION

REVISIONS

BLACK & VEATCH
Building a world of difference.
Black & Veatch Corporation
Registration No. F-258
Austin, Texas

STATE OF TEXAS
CHARLES E. MORRIS
108414
LICENSED
PROFESSIONAL ENGINEER
4/4/2014

Austin WATER
Walnut Creek WWTP - Tertiary Filter Rehabilitation Project
CIP ID No. 3023.025

INSTRUMENTATION
SODIUM BISULFITE SYSTEM PLC I/O POINT
WIRING SCHEMATIC SH. 2 OF 2

DESIGNED BY:	KWS
DRAWN BY:	KWS
REVIEWED BY:	CEM
APPROVED BY:	TLS
PROJECT NO.:	168622
DATE:	4/4/2014
SCALE:	NOT TO SCALE
REVISION:	
DISCIPLINE NO.	I-60
DWG. NO.	269 OF 273

FD168622 SAVED: SIM50225, 1115/2013 11:43:12 AM
D168622 PW:FEDR:168622.....109.5050 - Instrumentation Drawings
File: C:\PWBatchPDF\Process\168622 - Austin Walnut Creek WWTP Filter Rehab\I-60.dwg Layout: Layout1 Plotted: 4/4/2014 7:58:59 AM

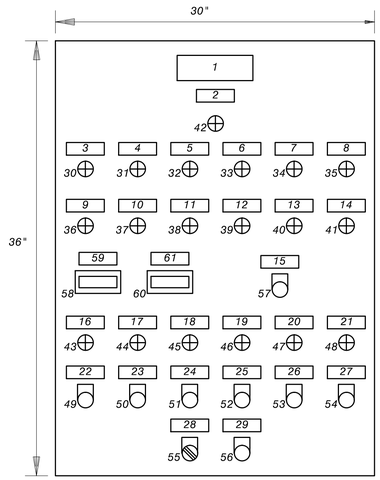

NO SCALE

AIR SCOUR BLOWER NO. 1 LOCAL CONTROL PANEL

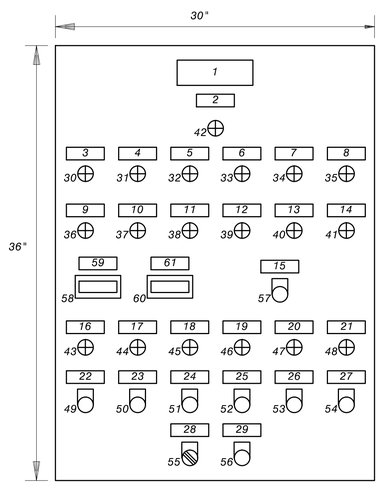

NO SCALE

AIR SCOUR BLOWER NO. 2 LOCAL CONTROL PANEL

NON-POTABLE WATER PUMP NO. 1 LOCAL CONTROL PANEL LEGEND		
NO.	DEVICE TYPE	NAMEPLATE ENGRAVING
1	NAMEPLATE	AIR SCOUR BLOWER NO. 1 LOCAL CONTROL PANEL
2	NAMEPLATE	CONTROL POWER ON
3	NAMEPLATE	HIGH INTAKE FILTER DIFFERENTIAL PRESSURE
4	NAMEPLATE	APPROACH SURGE
5	NAMEPLATE	APPROACH OVERLOAD
6	NAMEPLATE	BEARING HI TEMPERATURE
7	NAMEPLATE	BEARING VIBRATION WARNING
8	NAMEPLATE	STARTUP/SHUTDOWN SEQUENCE FAILURE
9	NAMEPLATE	SPARE
10	NAMEPLATE	SURGE
11	NAMEPLATE	OVERLOAD
12	NAMEPLATE	BEARING HIGH TEMPERATURE SHUTDOWN
13	NAMEPLATE	BEARING VIBRATION SHUTDOWN
14	NAMEPLATE	SPARE
15	NAMEPLATE	E-STOP
16	NAMEPLATE	INLET VALVE OPEN
17	NAMEPLATE	INLET VALVE CLOSE
18	NAMEPLATE	BLOWOFF VALVE OPEN
19	NAMEPLATE	BLOWOFF VALVE CLOSE
20	NAMEPLATE	BLOWER RUNNING
21	NAMEPLATE	BLOWER OFF
22	NAMEPLATE	OPEN
23	NAMEPLATE	CLOSE
24	NAMEPLATE	OPEN
25	NAMEPLATE	CLOSE
26	NAMEPLATE	START
27	NAMEPLATE	STOP
28	NAMEPLATE	LOCAL-REMOTE
29	NAMEPLATE	ALARM RESET
30-35	INDICATING LIGHT-RED	N/A
36-41	INDICATING LIGHT-AMBER	N/A
42	INDICATING LIGHT-WHITE	N/A
43,45,47	INDICATING LIGHT-RED	N/A
44,46,48	INDICATING LIGHT-GREEN	N/A
49,51,53,57	PUSHBUTTON-RED	N/A
50,52,54,56	PUSHBUTTON-GREEN	N/A
55	SELECTOR SWITCH	N/A
58	DIGITAL DISPLAY	N/A
59	NAMEPLATE	INLET VALVE POSITION
60	DIGITAL DISPLAY	N/A
61	NAMEPLATE	AIR FLOW/MOTOR AMPS

NON-POTABLE WATER PUMP NO. 2 LOCAL CONTROL PANEL LEGEND		
NO.	DEVICE TYPE	NAMEPLATE ENGRAVING
1	NAMEPLATE	AIR SCOUR BLOWER NO. 2 LOCAL CONTROL PANEL
2	NAMEPLATE	CONTROL POWER ON
3	NAMEPLATE	HIGH INTAKE FILTER DIFFERENTIAL PRESSURE
4	NAMEPLATE	APPROACH SURGE
5	NAMEPLATE	APPROACH OVERLOAD
6	NAMEPLATE	BEARING HI TEMPERATURE
7	NAMEPLATE	BEARING VIBRATION WARNING
8	NAMEPLATE	STARTUP/SHUTDOWN SEQUENCE FAILURE
9	NAMEPLATE	SPARE
10	NAMEPLATE	SURGE
11	NAMEPLATE	OVERLOAD
12	NAMEPLATE	BEARING HIGH TEMPERATURE SHUTDOWN
13	NAMEPLATE	BEARING VIBRATION SHUTDOWN
14	NAMEPLATE	SPARE
15	NAMEPLATE	E-STOP
16	NAMEPLATE	INLET VALVE OPEN
17	NAMEPLATE	INLET VALVE CLOSE
18	NAMEPLATE	BLOWOFF VALVE OPEN
19	NAMEPLATE	BLOWOFF VALVE CLOSE
20	NAMEPLATE	BLOWER RUNNING
21	NAMEPLATE	BLOWER OFF
22	NAMEPLATE	OPEN
23	NAMEPLATE	CLOSE
24	NAMEPLATE	OPEN
25	NAMEPLATE	CLOSE
26	NAMEPLATE	START
27	NAMEPLATE	STOP
28	NAMEPLATE	LOCAL-REMOTE
29	NAMEPLATE	ALARM RESET
30-35	INDICATING LIGHT-RED	N/A
36-41	INDICATING LIGHT-AMBER	N/A
42	INDICATING LIGHT-WHITE	N/A
43,45,47	INDICATING LIGHT-RED	N/A
44,46,48	INDICATING LIGHT-GREEN	N/A
49,51,53,57	PUSHBUTTON-RED	N/A
50,52,54,56	PUSHBUTTON-GREEN	N/A
55	SELECTOR SWITCH	N/A
58	DIGITAL DISPLAY	N/A
59	NAMEPLATE	INLET VALVE POSITION
60	DIGITAL DISPLAY	N/A
61	NAMEPLATE	AIR FLOW/MOTOR AMPS

NO.	DR	CK	DATE	DESCRIPTION

REVISIONS

BLACK & VEATCH
Building a world of difference.
Black & Veatch Corporation
Registration No. F-258
Austin, Texas

STATE OF TEXAS
CHARLES E. MORRIS
108414
LICENSED
PROFESSIONAL ENGINEER

Austin WATER
Walnut Creek WWTP - Tertiary Filter Rehabilitation Project
CIP ID No. 3023.025

INSTRUMENTATION
FILTERS AIR SCOUR BLOWERS
LOCAL CONTROL PANEL DETAILS

DESIGNED BY:	KWS
DRAWN BY:	KWS
REVIEWED BY:	CEM
APPROVED BY:	TLS
PROJECT NO.:	168622
DATE:	4/4/2014
SCALE:	NOT TO SCALE

REVISION:

DISCIPLINE NO.
I-61

DWG. NO.
270 OF 273

FD168622 SAVED: STIMS025, 9/4/2013 1:58:56 PM
D168622 PW:FDD1:D168622...\109.0055 - Instrumentation Drawings
File: C:\PWBatchPDF\Process\168622 - Austin Walnut Creek WWTP Filter Rehab_61.dwg Layout: Layout1 Plotted: 4/4/2014 7:59:10 AM

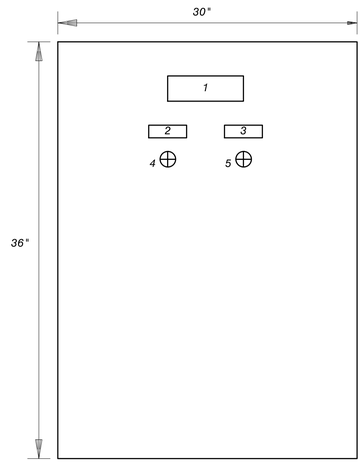

NO SCALE

NON-POTABLE WATER PUMP NO. 1 LOCAL CONTROL PANEL LEGEND		
NO.	DEVICE TYPE	NAMEPLATE ENGRAVING
1	NAMEPLATE	NPW PUMP NO.1
2	NAMEPLATE	OVERLOAD
3	NAMEPLATE	RUNNING
4	INDICATING LIGHT	N/A
5	INDICATING LIGHT	N/A

NPW PUMP NO. 1 LOCAL CONTROL PANEL

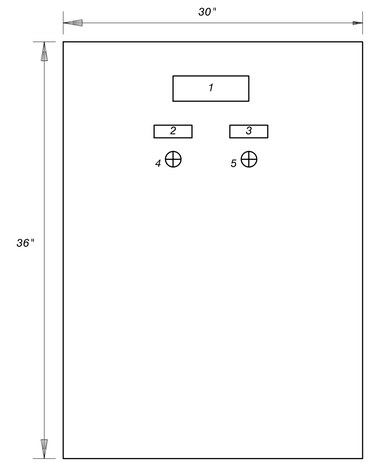

NO SCALE

NON-POTABLE WATER PUMP NO. 2 LOCAL CONTROL PANEL LEGEND		
NO.	DEVICE TYPE	NAMEPLATE ENGRAVING
1	NAMEPLATE	NPW PUMP NO.2
2	NAMEPLATE	OVERLOAD
3	NAMEPLATE	RUNNING
4	INDICATING LIGHT	N/A
5	INDICATING LIGHT	N/A

NPW PUMP NO. 2 LOCAL CONTROL PANEL

NO.	DR	CK	DATE	DESCRIPTION

REVISIONS

BLACK & VEATCH
Building a world of difference.
Black & Veatch Corporation
Registration No. F-258
Austin, Texas

STATE OF TEXAS
CHARLES E. MORRIS
108414
LICENSED
PROFESSIONAL ENGINEER

Austin WATER
Walnut Creek WWTP - Tertiary Filter Rehabilitation Project
CIP ID No. 3023.025

INSTRUMENTATION
NPW PUMP SYSTEM
LOCAL CONTROL PANEL DETAILS

DESIGNED BY:	KWS
DRAWN BY:	KWS
REVIEWED BY:	CEM
APPROVED BY:	TLS
PROJECT NO.:	168622
DATE:	4/4/2014
SCALE:	NOT TO SCALE

REVISION:

DISCIPLINE NO.
I-62

DWG. NO.
271 OF 273

FD168622 SAVED: STIMS025, 9/5/2013 3:00:56 PM
D168622 PW:FCDP1D:\168622...\109.5035 - Instrumentation Drawings
File: C:\PWBatchPDF\Process\168622 - Austin Walnut Creek WWTP Filter Rehab_62.dwg Layout: Layout1 Plotted: 4/4/2014 7:59:20 AM

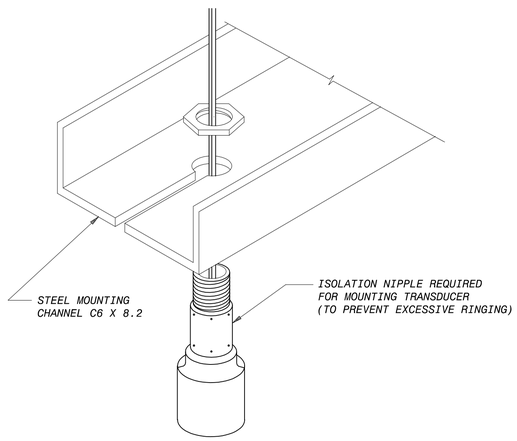

ULTRASONIC TRANSDUCER MOUNTING DETAIL

NO SCALE
TYPICAL FOR FILTERS

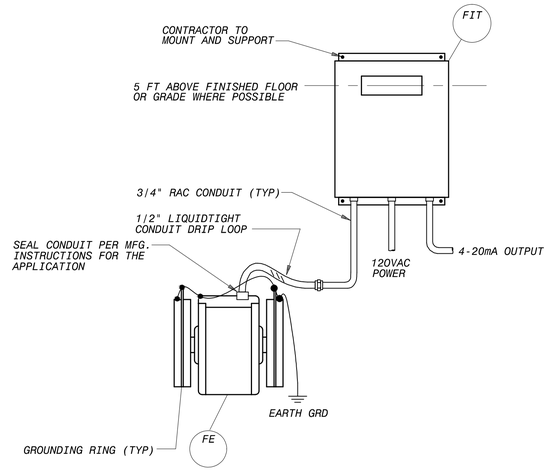

MAGNETIC FLOWMETER INSTALLATION DETAIL

NO SCALE
NOTE: PIPE TO BE SUPPORTED ON BOTH SIDES OF METER.

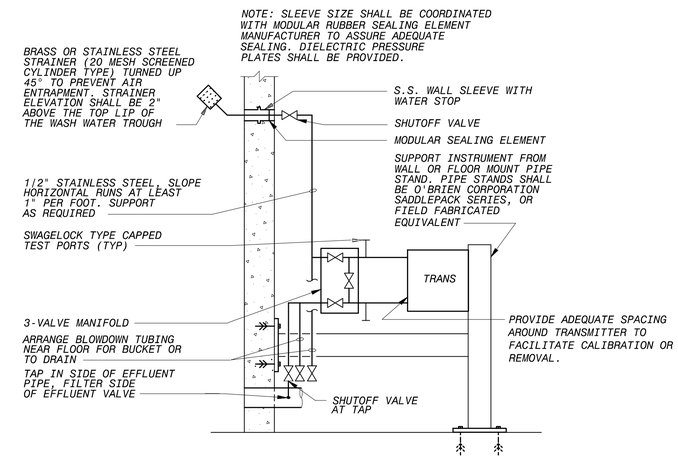

FILTER HEAD LOSS TRANSMITTER INSTALLATION DETAIL

NO SCALE

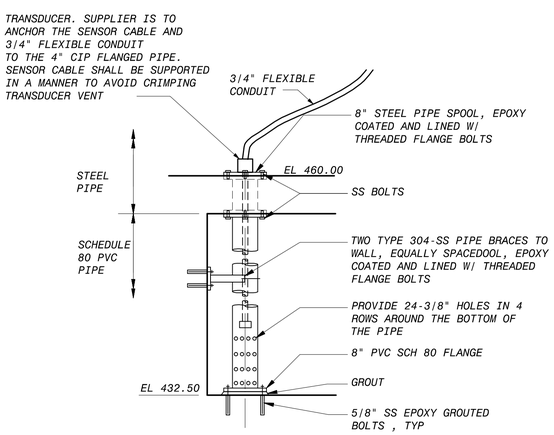

STILLING PIPE GRATING PENETRATION DETAIL

NO SCALE

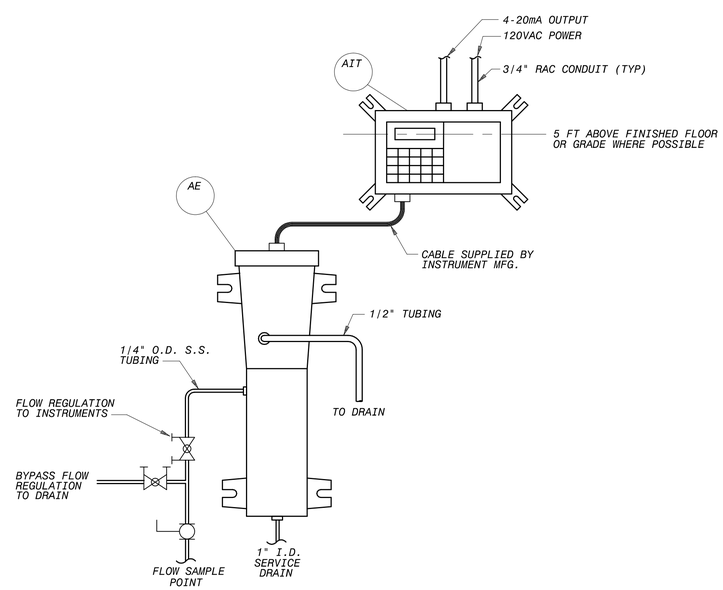

TURBIDITY METER INSTALLATION DETAIL

NO SCALE

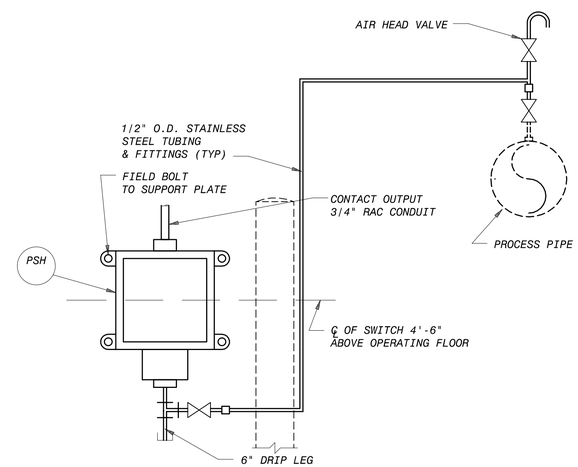

PRESSURE SWITCH INSTALLATION DETAIL

NO SCALE

NO.	DR	CK	DATE	DESCRIPTION

REVISIONS

BLACK & VEATCH
Building a world of difference.
Black & Veatch Corporation
Registration No. F-258
Austin, Texas

STATE OF TEXAS
CHARLES E. MORRIS
108414
LICENSED
PROFESSIONAL ENGINEER

Austin WATER
Walnut Creek WWTP - Tertiary Filter Rehabilitation Project
CIP ID No. 3023.025

INSTRUMENTATION INSTALLATION DETAILS

DESIGNED BY:	KWS
DRAWN BY:	KWS
REVIEWED BY:	CEM
APPROVED BY:	TLS
PROJECT NO.:	168622
DATE:	4/4/2014
SCALE:	NOT TO SCALE

REVISION:

DISCIPLINE NO.
I-63

DWG. NO.
272 OF 273

FD168622 SAVED: STIMS025, 11/7/2013 11:38:36 AM
D168622 PW:FDP1D168622...\09.0005 - Instrumentation Drawings
File: C:\PWBatchPDF\Process\168622 - Austin Walnut Creek WWTP Filter Rehab_I-63.dwg Layout: Layout1 Plotted: 4/4/2014 7:59:31 AM

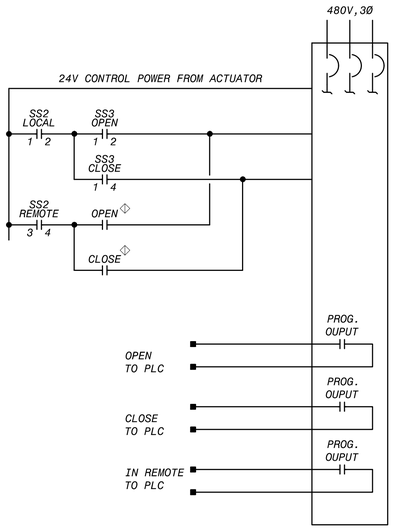

PROGRAMMABLE ELECTRIC ACTUATOR

TYPICAL FOR: BFV-016, BFV-030, BFV-017, BFV-032, BFV-020, BFV-040, BFV-021, BFV-042, BFV-053, BFV-049, BFV-054, BFV-050, BFV-065, BFV-061, BFV-066, BFV-062, BFV-077, BFV-073, BFV-078, BFV-074

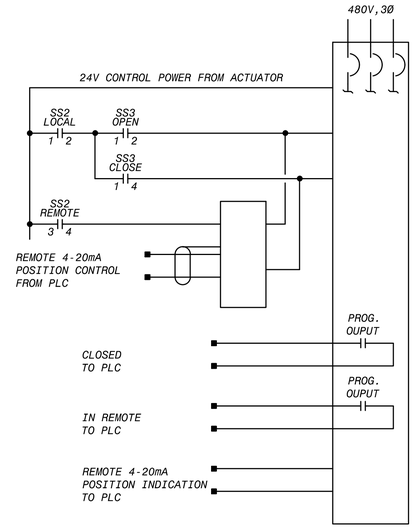

PROGRAMMABLE ELECTRIC MODULATING ACTUATOR

TYPICAL FOR: BFV-024, BFV-025, BFV-035, BFV-036, BFV-047, BFV-048, BFV-058, BFV-060, BFV-071, BFV-072

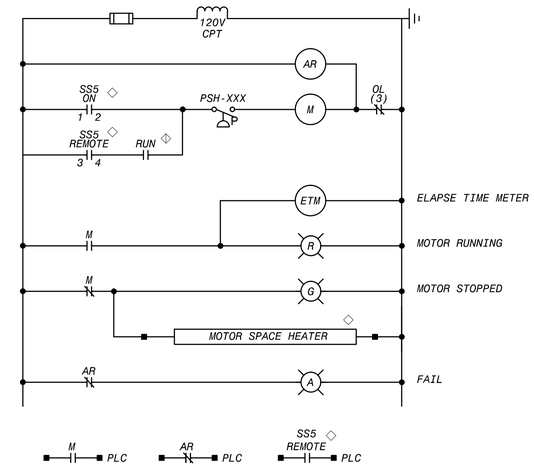

NPW AND BACKWASH PUMPS

TYPICAL FOR: NP-001, NP-002, BWP-001, BWP-002

DEVICE LOCATION LEGEND

- PLC
- AT OR NEAR DRIVEN EQUIPMENT
- REMOTE CONTROL STATION
- AT BLOWER CONTROL PANEL

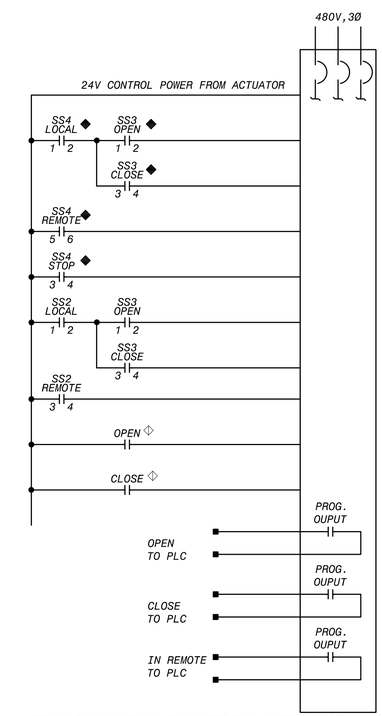

PROGRAMMABLE ELECTRIC ACTUATOR WITH REMOTE CONTROL STATION

TYPICAL FOR: BFV-029, BFV-033, BFV-031, BFV-034, BFV-039, BFV-043, BFV-041, BFV-044, BFV-051, BFV-057, BFV-052, BFV-058, BFV-063, BFV-069, BFV-064, BFV-070, BFV-075, BFV-082, BFV-076, BFV-083, BFV-026, BFV-110

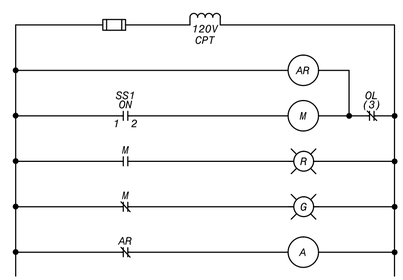

FAN STARTER

TYPICAL FOR: FB1-SF-001, FB1-SF-002

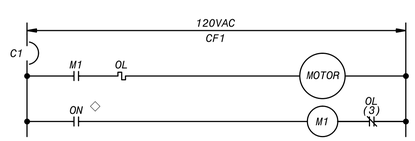

FAN STARTER

TYPICAL FOR: EF-1

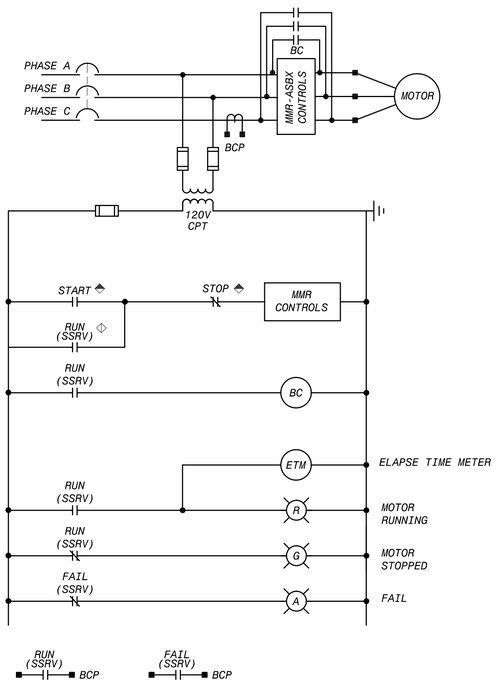

AIR SCOUR BLOWER

TYPICAL FOR: BB-AS-001, BB-AS-002

SELECTOR SWITCH LEGEND

SS1

CONTACTS	POSITION ON	POSITION OFF
1-2	X	

SS2

CONTACTS	POSITION LOCAL	POSITION REMOTE
1-2	X	
3-4		X

SS3

CONTACTS	POSITION OPEN	POSITION CLOSE
1-2	X	
3-4		X

SS4

CONTACTS	POSITION LOCAL	POSITION STOP	POSITION REMOTE
1-2	X		
3-4		X	
5-6			X

SS5

CONTACTS	POSITION LOCAL	POSITION OFF	POSITION REMOTE
1-2	X		
3-4			X
5-6			X

NOTES:

1. SEE DRAWINGS E-01 AND E-02 FOR ELECTRICAL NOTES, LEGEND, AND ABBREVIATIONS.
2. UNLESS OTHERWISE NOTED, DEVICES SHOWN ON THIS DRAWING SHALL BE SUPPLIED AN INTEGRAL PART OF THE STARTER. DEVICES LOCATED OUTSIDE OR REMOTE FROM THE STARTER ARE IDENTIFED BY A LOCATION SYMBOL AS DEFINED IN THE DEVICE LOCATION LEGEND.

NO.	DR	CK	DATE	DESCRIPTION

REVISIONS

BLACK & VEATCH
Building a world of difference.
Black & Veatch Corporation
Registration No. F-258
Austin, Texas

STATE OF TEXAS
CHARLES E. MORRIS
106414
LICENSED PROFESSIONAL ENGINEER

Walnut Creek WWTP - Tertiary Filter Rehabilitation Project
CIP ID No. 3023.025

INSTRUMENTATION SCHEMATICS

DESIGNED BY:	CEM
DRAWN BY:	KWS
REVIEWED BY:	CEM
APPROVED BY:	TLS
PROJECT NO.:	168622
DATE:	4/4/2014
SCALE:	NOT TO SCALE

REVISION:

DISCIPLINE NO. I-64

DWG. NO. 273 OF 273

FD168622 SAVED: SIMKO205, 11/19/2013 1:45:36 PM
D168622 PW-FEDD\D168622...\09.5035 - Instrumentation Drawings
File: C:\PWBatchPDF\Process\168622 - Austin Walnut Creek WWTP Filter Rehab_64.dwg Layout: Layout1 Plotted: 4/4/2014 10:56:53 AM