TAYLOR LANE
0.1 MGD WASTEWATER TREATMENT PLANT PROJECT

IFB NUMBER: IFB6100 CLMC600
CIP PROJECT NUMBER: 3353.095
FDU NUMBER: 4570-2307-4876

TRAVIS COUNTY, TEXAS
SEPTEMBER 5, 2016

OWNER: CLUB DEAL 120
9285 HUNTINGTON SQUARE
NORTH RICHLAND HILLS, TX 76182

ENGINEER: SMITH TURRIETA ENGINEERING
PO BOX 5902
AUSTIN, TEXAS 78763
(512) 569-9022

WATERSHED STATUS:

THIS SITE IS LOCATED IN THE GILLILAND CREEK WATERSHED WHICH IS CLASSIFIED AS SUBURBAN WATERSHED BY THE CITY OF AUSTIN. THIS SITE IS NOT LOCATED OVER THE EDWARDS AQUIFER RECHARGE ZONE.

FLOODPLAIN INFORMATION:

THIS SITE IS LOCATED WITHIN THE BOUNDARIES OF THE 100 YEAR FLOODPLAIN, AS SHOWN ON THE FLOOD INSURANCE RATE MAP COMMUNITY PANEL NO. 48453C0495J DATED AUGUST 18, 2014 FOR TRAVIS COUNTY, TEXAS.

LEGAL DESCRIPTION:

EASEMENT FOR INTERIM WASTEWATER TREATMENT PLANT (WHISPER VALLEY WWTP) AND ACCESS AND UTILITY EASEMENT AND RIGHT OF WAY. DOCUMENT #2007128044 OF THE OFFICIAL PUBLIC RECORDS OF TRAVIS COUNTY TEXAS.

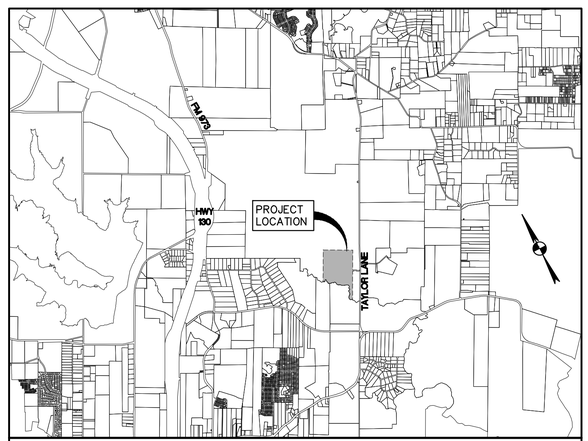

CITY GRIDS:
T22, T24
MAPSCO GRIDS:
T22

LOCATION MAP
SCALE: 1" = 1 MILE

NOTES:

1. CONTRACTOR SHALL NOTIFY THE PUBLIC WORKS DEPARTMENT 24 HOURS PRIOR TO STARTING CONSTRUCTION OR CLEARING OPERATIONS.
2. CONTRACTOR SHALL CALL "ONE CALL" AT 1-800-344-8377 FOR UTILITY LOCATIONS AT LEAST 48 HOURS PRIOR TO ANY WORK IN CITY EASEMENTS OR STREET RIGHT OF WAYS.
3. THIS PROJECT IS LOCATED WITHIN THE GILLELAND CREEK WATERSHED (CLASSIFIED AS SUBURBAN) AND SHALL BE DEVELOPED, CONSTRUCTED AND MAINTAINED IN ACCORDANCE WITH CHAPTER 25 OF THE CODE OF THE CITY OF AUSTIN.
4. NO PORTION OF THIS SITE IS LOCATED WITHIN PARKLAND OR LAND USED FOR PARK PURPOSES.
5. A PORTION OF OF THIS SITE IS LOCATED WITHIN THE 100-YEAR FLOODPLAIN, PER CITY OF AUSTIN AND FEDERAL EMERGENCY MANAGEMENT AGENCY FLOOD INSURANCE RATE MAPS.
6. THIS PROJECT IS NOT WITHIN THE EDWARDS AQUIFER RECHARGE ZONE AS DEFINED BY THE CITY OF AUSTIN. THIS PROJECT IS NOT WITHIN THE EDWARDS AQUIFER RECHARGE ZONE AS REGULATED BY THE TEXAS COMMISSION ON ENVIRONMENTAL QUALITY (TCEQ).
7. THERE ARE NO CRITICAL ENVIRONMENTAL FEATURES WITHIN 150' OF ANY PORTION OF THIS PROJECT. A FIELD INVESTIGATION HAS BEEN PERFORMED AS A PART OF THIS PROJECT.
8. PROJECT SCHEDULE MUST BE APPROVED BY THE PROJECT MANAGER. INSTALLATION AND REMOVAL OF TEMPORARY AND PERMANENT EROSION/SEDIMENTATION CONTROLS MUST BE REFLECTED IN THE SCHEDULE, BY STATION NUMBER. INSPECTOR MUST BE NOTIFIED A MINIMUM OF 48 HOURS IN ADVANCE OF TRANSITION BETWEEN PHASES.
9. APPROPRIATE EASEMENTS/APPROVALS MUST BE SECURED AND DOCUMENTED FOR PROJECT AREAS LOCATED OUTSIDE OF RIGHT OF WAYS. NO WORK SHALL BE PERFORMED WITHIN THESE AREAS UNTIL ASSOCIATED RIGHT OF ENTRY HAS BEEN SECURED. ADDITIONALLY, THIS PROJECT WILL NOT BE CONSIDERED COMPLETE UNTIL ALL RECORDED EASEMENT DOCUMENT NUMBERS HAVE BEEN OBTAINED AND SHOWN ON PLANS.

ALL RESPONSIBILITY FOR THE ADEQUACY OF THESE PLANS REMAINS WITH THE REGISTERED PROFESSIONAL ENGINEER/ARCHITECT/LANDSCAPE ARCHITECT (AS APPLIES) WHO PREPARED THEM. IN APPROVING THESE PLANS, THE CITY OF AUSTIN MUST RELY UPON THE ADEQUACY OF THE WORK OF THE DESIGN ENGINEER/ARCHITECT/LANDSCAPE ARCHITECT."

RELEASE OF THIS APPLICATION DOES NOT CONSTITUTE A VERIFICATION OF ALL DATA, INFORMATION AND CALCULATIONS SUPPLIED BY THE APPLICANT. THE ENGINEER OF RECORD IS SOLELY RESPONSIBLE FOR THE COMPLETENESS, ACCURACY AND ADEQUACY OF HIS/HER SUBMITTAL, WHETHER OR NOT THE APPLICATION IS REVIEWED FOR CODE COMPLIANCE BY CITY ENGINEERS.

PERMIT NO. : SP-2013-0044C
SUBPROJECT: ID No. 7265.008
SUBMITTAL DATE: NOVEMBER 14, 2014

ADDRESS : 7535 1/2 TAYLOR LANE
AUSTIN, TEXAS 78653

SUBMITTED BY : Susan Smith Turrieta 8-1-2016
DATE

SUSAN TURRIETA, PE
SMITH TURRIETA ENGINEERING
PO BOX 5902
AUSTIN, TEXAS 78763
(512) 569-9022

STATE OF TEXAS
SUSAN SMITH-TURRIETA
86839
LICENSED
PROFESSIONAL ENGINEER

NO.	DESCRIPTION	REVISE (R) ADD(A) VOID (V) SHEET NO.'S	TOTAL # SHEETS IN PLAN SET	DATE IMAGED

APPROVED FOR ACCEPTANCE:

DEVELOPMENT REVIEW AND INSPECTION DEPARTMENT — DATE

SP-2013-0044C
SITE PLAN/DEVELOPMENT PERMIT NUMBER — DATE

AUSTIN WATER UTILITY — DATE

TRAVIS COUNTY ESD NO. 12 — DATE

SMITH TURRIETA ENGINEERING
P.O. BOX 5902, AUSTIN, TEXAS 78763
TELEPHONE: (512) 569-9022
Texas Registration Number, F-16076

TAYLOR LANE ----

K:\ACAD\clients\STE\WWTP Ph2\1-CVR-SHT.dwg modified by roodrj on Jul 28, 16 9:51 AM

G GENERAL

- COVER
G-1 SHEET INDEX
G-2 GENERAL NOTES SHEET 1 OF 3
G-3 GENERAL NOTES SHEET 2 OF 3
G-4 GENERAL NOTES SHEET 3 OF 3
G-5 VICINITY MAP
G-6 MASTER SITE PLAN

P PROCESS

P-1 PROCESS FLOW DIAGRAM
P-2 HYDRAULIC PROFILE

ESC EROSION SEDIMENTATION CONTROL

ESC-1 EROSION AND SEDIMENTATION CONTROL PLAN A
ESC-2 EROSION AND SEDIMENTATION CONTROL PLAN B
ESC-3 EROSION AND SEDIMENTATION CONTROL PLAN C
ESC-4 EROSION AND SEDIMENTATION CONTROL DETAILS
ESC-5 TREE PROTECTION DETAILS

TC TRAFFIC CONTROL

T-1 TRAFFIC CONTROL PLAN
T-2 TRAFFIC CONTROL DETAILS

C CIVIL

C-1 SITE PLAN A - DIMENSION CONTROL PLAN
C-2 SITE PLAN B - DIMENSION CONTROL PLAN
C-3 SITE PLAN C - DIMENSION CONTROL PLAN
C-4 SITE PLAN A - GRADING
C-5 SITE PLAN B - GRADING
C-6 SITE PLAN C - GRADING
C-7 GRADING PLAN DETAILS
C-8 OVERALL PAVING PLAN AND SECTIONS
C-9 ALL WEATHER ACCESS ROAD PLAN AND PROFILE STA 27+14.4 TO END
C-10 EFFLUENT LINE PLAN AND PROFILE STA 10+OO - END
C-11 6" FM-DI AND 12" DR-PVC PLAN AND PROFILE
C-12 OUTFALL STRUCTURE PLAN AND SECTION
C-13 WATER AND NON POTABLE WATER LINES
CZ-1 STANDARD CIVIL DETAILS
CZ-2 STANDARD CIVIL DETAILS
CZ-3 STANDARD CIVIL DETAILS - FENCING
CZ-4 STANDARD WATER AND WASTEWATER DETAILS
CZ-5 STANDARD WATER AND WASTEWATER DETAILS
CZ-6 STANDARD WATER AND WASTEWATER DETAILS
CZ-7 STANDARD WATER AND WASTEWATER DETAILS
CZ-8 STANDARD WATER AND WASTEWATER DETAILS
CZ-9 STANDARD WATER AND WASTEWATER DETAILS

M MECHANICAL

MA-1 MECHANICAL LEGEND
MA-2 PIPE AND VALVE SCHEDULE
M-1A WWTP SITE PLAN - YARD PIPING
M-1 0.1 MGD WWTP PLAN AND SECTION
M-2 FILTRATION SYSTEM PLAN AND SECTION
M-2A FILTRATION SYSTEM SECTIONS
M-3 CHEMICAL MANHOLE VAULT
M-4 CHLORINE CONTACT BASIN PLAN
M-5 CHLORINE CONTACT BASIN SECTIONS
M-6 CHEMICAL BUILDING AND NPW SYSTEM PLAN VIEW
M-7 CHEMICAL BUILDING AND NPW SYSTEM SECTIONS
M-8 CASCADE MECHANICAL PLAN AND SECTIONS
MZ-1 STANDARD MECHANICAL DETAILS
MZ-2 STANDARD MECHANICAL DETAILS
MZ-3 STANDARD MECHANICAL DETAILS
MZ-4 STANDARD MECHANICAL DETAILS

S STRUCTURAL

S-1 STRUCTURAL GENERAL NOTES
S-2 STRUCTURAL GENERAL NOTES
S-3 FILTRATION SYSTEM SUPPORT PAD STRUCTURAL PLAN
S-4 CHEM FEED AND NPW SYSTEM SUPPORT PAD STRUCTURAL PLAN
S-5 CHEM FEED AND NPW SYSTEM CANOPY FRAMING PLAN
S-6 CHEM FEED AND NPW SYSTEM SUPPORT PAD DETAILS
S-7 CHLORINE CONTACT BASIN STRUCTURAL PLAN
S-8 CHLORINE CONTACT BASIN STRUCTURAL DETAILS
S-9 CASCADE STRUCTURE PLAN AND SECTIONS
SZ-1 STANDARD STRUCTURAL DETAILS
SZ-2 STANDARD STRUCTURAL DETAILS
SZ-3 STANDARD STRUCTURAL DETAILS

E ELECTRICAL

E-1 ELECTRICAL LEGEND
E-2 ELECTRICAL SITE PLAN
E-3 ONE-LINE DIAGRAM
E-4 ELECTRICAL SITE PLAN - 0.1 MGD WWTP PLAN
E-5 ELECTRICAL CHEMICAL FEED AND NPWS PLANS
E-6 ELECTRICAL CHLORINE CONTACT BASIN PLAN
E-7 ELECTRICAL FILTRATION SYSTEM PLAN
E-8 ELECTRICAL SCHEDULES
E-9 ELECTRICAL DETAILS

PERMIT / LANDSCAPING (SITE DEVELOPMENT PLAN SET)

2 GENERAL NOTES
3 EXISTING TOPOGRAPHIC AND TREE SURVEY
41 LANDSCAPING PLAN
42 LANDSCAPING DETAILS

DISCIPLINE

C CIVIL
E ELECTRICAL
ESC EROSION SEDIMENTATION CONTROL
G GENERAL
I INSTRUMENTATION
M MECHANICAL
P PROCESS
S STRUCTURAL
T TRAFFIC

DRAWING NUMBER NUMBERING SYSTEM

DRAWING NUMBER EXAMPLE: M -3
DISCIPLINE
SEQUENTIAL SHEET NUMBER

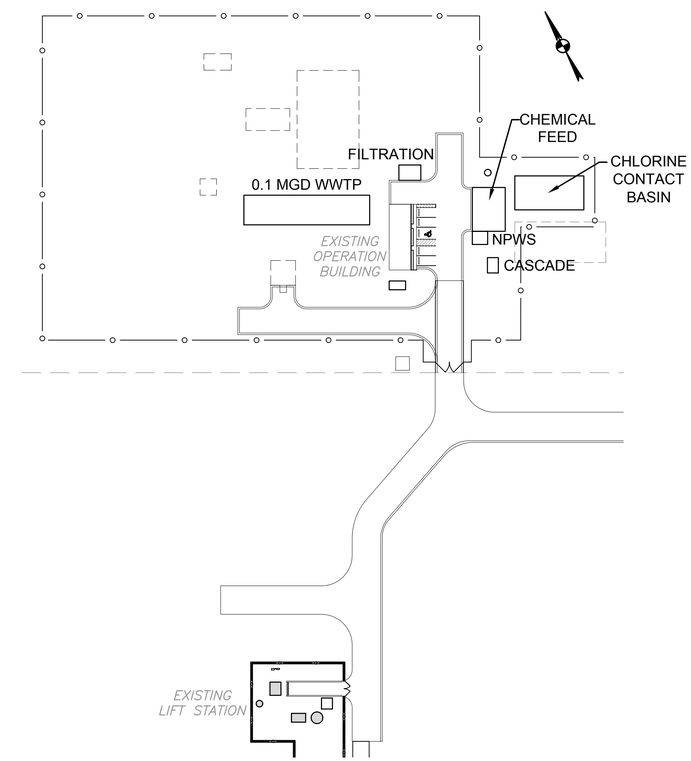

KEY MAP
SCALE: N.T.S.

REV	DATE	BY	DESCRIPTION	APPROVED

VERIFY SCALES
0 1"
IF BAR DOES NOT MEASURE ONE INCH ON THIS SHEET, ADJUST ACCORDINGLY.

STATE OF TEXAS
SUSAN SMITH-TURRIETA
86839
LICENSED
PROFESSIONAL ENGINEER
6-28-2016

DRAWN BY: RR
DESIGNED BY: SST
REVIEWED BY: SST
PROJECT NO: SST# XXXXX

SMITH TURRIETA ENGINEERING
P.O. BOX 5902, AUSTIN, TEXAS 78763
TELEPHONE: (512) 569-9022
Texas Registration Number, F-16076

CITY OF AUSTIN, TEXAS
TAYLOR LANE 0.1 MGD WASTEWATER TREATMENT PLANT PROJECT

SHEET INDEX

DWG. NO. G-1

SHEET 2 OF 79

K:\ACAD\clients\STE\WWTP Ph2\G-GN-NX101.dwg modified by roodrj on Jun 28, 16 10:43 AM

GENERAL NOTES:

1. APPLICABLE DESIGN AND DETAILS SHALL CONFORM TO GENERAL CONTRACT DOCUMENTS AND SPECIFICATIONS.

2. ALL EXISTING UTILITIES ARE AS PER AVAILABLE RECORDS. PRIOR TO CONSTRUCTION, EXACT LOCATION OF UTILITIES SHALL BE VERIFIED ON THE GROUND BY THE CONTRACTOR.

3. THE INFORMATION SHOWN ON THESE DRAWINGS CONCERNING TYPE AND LOCATION OF EXISTING UNDERGROUND AND OTHER UTILITIES IS NOT GUARANTEED TO BE ACCURATE OR ALL INCLUSIVE. THE CONTRACTOR IS RESPONSIBLE FOR MAKING HIS OWN DETERMINATIONS AS TO THE TYPE AND LOCATION OF ALL UNDERGROUND AND OTHER UTILITIES AS MAY BE NECESSARY TO AVOID DAMAGE THERETO.

4. EXISTING IMPROVEMENTS INCLUDING, BUT NOT LIMITED TO FENCES, DRIVEWAYS, SIDEWALKS, PAVEMENT, CURBS, UTILITY PIPELINES, AND DRAINAGE STRUCTURES, WHICH ARE DAMAGED, REMOVED OR ALTERED TO PERMIT INSTALLATION OF THE WORK SHALL BE REPAIRED OR REPLACED BY THE CONTRACTOR, AT THE CONTRACTOR'S EXPENSE, IN THE SAME LOCATION AND IN CONDITION AS GOOD AS OR BETTER THAN THEY WERE FOUND.

5. THE CONTRACTOR SHALL BACKFILL ALL EXCAVATIONS AT THE END OF EACH DAY.

6. THE CONTRACTOR SHALL REMOVE FROM THE PROJECT AREA ALL SURPLUS MATERIAL. THIS SHALL BE INCIDENTAL AND NOT A SEPARATE PAY ITEM. SURPLUS MATERIALS FROM EXCAVATION INCLUDING ROCK, DIRT, TRASH, ETC. SHALL BE PROPERLY DISPOSED OF AT AN APPROVED SITE WITHIN THE CITY LIMITS, IF THE LOCATION IS NOT WITHIN THE CITY LIMITS, THE CONTRACTOR SHALL PROVIDE A LETTER STATING SO. NO EXCESS EXCAVATED MATERIAL SHALL BE DEPOSITED IN LOW AREAS OR ALONG NATURAL DRAINAGE WAY WITHOUT WRITTEN PERMISSION FROM THE AFFECTED PROPERTY OWNER AND THE CITY'S FLOOD PLAIN ADMINISTRATOR. IF THE CONTRACTOR PLACES EXCESS MATERIAL IN THE AREAS WITHOUT PERMISSION, THE CONTRACTOR WILL BE RESPONSIBLE FOR ALL DAMAGE RESULTING FROM SUCH FILL, AND THE CONTRACTOR SHALL REMOVE MATERIAL AT THE CONTRACTOR'S OWN COST.

7. THE INSPECTION AND MAINTENANCE OF THE EROSION PREVENTION MEASURES SHALL BE CONTRACTOR'S RESPONSIBILITY THROUGHOUT ALL PHASES OF CONSTRUCTION. CONTRACTOR SHALL USE A SILT FENCE, OR OTHER METHOD APPROVED BY THE ENGINEER, TO CONTAIN SEDIMENT AND WASTE CONSTRUCTION MATERIALS ON-SITE. SILT FENCE SHALL BE MAINTAINED IN GOOD CONDITION FOR THE DURATION OF THE PROJECT.

8. CONTRACTOR SHALL MAINTAIN SUITABLE CONSTRUCTION ACCESS TO THE ENGINEER AND OWNER AT ALL TIMES DURING CONSTRUCTION.

9. CONTRACTOR SHALL BE RESPONSIBLE FOR KEEPING ALL EXISTING UTILITIES IN SERVICE DURING CONSTRUCTION.

10. THE CONTRACTOR SHALL REMOVE ALL FENCES, INTERFERING WITH CONSTRUCTION OPERATION AND PROVIDE TEMPORARY FENCING DURING CONSTRUCTION. REMOVED FENCES SHALL BE REPLACED WITH A NEW FENCE OR UNDAMAGED ORIGINAL FENCING. ALL AFFECTED PROPERTY OWNERS SHALL BE NOTIFIED PRIOR TO CONSTRUCTION. REMOVAL AND REPLACEMENT OF EXISTING AND TEMPORARY FENCES SHALL BE CONSIDERED SUBSIDIARY TO THE PROJECT COST.

11. THE CONTRACTOR SHALL VIDEO AND PHOTOGRAPH ALL IMPACTED PROPERTY WITHIN AND ADJACENT TO THE CONSTRUCTION LIMITS PRIOR TO WORK. VIDEOS SHALL INCLUDE DATE NOTATION AND AUDIO IDENTIFICATION OF PROJECT LOCATION AND PROJECT NAME. PHOTOGRAPHS SHALL INCLUDE DATE AND LOCATION NOTATION. VIDEO AND PHOTOGRAPHS SHALL BE CONSIDERED SUBSIDIARY WORK. PROVIDE OWNER WITH 2 COPIES OF DVD DISC WITH VIDEOS IN MPEG FORMAT AND PHOTOGRAPHS IN JPEG OR PDF FORMAT.

12. THE CONTRACTOR IS RESPONSIBLE FOR KEEPING STREETS ADJACENT TO THE PROJECT FREE OF MUD AND DEBRIS FROM THE CONSTRUCTION. THE CITY MAY DIRECT THE CONTRACTOR TO REMOVE MUD AND DEBRIS FROM STREETS ASSOCIATED WITH THE PROJECT AT NO CHARGE TO THE OWNER.

13. WHERE LIVESTOCK ARE PRESENT, THE CONTRACTOR SHALL MAINTAIN EXISTING FENCES DURING CONSTRUCTION.

14. ALL PADLOCKS REQUIRED FOR PROJECT TO BE KEYED ALIKE. CONTRACTOR TO FURNISH TEMPORARY PADLOCKS. OWNER TO FURNISH PERMANENT PADLOCKS.

15. EXCAVATION, TRENCHING, BACKFILLING AND GRADING: PRIOR TO ANY EXCAVATION OR TRENCHING, NOTIFY THE OWNER'S REPRESENTATIVE, UTILITY COMPANIES AND OWNER'S FACILITIES DEPARTMENT. ALLOW SUFFICIENT TIME FOR UTILITIES TO BE LOCATED PRIOR TO EXCAVATION TO AVOID DISRUPTION OF SERVICES. PROVIDE A MINIMUM OF 72 HOURS WRITTEN NOTICE TO THE OWNER PRIOR TO TRENCHING OR EXCAVATION. DO NOT PROCEED WITH TRENCHING OR EXCAVATION UNTIL AUTHORIZED BY THE OWNER. UTILITIES OR SERVICES WHICH ARE DAMAGED, WHICH ARE IDENTIFIED PRIOR TO EXCAVATION OR TRENCHING, OR WHERE CONFIRMATION BY UTILITY COMPANIES HAS NOT BEEN OBTAINED VERIFYING THAT UTILITIES ARE MARKED, SHALL BE REPAIRED TO OPERABLE CONDITION IMMEDIATELY, AT NO COST TO THE OWNER. BARRICADE OPEN TRENCHES AND EXCAVATIONS FOR THE ENTIRE DURATION OF THE PROJECT.

16. CONTRACTOR SHALL PROVIDE ANY REQUIRED EARTH AND/OR ROCK ANCHORS TO EQUAL OR EXCEED REQUIREMENTS OF OSHA FOR TRENCH EXCAVATION.

17. ALL CONSTRUCTION AREAS SHALL BE FINALLY GRADED AS INDICATED ON THE CONTRACT DOCUMENTS OR TO THE CONDITIONS OF THE SITE PRIOR TO CONSTRUCTION. GRADING SHALL BRING THE SITE BACK TO THE EXISTING CONDITIONS AS CLOSE AS PRACTICAL.

18. TURFED AREAS SHALL BE SODDED, OR HYDRO-MULCHED WITH MATCHING TURF. LANDSCAPING SHALL BE REPLACED WITH IDENTICAL SHRUBBERY, GROUND COVER, OR PLANTS AS EXISTED. THE CONTRACTOR SHALL BE RESPONSIBLE FOR MAINTAINING WATER ON NEW TURF AND LANDSCAPING UNTIL ESTABLISHED. IF NEW TURF AND LANDSCAPING IS IMPRACTICAL DUE TO WEATHER CONDITIONS, CONTRACTOR SHALL PROVIDE SATISFACTORY ARRANGEMENTS TO HAVE TURF AND LANDSCAPING FURNISHED AND INSTALLED AT THE EARLIEST OPPORTUNITY THEREAFTER.

19. THE CONTRACT SPECIFICATIONS CONTAINED IN THE PROJECT MANUAL HAVE PRECEDENT OVER CITY OF AUSTIN SPECIFICATIONS. FOR ITEMS NOT COVERED BY THE PROJECT MANUAL SPECIFICATIONS, THE "CITY OF AUSTIN STANDARD SPECIFICATIONS," AS AMENDED BY SPECIAL PROVISION, CURRENT AT THE TIME OF BIDDING, ARE TO GOVERN MATERIALS AND METHODS USED TO DO THE WORK. UNLESS OTHERWISE NOTED, ANY REVISIONS MADE AFTER BIDDING DO NOT APPLY.

20. CONTRACTOR TO GIVE NOTICE TO ALL AUTHORIZED INSPECTORS, SUPERINTENDENTS, OR PERSONS IN CHARGE OF PRIVATE AND PUBLIC UTILITIES AFFECTED BY HIS OPERATIONS PRIOR TO COMMENCEMENT OF WORK. CONTRACTOR TO ASSURE HIMSELF THAT ALL CONSTRUCTION PERMITS HAVE BEEN OBTAINED PRIOR TO COMMENCEMENT OF WORK. REQUIRED PERMITS THAT CAN ONLY BE ISSUED TO CONTRACTOR TO BE OBTAINED AT HIS EXPENSE.

21. CONTRACTOR TO COMPLY WITH ALL APPLICABLE LOCAL, STATE, AND FEDERAL REQUIREMENTS REGARDING EXCESS AND WASTE MATERIAL, INCLUDING METHODS OF HANDLING AND DISPOSAL.

22. CONTRACTOR TO LOCATE, PROTECT, AND MAINTAIN BENCHMARKS, MONUMENTS, CONTROL POINTS, AND PROJECT ENGINEERING REFERENCE POINTS. RE-ESTABLISH DISTURBED OR DESTROYED ITEMS BY REGISTERED PUBLIC SURVEYOR IN THE STATE OF TEXAS, AT NO ADDITIONAL COST TO OWNER.

23. CONTRACTOR TO CONTROL DUST CAUSED BY THE WORK AND COMPLY WITH POLLUTION CONTROL REGULATIONS OF GOVERNING AUTHORITIES.

24. THROUGHOUT THE CONSTRUCTION, AND AT THE COMPLETION OF CONSTRUCTION, THE CONTRACTOR TO ENSURE THAT DRAINAGE OF STORM WATER RUNOFF IS NOT BLOCKED.

25. NO BLASTING ALLOWED.

26. BURNING IS NOT ALLOWED ON THIS PROJECT.

27. REFER TO DRAWINGS FOR LOCATION OF TEMPORARY BENCHMARKS.

28. THE FINISHED GRADE ELEVATIONS SHOWN ARE INTENDED TO PROVIDE DRAINAGE AWAY FROM FACILITIES. MINOR FIELD CHANGES MAY BE NECESSARY TO PROVIDE ADEQUATE DRAINAGE. GRADE UNIFORMLY BETWEEN ELEVATIONS SHOWN TO PROVIDE DRAINAGE.

29. MAINTAIN DRAINAGE OF SITE DURING ALL PHASES OF CONSTRUCTION; DO NOT BLOCK DRAINAGE FROM ADJACENT AREAS NOR ADD FLOW TO ADJACENT AREAS.

30. ADJUST MANHOLE COVERS, VALVE BOXES, ELECTRICAL MANHOLES, ETC. TO MATCH PROPOSED FINISHED GRADE.

UTILITY ACCESS NOTES:

1. THE CONTRACTOR SHALL REQUIRE ALL PERSONNEL WHOSE JOB REQUIRES ENTERING AN ENCLOSED SPACE (SUCH AS MANHOLES AND LIFT STATIONS) CAPABLE OF HAVING ACCUMULATIONS OF HYDROGEN SULFIDE OR OTHER HARMFUL GASES TO WEAR PERSONAL GAS DETECTORS. THE CONTRACTOR SHALL PROVIDE THESE PERSONAL GAS DETECTORS TO THESE PERSONNEL.

TCEQ SEPARATION DISTANCE NOTES:

THE FOLLOWING RULES APPLY TO SEPARATION DISTANCES BETWEEN POTABLE WATER AND WASTEWATER TREATMENT PLANTS, AND WATERLINES AND SANITARY SEWERS.

1. WATER LINE/NEW SEWER LINE SEPARATION. WHEN NEW SANITARY SEWERS ARE INSTALLED, THEY SHALL BE INSTALLED NO CLOSER TO WATERLINES THAN NINE FEET IN ALL DIRECTIONS. SEWERS THAT PARALLEL WATERLINES MUST BE INSTALLED IN SEPARATE TRENCHES. WHERE THE NINE FOOT SEPARATION DISTANCE CANNOT BE ACHIEVED, THE FOLLOWING GUIDELINES WILL APPLY:

   (A) WHERE A SANITARY SEWER PARALLELS A WATERLINE, THE SEWER SHALL BE CONSTRUCTED OF CAST IRON, DUCTILE IRON OR PVC MEETING ASTM SPECIFICATIONS WITH A PRESSURE RATING FOR BOTH THE PIPE AND JOINTS OF 150 PSI. THE VERTICAL SEPARATION SHALL BE A MINIMUM OF TWO FEET BETWEEN OUTSIDE DIAMETERS AND THE HORIZONTAL SEPARATION SHALL BE A MINIMUM OF FOUR FEET BETWEEN OUTSIDE DIAMETERS. THE SEWER SHALL BE LOCATED BELOW THE WATERLINE.

   (B) WHERE A SANITARY SEWER CROSSES A WATERLINE AND THE SEWER IS CONSTRUCTED OF CAST IRON, DUCTILE IRON OR PVC WITH A MINIMUM PRESSURE RATING OF 150 PSI, AN ABSOLUTE MINIMUM DISTANCE OF 6 INCHES BETWEEN OUTSIDE DIAMETERS SHALL BE MAINTAINED. IN ADDITION THE SEWER SHALL BE LOCATED BELOW THE WATERLINE WHERE POSSIBLE AND ONE LENGTH OF THE SEWER PIPE MUST BE CENTERED ON THE WATERLINE.

   (C) WHERE A SEWER CROSSES UNDER A WATERLINE AND THE SEWER IS CONSTRUCTED OF ABS TRUSS PIPE, SIMILAR SEMI-RIGID PLASTIC COMPOSITE PIPE, CLAY PIPE OR CONCRETE PIPE WITH GASKETED JOINTS, A MINIMUM TWO FOOT SEPARATION DISTANCE SHALL BE MAINTAINED. THE INITIAL BACKFILL SHALL BE CEMENT STABILIZED SAND (TWO OR MORE BAGS OF CEMENT PER CUBIC YARD OF SAND) FOR ALL SECTIONS OF SEWER WITHIN NINE FEET OF THE WATERLINE. THIS INITIAL BACKFILL SHALL BE FROM ONE QUARTER DIAMETER BELOW THE CENTERLINE OF THE PIPE TO ONE PIPE DIAMETER (BUT NOT LESS THAN 12 INCHES) ABOVE THE TOP OF THE PIPE.

   (D) WHERE A SEWER CROSSES OVER A WATERLINE ALL PORTIONS OF THE SEWER WITHIN NINE FEET OF THE WATERLINE SHALL BE CONSTRUCTED OF CAST IRON, DUCTILE IRON, OR PVC PIPE WITH A PRESSURE RATING OF AT LEAST 150 PSI USING APPROPRIATE ADAPTERS. IN LIEU OF THIS PROCEDURE THE NEW CONVEYANCE MAY BE ENCASED IN A JOINT OF 150 PSI PRESSURE CLASS PIPE AT LEAST 18 FEET LONG AND TWO NOMINAL SIZES LARGER THAN THE NEW CONVEYANCE. THE SPACE AROUND THE CARRIER PIPE SHALL BE SUPPORTED AT 5 FEET INTERVALS WITH SPACERS OR BE FILLED TO THE SPRINGLINE WITH WASHED SAND. THE ENCASEMENT PIPE SHOULD BE CENTERED ON THE CROSSING AND BOTH ENDS SEALED WITH CEMENT GROUT OR MANUFACTURED SEAL.

2. WATER LINE/MANHOLE SEPARATION. UNLESS SANITARY SEWER MANHOLES AND THE CONNECTING SEWER CAN BE MADE WATERTIGHT AND TESTED FOR NO LEAKAGE, THEY MUST BE INSTALLED SO AS TO PROVIDE A MINIMUM OF NINE FEET OF HORIZONTAL CLEARANCE FROM AN EXISTING OR PROPOSED WATERLINE. WHERE THE NINE FOOT SEPARATION DISTANCE CANNOT BE ACHIEVED, A CARRIER PIPE AS DESCRIBED IN SUBSECTION (1)(D) OF THIS SECTION MAY BE USED WHERE APPROPRIATE.

PIPING NOTES

1. ALL UNDERGROUND DUCTILE IRON PIPE VALVES AND FITTINGS TO BE WRAPPED WITH AT LEAST 8-MIL POLYETHYLENE WRAP, IN ACCORDANCE WITH THE PROCEDURES SET FORTH IN AWWA C 105.

2. ALL UNDERGROUND DUCTILE IRON FITTINGS TO BE MECHANICAL JOINT, UNLESS OTHERWISE NOTED. WHERE DUCTILE IRON PIPE ENTERS STRUCTURES, CONNECT TO WALL PIPE WITH MECHANICAL JOINTS USING EPOXY-COATED NUTS AND BOLTS, UNLESS OTHERWISE NOTED ON PLANS.

3. WALL PENETRATIONS 4 INCHES AND LARGER ARE TO BE MADE WITH WALL PIPES WITH INTEGRALLY CAST OR CONTINUOUSLY WELDED WALL COLLARS. SMALLER WALL PENETRATIONS ARE TO BE MADE WITH WALL SLEEVES OR WALL PIPES.

4. ALL PIPE PENETRATIONS IN TANK FOUNDATIONS ARE TO BE MADE WITH WALL PIPES WITH INTEGRALLY CAST OR CONTINUOUSLY WELDED WALL COLLARS.

5. PIPING DRAWINGS INDICATE INVERT ELEVATIONS FOR GRAVITY FLOW LINES. SLOPE PIPE UNIFORMLY BETWEEN ELEVATIONS SHOWN; NO VALLEYS OR PEAKS PERMITTED IN GRAVITY FLOW LINES. FOR OTHER PIPING, REFER TO DETAIL SHEETS FOR PIPE ELEVATIONS AT EACH STRUCTURE. SITE PIPING DRAWINGS DO NOT INDICATE VERTICAL BENDS AND TRANSITIONS. WHEN NECESSARY, MAKE VERTICAL TRANSITIONS OR FURNISH AND INSTALL VERTICAL BENDS AT NO EXTRA COST. DO NOT EXCEED MANUFACTURER'S RECOMMENDATIONS FOR CURVATURE OF LINES AND/OR DEFLECTION OF PIPE JOINTS.

6. MAINTAIN MINIMUM CLEARANCE OF THREE (3) FEET FROM EDGE OF STRUCTURES TO CLOSEST EDGE OF PIPELINE ADJACENT AND PARALLEL TO EDGE OF STRUCTURE, UNLESS OTHERWISE NOTED ON PLANS.

7. PLACE PARALLEL PIPING IN COMMON TRENCH WHEN FEASIBLE, MAINTAINING MINIMUM ONE-FOOT (1') HORIZONTAL CLEARANCE

8. UNLESS OTHERWISE INDICATED, ABOVE-GROUND FITTINGS TO BE FLANGED DUCTILE IRON.

9. DIELECTRIC CONNECTIONS TO BE PREVENTED BY USE OF NON-CONDUCTIVE GASKETS BETWEEN DISSIMILAR PIPING MATERIALS.

10. EVERY EFFORT HAS BEEN MADE TO MAKE THE PIPING SCHEDULE COMPLETE AND CORRECT; HOWEVER, CONTRACTOR IS RESPONSIBLE FOR INSTALLING ALL PIPING NECESSARY FOR A COMPLETE OPERATING FACILITY WHETHER OR NOT SUCH PIPING IS INCLUDED IN THE SCHEDULE.

VALVE NOTES

1. EVERY EFFORT HAS BEEN MADE TO MAKE VALVE SCHEDULES COMPLETE AND CORRECT; HOWEVER, CONTRACTOR IS RESPONSIBLE FOR SUPPLYING AND INSTALLING ALL VALVES AND OPERATORS NECESSARY FOR A COMPLETE OPERATING FACILITY, WHETHER OR NOT SUCH VALVES ARE INCLUDED IN VALVE SCHEDULE OR ON PLANS.

2. PROVIDE BURIED VALVES WITH NUT OPERATORS, EXTENSION STEMS, AND VALVE BOXES WITH COVER. PROCESS PIPING AND PLANT DRAIN PIPING VALVE COVERS TO BE BLANK.

WATER AND WASTEWATER NOTES:

1. ALL GRAVITY SEWER LINES SHALL BE PVC SEWER PIPE MINIMUM OF SDR 26, MEETING ASTM D3034.

2. ALL SEWER LINES SHALL BE CONSTRUCTED OF SAME MATERIAL AND TYPE OF PIPE BETWEEN MANHOLES, UNLESS AN EXCEPTION IS SPECIFICALLY REQUESTED AND APPROVED BY THE ENGINEER.

3. ALL JOINT SEALS FOR GRAVITY SEWER PIPE SHALL MEET ASTM D3212.

4. ALL JOINT SEALS FOR FORCE MAINS, GRAVITY LINES PRESSURE RATED FOR 150 PSI, AND GRAVITY LINES WITHIN THE 100 YEAR FLOODPLAIN SHALL MEET ASTM F477.

5. SEWER ALIGNMENT SHALL BE LAID IN STRAIGHT ALIGNMENT WITH UNIFORM GRADE BETWEEN MANHOLES.

6. ALL SEWER LINES MUST BE CONSTRUCTED IN ACCORDANCE WITH CURRENT TEXAS COMMISSION ON ENVIRONMENTAL QUALITY (TCEQ) REGULATIONS, CHAPTER 217.

7. ALL TESTING MUST BE IN ACCORDANCE WITH CURRENT (TCEQ) REGULATIONS.

8. ALL TRENCH SAFETY AND TRENCH SHORING SHALL BE THE RESPONSIBILITY OF THE CONTRACTOR, PAYMENT WILL BE BY A SEPARATE PAY ITEM.

9. ALL SEALS BETWEEN SEWER LINES AND MANHOLES SHALL BE WATERTIGHT, SIZE-ON-SIZE RESILIENT CONNECTORS ALLOWING FOR DIFFERENTIAL SETTLEMENT AND MEETING ASTM C-923.

10. ALL MANHOLE INVERTS SHALL BE PROVIDED WITH A "U" SHAPED CHANNEL WITH A MINIMUM OF 1" FALL ACROSS THE MANHOLE THAT IS AS MUCH AS POSSIBLE A SMOOTH CONTINUATION OF THE INLET AND OUTLET PIPES. FOR MANHOLES CONNECTED TO PIPES LESS THAN 15 INCHES IN DIAMETER THE CHANNEL DEPTH SHALL BE AT LEAST HALF THE LARGEST PIPE DIAMETER. FOR MANHOLES CONNECTED TO PIPES 15 TO 24 INCHES IN DIAMETER THE CHANNEL DEPTH SHALL BE AT LEAST THREE FOURTHS THE LARGEST PIPE DIAMETER. FOR MANHOLES CONNECTED TO PIPES GREATER THAN 24 INCHES IN DIAMETER THE CHANNEL DEPTH SHALL BE LEAST EQUAL TO THE LARGEST PIPE DIAMETER. ALL BENCH PROVIDED ABOVE THE CHANNEL SHALL BE SLOPED AT A MINIMUM OF 0.5 INCH PER FOOT TOWARD THE FLOWLINE. (SEE MANHOLE BOTTOM DETAIL)

11. ALL MANHOLES WITH LARGER EFFLUENT PIPES THE TOPS OF ALL OF THE PIPES SHALL BE PLACED AT THE SAME ELEVATION AND FLOW CHANNELS IN THE INVERT SLOPED ON AN EVEN SLOPE FROM PIPE TO PIPE.

12. MANHOLE BASE SHALL BE OF CLASS A 3000 PSI CONCRETE IN 28 DAYS.

13. THE DIAMETER OF THE CONCRETE BASE SHALL NOT BE LESS THAN THE OUTSIDE DIAMETER OF THE MANHOLE PLUS 24".

14. ACCESS TO MANHOLES SHALL BE PROVIDED BY A PORTABLE LADDER.

15. WATER TIGHT MANHOLES WITH BOLTED AND GASKETED RING AND COVERS ARE REQUIRED.

16. MANHOLE TYPE MUST BE SPECIFIED WITH ALL DROP AND STANDARD MANHOLES.

17. MAXIMUM TRENCH WIDTH SHALL BE 24 INCHES OR THE PIPE O.D. PLUS 12 INCHES.

18. IF CONCRETE ENCASEMENT IS REQUIRED UNDER AN EXISTING OR PROPOSED ROADWAY, BACKFILL ABOVE THE CONCRETE AND PIPE SHALL BE AS DETAILED ABOVE FOR PAVED AREAS.

19. EXCAVATION IN EXISTING DRIVEWAY SHALL BE BACKFILLED AND REPAIRED TO EXISTING CONDITION. ALL BACKFILL SHALL BE COMPACTED TO TEX-113-E.

20. ALL EXCAVATION SHALL BE BACKFILLED AND COMPACTED TO THE APPROVAL OF THE ENGINEER.

21. WHERE PIPE INSTALLATIONS IN ROCK (OR OTHER INCOMPRESSIBLE FOUNDATION) THE CONTRACTOR SHALL EXCAVATE SO AS TO PROVIDE A MINIMUM OF 8" (OR 1/2" PER FOOT OF COVER) GRANULAR CUSHION BENEATH THE PIPE.

22. INSTALLATION OF ANY PIPE WITHIN 4' OF THE BACK OF CURB OR EDGE OF STREET OF A PROPOSED OR EXISTING STREET SHALL REQUIRE THE SAME EMBEDMENT AS FOR INSTALLATION IN STREETS.

23. CONTRACTOR SHALL SHAPE EMBEDMENT MATERIAL TO ACCOMMODATE THE BELLED JOINTS OF PIPES TO INSURE SUPPORT THROUGHOUT THEIR LENGTHS. BELLED JOINTS SHALL HAVE A MINIMUM OF 2" OF FILL BENEATH THEM.

24. IF EXCAVATED MATERIAL IS NOT ACCEPTABLE TO THE ENGINEER FOR BACKFILL, THE CONTRACTOR SHALL PROVIDE SELECT IMPORT MATERIAL AS REQUIRED, ALL BACKFILL MATERIAL IS SUBSIDIARY TO THE PRICE OF PIPE IN PLACE.

25. THRUST RESTRAINT TO BE IN ACCORDANCE WITH CITY STANDARD SPECIFICATION ITEM 510.3(22).

26. WATER LINE TESTING AND STERILIZATION TO BE PERFORMED IN ACCORDANCE WITH CITY STANDARD SPECIFICATION ITEMS 510.3(27)-(29). FORCE MAIN TESTING SHALL BE CONDUCTED AT THE PRESSURES SHOWN ON THE PLANS.

27. WATER LINES TO BE LAID TO THE FOLLOWING MINIMUM DEPTHS: 36 INCHES BELOW GROUND LINE IN NATURAL, UNDEVELOPED AREAS; 48 INCHES BELOW FINISH GRADE OF EXISTING STREETS OR OTHER TRAFFIC AREAS; 36 INCHES BELOW ACTUAL SUBGRADE OF PROPOSED STREETS OR OTHER TRAFFIC AREAS. TOP OF VALVE STEMS SHALL BE 18 INCHES TO 36 INCHES BELOW FINISHED GRADE.

28. THE CONTRACTOR TO PROVIDE FITTINGS, PLUGS, AND OTHER DEVICES FOR USE IN FILLING, FLUSHING, TESTING, ETC.

29. CONTRACTOR TO PROVIDE ADEQUATE THRUST BLOCKING TO WITHSTAND TEST PRESSURES.

30. DO NOT EXCEED MANUFACTURER'S RECOMMENDATION FOR CURVATURE OF LINES AND/OR DEFLECTION OF PIPE JOINTS. INSTALL JOINTS AS REQUIRED.

31. IF THE CONTRACTOR DISCOVERS A SUBTERRANEAN CAVITY OR VOID IN EXCESS OF ONE (1) CUBIC YARD DURING EXCAVATION, HE IS TO NOTIFY ENGINEER.

HANGER AND SUPPORT NOTES

1. CONTRACTOR IS RESPONSIBLE FOR DESIGNING, FURNISHING, AND INSTALLING HANGERS AND SUPPORTS FOR ALL PIPING AND VALVES TO PREVENT SAGGING AND LATERAL MOVEMENT, AND TO PREVENT TRANSFERRING STRESS TO EQUIPMENT OR COUPLINGS.

2. TRAPEZE HANGERS ARE PERMITTED, PROVIDED PIPES ARE AT THE SAME ELEVATION AND PARALLEL, AND ROLLER SUPPORTS ARE PROVIDED FOR EACH PIPE.

3. PIPE HANGERS AND SUPPORTS TO BE COATED IN ACCORDANCE WITH SPECIFICATION ITEM "PAINTING AND PROTECTIVE COATING" BEFORE INSTALLATION, UNLESS OTHERWISE NOTED ON PLANS. TWO NUTS TO BE PROVIDED (ONE FOR LOCKING PURPOSES) ON ALL HANGER RODS AND SUPPORTS.

4. ALL SUPPORTS TO BE SECURELY FASTENED.

OVER EXCAVATION, SITE PREPARATION AND SELECT FILL:

1. BUILDING AREAS AND ALL AREAS TO SUPPORT SELECT FILL SHOULD BE STRIPPED OF ALL VEGETATION AND ORGANIC TOPSOIL, EXTENDING A MINIMUM OF FIVE FEET BEYOND THE OUTER LIMITS OF FOOTPRINT. OVER EXCAVATION SHALL BE REQUIRED AT DEPTHS INDICATED BELOW. FILL AREAS WHERE STRATUM I AND II CLAY SUBGRADE WILL REMAIN SHALL BE THOROUGHLY PROOF ROLLED. A MINIMUM OF 5 PASSES OF A FULLY LOADED DUMP TRUCK OR SIMILAR METHOD APPROVED BY THE ENGINEER. THE INSPECTOR TO DOCUMENT SUBGRADE CONDITIONS AND OBSERVE PROOF ROLLING OPERATIONS. WEAK OR SOFT AREAS IDENTIFIED DURING PROOF ROLLING SHALL BE REMOVED AND REPLACED WITH SELECT FILL.

LOCATION	REMOVAL AND SELECT FILL REPLACEMENT
-CULVERT	4'-0" MIN.
-ACCESS ROAD	2'-0" MIN.
-LIFT STATION WET WELL	1'-0" MIN.
-LIFT STATION VALVE VAULT	1'-0" MIN.
-FLOW METER VAULT	1'-0" MIN.
-MCC BUILDINGS	6'-0" MIN.

2. UPON COMPLETION OF THE PROOF ROLLING OPERATIONS AND JUST PRIOR TO FILL PLACEMENT, THE CLAY SUBGRADE SHALL BE MOISTURE CONDITIONED BY SCARIFYING TO A MINIMUM DEPTH OF 6 INCHES AND RE-COMPACTING TO A MINIMUM OF 95 PERCENT OF THE MAXIMUM DENSITY AS DETERMINED BY TXDOT, TEX-114-E COMPACTION TEST. THE MOISTURE CONTENT OF THE CLAY SUBGRADE SHALL BE MAINTAINED WITHIN THE RANGE OF OPTIMUM MOISTURE CONTENT TO 3 PERCENTAGE POINTS ABOVE OPTIMUM MOISTURE CONTENT UNTIL PERMANENTLY COVERED.

3. MATERIALS USED, AS SELECT FILL FOR FINAL SITE GRADING IN BUILDING AREAS SHOULD BE CRUSHED STONE OR GRAVEL AGGREGATE. MATERIALS SPECIFIED FOR USE AS SELECT STRUCTURAL FILL SHALL MEET THE TEXAS DEPARTMENT OF TRANSPORTATION 2004 STANDARD SPECIFICATION FOR CONSTRUCTION OF HIGHWAYS, STREETS, AND BRIDGES, ITEM 247: TYPE A AND B, GRADE 2 (CRUSHED STONE), OR BETTER.

4. SELECT FILL SHALL BE PLACED IN LOOSE LIFTS NOT EXCEEDING 8 INCHES IN THICKNESS AND COMPACTED TO THE MAXIMUM DENSITY AS DETERMINED BY TXDOT, TEX-113-E COMPACTION TEST. THE MOISTURE CONTENT OF THE FILL SHOULD BE MAINTAINED WITHIN THE RANGE OF 2 PERCENTAGE POINTS BELOW TO 2 PERCENTAGE POINTS ABOVE THE OPTIMUM MOISTURE CONTENT UNTIL FINAL COMPACTION. THE WATER CONTENT OF THE FILL ALSO SHOULD BE MAINTAINED WITHIN THE SPECIFIED RANGE UNTIL THE FILL IS PERMANENTLY COVERED.

FIRE DEPARTMENT NOTES:

TRAVIS COUNTY EMERGENCY SERVICES DISTRICT NO. 12 (TCESD #12) NOTES

THE CURRENTLY ADOPTED FIRE CODE FOR TCESD #12 IS THE INTERNATIONAL FIRE CODE (IFC), 2009 EDITION. THE FIRE CODE ADOPTION ORDER AND ALL LOCAL CODE AMENDMENTS ARE ACCESSIBLE AT WWW.TCESD12.COM.

1. THE OWNER DEVELOPER SHALL BE RESPONSIBLE FOR CONTACTING TRAVIS COUNTY ESD #12 TO ENSURE COMPLIANCE WITH ALL CODES, ORDINANCES, STATUTES, AND PERMITTING REQUIREMENTS.
2. PRIOR TO BEGINNING ANY CONSTRUCTION AN APPROPRIATE TRAVIS COUNTY ESD #12 PERMIT SHALL BE OBTAINED AND POSTED ON THE JOB SITE.
3. AN APPROVED ALL-WEATHER DRIVING SURFACE (TO WITHIN 150' OF THE FARTHEST PART OF ANY PLANNED COMBUSTIBLE STRUCTURE) MUST BE SERVICEABLE PRIOR TO AND DURING CONSTRUCTION OF ANY COMBUSTIBLE STRUCTURE, UNLESS OTHERWISE APPROVED BY THE TCESD #12 FIRE CODE OFFICIAL. WHERE ALTERNATIVE METHODS OF PROTECTION, AS APPROVED BY THE TCESD #12 FIRE CODE OFFICIAL, ARE PROVIDED, THE ABOVE MAY BE MODIFIED OR WAIVED.
4. THE ALL-WEATHER DRIVING SURFACE ACCESS ROADS SHALL BE ENGINEERED AND INSTALLED TO SERVICE 75,000 LB. LIVE-VEHICLE LOADS.
5. MINIMUM VERTICAL CLEARANCE ABOVE AN ALL-WEATHER DRIVING SURFACE IS 13 FEET 6 INCHES FOR THE FULL WIDTH OF A REQUIRED ACCESS DRIVE.
6. TURNING RADII FOR ACCESS ROADS SHALL MEET OR EXCEED 25 FEET INSIDE AND 50 FEET OUTSIDE UNLESS OTHERWISE APPROVED BY THE TCESD #12 FIRE CODE OFFICIAL.
7. HYDRANTS SHALL MEET OR EXCEED THE MINIMUM STANDARD OF THE CITY OF MANOR(M511S-17) AND SHALL HAVE A STEAMER THREAD OF 4.5 INCHES NST FIRE THREAD.
8. HYDRANTS MUST BE INSTALLED WITH THE CENTER OF THE 4.5" OPENING AT LEAST 18" ABOVE FINISHED GRADE. THE 4.5" OPENING MUST FACE THE DRIVEWAY OR STREET, WITH 3 FT. TO 6 FT. SETBACKS FROM THE CURB LINE(S), AND THE 4.5" OPENING MUST BE TOTALLY UNOBSTRUCTED FROM THE STREET. NO OBSTRUCTION IS ALLOWED WITHIN 3 FT. OF ANY HYDRANT.
9. HYDRANT(S) SHALL BE COVERED WITH A BLACK BAG UNTIL THEY ARE ACCEPTED.
10. A CLOSE-OUT INSPECTION TEST OF HYDRANT FIRE FLOW IS REQUIRED BY TCESD #12. CONTRACTOR SHALL CONTACT TCESD12 TO SCHEDULE AN ACCEPTANCE TEST.
11. THE VERIFIED FIRE FLOW FOR THE PROPOSED STRUCTURE TYPE/OCCUPANCY SHALL MEET OR EXCEED VALUES LISTED IN IFC 2009 APPENDIX B PRIOR TO BEGINNING ANY COMBUSTIBLE CONSTRUCTION.
12. COMMERCIAL DUMPSTERS AND CONTAINERS WITH AN INDIVIDUAL CAPACITY OF 1.5 CUBIC YARDS OR GREATER SHALL NOT BE STORED OR PLACED WITHIN 10 FEET OF OPENINGS, COMBUSTIBLE WALLS, OR COMBUSTIBLE EVE LINES.

STORM WATER POLLUTION PREVENTION PLAN (SWP3) GENERAL NOTES

1. ALL CONSTRUCTION ACTIVITIES DISTURBING ONE ACRE AND GREATER MUST OBTAIN STORM WATER DISCHARGE AUTHORIZATION FROM THE TEXAS COMMISSION ON ENVIRONMENTAL QUALITY (TCEQ), THROUGH COMPLIANCE WITH TCEQ'S GENERAL PERMIT #TXR150000. THE PRIMARY CONSTRUCTION SITE OPERATOR(S) [PCSO] MUST PREPARE AND IMPLEMENT AN SWP3 THROUGHOUT CONSTRUCTION WHICH INCLUDES THE EROSION AND SEDIMENT CONTROL (ESC) PLAN AND OTHER BEST MANAGEMENT PRACTICES (BMPS) SPECIFIED IN THESE PLANS APPROVED BY TRAVIS COUNTY.
2. SMALL CONSTRUCTION ACTIVITIES DISTURBING BETWEEN ONE AND FIVE ACRES SHALL POST A TCEQ CONSTRUCTION SITE NOTICE (CSN) ON SITE PRIOR TO COMMENCING CONSTRUCTION. LARGE CONSTRUCTION ACTIVITIES DISTURBING FIVE ACRES OR GREATER SHALL SUBMIT A NOTICE OF INTENT (NOI) TO TCEQ AND POST THE NOI ON SITE AT LEAST SEVEN (7) DAYS PRIOR TO BEGINNING CONSTRUCTION. NOTICES POSTED MUST BE MAINTAINED THROUGHOUT CONSTRUCTION.
3. TRAVIS COUNTY IS OPERATOR OF THE SMALL MUNICIPAL SEPARATE STORM SEWER SYSTEM (MS4) RECEIVING STORM WATER DISCHARGES FROM THIS PROJECT, UNDER TCEQ MS4 PERMIT #TXR040327. UPON REQUEST BY TRAVIS COUNTY, THE PCSO SHALL PROVIDE A COPY OF THE NOI AND CSN; THE SWP3; AND REGULARLY PROVIDE COPIES OF THE SWP3 INSPECTION REPORTS, REQUIRED WEEKLY AND AFTER EVERY RAIN EVENTS THAT ARE 0.5 INCHES OR GREATER.
4. THE PCSO MUST REVISE THE SWP3 WHENEVER CHANGING SITE CONDITIONS, OR A CHANGE IN DESIGN, CONSTRUCTION, OPERATION, OR MAINTENANCE HAS A SIGNIFICANT EFFECT ON THE DISCHARGE OF POLLUTANTS NOT PREVIOUSLY ADDRESSED; OR WHEN RESULTS OF INSPECTIONS BY SITE OPERATOR, TRAVIS COUNTY, TCEQ, OR OTHER LOCAL AGENCY AUTHORIZED TO APPROVE ESC PLANS INDICATE THE SWP3 IS PROVING INEFFECTIVE IN ELIMINATING OR SIGNIFICANTLY MINIMIZING POLLUTANTS IN DISCHARGES FROM THE SITE.
5. TEMPORARY PERMANENT EROSION CONTROL AND STABILIZATION MEASURES MUST BE INITIATED AS SOON AS PRACTICABLE, AND AS SPECIFIED ON THE PLANS, IN PORTIONS OF THE SITE WHERE CONSTRUCTION ACTIVITIES HAVE TEMPORARILY OR PERMANENTLY CEASED. THESE MEASURES MUST BE INITIATED NO LATER THAN 14 DAYS AFTER CESSATION, UNLESS CONSTRUCTION ACTIVITIES WILL RESUME WITHIN 21 DAYS IN THE AREA.
6. UPON FINAL STABILIZATION OF THE ENTIRE SITE, INCLUDING COMPLETION OF ALL STABILIZATION REQUIREMENTS OF THE APPROVED PLANS AND PERMIT AS VERIFIED BY TRAVIS COUNTY, THE PCSO SHALL SUBMIT A NOTICE OF TERMINATION (NOT) TO TCEQ.

REV	DATE	BY	DESCRIPTION	APPROVED

VERIFY SCALES

0 1"

IF BAR DOES NOT MEASURE ONE INCH ON THIS SHEET, ADJUST ACCORDINGLY.

STATE OF TEXAS
SUSAN SMITH-TURRIETA
86839
LICENSED
PROFESSIONAL ENGINEER
6-28-2016

DRAWN BY: RR
DESIGNED BY: SST
REVIEWED BY: SST
PROJECT NO: SST# XXXXX

SMITH TURRIETA ENGINEERING
P.O. BOX 5902, AUSTIN, TEXAS 78763
TELEPHONE: (512) 569-9022
Texas Registration Number, F-16076

CITY OF AUSTIN, TEXAS
TAYLOR LANE 0.1 MGD WASTEWATER TREATMENT PLANT PROJECT

GENERAL NOTES
SHEET 1 OF 3

DWG. NO. G-2

K:\ACAD\clients\STE\WWTP Ph2\G-GN-NT101.dwg modified by roodrj on Apr 28, 16 4:11 PM

AUSTIN WATER UTILITY GENERAL CONSTRUCTION NOTES

August 21, 2013

1. THE CITY STANDARD CONSTRUCTION SPECIFICATIONS CURRENT AT THE TIME OF BIDDING SHALL COVER MATERIAL AND METHODS USED TO DO THIS WORK.

2. CONTRACTOR MUST OBTAIN A STREET CUT PERMIT FROM WATERSHED PROTECTION AND DEVELOPMENT REVIEW DEPARTMENT, RIGHT OF WAY MANAGEMENT DIVISION BEFORE BEGINNING CONSTRUCTION WITHIN THE RIGHT-OF-WAY OF A PUBLIC STREET OR ALLEY.

3. AT LEAST 48 HOURS BEFORE BEGINNING ANY WATER AND WASTEWATER CONSTRUCTION IN PUBLIC R.O.W. OR PUBLIC EASEMENT, THE CONTRACTOR SHALL NOTIFY WATERSHED PROTECTION AND DEVELOPMENT REVIEW INSPECTION OR WATER AND WASTEWATER UTILITY TAPS INSPECTION AT THE NUMBER INDICATED ON THE PLANS BY THE AWU PLAN REVIEWER.

4. THE CONTRACTOR SHALL CONTACT THE AUSTIN AREA "ONE CALL" SYSTEM AT 1-800-344-8377 FOR EXISTING UTILITY LOCATIONS PRIOR TO ANY EXCAVATION IN ADVANCE OF CONSTRUCTION. THE CONTRACTOR SHALL VERIFY THE LOCATIONS OF ALL UTILITIES TO BE EXTENDED, TIED TO, OR ALTERED, OR SUBJECT TO DAMAGE/INCONVENIENCE BY THE CONSTRUCTION OPERATIONS. THE CITY OF AUSTIN WATER AND WASTEWATER MAINTENANCE RESPONSIBILITY ENDS AT R.O.W./EASEMENT LINES.

5. NO OTHER UTILITY SERVICE/APPURTENANCES SHALL BE PLACED NEAR THE PROPERTY LINE, OR OTHER ASSIGNED LOCATION DESIGNATED FOR WATER AND WASTEWATER UTILITY SERVICE THAT WOULD INTERFERE WITH THE WATER AND WASTEWATER SERVICES.

6. THE CITY SPECIFICATION ITEM 509S WILL BE REQUIRED AS A MINIMUM TRENCH SAFETY MEASURE.

7. ALL MATERIALS TESTS, INCLUDING SOIL DENSITY TESTS AND DETAILED SOIL ANALYSES, SHALL BE CONDUCTED BY AN INDEPENDENT LABORATORY AND FUNDED BY THE OWNER IN ACCORDANCE WITH CITY STANDARD SPECIFICATION ITEM 1804S.04.

8. PRESSURE TAPS SHALL BE IN ACCORDANCE WITH CITY STANDARD SPECIFICATION ITEM 510.3(24). THE CONTRACTOR SHALL PERFORM EXCAVATION ETC., AND SHALL FURNISH, INSTALL AND AIR TEST THE SLEEVE AND VALVE. WHEN CONTRACTORS MAKE THE TAP A CITY INSPECTOR MUST BE PRESENT AND 2 WORKING DAYS (MIN.) NOTICE MUST BE GIVEN. "SIZE ON SIZE" TAPS WILL NOT BE PERMITTED, UNLESS, IT HAS BEEN DEMONSTRATED THAT A MORE ACCEPTABLE CONNECTION WOULD INVOLVE CONSIDERABLE HARDSHIP TO THE UTILITY SYSTEM. ALL TAPS SHALL BE MADE BY USE OF AN APPROVED FULL CIRCLE-GASKETED CAST IRON OR DUCTILE IRON TAPPING SLEEVE. CONCRETE BLOCKING SHALL BE PLACED UNDER ALL TAP SLEEVES PRIOR TO MAKING THE PRESSURE TAP AND THE USE OF PRECAST BLOCKS MAY BE USED TO HOLD THE TAP IN ITS CORRECT POSITION PRIOR TO BLOCKING. THE BLOCKING BEHIND AND UNDER THE TAP SHALL HAVE A MINIMUM OF 24 HOURS CURING TIME BEFORE THE VALVE CAN BE RE-OPENED FOR SERVICE FROM THAT TAP.

9. THRUST RESTRAINT SHALL BE IN ACCORDANCE WITH CITY STANDARD SPECIFICATION ITEM 510.3 (22).

10. ALL BRANCH CONNECTIONS SHALL HAVE THE VALVE BOLTED TO THE MAIN BY METHODS OF FLANGE OR SWIVEL TEES. FOSTER ADAPTORS MAY BE USED IN LIEU OF FLANGE OR SWIVEL TEES WHEN CALLED OUT ON THE PLANS BY THE DESIGN ENGINEER.

11. A). FIRE HYDRANTS SHALL BE SET IN ACCORDANCE WITH CITY STANDARD SPECIFICATION ITEM 511S.4
    B). FIRE HYDRANTS SHALL BE PAINTED FLYNT ALUMINUM OR EQUAL.

12. WATER LINE TESTING AND STERILIZATION SHALL BE PERFORMED IN ACCORDANCE WITH CITY STANDARD SPECIFICATION ITEMS 510.3 (27)-(29). FORCE MAIN PRESSURE TESTING SHALL BE CONDUCTED AND FALL UNDER THE SPECIFICATIONS AS WATER LINES (PRESSURE PIPE) OR AT THE PRESSURES SHOWN ON THE APPROVED PLANS.

13. ALL MATERIAL USED ON THIS PROJECT MUST BE LISTED ON THE STANDARD PRODUCTS LISTING. ANY MATERIAL NOT LISTED HAS TO GO THROUGH THE REVIEW OF THE STANDARDS COMMITTEE FOR REVIEW AND APPROVAL PRIOR TO START OF PROJECT. TESTING AND EVALUATION OF PRODUCTS ARE REQUIRED BEFORE APPROVAL WILL BE GIVEN ANY CONSIDERATION.

14. WHEN WATER SERVICES ARE DAMAGED AND THE SERVICE MATERIAL IS PE, THE LINE SHALL BE REPAIRED ONLY BY HEAT FUSION WELD OR REPLACED THE FULL LENGTH WITH TYPE K COPPER MATERIAL. ANY TIME PB IS DAMAGED OR TAMPERED WITH IN ANY WAY, THE SERVICE LINE SHALL BE REPLACED FULL LENGTH WITH TYPE K COPPER MATERIAL. NOTE: FULL LENGTH IS FROM CORPORATION STOP TO METER.

15. WHEN AN EXISTING WATERLINE SHUT OUT IS NECESSARY AND POSSIBLE, THE CONTRACTOR SHALL NOTIFY THE CONSTRUCTION INSPECTOR WHO WILL THEN NOTIFY THE AUSTIN WATER UTILITY DISPATCH AND THE AFFECTED CUSTOMERS A MINIMUM OF SEVENTY-TWO (72) HOURS IN ADVANCE.

16. THE CONTRACTOR SHALL NOTIFY THE CONSTRUCTION INSPECTOR SO THAT HE CAN NOTIFY THE AUSTIN WATER UTILITY AT 512-972-0000 AT A MINIMUM OF 72 HOURS PRIOR TO RELOCATING ANY DOMESTIC OR FIRE DEMAND WATER METERS. THE CONTRACTOR SHALL CAREFULLY REMOVE ALL METERS AND METERS BOXES THAT ARE INDICATED TO BE RELOCATED OR SALVAGED. THE CONTRACTOR SHALL INSTALL THE REMOVED METER OR CITY PROVIDED METER AT THE NEW LOCATION INDICATED ON THE CONSTRUCTION PLANS.

17. ALL MANHOLES IN UNPAVED AREAS PROVIDING DIRECT ACCESS TO A WASTEWATER LINE SHALL BE WATERTIGHT AND BEAR THE WORDING AND INSIGNIA FOR THE CITY OF AUSTIN.

18. THE CONTRACTOR SHALL VERIFY ALL VERTICAL AND HORIZONTAL LOCATIONS OF EXISTING UTILITIES PRIOR TO STARTING ONSITE UTILITY WORK.

19. ALL RESPONSIBILITY FOR THE ADEQUACY OF THESE PLANS REMAINS WITH THE ENGINEER WHO PREPARED THEM. APPROVAL OF THESE PLANS BY THE CITY OF AUSTIN DOES NOT REMOVE THESE RESPONSIBILITIES.

20. REVIEW BY THE AUSTIN WATER UTILITY APPLIES ONLY TO FACILITIES WITHIN PUBLIC STREETS OR PUBLIC UTILITY EASEMENTS. ALL OTHER WATER AND WASTEWATER FACILITIES INSIDE PRIVATE PROPERTY ARE UNDER THE JURISDICTION OF BUILDING INSPECTION.

21. ALL WATER AND WASTEWATER MAINS SHALL BE INSTALLED IN ACCORDANCE WITH THE SEPARATION DISTANCES INDICATED IN CHAPTER 290 - DRINKING WATER STANDARDS, AND CHAPTER 217 - DESIGN CRITERIA FOR SEWAERAGE SYSTEMS, OF TCEQ RULES.

22. CONTRACTOR'S PERSONNEL THAT PERFORM BUTT FUSION AND ELECTRO-FUSION ON OR TO HDPE PIPE AND FITTINGS MUST HAVE CURRENT QUALIFICATION TRAINING CERTIFICATE ISSUED BY MCELROY OR COMPARABLE TRAINING PROGRAM.

23. SHOP DRAWINGS SHALL BE SUBMITTED FOR AWU APPROVAL FOR LARGE DIAMETER PRE-CAST MANHOLES, JUNCTION BOXES, WET WELLS, AND SIMILAR STRUCTURES. THE SHOP DRAWINGS SHALL INCLUDE FLOWLINE ELEVATIONS OF ALL INCOMING AND OUTGOING PIPES, ELEVATION OF TRANSITION FROM LARGE DIAMETER SECTIONS TO 48" ID SECTION, TOP OF MANHOLE ELEVATION, SURROUNDING GROUND ELEVATION, AS WELL AS SPECIAL CONSTRUCTION CONSIDERATIONS THAT ARE SPECIFIED IN THE CONTRACT DRAWINGS.

24. VALVE STEM EXTENSIONS SHALL CONSIST OF A SINGLE PIECE OF IRON ROD OF THE REQUIRED LENGTH WITH A SOCKET ON ONE END AND NUT ON THE OTHER.

25. ASBESTOS CONCRETE PIPE (AC PIPE) HAS BEEN INSTALLED IN THE PAST AS PART OF AUSTIN WATER UTILITY'S WATER DISTRIBUTION AND WASTEWATER COLLECTION SYSTEMS. AUSTIN WATER UTILITY'S INFRASTRUCTURE INCLUDES AC PIPE THAT IS CURRENTLY IN SERVICE AS WELL AS AC PIPE THAT HAS BEEN ABANDONED AND IS NO LONGER IN SERVICE. RECORD INFORMATION MAY NOT BE COMPLETE IN YOUR PROJECT AREA. CONTRACTORS AND SUBCONTRACTORS MUST BE ALERT TO THE PRESENCE AC PIPE AND BE KNOWLEDGEABLE OF HOW TO IDENTIFY IT. DISTURBANCE, REMOVAL OR CUTTING OF ASBESTOS CONTAINING PIPE IS TO BE CONDUCTED IN ACCORDANCE WITH THE REQUIREMENTS OF TEXAS ADMINISTRATIVE CODE 25, SECTION 15, ARTICLE 4477-3A AND 29 CFR 1926.1101. REFERENCE STANDARD SPECIFICATION SECTION 01901. CONTACT THE CITY OF AUSTIN ASBESTOS MANAGER AT 512-974-7154 THIRTY (30) DAYS PRIOR TO THE PLANNED DISTURBANCE OF THE AC PIPE. ONLY LICENSED PERSONNEL ARE PERMITTED TO DISTURB, REMOVE, TRANSPORT AND DISPOSE OF AC PIPE.

ECM - EROSION CONTROL NOTES

1. THE CONTRACTOR SHALL INSTALL EROSION/SEDIMENTATION CONTROLS AND TREE/NATURAL AREA PROTECTIVE FENCING PRIOR TO ANY SITE PREPARATION WORK (CLEARING, GRUBBING OR EXCAVATION).

2. THE PLACEMENT OF EROSION/SEDIMENTATION CONTROLS SHALL BE IN ACCORDANCE WITH THE ENVIRONMENTAL CRITERIA MANUAL AND THE APPROVED EROSION AND SEDIMENTATION CONTROL PLAN. THE COA ESC PLAN SHALL BE CONSULTED AND USED AS THE BASIS FOR A TPDES REQUIRED SWPPP. IF A SWPPP IS REQUIRED, IT SHALL BE AVAILABLE FOR REVIEW BY THE CITY OF AUSTIN ENVIRONMENTAL INSPECTOR AT ALL TIMES DURING CONSTRUCTION, INCLUDING AT THE PRE-CONSTRUCTION MEETING. THE CHECKLIST BELOW CONTAINS THE BASIC ELEMENTS THAT SHALL BE REVIEWED FOR PERMIT APPROVAL BY COA EV PLAN REVIEWERS AS WELL AS COA EV INSPECTORS.

PLAN SHEETS SUBMITTED TO THE CITY OF AUSTIN MUST SHOW THE FOLLOWING:

- DIRECTION OF FLOW DURING GRADING OPERATIONS.
- LOCATION, DESCRIPTION, AND CALCULATIONS FOR OFF-SITE FLOW DIVERSION STRUCTURES.
- AREAS THAT WILL NOT BE DISTURBED; NATURAL FEATURES TO BE PRESERVED.
- DELINEATION OF CONTRIBUTING DRAINAGE AREA TO EACH PROPOSED BMP (E.G., SILT FENCE, SEDIMENT BASIN, ETC.)
- LOCATION AND TYPE OF E&S BMPS FOR EACH PHASE OF DISTURBANCE.
- CALCULATIONS FOR BMPS AS REQUIRED.
- LOCATION AND DESCRIPTION OF TEMPORARY STABILIZATION MEASURES.
- LOCATION OF ON-SITE SPOILS, DESCRIPTION OF HANDLING AND DISPOSAL OF BORROW MATERIALS, AND DESCRIPTION
- DESCRIBE SEQUENCE OF CONSTRUCTION AS IT PERTAINS TO ESC INCLUDING THE FOLLOWING ELEMENTS:

1. INSTALLATION SEQUENCE OF CONTROLS (E.G. PERIMETER CONTROLS, THEN SEDIMENT BASINS, THEN TEMPORARY STABILIZATION, THEN PERMANENT, ETC)
2. PROJECT PHASING IF REQUIRED (LOC GREATER THAN 25 ACRES)
3. SEQUENCE OF GRADING OPERATIONS AND NOTATION OF TEMPORARY STABILIZATION MEASURES TO BE USED
4. SCHEDULE FOR CONVERTING TEMPORARY BASINS TO PERMANENT WQ CONTROLS
5. SCHEDULE FOR REMOVAL OF TEMPORARY CONTROLS
6. ANTICIPATED MAINTENANCE SCHEDULE FOR TEMPORARY CONTROLS

CATEGORIZE EACH BMP UNDER ONE OF THE FOLLOWING AREAS OF BMP ACTIVITY AS DESCRIBED BELOW:

3.1 MINIMIZE DISTURBED AREA AND PROTECT NATURAL FEATURES AND SOIL

3.2 CONTROL STORMWATER FLOWING ONTO AND THROUGH THE PROJECT

3.3 STABILIZE SOILS

3.4 PROTECT SLOPES

3.5 PROTECT STORM DRAIN INLETS

3.6 ESTABLISH PERIMETER CONTROLS AND SEDIMENT BARRIERS

3.7 RETAIN SEDIMENT ON-SITE AND CONTROL DEWATERING PRACTICES

3.8 ESTABLISH STABILIZED CONSTRUCTION EXITS

3.9 ANY ADDITIONAL BMPS

NOTE THE LOCATION OF EACH BMP ON YOUR SITE MAP(S).

FOR ANY STRUCTURAL BMPS, YOU SHOULD PROVIDE DESIGN SPECIFICATIONS AND DETAILS AND REFER TO THEM.

FOR MORE INFORMATION, SEE CITY OF AUSTIN ENVIRONMENTAL CRITERIA MANUAL 1.4.

3. THE PLACEMENT OF TREE/NATURAL AREA PROTECTIVE FENCING SHALL BE IN ACCORDANCE WITH THE CITY OF AUSTIN STANDARD NOTES FOR TREE AND NATURAL AREA PROTECTION AND THE APPROVED GRADING/TREE AND NATURAL AREA PLAN.

4. A PRE-CONSTRUCTION CONFERENCE SHALL BE HELD ON-SITE WITH THE CONTRACTOR, DESIGN ENGINEER/PERMIT APPLICANT AND ENVIRONMENTAL INSPECTOR AFTER INSTALLATION OF THE EROSION/SEDIMENTATION CONTROLS AND TREE/NATURAL AREA PROTECTION MEASURES AND PRIOR TO BEGINNING ANY SITE PREPARATION WORK. THE OWNER OR OWNER'S REPRESENTATIVE SHALL NOTIFY THE PLANNING AND DEVELOPMENT REVIEW DEPARTMENT, 512-974-2278, AT LEAST THREE DAYS PRIOR TO THE MEETING DATE. COA APPROVED ESC PLAN AND TPDES SWPPP (IF REQUIRED) SHOULD BE REVIEWED BY COA EV INSPECTOR AT THIS TIME.

5. ANY MAJOR VARIATION IN MATERIALS OR LOCATIONS OF CONTROLS OR FENCES FROM THOSE SHOWN ON THE APPROVED PLANS WILL REQUIRE A REVISION AND MUST BE APPROVED BY THE REVIEWING ENGINEER, ENVIRONMENTAL SPECIALIST OR CITY ARBORIST AS APPROPRIATE. MAJOR REVISIONS MUST BE APPROVED BY THE PLANNING AND DEVELOPMENT REVIEW DEPARTMENT. MINOR CHANGES TO BE MADE AS FIELD REVISIONS TO THE EROSION AND SEDIMENTATION CONTROL PLAN MAY BE REQUIRED BY THE ENVIRONMENTAL INSPECTOR DURING THE COURSE OF CONSTRUCTION TO CORRECT CONTROL INADEQUACIES.

6. THE CONTRACTOR IS REQUIRED TO PROVIDE A CERTIFIED INSPECTOR WITH EITHER A CERTIFIED PROFESSIONAL IN EROSION AND SEDIMENT CONTROL (CPESC), CERTIFIED EROSION, SEDIMENT AND STORMWATER-INSPECTOR (CESSWI) OR CERTIFIED INSPECTOR OF SEDIMENTATION AND EROSION CONTROLS (CISEC) CERTIFICATION TO INSPECT THE CONTROLS AND FENCES AT WEEKLY INTERVALS AND AFTER SIGNIFICANT RAINFALL EVENTS TO INSURE THAT THEY ARE FUNCTIONING PROPERLY. THE PERSON(S) RESPONSIBLE FOR MAINTENANCE OF CONTROLS AND FENCES SHALL IMMEDIATELY MAKE ANY NECESSARY REPAIRS TO DAMAGED AREAS. SILT ACCUMULATION AT CONTROLS MUST BE REMOVED WHEN THE DEPTH REACHES SIX (6) INCHES.

7. PRIOR TO FINAL ACCEPTANCE BY THE CITY, HAUL ROADS AND WATERWAY CROSSINGS CONSTRUCTED FOR TEMPORARY CONTRACTOR ACCESS MUST BE REMOVED, ACCUMULATED SEDIMENT REMOVED FROM THE WATERWAY AND THE AREA RESTORED TO THE ORIGINAL GRADE AND REVEGETATED. ALL LAND CLEARING DEBRIS SHALL BE DISPOSED OF IN APPROVED SPOIL DISPOSAL SITES.

ECM - EROSION CONTROL NOTES CONTINUED:

8. ALL WORK MUST STOP IF A VOID IN THE ROCK SUBSTRATE IS DISCOVERED WHICH IS; ONE SQUARE FOOT IN TOTAL AREA; BLOWS AIR FROM WITHIN THE SUBSTRATE AND/OR CONSISTENTLY RECEIVES WATER DURING ANY RAIN EVENT. AT THIS TIME IT IS THE RESPONSIBILITY OF THE PROJECT MANAGER TO IMMEDIATELY CONTACT A CITY OF AUSTIN ENVIRONMENTAL INSPECTOR FOR FURTHER INVESTIGATION.

9. TEMPORARY AND PERMANENT EROSION CONTROL: ALL DISTURBED AREAS SHALL BE RESTORED AS NOTED BELOW.

A. ALL DISTURBED AREAS TO BE REVEGETATED ARE REQUIRED TO PLACE A MINIMUM OF SIX (6) INCHES OF TOPSOIL [SEE STANDARD SPECIFICATION ITEM NO. 601S.3(A)]. DO NOT ADD TOPSOIL WITHIN THE CRITICAL ROOT ZONE OF EXISTING TREES. THE TOPSOIL SHALL BE COMPOSED OF 4 PARTS OF SOIL MIXED WITH 1 PART COMPOST, BY VOLUME. THE COMPOST SHALL MEET THE DEFINITION OF COMPOST AS DEFINED BY TxDOT SPECIFICATION ITEM 161. THE SOIL SHALL BE LOCALLY AVAILABLE NATIVE SOIL THAT MEETS THE FOLLOWING SPECIFICATIONS:

- SHALL BE FREE OF TRASH, WEEDS, DELETERIOUS MATERIALS, ROCKS, AND DEBRIS.
- 100% SHALL PASS THROUGH A 1.5-INCH (38-MM) SCREEN.
- SOIL TO BE A LOAMY MATERIAL THAT MEETS THE REQUIREMENTS OF THE TABLE BELOW IN ACCORDANCE WITH THE USDA TEXTURAL TRIANGLE. SOIL KNOWN LOCALLY AS "RED DEATH" IS NOT AN ALLOWABLE SOIL. TEXTURAL COMPOSITION SHALL MEET THE FOLLOWING CRITERIA:

TEXTURAL CLASS	MINIMUM	MAXIMUM
CLAY	5%	50%
SILT	10%	50%
SAND	15%	67%

- AN OWNER/ENGINEER MAY PROPOSE USE OF ONSITE SALVAGED TOPSOIL WHICH DOES NOT MEET THE SOIL TEXTURE CLASS REQUIRED ABOVE BY PROVIDING A SOIL ANALYSIS AND A WRITTEN STATEMENT FROM A QUALIFIED PROFESSIONAL IN SOILS, LANDSCAPE ARCHITECTURE, OR AGRONOMY INDICATING THE ONSITE TOPSOIL WILL PROVIDE AN EQUIVALENT GROWTH MEDIA AND SPECIFYING WHAT, IF ANY, SOIL AMENDMENTS ARE REQUIRED.
- SOIL AMENDMENTS SHALL BE WORKED INTO THE EXISTING ONSITE TOPSOIL WITH A DISC OR TILLER TO CREATE A WELL-BLENDED MATERIAL.

(FOR CONTINUATION OF EROSION CONTROL NOTES SEE SHEET G-4).

GENERAL CONSTRUCTION NOTES

1. ALL RESPONSIBILITY FOR THE ADEQUACY OF THESE PLANS REMAINS WITH THE ENGINEER WHO PREPARED THEM. IN REVIEWING THESE PLANS, THE CITY OF AUSTIN MUST RELY ON THE ADEQUACY OF THE WORK OF THE DESIGN ENGINEER.

2. CONTRACTOR SHALL CALL THE ONE CALL CENTER (512-472-2822) FOR UTILITY LOCATIONS PRIOR TO ANY WORK IN CITY EASEMENTS OR STREET R.O.W.

3. CONTRACTOR SHALL NOTIFY THE DEPARTMENT OF PUBLIC WORKS AND TRANSPORTATION (DPWT) AT 512-499-7161 AT LEAST 24 HOURS PRIOR TO THE INSTALLATION OF ANY DRAINAGE FACILITY WITHIN A DRAINAGE EASEMENT OR STREET R.O.W. THE METHOD OF PLACEMENT AND COMPACTION OF BACKFILL IN THE CITY'S R.O.W. MUST BE APPROVED PRIOR TO THE START OF BACKFILL OPERATIONS.

4. FOR SLOPES OR TRENCHES MORE THAN FIVE (5) FEET IN DEPTH, A NOTE MUST BE ADDED TO THE GENERAL CONSTRUCTION NOTES STATING THAT: "ALL CONSTRUCTION OPERATIONS SHALL BE ACCOMPLISHED IN ACCORDANCE WITH THE CITY OF AUSTIN STANDARD SPECIFICATIONS ITEM NO. 509 AND APPLICABLE REGULATIONS OF THE U.S. OCCUPATIONAL SAFETY AND HEALTH ADMINISTRATION (OSHA)." COPIES OF OSHA STANDARDS MAY BE PURCHASED FROM THE U.S. GOVERNMENT PRINTING OFFICE; INFORMATION AND RELATED REFERENCE MATERIALS MAY BE PURCHASED FROM OSHA, 611 E. 6TH STREET, AUSTIN, TEXAS.

5. DEVELOPER INFORMATION:

OWNER: CLUB DEAL 120
DOUG H. GILLILAND

ADDRESS: 9285 HUNTINGTON SQUARE
NORTH RICHLAND HILLS
TX 76182

PHONE: 817-788-1000

NAME: SUSAN TURRIETA, PE PHONE: 512-569-9022
OWNER'S REPRESENTATIVE RESPONSIBLE FOR PLAN ALTERATIONS.

NAME: CONTRACTOR PHONE:
PERSON OR FIRM RESPONSIBLE FOR EROSION/SEDIMENTATION CONTROL MAINTENANCE:

NAME: CONTRACTOR PHONE:
PERSON OR FIRM RESPONSIBLE FOR TREE/NATURAL AREA PROTECTION MAINTENANCE:

REV	DATE	BY	DESCRIPTION	APPROVED

VERIFY SCALES

0 1"

IF BAR DOES NOT MEASURE ONE INCH ON THIS SHEET, ADJUST ACCORDINGLY.

STATE OF TEXAS
SUSAN SMITH-TURRIETA
86839
LICENSED
PROFESSIONAL ENGINEER
6-28-2016

DRAWN BY: RR

DESIGNED BY: SST

REVIEWED BY: SST

PROJECT NO: SST# XXXXX

SMITH TURRIETA ENGINEERING
P.O. BOX 5902, AUSTIN, TEXAS 78763
TELEPHONE: (512) 569-9022
Texas Registration Number, F-16076

CITY OF AUSTIN, TEXAS
TAYLOR LANE 0.1 MGD WASTEWATER
TREATMENT PLANT PROJECT

GENERAL NOTES
SHEET 2 OF 3

DWG. NO.
G-3

K:\ACAD\clients\STE\WWTP Ph2\G-GN-NT102.dwg modified by roodrj on May 3, 16 3:39 PM

ECM – P-1 EROSION CONTROL NOTES (CONTINUED FROM SHEET G-3)

TOPSOIL SALVAGED FROM THE EXISTING SITE MAY OFTEN BE USED, BUT IT SHOULD MEET THE SAME STANDARDS AS SET FORTH IN THESE STANDARDS.

THE VEGETATIVE STABILIZATION OF AREAS DISTURBED BY CONSTRUCTION SHALL BE AS FOLLOWS:

TEMPORARY VEGETATIVE STABILIZATION:

1. FROM SEPTEMBER 15 TO MARCH 1, SEEDING SHALL BE WITH COOL SEASON COVER CROPS (WHEAT AT 0.5 POUNDS PER 1000 SF, OATS AT 0.5 POUNDS PER 1000 SF, CEREAL RYE GRAIN AT 0.5 POUNDS PER 1000 SF) WITH A TOTAL RATE OF 1.5 POUNDS PER 1000 SF. COOL SEASON COVER CROPS ARE NOT PERMANENT EROSION CONTROL.
2. FROM MARCH 2 TO SEPTEMBER 14, SEEDING SHALL BE WITH HULLED BERMUDA AT A RATE OF 1 POUNDS PER 1000 SF.
   - A. FERTILIZER SHALL BE WATER SOLUBLE WITH AN ANALYSIS OF 15–15–15 TO BE APPLIED ONCE AT PLANTING AND ONCE DURING THE PERIOD OF ESTABLISHMENT AT A RATE OF 1/2 POUND PER 1000 SF.
   - B. HYDROMULCH SHALL COMPLY WITH TABLE1, BELOW.
   - C. TEMPORARY EROSION CONTROL SHALL BE ACCEPTABLE WHEN THE GRASS HAS GROWN AT LEAST 1 1/2 INCHES HIGH WITH 95% COVERAGE, PROVIDED NO BARE SPOTS LARGER THAN 16 SQUARE FEET EXIST.
   - D. WHEN REQUIRED, NATIVE GRASS SEEDING SHALL COMPLY WITH REQUIREMENTS OF THE CITY OF AUSTIN ENVIRONMENTAL CRITERIA MANUAL.

TABLE 1: HYDROMULCHING FOR TEMPORARY VEGETATIVE STABILIZATION

MATERIAL RATES	DESCRIPTION	LONGEVITY	TYPICAL APPLICATIONS	APPLICATION
100% OR ANY BLEND OF WOOD, STRAW, AND/OR COTTON PLANT MATERIAL (EXCEPT NO MULCH SHALL EXCEED 30% PAPER)	70% OR GREATER WOOD/STRAW 30% OR LESS PAPER OR NATURAL FIBERS	0–3 MONTHS	MODERATE SLOPES: FROM FLAT TO 3:1	1500 TO 2000 LBS PER ACRE

PERMANENT VEGETATIVE STABILIZATION:

1. FROM SEPTEMBER 15 TO MARCH 1, SEEDING IS CONSIDERED TO BE TEMPORARY STABILIZATION ONLY. IF COOL SEASON COVER CROPS EXIST WHERE PERMANENT VEGETATIVE STABILIZATION IS DESIRED, THE GRASSES SHALL BE MOWED TO A HEIGHT OF LESS THAN ONE–HALF (1/2) INCH AND THE AREA SHALL BE RE–SEEDED IN ACCORDANCE WITH 2. BELOW.
2. FROM MARCH 2 TO SEPTEMBER 14, SEEDING SHALL BE WITH HULLED BERMUDA AT A RATE OF 1 POUND PER 1000 SF WITH A PURITY OF 95% WITH 85% GERMINATION. BERMUDA GRASS IS A WARM SEASON GRASS AND IS CONSIDERED PERMANENT EROSION CONTROL.
   - A. FERTILIZER SHALL BE A WATER SOLUBLE WITH AN ANALYSIS OF 15–15–15 TO BE APPLIED ONCE AT PLANTING AND ONCE DURING THE PERIOD OF ESTABLISHMENT AT A RATE OF 1/2 POUND PER 1000 SF.
   - B. HYDROMULCH SHALL COMPLY WITH TABLE 2, BELOW.
   - C. THE PLANTED AREA SHALL BE IRRIGATED OR SPRINKLED IN A MANNER THAT WILL NOT ERODE THE TOPSOIL, BUT WILL SUFFICIENTLY SOAK THE SOIL TO A DEPTH OF SIX INCHES. THE IRRIGATION SHALL OCCUR AT DAILY INTERVALS (MINIMUM) DURING THE FIRST TWO MONTHS. RAINFALL OCCURRENCES OF ½ INCH OR MORE SHALL POSTPONE THE WATERING SCHEDULE FOR ONE WEEK.
   - D. PERMANENT EROSION CONTROL SHALL BE ACCEPTABLE WHEN THE GRASS HAS GROWN AT LEAST 1½ INCHES HIGH WITH 95% COVERAGE, PROVIDED NO BARE SPOTS LARGER THAN 16 SQUARE FEET EXIST.
   - E. WHEN REQUIRED, NATIVE GRASS SEEDING SHALL COMPLY WITH REQUIREMENTS OF THE CITY OF AUSTIN ENVIRONMENTAL CRITERIA MANUAL.

TABLE 2: HYDROMULCHING FOR PERMANENT VEGETATIVE STABILIZATION

MATERIAL	DESCRIPTION	LONGEVITY	TYPICAL APPLICATIONS	APPLICATION RATES
BONDED FIBER MATRIX (BFM)	80% ORGANIC DEFIBRATED FIBERS 10% TACKIFIER	6 MONTHS	ON SLOPES UP TO 2:1 AND EROSIVE SOIL CONDITIONS	2500 – 4000 LBS PER ACRE (SEE MANUFACTURERS RECOMMENDATIONS)
FIBER REINFORCED MATRIX (FRM)	65% ORGANIC DEFIBRATED FIBERS 25% REINFORCING FIBERS OR LESS 10% TACKIFIER	UP TO 12 MONTHS	ON SLOPES UP TO 1:1 AND EROSIVE SOIL CONDITIONS	3000 – 4000 LBS PER ACRE (SEE MANUFACTURERS RECOMMENDATIONS)

ECM – P-2 TREE AND NATURAL AREA PROTECTION NOTES

1. ALL TREES AND NATURAL AREAS SHOWN ON PLAN TO BE PRESERVED SHALL BE PROTECTED DURING CONSTRUCTION WITH TEMPORARY FENCING.
2. PROTECTIVE FENCES SHALL BE ERECTED ACCORDING TO CITY OF AUSTIN STANDARDS FOR TREE PROTECTION.
3. PROTECTIVE FENCES SHALL BE INSTALLED PRIOR TO THE START OF ANY SITE PREPARATION WORK (CLEARING, GRUBBING OR GRADING), AND SHALL BE MAINTAINED THROUGHOUT ALL PHASES OF THE CONSTRUCTION PROJECT.
4. EROSION AND SEDIMENTATION CONTROL BARRIERS SHALL BE INSTALLED OR MAINTAINED IN A MANNER WHICH DOES NOT RESULT IN SOIL BUILD–UP WITHIN TREE DRIP LINES.
5. PROTECTIVE FENCES SHALL SURROUND THE TREES OR GROUP OF TREES, AND WILL BE LOCATED AT THE OUTERMOST LIMIT OF BRANCHES (DRIP LINE) , FOR NATURAL AREAS, PROTECTIVE FENCES SHALL FOLLOW THE LIMIT OF CONSTRUCTION LINE, IN ORDER TO PREVENT THE FOLLOWING:
   - A. SOIL COMPACTION IN THE ROOT ZONE AREA RESULTING FROM VEHICULAR TRAFFIC OR STORAGE OF EQUIPMENT OR MATERIALS;
   - B. ROOT ZONE DISTURBANCES DUE TO GRADE CHANGES (GREATER THAN 6 INCHES CUT OR FILL), OR TRENCHING NOT REVIEWED AND AUTHORIZED BY THE CITY ARBORIST;
   - C. WOUNDS TO EXPOSED ROOTS, TRUNK OR LIMBS BY MECHANICAL EQUIPMENT;
   - D. OTHER ACTIVITIES DETRIMENTAL TO TREES SUCH AS CHEMICAL STORAGE, CEMENT TRUCK CLEANING, AND FIRES.
6. EXCEPTIONS TO INSTALLING FENCES AT TREE DRIP LINES MAY BE PERMITTED IN THE FOLLOWING CASES:
   - A. WHERE THERE IS TO BE AN APPROVED GRADE CHANGE, IMPERMEABLE PAVING SURFACE, TREE WELL, OR OTHER SUCH SITE DEVELOPMENT, ERECT THE FENCE APPROXIMATELY 2 TO 4 FEET BEYOND THE AREA DISTURBED;
   - B. WHERE PERMEABLE PAVING IS TO BE INSTALLED WITHIN A TREE'S DRIP LINE, ERECT THE FENCE AT THE OUTER LIMITS OF THE PERMEABLE PAVING AREA (PRIOR TO SITE GRADING SO THAT THIS AREA IS GRADED SEPARATELY PRIOR TO PAVING INSTALLATION TO MINIMIZED ROOT DAMAGE);

ECM – P-2 TREE AND NATURAL AREA PROTECTION NOTES (CONTINUED)

   - C. WHERE TREES ARE CLOSE TO PROPOSED BUILDINGS, ERECT THE FENCE TO ALLOW 6 TO 10 FEET OF WORK SPACE BETWEEN THE FENCE AND THE BUILDING;
   - D. WHERE THERE ARE SEVERE SPACE CONSTRAINTS DUE TO TRACT SIZE, OR OTHER SPECIAL REQUIREMENTS, CONTACT THE CITY ARBORIST AT 974–1876 TO DISCUSS ALTERNATIVES.

SPECIAL NOTE: FOR THE PROTECTION OF NATURAL AREAS, NO EXCEPTIONS TO INSTALLING FENCES AT THE LIMIT OF CONSTRUCTION LINE WILL BE PERMITTED.

7. WHERE ANY OF THE ABOVE EXCEPTIONS RESULT IN A FENCE BEING CLOSER THAN 4 FEET TO A TREE TRUNK, PROTECT THE TRUNK WITH STRAPPED–ON PLANKING TO A HEIGHT OF 8 FT (OR TO THE LIMITS OF LOWER BRANCHING) IN ADDITION TO THE REDUCED FENCING PROVIDED.
8. TREES APPROVED FOR REMOVAL SHALL BE REMOVED IN A MANNER WHICH DOES NOT IMPACT TREES TO BE PRESERVED.
9. ANY ROOTS EXPOSED BY CONSTRUCTION ACTIVITY SHALL BE PRUNED FLUSH WITH THE SOIL. BACKFILL ROOT AREAS WITH GOOD QUALITY TOP SOIL AS SOON AS POSSIBLE. IF EXPOSED ROOT AREAS ARE NOT BACKFILLED WITHIN 2 DAYS, COVER THEM WITH ORGANIC MATERIAL IN A MANNER WHICH REDUCES SOIL TEMPERATURE AND MINIMIZES WATER LOSS DUE TO EVAPORATION.
10. ANY TRENCHING REQUIRED FOR THE INSTALLATION OF LANDSCAPE IRRIGATION SHALL BE PLACED AS FAR FROM EXISTING TREE TRUNKS AS POSSIBLE.
11. NO LANDSCAPE TOPSOIL DRESSING GREATER THAN 4 INCHES SHALL BE PERMITTED WITHIN THE DRIP LINE OF TREES. NO SOIL IS PERMITTED ON THE ROOT FLARE OF ANY TREE.
12. PRUNING TO PROVIDE CLEARANCE FOR STRUCTURES, VEHICULAR TRAFFIC AND EQUIPMENT SHALL TAKE PLACE BEFORE DAMAGE OCCURS (RIPPING OF BRANCHES, ETC.).
13. ALL FINISHED PRUNING SHALL BE DONE ACCORDING TO RECOGNIZED, APPROVED STANDARDS OF THE INDUSTRY (REFERENCE THE NATIONAL ARBORIST ASSOCIATION PRUNING STANDARDS FOR SHADE TREES AVAILABLE ON REQUEST FROM THE CITY ARBORIST).
14. DEVIATIONS FROM THE ABOVE NOTES MAY BE CONSIDERED ORDINANCE VIOLATIONS IF THERE IS SUBSTANTIAL NON–COMPLIANCE OR IF A TREE SUSTAINS DAMAGE AS A RESULT.

ECM – P-4 STANDARD SEQUENCE OF CONSTRUCTION

THE FOLLOWING SEQUENCE OF CONSTRUCTION SHALL BE USED FOR ALL DEVELOPMENT. THE APPLICANT IS ENCOURAGED TO PROVIDE ANY ADDITIONAL DETAILS APPROPRIATE FOR THE PARTICULAR DEVELOPMENT.

1. TEMPORARY EROSION AND SEDIMENTATION CONTROLS ARE TO BE INSTALLED AS INDICATED ON THE APPROVED SITE PLAN OR SUBDIVISION CONSTRUCTION PLAN AND IN ACCORDANCE WITH THE STORMWATER POLLUTION PREVENTION PLAN (SWPPP) THAT IS REQUIRED TO BE POSTED ON THE SITE. INSTALL TREE PROTECTION AND INITIATE TREE MITIGATION MEASURES.
2. THE ENVIRONMENTAL PROJECT MANAGER OR SITE SUPERVISOR MUST CONTACT THE WATERSHED PROTECTION DEPARTMENT, ENVIRONMENTAL INSPECTION, AT 512–974–2278, 72 HOURS PRIOR TO THE SCHEDULED DATE OF THE REQUIRED ON–SITE PRECONSTRUCTION MEETING.
3. THE ENVIRONMENTAL PROJECT MANAGER, AND/OR SITE SUPERVISOR, AND/OR DESIGNATED RESPONSIBLE PARTY, AND THE GENERAL CONTRACTOR WILL FOLLOW THE STORM WATER POLLUTION PREVENTION PLAN (SWPPP) POSTED ON THE SITE. TEMPORARY EROSION AND SEDIMENTATION CONTROLS WILL BE REVISED, IF NEEDED, TO COMPLY WITH CITY INSPECTORS' DIRECTIVES, AND REVISED CONSTRUCTION SCHEDULE RELATIVE TO THE WATER QUALITY PLAN REQUIREMENTS AND THE EROSION PLAN.
4. TEMPORARY EROSION AND SEDIMENTATION CONTROLS WILL BE INSPECTED AND MAINTAINED IN ACCORDANCE WITH THE STORM WATER POLLUTION PREVENTION PLAN (SWPPP) POSTED ON THE SITE.
5. BEGIN SITE CLEARING/CONSTRUCTION (OR DEMOLITION) ACTIVITIES.
6. COMPLETE CONSTRUCTION AND START REVEGETATION OF THE SITE.
7. UPON COMPLETION OF THE SITE CONSTRUCTION AND REVEGETATION OF A PROJECT SITE, THE DESIGN ENGINEER SHALL SUBMIT AN ENGINEER'S LETTER OF CONCURRENCE TO THE WATERSHED PROTECTION AND DEVELOPMENT REVIEW DEPARTMENT INDICATING THAT CONSTRUCTION, INCLUDING REVEGETATION, IS COMPLETE AND IN SUBSTANTIAL CONFORMITY WITH THE APPROVED PLANS. AFTER RECEIVING THIS LETTER, A FINAL INSPECTION WILL BE SCHEDULED BY THE APPROPRIATE CITY INSPECTOR.
8. UPON COMPLETION OF LANDSCAPE INSTALLATION OF A PROJECT SITE, THE LANDSCAPE ARCHITECT SHALL SUBMIT A LETTER OF CONCURRENCE TO THE WATERSHED PROTECTION AND DEVELOPMENT REVIEW DEPARTMENT INDICATING THAT THE REQUIRED LANDSCAPING IS COMPLETE AND IN SUBSTANTIAL CONFORMITY WITH THE APPROVED PLANS. AFTER RECEIVING THIS LETTER, A FINAL INSPECTION WILL BE SCHEDULED BY THE APPROPRIATE CITY INSPECTOR.
9. AFTER A FINAL INSPECTION HAS BEEN CONDUCTED BY THE CITY INSPECTOR AND WITH APPROVAL FROM THE CITY INSPECTOR, REMOVE THE TEMPORARY EROSION AND SEDIMENTATION CONTROLS AND COMPLETE ANY NECESSARY FINAL REVEGETATION RESULTING FROM REMOVAL OF THE CONTROLS.

AUSTIN ENERGY TRANSMISSION NOTES

1. A PRE–CONSTRUCTION MEETING IS REQUIRED WITH AUSTIN ENERGY (ae) 48 HOURS BEFORE COMMENCEMENT OF CONSTRUCTION. FAILURE TO DO SO WILL RESULT IN THE PROJECT BEING SHUT DOWN. CALL DOUG WEISE AT 512–505–7023 TO SCHEDULE A TAILGATE SAFETY MEETING.
2. PRIOR TO MOBILIZING TALL EQUIPMENT SUCH AS CRANES, CALL DOUG WEISE AT 512–505–7023 TO COORDINATE WITH TRANSMISSION PERSONNEL.
3. ANY RELOCATION OF ELECTRIC TRANSMISSION FACILITIES OR OUTAGES CAUSED BY THIS PROJECT WILL BE CHARGED TO AUSTIN WATER UTILITY AND THEIR CONTRACTOR.
4. WARNING SIGNS MUST BE PLACED UNDER THE OVERHEAD ELECTRIC TRANSMISSION FACILITIES AS NOTIFICATION OF THE ELECTRICAL HAZARD.
5. CONSTRUCTION EQUIPMENT, DUMPSTERS, STAGING OR SOILS AREAS ARE NOT PERMITTED WITHIN 20 FEET OF THE ELECTRIC TRANSMISSION FACILITIES FOR SAFETY REASONS.
6. 24–HOUR ACCESS TO ELECTRIC TRANSMISSION FACILITIES SHALL BE MAINTAINED.
7. TEMPORARY OR PERMANENT FENCING THAT PREVENTS ACCESS TO THE EASEMENT, SHALL BE COORDINATED WITH AE. AE WILL INSTALL A LOCK ON THE GATE FOR ACCESS. GROUNDING REQUIREMENTS FOR FENCING WILL BE DETERMINED BY THE AE STAFF.
8. AUSTIN WATER UTILITY AND THEIR CONTRACTOR ARE RESPONSIBLE FOR DUST CONTROLS FOR INSULATORS AND TO PREVENT FLASHING AND ALL OUTAGES CAUSED BY THE DUST FROM THIS PROJECT.

TRAVIS COUNTY NOTES

1. DRIVEWAY AND DRAINAGE CONSTRUCTION STANDARDS SHALL BE IN ACCORDANCE WITH THE REQUIREMENTS OF THE TRAVIS COUNTY STANDARDS UNLESS OTHERWISE SPECIFIED AND APPROVED BY TRAVIS COUNTY.
2. PRIOR TO BEGINNING ANY CONSTRUCTION, A TRAVIS COUNTY BASIC DEVELOPMENT PERMIT SHALL BE OBTAINED AND POSTED ON THE JOB SITE. DEVELOPMENT OUTSIDE OF APPROVED CONSTRUCTION BOUNDARIES IS PROHIBITED WITHOUT A REVISED PERMIT.
3. PRIOR TO BEGINNING ANY CONSTRUCTION, ALL STORM WATER POLLUTION PREVENTION PLAN (SWPPP) REQUIREMENTS SHALL BE MET, NOTICES POSTED ON SITE, AND THE FIRST PHASE OF TEMPORARY EROSION CONTROL ITEMS SHALL BE IN PLACE.
4. A TRAFFIC CONTROL PLAN SHALL BE REVIEWED AND APPROVED BY TRAVIS COUNTY PRIOR TO BEGINNING CONSTRUCTION WITHIN COUNTY RIGHT–OF–WAY.
5. THE CONTRACTOR SHALL NOTIFY TRAVIS COUNTY AT 512–854–9383 (PLANNING AND ENGINEERING SERVICES DIVISION) AND STORMWATER MANAGEMENT PROGRAM INSPECTOR AT 512–854–7590 AT LEAST 48 HOURS PRIOR TO START OF CONSTRUCTION AND TO SCHEDULE A MANDATORY PRE–CONSTRUCTION CONFERENCE.
6. CONTOUR DATA SOURCE: TOPOGRAPHIC SURVEY SEE G–5 FOR BENCHMARKS.
7. CONTRACTOR SHALL NOT STOCKPILE MATERIAL WITHIN THE 100–YEAR FLOOD PLAIN OR AREAS OUTSIDE OF PERMIT BOUNDARIES. ANY REGULATORY PERMITS REQUIRED FOR DISPOSAL OF EXCESS EXCAVATED MATERIAL OFF THE PERMIT SITE MUST BE OBTAINED FROM THE APPLICABLE JURISDICTIONS. DISPOSAL OF SOLID WASTE MATERIALS, AS DEFINED BY STATE LAW (LITTER, TIRES, DECOMPOSABLE WASTES, ETC.) IS PROHIBITED IN PERMANENT FILL SITES.
8. WITHIN TRAVIS COUNTY RIGHT–OF–WAY, DRIVEWAYS ARE TO BE CONSTRUCTED IN ACCORDANCE WITH CITY OF AUSTIN CRITERIA, EXCEPT AS NOTED IN 82.302 (G) OF THE STANDARDS.
9. THE DESIGN ENGINEER IS RESPONSIBLE FOR THE ADEQUACY OF THE CONSTRUCTION PLANS. IN REVIEWING THE CONSTRUCTION PLANS, TRAVIS COUNTY WILL RELY UPON THE ADEQUACY OF THE WORK OF THE DESIGN ENGINEER.
10. A MINIMUM OF TWO SURVEY BENCHMARKS SHALL BE SET AND DESCRIBED PER SUBDIVISION INCLUDING DESCRIPTION, LOCATION, AND ELEVATION. TIE TO TRAVIS COUNTY STANDARDS WHEN POSSIBLE.
11. ANY EXISTING PAVEMENT, CURBS, SIDEWALKS, OR DRAINAGE STRUCTURES WITHIN COUNTY RIGHT–OF–WAY WHICH ARE DAMAGED, REMOVED, OR SILTED, WILL BE REPAIRED BY THE CONTRACTOR AT HIS/HER EXPENSE BEFORE APPROVAL OF THE CONSTRUCTION.
12. THE ONE–CALL UTILITY SYSTEM WILL BE USED: DIAL 512–472–2822 AND THE TEXAS UNDERGROUND FACILITY NOTIFICATION CORPORATION AT LEAST 48 HOURS BEFORE YOU DIG.
13. ALL STORM SEWER PIPES SHALL BE CLASS III RCP, UNLESS OTHERWISE NOTED.
14. CONTRACTOR IS REQUIRED TO OBTAIN A TRAVIS COUNTY WORK IN RIGHT–OF–WAY (UTILITY INSTALLATION NOTICE) PERMIT PRIOR TO ANY CONSTRUCTION OF UTILITIES WITHIN ANY TRAVIS COUNTY RIGHT–OF–WAY.
15. THIS PROJECT IS LOCATED ON FLOOD INSURANCE RATE MAP 48453 CO 495H J.
16. SOIL DATA SOURCES:
    GEOTECHNICAL ENGINEERING STUDY
    WHISPER VALLEY INTERCEPTOR AND WASTEWATER TREATMENT PLANT
    T.C.T.X. BY RABA–KISTNER CONSULTANTS, INC. (JUNE 12, 2012)
17. ALL TREES WITHIN THE RIGHT–OF–WAY AND DRAINAGE EASEMENTS SHALL BE SAVED OR REMOVED IN ACCORDANCE WITH THE APPROVED CONSTRUCTION PLANS.
18. A PRE–CONSTRUCTION CONFERENCE IS REQUIRED WITH TNR PRIOR TO START OF ANY CONSTRUCTION IN TRAVIS COUNTY RIGHT–OF–WAY.
19. THE UTILITY CONTRACTOR SHALL GIVE TNR AT LEAST 48 HOURS NOTICE PRIOR TO CONSTRUCTION.
20. PRIOR TO BEGINNING ANY CONSTRUCTION, THE TEMPORARY EROSION CONTROL ITEMS SHALL BE IN PLACE.
21. CONTRACTOR SHALL KEEP THE TNR PLANNING AND ENGINEERING SERVICES DIVISION (854–9383) CURRENT ON THE STATUS OF EACH STAGE OF CONSTRUCTION ACTIVITY.
22. TNR APPROVAL OF THE CONSTRUCTION IS REQUIRED ON ALL WORK COMPLETED PRIOR TO ACCEPTANCE AND COMMENCEMENT OF ONE–YEAR PERFORMANCE PERIOD.
23. THE CONTRACTOR SHALL INSTALL ALL TRAFFIC MARKING AND SIGNAGE PER CURRENT TxDOT MANUAL OF UNIFORM TRAFFIC CONTROL DEVICES PRIOR TO TNR APPROVAL.

REV	DATE	BY	DESCRIPTION	APPROVED

VERIFY SCALES

0 1"

IF BAR DOES NOT MEASURE ONE INCH ON THIS SHEET, ADJUST ACCORDINGLY.

TAYLOR, TEXAS
SUSAN SMITH–TURRIETA
86839
LICENSED
PROFESSIONAL ENGINEER
6-28-2016

DRAWN BY: RR
DESIGNED BY: SST
REVIEWED BY: SST
PROJECT NO: SST# XXXXX

SMITH TURRIETA ENGINEERING
P.O. BOX 5902, AUSTIN, TEXAS 78763
TELEPHONE: (512) 569-9022
Texas Registration Number, F-16076

CITY OF AUSTIN, TEXAS
TAYLOR LANE 0.1 MGD WASTEWATER TREATMENT PLANT PROJECT

GENERAL NOTES
SHEET 3 OF 3

DWG. NO. G-4

K:\ACAD\clients\STE\WWTP Ph2\G-GN-NT103.dwg modified by rodrij on Apr 28, 16 4:34 PM

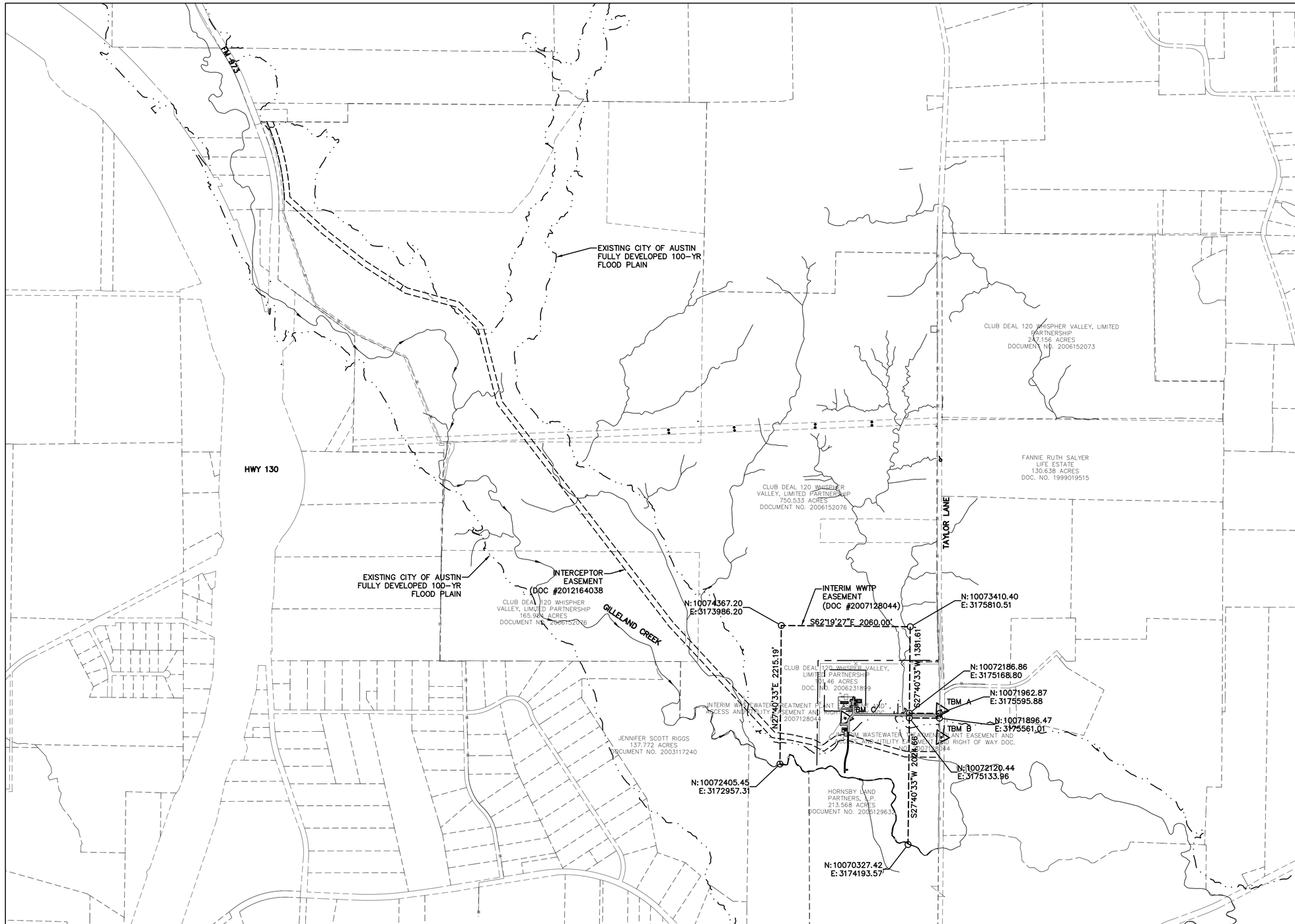

LEGEND

	WWTP EASEMENT LIMITS
	WWTP BOUNDARY
	PROPERTY LINE
	FEMA 100-YR FLOOD PLAIN

BENCHMARK INFORMATION:

ELEVATIONS HEREON ARE REFERENCED TO THE NORTH AMERICAN VERTICAL DATUM OF 1988 (NAVD 88) UTILIZING WESTERN DATA SYSTEMS CONTINUALLY OPERATING REFERENCE STATION (CORS) NETWORK AND ADDITIONALLY REFERENCED TO LCRA GPS CONTROL MONUMENTS AT THE TIME OF THIS SURVEY.

BENCHMARK: LCRA CS33 – 3" ALUMINUM DISC IN CONCRETE ON EAST SIDE OF TAYLOR ROAD, ±3' WEST OF BARB-WIRE FENCE AND ±27' EAST OF PAVEMENT, EQUIDISTANT BETWEEN 8TH AND 9TH "T" POST FROM CORNER OF HOG-WIRE AND BARB-WIRE FENCE TRANSITION
PUBLISHED ELEV=587.486 (NAVD 88)
AS FOUND = 587.44' (NAVD 88)

TBM A: 1/2" IRON ROD WITH BLUE "BURY+PARTNERS" CAP SET ON WEST SIDE OF TAYLOR ROAD ±2205' NORTH OF GILLELAND CREEK CROSSING, ±50' NORTHEAST OF UTILITY POLE, BETWEEN 12" CMP CULVERTS. ELEV=427.38'

TBM B: COTTON SPINDLE SET ON WEST SIDE OF TAYLOR ROAD ±1775' NORTH OF GILLELAND CREEK CROSSING, ±105' SOUTH OF UTILITY POLE WITH GUY WIRE. ELEV=422.59'

TBM C: 1/2" IRON ROD WITH BLUE "BURY+PARTNERS" CAP SET ±1530' WEST OF TAYLOR ROAD AND ±45' SOUTH OF 90° BEND IN WIRE FENCE LINE, BETWEEN 12" HACKBERRY TREES TAGGED 7053 AND 7054, RESPECTIVELY. ELEV=431.03'

REV	DATE	BY	DESCRIPTION	APPROVED

VERIFY SCALES

0 1"

IF BAR DOES NOT MEASURE ONE INCH ON THIS SHEET, ADJUST ACCORDINGLY.

STATE OF TEXAS
SUSAN SMITH-TURRIETA
86839
LICENSED
PROFESSIONAL ENGINEER
6-28-2016

DRAWN BY: RR

DESIGNED BY: SST

REVIEWED BY: SST

PROJECT NO: SST# XXXXX

SMITH TURRIETA ENGINEERING

P.O. BOX 5902, AUSTIN, TEXAS 78763
TELEPHONE: (512) 569-9022
Texas Registration Number, F-16076

CITY OF AUSTIN, TEXAS
TAYLOR LANE 0.1 MGD WASTEWATER TREATMENT PLANT PROJECT

VICINITY MAP

DWG. NO.

G-5

SHEET 6 OF 79

K:\ACAD\clients\STE\WWTP Ph2\G-VN-PL101.dwg modified by roodrj on Apr 29, 16 12:31 PM

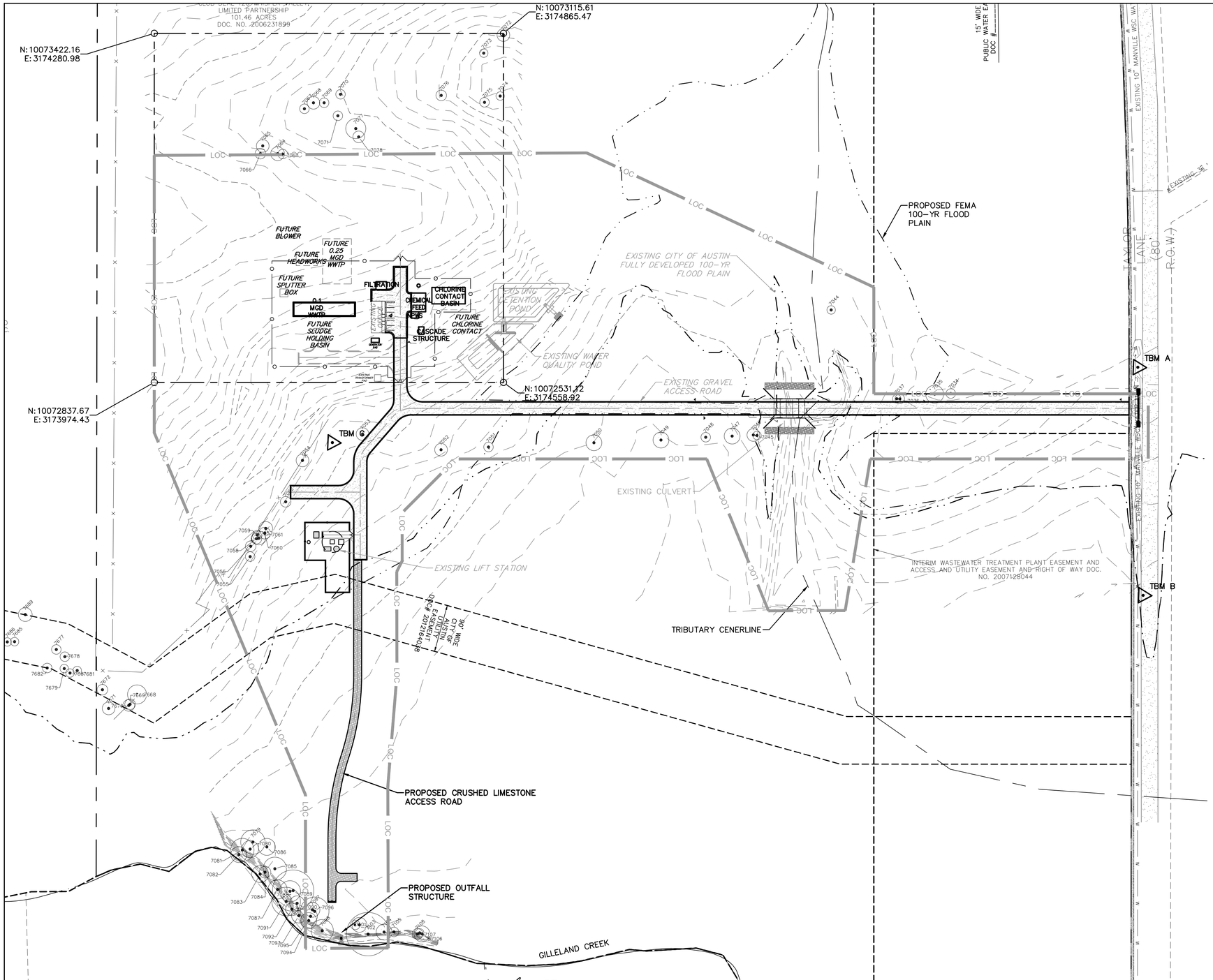

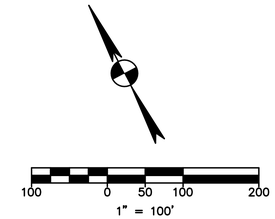

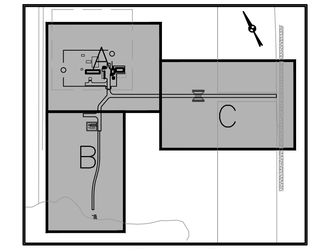

KEY MAP

LEGEND

	WWTP EASEMENT LIMITS
	WWTP BOUNDARY
	PROPERTY LINE
	FEMA 100-YR FLOOD PLAIN
LOC	LIMITS OF CONSTRUCTION

BENCHMARK INFORMATION:

ELEVATIONS HEREON ARE REFERENCED TO THE NORTH AMERICAN VERTICAL DATUM OF 1988 (NAVD 88) UTILIZING WESTERN DATA SYSTEMS CONTINUALLY OPERATING REFERENCE STATION (CORS) NETWORK AND ADDITIONALLY REFERENCED TO LCRA GPS CONTROL MONUMENTS AT THE TIME OF THIS SURVEY.

BENCHMARK: LCRA CS33 – 3" ALUMINUM DISC IN CONCRETE ON EAST SIDE OF TAYLOR ROAD, ±3' WEST OF BARB-WIRE FENCE AND ±27' EAST OF PAVEMENT, EQUIDISTANT BETWEEN 8TH AND 9TH "T" POST FROM CORNER OF HOG-WIRE AND BARB-WIRE FENCE TRANSITION
PUBLISHED ELEV=587.486 (NAVD 88)
AS FOUND = 587.44' (NAVD 88)

TBM A: 1/2" IRON ROD WITH BLUE "BURY+PARTNERS" CAP SET ON WEST SIDE OF TAYLOR ROAD ±2205' NORTH OF GILLELAND CREEK CROSSING, ±50' NORTHEAST OF UTILITY POLE, BETWEEN 12" CMP CULVERTS. ELEV=427.38'

TBM B: COTTON SPINDLE SET ON WEST SIDE OF TAYLOR ROAD ±1775' NORTH OF GILLELAND CREEK CROSSING, ±105' SOUTH OF UTILITY POLE WITH GUY WIRE. ELEV=422.59'

TBM C: 1/2" IRON ROD WITH BLUE "BURY+PARTNERS" CAP SET ±1530' WEST OF TAYLOR ROAD AND ±45' SOUTH OF 90" BEND IN WIRE FENCE LINE, BETWEEN 12" HACKBERRY TREES TAGGED 7053 AND 7054, RESPECTIVELY. ELEV=431.03'

SITE PLAN NOTES:

1. THIS SITE IS PART OF THE WHISPER VALLEY PLANNED UNIT DEVELOPMENT (PUD), ORDINANCE NUMBER 20100826-066.
2. ALL IMPROVEMENTS SHALL BE MADE IN ACCORDANCE WITH THE APPROVED SITE PLAN; ANY ADDITIONAL IMPROVEMENTS WILL REQUIRE APPROVAL OF THE PLANNING AND DEVELOPMENT REVIEW DEPARTMENT AND AMENDMENT OF THE SITE PLAN.
3. APPROVAL OF THIS SITE PLAN DOES NOT INCLUDE BUILDING PERMIT APPROVAL.
4. A DEVELOPMENT PERMIT MUST BE ISSUED PRIOR TO AN APPLICATION FOR BUILDING PERMIT FOR NON-CONSOLIDATED OR PLANNING COMMISSION APPROVED SITE PLANS.
5. ALL EXISTING STRUCTURES SHOWN TO BE REMOVED WILL REQUIRE A DEMOLITION PERMIT FROM THE CITY OF AUSTIN PLANNING AND DEVELOPMENT REVIEW DEPARTMENT.
6. COMPLIANCE WITH THE COMMERCIAL AND MULTIFAMILY RECYCLING ORDINANCE IS MANDATORY FOR MULTIFAMILY COMPLEXES WITH 100 OR MORE UNITS AND BUSINESSES AND OFFICE BUILDINGS WITH 100 OR MORE EMPLOYEES ON SITE (AUSTIN CITY CODE SEC 15-6-91).
7. WATER WILL BE PROVIDED BY MANVILLE WSC. WASTEWATER SERVICE WILL BE PROVIDED BY AUSTIN WATER UTILITY.
8. THE OWNER OF THE PROPERTY IS RESPONSIBLE FOR MAINTAINING CLEARANCES REQUIRED BY THE NATIONAL ELECTRIC SAFETY CODE, OCCUPATIONAL SAFETY AND HEALTH ADMINISTRATION (OSHA) REGULATIONS, CITY OF AUSTIN RULES AND REGULATIONS AND TEXAS STATE LAWS PERTAINING TO CLEARANCES WHEN WORKING IN CLOSE PROXIMITY TO OVERHEAD POWER LINES AND EQUIPMENT. AUSTIN ENERGY WILL NOT RENDER ELECTRIC SERVICE UNLESS REQUIRED CLEARANCES ARE MAINTAINED. ALL COSTS INCURRED BECAUSE OF FAILURE TO COMPLY WITH THE REQUIRED CLEARANCES WILL BE CHARGED TO THE OWNER.
9. ALL SIGNS MUST COMPLY WITH REQUIREMENTS OF THE LAND DEVELOPMENT CODE (CHAPTER 25-10).
10. FOR CONSTRUCTION WITHIN THE RIGHT-OF-WAY, A ROW EXCAVATION PERMIT IS REQUIRED.
11. ALTERNATIVE EQUIVALENT COMPLIANCE (AEC) HAS BEEN GRANTED FOR THIS PROJECT. AS AN ALTERNATIVE, A PEDESTRIAN AMENITY INCLUDING A SHADED SEATING AREA UNDER A 3" LIVE OAK TREE HAS BEEN PROVIDED. THE AEC APPROVAL LETTER HAS BEEN INCLUDED FOR REFERENCE ON SHEET 2 GENERAL NOTES OF SITE DEVELOPMENT PERMIT PLAN SET.
12. ALL YARD VALVES SHALL HAVE VALVE BOXES WITH CONCRETE PADS.

REV	DATE	BY	DESCRIPTION	APPROVED

VERIFY SCALES
0 1"
IF BAR DOES NOT MEASURE ONE INCH ON THIS SHEET, ADJUST ACCORDINGLY.

STATE OF TEXAS
SUSAN SMITH-TURRIETA
86839
LICENSED
PROFESSIONAL ENGINEER
6-28-2016

DRAWN BY: RR
DESIGNED BY: SST
REVIEWED BY: SST
PROJECT NO: SST# XXXXX

SMITH TURRIETA ENGINEERING
P.O. BOX 5902, AUSTIN, TEXAS 78763
TELEPHONE: (512) 569-9022
Texas Registration Number, F-16076

CITY OF AUSTIN, TEXAS
TAYLOR LANE 0.1 MGD WASTEWATER TREATMENT PLANT PROJECT

MASTER SITE PLAN

DWG. NO.
G-6

SHEET 7 OF 79

K:\ACAD\clients\STE\WWTP Ph2\C-ST-PL106.dwg modified by roodrj on Jun 27, 16 3:39 PM

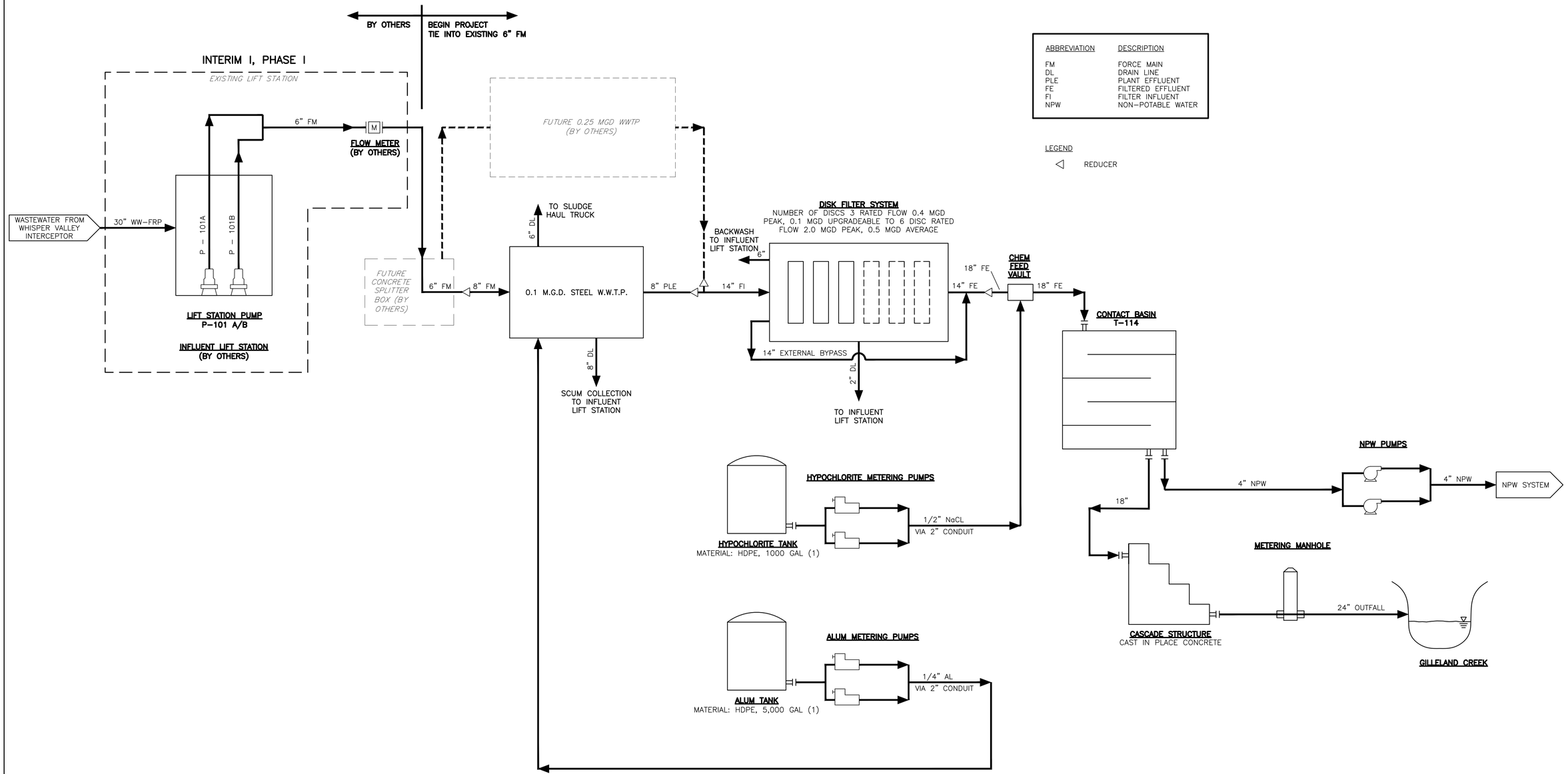

ABBREVIATION	DESCRIPTION
FM	FORCE MAIN
DL	DRAIN LINE
PLE	PLANT EFFLUENT
FE	FILTERED EFFLUENT
FI	FILTER INFLUENT
NPW	NON-POTABLE WATER

LEGEND

◁ REDUCER

NOTE:

IN THE EVENT OF A DISCREPANCY BETWEEN THE PROCESS FLOW DIAGRAM, P&ID DRAWINGS AND THE MECHANICAL DRAWINGS, THE MECHANICAL DRAWINGS SHALL CONTROL.

REV	DATE	BY	DESCRIPTION	APPROVED

VERIFY SCALES

0 1"

IF BAR DOES NOT MEASURE ONE INCH ON THIS SHEET, ADJUST ACCORDINGLY.

STATE OF TEXAS
SUSAN SMITH-TURRIETA
86839
LICENSED
PROFESSIONAL ENGINEER
8-1-2016

DRAWN BY: RR

DESIGNED BY: SST

REVIEWED BY: SST

PROJECT NO: SST# XXXXX

SMITH TURRIETA ENGINEERING

P.O. BOX 5902, AUSTIN, TEXAS 78763
TELEPHONE: (512) 569-9022
Texas Registration Number, F-16076

CITY OF AUSTIN, TEXAS
TAYLOR LANE 0.1 MGD WASTEWATER
TREATMENT PLANT PROJECT

PROCESS FLOW DIAGRAM

DWG. NO.

P-1

SHEET 8 OF 79

K:\ACAD\clients\STE\WWTP Ph2\1-PFD01.dwg modified by roodrj on Aug 1, 16 10:00 AM

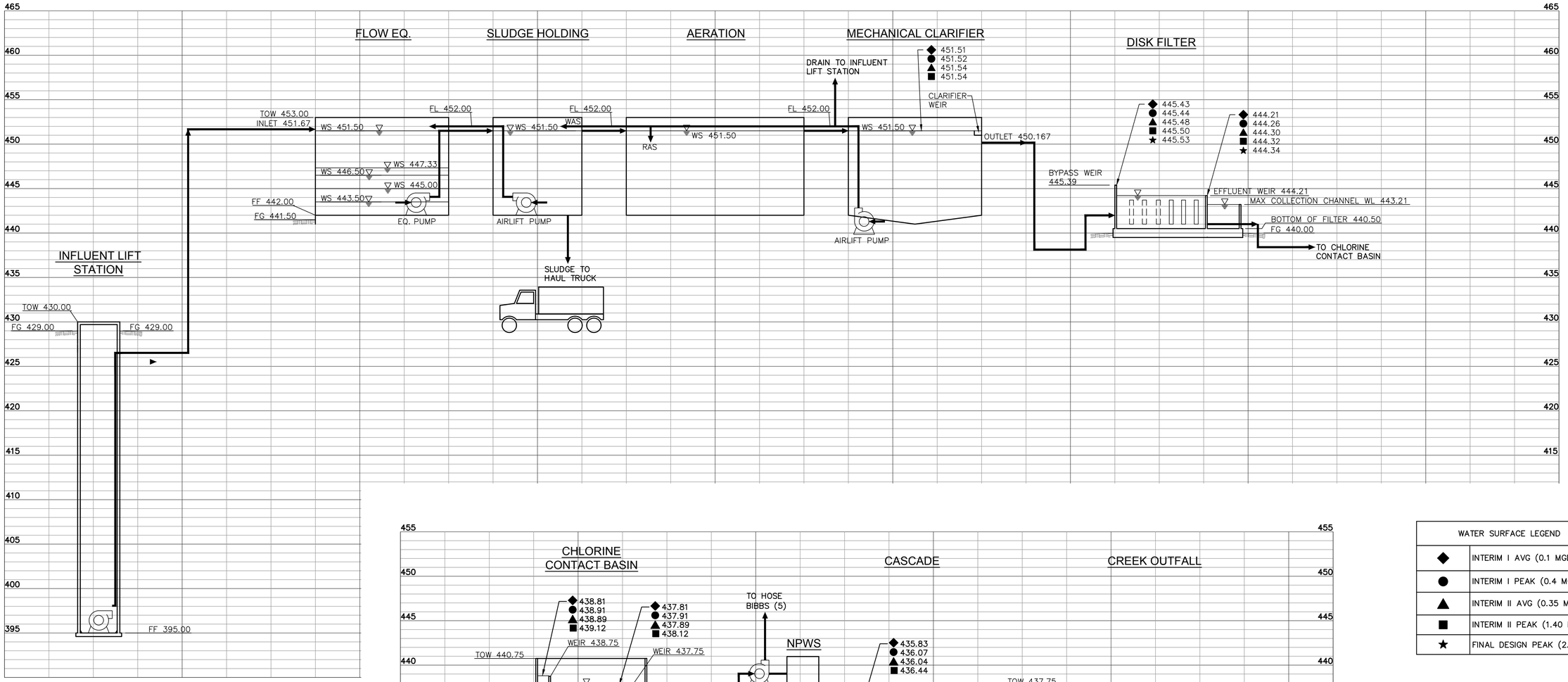

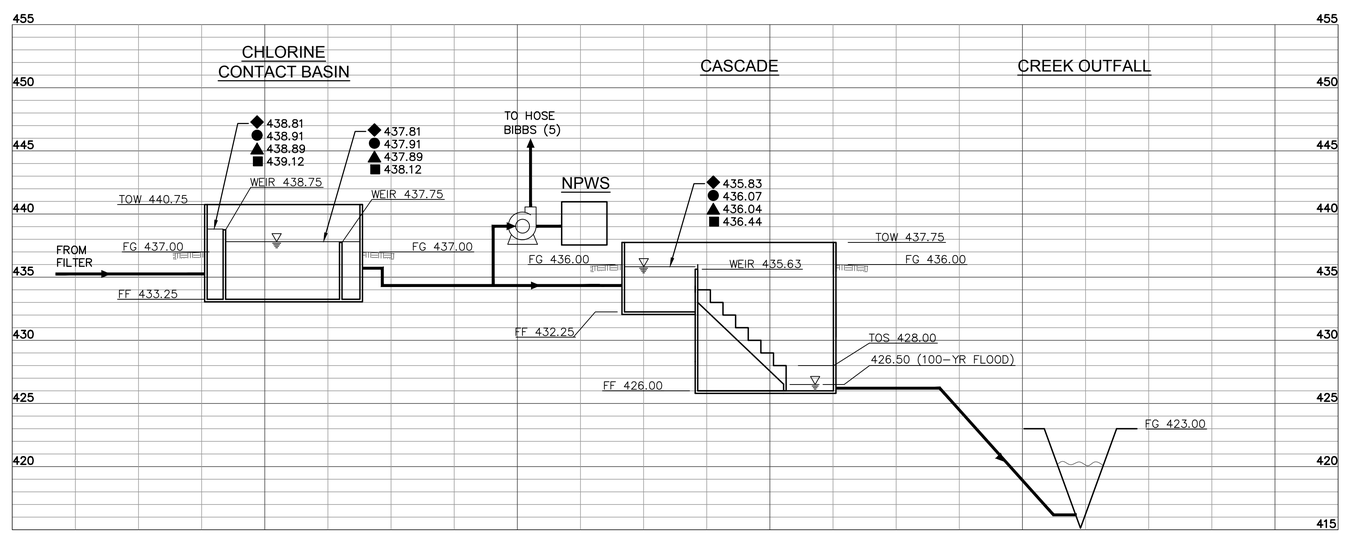

WATER SURFACE LEGEND	
◆	INTERIM I AVG (0.1 MGD)
●	INTERIM I PEAK (0.4 MGD)
▲	INTERIM II AVG (0.35 MGD)
■	INTERIM II PEAK (1.40 MGD)
★	FINAL DESIGN PEAK (2.0 MGD)

REV	DATE	BY	DESCRIPTION	APPROVED

VERIFY SCALES

0 1"

IF BAR DOES NOT MEASURE ONE INCH ON THIS SHEET, ADJUST ACCORDINGLY.

STATE OF TEXAS
SUSAN SMITH-TURRETA
86839
LICENSED
PROFESSIONAL ENGINEER
8-1-2016

DRAWN BY: RR
DESIGNED BY: SST
REVIEWED BY: SST
PROJECT NO: SST# XXXXX

SMITH TURRETA ENGINEERING
P.O. BOX 5902, AUSTIN, TEXAS 78763
TELEPHONE: (512) 569-9022
Texas Registration Number, F-16076

CITY OF AUSTIN, TEXAS
TAYLOR LANE 0.1 MGD WASTEWATER TREATMENT PLANT PROJECT

HYDRAULIC PROFILE

DWG. NO. P-2

SHEET 9 OF 79

K:\ACAD\clients\STE\WWTP Ph2\G-FS-HP101.dwg modified by roodrj on Aug 1, 16 10:04 AM

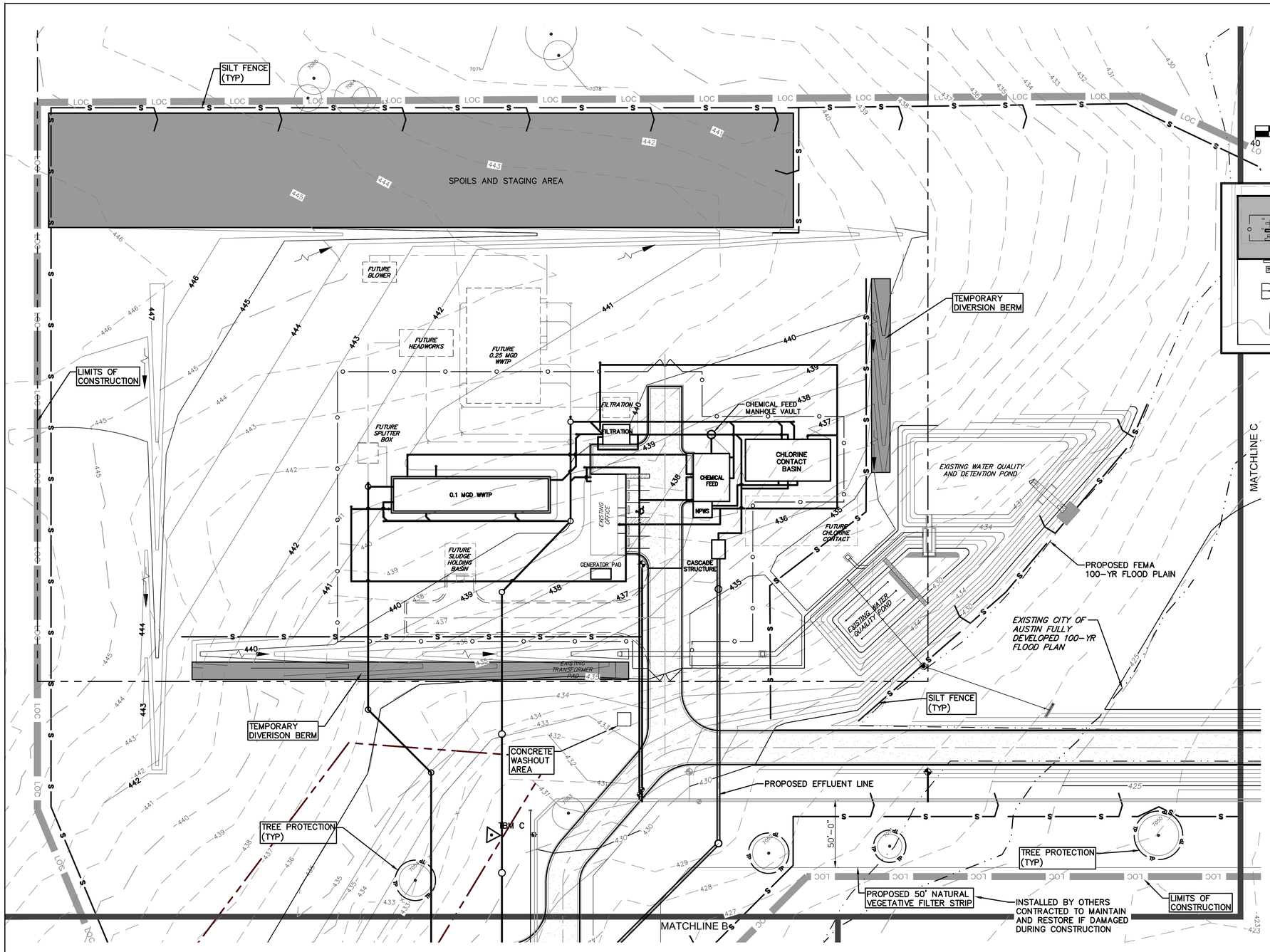

LEGEND

EXISTING	PROPOSED	
(XXXX)		PROPERTY (R.O.W.) LINE RECORD INFORMATION
		LIGHT POLE
		POWER POLE
		DOWN GUY
	T	TRANSFORMER (SIZE VARIES)
		FIRE HYDRANT
		YARD HYDRANT
		WATER VALVE
		WATER METER
	WM	WATER METER VAULT
WTRMH		WATER MANHOLE
		TELEPHONE RISER
		CABLE TV RISER
	E	ELECTRIC BOX
	EM	ELECTRIC METER
	G	GAS METER
		GAS VALVE
TCB	TCB	TRAFFIC CONTROL BOX
TSP	TSP	TRAFFIC SIGNAL POST
		GRATE INLET
		CURB INLET (SIZE VARIES)
	GT	GREASE TRAP (SIZE VARIES)
SS		STORMSEWER LINE
W	XX"W	WATER LINE
	XX"FL	FIRE LINE
WW	XX"WW	WASTEWATER LINE
G	G	GAS LINE
E	E	ELECTRIC LINE
OE	XX"OE	OVERHEAD ELECTRIC
UT	XX"UT	UNDERGROUND TELEPHONE
UC	XX"UC	UNDERGROUND CABLE AND INTERNET
TC	TC	TELECOMMUNICATIONS LINE
EMH	EMH	ELECTRIC MANHOLE (SIZE VARIES)
WWMH	WWMH	WASTEWATER MANHOLE (SIZE VARIES)
SSMH	SSMH	STORMSEWER MANHOLE (SIZE VARIES)
TMH	TMH	TELEPHONE MANHOLE (SIZE VARIES)
CO	CO	WASTEWATER CLEANOUT
		CURB & GUTTER
		EDGE OF PAVEMENT
	D	DUMPSTER
		CONCRETE SIDEWALKS
		WALL
	TP	TREE PROTECTION
	S	SILT FENCE
	LOC	LIMITS OF CONSTRUCTION
		STABILIZED CONSTRUCTION ENTRANCE
		CONSTRUCTION STAGING AREA
		TEMPORARY SPOIL DISPOSAL AREA
		TOPSOIL STORAGE AREA
		ASPHALT
		INLET PROTECTION
678		CONTOUR
1170		TREE TO REMAIN
1184		TREE TO BE REMOVED (R)

NOTES:

1. ENVIRONMENTAL INSPECTOR HAS THE AUTHORITY TO ADD AND/OR MODIFY EROSION AND SEDIMENTATION CONTROLS ON SITE TO KEEP PROJECT IN COMPLIANCE WITH CITY OF AUSTIN RULES AND REGULATIONS.
2. CONTRACTOR SHALL UTILIZE DUST CONTROL MEASURES DURING SITE CONSTRUCTION SUCH AS IRRIGATION TRUCKS AND MULCHING AS PER ECM 1.4.5(D), OR AS DIRECTED BY THE ENVIRONMENTAL INSPECTOR.
3. SILT FENCE TYPE AND INSTALLATION SHALL COMPLY WITH ECM 1.4.2(G).
4. IF DISTURBED AREA IS NOT TO BE WORKED ON FOR MORE THAN 14 DAYS, DISTURBED AREA NEEDS TO BE STABILIZED BY REVEGETATION, MULCH, TARP, OR REVEGETATION MATTING.
5. FINAL GRADING AND REVEGETATION SHALL COMMENCE IMMEDIATELY FOR THE PHASE I AREA.
6. ALL REVEGETATED AREAS SHALL BE IN ACCORDANCE WITH CITY OF AUSTIN STANDARD SPECIFICATION 604S.
7. ANY DE-WATERING METHOD/PLAN MUST BE APPROVED BY THE COUNTY ENVIRONMENTAL INSPECTOR. THE DE-WATERING METHOD/PLAN MUST MINIMIZE THE DISCHARGE OF SUSPENDED SEDIMENTS I THE PONDED WATER TO THE GREATEST EXTEND FEASIBLE.
8. THE SWPPP MUST BE WRITTEN BY AN INDIVIDUAL WITH EITHER A PE LICENSE OR CPESC CERTIFICATION.
9. ONLY AN INDIVIDUAL WITH A CPESC, CESSWI, CISEC CERTIFY COMPLETE A SW INSPECTION IN TRAVIS COUNTY.
10. MUD AND OR DIRT TRACKED INTO THE ROADWAY MUST BE IMMEDIATELY REMOVED UPON DISCOVERY.
11. EXCESS MATERIAL THAT WILL BE TRANSPORTED TO AN OFFSITE LOCATION MUST HAVE THAT LOCATION CLEARED BY ENVIRONMENTAL INSPECTOR.
12. ALL BMP'S INSTALLED BY OTHERS SHALL BE MAINTAINED BY CONTRACTOR. UPON PROJECT COMPLETION TEMPORARY BMP'S SHALL BE REMOVED AND SITE SHALL BE RESTORED PER PROJECT SPECIFICATIONS.

REV	DATE	BY	DESCRIPTION	APPROVED

VERIFY SCALES

0 1"

IF BAR DOES NOT MEASURE ONE INCH ON THIS SHEET, ADJUST ACCORDINGLY.

STATE OF TEXAS
SUSAN SMITH-TURRIETA
86839
LICENSED
PROFESSIONAL ENGINEER
8-1-2016

DRAWN BY: RR
DESIGNED BY: SST
REVIEWED BY: SST
PROJECT NO: SST# XXXXX

SMITH TURRIETA ENGINEERING
P.O. BOX 5902, AUSTIN, TEXAS 78763
TELEPHONE: (512) 569-9022
Texas Registration Number, F-16076

CITY OF AUSTIN, TEXAS
TAYLOR LANE 0.1 MGD WASTEWATER TREATMENT PLANT PROJECT

EROSION AND SEDIMENTATION CONTROL PLAN A

DWG. NO. ESC-1

K:\ACAD\clients\STE\WWTP Ph2\C-EC-PL101.dwg modified by roodrj on Aug 1, 16 11:19 AM

EXISTING CITY OF AUSTIN FULLY DEVELOPED 100-YR FLOOD PLAN

PROPOSED FEMA 100-YR FLOOD PLAIN

90' WIDE CITY OF AUSTIN UTILITY EASEMENT DOC# 2012164038

40 0 20 40 80

1" = 40'

SILT FENCE (TYP)

TREE PROTECTION (TYP)

PROPOSED WW EFFLUENT LINE

50'-0"

PROPOSED 50' NATURAL VEGETATIVE FILTER STRIP

PROPOSED WWTP OUTFALL

FUTURE ACCESS ROAD BY OTHERS

30-INCH INTERCEPTOR EXISTING WITH SITE PLAN SP-2012-0340D

EXISTING LIFT STATION

TREE PROTECTION (TYP)

LIMITS OF CONSTRUCTION

MATCHLINE A

GILLELAND CREEK

KEY MAP

LEGEND

EXISTING	PROPOSED	
(XXX)		PROPERTY (R.O.W.) LINE RECORD INFORMATION
		LIGHT POLE
		POWER POLE
		DOWN GUY
	T	TRANSFORMER (SIZE VARIES)
		FIRE HYDRANT
		YARD HYDRANT
		WATER VALVE
		WATER METER
	WM	WATER METER VAULT
WTRMH		WATER MANHOLE
		TELEPHONE RISER
		CABLE TV RISER
	E	ELECTRIC BOX
	EM	ELECTRIC METER
	G	GAS METER
		GAS VALVE
TCB	TCB	TRAFFIC CONTROL BOX
TSP	TSP	TRAFFIC SIGNAL POST
		GRATE INLET
		CURB INLET (SIZE VARIES)
	GT	GREASE TRAP (SIZE VARIES)
SS		STORMSEWER LINE
W	XX"W	WATER LINE
	XX"FL	FIRE LINE
WW	XX"WW	WASTEWATER LINE
G	G	GAS LINE
E	E	ELECTRIC LINE
OE	XX"OE	OVERHEAD ELECTRIC
UT	XX"UT	UNDERGROUND TELEPHONE
UC	XX"UC	UNDERGROUND CABLE AND INTERNET
TC	TC	TELECOMMUNICATIONS LINE
EMH	EMH	ELECTRIC MANHOLE (SIZE VARIES)
WWMH	WWMH	WASTEWATER MANHOLE (SIZE VARIES)
SSMH	SSMH	STORMSEWER MANHOLE (SIZE VARIES)
TMH	TMH	TELEPHONE MANHOLE (SIZE VARIES)
CO	CO	WASTEWATER CLEANOUT
		CURB & GUTTER
		EDGE OF PAVEMENT
	D	DUMPSTER
		CONCRETE SIDEWALKS
		WALL
	TP	TREE PROTECTION
	S	SILT FENCE
	LOC	LIMITS OF CONSTRUCTION
		STABILIZED CONSTRUCTION ENTRANCE
		CONSTRUCTION STAGING AREA
		TEMPORARY SPOIL DISPOSAL AREA
		TOPSOIL STORAGE AREA
		ASPHALT
		INLET PROTECTION
678		CONTOUR
1170		TREE TO REMAIN
1184		TREE TO BE REMOVED (R)

NOTES:

1. ENVIRONMENTAL INSPECTOR HAS THE AUTHORITY TO ADD AND/OR MODIFY EROSION AND SEDIMENTATION CONTROLS ON SITE TO KEEP PROJECT IN COMPLIANCE WITH CITY OF AUSTIN RULES AND REGULATIONS.
2. CONTRACTOR SHALL UTILIZE DUST CONTROL MEASURES DURING SITE CONSTRUCTION SUCH AS IRRIGATION TRUCKS AND MULCHING AS PER ECM 1.4.5(D), OR AS DIRECTED BY THE ENVIRONMENTAL INSPECTOR.
3. SILT FENCE TYPE AND INSTALLATION SHALL COMPLY WITH ECM 1.4.2(G).
4. IF DISTURBED AREA IS NOT TO BE WORKED ON FOR MORE THAN 14 DAYS, DISTURBED AREA NEEDS TO BE STABILIZED BY REVEGETATION, MULCH, TARP, OR REVEGETATION MATTING.
5. FINAL GRADING AND REVEGETATION SHALL COMMENCE IMMEDIATELY FOR THE PHASE I AREA.
6. ALL REVEGETATED AREAS SHALL BE IN ACCORDANCE WITH CITY OF AUSTIN STANDARD SPECIFICATION 604S.
7. ANY DE-WATERING METHOD/PLAN MUST BE APPROVED BY THE COUNTY ENVIRONMENTAL INSPECTOR. THE DE-WATERING METHOD/PLAN MUST MINIMIZE THE DISCHARGE OF SUSPENDED SEDIMENTS I THE PONDED WATER TO THE GREATEST EXTEND FEASIBLE.
8. THE SWPPP MUST BE WRITTEN BY AN INDIVIDUAL WITH EITHER A PE LICENSE OR CPESC CERTIFICATION.
9. ONLY AN INDIVIDUAL WITH A CPESC, CESSWI, CISEC CERTIFY COMPLETE A SW INSPECTION IN TRAVIS COUNTY.
10. MUD AND OR DIRT TRACKED INTO THE ROADWAY MUST BE IMMEDIATELY REMOVED UPON DISCOVERY.
11. EXCESS MATERIAL THAT WILL BE TRANSPORTED TO AN OFFSITE LOCATION MUST HAVE THAT LOCATION CLEARED BY ENVIRONMENTAL INSPECTOR.
12. ALL BMP'S INSTALLED BY OTHERS SHALL BE MAINTAINED BY CONTRACTOR. UPON PROJECT COMPLETION TEMPORARY BMP'S SHALL BE REMOVED AND SITE SHALL BE RESTORED PER PROJECT SPECIFICATIONS.

REV	DATE	BY	DESCRIPTION	APPROVED

VERIFY SCALES

0 1"

IF BAR DOES NOT MEASURE ONE INCH ON THIS SHEET, ADJUST ACCORDINGLY.

STATE OF TEXAS SUSAN SMITH-TURRETA 86839 LICENSED PROFESSIONAL ENGINEER

6-28-2016

DRAWN BY: RR

DESIGNED BY: SST

REVIEWED BY: SST

PROJECT NO: SST# XXXXX

SMITH TURRETA ENGINEERING

P.O. BOX 5902, AUSTIN, TEXAS 78763
TELEPHONE: (512) 569-9022
Texas Registration Number, F-16076

CITY OF AUSTIN, TEXAS
TAYLOR LANE 0.1 MGD WASTEWATER TREATMENT PLANT PROJECT

EROSION AND SEDIMENTATION CONTROL PLAN B

DWG. NO.

ESC-2

SHEET 11 OF 79

K:\ACAD\clients\STE\WWTP Ph2\C-EC-PL102.dwg modified by roodrj on Jun 15, 16 11:16 AM

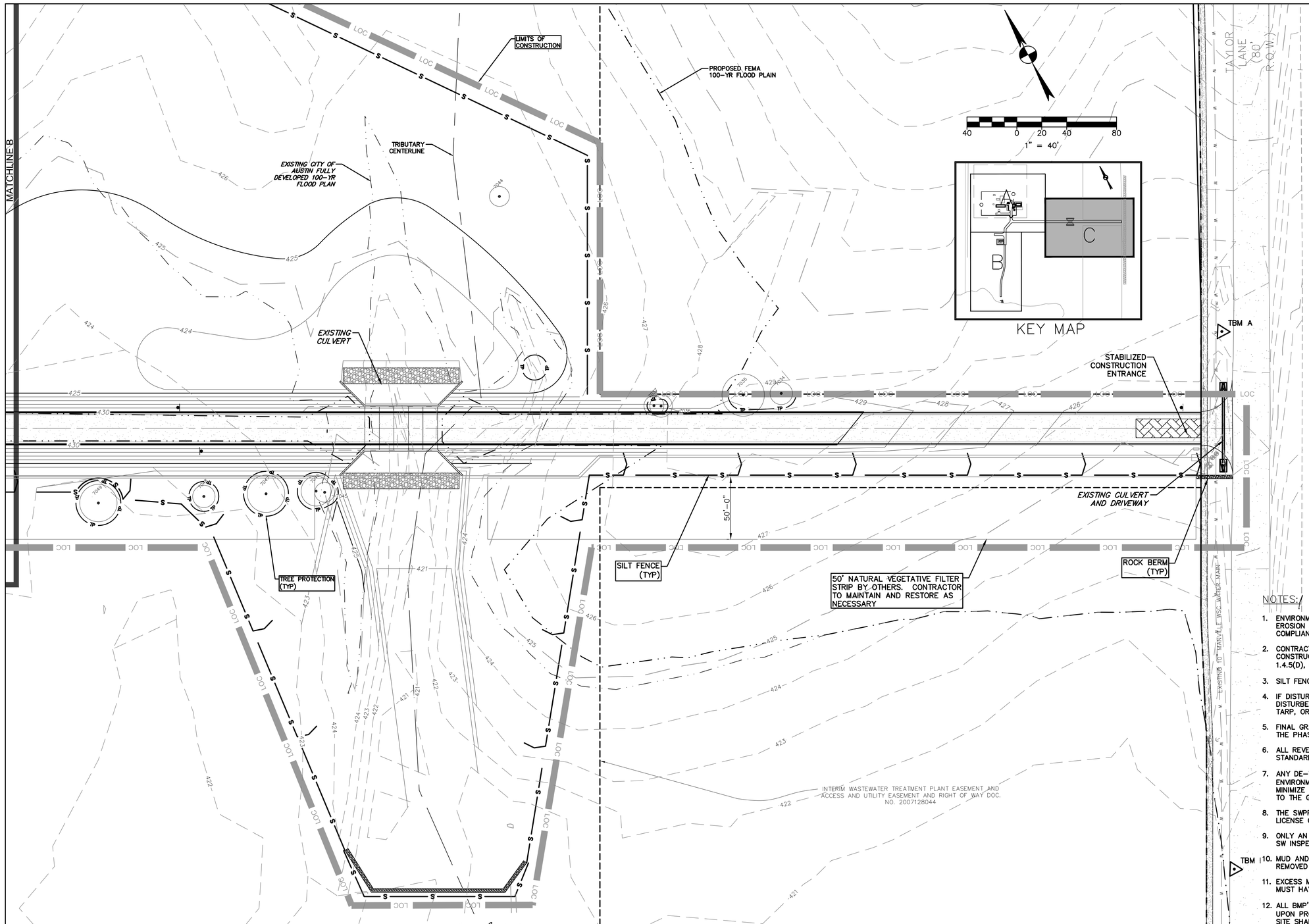

LEGEND

EXISTING	PROPOSED	
(XXX)		PROPERTY (R.O.W.) LINE RECORD INFORMATION
		LIGHT POLE
		POWER POLE
		DOWN GUY
	T	TRANSFORMER (SIZE VARIES)
		FIRE HYDRANT
		YARD HYDRANT
		WATER VALVE
		WATER METER
	WM	WATER METER VAULT
WTRMH		WATER MANHOLE
		TELEPHONE RISER
		CABLE TV RISER
	E	ELECTRIC BOX
	EM	ELECTRIC METER
	G	GAS METER
		GAS VALVE
TCB	TCB	TRAFFIC CONTROL BOX
TSP	TSP	TRAFFIC SIGNAL POST
		GRATE INLET
		CURB INLET (SIZE VARIES)
	GT	GREASE TRAP (SIZE VARIES)
SS		STORMSEWER LINE
W	XX"W	WATER LINE
	XX"FL	FIRE LINE
WW	XX"WW	WASTEWATER LINE
G	G	GAS LINE
E	E	ELECTRIC LINE
OE	XX"OE	OVERHEAD ELECTRIC
UT	XX"UT	UNDERGROUND TELEPHONE
UC	XX"UC	UNDERGROUND CABLE AND INTERNET
TC	TC	TELECOMMUNICATIONS LINE
EMH	EMH	ELECTRIC MANHOLE (SIZE VARIES)
WWMH	WWMH	WASTEWATER MANHOLE (SIZE VARIES)
SSMH	SSMH	STORMSEWER MANHOLE (SIZE VARIES)
TMH	TMH	TELEPHONE MANHOLE (SIZE VARIES)
CO	CO	WASTEWATER CLEANOUT
		CURB & GUTTER
		EDGE OF PAVEMENT
	D	DUMPSTER
		CONCRETE SIDEWALKS
		WALL
	TP	TREE PROTECTION
	S	SILT FENCE
	LOC	LIMITS OF CONSTRUCTION
		STABILIZED CONSTRUCTION ENTRANCE
		CONSTRUCTION STAGING AREA
		TEMPORARY SPOIL DISPOSAL AREA
		TOPSOIL STORAGE AREA
		ASPHALT
		INLET PROTECTION
678		CONTOUR
1170		TREE TO REMAIN
1184		TREE TO BE REMOVED (R)

NOTES:

1. ENVIRONMENTAL INSPECTOR HAS THE AUTHORITY TO ADD AND/OR MODIFY EROSION AND SEDIMENTATION CONTROLS ON SITE TO KEEP PROJECT IN COMPLIANCE WITH CITY OF AUSTIN RULES AND REGULATIONS.
2. CONTRACTOR SHALL UTILIZE DUST CONTROL MEASURES DURING SITE CONSTRUCTION SUCH AS IRRIGATION TRUCKS AND MULCHING AS PER ECM 1.4.5(D), OR AS DIRECTED BY THE ENVIRONMENTAL INSPECTOR.
3. SILT FENCE TYPE AND INSTALLATION SHALL COMPLY WITH ECM 1.4.2(G).
4. IF DISTURBED AREA IS NOT TO BE WORKED ON FOR MORE THAN 14 DAYS, DISTURBED AREA NEEDS TO BE STABILIZED BY REVEGETATION, MULCH, TARP, OR REVEGETATION MATTING.
5. FINAL GRADING AND REVEGETATION SHALL COMMENCE IMMEDIATELY FOR THE PHASE I AREA.
6. ALL REVEGETATED AREAS SHALL BE IN ACCORDANCE WITH CITY OF AUSTIN STANDARD SPECIFICATION 604S.
7. ANY DE-WATERING METHOD/PLAN MUST BE APPROVED BY THE COUNTY ENVIRONMENTAL INSPECTOR. THE DE-WATERING METHOD/PLAN MUST MINIMIZE THE DISCHARGE OF SUSPENDED SEDIMENTS I THE PONDED WATER TO THE GREATEST EXTEND FEASIBLE.
8. THE SWPPP MUST BE WRITTEN BY AN INDIVIDUAL WITH EITHER A PE LICENSE OR CPESC CERTIFICATION.
9. ONLY AN INDIVIDUAL WITH A CPESC, CESSWI, CISEC CERTIFY COMPLETE A SW INSPECTION IN TRAVIS COUNTY.
10. MUD AND OR DIRT TRACKED INTO THE ROADWAY MUST BE IMMEDIATELY REMOVED UPON DISCOVERY.
11. EXCESS MATERIAL THAT WILL BE TRANSPORTED TO AN OFFSITE LOCATION MUST HAVE THAT LOCATION CLEARED BY ENVIRONMENTAL INSPECTOR.
12. ALL BMP'S INSTALLED BY OTHERS SHALL BE MAINTAINED BY CONTRACTOR. UPON PROJECT COMPLETION TEMPORARY BMP'S SHALL BE REMOVED AND SITE SHALL BE RESTORED PER PROJECT SPECIFICATIONS.

REV	DATE	BY	DESCRIPTION	APPROVED

VERIFY SCALES

0 1"

IF BAR DOES NOT MEASURE ONE INCH ON THIS SHEET, ADJUST ACCORDINGLY.

STATE OF TEXAS
SUSAN SMITH-TURRIETA
86839
LICENSED
PROFESSIONAL ENGINEER
6-28-2010

DRAWN BY: RR
DESIGNED BY: SST
REVIEWED BY: SST
PROJECT NO: SST# XXXXX

SMITH TURRIETA ENGINEERING
P.O. BOX 5902, AUSTIN, TEXAS 78763
TELEPHONE: (512) 569-9022
Texas Registration Number, F-16076

CITY OF AUSTIN, TEXAS
TAYLOR LANE 0.1 MGD WASTEWATER TREATMENT PLANT PROJECT

EROSION AND SEDIMENTATION CONTROL PLAN C

DWG. NO.
ESC-3

K:\ACAD\clients\STE\WWTP Ph2\C-EC-PL103.dwg modified by roodrj on May 2, 16 1:48 PM

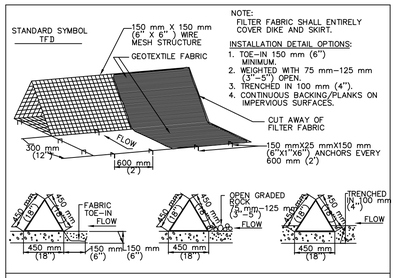

GENERAL NOTES

1. DIKES SHALL BE PLACED IN A ROW WITH ENDS TIGHTLY ABUTTING THE ADJACENT DIKE.
2. THE FABRIC COVER AND SKIRT SHALL BE A CONTINUOUS WRAPPING OF GEOTEXTILE. THE SKIRT SHALL BE A CONTINUOUS EXTENSION OF THE FABRIC ON THE UPSTREAM FACE.
3. THE SKIRT SHALL BE WEIGHTED WITH A CONTINUOUS LAYER OF 75-125 mm (3-5") OPEN GRADED ROCK OR TOED-IN 150 mm (6") WITH MECHANICALLY COMPACTED MATERIAL. OTHERWISE, THE ENTIRE STRUCTURE SHALL BE TRENCHED IN 100 mm (4").
4. DIKES AND SKIRT SHALL BE SECURELY ANCHORED IN PLACE USING 150 mm (6") WIRE STAPLES ON 600 mm (2') CENTERS ON BOTH EDGES AND SKIRT, OR STAKE USING 10M (3/8 ") DIAMETER RE-BAR WITH TEE ENDS.
5. FILTER MATERIAL SHALL BE LAPPED OVER ENDS 150 mm (6") TO COVER DIKE TO DIKE JOINTS. JOINTS SHALL BE FASTENED WITH GALVANIZED SHOAT RINGS.
6. THE DIKE STRUCTURE SHALL BE MW40-150 mmX150 mm (6 GA. 6"X6") WIRE MESH, 450 mm (18") ON A SIDE.
7. INSPECTION SHALL BE MADE WEEKLY OR AFTER EACH RAINFALL EVENT AND REPAIR OR REPLACEMENT SHALL BE MADE PROMPTLY AS NEEDED BY THE CONTRACTOR.
8. ACCUMULATED SILT SHALL BE REMOVED WHEN IT REACHES A DEPTH OF 150 mm (6") AND DISPOSED OF IN A MANNER WHICH WILL NOT CAUSE ADDITIONAL SILTATION.
9. AFTER THE DEVELOPMENT SITE IS COMPLETLY STABILIZED, THE DIKES AND ANY REMAINING SILT SHALL BE REMOVED. SILT SHALL BE DISPOSED OF AS INDICATED IN GENERAL NOTE 8 ABOVE.

CITY OF AUSTIN WATERSHED PROTECTION DEPARTMENT	TRIANGULAR SEDIMENT FILTER DIKE	
RECORD COPY SIGNED BY J. PATRICK MURPHY 3/27/00 ADOPTED	THE ARCHITECT/ENGINEER ASSUMES RESPONSIBILITY FOR APPROPRIATE USE OF THIS STANDARD.	STANDARD NO. 628S

1 TRIANGULAR SEDIMENT FILTER DIKE
SCALE: N.T.S.

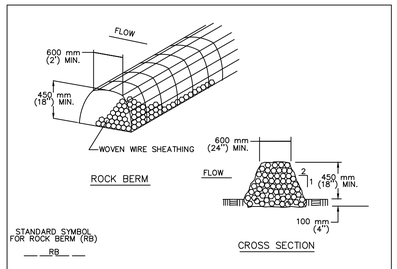

NOTES:

1. USE ONLY OPEN GRADED ROCK 75 to 125 mm (3 to 5") DIAMETER FOR ALL CONDITIONS.
2. THE ROCK BERM SHALL BE SECURED WITH A WOVEN WIRE SHEATHING HAVING MAXIMUM 25 mm (1") OPENING AND MINIMUM WIRE DIAMETER OF 12.9 mm (20 GAUGE).
3. THE ROCK BERM SHALL BE INSPECTED DAILY OR AFTER EACH RAIN, AND THE STONE AND/OR FABRIC CORE-WOVEN SHEATHING SHALL BE REPLACED WHEN THE STRUCTURE CEASES TO FUNCTION AS INTENDED, DUE TO SEDIMENT ACCUMULATION AMONG THE ROCKS, WASHOUT, CONSTRUCTION TRAFFIC DAMAGE, ETC.
4. IF SEDIMENT REACHES A DEPTH EQUAL TO ONE-THIRD THE HEIGHT OF THE BERM OR 150 mm (6"), WHICHEVER IS LESS, THE SEDIMENT SHALL BE REMOVED AND DISPOSED OF ON AN APPROVED SITE AND IN A MANNER THAT WILL NOT CREATE A SEDIMENTION PROBLEM.
5. WHEN THE SITE IS COMPLETELY STABILIZED, THE BERM AND ACCUMULATED SEDIMENT SHALL BE REMOVED AND DISPOSED OF IN AN APPROVED MANNER.

CITY OF AUSTIN WATERSHED PROTECTION DEPARTMENT	ROCK BERM	
RECORD COPY SIGNED BY MORGAN BYARS 8/24/2010 ADOPTED	THE ARCHITECT/ENGINEER ASSUMES RESPONSIBILITY FOR APPROPRIATE USE OF THIS STANDARD.	STANDARD NO. 639S-1

2 ROCK BERM
SCALE: N.T.S.

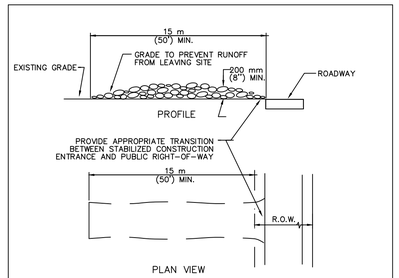

NOTES:

1. STONE SIZE: 75-125 mm (3-5") OPEN GRADED ROCK.
2. LENGTH: AS EFFECTIVE BUT NOT LESS THAN 15 m (50').
3. THICKNESS: NOT LESS THAN 200 mm (8").
4. WIDTH: NOT LESS THAN FULL WIDTH OF ALL POINTS OF INGRESS/EGRESS.
5. WASHING: WHEN NECESSARY, VEHICLE WHEELS SHALL BE CLEANED TO REMOVE SEDIMENT PRIOR TO ENTRANCE ONTO PUBLIC ROADWAY. WHEN WASHING IS REQUIRED, IT SHALL BE DONE ON AN AREA STABILIZED WITH CRUSHED STONE AND DRAINS INTO AN APPROVED TRAP OR SEDIMENT BASIN. ALL SEDIMENT SHALL BE PREVENTED FROM ENTERING ANY STORM DRAIN, DITCH OR WATERCOURSE USING APPROVED METHODS.
6. MAINTENANCE: THE ENTRANCE SHALL BE MAINTAINED IN A CONDITION THAT WILL PREVENT TRACKING OR FLOWING OF SEDIMENT ONTO PUBLIC ROADWAY. THIS MAY REQUIRE PERIODIC TOP DRESSING WITH ADDITIONAL STONE AS CONDITIONS DEMAND, AS WELL AS REPAIR AND CLEAN OUT OF ANY MEASURE DEVICES USED TO TRAP SEDIMENT. ALL SEDIMENTS THAT IS SPILLED, DROPPED, WASHED OR TRACKED ONTO PUBLIC ROADWAY MUST BE REMOVED IMMEDIATELY.
7. DRAINAGE: ENTRANCE MUST BE PROPERLY GRADED OR INCORPORATE A DRAINAGE SWALE TO PREVENT RUNOFF FROM LEAVING THE CONSTRUCTION SITE.

CITY OF AUSTIN WATERSHED PROTECTION DEPARTMENT	STABILIZED CONSTRUCTION ENTRANCE	
RECORD COPY SIGNED BY J. PATRICK MURPHY 5/23/00 ADOPTED	THE ARCHITECT/ENGINEER ASSUMES RESPONSIBILITY FOR APPROPRIATE USE OF THIS STANDARD.	STANDARD NO. 641S-1

3 STABILIZED CONSTRUCTION ENTRANCE
SCALE: N.T.S.

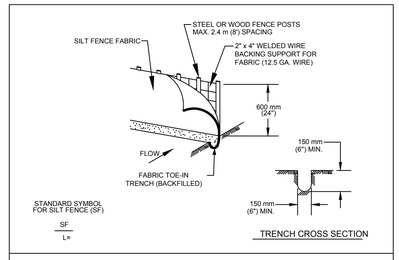

1. STEEL OR WOOD POSTS WHICH SUPPORT THE SILT FENCE SHALL BE INSTALLED ON A SLIGHT ANGLE TOWARD THE ANTICIPATED RUNOFF SOURCE. POST MUST BE EMBEDDED A MINIMUM OF 300 mm (12 INCHES). IF WOOD POSTS CANNOT ACHIEVE 300 mm (12 inches) DEPTH, USE STEEL POSTS.

2. THE TOE OF THE SILT FENCE SHALL BE TRENCHED IN WITH A SPADE OR MECHANICAL TRENCHER, SO THAT THE DOWNSLOPE FACE OF THE TRENCH IS FLAT AND PERPENDICULAR TO THE LINE OF FLOW.

3. THE TRENCH MUST BE A MINIMUM OF 150 mm (6 inches) DEEP AND 150 mm (6 inches) WIDE TO ALLOW FOR THE SILT FENCE FABRIC TO BE LAID IN THE GROUND AND BACKFILLED WITH COMPACTED MATERIAL.

4. SILT FENCE FABRIC SHOULD BE SECURELY FASTENED TO EACH STEEL OR WOOD SUPPORT POST OR TO WOVEN WIRE , WHICH IS IN TURN ATTACHED TO THE STEEL OR WOOD FENCE POST.

5. INSPECTION SHALL BE MADE WEEKLY OR AFTER EACH RAINFALL EVENT AND REPAIR OR REPLACEMENT SHALL BE MADE PROMPTY AS NEEDED.

6. SILT FENCE SHALL BE REMOVED WHEN THE SITE IS COMPLETELY STABILIZED SO AS NOT TO BLOCK OR IMPEDE STORM FLOW OR DRAINAGE.

7. ACCUMULATED SILT SHALL BE REMOVED WHEN IT REACHES A DEPTH OF 150 mm (6 inches). THE SILT SHALL BE DISPOSED OF ON AN APPROVED SITE AND IN SUCH A MANNER THAT WILL NOT CONTRIBUTE TO ADDITIONAL SILTATION.

CITY OF AUSTIN WATERSHED PROTECTION DEPARTMENT	SILT FENCE	
RECORD COPY SIGNED BY MORGAN BYARS 09/01/2011 ADOPTED	THE ARCHITECT/ENGINEER ASSUMES RESPONSIBILITY FOR APPROPRIATE USE OF THIS STANDARD.	STANDARD NO. 642S-1

4 SILT FENCE
SCALE: N.T.S.

CITY OF AUSTIN – STANDARD NOTES EROSION AND SEDIMENTATION CONTROL

1. THE CONTRACTOR SHALL INSTALL EROSION/SEDIMENTATION CONTROLS AND TREE/NATURAL AREA PROTECTIVE FENCING PRIOR TO ANY SITE PREPARATION WORK (CLEARING, GRUBBING, OR EXCAVATION).

2. THE PLACEMENT OF EROSION/SEDIMENTATION CONTROLS SHALL BE IN ACCORDANCE WITH THE ENVIRONMENTAL CRITERIA MANUAL AND THE APPROVED EROSION AND SEDIMENTATION CONTROL PLAN.

3. THE PLACEMENT OF TREE/NATURAL AREA PROTECTIVE FENCING SHALL BE IN ACCORDANCE WITH THE CITY OF AUSTIN STANDARD NOTES FOR TREE AND NATURAL AREA PROTECTION AND THE APPROVED GRADING/TREE AND NATURAL AREA PLAN.

4. A PRE-CONSTRUCTION CONFERENCE SHALL BE HELD ON-SITE WITH THE CONTRACTOR, DESIGN ENGINEER, PERMIT APPLICANT, AND ENVIRONMENTAL INSPECTOR AFTER INSTALLATION OF THE EROSION/SEDIMENTATION CONTROLS AND THE TREE/NATURAL AREA PROTECTION MEASURES AND PRIOR TO BEGINNING ANY SITE PREPARATION WORK. THE CONTRACTOR SHALL NOTIFY ENVIRONMENTAL INSPECTION AT 512/974-2278, AT LEAST 3 DAYS PRIOR TO THE MEETING DATE.

5. ANY SIGNIFICANT VARIATION IN MATERIALS OR LOCATIONS OF CONTROLS OR FENCES FROM THOSE SHOWN ON THE APPROVED PLANS MUST BE APPROVED BY THE REVIEWING ENGINEER AND THE ENVIRONMENTAL INSPECTOR.

6. THE CONTRACTOR IS REQUIRED TO INSPECT THE CONTROLS AND FENCES AT WEEKLY INTERVALS AND AFTER SIGNIFICANT RAINFALL EVENTS TO INSURE THAT THEY ARE FUNCTIONING PROPERLY. THE PERSON(S) RESPONSIBLE FOR MAINTENANCE OF CONTROLS AND FENCES SHALL IMMEDIATELY MAKE ANY NECESSARY REPAIRS TO DAMAGED AREAS. SILT ACCUMULATION AT CONTROLS MUST BE REMOVED WHEN THE DEPTH REACHES SIX (6) INCHES. SILT ACCUMULATION AT INLET DEVICES SHOULD BE REMOVED WHEN THE DEPTH REACHES TWO (2) INCHES.

7. PRIOR TO FINAL ACCEPTANCE BY THE CITY, HAUL ROADS AND WATERWAY CROSSINGS CONSTRUCTED FOR TEMPORARY CONTRACTOR ACCESS MUST BE REMOVED, ACCUMULATED SEDIMENT REMOVED FROM THE WATERWAY AND THE AREA RESTORED TO THE ORIGINAL GRADE AND REVEGETATED. ALL LAND CLEARING DEBRIS SHALL BE DISPOSED OF IN APPROVED SPOIL DISPOSAL SITES.

8. ALL WORK MUST STOP IF A VOID IN THE ROCK SUBSTRATE IS DISCOVERED WHICH IS ONE SQUARE FOOT OR LARGER IN TOTAL AREA, BLOWS AIR FROM WITHIN THE SUBSTRATE, AND/OR CONSISTENTLY RECEIVES WATER DURING ANY RAIN EVENT. AT THIS TIME, IT IS THE RESPONSIBILITY OF THE PROJECT MANAGER TO IMMEDIATELY CONTACT THE ENVIRONMENTAL INSPECTOR FOR FURTHER INVESTIGATION.

9. FIELD REVISIONS TO THE EROSION/SEDIMENTATION CONTROL PLAN MAY BE REQUIRED BY THE ENVIRONMENTAL INSPECTOR DURING THE COURSE OF CONSTRUCTION TO CORRECT CONTROL INADEQUACIES. ANY REVISIONS TO THE PERMITTED PLAN MUST BE APPROVED BY THE WATERSHED PROTECTION AND DEVELOPMENT REVIEW DEPARTMENT.

10. PERMANENT EROSION/SEDIMENTATION CONTROL: ALL DISTURBED AREAS SHALL BE RESTORED IN ACCORDANCE WITH CURRENT CITY OF AUSTIN ENVIRONMENTAL CRITERIA MANUAL AND STANDARD SPECIFICATIONS, UNLESS OTHERWISE INDICATED IN THE PLAN SET PERMITTED THROUGH THE WATERSHED PROTECTION AND DEVELOPMENT REVIEW DEPARTMENT.

11. DEVELOPER INFORMATION:

OWNER: CLUB DEAL 120
CONTACT: DOUG H. GILLILAND
ADDRESS: 9285 HUNTINGTON SQUARE
ADDRESS: NORTH RICHLAND HILLS, TX 76182
PHONE: 817-788-1000
FAX: 512-397-3641

OWNER'S REPRESENTATIVE RESPONSIBLE FOR PLAN ALTERATIONS:
COMPANY: SMITH TURRIETA ENGINEERING
CONTACT: SUSAN TURRIETA, P.E.
ADDRESS: PO BOX 5903
ADDRESS: AUSTIN, TX 78763
PHONE: (512) 569-9022

PARTY RESPONSIBLE FOR EROSION/SEDIMENTATION CONTROL MAINTENANCE:
COMPANY: CONTRACTOR

PARTY RESPONSIBLE FOR TREE/NATURAL AREA PROTECTION MAINTENANCE:
COMPANY: CONTRACTOR

12. THE CONTRACTOR SHALL NOT DISPOSE OF SURPLUS EXCAVATED MATERIAL FROM THE SITE WITHOUT NOTIFYING ENVIRONMENTAL INSPECTION, AT (512) 974-2278, AT LEAST 48 HOURS PRIOR TO THE SPOILS REMOVAL. THIS NOTIFICATION SHALL INCLUDE THE DISPOSAL LOCATION AND A COPY OF THE PERMIT ISSUED TO RECEIVE THE MATERIAL.

13. INLET PROTECTION SHALL BE INSTALLED IMMEDIATELY PRIOR TO STREET WORK, AND WILL BE REMOVED AS SOON AS THE ENVIRONMENTAL INSPECTOR AGREES THAT THERE IS NO POTENTIAL FOR SEDIMENTATION.

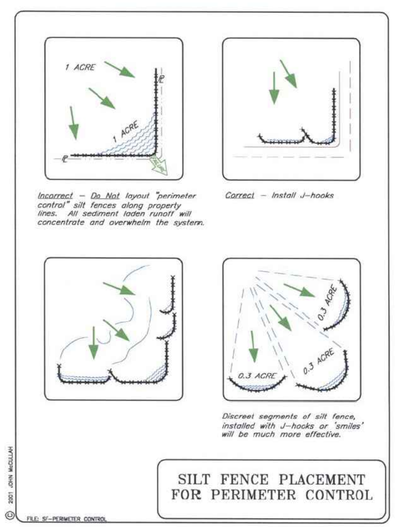

5 SILT FENCE PLACEMENT FOR PERIMETER CONTROL
SCALE: N.T.S.

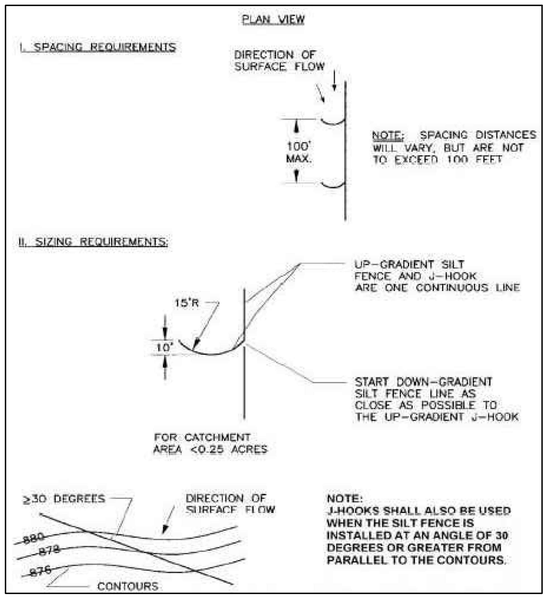

6 J HOOK DETAIL
SCALE: N.T.S.

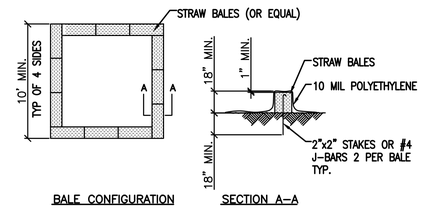

NOTES:

1. FACE SIGN TOWARD NEAREST STREET OR ACCESS POINT
2. CONCRETE WASHOUT SHALL BE LOCATED BEHIND CURB AND 50 FT. MINIMUM FROM DRAINAGE INLETS OR WATERCOURSES

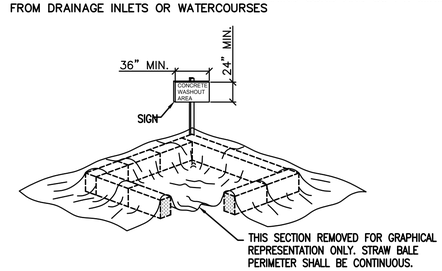

NOTES:

A. WIRE MESH SHALL BE LAID OVER THE DROP INLET SO THAT THE WIRE EXTENDS MINIMUM OF 1 FOOT BEYOND EACH SIDE OF THE INLET STRUCTURE. HARDWARE CLOTH OR COMPARABLE WIRE MESH WITH 1/2-INCH OPENINGS SHALL BE USED. IF MORE THAN ONE STRIP OF MESH IS NECESSARY, THE STRIPS SHALL BE OVERLAPPED.

B. AGGREGATE SHALL BE PLACED OVER THE WIRE MESH AS INDICATED ABOVE. THE DEPTH OF STONE SHALL BE AT LEAST 12 INCHES OVER THE ENTIRE INLET OPENING. THE STONE SHALL EXTEND BEYOND THE INLET OPENING AT LEAST 18 INCHES ON ALL SIDES.

C. IF THE STONE FILTER BECOMES CLOGGED WITH SEDIMENT SO THAT IT NO LONGER ADEQUATELY PERFORMS IT'S FUNCTION, THE STONES MUST BE PULLED AWAY FROM THE INLET, CLEANED AND REPLACED.

8 CONCRETE WASHOUT DETAIL
SCALE: N.T.S.

REV	DATE	BY	DESCRIPTION	APPROVED

VERIFY SCALES
0 1"
IF BAR DOES NOT MEASURE ONE INCH ON THIS SHEET, ADJUST ACCORDINGLY.

SUSAN SMITH-TURRIETA 86839 LICENSED PROFESSIONAL ENGINEER TEXAS
6-28-2016

DRAWN BY: RR
DESIGNED BY: SST
REVIEWED BY: SST
PROJECT NO: SST# XXXXX

SMITH TURRIETA ENGINEERING
P.O. BOX 5902, AUSTIN, TEXAS 78763
TELEPHONE: (512) 569-9022
Texas Registration Number, F-16076

CITY OF AUSTIN, TEXAS
TAYLOR LANE 0.1 MGD WASTEWATER TREATMENT PLANT PROJECT

EROSION AND SEDIMENTATION CONTROL DETAILS

DWG. NO. ESC-4

K:\ACAD\clients\STE\WWTP Ph2\C-EC-DT101.dwg modified by roodrj on Feb 17, 16 5:30 PM

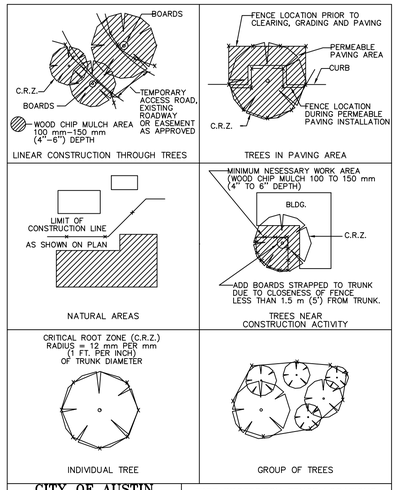

CITY OF AUSTIN WATERSHED PROTECTION DEPARTMENT	TREE PROTECTION FENCE LOCATIONS	
RECORD COPY SIGNED BY J. PATRICK MURPHY 11/15/99 ADOPTED	THE ARCHITECT/ENGINEER ASSUMES RESPONSIBILITY FOR APPROPRIATE USE OF THIS STANDARD.	STANDARD NO. 610S–1

1 – TREE PROTECTION FENCE LOCATIONS
SCALE: N.T.S.

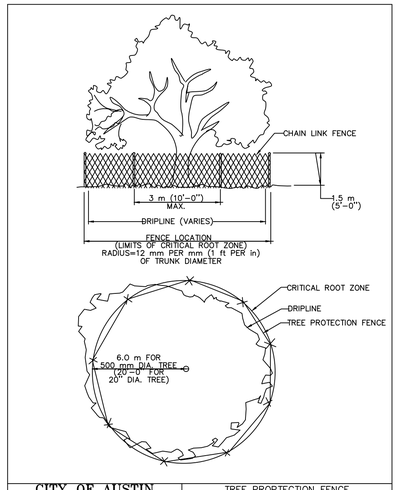

CITY OF AUSTIN WATERSHED PROTECTION DEPARTMENT	TREE PROPTECTION FENCE TYPE A – CHAIN LINK	
RECORD COPY SIGNED BY J. PATRICK MURPHY 11/15/99 ADOPTED	THE ARCHITECT/ENGINEER ASSUMES RESPONSIBILITY FOR APPROPRIATE USE OF THIS STANDARD.	STANDARD NO. 610S–2

2 – TREE PROTECTION FENCE TYPE A – CHAIN LINK
SCALE: N.T.S.

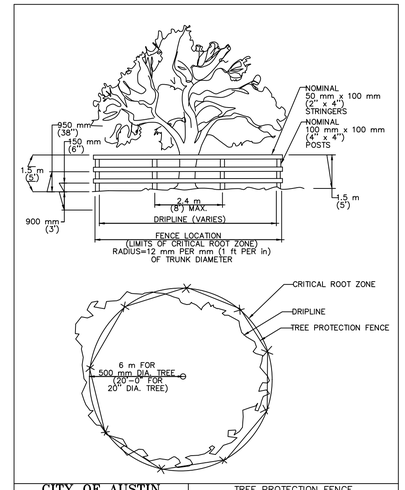

CITY OF AUSTIN WATERSHED PROTECTION DEPARTMENT	TREE PROTECTION FENCE TYPE B – WOOD	
RECORD COPY SIGNED BY J. PATRICK MURPHY 11/15/99 ADOPTED	THE ARCHITECT/ENGINEER ASSUMES RESPONSIBILITY FOR APPROPRIATE USE OF THIS STANDARD.	STANDARD NO. 610S–3

3 – TREE PROTECTION FENCE TYPE B – WOOD
SCALE: N.T.S.

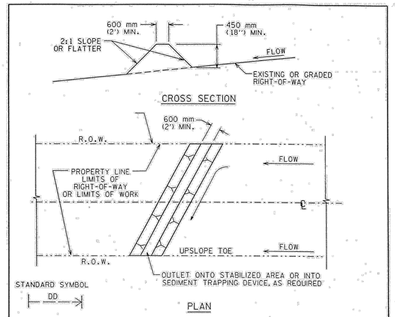

GENERAL NOTES :

1. ALL DIKES SHALL BE MACHINE COMPACTED.
2. ALL DIVERSION DIKES SHALL HAVE POSITIVE DRAINAGE TO AN OUTLET.
3. a. DIVERTED RUNOFF FROM A PROTECTED OR STABILIZED AREA SHALL HAVE ITS OUTLET FLOW DIRECTED TO AN UNDISTURBED STABILIZED AREA OR INTO A LEVEL SPREADER OR GRADE STABILIZATION STRUCTURE.
   b. DIVERTED RUNOFF FROM A DISTURBED OR EXPOSED AREA SHALL BE CONVEYED TO A SEDIMENT TRAPPING DEVICE, SUCH AS A ROCK BERM, BRUSH BERM, STONE OUTLET STRUCTURE, SEDIMENT TRAP OR SEDIMENT BASIN OR TO AN AREA PROTECTED BY ANY OF THESE PRACTICES.
4. UNLESS OTHERWISE SPECIFIED, EROSION STABILIZATION SHALL BE OPEN GRADED ROCK 75-125 mm (3-5") IN DIAMETER PLACED IN A 75 mm (3") THICK LAYER AND EMBEDDED INTO THE SOIL.
5. INSPECTION SHALL BE CONDUCTED WEEKLY OR AFTER EACH RAINFALL EVENT.

CITY OF AUSTIN WATERSHED PROTECTION DEPARTMENT	INTERCEPTOR DIKE	
3-27-00 ADOPTED	THE ARCHITECT/ENGINEER ASSUMES RESPONSIBILITY FOR APPROPRIATE USE OF THIS STANDARD.	STANDARD NO. 630S–1

4 – INTERCEPTOR DIKE
SCALE: N.T.S.

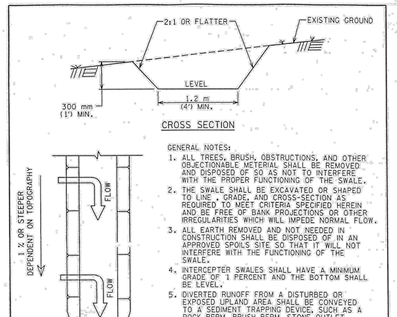

GENERAL NOTES:

1. ALL TREES, BRUSH, OBSTRUCTIONS, AND OTHER OBJECTIONABLE METERIAL SHALL BE REMOVED AND DISPOSED OF SO AS NOT TO INTERFERE WITH THE PROPER FUNCTIONING OF THE SWALE.
2. THE SWALE SHALL BE EXCAVATED OR SHAPED TO LINE , GRADE, AND CROSS-SECTION AS REQUIRED TO MEET CRITERIA SPECIFIED HEREIN AND BE FREE OF BANK PROJECTIONS OR OTHER IRREGULARITIES WHICH WILL IMPEDE NORMAL FLOW.
3. ALL EARTH REMOVED AND NOT NEEDED IN CONSTRUCTION SHALL BE DISPOSED OF IN AN APPROVED SPOILS SITE SO THAT IT WILL NOT INTERFERE WITH THE FUNCTIONING OF THE SWALE.
4. INTERCEPTER SWALES SHALL HAVE A MINIMUM GRADE OF 1 PERCENT AND THE BOTTOM SHALL BE LEVEL.
5. DIVERTED RUNOFF FROM A DISTURBED OR EXPOSED UPLAND AREA SHALL BE CONVEYED TO A SEDIMENT TRAPPING DEVICE, SUCH AS A ROCK BERM, BRUSH BERM, STONE OUTLET STRUCTURE, SEDIMENT TRAP, OR SEDIMENT BASIN (SEE STANDARD FOR THOSE DEVICES) OR TO AN AREA PROTECTED BY ANY OF THESE PRACTICES.
6. DIVERTED RUNOFF FROM A PROTECTED OR STABILIZED UPLAND AREA SHALL BE OUTLET DIRECTLY ONTO AN DISTURBED STABLIZED AREA, LEVEL SPREADER, OR INTO A GRADE STABLIZATION STRUCTURE.
7. THE ON-SITE LOCATION MAY NEED TO BE ADJUSTED TO MEET FIELD CONDITION IN ORDER TO UTILIZE THE MOST SUITABLE OUTLET.
8. STABILIZATION, WHEN REQUIRED, SHALL BE OPEN GRADED ROCK 75-125 mm (3-5") DIAMETER PLACED IN A LAYER A MINIMUM OF 75 mm (3") THICKNESS AND SHALL EXTEND ACROSS THE BOTTOM AND UP BOTH SIDES OF THE CHANNEL TO A HEIGHT OF AT LEAST 200 mm (8").

CITY OF AUSTIN WATERSHED PROTECTION DEPARTMENT	PERIMETER SWALE	
3-27-00 ADOPTED	THE ARCHITECT/ENGINEER ASSUMES RESPONSIBILITY FOR APPROPRIATE USE OF THIS STANDARD.	STANDARD NO. 636S–1

5 – PERIMETER SWALE
SCALE: N.T.S.

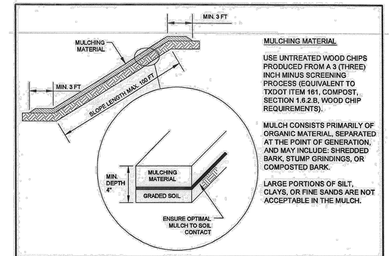

MULCHING MATERIAL

USE UNTREATED WOOD CHIPS PRODUCED FROM A 3 (THREE) INCH MINUS SCREENING PROCESS (EQUIVALENT TO TXDOT ITEM 161, COMPOST, SECTION 1.6.2.B, WOOD CHIP REQUIREMENTS).

MULCH CONSISTS PRIMARILY OF ORGANIC MATERIAL, SEPARATED AT THE POINT OF GENERATION, AND MAY INCLUDE: SHREDDED BARK, STUMP GRINDINGS, OR COMPOSTED BARK.

LARGE PORTIONS OF SILT, CLAYS, OR FINE SANDS ARE NOT ACCEPTABLE IN THE MULCH.

NOTES:

1. MULCHING ON SLOPES OF 3:1 OR FLATTER USE A MINIMUM DEPTH OF FOUR (4) INCHES.
2. MULCHING IS PERFORMED AFTER GRADING AND SOIL SURFACE PREPARATION IS COMPLETED. THE EFFECTIVENESS OF THE MULCHING MATERIAL DEPENDS ON GOOD CONTACT BETWEEN THE SOIL AND MULCHING MATERIAL. PROVIDE A SMOOTH MULCHING APPLICATION SURFACE BY TRACKING, ROLLING, RAKING, ETC. TO ENSURE OPTIMAL MULCH TO SOIL CONTACT.
3. APPLY MULCHING MATERIAL A MINIMUM OF THREE (3) FEET OVER THE SHOULDER AND BEYOND THE BASE OF THE SLOPE OR INTO EXISTING VEGETATION WHERE POSSIBLE TO PREVENT RILL FORMATION AND TRANSPORT OF THE MATERIAL. THE MULCHING MATERIAL SHALL BE PLACED EVENLY AND UNIFORMLY TO PROVIDE 100% COVERAGE.
4. MULCH MATERIAL MUST BE FREE OF REFUSE, PHYSICAL CONTAMINANTS, AND MATERIAL TOXIC TO PLANT GROWTH; IT IS NOT ACCEPTABLE FOR THE MULCH MATERIAL TO CONTAIN GROUND CONSTRUCTION DEBRIS, BIOSOLIDS, OR MANURE.
5. THE MULCHED AREA SHALL BE INSPECTED REGULARLY AND AFTER EACH LARGE RAINFALL. ANY REQUIRED REPAIRS SHALL BE MADE INMMEDIATELY, WITH ADDITONAL MULCHING MATERIAL PLACED ON TOP OF THE MULCH TO REACH THE RECOMMENDED THICKNESS.
8. WHEN THE MULCH IS DECOMPOSED, CLOGGED WITH SEDIMENT, ERODED OR INEFFECTIVE, IT MUST BE REPLACED OR REPAIRED.

CITY OF AUSTIN WATERSHED PROTECTION DEPARTMENT	MULCHING	
08/24/2010 ADOPTED	THE ARCHITECT/ENGINEER ASSUMES RESPONSIBILITY FOR APPROPRIATE USE OF THIS STANDARD.	STANDARD NO. 645S-1

6 – MULCHING
SCALE: N.T.S.

REV	DATE	BY	DESCRIPTION	APPROVED

VERIFY SCALES

0 1"

IF BAR DOES NOT MEASURE ONE INCH ON THIS SHEET, ADJUST ACCORDINGLY.

STATE OF TEXAS
SUSAN SMITH-TURRIETA
86839
LICENSED
PROFESSIONAL ENGINEER
6-28-2006

DRAWN BY: RR
DESIGNED BY: SST
REVIEWED BY: SST
PROJECT NO: SST# XXXXX

SMITH TURRIETA ENGINEERING
P.O. BOX 5902, AUSTIN, TEXAS 78763
TELEPHONE: (512) 569-9022
Texas Registration Number, F-16076

CITY OF AUSTIN, TEXAS
TAYLOR LANE 0.1 MGD WASTEWATER TREATMENT PLANT PROJECT

TREE PROTECTION DETAILS

DWG. NO.
ESC-5

SHEET 14 OF 79

K:\ACAD\clients\STE\WWTP Ph2\C-EC-DT102.dwg modified by roodrj on Apr 20, 16 7:54 AM

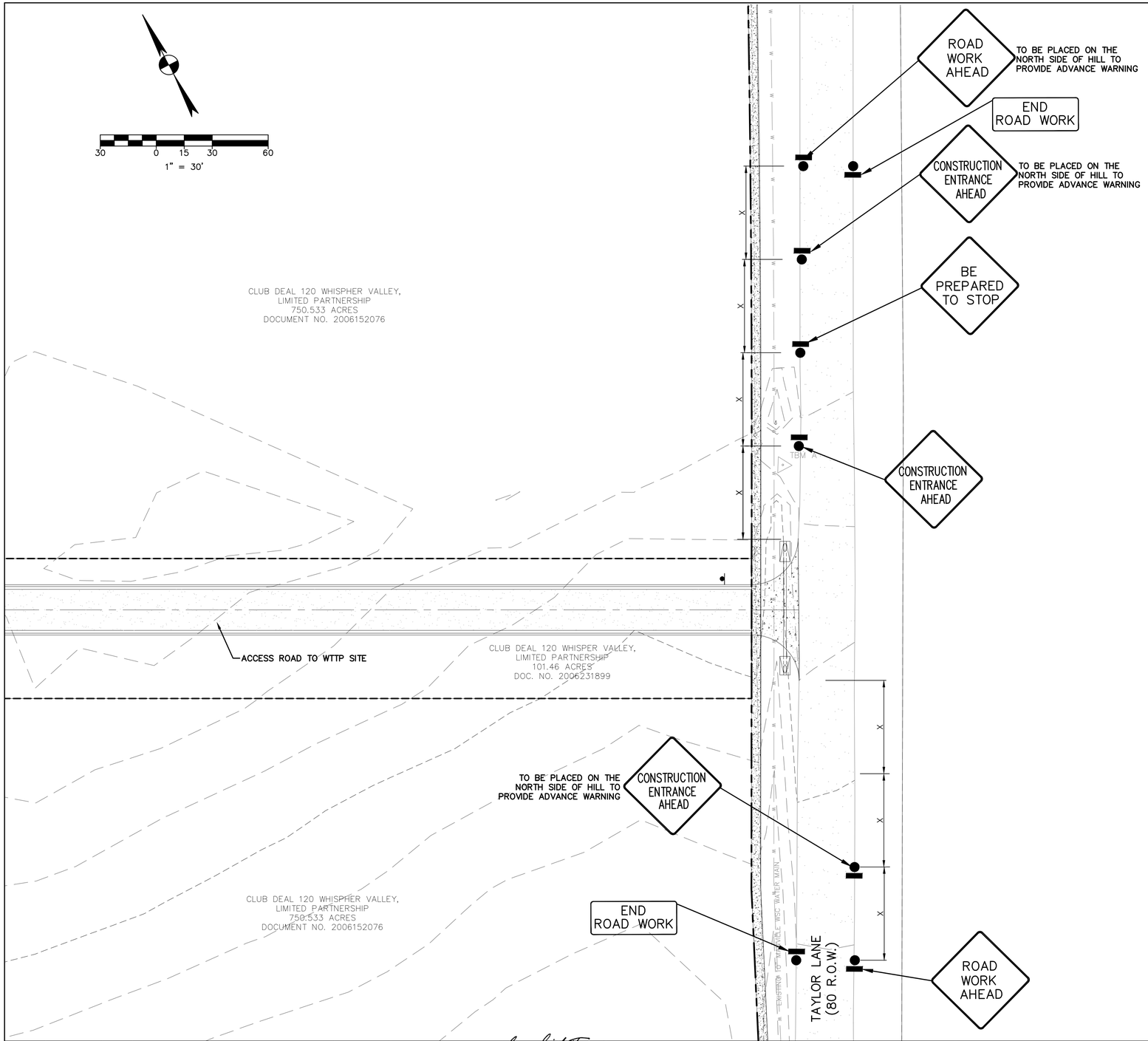

RIGHT OF WAY MANAGEMENT STANDARD NOTES

1. FOR RIGHT OF WAY VIOLATIONS INCLUDING BUT NOT LIMITED TO WORKING WITHOUT A PERMIT OR AN EXPIRED PERMIT WITHIN THE CITY OF AUSTIN ROW AN INVESTIGATION FEE WILL BE ASSESSED FOR EACH OFFENSE, UNTIL THE VIOLATION IS CORRECTED. FOLLOWING IS THE INVESTIGATION FEE SCHEDULE FOR VIOLATIONS OF PUBLIC SAFETY:

   a. NO OR EXPIRED PERMIT = EQUAL TO THE COST OF THE PERMIT
   b. VIOLATION OF PERMIT CONDITIONS, RESTRICTION LIMITS, TIMES AND LOCATIONS ON ROW PERMIT = $250
   c. IMPROPER ADVANCE WARNING SIGN = $250
   d. IMPROPER USE OF DEVICE = $250
   e. FAILURE TO CORRECT DEFICIENCY = $250
   f. RESTRICTING TRAFFIC DURING PEAK HOURS =EQUAL TO THE COST OF THE PERMIT
   g. MULTIPLE VIOLATIONS =UP TO A 4 DAY SUSPENSION OF WORK

2. CONTRACTORS AND THEIR SUBCONTRACTORS MUST BE LICENSED BY THE CITY OF AUSTIN FOR CONDUCTING WORK WITHIN THE RIGHT OF WAY.

3. CONTRACTOR MUST OBTAIN RIGHT OF WAY EXCAVATION PERMITS FROM RIGHT OF WAY MANAGEMENT DIVISION, FOR EACH STREET PRIOR TO COMMENCEMENT OF WORK. PLEASE CALL (512) 974–1150 FOR ADDITIONAL INFORMATION REGARDING PERMITTING PROCESS AND THE MOST CURRENT RIGHT OF WAY PERMITTING FEE SCHEDULE.

4. FOR WORK AT SIGNALIZED INTERSECTIONS CONTRACTOR MUST DIAL 311 OR (512) 974–2000 TO INITIATE A CITIZENS SERVICE REQUEST (CSR) FOR THE TRAFFIC SIGNALS GROUP, TO COORDINATE AND GAIN APPROVAL A MINIMUM OF 1 WEEK PRIOR TO CHANGE OF PROJECT LOCATION OR PHASE.

5. CONTRACTOR SHALL HAVE AN APPROVED RIGHT OF WAY PERMIT ON SITE AT ALL TIMES WHEN WORKING IN THE ROW.

6. CONTRACTOR MUST DIAL 311 OR (512) 974–2000 TO INITIATE A CITIZENS SERVICE REQUEST (CSR) FOR RIGHT OF WAY MANAGEMENT A MINIMUM OF 1 WEEK PRIOR TO START OF WORK.

7. CONTRACTOR MUST PROVIDE TRAINING CERTIFICATION OF COMPETENT PERSON THAT WILL BE RESPONSIBLE FOR THE TRAFFIC CONTROL PLACEMENT, TO RIGHT OF WAY INSPECTOR, PRIOR TO START OF WORK.

8. STORAGE OF EQUIPMENT AND/OR MATERIAL WITHIN THE ROW.
   a. STORAGE OF EQUIPMENT IN THE ROW IS PERMISSIBLE ONLY WITHIN THE CURRENT LIMITS OF LONG–TERM OR INTERMEDIATE–TERM CLOSURES AND SHALL BE LIMITED TO THE EQUIPMENT REQUIRED FOR THE CURRENT WORK ACTIVITY. THIS EQUIPMENT SHALL BE PROTECTED BEHIND BARRICADES.
   b. STORAGE OF MATERIAL IN THE ROW IS PERMISSIBLE ONLY WITHIN THE CURRENT LIMITS OF LONG–TERM OR INTERMEDIATE–TERM CLOSURES AND SHALL BE LIMITED TO NO MORE THAN THE MATERIAL REQUIRED FOR THREE DAYS OF PRODUCTION. THIS MATERIAL SHALL BE PROTECTED BEHIND WATER–FILLED BARRIER.
   c. EQUIPMENT OR MATERIAL STORED IN THE ROW SHALL NOT CREATE A VISUAL BARRIER TO TRAFFIC.

9. NO MORE THAN ONE WORK ZONE LOCATION MAY BE SET AT ONE TIME.

10. PEAK HOURS FOR ARTERIAL AND COLLECTOR STREETS ARE 6AM TO 9AM AND 4PM TO 6PM MONDAY THROUGH FRIDAY. NO DISRUPTION OR REDUCTION OF ACTIVE ROADWAY OR PEDESTRIAN ROUTE CAPACITY SHALL OCCUR DURING THESE TIMES, UNLESS ALLOWED BY TRAFFIC CONTROL PLAN.

11. EXCAVATIONS SHALL BE BACKFILLED OR PLATED WHEN REQUIRED TO OPEN IMPACTED TRAFFIC LANES. FOR EXCAVATIONS EXCEEDING A TRANSVERSE WIDTH OF 6 FEET, THE CONTRACTOR SHALL PROVIDE AN ENGINEERED PLATING PLAN TO THE OWNER'S REPRESENTATIVE FOR REVIEW BY RIGHT OF WAY MANAGEMENT DIVISION.

12. EXISTING SIDEWALKS AND BEATEN PATHS SHALL BE MAINTAINED AS ADA COMPLIANT THROUGHOUT THE PROJECT DURATION WITH THE EXCEPTION OF FINAL FLATWORK AND UTILITY TIE–INS. ANY WORK OVERHEAD WITHIN 25 FEET OF EXISTING PEDESTRIAN PATHWAYS WILL REQUIRE PEDESTRIAN COVERED WALKWAYS. SIDEWALK CLOSURES FOR MAJOR SIDEWALK IMPROVEMENTS HAVE A 14–DAY MAXIMUM PERIOD AND SHALL BE COMPLETED IN PHASES AS TO NOT CLOSE MORE THAN ONE BLOCK AT A TIME.

13. "ROAD WORK AHEAD" AND "CONSTRUCTION ENTRANCE AHEAD" SIGNS MUST BE PLACED AT ALL APPROACHES TO STABILIZED CONSTRUCTION ENTRANCE. SEE THE CITY OF AUSTIN STANDARD DETAILS FOR SIGN SPACING.

14. DRIVEWAYS SHALL NOT BE CLOSED FOR MORE THAN THREE CONSECUTIVE CALENDAR DAYS.

15. ADA COMPLIANCE SHALL BE MAINTAINED THROUGH STABILIZED CONSTRUCTION ENTRANCE.

16. BARRIER SHALL BE PLACED WITHIN GUIDELINES SET FORTH BY THE TMUTCD CRASH TESTING REQUIREMENTS (NCHRP REPORT 350) FOR THAT PARTICULAR BARRIER USED. ANY MODIFICATIONS TO THAT TESTING APPLICATION SHALL BE APPROVED BY THE ENGINEER OF RECORD.

17. FOR OVERNIGHT PROTECTION OF WORK ZONES WITHIN THE ROW, REFER TO COA STANDARD DETAIL 804S–4.
18. ALL TEMPORARY PAVING SHALL CONFORM TO CITY STANDARD DETAIL 1100S–4.

19. INITIAL AND PHASE CHANGE TRAFFIC CONTROL CHANGES SHALL BE INSTALLED ON WEEKENDS.

20. THE NAME AND TELEPHONE NUMBER OF THE CONTRACTOR OR SUPPLIER SHALL BE SHOWN ON THE NON–REFLECTIVE SURFACE OF ALL CHANNELIZING DEVICES IN ACCORDANCE WITH CITY 800 SERIES STANDARD DETAILS.

STREET TRAFFIC CONTROL & WORK HOURS

PROTECTION	STREET NAME	FROM STREET	TO STREET	FUNCTIONAL CLASSIFICATION	WORK HOURS	TRAFFIC CONTROL
N/A	TAYLOR LANE	X	X	COL	7:00 A.M. - 6:00 P.M.	"SEE SHEET T-2"

NOTES:

1. **POSTED SPEED LIMIT TAYLOR LANE – 55 MPH.**
2. **SIGN SPACING FOR TRAFFIC CONTROL SIGNS SHALL BE PER COA STANDARD DETAIL 804S–5.**

REV	DATE	BY	DESCRIPTION	APPROVED

VERIFY SCALES

0 1"

IF BAR DOES NOT MEASURE ONE INCH ON THIS SHEET, ADJUST ACCORDINGLY.

STATE OF TEXAS SUSAN SMITH–TURRETA 86839 LICENSED PROFESSIONAL ENGINEER

7–28–2016

DRAWN BY: RR

DESIGNED BY: SST

REVIEWED BY: SST

PROJECT NO: SST# XXXXX

SMITH TURRETA ENGINEERING
P.O. BOX 5902, AUSTIN, TEXAS 78763
TELEPHONE: (512) 569-9022
Texas Registration Number, F-16076

CITY OF AUSTIN, TEXAS
TAYLOR LANE 0.1 MGD WASTEWATER TREATMENT PLANT PROJECT

TRAFFIC CONTROL PLAN

DWG. NO. T-1

K:\ACAD\clients\STE\WWTP Ph2\C–ST–DT101.dwg modified by roodrj on Jul 27, 16 2:39 PM

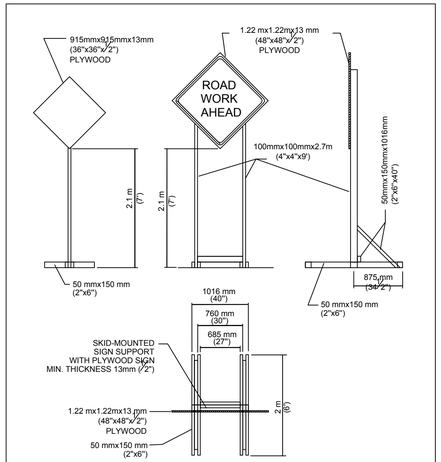

(LONG TERM AND INTERMEDIATE-TERM STATIONARY WORK)

TEMPORARY SIGN SUPPORT

SEE STANDARD 804S-5
SHEET 12 OF 13 AND SHEET 13 OF 13
FOR GENERAL NOTES AND DEVICE SPACING.

CITY OF AUSTIN DEPARTMENT OF PUBLIC WORKS		TRAFFIC CONTROL SIGNS	STANDARD NO.
RECORD COPY SIGNED BY SAM ANGOORI	01/04/10 ADOPTED	THE ARCHITECT/ENGINEER ASSUMES RESPONSIBILITY FOR APPROPRIATE USE OF THIS STANDARD.	804S-5 5 OF 13

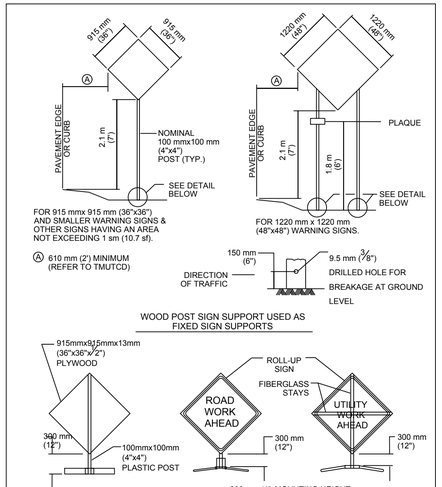

WOOD POST SIGN SUPPORT USED AS
FIXED SIGN SUPPORTS

300 mm (1') MOUNTING HEIGHT
(SHORT TERM AND SHORT DURATION WORK)

SEE STANDARD 804S-5
SHEET 12 OF 13 AND
SHEET 13 OF 13 FOR
GENERAL NOTES AND DEVICE SPACING.

PORTABLE SIGN SUPPORT

CITY OF AUSTIN DEPARTMENT OF PUBLIC WORKS		TRAFFIC CONTROL SIGNS	STANDARD NO.
RECORD COPY SIGNED BY SAM ANGOORI	01/04/10 ADOPTED	THE ARCHITECT/ENGINEER ASSUMES RESPONSIBILITY FOR APPROPRIATE USE OF THIS STANDARD.	804S-5 6 OF 13

1. WARNING SIGNS SHALL BE ORANGE, FLUORESCENT RED-ORANGE OR FLUORESCENT YELLOW-ORANGE IN COLOR. THE FLUORESCENT VERSIONS OF ORANGE PROVIDE HIGHER CONSPICUITY THAN STANDARD ORANGE, ESPECIALLY DURING TWILIGHT. ALL SIGNS USED AT NIGHT SHALL BE EITHER RETROREFLECTIVE, WITH A MATERIAL THAT HAS A SMOOTH, SEALED OUTER SURFACE, OR ILLUMINATED TO SHOW SIMILAR SHAPE AND COLOR BOTH DAY AND NIGHT. SIGN ILLUMINATION MAY BE EITHER INTERNAL OR EXTERNAL. ROADWAY LIGHTING DOES NOT MEET THE REQUIREMENTS FOR SIGN ILLUMINATION.
2. TYPE A FLASHING WARNING LIGHTS MAY BE USED IN CONJUNCTION WITH SIGNS AT NIGHT. STANDARD ORANGE FLAGS MAY BE USED FOR DAY TIME OPERATIONS. HOWEVER, NEITHER LIGHTS NOR FLAGS MAY BLOCK THE SIGN LEGEND.
3. SIGNS SHOULD BE LOCATED ON THE RIGHT-HAND SIDE OF THE ROADWAY. WHEN SPECIAL EMPHASIS IS NEEDED, SIGNS MAY BE PLACE ON BOTH THE LEFT AND RIGHT SIDES OF ROADWAY. SIGNS SHALL BE PLACED ON BOTH THE LEFT AND RIGHT SIDES OF ONE-WAY OR DIVIDED ROADWAYS. SIGNS USED FOR LONG-TERM STATIONARY AND INTERMEDIATE-TERM STATIONARY WORK SHALL BE MOUNTED AT A HEIGHT OF AT LEAST 2.1 m (7'), MEASURED FROM THE BOTTOM OF THE SIGN. THE HEIGHT TO THE BOTTOM OF A SECONDARY SIGN MOUNTED BELOW ANOTHER SIGN MAY BE 0.3 m (1') LESS THAN THE APPROPRIATE HEIGHT ABOVE.
4. SIGNS MAY BE MOUNTED ON PORTABLE SUPPORTS FOR SHORT-TERM, SHORT DURATION, MOBILE CONDITIONS AND EMERGENCIES. SIGNS MOUNTED ON PORTABLE SUPPORTS SHALL BE AT A HEIGHT OF AT LEAST 0.3 m (1'), MEASURED FROM THE BOTTOM OF THE SIGN.
5. ALL SIGN SYSTEMS SHOULD BE CRASHWORTHY. NO SIGN MOUNTS SHALL BLOCK OR IMPEDE SIDEALKS UNLESS NO OTHER OPTION IS AVAILABLE. ONLY SANDBAGS SHOULD BE USED FOR BALLASTING SIGN MOUNTS.

TABLE VI-3 TYPICAL CONSTRUCTION WARNING SIGN SIZE AND SPACING

Roadway Classification	Posted Speed	Sign Spacing ★	Long-term Stationary Or Intermediate-term Stationary Approaching Warning Signs CW20 Series And CW22-1 Sign		Short-term Stationary Or Short Duration Approach Warning Signs CW22 Series		Other Warning Signs
			Standard	Minimum#	Standard	Minimum#	Standard
Conven.	KPH (MPH)	meter (feet)	mm (inches)	mm (inches)	mm (inches)	mm (inches)	mm (inches)
	50 (30)	40 (120)	1220x1220 (48x48)	915x915 (36x36)			
	55 (35)	50 (160)			915x915 (36x36)		915x915 (36x36)
	65 (40)	75 (240)					
	70 (45)	100 (320)	Use Standard Size		Use Standard Size		
	80 (50)	120 (400)					
	90 (55)	150 (500) 2					
	100 (60)	180 (600) 2			1220x1220 (48x48)		1220x1220 (48x48)
	105 (65)	210 (700) 2					
	115 (70)	240 (800) 2					
Exp. or Fwy	★★	★★ 3			★★★	★★★	★★★

★ MINIMUM DISTANCE FROM WORK TO 1st ADVANCE WARNING SIGN AND/OR DISTANCE BETWEEN EACH ADDITIONAL SIGN.
★★ FOR TYPICAL SIGN SPACINGS ON EXPRESSWAYS AND FREEWAYS, REFER TO THE CURRENT ADDITION OF TMUTCD.
★★★ SMALLER SIGN SIZES MAY BE USED WHERE SIGN DESIGNS HAVE NOT BEEN INCLUDED IN THE "STANDARD HIGHWAY SIGNS DESIGN MANUAL".

1. SPECIAL OR LARGER SIZE SIGNS MAY BE USED AS NECESSARY.
2. DISTANCE BETWEEN SIGNS SHOULD BE INCREASED AS REQUIRED TO HAVE 450 m (1500') OR MORE ADVANCE WARNING.
3. DISTANCE BETWEEN SIGNS SHOULD BE INCREASED AS REQUIRED TO HAVE A 0.8 km (½ MILE) OR MORE ADVANCE WARNING.
4. FOR USE ONLY ON SECONDARY ROADS OR CITY STREETS WHERE SPEEDS ARE LOW.

CITY OF AUSTIN DEPARTMENT OF PUBLIC WORKS		TRAFFIC CONTROL SIGNS	STANDARD NO.
RECORD COPY SIGNED BY SAM ANGOORI	01/04/10 ADOPTED	THE ARCHITECT/ENGINEER ASSUMES RESPONSIBILITY FOR APPROPRIATE USE OF THIS STANDARD.	804S-5 7 OF 13

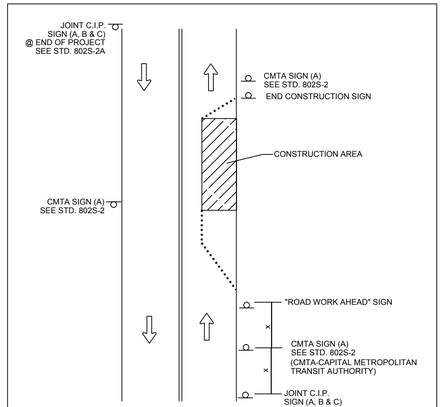

NOTES:

1. OTHER REQUIRED SIGNS NOT SHOWN FOR CLARITY.
2. "X" DISTANCES SAME AS STANDARD TABLE SHOWN ON SHEET 13 OF 13.

SEE STANDARD 804S-5
SHEET 12 OF 13 AND SHEET 13 OF 13
FOR GENERAL NOTES AND DEVICE SPACING.

CITY OF AUSTIN DEPARTMENT OF PUBLIC WORKS		TYPICAL CMTA/C.I.P. SIGN LOCATIONS	STANDARD NO.
RECORD COPY SIGNED BY SAM ANGOORI	01/04/10 ADOPTED	THE ARCHITECT/ENGINEER ASSUMES RESPONSIBILITY FOR APPROPRIATE USE OF THIS STANDARD.	804S-5 8 OF 13

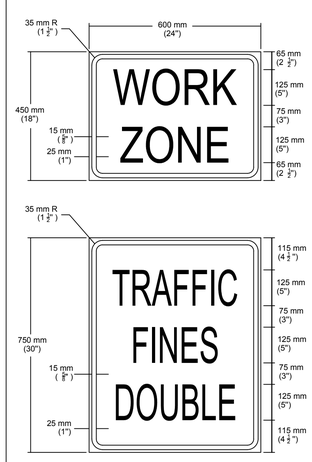

SEE STANDARD DETAIL 804S-5
SHEET 5 OF 13 FOR SKID-
MOUNTED SIGN SUPPORT.

CITY OF AUSTIN DEPARTMENT OF PUBLIC WORKS		SPECIAL WORK ZONE SIGNS	STANDARD NO.
RECORD COPY SIGNED BY SAM ANGOORI	01/04/10 ADOPTED	THE ARCHITECT/ENGINEER ASSUMES RESPONSIBILITY FOR APPROPRIATE USE OF THIS STANDARD.	804S-5 9 OF 13

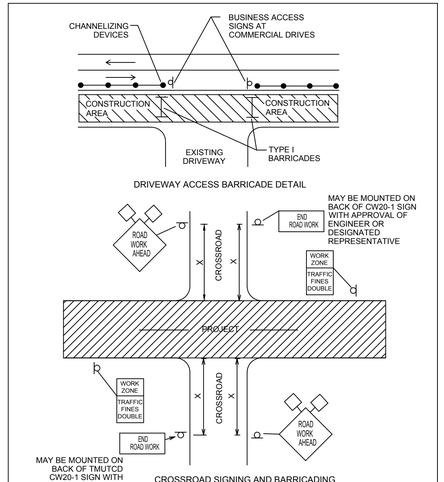

CROSSROAD SIGNING AND BARRICADING

SEE STANDARD 804S-5
SHEET 12 OF 13 AND SHEET 13 OF 13
FOR GENERAL NOTES AND DEVICE SPACING.

CITY OF AUSTIN DEPARTMENT OF PUBLIC WORKS		SIGNING AND BARRICADING CROSSROAD & DRIVEWAY	STANDARD NO.
RECORD COPY SIGNED BY SAM ANGOORI	01/04/10 ADOPTED	THE ARCHITECT/ENGINEER ASSUMES RESPONSIBILITY FOR APPROPRIATE USE OF THIS STANDARD.	804S-5 11 OF 13

1. ALL TRAFFIC CONTROL DEVICES, SIGNS, BARRICADES AND WARNING SIGNS SHALL BE FURNISHED, PLACED, CONSTRUCTED AND MAINTAINED IN THE APPROPRIATE TYPES AND SIZES AND FLAGGER OPERATIONS EXECUTED IN ACCORDANCE WITH THE CURRENT EDITION OF THE TEXAS MANUAL ON UNIFORM CONTROL DEVICES (TMUTCD), THE CITY OF AUSTIN STANDARD SPECIFICATIONS SERIES 800 AND THE CITY OF AUSTIN TRANSPORTATION CRITERIA MANUAL, OR AS DIRECTED BY THE ENGINEER OR DESIGNATED REPRESENTATIVE. IF A CONFLICT ARISES THEN THE CITY OF AUSTIN TRANSPORTATION CRITERIA MANUAL SHALL CONTROL UNLESS OTHERWISE INSTRUCTED BY THE ENGINEER OR DESIGNATED REPRESENTATIVE.
2. THE CONTRACTOR SHALL NOTIFY THE TRANSPORTATION DIVISION OF THE DEPARTMENT OF PUBLIC WORKS AT 974-7024 NO LATER THAN THE MONDAY OF THE WEEK DURING WHICH THE CONTRACTOR INTENDS TO SET UP BARRICADES TO START CONSTRUCTION.
3. PROPOSED CONSTRUCTION TRAFFIC MOVEMENTS MAY REQUIRE EXISTING SIGNAL HEADS TO BE RELOCATED. THE CITY OF AUSTIN WILL REVIEW SIGNAL HEAD LOCATIONS DURING CONSTRUCTION AND PERFORM THE REQUIRED ADJUSTMENTS. THE CONTRACTOR SHALL CONTACT THE TRANSPORTATION DIVISION OF THE DEPARTMENT OF PUBLIC WORKS AT 974-7024, THREE (3) DAYS PRIOR TO PLACMENT ANY TRAFFIC CONTROLS WHICH MAY REQUIRE SIGNAL HEAD ADJUSTMENTS/RELOCATION.
4. THE CONTRACTOR SHALL PROVIDE ONE (1) FULL-TIME OFF-DUTY, UNIFORMED AUSTIN POLICE DEPARTMENT CERTIFIED PEACE OFFICER AND ONE (1) VEHICLE OF THE TYPE APPROVED BY THE ENGINEER OR DESIGNATED REPRESENTATIVE FOR TEMPORARY LANE CLOSURES WHEN UNDERSEALING, MILLING, PAVING AND WHEN WORKING IN INTERSECTIONS AS PART OF THE TRAFFIC CONTROL OPERATIONS. THE PEACE OFFICER SHALL BE ABLE TO SHOW PROOF OF CERTIFICATION BY THE TEXAS COMMISSION ON LAW ENFORCEMENT OFFICER STANDARDS.
5. THE CONTRACTOR SHALL NOTIFY ALL OTHER GOVERNMENTAL AGENCIES WHOSE RIGHTS-OF-WAY ARE AFFECTED BY HIS WORK ACTIVITIES. THE CONTRACTOR SHALL PROVIDE ANY ADDITIONAL TRAFFIC CONTROL DEVICES THAT THEY MAY NEED.
6. THE CONTRACTOR SHALL MAINTAIN ONE (1) DUST-FREE LANE OF TRAFFIC IN EACH DIRECTION AT ALL TIMES, UNLESS OTHERWISE NOTED IN THE DRAWINGS OR APPROVED THE ENGINEER OR DESIGNATED REPRESENTATIVE.
7. THERE SHALL BE A MINIMUM OF THREE (3) METERS (10 FEET) CLEAR WIDTH FOR EACH LANE OF TRAFFIC IN CHANNELIZED AREAS, UNLESS OTHERWISE NOTED ON THE DRAWINGS OR APPROVED BY THE ENGINEER OR DESIGNATED REPRESENTATIVE.
8. THE CONTRACTOR SHALL MAINTAIN DRIVEWAY ACCESS AT ALL TIMES. IF ACCESS CANNOT BE MAINTAINED, THE CONTRACTOR WITH THE APPROVAL OF THE ENGINEER OR DESIGNATED REPRESENTATIVE SHALL PROVIDE AT LEAST 24 HOUR WRITTEN NOTICE OF LIMITED ACCESS TO AFFECTED PROPERTY OWNERS. THE CONTRACTOR SHALL PROVIDE BUSINESS ACCESS SIGNS AS NEEDED TO NFORM DRIVERS OF THE LOCATIONS OF ALL DRIVEWAYS.
9. TEMPORARY LANE CLOSURES IN THE CENTRAL BUSINESS DISTRICT (CBD) OR ON ARTERIAL STREETS SHALL NOT BE PERMITTED DURING THE HOURS OF 7 AM TO 9 AM AND 4 PM TO 6PM MONDAY THROUGH FRIDAY UNLESS PRIOR APPROVAL HAS BEEN OBTAINED FROM THE TRANSPORTATION DIVISION.
10. TRAFFIC CONTROL SHOWN ON STANDARD DETAILS IS TYPICAL. ADDITIONAL SIGNING AND/OR BARRICADING, AS WELL AS TEMPORARY PAVEMENT MARKINGS AND OBLITERATION/RESTORATION OF EXISTING PAVEMENT MARKINGS, MAY BE REQUIRED DEPENDING ON FIELD CONDITIONS. FIELD ADJUSTMENTS TO TRAFFIC CONTROLS WILL NOT BE PAID FOR DIRECTLY, BUT WILL BE CONSIDERED SUBSIDIARY TO ITEM NO. 803S "BARRICADES, SIGNS AND TRAFFIC HANDLING".
11. THE CONTRACTOR SHALL DESIGNATE A COMPETENT PERSON FOR TRAFFIC CONTROL. THE COMPETENT PERSON SHALL MAKE INSPECTIONS OF THE TRAFFIC CONTROL DEVICES AT LEAST TWO (2) TIMES A DAY (ONCE AT THE BEGINNING OF THE DAY AND ONCE AT THE END OF THE DAY), INCLUDING NON-WORKING DAYS, ENSURING THAT ALL DEVICES ARE IN THEIR PROPER PLACE AND ARE IN WORKING ORDER.
12. ALL DEVICES SHALL BE MADE USING MATERIALS LISTED ON THE TxDOT APPROVED PRODUCTS LIST.

CITY OF AUSTIN DEPARTMENT OF PUBLIC WORKS		GENERAL TRAFFIC CONTROL NOTES	STANDARD NO.
RECORD COPY SIGNED BY SAM ANGOORI	01/04/10 ADOPTED	THE ARCHITECT/ENGINEER ASSUMES RESPONSIBILITY FOR APPROPRIATE USE OF THIS STANDARD.	804S-5 12 OF 13

13. ALL PERSONS WORKING WITHIN THE RIGHT-OF-WAY SHALL WEAR A BRIGHTLY COLORED SAFETY VEST. FOR NIGHTTIME WORK THE VEST SHALL BE RETROREFLECTIVE,
14. WHEN AN INTERSECTION IS CLOSED FOR CONSTRUCTION, THE CONTRACTOR SHALL PROCEED WITH CONSTRUCTION IN SUCH A MANNER THAT THE CLOSURE TIME IS MINIMIZED.
15. THE CONTRACTOR SHALL NOTIFY THE CAPITAL METRO DISPATCHER AT 385-4295 ONE (1) WEEK PRIOR TO LANE CLOSURES ADJACENT TO BUS STOPS.

DURATION OF WORK
WORK DURATION IS A MAJOR FACTOR IN DETERMINING THE NUMBER AND TYPES OF DEVICES USED IN TEMPORARY TRAFFIC ZONES. THE FIVE (5) CATEGORIES OF WORK DURATION AND THEIR TIME AT A LOCATION ARE AS FOLLOWS:

- LONG-TERM STATIONARY-WORK THAT OCCUPIES A LOCATION FOR MORE THAN 3 DAYS.
- INTERMEDIATE-TERM STATIONARY-WORK THAT OCCUPIES A LOCATION FROM OVERNIGHT TO 3 DAYS.
- SHORT-TERM STATIONARY-DAYTIME WORK THAT OCCUPIES A LOCATION FROM 1 TO 12 HOURS.
- SHORT-DURATION WORK THAT OCCUPIES A LOCATION UP TO 1 HOUR.
- MOBILE-WORK THAT MOVES INTERMITTENTLY OR CONTINUOUSLY.

Typical Transition Lengths and Suggested Maximum Spacing of Devices

Posted Speed KPH (MPH)	Formula	Minimum Desirable Taper Lengths (L) Meters (Feet)			Suggested Max. Device Spacing		Suggested Sign Spacing Meters (Feet)
		3.0(10) Offset Meters (feet)	3.3(11) Offset Meters (feet)	3.6(12) Offset Meters (feet)	On a taper Meters (feet)	On a tangent Meters (feet)	"X" Dimension
50 (30)	L=WS.^{2}/60	45 (150)	50 (165)	55 (180)	9 (30)	15-20 (60-75)	40 (120)
55 (35)		65 (205)	70 (225)	75 (245)	10 (35)	25-25 (70-90)	50 (160)
65 (40)		80 (265)	90 (295)	100 (320)	12 (40)	25-30 (80-100)	75 (240)
70 (45)	L=WS	135 (450)	145 (495)	165 (540)	13 (45)	25-30 (90-110)	100 (320)
80 (50)		150 (500)	165 (550)	180 (600)	15 (50)	30-35 (100-125)	120 (400)
90 (55)		165 (550)	185 (605)	200 (660)	16 (55)	35-40 (110-140)	150 (500)
100 (60)		180 (600)	200 (660)	220 (720)	18 (60)	40-45 (120-150)	180 (600)
105 (65)		195 (650)	215 (715)	235 (780)	19 (65)	40-50 (130-165)	210 (700)
115 (70)		215 (700)	235 (770)	255 (840)	21 (70)	45-55 (140-175)	240 (800)

CITY OF AUSTIN DEPARTMENT OF PUBLIC WORKS		GENERAL TRAFFIC CONTROL NOTES	STANDARD NO.
RECORD COPY SIGNED BY SAM ANGOORI	01/04/10 ADOPTED	THE ARCHITECT/ENGINEER ASSUMES RESPONSIBILITY FOR APPROPRIATE USE OF THIS STANDARD.	804S-5 13 OF 13

REV	DATE	BY	DESCRIPTION	APPROVED

VERIFY SCALES
0 1"
IF BAR DOES NOT MEASURE ONE INCH ON THIS SHEET, ADJUST ACCORDINGLY.

STATE OF TEXAS
SUSAN SMITH-TURRIETA
86839
LICENSED
PROFESSIONAL ENGINEER
6-28-2010

DRAWN BY: RR
DESIGNED BY: SST
REVIEWED BY: SST
PROJECT NO: SST# XXXXX

SMITH TURRIETA ENGINEERING
P.O. BOX 5902, AUSTIN, TEXAS 78763
TELEPHONE: (512) 569-9022
Texas Registration Number, F-16076

CITY OF AUSTIN, TEXAS
TAYLOR LANE 0.1 MGD WASTEWATER
TREATMENT PLANT PROJECT

TRAFFIC CONTROL DETAILS

DWG. NO.
T-2

SHEET 16 OF 79

K:\ACAD\clients\STE\WWTP Ph2\C-2D-D1103.dwg modified by roodrj on Apr 20, 16 8:00 AM

BENCHMARK INFORMATION:

ELEVATIONS HEREON ARE REFERENCED TO THE NORTH AMERICAN VERTICAL DATUM OF 1988 (NAVD 88) UTILIZING WESTERN DATA SYSTEMS CONTINUALLY OPERATING REFERENCE STATION (CORS) NETWORK AND ADDITIONALLY REFERENCED TO LCRA GPS CONTROL MONUMENTS AT THE TIME OF THIS SURVEY.

BENCHMARK: LCRA CS33 – 3" ALUMINUM DISC IN CONCRETE ON EAST SIDE OF TAYLOR ROAD, ±3' WEST OF BARB-WIRE FENCE AND ±27' EAST OF PAVEMENT, EQUIDISTANT BETWEEN 8TH AND 9TH "T" POST FROM CORNER OF HOG-WIRE AND BARB-WIRE FENCE TRANSITION
PUBLISHED ELEV=587.486 (NAVD 88)
AS FOUND = 587.44' (NAVD 88)

TBM A: 1/2" IRON ROD WITH BLUE "BURY+PARTNERS" CAP SET ON WEST SIDE OF TAYLOR ROAD ±2205' NORTH OF GILLELAND CREEK CROSSING, ±50' NORTHEAST OF UTILITY POLE, BETWEEN 12" CMP CULVERTS. ELEV=427.38'

TBM B: COTTON SPINDLE SET ON WEST SIDE OF TAYLOR ROAD ±1775' NORTH OF GILLELAND CREEK CROSSING, ±105' SOUTH OF UTILITY POLE WITH GUY WIRE. ELEV=422.59'

TBM C: 1/2" IRON ROD WITH BLUE "BURY+PARTNERS" CAP SET ±1530' WEST OF TAYLOR ROAD AND ±45' SOUTH OF 90° BEND IN WIRE FENCE LINE, BETWEEN 12" HACKBERRY TREES TAGGED 7053 AND 7054, RESPECTIVELY. ELEV=431.03'

LEGEND

	WWTP EASEMENT LIMITS
	WWTP BOUNDARY
	PROPERTY LINE
	FEMA 100-YR FLOOD PLAIN

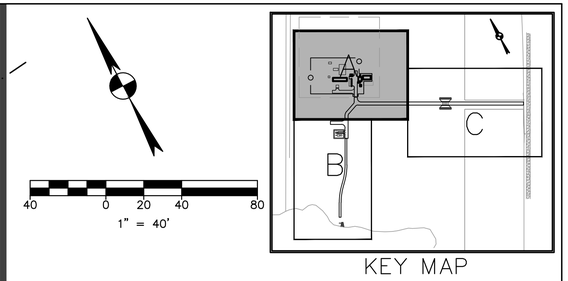

KEY MAP

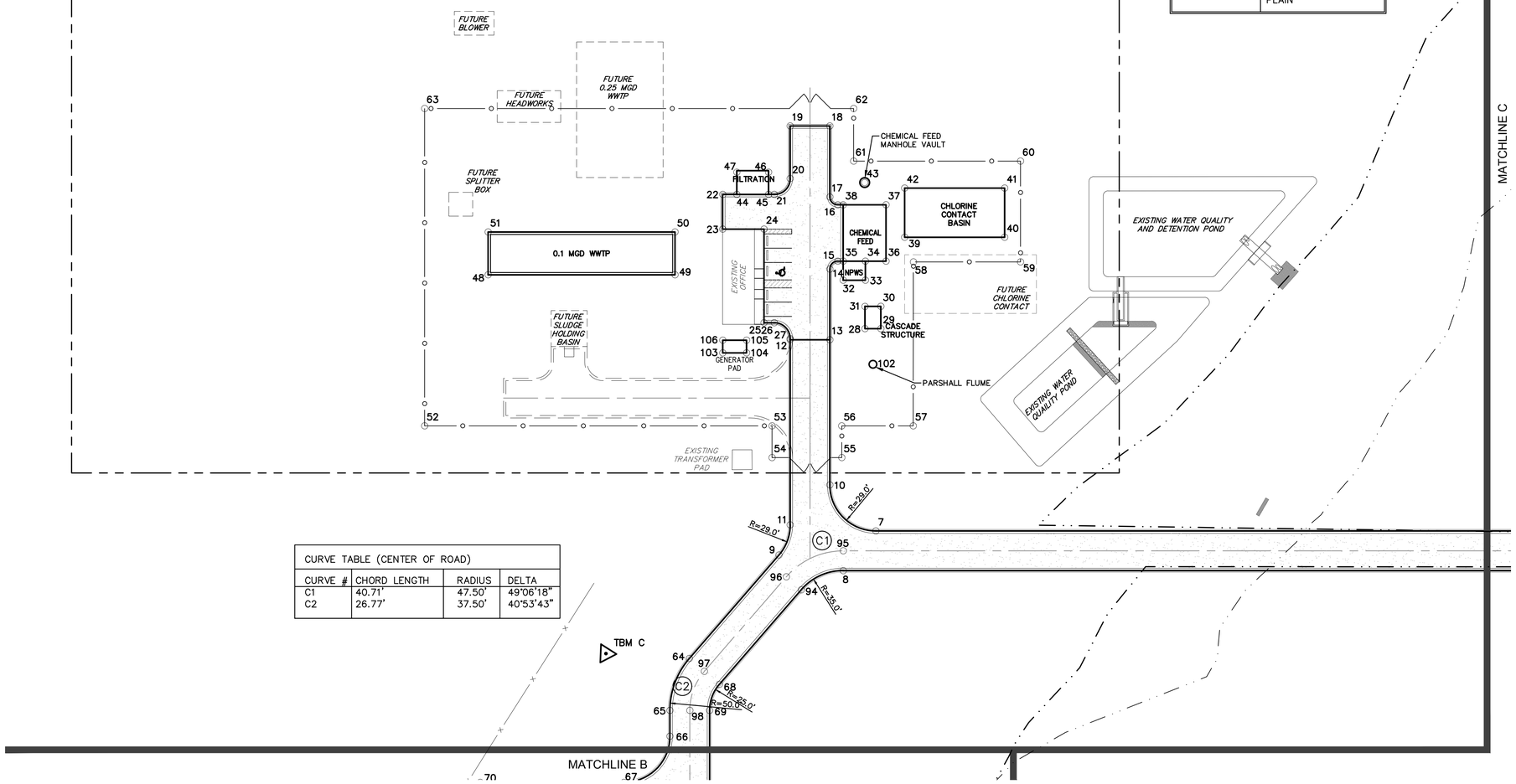

CURVE TABLE (CENTER OF ROAD)

CURVE #	CHORD LENGTH	RADIUS	DELTA
C1	40.71'	47.50'	49°06'18"
C2	26.77'	37.50'	40°53'43"

TABLE OF COORDINATES

POINT #	NORTHING	EASTING	DESCRIPTION
7	10072569.94	3174406.12	EDGE OF ROAD
8	10072557.33	3174376.33	EDGE OF ROAD
9	10072584.87	3174344.98	EDGE OF ROAD
10	10072609.09	3174393.91	EDGE OF ROAD
11	10072598.40	3174360.07	EDGE OF ROAD
12	10072701.73	3174414.27	EDGE OF ROAD
13	10072690.12	3174436.41	EDGE OF ROAD
14	10072729.56	3174457.09	EDGE OF ROAD
15	10072731.66	3174463.84	EDGE OF ROAD
16	10072763.10	3174480.33	EDGE OF ROAD
17	10072769.85	3174478.22	EDGE OF ROAD
18	10072809.45	3174498.99	EDGE OF ROAD
19	10072821.06	3174476.85	EDGE OF ROAD
20	10072791.68	3174461.44	EDGE OF ROAD
21	10072787.47	3174447.94	EDGE OF ROAD
22	10072802.56	3174419.16	EDGE OF ROAD
23	10072783.23	3174409.02	EDGE OF ROAD
24	10072771.16	3174432.05	EDGE OF ROAD
25	10072718.91	3174404.64	EDGE OF ROAD
26	10072715.89	3174410.40	EDGE OF ROAD
27	10072702.39	3174414.61	EDGE OF ROAD
28	10072686.06	3174459.28	CORNER OF CASCADE STRUCTURE
29	10072681.42	3174468.13	CORNER OF CASCADE STRUCTURE
30	10072693.82	3174474.64	CORNER OF CASCADE STRUCTURE
31	10072698.46	3174465.78	CORNER OF CASCADE STRUCTURE
32	10072719.46	3174461.28	CORNER OF NPWS
33	10072712.95	3174473.68	CORNER OF NPWS
34	10072723.58	3174479.25	CORNER OF NPWS
35	10072730.08	3174466.85	CORNER OF CHEMICAL FEED BLDG.
36	10072717.54	3174490.76	CORNER OF CHEMICAL FEED BLDG.
37	10072748.98	3174507.25	CORNER OF CHEMICAL FEED BLDG.
38	10072761.52	3174483.34	CORNER OF CHEMICAL FEED BLDG.
39	10072725.41	3174508.14	CORNER OF CHLORINE CONTACT BASIN
40	10072696.15	3174563.93	CORNER OF CHLORINE CONTACT BASIN
41	10072723.60	3174578.33	CORNER OF CHLORINE CONTACT BASIN
42	10072752.86	3174522.54	CORNER OF CHLORINE CONTACT BASIN
43	10072767.68	3174501.82	CENTER OF CHEMICAL FEED MH VAULT
44	10072798.43	3174427.04	CORNER OF FILTRATION
45	10072789.14	3174444.75	CORNER OF FILTRATION
46	10072801.54	3174451.26	CORNER OF FILTRATION
47	10072810.83	3174433.54	CORNER OF FILTRATION
48	10072826.35	3174264.79	CORNER OF 0.1 MGD WWTP
49	10072771.65	3174369.07	CORNER OF 0.1 MGD WWTP
50	10072795.57	3174381.61	CORNER OF 0.1 MGD WWTP
51	10072850.26	3174277.33	CORNER OF 0.1 MGD WWTP
52	10072760.62	3174185.16	CORNER OF FENCE
53	10072658.98	3174378.96	CORNER OF FENCE
54	10072641.27	3174369.67	CORNER OF FENCE
55	10072620.87	3174408.56	CORNER OF FENCE
56	10072638.59	3174417.85	CORNER OF FENCE
57	10072617.68	3174457.70	CORNER OF FENCE
58	10072709.13	3174505.81	CORNER OF FENCE
59	10072677.77	3174565.59	CORNER OF FENCE
60	10072734.01	3174595.09	CORNER OF FENCE
61	10072782.84	3174501.97	CORNER OF FENCE
62	10072812.22	3174517.38	CORNER OF FENCE
63	10072937.74	3174278.05	CORNER OF FENCE
64	10072553.37	3174264.74	EDGE OF ROAD
65	10072530.05	3174238.72	EDGE OF ROAD
66	10072515.60	3174231.14	EDGE OF ROAD
67	10072503.38	3174191.99	EDGE OF ROAD
68	10072530.10	3174273.87	EDGE OF ROAD
69	10072518.44	3174260.86	EDGE OF ROAD
94	10072558.92	3174347.29	EDGE OF ROAD
95	10072568.40	3174382.14	CENTER OF ROAD
96	10072570.55	3174342.72	CENTER OF ROAD
97	10072541.74	3174269.30	CENTER OF ROAD
98	10072524.25	3174249.79	CENTER OF ROAD
102	10072663.82	3174453.26	CENTER OF PARSHALL FLUME
103	10072714.15	3174372.81	CORNER OF GENERATOR PAD
104	10072707.19	3174386.09	CORNER OF GENERATOR PAD
105	10072714.27	3174389.81	CORNER OF GENERATOR PAD
106	10072721.24	3174376.52	CORNER OF GENERATOR PAD

REV	DATE	BY	DESCRIPTION	APPROVED

VERIFY SCALES
0 1"
IF BAR DOES NOT MEASURE ONE INCH ON THIS SHEET, ADJUST ACCORDINGLY.

STATE OF TEXAS
SUSAN SMITH-TURRIETA
86839
LICENSED
PROFESSIONAL ENGINEER
6-28-2016

DRAWN BY: RR
DESIGNED BY: SST
REVIEWED BY: SST
PROJECT NO: SST# XXXXX

SMITH TURRIETA ENGINEERING
P.O. BOX 5902, AUSTIN, TEXAS 78763
TELEPHONE: (512) 569-9022
Texas Registration Number, F-16076

CITY OF AUSTIN, TEXAS
TAYLOR LANE 0.1 MGD WASTEWATER TREATMENT PLANT PROJECT

SITE PLAN A - DIMENSION CONTROL PLAN

DWG. NO. C-1

SHEET 17 OF 79

K:\ACAD\clients\STE\WWTP Ph2\C-ST-PL107.dwg modified by roodrj on Jun 28, 16 11:23 AM

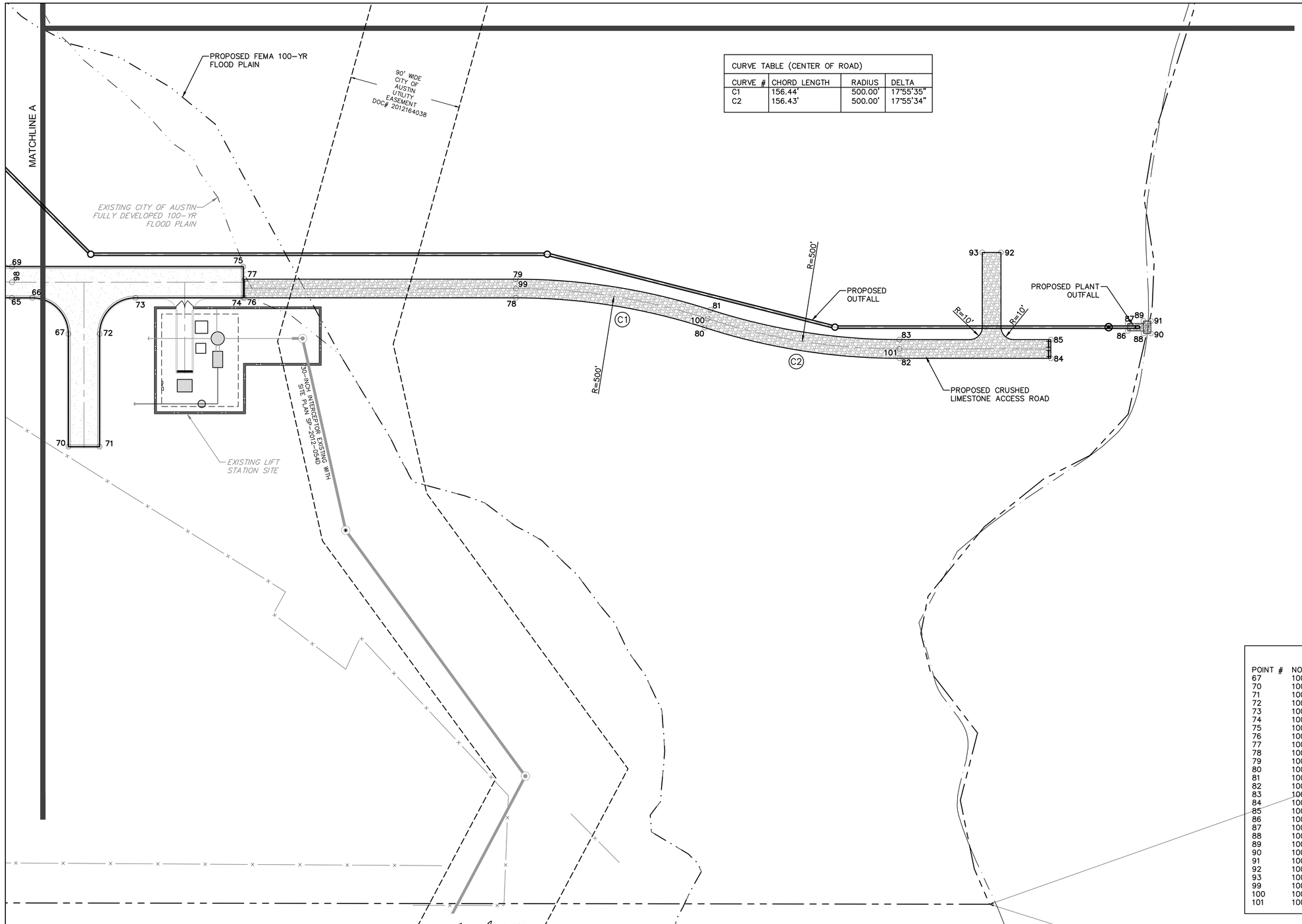

CURVE TABLE (CENTER OF ROAD)			
CURVE #	CHORD LENGTH	RADIUS	DELTA
C1	156.44'	500.00'	17°55'35"
C2	156.43'	500.00'	17°55'34"

40 0 20 40 80

1" = 40'

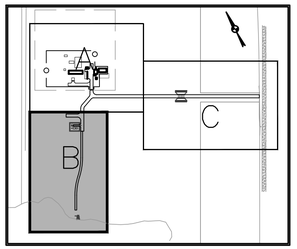

KEY MAP

LEGEND

	WWTP EASEMENT LIMITS
	WWTP BOUNDARY
	PROPERTY LINE
	FEMA 100-YR FLOOD PLAIN

BENCHMARK INFORMATION:

ELEVATIONS HEREON ARE REFERENCED TO THE NORTH AMERICAN VERTICAL DATUM OF 1988 (NAVD 88) UTILIZING WESTERN DATA SYSTEMS CONTINUALLY OPERATING REFERENCE STATION (CORS) NETWORK AND ADDITIONALLY REFERENCED TO LCRA GPS CONTROL MONUMENTS AT THE TIME OF THIS SURVEY.

BENCHMARK: LCRA CS33 – 3" ALUMINUM DISC IN CONCRETE ON EAST SIDE OF TAYLOR ROAD, ±3' WEST OF BARB-WIRE FENCE AND ±27' EAST OF PAVEMENT, EQUIDISTANT BETWEEN 8TH AND 9TH "T" POST FROM CORNER OF HOG-WIRE AND BARB-WIRE FENCE TRANSITION
PUBLISHED ELEV=587.486 (NAVD 88)
AS FOUND = 587.44' (NAVD 88)

TBM A: 1/2" IRON ROD WITH BLUE "BURY+PARTNERS" CAP SET ON WEST SIDE OF TAYLOR ROAD ±2205' NORTH OF GILLELAND CREEK CROSSING, ±50' NORTHEAST OF UTILITY POLE, BETWEEN 12" CMP CULVERTS. ELEV=427.38'

TBM B: COTTON SPINDLE SET ON WEST SIDE OF TAYLOR ROAD ±1775' NORTH OF GILLELAND CREEK CROSSING, ±105' SOUTH OF UTILITY POLE WITH GUY WIRE. ELEV=422.59'

TBM C: 1/2" IRON ROD WITH BLUE "BURY+PARTNERS" CAP SET ±1530' WEST OF TAYLOR ROAD AND ±45' SOUTH OF 90° BEND IN WIRE FENCE LINE, BETWEEN 12" HACKBERRY TREES TAGGED 7053 AND 7054, RESPECTIVELY. ELEV=431.03'

TABLE OF COORDINATES

POINT #	NORTHING	EASTING	DESCRIPTION
67	10072503.38	3174191.99	EDGE OF ROAD
70	10072545.42	3174111.84	EDGE OF ROAD
71	10072523.28	3174100.23	EDGE OF ROAD
72	10072481.24	3174180.38	EDGE OF ROAD
73	10072442.09	3174192.59	EDGE OF ROAD
74	10072365.62	3174152.48	EDGE OF ROAD
75	10072354.01	3174174.62	EDGE OF ROAD
76	10072364.73	3174152.02	EDGE OF ROAD
77	10072357.76	3174165.30	EDGE OF ROAD
78	10072171.89	3174050.87	EDGE OF ROAD
79	10072164.92	3174064.16	EDGE OF ROAD
80	10072048.75	3173959.29	EDGE OF ROAD
81	10072038.03	3173969.79	EDGE OF ROAD
82	10071921.86	3173864.92	EDGE OF ROAD
83	10071914.89	3173878.21	EDGE OF ROAD
84	10071814.27	3173808.50	EDGE OF ROAD
85	10071807.30	3173821.78	EDGE OF ROAD
86	10071749.43	3173799.33	CORNER OF OUTFALL STRUCTURE
87	10071746.64	3173804.65	CORNER OF OUTFALL STRUCTURE
88	10071739.12	3173791.67	CORNER OF OUTFALL STRUCTURE
89	10071734.48	3173800.52	CORNER OF OUTFALL STRUCTURE
90	10071733.81	3173788.88	CORNER OF OUTFALL STRUCTURE
91	10071729.16	3173797.74	CORNER OF OUTFALL STRUCTURE
92	10071810.21	3173902.35	EDGE OF ROAD
93	10071823.50	3173909.32	EDGE OF ROAD
99	10072168.40	3174057.52	CENTER OF ROAD
100	10072043.39	3173964.54	CENTER OF ROAD
101	10071918.37	3173871.57	CENTER OF ROAD

REV	DATE	BY	DESCRIPTION	APPROVED

VERIFY SCALES

0 1"

IF BAR DOES NOT MEASURE ONE INCH ON THIS SHEET, ADJUST ACCORDINGLY.

STATE OF TEXAS
SUSAN SMITH-TURRIETA
86839
LICENSED
PROFESSIONAL ENGINEER
8-22-2016

DRAWN BY: RR

DESIGNED BY: SST

REVIEWED BY: SST

PROJECT NO: SST# XXXXX

SMITH TURRIETA ENGINEERING

P.O. BOX 5902, AUSTIN, TEXAS 78763
TELEPHONE: (512) 569-9022
Texas Registration Number, F-16076

CITY OF AUSTIN, TEXAS
TAYLOR LANE 0.1 MGD WASTEWATER TREATMENT PLANT PROJECT

SITE PLAN B - DIMENSION CONTROL

DWG. NO.

C-2

SHEET 18 OF 79

K:\ACAD\clients\STE\WWTP Ph2\C-ST-PL112.dwg modified by roodrj on Aug 22, 16 7:18 AM

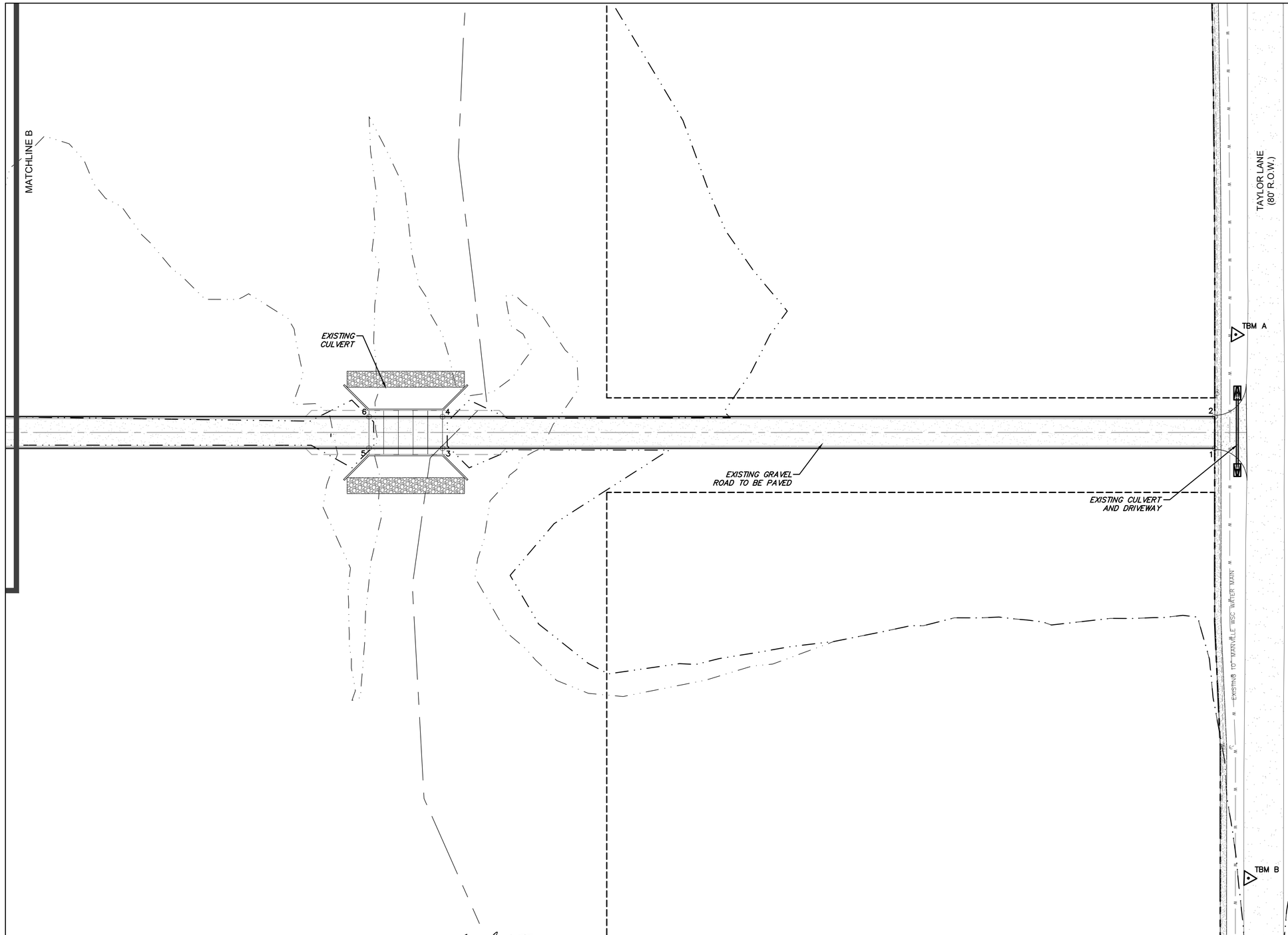

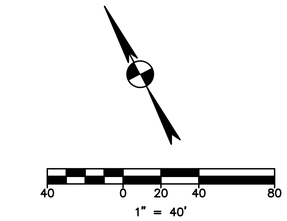

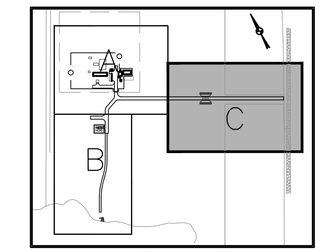

KEY MAP

LEGEND

	WWTP EASEMENT LIMITS
	WWTP BOUNDARY
	PROPERTY LINE
	FEMA 100-YR FLOOD PLAIN

BENCHMARK INFORMATION:

ELEVATIONS HEREON ARE REFERENCED TO THE NORTH AMERICAN VERTICAL DATUM OF 1988 (NAVD 88) UTILIZING WESTERN DATA SYSTEMS CONTINUALLY OPERATING REFERENCE STATION (CORS) NETWORK AND ADDITIONALLY REFERENCED TO LCRA GPS CONTROL MONUMENTS AT THE TIME OF THIS SURVEY.

BENCHMARK: LCRA CS33 – 3" ALUMINUM DISC IN CONCRETE ON EAST SIDE OF TAYLOR ROAD, ±3' WEST OF BARB-WIRE FENCE AND ±27' EAST OF PAVEMENT, EQUIDISTANT BETWEEN 8TH AND 9TH "T" POST FROM CORNER OF HOG-WIRE AND BARB-WIRE FENCE TRANSITION
PUBLISHED ELEV=587.486 (NAVD 88)
AS FOUND = 587.44' (NAVD 88)

TBM A: 1/2" IRON ROD WITH BLUE "BURY+PARTNERS" CAP SET ON WEST SIDE OF TAYLOR ROAD ±2205' NORTH OF GILLELAND CREEK CROSSING, ±50' NORTHEAST OF UTILITY POLE, BETWEEN 12" CMP CULVERTS. ELEV=427.38'

TBM B: COTTON SPINDLE SET ON WEST SIDE OF TAYLOR ROAD ±1775' NORTH OF GILLELAND CREEK CROSSING, ±105' SOUTH OF UTILITY POLE WITH GUY WIRE. ELEV=422.59'

TBM C: 1/2" IRON ROD WITH BLUE "BURY+PARTNERS" CAP SET ±1530' WEST OF TAYLOR ROAD AND ±45' SOUTH OF 90° BEND IN WIRE FENCE LINE, BETWEEN 12" HACKBERRY TREES TAGGED 7053 AND 7054, RESPECTIVELY. ELEV=431.03'

TABLE OF COORDINATES

POINT #	NORTHING	EASTING	DESCRIPTION
1	10071927.46	3175577.29	EDGE OF ROAD
2	10071949.60	3175588.91	EDGE OF ROAD
3	10072211.96	3175034.84	EDGE OF ROAD
4	10072234.10	3175046.45	EDGE OF ROAD
5	10072239.06	3174983.18	EDGE OF ROAD
6	10072261.20	3174994.79	EDGE OF ROAD

REV	DATE	BY	DESCRIPTION	APPROVED

VERIFY SCALES

0 1"

IF BAR DOES NOT MEASURE ONE INCH ON THIS SHEET, ADJUST ACCORDINGLY.

STATE OF TEXAS
SUSAN SMITH-TURRIETA
86839
LICENSED
PROFESSIONAL ENGINEER
6-28-2016

DRAWN BY: RR
DESIGNED BY: SST
REVIEWED BY: SST
PROJECT NO: SST# XXXXX

SMITH TURRIETA ENGINEERING
P.O. BOX 5902, AUSTIN, TEXAS 78763
TELEPHONE: (512) 569-9022
Texas Registration Number, F-16076

CITY OF AUSTIN, TEXAS
TAYLOR LANE 0.1 MGD WASTEWATER TREATMENT PLANT PROJECT

SITE PLAN C - DIMENSION CONTROL PLAN

DWG. NO. C-3

K:\ACAD\clients\STE\WWTP Ph2\C-ST-PL113.dwg modified by roodrj on May 2, 16 10:39 AM

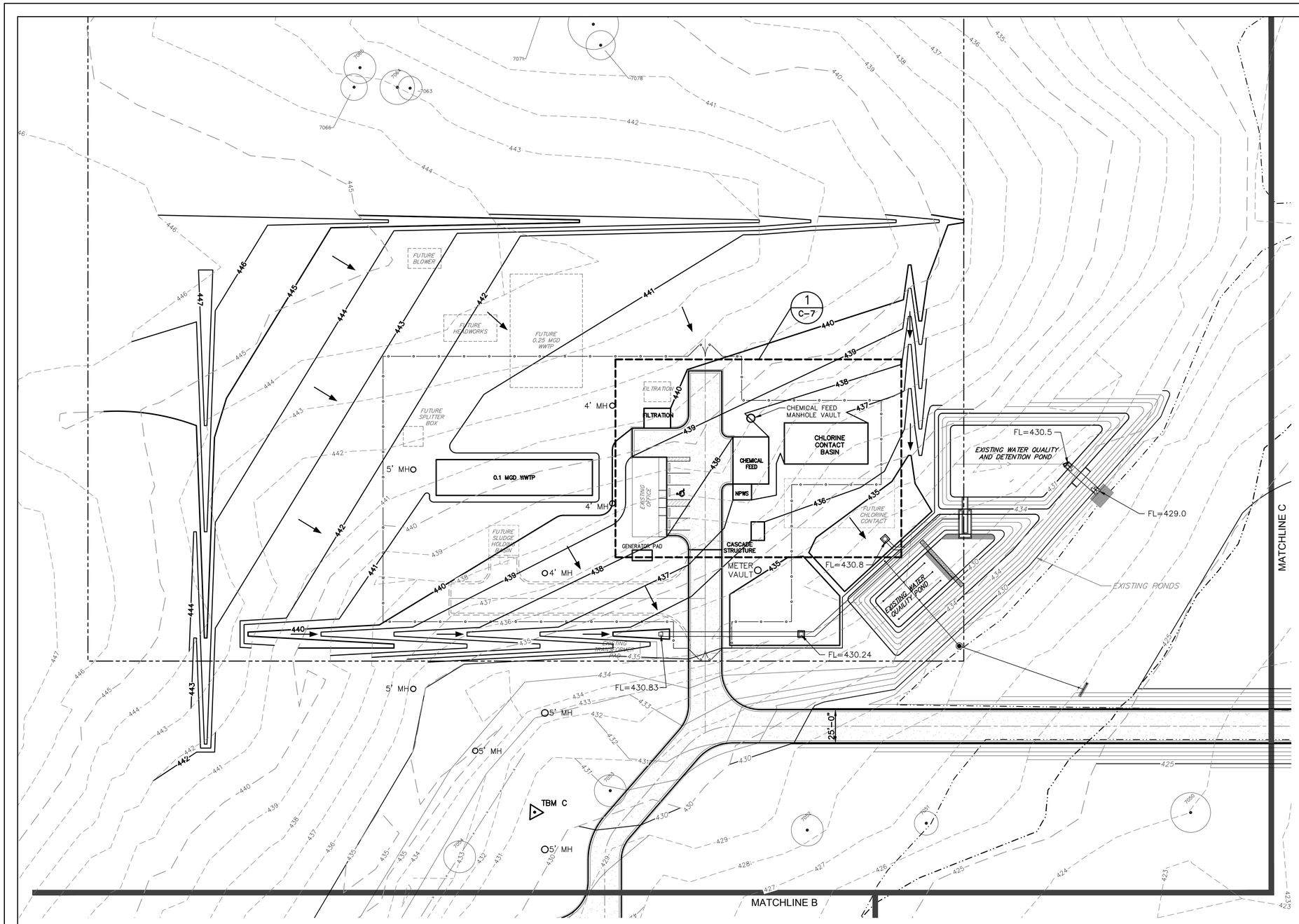

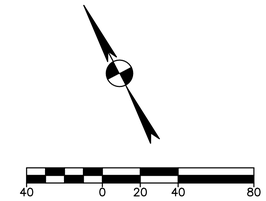

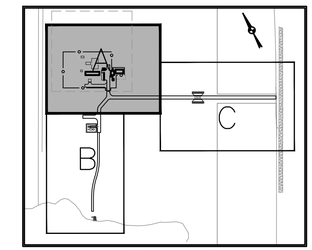

KEY MAP

LEGEND

EXISTING	PROPOSED	
(XXX)		PROPERTY (R.O.W.) LINE RECORD INFORMATION
		LIGHT POLE
		POWER POLE
		DOWN GUY
	T	TRANSFORMER (SIZE VARIES)
		FIRE HYDRANT
		YARD HYDRANT
		WATER VALVE
		WATER METER
	WM	WATER METER VAULT
WTRMH		WATER MANHOLE
		TELEPHONE RISER
		CABLE TV RISER
		ELECTRIC BOX
		ELECTRIC METER
		GAS METER
		GAS VALVE
TCB	TCB	TRAFFIC CONTROL BOX
TSP	TSP	TRAFFIC SIGNAL POST
		GRATE INLET
	CI	CURB INLET (SIZE VARIES)
	GT	GREASE TRAP (SIZE VARIES)
SS		STORMSEWER LINE
W	XX"W	WATER LINE
	XX"FL	FIRE LINE
WW	XX"WW	WASTEWATER LINE
G	G	GAS LINE
E	E	ELECTRIC LINE
OE	XX"OE	OVERHEAD ELECTRIC
UT	XX"UT	UNDERGROUND TELEPHONE
UC	XX"UC	UNDERGROUND CABLE AND INTERNET
TC	TC	TELECOMMUNICATIONS LINE
EMH	EMH	ELECTRIC MANHOLE (SIZE VARIES)
WWMH	WWMH	WASTEWATER MANHOLE (SIZE VARIES)
SSMH	SSMH	STORMSEWER MANHOLE (SIZE VARIES)
TMH	TMH	TELEPHONE MANHOLE (SIZE VARIES)
CO	CO	WASTEWATER CLEANOUT
		CURB & GUTTER
		EDGE OF PAVEMENT
	D	DUMPSTER
		CONCRETE SIDEWALKS
		HANDICAP ACCESSIBLE ROUTE
		ASPHALT
		WALL
678	678	CONTOUR
100.0 x	100.0 x	SPOT ELEVATION
		DIRECTION OF FLOW
		TREE TO BE REMOVED
		TREE TO BE SAVED

NOTE:

1. SITE GRADING COMPLETED BY OTHERS. CONTRACTOR SHALL VERIFY GRADING AND PLANT HYDRAULICS PER DESIGN.

REV	DATE	BY	DESCRIPTION	APPROVED

VERIFY SCALES

0 1"

IF BAR DOES NOT MEASURE ONE INCH ON THIS SHEET, ADJUST ACCORDINGLY.

STATE OF TEXAS
SUSAN SMITH-TURRIETA
86839
LICENSED
PROFESSIONAL ENGINEER
8-1-2016

DRAWN BY: RR
DESIGNED BY: SST
REVIEWED BY: SST
PROJECT NO: SST# XXXXX

SMITH TURRIETA ENGINEERING
P.O. BOX 5902, AUSTIN, TEXAS 78763
TELEPHONE: (512) 569-9022
Texas Registration Number, F-16076

CITY OF AUSTIN, TEXAS
TAYLOR LANE 0.1 MGD WASTEWATER TREATMENT PLANT PROJECT

SITE PLAN A - GRADING

DWG. NO. C-4

SHEET 20 OF 79

K:\ACAD\clients\STE\WWTP Ph2\C-ST-PL101.dwg modified by roodrj on Aug 1, 16 2:17 PM

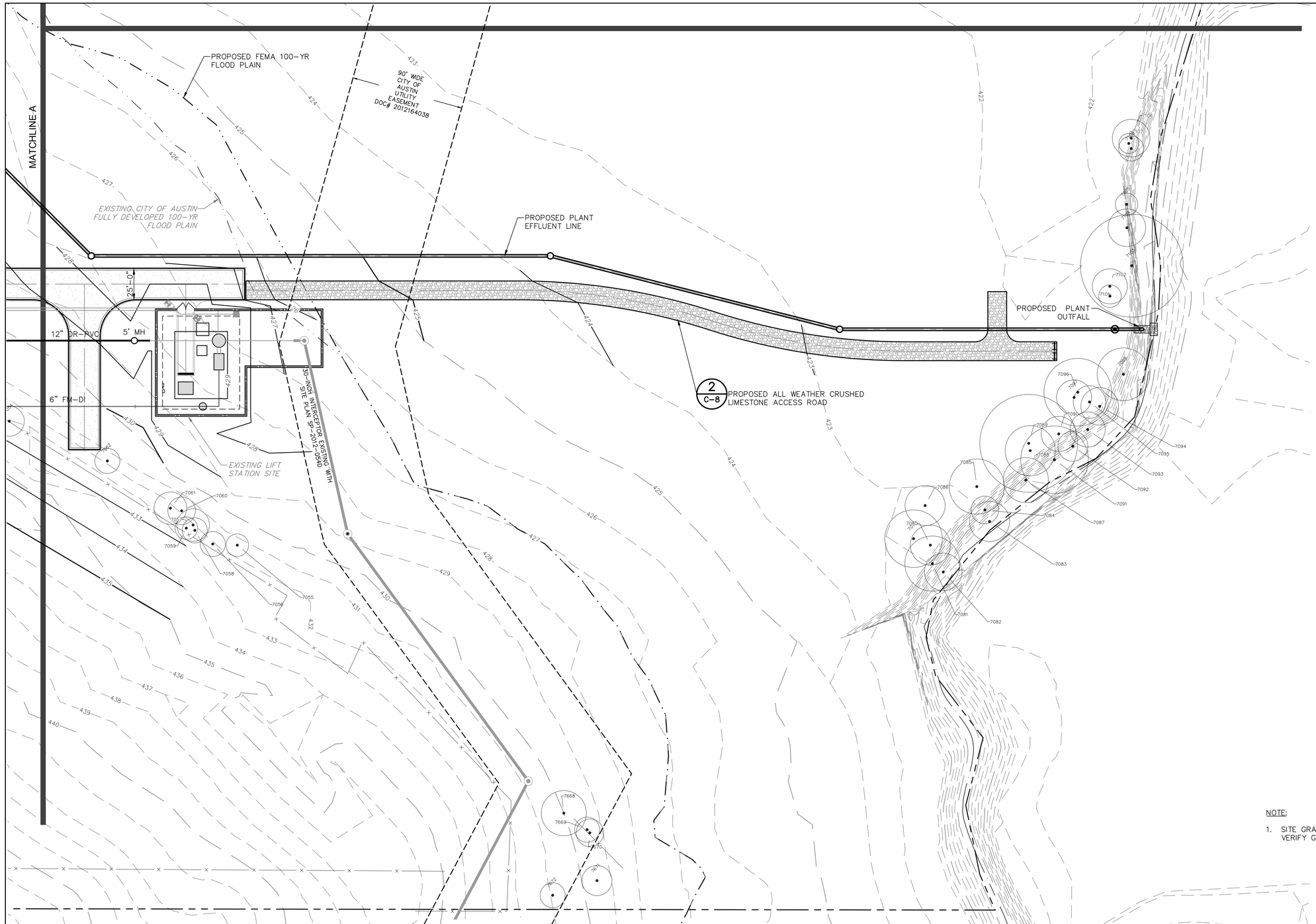

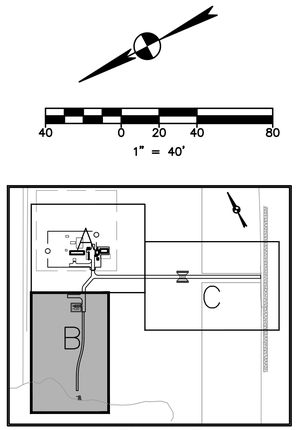

KEY MAP

LEGEND

EXISTING	PROPOSED	
(xxx)		PROPERTY (R.O.W.) LINE RECORD INFORMATION
		LIGHT POLE
		POWER POLE
		DOWN GUY
	T	TRANSFORMER (SIZE VARIES)
		FIRE HYDRANT
		YARD HYDRANT
		WATER VALVE
		WATER METER
	WM	WATER METER VAULT
WTRMH		WATER MANHOLE
		TELEPHONE RISER
		CABLE TV RISER
	E	ELECTRIC BOX
		ELECTRIC METER
	G	GAS METER
		GAS VALVE
TCB	TCB	TRAFFIC CONTROL BOX
TSP	TSP	TRAFFIC SIGNAL POST
		GRATE INLET
	CI	CURB INLET (SIZE VARIES)
	GT	GREASE TRAP (SIZE VARIES)
SS		STORMSEWER LINE
W	XX"W	WATER LINE
	XX"FL	FIRE LINE
WW	XX"WW	WASTEWATER LINE
G	G	GAS LINE
E	E	ELECTRIC LINE
OE	XX"OE	OVERHEAD ELECTRIC
UT	XX"UT	UNDERGROUND TELEPHONE
UC	XX"UC	UNDERGROUND CABLE AND INTERNET
TC	TC	TELECOMMUNICATIONS LINE
EMH	EMH	ELECTRIC MANHOLE (SIZE VARIES)
WWMH	WWMH	WASTEWATER MANHOLE (SIZE VARIES)
SSMH	SSMH	STORMSEWER MANHOLE (SIZE VARIES)
TMH	TMH	TELEPHONE MANHOLE (SIZE VARIES)
CO	CO	WASTEWATER CLEANOUT
		CURB & GUTTER
		EDGE OF PAVEMENT
	D	DUMPSTER
		CONCRETE SIDEWALKS
		HANDICAP ACCESSIBLE ROUTE
		ASPHALT
		WALL
678	678	CONTOUR
100.0 x	100.0 x	SPOT ELEVATION
		DIRECTION OF FLOW
1111		TREE TO BE REMOVED
1111		TREE TO BE SAVED

NOTE:

1. SITE GRADING COMPLETED BY OTHERS. CONTRACTOR SHALL VERIFY GRADING AND PLANT HYDRAULICS PER DESIGN.

REV	DATE	BY	DESCRIPTION	APPROVED

VERIFY SCALES

0 1"

IF BAR DOES NOT MEASURE ONE INCH ON THIS SHEET, ADJUST ACCORDINGLY.

STATE OF TEXAS
SUSAN SMITH-TURRIETA
86839
LICENSED
PROFESSIONAL ENGINEER
6-28-2016

DRAWN BY: RR

DESIGNED BY: SST

REVIEWED BY: SST

PROJECT NO: SST# XXXXX

SMITH TURRIETA ENGINEERING

P.O. BOX 5902, AUSTIN, TEXAS 78763
TELEPHONE: (512) 569-9022
Texas Registration Number, F-16076

CITY OF AUSTIN, TEXAS
TAYLOR LANE 0.1 MGD WASTEWATER TREATMENT PLANT PROJECT

SITE PLAN B - GRADING

DWG. NO.

C-5

SHEET 21 OF 79

K:\ACAD\clients\STE\WWTP Ph2\C-ST-PL102.dwg modified by roodrj on Jun 21, 16 2:15 PM

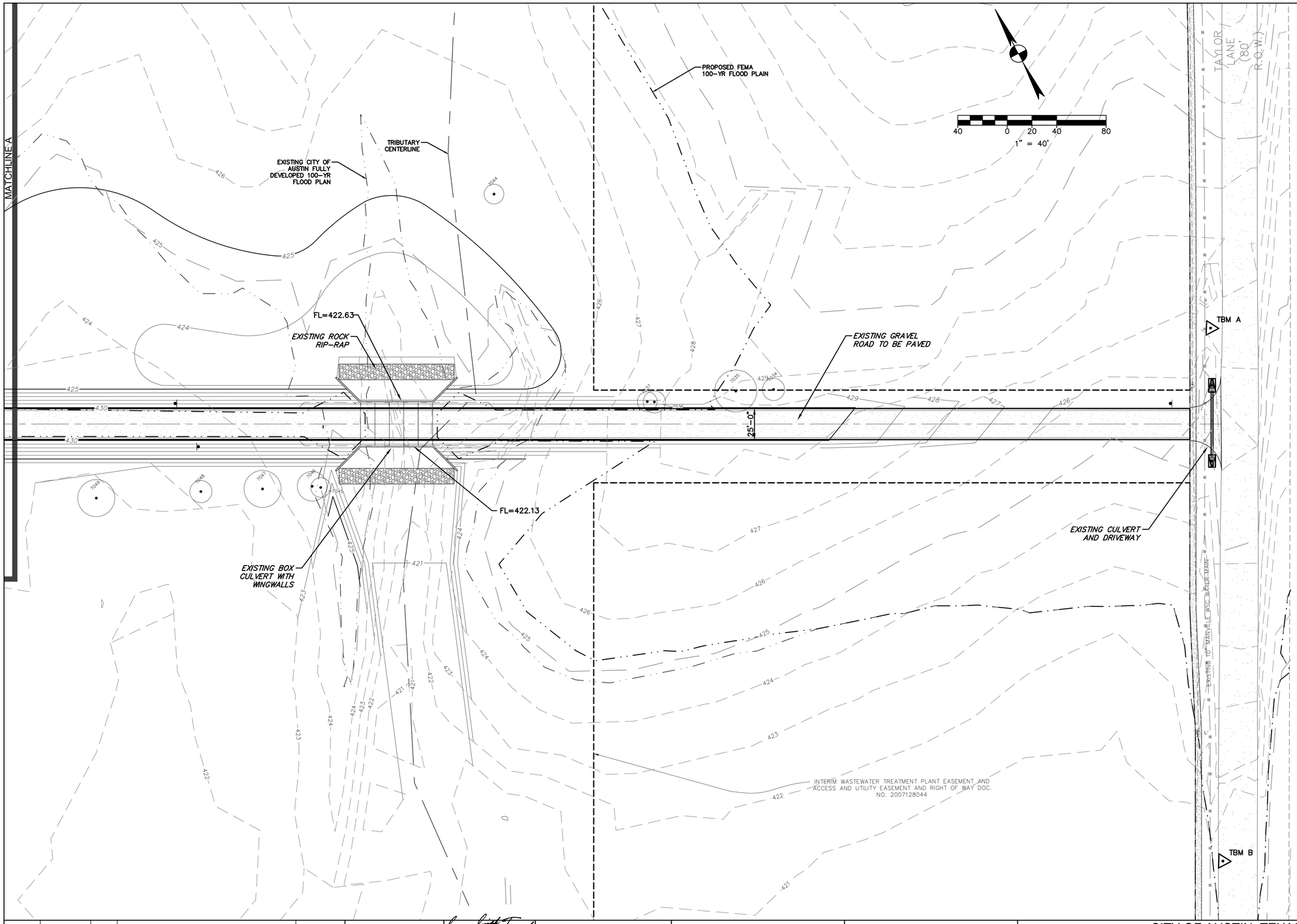

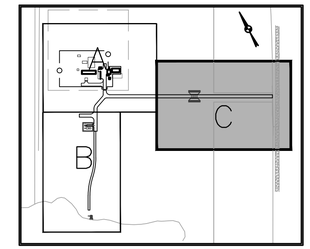

KEY MAP

LEGEND

EXISTING	PROPOSED	
(xxxx)		PROPERTY (R.O.W.) LINE RECORD INFORMATION
		LIGHT POLE
		POWER POLE
		DOWN GUY
	T	TRANSFORMER (SIZE VARIES)
		FIRE HYDRANT
		YARD HYDRANT
		WATER VALVE
		WATER METER
	WM	WATER METER VAULT
WTRMH		WATER MANHOLE
		TELEPHONE RISER
		CABLE TV RISER
		ELECTRIC BOX
		ELECTRIC METER
		GAS METER
		GAS VALVE
TCB	TCB	TRAFFIC CONTROL BOX
TSP	TSP	TRAFFIC SIGNAL POST
		GRATE INLET
	CI	CURB INLET (SIZE VARIES)
	GT	GREASE TRAP (SIZE VARIES)
SS		STORMSEWER LINE
W	XX"W	WATER LINE
	XX"FL	FIRE LINE
WW	XX"WW	WASTEWATER LINE
G	G	GAS LINE
E	E	ELECTRIC LINE
OE	XX"OE	OVERHEAD ELECTRIC
UT	XX"UT	UNDERGROUND TELEPHONE
UC	XX"UC	UNDERGROUND CABLE AND INTERNET
TC	TC	TELECOMMUNICATIONS LINE
EMH	EMH	ELECTRIC MANHOLE (SIZE VARIES)
WWMH	WWMH	WASTEWATER MANHOLE (SIZE VARIES)
SSMH	SSMH	STORMSEWER MANHOLE (SIZE VARIES)
TMH	TMH	TELEPHONE MANHOLE (SIZE VARIES)
CO	CO	WASTEWATER CLEANOUT
		CURB & GUTTER
		EDGE OF PAVEMENT
	D	DUMPSTER
		CONCRETE SIDEWALKS
		HANDICAP ACCESSIBLE ROUTE
		ASPHALT
		WALL
678	678	CONTOUR
100.0 x	100.0 x	SPOT ELEVATION
		DIRECTION OF FLOW
1111		TREE TO BE REMOVED
1111		TREE TO BE SAVED

NOTES:

1. SITE GRADING COMPLETED BY OTHERS. CONTRACTOR SHALL VERIFY GRADING AND PLANT HYDRAULICS PER DESIGN.
2. GRADING PLAN IF FOR REFERENCE PURPOSES ONLY. SITE GRADING COMPLETED BY OTHERS. ROAD GRADED AND STABILIZED BY OTHERS. CONTRACTOR SHALL RESTORE FLEXIBLE BASE AS NECESSARY PRIOR TO PAVING ROAD.

REV	DATE	BY	DESCRIPTION	APPROVED

VERIFY SCALES

0 1"

IF BAR DOES NOT MEASURE ONE INCH ON THIS SHEET, ADJUST ACCORDINGLY.

STATE OF TEXAS
SUSAN SMITH-TURRIETA
86839
LICENSED
PROFESSIONAL ENGINEER
6-28-2016

DRAWN BY: RR
DESIGNED BY: SST
REVIEWED BY: SST
PROJECT NO: SST# XXXXX

SMITH TURRIETA ENGINEERING
P.O. BOX 5902, AUSTIN, TEXAS 78763
TELEPHONE: (512) 569-9022
Texas Registration Number, F-16076

CITY OF AUSTIN, TEXAS
TAYLOR LANE 0.1 MGD WASTEWATER TREATMENT PLANT PROJECT

SITE PLAN C - GRADING

DWG. NO. C-6

SHEET 22 OF 79

K:\ACAD\clients\STE\WWTP Ph2\C-ST-PL114.dwg modified by roodrj on Jun 21, 16 2:18 PM

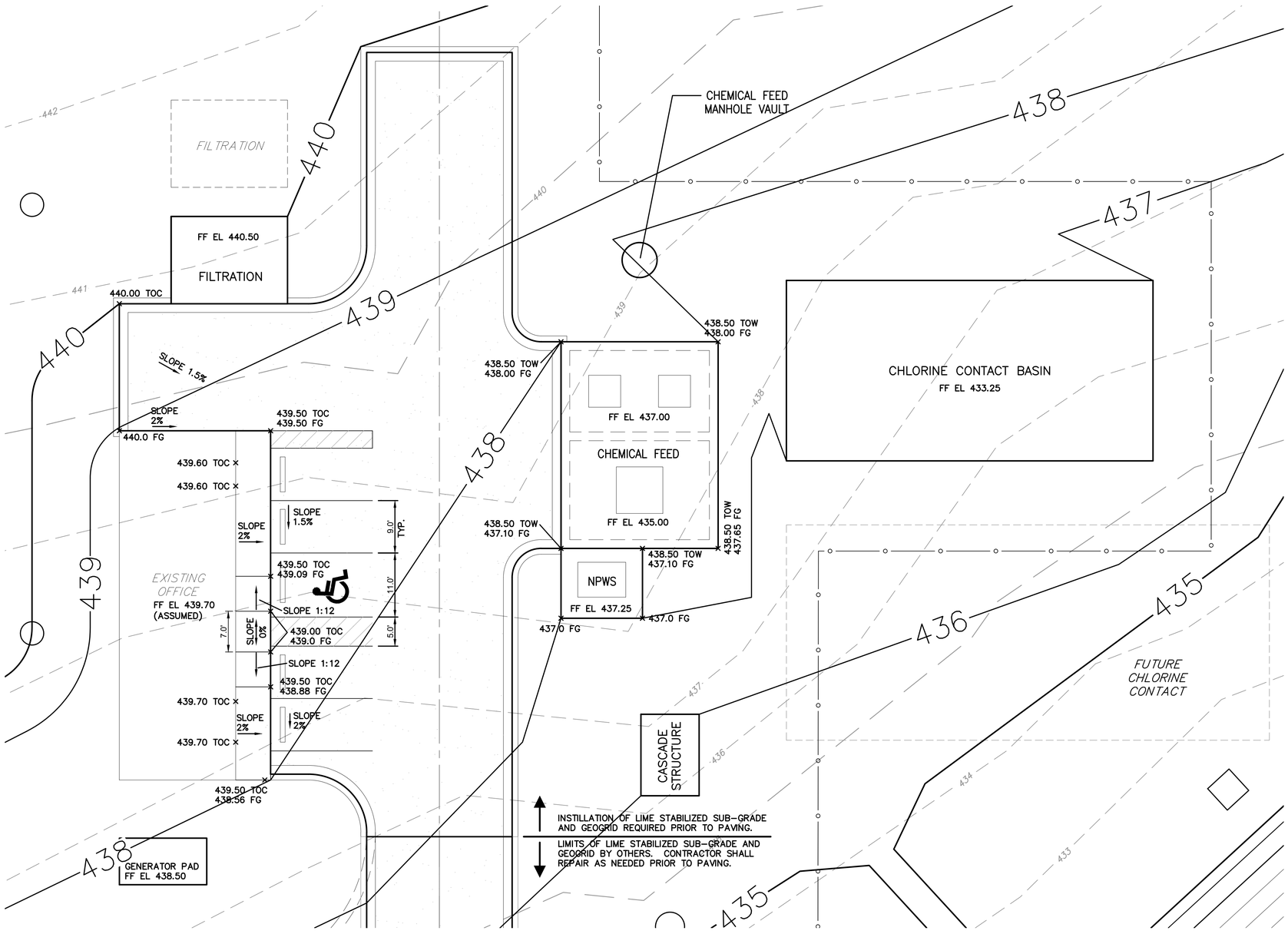

1 C-6 OPERATIONAL AREA
SCALE:1" = 10'

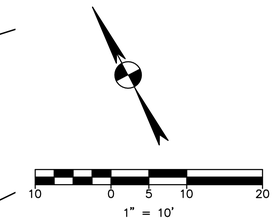

LEGEND

EXISTING	PROPOSED	
(xxx)		PROPERTY (R.O.W.) LINE
		RECORD INFORMATION
		LIGHT POLE
		POWER POLE
		DOWN GUY
	T	TRANSFORMER (SIZE VARIES)
		FIRE HYDRANT
		YARD HYDRANT
		WATER VALVE
		WATER METER
	WM	WATER METER VAULT
WTRMH		WATER MANHOLE
		TELEPHONE RISER
		CABLE TV RISER
		ELECTRIC BOX
		ELECTRIC METER
		GAS METER
		GAS VALVE
TCB	TCB	TRAFFIC CONTROL BOX
TSP	TSP	TRAFFIC SIGNAL POST
		GRATE INLET
		CURB INLET (SIZE VARIES)
	GT	GREASE TRAP (SIZE VARIES)
SS		STORMSEWER LINE
W	XX"W	WATER LINE
	XX"FL	FIRE LINE
WW	XX"WW	WASTEWATER LINE
G	G	GAS LINE
E	E	ELECTRIC LINE
OE	XX"OE	OVERHEAD ELECTRIC
UT	XX"UT	UNDERGROUND TELEPHONE
UC	XX"UC	UNDERGROUND CABLE AND INTERNET
TC	TC	TELECOMMUNICATIONS LINE
EMH	EMH	ELECTRIC MANHOLE (SIZE VARIES)
WWMH	WWMH	WASTEWATER MANHOLE (SIZE VARIES)
SSMH	SSMH	STORMSEWER MANHOLE (SIZE VARIES)
TMH	TMH	TELEPHONE MANHOLE (SIZE VARIES)
CO	CO	WASTEWATER CLEANOUT
		CURB & GUTTER
		EDGE OF PAVEMENT
	D	DUMPSTER
		CONCRETE SIDEWALKS
		HANDICAP ACCESSIBLE ROUTE
		ASPHALT
		WALL
678	678	CONTOUR
100.0 x	100.0 x	SPOT ELEVATION
		DIRECTION OF FLOW
		TREE TO BE REMOVED
		TREE TO BE SAVED

NOTES:

1. CONTINUE RAILING AROUND PERIMETER OF WALKWAY, EACH DIRECTION.
2. 12" OF EDGE PROTECTION REQUIRED.

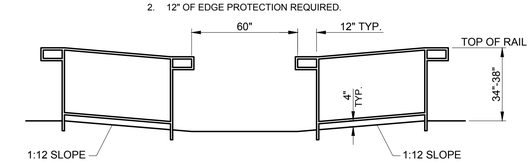

EXTERIOR RAILING
DETAIL A
NTS

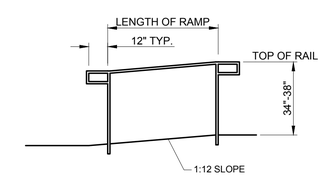

INTERIOR RAILING
DETAIL B
NTS

REV	DATE	BY	DESCRIPTION	APPROVED

VERIFY SCALES
0 1"
IF BAR DOES NOT MEASURE ONE INCH ON THIS SHEET, ADJUST ACCORDINGLY.

STATE OF TEXAS
SUSAN SMITH-TURRIETA
86839
LICENSED
PROFESSIONAL ENGINEER
8-22-2016

DRAWN BY: RR
DESIGNED BY: SST
REVIEWED BY: SST
PROJECT NO: SST# XXXXX

SMITH TURRIETA ENGINEERING
P.O. BOX 5902, AUSTIN, TEXAS 78763
TELEPHONE: (512) 569-9022
Texas Registration Number, F-16076

CITY OF AUSTIN, TEXAS
TAYLOR LANE 0.1 MGD WASTEWATER TREATMENT PLANT PROJECT

GRADING PLAN DETAILS

DWG. NO. C-7

SHEET 23 OF 79

K:\ACAD\clients\STE\WWTP Ph2\C-ST-PL105.dwg modified by roodrj on Aug 22, 16 7:22 AM

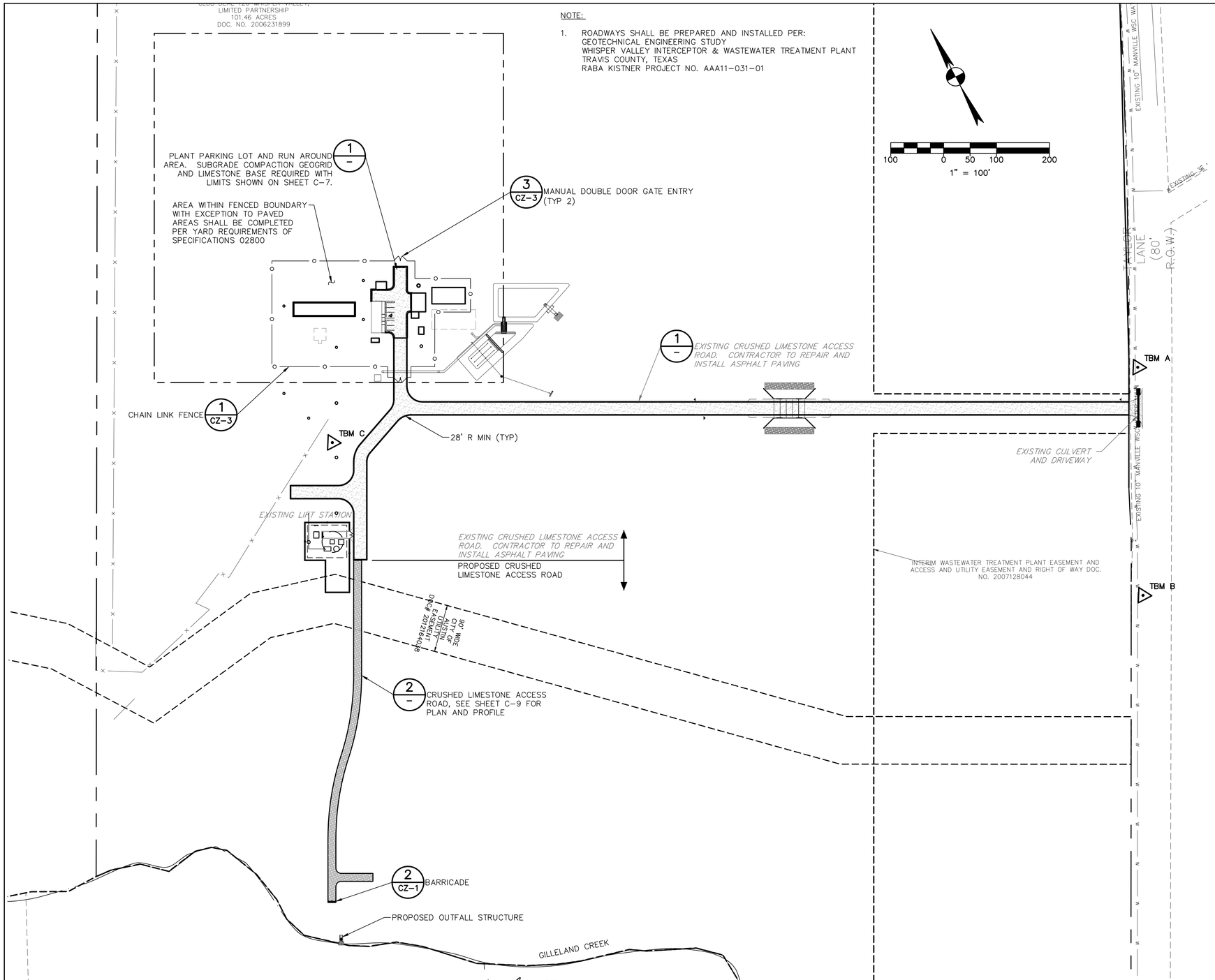

NOTE:

1. ROADWAYS SHALL BE PREPARED AND INSTALLED PER:
GEOTECHNICAL ENGINEERING STUDY
WHISPER VALLEY INTERCEPTOR & WASTEWATER TREATMENT PLANT
TRAVIS COUNTY, TEXAS
RABA KISTNER PROJECT NO. AAA11-031-01

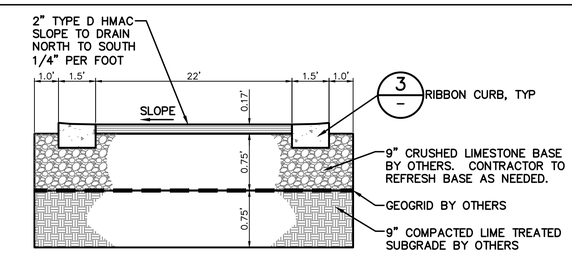

1 – 25' WIDE – 2" ASPHALT PAVEMENT SECTION
SCALE: N.T.S.

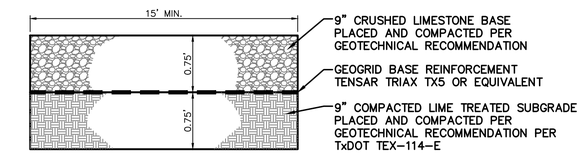

2 – CRUSHED LIMESTONE ACCESS ROAD SECTION
SCALE: N.T.S.

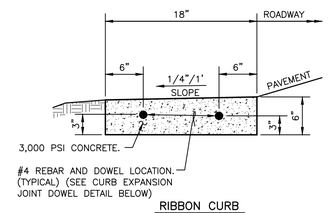

RIBBON CURB

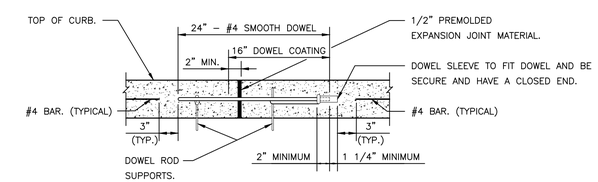

CURB EXPANSION JOINT DOWEL DETAIL

NOTES:

1. ALL WORK AND MATERIAL SHALL CONFORM TO ASTM A615, A615M, C309 AND D1752. BROOM FINISH EXPOSED SURFACE.
2. CONTROL JOINT SPACING SHALL NOT EXCEED 10'-0".
3. EXPANSION JOINTS AS PER STANDARD ASTM D-1752.
4. EXPANSION JOINT INTERVALS NOT TO EXCEED 40'-0" FOR ALL CURBS AND CONSTRUCTION METHODS.

3 – RIBBON CURB DETAIL
SCALE: N.T.S.

REV	DATE	BY	DESCRIPTION	APPROVED

VERIFY SCALES
0 1"
IF BAR DOES NOT MEASURE ONE INCH ON THIS SHEET, ADJUST ACCORDINGLY.

STATE OF TEXAS
SUSAN SMITH-TURRIETA
86839
LICENSED
PROFESSIONAL ENGINEER
8-22-2016

DRAWN BY: RR
DESIGNED BY: SST
REVIEWED BY: SST
PROJECT NO: SST# XXXXX

SMITH TURRIETA ENGINEERING
P.O. BOX 5902, AUSTIN, TEXAS 78763
TELEPHONE: (512) 569-9022
Texas Registration Number, F-16076

CITY OF AUSTIN, TEXAS
TAYLOR LANE 0.1 MGD WASTEWATER TREATMENT PLANT PROJECT

OVERALL PAVING PLAN AND SECTIONS

DWG. NO. C-8

K:\ACAD\clients\STE\WWTP Ph2\C-ST-PL104.dwg modified by roodrj on Aug 22, 16 7:28 AM

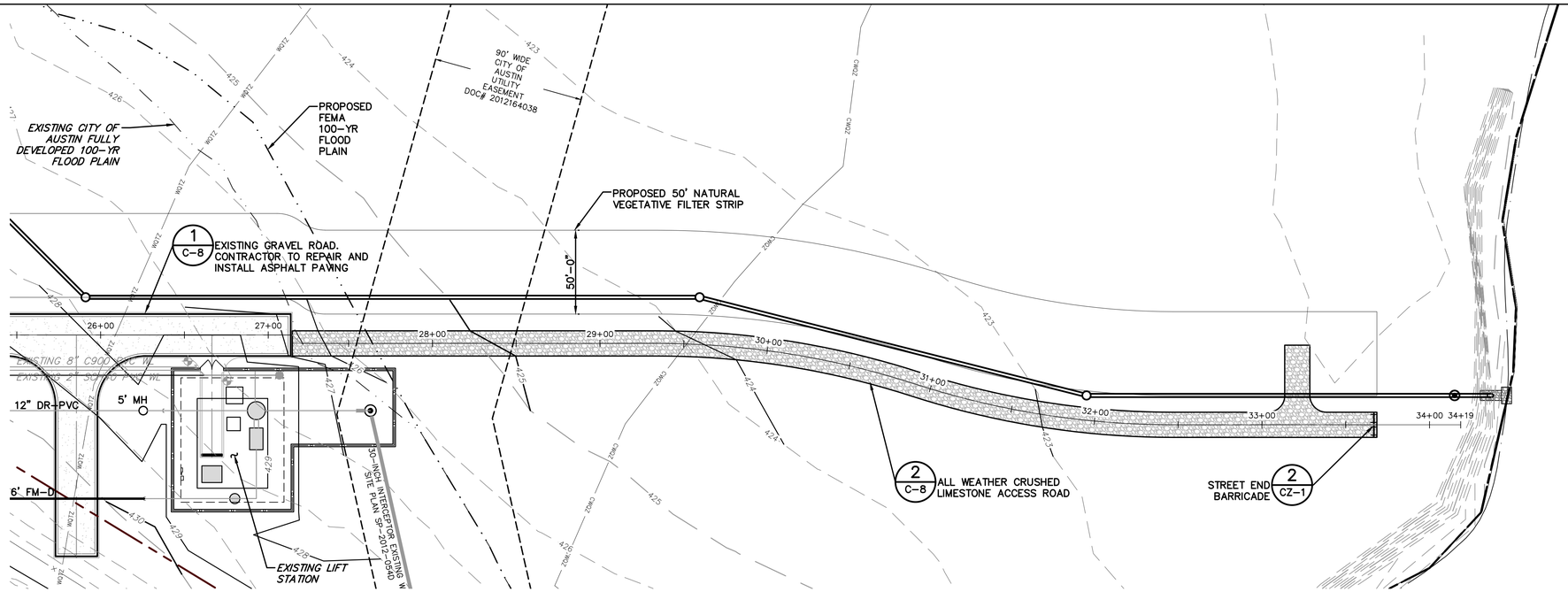

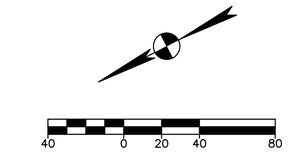

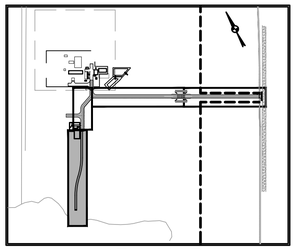

KEY MAP

PROFILE LEGEND:	PROFILE SCALE:
PROPOSED CL/EOP GRADE	1"= 40' HORIZONTAL
EXISTING GRADE	1"= 4' VERTICAL
PROPOSED SUBGRADE	
ELEVATION EXISTING GRADE 669.7	671.59 ELEVATION PROPOSED GRADE

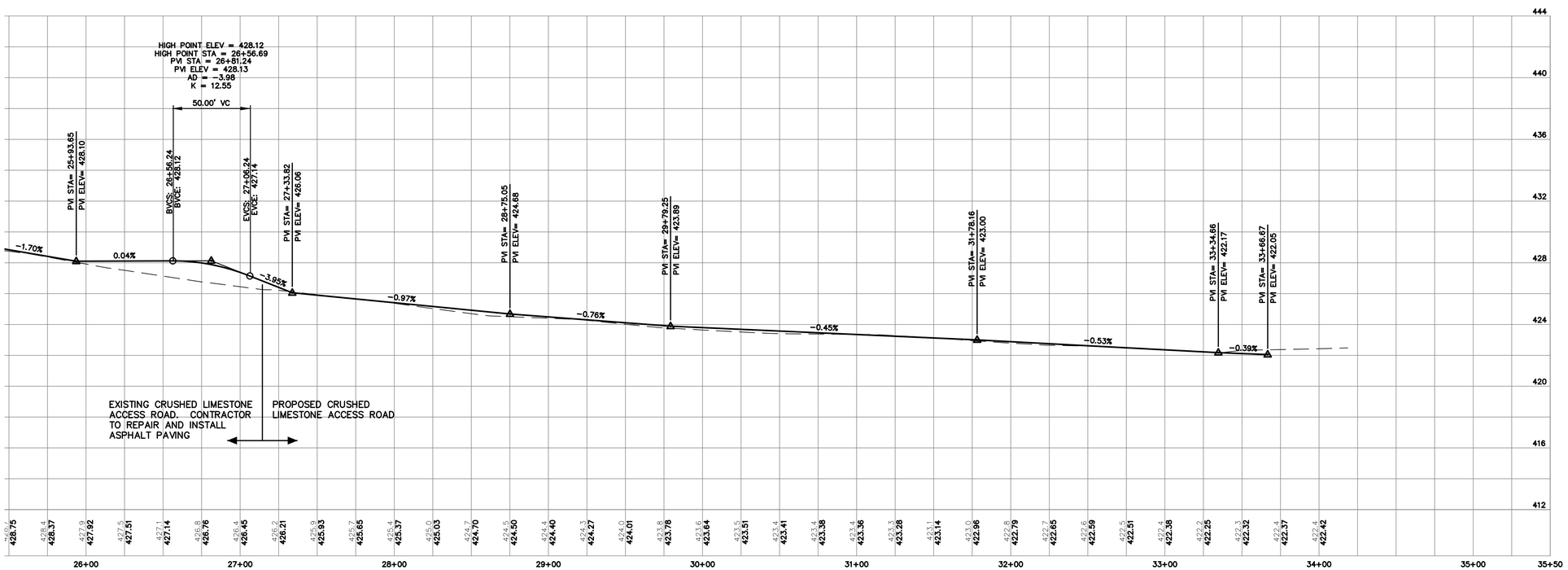

REV	DATE	BY	DESCRIPTION	APPROVED

VERIFY SCALES

0 1"

IF BAR DOES NOT MEASURE ONE INCH ON THIS SHEET, ADJUST ACCORDINGLY.

STATE OF TEXAS
SUSAN SMITH-TURRIETA
86839
LICENSED
PROFESSIONAL ENGINEER
6-28-2016

DRAWN BY: RR

DESIGNED BY: SST

REVIEWED BY: SST

PROJECT NO: SST# XXXXX

SMITH TURRIETA ENGINEERING

P.O. BOX 5902, AUSTIN, TEXAS 78763
TELEPHONE: (512) 569-9022
Texas Registration Number, F-16076

CITY OF AUSTIN, TEXAS
TAYLOR LANE 0.1 MGD WASTEWATER TREATMENT PLANT PROJECT

ALL WEATHER ACCESS ROAD
STA. 27+14.4 TO END

DWG. NO.

C-9

SHEET 25 OF 79

K:\ACAD\clients\STE\WWTP Ph2\C-ST-PL110.dwg modified by roodrj on Jun 27, 16 3:19 PM

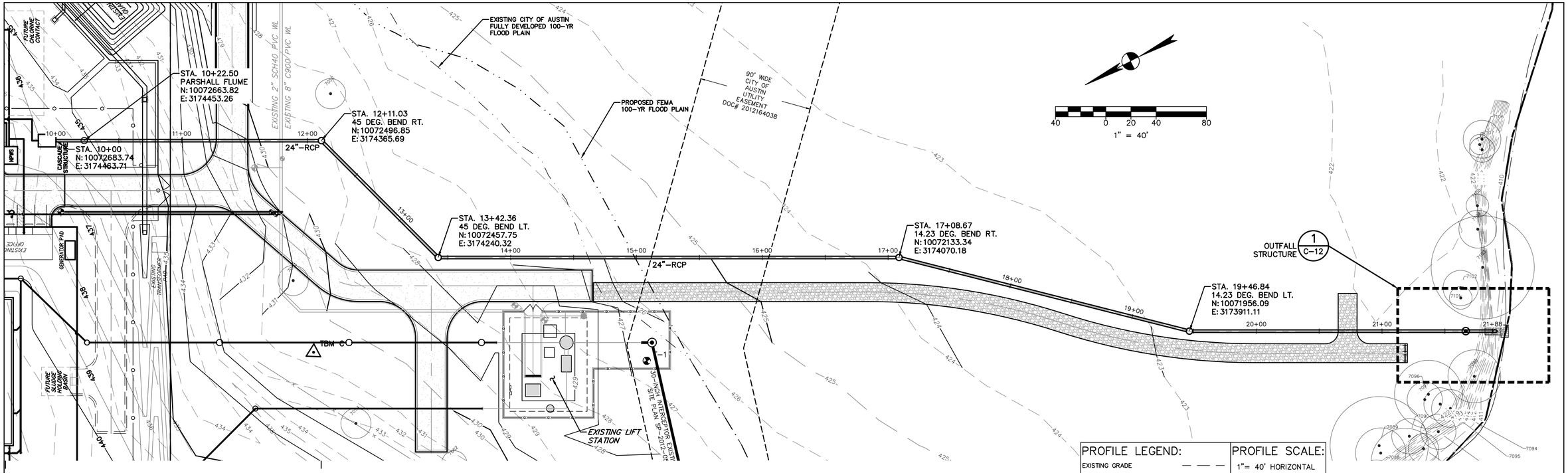

EFF A

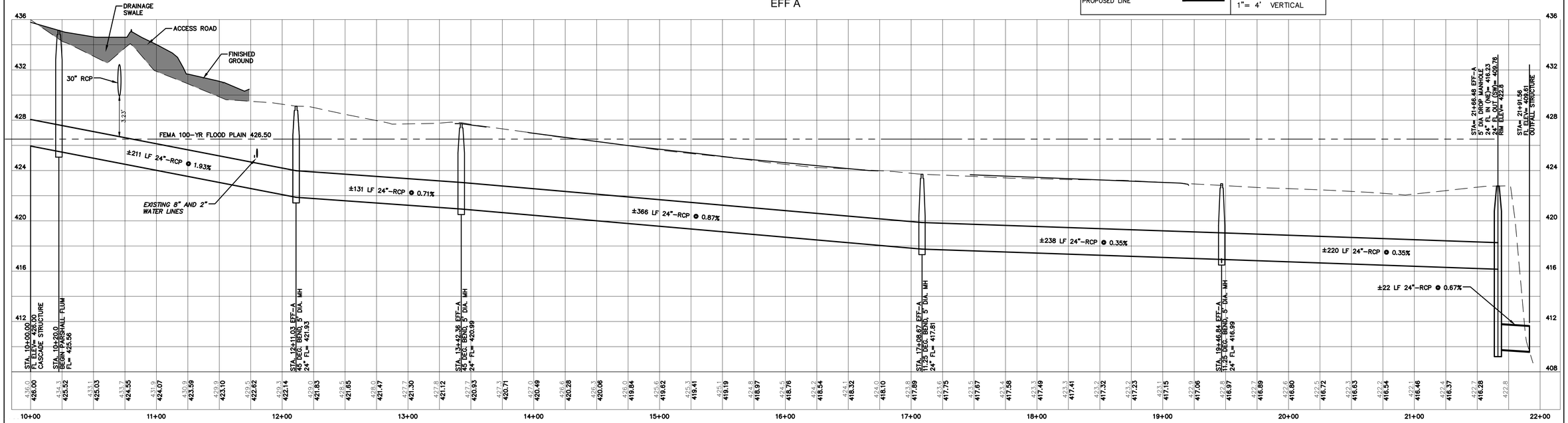

REV	DATE	BY	DESCRIPTION	APPROVED

VERIFY SCALES

0 1"

IF BAR DOES NOT MEASURE ONE INCH ON THIS SHEET, ADJUST ACCORDINGLY.

STATE OF TEXAS
SUSAN SMITH-TURRIETA
86839
LICENSED
PROFESSIONAL ENGINEER
8-1-2016

DRAWN BY: RR
DESIGNED BY: SST
REVIEWED BY: SST
PROJECT NO: SST# XXXXX

SMITH TURRIETA ENGINEERING
P.O. BOX 5902, AUSTIN, TEXAS 78763
TELEPHONE: (512) 569-9022
Texas Registration Number, F-16076

CITY OF AUSTIN, TEXAS
TAYLOR LANE 0.1 MGD WASTEWATER TREATMENT PLANT PROJECT

EFFLUENT LINE PLAN AND PROFILE STA. 10+00 TO END

DWG. NO. C-10

K:\ACAD\clients\STE\WWTP Ph2\C-ST-PL108.dwg modified by roodrj on Aug 1, 16 7:36 AM

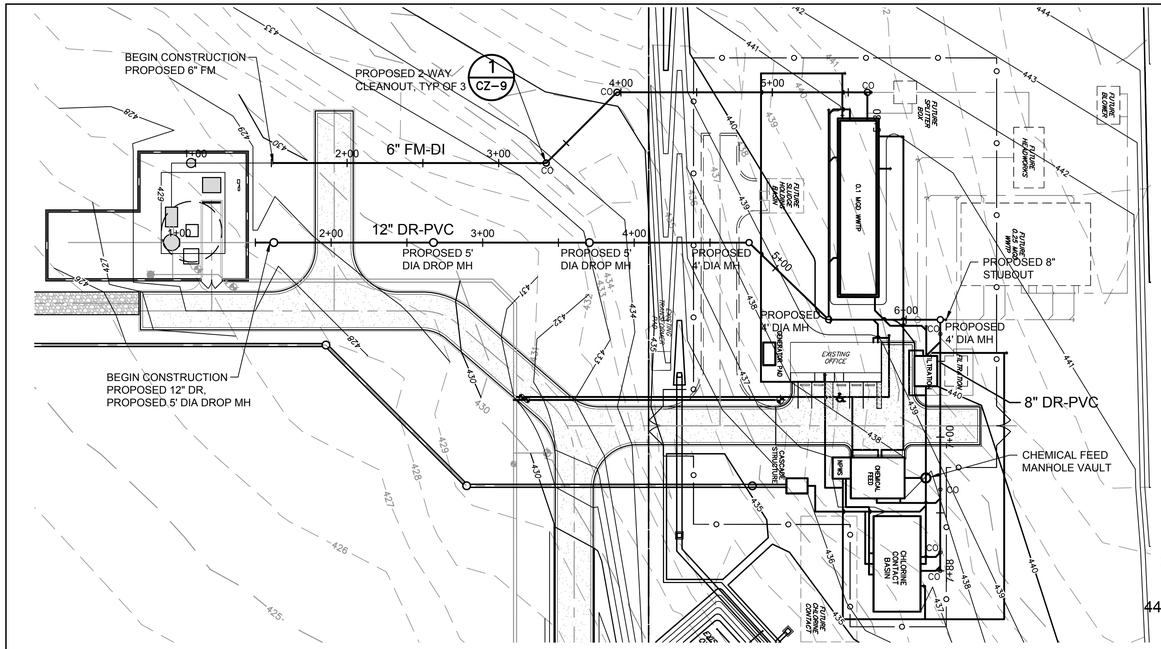

PARTIAL PLAN

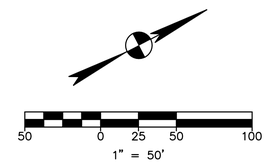

6in-FM PROFILE

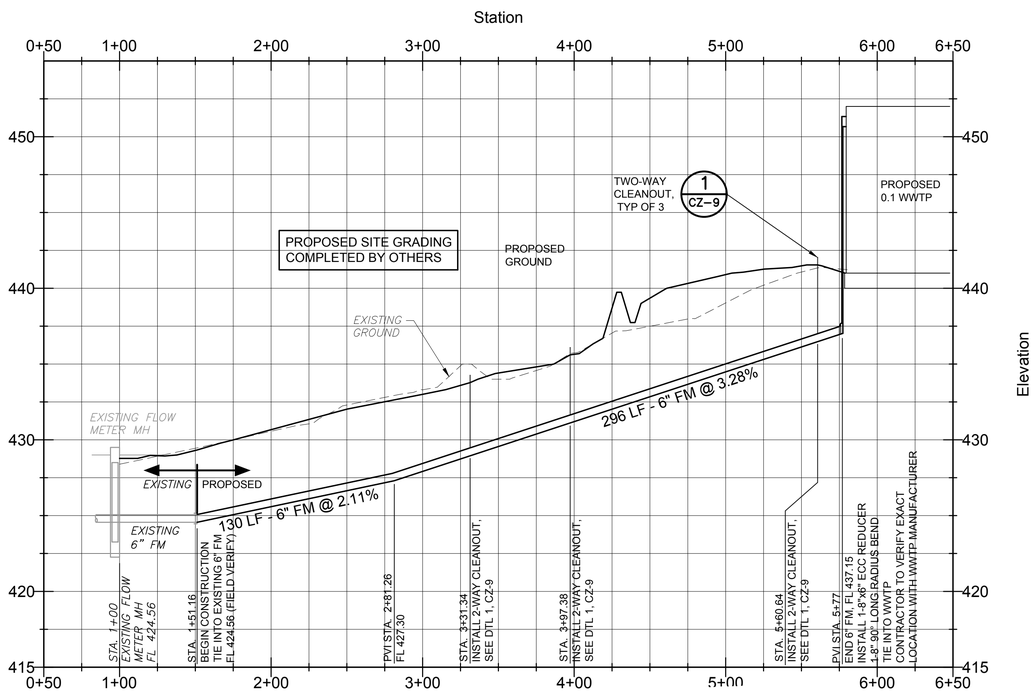

12in-DR PROFILE

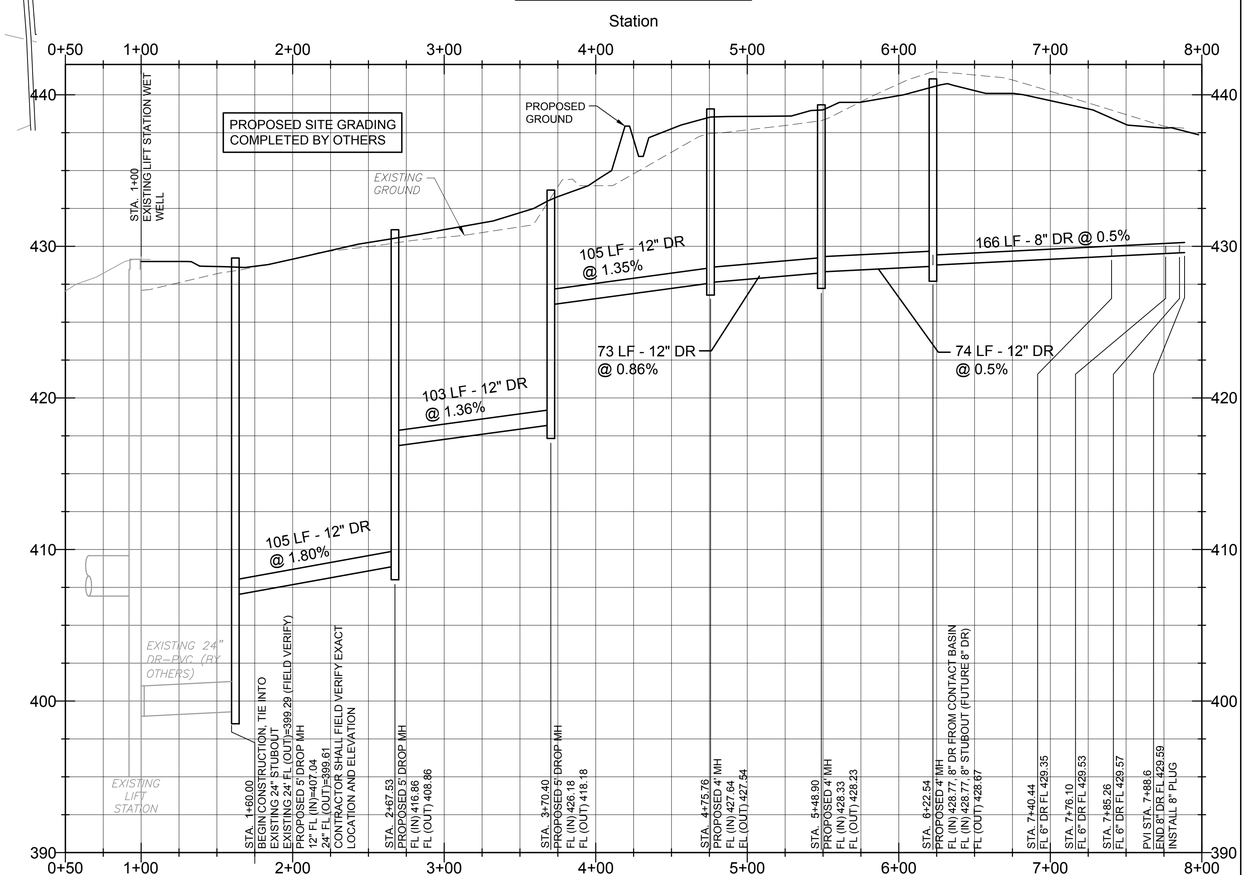

REV	DATE	BY	DESCRIPTION	APPROVED

VERIFY SCALES

0 1"

IF BAR DOES NOT MEASURE ONE INCH ON THIS SHEET, ADJUST ACCORDINGLY.

STATE OF TEXAS
SUSAN SMITH-TURRIETA
86839
LICENSED
PROFESSIONAL ENGINEER
8-1-2016

DRAWN BY: RR
DESIGNED BY: SST
REVIEWED BY: SST
PROJECT NO: SST# XXXXX

SMITH TURRIETA ENGINEERING
P.O. BOX 5902, AUSTIN, TEXAS 78763
TELEPHONE: (512) 569-9022
Texas Registration Number, F-16076

CITY OF AUSTIN, TEXAS
TAYLOR LANE 0.1 MGD WASTEWATER
TREATMENT PLANT PROJECT

6" FM-DI AND 12" DR-PVC PLAN AND PROFILE

DWG. NO. C-11

SHEET 27 OF 79

K:\ACAD\clients\STE\WWTP Ph2\C-ST-PR101.dwg modified by roodrj on Aug 1, 16 2:26 PM

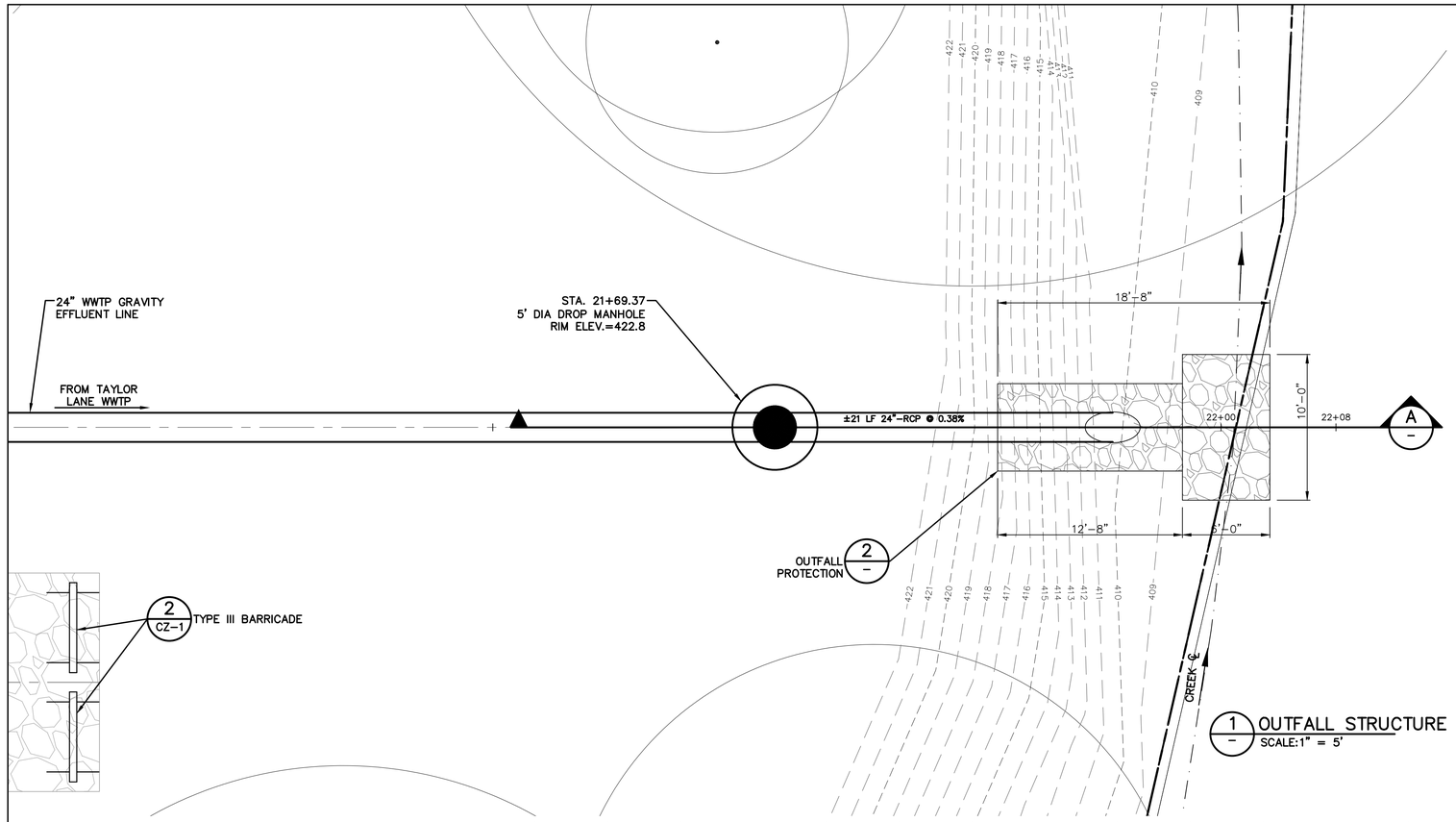

1 – OUTFALL STRUCTURE
SCALE:1" = 5'

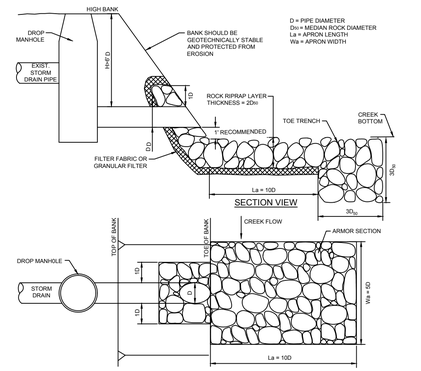

NOTES:

1. ROCK RIPRAP SHALL BE SOUND MATERIAL AND GRADED PER REQUIREMENTS SPECIFIED IN STANDARD SPECIFICATION ITEM NO. 591S.
2. ROCK SIZE (D_{50}) AND GRADATION SHALL BE STABLE FOR THE DESIGN HYDRAULIC CONDITIONS AND IN ACCORDANCE WITH THE ECM 1.4.6.D PERMANENT STRUCTURAL PRACTICES, STONE RIPRAP OR OTHER ENGINEERING STANDARD OF PRACTICE FOR SIZING ROCK RIPRAP. ROCK RIPRAP D_{50} AND FILTER TYPE SHALL BE NOTED ON PLANS.
3. GEOTEXTILE FILTER FABRIC SHALL MEET THE REQUIREMENTS SPECIFIED IN STANDARD SPECIFICATION ITEM NO. 620S.
4. AGGREGATE FOR GRANULAR FILTER SHALL MEET THE REQUIREMENTS SPECIFIED IN STANDARD SPECIFICATION ITEM NO. 403, AGGREGATE SIZE CLASSIFICATION/GRADE, NUMBER OF LAYERS AND LAYER THICKNESS SHOULD BE NOTED ON THE PLANS.

2 – OUTFALL PROTECTION
SCALE:N.T.S.

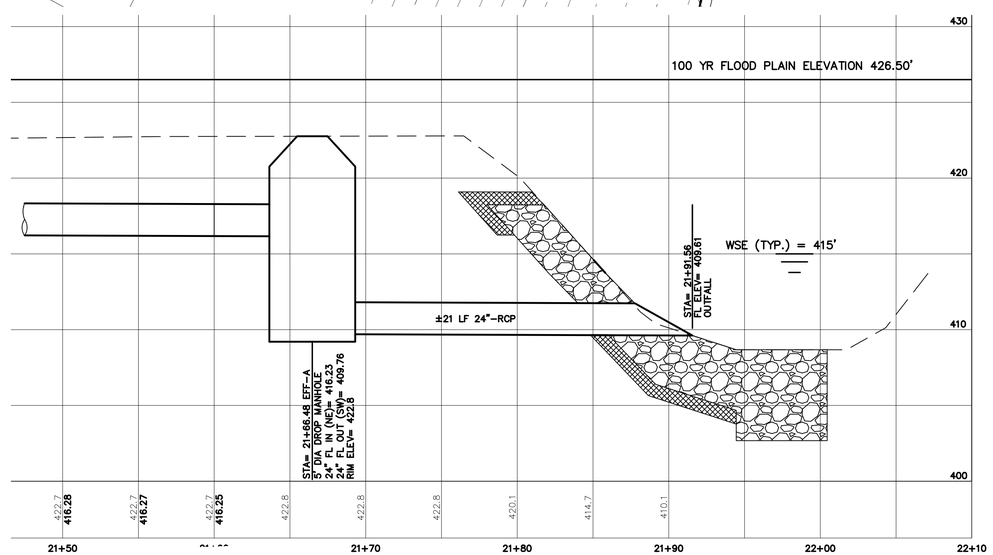

NOTES:

1. MEDIAN ROCK SIZE (D50) DETERMINED TO BE 23" PER HYDRAULIC DESIGN CRITERIA

PROFILE LEGEND:		PROFILE SCALE:
EXISTING GRADE	— —	1"= 5' HORIZONTAL
PROPOSED LINE	———	1"= 5' VERTICAL

A – SECTION
SCALE:1" = 5'

REV	DATE	BY	DESCRIPTION	APPROVED

VERIFY SCALES
0 1"
IF BAR DOES NOT MEASURE ONE INCH ON THIS SHEET, ADJUST ACCORDINGLY.

STATE OF TEXAS
SUSAN SMITH-TURRIETA
86839
LICENSED
PROFESSIONAL ENGINEER
8-1-2016

DRAWN BY: RR
DESIGNED BY: SST
REVIEWED BY: SST
PROJECT NO: SST# XXXXX

SMITH TURRIETA ENGINEERING
P.O. BOX 5902, AUSTIN, TEXAS 78763
TELEPHONE: (512) 569-9022
Texas Registration Number, F-16076

CITY OF AUSTIN, TEXAS
TAYLOR LANE 0.1 MGD WASTEWATER TREATMENT PLANT PROJECT

OUTFALL STRUCTURE PLAN AND SECTION

DWG. NO. C-12

SHEET 28 OF 79

K:\ACAD\clients\STE\WWTP Ph2\C-ST-PL109.dwg modified by roadrj on Aug 1, 16 2:07 PM

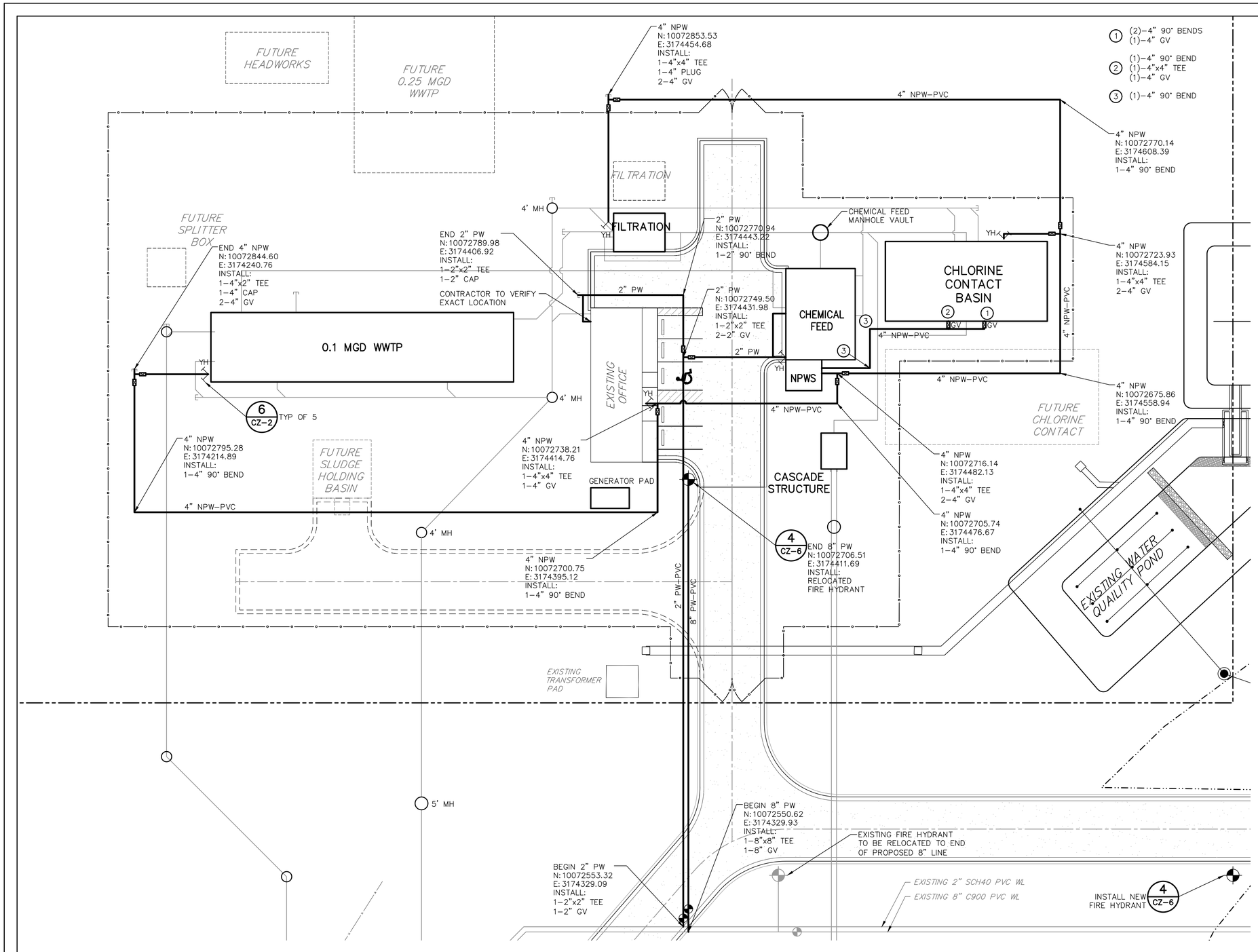

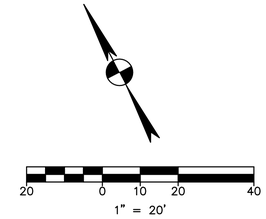

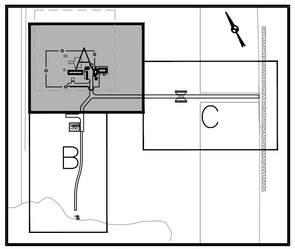

KEY MAP

LEGEND

EXISTING	PROPOSED	
(XXX)		PROPERTY (R.O.W.) LINE RECORD INFORMATION
		LIGHT POLE
		POWER POLE
		DOWN GUY
	T	TRANSFORMER (SIZE VARIES)
		FIRE HYDRANT
		YARD HYDRANT
		WATER VALVE
		WATER METER
	WM	WATER METER VAULT
WTRMH		WATER MANHOLE
		TELEPHONE RISER
		CABLE TV RISER
	E	ELECTRIC BOX
		ELECTRIC METER
	G	GAS METER
	G	GAS VALVE
TCB	TCB	TRAFFIC CONTROL BOX
TSP	TSP	TRAFFIC SIGNAL POST
		GRATE INLET
	CI	CURB INLET (SIZE VARIES)
	GT	GREASE TRAP (SIZE VARIES)
—SS—		STORMSEWER LINE
—W—	XX"W	WATER LINE
	XX"FL	FIRE LINE
—WW—	XX"WW	WASTEWATER LINE
—G—	G	GAS LINE
—E—	E	ELECTRIC LINE
—OE—	XX"OE	OVERHEAD ELECTRIC
—UT—	XX"UT	UNDERGROUND TELEPHONE
—UC—	XX"UC	UNDERGROUND CABLE AND INTERNET
—TC—	TC	TELECOMMUNICATIONS LINE
EMH	EMH	ELECTRIC MANHOLE (SIZE VARIES)
WWMH	WWMH	WASTEWATER MANHOLE (SIZE VARIES)
SSMH	SSMH	STORMSEWER MANHOLE (SIZE VARIES)
TMH	TMH	TELEPHONE MANHOLE (SIZE VARIES)
CO	CO	WASTEWATER CLEANOUT
		CURB & GUTTER
		EDGE OF PAVEMENT
	D	DUMPSTER
		CONCRETE SIDEWALKS
		HANDICAP ACCESSIBLE ROUTE
		ASPHALT
		WALL
—678—	—678—	CONTOUR
100.0 x	100.0 x	SPOT ELEVATION
		DIRECTION OF FLOW
		TREE TO BE REMOVED
		TREE TO BE SAVED

NOTES:

1. SITE GRADING COMPLETED BY OTHERS. CONTRACTOR SHALL VERIFY GRADING AND PLANT HYDRAULICS PER DESIGN.
2. ALL FIRE HYDRANTS ON SITE (EXISTING AND PROPOSED ARE TO BE PAINTED RED.

REV	DATE	BY	DESCRIPTION	APPROVED

VERIFY SCALES

0 1"

IF BAR DOES NOT MEASURE ONE INCH ON THIS SHEET, ADJUST ACCORDINGLY.

STATE OF TEXAS — SUSAN SMITH-TURRIETA — 86839 — LICENSED — PROFESSIONAL ENGINEER

8-1-2016

DRAWN BY: RR

DESIGNED BY: SST

REVIEWED BY: SST

PROJECT NO: SST# XXXXX

SMITH TURRIETA ENGINEERING

P.O. BOX 5902, AUSTIN, TEXAS 78763
TELEPHONE: (512) 569-9022
Texas Registration Number, F-16076

CITY OF AUSTIN, TEXAS
TAYLOR LANE 0.1 MGD WASTEWATER TREATMENT PLANT PROJECT

WATER AND NON-POTABLE WATER LINES

DWG. NO. C-13

SHEET 29 OF 79

K:\ACAD\clients\STE\WWTP Ph2\C-ST-PL116.dwg modified by roodrj on Aug 1, 16 9:08 AM

REPAIR OF NEW STREETS and ARTERIAL STREETS in GOOD CONDITION (UCM SECTION 5.3.3 and 5.3.4)

TYPICAL RESTORATION FOR EXCAVATION IN INTERSECTIONS

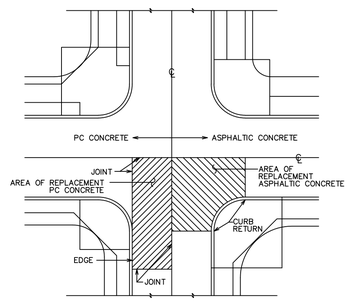

TYPICAL PLAN

TRENCH REPAIRS WITHIN PORTLAND CEMENT CONCRETE PAVEMENTS NOTE:

IF ANY PART OF THE TRENCH REPAIR FALLS WITHIN AN INTERSECTION, THEN THE ENTIRE CONCRETE SLAB FROM JOINT TO JOINT AND JOINT TO EDGE SHALL BE REPLACED, UNLESS OTHERWISE DIRECTED IN WRITING BY THE DIRECTOR.

TRENCH REPAIRS WITHIN ASPHALTIC CONCRETE PAVEMENTS NOTES:

1. IF ANY PART OF THE TRENCH REPAIR FALLS WITHIN AN INTERSECTION, DEFINED FROM CURB RETURN TO CURB RETURN, THE ENTIRE QUADRANT OF THE EXISTING SURFACE SHALL BE REPLACED, UNLESS OTHERWISE DIRECTED IN WRITING BY THE ENGINEER OR DESIGNATED REPRESENTATIVE.
2. A QUADRANT IS DEFINED AS THE CROSS-HATCHED AREA IN THE ABOVE DETAIL.

CITY OF AUSTIN DEPARTMENT OF PUBLIC WORKS		STREET REPAIR REQUIREMENTS	STANDARD NO.
RECORD COPY SIGNED BY BILL GARDNER	9/14/05 ADOPTED	THE ARCHITECT/ENGINEER ASSUMES RESPONSIBILITY FOR APPROPRIATE USE OF THIS STANDARD.	1100S-7 1 OF 3

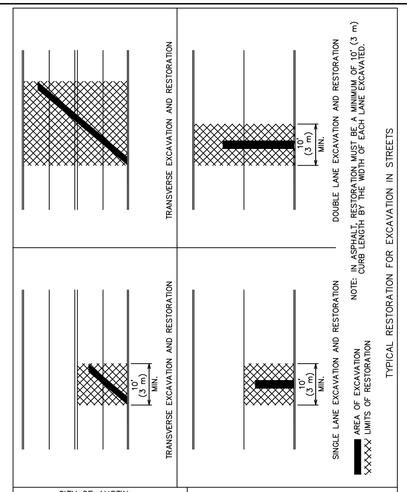

TYPICAL RESTORATION FOR EXCAVATION IN STREETS

CITY OF AUSTIN DEPARTMENT OF PUBLIC WORKS		STREET REPAIR REQUIREMENTS	STANDARD NO.
RECORD COPY SIGNED BY BILL GARDNER	9/14/05 ADOPTED	THE ARCHITECT/ENGINEER ASSUMES RESPONSIBILITY FOR APPROPRIATE USE OF THIS STANDARD.	1100S-7 2 OF 3

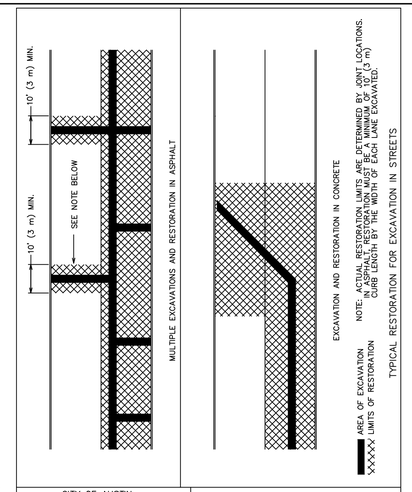

TYPICAL RESTORATION FOR EXCAVATION IN STREETS

CITY OF AUSTIN DEPARTMENT OF PUBLIC WORKS		STREET REPAIR REQUIREMENTS	STANDARD NO.
RECORD COPY SIGNED BY BILL GARDNER	9/14/05 ADOPTED	THE ARCHITECT/ENGINEER ASSUMES RESPONSIBILITY FOR APPROPRIATE USE OF THIS STANDARD.	1100S-7 3 OF 3

1 STREET REPAIR REQUIRMENTS
SCALE: N.T.S.

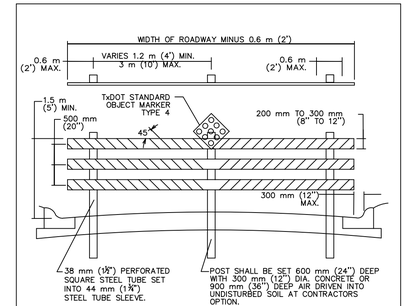

NOTES:

1. WIDTH OF RAIL SHALL BE A MINIMUM OF 200 mm (8") AND MAY BE UP TO A MAXIMUM OF 300 mm (12"), 25 mm (1") HOLLOW-PROFILE PLASTIC LUMBER WITH INTERNAL SL STIFFNERS.
2. RAILS SHALL BE FASTENED TO EACH TUBE WITH 50 mm (2") STEEL BOLTS WITH NUTS AND WASHERS ON EACH SIDE. BOLT THREADS SHALL BE PEENED.
3. THE RAILS SHALL HAVE 150 mm (6") WIDE REFLECTORIZED RED STRIPES OF TAPE PLACED ON 45 DEGREE SLOPES, DOWN AND TOWARD THE CENTER OF THE BARRICADE.
4. BARRICADES MAY BE CONSTRUCTED IN SECTIONS OR MAY BE CONTINUOUS ACROSS ROADWAY WIDTH. SPLICES ON CONTINUOUS RAIL BARRICADES SHALL BE AT POSTS AND SHALL HAVE A 600 mm (2') SPLICE BLOCK ON BACK SIDE OF THE SAME MATERIAL AS RAIL.
5. 450 mm (18") DIAMOND REFLECTORIZED RED PANEL OR 450 mm (18") DIAMOND RED OR BLACK PANEL WITH NINE-75 mm (3") DIAMETER RED REFLECTORS SYMMETRICALLY PLACED AT CENTER POSTS, A MINIMUM OF 1.2 m (4') ABOVE GROUND SHALL BE USED FOR END OF ROAD MARKERS AS PER TEXAS MANUAL on UNIFORM TRAFFIC CONTROL DEVICES (TMUTCD) SECTION 3C.04.

DEPARTMENT OF PUBLIC WORKS		STREET-END BARRICADE	STANDARD NO.
RECORD COPY SIGNED BY BILL GARDNER	03/12/07 ADOPTED	THE ARCHITECT/ENGINEER ASSUMES RESPONSIBILITY FOR APPROPRIATE USE OF THIS STANDARD.	803S-1

2 STREET-END BARRICADE
SCALE: N.T.S.

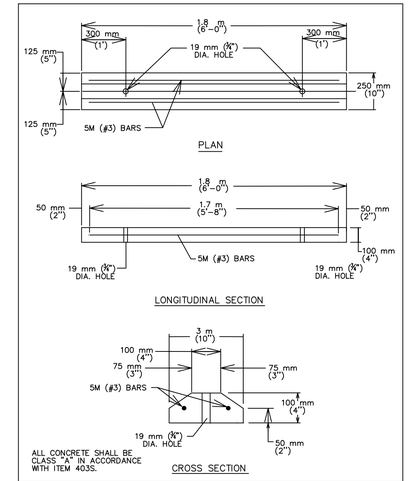

CITY OF AUSTIN DEPARTMENT OF PUBLIC WORKS		PARKING LOT BUMPER CURB	STANDARD NO.
RECORD COPY SIGNED BY BILL GARDNER APPROVED	3/15/05 ADOPTED	THE ARCHITECT/ENGINEER ASSUMES RESPONSIBILITY FOR APPROPRIATE USE OF THIS STANDARD.	439S-1

3 PARKWAY LOT BUMPER CURB
SCALE: N.T.S.

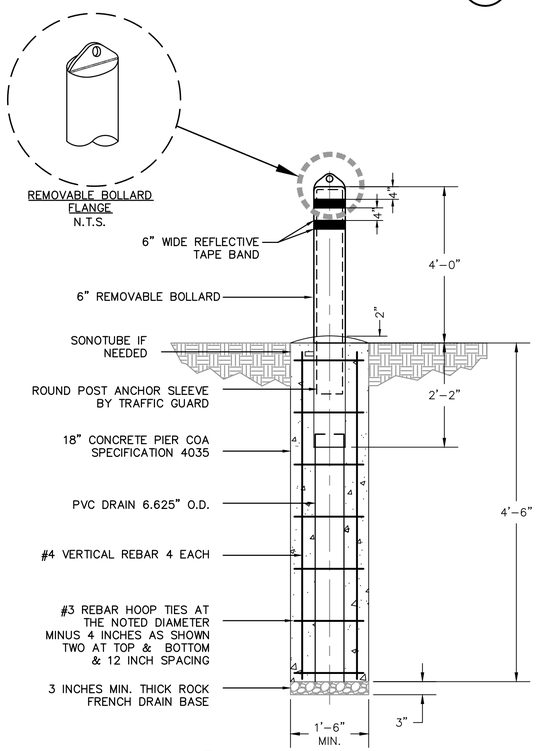

4 REMOVABLE BOLLARD
SCALE: N.T.S.

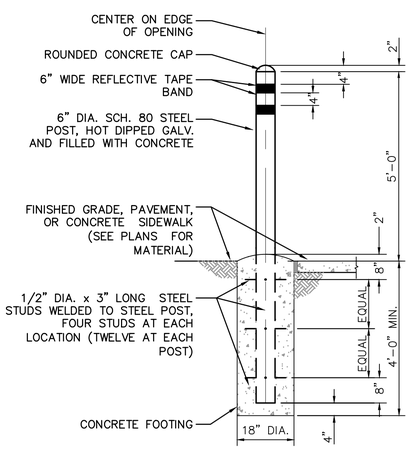

5 BOLLARD DETAIL
SCALE: N.T.S.

REV	DATE	BY	DESCRIPTION	APPROVED

VERIFY SCALES

0 1"

IF BAR DOES NOT MEASURE ONE INCH ON THIS SHEET, ADJUST ACCORDINGLY.

STATE OF TEXAS SUSAN SMITH-TURRIETA 86839 LICENSED PROFESSIONAL ENGINEER

6-28-2016

DRAWN BY: RR

DESIGNED BY: SST

REVIEWED BY: SST

PROJECT NO: SST# XXXXX

SMITH TURRIETA ENGINEERING

P.O. BOX 5902, AUSTIN, TEXAS 78763
TELEPHONE: (512) 569-9022
Texas Registration Number, F-16076

CITY OF AUSTIN, TEXAS
TAYLOR LANE 0.1 MGD WASTEWATER TREATMENT PLANT PROJECT

STANDARD CIVIL DETAILS

DWG. NO. CZ-1

K:\ACAD\clients\STE\WWTP Ph2\C-ZD-DT101.dwg modified by roodrj on Jun 12, 16 10:59 AM

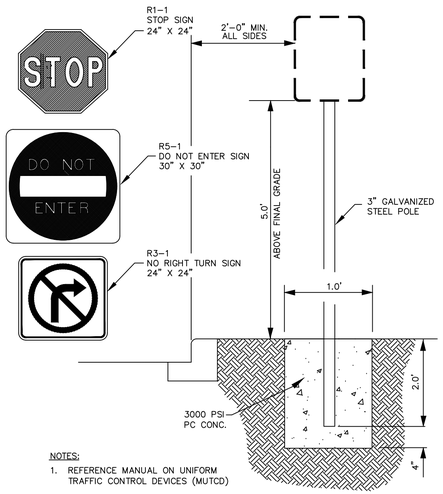

NOTES:
1. REFERENCE MANUAL ON UNIFORM TRAFFIC CONTROL DEVICES (MUTCD)

1 SIGN DETAIL
SCALE: N.T.S.

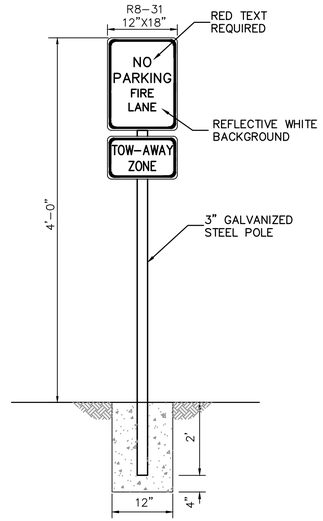

2 FIRE LANE SIGN
SCALE: N.T.S.

COLORS:
- LEGEND AND BORDER – GREEN
- WHITE SYMBOL ON BLUE BACKGROUND
- BACKGROUND – WHITE

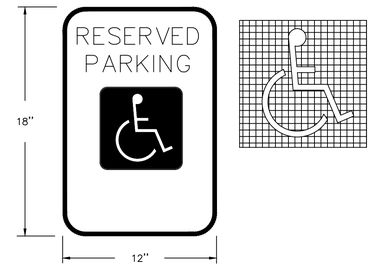

3 ACCESSIBLE PARKING SIGN
SCALE: N.T.S.

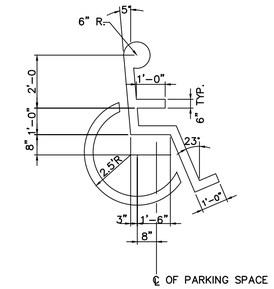

NOTE: HANDICAP PARKING STALL SYMBOL SHALL CONFORM TO THE CURRENT STATE AND LOCAL STANDARDS

4 ASSESSIBLE PARKING SYMBOL
SCALE: N.T.S.

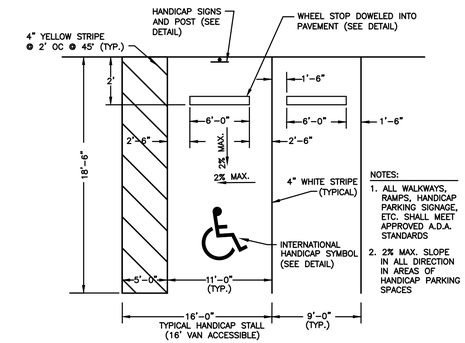

NOTES:
1. ALL WALKWAYS, RAMPS, HANDICAP PARKING SIGNAGE, ETC. SHALL MEET APPROVED A.D.A. STANDARDS
2. 2% MAX. SLOPE IN ALL DIRECTION IN AREAS OF HANDICAP PARKING SPACES

5 STRIPING FOR 90 DEG. PARKING
SCALE: N.T.S.

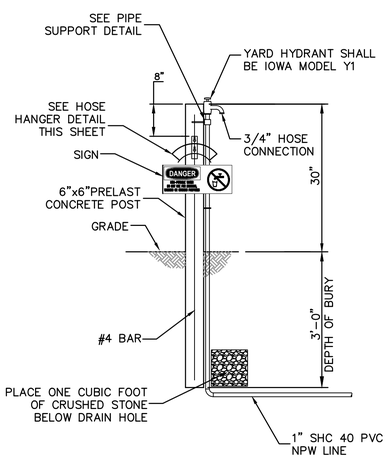

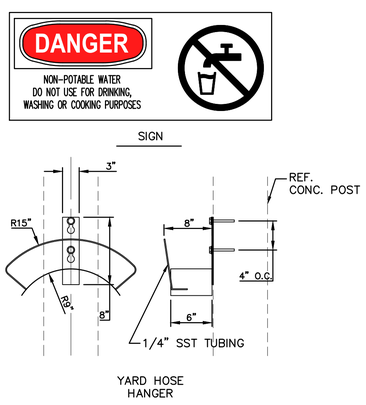

NOTE:
ALL YARD HYDRANTS SHALL BE PROVIDED 100 FEET OF PURPLE WATER HOSE RATED AT 150 PSI.

6 NON–FREEZE YARD HYDRANT
SCALE: N.T.S.

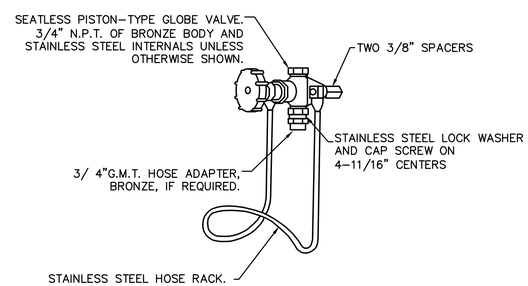

NOTES:

1. FURNISH AND INSTALL AN ENGINEER APPROVED HOSE STATION ASSEMBLY WITH MODEL 70 RUBBER–COVERED SPRAY NOZZLE LEVER ACTION. RATED AT 150 P.S.I
2. FURNISH 50 FEET OF 5/8"ø HEAVY DUTY WATER HOSE WITH CORD BRAID REINFORCING AND FLEXIBLE NEOPRENE EXTERIOR. HOSE SHALL BE FITTED WITH 3/4"FEMALE GMT FITTING ON ONE END AND 3/4" FEMALE GMT SWIVEL SPRAY NOZZLE ON FREE END. PROVIDE STAINLESS STEEL SPRING PROTECTORS ON BOTH ENDS. (FURNISH FOR INSIDE BUILDING STATIONS ONLY)
3. MOUNT HOSE STATION WITH ALUMINUM UNISTRUT.

7 HOSE STATION AT BUILDING
SCALE: N.T.S.

REV	DATE	BY	DESCRIPTION	APPROVED

VERIFY SCALES
0 1"
IF BAR DOES NOT MEASURE ONE INCH ON THIS SHEET, ADJUST ACCORDINGLY.

STATE OF TEXAS
SUSAN SMITH-TURRIETA
86839
LICENSED
PROFESSIONAL ENGINEER
6-28-2016

DRAWN BY: RR
DESIGNED BY: SST
REVIEWED BY: SST
PROJECT NO: SST# XXXXX

SMITH TURRIETA ENGINEERING
P.O. BOX 5902, AUSTIN, TEXAS 78763
TELEPHONE: (512) 569-9022
Texas Registration Number, F-16076

CITY OF AUSTIN, TEXAS
TAYLOR LANE 0.1 MGD WASTEWATER TREATMENT PLANT PROJECT

STANDARD CIVIL DETAILS

DWG. NO.
CZ-2

K:\ACAD\clients\STE\WWTP Ph2\C-ZD-DT104.dwg modified by roodrj on Apr 18, 16 4:55 PM

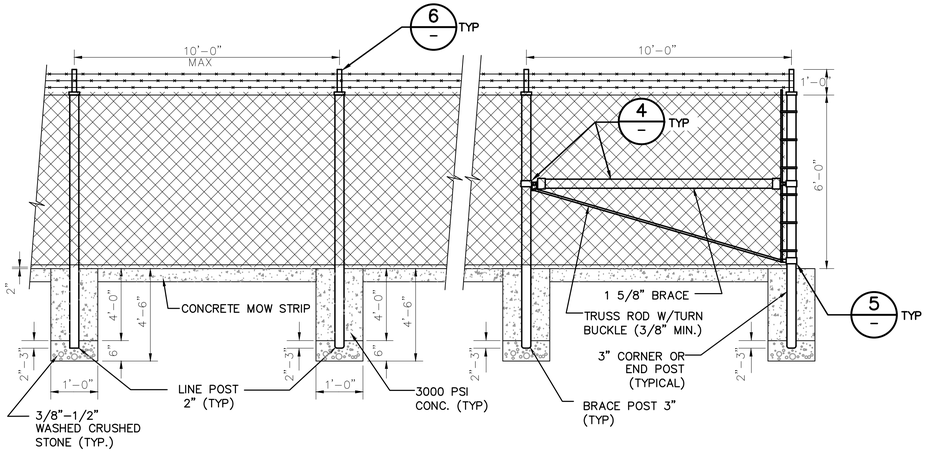

1 TYPICAL FENCE DETAIL
SCALE:N.T.S.

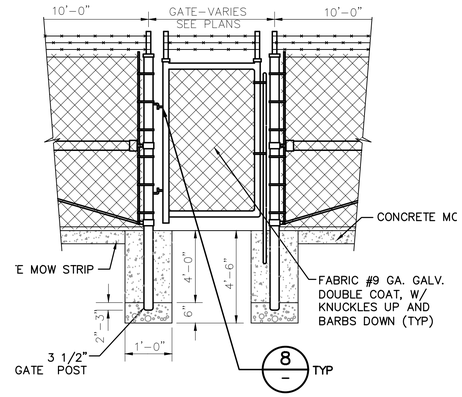

2 SINGLE DOOR GATE ENTRY
SCALE:N.T.S.

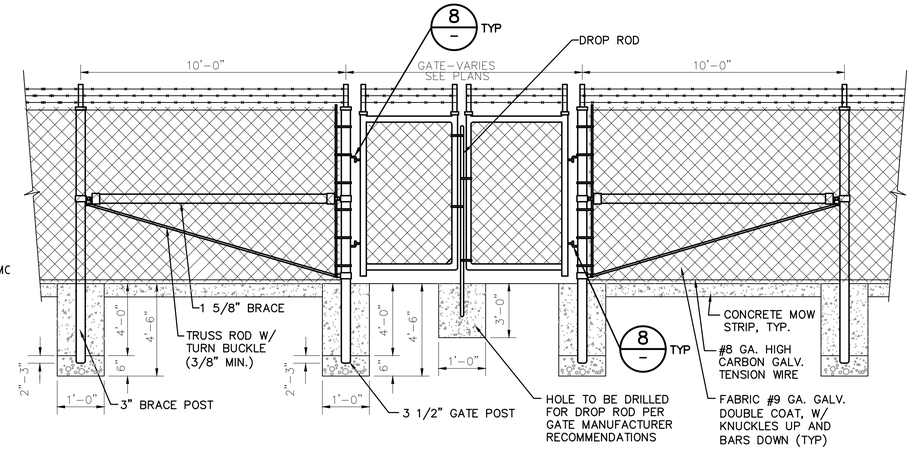

3 DOUBLE DOOR GATE ENTRY
SCALE:N.T.S.

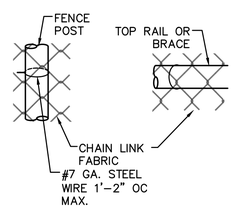

4 WIRE TIES FOR CHAIN LINK
SCALE:N.T.S.

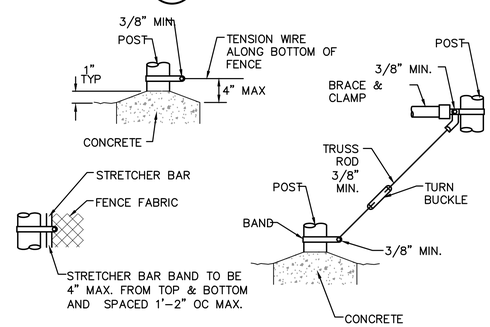

5 FASTENING DETAIL
SCALE:N.T.S.

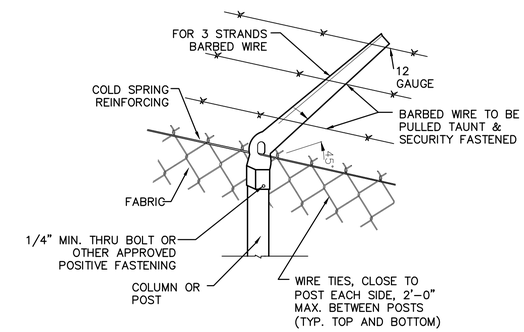

6 EXTENSION ARM FOR BARBED WIRE
SCALE:N.T.S.

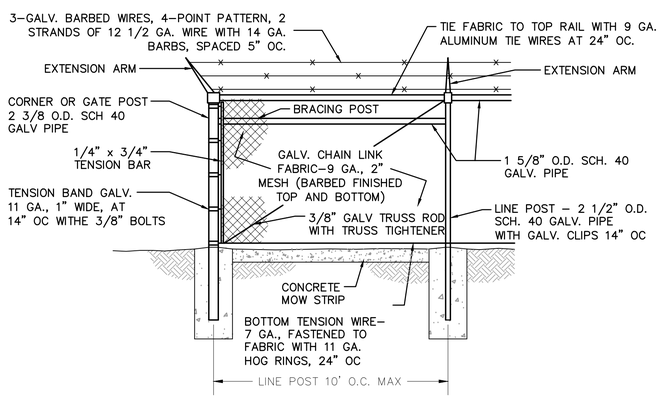

7 FENCE CORNER POST
SCALE:N.T.S.

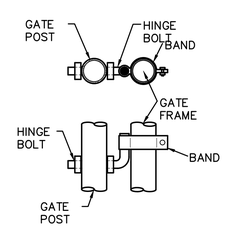

NOTES:

1. ALL POLES, BRACES, FABRIC AND HARDWARE SHALL BE GALVANIZED
2. BOTTOM OF FABRIC SHALL BE NO MORE THAN 2 INCHES ABOVE FINAL GRADE AT ANY POINT ALONG THE FENCE.
3. INSERT FENCE 2'-0" INSIDE PROPERTY BOUNDARY.

8 GATE HINGE DETAIL
SCALE:N.T.S.

REV	DATE	BY	DESCRIPTION	APPROVED

VERIFY SCALES

0 1"

IF BAR DOES NOT MEASURE ONE INCH ON THIS SHEET, ADJUST ACCORDINGLY.

STATE OF TEXAS — SUSAN SMITH-TURRIETA — 86839 — LICENSED PROFESSIONAL ENGINEER — 6-28-2016

DRAWN BY: RR

DESIGNED BY: SST

REVIEWED BY: SST

PROJECT NO: SST# XXXXX

SMITH TURRIETA ENGINEERING
P.O. BOX 5902, AUSTIN, TEXAS 78763
TELEPHONE: (512) 569-9022
Texas Registration Number, F-16076

CITY OF AUSTIN, TEXAS
TAYLOR LANE 0.1 MGD WASTEWATER TREATMENT PLANT PROJECT

STANDARD CIVIL DETAILS - FENCING

DWG. NO. CZ-3

K:\ACAD\clients\STE\WWTP Ph2\C-ZD-DT106.dwg modified by roodrj on Jun 21, 16 3:00 PM

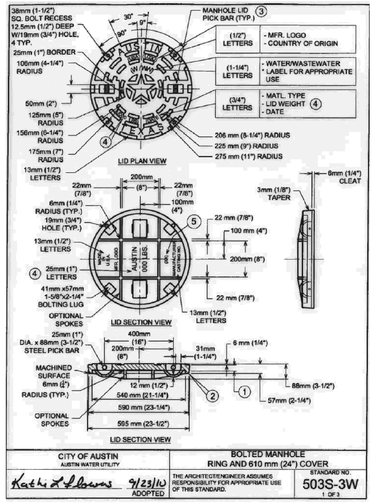

CITY OF AUSTIN AUSTIN WATER UTILITY	BOLTED MANHOLE RING AND 610 mm (24") COVER	
Kathi L Flowers 9/23/10 ADOPTED	THE ARCHITECT/ENGINEER ASSUMES RESPONSIBILITY FOR APPROPRIATE USE OF THIS STANDARD.	STANDARD NO. 503S-3W 1 OF 3

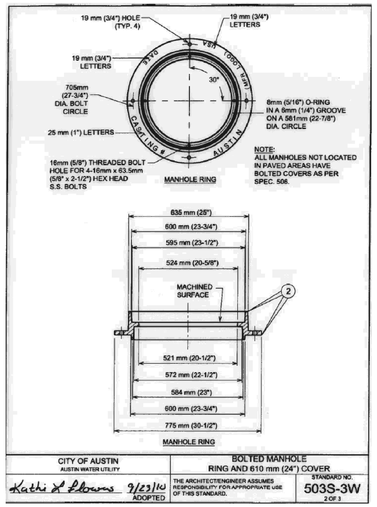

CITY OF AUSTIN AUSTIN WATER UTILITY	BOLTED MANHOLE RING AND 610 mm (24") COVER	
Kathi L Flowers 9/23/10 ADOPTED	THE ARCHITECT/ENGINEER ASSUMES RESPONSIBILITY FOR APPROPRIATE USE OF THIS STANDARD.	STANDARD NO. 503S-3W 2 OF 3

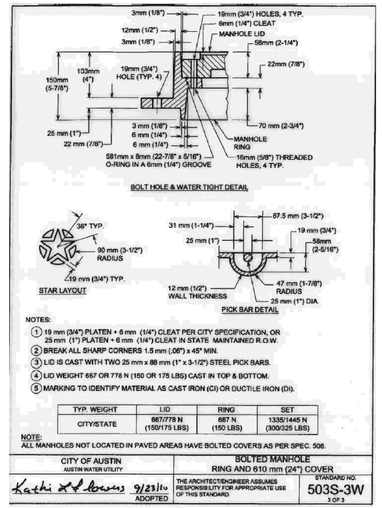

TYP. WEIGHT	LID	RING	SET
CITY/STATE	667/778 N (150/175 LBS)	667 N (150 LBS)	1335/1445 N (300/325 LBS)

NOTE:
ALL MANHOLES NOT LOCATED IN PAVED AREAS HAVE BOLTED COVERS AS PER SPEC. 506.

CITY OF AUSTIN AUSTIN WATER UTILITY	BOLTED MANHOLE RING AND 610 mm (24") COVER	
Kathi L Flowers 9/23/10 ADOPTED	THE ARCHITECT/ENGINEER ASSUMES RESPONSIBILITY FOR APPROPRIATE USE OF THIS STANDARD.	STANDARD NO. 503S-3W 3 OF 3

2 BOLTED SANITARY SEWER MANHOLE
SCALE: N.T.S.

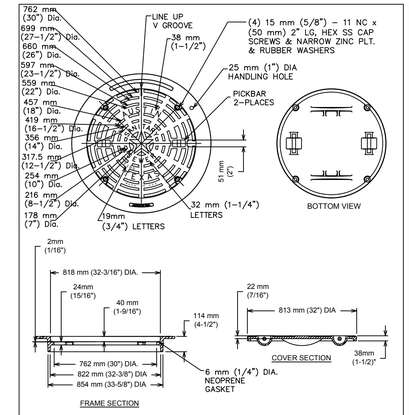

NOTES:
1. MANUFACTURER'S LOGO, COUNTRY OF ORIGIN, LID WEIGHT (IN LBS.) AND DATE OF CASTING SHALL BE CAST IN RING AND COVER AS DESCRIBED BY 503S–5W.
2. SEE SPL WW–219 FOR ADDITIONAL INFORMATION.

CITY OF AUSTIN AUSTIN WATER UTILITY	WATERTIGHT MANHOLE RING AND 813 mm 32" COVER	
RECORD COPY SIGNED BY KATHI L FLOWERS 06/01/10 ADOPTED	THE ARCHITECT/ENGINEER ASSUMES RESPONSIBILITY FOR APPROPRIATE USE OF THIS STANDARD.	STANDARD NO. 503S-6W 1 OF 2

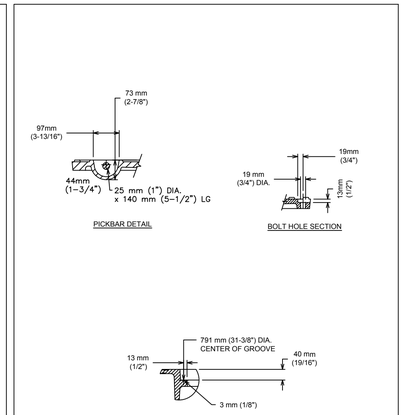

CITY OF AUSTIN AUSTIN WATER UTILITY	WATERTIGHT MANHOLE RING AND 813 mm 32" COVER	
RECORD COPY SIGNED BY KATHI L FLOWERS 06/01/10 ADOPTED	THE ARCHITECT/ENGINEER ASSUMES RESPONSIBILITY FOR APPROPRIATE USE OF THIS STANDARD.	STANDARD NO. 503S-6W 2 OF 2

4 WATERTIGHT MANHOLE
SCALE: N.T.S.

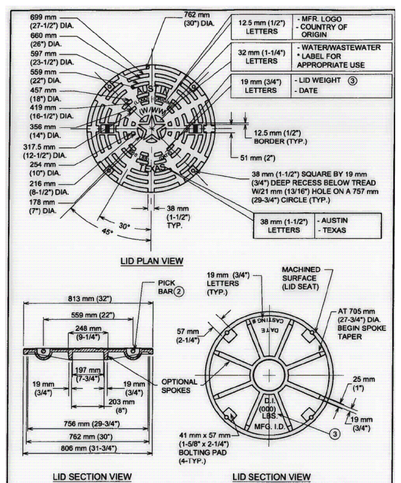

CITY OF AUSTIN AUSTIN WATER UTILITY	BOLTED MANHOLE RING AND 813 mm 32" COVER	
Kathi L Flowers 9/23/10 ADOPTED	THE ARCHITECT/ENGINEER ASSUMES RESPONSIBILITY FOR APPROPRIATE USE OF THIS STANDARD.	STANDARD NO. 503S-5W 1 OF 3

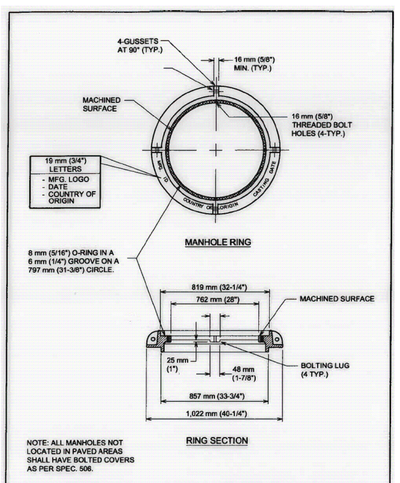

CITY OF AUSTIN AUSTIN WATER UTILITY	BOLTED MANHOLE RING AND 813 mm 32" COVER	
Kathi L Flowers 9/23/10 ADOPTED	THE ARCHITECT/ENGINEER ASSUMES RESPONSIBILITY FOR APPROPRIATE USE OF THIS STANDARD.	STANDARD NO. 503S-5W 2 OF 3

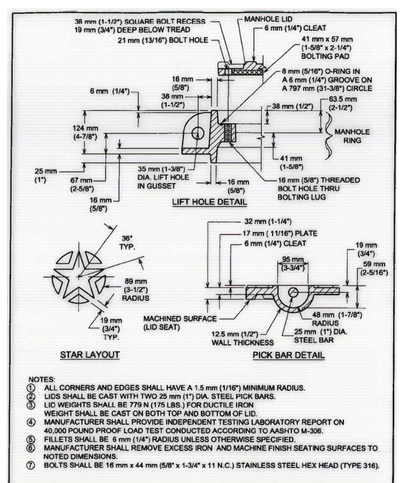

CITY OF AUSTIN AUSTIN WATER UTILITY	BOLTED MANHOLE RING AND 813 mm 32" COVER	
Kathi L Flowers 9/23/10 ADOPTED	THE ARCHITECT/ENGINEER ASSUMES RESPONSIBILITY FOR APPROPRIATE USE OF THIS STANDARD.	STANDARD NO. 503S-5W 3 OF 3

3 BOLTED MANHOLE
SCALE: N.T.S.

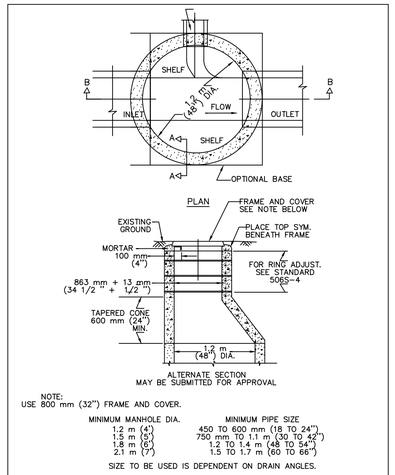

NOTE:
USE 800 mm (32") FRAME AND COVER.

MINIMUM MANHOLE DIA.	MINIMUM PIPE SIZE
1.2 m (4')	450 TO 600 mm (18 TO 24")
1.5 m (5')	750 mm TO 1.1 m (30 TO 42")
1.8 m (6')	1.2 TO 1.4 m (48 TO 54")
2.1 m (7')	1.5 TO 1.7 m (60 TO 66")

SIZE TO BE USED IS DEPENDENT ON DRAIN ANGLES.

CITY OF AUSTIN DEPARTMENT OF WATERSHED PROTECTION AND DEVELOPMENT REVIEW	PRE–CAST CONCRETE STORM DRAIN MANHOLE	
RECORD COPY SIGNED BY GEORGE E. OSWALD 2/14/02 ADOPTED	THE ARCHITECT/ENGINEER ASSUMES RESPONSIBILITY FOR APPROPRIATE USE OF THIS STANDARD.	STANDARD NO. 506S–3 1 OF 2

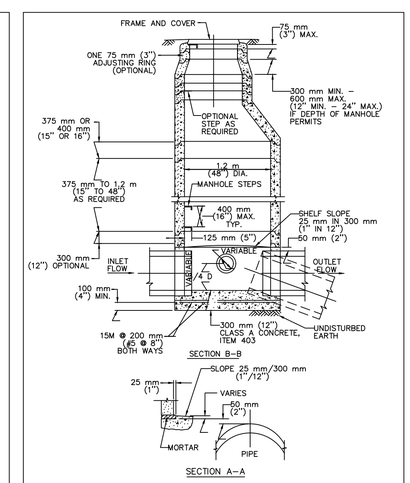

CITY OF AUSTIN DEPARTMENT OF WATERSHED PROTECTION AND DEVELOPMENT REVIEW	PRE–CAST CONCRETE STORM DRAIN MANHOLE	
RECORD COPY SIGNED BY GEORGE E. OSWALD 2/14/02 ADOPTED	THE ARCHITECT/ENGINEER ASSUMES RESPONSIBILITY FOR APPROPRIATE USE OF THIS STANDARD.	STANDARD NO. 506S–3 2 OF 2

5 PRE–CAST CONCRETE STORM DRAIN MANHOLE
SCALE: N.T.S.

REV	DATE	BY	DESCRIPTION	APPROVED

VERIFY SCALES
0 1"
IF BAR DOES NOT MEASURE ONE INCH ON THIS SHEET, ADJUST ACCORDINGLY.

STATE OF TEXAS SUSAN SMITH–TURRIETA 86839 LICENSED PROFESSIONAL ENGINEER
6-28-2010

DRAWN BY: RR
DESIGNED BY: SST
REVIEWED BY: SST
PROJECT NO: SST# XXXXX

SMITH TURRIETA ENGINEERING
P.O. BOX 5902, AUSTIN, TEXAS 78763
TELEPHONE: (512) 569-9022
Texas Registration Number, F-16076

CITY OF AUSTIN, TEXAS
TAYLOR LANE 0.1 MGD WASTEWATER TREATMENT PLANT PROJECT

WATER AND WASTEWATER DETAILS

DWG. NO. CZ-4

SHEET 33 OF 79

K:\ACAD\clients\STE\WWTP Ph2\C-ZD-DT107.dwg modified by roodrj on Jun 28, 16 12:06 PM

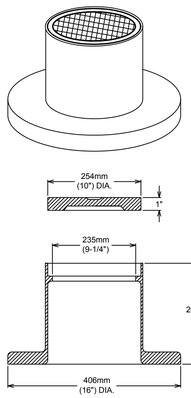

NOTES:
1. HEAVY DUTY.
2. SEE SPL WW-622 FOR MORE INFORMATION.

CITY OF AUSTIN AUSTIN WATER UTILITY		CLEANOUT RING AND COVER	
RECORD COPY SIGNED BY KATHI L. FLOWERS	06/01/10	THE ARCHITECT/ENGINEER ASSUMES RESPONSIBILITY FOR APPROPRIATE USE OF THIS STANDARD.	STANDARD NO. 503S-7W

1 CLEANOUT RING AND COVER
SCALE: N.T.S.

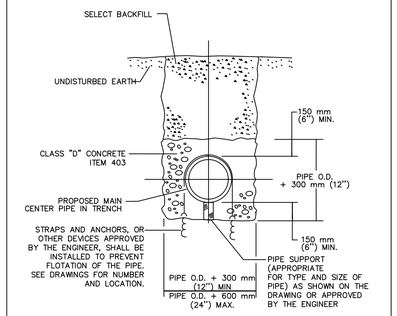

CITY OF AUSTIN WATER AND WASTEWATER UTILITY		CONCRETE ENCASEMENT	
RECORD COPY SIGNED BY LEON BARBA	8/18/00 ADOPTED	THE ARCHITECT/ENGINEER ASSUMES RESPONSIBILITY FOR APPROPRIATE USE OF THIS STANDARD.	STANDARD NO. 505S–1

2 CONCRETE ENCASEMENT
SCALE: N.T.S.

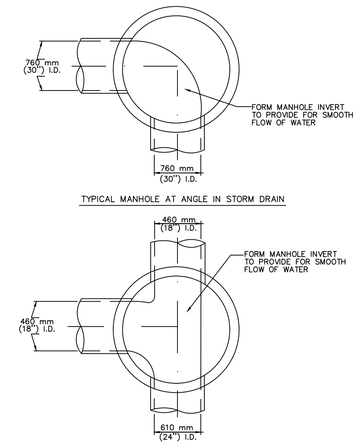

CITY OF AUSTIN DEPARTMENT OF WATERSHED PROTECTION AND DEVELOPMENT REVIEW		MANHOLE INVERT PLAN	
RECORD COPY SIGNED BY GEORGE E. OSWALD	*2/14/02* ADOPTED	THE ARCHITECT/ENGINEER ASSUMES RESPONSIBILITY FOR APPROPRIATE USE OF THIS STANDARD.	STANDARD NO. 506S–1

3 MANHOLE INVERT PLAN
SCALE: N.T.S.

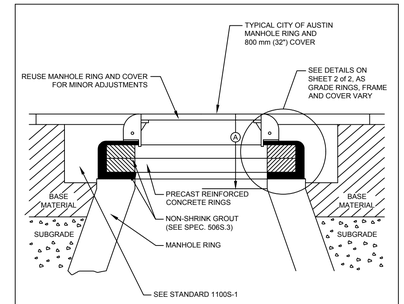

(A) VERTICAL FACE = ALLOWABLE THROAT OR CHIMNEY HEIGHT
= NEW CONSTRUCTION = 525mm = (21") Max.
= EXISTING CONSTRUCTION = 675mm (27") Max.

NOTES:
1. NON-SHRINK GROUT SHALL NOT EXCEED 25 mm (1") IN ANY DIMENSION.
2. SUB-GRADE AND BASE MATERIALS SHALL BE COMPACTED ACCORDING TO ITEMS 201S AND 210S, RESPECTIVELY, OF THE CITY OF AUSTIN STANDARD SPECIFICATIONS.
3. REFER TO STANDARD 1100S-1 FOR REPAIRS AROUND MANHOLES.
4. SEE STANDARD 506S-4A FOR HDPE RING INSTALLATION (FOR USE IN PAVED AREAS ONLY).

CITY OF AUSTIN AUSTIN WATER UTILITY		MINOR MANHOLE ADJUSTMENT & NEW MANHOLE CONSTRUCTION	
RECORD COPY SIGNED BY KATHI L FLOWERS	08/31/2011	THE ARCHITECT/ENGINEER ASSUMES RESPONSIBILITY FOR APPROPRIATE USE OF THIS STANDARD.	STANDARD NO. 506S-4 1 OF 2

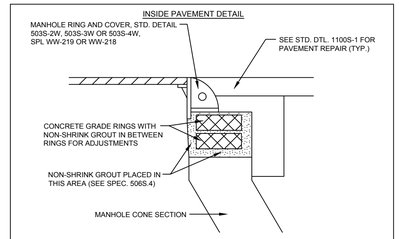

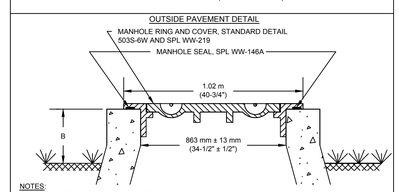

NOTES:
1. FOR USE IN UNPAVED AREAS ONLY
2. WHEN USED WITHIN 100-YEAR FLOODPLAIN, SEE DTL. 506S-6 FOR ADDITIONAL M.H. REQUIREMENTS.
3. DIMENSION B=150-300 mm (6"-12") FOR M.H. LOCATED IN 100-YR FLOOD PLAN. =50-300 mm (2"-12") FOR M.H. OUTSIDE 100-YR FLOOD PLAN.

CITY OF AUSTIN AUSTIN WATER UTILITY		MINOR MANHOLE ADJUSTMENT & NEW MANHOLE CONSTRUCTION	
RECORD COPY SIGNED BY KATHI L FLOWERS	08/31/2011	THE ARCHITECT/ENGINEER ASSUMES RESPONSIBILITY FOR APPROPRIATE USE OF THIS STANDARD.	STANDARD NO. 506S-4 2 OF 2

4 MINOR MANHOLE ADJUSTMENT & NEW MANHOLE CONSTRUCTION
SCALE: N.T.S.

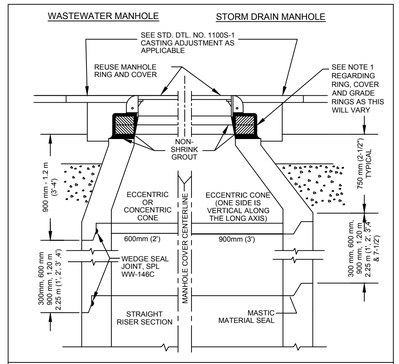

1. SEE "MINOR MANHOLE HEIGHT ADJUSTMENT" STANDARDS 506S-4 AND 506S-4A FOR ADDITIONAL INFORMATION.
2. MANHOLE SECTIONS TEMPORARILY REMOVED FOR ROADWAY CONSTRUCTION MAY BE REUSED ONLY WITH WRITTEN APPROVAL OF THE INSPECTOR. WEDGE SEALS SHALL NOT BE REUSED.
3. ANY COMBINATION OF REMOVING THE GRADE RINGS, AND/OR THE MANHOLE CONE, AND/OR THE STRAIGHT RISER SECTION OF THE MANHOLE SHALL BE ACCEPTABLE TO TEMPORARILY LOWER THE MANHOLE GRADE FOR RECONSTRUCTION.
4. WHILE THE MANHOLE IS TEMPORARILY LOWERED, A SHEET OF STEEL SUITABLE TO SUPPORT ALL IMPOSED LOADS SHALL BE USED TO COVER THE OPENING. STEEL SHALL BE PLACED SO THE SHEET WILL NOT MOVE UNDER ANY & ALL TRAFFIC CONDITIONS.
5. SUB-GRADE AND BASE MATERIALS SHALL BE COMPACTED TO 95% AND 100% DENSITIES, RESPECTIVELY. COMPACTION SHALL BE BY MECHANICAL TAMPING TO THE DENSITIES SPECIFIED, SEE STD. DTL. NO .1100S-1.

CITY OF AUSTIN AUSTIN WATER UTILITY		MAJOR MANHOLE ADJUSTMENT	
RECORD COPY SIGNED BY KATHI L FLOWERS	08/31/2011	THE ARCHITECT/ENGINEER ASSUMES RESPONSIBILITY FOR APPROPRIATE USE OF THIS STANDARD.	STANDARD NO. 506S-2

5 MAJOR MANHOLE ADJUSTMENT
SCALE: N.T.S.

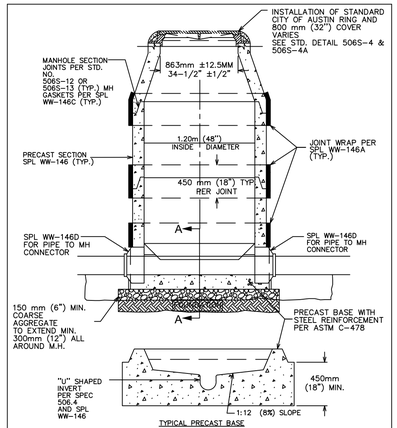

NOTE:
1. THE MANHOLE BASE SHALL BE BEDDED ON 150 mm (6") COARSE AGGREGATE. THE CONTRACTOR SHALL LEVEL AND PLUMB THE BASE PRIOR TO SETTING THE PRECAST MANHOLE RISER SECTIONS ON THE PRECAST CONCRETE BASE.
2. MANHOLE FOUNDATION SHALL MEET OR EXCEED SPEC. 506.5B.

CITY OF AUSTIN WATER AND WASTEWATER UTILITY		WATER TIGHT WASTEWATER MANHOLE ON PRECAST BASE	
RECORD COPY SIGNED BY KATHI L FLOWERS	08/31/2011	THE ARCHITECT/ENGINEER ASSUMES RESPONSIBILITY FOR APPROPRIATE USE OF THIS STANDARD.	STANDARD NO. 506S–6

6 WATER TIGHT WASTEWATER MANHOLE ON PRECAST BASE
SCALE: N.T.S.

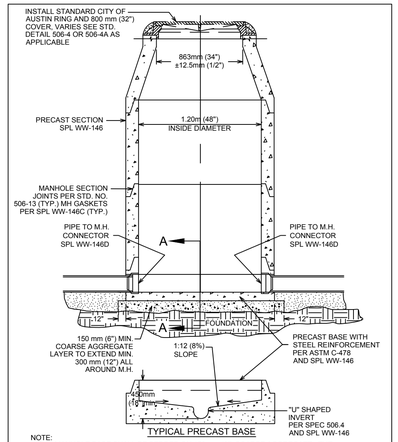

NOTE:
1. THE MANHOLE BASE SHALL BE BEDDED ON 150 mm (6") COARSE AGGREGATE. THE CONTRACTOR SHALL LEVEL AND PLUMB THE BASE PRIOR TO SETTING THE PRECAST MANHOLE RISER SECTIONS ON THE PRECAST CONCRETE BASE.
2. MH FOUNDATION SHALL MEET OR EXCEED STD. SPEC. 506.5B.

CITY OF AUSTIN AUSTIN WATER UTILITY		WASTEWATER MANHOLE ON PRECAST BASE	
RECORD COPY SIGNED BY KATHI L FLOWERS	08/31/2011	THE ARCHITECT/ENGINEER ASSUMES RESPONSIBILITY FOR APPROPRIATE USE OF THIS STANDARD.	STANDARD NO. 506S-10

7 WASTERWATER MANHOLE ON PRECAST BASE
SCALE: N.T.S.

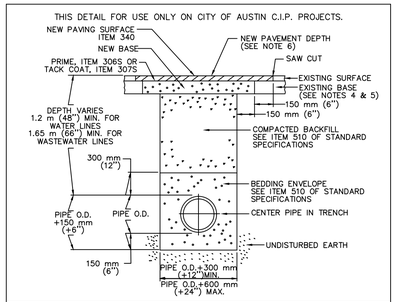

NOTES:
1. THE EXISTING PAVING SURFACE SHALL BE SAW CUT IN A STRAIGHT LINE A MINIMUM OF 300 mm (12") WIDER THAN THE UNDISTURBED SIDES OF THE TRENCH, SYMETRICAL ABOUT THE CENTER LINE OF THE EXCAVATION.
2. ANY CONCRETE PAVING SHALL BE SAW CUT 150 mm (6") WIDER THAN UNDISTURBED SIDES OF EXCAVATION.
3. IF EXCAVATION AREA IS OPEN FOR TEMPORARY PUBLIC USE, THE SURFACE SHALL BE MAINTAINED LEVEL WITH ADJACENT RIDING SURFACE WITH COLD MIX OR TEMPORARY HOT MIX ASPHALTIC CONCRETE.
4. ROAD BASE AND SURFACE MATERIALS IN THE TRENCH CUT SHALL BE REPLACED IN KIND OF EQUAL THICKNESS, OR MINIMUM BASE THICKNESS OF 250 mm (10"), WHICHEVER IS GREATER.
5. ALL DAMAGED AREAS OF PAVEMENT OUTSIDE THE TRENCH CUT SHALL BE REMOVED AND REPLACED WITH MINIMUM OF 200 mm (8") OF BASE OR MATCH EXISTING THICKNESS, WHICHEVER IS GREATER.
6. SURFACE PAVEMENT SHALL BE OF THE KIND AND THICKNESS AS EXISTING, OR MINIMUM 50 mm (2"), WHICHEVER IS GREATER.

CITY OF AUSTIN WATER AND WASTEWATER UTILITY		TYPICAL TRENCH WITH PAVED SURFACE	
RECORD COPY SIGNED BY KATHI L. FLOWERS	*8/19/02* ADOPTED	THE ARCHITECT/ENGINEER ASSUMES RESPONSIBILITY FOR APPROPRIATE USE OF THIS STANDARD.	STANDARD NO. 510S–3

8 TYPICAL TRENCH WITH PAVED SURFACE
SCALE: N.T.S.

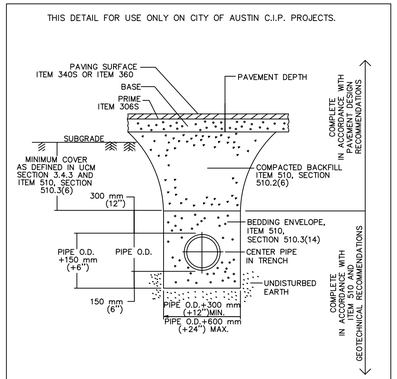

REFERENCES:
1. UTILITY CRITERIA MANUAL SECTION 3.4.3, "FINAL DESIGN"
2. STANDARD SPECIFICATION MANUAL ITEM 510,
   SECTION 510.2(6), "SELECT BACKFILL OR BORROW";
   SECTION 510.3(6), "TRENCH DEPTH AND DEPTH OF COVER";
   SECTION 510.3(14), "PIPE BEDDING ENVELOPE"

CITY OF AUSTIN DEPARTMENT OF PUBLIC WORKS		TYPICAL DETAIL FOR PROPOSED STREET	
RECORD COPY SIGNED BY BILL GARDNER	03/13/06 ADOPTED	THE ARCHITECT/ENGINEER ASSUMES RESPONSIBILITY FOR APPROPRIATE USE OF THIS STANDARD.	STANDARD NO. 510S–4

9 TYPICAL DETAIL FOR PROPOSED STREET
SCALE: N.T.S.

REV	DATE	BY	DESCRIPTION	APPROVED

VERIFY SCALES
0 1"
IF BAR DOES NOT MEASURE ONE INCH ON THIS SHEET, ADJUST ACCORDINGLY.

STATE OF TEXAS
SUSAN SMITH-TURRIETA
86839
LICENSED
PROFESSIONAL ENGINEER
6-28-2006

DRAWN BY: RR
DESIGNED BY: SST
REVIEWED BY: SST
PROJECT NO: SST# XXXXX

SMITH TURRIETA ENGINEERING
P.O. BOX 5902, AUSTIN, TEXAS 78763
TELEPHONE: (512) 569-9022
Texas Registration Number, F-16076

CITY OF AUSTIN, TEXAS
TAYLOR LANE 0.1 MGD WASTEWATER
TREATMENT PLANT PROJECT

WATER AND WASTEWATER DETAILS

DWG. NO.
CZ-5

SHEET 34 OF 79

K:\ACAD\clients\STE\WWTP Ph2\C-ZD-DT108.dwg modified by roodrj on Apr 18, 16 4:56 PM

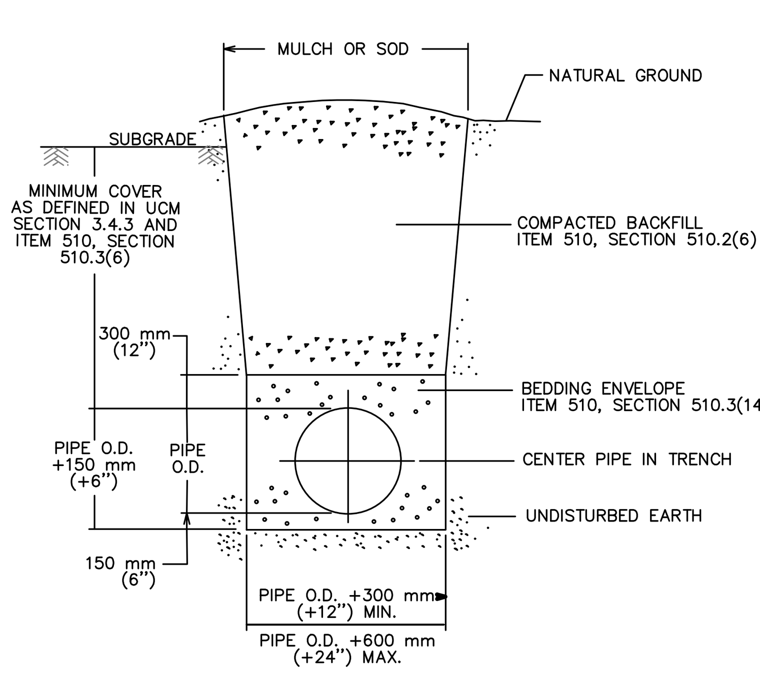

REFERENCES:
1. UTILITY CRITERIA MANUAL SECTION 3.4.3, "FINAL DESIGN"
2. STANDARD SPECIFICATION MANUAL ITEM 510, SECTION 510.2(6), "SELECT BACKFILL OR BORROW"; SECTION 510.3(6), "TRENCH DEPTH AND DEPTH OF COVER"; SECTION 510.3(14), "PIPE BEDDING ENVELOPE"

CITY OF AUSTIN DEPARTMENT OF PUBLIC WORKS	TYPICAL TRENCH DETAIL WITH UNFINISHED SURFACE	
RECORD COPY SIGNED BY BILL GARDNER 03/13/06 ADOPTED	THE ARCHITECT/ENGINEER ASSUMES RESPONSIBILITY FOR APPROPRIATE USE OF THIS STANDARD.	STANDARD NO. 510S–5

1 TYPICAL TRENCH DETAIL WITH UNFINISHED SURFACE
SCALE: N.T.S.

NOTES:
1. WELD SOCKET 64 mm X 51 mm (2½" X 2") DEEP TO 25 mm (1") SCH. 40 ROUND STEM EXTENSION, FITTED ON OPERATING NUT, SCH. 80 FOR LENGTHS OVER 3 m (10').
2. CITY OF AUSTIN STANDARD VALVE CASTING RING C–6 & LID C–7 OR C–5A LID IN UNPAVED AREAS. SEE VALVE CASTING DETAIL.
3. NUT AT TOP OF VALVE EXTENSION ROD SHALL BE SQUARE 51 mm (2") LONG WELDED TO TOP OF ROD.

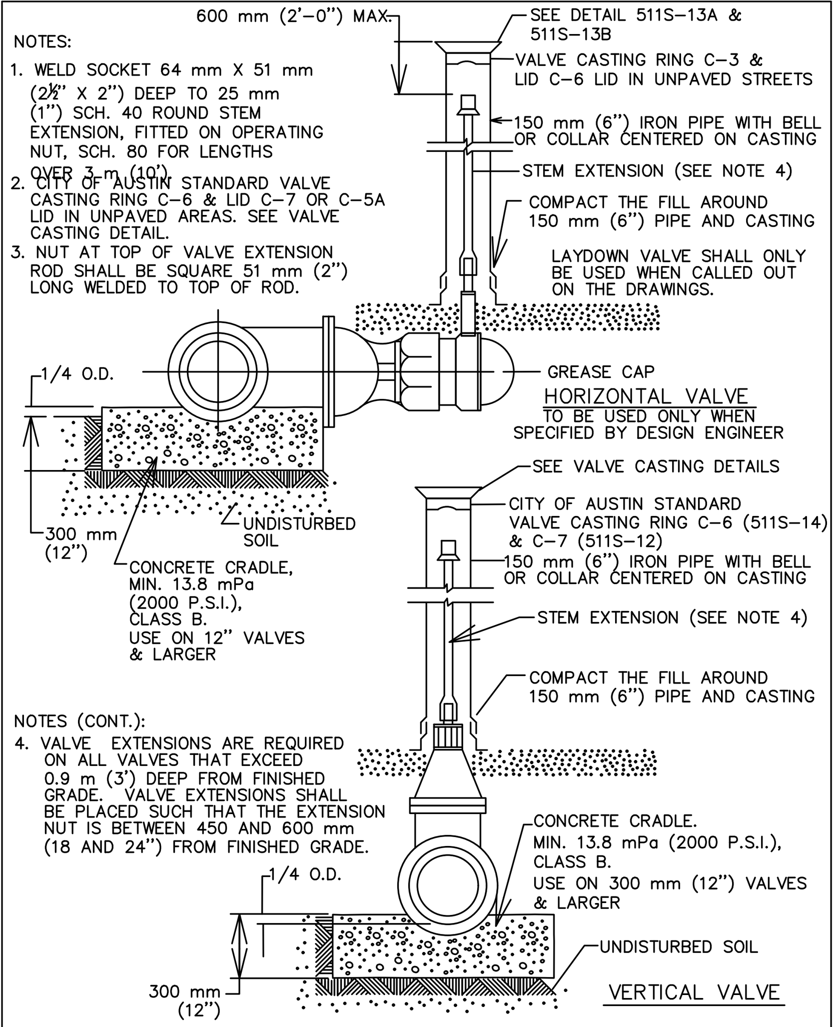

NOTES (CONT.):
4. VALVE EXTENSIONS ARE REQUIRED ON ALL VALVES THAT EXCEED 0.9 m (3') DEEP FROM FINISHED GRADE. VALVE EXTENSIONS SHALL BE PLACED SUCH THAT THE EXTENSION NUT IS BETWEEN 450 AND 600 mm (18 AND 24") FROM FINISHED GRADE.

CITY OF AUSTIN AUSTIN WATER UTILITY	TYPICAL GATE VALVE 100 mm–600 mm (4"–24")	
RECORD COPY SIGNED BY KATHI L. FLOWERS 3/9/04 ADOPTED	THE ARCHITECT/ENGINEER ASSUMES RESPONSIBILITY FOR APPROPRIATE USE OF THIS STANDARD.	STANDARD NO. 511S–7

2 TYPICAL GATE VALVE
SCALE: N.T.S.

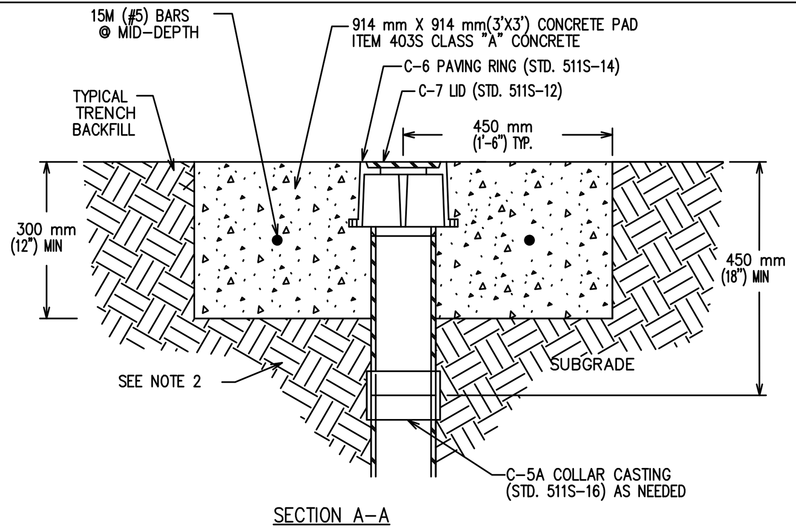

NOTES:
1. PADS ARE TO BE INSTALLED AROUND VALVE BOX LIDS ON ALL WATER VALVES IN UNPAVED AREAS.
2. TRENCH BACKFILL SHALL BE COMPACTED AS PER ITEM 510.
3. VALVE CASTINGS SHALL BE ADJUSTED TO GRADE AFTER FINAL GRADING OF TRENCH BACKFILL IS COMPLETED.
4. CLEAN VALVE BOX OF ALL DEBRIS DOWN TO THE VALVE OPERATOR.
5. REINFORCING STEEL SHALL MEET ITEM 406S, REINFORCING STEEL.
6. IN UNDEVELOPED AREAS THAT WILL NOT BE REGULARLY MOWED AND MAINTAINED, INSTALL ONE DELINEATOR STAKE IMMEDIATELY ADJACENT TO THE EDGE OF THE PAD. DELINEATOR SHALL BE BLUE FOR WATER (FLEX STAKE HD600 OR APPROVED EQUAL) AND PURPLE FOR RECLAIMED WATER (CHRISTY'S PART NO. IDSF66.PRW WITH VANDAL RESISTANT ANCHOR KIT PART NO. IDSF.ANCHOR INSTALLED OR APPROVED EQUAL) AND SHALL EXTEND AT LEAST 60" ABOVE GROUND. DELINEATORS SHALL HAVE 2" WIDE, WHITE, TYPE I REFLECTIVE TAPE (COLE FARMS OR APPROVED EQUAL) MOUNTED DIAGONALLY AT 12" SPACING ON BOTH SIDES.

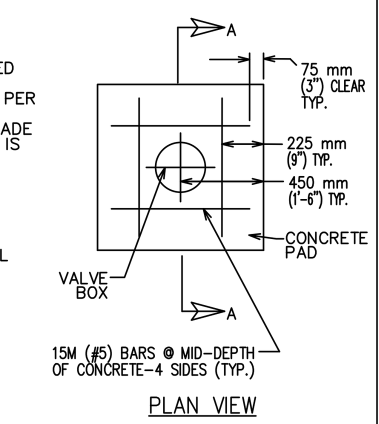

CITY OF AUSTIN AUSTIN WATER UTILITY	WATER VALVE BOX CONCRETE PAD IN UNPAVED AREA	
RECORD COPY SIGNED BY SAM ANGOORI 10/19/09 ADOPTED	THE ARCHITECT/ENGINEER ASSUMES RESPONSIBILITY FOR APPROPRIATE USE OF THIS STANDARD.	STANDARD NO. 511S–13C

3 WATER VALVE BOX CONCRETE PAD IN UNPAVED AREA
SCALE: N.T.S.

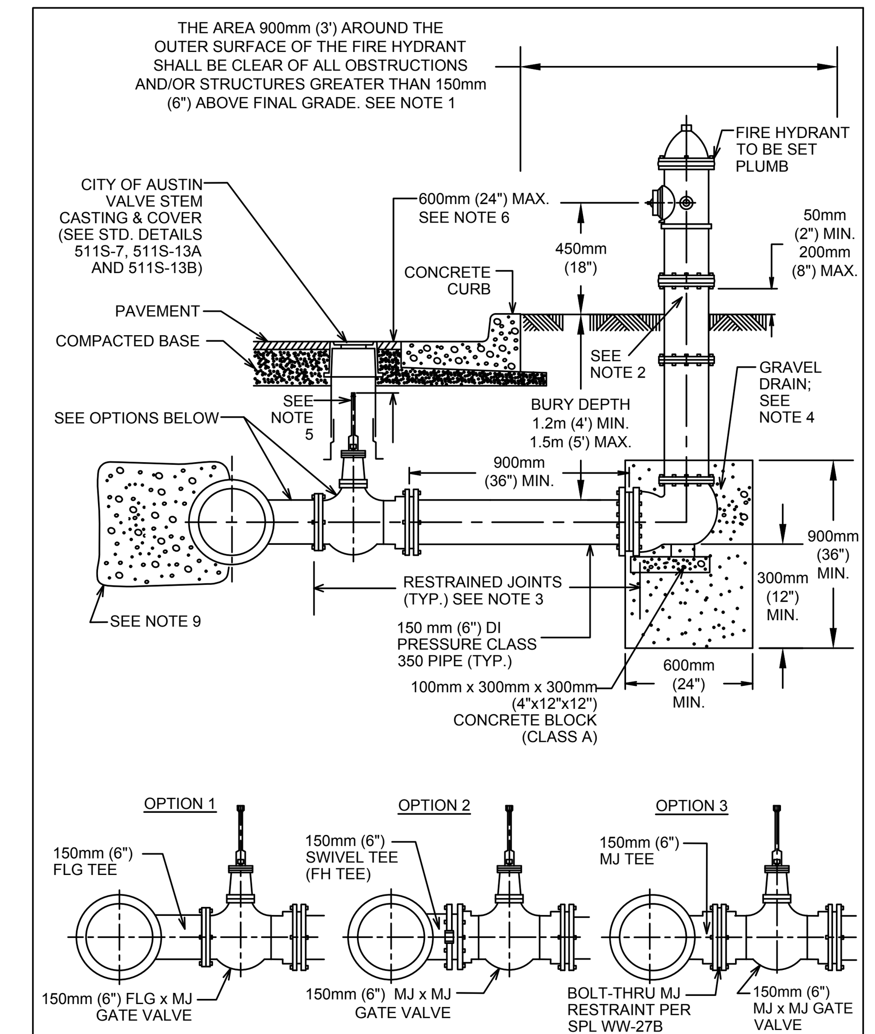

CITY OF AUSTIN AUSTIN WATER UTILITY	STANDARD FIRE HYDRANT INSTALLATION	
RECORD COPY SIGNED BY KATHI L FLOWERS 08/31/2011	THE ARCHITECT/ENGINEER ASSUMES RESPONSIBILITY FOR APPROPRIATE USE OF THIS STANDARD.	STANDARD NO. 511S-17 1 OF 2

NOTES:
1. DIMENSION FROM GUTTER FACE OF CURB TO OUTERMOST PART OF ANY NOZZLE CAP SHALL BE NOT LESS THAN 0.9m (3'), NOR MORE THAN 1.8m (6'). NO PART OF A HYDRANT OR ITS NOZZLE CAPS SHALL BE WITHIN 150mm (6") OF ANY SIDEWALK OR PEDESTRIAN RAMP. ANY FIRE HYDRANT PLACED NEAR A STREET CORNER SHALL BE LOCATED OUTSIDE THE CURVE RADIUS AND A MINIMUM OF 1.2m (4') FROM RAMPS.
2. ONE BARREL EXTENSION NOT EXCEEDING 600 mm (2') LENGTH MAY BE INSTALLED DIRECTLY BELOW THE FIRE HYDRANT IN ORDER TO MEET THE REQUIRED BURY DEPTH OF 1.2m TO 1.5m (4' TO 5'). BREAK AWAY BOLTS (SHOE TYPES) SHALL BE PROPERLY SPACED AND PLACED WHEN EXTENSIONS ARE NEEDED TO ACCOMMODATE FIRE HYDRANTS. SEE STD. DETAIL 511S-17A FOR FIRE HYDRANTS ON DEEP WATER MAINS.
3. FIRE LINE SHALL HAVE ALL JOINTS RESTRAINED FROM MAIN TO FIRE HYDRANT. JOINTS SHOWN MAY VARY. SEE SPL WW-27, WW-27A, AND WW-27B FOR RESTRAINT OPTIONS.
4. BELOW EACH HYDRANT, A DRAINAGE PIT 0.6m (2') IN DIAMETER AND 0.3m (1') DEEP SHALL BE EXCAVATED AND FILLED WITH COMPACTED COARSE GRAVEL OR BROKEN STONE MIXED WITH COARSE SAND UNDER AND AROUND THE BOWL OF THE HYDRANT, AND TO A LEVEL 150mm (6") ABOVE THE HYDRANT DRAIN OPENING (SEE STD. SPEC. 510). THE HYDRANT DRAINAGE PIT SHALL NOT BE CONNECTED TO A SANITARY SEWER. THE DRAIN GRAVEL SHALL BE COVERED WITH FILTER FABRIC TO PREVENT BLOCKAGE OF VOIDS IN THE GRAVEL BY MIGRATION OF BACKFILL MATERIAL. THE BOWL OF EACH HYDRANT SHALL BE WELL BRACED AGAINST UNEXCAVATED EARTH AT THE END OF THE TRENCH TAKING CARE NOT TO OBSTRUCT THE HYDRANT DRAIN HOLES, IF THE HYDRANT LEAD IS NOT RESTRAINED TO THE MAIN.
5. WELD SOCKET 64mm x 51mm (2-1/2" x 2") TO 25mm (1") SCH. 40 ROUND STEM EXTENSION, FIT ON OPERATING NUT. USE SCH. 80 ROUND STEM EXTENSION FOR LENGTHS OVER 3m (10'). VALVE STEM EXTENSIONS SHALL CONSIST OF A SINGLE PIECE OF REQUIRED LENGTH WITH A SOCKET ON ONE END AND A NUT ON THE OTHER.
6. VALVE STEM EXTENSIONS ARE REQUIRED ON ALL VALVES THAT EXCEED 0.9 m (3') DEEP FROM FINISHED GRADE. VALVE STEM EXTENSIONS SHALL BE PLACED SUCH THAT THE EXTENSION NUT IS BETWEEN 450 AND 600 mm (18" AND 24") FROM FINISHED GRADE.
7. FOR FIRE HYDRANT LEADS AT A MAIN OUTLET LARGER THAN 150mm (6") DIAMETER, OUTLET SHALL BE FLANGED AND A FLANGE x FLANGE REDUCER SHALL BE INSTALLED DIRECTLY ON THE OUTLET.
8. WRAP 8 mil POLY-FILM WRAP ON ALL BURIED PIPE AND FITTINGS.
9. THRUST BLOCKING REQUIRED FOR PIPE SIZE & SOIL CONDITION (SEE STD. DETAIL 510-6)

CITY OF AUSTIN AUSTIN WATER UTILITY	STANDARD FIRE HYDRANT INSTALLATION	
RECORD COPY SIGNED BY KATHI L FLOWERS 08/31/2011	THE ARCHITECT/ENGINEER ASSUMES RESPONSIBILITY FOR APPROPRIATE USE OF THIS STANDARD.	STANDARD NO. 511S-17 2 OF 2

4 STANDARD FIRE HYDRANT INSTALLATION
SCALE: N.T.S.

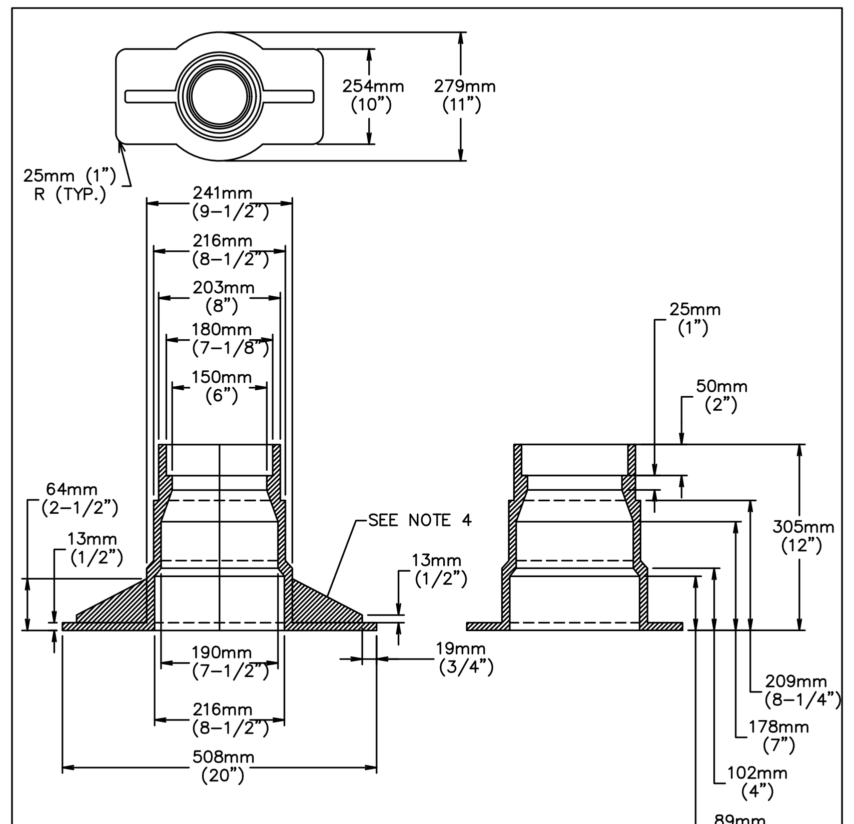

NOTES:
1. MATERIAL SHALL BE GRAY CAST IRON, ASTM A48, GRADE 30B.
2. THE MANUFACTURER'S IDENTIFICATION AND CASTING NUMBER AND THE COUNTRY WHERE CAST SHALL BE DISTINCTLY CAST ONTO EACH VALVE BOX.
3. DRAFT AND SHRINKAGE ALLOWANCE SHALL BE IN ACCORDANCE WITH NORMAL FOUNDRY PRACTICE.
4. CASTING FINISH BY MANUFACTURER SHALL INCLUDED REMOVAL OF FINS AND FLASHING, AND PAINT WITH BLACK ASPHALT COATING.
5. WEIGHT: APPROXIMATELY 78 LBS.

CITY OF AUSTIN AUSTIN WATER UTILITY	POTABLE WATER VALVE BOX CASTING	
RECORD COPY SIGNED BY KATHI L FLOWERS 08/31/2011	THE ARCHITECT/ENGINEER ASSUMES RESPONSIBILITY FOR APPROPRIATE USE OF THIS STANDARD.	STANDARD NO. 511S-15

5 POTABLE WATER VALVE BOX CASTING
SCALE: N.T.S.

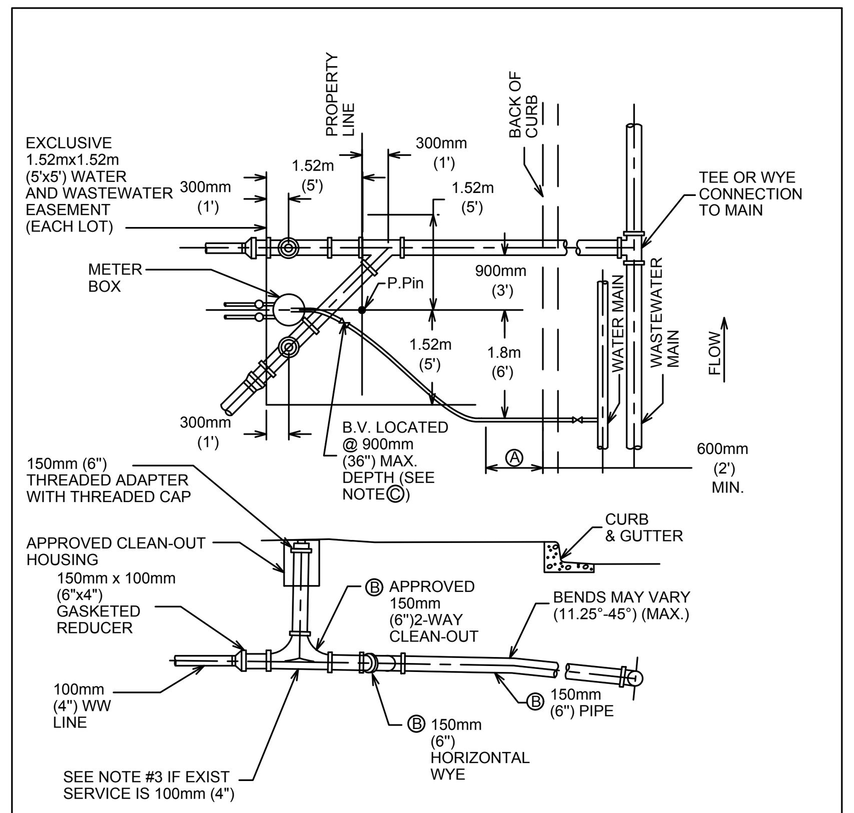

NOTES:
Ⓐ THESE DIMENSIONS MAY BE INCREASED BY WIDTH OF WALK IF WALK IS LOCATED AT CURB.
Ⓑ TO BE INSTALLED AND INSPECTED DURING SUBDIVISION CONSTRUCTION.
Ⓒ BALL VALVE SHALL NOT BE LOCATED UNDER CURB OR PAVEMENT AND NOT BE LOCATED MORE THAN 24" (600mm) HORIZONTAL FROM METER BOX.

CITY OF AUSTIN AUSTIN WATER UTILITY	WATER AND WASTEWATER SERVICE CONNECTION 1.5mx1.5m (5'x5') ESMT.	
RECORD COPY SIGNED BY KATHI L FLOWERS 06/01/10 ADOPTED	THE ARCHITECT/ENGINEER ASSUMES RESPONSIBILITY FOR APPROPRIATE USE OF THIS STANDARD.	STANDARD NO. 520S-1 1 OF 2

NOTES:
1. DURING SUBDIVISION CONSTRUCTION UTILITY CONTRACTOR INSTALLS WASTEWATER CONNECTION TO MAIN, 150mm (6") STUB WITH HORIZONTAL WYE FOR DOUBLE SERVICES, 150mm (6") SERVICE BRANCH WITH 2-WAY-CLEANOUT(S) AND RISER FOR CLEANOUT(S) (CAPPED), AND PLUG(S) FOR 2-WAY-CLEANOUT(S) AT PROPERTY LINE END. ALL WASTEWATER PIPING SHALL HAVE ELASTOMERIC GASKET TYPE JOINTS AND SLOPE DOWNWARD TO MAIN 1% MINIMUM TO 45° MAXIMUM. DEPTH OF SERVICE STUB AT PROPERTY LINE WILL BE SHOWN ON PLANS BY ENGINEER IF GREATER THAN 1.22m (4'), OTHERWISE THE INSTALLED DEPTH WILL TYPICALLY BE 1.22m (4') TO 1.8m (6'). IF WASTEWATER SERVICE LINE TO MAIN REQUIRES DEFLECTION EXCEEDING 45°, REFER TO DETAIL 520-6. UTILITY CONTRACTOR ALSO INSTALLS WATER CONNECTION TO MAIN WATER PIPE, FITTINGS AND VALVES INCLUDING STOP VALVE-REFER TO DETAIL 520S-9, 9A, 11 AND 11A FOR LOCATION OF STOP VALVES. ALL INSTALLATIONS SHALL BE MADE IN ACCORDANCE WITH INFORMATION SHOWN ON APPLICABLE STANDARD DRAWINGS AND WILL BE INSPECTED BY CITY OF AUSTIN CONSTRUCTION INSPECTION PERSONNEL.
2. CUSTOMER REMOVES PLUG FROM 2-WAY CLEAN-OUT AT PROPERTY LINE, INSTALLS 150mm x 100mm (6"x4") ELASTOMERIC GASKETED BELL REDUCER (SPL WW-227-B). A BUSHING WILL NOT BE ALLOWED. AS AN ALTERNATE, CUSTOMER MAY INSTALL MINIMUM 450mm (18") LENGTH OF 150mm (6") PIPE, INSTALL 100mm (4") WASTEWATER LINES, EXTEND 100mm (4") PIPE 150mm (6") MINIMUM INTO 150mm (6") PIPE AND JOINT BLOCK UNDER THE FLEXIBLE ADAPTER (SPL WW-354) AND CAST IN PLACE CONCRETE SUPPORT BLOCK UNDER THE FLEXIBLE ADAPTER. IF WASTEWATER WILL NOT SATISFACTORILY FLOW BY GRAVITY TO SEWER MAIN ADJACENT TO PROPERTY, PUMP EQUIPMENT MUST BE PROVIDED BY THE CUSTOMER AS PART OF THE CUSTOMER'S WASTEWATER SYSTEM. CUSTOMER ALSO INSTALLS WATER LINES INCLUDING FITTINGS AND VALVES ON BOTH SIDES OF METER, AND INSTALLS METER BOXES AND COVERS. A VENTED SPACER MAY BE USED TO ASSURE PROPER SPACING AND ALIGNMENT OF METER FITTINGS.
3. IF EXISTING WASTEWATER SERVICE IS 100mm (4"), CUSTOMER SHALL INSTALL A 100mm (4") 2-WAY CLEAN-OUT. SEE SPL WW-227B.
4. IF EXISTING SERVICE IS NOT PVC, THE CUSTOMER SHALL INSTALL A FLEXIBLE ADAPTER (SPL WW-354) AND CAST IN PLACE CONCRETE SUPPORT BLOCK UNDER THE ADAPTER TO TRANSITION TO PVC. THE SUPPORT BLOCK SHALL HAVE MINIMUM DIMENSIONS OF 150mm (6") THICK AND 450mm (18") WIDE AND EXTEND A MINIMUM OF 150mm (6") BEYOND EITHER END OF THE ADAPTER.
5. CUSTOMER IS RESPONSIBLE FOR METER BOX AND PIPING SYSTEM UNTIL METER IS INSTALLED AND WASTEWATER IS CONNECTED. ANY MISSING OR DAMAGED PARTS SHALL BE REINSTALLED BY CUSTOMER WHO SHALL GUARANTEE, FOR A PERIOD OF ONE (1) YEAR FROM DATE OF ACCEPTANCE, THAT ALL VALVES AND STOPS, METER BOX AND 2-WAY-CLEANOUTS REMAIN CLEAR OF SIDEWALKS AND OTHER OBSTRUCTIONS.
6. CITY OF AUSTIN ACTIVITY IS LIMITED TO INSTALLATION OF THE WATER METER AND INSPECTION OF CONNECTIONS TO THE CITY'S RESPONSIBILITY ENDS AT THE CUSTOMER'S WATER CUT-OFF VALVE AND AT THE CUSTOMER'S WASTEWATER CONNECTION TO THE 2-WAY CLEAN-OUT.
7. PIPING AND TUBING IN STREET RIGHT-OF-WAY AND IN EASEMENT AREA SHALL BE BEDDED IN GRANULAR MATERIALS AS REQUIRED BY CITY OF AUSTIN STANDARD SPECIFICATION 510.3 (14); MATERIALS SHALL BE AS SPECIFIED IN 510.2 (2)(A) AND (3)(B); BACKFILL ABOVE THE GRANULAR BEDDING SHALL BE AS REQUIRED BY SECTION 510.3 (25). SERVICE LINES IN THESE AREAS SHALL HAVE A MINIMUM COVER BELOW FINAL STREET GRADE OF 1.07m (42") ANY EXCEPTION MUST BE SPECIFICALLY APPROVED BY THE ENGINEER.
8. NO METER BOX OR CLEAN-OUT SHALL BE SET IN SIDEWALK OR DRIVEWAY AREA WITHOUT WRITTEN APPROVAL FROM AUSTIN WATER UTILITY.
9. ALL WW JOINTS THAT ARE NOT PVC OR A COMBINATION OF NON-PVC WITH PVC SHALL BE ENCASED IN CONCRETE OR CLSM.

CITY OF AUSTIN AUSTIN WATER UTILITY	WATER AND WASTEWATER SERVICE CONNECTION 1.5mx1.5m (5'x5') ESMT.	
RECORD COPY SIGNED BY KATHI L FLOWERS 06/01/10 ADOPTED	THE ARCHITECT/ENGINEER ASSUMES RESPONSIBILITY FOR APPROPRIATE USE OF THIS STANDARD.	STANDARD NO. 520S-1 2 OF 2

6 WATER AND WASTEWATER SERVICE CONNECTION
SCALE: N.T.S.

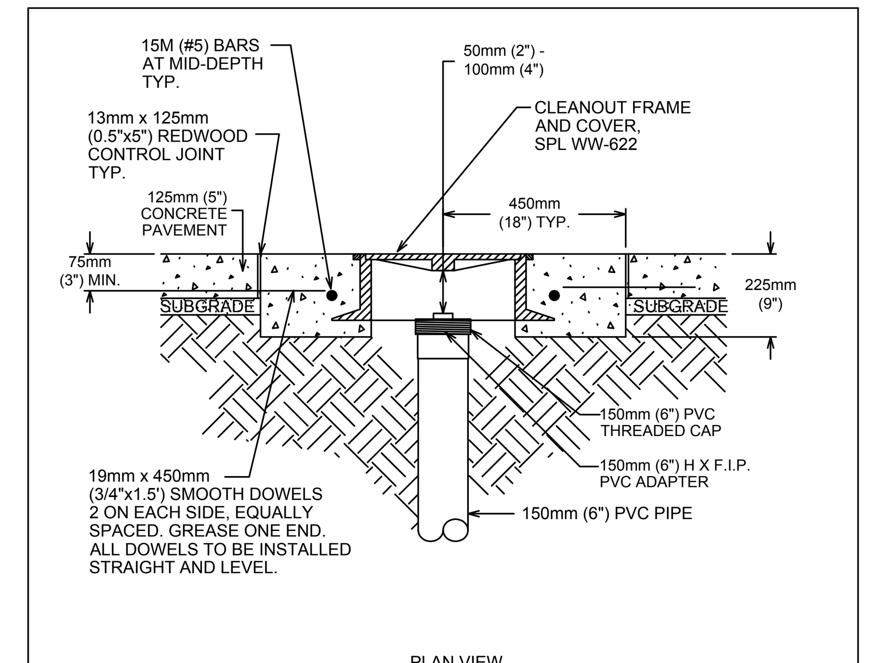

NOTES:
1. SERVICES SHALL BE DESIGNED TO AVOID CLEAN-OUT LOCATION WITHIN DRIVEWAYS.
2. THIS STANDARD DETAIL IS ONLY FOR EXISTING CLEANOUTS THAT ARE LOCATED WITHIN EXISTING DRIVEWAYS.
3. SUB-GRADE SHALL BE COMPACTED AS PER STD. SPEC. 201S, SUB-GRADE PREPARATION.
4. REINFORCING STEEL SHALL MEET ITEM 406S, REINFORCING STEEL.
5. PC CONCRETE SHALL MEET ITEM 403S CLASS "A".
6. TRAFFIC BEARING FRAME AND COVER ONLY, HEAVY DUTY.
7. PLACE CASTING IN CONCRETE, FINISH CONCRETE SMOOTH.
8. LOCATE CASTING SO WATER WILL NOT ACCUMULATE AT CASTING.
9. PVC PIPE SHALL BE A MINIMUM WALL THICKNESS AS REQUIRED BY SDR-35. CLEANOUTS INSTALLED ON SDR-26 SERVICES SHALL BE A MINIMUM WALL THICKNESS AS REQUIRED BY SDR-26.

CITY OF AUSTIN AUSTIN WATER UTILITY	WASTEWATER CLEAN-OUT ADJUSTMENT TO GRADE IN DRIVEWAYS	
RECORD COPY SIGNED BY KATHI L FLOWERS 06/01/10 ADOPTED	THE ARCHITECT/ENGINEER ASSUMES RESPONSIBILITY FOR APPROPRIATE USE OF THIS STANDARD.	STANDARD NO. 520S-4

7 WASTEWATER CLEAN–OUT ADJUSTMENT TO GRADE IN DRIVEWAYS
SCALE: N.T.S.

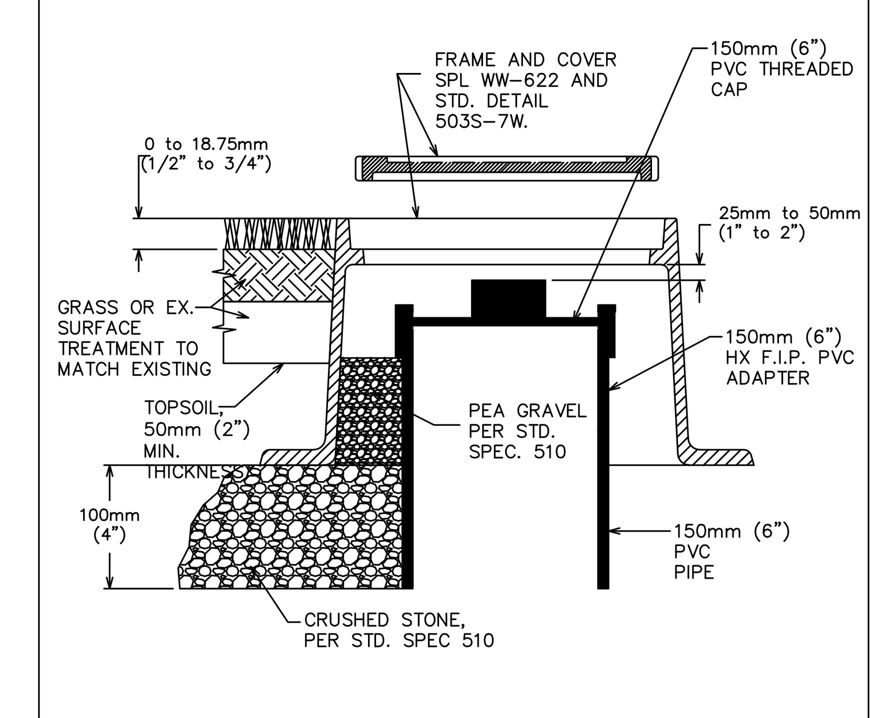

NOTES:
1. THIS ASSEMBLY IS NOT FOR ANY LOCATION THAT WILL HAVE TRAFFIC LOADS.
2. FOR CLEANOUTS LOCATED IN SIDEWALKS, DRIVEWAYS, ASPHALT, AND OTHER PAVED AREAS, INSTALL CLEAN–OUT CASTING PER 520S–4.
3. LOCATE CASTING OR SET AT APPROPRIATE HEIGHT SO WATER WILL NOT ACCUMULATE AT CASTING.
4. PVC PIPE SHALL BE A MINIMUM WALL THICKNESS AS REQUIRED BY SDR–35. CLEANOUTS INSTALLED ON SDR–26 SERVICES SHALL BE A MINIMUM WALL THICKNESS AS REQUIRED BY SDR–26.

CITY OF AUSTIN AUSTIN WATER UTILITY	WASTEWATER CLEANOUT CASTING (UNPAVED LOCATION)	
RECORD COPY SIGNED BY KATHI L FLOWERS 08/31/2011	THE ARCHITECT/ENGINEER ASSUMES RESPONSIBILITY FOR APPROPRIATE USE OF THIS STANDARD.	STANDARD NO. 520S–4A

8 WASTEWATER CLEANOUT CASTING
SCALE: N.T.S.

REV	DATE	BY	DESCRIPTION	APPROVED

VERIFY SCALES

0 1"

IF BAR DOES NOT MEASURE ONE INCH ON THIS SHEET, ADJUST ACCORDINGLY.

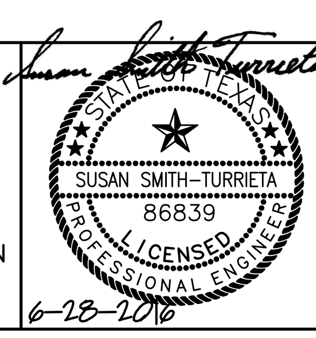

DRAWN BY: RR

DESIGNED BY: SST

REVIEWED BY: SST

PROJECT NO: SST# XXXXX

SMITH TURRIETA ENGINEERING

P.O. BOX 5902, AUSTIN, TEXAS 78763
TELEPHONE: (512) 569-9022
Texas Registration Number, F-16076

CITY OF AUSTIN, TEXAS
TAYLOR LANE 0.1 MGD WASTEWATER TREATMENT PLANT PROJECT

WATER AND WASTEWATER DETAILS

DWG. NO. CZ-6

SHEET 35 OF 79

K:\ACAD\clients\STE\WWTP Ph2\C–ZD–DT109.dwg modified by roodrj on Apr 18, 16 4:56 PM

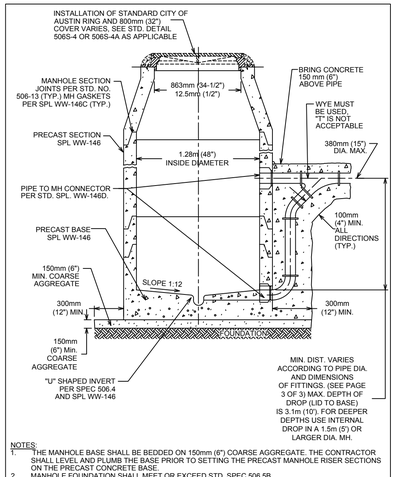

NOTES:
1. THE MANHOLE BASE SHALL BE BEDDED ON 150mm (6") COARSE AGGREGATE. THE CONTRACTOR SHALL LEVEL AND PLUMB THE BASE PRIOR TO SETTING THE PRECAST MANHOLE RISER SECTIONS ON THE PRECAST CONCRETE BASE.
2. MANHOLE FOUNDATION SHALL MEET OR EXCEED STD. SPEC 506.5B.

CITY OF AUSTIN AUSTIN WATER UTILITY	PRECAST MANHOLE WITH DROP INLET ON PRECAST BASE	
RECORD COPY SIGNED BY KATHI L FLOWERS 08/31/2011	THE ARCHITECT/ENGINEER ASSUMES RESPONSIBILITY FOR APPROPRIATE USE OF THIS STANDARD.	STANDARD NO. 506S-8 1 OF 3

INVERT DETAIL

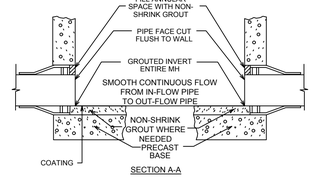

SECTION A-A

INVERT PLAN VIEW

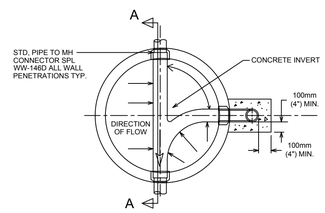

CITY OF AUSTIN AUSTIN WATER UTILITY	PRECAST MANHOLE WITH DROP INLET ON PRECAST BASE	
RECORD COPY SIGNED BY KATHI L FLOWERS 08/31/2011	THE ARCHITECT/ENGINEER ASSUMES RESPONSIBILITY FOR APPROPRIATE USE OF THIS STANDARD.	STANDARD NO. 506S-8 2 OF 3

STANDARD DROP CONNECTIONS
MINIMUM DIMENSIONS
(FOR INFORMATION ONLY)

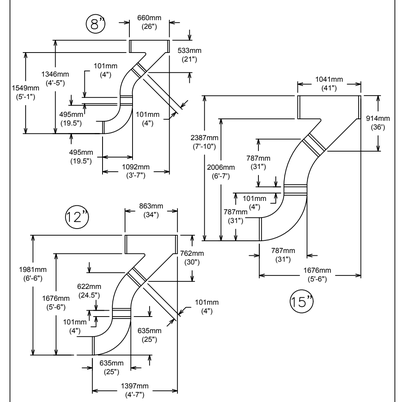

CITY OF AUSTIN AUSTIN WATER UTILITY	PRECAST MANHOLE WITH DROP INLET ON PRECAST BASE	
RECORD COPY SIGNED BY KATHI L FLOWERS 08/31/2011	THE ARCHITECT/ENGINEER ASSUMES RESPONSIBILITY FOR APPROPRIATE USE OF THIS STANDARD.	STANDARD NO. 506S-8 3 OF 3

1 PRECAST MANHOLE WITH DROP INLET ON PRECAST BASE
SCALE: N.T.S.

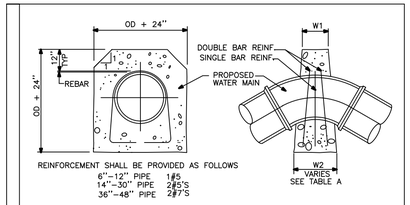

REINFORCEMENT SHALL BE PROVIDED AS FOLLOWS
6"–12" PIPE 1#5
14"–30" PIPE 2#5'S
36"–48" PIPE 2#7'S

VERTICAL DOWN BEND

TABLE A
UPWARD THRUST GRAVITY BLOCKS

PIPE DIA.	MIN. TOP WIDTH W1	ANGLE (degrees)	BOTTOM WIDTH* W2 (in)
6"	6"	0–5	NOTE 2
		5–15	24
		15–25	48
		► 25	NOTE 1
8"	6"	0–5	NOTE 2
		5–9	30
		9–15	36
		►15	NOTE 1
12"	6"	0–5	NOTE 2
		5–15	48
		► 15	NOTE 1
16"	12"	0–5	NOTE 2
		5–10	60
		10–15	96
		► 15	NOTE 1
24" THRU 36" DIA.		►5.0	NOTE 1
42" THRU 48" DIA.		►3.0	NOTE 1

NOTES:
1– FOR ANGLES GREATER THAN THOSE INDICATED RESTRAINED JOINTS SHALL BE INSTALLED
2– FOR JOINT DEFLECTIONS LESS THAN 5 DEGREES, NO HORIZONTAL OR VERTICAL THRUST RESTRAINT IS REQUIRED FOR PIPES LESS THAN 42" IN DIAMETER.

THRUST BLOCK DESIGN AS FOLLOWS
A. PRESSURE OF 150 P.S.I. (ACTUAL IF HIGHER) + 50 % SURGE ALLOWANCE
B. MAXIMUM SOIL BEARING SEE TABLE BELOW

SOIL TYPES	PRESSURE
LOOSE OR SPONGY SOIL	1500 Lb/Sq.Ft.
UNDISTURBED SOIL, CALICHE	2000 Lb/Sq.Ft.
LIMESTONE ROCK	4000 Lb/Sq.Ft.

REV. DATE: 2-27-97 DESCRIPTION: STANDARD MANUAL

CITY OF AUSTIN WATER AND WASTEWATER UTILITY	CONCRETE THRUST BLOCKING	
RECORD COPY SIGNED BY JAMES E. THOMPSON 2/11/86 APPROVED DATE	ADOPTED: 2/11/86 SCALE: N.T.S. INITIAL:	STANDARD NO. 510–6 1 OF 2

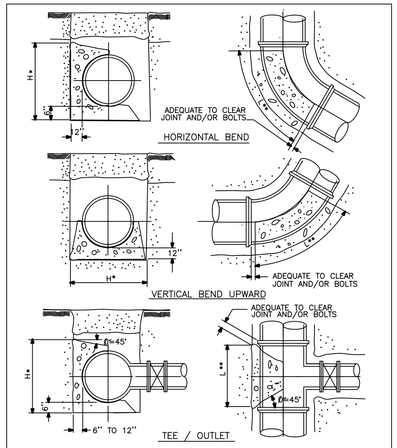

* THE DIMENSION FOR "H" MUST BE GREATER THAN DIAMETER OF THE PIPE
** LENGTH "L" ALONG THE BEND MUST BE GREATER THAN "H" AND LESS THAN 2 TIMES "H"

CITY OF AUSTIN WATER AND WASTEWATER UTILITY	CONCRETE THRUST BLOCKING	
RECORD COPY SIGNED BY JAMES E. THOMPSON 2/11/86 APPROVED DATE	ADOPTED: 2/11/86 SCALE: N.T.S. INITIAL:	STANDARD NO. 510–6 2 OF 2

2 THRUST BLOCKS
SCALE: N.T.S.

THRUST RESTRAINT	
FITTING	RESTRAINED LENTH (FT)
8" THRU TEE	10
8" BRANCH TEE	2
VALVES/DEAD ENDS	83
8" 45 DEG BEND	12
8" 90 DEG BEND	28
RESTRAINED LENTH IS EACH SIDE OF FITTING	

3 THRUST RESTRAINT
SCALE: N.T.S.

REV	DATE	BY	DESCRIPTION	APPROVED

VERIFY SCALES
0 1"
IF BAR DOES NOT MEASURE ONE INCH ON THIS SHEET, ADJUST ACCORDINGLY.

STATE OF TEXAS
SUSAN SMITH-TURRIETA
86839
LICENSED
PROFESSIONAL ENGINEER
6-28-2016

DRAWN BY: RR
DESIGNED BY: SST
REVIEWED BY: SST
PROJECT NO: SST# XXXXX

SMITH TURRIETA ENGINEERING
P.O. BOX 5902, AUSTIN, TEXAS 78763
TELEPHONE: (512) 569-9022
Texas Registration Number, F-16076

CITY OF AUSTIN, TEXAS
TAYLOR LANE 0.1 MGD WASTEWATER TREATMENT PLANT PROJECT

WATER AND WASTEWATER DETAILS

DWG. NO.
CZ-7

SHEET 36 OF 79

K:\ACAD\clients\STE\WWTP Ph2\C-ZD-DT110.dwg modified by roodrj on Apr 18, 16 4:57 PM

MANDREL SHALL BE CONSTRUCTED FROM METAL OR RIGID PLASTIC MATERIAL THAT CAN WITHSTAND 200 PSI WITHOUT BEING DEFORMED.

5% DEFLECTION
FOR O.D. CONTROLLED PVC PIPE
(ALL DIMENSIONS IN INCHES)

Pipe Size	Pipe Type	Base I.D.**	95% I.D.	R1	R2	L1	L2	T1	T2	Rod Diameter
6	ASTM D 3034 SDR 35	5.742	5.45	2.73	0.75	4.50	6	0.375	1.0	0.375
6	ASTM D 2241 SDR 26	5.977	5.68	2.84	0.75	4.50	6	0.375	1.0	0.375
8	ASTM D 3034 SDR 35	7.665	7.28	3.64	1.25	6.00	6	0.375	1.0	0.375
8	ASTM D 2241 SDR 26	7.763	7.37	3.69	1.25	6.00	6	0.375	1.0	0.375
10	ASTM D 3034 SDR 35	9.563	9.08	4.54	1.50	7.50	6	0.375	1.0	0.375
10	ASTM D 2241 SDR 26	9.712	9.23	4.61	1.50	7.50	6	0.375	1.0	0.375
12	ASTM D 3034 SDR 35	11.361	10.79	5.40	1.75	9.00	6	0.375	1.0	0.375
12	ASTM D 2241 SDR 26	11.545	10.97	5.48	1.75	9.00	6	0.375	1.0	0.375
15	ASTM D 3034 SDR 35	13.898	13.20	6.60	2.00	11.25	6	0.375	1.0	0.375
18	ASTM F 679 (T-1)	16.976	16.13	8.06	2.50	13.50	9	0.50	1.5	0.50
21	ASTM F 679 (T-1)	20.004	19.00	9.50	3.00	15.75	9	0.50	1.5	0.50
24	ASTM F 679 (T-1)	22.480	21.36	10.68	3.50	18.00	9	0.50	1.5	0.50
27	ASTM F 679 (T-1)	25.327	24.06	12.03	4.00	20.25	9	0.50	1.5	0.50

** Base I.D. = Average I.D. – Tolerance Package

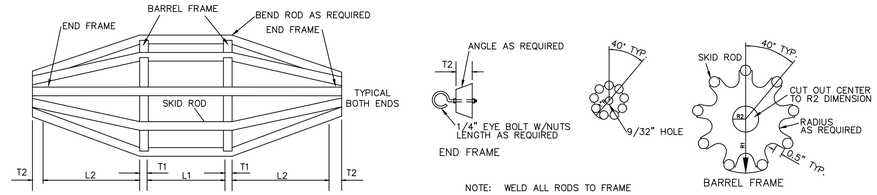

1 TYPICAL MANDREL DETAIL
SCALE: N.T.S.

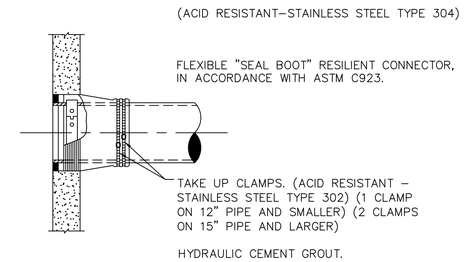

2 FLEXIBLE SEAL BOOT RESILIENT CONNECTOR DETAIL
SCALE: N.T.S.

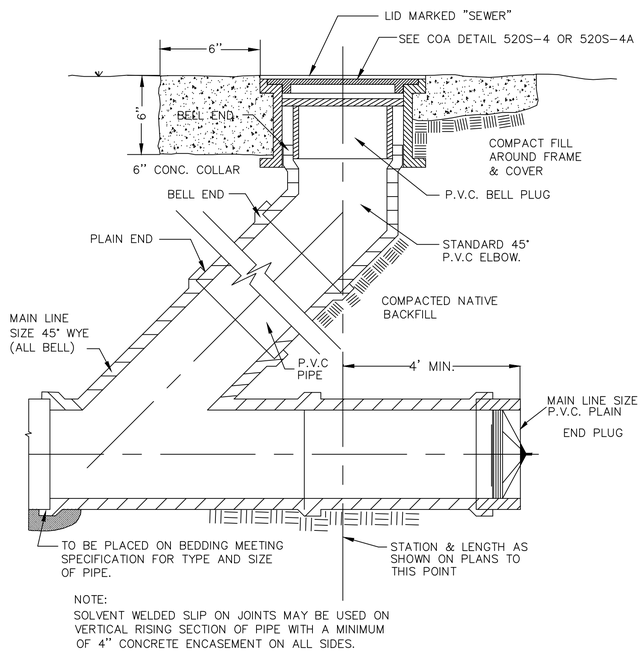

3 GRAVITY SEWER CLEANOUT DETAIL
SCALE: N.T.S.

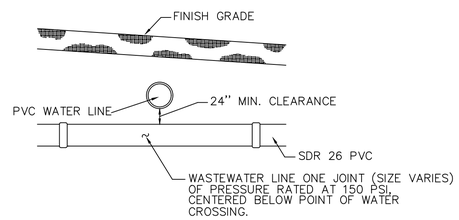

4 UTLITIY CROSSING DETAIL
SCALE: N.T.S.

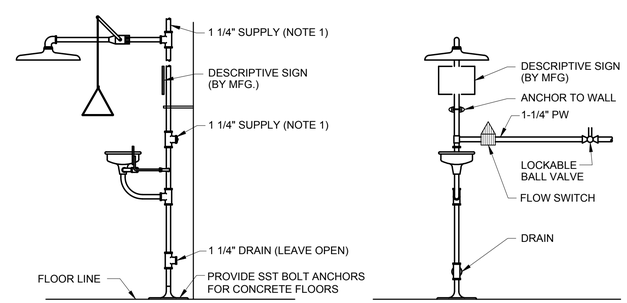

NOTE:

1. AT THE CONTRACTOR'S OPTION AND DEPENDING ON LOCATION OF WATER SUPPLY LOCATION, THE WATER SUPPLY CAN BE CONNECTED AT EITHER MANUFACTURER PROVIDED SUPPLY CONNECTION, TOP OR BOTTOM.

EMERGENCY SHOWER/EYEWASH
DETAIL A
NTS

REV	DATE	BY	DESCRIPTION	APPROVED

VERIFY SCALES
0 1"
IF BAR DOES NOT MEASURE ONE INCH ON THIS SHEET, ADJUST ACCORDINGLY.

STATE OF TEXAS
SUSAN SMITH-TURRIETA
86839
LICENSED
PROFESSIONAL ENGINEER
6-28-2016

DRAWN BY: RR
DESIGNED BY: SST
REVIEWED BY: SST
PROJECT NO: SST# XXXXX

SMITH TURRIETA ENGINEERING
P.O. BOX 5902, AUSTIN, TEXAS 78763
TELEPHONE: (512) 569-9022
Texas Registration Number, F-16076

CITY OF AUSTIN, TEXAS
TAYLOR LANE 0.1 MGD WASTEWATER TREATMENT PLANT PROJECT

WATER AND WASTEWATER DETAILS

DWG. NO. CZ-8

SHEET 37 OF 79

K:\ACAD\clients\STE\WWTP Ph2\C-ZD-DT111.dwg modified by roodrj on Apr 18, 16 4:57 PM

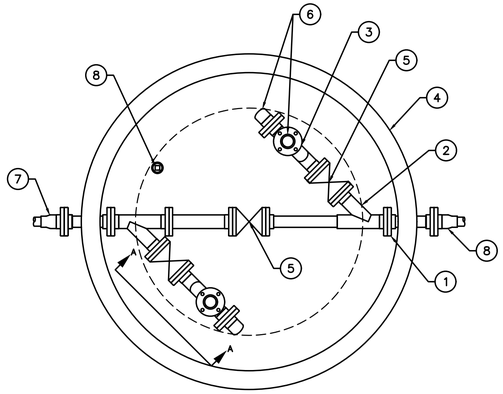

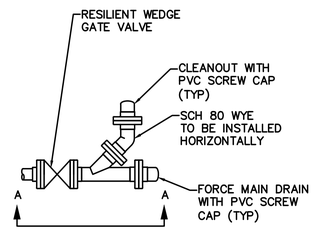

MATERIAL LIST:

1. SCH 80 PRESSURE LINE
2. WYE
3. WYE AND 45° BEND
4. STANDARD CITY OF AUSTIN WATER TIGHT RING AND 32" COVER
5. RESILIENT WEDGE GATE VALVE (MATCO–NORCA 10 RS MODEL ONLY)
6. PVC SCREW CAP
7. BUSHING OR REDUCER
8. PVC THREADED DRAIN PIPE AND PLUG (NORMALLY OPEN) LOCATED IN CLEAR AREA BELOW MANHOLE COVER

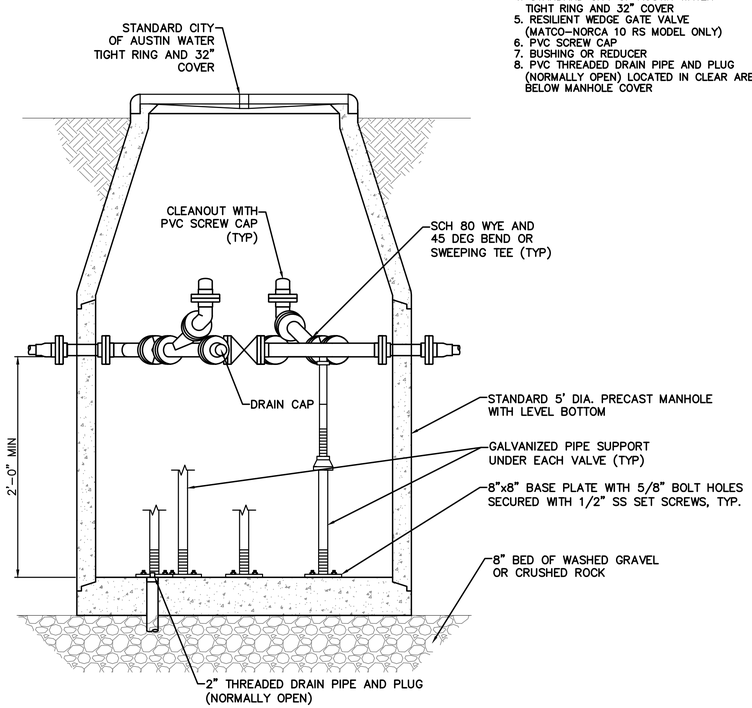

1 – TWO WAY CLEAN–OUT DETAIL
SCALE: N.T.S.

REV	DATE	BY	DESCRIPTION	APPROVED

VERIFY SCALES
0 1"
IF BAR DOES NOT MEASURE ONE INCH ON THIS SHEET, ADJUST ACCORDINGLY.

STATE OF TEXAS
SUSAN SMITH-TURRIETA
86839
LICENSED
PROFESSIONAL ENGINEER
6-28-2016

DRAWN BY: RR
DESIGNED BY: SST
REVIEWED BY: SST
PROJECT NO: SST# XXXXX

SMITH TURRIETA ENGINEERING
P.O. BOX 5902, AUSTIN, TEXAS 78763
TELEPHONE: (512) 569-9022
Texas Registration Number, F-16076

CITY OF AUSTIN, TEXAS
TAYLOR LANE 0.1 MGD WASTEWATER TREATMENT PLANT PROJECT

WATER AND WASTEWATER DETAILS

DWG. NO. CZ-9

K:\ACAD\clients\STE\WWTP Ph2\C-ZD-DT112.dwg modified by roodrj on Jun 21, 16 3:14 PM

PIPING SYMBOLS

PIPE LINE SYMBOL	SINGLE LINE SYMBOL	DESCRIPTION
		WELDED JOINT
		BLIND FLANGE
		FLANGED JOINT COMPLEX REPRESENTATION
		MECHANICAL JOINT COMPLEX REPRESENTATION
		PUSH ON JOINT OR CAULKED BELL & SPIGOT JOINT COMPLEX REPRESENTATION
		DIRECTION OF FLOW

VALVE SYMBOLS (ABBREVIATIONS)

SYMBOL	DESCRIPTION
	CAP OR PLUG
	FLOW METER (FM)
	GATE VALVE (GV)
	KNIFE GATE VALVE
	GLOBE VALVE
	BALL VALVE (BV)
	3-WAY BALL VALVE
	PINCH VALVE
	DIAPHRAGM VALVE
	BUTTERFLY VALVE (BFV)
	PLUG VALVE
	CHECK VALVE
	BALL CHECK VALVE (BCV)
	DOUBLE DOOR CHECK VALVE
	SOLENOID VALVE
	3-WAY SOLENOID VALVE
	MOTOR OPERATED VALVE
	FLAP VALVE
	MUD VALVE
	FLOOR DRAIN
	EQUIPMENT DRAIN
	ECCENTRIC REDUCER OR REDUCING BUSHING
	CONCENTRIC REDUCER OR REDUCING BUSHING
	Y-STRAINER
	YARD HOSE STATION
	CALIBRATION CYLINDER
	AIR RELEASE VALVE (ARV)
	CONCENTRIC REDUCER OR REDUCING BUSHING
	DOWN
	UP
	DROP OR RISE
	PRESSURE RELIEF VALVE (PRV)
	PRESSURE SUSTAINING
	FIRE HYDRANT
	YARD HYDRANT
CO	CLEAN OUT
CO2	TWO WAY CLEAN OUT

PIPE MATERIAL

CM	CORRUGATED METAL
CS	CARBON STEEL
CU	COPPER
DI	DUCTILE IRON
FRP	FIBER REINFORCED PLASTIC
GS	GALVANIZED CARBON STEEL
PCCP	PRESTRESSED CYLINDER
PVC	POLYVINYL CHLORIDE
RCP	REINFORCED CONCRETE
RCCP	REINFORCED CONCRETE CYLINDER
SS	STAINLESS STEEL
STL	STEEL
TFL	TEFLON TUBING
HDPE	HIGH-DENSITY POLYETHYLENE

PROCESS FLUID ABBREVIATIONS

AL	ALUM
DCT	SLUDGE DECANT
DE	DISINFECTION EFFLUENT
DR	DRAIN
FBW	FILTER BACKWASH
FE	FILTER EFFLUENT
FM	FORCE MAIN
INF	INFLUENT
ML	MIXED LIQUID
NPW	NON-POTABLE WATER
NPWS	NON-POTABLE WATER SUPPLY
PLE	PLANT EFFLUENT
POL	POLYMER
PW	POTABLE WATER
RAS	RETURN ACTIVATED SLUDGE
S	SCREENINGS
SA	SODA ASH
SC	SCUM DRAIN
SE	SECONDARY EFFLUENT
NaClO	SODIUM HYPOCHLORITE
SL	SLUDGE
SPL	SAMPLE LINE
TS	THICKENED SLUDGE
WAS	WASTE ACTIVATED SLUDGE
WW	WASTEWATER

GATE SYMBOLS

PLAN	FEATURE
	SLUICE GATE (SG)
	SLIDE GATE (SLG)
	STOP PLATE (SP)

VALVE TAG

NOTE: ONLY NEW VALVES 4" OR LARGER WILL BE TAGGED.

16"-PTW-GV

- ABBREVIATIONS INDICATING TYPE OF VALUE, i.e. GATE
- PROCESS FLUID ABBREVIATION
- VALVE SIZE

PIPE TAG

2" PTW-PVC

- NOMINAL PIPE SIZE
- PIPE MATERIAL SEE ABBREVIATION
- PROCESS FLUID ABBREVIATION SEE ABBREVIATION

REV	DATE	BY	DESCRIPTION	APPROVED

VERIFY SCALES

0 1"

IF BAR DOES NOT MEASURE ONE INCH ON THIS SHEET, ADJUST ACCORDINGLY.

STATE OF TEXAS
SUSAN SMITH-TURRIETA
86839
LICENSED
PROFESSIONAL ENGINEER
6-28-2016

DRAWN BY: RR
DESIGNED BY: SST
REVIEWED BY: SST
PROJECT NO: SST# XXXXX

SMITH TURRIETA ENGINEERING
P.O. BOX 5902, AUSTIN, TEXAS 78763
TELEPHONE: (512) 569-9022
Texas Registration Number, F-16076

CITY OF AUSTIN, TEXAS
TAYLOR LANE 0.1 MGD WASTEWATER TREATMENT PLANT PROJECT

MECHANICAL LEGEND

DWG. NO. MA-1

K:\ACAD\clients\STE\WWTP Ph2\M-SY-GL101.dwg modified by roodrj on Jun 12, 16 11:26 AM

PIPING SCHEDULE

PROCESS FLOW STREAM	SERVICE	MATERIAL	CLASS	TYPE OF JOINT	COMMENTS
AL	LIQUID ALUM				
	CARRIER	TFL			FLUOROPOLYMER TEFLON TUBING (PTFE) USE LONG SWEEPING ELBOWS/BENDS
	CONDUIT	PVC	SCH 40	SW	
NaClO	SODIUM HYPOCHLORITE SOLUTION				
	CARRIER	TFL			FLUOROPOLYMER TEFLON TUBING (PTFE) USE LONG SWEEPING ELBOWS/BENDS
	CONDUIT	PVC	SCH 40	SW	
DCT	SLUDGE DECANT:				
	WALL PENETRATION	DI	PC 350	WR/PE/MJ	
	ABOVE GROUND	DI	TC 53	FL	
	UNDER GROUND	DI	PC 150	PO/MJ	
DE	DISINFECTION EFFLUENT				
	WALL PENETRATION	DI	PC 350	WR/PE/MJ	
	ABOVE GROUND	DI	TC 53	FL	
	UNDER GROUND	DI	PC 150	PO/MJ	
DR	DRAIN:				
	UNDER (FUTURE) STRUCTURES	DI	PC 150	PO/MJ	
	INSIDE BUILDINGS	PVC	SDR 26	PO	
	UNDER GROUND	PVC	SDR 26	PO	
FBW	FILTER BACKWASH				
	UNDER GROUND	DI	TC 53	FL	
	ABOVE GROUND	PVC	SDR 26	PO	
FE	FILTER EFFLUENT				
	WALL PENETRATION	DI	PC 350	WR/PE/MJ	
	ABOVE GROUND	DI	TC 53	FL	
	UNDER GROUND	DI	PC 150	PO/MJ	
FM	FORCE MAIN				
	ABOVE GROUND	DI	TC 53	FL/PE	
	UNDER GROUND	DI	PC 350	PO/MJ	
NPW / NPWS	NONPOTABLE WATER:				NOTE 6
	ABOVE GROUND (4")	DI	TC 53	FL	
	ABOVE GROUND (LESS THAN 4")	GS	SCH 40	TJ	
	UNDER GROUND (4")	PVC C900	DR 18	PO/MJ	USE DI MJ FITTINGS
	UNDER GROUND (LESS THAN 4")	PVC	SCH 80	SW	

PIPING SCHEDULE

PROCESS FLOW STREAM	SERVICE	MATERIAL	CLASS	TYPE OF JOINT	COMMENTS
PLE	PLANT EFFLUENT				
	WALL PENETRATION/ABOVE GROUND	DI	PC 350	WR/PE/MJ	DI MJ COUPLER AT DI/PVC TRANSITION
	UNDER GROUND	PVC	SDR 26	PO	
PW	POTABLE WATER				NOTE 6
	UNDER GROUND (10")	PVC C900	DR 14	PO/MJ	USE DI MJ FITTINGS
	UNDER GROUND (8")	PVC C900	DR 14	PO/MJ	USE DI MJ FITTINGS
	UNDER GROUND (2")	PVC	SDR 21	PO/TJ	IPS FITTINGS
SC	SCUM				
	UNDER (FUTURE) STRUCTURES	DI	PC 350	PO/MJ	
	UNDER GROUND	PVC	SDR 26	PO	

YARD PIPING VALVE, HYDRANT AND CO SCHEDULE

AREA	EQUIPMENT	SIZE	OPERATOR	QTY
PW	GV	2"	STEM W/NUT	10
PW	GV	8"	STEM W/NUT	2
PW	FH	N/A	DETAIL 511S-17	1
PW	HOSE BIB	N/A	DETAIL 7 SHT CZ-2	2
NPW	YARD HYDRANT	N/A	DETAIL 6 SHT CZ-2	6
NPW	GV	4"	STEM W/NUT	14
FM	2 WAY CO	6"	DETAIL 1 SHT CZ-9	4
DR	GV	6"	STEM W/NUT	6
DR	GV	4"	STEM W/NUT	2
DR	CO	6"	DETAIL 3 SHT CZ-8	10
FE	GV	18"	STEM W/NUT	4
CCB	FTV	4"	N/A	2
DCT	GV	3"	HANDWHEEL	1
DCT	INSTANT LOCK ADAPTOR	3"	DETAIL 1, SHT. MZ-2	1

NOTES: SCHEDULE IS FOR YARD PIPING ONLY. VALVES REQUIRED FOR WWTP, CHEM FEED, AND NPW SYSTEMS ARE NOT INCLUDED IN SCHEDULE

NOTES:

1. REFER TO PIPE SPECIFICATIONS FOR MORE INFORMATION
2. PIPING TO BE AS SHOWN IN SCHEDULE, UNLESS OTHERWISE NOTED ON SPECIFIED DRAWINGS. CONTRACTOR SHALL NOTIFY ENGINEER/OWNER WHEN DISCREPANCIES ARE FOUND.
3. TRANSITIONS BETWEEN PIPING MATERIALS ARE CONTRACTOR'S RESPONSIBILITY AND ARE TO BE ABLE TO WITHSTAND OPERATING AND TEST PRESSURES. NO CONCRETE FILL JOINTS.
4. TEST IN ACCORDANCE WITH TESTING SPECIFICATIONS IN PROJECT MANUAL.
5. CONTRACTOR IS RESPONSIBLE FOR INSTALLING ALL PIPING NECESSARY FOR A COMPLETE OPERATING FACILITY WHETHER OR NOT SUCH PIPING IS INCLUDED IN THE SCHEDULE.
6. ALL EXPOSED POTABLE WATER AND NONPOTABLE WATER LINES SHALL BE INSULATED.

LEGEND

PC	PRESSURE CLASS
TC	THICKNESS CLASS
SDR	STANDARD DIAMETER RATIO
SCH	SCHEDULE
SW	SOLVENT WELD
WR	WALL RING
PE	PLAIN END
MJ	MECHANICAL JOINT
FL	FLANGE JOINT
PO	PUSH-ON JOINT
TJ	THREADED JOINT

REV	DATE	BY	DESCRIPTION	APPROVED

VERIFY SCALES

0 1"

IF BAR DOES NOT MEASURE ONE INCH ON THIS SHEET, ADJUST ACCORDINGLY.

STATE OF TEXAS
SUSAN SMITH-TURRIETA
86839
LICENSED
PROFESSIONAL ENGINEER
6-28-2016

DRAWN BY: RR
DESIGNED BY: SST
REVIEWED BY: SST
PROJECT NO: SST# XXXXX

SMITH TURRIETA ENGINEERING
P.O. BOX 5902, AUSTIN, TEXAS 78763
TELEPHONE: (512) 569-9022
Texas Registration Number, F-16076

CITY OF AUSTIN, TEXAS
TAYLOR LANE 0.1 MGD WASTEWATER TREATMENT PLANT PROJECT

PIPE AND VALVE SCHEDULE

DWG. NO. MA-2

SHEET 40 OF 79

K:\ACAD\clients\STE\WWTP Ph2\M-YP-Sh101.dwg modified by roodrj on Jun 12, 16 11:29 AM

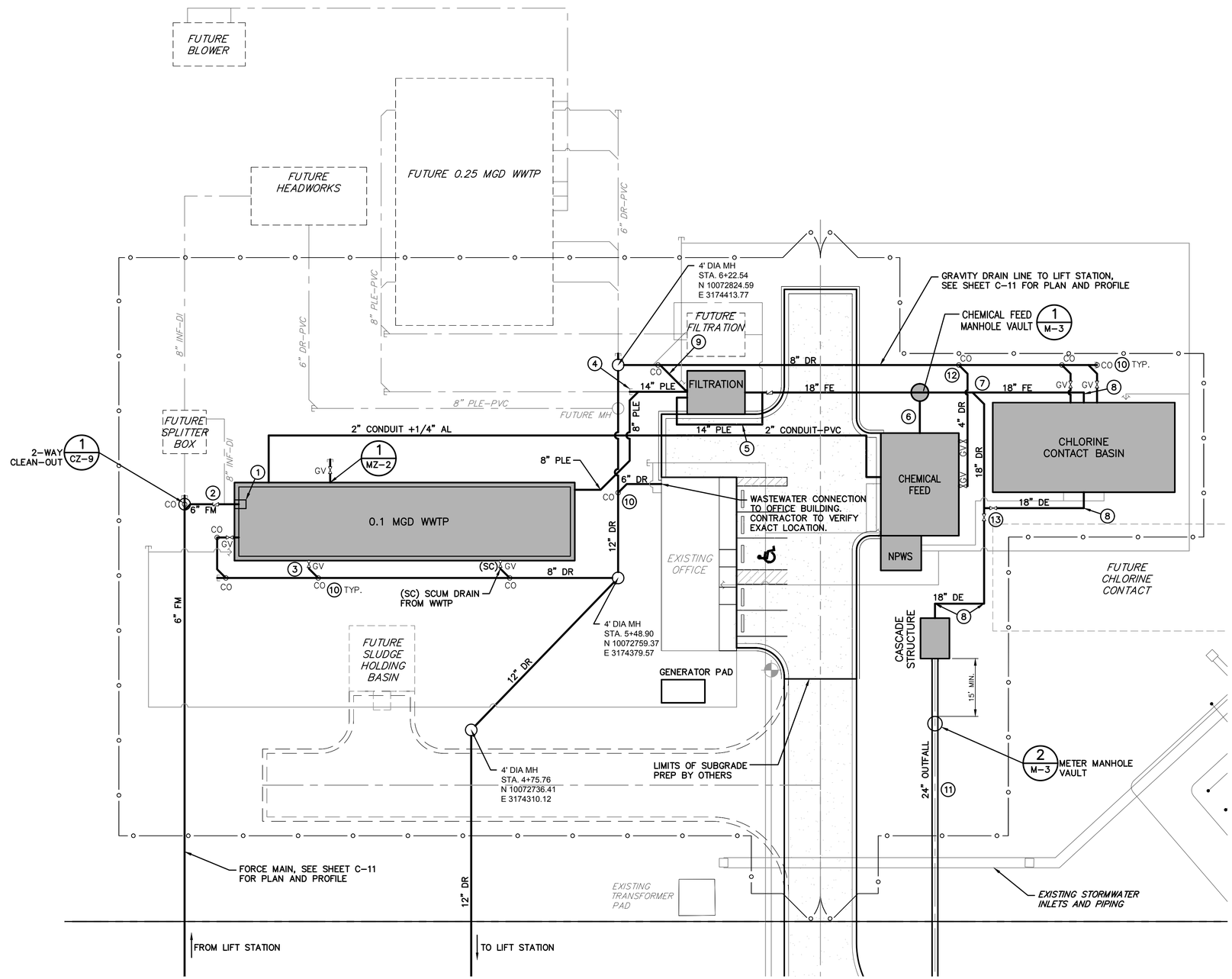

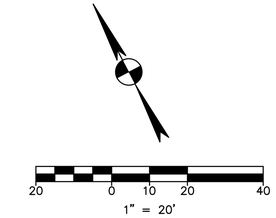

NOTES:

1. ALL YARD VALVES SHALL HAVE VALVE BOXES WITH CONCRETE PADS PER DETAIL 2 ON SHEET CZ-6.
2. THRUST BLOCKING AT ALL LOCATIONS AS DEFINED IN DETAIL 2 ON SHEET CZ-7.
3. CONTRACTOR SHALL VERIFY EXACT LOCATION AND FITTINGS REQUIRED TO TIE INTO YARD PIPING WITH EQUIPMENT MANUFACTURES.
4. ALL BENDS SHALL BE LONG RADIUS.
5. SEE SHEET C-13 FOR POTABLE WATER AND NON-POTABLE WATER PIPING.

1. WWTP TO BE FITTED WITH AN AUTOMATIC SCREEN SYSTEM
2. 8"x6" ECCENTRIC REDUCER
   (2)-8" 90° BENDS
3. WWTP SHALL HAVE DRAINAGE LINE FROM EACH CHAMBER.
4. 14"x8" WYE
   (2)-8" 90° BENDS
5. 14" PLE (FILTER BYPASS)
   (4)-90° BENDS
   (1)-14"x14" TEE
   (1)-18"x14" ECCENTRIC REDUCER
6. 2" CONDUIT 1/2" NaClO
7. (1)-18"x18" WYE
   (1)-18" 45° BEND
   (2)-18" GV
8. (1)-18" 90° BEND
9. 6" FBW (FILTER BACKWASH)
   (1)-45° BEND
   (2)-90° BEND
   (1)-8"x6" WYE
10. (1)-6" 45° BEND
    (1)-8"x6" WYE
    (1)-6" GV
11. 24" OUTFALL, SEE SHEET C-10 FOR PLAN AND PROFILE
12. (1)-4" 45° BEND
    (1)-8"x4" WYE
13. (1)-18"x18" TEE
    (2)-18" GV

REV	DATE	BY	DESCRIPTION	APPROVED

VERIFY SCALES
0 1"
IF BAR DOES NOT MEASURE ONE INCH ON THIS SHEET, ADJUST ACCORDINGLY.

STATE OF TEXAS
SUSAN SMITH-TURRIETA
86839
LICENSED
PROFESSIONAL ENGINEER
8-1-2016

DRAWN BY: RR
DESIGNED BY: SST
REVIEWED BY: SST
PROJECT NO: SST# XXXXX

SMITH TURRIETA ENGINEERING
P.O. BOX 5902, AUSTIN, TEXAS 78763
TELEPHONE: (512) 569-9022
Texas Registration Number, F-16076

CITY OF AUSTIN, TEXAS
TAYLOR LANE 0.1 MGD WASTEWATER TREATMENT PLANT PROJECT

WWTP SITE PLAN - YARD PIPING

DWG. NO. M-1A

K:\ACAD\clients\STE\WWTP Ph2\C-ST-PL115.dwg modified by roodrj on Jul 7, 16 2:28 PM

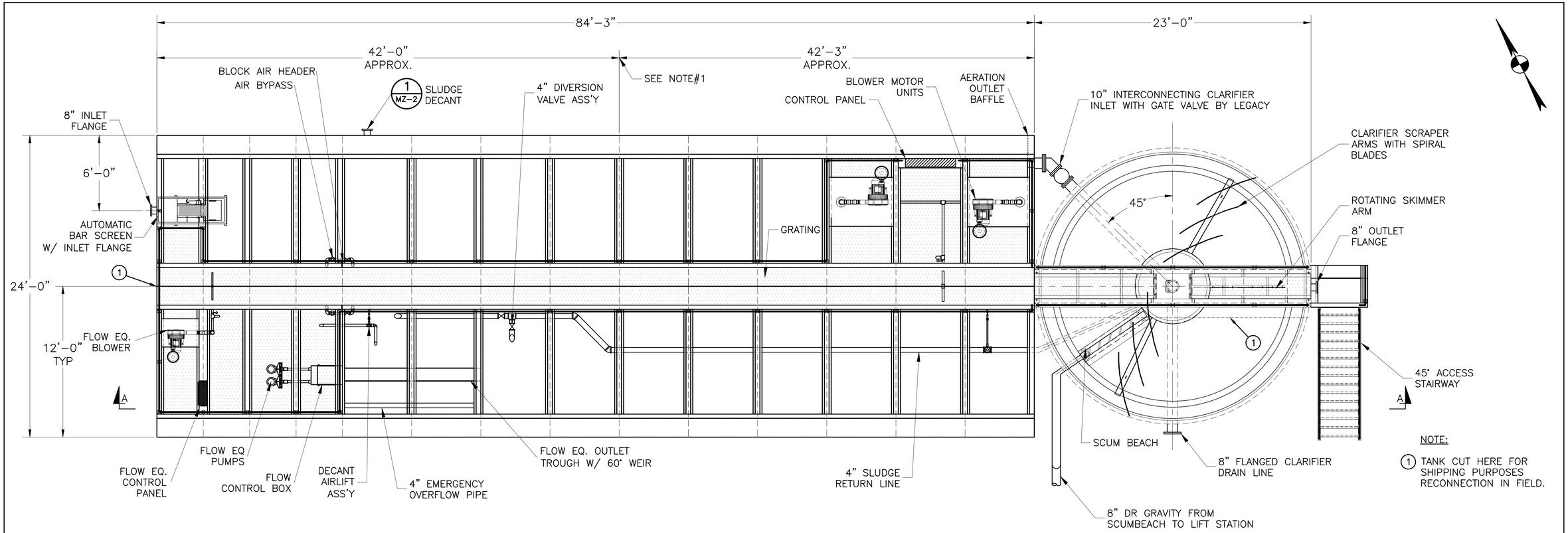

PLAN

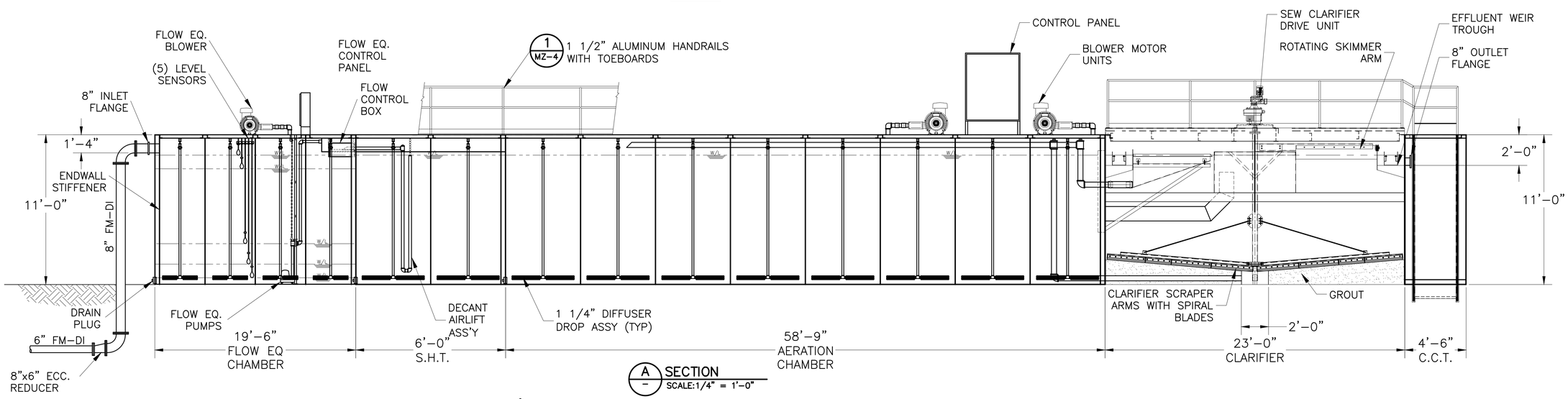

A SECTION
SCALE:1/4" = 1'-0"

REV	DATE	BY	DESCRIPTION	APPROVED

VERIFY SCALES
0 1"
IF BAR DOES NOT MEASURE ONE INCH ON THIS SHEET, ADJUST ACCORDINGLY.

STATE OF TEXAS
SUSAN SMITH-TURRIETA
86839
LICENSED PROFESSIONAL ENGINEER
8-1-2016

DRAWN BY: RR
DESIGNED BY: SST
REVIEWED BY: SST
PROJECT NO: SST# XXXXX

SMITH TURRIETA ENGINEERING
P.O. BOX 5902, AUSTIN, TEXAS 78763
TELEPHONE: (512) 569-9022
Texas Registration Number, F-16076

CITY OF AUSTIN, TEXAS
TAYLOR LANE 0.1 MGD WASTEWATER TREATMENT PLANT PROJECT

0.1 MGD WWTP PLAN AND SECTIONS

DWG. NO. M-1

SHEET 42 OF 79

K:\ACAD\clients\STE\WWTP Ph2\M-WWTP.dwg modified by roodrj on Aug 1, 16 9:14 AM

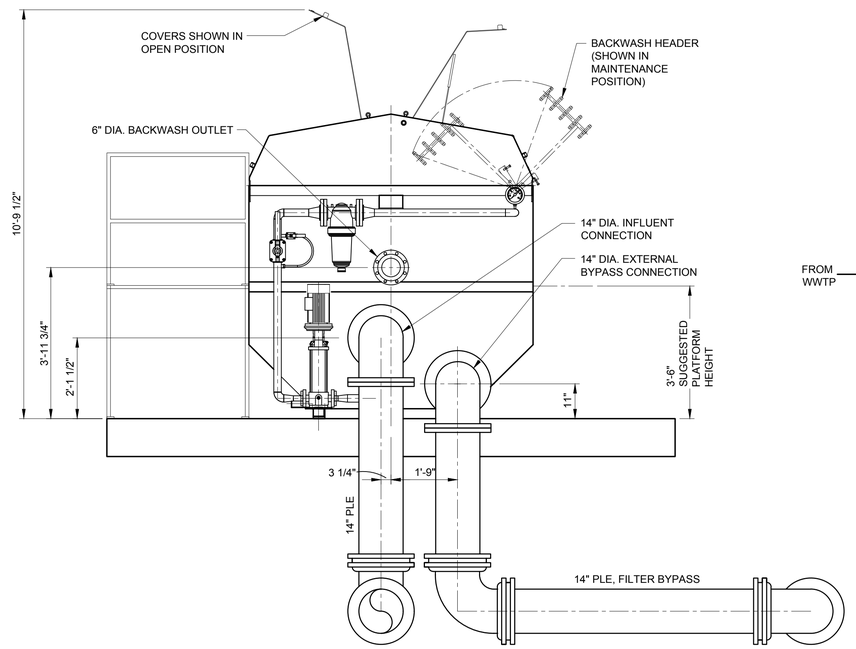

INFLUENT SIDE VIEW
RH BACKWASH (STD)

A SECTION
SCALE:1/2" = 1'-0"

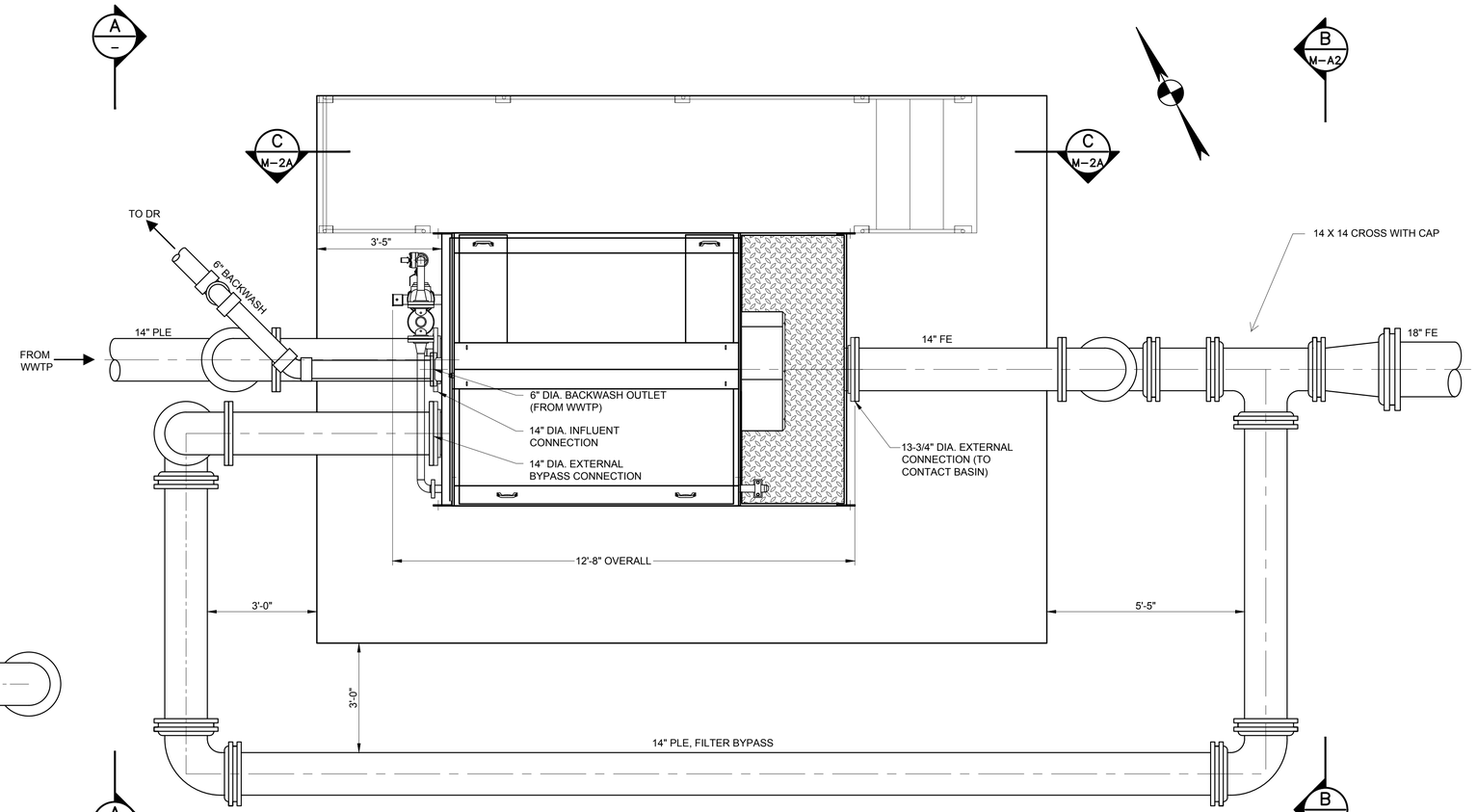

PLAN
SCALE: 1/2" = 1'-0"

REV	DATE	BY	DESCRIPTION	APPROVED

VERIFY SCALES
0 1"
IF BAR DOES NOT MEASURE ONE INCH ON THIS SHEET, ADJUST ACCORDINGLY.

STATE OF TEXAS
SUSAN SMITH-TURRIETA
86839
LICENSED
PROFESSIONAL ENGINEER
6-28-2016

DRAWN BY: RR
DESIGNED BY: SST
REVIEWED BY: SST
PROJECT NO: SST# XXXXX

SMITH TURRIETA ENGINEERING
P.O. BOX 5902, AUSTIN, TEXAS 78763
TELEPHONE: (512) 569-9022
Texas Registration Number, F-16076

CITY OF AUSTIN, TEXAS
TAYLOR LANE 0.1 MGD WASTEWATER TREATMENT PLANT PROJECT

FILTRATION SYSTEM PLAN AND SECTION

DWG. NO.
M-2

SHEET 43 OF 79

K:\ACAD\clients\STE\WWTP Ph2\M-FI-PLSC-101.dwg modified by roodrj on Apr 20, 16 10:29 AM

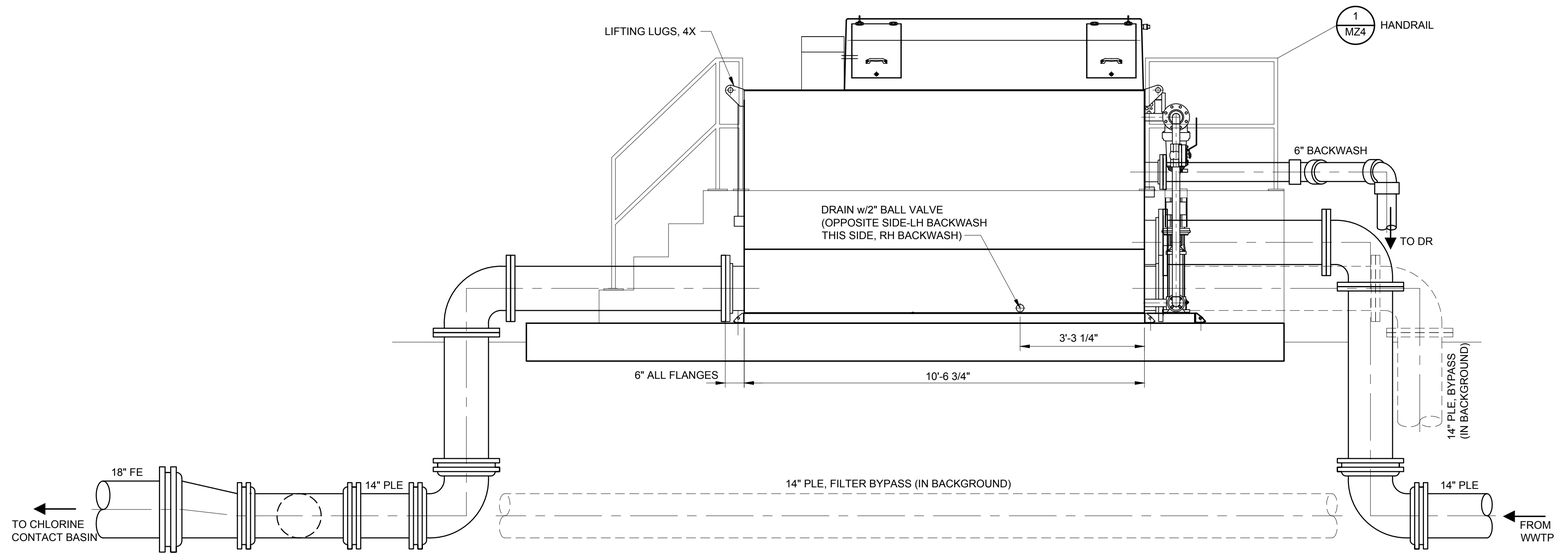

C / M-2 SECTION
SCALE: 1/2" = 1'-0"

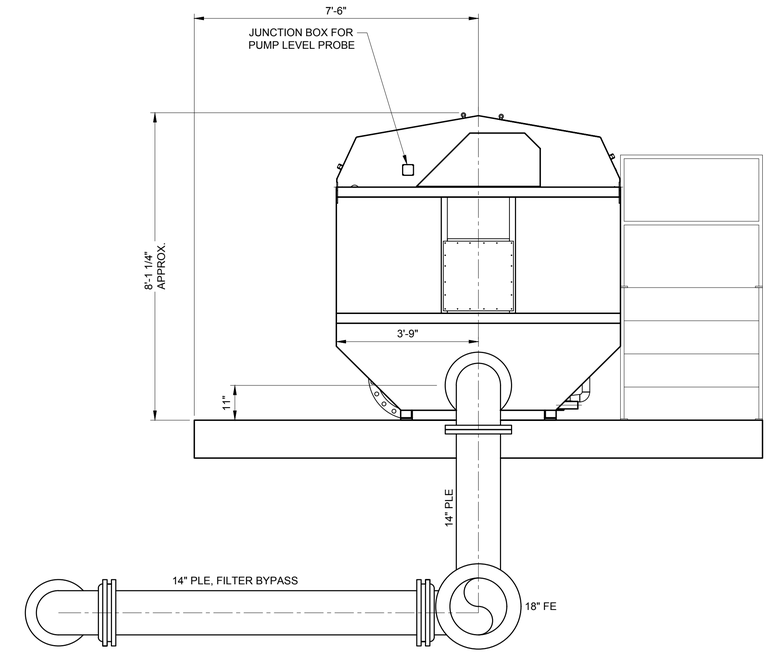

EFFLUENT SIDE VIEW

B / – SECTION
SCALE: 1/2" = 1'-0"

REV	DATE	BY	DESCRIPTION	APPROVED

VERIFY SCALES
0 1"
IF BAR DOES NOT MEASURE ONE INCH ON THIS SHEET, ADJUST ACCORDINGLY.

STATE OF TEXAS
SUSAN SMITH-TURRIETA
86839
LICENSED
PROFESSIONAL ENGINEER
6-28-2016

DRAWN BY: RR
DESIGNED BY: SST
REVIEWED BY: SST
PROJECT NO: SST# XXXXX

SMITH TURRIETA ENGINEERING
P.O. BOX 5902, AUSTIN, TEXAS 78763
TELEPHONE: (512) 569-9022
Texas Registration Number, F-16076

CITY OF AUSTIN, TEXAS
TAYLOR LANE 0.1 MGD WASTEWATER
TREATMENT PLANT PROJECT

FILTRATION SYSTEM SECTIONS

DWG. NO.
M-2A

K:\ACAD\clients\STE\WWTP Ph2\M-FI-PLSC-101.dwg modified by roodrj on Apr 20, 16 10:29 AM

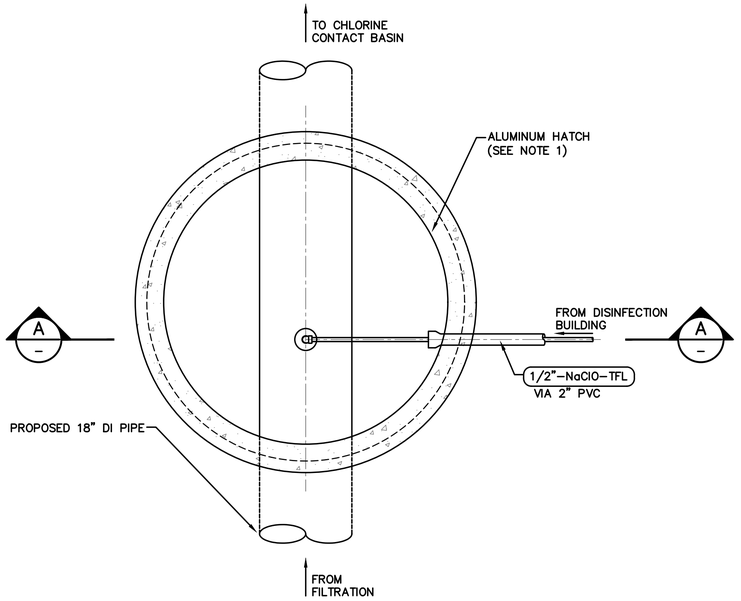

1 CHEMICAL MANHOLE VAULT PLAN
SCALE: 3/4" = 1'-0"

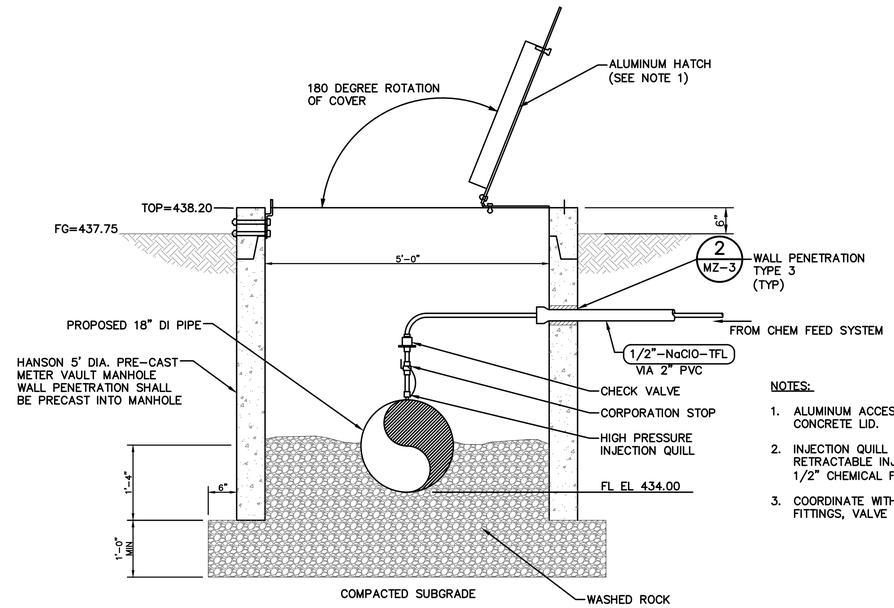

NOTES:

1. ALUMINUM ACCESS HATCH IN REINFORCED CONCRETE LID.
2. INJECTION QUILL TO BE SAT-T-FLOW RETRACTABLE INJECTOR MODEL EB-146 FOR 1/2" CHEMICAL FEED LINE OR APPROVED EQUAL.
3. COORDINATE WITH AWU AND MANUFACTURER ON FITTINGS, VALVE MATERIAL AND ASSEMBLY.

A SECTION
SCALE: 3/4" = 1'-0"

NOTE: THE CONE TOP IS NOT SHOWN THIS VIEW FOR CLARITY

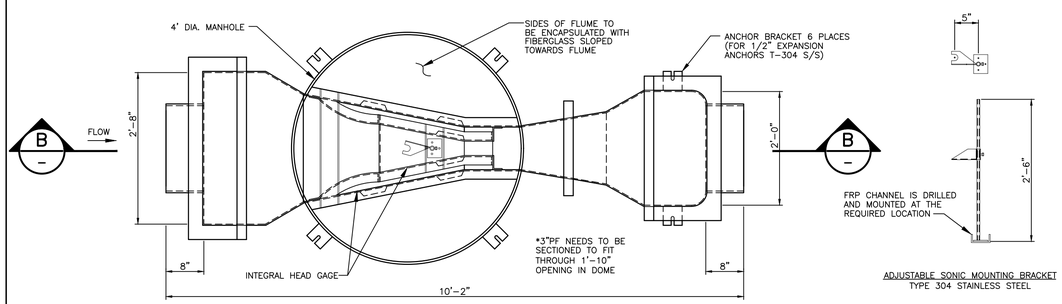

NOTES:

1. MATERIAL IS FRP (FIBERGLASS REINFORCED POLYESTER).
2. NEOPRENE BOOTS ARE SECURED WITH STAINLESS STEEL BANDS.
3. THE MINIMUM MANHOLE BARREL THICKNESS IS 1/2" FRP.

2 PARSHALL FLUME
SCALE: 3/4" = 1'-0"

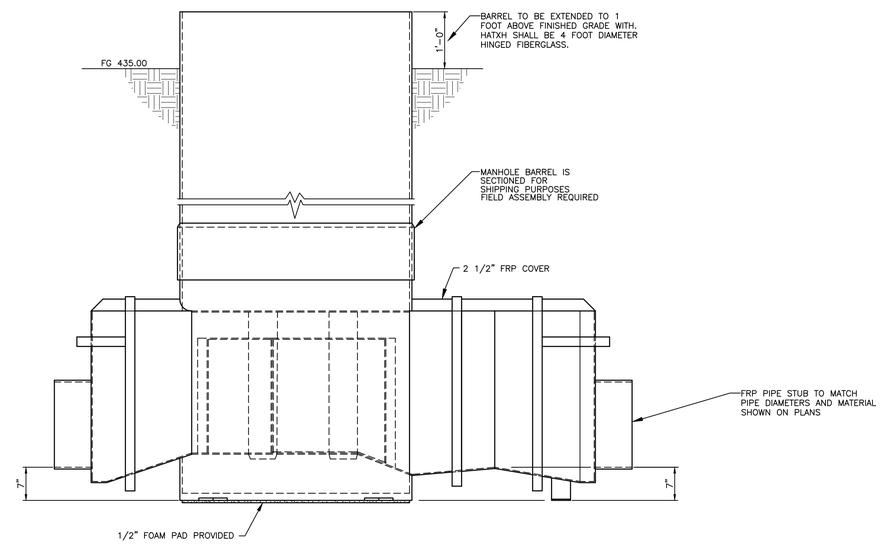

B SECTION
SCALE: 3/4" = 1'-0"

REV	DATE	BY	DESCRIPTION	APPROVED

VERIFY SCALES
0 1"
IF BAR DOES NOT MEASURE ONE INCH ON THIS SHEET, ADJUST ACCORDINGLY.

STATE OF TEXAS
SUSAN SMITH-TURRIETA
86839
LICENSED
PROFESSIONAL ENGINEER
8-1-2016

DRAWN BY: RR
DESIGNED BY: SST
REVIEWED BY: SST
PROJECT NO: SST# XXXXX

SMITH TURRIETA ENGINEERING
P.O. BOX 5902, AUSTIN, TEXAS 78763
TELEPHONE: (512) 569-9022
Texas Registration Number, F-16076

CITY OF AUSTIN, TEXAS
TAYLOR LANE 0.1 MGD WASTEWATER TREATMENT PLANT PROJECT

CHEMICAL MANHOLE VAULT

DWG. NO.
M-3

K:\ACAD\clients\STE\WWTP Ph2\M-CM-PL101.dwg modified by roodrj on Aug 1, 16 9:32 AM

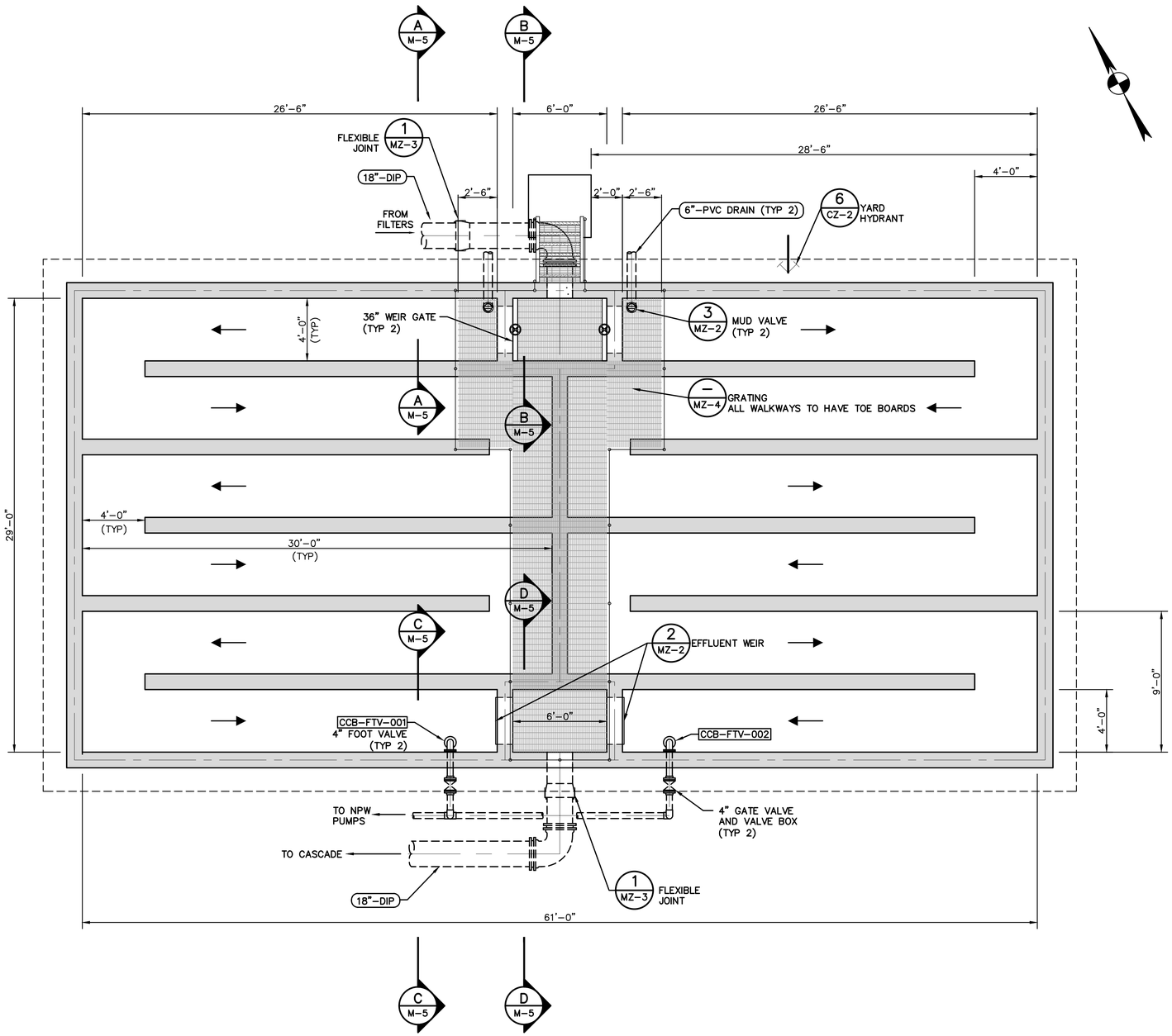

PLAN

SCALE: 1/4"=1'-0"

GATE SCHEDULE										
TAG NUMBER			SIZE		DIRECTION TO OPEN	SERVICE	MOUNTING TYPE	OPERATOR / STEM	HEAD (FEET)	
AREA CODE	EQUIPMENT CODE	UNIT CODE	WIDTH (in)	HEIGHT (in)					SEATING MAX	UNSEATING MAX
CCB	WG	001	36	36	DOWN	CHLORINE CONTACT	CWM	HW	2	3
CCB	WG	002	36	36	DOWN	CHLORINE CONTACT	CWM	HW	2	3

LEGEND

EQUIPMENT

CWM CONCRETE WALL MOUNTED

HW HANDWHEEL

SG SLUICE GATE

WG WEIR GATE

PROCESS AREA

CCB CHLORINE CONTACT BASIN

HW HEADWORKS

REV	DATE	BY	DESCRIPTION	APPROVED

VERIFY SCALES

0 1"

IF BAR DOES NOT MEASURE ONE INCH ON THIS SHEET, ADJUST ACCORDINGLY.

STATE OF TEXAS
SUSAN SMITH-TURRIETA
86839
LICENSED
PROFESSIONAL ENGINEER
8-1-2016

DRAWN BY: RR

DESIGNED BY: SST

REVIEWED BY: SST

PROJECT NO: SST# XXXXX

SMITH TURRIETA ENGINEERING
P.O. BOX 5902, AUSTIN, TEXAS 78763
TELEPHONE: (512) 569-9022
Texas Registration Number, F-16076

CITY OF AUSTIN, TEXAS
TAYLOR LANE 0.1 MGD WASTEWATER TREATMENT PLANT PROJECT

CHLORINE CONTACT BASIN PLAN

DWG. NO. M-4

K:\ACAD\clients\STE\WWTP Ph2\M-CB-PL101.dwg modified by roodrj on Aug 1, 16 9:46 AM

NOTES:

1. WEIR GATES SHALL BE DOWNWARD OPENING AND SHALL OPERATE BETWEEN 438.50 AND 440.25.

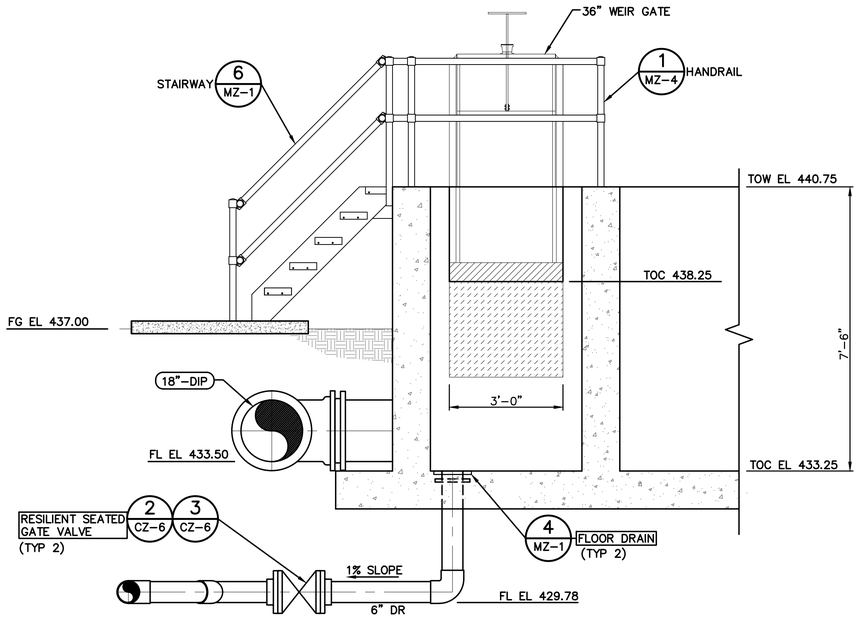

A M-4 SECTION
SCALE:1/2"=1'-0"

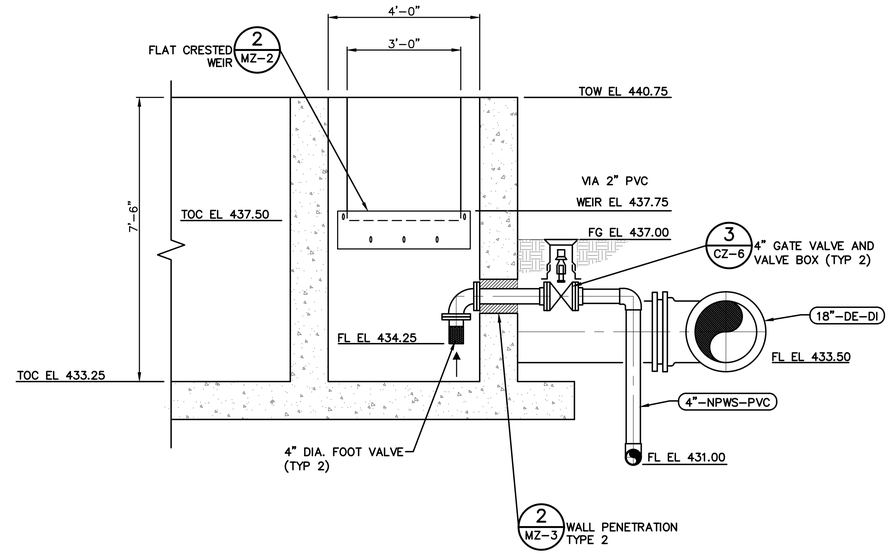

C M-4 SECTION
SCALE:1/2"=1'-0"

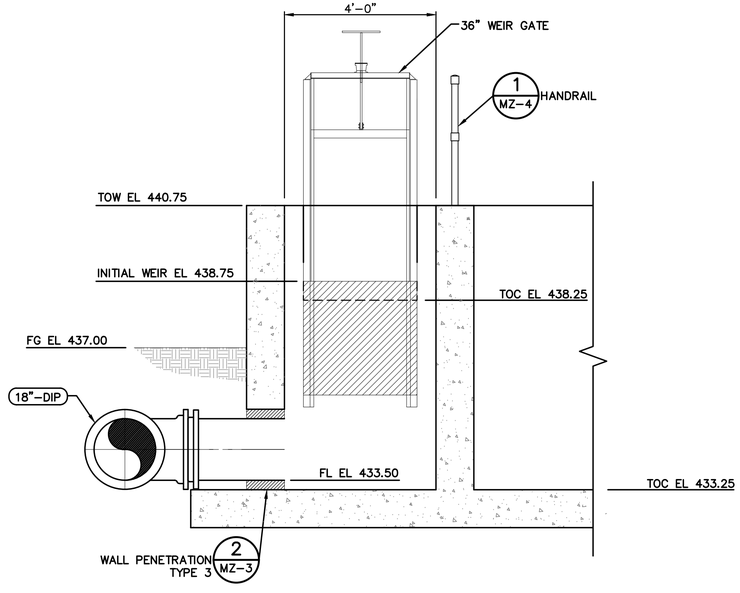

B M-4 SECTION
SCALE:1/2"=1'-0"

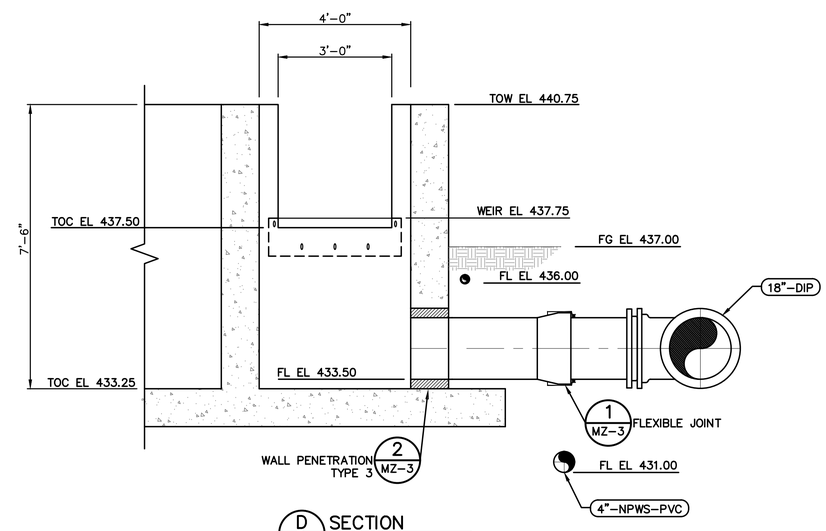

D M-4 SECTION
SCALE:1/2"=1'-0"

REV	DATE	BY	DESCRIPTION	APPROVED

VERIFY SCALES

0 1"

IF BAR DOES NOT MEASURE ONE INCH ON THIS SHEET, ADJUST ACCORDINGLY.

STATE OF TEXAS
SUSAN SMITH-TURRIETA
86839
LICENSED
PROFESSIONAL ENGINEER
6-28-2016

DRAWN BY: RR
DESIGNED BY: SST
REVIEWED BY: SST
PROJECT NO: SST# XXXXX

SMITH TURRIETA ENGINEERING
P.O. BOX 5902, AUSTIN, TEXAS 78763
TELEPHONE: (512) 569-9022
Texas Registration Number, F-16076

CITY OF AUSTIN, TEXAS
TAYLOR LANE 0.1 MGD WASTEWATER TREATMENT PLANT PROJECT

CHLORINE CONTACT BASIN SECTIONS

DWG. NO. M-5

K:\ACAD\clients\STE\WWTP Ph2\W-CB-SC101.dwg modified by roodrj on Jun 27, 16 1:13 PM

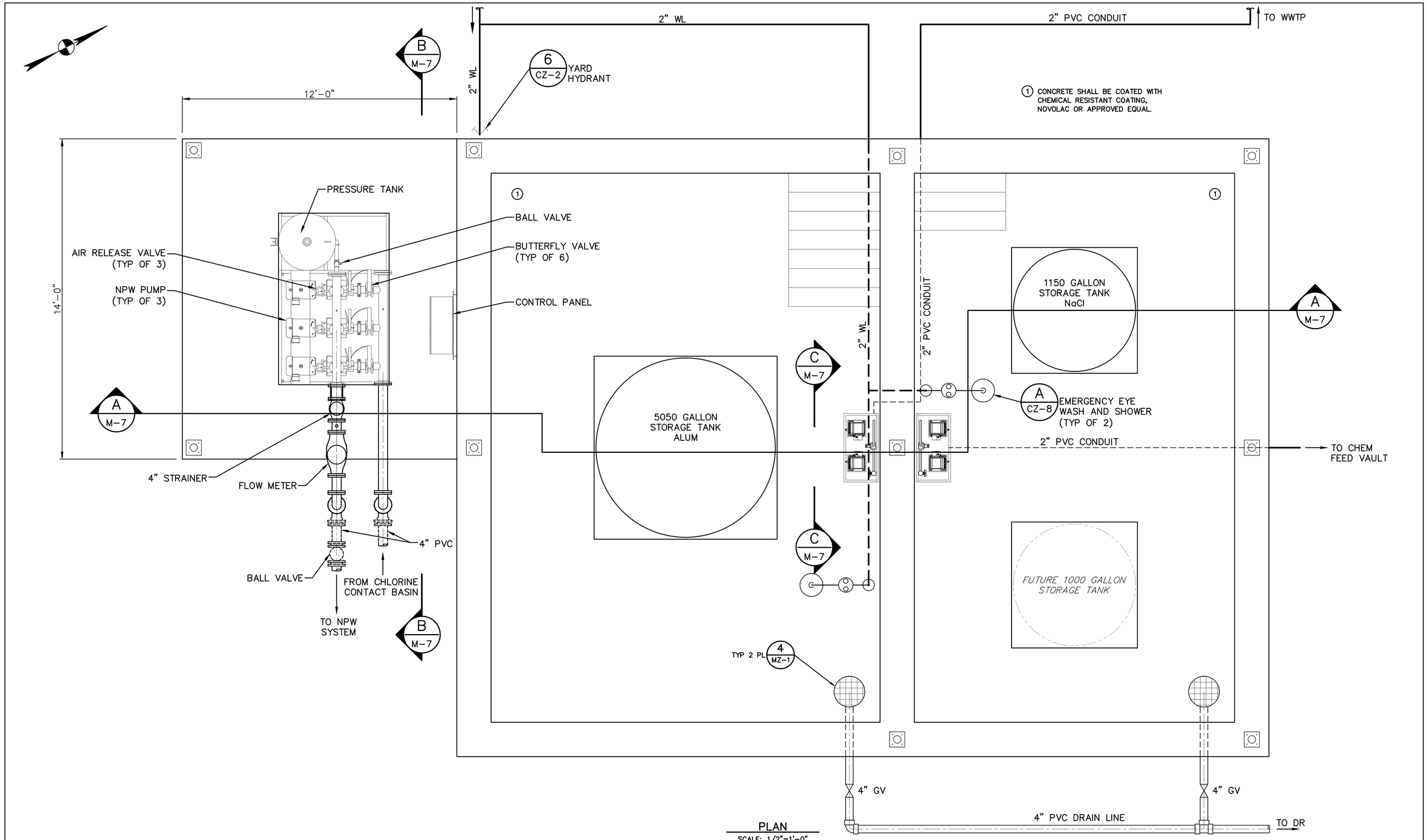

PLAN
SCALE: 1/2"=1'-0"

REV	DATE	BY	DESCRIPTION	APPROVED

VERIFY SCALES
0 1"
IF BAR DOES NOT MEASURE ONE INCH ON THIS SHEET, ADJUST ACCORDINGLY.

STATE OF TEXAS
SUSAN SMITH-TURRIETA
86839
LICENSED
PROFESSIONAL ENGINEER
8-22-2016

DRAWN BY: RR
DESIGNED BY: SST
REVIEWED BY: SST
PROJECT NO: SST# XXXXX

SMITH TURRIETA ENGINEERING
P.O. BOX 5902, AUSTIN, TEXAS 78763
TELEPHONE: (512) 569-9022
Texas Registration Number, F-16076

CITY OF AUSTIN, TEXAS
TAYLOR LANE 0.1 MGD WASTEWATER TREATMENT PLANT PROJECT

CHEMICAL BUILDING AND NPW SYSTEM PLAN VIEW

DWG. NO.
M-6

SHEET 48 OF 79

K:\ACAD\clients\STE\WWTP Ph2\M-CF-PL101.dwg modified by roodrj on Aug 22, 16 9:38 AM

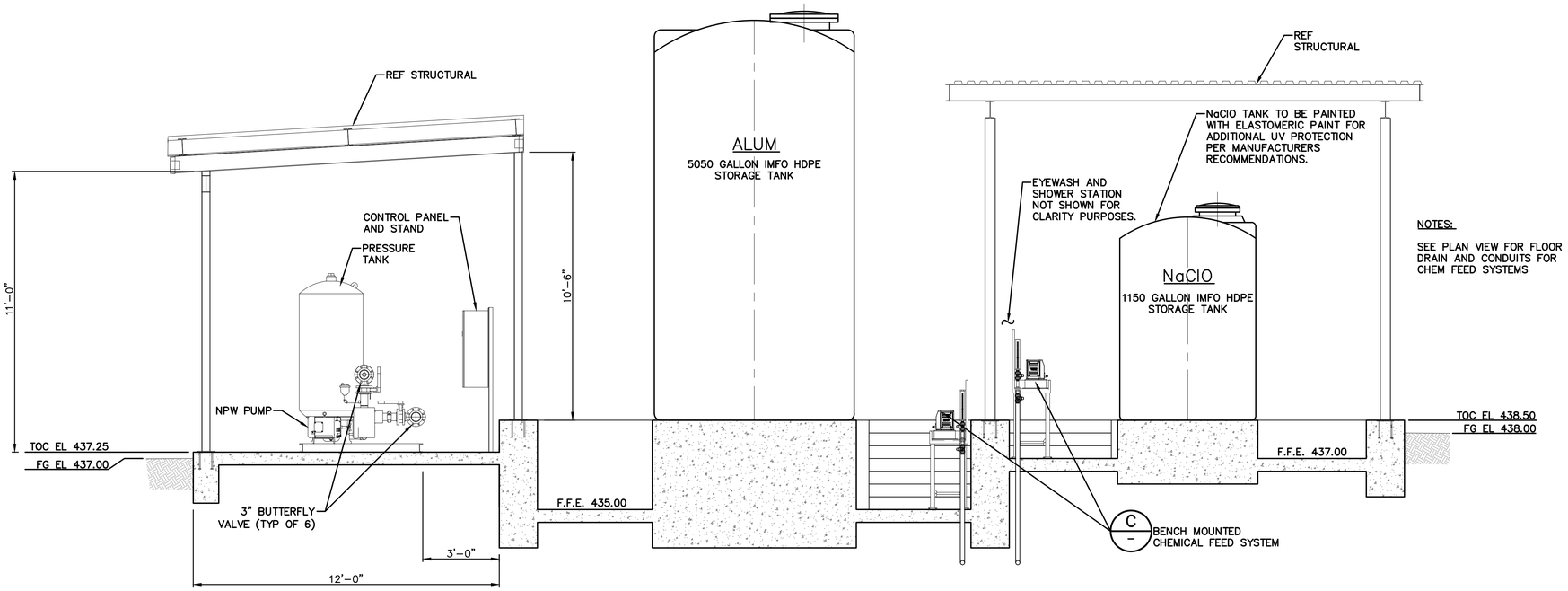

A SECTION
SCALE:3/8" = 1'-0"

NOTES:

SEE PLAN VIEW FOR FLOOR DRAIN AND CONDUITS FOR CHEM FEED SYSTEMS

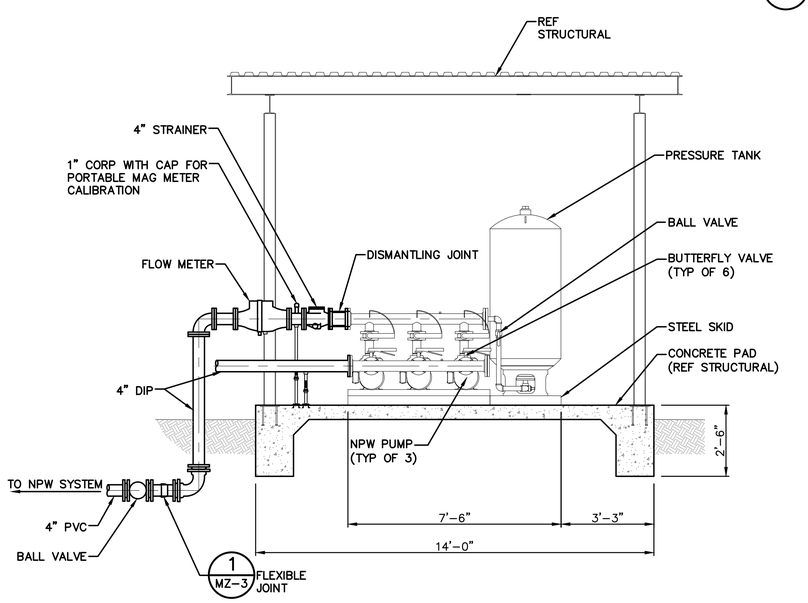

B SECTION
SCALE:3/8" = 1'-0"

NOTES:

1. ALL EXPOSED NPW AND EMERGENCY SHOWER AND EYEWASH PIPING/TUBING 3" IN DIAMETER AND SMALLER SHALL BE HEAT TRACED AND INSULATED FOR FREEZE PROTECTION TO 20°F.
2. STRAINER SHALL BE MANUALLY OPERATED AND INCLUDE A 2" NPT SOLIDS FLUSH OUTLET WITH THE DRAIN DISCHARGING DOWNWARD.
3. STORAGE TANKS ACCESS LADDERS SHALL BE STAINLESS STEEL.
4. ALL CHEMICAL FEED PIPING SHALL BE IDENTIFIED IN ACCORDANCE WITH ASME A13.1 WITH THE NAME OF THE CONTENTS AND THE DIRECTION OF TRAVEL.
5. CHEMICAL FEED TEFLON TUBING SHALL BE HYDROSTATICALLY TESTED TO A PRESSURE OF 200 PSI FOR 10 MINUTES. THE TUBING SHALL THEN GO UNDER A LEAK DETECTION TEST AT 150 PSI FOR 2 HOURS, THE PRESSURE VARIATION SHALL NOT BE MORE THAN 5 PSI DURING TESTING PROCEDURES.

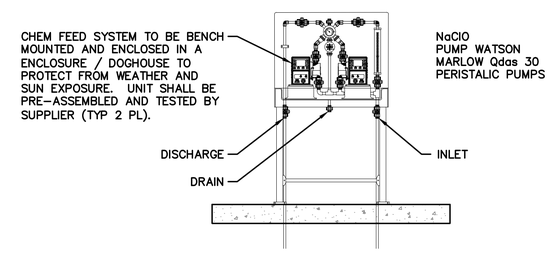

CHEM FEED SYSTEM

C SECTION
SCALE:1/2" = 1'-0"

REV	DATE	BY	DESCRIPTION	APPROVED

VERIFY SCALES

0 1"

IF BAR DOES NOT MEASURE ONE INCH ON THIS SHEET, ADJUST ACCORDINGLY.

STATE OF TEXAS
SUSAN SMITH-TURRIETA
86839
LICENSED
PROFESSIONAL ENGINEER
8-22-2016

DRAWN BY: RR
DESIGNED BY: SST
REVIEWED BY: SST
PROJECT NO: SST# XXXXX

SMITH TURRIETA ENGINEERING
P.O. BOX 5902, AUSTIN, TEXAS 78763
TELEPHONE: (512) 569-9022
Texas Registration Number, F-16076

CITY OF AUSTIN, TEXAS
TAYLOR LANE 0.1 MGD WASTEWATER TREATMENT PLANT PROJECT

CHEMICAL BUILDING AND NPW SYSTEM SECTIONS

DWG. NO. M-7

K:\ACAD\clients\STE\WWTP Ph2\M-NPW-PLSC-101.dwg modified by rodrj on Aug 22, 16 7:50 AM

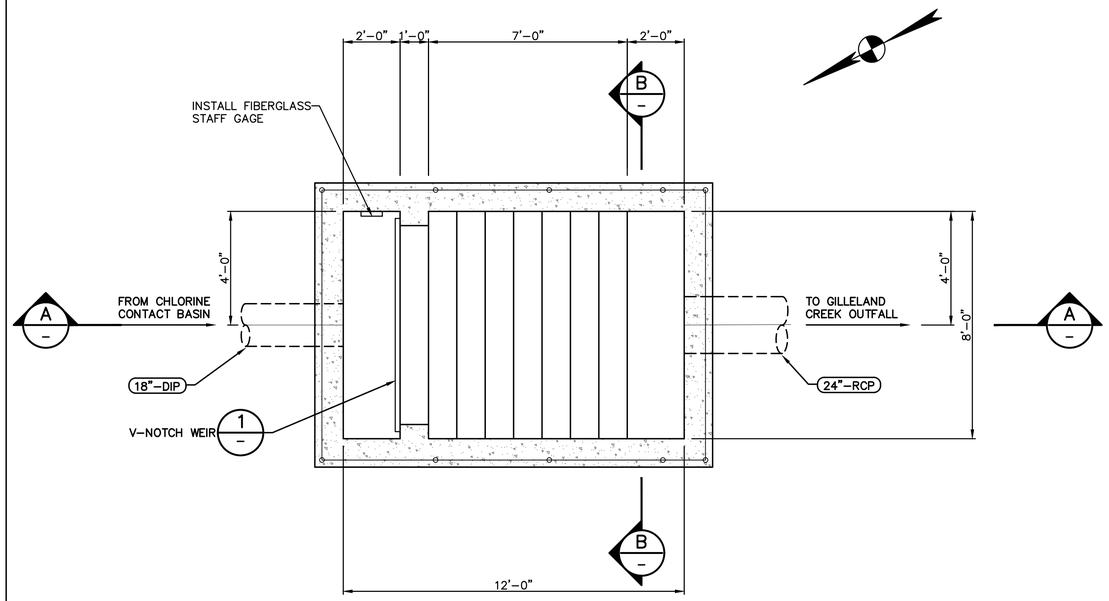

PLAN
SCALE: 3/8"=1'-0"

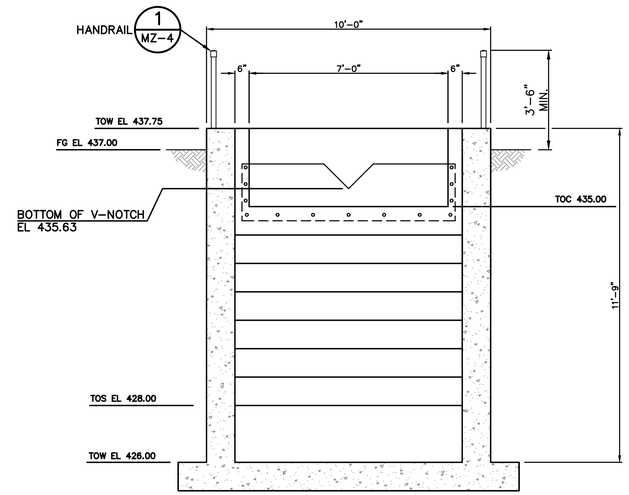

B SECTION
SCALE: 3/8"1'-0"

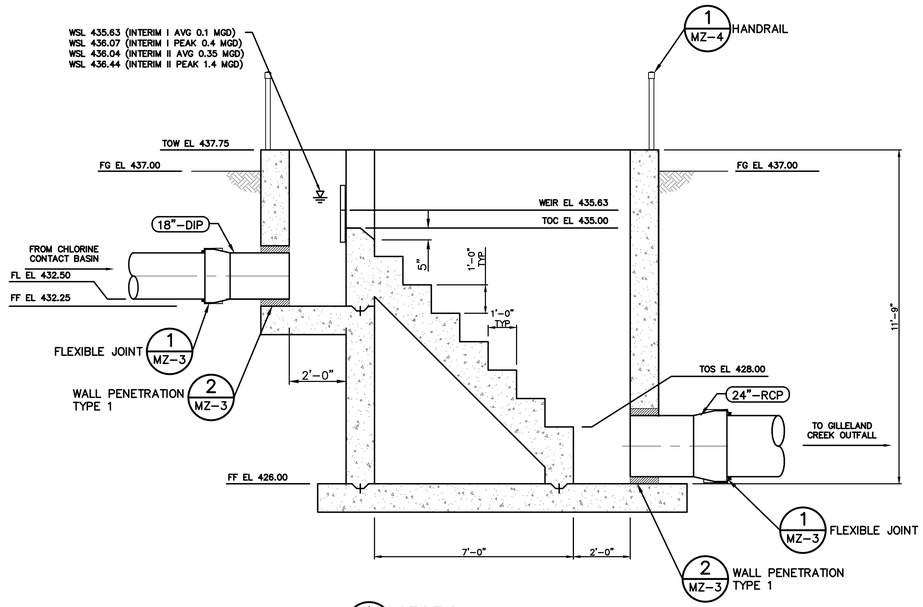

A SECTION
SCALE: 3/8"=1'-0"

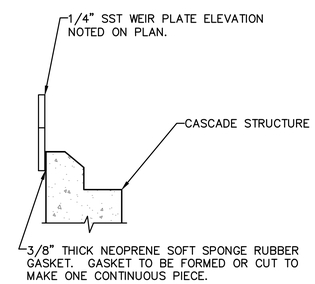

C SECTION
SCALE:1/2" = 1'-0"

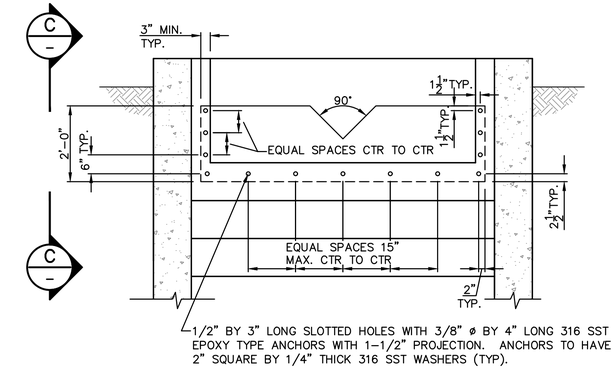

1 V-NOTCH WEIR DETAIL
SCALE:1/2" = 1'-0"

REV	DATE	BY	DESCRIPTION	APPROVED

VERIFY SCALES
0 1"
IF BAR DOES NOT MEASURE ONE INCH ON THIS SHEET, ADJUST ACCORDINGLY.

STATE OF TEXAS
SUSAN SMITH-TURRIETA
86839
LICENSED
PROFESSIONAL ENGINEER
6-28-2016

DRAWN BY: RR
DESIGNED BY: SST
REVIEWED BY: SST
PROJECT NO: SST# XXXXX

SMITH TURRIETA ENGINEERING
P.O. BOX 5902, AUSTIN, TEXAS 78763
TELEPHONE: (512) 569-9022
Texas Registration Number, F-16076

CITY OF AUSTIN, TEXAS
TAYLOR LANE 0.1 MGD WASTEWATER TREATMENT PLANT PROJECT

CASCADE MECHANICAL PLAN AND SECTIONS

DWG. NO.
M-8

SHEET 50 OF 79

K:\ACAD\clients\STE\WWTP Ph2\M-CAS-PLSC-101.dwg modified by roodrj on Jun 27, 16 1:11 PM

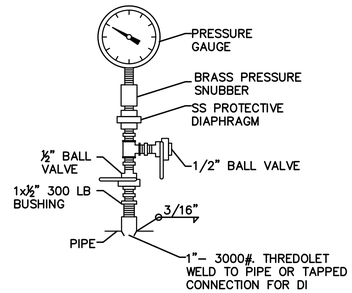

NOTES:
1. USE DIAPHRAGM SEALS AND VALVES FOR ALL CHEMICALS, SEWAGE, SLUDGE AND OTHER LIQUIDS CONTAINING SOLIDS.

1 – PRESSURE GAUGE
SCALE: N.T.S.

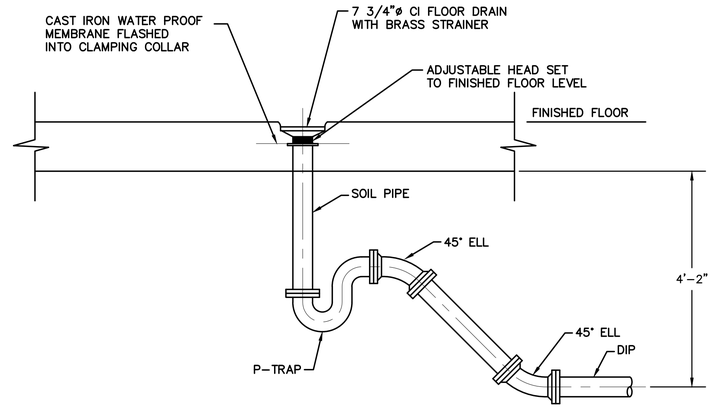

2 – FLOOR DRAIN P–TRAP DETAIL
SCALE: N.T.S.

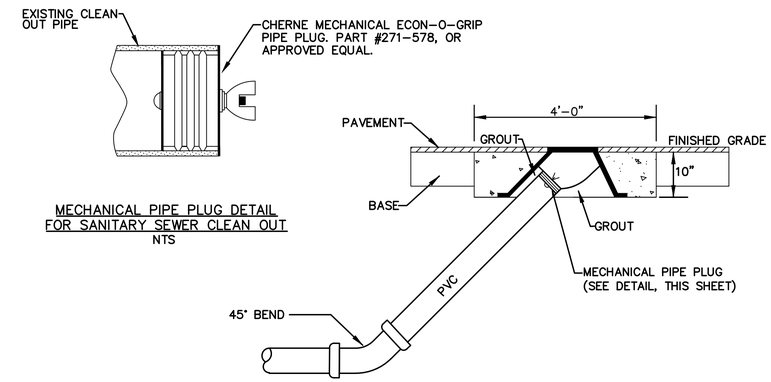

3 – SEWER CLEAN–OUT SECTION
SCALE: N.T.S.

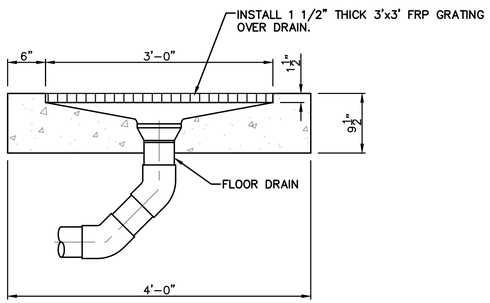

4 – SPILL CONTAINMENT PAD
SCALE: N.T.S.

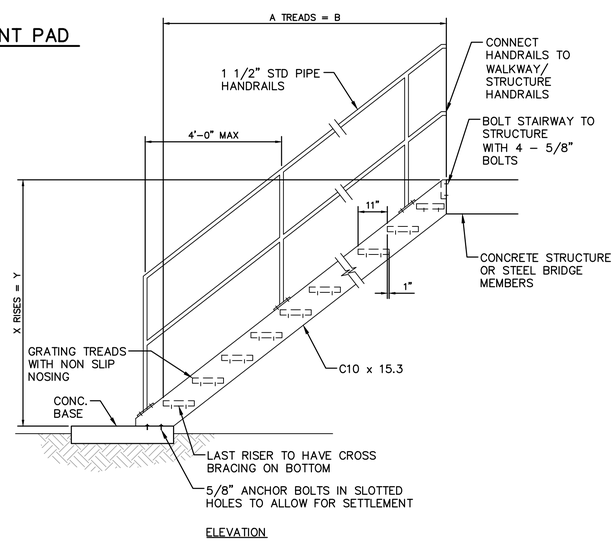

5 – STAIRWAY DETAIL
SCALE: N.T.S.

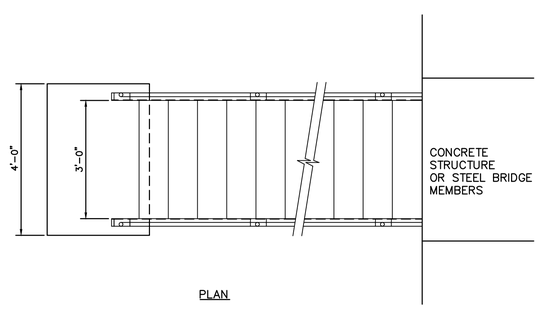

NOTES:
1. ALL STEELWORK TO BE HOT DIPPED GALVANIZED AFTER FABRICATION.
2. GRATING TREADS TO BE GALVANIZED WITH NON SLIP NOSINGS.
3. ALL WELDS TO BE FULL PENETRATION AND CONTINUOUS.
4. ANCHOR BOLTS TO BE STAINLESS STEEL.

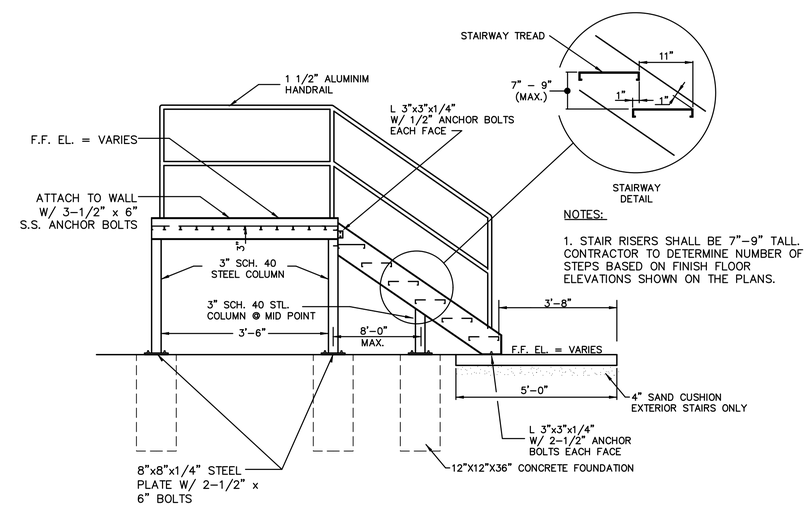

NOTES:
1. STAIR RISERS SHALL BE 7"–9" TALL. CONTRACTOR TO DETERMINE NUMBER OF STEPS BASED ON FINISH FLOOR ELEVATIONS SHOWN ON THE PLANS.

6 – EXTERIOR STAIRWAY ELEVATION
SCALE: N.T.S.

REV	DATE	BY	DESCRIPTION	APPROVED

VERIFY SCALES
0 1"
IF BAR DOES NOT MEASURE ONE INCH ON THIS SHEET, ADJUST ACCORDINGLY.

STATE OF TEXAS
SUSAN SMITH–TURRIETA
86839
LICENSED
PROFESSIONAL ENGINEER
6-28-2016

DRAWN BY: RR
DESIGNED BY: SST
REVIEWED BY: SST
PROJECT NO: SST# XXXXX

SMITH TURRIETA ENGINEERING
P.O. BOX 5902, AUSTIN, TEXAS 78763
TELEPHONE: (512) 569-9022
Texas Registration Number, F-16076

CITY OF AUSTIN, TEXAS
TAYLOR LANE 0.1 MGD WASTEWATER TREATMENT PLANT PROJECT

STANDARD MECHANICAL DETAILS

DWG. NO. MZ-1

K:\ACAD\clients\STE\WWTP Ph2\M–ZD–DT103.dwg modified by rcodrj on Apr 20, 16 10:45 AM

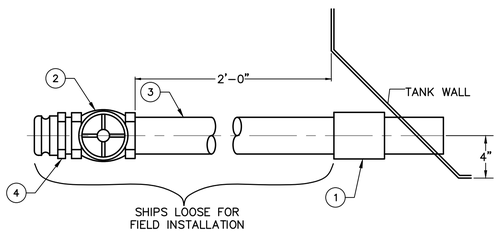

NO.	QTY.	PART NO.	DESCRIPTION
1	1		COUPLING, 3"-150# C.S.
2	1		BRONZE GATE VALVE, 3"-150#
3	1		PIPE NIPPLE, 3" SCH40 X AS REQ'D LG
4	1		INSTANT-LOK ADAPTOR, 3" MNPT

QUICK DISCONNECT

1 DETAIL
SCALE: N.T.S.

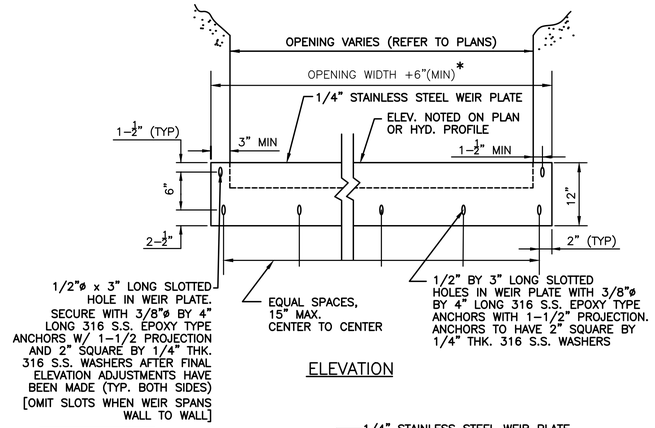

ELEVATION

t (in.)	x (in.)
4	2
6	2
8	5
10	5
12	5
24	8
36	12
48	16

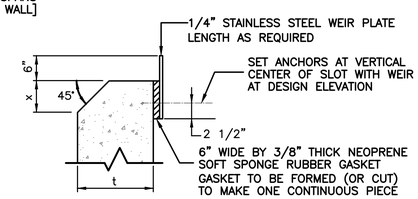

SECTION

* WEIR LENGTH = OPENING WIDTH WHEN WEIR SPANS WALL TO WALL

2 FLAT CRESTED WIER
SCALE: N.T.S.

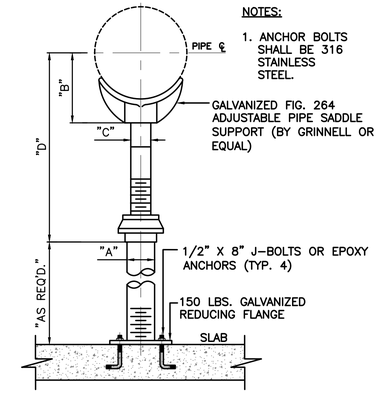

NOTES:

1. ANCHOR BOLTS SHALL BE 316 STAINLESS STEEL.

	WGT APPROX. LBS EACH					D	
PIPE SIZE	COMPLETE	SADDLE ONLY	A	B	C	MINIMUM	MAXIMUM
2 1/2	9.0	4.8	2 1/2	3 1/2	1 1/2	8	13
3	9.2	5.0	2 /12	3 3/4	1 1/2	8 1/4	13 1/4
3 1/2	9.4	5.2	2 1/2	4	1 1/2	8 1/2	13 1/2
4	15.0	7.6	3	4 1/4	2 1/2	9 1/4	14
5	16.7	8.3	3	4 7/8	2 1/2	10	14 3/4
6	17.7	10.3	3	5 1/2	2 1/2	10 1/2	15 1/4
8	20.2	12.8	3	6 7/8	2 1/2	11 3/4	16 1/2
10	25.2	17.8	3	8 1/2	2 1/2	13 1/2	18 1/4
12	29.0	21.6	3	9 15/16	2 1/2	15	19 3/4
14	40.2	38.0	4	10 15/16	3	16 1/4	20 3/4
16	53.2	42.0	4	12 3/8	3	17 3/4	22 1/4
18	70.8	51.0	6	13 7/8	3 1/2	19 1/2	24
20	104.8	85.0	6	15 3/8	3 1/2	21	25 1/2
24	137.0	110.0	6	17 15/16	4	23 3/4	28 1/2
30	170.0	150.0	6	21 5/16	4	27	31 1/2
32	181.0	161.1	6	22 1/2	4	28 1/8	32 3/4
36	249.0	229.0	6	24 1/4	4	30 1/4	34 3/4

3 ADJUSTABLE PIPE SUPPORT DETAIL
SCALE: N.T.S.

REV	DATE	BY	DESCRIPTION	APPROVED

VERIFY SCALES
0 1"
IF BAR DOES NOT MEASURE ONE INCH ON THIS SHEET, ADJUST ACCORDINGLY.

STATE OF TEXAS
SUSAN SMITH-TURRIETA
86839
LICENSED
PROFESSIONAL ENGINEER
6-28-2016

DRAWN BY: RR
DESIGNED BY: SST
REVIEWED BY: SST
PROJECT NO: SST# XXXXX

SMITH TURRIETA ENGINEERING
P.O. BOX 5902, AUSTIN, TEXAS 78763
TELEPHONE: (512) 569-9022
Texas Registration Number, F-16076

CITY OF AUSTIN, TEXAS
TAYLOR LANE 0.1 MGD WASTEWATER
TREATMENT PLANT PROJECT

STANDARD MECHANICAL DETAILS

DWG. NO.
MZ-2

K:\ACAD\clients\STE\WWTP Ph2\M-ZD-DT104.dwg modified by roodrj on Jun 15, 16 11:16 AM

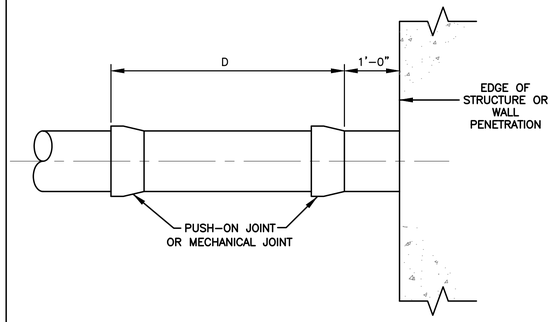

PVC SEWER PIPE OR DUCTILE IRON UNRESTRAINED

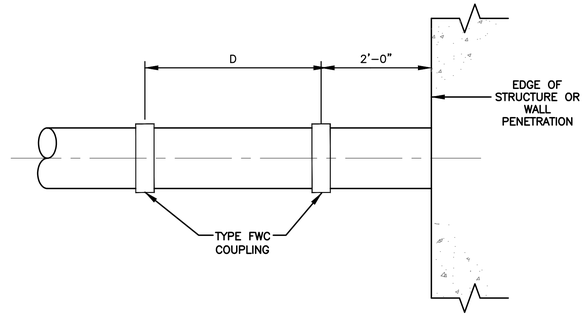

FRP PIPE

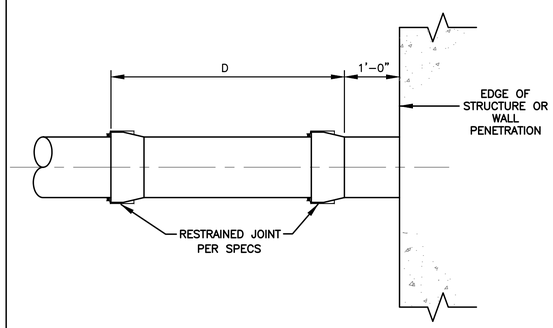

DUCTILE IRON RESTRAINED JOINT PIPE

NOTES:

1. PROVIDE FLEXIBLE JOINT AT ALL PIPE INTERFACES BETWEEN SITE PIPING AND STRUCTURES / BUILDINGS TO ACCOMMODATE 2 1/2" OF DIFFERENTIAL MOVEMENT.
2. MECHANICAL PLANS GENERALLY INDICATE LOCATION OF JOINT. PROVIDE FLEXIBLE JOINT AT EACH INTERFACE, EVEN IF ONE IS NOT SPECIFICALLY INDICATED.
3. APPLY APPROPRIATE STYLE OF FLEXIBLE JOINT IF AN APPLICATION IS NOT DEFINED, COORDINATE WITH ENGINEER TO IDENTIFY AN ACCEPTABLE JOINT TO PROVIDE THE DESIRED MOVEMENT.
4. COUPLINGS SHALL BE US PIPES TR TELE FLEX COUPLING OR APPROVED EQUAL.

DISTANCE TABLE	
PIPE SIZE – INCHES	"D"* – FEET
4–8	2
10–12	3
14–16	4
18–24	6
30–36	10
42–48	12

* DISTANCE "D" TO BE AS SHOWN UP TO D+0.25D

1 – FLEXIBLE JOINTS
SCALE: N.T.S.

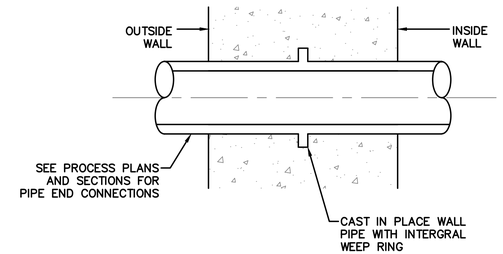

TYPE 1

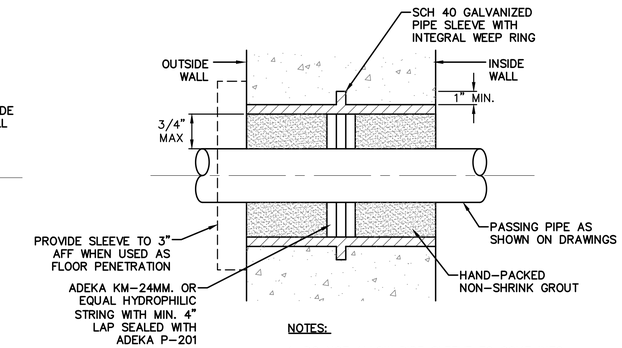

NOTES:

1. DO NOT ALLOW PIPE SLEEVE TO COME INTO CONTACT WITH REINFORCING STEEL.

TYPE 2

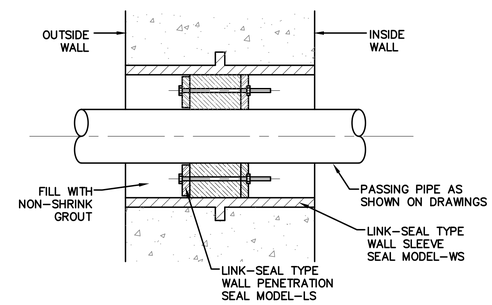

TYPE 3

NOTES:

1. INSIDE DIAMETER OF EACH WALL OPENING SHALL BE OF THE SIZE RECOMMENDED BY MANUFACTURER TO FIT THE PIPE OR CONDUIT AND THE WALL SEAL ASSEMBLY TO ASSURE WATER-TIGHT JOINT.
2. PIPE TO WALL PENETRATION CLOSURES SHALL BE OF THE MODULAR MECHANICAL TYPE, CONSISTING OF INTERLOCKING SYNTHETIC RUBBER LINKS SHAPED TO FILL THE ANNULAR SPACE BETWEEN THE PIPE AND WALL OPENING. A PRESSURE PLATE SHALL BE PROVIDED UNDER EACH BOLT HEAD AND NUT, WITH THE SEAL CONSTRUCTED TO PROVIDE ELECTRICAL INSULATION BETWEEN PIPE AND WALL.
3. WALL SEAL ASSEMBLY SHALL BE "LINK SEAL" AS MFG. BY THUNDERLINE CORP., WAYNE, MICHIGAN OR EQUAL.
4. PROVIDE ESCUTCHEONS IN FINISHED SPACES.
5. WALL SEAL ASSEMBLY MAY BE OMITTED AND THE ENTIRE ANNULAR SPACE BETWEEN THE PIPE AND WALL SHALL BE FILLED WITH GROUT WHERE PIPES PENETRATE EXISTING WALLS.

2 – WALL PENETRATIONS DETAIL
SCALE: N.T.S.

REV	DATE	BY	DESCRIPTION	APPROVED

VERIFY SCALES
0 1"
IF BAR DOES NOT MEASURE ONE INCH ON THIS SHEET, ADJUST ACCORDINGLY.

STATE OF TEXAS
SUSAN SMITH-TURRIETA
86839
LICENSED
PROFESSIONAL ENGINEER
6-28-2016

DRAWN BY: RR
DESIGNED BY: SST
REVIEWED BY: SST
PROJECT NO: SST# XXXXX

SMITH TURRIETA ENGINEERING
P.O. BOX 5902, AUSTIN, TEXAS 78763
TELEPHONE: (512) 569-9022
Texas Registration Number, F-16076

CITY OF AUSTIN, TEXAS
TAYLOR LANE 0.1 MGD WASTEWATER TREATMENT PLANT PROJECT

STANDARD MECHANICAL DETAILS

DWG. NO. MZ-3

SHEET 53 OF 79

K:\ACAD\clients\STE\WWTP Ph2\W-ZD-DT105.dwg modified by roodrj on Apr 20, 16 10:42 AM

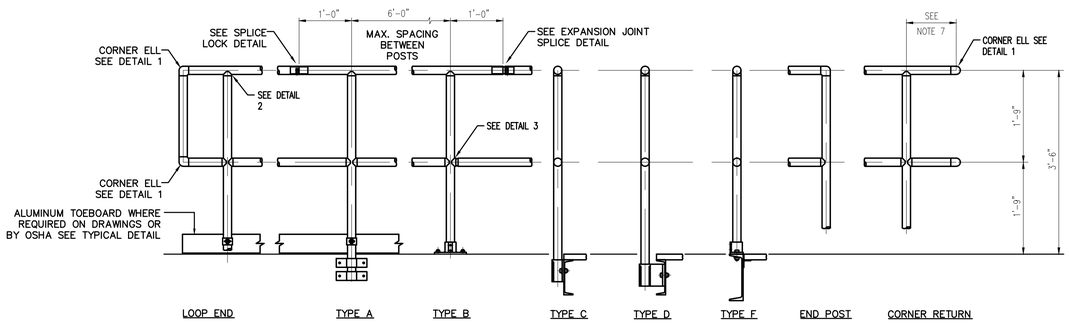

TYPICAL HANDRAIL

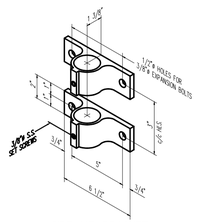

SIDE-MT. BRACKET
TYPE A

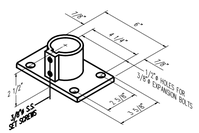

BASE FLANGE
TYPE B (4-HOLE)
LOCATE SET SCREWS IN BASE FLANGE AT 90° FROM CENTERLINE OF HANDRAIL RUN AND ON SIDE AWAY FROM WALKING SURFACE.

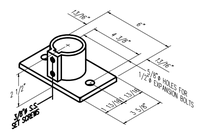

BASE FLANGE
TYPE B (2-HOLE)
LOCATE SET SCREWS IN BASE FLANGE AT 90° FROM CENTERLINE OF HANDRAIL RUN AND ON SIDE AWAY FROM WALKING SURFACE.

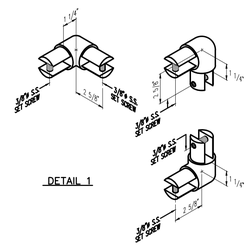

DETAIL 1

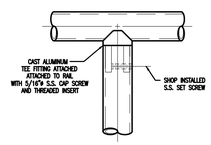

DETAIL 2

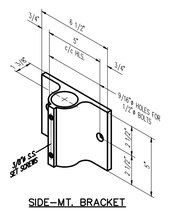

SIDE-MT. BRACKET
TYPE C

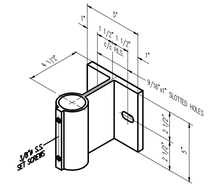

SIDE-MT. BRACKET
TYPE D

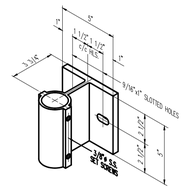

SIDE-MT. BRACKET
TYPE E

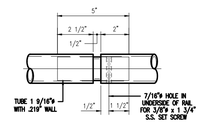

EXPANSION JOINT SPLICE
LOCATED AT 60'-0"
MAXIMUM INTERVALS

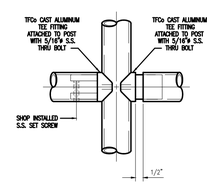

DETAIL 3
EXPANSION
SPLICE LOCATED
AT 60'-0"
MAXIMUM
INTERVALS

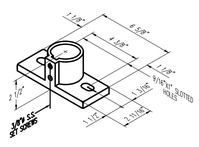

BASE FLANGE

TYPE F

LOCATE SET SCREWS IN BASE FLANGE AT 90° FROM CENTERLINE OF HANDRAIL RUN AND ON SIDE AWAY FROM WALKING SURFACE.

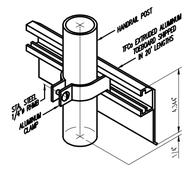

TOEBOARD DETAILS

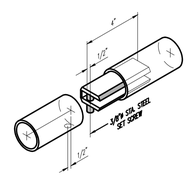

SPLICE LOCK

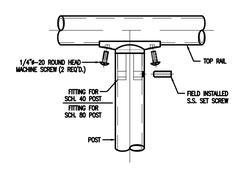

DETAIL 8
FOR FIELD
ASSEMBLED
HANDRAIL

1 HANDRAIL DETAILS
SCALE: N.T.S.

OSHA DESIGN SPECIFICATIONS

1. HANDRAIL SHALL BE THE PRODUCT OF A COMPANY NORMALLY ENGAGED IN THE MANUFACTURE OF PIPE RAILING. RAILING SHALL BE SHOP ASSEMBLED IN LENGTHS NOT TO EXCEED 24 FEET FOR FIELD ERECTION.

2. HANDRAILS SHALL BE DESIGNED TO WITHSTAND 200# CONCENTRATED LOAD APPLIED IN ANY DIRECTION TO THE TOP RAIL.

3. THE MANUFACTURER SHALL SUBMIT CALCULATIONS TO THE ENGINEER FOR APPROVAL. TESTING OF BASE CASTINGS OR BASE EXTRUSIONS BY AN INDEPENDENT LAB OR MANUFACTURER'S LAB (IF MANUFACTURER'S LAB MEETS THE REQUIREMENTS OF THE ALUMINUM ASSOCIATION) WILL BE AN ACCEPTABLE SUBSTITUTE FOR CALCULATIONS. CALCULATIONS WILL BE REQUIRED FOR APPROVAL OF ALL OTHER DESIGN ASPECTS.

4. POST SPACING SHALL BE A MAXIMUM OF 6'-0". POSTS AND RAILINGS SHALL BE A MINIMUM OF 1-1/2" SCHEDULE 40 ALUMINUM PIPE ALLOY 6105-T5, ASTM-B-429 OR ASTM-B-221. THE HANDRAIL MANUFACTURER SHALL SHOW THAT THEIR POSTS ARE OF ADEQUATE STRENGTH TO MEET THE LOADING REQUIREMENTS. IF THE MANUFACTURER'S POSTS ARE NOT OF ADEQUATE STRENGTH, THE MANUFACTURER MAY REDUCE THE POST SPACING OR ADD REINFORCING DOWELS OR MAY DO BOTH IN ORDER TO MEET THE LOADING REQUIREMENTS.

5. THE HANDRAIL SHALL BE MADE OF PIPES JOINED TOGETHER WITH COMPONENT FITTINGS. SAMPLES OF ALL COMPONENTS, BASES, TOE PLATE AND PIPE MUST BE SUBMITTED FOR APPROVAL. COMPONENTS THAT ARE POP-RIVETED OR GLUED AT THE JOINTS WILL NOT BE ACCEPTABLE. ALL COMPONENTS MUST BE MECHANICALLY FASTENED WITH STAINLESS STEEL HARDWARE.

6. POSTS SHALL NOT INTERRUPT THE CONTINUATION OF THE TOP RAIL AT ANY POINT ALONG THE RAILING, INCLUDING CORNERS AND END TERMINATIONS (OSHA 1910.23). THE TOP SURFACE OF THE TOP RAILING SHALL BE SMOOTH AND SHALL NOT BE INTERRUPTED BY PROJECTED FITTINGS.

7. THE MIDRAIL AT A CORNER RETURN SHALL BE ABLE TO WITHSTAND A 200# LOAD WITHOUT LOOSENING. THE MANUFACTURER IS TO DETERMINE THIS DIMENSION FOR THEIR SYSTEM. PROVIDE PHYSICAL TESTS FROM A LABORATORY TO CONFIRM COMPLIANCE.

8. EXPANSION BOLTS SHALL BE SPACED 10D APART AND 5D EDGE DISTANCE FOR NO REDUCTION IN PULLOUT STRENGTH. A SAFETY FACTOR OF 4 SHALL BE USED ON EXPANSION BOLT PULLOUT VALUES PUBLISHED BY THE MANUFACTURER. EXPANSION BOLTS SHALL BE STAINLESS STEEL TYPE 18-8 WEDGE BOLTS AND SHALL BE FURNISHED BY THE HANDRAIL MANUFACTURER.

9. TOE PLATE SHALL CONFORM TO OSHA STANDARDS. TOE PLATE SHALL BE A MINIMUM OF 4" HIGH AND SHALL BE AN EXTRUSION THAT ATTACHES TO THE POSTS WITH CLAMPS WHICH WILL ALLOW FOR EXPANSION AND CONTRACTION BETWEEN POSTS. TOE PLATES SHALL BE SET 1/4" ABOVE THE WALKING SURFACE. TOE PLATES SHALL BE PROVIDED ON HANDRAILS AS REQUIRED BY OSHA AND/OR AS SHOWN ON DRAWINGS. TOE PLATES SHALL BE SHIPPED LOOSE IN STOCK LENGTHS WITH PRE-MANUFACTURED CORNERS FOR FIELD INSTALLATION.

10. OPENINGS IN THE RAILING SHALL BE GUARDED BY A SELF-CLOSING GATE (OSHA 1910.23). SAFETY CHAINS SHALL BE USED WHERE SPECIFICALLY SHOWN ON THE DRAWINGS.

11. FINISH SHALL BE ALUMINUM ASSOCIATION M10-C22-A41 (215-R1). THE PIPE SHALL BE PLASTIC-WRAPPED. THE PLASTIC WRAP IS TO BE REMOVED AFTER ERECTION.

12. ALUMINUM SURFACES IN CONTACT WITH CONCRETE, GROUT OR DISSIMILAR METALS WILL BE PROTECTED WITH A COAT OF BITUMINOUS PAINT, MYLAR ISOLATORS OR OTHER APPROVED MATERIAL.

REV	DATE	BY	DESCRIPTION	APPROVED

VERIFY SCALES
0 1"
IF BAR DOES NOT MEASURE ONE INCH ON THIS SHEET, ADJUST ACCORDINGLY.

STATE OF TEXAS
SUSAN SMITH-TURRIETA
86839
LICENSED
PROFESSIONAL ENGINEER
6-28-2016

DRAWN BY: RR
DESIGNED BY: SST
REVIEWED BY: SST
PROJECT NO: SST# XXXXX

SMITH TURRIETA ENGINEERING
P.O. BOX 5902, AUSTIN, TEXAS 78763
TELEPHONE: (512) 569-9022
Texas Registration Number, F-16076

CITY OF AUSTIN, TEXAS
TAYLOR LANE 0.1 MGD WASTEWATER TREATMENT PLANT PROJECT

STANDARD MECHANICAL DETAILS

DWG. NO.
MZ-4

K:\ACAD\clients\STE\WWTP Ph2\M-ZD-DT106.dwg modified by roodrj on Apr 20, 16 10:40 AM

STRUCTURAL GENERAL NOTES

GENERAL

1. THESE STRUCTURAL DRAWINGS SHALL BE USED FOR THE CONSTRUCTION OF A CAST-IN-PLACE CONCRETE PAD FOR THE SUPPORT OF A FILTRATION SYSTEM, A CAST-IN-PLACE CONCRETE PAD FOR THE SUPPORT OF A GENERATOR, A CAST-IN-PLACE CONCRETE PAD FOR THE SUPPORT OF A NON-POTABLE WATER AND CHEMICAL FEED SYSTEM WITH STRUCTURAL STEEL CANOPY, A CONCRETE TANKAGE FOR A CHLORINE CONTACT BASIN AND A CONCRETE TANKAGE FOR A CASCADE STRUCTURE LOCATED IN MANOR, TEXAS.

2. UNLESS NOTED OTHERWISE, SPECIFICATION ITEMS REFERENCED IN THESE DOCUMENTS ARE THE CURRENT CITY OF AUSTIN STANDARD SPECIFICATIONS. SHOULD THERE BE A CONFLICT BETWEEN STRUCTURAL GENERAL NOTES AND SPECIFICATIONS, THEN GENERAL NOTES SHALL GOVERN OVER SPECIFICATIONS.

3. THE CONTRACTOR SHALL EXAMINE THE DRAWINGS AND SPECIFICATIONS, VISIT THE JOB SITE, AND FULLY INFORM HIMSELF OF ALL EXISTING CONDITIONS AND LIMITATIONS. FAILURE TO VISIT THE SITE AND NOT BEING FAMILIAR WITH THE EXISTING CONDITIONS AND LIMITATIONS IN NO WAY RELIEVES THE CONTRACTOR FROM FURNISHING ANY MATERIALS OR PERFORMING ANY WORK THAT MAY BE REQUIRED TO COMPLETE CONSTRUCTION IN ACCORDANCE WITH THE DRAWINGS AND SPECIFICATIONS WITHOUT ANY ADDITIONAL COST TO THE OWNER.

4. IT SHALL BE THE RESPONSIBILITY OF THE CONTRACTOR TO COORDINATE THE STRUCTURAL DRAWINGS WITH THE CIVIL AND OTHER TRADE DRAWINGS. IN CASE OF CONFLICT BETWEEN THE STRUCTURAL DRAWINGS AND DRAWINGS RELATED TO OTHER TRADES, THE CONTRACTOR SHALL ADHERE TO THE MORE STRINGENT REQUIREMENTS. ALL CONFLICTS BETWEEN THE STRUCTURAL DRAWINGS AND THE DRAWINGS OF OTHER TRADES SHALL BE CALLED TO THE ENGINEER'S ATTENTION.

5. STRUCTURAL DRAWINGS ARE NOT TO BE SCALED FOR DETERMINATION OF QUANTITIES, LENGTHS OR MATERIAL SIZES.

6. COMPLETE SHOP DRAWINGS FOR STRUCTURAL WORK SHALL BE SUBMITTED FOR REVIEW PRIOR TO COMMENCEMENT OF CONSTRUCTION, IN ACCORDANCE WITH THE SPECIFICATIONS. REVIEW OF THE SHOP DRAWINGS BY THE ENGINEER DOES NOT RELIEVE THE CONTRACTOR OF FULL RESPONSIBILITY FOR CORRECT FABRICATION AND CONSTRUCTION OF THE WORK.

7. STRUCTURAL DOCUMENTS SHALL NOT BE COPIED AND SUBMITTED AS SHOP DRAWINGS WITHOUT PRIOR WRITTEN APPROVAL OF THE ENGINEER. SUBMITTALS WHICH ARE UNAUTHORIZED COPIES OF STRUCTURAL DOCUMENTS WILL BE REJECTED WITHOUT REVIEW.

8. THE CONTRACTOR SHALL PROVIDE TEMPORARY ERECTION BRACING, TRENCH PROTECTION AND SHORING FOR ALL STRUCTURAL WORK AS REQUIRED FOR STABILITY OF THE STRUCTURE DURING ALL PHASES OF CONSTRUCTION. THE CONTRACTOR SHALL IMMEDIATELY NOTIFY THE ENGINEER OF ANY CONDITION WHICH, IN HIS OPINION, MIGHT ENDANGER THE STABILITY OF THE STRUCTURE OR CAUSE DISTRESS OF THE STRUCTURE.

9. THE CONTRACTOR SHALL PERFORM ALL WORK WITH DUE REGARD TO LIFE AND PROPERTY IN THE VICINITY OF THE WORK AREA. THE CONTRACTOR ALONE SHALL BE RESPONSIBLE FOR PROTECTION OF THE SAME FROM ANY HARM OR DAMAGE DURING ALL CONSTRUCTION OPERATIONS. ANY HARM OR DAMAGE SHALL BE RECTIFIED TO THE ENTIRE SATISFACTION OF THE OWNER AT NO ADDITIONAL COST TO THE OWNER.

10. THE CONTRACTOR IS RESPONSIBLE FOR THE REMOVAL AND DISPOSAL OF ALL CONSTRUCTION DEBRIS IN THE VICINITY OF WORK.

CODES AND DESIGN LOADS

1. 2012 INTERNATIONAL BUILDING CODE

2. ACI 350-06 CODE REQUIREMENTS FOR ENVIRONMENTAL ENGINEERING CONCRETE STRUCTURES (CHEMICAL BUILDING, CHLORINE CONTACT BASIN AND CASCADE STRUCTURE).

3. ACI 318-11 BUILDING CODE REQUIREMENTS FOR STRUCTURAL CONCRETE (FILTRATION SYSTEM, GENERATOR AND NPW SYSTEM SUPPORT PADS).

4. APPLIED EARTH PRESSURE: AS INDICATED IN CONCRETE FOUNDATIONS SECTION OF THESE NOTES.

5. DESIGN LIQUID LEVEL (CHLORINE CONTACT BASIN):
   DURING LIQUID TIGHTNESS TESTING ..... 7.50 FT (TO TOP OF WALLS)
   OPERATIONAL LIQUID LEVEL ..... 5.50 FT (PER MECH'L)

   DESIGN LIQUID LEVEL (CASCADE STRUCTURE):
   DURING LIQUID TIGHTNESS TESTING ..... 11.75 FT (TO TOP OF WALLS)
   OPERATIONAL LIQUID LEVEL ..... 10.44 FT (PER MECH'L)

6. SUPERIMPOSED DEAD LOADS:
   CANOPY STRUCTURES ..... 5 PSF (LIGHTS, MISC)

7. LIVE LOADS:
   ROOF LIVE LOADS ..... 20 PSF

   SURCHARGE (APPLIED TO WALLS BELOW GRADE) ..... 50 PSF

   FILTRATION UNIT ..... 6,393 LB DRY
   (2206-1F DISC FILTER BY KRUGER ..... 26,015 LB OPERATIONAL
   OR APPROVED EQUIVALENT)

   GENERATOR ..... 11,500 LB DRY
   (300 KW DIESEL GENERATOR - ..... 15,500 LB WET
   SUBMIT MODEL FOR APPROVAL)

   CHEM FEED NaClO TANK ..... 260 LB EMPTY
   (1150 GALLON IMFO TANK BY POLYPROCESSING ..... 12,434 LB FULL
   COMPANY OR APPROVED EQUIVALENT)

   CHEM FEED ALUM TANK ..... 1,650 LB EMPTY
   (5050 GALLON DOUBLE IMFO TANK BY ..... 58,188 LB FULL
   POLYPROCESSING COMPANY OR APPROVED EQUIVALENT)

   NPW SYSTEM UNIT ..... 2,150 LB DRY
   (TIGERFLOW MODEL TSPH-106W-S1-S4-CC-M-VFD ..... 3,693 LB OPERATIONAL
   OR APPROVED EQUIVALENT)

8. WIND LOADS:
   ULTIMATE DESIGN WIND SPEED ..... 120 MPH
   NOMINAL DESIGN WIND SPEED ..... 93 MPH
   RISK CATEGORY ..... III (3)
   WIND EXPOSURE C

9. SEISMIC DESIGN DATA:
   SEISMIC DESIGN CATEGORY ..... A

   DUE TO THE SEISMIC DESIGN CATEGORY, IBC SECTION 1603.1.5 DOES NOT APPLY FOR THIS PROJECT.

10. THE CHLORINE CONTACT BASIN HAS BEEN DESIGNED FOR NORMAL ENVIRONMENTAL EXPOSURE DURING LIQUID TIGHTNESS TESTING AND FOR SEVERE ENVIRONMENTAL EXPOSURE DURING OPERATION. THE CASCADE STRUCTURE HAS BEEN DESIGNED FOR NORMAL ENVIRONMENTAL EXPOSURE DURING BOTH TESTING AND OPERATION.

LIST OF SPECIFICATIONS

THE FOLLOWING IS A LIST OF CITY OF AUSTIN STANDARD SPECIFICATIONS APPLICABLE TO THIS PROJECT. SHOULD THERE BE A CONFLICT BETWEEN STRUCTURAL GENERAL NOTES AND SPECIFICATIONS, THEN GENERAL NOTES SHALL GOVERN OVER SPECIFICATIONS.

ITEM NO.	COA STANDARD SPECIFICATION
1023	CLEARING AND GRUBBING
1303	BORROW
2015	SUBGRADE PREPARATION
2105	FLEXIBLE BASE
4015	STRUCTURAL EXCAVATION AND BACKFILL
4025	CONTROLLED LOW STRENGTH MATERIAL
4035	CONCRETE FOR STRUCTURES
4055	CONCRETE ADMIXTURES
4065	REINFORCING STEEL
4085	CONCRETE JOINT MATERIALS
4095	MEMBRANE CURING
4105	CONCRETE STRUCTURES
4115	SURFACE FINISHES FOR CONCRETE
4165	WATERSTOPS
5085	MISCELLANEOUS STRUCTURES AND APPURTENANCES
7205	METAL FOR STRUCTURES
7215	STEEL STRUCTURES
7225	PROTECTIVE COATINGS
723	STRUCTURAL WELDING

SUBGRADE PREPARATION, BACKFILL AND CONCRETE FOUNDATIONS

1. FOUNDATION DESIGN IS BASED ON INFORMATION AND RECOMMENDATIONS FOUND IN THE GEOTECHNICAL REPORT SEALED BY GABRIEL ORNELAS, JR., P.E., PMP OF RABA KISTNER CONSULTANTS, INC., DATED JUNE 12, 2012 (RKCI PROJECT NO. AAA11-031-01). SPECIFIED ALLOWABLE VALUES, UPON WHICH DESIGN IS BASED, ARE AS FOLLOWS:

   LATERAL (SATURATED) PRESSURE FOR WALL BACKFILL MATERIAL:

		ACTIVE		AT-REST	
BACKFILL TYPE	EFFECTIVE UNIT WEIGHT (PCF)	PRESSURE COEFFICIENT KA	EQUIVALENT FLUID DENSITY (PCF)	PRESSURE COEFFICIENT KO	EQUIVALENT FLUID DENSITY (PCF)
WASHED GRAVEL	74	0.29	84	0.45	96
CRUSHED LIMESTONE	84	0.24	82	0.38	94

   ALLOWABLE BEARING PRESSURE:
   GRADE BEAMS ON 12" MINIMUM SELECT FILL ..... 2,500 PSF
   WIDENED BEAMS AND SLABS ON 12" MINIMUM SELECT FILL ..... 3,100 PSF

   COEFFICIENT OF FRICTION:
   CLAY 0.35
   SELECT FILL 0.70

2. THE CONTRACTOR SHALL OBTAIN A COPY OF AND BE FULLY FAMILIAR WITH ALL ASPECTS OF THE REFERENCED GEOTECHNICAL REPORT AND SHALL CONFORM TO THE RECOMMENDATIONS THEREIN REGARDING SUBGRADE PREPARATION AND FOUNDATION CONSTRUCTION.

3. POSITIVE SITE DRAINAGE SHALL BE PROVIDED AT ALL TIMES DURING CONSTRUCTION SO THAT PONDING OF SURFACE RUNOFF DOES NOT OCCUR AND CAUSE CONSTRUCTION DELAYS OR INHIBIT SITE ACCESS. INFILTRATION OF WATER INTO EXCAVATIONS SHALL BE PREVENTED. ALL GRADES MUST PROVIDE EFFECTIVE DRAINAGE AWAY FROM STRUCTURES DURING AND AFTER CONSTRUCTION.

4. VERIFY LOCATION OF ALL UNDERGROUND UTILITIES AND NOTIFY CONSTRUCTION MANAGER OF ANY CONFLICTS PRIOR TO DRILLING OR EXCAVATING.

5. SLAB AREAS AND ALL AREAS TO SUPPORT SELECT FILL SHALL BE STRIPPED OF ALL VEGETATION AND ORGANIC TOPSOIL IN ACCORDANCE WITH ITEM 1023, EXTENDING A MINIMUM OF 5 FEET BEYOND THE OUTER LIMITS OF THE SLAB FOOTPRINT TO ALLOW FOR CONSTRUCTION OF THE SLAB PAD. OVEREXCAVATE EXISTING SOILS AND REPLACE WITH SELECT FILL MATERIAL IN ACCORDANCE WITH ITEM 4015 TO THE FOLLOWING DEPTHS BELOW THE LOWEST SLAB:
   FILTRATION SYSTEM SUPPORT PAD ..... 6 FT
   NPW & CHEM FEED SYSTEM SUPPORT PAD ..... 6 FT
   GENERATOR SUPPORT PAD ..... 6 FT
   CHLORINE CONTACT BASIN ..... 3 FT
   CASCADE STRUCTURE ..... 1 FT

6. UPON COMPLETION OF THE PROOFROLLING OPERATIONS AND JUST PRIOR TO FILL PLACEMENT, THE CLAY SUBGRADE SHALL BE MOISTURE CONDITIONED BY SCARIFYING IN ACCORDANCE WITH ITEM 2015. THE MOISTURE CONTENT OF THE CLAY SUBGRADE SHALL BE MAINTAINED WITHIN THE RANGE OF OPTIMUM MOISTURE CONTENT TO 3 PERCENTAGE POINTS ABOVE OPTIMUM MOISTURE CONTENT UNTIL PERMANENTLY COVERED.

7. EXCAVATIONS SHALL BE FREE OF DEBRIS, LOOSE MATERIAL AND WATER PRIOR TO PLACING CONCRETE.

8. EXCAVATIONS SHALL BE OBSERVED BY A REPRESENTATIVE OF THE GEOTECHNICAL ENGINEER'S OFFICE PRIOR TO PLACEMENT OF THE REINFORCING STEEL AND CONCRETE, TO VERIFY THAT BEARING SOILS ARE SIMILAR TO THOSE ENCOUNTERED DURING GEOTECHNICAL TEST BORINGS AND THAT EXCESSIVE LOOSE MATERIALS AND WATER ARE NOT PRESENT WITHIN THE EXCAVATIONS.

9. IF SOFT POCKETS OF SOIL ARE ENCOUNTERED IN THE FOUNDATION EXCAVATIONS, THEY SHALL BE REMOVED AND REPLACED WITH A COMPACTED NON-EXPANSIVE FILL MATERIAL OR LEAN CONCRETE UP TO THE DESIGN FOUNDATION BEARING ELEVATIONS.

10. GROUNDWATER WAS ENCOUNTERED AT BORINGS DURING THE GEOTECHNICAL FIELD INVESTIGATION, AT AS LITTLE AS 17 FEET BELOW THE EXISTING GROUND SURFACE. IF GROUNDWATER SEEPAGE IS ENCOUNTERED DURING EXCAVATION, CONTRACTOR SHALL SUBMIT A PLAN TO MITIGATE EFFECTS OF GROUND WATER SEEPAGE DURING CONSTRUCTION TO THE ENGINEER FOR APPROVAL.

11. MATERIALS USED AS SELECT FILL FOR FINAL SITE GRADING IN BUILDING AREAS SHALL BE FLEXIBLE BASE IN ACCORDANCE WITH ITEM 2105. THE USE OF ON-SITE STRATUM I CLAYS AS BACKFILL SHALL NOT BE PERMITTED.

12. SELECT FILL SHALL BE PLACED IN ACCORDANCE WITH ITEM 2105.5 AND THE WATER CONTENT OF SELECT FILL SHALL BE MAINTAINED WITHIN THE RANGE OF 2 PERCENTAGE POINTS BELOW TO 2 PERCENTAGE POINTS ABOVE THE OPTIMUM MOISTURE CONTENT UNTIL THE SELECT FILL IS PERMANENTLY COVERED.

13. BACKFILL MATERIALS SHALL GRANULAR MATERIAL BE PLACED AND COMPACTED IN ACCORDANCE WITH ITEM 4015.8. EACH LIFT OF BACKFILL SHALL BE TESTED DURING THE BACKFILLING OPERATIONS TO DOCUMENT THE DEGREE OF COMPACTION. WITHIN AT LEAST A 5 FOOT ZONE OF THE WALLS, COMPACTION SHALL BE ACCOMPLISHED USING HAND-GUIDED COMPACTION EQUIPMENT CAPABLE OF ACHIEVING THE MAXIMUM DENSITY IN A SERIES OF 3 TO 5 PASSES.

14. PLACE BACKFILL ADJACENT TO WALLS ONLY AFTER CONCRETE HAS REACHED THE MINIMUM FLEXURAL STRENGTH REQUIRED PER ITEM 4035.

CONCRETE MIX GUIDELINES

1. PROVIDE HYDRAULIC CEMENT CONCRETE IN ACCORDANCE WITH ITEM 4035 AND 4055. USE CLASS S FOR ALL STRUCTURAL CONCRETE. PORTLAND CEMENT SHALL CONFORM TO ASTM C 150, TYPE II. FLY ASH SHALL CONFORM TO ASTM C618, CLASS F.

2. PROVIDE AIR ENTRAINMENT FOR MODERATE EXPOSURE IN ACCORDANCE WITH ITEM 4035.

3. WORKABILITY ADMIXTURES MAY BE USED IN ACCORDANCE WITH ITEM 4055, PROVIDED THAT BATCH PROPORTIONS ARE DETERMINED IN THE MANNER DESCRIBED IN THE SPECIFICATIONS AND SUBMITTED TO THE ENGINEER FOR REVIEW.

4. IN ORDER TO MINIMIZE SHRINKAGE CRACKING, MIX DESIGNS SHALL BE DIRECTED TOWARD MINIMIZING WATER/CEMENT (W/C) RATIO WHILE MAINTAINING WORKABILITY. MAXIMUM W/C RATIO FOR ALL MIX DESIGNS SHALL BE IN ACCORDANCE WITH ITEM 4035.

CONCRETE REINFORCEMENT

1. CONCRETE REINFORCING FABRICATOR AND INSTALLER SHALL INCLUDE IN BASE BID AN ALLOWANCE FOR UP TO ONE TON OF MISCELLANEOUS REINFORCING STEEL TO BE INSTALLED IN THE FIELD AS DIRECTED BY THE ENGINEER. ALLOWANCE SHALL COVER ALL COSTS INCLUDING MATERIAL, FABRICATION, TRANSPORTATION AND PLACEMENT. ANY UNUSED PORTION OF ALLOWANCE SHALL BE CREDITED TO THE OWNER AT A UNIT COST PER TON ESTABLISHED DURING BIDDING.

2. IN ACCORDANCE WITH ITEM 4065, STRAIGHT BAR REINFORCING STEEL SHALL BE NEW DEFORMED BILLET STEEL CONFORMING TO ASTM A615 GRADE 60.

3. BAR DETAILING, SUPPORTS, SPACERS AND PLACEMENT SHALL BE IN ACCORDANCE WITH ITEM 4065, "REINFORCING STEEL". WHERE NOT SPECIFICALLY DETAILED IN THE PLANS, BAR DIMENSIONS SHALL SATISFY MINIMUM CLEAR COVER REQUIREMENTS AND STANDARD HOOK REQUIREMENTS OF THE LATEST EDITION OF AMERICAN CONCRETE INSTITUTE BUILDING DETAILS AND DETAILING OF CONCRETE REINFORCEMENT (ACI 315).

4. INTENDED SPLICE LOCATIONS AND LENGTHS ARE DETAILED IN THE DRAWINGS. ANY OTHER SPLICES MUST BE SUBMITTED FOR APPROVAL BY THE ENGINEER OF RECORD.

CONTROLLED LOW STRENGTH MATERIAL

1. CLSM SHALL BE IN ACCORDANCE WITH ITEM 4025.

2. THE UPPER FOUNDATION OF SPLIT-LEVEL FOUNDATION STRUCTURES SHALL BE SUPPORTED BY CLSM (FROM THE BOTTOM OF THE UPPER LEVEL SLAB TO THE BOTTOM OF THE LOWER LEVEL SLAB) AS SHOWN IN THE PLANS.

REV	DATE	BY	DESCRIPTION	APPROVED

STATE OF TEXAS
TIMOTHY J. ROSS
98465
08/01/16

DRAWN BY: TJR
DESIGNED BY: TJR
REVIEWED BY: LCP
PROJECT NO: 140005.000.2

PESC
P.E. Structural Consultants, Inc.
8436 Spicewood Springs Road
Austin, Texas 78759
512.250.5200
www.PEStructural.com
Texas Registered Engineering Firm # F-1475

SMITH TURRIETA ENGINEERING
P.O. BOX 5902, AUSTIN, TEXAS 78763
TELEPHONE: (512) 569-9022
Texas Registration Number, F-16076

CITY OF AUSTIN, TEXAS
TAYLOR LANE 0.1 MDG WASTEWATER TREATMENT PLANT PROJECT

STRUCTURAL GENERAL NOTES

DWG. NO. S-1

\pescx3\d\CURRENT\14\031\Dwg\S-1 GENERAL NOTES Phase II.dwg modified by tmr on Aug 1, 16 9:57 AM

STRUCTURAL GENERAL NOTES - CONTINUED

CONCRETE STRUCTURES

1. ALL CONCRETE WORK SHALL BE IN ACCORDANCE WITH ITEM 410S AND THE LATEST EDITION OF ACI STANDARD "BUILDING CODE REQUIREMENTS FOR REINFORCED CONCRETE" (ACI 318) AND "CODE REQUIREMENTS FOR ENVIRONMENTAL ENGINEERING CONCRETE STRUCTURES" (ACI 350).

2. ALL CONCRETE WORK SHALL BE AS NOTED HEREIN. COORDINATE LOCATIONS OF PENETRATIONS AND EQUIPMENT ATTACHMENTS, SHOWN SCHEMATICALLY IN THE STRUCTURAL DRAWINGS, WITH CIVIL AND MECHANICAL.

3. UNLESS DETAILED OTHERWISE, ALL EXPOSED, FORMED CORNERS SHALL HAVE 3/4" CHAMFERS.

4. VERTICAL FACES OF FOOTINGS, GRADE BEAMS AND WALLS SHALL BE FORMED AND NOT CAST DIRECTLY AGAINST EXCAVATED EARTH.

5. THE FOLLOWING MINIMUM CONCRETE CLEAR COVER SHALL BE PROVIDED FOR REINFORCEMENT:

   CAST AGAINST EARTH
   - ALL BARS ..... 3"

   EXPOSED TO EARTH, LIQUID OR WEATHER
   - BEAMS
     - PRIMARY REINFORCING ..... 2"
     - TIES, STIRRUPS & SPIRALS ..... 1 1/2"
   - WALLS ..... 2"
   - FOOTINGS AND BASE SLABS:
     - FORMED SURFACES ..... 2"
     - TOP SURFACE ..... 2"

6. PROVIDE WATERSTOPS IN ACCORDANCE WITH ITEM 416S. WATERSTOPS SHALL BE FLEXIBLE PVC CONFORMING TO CORPS OF ENGINEERS SPECIFICATION NUMBER CRD-C-572. WATERSTOP SHALL BE 6" BY 3/8" THICK WITH A RIBBED FLAT PROFILE.

7. REMOVAL OF FORMS AND FALSEWORK SHALL BE IN ACCORDANCE WITH ITEM 401S.24.

8. CURING OF CONCRETE SHALL BE IN ACCORDANCE WITH ITEM 410S.23 AND THE RECOMMENDATIONS OF ACI 308 "STANDARD PRACTICE FOR CURING CONCRETE." CURING OPERATIONS SHALL BEGIN AS SOON AS CURING MEMBRANE CAN BE APPLIED WITHOUT DAMAGE TO THE NEWLY FINISHED CONCRETE SURFACE, AND SHALL CONTINUE FOR A MINIMUM OF 7 DAYS.

9. CONCRETE SLABS SHALL HAVE THICKNESS AND SHALL BE REINFORCED AS INDICATED ON THE PLANS. THE CONCRETE SLAB REINFORCING SHALL BE LOCATED WITH 2" CLEARANCE BELOW THE TOP OF THE SLAB.

10. LIMIT EACH FLOOR SLAB PLACEMENT TO AN AREA FOR WHICH THE CONTRACTOR HAS ADEQUATE EQUIPMENT AND PERSONNEL TO PLACE AND PROPERLY FINISH THE CONCRETE. IF CONSTRUCTION JOINTS IN ADDITION TO THOSE SHOWN ON THE PLANS ARE REQUIRED BY THE CONTRACTOR, THEY SHALL BE LOCATED SO THAT THEY COINCIDE WITH THE CONTROL JOINT PATTERN INDICATED ON THE DRAWINGS. SUBMIT ANY JOINT LOCATIONS NOT SHOWN IN THE PLANS TO THE ENGINEER FOR APPROVAL.

11. PROVIDE CONTROL JOINTS AND CONSTRUCTION JOINTS AT LOCATIONS SHOWN ON THE PLANS. THE DEPTH OF CONTROL JOINTS SHALL BE 1/4 OF THE SLAB THICKNESS, UNLESS DETAILED OTHERWISE. SAWCUT JOINTS SHALL BE CUT AS SOON AS POSSIBLE WITHOUT DAMAGE TO THE SLAB. ALL SAWING SHALL BE COMPLETED NO LATER THAN 12 HOURS AFTER THE TIME THE CONCRETE IS PLACED. JOINTS SHALL BE CONSTRUCTED AS DETAILED ON THE DRAWINGS. JOINTS SHALL BE SEALED IN ACCORDANCE WITH ITEM 408S, "CONCRETE JOINT MATERIALS".

12. PROVIDE CORNER SPLICE BARS FOR EACH HORIZONTAL BAR AT EACH FACE OF INTERSECTING GRADE BEAMS. THE CORNER SPLICE BARS SHALL BE EQUAL IN SIZE TO THE LARGER OF THE INTERSECTING BARS AND SHALL LAP A MINIMUM OF 50 BAR DIAMETERS.

13. HORIZONTAL RUNS OF UNDERSLAB PIPES, DUCTS, CONDUITS, ETC. SHALL BE LOCATED WITHIN THE SUBGRADE OR COMPACTED FILL BELOW THE SLAB AND NOT WITHIN THE DEPTH OF THE SLAB. VERTICAL PENETRATION OF ANY RIGID ELEMENT THROUGH THE SLAB SHALL BE ISOLATED FROM THE SLAB BY A 1/2" THICKNESS OF COMPRESSIBLE EXPANSION JOINT MATERIAL AT THE PERIMETER OF THE PENETRATION.

14. HORIZONTAL RUNS OF CONDUIT UP TO 3" O.D. MAY PENETRATE GRADE BEAMS, PROVIDED THEY ARE POSITIONED WITHIN THE MIDDLE THIRD OF THE BEAM DEPTH AND ARE WRAPPED WITH 1/2" THICKNESS OF COMPRESSIBLE MATERIAL. VERTICAL RUNS OF CONDUIT SHALL NOT PASS THROUGH BEAMS.

15. PROVIDE A BROOM FINISH TO THE TOP OF THE SUPPORT PAD SLABS.

16. ANCHOR BOLTS FOR THE FILTRATION UNIT SHALL BE HILTI HIT-Z-R ANCHORS WITH HILTI HIT-HY 200 ADHESIVE (OR APPROVED EQUIVALENT). SEE FILTRATION UNIT MANUFACTURER DRAWINGS FOR ANCHOR SIZE, NUMBER AND LOCATION.

17. ANCHOR BOLTS FOR THE GENERATOR ARE PER THE MANUFACTURER AND SHALL BE SUBMITTED FOR APPROVAL.

18. WALL FORM TIES SHALL UTILIZE WATERSTOP RINGS.

STRUCTURAL STEEL

1. STEEL FABRICATOR AND ERECTOR SHALL INCLUDE IN BASE BID AN ALLOWANCE FOR UP TO ONE HALF TON OF MISCELLANEOUS STRUCTURAL STEEL. (PLATE, PIPE, TUBE, ROLLED SHAPES, ETC.) TO BE INSTALLED IN THE FIELD AS DIRECTED BY THE ENGINEER. ALLOWANCE SHALL COVER ALL COSTS INCLUDING MATERIAL, DETAILING, FABRICATION, TRANSPORTATION AND ERECTION. ANY UNUSED PORTION OF ALLOWANCE SHALL BE CREDITED TO THE OWNER AT A UNIT COST PER TON ESTABLISHED DURING BIDDING.

2. STRUCTURAL STEEL SHALL CONFORM TO THE LATEST EDITION OF THE AISC "SPECIFICATION FOR STRUCTURAL STEEL BUILDINGS".

3. STRUCTURAL STEEL FABRICATION AND ERECTION SHALL CONFORM TO THE LATEST EDITION OF THE AISC "CODE OF STANDARD PRACTICE FOR STEEL BUILDINGS AND BRIDGES."

4. WIDE FLANGE SHAPES SHALL BE "HIGH STRENGTH STRUCTURAL STEEL" IN ACCORDANCE WITH ITEM 720S, "METAL FOR STRUCTURES".

5. PLATES, ANGLES AND CHANNELS SHALL BE "STRUCTURAL STEEL" IN ACCORDANCE WITH ITEM 720S, "METAL FOR STRUCTURES".

6. HOLLOW STRUCTURAL SECTIONS (HSS) SHALL CONFORM TO ASTM A500 GRADE B (FY = 42 KSI).

7. ALL STEEL SHALL BE GALVANIZED IN ACCORDANCE WITH ITEM 722S, "PROTECTIVE COATINGS"

8. TOP OF PURLIN (T.O. PURLIN) ELEVATIONS NOTED ON THE PLAN ARE TO THE TOP OF THE STEEL MEMBER AT THE MEMBER CENTERLINE.

9. COLUMN ANCHOR BOLTS SHALL BE GALVANIZED THREADED HEAVY HEX HEAD BOLTS CONFORMING TO ASTM F1554 (GR 36).

10. GROUT BELOW BASE PLATES SHALL BE A PRE-MIXED NON-SHRINK MATERIAL WITH A MINIMUM 28 DAY COMPRESSIVE STRENGTH OF 5,000 PSI.

11. CONTRACTOR SHALL PROVIDE TEMPORARY CONSTRUCTION BRACING AS REQUIRED TO ENSURE STABILITY.

12. FABRICATOR SHALL PROVIDE VENT AND DRAIN HOLES AS NECESSARY FOR ADEQUATE FLOW OF GALVANIZING MATERIAL AND ENSURE A COMPLETE COATING OF ALL STEEL ASSEMBLIES INSIDE AND OUT. ALL EXTERIOR VENT AND DRAIN HOLES SHALL BE CLOSED AFTER GALVANIZING USING DRIVE CAPS OR PLUGS. PLUGS SHALL BE FILED OFF FLUSH WITH SURROUNDING STEEL SURFACE.

13. AFTER ERECTION IS COMPLETE, AREAS OF HOT-DIP GALVANIZED MEMBERS WHERE GALVANIZING HAS BEEN HELD BACK FOR FIELD WELDING AND ANYWHERE GALVANIZING HAS BEEN ABRADED OR CHIPPED SHALL BE TOUCHED UP WITH TWO COATS OF COLD GALVANIZING COMPOUND TO A MINIMUM DRY FILM THICKNESS OF 2.0 MILS.

STRUCTURAL STEEL CONNECTIONS

1. ALL SHOP FABRICATION AND WELDING SHALL CONFORM TO ITEM 721S, "STEEL STRUCTURES" AND TXDOT BULLETIN C-5.

2. ALL WELDED CONNECTIONS ARE INTENDED TO BE PERFORMED IN THE SHOP. IN THE EVENT THAT A FIELD WELD IS NEEDED, THE CONTRACTOR SHALL OBTAIN PRIOR APPROVAL FROM THE ENGINEER.

3. FIELD WELDED CONNECTIONS SHALL BE IN ACCORDANCE WITH ITEM 723, "STRUCTURAL WELDING".

4. BOLTS AND BOLTED CONNECTIONS SHALL BE IN ACCORDANCE WITH ITEM 721S, "STEEL STRUCTURES".

5. ALL STEEL BOLTS, NUTS, AND WASHERS SHALL BE GALVANIZED IN ACCORDANCE WITH ITEM 720S, "METAL FOR STRUCTURES".

6. BOLT HOLES SHALL BE STANDARD SIZE UNLESS OTHERWISE NOTED.

7. BOLTED CONNECTIONS SHALL BE AISC "TYPE 2, SIMPLE FRAMING" CONNECTIONS AND SHALL BE SNUG-TIGHT AS SPECIFIED BY AISC.

8. WIDE-FLANGE BEAM STIFFENER PLATES SHALL BE PROVIDED AT EACH LOCATION INDICATED ON THE DETAILS AND AT EVERY LOCATION WHERE A BEAM BEARS ON A COLUMN CAP PLATE.

9. PROVIDE FILLET WELDS AT ALL CONTACT JOINTS BETWEEN STEEL MEMBERS SUFFICIENT TO DEVELOP THE ALLOWABLE TENSILE STRENGTH OF THE SMALLER MEMBER AT THE JOINT, UNLESS DETAILED OTHERWISE ON THE DRAWINGS.

METAL ROOF DECK

1. THE DECK AND ITS INSTALLATION SHALL CONFORM TO THE LATEST EDITION OF THE STEEL DECK INSTITUTE'S "SPECIFICATIONS AND COMMENTARY FOR STEEL ROOF DECK," UNLESS NOTED OTHERWISE.

2. ROOF DECK SHALL BE 20 GAGE TYPE "1.5F" ROOF DECK WITH A 1 1/2" DEPTH AND A 6" RIB SPACING. THE DECK STEEL SHALL CONFORM TO ASTM A653, STRUCTURAL QUALITY AND SHALL BE GALVANIZED WITH A G-90 COATING CLASS.

3. STEEL FOR DECK AND ACCESSORIES SHALL BE ASTM A653 STRUCTURAL QUALITY, GRADE 33 OR HIGHER.

4. DECK CONNECTIONS SHALL USE NEOPRENE WASHERS AND SHALL BE AS FOLLOWS, UNLESS NOTED OTHERWISE:

   A. SIDE LAPS: #10 TEK SCREWS @ 12" O.C. BETWEEN SUPPORTS

   B. SUPPORTS: #10 TEK SCREWS AT A 36/4 PATTERN (12" O.C.)

4. MINIMUM BEARING LENGTH OF DECK OVER SUPPORTING MEMBER SHALL BE 1 1/2".

5. DECK SHALL BE CONTINUOUS OVER TWO OR MORE SPANS WITH FLUSH, TELESCOPED OR NESTED 2" LAPS AT ENDS AND INTERLOCKING OR NESTED SIDE LAPS, UNLESS OTHERWISE INDICATED.

REQUIRED TESTING / SPECIAL INSPECTIONS

1. OWNER SHALL EMPLOY ONE OR MORE SPECIAL INSPECTORS TO PROVIDE INSPECTIONS DURING CONSTRUCTION ON THE TYPES OF WORK LISTED BELOW. THE SPECIAL INSPECTOR SHALL BE A QUALIFIED PERSON WHO SHALL DEMONSTRATE COMPETENCE, TO THE SATISFACTION OF THE BUILDING OFFICIAL OR OWNER, FOR INSPECTION OF THE PARTICULAR TYPE OF CONSTRUCTION OR OPERATION.

2. CHAMBERS SHALL BE LEAK TESTED FOR A MINIMUM OF 48 HOURS PRIOR TO BACKFILLING. LEAK TESTING SHALL INCLUDE FILLING EACH CHAMBER TO TOP OF WALL WITH CLEAN WATER AND MEASURING WATER LEVELS THERE SHALL BE NO LEAKAGE FROM THE CHAMBER. EACH CHAMBER SHALL BE TESTED INDEPENDENTLY OF THE OTHER CHAMBERS.

3. STRUCTURAL STEEL
   - 3.1. SPECIAL INSPECTION OF STRUCTURAL STEEL SHALL BE IN ACCORDANCE WITH THE QUALITY ASSURANCE INSPECTION REQUIREMENTS OF AISC 360.

4. STEEL CONSTRUCTION OTHER THAN STRUCTURAL STEEL
   - 4.1. COLD-FORMED STEEL DECK:
     - PERIODIC VERIFICATION OF IDENTIFICATION MARKINGS TO CONFORM TO ASTM STANDARDS SPECIFIED IN THESE DOCUMENTS IN ACCORDANCE WITH IBC TABLE 1705.2.2 ITEM 1.A.
     - PERIODIC VERIFICATION OF MANUFACTURER'S CERTIFIED TEST REPORTS IN ACCORDANCE WITH IBC TABLE 1705.2.2 ITEM 1.B.

5. CONCRETE CONSTRUCTION
   - 5.1. PERIODIC INSPECTION OF REINFORCING STEEL AND PLACEMENT IN ACCORDANCE WITH IBC 2012 TABLE 1705.3, TASK 1.
   - 5.2. PERIODIC VERIFICATION OF USE OF REQUIRED CONCRETE MIX IN ACCORDANCE WITH IBC 2012 TABLE 1705.3, TASK 5.
   - 5.3. PERIODIC INSPECTION OF ANCHORS POST-INSTALLED IN HARDENED CONCRETE MEMBERS (FOR ANCHORS SPECIFIED BY WWTP DESIGNER).
   - 5.4. CONTINUOUS FABRICATION OF SPECIMENS FOR TESTING IN ACCORDANCE WITH IBC 2012 TABLE 1705.3, TASK 6.
   - 5.5. CONTINUOUS INSPECTION OF CONCRETE PLACEMENT FOR PROPER APPLICATION TECHNIQUES IN ACCORDANCE WITH IBC 2012 TABLE 1705.3, TASK 7.
   - 5.6. PERIODIC INSPECTION FOR MAINTENANCE OF CURING TEMPERATURE AND TECHNIQUES IN ACCORDANCE WITH IBC 2012 TABLE 1705.3, TASK 8.
   - 5.7. PERIODIC INSPECTION OF FORMWORK FOR SHAPE, LOCATION AND DIMENSIONS IN ACCORDANCE WITH IBC 2012 TABLE 1705.3, TASK 12.

6. SOILS
   - 6.1. PERIODIC VERIFICATION MATERIALS BELOW SHALLOW FOUNDATIONS ARE ADEQUATE TO ACHIEVE DESIGN BEARING CAPACITY.
   - 6.2. PERIODIC VERIFICATION EXCAVATIONS ARE EXTENDED TO PROPER DEPTH AND HAVE REACHED PROPER MATERIAL.
   - 6.3. PERIODIC CLASSIFICATION AND TESTING OF COMPACTED FILL MATERIALS.
   - 6.4. CONTINUOUS VERIFICATION OF PROPER MATERIALS, DENSITIES AND LIFT THICKNESSES DURING PLACEMENT AND COMPACTION OF COMPACTED FILL.
   - 6.5. PRIOR TO PLACEMENT OF COMPACTED FILL, PERIODIC OBSERVATION OF SUBGRADE AND VERIFICATION THAT SITE IS PROPERLY PREPARED.

7. DESIGN STRENGTH OF MATERIALS
   - 7.1. MATERIALS SHALL BE SHOWN TO CONFORM TO APPLICABLE STANDARDS IN ACCORDANCE WITH IBC 2012 SECTION 1706.1.

REQUIRED SUBMITTALS

1. PRODUCT DATA: SUBMIT MANUFACTURER'S PRODUCT DATA WITH APPLICATION AND INSTALLATION INSTRUCTIONS FOR PROPRIETARY MATERIALS AND ITEMS, INCLUDING REINFORCEMENT AND FORMING ACCESSORIES, ADMIXTURES, PATCHING COMPOUNDS, WATERSTOPS, JOINT SYSTEMS, ADHESIVE SYSTEMS, MORTAR REPAIR PRODUCTS AND CURING COMPOUNDS.

2. SHOP DRAWINGS:
   - 2.1. SUBMIT SHOP DRAWINGS FOR FABRICATION, BENDING AND PLACEMENT OF CONCRETE REINFORCEMENT. COMPLY WITH ACI "MANUAL OF STANDARD PRACTICE FOR DETAILING REINFORCED CONCRETE STRUCTURES" SHOWING BAR SCHEDULES, STIRRUP SPACING, DIAGRAMS OF BENT BARS, AND ARRANGEMENT OF CONCRETE REINFORCEMENT.
   - 2.2. SUBMIT STRUCTURAL STEEL SHOP DRAWINGS PREPARED UNDER THE SUPERVISION OF A REGISTERED PROFESSIONAL ENGINEER, INCLUDING COMPLETE DETAILS AND SCHEDULES FOR FABRICATION AND ASSEMBLY OF STRUCTURAL STEEL MEMBERS INCLUDING DETAILS OF CUTS, CONNECTIONS, CAMBER, HOLES AND OTHER PERTINENT DATA. INDICATE WELDS BY STANDARD AWS SYMBOLS, AND SHOW SIZE, LENGTH AND TYPE OF EACH WELD. PROVIDE SETTING DRAWINGS, TEMPLATES AND DIRECTIONS FOR INSTALLATION OF ANCHOR BOLTS AND OTHER ANCHORAGES TO BE INSTALLED BY OTHERS.
   - 2.3. SUBMIT DETAILED DRAWINGS SHOWING LAYOUT AND TYPES OF DECK PANELS, ANCHORAGE DETAILS, CONDITIONS REQUIRING CLOSURE PANELS, CANT STRIPS, CUT OPENINGS, SPECIAL JOINTING OR OTHER ACCESSORIES.

3. CONCRETE MIX DESIGN: SEE CONCRETE MIX GUIDELINES SECTION FOR ADDITIONAL INFORMATION.

4. SPECIAL INSPECTION REPORTS: FOR EACH SPECIAL INSPECTION LISTED ABOVE, SUBMIT ONE (1) COPY OF REPORTS TO THE PRIME ENGINEER, ONE (1) COPY TO STRUCTURAL ENGINEER AND ONE (1) COPY TO THE OWNER.

REV	DATE	BY	DESCRIPTION	APPROVED

STATE OF TEXAS
TIMOTHY J. ROSS
98465
LICENSED
08/01/16

DRAWN BY: TJR
DESIGNED BY: TJR
REVIEWED BY: LCP
PROJECT NO: 140005.000.2

PESC
P.E. Structural Consultants, Inc.
8436 Spicewood Springs Road
Austin, Texas 78759
512.250.5200
www.PEStructural.com
Texas Registered Engineering Firm # F-1475

SMITH TURRIETA ENGINEERING
P.O. BOX 5902, AUSTIN, TEXAS 78763
TELEPHONE: (512) 569-9022
Texas Registration Number, F-16076

CITY OF AUSTIN, TEXAS
TAYLOR LANE 0.1 MDG WASTEWATER TREATMENT PLANT PROJECT

STRUCTURAL GENERAL NOTES

DWG. NO. S-2

SHEET 56 OF 79

\\pesrv3\d\CURRENT\14\031\Dwg\S-2 GENERAL NOTES Phase II.dwg modified by timr on Aug 1, 16 9:58 AM

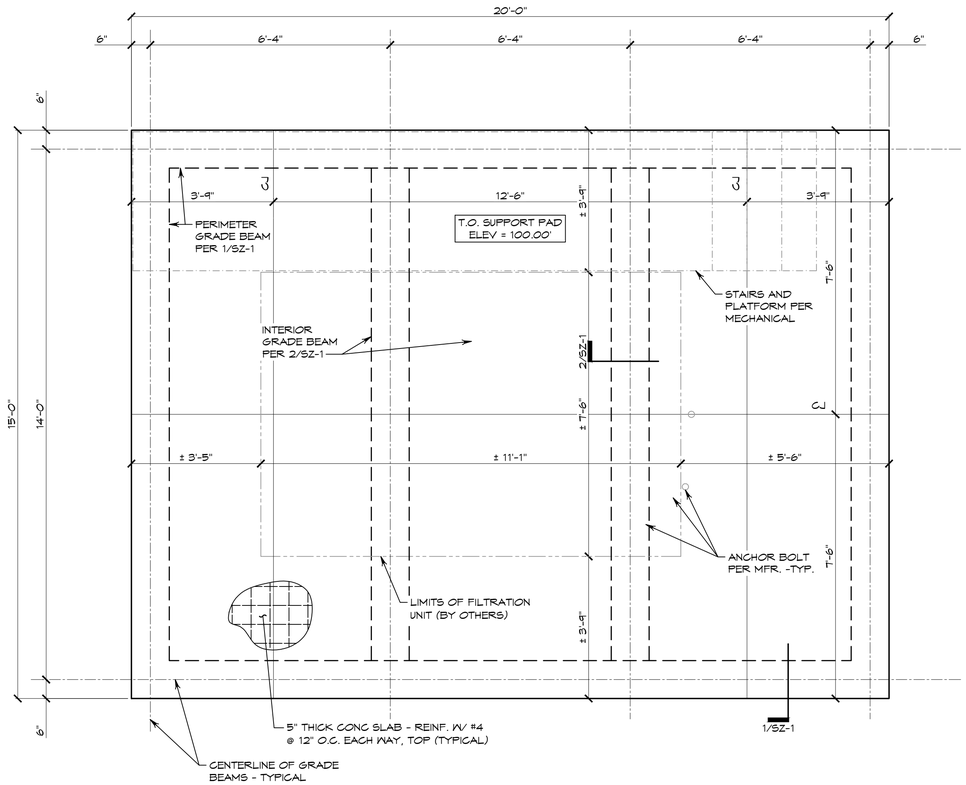

1 FILTRATION SYSTEM SUPPORT PAD PLAN

1/2" = 1'-0"

PLAN NORTH

FILTRATION SYSTEM PAD PLAN NOTES:

1. LISTED ELEVATIONS ARE TO T.O. CONCRETE SLAB ELEVATION 100.00' = 440.50' ACTUAL - VERIFY W/ CIVIL.
2. SEE STRUCTURAL GENERAL NOTES FOR SUBGRADE PREPARATION, CONCRETE, AND REINFORCING STEEL REQUIREMENTS.
3. VERIFY ALL DIMENSIONS WITH CIVIL / MECH'L DRAWINGS AND APPROVED FILTRATION UNIT.
4. SEE CIVIL FOR SITE LOCATION.
5. PROVIDE ANCHOR BOLTS PER STRUCTURAL GENERAL NOTES. LOCATIONS SHOWN ARE SCHEMATIC. SEE APPROVED FILTRATION UNIT DRAWINGS FOR DETAILED DIMENSIONS.
6. "CJ" INDICATES CONTROL JOINT PER 3/SZ-1.
7. SEE SHEET SZ-1 FOR STANDARD STRUCTURAL DETAILS.

GENERATOR PAD PLAN NOTES:

1. LISTED ELEVATIONS ARE TO T.O. CONCRETE SLAB ELEVATION 100.00' = 438.50' ACTUAL - VERIFY W/ CIVIL.
2. SEE STRUCTURAL GENERAL NOTES FOR SUBGRADE PREPARATION, CONCRETE, AND REINFORCING STEEL REQUIREMENTS.
3. VERIFY ALL DIMENSIONS WITH CIVIL / MECH'L DRAWINGS AND APPROVED GENERATOR.
4. SEE CIVIL FOR SITE LOCATION.
5. COORDINATE ANCHOR BOLT LOCATIONS WITH APPROVED GENERATOR MANUFACTURER AND SUBMIT FOR APPROVAL.
6. SEE SHEET SZ-1 FOR STANDARD STRUCTURAL DETAILS.

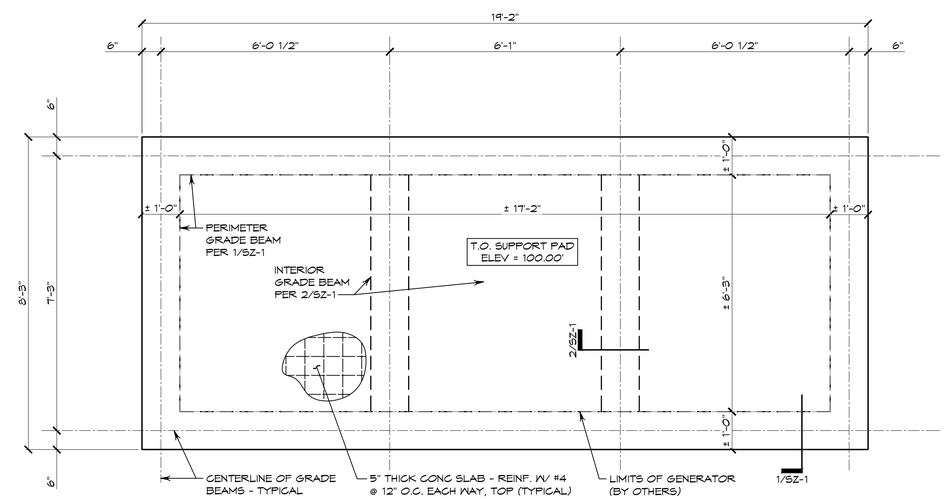

2 GENERATOR SUPPORT PAD PLAN

1/2" = 1'-0"

PLAN NORTH

REV	DATE	BY	DESCRIPTION	APPROVED

VERIFY SCALES

0 1"

IF BAR DOES NOT MEASURE ONE INCH ON THIS SHEET, ADJUST ACCORDINGLY.

STATE OF TEXAS
TIMOTHY J. ROSS
98465
LICENSED PROFESSIONAL ENGINEER
08/01/16

DRAWN BY: TJR
DESIGNED BY: WFS
REVIEWED BY: LCP
PROJECT NO: 140005.000.2

PESC
P.E. Structural Consultants, Inc.
8436 Spicewood Springs Road
Austin, Texas 78759
512.250.5200
www.PEStructural.com
Texas Registered Engineering Firm # F-1475

SMITH TURRIETA ENGINEERING
P.O. BOX 5902, AUSTIN, TEXAS 78763
TELEPHONE: (512) 569-9022
Texas Registration Number, F-16076

CITY OF AUSTIN, TEXAS
TAYLOR LANE 0.1 MDG WASTEWATER TREATMENT PLANT PROJECT

FILTRATION SYSTEM & GENERATOR SUPPORT PAD STRUCTURAL PLANS

DWG. NO. S-3

\\pesvr3\d\CURRENT\14\031\Dwg\S-3 FILTER & GENERATOR PLAN.dwg modified by timr on Aug 1, 16 9:59 AM

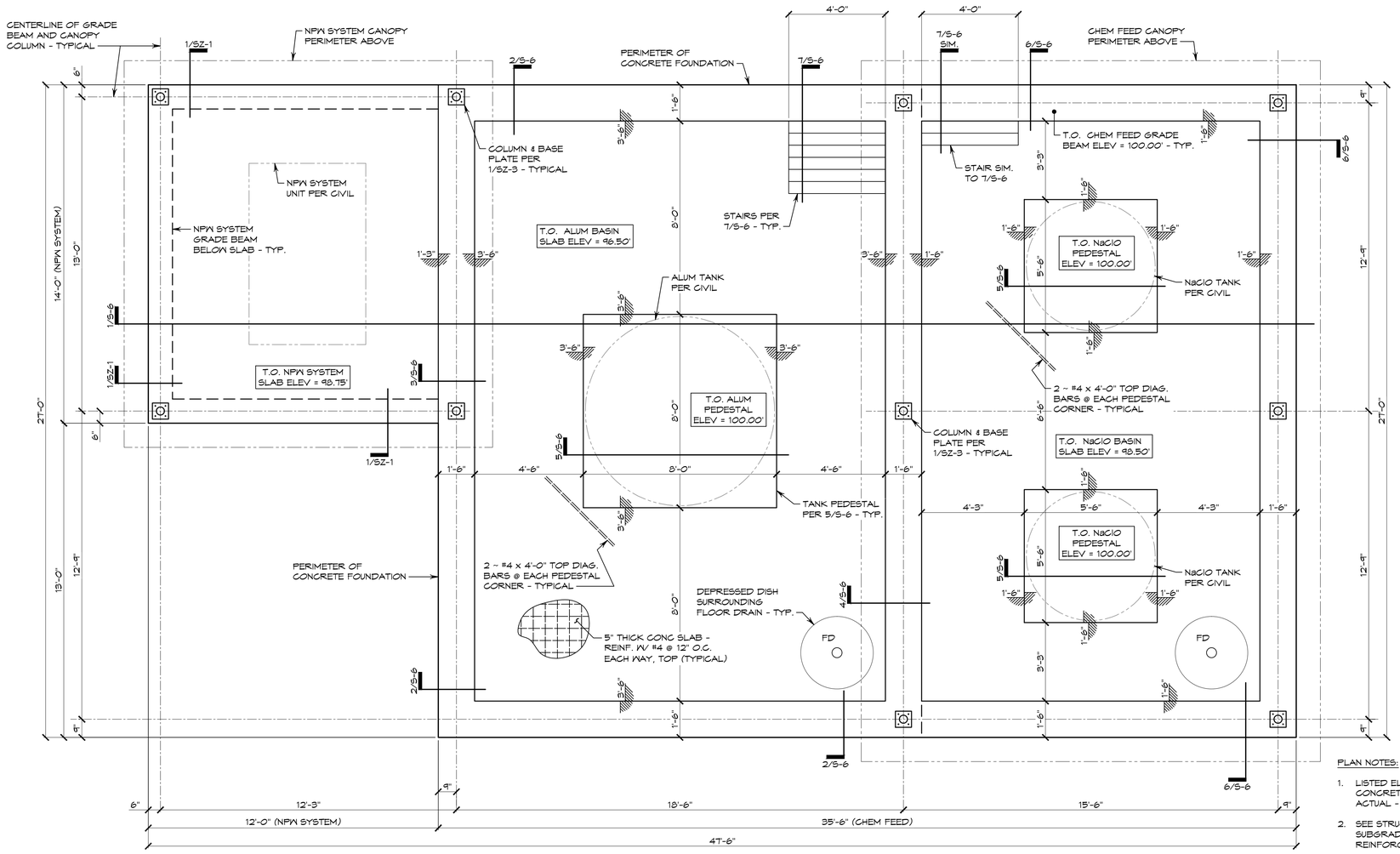

1 CHEMICAL BUILDING & NPW SYSTEM FOUNDATION PLAN

3/8" = 1'-0"

PLAN NORTH

PLAN NOTES:

1. LISTED ELEVATIONS ARE RELATIVE TO T.O. CONCRETE ELEVATION 100.00' = 438.50' ACTUAL - VERIFY W/ CIVIL.
2. SEE STRUCTURAL GENERAL NOTES FOR SUBGRADE PREPARATION, CONCRETE, AND REINFORCING STEEL REQUIREMENTS.
3. VERIFY ALL DIMENSIONS WITH CIVIL DRAWINGS.
4. SEE CIVIL FOR SITE LOCATION.
5. "FD" INDICATES FLOOR DRAIN PER MECH'L AND DETAIL 6/SZ-1.
6. T.O. BASIN SLAB ELEVATIONS SHOWN ARE MAXIMUMS. BASIN SLABS SHALL BE SLOPED TOWARDS FLOOR DRAIN AT A MINIMUM OF 1/4" PER FOOT.
7. SEE SHEET SZ-1 FOR STANDARD STRUCTURAL DETAILS.

REV	DATE	BY	DESCRIPTION	APPROVED

VERIFY SCALES

0 1"

IF BAR DOES NOT MEASURE ONE INCH ON THIS SHEET, ADJUST ACCORDINGLY.

STATE OF TEXAS
TIMOTHY J. ROSS
98465
LICENSED
PROFESSIONAL ENGINEER
08/17/2016

DRAWN BY: TJR
DESIGNED BY: WFS
REVIEWED BY: LCP
PROJECT NO: 140005.000.2

PESC
P.E. Structural Consultants, Inc.
8436 Spicewood Springs Road
Austin, Texas 78759
512.250.5200
www.PEStructural.com
Texas Registered Engineering Firm # F-1475

SMITH TURRIETA ENGINEERING
P.O. BOX 5902, AUSTIN, TEXAS 78763
TELEPHONE: (512) 569-9022
Texas Registration Number, F-16076

CITY OF AUSTIN, TEXAS
TAYLOR LANE 0.1 MDG WASTEWATER TREATMENT PLANT PROJECT

CHEMICAL BUILDING & NPW SYSTEM SUPPORT PAD STRUCTURAL PLAN

DWG. NO. S-4

SHEET 58 OF 79

\\pescv3\d\CURRENT\14\031\Dwg\S-4 CHEMICAL BUILDING & NPW SYSTEM FNDN PLAN.dwg modified by timr on Aug 1, 16 9:59 AM

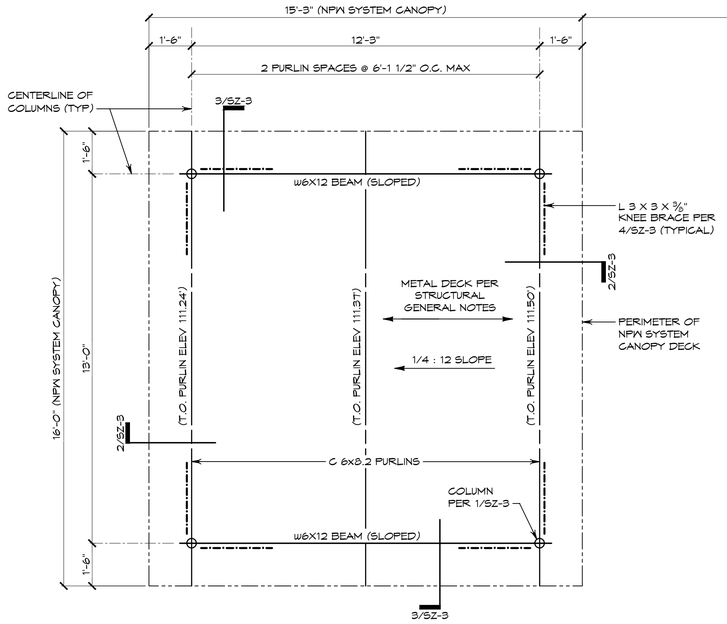

15'-3"

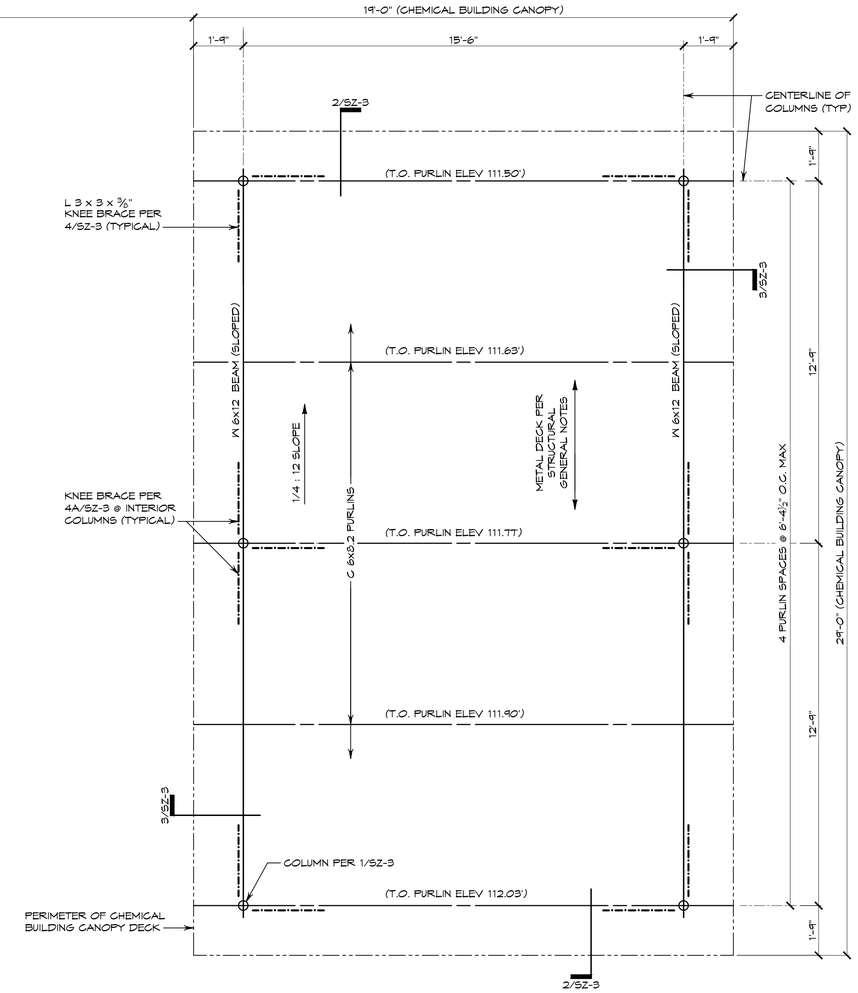

CANOPY FRAMING NOTES:

1. LISTED ELEVATIONS ARE RELATIVE TO T.O. SLAB ELEVATION 100.00' = 438.50' ACTUAL - VERIFY W/ CIVIL.
2. T.O. PURLIN ELEVATIONS ARE TOP OF PURLIN AT CENTERLINE OF COLUMN.
3. SEE SHEET SZ-3 FOR TYPICAL STEEL FRAMING DETAILS.

1 CHEMICAL BUILDING & NPW SYSTEM CANOPY FRAMING PLAN

3/8" = 1'-0"

PLAN NORTH

REV	DATE	BY	DESCRIPTION	APPROVED

VERIFY SCALES

0 1"

IF BAR DOES NOT MEASURE ONE INCH ON THIS SHEET, ADJUST ACCORDINGLY.

STATE OF TEXAS
TIMOTHY J. ROSS
98465
08/01/16

DRAWN BY: RAB
DESIGNED BY: KSD
REVIEWED BY: LCP
PROJECT NO: 140005.000.2

PESC
P.E. Structural Consultants, Inc.
8436 Spicewood Springs Road
Austin, Texas 78759
512.250.5200
www.PEStructural.com
Texas Registered Engineering Firm # F-1475

SMITH TURRIETA ENGINEERING
P.O. BOX 5902, AUSTIN, TEXAS 78763
TELEPHONE: (512) 569-9022
Texas Registration Number, F-16076

CITY OF AUSTIN, TEXAS
TAYLOR LANE 0.1 MDG WASTEWATER TREATMENT PLANT PROJECT

CHEMICAL BUILDING & NPW SYSTEM CANOPY FRAMING PLAN

DWG. NO. S-5

SHEET 59 OF 79

\\pescv3\d\CURRENT\14\031\Dwg\S-5 CHEMICAL BUILDING & NPW SYSTEM FRAMING PLAN.dwg modified by timr on Aug 1, 16 10:00 AM

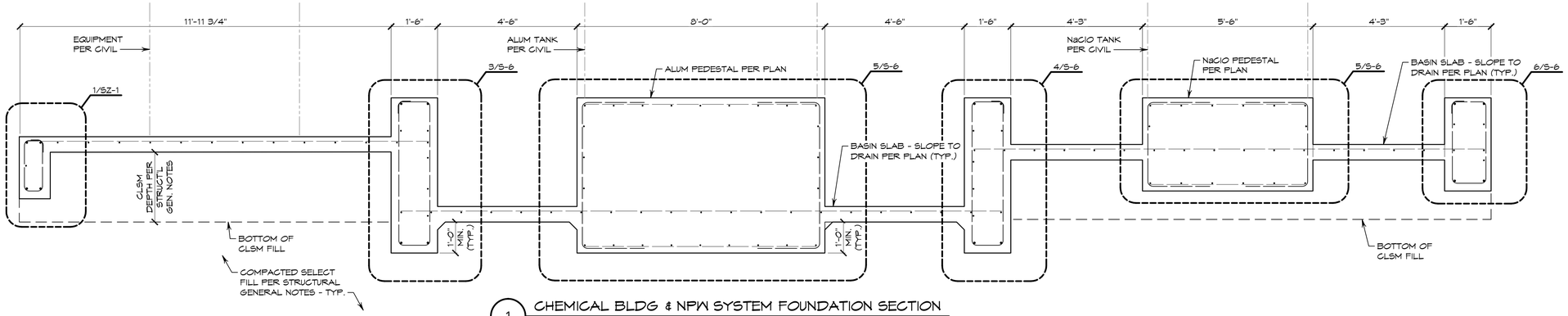

1 CHEMICAL BLDG & NPW SYSTEM FOUNDATION SECTION

1/2" = 1'-0"

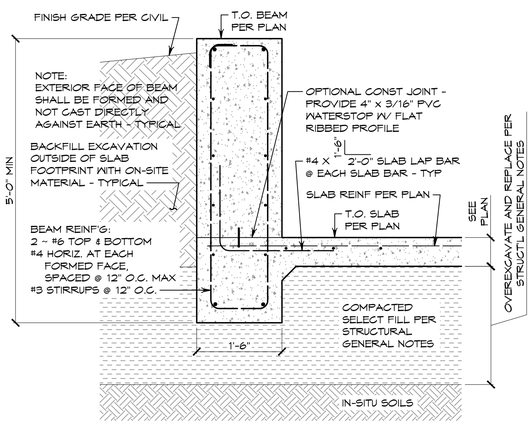

2 ALUM BASIN PERIMETER BEAM

3/4" = 1'-0"

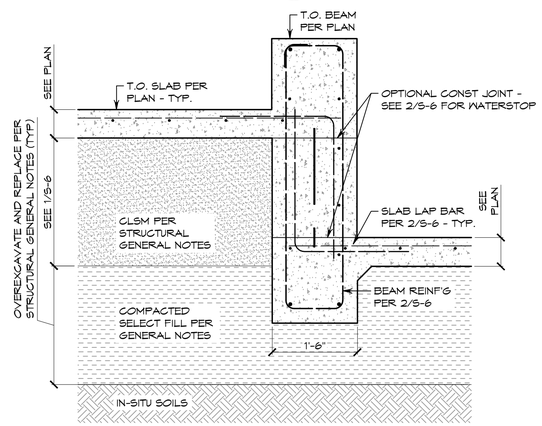

3 NPWS SLAB TO ALUM BASIN TRANSITION

3/4" = 1'-0"

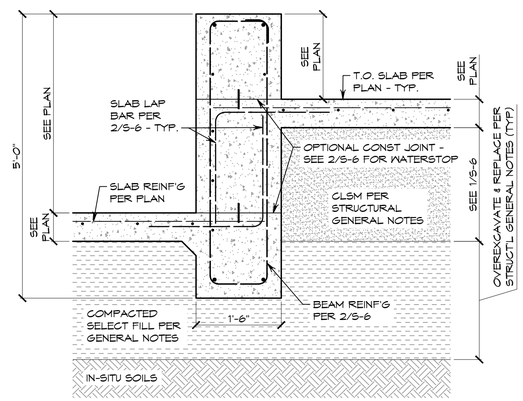

4 ALUM BASIN TO NaClO BASIN TRANSITION

3/4" = 1'-0"

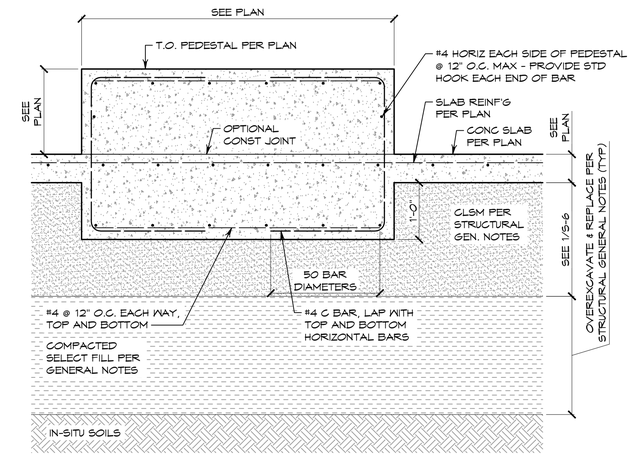

5 TYPICAL PEDESTAL DETAIL

3/4" = 1'-0"

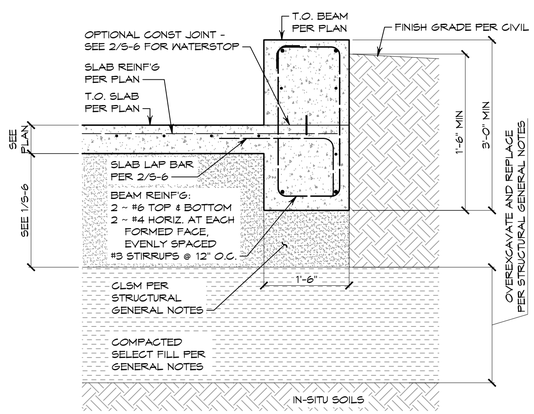

6 NaClO BASIN PERIMETER BEAM

3/4" = 1'-0"

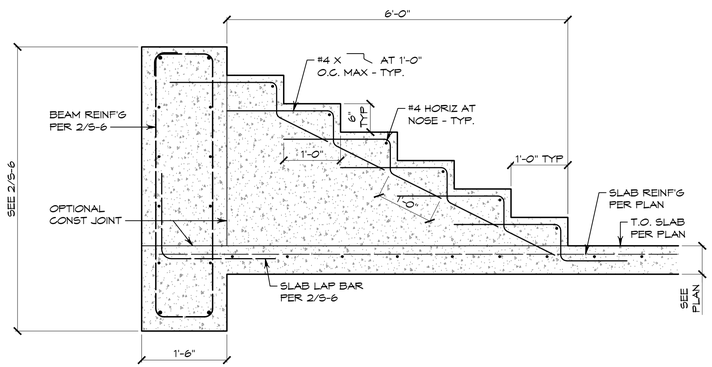

7 TYPICAL STAIR SECTION

3/4" = 1'-0"

REV	DATE	BY	DESCRIPTION	APPROVED

VERIFY SCALES

0 1"

IF BAR DOES NOT MEASURE ONE INCH ON THIS SHEET, ADJUST ACCORDINGLY.

STATE OF TEXAS
TIMOTHY J. ROSS
98465
LICENSED PROFESSIONAL ENGINEER
06/17/2016

DRAWN BY: WFS
DESIGNED BY: WFS
REVIEWED BY: LCP
PROJECT NO: 140005.000.2

PESC
P.E. Structural Consultants, Inc.
8436 Spicewood Springs Road
Austin, Texas 78759
512.250.5200
www.PEStructural.com
Texas Registered Engineering Firm # F-1475

SMITH TURRIETA ENGINEERING
P.O. BOX 5902, AUSTIN, TEXAS 78763
TELEPHONE: (512) 569-9022
Texas Registration Number, F-16076

CITY OF AUSTIN, TEXAS
TAYLOR LANE 0.1 MDG WASTEWATER TREATMENT PLANT PROJECT

CHEMICAL BUILDING & NPW SYSTEM SUPPORT PAD DETAILS

DWG. NO. S-6

SHEET 60 OF 79

\\pesco-3\d\CURRENT\14\031\Dwg\S-6 CHEMICAL BUILDING & NPW SYSTEM SUPPORT PAD DETAILS.dwg modified by timr on Aug 17, 16 4:48 PM

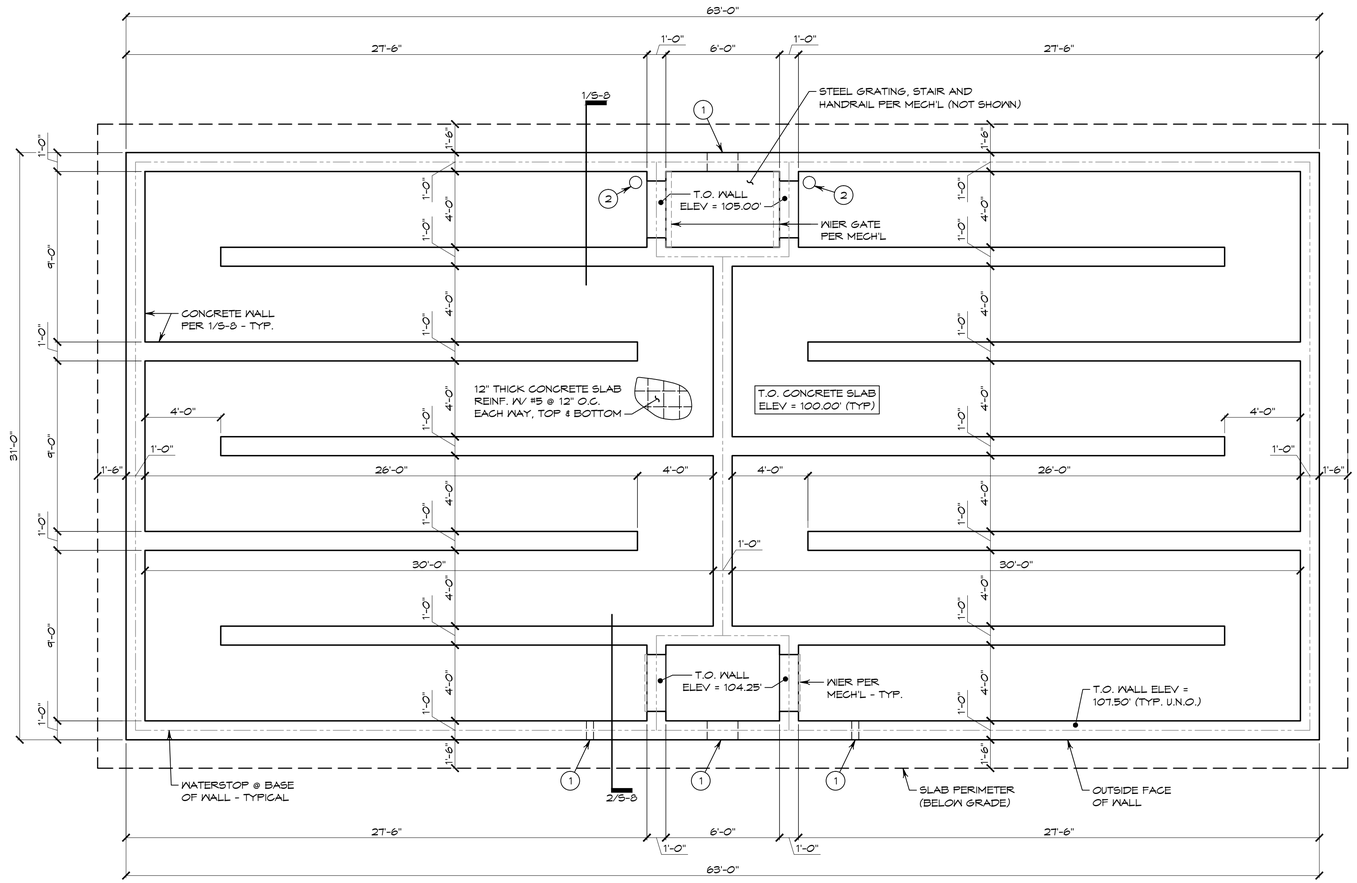

PLAN NORTH

1 CHLORINE CONTACT BASIN STRUCTURAL PLAN

1/4" = 1'-0"

(1) WALL PENETRATION PER MECH'L

(2) SLAB PENETRATION PER MECH'L

SPECIAL WATERSTOP NOTE:

THIS STRUCTURE IS REQUIRED TO BE WATERTIGHT. ALL JOINTS IN CONCRETE SHALL UTILIZE FLEXIBLE PVC WATERSTOPS PER THE SPECIFICATIONS. SEE PLAN FOR WATERSTOP LOCATIONS AT WALL BASE.

PLAN NOTES:

1. LISTED ELEVATIONS ARE RELATIVE TO T.O. SLAB ELEV. 100.00' = 493.25' ACTUAL - VERIFY W/ CIVIL.
2. SEE STRUCTURAL GENERAL NOTES FOR SUBGRADE PREPARATION, CONCRETE AND REINFORCING REQUIREMENTS.
3. VERIFY AND ALL DIMENSIONS, ELEVATIONS, AND DROPS WITH MECH'L PLANS.
4. SEE CIVIL FOR SITE LOCATION.
5. LOCATIONS OF PENETRATIONS ARE SHOWN SCHEMATICALLY. SEE MECH'L FOR ACTUAL LOCATIONS AND SIZES.
6. SEE MECH'L DRAWINGS FOR INFORMATION ON POST-INSTALLED ANCHORS FOR ATTACHMENT OF EQUIPMENT.
7. SEE SHEET SZ-2 FOR STANDARD STRUCTURAL DETAILS.

REV	DATE	BY	DESCRIPTION	APPROVED

VERIFY SCALES

0 1"

IF BAR DOES NOT MEASURE ONE INCH ON THIS SHEET, ADJUST ACCORDINGLY.

STATE OF TEXAS
TIMOTHY J. ROSS
98465
LICENSED PROFESSIONAL ENGINEER
08/01/16

DRAWN BY: AE
DESIGNED BY: EWB
REVIEWED BY: LCP
PROJECT NO: 140005.000.2

PESC
P.E. Structural Consultants, Inc.
8436 Spicewood Springs Road
Austin, Texas 78759
512.250.5200
www.PEStructural.com
Texas Registered Engineering Firm # F-1475

SMITH TURRIETA ENGINEERING
P.O. BOX 5902, AUSTIN, TEXAS 78763
TELEPHONE: (512) 569-9022
Texas Registration Number, F-16076

CITY OF AUSTIN, TEXAS
TAYLOR LANE 0.1 MDG WASTEWATER TREATMENT PLANT PROJECT

CHLORINE CONTACT BASIN STRUCTURAL PLAN

DWG. NO. S-7

\pescv3\pj\CURRENT\14\031\Dwg\S-7 CHLORINE BASIN PLAN.dwg modified by limr on Aug 1, 16 10:06 AM

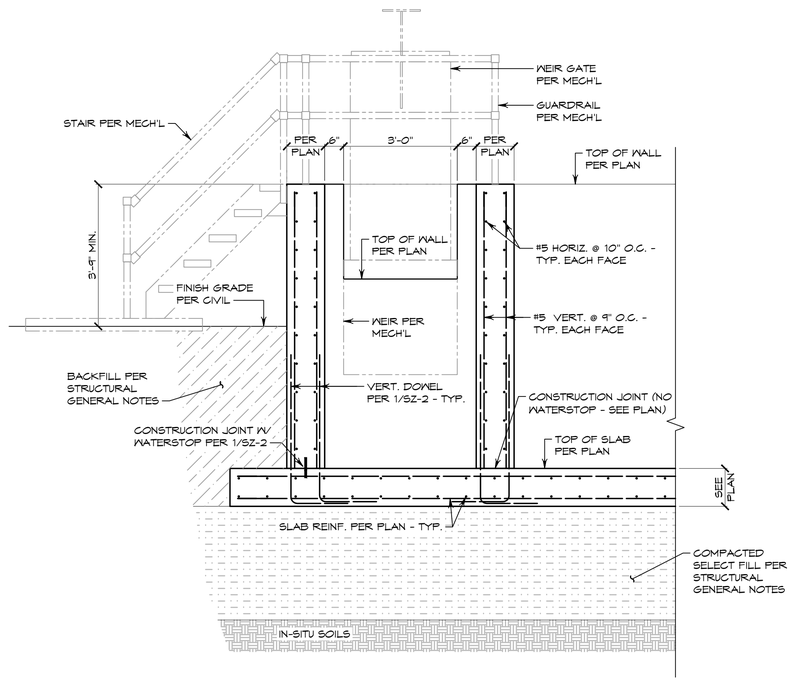

1 CHLORINE CONTACT BASIN SECTION

1/2" = 1'-0"

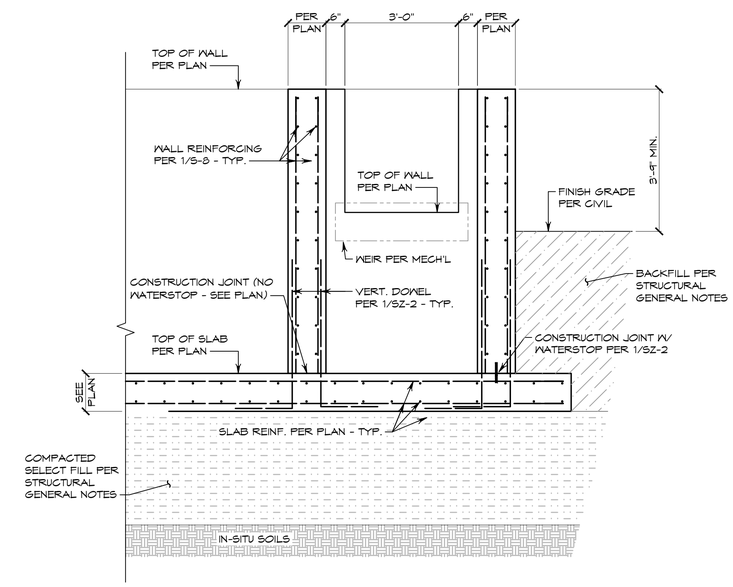

2 CHLORINE CONTACT BASIN SECTION

1/2" = 1'-0"

REV	DATE	BY	DESCRIPTION	APPROVED

VERIFY SCALES

0 1"

IF BAR DOES NOT MEASURE ONE INCH ON THIS SHEET, ADJUST ACCORDINGLY.

STATE OF TEXAS
TIMOTHY J. ROSS
98465
LICENSED PROFESSIONAL ENGINEER
08/01/16

DRAWN BY: AE

DESIGNED BY: EWB

REVIEWED BY: LCP

PROJECT NO: 140005.000.2

PESC
P.E. Structural Consultants, Inc.
8436 Spicewood Springs Road
Austin, Texas 78759
512.250.5200
www.PEStructural.com
Texas Registered Engineering Firm # F-1475

SMITH TURRIETA ENGINEERING
P.O. BOX 5902, AUSTIN, TEXAS 78763
TELEPHONE: (512) 569-9022
Texas Registration Number, F-16076

CITY OF AUSTIN, TEXAS

TAYLOR LANE 0.1 MDG WASTEWATER TREATMENT PLANT PROJECT

CHLORINE CONTACT BASIN STRUCTURAL DETAILS

DWG. NO.

S-8

SHEET 62 OF 79

\\pesvr3\d\CURRENT\14\031\Dwg\S-8 CHLORINE BASIN DETAILS.dwg modified by tjmr on Aug 1, 16 10:06 AM

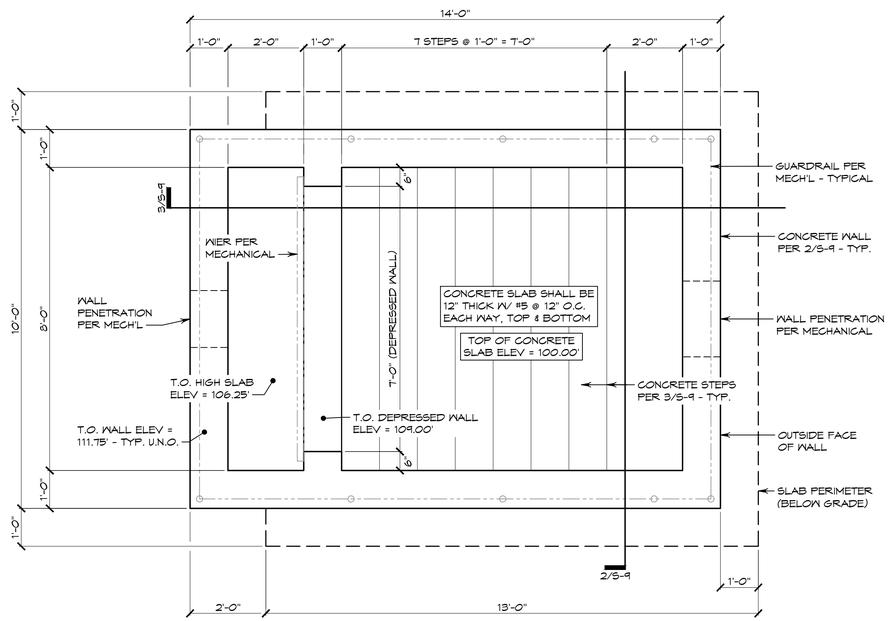

PLAN NORTH

1 CASCADE STRUCTURE PLAN

1/2" = 1'-0"

SPECIAL WATERSTOP NOTE:

THIS STRUCTURE IS REQUIRED TO BE WATERTIGHT. ALL JOINTS IN CONCRETE SHALL UTILIZE FLEXIBLE PVC WATERSTOPS PER THE SPECIFICATIONS.

PLAN NOTES:

1. LISTED ELEVATIONS ARE RELATIVE TO T.O. CONCRETE SLAB ELEV. 100.00' = 426.00' - VERIFY W/ MECH'L

2. SEE STRUCTURAL GENERAL NOTES FOR SUBGRADE PREPARATION, CONCRETE AND REINFORCING REQUIREMENTS.

3. VERIFY AND ALL DIMENSIONS, ELEVATIONS, AND DROPS WITH MECH'L PLANS.

4. SEE CIVIL FOR SITE LOCATION.

5. SEE MECH'L FOR WALL PENETRATIONS NOT SHOWN HERE.

6. SEE SHEET S2-2 FOR STANDARD STRUCTURAL DETAILS.

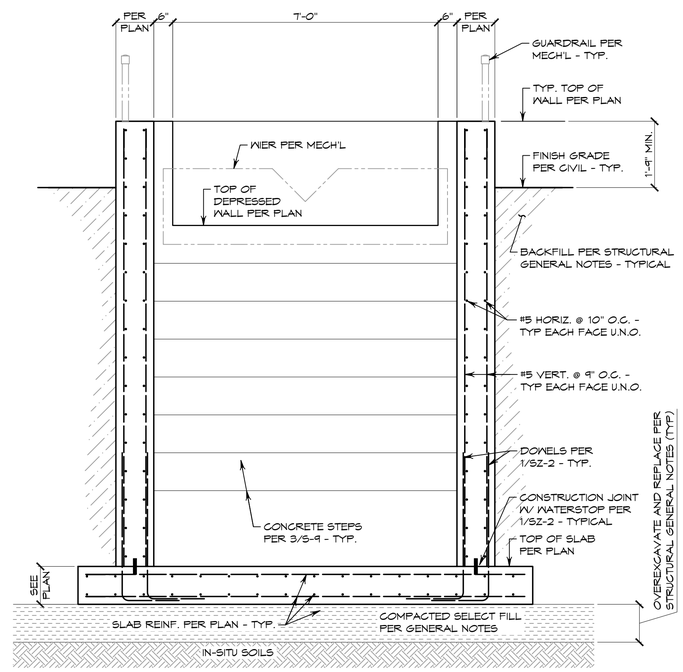

2 CASCADE STRUCTURE SECTION

1/2" = 1'-0"

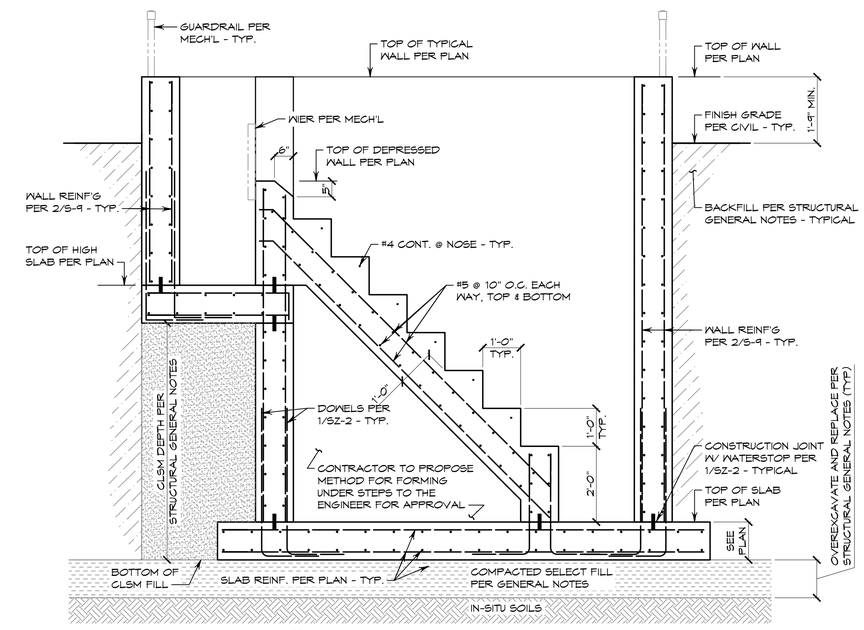

3 CASCADE STRUCTURE SECTION

1/2" = 1'-0"

REV	DATE	BY	DESCRIPTION	APPROVED

VERIFY SCALES

0 1"

IF BAR DOES NOT MEASURE ONE INCH ON THIS SHEET, ADJUST ACCORDINGLY.

STATE OF TEXAS
TIMOTHY J. ROSS
98465
PROFESSIONAL ENGINEER
08/01/16

DRAWN BY: AE

DESIGNED BY: EWB

REVIEWED BY: LCP

PROJECT NO: 140005.000.2

PESC
P.E. Structural Consultants, Inc.
8436 Spicewood Springs Road
Austin, Texas 78759
512.250.5200
www.PEStructural.com
Texas Registered Engineering Firm # F-1475

SMITH TURRIETA ENGINEERING
P.O. BOX 5902, AUSTIN, TEXAS 78763
TELEPHONE: (512) 569-9022
Texas Registration Number, F-16076

CITY OF AUSTIN, TEXAS

TAYLOR LANE 0.1 MDG WASTEWATER TREATMENT PLANT PROJECT

CASCADE STRUCTURE PLAN AND SECTIONS

DWG. NO.

S-9

\\pescv3\d\CURRENT\14\031\Dwg\S-9 CASCADE STRUCTURE.dwg modified by timr on Aug 1, 16 10:07 AM

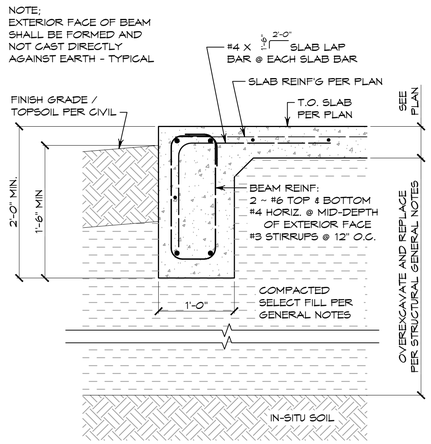

1 TYPICAL PERIMETER GRADE BEAM

1" = 1'-0"

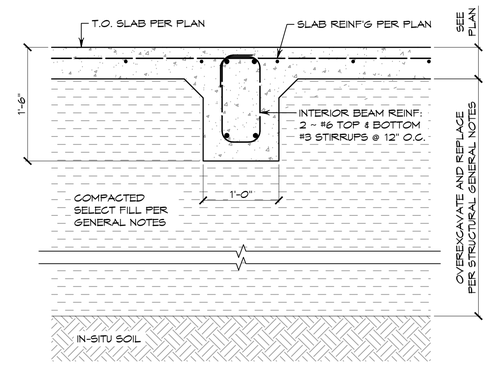

2 TYPICAL INTERIOR STIFFENING BEAM

1" = 1'-0"

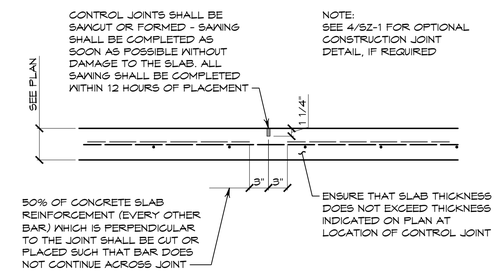

3 SLAB CONTROL JOINT

5" SLABS 1" = 1'-0"

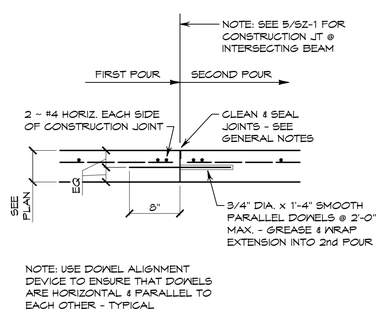

4 SLAB CONSTRUCTION JOINT

5" SLABS 1" = 1'-0"

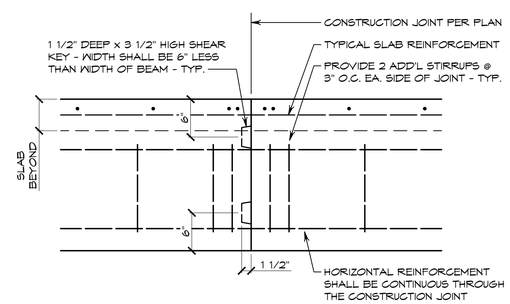

5 BEAM CONSTRUCTION JOINT

1" = 1'-0"

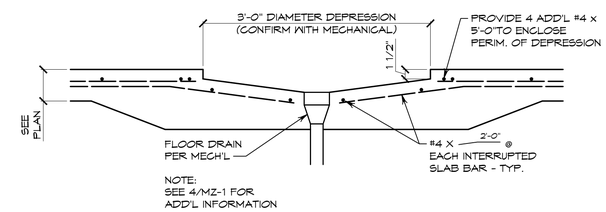

6 FLOOR DRAIN DETAIL

1" = 1'-0"

REV	DATE	BY	DESCRIPTION	APPROVED

VERIFY SCALES

0 1"

IF BAR DOES NOT MEASURE ONE INCH ON THIS SHEET, ADJUST ACCORDINGLY.

STATE OF TEXAS
TIMOTHY J. ROSS
98465
LICENSED PROFESSIONAL ENGINEER
05/01/16

DRAWN BY: AE

DESIGNED BY: EWB

REVIEWED BY: LCP

PROJECT NO: 140005.000.2

PESC
P.E. Structural Consultants, Inc.
8436 Spicewood Springs Road
Austin, Texas 78759
512.250.5200
www.PEStructural.com
Texas Registered Engineering Firm # F-1475

SMITH TURRIETA ENGINEERING
P.O. BOX 5902, AUSTIN, TEXAS 78763
TELEPHONE: (512) 569-9022
Texas Registration Number, F-16076

CITY OF AUSTIN, TEXAS

TAYLOR LANE 0.1 MDG WASTEWATER TREATMENT PLANT PROJECT

STANDARD STRUCTURAL DETAILS

DWG. NO.

SZ-1

SHEET 64 OF 79

\\pescr3\d\CURRENT\14\031\Dwg\SZ-1 STANDARD DETAILS Phase II.dwg modified by timr on Aug 1, 16 10:07 AM

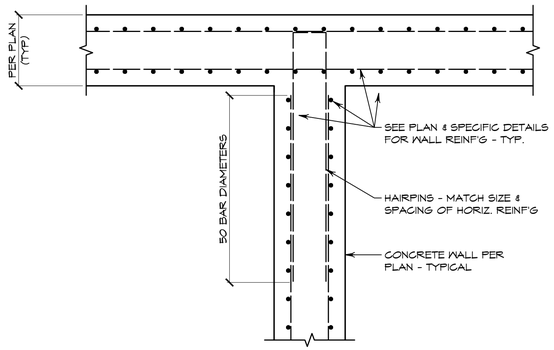

PLAN

1 WALL "T" INTERSECTION DETAIL

3/4" = 1'-0"

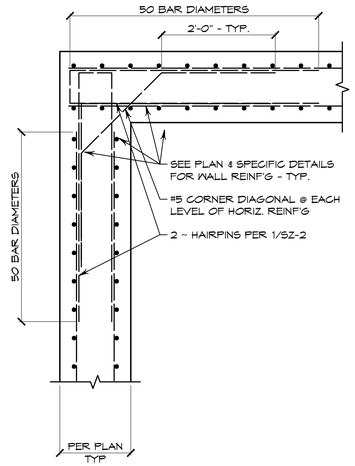

PLAN

2 WALL CORNER DETAIL

3/4" = 1'-0"

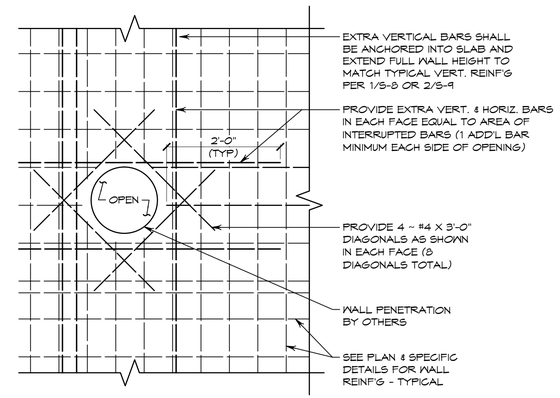

ELEVATION

3 WALL PENETRATION DETAIL

3/4" = 1'-0"

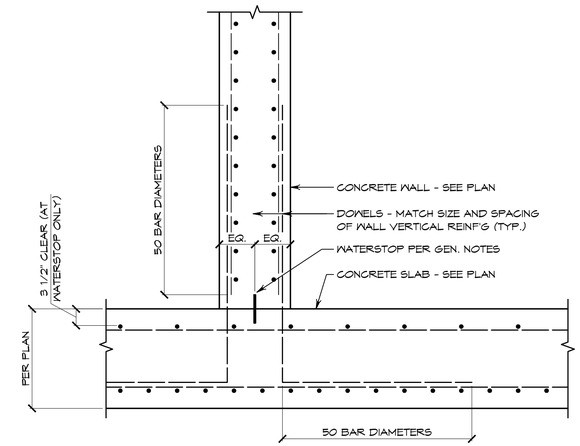

SECTION

4 CONSTRUCTION JOINT BETWEEN WALL & SLAB

3/4" = 1'-0"

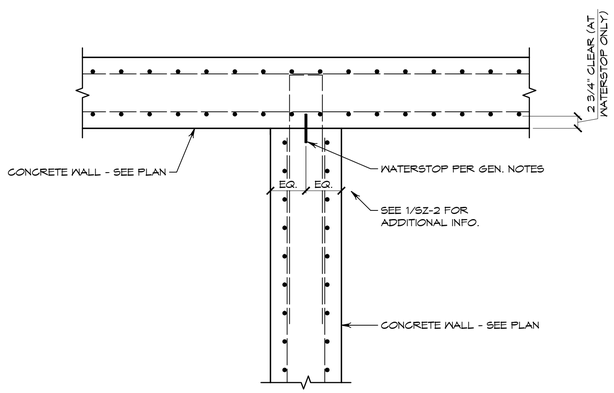

PLAN

5 CONSTRUCTION JOINT BETWEEN WALLS

3/4" = 1'-0"

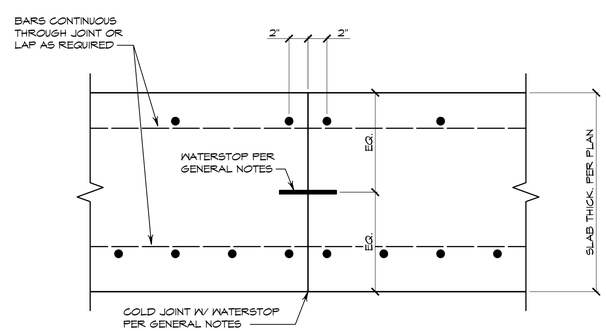

SECTION

6 CONSTRUCTION JOINT @ SLAB

12" SLABS 1 1/2" = 1'-0"

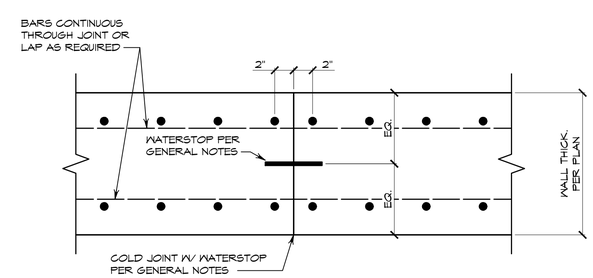

PLAN

7 CONSTRUCTION JOINT IN WALL

1 1/2" = 1'-0"

REV	DATE	BY	DESCRIPTION	APPROVED

VERIFY SCALES

0 1"

IF BAR DOES NOT MEASURE ONE INCH ON THIS SHEET, ADJUST ACCORDINGLY.

STATE OF TEXAS
TIMOTHY J. ROSS
98465
LICENSED PROFESSIONAL ENGINEER
06/01/16

DRAWN BY: AE

DESIGNED BY: EWB

REVIEWED BY: LCP

PROJECT NO: 140005.000.2

PESC
P.E. Structural Consultants, Inc.
8436 Spicewood Springs Road
Austin, Texas 78759
512.250.5200
www.PEStructural.com
Texas Registered Engineering Firm # F-1475

SMITH TURRIETA ENGINEERING
P.O. BOX 5902, AUSTIN, TEXAS 78763
TELEPHONE: (512) 569-9022
Texas Registration Number, F-16076

CITY OF AUSTIN, TEXAS

TAYLOR LANE 0.1 MDG WASTEWATER TREATMENT PLANT PROJECT

STANDARD STRUCTURAL DETAILS

DWG. NO. SZ-2

SHEET 65 OF 79

\\pescv3\d\CURRENT\14\031\Dwg\SZ-2 STANDARD STRUCTURAL DETAILS.dwg modified by timr on Aug 1, 16 10:07 AM

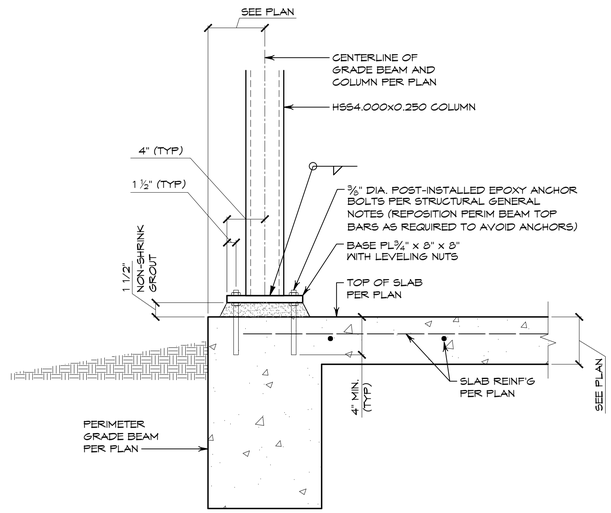

1 COLUMN AND BASE PLATE DETAIL

1-1/2" = 1'-0"

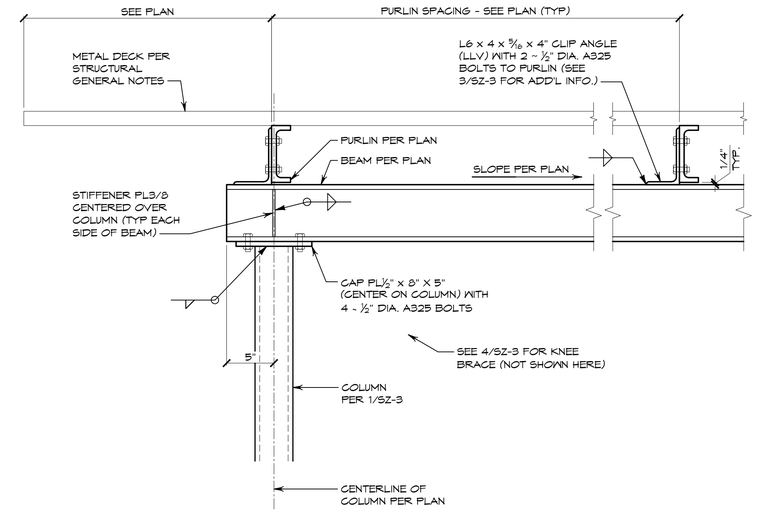

2 CANOPY FRAMING DETAIL

1-1/2" = 1'-0"

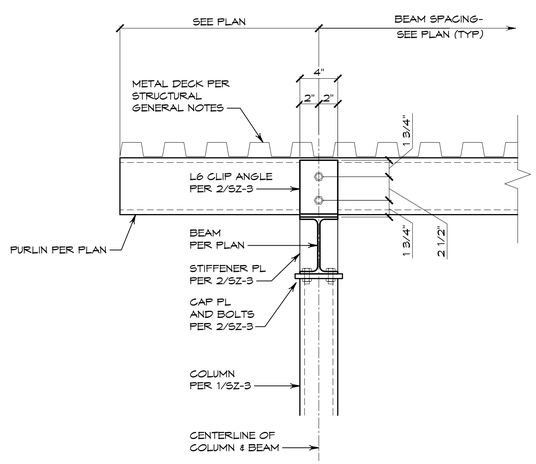

3 CANOPY FRAMING DETAIL

1-1/2" = 1'-0"

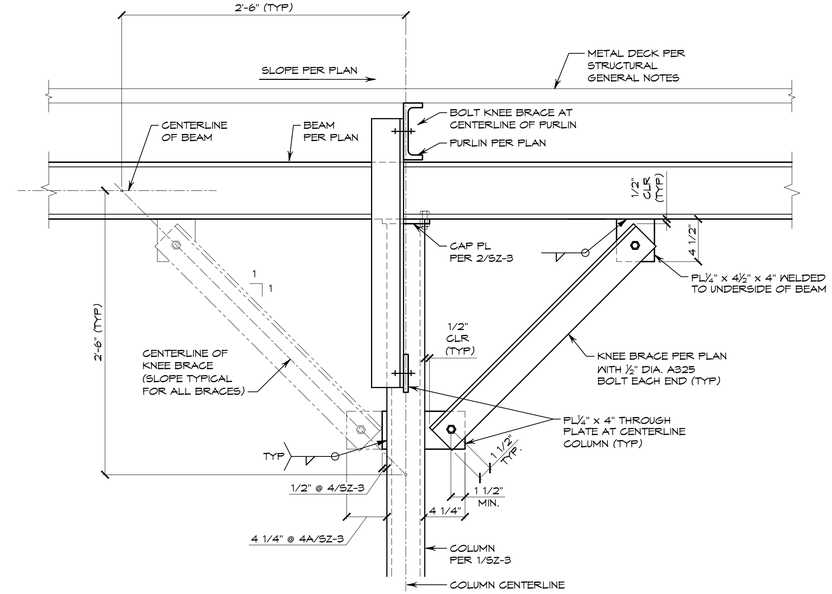

4 4A KNEE BRACE DETAIL

1-1/2" = 1'-0"

REV	DATE	BY	DESCRIPTION	APPROVED

VERIFY SCALES

0 1"

IF BAR DOES NOT MEASURE ONE INCH ON THIS SHEET, ADJUST ACCORDINGLY.

STATE OF TEXAS
TIMOTHY J. ROSS
98465
LICENSED PROFESSIONAL ENGINEER
08/01/16

DRAWN BY: RAB

DESIGNED BY: KSD

REVIEWED BY: LCP

PROJECT NO: 140005.000.2

PESC
P.E. Structural Consultants, Inc.
8436 Spicewood Springs Road
Austin, Texas 78759
512.250.5200
www.PEStructural.com
Texas Registered Engineering Firm # F-1475

SMITH TURRIETA ENGINEERING
P.O. BOX 5902, AUSTIN, TEXAS 78763
TELEPHONE: (512) 569-9022
Texas Registration Number, F-16076

CITY OF AUSTIN, TEXAS

TAYLOR LANE 0.1 MDG WASTEWATER TREATMENT PLANT PROJECT

STANDARD STRUCTURAL DETAILS

DWG. NO.

SZ-3

\pescv3\d\CURRENT\14\031\Dwg\SZ-3 STANDARD STRUCTURAL DETAILS.dwg modified by timr on Aug 1, 16 10:08 AM

PLAN SYMBOLS

- CONDUIT RUN UNDERGROUND OR IN FLOOR SLAB
- EXPOSED CONDUIT
- 3#10(P), 1#10(G), 3/4" C. — CONDUIT & WIRE DESIGNATION E.G., 3 # 10 POWER 1 # 10 (G) IN 3/4" CONDUIT
  (P) = POWER (C) = CONTROL
  (G) = GROUND (A) = ALARM
  (SH) = SPACE HEATER (I) = INSTRUMENTATION
  (SP) = SPARE WIRES (EC) = EMPTY CONDUIT
- HOMERUN TO PANEL CIRCUIT, MEMBERS INDICATED, SHORT HASH MARKS INDICATE PHASE WIRES, LONG HASH MARK INDICATES NEUTRAL WIRE, MARK INDICATES EQUIPMENT GROUND WIRE.
- GROUND WIRE. BARE COPPER UNDERGROUND
- CONDUIT TURNING DOWN
- CONDUIT GOING DOWN
- CONDUIT TURNING UP
- CONDUIT GOING UP
- P1 — CONDUIT TAG
- XXX-LSP-1 — EQUIPMENT TAG
- 1 — KEYNOTE SYMBOL AND KEYNOTE NUMBER
- M — SERVICE METER
- DUPLEX OUTLET
- SIMPLEX OUTLET
- 50 — MOTOR – NUMBER DENOTES HP SIZE
- M-P-1 — MOTOR TAG
- GFCI — GFCI RECEPTACLE IN A WEATHER PROOF ENCLOSURE

DRAWING LIST

E-1	ELECTRICAL LEGEND
E-2	ELECTRICAL SITE PLAN
E-3	ELECTRICAL ONE-LINE DIAGRAM
E-4	ELECTRICAL 0.1 MGD WWTP PLAN
E-5	ELECTRICAL CHEMICAL FEED & NPWS PLANS
E-6	ELECTRICAL CHLORINE CONTACT BASIN
E-7	ELECTRICAL FILTRATION SYSTEM
E-8	ELECTRICAL SCHEDULES
E-9	ELECTRICAL DETAILS
E-10	ELECTRICAL BUILDING PAN

1

ONE LINE DIAGRAM SYMBOLS

- CIRCUIT BREAKER
- COMBINATION MOTOR STARTER
- NORMALLY OPEN RELAY CONTACT
- NORMALLY CLOSED RELAY CONTACT
- R — PILOT LIGHT, COLOR INDICATED
- POWER TRANSFORMER
- POTENTIAL TRANSFORMER
- CURRENT TRANSFORMER
- RESET — MOMENTARY CONTACT PUSHBUTTON, NORMALLY CLOSED
- FUSE
- 50 — MOTOR. HP INDICATED
- ETM — ELAPSED TIME METER
- GROUND
- GROUND ROD
- NORMALLY OPEN SWITCH
- V — VOLTMETER
- OVERLOAD
- PMR — POWER MONITOR RELAY
- POWER RECEPTACLE–PIN & SLEEVE TYPE
- H O A — HAND–OFF–AUTOMATIC SWITCH
- S S — START STOP SELECTOR SWITCH
- 100 A / 50 A — FUSE DISCONNECT SWITCH –100 A SWITCH, 50 A FUSE
- USER TELEPHONE JACK, TYPE RJ–11
- MCP — MOTOR CIRCUIT PROTECTOR
- P1 — CONDUIT TAG
- XXX-LSP-1 — EQUIPMENT TAG
- MM — MOTOR METERING UNIT
- SOLID STATE REDUCED VOLTAGE STARTER
- CAS — PUMP MOISTURE/TEMPERATURE MONITOR FINISHED BY PUMP MANUFACTURER
- IC — ISOLATING CONTACTOR FOR VFD

SCHEMATIC DIAGRAM SYMBOLS

- CIRCUIT BREAKER
- NORMALLY OPEN RELAY CONTACT
- NORMALLY CLOSED RELAY CONTACT
- PILOT LIGHT, COLOR INDICATED
- RESET — MOMENTARY CONTACT PUSHBUTTON, NORMALLY CLOSED
- FUSE
- TERMINAL BLOCK LOCATED IN MOTOR CONTROL CENTER
- SOLID STATE METERING
- CURRENT TRANSFORMER
- LEVEL SWITCH, NORMALLY OPEN
- TERMINAL BLOCK LOCATED IN MOTOR CONTROL CENTER
- 50 — MOTOR. HP INDICATED
- H O A / X00 / 0X0 / 00X — HAND–OFF–AUTOMATIC SWITCH
- ELECTRODE
- TS — TEMPERATURE SWITCH
- PANEL INTERIOR LIGHT W/SW 25W FLUORESCENT LAMP
- FLASHER
- SNI — SYSTEM NETWORK INTERFACE –CUSTOMER TELEPHONE J–BOX BY SOUTHWESTERN BELL TELEPHONE CO.
- USER TELEPHONE JACK, TYPE RJ–11
- SWITCH SPST, 20A, 125V
- BEACON/HORN ACK.
- CRL1 — CONTROL RELAY, TAG ID "CRL1"
- DUPLEX RECEPTACLE
- UPS — UNITERUPTIBLE POWER SUPPLY
- MCP — MOTOR CIRCUIT PROTECTOR
- M — SOLID–STATE MOTOR STARTER CONTACTOR
- OVERLOAD
- GROUND GRID

P & ID SYMBOLS

- YL — GREEN OFF INDICATOR
- LAL — LEVEL ALARM LOW
- LAH — LEVEL ALARM HIGH
- TAH — TEMP. ALARM HIGH
- YL — RED RUN INDICATOR
- MAH — MOISTURE ALARM HIGH
- HS HOA — HAND SWITCH
- KQI — ELAPSED TIME METER
- UI — MULTIVARIABLE INDICATOR (AUTO DIALER)
- YI — PUMP FAIL TO START ALARM
- LSL — LOW LEVEL ALARM SWITCH
- LSO — PUMPS OFF LEVEL SWITCH
- LS1 — LEAD PUMP START LEVEL SWITCH
- LS2 — LAG PUMP START LEVEL SWITCH
- LSH — HIGH LEVEL ALARM SWITCH
- LT — LEVEL SIGNAL CONVERTER/TRANSMITTER
- LE — SUBMERSIBLE LEVEL TRANSDUCER
- TSH — MOTOR HIGH TEMPERATURE SWITCH
- M — MOTOR
- LI — LEVEL INDICATOR
- FQIT — ULTRASONIC FLOW INDICATING TRANSMITTER WITH TOTALIZER
- MS ALT — ALTERNATOR/PUMP CONTROL SELECTOR SWITCH
- LST — ULTRASONIC FLOW TRANSDUCER
- YS — GENERATOR AUXILIARY RUN CONTACTS
- ZS
- HMS — PUSHBUTTON SWITCH
- UA — GENERATOR GLOBAL ALARM CONTACT
- XAH — AUDIBLE ALARM HORN AND BEACON

REV	DATE	BY	DESCRIPTION	APPROVED
1	2016/08/03	AH	REVISION #1	SK

VERIFY SCALES
0 1"
IF BAR DOES NOT MEASURE ONE INCH ON THIS SHEET, ADJUST ACCORDINGLY.

STATE OF TEXAS — STEVE L. KANETZKY — 84696 — LICENSED PROFESSIONAL ENGINEER — 8/5/16

DRAWN BY: AH
DESIGNED BY: DM
REVIEWED BY: DN/SK
PROJECT NO: SST# XXXXX

SKE — S. Kanetzky Engineering, LLC.
5920 W. William Cannon Building 7, Suite 200 Austin Texas 78749
(512) 326-3380 TEL.
(512) 329-5774 FAX
www.skaneng.com
TEXAS REGISTRATION #2356
SKE PROJECT # 2620115

SMITH TURRIETA ENGINEERING
P.O. BOX 5902, AUSTIN, TEXAS 78763
TELEPHONE: (512) 569-9022
Texas Registration Number, F-16076

CITY OF AUSTIN, TEXAS
TAYLOR LANE 0.1 MGD WASTEWATER TREATMENT PLANT PROJECT

ELECTRICAL LEGEND

DWG. NO. E-1

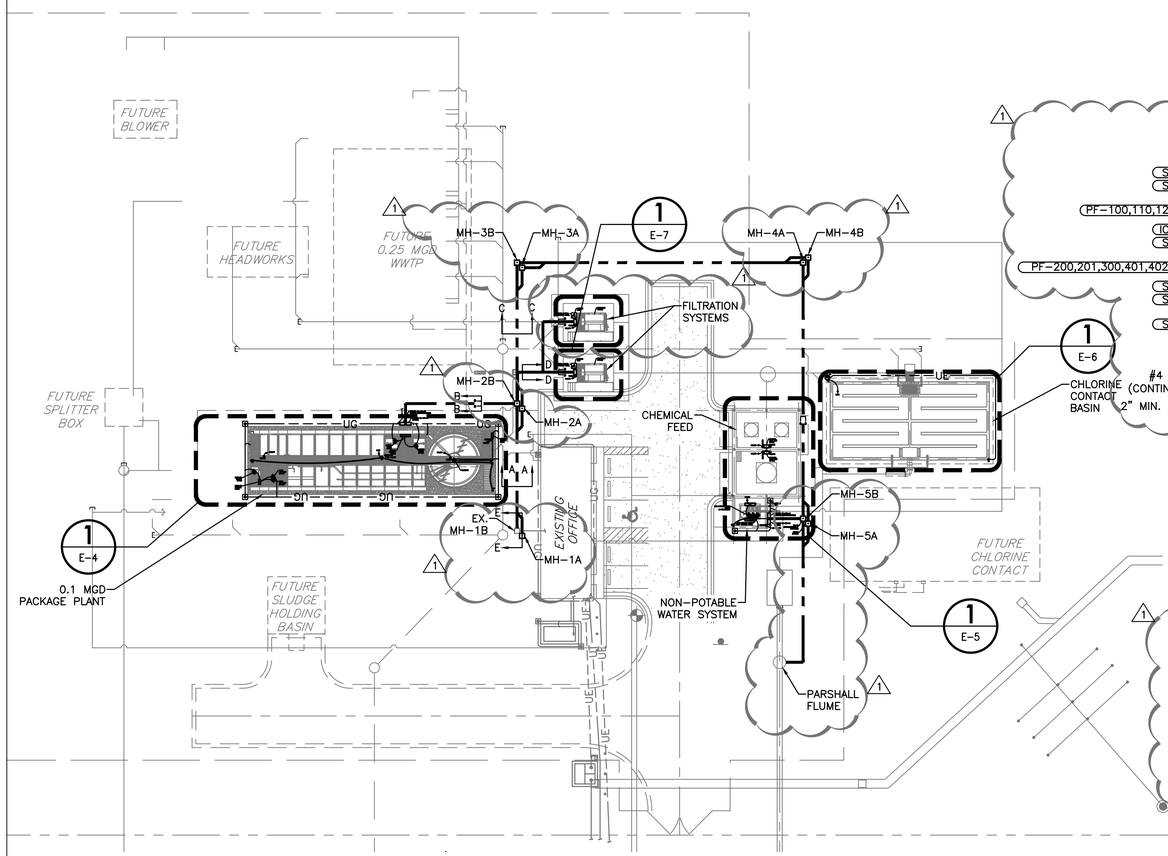

1 E-2 **ELECTRICAL BUILDING SITE PLAN**
SCALE: 1" = 30'

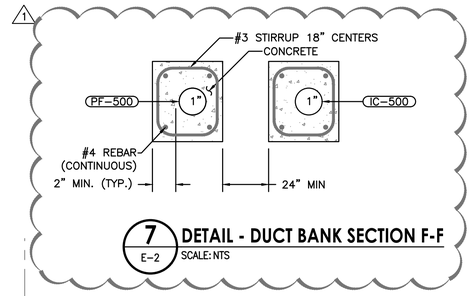

7 E-2 **DETAIL - DUCT BANK SECTION F-F**
SCALE: NTS

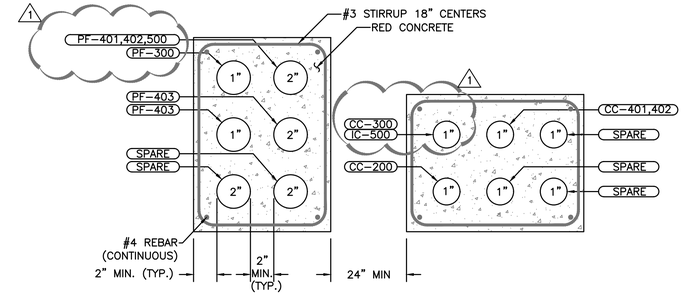

4 E-2 **DETAIL - DUCT BANK SECTION C-C**
SCALE: NTS

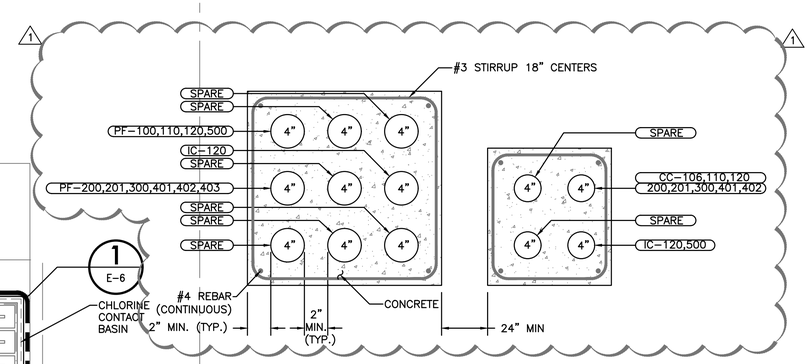

6 E-2 **DETAIL - DUCT BANK SECTION E-E**
SCALE: NTS

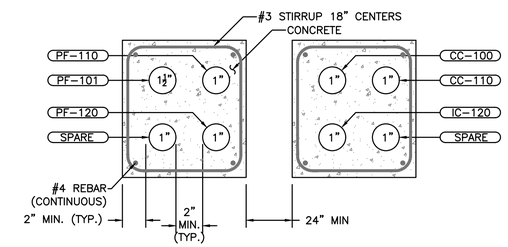

3 E-2 **DETAIL - DUCT BANK SECTION B-B**
SCALE: NTS

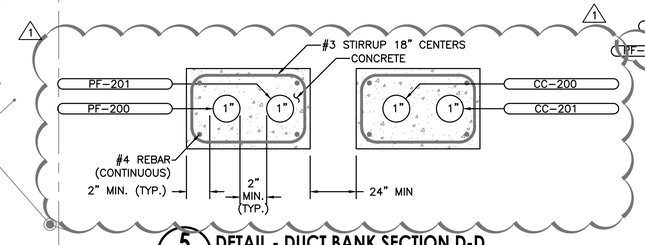

5 E-2 **DETAIL - DUCT BANK SECTION D-D**
SCALE: NTS

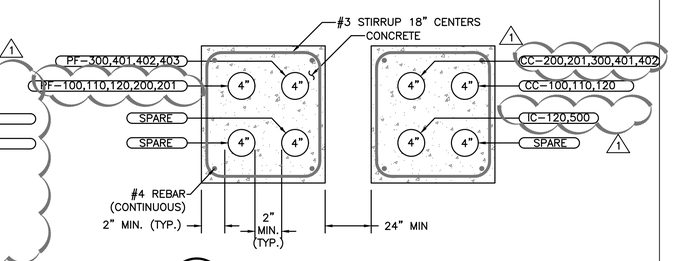

2 E-2 **DETAIL - DUCT BANK SECTION A-A**
SCALE: NTS

REV	DATE	BY	DESCRIPTION	APPROVED
1	2016/08/03	AH	REVISION #1	SK

VERIFY SCALES
0 1"
IF BAR DOES NOT MEASURE ONE INCH ON THIS SHEET, ADJUST ACCORDINGLY.

STATE OF TEXAS
STEVE L. KANETZKY
84696
LICENSED PROFESSIONAL ENGINEER
8/5/16

DRAWN BY: AH
DESIGNED BY: DM
REVIEWED BY: DN/SK
PROJECT NO: SST# XXXXX

SKE
S. Kanetzky Engineering, LLC.
5920 W. William Cannon
Building 7, Suite 200
Austin Texas 78749
(512) 326-3380 TEL.
(512) 329-5774 FAX
www.skaneng.com
TEXAS REGISTRATION #2356
SKE PROJECT # 2620115

SMITH TURRIETA ENGINEERING
P.O. BOX 5902, AUSTIN, TEXAS 78763
TELEPHONE: (512) 569-9022
Texas Registration Number, F-16076

CITY OF AUSTIN, TEXAS
TAYLOR LANE 0.1 MGD WASTEWATER TREATMENT PLANT PROJECT

ELECTRICAL SITE PLAN

DWG. NO. E-2

REFERENCE NOTES

(1) PROVIDE AND INSTALL CONDUITS AND CONDUCTORS FROM EXISTING SWITCHBOARD "SB-1" TO NEW LOADS AT 0.1MGD WASTE WATER TREATMENT PLANT AND NON-POTABLE WATER SYSTEM. SEE SHEET E-2 FOR DUCT BANK ROUTING AND FURTHER DETAILS. TYP.

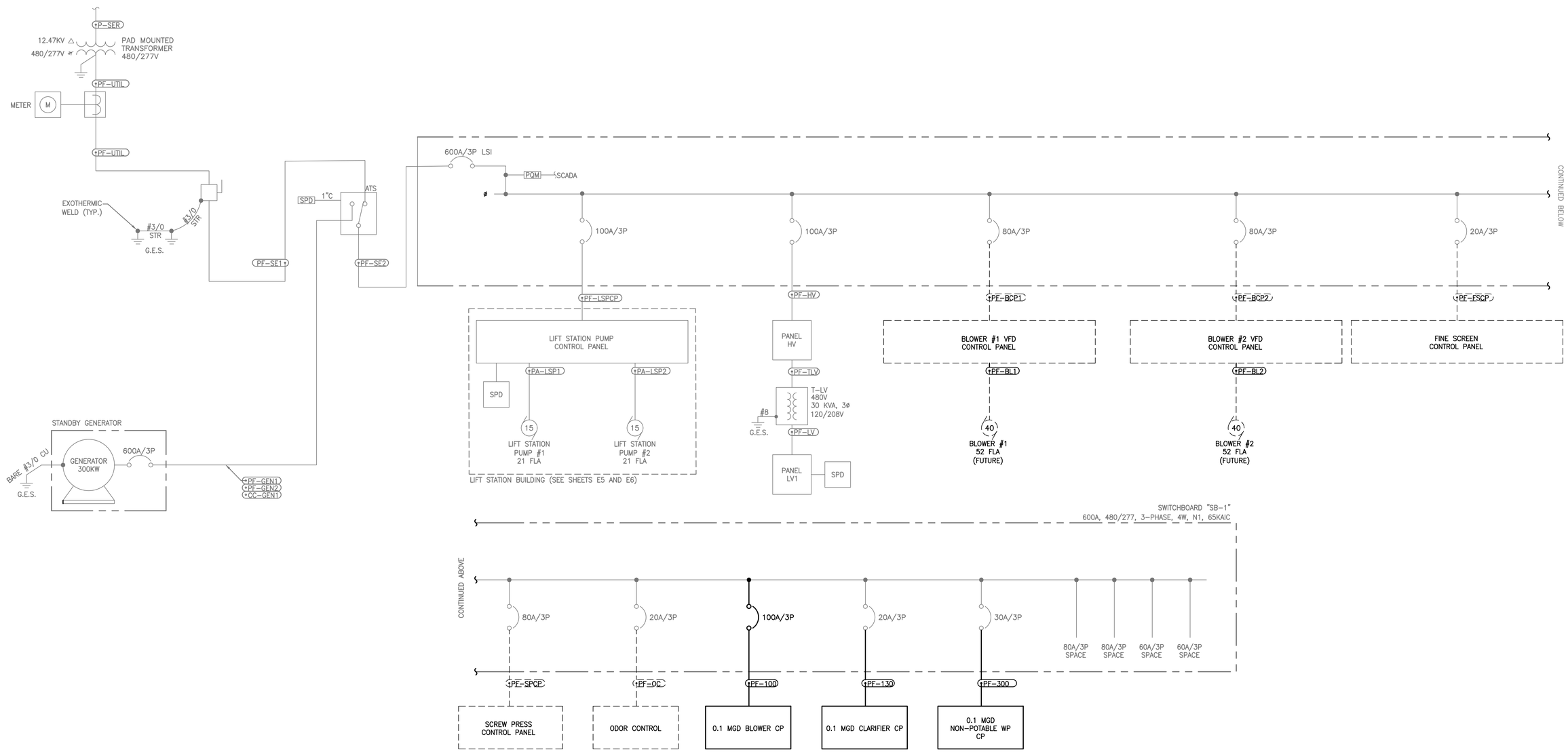

1 / E-3 ELECTRICAL ONE-LINE DIAGRAM (1)

SCALE: NTS

REV	DATE	BY	DESCRIPTION	APPROVED
1	2016/08/03	AH	REVISION #1	SK

VERIFY SCALES

0 1"

IF BAR DOES NOT MEASURE ONE INCH ON THIS SHEET, ADJUST ACCORDINGLY.

STATE OF TEXAS
STEVE L. KANETZKY
84696
LICENSED PROFESSIONAL ENGINEER
8/5/16

DRAWN BY: AH
DESIGNED BY: DM
REVIEWED BY: DN/SK
PROJECT NO: SST# XXXXX

SKE
S. Kanetzky Engineering, LLC.
5920 W. William Cannon
Building 7, Suite 200
Austin Texas 78749
(512) 326-3380 TEL.
(512) 329-5774 FAX
www.skaneng.com
TEXAS REGISTRATION #2356
SKE PROJECT # 2620115

SMITH TURRIETA ENGINEERING
P.O. BOX 5902, AUSTIN, TEXAS 78763
TELEPHONE: (512) 569-9022
Texas Registration Number, F-16076

CITY OF AUSTIN, TEXAS

TAYLOR LANE 0.1 MGD WASTEWATER TREATMENT PLANT PROJECT

ONE-LINE DIAGRAM

DWG. NO. E-3

REFERENCE NOTES

1. PROVIDE AND INSTALL NEW 3/4" X 10' COPPER CLAD GROUND RODS. PROVIDE AND INSTALL NEW TEST WELLS. INSTALL 10' BETWEEN EACH ROD. BOND #3/0 BARE COPPER 30" BELOW GRADE.
2. BOND #6 SOLID COPPER TO NEW 3/4" X 10' COPPER CLAD GROUND RODS. REFER TO DETAIL 1/E-9.
3. BOND MOTOR CASINGS TO GROUNDING ELECTRODE SYSTEM. REFER TO DETAILS 4/E-9 & 5/E-9 TYPICAL.
4. BOND METALLIC PIPING TO GROUNDING ELECTRODE SYSTEM. TYPICAL.
5. EFFLUENT FLOW METER TO BE PROVIDED BY WWTP MANUFACTURER AND INSTALLED BY THE ELECTRICAL CONTRACTOR. COORDINATE EXACT REQUIREMENTS WITH WWTP MANUFACTURER. TYPICAL.
6. GENERAL CONDUIT ROUTING: CONDUITS SHOWN ON PLAN ARE FOR GENERAL ROUTING ONLY AND REPRESENT MULTIPLE AND/OR INDIVIDUAL CONDUITS. CONDUITS SHALL BE ROUTED ALONG HAND RAILS AND/OR ALONG TANK WALLS OR IN CONCRETE DECK PROCESS/MECHANICAL EQUIPMENT IN GENERAL LOCATIONS SHOWN ON PLANS. CONDUIT SHALL BE ROUTED TO ACCOMADATE FOR ELEVATION DROPS AND SHALL BE ROUTED AT A MINIMUM OF 12" ABOVE MAXIMUM WATER ELEVATION WHERE APPLICABLE.
7. FLOW EQ. CONTROL PANEL TO BE PROVIDED BY OTHERS. COORDINATE EXACT REQUIREMENTS WITH WWTP MANUFACTURER. TYP.
8. BLOWER SYSTEM CONTROL PANEL TO BE PROVIDED BY OTHERS. COORDINATE EXACT REQUIREMENTS WITH WWTP MANUFACTURER. TYP.
9. CLARIFIER CONTROL PANEL TO BE PROVIDED BY OTHERS. COORDINATE EXACT REQUIREMENTS WITH WWTP MANUFACTURER. TYP.

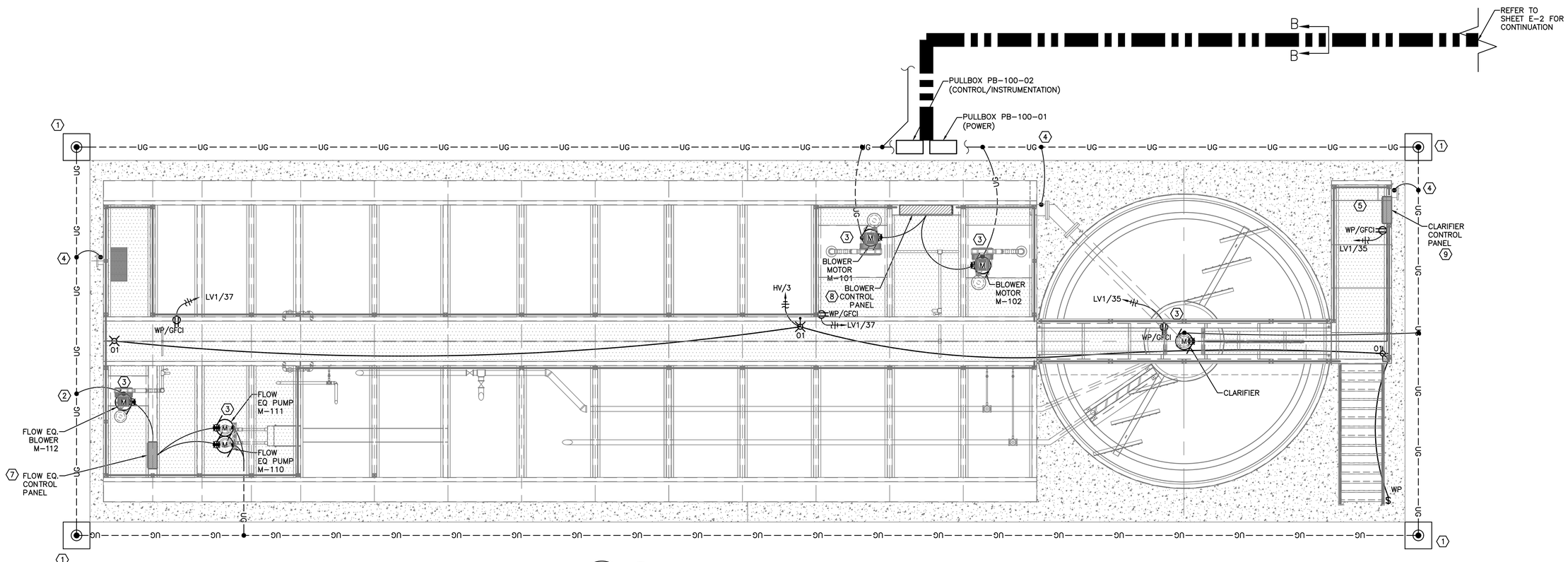

1 E-4 **ELECTRICAL 0.1 MGD WWTP PLAN** (6)
SCALE: 1/4" = 1'-0"

REV	DATE	BY	DESCRIPTION	APPROVED
1	2016/08/03	AH	REVISION #1	SK

VERIFY SCALES
0 1"
IF BAR DOES NOT MEASURE ONE INCH ON THIS SHEET, ADJUST ACCORDINGLY.

STATE OF TEXAS
STEVE L. KANETZKY
84696
LICENSED PROFESSIONAL ENGINEER
8/5/16

DRAWN BY: AH
DESIGNED BY: DM
REVIEWED BY: DN/SK
PROJECT NO: SST# XXXXX

SKE
S. Kanetzky Engineering, LLC.
5920 W. William Cannon
Building 7, Suite 200
Austin Texas 78749
(512) 326-3380 TEL.
(512) 329-5774 FAX
www.skaneng.com
TEXAS REGISTRATION #2356
SKE PROJECT # 2620115

SMITH TURRIETA ENGINEERING
P.O. BOX 5902, AUSTIN, TEXAS 78763
TELEPHONE: (512) 569-9022
Texas Registration Number, F-16076

CITY OF AUSTIN, TEXAS
TAYLOR LANE 0.1 MGD WASTEWATER TREATMENT PLANT PROJECT

ELECTRICAL 0.1 MGD WWTP PLAN

DWG. NO. E-4

REFERENCE NOTES

1. PROVIDE AND INSTALL NEW 3/4" X 10' COPPER CLAD GROUND RODS. PROVIDE AND INSTALL NEW TEST WELLS. INSTALL 10' BETWEEN EACH ROD. BOND #3/0 BARE COPPER 30" BELOW GRADE.
2. BOND #6 SOLID COPPER TO NEW 3/4" X 10' COPPER CLAD GROUND RODS. REFER TO DETAIL 1/E-9
3. BOND MOTOR CASINGS TO GROUNDING ELECTRODE SYSTEM. REFER TO DETAILS 4/E-9 & 5/E-9 TYPICAL.
4. BOND METALLIC PIPING TO GROUNDING ELECTRODE SYSTEM. TYPICAL.
5. NON-POTABLE WATER SYSTEM CONTROL PANEL TO BE PROVIDED BY OTHERS. COORDINATE EXACT REQUIREMENTS WITH MANUFACTURER. TYP.
6. CHECMICAL FEED SKID TO BE PROVIDED BY OTHERS. COORDINATE EXACT REQUIREMENTS WITH MANUFACTURER. TYP.

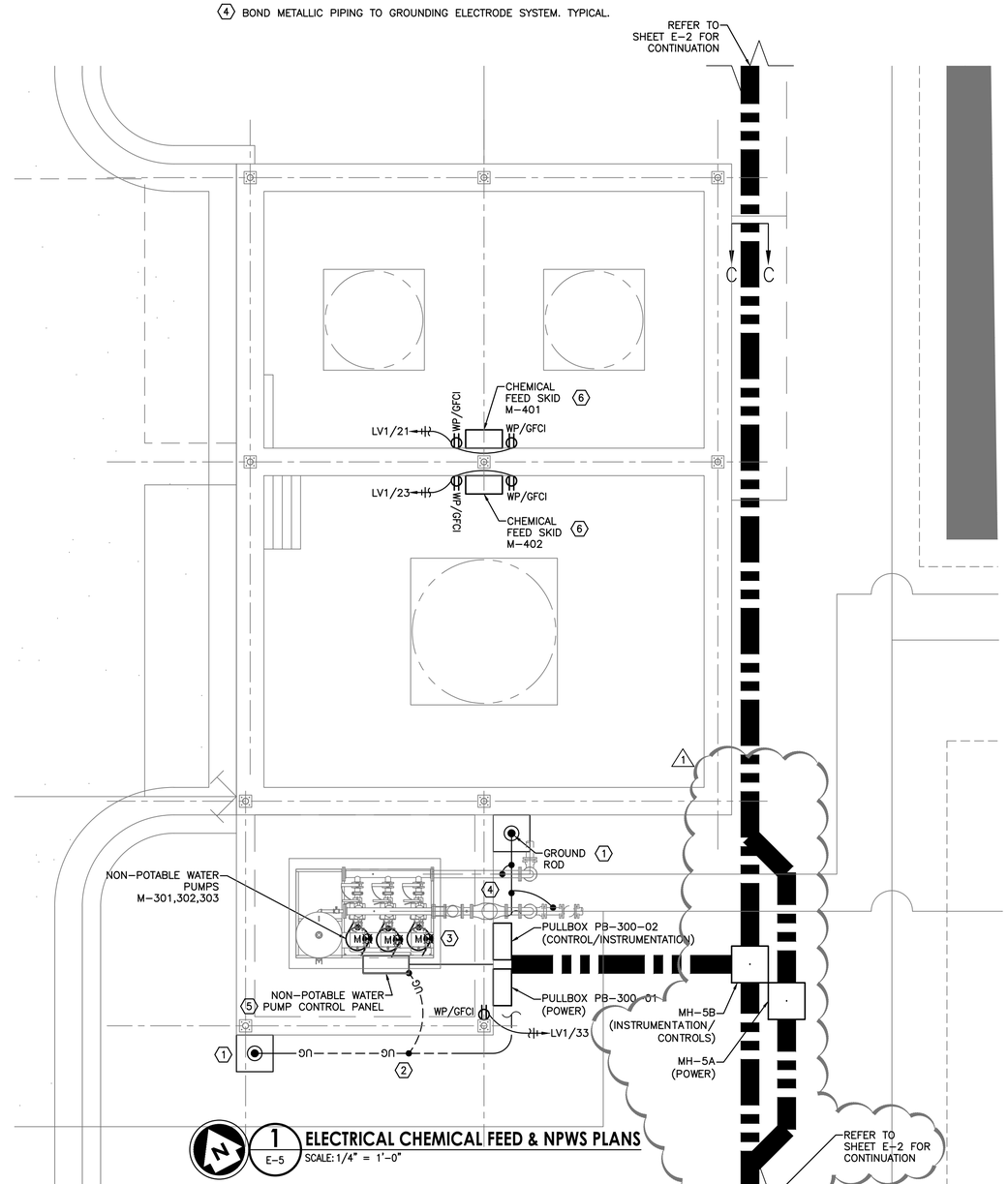

1 E-5 **ELECTRICAL CHEMICAL FEED & NPWS PLANS**
SCALE: 1/4" = 1'-0"

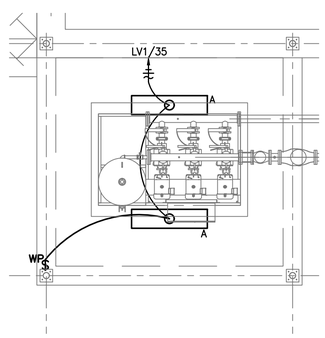

2 E5 **ELECTRICAL LIGHTING PLAN**
SCALE: 1/4" = 1'-0"

REV	DATE	BY	DESCRIPTION	APPROVED
1	2016/08/03	AH	REVISION #1	SK

VERIFY SCALES
0 1"
IF BAR DOES NOT MEASURE ONE INCH ON THIS SHEET, ADJUST ACCORDINGLY.

STATE OF TEXAS
STEVE L. KANETZKY
84696
LICENSED PROFESSIONAL ENGINEER
8/5/16

DRAWN BY: AH
DESIGNED BY: DM
REVIEWED BY: DN/SK
PROJECT NO: SST# XXXXX

SKE
S. Kanetzky Engineering, LLC.
5920 W. William Cannon Building 7, Suite 200 Austin Texas 78749
(512) 326-3380 TEL.
(512) 329-5774 FAX
www.skaneng.com
TEXAS REGISTRATION #2356
SKE PROJECT # 2620115

SMITH TURRIETA ENGINEERING
P.O. BOX 5902, AUSTIN, TEXAS 78763
TELEPHONE: (512) 569-9022
Texas Registration Number, F-16076

CITY OF AUSTIN, TEXAS
TAYLOR LANE 0.1 MGD WASTEWATER TREATMENT PLANT PROJECT

ELECTRICAL CHEMICAL FEED & NPWS PLANS

DWG. NO. E-5

SHEET 71 OF 79

KEYED NOTES

1. PROVIDE AND INSTALL NEW LIGHT FIXTURES AS SHOWN. SEE LIGHTING FIXTURE SCHEDULE FOR DETAILS. TYP.
2. PROVIDE AND INSTALL SINGLE POLE SWITCH IN WEATHERPROOF ENCLOSURE FOR NEW LIGHT FIXTURES. TYP.
3. GENERAL CONDUIT ROUTING: CONDUITS SHOWN ON PLAN ARE FOR GENERAL ROUTING ONLY AND REPRESENT MULTIPLE AND/OR INDIVIDUAL CONDUITS. CONDUITS SHALL BE ROUTED ALONG HAND RAILS AND/OR ALONG TANK WALLS OR IN CONCRETE DECK PROCESS/MECHANICAL EQUIPMENT IN GENERAL LOCATIONS SHOWN ON PLANS. CONDUIT SHALL BE ROUTED TO ACCOMMODATE FOR ELEVATION DROPS AND SHALL BE ROUTED AT A MINIMUM OF 12" ABOVE MAXIMUM WATER ELEVATION WHERE APPLICABLE.

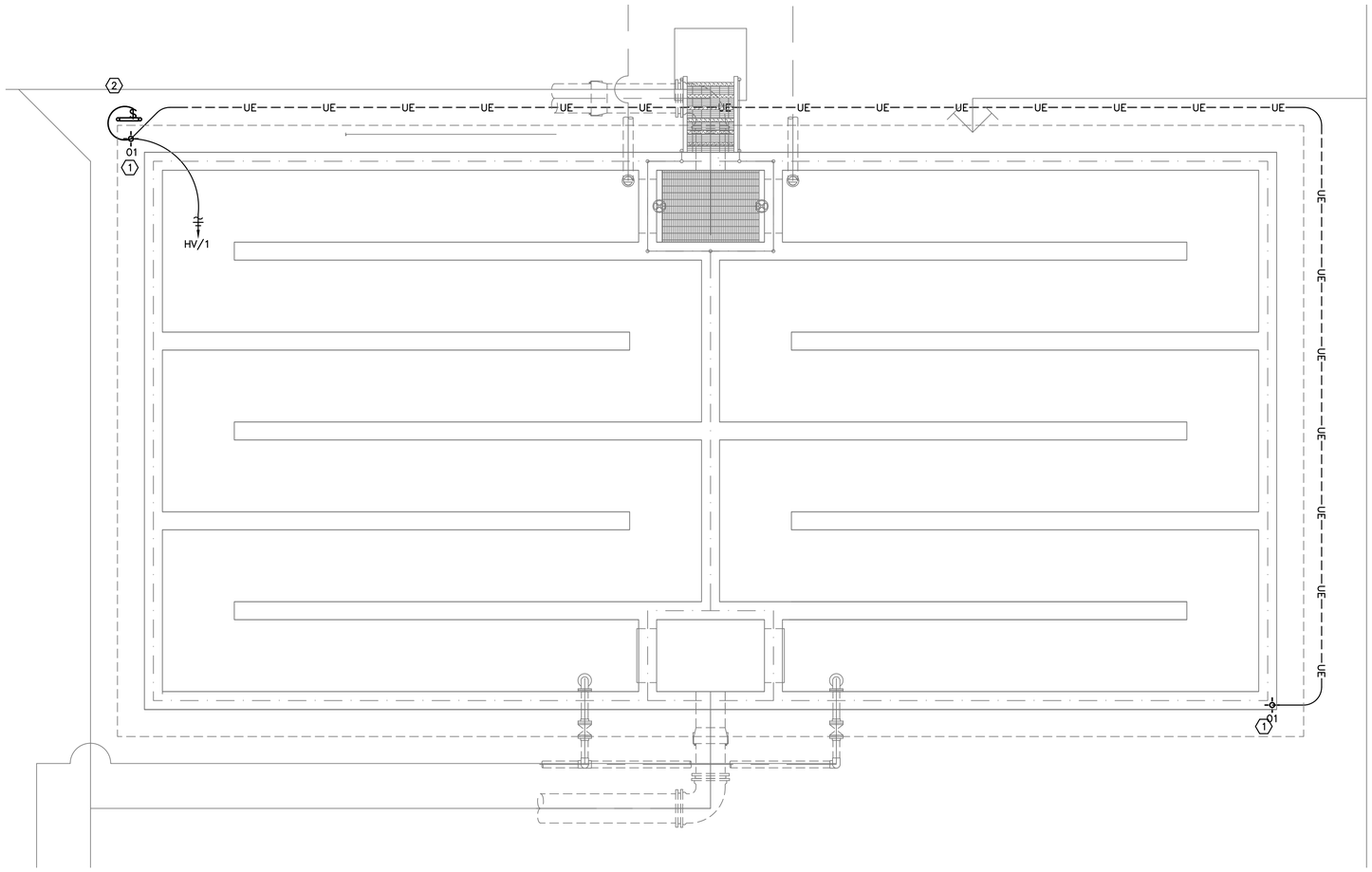

1 E-6 **ELECTRICAL CHLORINE CONTACT BASIN PLAN** 3
SCALE: 1/4" = 1'-0"

REV	DATE	BY	DESCRIPTION	APPROVED
1	2016/08/03	AH	REVISION #1	SK

VERIFY SCALES
0 1"
IF BAR DOES NOT MEASURE ONE INCH ON THIS SHEET, ADJUST ACCORDINGLY.

STATE OF TEXAS
STEVE L. KANETZKY
84696
LICENSED PROFESSIONAL ENGINEER
8/5/16

DRAWN BY: AH
DESIGNED BY: DM
REVIEWED BY: DN/SK
PROJECT NO: SST# XXXXX

SKE
S. Kanetzky Engineering, LLC.
5920 W. William Cannon
Building 7, Suite 200
Austin Texas 78749
(512) 326-3380 TEL.
(512) 329-5774 FAX
www.skaneng.com
TEXAS REGISTRATION #2356
SKE PROJECT # 2620115

SMITH TURRIETA ENGINEERING
P.O. BOX 5902, AUSTIN, TEXAS 78763
TELEPHONE: (512) 569-9022
Texas Registration Number, F-16076

CITY OF AUSTIN, TEXAS
TAYLOR LANE 0.1 MGD WASTEWATER TREATMENT PLANT PROJECT

ELECTRICAL CHLORINE CONTACT BASIN PLAN

DWG. NO. E-6

REFERENCE NOTES

1. PROVIDE AND INSTALL NEW 3/4" X 10' COPPER CLAD GROUND RODS. PROVIDE AND INSTALL NEW TEST WELLS. INSTALL 10' BETWEEN EACH ROD. BOND #3/0 BARE COPPER 30" BELOW GRADE.
2. BOND #6 SOLID COPPER TO NEW 3/4" X 10' COPPER CLAD GROUND RODS. REFER TO DETAIL 1/E-9.
3. FILTRATION SYSTEM CONTROL PANEL TO BE PROVIDED BY OTHERS. COORDINATE EXACT REQUIREMENTS WITH FILTRATION SYSTEM MANUFACTURER. TYP.

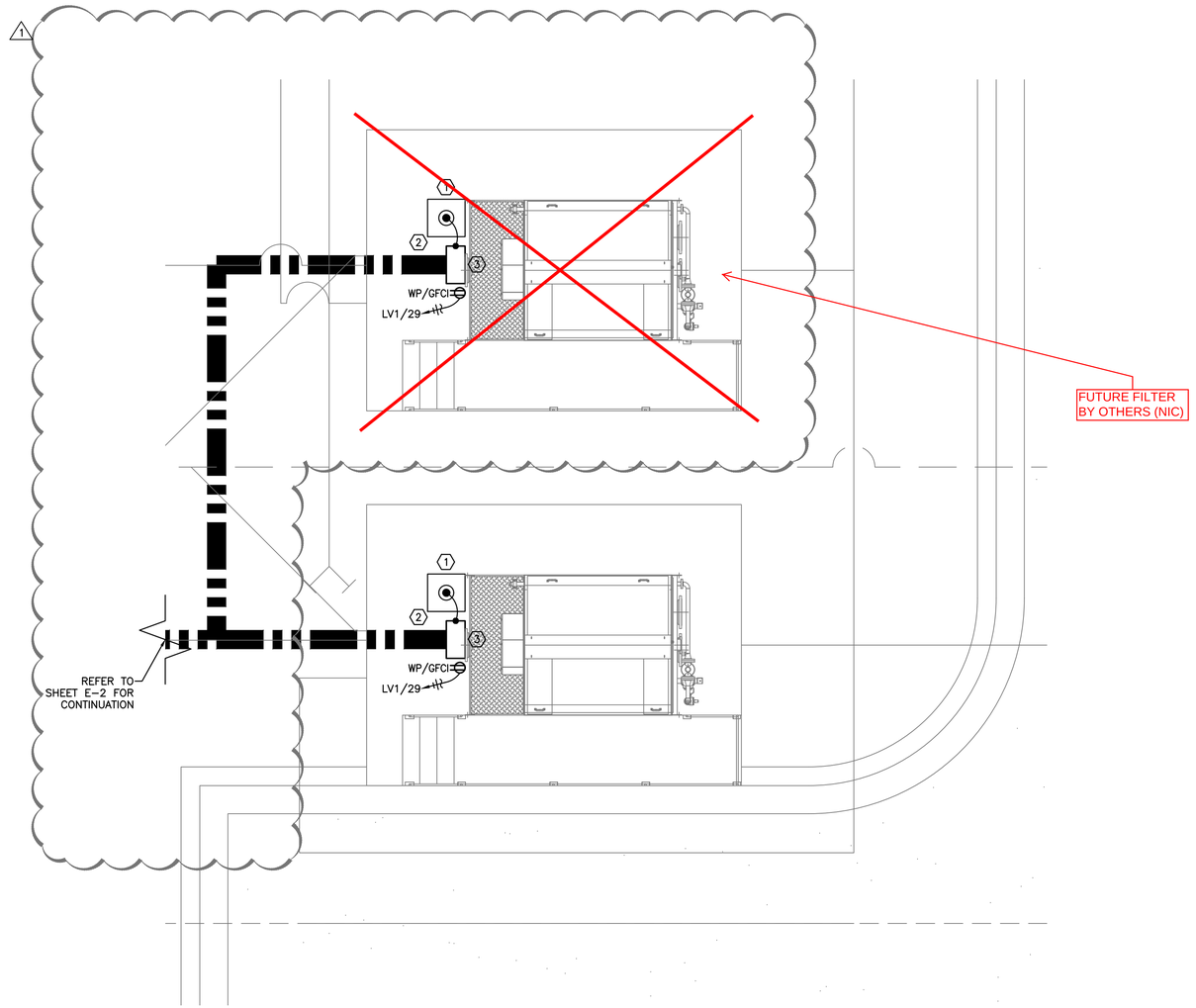

N 1 E-7 **ELECTRICAL FILTRATION SYSTEM PLAN**
SCALE: 1/4" = 1'-0"

REV	DATE	BY	DESCRIPTION	APPROVED
1	2016/08/03	AH	REVISION #1	SK

VERIFY SCALES
0 1"
IF BAR DOES NOT MEASURE ONE INCH ON THIS SHEET, ADJUST ACCORDINGLY.

STATE OF TEXAS
STEVE L. KANETZKY
84696
LICENSED
PROFESSIONAL ENGINEER
8/5/16

DRAWN BY: AH
DESIGNED BY: DM
REVIEWED BY: DN/SK
PROJECT NO: SST# XXXXX

SKE
S. Kanetzky Engineering, LLC.
5920 W. William Cannon
Building 7, Suite 200
Austin Texas 78749
(512) 326-3380 TEL.
(512) 329-5774 FAX
www.skaneng.com
TEXAS REGISTRATION #2356
SKE PROJECT # 2620115

SMITH TURRIETA ENGINEERING
P.O. BOX 5902, AUSTIN, TEXAS 78763
TELEPHONE: (512) 569-9022
Texas Registration Number, F-16076

CITY OF AUSTIN, TEXAS
TAYLOR LANE 0.1 MGD WASTEWATER TREATMENT PLANT PROJECT

ELECTRICAL FILTRATION SYSTEM PLAN

DWG. NO. E-7

REFERENCE NOTES

1. UTILIZE EXISTING SPARE CIRCUIT BREAKERS IN EXISTING PANEL HV. TYP.
2. PROVIDE AND INSTALL NEW 30A/3P CIRCUIT BREAKER IN EXISTING PANEL HV. MATCH EXSITING TYPE AND CONDITIONS. TYPICAL.
3. PROVIDE AND INSTALL NEW 20A/3P CIRCUIT BREAKER IN EXISTING PANEL HV. MATCH EXSITING TYPE AND CONDITIONS. TYPICAL.

LIGHTING FIXTURE SCHEDULE

TYPE	MANUFACTURER	CATALOG NO.	LAMP QTY	LAMP TYPE	LAMP WATTS	FIX. WATTS	VOLTS	MOUNTING	REMARKS
A	LITHONIA	FEM4LED4LIMACDMVOLT	1	LED	61	61	120	SURFACE	WET LOCATION, LED STRIP, SURFACE MOUNTED, 10 ' AFF, WIREGUARD
O1	RIG-A-LITE	SXPJ-LED-11-L2-U-GG-W1	1	LED	96	96	277	STANCHION	CLASS1, DIVISION 2 SPACE, SEALED LED FIXTURE

CIRCUIT SCHEDULE

CIRCUIT ID	CONDUCTORS	FROM	TO	EQUIPMENT/FUNCTION
0.1 MGD WWTP (SECTION 100)				
PF-100	1/1/2"C w/3#1, 1#8G	BLOWER CONTROL PANEL	SWITCHBOARD SB-1	POWER FEEDER FOR PLANT BLOWERS
CC-100	1"C w/20#14, 1#12G	BLOWER CONTROL PANEL	CONTROL BUILDING RTU	ALARMS FOR PLANT BLOWERS
PF-110	1"C w/3#10, 1#10G	FLOW EQ CONTROL PANEL	PANELBOARD HV	POWER FEEDER FOR FLOW EQ SYSTEM
CC-110	1"C w/16#14, 1#12G	FLOW EQ CONTROL PANEL	CONTROL BUILDING RTU	ALARMS FOR FLOW EQ SYSTEM
PF-120	1"C w/3#10, 1#10G	CLARIFIER CONTROL PANEL	SWITCHBOARD SB-1	POWER FEEDER FOR CLARIFIER
CC-120	1"C w/10#14, 1#12G	CLARIFIER CONTROL PANEL	CONTROL BUILDING RTU	ALARMS FOR CLARIFIER
PF-130	1"C w/2#12, 1#12G	0.1 MGD ULTRASONIC FLOW METER	CONTROL BUILDING PANEL LV	POWER FOR FLOW METER
IC-130	1"C w/1#16TSP, 1#12G	0.1 MGD ULTRASONIC FLOW METER	CONTROL BUILDING RTU	SIGNAL FROM FLOW METER TO RTU
FILTRATION (SECTION 200)				
PF-200	1"C w/3#10, 1#10G	FILTRATION CONTROL PANEL #1	PANEL HV	POWER FEEDER FOR FILTRATION CONTROL PANEL
PF-201	1"C w/3#10, 1#10G	FILTRATION CONTROL PANEL #2	PANEL HV	POWER FEEDER FOR FILTRATION CONTROL PANEL
CC-200	1"C w/10#14, 1#12G	FILTRATION CONTROL PANEL #1	CONTROL BUILDING RTU	ALARMS FOR FILTRATION SYSTEM
CC-201	1"C w/10#14, 1#12G	FILTRATION CONTROL PANEL #2	CONTROL BUILDING RTU	ALARMS FOR FILTRATION SYSTEM
NPW SYSTEM (SECTION 300)				
PF-300	1"C w/3#10, 1#10G	NPW CONTROL PANEL	SWITCHBOARD SB-1	POWER FEEDER FOR NPW CONTROL PANEL
CC-300	1"C w/10#14, 1#12G	NPW CONTROL PANEL	CONTROL BUILDING RTU	ALARMS FOR NPW CONTROL PANEL
NPW SYSTEM (SECTION 400)				
PF-401	1"C w/2#10, 1#10G	CHEMICAL FEED SKID	PANEL LV	POWER FEEDER FOR CHECMICAL FEED SKID
CC-401	1"C w/10#14, 1#12G	CHEMICAL FEED SKID	CONTROL BUILDING RTU	ALARMS FOR CHECMICAL FEED SKID
PF-402	1"C w/2#10, 1#10G	CHEMICAL FEED SKID	PANEL LV	POWER FEEDER FOR CHECMICAL FEED SKID
CC-402	1"C w/10#14, 1#12G	CHEMICAL FEED SKID	CONTROL BUILDING RTU	ALARMS FOR CHEMICAL FEED SKID
PARSHALL FLUME (SECTION 500)				
IC-500	1"C w/1#16TSP, 1#12G	PARSHALL FLUME	CONTROL BUILDING RTU	SIGNAL FROM FLOW METER TO RTU
PF-500	1"C w/2#10, 1#10G	PRASHALL FLUME	PANEL LV	POWER FEEDER PARSHALL FLUME

PANEL HV (MODIFIED)

AMPS: 100A MLO
VOLTAGE: 480/277V
LOCATION: COTNROL BUILDING
FED FROM: SWITCHBOARD SB-1

PHASE: 3
WIRE: 4

MOUNTING: SURFACE
MINIMUM AIC RATING: 14 KA
BUSSING: COPPER
NEMA: 1

CKT. NO.	SERVICE DESCRIPTION	WIRE	BKR	POLES	KVA	A	B	C	KVA	POLES	BKR	WIRE	SERVICE DESCRIPTION	CKT. NO.
1	**LTG - CHLORINE TANK**	**10**	**20**	**1**	**0.2**	6.2			6.0	3	40	8	T-LV	2
3	**LTG - 0.1 WWTP**	**10**	**20**	**1**	**0.0**		5.0		5.0				|	4
5	SPARE		20	1	0.0			4.0	4.0				|	6
7	SPARE		20	1	0.0	0.0			0.0	1	20		SPARE	8
9	SPARE		20	1	0.0		0.0		0.0	1	20		SPARE	10
11	SPARE		20	1	0.0			0.0	0.0	1	20		SPARE	12
13	SPARE		20	1	0.0	0.0			0.0	1	20		SPARE	14
15	SPARE		20	1	0.0		0.0		0.0	1	20		SPARE	16
17	SPARE		20	1	0.0			0.0	0.0	1	20		SPARE	18
19	SPARE		20	1	0.0	0.0			0.0	1	20		SPARE	20
21	**FLOW EQ PANEL**	**10**	**30**	**3**	**4.6**		7.6		**3.0**	**3**	**20**	**10**	**FILTRATION CP #1**	22
23	|				**4.6**			7.6	**3.0**				|	24
25	|				**4.6**	7.6			**3.0**				|	26
27	SPACE				0.0		3.0		**3.0**	**3**	**20**	**10**	**FILTRATION CP #2**	28
29	SPACE				0.0			3.0	**3.0**				|	30
31	SPACE				0.0	3.0			**3.0**				|	32
33	SPACE				0.0		0.0		0.0				SPACE	34
35	SPACE				0.0			0.0	0.0				SPACE	36
37	RECEPTACLES				0.0	0.0			0.0				SPACE	38
39	SPACE				0.0		0.0		0.0				SPACE	40
41	SPACE				0.0			0.0	0.0				SPACE	42
					PHASE LOAD IN KVA:	16.8	15.6	14.6						
					PHASE LOAD IN AMPS:	61	56	53						

NOTE: TYPE SQUARE D NQ OR EQUAL

PANEL LV1 (MODIFIED)

AMPS: 100A MCB
VOLTAGE: 208/120V
LOCATION: BUILDING
FED FROM: TRANSFORMER

PHASE: 3
WIRE: 4

MOUNTING: SURFACE
MINIMUM AIC RATING: 10 KA
BUSSING: COPPER
NEMA: 1

CKT. NO.	SERVICE DESCRIPTION	WIRE	BKR	POLES	KVA	A	B	C	KVA	POLES	BKR	WIRE	SERVICE DESCRIPTION	CKT. NO.
1	CONTROLS	12	20	1	1.0	2.0			1.0	1	20	12	INDOOR LIGHTS	2
3	UPS RECEPTACLE	12	20	1	1.0		2.0		1.0	1	20	10	AREA LIGHTING	4
5	NL. LGT. & HTR./DR. RECEP	12	20	1	1.0			2.0	1.0	1	20	12	GFCI RECEPTACLES	6
7	DOOR RECEPTACLE	12	20	1	1.0	2.0			1.0	1	20	12	GFCI (ODOR CONTROL)	8
9	ANNUNCIATOR	12	20	1	1.0		2.0		1.0	2	20	10	GEN. JACKET/WTR. HTR.	10
11	A/C-1	12	20	2	1.0			2.0	1.0				|	12
13	|				1.0	2.0			1.0	1	20	10	BATTERY CHARGER	14
15	INFLUENT FLOW METER	12	20	1	0.5		2.5		2.0	1	20	12	BUBBLER COMPRESS.	16
17	INDOOR RECEPT.	12	20	1	0.5			1.5	1.0	1	20	12	BUBBLER CP	18
19	EF-1		20	1	0.5	0.6			0.1	1	20	12	BLDG. LIGHTING	20
21	**CHEMICAL FEED SKID #1**	**10**	**20**	**1**	**1.0**		2.0		1.0	1	20	12	A/C-2	22
23	**CHEMICAL FEED SKID #2**	**10**	**20**	**1**	**1.0**			2.0	1.0	1			|	24
25	**RECEPTACLE**	**12**	**20**	**1**	**0.2**	1.2			1.0	1	20	12	MICROWAVE	26
27	**LIGHTING**	**12**	**20**	**1**	**0.1**		1.3		1.2	1	20	12	COFFEE	28
29	**RECEPTACLE**	**12**	**30**	**1**	**0.2**			1.1	0.9	1	20	12	RECEPTACLES	30
31	**PARSHALL FLUME**	**10**	**20**	**1**	**0.5**	0.6			0.1	1	20	12	RECEPTACLE	32
33	**SPACE**			**1**	**0.0**		0.0		0.0	1			SPACE	34
35	**RECEPTACLES**	**12**	**20**	**1**	**0.4**			0.4	0.0	1			SPACE	36
37	**RECEPTACLES**	**12**	**20**	**1**	**0.4**	0.4			0.0	1			SPACE	38
39	SURGE PROTECTOR	10	30	2	0.0		0.0		0.0	1			SPACE	40
41	|				0.0			0.0	0.0	1			SPACE	42
					PHASE LOAD IN KVA:	**8.7**	**9.8**	**9.0**						
					PHASE LOAD IN AMPS:	**32**	**35**	**32**						

NOTE: SQUARE D NQ OR EQUAL

REV	DATE	BY	DESCRIPTION	APPROVED
1	2016/08/03	AH	REVISION #1	SK

VERIFY SCALES
0 1"
IF BAR DOES NOT MEASURE ONE INCH ON THIS SHEET, ADJUST ACCORDINGLY.

STATE OF TEXAS
STEVE L. KANETZKY
84696
LICENSED PROFESSIONAL ENGINEER
8/5/16

DRAWN BY: AH
DESIGNED BY: DM
REVIEWED BY: DN/SK
PROJECT NO: SST# XXXXX

SKE
S. Kanetzky Engineering, LLC.
5920 W. William Cannon
Building 7, Suite 200
Austin Texas 78749
(512) 326-3380 TEL.
(512) 329-5774 FAX
www.skaneng.com
TEXAS REGISTRATION #2356
SKE PROJECT # 2620115

SMITH TURRIETA ENGINEERING
P.O. BOX 5902, AUSTIN, TEXAS 78763
TELEPHONE: (512) 569-9022
Texas Registration Number, F-16076

CITY OF AUSTIN, TEXAS
TAYLOR LANE 0.1 MGD WASTEWATER TREATMENT PLANT PROJECT

ELECTRICAL SCHEDULES

DWG. NO. E-8

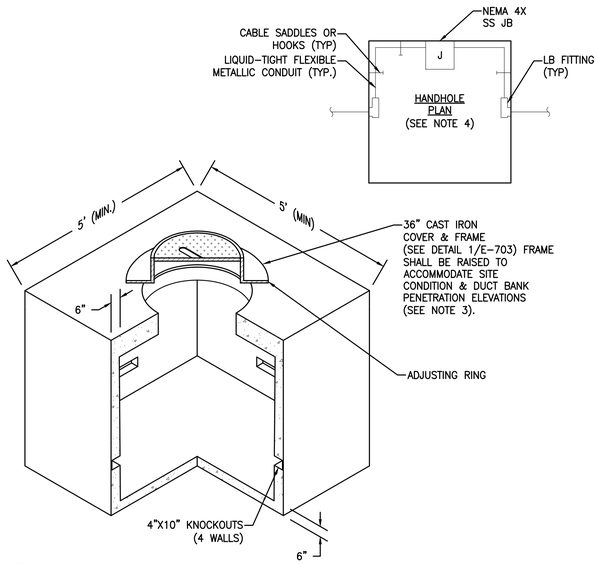

NOTES:
1. KNOCKOUTS SHOWN IN DETAIL ARE MINIMUM REQUIREMENTS. COORDINATE ACTUAL KNOCKOUT REQUIREMENTS WITH DUCT BANK SECTIONS.
2. DRAIN HOLE, GROUND ROD, AND PULL IRONS (NOT SHOWN) ARE REQUIRED FOR EACH HANDHOLE.
3. HANDHOLE BOX SHALL BE INSTALLED A MINIMUM OF 12" BELOW FINISHED GRADE. PROVIDE PRECAST CONCRETE FRAME ADJUSTING RING TO ACCOMMODATE MOUNTING HEIGHT OF THE FRAME.
4. INSTRUMENTATION, NETWORK AND INTRINSICALLY SAFE CIRCUITS SHALL BE ISOLATED FROM OTHER CIRCUITS VIA CONDUITS AND JUNCTON BOXES (TYP.)

6 / E-9 PRECAST ELECTRIC HANDHOLE DETAIL
SCALE: NTS

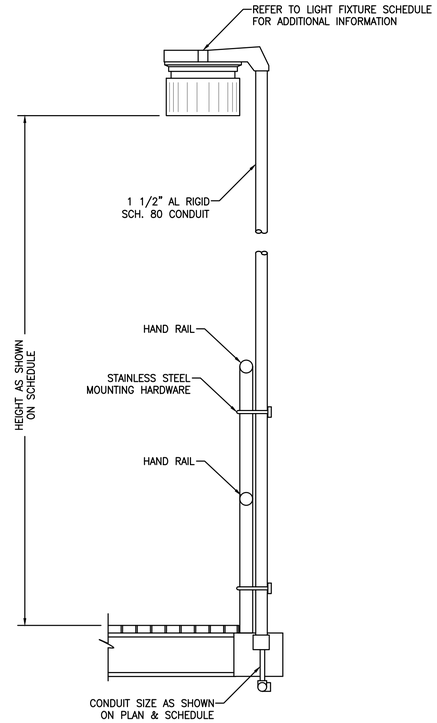

4 / E-9 DETAIL - PLATFORM MOUNTED LIGHTING FIXTURE
SCALE: NTS

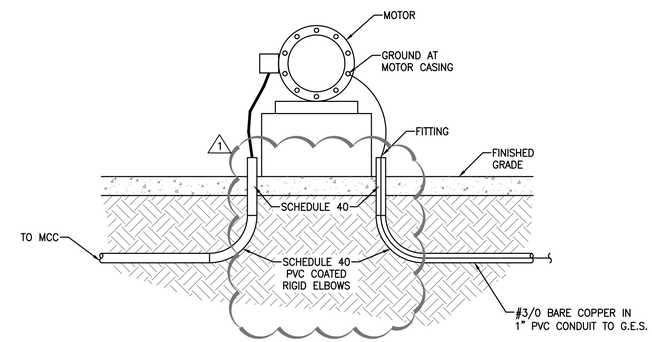

2 / E-9 DETAIL - MOTOR POWER & GROUNDING
SCALE: NTS

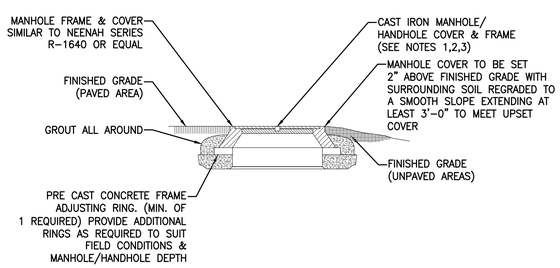

NOTES:
1. MANHOLE AND HANDHOLE COVERS SHALL BE 36". REFER DETAIL 2/E-2
2. COVERS SHALL BE PROVIDED WITH CAST LETTERING E="ELECTRIC" AND C="COMMUNICATIONS" WHERE NOTED ON THE DRAWINGS.
3. GROUND MANHOLE FRAMES TO GROUND ROD.

5 / E-9 MANHOLE/HANDHOLE FRAME & COVER DETAIL
SCALE: NTS

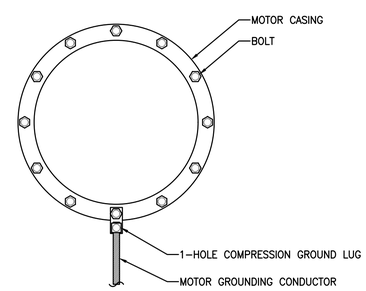

3 / E-9 DETAIL - GROUND AT MOTOR CASING
SCALE: NTS

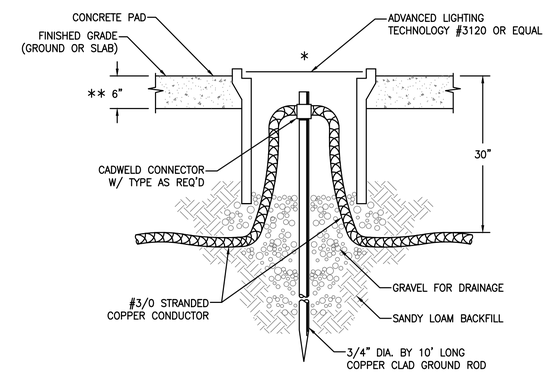

* INSTALL GROUND RODS AWAY FROM HEAVY TRAFFIC AREAS AND SIDEWALKS. COORDINATE EXACT LOCATION WITH CIVIL DRAWINGS.

** INSTALL 2'X2'X6" CONCRETE PAD.

1 / E-9 DETAIL - 3/4" X 10' GROUND ROD
SCALE: NTS

REV	DATE	BY	DESCRIPTION	APPROVED
1	2016/08/03	AH	REVISION #1	SK

VERIFY SCALES
0 1"
IF BAR DOES NOT MEASURE ONE INCH ON THIS SHEET, ADJUST ACCORDINGLY.

STATE OF TEXAS
STEVE L. KANETZKY
84696
LICENSED PROFESSIONAL ENGINEER
8/5/16

DRAWN BY: AH
DESIGNED BY: DM
REVIEWED BY: DN/SK
PROJECT NO: SST# XXXXX

SKE
S. Kanetzky Engineering, LLC.
5920 W. William Cannon
Building 7, Suite 200
Austin Texas 78749
(512) 326-3380 TEL.
(512) 329-5774 FAX
www.skaneng.com
TEXAS REGISTRATION #2356
SKE PROJECT # 2620115

SMITH TURRIETA ENGINEERING
P.O. BOX 5902, AUSTIN, TEXAS 78763
TELEPHONE: (512) 569-9022
Texas Registration Number, F-16076

CITY OF AUSTIN, TEXAS
TAYLOR LANE 0.1 MGD WASTEWATER TREATMENT PLANT PROJECT

ELECTRICAL DETAILS

DWG. NO. E-9

REFERENCE NOTES

1. PROVIDE AND INSTALL NEW RTU PER SPECIFICATION 16710. SEE DRAWING E-11 FOR DETAILS.
2. PROVIDE AND INSTALL NEW CRYSTALL BALL BY OMNISITE.

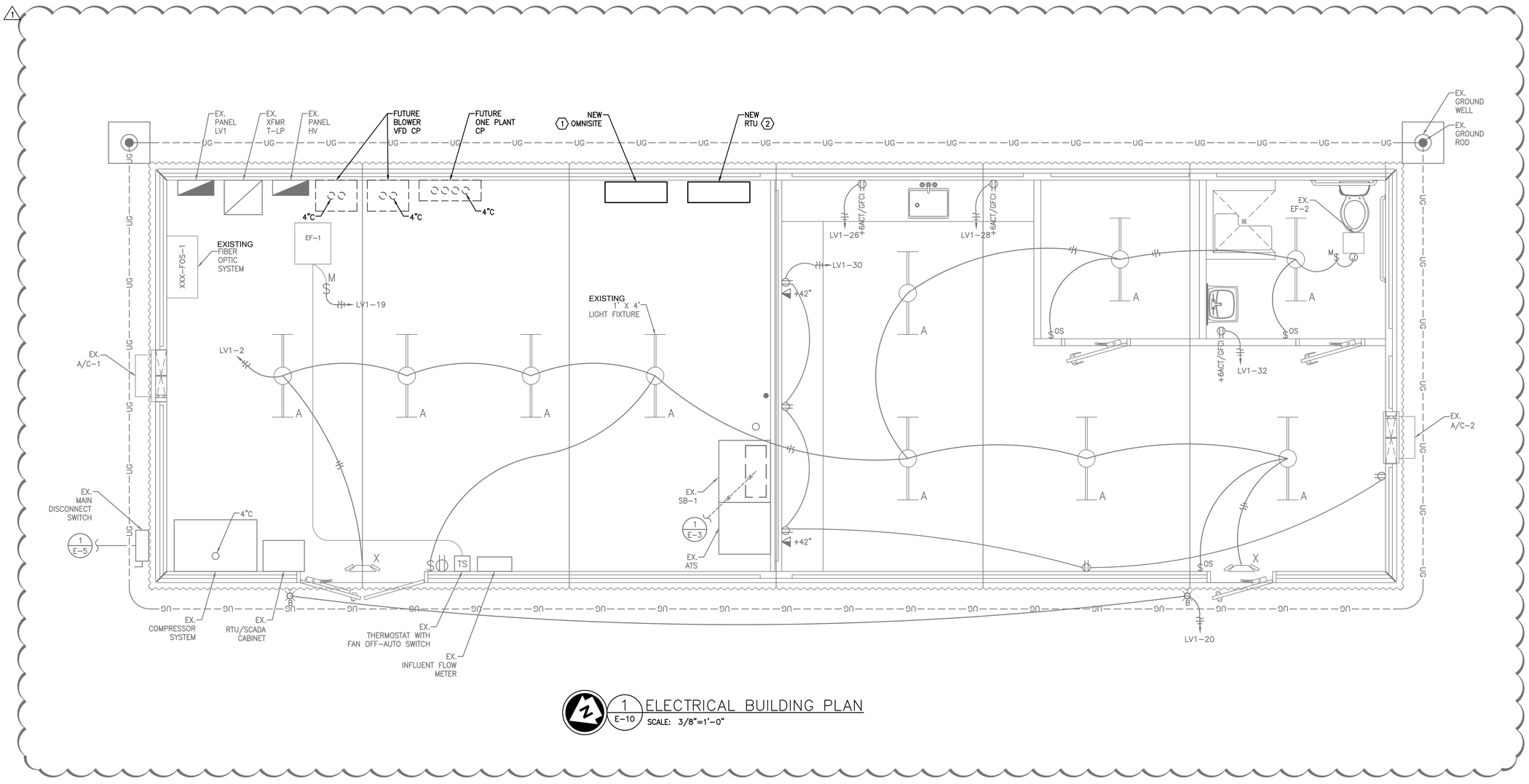

1 E-10 ELECTRICAL BUILDING PLAN
SCALE: 3/8"=1'-0"

REV	DATE	BY	DESCRIPTION	APPROVED
1	2016/08/03	AH	REVISION #1	SK

VERIFY SCALES
0 1"
IF BAR DOES NOT MEASURE ONE INCH ON THIS SHEET, ADJUST ACCORDINGLY.

STATE OF TEXAS
STEVE L. KANETZKY
84696
LICENSED PROFESSIONAL ENGINEER
8/5/16

DRAWN BY: AH
DESIGNED BY: DM
REVIEWED BY: DN/SK
PROJECT NO: SST# XXXXX

S. Kanetzky Engineering, LLC.
5920 W. William Cannon
Building 7, Suite 200
Austin Texas 78749
(512) 326-3380 TEL.
(512) 329-5774 FAX
www.skaneng.com
TEXAS REGISTRATION #2356
SKE PROJECT # 2620115

SMITH TURRIETA ENGINEERING
P.O. BOX 5902, AUSTIN, TEXAS 78763
TELEPHONE: (512) 569-9022
Texas Registration Number, F-16076

CITY OF AUSTIN, TEXAS
TAYLOR LANE 0.1 MGD WASTEWATER TREATMENT PLANT PROJECT

ELECTRICAL BUILDING PLAN

DWG. NO. E-10

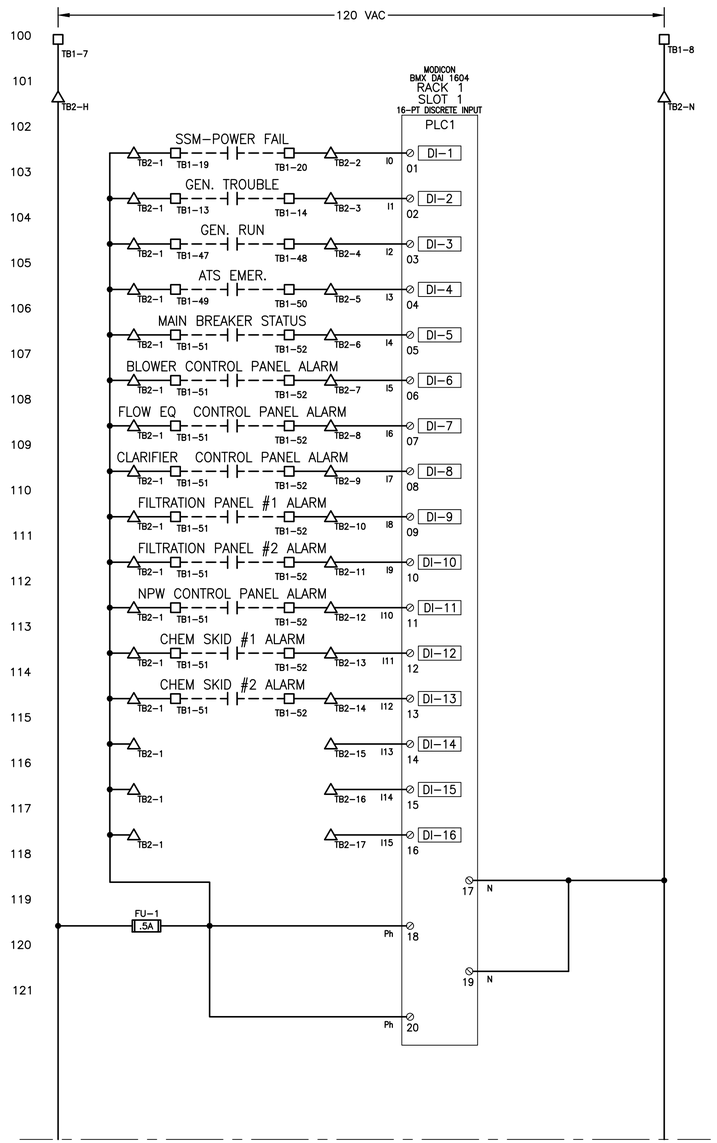

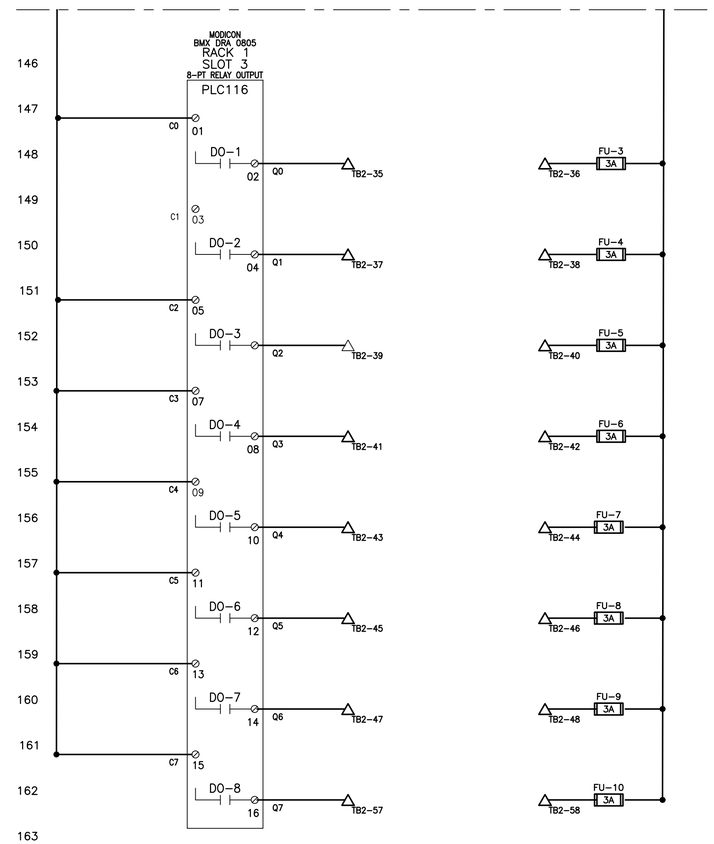

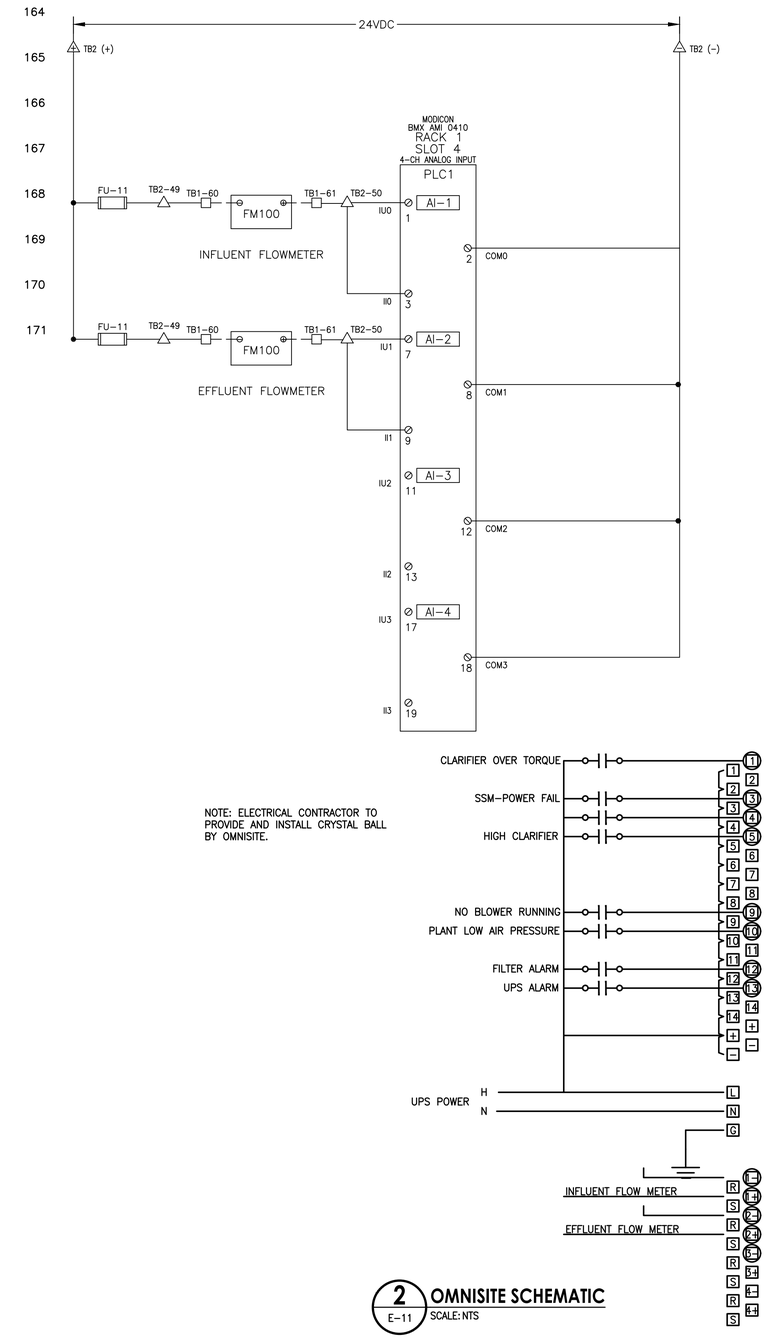

NOTE: ELECTRICAL CONTRACTOR TO PROVIDE AND INSTALL CRYSTAL BALL BY OMNISITE.

1 E-11 **RTU SCHEMATIC**
SCALE: NTS

2 E-11 **OMNISITE SCHEMATIC**
SCALE: NTS

REV	DATE	BY	DESCRIPTION	APPROVED
1	2016/08/03	AH	REVISION #1	SK

VERIFY SCALES
0 1"
IF BAR DOES NOT MEASURE ONE INCH ON THIS SHEET, ADJUST ACCORDINGLY.

STATE OF TEXAS
STEVE L. KANETZKY
84696
LICENSED PROFESSIONAL ENGINEER
8/5/16

DRAWN BY: AH
DESIGNED BY: DM
REVIEWED BY: DN/SK
PROJECT NO: SST# XXXXX

S. Kanetzky Engineering, LLC.
5920 W. William Cannon
Building 7, Suite 200
Austin Texas 78749
(512) 326-3380 TEL.
(512) 329-5774 FAX
www.skaneng.com
TEXAS REGISTRATION #2356
SKE PROJECT # 2620115

SMITH TURRIETA ENGINEERING
P.O. BOX 5902, AUSTIN, TEXAS 78763
TELEPHONE: (512) 569-9022
Texas Registration Number, F-16076

CITY OF AUSTIN, TEXAS
TAYLOR LANE 0.1 MGD WASTEWATER TREATMENT PLANT PROJECT

RTU SCHEMATAIC

DWG. NO. E-11

APPENDIX P-1:
EROSION CONTROL NOTES

1. THE CONTRACTOR SHALL INSTALL EROSION/SEDIMENTATION CONTROLS AND TREE/NATURAL AREA PROTECTIVE FENCING PRIOR TO ANY SITE PREPARATION WORK (CLEARING, GRUBBING OR EXCAVATION).
2. THE PLACEMENT OF EROSION/SEDIMENTATION CONTROLS SHALL BE IN ACCORDANCE WITH THE ENVIRONMENTAL CRITERIA MANUAL AND THE APPROVED EROSION AND SEDIMENTATION CONTROL PLAN.
3. THE PLACEMENT OF TREE/NATURAL AREA PROTECTIVE FENCING SHALL BE IN ACCORDANCE WITH THE CITY OF AUSTIN STANDARD NOTES FOR TREE AND NATURAL AREA PROTECTION AND THE APPROVED GRADING/TREE AND NATURAL AREA PLAN.
4. A PRE-CONSTRUCTION CONFERENCE SHALL BE HELD ON-SITE WITH THE CONTRACTOR, DESIGN ENGINEER/PERMIT APPLICANT AND ENVIRONMENTAL INSPECTOR AFTER INSTALLATION OF THE EROSION/SEDIMENTATION CONTROLS AND TREE/NATURAL AREA PROTECTION MEASURES AND PRIOR TO BEGINNING ANY SITE PREPARATION WORK. THE CONTRACTOR SHALL NOTIFY THE PLANNING AND DEVELOPMENT REVIEW DEPARTMENT, 974-2278, AT LEAST THREE DAYS PRIOR TO THE MEETING DATE.
5. ANY MAJOR VARIATION IN MATERIALS OR LOCATIONS OF CONTROLS OR FENCES FROM THOSE SHOWN ON THE APPROVED PLANS WILL REQUIRE A REVISION AND MUST BE APPROVED BY THE REVIEWING ENGINEER, ENVIRONMENTAL SPECIALIST OR CITY ARBORIST AS APPROPRIATE. MAJOR REVISIONS MUST BE APPROVED BY THE PLANNING AND DEVELOPMENT REVIEW DEPARTMENT. MINOR CHANGES TO BE MADE AS FIELD REVISIONS TO THE EROSION AND SEDIMENTATION CONTROL PLAN MAY BE REQUIRED BY THE ENVIRONMENTAL INSPECTOR DURING THE COURSE OF CONSTRUCTION TO CORRECT CONTROL INADEQUACIES.
6. THE CONTRACTOR IS REQUIRED TO INSPECT THE CONTROLS AND FENCES AT WEEKLY INTERVALS AND AFTER SIGNIFICANT RAINFALL EVENTS TO INSURE THAT THEY ARE FUNCTIONING PROPERLY. THE PERSON(S) RESPONSIBLE FOR MAINTENANCE OF CONTROLS AND FENCES SHALL IMMEDIATELY MAKE ANY NECESSARY REPAIRS TO DAMAGED AREAS. SILT ACCUMULATION AT CONTROLS MUST BE REMOVED WHEN THE DEPTH REACHES SIX (6) INCHES.
7. PRIOR TO FINAL ACCEPTANCE BY THE CITY, HAUL ROADS AND WATERWAY CROSSINGS CONSTRUCTED FOR TEMPORARY CONTRACTOR ACCESS MUST BE REMOVED, ACCUMULATED SEDIMENT REMOVED FROM THE WATERWAY AND THE AREA RESTORED TO THE ORIGINAL GRADE AND REVEGETATED. ALL LAND CLEARING DEBRIS SHALL BE DISPOSED OF IN APPROVED SPOIL DISPOSAL SITES.
8. ALL WORK MUST STOP IF A VOID IN THE ROCK SUBSTRATE IS DISCOVERED WHICH IS; ONE SQUARE FOOT IN TOTAL AREA; BLOWS AIR FROM WITHIN THE SUBSTRATE AND/OR CONSISTENTLY RECEIVES WATER DURING ANY RAIN EVENT. AT THIS TIME IT IS THE RESPONSIBILITY OF THE PROJECT MANAGER TO IMMEDIATELY CONTACT A CITY OF AUSTIN ENVIRONMENTAL INSPECTOR FOR FURTHER INVESTIGATION.
9. TEMPORARY AND PERMANENT EROSION CONTROL: ALL DISTURBED AREAS SHALL BE RESTORED AS NOTED BELOW.
   a. ALL DISTURBED AREAS TO BE REVEGETATED ARE REQUIRED TO PLACE A MINIMUM OF SIX (6) INCHES OF TOPSOIL [SEE STANDARD SPECIFICATION ITEM NO. 601S.3(A)]. DO NOT ADD TOPSOIL WITHIN THE CRITICAL ROOT ZONE OF EXISTING TREES. THE TOPSOIL SHALL BE COMPOSED OF 3 PARTS OF SOIL MIXED WITH 1 PART COMPOST, BY VOLUME. THE COMPOST SHALL BE DILLO DIRT OR AN EQUAL APPROVED BY THE ENGINEER, OR DESIGNATED REPRESENTATIVE. THE APPROVED EQUAL, IF USED, SHALL MEET THE DEFINITION OF COMPOST (AS DEFINED BY TXDOT SPECIFICATION ITEM 161). THE SOIL SHALL BE LOCALLY AVAILABLE NATIVE SOIL THAT MEETS THE FOLLOWING SPECIFICATIONS:
   - SHALL BE FREE OF TRASH, WEEDS, DELETERIOUS MATERIALS, ROCKS, AND DEBRIS.
   - 100% SHALL PASS THROUGH A 0.375-INCH (3/8") SCREEN.
   - SOIL TEXTURE CLASS TO BE LOAM, SANDY CLAY LOAM, OR SANDY LOAM IN ACCORDANCE WITH THE USDA TEXTURE TRIANGLE. SOIL KNOWN LOCALLY AS 'RED DEATH' OR AUSTIN SANDY LOAM IS NOT AN ALLOWABLE SOIL. TEXTURAL COMPOSITION SHALL MEET THE FOLLOWING CRITERIA:

TABLE 1_1 TEXTURAL COMPOSITION REQUIREMENTS

TEXTURE CLASS	MINIMUM	MAXIMUM
CLAY	5%	25%
SILT	10%	50%
SAND	30%	80%

TOPSOIL SALVAGED FROM THE EXISTING SITE MAY OFTEN BE USED, BUT IT SHOULD MEET THE SAME STANDARDS AS SET FORTH IN THESE STANDARDS.

   b. THE VEGETATIVE STABILIZATION OF AREAS DISTURBED BY CONSTRUCTION SHALL BE AS FOLLOWS: TEMPORARY VEGETATIVE STABILIZATION
   c. THE DISTURBED AREAS WITHIN THIS PROJECT SHALL BE REVEGETATED AND ALL PERMANENT EROSION/SEDIMENTATION CONTROLS COMPLETED PRIOR TO THE ISSUANCE OF OCCUPANCY PERMITS FOR THAT PHASE. 25-8-182(B) TEMPORARY EROSION/SEDIMENTATION CONTROLS SHALL BE ADJUSTED AS NEEDED PRIOR TO THIS RELEASE TO INSURE THAT SUBSEQUENT PHASE DISTURBED AREAS ARE ADEQUATELY COVERED. ANY AREA WITHIN THE LIMIT OF DISTURBANCE OF THE PROJECT WHICH IS NOT ADEQUATELY REVEGETATED SHALL BE BROUGHT INTO COMPLIANCE PRIOR TO THE RELEASE OF THE FINAL PHASE.

10. FROM SEPTEMBER 15 TO MARCH 1, SEEDING SHALL BE WITH COOL SEASON COVER CROPS (WHEAT AT 0.5 POUNDS PER 1000 SF, OATS AT 0.5 POUNDS PER 1000 SF, CEREAL RYE GRAIN AT 0.5 POUNDS PER 1000 SF) WITH A TOTAL RATE OF 1.5 POUNDS PER 1000 SF. COOL SEASON COVER CROPS ARE NOT PERMANENT EROSION CONTROL.
11. FROM MARCH 2 TO SEPTEMBER 14, SEEDING SHALL BE WITH HULLED BERMUDA AT A RATE OF 1 POUNDS PER 1000 SF.
   c. FERTILIZER SHALL BE WATER SOLUBLE WITH AN ANALYSIS OF 15-15-15 TO BE APPLIED ONCE AT PLANTING AND ONCE DURING THE PERIOD OF ESTABLISHMENT AT A RATE OF ½ POUND PER 1000 SF.
   d. HYDROMULCH SHALL COMPLY WITH TABLE 1, BELOW.
   e. TEMPORARY EROSION CONTROL SHALL BE ACCEPTABLE WHEN THE GRASS HAS GROWN AT LEAST 1½ INCHES HIGH WITH 95% COVERAGE, PROVIDED NO BARE SPOTS LARGER THAN 16 SQUARE FEET EXIST.
   f. WHEN REQUIRED, NATIVE GRASS SEEDING SHALL COMPLY WITH REQUIREMENTS OF THE CITY OF AUSTIN ENVIRONMENTAL CRITERIA MANUAL.

TABLE 1_1 TEXTURAL COMPOSITION REQUIREMENTS

MATERIAL APPLICATION RATES	DESCRIPTION	LONGEVITY	TYPICAL APPLICATIONS	
70/30 WOOD/ LBS/1000 SF	70% WOOD	0-3 MONTHS	MODERATE SLOPES;	45.9
CELLULOSE BLEND	30% PAPER		FROM FLAT TO 3:1	
MULCH	3% TACKIFIER			
WOOD FIBER LBS/1000 SF	96% WOOD	0-3 MONTHS	MODERATE SLOPES;	45.9
MULCH FLAT TO 3:1	3% TACKIFIER			FROM

PERMANENT VEGETATIVE STABILIZATION

12. FROM SEPTEMBER 15 TO MARCH 1, SEEDING IS CONSIDERED TO BE TEMPORARY STABILIZATION ONLY. IF COOL SEASON COVER CROPS EXIST WHERE PERMANENT VEGETATIVE STABILIZATION IS DESIRED, THE GRASSES SHALL BE MOWED TO A HEIGHT OF LESS THAN ONE-HALF (1/2) INCH AND THE AREA SHALL BE RE-SEEDED IN ACCORDANCE WITH 2. BELOW.
13. FROM MARCH 2 TO SEPTEMBER 14, SEEDING SHALL BE WITH HULLED BERMUDA AT A RATE OF 1 POUND PER 1000 SF WITH A PURITY OF 95% WITH 85% GERMINATION. BERMUDA GRASS IS A WARM SEASON GRASS AND IS CONSIDERED PERMANENT EROSION CONTROL.
   a. FERTILIZER SHALL BE WATER SOLUBLE WITH AN ANALYSIS OF 15-15-15 TO BE APPLIED ONCE AT PLANTING AND ONCE DURING THE PERIOD OF ESTABLISHMENT AT A RATE OF ½ POUND PER 1000 SF.
   b. HYDROMULCH SHALL COMPLY WITH THE TABLE BELOW.
   C. THE PLANTED AREA SHALL BE IRRIGATED OR SPRINKLED IN A MANNER THAT WILL NOT ERODE THE TOPSOIL, BUT WILL SUFFICIENTLY SOAK THE SOIL TO A DEPTH OF SIX INCHES. THE IRRIGATION SHALL OCCUR AT DAILY INTERVALS (MINIMUM) DURING THE FIRST TWO MONTHS. RAINFALL OCCURRENCES OF ½ INCH OR MORE SHALL POSTPONE THE WATERING SCHEDULE FOR ONE WEEK.
   d. PERMANENT EROSION CONTROL SHALL BE ACCEPTABLE WHEN THE GRASS HAS GROWN AT LEAST 1½ INCHES HIGH WITH 95% COVERAGE, PROVIDED NO BARE SPOTS LARGER THAN 16 SQUARE FEET EXIST.
   e. WHEN REQUIRED, NATIVE GRASS SEEDING SHALL COMPLY WITH REQUIREMENTS OF THE CITY OF AUSTIN ENVIRONMENTAL CRITERIA MANUAL.

TABLE 1_2 HYDROMULCHING FOR PERMANENT VEGETATIVE STABILIZATION

MATERIAL	DESCRIPTION	LONGEVITY	TYPICAL APPLICATIONS	APPLICATION RATES
BONDED FIBER MATRIX (BFM)	80% THERMALLY REFINED WOOD 10% TACKIFIER	6 MONTHS	ON SLOPES UP TO 2:1 AND EROSIVE SOIL CONDITIONS	63.9 LBS/SF TO 80.3 LBS/1000 SF
FIBER REINFORCED MATRIX (FRM)	75% THERMALLY REFINED WOOD 5% REINFORCING FIBERS 10% TACKIFIER	12 MONTHS	ON SLOPES UP TO 1:1 AND EROSIVE SOIL CONDITIONS	63.9 LBS/SF TO 80.3 LBS/ 1000SF

14. THE CONTRACTOR SHALL NOT DISPOSE OF SURPLUS EXCAVATED MATERIAL FROM THE SITE WITHOUT NOTIFYING THE PLANNING AND DEVELOPMENT REVIEW DEPARTMENT AT 974-2278 AT LEAST 48 HOURS PRIOR WITH THE LOCATION AND A COPY OF THE PERMIT ISSUED TO RECEIVE THE MATERIAL.

CITY OF AUSTIN STANDARD NOTES FOR TREE AND NATURAL AREA PROTECTION

1. ALL TREES AND NATURAL AREAS SHOWN ON PLAN TO BE PRESERVED SHALL BE PROTECTED DURING CONSTRUCTION WITH TEMPORARY FENCING.
2. PROTECTIVE FENCES SHALL BE ERECTED ACCORDING TO CITY OF AUSTIN STANDARDS FOR TREE PROTECTION.
3. PROTECTIVE FENCES SHALL BE INSTALLED PRIOR TO THE START OF ANY SITE PREPARATION WORK (CLEARING, GRUBBING OR GRADING), AND SHALL BE MAINTAINED THROUGHOUT ALL PHASES OF THE CONSTRUCTION PROJECT.
4. EROSION AND SEDIMENTATION CONTROL BARRIERS SHALL BE INSTALLED OR MAINTAINED IN A MANNER WHICH DOES NOT RESULT IN SOIL BUILDUP WITHIN TREE DRIP LINES.
5. PROTECTIVE FENCES SHALL SURROUND THE TREES OR GROUP OF TREES, AND WILL BE LOCATED AT THE OUTERMOST LIMIT OF BRANCHES (DRIP LINE), FOR NATURAL AREAS, PROTECTIVE FENCES SHALL FOLLOW THE LIMIT OF CONSTRUCTION LINE, IN ORDER TO PREVENT THE FOLLOWING: A. SOIL COMPACTION IN THE ROOT ZONE AREA RESULTING FROM VEHICULAR TRAFFIC OR STORAGE OF EQUIPMENT OR MATERIALS; B. ROOT ZONE DISTURBANCES DUE TO GRADE CHANGES (GREATER THAN 6 INCHES CUT OR FILL), OR TRENCHING NOT REVIEWED AND AUTHORIZED BY THE CITY ARBORIST; C. WOUNDS TO EXPOSED ROOTS, TRUNK OR LIMBS BY MECHANICAL EQUIPMENT; D. OTHER ACTIVITIES DETRIMENTAL TO TREES SUCH AS CHEMICAL STORAGE, CEMENT TRUCK CLEANING, AND FIRES.
6. EXCEPTIONS TO INSTALLING FENCES AT TREE DRIP LINES MAY BE PERMITTED IN THE FOLLOWING CASES: A. WHERE THERE IS TO BE AN APPROVED GRADE CHANGE, IMPERMEABLE PAVING SURFACE, TREE WELL, OR OTHER SUCH SITE DEVELOPMENT, ERECT THE FENCE APPROXIMATELY 2 TO 4 FEET BEYOND THE AREA DISTURBED; B. WHERE PERMEABLE PAVING IS TO BE INSTALLED WITHIN A TREE'S DRIP LINE, ERECT THE FENCE AT THE OUTER LIMITS OF THE PERMEABLE PAVING AREA (PRIOR TO SITE GRADING SO THAT THIS AREA IS GRADED SEPARATELY PRIOR TO PAVING INSTALLATION TO MINIMIZED ROOT DAMAGE); C. WHERE TREES ARE CLOSE TO PROPOSED BUILDINGS, ERECT THE FENCE TO ALLOW 6 TO 10 FEET OF WORKSPACE BETWEEN THE FENCE AND THE BUILDING; D. WHERE THERE ARE SEVERE SPACE CONSTRAINTS DUE TO TRACT SIZE, OR OTHER SPECIAL REQUIREMENTS, CONTACT THE CITY ARBORIST AT 974-1876 TO DISCUSS ALTERNATIVES. SPECIAL NOTE: FOR THE PROTECTION OF NATURAL AREAS, NO EXCEPTIONS TO INSTALLING FENCES AT THE LIMIT OF CONSTRUCTION LINE WILL BE PERMITTED.
7. WHERE ANY OF THE ABOVE EXCEPTIONS RESULT IN A FENCE BEING CLOSER THAN 4 FEET TO A TREE TRUNK, PROTECT THE TRUNK WITH STRAPPED-ON PLANKING TO A HEIGHT OF 8 FT (OR TO THE LIMITS OF LOWER BRANCHING) IN ADDITION TO THE REDUCED FENCING PROVIDED.
8. TREES APPROVED FOR REMOVAL SHALL BE REMOVED IN A MANNER WHICH DOES NOT IMPACT TREES TO BE PRESERVED.
9. ANY ROOTS EXPOSED BY CONSTRUCTION ACTIVITY SHALL BE PRUNED FLUSH WITH THE SOIL. BACKFILL ROOT AREAS WITH GOOD QUALITY TOP SOIL AS SOON AS POSSIBLE. IF EXPOSED MATERIAL IN A MANNER WHICH REDUCES SOIL TEMPERATURE AND MINIMIZES WATER LOSS DUE TO EVAPORATION.
10. ANY TRENCHING REQUIRED FOR THE INSTALLATION OF LANDSCAPE IRRIGATION SHALL BE PLACED AS FAR FROM EXISTING TREE TRUNKS AS POSSIBLE.
11. NO LANDSCAPE TOPSOIL DRESSING GREATER THAN 4 INCHES SHALL BE PERMITTED WITHIN THE DRIP LINE OF TREES. NO SOIL IS PERMITTED ON THE ROOT FLARE OF ANY TREE.
12. PRUNING TO PROVIDE CLEARANCE FOR STRUCTURES, VEHICULAR TRAFFIC AND EQUIPMENT SHALL TAKE PLACE BEFORE DAMAGE OCCURS (RIPPING OF BRANCHES, ETC.).
13. ALL FINISHED PRUNING SHALL BE DONE ACCORDING TO RECOGNIZED, APPROVED STANDARDS OF THE INDUSTRY (REFERENCE THE NATIONAL ARBORIST ASSOCIATION PRUNING STANDARDS FOR SHADE TREES AVAILABLE ON REQUEST FROM THE CITY ARBORIST).
14. PRIOR TO EXCAVATION WITHIN TREE DRIPLINES, OR THE REMOVAL OF TREES ADJACENT TO OTHER TREES THAT ARE TO REMAIN, MAKE A CLEAN CUT BETWEEN THE DISTURBED AND UNDISTURBED ROOT ZONES WITH A ROCK SAW OR SIMILAR EQUIPMENT TO MINIMIZE ROOT DAMAGE.
15. IN CRITICAL ROOT ZONE AREAS THAT CANNOT BE PROTECTED DURING CONSTRUCTION WITH FENCING, AND WHERE HEAVY VEHICULAR TRAFFIC IS ANTICIPATED, COVER THOSE AREAS WITH FOUR (4) INCHES OF ORGANIC MULCH TO BE PRODUCED ON SITE, TO MINIMIZE SOIL COMPACTION.
16. PERFORM ALL GRADING WITHIN CRITICAL ROOT ZONE AREAS WITH SMALL EQUIPMENT TO MINIMIZE ROOT DAMAGE.
17. WATER ALL TREES MOST HEAVILY IMPACTED BY CONSTRUCTION ACTIVITIES DEEPLY AS NECESSARY DURING PERIODS OF HOT, DRY WEATHER. SPRAY TREE CROWNS WITH WATER PERIODICALLY TO REDUCE DUST ACCUMULATION ON THE LEAVES.
18. WHEN INSTALLING CONCRETE ADJACENT TO THE ROOT ZONE OF A TREE, USE A PLASTIC VAPOR BARRIER BEHIND THE CONCRETE TO PROHIBIT LEACHING OF LIME INTO THE SOIL.
19. DEVIATIONS FROM THE ABOVE NOTES MAY BE CONSIDERED ORDINANCE VIOLATIONS IF THERE IS SUBSTANTIAL NON-COMPLIANCE OR IF A TREE SUSTAINS DAMAGE AS A RESULT.

GENERAL CONSTRUCTION NOTES

1. ALL CONSTRUCTION SHALL BE IN ACCORDANCE WITH THE CITY OF AUSTIN STANDARD SPECIFICATIONS.
2. DESIGN PROCEDURES ARE IN GENERAL COMPLIANCE WITH THE CITY OF AUSTIN DRAINAGE CRITERIA MANUAL.
3. ALL RESPONSIBILITY FOR THE ADEQUACY OF THESE PLANS REMAINS WITH THE ENGINEER WHO PREPARED THEM. IN REVIEWING THESE PLANS, THE CITY OF AUSTIN MUST RELY ON THE ADEQUACY OF THE WORK OF THE DESIGN ENGINEER.
4. CONTRACTOR SHALL CALL THE TEXAS ONE CALL CENTER (1-800-245-4545) FOR UTILITY LOCATIONS PRIOR TO ANY WORK IN CITY EASEMENTS OR STREET R.O.W.
5. CONTRACTOR SHALL NOTIFY THE DEPARTMENT OF PUBLIC WORKS AND TRANSPORTATION AT (512) 974-7266 AT LEAST 24 HOURS PRIOR TO THE INSTALLATION OF ANY DRAINAGE FACILITY WITHIN A DRAINAGE EASEMENT OR STREET R.O.W. THE METHOD OF PLACEMENT AND COMPACTION OF BACKFILL IN THE CITY'S R.O.W. MUST BE APPROVED PRIOR TO THE START OF BACKFILL OPERATIONS.
6. FOR SLOPES OR TRENCHES GREATER THAN FIVE (5) FEET IN DEPTH, A NOTE MUST BE ADDED STATING THAT CONSTRUCTION OPERATIONS SHALL BE ACCOMPLISHED IN ACCORDANCE WITH APPLICABLE REGULATIONS OF THE U.S. OCCUPATIONAL SAFETY AND HEALTH ADMINISTRATION. COPIES OF OSHA STANDARDS MAY BE PURCHASED FROM THE U.S. GOVERNMENT PRINTING OFFICE; INFORMATION AND RELATED REFERENCE MATERIALS MAY BE PURCHASED FROM OSHA, 611 E. 6TH STREET, AUSTIN, TEXAS.
7. ALL SITE WORK MUST ALSO COMPLY WITH ENVIRONMENTAL REQUIREMENTS.
8. UPON COMPLETION OF THE PROPOSED SITE IMPROVEMENTS AND PRIOR TO:
   - RELEASE OF THE CERTIFICATE OF OCCUPANCY BY THE DEPARTMENT OF PLANNING AND DEVELOPMENT (INSIDE THE CITY LIMITS); OR
   - INSTALLATION OF AN ELECTRIC OR WATER METER (IN THE FIVE-MILE ETJ), THE ENGINEER SHALL CERTIFY IN WRITING THAT THE PROPOSED DRAINAGE, FILTRATION, AND DETENTION FACILITIES WERE CONSTRUCTED IN CONFORMANCE WITH THE APPROVED PLANS.
9. A MINIMUM OF TWO BENCHMARKS PER SUBDIVISION TO INCLUDE DESCRIPTION, LOCATION, AND ELEVATION. TIE TO CITY OF AUSTIN STANDARDS.
10. PRIOR TO BEGINNING CONSTRUCTION, THE OWNER OR HIS AUTHORIZED REPRESENTATIVE SHALL CONVENE A PRE-CONSTRUCTION CONFERENCE BETWEEN THE CITY OF AUSTIN, TRAVIS COUNTY ESD #12, CONSULTING ENGINEER, CONTRACTOR, AND ANY OTHER AFFECTED PARTIES. NOTIFY PLANNING AND DEVELOPMENT REVIEW, CONSTRUCTION INSPECTION DIVISION, 974-7065, AND AUSTIN WATER UTILITY, 972-0003, AT LEAST 48 HOURS PRIOR TO THE TIME OF THE CONFERENCE AND 48 HOURS PRIOR TO THE BEGINNING OF CONSTRUCTION.
11. THE CONTRACTOR SHALL GIVE THE CITY A MINIMUM OF 48 HOURS NOTICE BEFORE BEGINNING EACH PHASE OF CONSTRUCTION, CALL CONSTRUCTION INSPECTION DIVISION, 974-7065.
12. BARRICADES, BUILT TO CITY OF AUSTIN STANDARD SPECIFICATIONS, SHALL BE CONSTRUCTED ON ALL DEAD-END STREETS AND AS NECESSARY DURING CONSTRUCTION TO MAINTAIN JOB SAFETY.
13. IF BLASTING IS PLANNED BY THE CONTRACTOR, A BLASTING PERMIT MUST BE SECURED PRIOR TO COMMENCEMENT OF ANY BLASTING.
14. ANY EXISTING PAVEMENT, CURBS, AND/ OR SIDEWALKS DAMAGED OR REMOVED WILL BE REPAIRED BY THE CONTRACTOR AT HIS EXPENSE BEFORE ACCEPTANCE OF THE SITE PLAN.
15. THE LOCATION OF ANY WATER AND / OR WASTEWATER LINES SHOWN ON THE PLANS MUST BE VERIFIED BY THE WATER AND WASTEWATER DEPARTMENT.
16. ALL STORM SEWER PIPES TO BE CLASS III RCP UNLESS NOTED OTHERWISE.

FIRE DEPARTMENT

1. THE TRAVIS COUNTY ESD #12 REQUIRES ASPHALT OR CONCRETE PAVEMENT PRIOR TO CONSTRUCTION AS AN "ALL WEATHER DRIVING SURFACE."
2. HYDRANTS MUST BE INSTALLED WITH THE CENTER OF THE 4-INCH OPENING AT LEAST EIGHTEEN (18) INCHES ABOVE FINISHED GRADE. THE 4-INCH OPENING MUST FACE THE DRIVEWAY OR STREET WITH A THREE (3) TO SIX (6) FOOT SETBACK FROM CURBLINE(S) NO OBSTRUCTION IS ALLOWED WITHIN THREE (3) FEET OF ANY HYDRANT AND THE 4-INCH OPENING MUST BE TOTALLY UNOBSTRUCTED FROM THE STREET.
3. TIMING OF INSTALLATION: WHEN FIRE PROTECTION FACILITIES ARE INSTALLED BY THE DEVELOPER, SUCH FACILITIES INCLUDE ALL SURFACE ACCESS ROADS WHICH SHALL BE INSTALLED AND MADE SERVICEABLE PRIOR TO AND DURING THE TIME OF CONSTRUCTION. WHERE ALTERNATE METHODS OF PROTECTION ARE PROVIDED, AS APPROVED BY THE FIRE CHIEF, THE ABOVE MAY BE MODIFIED OR WAIVED.
4. ALL PERVIOUS/DECORATIVE PAVING SHALL BE ENGINEERED AND INSTALLED FOR 80,000 LB. LIVE VEHICLE LOADS. ANY PERVIOUS/DECORATIVE PAVING WITHIN 100' OF ANY BUILDING MUST BE APPROVED BY THE FIRE DEPARTMENT.
5. COMMERCIAL DUMPSTERS AND CONTAINERS WITH AN INDIVIDUAL CAPACITY OF 1.5 CUBIC YARDS OR GREATER SHALL NOT BE STORED OR PLACED WITHIN TEN (10) FEET OF OPENINGS, COMBUSTIBLE WALLS, OR COMBUSTIBLE EAVE LINES.
6. FIRE LANES DESIGNATED ON SITE PLAN SHALL BE REGISTERED WITH TRAVIS COUNTY ESD #12 OFFICE AND INSPECTED FOR FINAL APPROVAL.
7. VERTICAL CLEARANCE REQUIRED FOR FIRE APPARATUS IS 14 FEET, 0 INCHES FOR FULL WIDTH OF ACCESS DRIVE.

AMERICANS WITH DISABILITIES ACT

1. THE CITY OF AUSTIN HAS REVIEWED THIS PLAN FOR COMPLIANCE WITH CITY DEVELOPMENT REGULATIONS ONLY. THE APPLICANT, PROPERTY OWNER, AND OCCUPANT OF THE PREMISES ARE RESPONSIBLE FOR DETERMINING WHETHER THE PLAN COMPLIES WITH ALL OTHER LAWS, REGULATIONS, AND RESTRICTIONS WHICH MAY BE APPLICABLE TO THE PROPERTY AND ITS USE.

DEVELOPER INFORMATION:

CLUB DEAL 120 PHONE # (817) 788-1000

ADDRESS: 9235 HUNTINGTON SQUARE, NORTH RICHLAND HILLS, TX 76182

OWNER'S REPRESENTATIVE RESPONSIBLE FOR PLAN ALTERATIONS:

BURY + PARTNERS, INC. PHONE #(512) 328-0011

PERSON OR FIRM RESPONSIBLE FOR EROSION/SEDIMENTATION CONTROL MAINTENANCE:

CLUB DEAL 120 PHONE # (817) 788-1000

PERSON OR FIRM RESPONSIBLE FOR TREE/NATURAL AREA PROTECTION MAINTENANCE:

CLUB DEAL 120 PHONE # (817) 788-1000

THE CONTRACTOR SHALL NOT DISPOSE OF SURPLUS EXCAVATED MATERIAL FROM THE SITE WITHOUT NOTIFYING THE DRAINAGE UTILITY DEPARTMENT AT 974-2278 AT LEAST 48 HOURS PRIOR WITH THE LOCATION AND A COPY OF THE PERMIT ISSUED TO RECEIVE THE MATERIAL.

SPECIAL TREE FERTILIZATION NOTES

1. TREES WILL BE FERTILIZED PRIOR TO ANY CONSTRUCTION ACTIVITY. MATERIALS AND METHODS ARE TO BE APPROVED BY THE CITY ARBORIST (974-1876) PRIOR TO APPLICATION.
2. THE GENERAL CONTRACTOR SHALL SELECT A FERTILIZATION CONTRACTOR AND INSURE COORDINATION WITH THE CITY ARBORIST. WITHIN 7 DAYS AFTER FERTILIZATION IS PERFORMED, THE CONTRACTOR SHALL PROVIDE DOCUMENTATION OF THE WORK PERFORMED TO THE CITY ARBORIST, PLANNING, P.O. BOX 1088, AUSTIN, TEXAS, 78767.
3. ALL CLASS 1 TREES WITHIN (OR ADJACENT TO) THE LIMITS OF CONSTRUCTION WHICH ARE INDICATED TO BE PRESERVED (ON THE PLANS) WILL BE FERTILIZED PRIOR TO THE BEGINNING OF CONSTRUCTION ACTIVITIES AND AGAIN AFTER THE COMPLETION OF ALL CONSTRUCTION. AREAS TO BE FERTILIZED INCLUDE THE ENTIRE CRITICAL ROOT ZONE OF A TREE AS DEPICTED ON THE CITY APPROVED PLANS. TREES ARE TO BE FERTILIZED VIA SOIL INJECTION METHOD (MINIMUM100 PSI), USING DOGGETT X-L INJECTO 32-7-7 OR EQUIVALENT AT RECOMMENDED RATES. CONSTRUCTION THAT WILL BE COMPLETED IN LESS THAN 90 DAYS SHOULD USE MATERIAL AT ½ RECOMMENDED RATES. ALTERNATIVE ORGANIC FERTILIZER MATERIALS ARE ACCEPTABLE WHEN APPROVED BY THE CITY ARBORIST.

SEQUENCE OF CONSTRUCTION

1. CALL PLANNING AND DEVELOPMENT REVIEW DEPARTMENT, 974-7065, 72 HOURS PRIOR TO BEGINNING ANY WORK. CALL THE TEXAS ONE CALL CENTER AT 800-545-6005 FOR UTILITY LOCATIONS, AND OBTAIN PERMIT FOR ANY WORK INSIDE CITY ROW.
2. TREES WILL BE FERTILIZED PRIOR TO ANY CONSTRUCTION ACTIVITY. MATERIALS AND METHODS ARE TO BE APPROVED BY THE CITY ARBORIST (974-1876) PRIOR TO APPLICATION. THE GENERAL CONTRACTOR SHALL SELECT A FERTILIZATION CONTRACTOR AND INSURE COORDINATION WITH THE CITY ARBORIST. WITHIN 7 DAYS AFTER FERTILIZATION IS PERFORMED, THE CONTRACTOR SHALL PROVIDE DOCUMENTATION OF THE WORK PERFORMED TO THE CITY ARBORIST, WATERSHED PROTECTION, P.O.BOX 1088, AUSTIN, TEXAS, 78767. ALL CLASS 1 TREES WITHIN (OR ADJACENT TO) THE LIMITS OF CONSTRUCTION WHICH ARE INDICATED TO BE PRESERVED (ON THE PLANS) WILL BE FERTILIZED PRIOR TO THE BEGINNING OF CONSTRUCTION ACTIVITIES AND AGAIN AFTER THE COMPLETION OF ALL CONSTRUCTION. AREAS TO BE FERTILIZED INCLUDE THE ENTIRE CRITICAL ROOT ZONE OF A TREE AS DEPICTED ON THE CITY APPROVED PLANS. TREES ARE TO BE FERTILIZED VIA SOIL INJECTION METHOD (MINIMUM 110 PSI), USING DOGGETT X-L INJECTO 32-7-7 OR EQUIVALENT AT RECOMMENDED RATES. CONSTRUCTION THAT WILL BE COMPLETED IN LESS THAN 90 DAYS SHOULD USE MATERIAL AT ½ RECOMMENDED RATES. ALTERNATIVE ORGANIC FERTILIZER MATERIALS ARE ACCEPTABLE WHEN APPROVED BY THE CITY ARBORIST.
3. TEMPORARY EROSION AND SEDIMENTATION CONTROLS ARE TO BE INSTALLED AS INDICATED ON THE APPROVED SITE PLAN OR SUBDIVISION CONSTRUCTION PLAN AND IN ACCORDANCE WITH THE STORMWATER POLLUTION PREVENTION PLAN (SWPPP) THAT IS REQUIRED TO BE POSTED ON THE SITE. INSTALL TREE PROTECTION AND INITIATE TREE MITIGATION MEASURES.
4. THE ENVIRONMENTAL PROJECT MANAGER OR SITE SUPERVISOR MUST CONTACT THE WATERSHED PROTECTION DEPARTMENT, ENVIRONMENTAL INSPECTION, AT 512-974-2278, 72 HOURS PRIOR TO THE SCHEDULED DATE OF THE REQUIRED ON-SITE PRECONSTRUCTION MEETING.
5. THE ENVIRONMENTAL PROJECT MANAGER, AND/OR SITE SUPERVISOR, AND/OR DESIGNATED RESPONSIBLE PARTY, AND THE GENERAL CONTRACTOR WILL FOLLOW THE STORM WATER POLLUTION PREVENTION PLAN (SWPPP) POSTED ON THE SITE. TEMPORARY EROSION AND SEDIMENTATION CONTROLS WILL BE REVISED, IF NEEDED, TO COMPLY WITH CITY INSPECTORS' DIRECTIVES, AND REVISED CONSTRUCTION SCHEDULE RELATIVE TO THE WATER QUALITY PLAN REQUIREMENTS AND THE EROSION PLAN.
6. TEMPORARY EROSION AND SEDIMENTATION CONTROLS WILL BE INSPECTED AND MAINTAINED IN ACCORDANCE WITH THE STORM WATER POLLUTION PREVENTION PLAN (SWPPP) POSTED ON THE SITE.
7. BEGIN SITE CLEARING/CONSTRUCTION (OR DEMOLITION) ACTIVITIES. CONSTRUCT (ROUGH CUT) DETENTION POND TO ACT AS A SEDIMENT TRAP. EITHER THE PERMANENT OUTLET STRUCTURE OR A TEMPORARY OUTLET OR SKIMMER SYSTEM SHALL BE IN PLACE BEFORE AN EMBANKMENT OR EXCAVATION IS IN PLACE THAT ALLOWS PONDING TO DEVELOP. TEMPORARY BERMS WITH MINIMUM DIMENSIONS OF 18-INCHES TALL BY 2 FEET WIDE (TOP WIDTH) SHALL BE CONSTRUCTED TO DIRECT STORMWATER RUNOFF FROM DA 2, DA 3, AND DA 4 TO THE SEDIMENT TRAP AND MAY NOT BE REMOVED UNTIL FINAL GRADING OF THE PERMANENT BERMS, SWALES, AND STORMSEWER IMPROVEMENTS ARE IN PLACE.
8. FINAL GRADING AND SITE RESTORATION OF THE PHASE 1 AREA ARE TO BE PERFORMED IMMEDIATELY UPON COMMENCEMENT OF THE WORK.
9. IF DISTURBED AREA IS NOT TO BE WORKED ON FOR MORE THAN 14 DAYS, DISTURBED AREA NEEDS TO BE STABILIZED BY REVEGETATION, MULCH, TARP OR REVEGETATION MATTING.
10. COMPLETE CONSTRUCTION AND START REVEGETATION OF THE SITE AND INSTALLATION OF LANDSCAPING.
11. UPON COMPLETION OF THE SITE CONSTRUCTION AND REVEGETATION OF A PROJECT SITE, THE DESIGN ENGINEER SHALL SUBMIT AN ENGINEER'S LETTER OF CONCURRENCE TO THE WATERSHED PROTECTION AND DEVELOPMENT REVIEW DEPARTMENT INDICATING THAT CONSTRUCTION, INCLUDING REVEGETATION, IS COMPLETE AND IN SUBSTANTIAL CONFORMITY WITH THE APPROVED PLANS. AFTER RECEIVING THIS LETTER, A FINAL INSPECTION WILL BE SCHEDULED BY THE APPROPRIATE CITY INSPECTOR.
12. UPON COMPLETION OF LANDSCAPE INSTALLATION OF A PROJECT SITE, THE LANDSCAPE ARCHITECT SHALL SUBMIT A LETTER OF CONCURRENCE TO THE WATERSHED PROTECTION AND DEVELOPMENT REVIEW DEPARTMENT INDICATING THAT THE REQUIRED LANDSCAPING IS COMPLETE AND IN SUBSTANTIAL CONFORMITY WITH THE APPROVED PLANS. AFTER RECEIVING THIS LETTER, A FINAL INSPECTION WILL BE SCHEDULED BY THE APPROPRIATE CITY INSPECTOR.
13. AFTER A FINAL INSPECTION HAS BEEN CONDUCTED BY THE CITY INSPECTOR AND WITH APPROVAL FROM THE CITY INSPECTOR, REMOVE THE TEMPORARY EROSION AND SEDIMENTATION CONTROLS AND COMPLETE ANY NECESSARY FINAL REVEGETATION RESULTING FROM REMOVAL OF THE CONTROLS. CONDUCT ANY MAINTENANCE AND REHABILITATION OF THE WATER QUALITY PONDS OR CONTROLS.

City of Austin
Founded by Congress, Republic of Texas, 1839
Planning and Development Review Department
One Texas Center, 505 Barton Springs Road
P.O. Box 1088, Austin, Texas 78767

Kelley Fowler, P.E.
Bury
221 West 6th Street
Austin, TX 78701

Alternative Equivalent Compliance for Taylor Lane Wastewater Treatment Plant (SP-2013-0044C)

October 24, 2013

Case Reviewer: Amanda Couch 974-2881

The City of Austin's findings for the requested Alternative Equivalence Compliance as follows:

1.) Section 2.2.5(B) – Internal Circulation Route
2.) Section 2.2.5(F) – Orientation of Building Frontage

It is impractical to require strict compliance with the above requirements due to the fact that this facility is not to be accessible to the public or pedestrian oriented. The facility is to be gated and locked at all times for public health and safety reasons.

As an alternative, the Taylor Lane Wastewater Treatment Plant shall provide a pedestrian amenity within the treatment plant for the workers on site. The amenity shall include shades seating under a 3" live oak tree.

If you have any questions about this determination, please call Amanda Couch at 974-2881.

Amanda M. Couch

Amanda Couch
Planner Senior
Planning and Development Review Department

Copy of City of Austin Originals

MILLER blueprint Since 1920

FOR CITY USE ONLY:

SITE PLAN APPROVAL Sheet 2 of 42
FILE NUMBER: SP-2013-0044C APPLICATION DATE: 2-8-13
APPROVED BY COMMISSION ON: N/A UNDER SECTION 112 OF
CHAPTER 25-5 OF THE CITY OF AUSTIN CODE.
EXPIRATION DATE (25-5-81,LDC) 3-11-17 CASE MANAGER A. COUCH
PROJECT EXPIRATION DATE (ORD.#970905-A) N/A DWPZ ___ DDZ ___
Amanda M. Couch
Director, Planning and Development Review Department
RELEASED FOR GENERAL COMPLIANCE: 3-11-14 ZONING: PUD
Rev. 1 ______ Correction 1 ______
Rev. 2 ______ Correction 2 ______
Rev. 3 ______ Correction 3 ______

FINAL PLAT MUST BE RECORDED BY THE PROJECT EXPIRATION DATE, IF APPLICABLE. SUBSEQUENT SITE PLANS WHICH DO NOT COMPLY WITH THE CODE CURRENT AT THE TIME OF FILING, AND ALL REQUIRED BUILDING PERMITS AND/OR A NOTICE OF CONSTRUCTION (IF A BUILDING PERMIT IS NOT REQUIRED), MUST ALSO BE APPROVED PRIOR TO THE PROJECT EXPIRATION DATE.

DATE	NO.	REVISION	APPROVAL

Bury+Partners
221 West Sixth Street, Suite 600
Austin, Texas 78701
Tel. (512)328-0011 Fax (512)328-0325
TBPE Registration Number F-1048
Bury+Partners, Inc. ©Copyright 2014

STATE OF TEXAS
KELLEY W. FOWLER
108583
LICENSED
PROFESSIONAL ENGINEER
02/27/14

GENERAL NOTES

WASTEWATER TREATMENT PLANT
7535 1/2 TAYLOR LANE

TAYLOR LANE

DRAWN BY: RWM
DESIGNED BY: KWF
REVIEWED BY: KWF
PROJECT NO.: 80046-01

SHEET 2 OF 42

SP-2013-0044C

P:\G AutoCAD\80046\01\WWTP\PERMIT\80046001GN501.dwg modified by kfowler on Feb 26, 14 1:34 PM

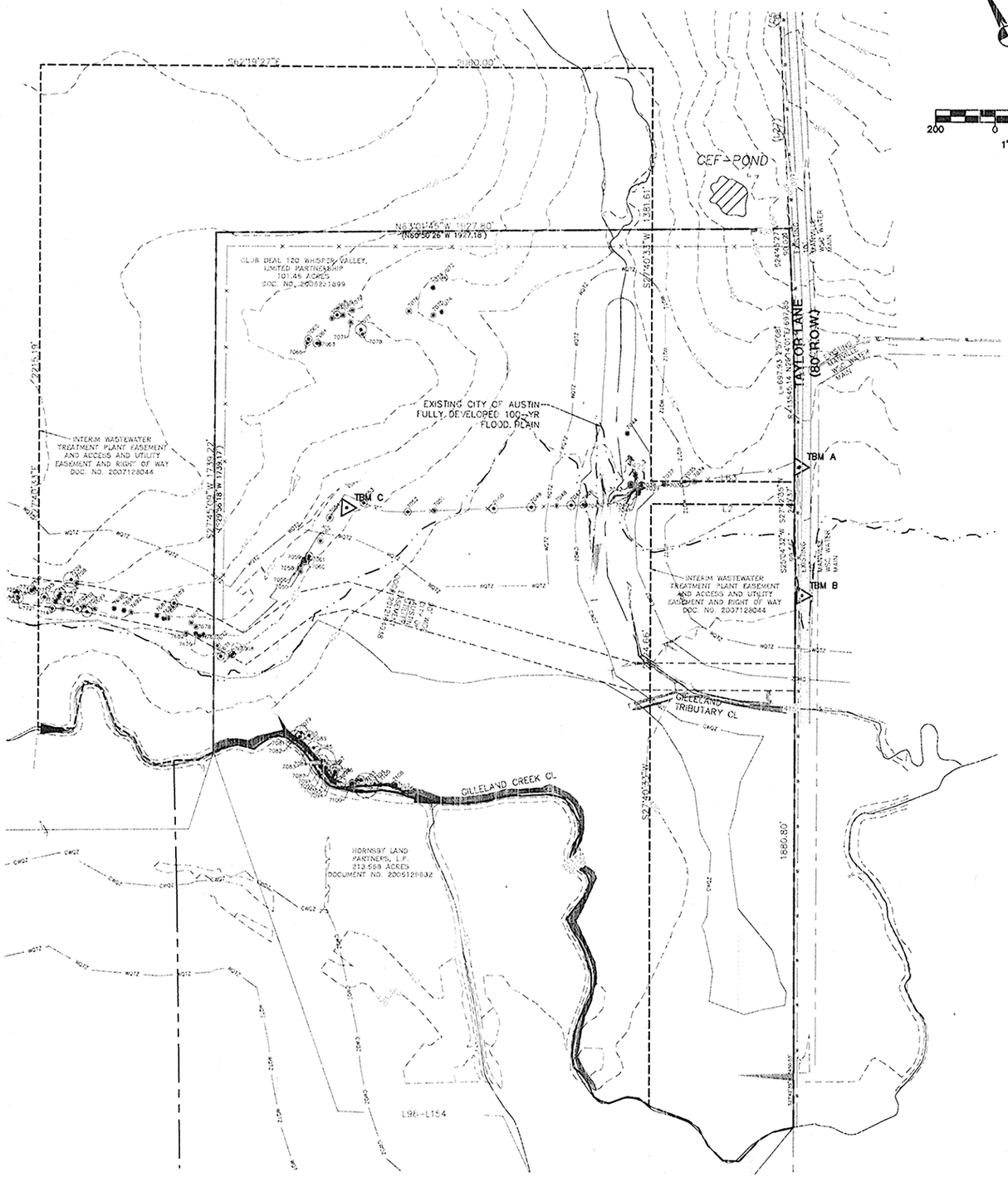

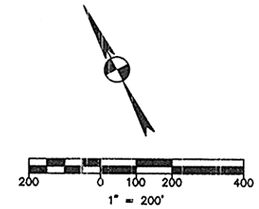

LEGEND

EXISTING	
	PROPERTY (R.O.W.) LINE
	RECORD INFORMATION
	LIGHT POLE
	POWER POLE
	DOWN GUY
	TRANSFORMER (SIZE VARIES)
	FIRE HYDRANT
	WATER VALVE
	WATER METER
	WATER METER VAULT
	WATER MANHOLE
	TELEPHONE RISER
	CABLE TV RISER
	ELECTRIC BOX
	ELECTRIC METER
	GAS METER
	GAS VALVE
	TRAFFIC CONTROL BOX
	TRAFFIC SIGNAL POST
	GRATE INLET
	CURB INLET (SIZE VARIES)
	GREASE TRAP (SIZE VARIES)
	WIRE FENCE
	OVERHEAD ELECTRIC
	ELECTRIC MANHOLE (SIZE VARIES)
	WASTEWATER MANHOLE (SIZE VARIES)
	STORMSEWER MANHOLE (SIZE VARIES)
	TELEPHONE MANHOLE (SIZE VARIES)
	DUMPSTER
	TRASH COMPACTOR
	CURB & GUTTER
	SIGN
	WHEELSTOP
	BOLLARD
	PARKING COUNT (REGULAR SPACES)
	HANDICAP SPACE
	TREE
	ZONING BOUNDARIES
678	CONTOUR
	EXISTING BOUNDARIES
	PROPOSED BOUNDARIES

TREE LIST		
TAG NO.		SIZE AND DESCRIPTION
7034	–	HACKBERRY 9
7035	–	MESQUITE 17 16
7036	–	MESQUITE 9 9
7037	–	MESQUITE 8 7
7038	(R)	HACKBERRY 9
7039	(R)	MESQUITE 13 10
7040	(R)	HACKBERRY 9
7041	(R)	HACKBERRY 9
7042	(R)	HACKBERRY 11
7043	(R)	CEDAR ELM 9
7044	–	HACKBERRY 8
7045	–	HACKBERRY 8
7046	–	HACKBERRY 12
7047	–	MESQUITE 15
7048	–	MESQUITE 9
7049	–	CEDAR ELM 15
7050	–	HACKBERRY 15
7051	–	MESQUITE 9 7 6
7052	–	HACKBERRY 12
7053	–	HACKBERRY 12
7054	–	HACKBERRY 12
7055	–	HACKBERRY 9
7056	–	CEDAR 10
7057	–	HACKBERRY 13
7058	–	HACKBERRY 10
7059	–	HACKBERRY 9
7060	–	HACKBERRY 11
7061	–	HACKBERRY 13
7062	–	HACKBERRY 10
7079	–	CEDAR ELM 19 8
7080	–	CEDAR ELM 16
7081	–	CEDAR ELM 22
7082	–	LIVE OAK 15
7083	–	LIVE OAK 16
7084	–	CEDAR ELM 11
7085	–	CEDAR ELM 22
7086	–	CHINABERRY 16 10

SLOPES TABLE				
NUMBER	MIN. SLOPE	MAX SLOPE	AREA (AC)	COLOR
1	0.00%	14.99%	97.6	
2	15.00%	24.99%	0.5	
3	25.00%	34.99%	0.6	
4	35.00%	100.00%	0.5	

BENCHMARK INFORMATION:

ELEVATIONS HEREON ARE REFERENCED TO THE NORTH AMERICAN VERTICAL DATUM OF 1988 (NAVD 88) UTILIZING WESTERN DATA SYSTEMS CONTINUALLY OPERATING REFERENCE STATION (CORS) NETWORK AND ADDITIONALLY REFERENCED TO LCRA GPS CONTROL MONUMENTS AT THE TIME OF THIS SURVEY.

BENCHMARK: LCRA CS33 – 3" ALUMINUM DISC IN CONCRETE ON EAST SIDE OF TAYLOR ROAD, ±3' WEST OF BARB-WIRE FENCE AND ±27' EAST OF PAVEMENT, EQUIDISTANT BETWEEN 8TH AND 9TH "T" POST FROM CORNER OF HOG-WIRE AND BARB-WIRE FENCE TRANSITION
PUBLISHED ELEV=587.486 (NAVD 88)
AS FOUND = 587.44' (NAVD 88)

TBM A: 1/2" IRON ROD WITH BLUE "BURY+PARTNERS" CAP SET ON WEST SIDE OF TAYLOR ROAD ±2205' NORTH OF GILLELAND CREEK CROSSING, ±50' NORTHEAST OF UTILITY POLE, BETWEEN 12" CMP CULVERTS. ELEV=427.38'

TBM B: COTTON SPINDLE SET ON WEST SIDE OF TAYLOR ROAD ±1775' NORTH OF GILLELAND CREEK CROSSING, ±105' SOUTH OF UTILITY POLE WITH GUY WIRE. ELEV=422.59'

TBM C: 1/2" IRON ROD WITH BLUE "BURY+PARTNERS" CAP SET ±1530' WEST OF TAYLOR ROAD AND ±45' SOUTH OF 90' BEND IN WIRE FENCE LINE, BETWEEN 12" HACKBERRY TREES TAGGED 7053 AND 7054, RESPECTIVELY. ELEV=431.03'

Copy of City of Austin Originals

FOR CITY USE ONLY:

SITE PLAN APPROVAL Sheet 3 of 42
FILE NUMBER: SP-2013-0044C APPLICATION DATE: 2-8-13
APPROVED BY COMMISSION ON: N/A UNDER SECTION 112 OF
CHAPTER 25-5 OF THE CITY OF AUSTIN CODE.
EXPIRATION DATE (25-5-81,LDC) 3-11-17 CASE MANAGER: A. Couch
PROJECT EXPIRATION DATE (ORD.#970905-A) N/A DWPZ ___ DOZ ___
Amanda M. Couch
Director, Planning and Development Review Department
RELEASED FOR GENERAL COMPLIANCE: 3-11-14 ZONING: PUD
Rev. 1 ___ Correction 1 ___
Rev. 2 ___ Correction 2 ___
Rev. 3 ___ Correction 3 ___

FINAL PLAT MUST BE RECORDED BY THE PROJECT EXPIRATION DATE, IF APPLICABLE. SUBSEQUENT SITE PLANS WHICH DO NOT COMPLY WITH THE CODE CURRENT AT THE TIME OF FILING, AND ALL REQUIRED BUILDING PERMITS AND/OR A NOTICE OF CONSTRUCTION (IF A BUILDING PERMIT IS NOT REQUIRED), MUST ALSO BE APPROVED PRIOR TO THE PROJECT EXPIRATION DATE.

DATE	NO.	REVISION	APPROVAL

Bury+Partners
221 West Sixth Street, Suite 600
Austin, Texas 78701
Tel. (512)328-0011 Fax (512)328-0325
TBPE Registration Number F-1048
Bury+Partners, Inc. Copyright 2014

STATE OF TEXAS
KELLEY W. FOWLER
108583
LICENSED
PROFESSIONAL ENGINEER
2-7-14

EXISTING CONDITION, TOPOGRAPHIC AND TREE SURVEY

WASTEWATER TREATMENT PLANT 7535 1/2 TAYLOR LANE

TAYLOR LANE

DRAWN BY: RWM
DESIGNED BY: KWF
REVIEWED BY: KWF
PROJECT NO.: 80046-01

SHEET 3 OF 42

P:\C AutoCAD\80046\01\WWTP\PERMIT\80046001TP01.dwg modified by cerickson on Feb 10, 14 1:15 PM

LANDSCAPE CERTIFICATION BLOCK
THE PLAN MEETS THE REQUIREMENTS OF LDC 25-2, ARTICLE 9 OF THE LAND DEVELOPMENT CODE. 25-2-983(A), ECM 2.4.8

ZACHRY HUNTER — DATE: 27 FEBRUARY 2014

FOR CITY USE ONLY:

SITE PLAN RELEASE — Sheet 41 of 42

FILE NUMBER: SP-2013-0044C EXPIRATION DATE: 3-11-17
CASE MANAGER: A. COACH APPLICATION DATE: 2-8-13
APPROVED ADMINISTRATIVELY ON: _____
APPROVED BY PLANNING COMMISSION ON: N/A
APPROVED BY CITY COUNCIL ON: N/A
under Section 112 Of Chapter 25-2 Of The Austin City Code.
Amanda M. Couch
Signing For Director, Planning and Development Review Department
DATE OF RELEASE: 3-11-14 Zoning: PUD
Rev. 1 _____ Correction 1 _____
Rev. 2 _____ Correction 2 _____
Rev. 3 _____ Correction 3 _____

RELEASE OF THIS APPLICATION DOES NOT CONSTITUTE A VERIFICATION OF ALL DATA, INFORMATION AND CALCULATIONS SUPPLIED BY THE APPLICANT. THE ENGINEER OF RECORD IS SOLELY RESPONSIBLE FOR THE COMPLETENESS, ACCURACY AND ADEQUACY OF HIS/HER SUBMITTAL, WHETHER OR NOT THE APPLICATION IS REVIEWED FOR CODE COMPLIANCE BY CITY ENGINEERS.

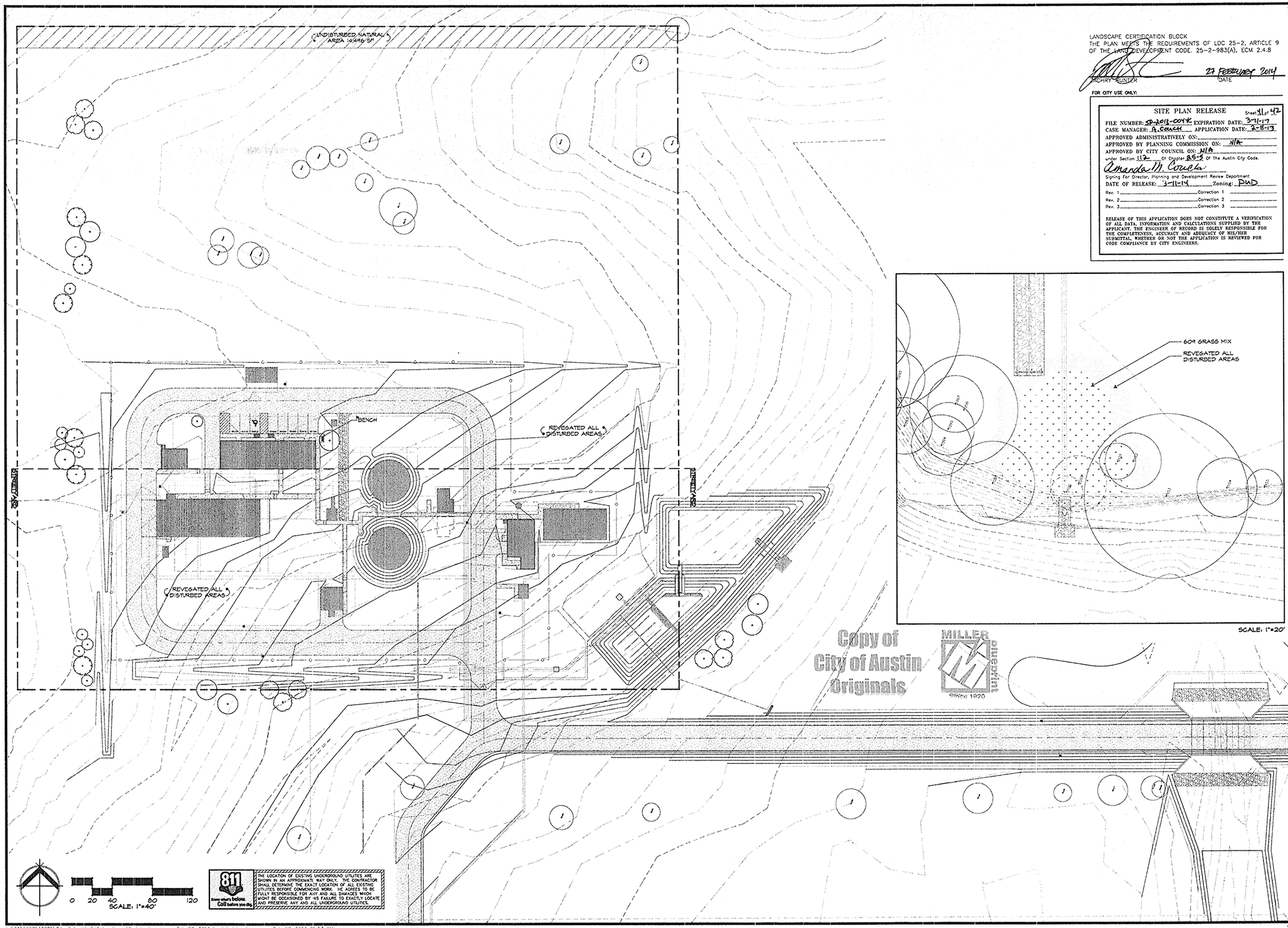

Copy of City of Austin Originals
MILLER engineering since 1920

REVISIONS
DATE | COMMENTS

REGISTERED LANDSCAPE ARCHITECT — ZACHRY HUNTER — 2151 — STATE OF TEXAS — 02/27/2014

TAYLOR LANE WWTP
7535 1/2 TAYLOR LANE AUSTIN, TEXAS
LANDSCAPE CITY SUBMITTAL PLAN

DRAWN BY: AK
DESIGNED BY: RC
REVIEWED BY: ZH
DATE: 06/13/13
JOB # 0106960-10001

Bury+Partners
221 West Sixth Street, Suite 600
Austin, Texas 78701
Tel: (512)328-0011 Fax: (512)328-0325
Bury+Partners, Inc. © Copyright 2014

SP-2013-0044C

L:\0106960\10001\City Submittal\L1.dwg | modified by lennon on Feb 27, 2014 | printed by lennon on Feb 27, 2014 01:53 PM

EXISTING TREES

TREE LIST		
TAG NO.		SIZE AND DESCRIPTION
7034	_	HACKBERRY 9
7035	_	MESQUITE 17 16
7036	_	MESQUITE 9 9
7037	_	MESQUITE 8 7
7038	(R)	HACKBERRY 9
7039	(R)	MESQUITE 13 10
7040	(R)	HACKBERRY 9
7041	(R)	HACKBERRY 9
7042	(R)	HACKBERRY 11
7043	_	CEDAR ELM 9
7044	_	HACKBERRY 8
7045	_	HACKBERRY 8
7046	_	HACKBERRY 12
7047	_	MESQUITE 15
7048	_	MESQUITE 9
7049	_	CEDAR ELM 15
7050	_	HACKBERRY 15
7051	_	MESQUITE 9 7 6
7052	_	HACKBERRY 12
7053	(R)	HACKBERRY 12
7054	_	HACKBERRY 12
7055	_	HACKBERRY 9
7056	_	CEDAR 10
7057	_	HACKBERRY 13
7058	_	HACKBERRY 10
7059	_	HACKBERRY 9
7060	_	HACKBERRY 11
7061	_	HACKBERRY 13
7062	_	HACKBERRY 10
7063	_	CHINABERRY 9
7064	_	MESQUITE 13 13
7065	_	HACKBERRY 12
7066	_	MESQUITE 10 7
7067	_	HACKBERRY 9
7068	_	HACKBERRY 12
7069	_	HACKBERRY 9
7070	_	HACKBERRY 9

TREE LIST		
TAG NO.		SIZE AND DESCRIPTION
7071	_	CEDAR ELM 9
7072	_	MESQUITE 12 9
7073	_	MESQUITE 8
7074	_	MESQUITE 8
7075	_	MESQUITE 9 8 8 8
7076	_	MESQUITE 10 8
7077	_	CEDAR ELM 13 13
7078	_	HACKBERRY 11
7079	_	CEDAR ELM 19 8
7080	_	CEDAR ELM 16
7081	_	CEDAR ELM 22
7082	_	LIVE OAK 15
7083	_	LIVE OAK 16
7084	_	CEDAR ELM 11
7085	_	CEDAR ELM 22
7086	_	CHINABERRY 16 10
7087	_	LIVE OAK 18
7088	_	LIVE OAK 20 18
7089	_	LIVE OAK 39
7090	_	CEDAR ELM 14
7091	_	LIVE OAK 22 10
7092	_	LIVE OAK 12 12
7093	_	LIVE OAK 14
7094	_	LIVE OAK 15
7095	_	LIVE OAK 13
7096	_	LIVE OAK 27
7097	_	CEDAR ELM 14
7098	_	LIVE OAK 15 13
7099	(R)	HACKBERRY 14
7100	(R)	CEDAR ELM 8
7101	_	HACKBERRY 9
7102	_	HACKBERRY 14
7103	_	LIVE OAK 41
7104	_	CEDAR ELM 15
7105	_	LIVE OAK 9
7106	_	CEDAR ELM 15
7107	_	CEDAR ELM 8

(R) = REMOVED TREE

TREE LIST		
TAG NO.		SIZE AND DESCRIPTION
7108	_	CEDAR ELM 10
7668	_	MESQUITE 10 9 7
7669	_	MESQUITE 10
7670	_	MESQUITE 11
7671	_	MESQUITE 12
7672	_	ELM 10
7677	_	MESQUITE 9
7678	_	ELM 9
7679	_	ELM 8
7680	_	ELM 8
7681	_	ELM 8
7682	_	ELM 9
7685	_	ELM 8
7686	_	ELM 8
7687	_	ELM 8
7689	_	ELM 13
7692	_	ELM 9
7694	_	ELM 8
7696	_	ELM 8
7699	_	ELM 9
7700	_	ELM 10 9 8
7701	_	ELM 9
7702	_	ELM 12 7
7703	_	ELM 9
7704	_	ELM 9 8 8
7708	_	MESQUITE 10
7709	_	MESQUITE 13 12 7 7
7711	_	ELM 11 10 9
7712	_	ELM 8
7713	_	ELM 8
7714	_	ELM 11
7715	_	ELM 9 8
7717	_	MESQUITE 8
7718	_	ELM 8
7719	_	MESQUITE 10 10

LANDSCAPE CALCULATIONS

STREET YARD

	Required	Provided
Total Site Area	N\A	435,600 sf.
Total Street-yard Area	N\A	144,959 sf.
Street-yard Landscape (20%)	28,991 sf.	116,410

	Required	Provided
TREES (street-yard)	57	10 (including existing tree credit)
Existing tree credit		
2" dia. to 6" dia.	0 ea. x 1=	0 ea.
6" dia. or greater	0 ea. x 2=	0 ea.
Proposed Trees (street yard)	10 ea.	10 ea.

ISLAND, MEDIANS, OR PENINSULAS

	Required	Provided
Street-yard area	NA sf.	NA sf.
Non street-yard area	40 sf.	>40 sf.

ALTERNATIVE COMPLIANCE - DEFICIENCY

Landscape area / Street-yard	40 pts.
Island, Medians, & Peninsular	0 pts.
Trees / Street-yard	0 pts.
Trees / Parking areas	0 pts.
Island, Medians, Peninsula within 50' of parking	0 pts.
Trees within 50' of parking	0 pts.
Total Negative	40 pts.

* Due to the large size of the streetyard and the type of the proposed development, alternative compliance has been approved:

Streetyard tree quantity deficiency = -40 points
Ten streetyard trees with minimum 4 inch diameter = +10 points
All native plants = +15 points
Shaded seating = +15 points

INNOVATIVE WATER MANAGEMENT

REQUIRED LANDSCAPED AREA	28,991 SF	
50 PERCENT OF REQUIRED LANDSCAPED AREA	14,496 SF	
	REQUIRED	PROVIDED
LANDSCAPING RECEIVING STORM WATER RUNOFF	0	0
UNDISTURBED NATURAL AREAS	14,496 SF	14,496 SF
UNDISTURBED EXISTING TREES	0	0
TOTAL	14,496 SF	14,496 SF

MITIGATION PERCENTAGE TABLE

	ON APP. F 8-18"	NOT ON APP. F 8-18"	ON APP. F 19"+	NOT ON APP. F 19"+
Totals	90	X	X	X
INCHES TO BE REPLACED	50%	25%	100%	50%
	45	X	X	X
TOTAL CALIPER INCHES REMOVED				90
TOTAL CALIPER INCHES TO BE REPLACED				45
TOTAL CALIPER INCHES REPLACED (6 @ 3" CAL. = 18") (9 @ 1.5" CAL. = 13.5") (7 @ 4" CAL. = 28")				59.5
% OF REPLACEMENT INCHES PROVIDED				100%

URBAN FORESTRY SUMMARY

TOTAL TREE INCHES SURVEYED	1,460
TOTAL TREE INCHES REMOVED, 8"-18" ON APPENDIX F	90
TOTAL TREE INCHES REMOVED, 8"-18" NOT ON APPENDIX F	0
TOTAL TREE INCHES REMOVED, 19"+ ON APPENDIX F	0
TOTAL TREE INCHES REMOVED, 19"+ NOT ON APPENDIX F	0
TOTAL TREE INCHES PLANTED ON SITE	99.5

PROPOSED TREE LIST

9	(symbol)	Bur Oak	Quercus macrocarpa	4" caliper, 10' Ht./ 4' spread, B&B, specimen
6	(symbol)	Cedar Elm	Ulmus crassifolia	3" caliper, 10'+ Ht./ 4' spread, B&B straight trunk
8	(symbol)	Live Oak	Quercus virginiana	4" caliper, 10' Ht./ 4' spread, B&B, nursery grown
9	(symbol)	Holly, Yaupon	Ilex vomitoria	8' Ht./5' spread, multi-trunk, 5 trunk min., 1 1/2" cal./trunk min., container, female

TURF GRASS

QUANTITY	SYMBOL	COMMON NAME	SCIENTIFIC NAME	SIZE AND CONDITION
VARIES		Common Bermuda Grass	Cynodon dactylon	Hydromulch - revegetate all disturbed areas
3,000 S.F.		609 S. Native Grassland Seed		Ref. C.O.A. Specifications for Item No. 609 S.

Appendix O: Landscape/Irrigation Notes

SITE DEVELOPMENT PERMIT - IRRIGATION NOTES

Automatic irrigation systems shall comply with the following requirements. These requirements shall be noted on the Site Development Permit and shall be implemented as part of the landscape inspection:

1. A non commercial and multi-family irrigation system must be designed and installed so that:
   (a) there is not direct overspray onto non-irrigated areas;
   (b) the system does not include spray irrigation on areas less than six (6) feet wide (such as medians, buffer strips, and parking lot islands)
   (c) above-ground irrigation emission devices are set back at least six (6) inches from impervious surfaces;
   (d) the irrigation system has a master valve;
   (e) circuit remote control valves have adjustable flow controls;
   (f) serviceable in-head check valves are adjacent to paved areas where elevation differences may cause low head drainage;
   (g) the irrigation system has a City-approved weather based controller;
   (h) an automatic rain shut-off device shuts off the irrigation system automatically after not more than a one-half inch (1/2") rainfall;
   (i) zone valves and circuits are separated based on plant water requirements;
   (j) an irrigation emission device (such as spray, rotor, or drip emitter) does not exceed the manufacturer's recommended operating pressure; and
   (k) no component of the irrigation system deviates from the manufacturer's recommended use of the project.
2. The maximum spacing between spray or rotary sprinkler heads must not exceed the radius of throw of the head unless manufacturer of the sprinkler head specifically recommends a greater spacing. The radius throw is determined by reference to the manufacturer's specifications for a specific nozzle at a specific operating pressure.
3. The irrigation installer shall develop and provide an as-built design plan and water budget to the City at the time the final plumbing inspection is performed. The water budget shall include:
   (a) a chart containing zone numbers, precipitation rate, and gallons per minute; and
   (b) the location of the emergency irrigation system shut-off valve. A laminated copy of the water budget shall be permanently installed inside the irrigation controller door.
4. The irrigation installer shall provide a report to the City on a form provided by the Austin Water Utility Department certifying compliance with Subsection I when the final plumbing inspection is performed by the City.

GENERAL LANDSCAPE NOTES:

1. All proposed landscaping is to be installed as per local city ordinances and codes.
2. Existing trees to be saved shall be protected by tree protective fencing before construction begins. (REFER TO CIVIL PLANS FOR DETAILS). No equipment or materials shall be stored, operated or maintained within the fenced area. Fences shall be at the dripline and completely surround the tree or clusters of trees. No fires or cleaning of equipment trucks will be allowed in these areas.
3. Irrigation shall be by automated underground system to be installed prior to planting. Large open spaces will have spray or rotary nozzles. Piping that extends into the critical root zone of existing trees shall be hand dug.
4. All landscaping, replacement, screening, buffering, street yard, and all other revegetated areas shall have adequate irrigation provided to sustain growth.
5. Landscaping to be maintained and replaced as required to meet ordinance requirements.
6. Owner may make reasonable substitutions of equivalent trees for those species shown on the landscape plan tree legend. Additionally, the owner may elect to provide plant material above and beyond the materials shown on this plan.
7. All areas of native vegetation beyond the limits of construction shall be left undisturbed.
8. All proposed trees shown on this plan are for landscape requirements and replacement trees. Replacement trees shall be designated on plan by an (R) placed next to the trunk, canopy, or plant label. All replacement trees shall be irrigated by an automated underground system to be installed prior to planting.
9. All required landscape planting areas shall be a minimum of 8 feet in width (soil area). Large parking lots shall have medians with a 10 foot minimum (soil area).
10. All plant materials and irrigation shall be in place and operational at the time of landscape inspection for Certificate of Occupancy. Fiscal posting shall be made in lieu of a completed landscape installation.
11. No more than 50% of the proposed plant material shall be from the same genus or species.
12. The OWNER will continuously maintain the required landscaping in accordance with the Land Development Code Section 25-8 in effect at the time of this plan approval.
13. If establishing vegetation during any stage of a drought, section 6-4-30 may require a variance. Contact Austin Water Conservation staff at waterusecomp-var@austintexas.gov or call 512-974-2199. All landscaped areas are to be protected by 6 inch wheel curbs, wheelstops, or other approved barriers as per ECM 2.4.7. [LDC 25-2-1004(A), ECM 2.4.7(A)].

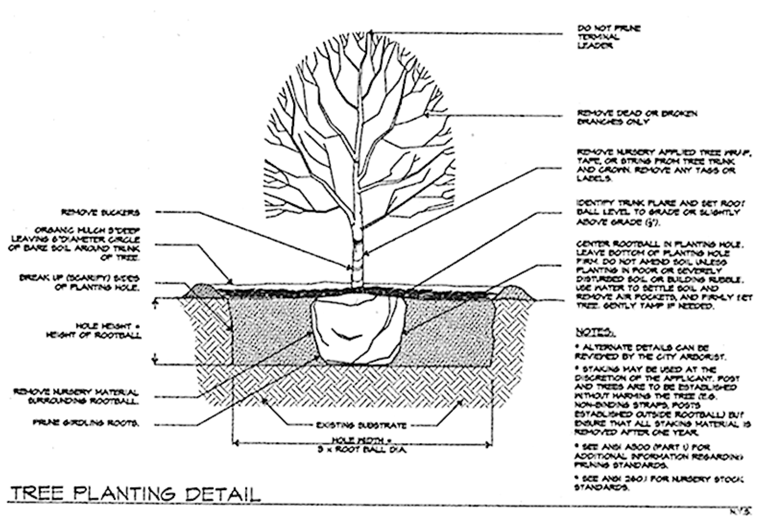

NOTES:
* ALTERNATE DETAILS CAN BE REVIEWED BY THE CITY ARBORIST.
* STAKING MAY BE USED AT THE DISCRETION OF THE APPLICANT. POST AND TREES ARE TO BE ESTABLISHED WITHOUT HARMING THE TREE (E.G. NON-BINDING STRAPS, POSTS ESTABLISHED OUTSIDE ROOTBALL) BUT ENSURE THAT ALL STAKING MATERIAL IS REMOVED AFTER ONE YEAR.
* SEE ANSI A300 (PART 1) FOR ADDITIONAL INFORMATION REGARDING PRUNING STANDARDS.
* SEE ANSI Z60.1 FOR NURSERY STOCK STANDARDS.

TREE PLANTING DETAIL

N.T.S.

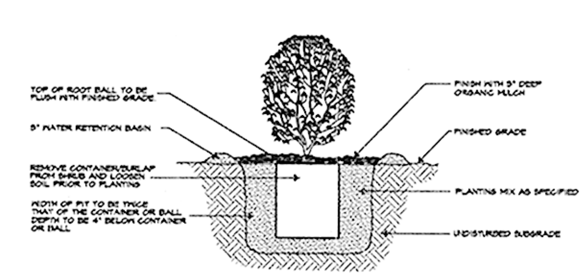

SHRUB PIT PLANTING DETAIL

N.T.S.

Copy of City of Austin Originals

MILLER blueprint Since 1920

LANDSCAPE CERTIFICATION BLOCK
THE PLAN MEETS THE REQUIREMENTS OF LDC 25-2, ARTICLE 9 OF THE LAND DEVELOPMENT CODE. 25-2-983(A), ECM 2.4.8

ZACHRY HUNTER — DATE: 27 FEBRUARY 2014

FOR CITY USE ONLY:

SITE PLAN RELEASE — Sheet 42 of 42

FILE NUMBER: SP-2013-0044C EXPIRATION DATE: 3-11-17
CASE MANAGER: A. COUCH APPLICATION DATE: 2-8-13
APPROVED ADMINISTRATIVELY ON: ______
APPROVED BY PLANNING COMMISSION ON: N/A
APPROVED BY CITY COUNCIL ON: N/A
under Section 112 of Chapter 25-5 of The Austin City Code.

Amanda M. Couch
Signing For Director, Planning and Development Review Department
DATE OF RELEASE: 3-11-14 Zoning: PUD
Rev. 1 ______ Correction 1 ______
Rev. 2 ______ Correction 2 ______
Rev. 3 ______ Correction 3 ______

RELEASE OF THIS APPLICATION DOES NOT CONSTITUTE A VERIFICATION OF ALL DATA, INFORMATION AND CALCULATIONS SUPPLIED BY THE APPLICANT. THE ENGINEER OF RECORD IS SOLELY RESPONSIBLE FOR THE COMPLETENESS, ACCURACY AND ADEQUACY OF HIS/HER SUBMITTAL, WHETHER OR NOT THE APPLICATION IS REVIEWED FOR CODE COMPLIANCE BY CITY ENGINEERS.

811 Know what's below. Call before you dig.

THE LOCATION OF EXISTING UNDERGROUND UTILITIES ARE SHOWN IN AN APPROXIMATE WAY ONLY. THE CONTRACTOR SHALL DETERMINE THE EXACT LOCATION OF ALL EXISTING UTILITIES BEFORE COMMENCING WORK. HE AGREES TO BE FULLY RESPONSIBLE FOR ANY AND ALL DAMAGES WHICH MIGHT BE OCCASIONED BY HIS FAILURE TO EXACTLY LOCATE AND PRESERVE ANY AND ALL UNDERGROUND UTILITIES.

REVISIONS — DATE — COMMENTS

REGISTERED LANDSCAPE ARCHITECT — ZACHRY HUNTER — 2157 — STATE OF TEXAS — 12/10/13

TAYLOR LANE WWTP

7535 1/2 TAYLOR LANE AUSTIN, TEXAS

LANDSCAPE CITY SUBMITTAL CHARTS AND DETAILS

DRAWN BY: AK
DESIGNED BY: RC
REVIEWED BY: ZH
DATE: 06/13/13
JOB # 0106960-10001

Bury+Partners
221 West Sixth Street, Suite 600
Austin, Texas 78701
Tel. (512)328-0011 Fax (512)328-0325
Bury+Partners, Inc. © Copyright 2013

SP-2013-0044C

L:\0106960\10001\City Submittal\L2.dwg | modified by okrouse on Dec 10, 2013 | printed by okrouse on Feb 27, 2014 01:56 PM