ADDENDUM No. 3

Date August 31, 2016

City of Austin

Project Name Montopolis Water Reclamation Initiative (WRI) Storage Reservoir and Pump Station Project

C.I.P. No. 5267.035 IFB 6100 CLMC601

This Addendum forms a part of Contract and clarifies, corrects or modifies original Bid Documents, dated May 2016. Acknowledge receipt of this addendum in space provided on bid form. Failure to do so may subject bidder to disqualification.

A. Project Manual Revisions:

1. Section 00820 Modifications to Bidding Requirements and Contract Forms

   REMOVE Section 00820 Modifications to Bidding Requirements and Contract Forms - Addendum No. 2 and REPLACE this section in its entirety with the new version.

2. Section 03315 Prestressed Concrete Tank

   REMOVE Section 03315 Prestressed Concrete Tank and REPLACE this section in its entirety with the new version.

3. Section 11211 Horizontal Split-Case Centrifugal Pumps

   REMOVE Section 11211 Horizontal Split-Case Centrifugal Pumps and REPLACE this section in its entirety with the new version.

4. Section 13315 PLC Network Requirements

   REMOVE Section 13315 PLC Network Requirements and REPLACE this section in its entirety with the new version.

5. Section 13400 Process Instrumentation and Control System (PICS) – COMPONENT SPECIFICATIONS

   REMOVE Section 13400 Process Instrumentation and Control System (PICS)– COMPONENT SPECIFICATIONS SUPPLEMENTS 1-15 and REPLACE SUPPLEMENTS 1-15 in its entirety with the attached new version.

6. Section 15208 Hydropnuematic Tank and Control System

   REMOVE Section 15208 Hydropnuematic Tank and Control System and REPLACE this section in its entirety with the new version.

7. Volume 5 Geotechnical Report

Section 4.8.4: REMOVE second sentence and REPLACE the second sentence with the following sentence:

"Based on the results of the soil borings conducted at the project site and additional subsurface information within the project region, the site is classified as C using the 2012 edition of the International Building Code (IBC2012)."

B. Drawing Revisions:

1. Drawing G-6 PIPE AND VALVE SCHEDULE

   REMOVE Drawing G-6 PIPE AND VALVE SCHEDULE and REPLACE this drawing in its entirety with the attached new version.

2. Drawing Y-1 YARD PIPING PLAN 1 OF 2

   REMOVE Drawing Y-1 YARD PIPING PLAN 1 OF 2 and REPLACE this drawing in its entirety with the attached new version.

3. Drawing Y-2YARD PIPING PLAN 2 OF 2

   REMOVE Drawing Y-2 YARD PIPING PLAN 2 OF 2 and REPLACE this drawing in its entirety with the attached new version.

4. Drawing SR-201 STORAGE TANK ROOF PLAN & ELEVATION

   REMOVE Drawing SR-201 STORAGE TANK ROOF PLAN & ELEVATION and REPLACE this drawing in its entirety with the attached new version.

This Addendum consists of 78 page(s)/sheet(s).

8-31-16

Approved by OWNER

Approved by ENGINEER/ARCHITECT

STATE OF TEXAS
JOSEPH W. JENKINS
68717
REGISTERED
PROFESSIONAL ENGINEER

8-31-2016

END

SECTION 00100 – INSTRUCTIONS TO BIDDERS

7. Submission of Bid

Replace Paragraph 7(g) Nonresident Bidders Provisions (Section 00475) as that language is not applicable to this project

With Paragraph 7(g) Vendor Compliance with Reciprocity of Non-Resident Bidders, TWDB-0459 Form, completed and signed.

11. Submission of Post Bid Information

Add (7) One copy of TWDB forms, ED-103 Contractor's Act of Assurance, ED-104 Contractor's Resolution on Authorized Representative, WRD-255 Bidder's Certifications

9. Rejection of Bids

Add Paragraph 9 A. The following **will** be cause to reject a Bid:

"(11) Failure to submit Vendor Compliance with Reciprocity of Non-Resident Bidders, TWDB-0459 Form completed and signed"

Add Paragraph 9 B. The following **may** be cause to reject a Bid:

"(17) Failure to submit copy of TWDB forms, ED-103 Contractor's Act of Assurance, ED-104 Contractor's Resolution on Authorized Representative, WRD-255 Bidder's Certifications

Delete Paragraph 13, Partnering, and replace with the following:

"**13. Partnering**

To complete this Work most beneficially for all parties, OWNER desires to form a Partnering Team among OWNER, E/A, CONTRACTOR, and Subcontractor(s). This relationship will draw on the strength of all parties to identify and achieve mutual goals. The objectives are effective and efficient Contract performance, intended to achieve completion within budget, on schedule, and in accordance with the Drawings and Specifications. The partnering relationship will be multilateral in makeup and participation will be totally voluntary. Refer to Section 01100, Special Project Procedures, and/or Section 01200, Project Meetings, for clarification of the intents and responsibilities of the persons and entities entering into the partnering charter."

SECTION 00810TWDB- TEXAS WATER DEVELOPMENT BOARD (TWDB) SUPPLEMENTAL CONTRACT CONDITIONS AND INSTRUCTIONS

General notes regarding Section 00810TWDB Requirements

1. Any contract or contracts awarded under this invitation for Bids is/are expected to be funded in part by a loan or grant from the TWDB. Neither the state of Texas, nor any of its departments, agencies or emplyees are or will be a party to this Invitation for Bids or any resulting contract. The requirements of Section 00810TWDB shall govern over all other sections of the Contract Documents, as applicable.

2. This project is not funded by EDAP or DFund mechanisms, and therefore the U.S. Iron and Steel and Manufactured Goods and the Employment of Local Labor requirements do not apply to this project.

END

SECTION 03315 PRESTRESSED CONCRETE TANK

PART 1 GENERAL

1.01 REFERENCES

A. The following is a list of standards which may be referenced in this section:

1. American Concrete Institute (ACI):
   a. 305R, Hot Weather Concreting.
   b. 350, Code Requirements for Environmental Engineering Concrete Structures and Commentary.
   c. 372R, Design and Construction of Circular Wire and strand Wrapped Prestressed Concrete Structures.
   d. b. 506R, Guide to Shotcrete.
   e. c. 506.2, Specification for Shotcrete.

2. ASTM International (ASTM):
   a. A82, Standard Specification for Steel Wire, Plain, for Concrete Reinforcement.
   b. A185, Standard Specification for Steel Welded Wire Fabric, Plain, for Concrete Reinforcement.
   c. A416, Standard Specification for Steel Strand, Uncoated Seven-Wire for Prestressed Concrete.
   d. A615, Standard Specification for Deformed and Plain Billet-Steel Bars for Concrete Reinforcement.
   e. A1008, Standard Specification for Commercial Steel (CS) Sheet, Carbon, (0.15 Maximum Percent) Cold-Rolled.
   f. C42, Standard Test Method for Obtaining and Testing Drilled Cores and Sawed Beams of Concrete.
   g. C920, Standard Specification for Elastomeric Joint Sealants.
   h. D1056, Standard Specification for Flexible Cellular Materials – Sponge or Expanded Rubber.
   i. D1752, Standard Specification for Preformed Sponge Rubber and Cork Expansion Joint Fillers for Concrete Paving and Structural Construction.

3. American Water Works Association (AWWA), D110, Wire and Strand-Wound, Circular, Prestressed Concrete Water Tanks.
4. International Code Council (ICC): International Building Code (IBC).
5. ASCE Standard 7 Minimum Design Loads for Buildings and Other Structures.

1.02 DEFINITIONS

A. Prestressed Tank System: Consists of a cast-in-place concrete floor slab, a core wall, and dome roof.

B. Shotcrete: Mortar projected jet directly upon intended surface.

1.03 DESIGN REQUIREMENTS

A. Obtain services of a qualified design engineer, as defined in Article QUALITY ASSURANCE, to design Prestressed Tank System conforming to attributes specified in this section.

B. Floor Slab: Cast-in-place concrete, minimum 6-inches thick with minimum reinforcing in slab equals 0.005 times concrete section.

C. Roof: Cast-in-place or precast concrete dome with minimum thickness of 4 inches and minimum reinforcing of 0.005 times concrete section.

D. Walls: Precast concrete core wall with steel diaphragm, vertical joint seals, and shotcrete coverings. Walls placed on elastomeric bearing pads, free to move radially, and plastic water stop connection between wall and footing. Satisfy allowable stress requirements when calculating wall thicknesses.

E. Openings and Penetrations: Except for the openings shown on the Drawings, other openings or penetrations through wall not permitted.

F. Design Loads and Foundation Criteria:

1. Storage Capacity: 4.0 million gallons.
2. Roof Live Load: 20 psf for dome roof.
3. Wind Load: in accordance with IBC Section 1609, with basic wind speed (3 second gust) of 90 mph, exposure C, and Wind Importance Factor Iw = 1.15.
4. Winter Temperature: Water 50 degrees F, and outside air 32 degrees F.
5. Summer Temperature: Water 60 degrees F, and outside air 100 degrees F.
6. Differential Drying Allowance: 10 degrees F shall be additive to temperature differential during winter.
7. Liquid Unit Weight: 62.4 pcf.
8. Design Overflow Rate for Overflow Weir: 5000 gpm.
9. Design Draw-down Rate for Vents: 63,000 gpm.
10. Maximum Foundation Bearing Pressure: 4,000 psf (bearing pressure includes weight of water).
11. Maximum Differential Settlement: 1/2 inch.

12. Seismic Zone Forces: In accordance with IBC, Section 1615, with foundation soils classified as Class C.

1.04 SUBMITTALS

A. Shop Drawings:

1. Design Data:
   a. Proposed details, concepts, stress calculations, and overflow pipe opening for prestressed tank walls.
   b. For design loads and foundation criteria, show calculations and details based on the seismic zone forces.
   c. Details for sealing vertical joints of steel diaphragm shell.
   d. Details of prestressed tank accessories.
   e. Calculations stamped by professional engineer registered in Texas.
   f. Design drawings stamped by a professional engineer registered in Texas.

      1) Curing methods for dome concrete.
      2) Description of construction method and materials.

B. B. Samples: Vertical joint of steel diaphragm shell to show evidence of satisfactory seal.

C. C. Information Submittals:

1. Manufacturer's Certificate of Compliance:
   a. Shotcrete sand.
   b. Concrete and shotcrete admixtures do not contain chlorides or other corrosive chemicals.

2. Manufacturer's Certificate of Proper Installation.
3. Statements of Qualification:
   a. Registered professional engineer.
   b. Prestressed tank installer.
4. Written Test Reports of Each Test and Inspection:
   a. Shotcrete.
   b. Test reports for prestressing steel components.
   c. Mill test data for circumferential prestressing material regardless of manufacture. Include chemical composition, physical properties, and dimensions of steel. Mill test data for at least three samples of final prestressing material taken from material delivered to site. Identify each roll that Samples were taken from. Identify packages or rolls of prestressing material with mill and heat number.

1.05 QUALITY ASSURANCE

A. Qualifications:

1. Qualified Design Engineer: Registered in Texas.
2. Prestressed Tank Installer:
   a. Company specializing in design and construction of prestressed tanks. Minimum 10 years' experience on tanks of similar size and type required for Project. Company has designed and built in its name or under one of its divisions no less than 20 AWWA D110 Prestressed Concrete Tanks with a Type III core wall now in use and are giving satisfactory service. Tanks shall have been constructed within the last 10 years. Include name and address of owners.
   b. Experience in the design and construction of AWWA D110 Type I, Type II, or Type IV tanks is not acceptable.
   c. The Tank Contractor shall have in its employ a design professional with a minimum of 10 years experience.

B. Shotcrete Panel Mockups:

1. When not using automated equipment, assemble test panel at least 30 inches by 30 inches for each mix being considered.
2. Assemble test panels to same thickness as structure, but not less than 3 inches.
3. Take minimum three cubes or cores from panels for strength testing of shotcrete.
4. Cut or broken surfaces shall be dense and free from laminations and sand pockets.
5. Retain and maintain test panels during construction to establish standards by which completed shotcrete Work will be judged.
6. Independent Testing Laboratory Services will:
   a. Test proposed materials, including water.
   b. Test proposed mix proportions.
   c. Test specimens.
   d. Secure production samples of materials at plants or stockpiles during construction and test.
   e. Test strength of shotcrete as Work progresses.

1.06 DELIVERY, STORAGE, AND HANDLING

A. Materials delivered prior to time required, store in a dry, ventilated building, heat if necessary to prevent accumulation of moisture on materials or in wrapping. Do not store on ground or expose to weather.

1.07 ENVIRONMENTAL REQUIREMENTS

A. Delay Work under the following conditions:

1. During high winds causing sand to separate at the nozzle.
2. When weather approaches freezing defined as below 40 degrees F when temperature is falling, or until temperature is 35 degrees F when temperature is rising.
3. During rains of high intensity to wash cement out of fresh material.

B. Cold Weather: Take precautions to avoid low temperatures detrimental to epoxy grout or the ability to pump. If grouting procedure cannot be postponed, keep wall temperatures within the required temperature range.

C. Hot Weather: When temperatures exceed 90 degrees F, obtain approval for method used to protect shotcrete from excessive heat and drying. Hot weather shotcreting shall be in accordance with ACI 305R.

D. Do not expose circumferential prestressing on walls to weather for more than 72 hours. Exercise precautions during adverse weather conditions.

1.08 SPECIAL GUARANTEE

A. The tank manufacturer shall supply a special guarantee that the circumferential prestressing and shotcrete are free from defects in workmanship and materials for a period of 5 (five) years after substantial completion of the Project. If within 5 (five) years, workmanship or materials are proved defective, the tank contractor shall repair such defects at his own expense.

1.09 MANUFACTURERS

A. DN Tanks, Inc., Delaware (Natgun Corporation, Massachusetts, and DYK Incorporated, California, Divisions of DN Tanks)

B. Preload, LLC, Louisville, KY

PART 2 PRODUCTS

2.01 CONCRETE

A. In accordance with City Standard Technical Specifications Series 400, except that a 3/8-inch maximum size aggregate may be used for dome concrete if designed for strength and maximum density.

B. Minimum Design Strengths:

1. Dome Roof: 4,000 psi at 28 days.
2. Core Wall: 4,000 psi at 28 days.
3. Floor Slab: 4,000 psi at 28 days.

C. Admixtures: As specified in City Standard Technical Specifications Series 400.

2.02 SHOTCRETE

A. Fine Aggregates (Sand):

1. Saturated, surface dry, hard, dense, uncoated rock fragments free from injurious amounts of foreign or deleterious substances as specified in City Standard Technical Specifications Series 400.
2. Fineness Modulus for Sand: Range from 2.40 to 2.75 with maximum particle size of 1/4 inch.
3. Maintain sand at 3 to 6 percent moisture content; dampen or dry with sand dryers if necessary.
4. Gradation:
   Sieve Size Percent Passing by Weight
   3/8 inch 100 No. 4 97 - 100 No. 8 90 - 98
   No. 16 70 - 85 No. 30 35 - 55 No. 50 12 - 25
   No. 100 2 -8

B. Screen sand for finish coat to produce uniform dense surface in texture and appearance.

C. Water and Cement: As specified in City Standard Technical Specifications Series 400.

D. D. Admixtures: As specified in City Standard Technical Specifications Series 400.

E. E. Minimum design strength 4,000 psi at 28 days.

2.03 MORTAR FILL AND NON-SHRINK GROUT

A. Mortar fill and non-shrink grout shall have a minimum compressive strength of 4,000 psi at twenty-eight days, have a maximum water to cement ratio of 0.42 and meet all requirements for concrete contained in this specification.

B. Portland cement grout will not be accepted.

2.04 ELASTOMERIC MATERIALS

A. A 9 inch minimum waterstop with centerbulb shall be polyvinyl chloride meeting the requirements of the Corps of Engineers Specification CRD-C 572. Splices shall be made in accordance with the Manufacturer's recommendations subject to the approval of the Engineer. Waterstop shall be manufactured by Greenstreak Plastic Products Company, Inc., or equal.

B. Bearing pads shall be natural rubber or neoprene.

1. Natural rubber bearing pads shall contain only virgin natural polyisoprene as the raw polymer and the physical properties shall comply with ASTM D2000 Line Call-Out M 4 AA 414 A1 3.

2. Neoprene bearing pads shall have a hardness of 40 to 50 durometer, a minimum tensile strength of 1,500 psi, a minimum elongation of 500%, and a maximum compressive set of 50%. Pads shall meet the requirements of ASTM D2000 Line Call-Out M 2 BC 410 A1 4 B14 or M 2 BC 414 A14 C12 F17 for 40 durometer material.

C. Sponge filler shall be closed-cell neoprene or rubber conforming to ASTM D1056, Type 2, Class A, and Grade 1 or 3. Compression deflection limited to 25% at 2 to 5 psi.

D. Polysulfide or polyurethane sealant will be a two or three component elastomeric compound meeting the requirements of ASTM C920. Sealants shall have permanent characteristics of bond to metal surfaces, flexibility, and resistance to extrusion due to hydrostatic pressure. Air cured sealants shall not be used.

2.05 WELDED WIRE FABRIC

A. In accordance with ASTM A82 and ASTM A185.

2.06 MILD STEEL REINFORCING

A. Deformed Grade 60 bars with maximum service load design, allowable stress of 18,000 psi in accordance with ASTM A615.

2.07 CIRCUMFERENTIAL PRESTRESSING STEEL

A. High Tensile High Carbon Steel Wire:

1. Diameter Tolerance of Wire: Plus or minus 0.002 inch.
2. Tensile Strength: Minimum 210,000 psi.
3. Yield Strength at 1 Percent Extension: Minimum 170,000 psi.
4. Elongation in 10 Inches at Fracture: Minimum 4 percent.
5. Bending (R equals 5D): Minimum 6 bends per 90 degrees.
6. Meet requirements of ASTM A821.

B. Anchorage: Prestressing manufacturer's standard and capable of safely developing full strength of units, and not susceptible to galvanic action with prestressed steel.

C. Prestressing Steel Requirements:

1. Initial prestress force in circumferential prestressing units after anchoring shall not exceed 70 percent of guaranteed ultimate strength. Coordinate value with tolerance requirements and reflect values in calculations.
2. Final prestress force in circumferential prestressing units, when using nonelectronic or electronic wrapping machine, not capable of close stress tolerance, shall be determined by using stress loss of 25,000 psi for concrete shrinkage, plastic flow, and creep in steel plus 6 percent of initial wire stress system tolerances.
3. Calculate final circumferential prestress force and location on wall. Final prestress force shall provide for minimum residual compression in wall, above that required to resist internal water pressure of 200 psi. Maximum compression in core wall limited to 0.45 times design strength of core wall when using final prestress force after all losses. Maximum initial compression in core wall limited to 0.55 times design strength of core wall. Calculate wall thickness to comply with these requirements and bending requirements.

2.08 STEEL DIAPHRAGM SHELL

A. Tank diaphragm in accordance with ASTM A1008 for Commercial Quality cold-rolled steel sheet. Minimum of 26-gauge sheet and form corrugations of a pattern to form a continuous positive watertight seal and a strong mechanical key between shotcrete and steel. Furnish steel sheets in one continuous length to full height of wall. Vertical joints between sheets.

2.09 SHOTCRETE MIX PROPORTIONS

A. Adjacent to Steel Diaphragm and Over Wires: 1 part cement to 3 parts sand.

B. All Other: 1 part cement to 4 parts sand.

2.10 LADDERS AND HANDRAILS

A. Provide an aluminum exterior ladder as shown on the Drawings and in accordance with Section 05500, METAL FABRICATIONS.

B. Provide aluminum handrail as shown on the Drawings and in accordance with Section 05521, ALUMINUM RAILINGS.

PART 3 EXECUTION

3.01 GENERAL

A. Foundation:

1. Encase tank piping under foundations in concrete.

B. Welded Wire Fabric: Adequately support prior to placement of concrete.

3.02 CORE WALL

A. Do not begin prestressing until core wall has obtained a compressive field strength of 4,000 psi or higher as determined by tests.

3.03 CIRCUMFERENTIAL PRESTRESSING

A. Apply uniformed stressed steel wire to core wall using a wrapping machine to provide the final prestressing force per linear foot of wall height. Electronic servo controlled wrapping systems with automatic electronic recording may be used. Nonelectronic wrapping machines may also be used.

B. Stress Measurement and Recording:

1. Apparatus capable of measuring stress of circumferential prestressing units accurately.
2. Gauges or other stress measuring apparatus calibrated by a recognized gauge manufacturer or testing laboratory on wire samples taken from prestressing steel delivered to site to be used in the Work.
3. Perform calibration work performed within 15 days prior to prestressing.
4. Recalibrate stress measuring apparatus during progress of Work.
5. If stresses measured exceed values specified, discontinue operation and make satisfactory adjustments prior to proceeding with wrapping.
6. Apply additional wire to compensate for understressed wire.
7. Base measurements of wire stress on a continuous sensing of applied force on wire between tensioning drum and wall when, and as, wire is being wrapped and laid on wall.

C. Splicing of Wire:

1. Do not weld splice wire, except when terminating one complete coil or in event of a defect.
2. Join ends of wire with steel sleeves or splicing devices which will develop full strength of wire without slippage or loss of stress.
3. Anchor stressed prestressing steel, or tie off at frequent intervals as stressing proceeds to minimize loss of stress in event of breakage.
4. Remove from Work, coils of prestressing steel which have broken three or more times.

5. Stress prestressing steel only once.

D. Spacing:

1. Space at minimum five wires of 0.162 to 0.192 inch in diameter, per foot of wall height, and maximum 24 wires per foot.
2. Minimum clear spacing between units not less than 1.5 unit diameters or 5/16 inch, whichever is larger.
3. Spread or remove from Work prestressing steel wrapped closer together.
4. Space wire of other diameters.
5. Wires in contact with each other shall be rejected.

3.04 SHOTCRETING OF CIRCUMFERENTIAL PRESTRESSING STEEL

A. In accordance with ACI 506.2 and ACI 506R. Application of dry or wet mix is acceptable.

B. Cover each layer and outer layer of prestressing steel with a coating of shotcrete. Work from bottom to top of wall.

C. Completely embed the prestressing steel without voids. Maintain uniform flow of material from nozzle.

D. Cut out slugs, sand spots, or wet sloughs resulting from nonuniform material flow and repair as Work progresses.

E. Clear rebound away from Work before initial set occurs.

F. Time the intervals between successive applications to allow for initial set to develop. After initial set, stiff broom shotcrete layers receiving another coat to remove laitance and to provide a bond with succeeding applications.

G. Adjust amount of water in shotcrete placed on vertical surfaces. Thickness of shotcrete approximately 3/4 inch.

H. Remove deposits of loose sand before placing succeeding layers of shotcrete. Clear rebound away continuously from the Work, and do not reuse rebounded sand.

I. Slope construction joints or day's work joints off to thin, clean, and to regular feathered slope edge. Thoroughly clean sloped portion and adjacent shotcrete with mortar film coating. Wet and scour with air jet, or sandblast with silica sand before placing adjoining Work.

J. Where more than one layer of circumferential prestressing units are required, maintain minimum 1/4-inch cover over each underlayer. Shotcrete cover over outer layer shall be a minimum of 1-inch thickness applied in a minimum of

two coats. Provide 1/4-inch minimum cover over prestressing unit for first coat. Layers of shotcrete shall have a nozzle finish.

3.05 FINISHING OF SHOTCRETE

A. Underlayers or Exposed Surfaces:

1. On completing surfaces, bring shotcrete to an even plane and to well-formed corners by working up to ground wires or other thickness or alignment guides, using lower placing velocity than normal.

B. Finish Coat:

1. Apply coat to remove rough areas after ground wires have been removed.
2. Carefully screen sand for finish coat to remove oversize particles which rebound and mar surfaces.
3. Surface of finish coat shall be; of natural texture and coloration; free from spotting, cement or dust streaking, lap lines, uneven surfaces, and rebounded material.
4. Do not hand-patch.
5. Check coatings for bond by tapping lightly to test for hollow sounding spots.
6. Cut out areas where bond is not fully developed and repair.

C. Corrosion Protection:

1. Inspect core wall and patched surfaces.
2. Patch surfaces by building out in uniform circular area level with surface.
3. Sandblast patches and core wall surfaces prior to application of prestressing and shotcrete.

3.06 CURING

A. Dome Concrete:

1. Water cure dome concrete for 7 days by keeping surface continuously wet.
2. Schedule wire wrapping and application of shotcrete so curing shall not be interrupted, and water from curing shall not wash or damage shotcrete wire coats.
3. Begin curing after initial concrete set has occurred.

B. Shotcrete:

1. Keep shotcrete between layers of wire and cover damp by hand watering or fine mist spray.

2. Continuously water cure completed shotcrete surfaces for period of 7 days after application, or until subsequent shotcrete coats are applied prior to end of the 7-day curing period.
3. Remove laitance from wall by light sandblasting or pressure washing after curing period.
4. Do not use curing compounds.

3.07 DECORATIVE COATINGS

A. All exposed concrete shall be given a two-coat finish consisting of one coat of damp-proofing product such as “Tamoseal with AKKRO-71” or equal, and one coat of “Tammscoat” or equal. Work shall be performed by workmen skilled in the application of these types of products. The manufacturer’s application instructions shall be submitted to the ENGINEER for approval. The CONTRACTOR shall confer with the manufacturer’s representatives regarding application techniques and shall follow the manufacturer’s instructions implicitly.

B. The concrete surface to be coated must be clean, free of all laitance, dirt, grease, or other foreign materials. All defective surfaces shall be filled and/or repaired. Application shall be in full accordance with the manufacturer’s instructions or as amended by the ENGINEER.

C. The OWNER shall select the color.

D. See Architectural Rendering Drawing for required finished pattern.

3.08 TESTS

A. Shotcrete Panel Field Tests:

1. When length of core is less than twice diameter, apply correction factors in accordance with ASTM C42 to obtain compressive strength of individual cores.
2. Average compressive strength of three cores taken from test panel equal or exceed 0.85 f’c with no individual core less than 0.75 f’c. Average of three cubes taken from a panel equal or exceed f’c with no individual cube less than 0.88 f’c.
3. Shotcrete will be based on results obtained from cores or sawed cubes.
4. Use of data obtained from impact hammers, ultrasonic equipment, or nondestructive testing devices is not permitted. However, these devices may be used for determining uniformity of shotcrete.
5. Remove and replace shotcrete found not meeting tests, or cut cores and further test shotcrete, or repair and replace as approved by ENGINEER.

B. Perform water leakage test on tank as specified in Section 5.12 of AWWA D110-13 for water tightness testing.

END OF SECTION

SECTION 11211
HORIZONTAL SPLIT-CASE CENTRIFUGAL PUMPS

PART 1 GENERAL

1.01 REFERENCES

A. The following is a list of standards which may be referenced in this section:

1. American Petroleum Institute (API):
   a. Standard 610, Centrifugal Pumps for Petroleum, Petrochemical, and Natural Gas Industries.
   b. Standard 670, Machinery Protection Systems.
2. Hydraulic Institute Standards (HIS):
   a. 9.6.4, Rotodynamic Pumps for Vibration Measurements and Allowable Values.
   b. 14.6, Rotodynamic Pumps for Hydraulic Performance Acceptance Tests.
3. National Electrical Manufacturer's Association (NEMA): MG 1, Motors and Generators.
4. NSF International (NSF):
   a. NSF/ANSI 61, Drinking Water System Components - Health Effects.
   b. NSF/ANSI 372, Drinking Water System Components - Lead Content.

1.02 DEFINITIONS

A. Terminology pertaining to pumping unit performance and construction shall conform to the ratings and nomenclature of the Hydraulic Institute Standards.

1.03 SUBMITTALS

A. Action Submittals:

1. Make, model, weight, and horsepower of each equipment assembly.
2. Complete catalog information, descriptive literature, specifications, and identification of materials of construction.
3. Performance data curves showing head, capacity, horsepower demand, NPSH required, and pump efficiency over entire operating range of pump, from shutoff to maximum capacity. Indicate separately the head, capacity, horsepower demand, overall efficiency, and minimum submergence required at the design flow conditions.

4. Detailed structural, mechanical, and electrical drawings showing equipment dimensions, size, and locations of connections and weights of components. Assembly and installation drawings including shaft size, seal, coupling, bearings, anchor bolt plan, parts nomenclature, and materials of construction lists. Baseplate drawings with leveling jackscrew details, anchor bolt and sleeve details, and minimum foundation installation and leveling requirements.
5. Power and control wiring diagrams, including terminals and numbers.
6. Complete motor nameplate data, as defined by NEMA, motor manufacturer, and including any motor modifications.
7. Factory finish system.
8. Vibration monitoring system information including technical product bulletins and descriptions, specification data sheets, wiring diagrams, communications hardware and software, documentation sufficient for configuration of functions specified herein and shown on Drawings.

B. Informational Submittals:

1. Manufacturer's Certificate of Compliance, in accordance with Section 01740, Common Product Requirements, that factory finish system is identical to requirements specified herein.
2. Special shipping, storage and protection, and handling instructions.
3. Manufacturer's printed installation instructions.
4. Factory Functional and Performance Test Reports and Log. Factory test data for each pump shall be submitted, reviewed, and approved by Engineer prior to shipment of equipment.
5. Suggested spare parts list to maintain the equipment in service for a period of 1 year and 5 years. Include a list of special tools required for checking, testing, parts replacement, and maintenance with current price information.
6. List special tools, materials, and supplies furnished with equipment for use prior to and during startup and for future maintenance.
7. Operation and Maintenance Data: As specified in Section 01730, Operation and Maintenance Data.
8. Manufacturer's Certificate of Proper Installation, in accordance with Section 01650, Facility Startup/Commissioning.

1.04 EXTRA MATERIALS

A. Furnish for each pump:

1. Complete seal kit.
2. Complete set bearings.
3. Complete set gaskets and O-ring seals.
4. Complete set of shaft sleeves.
5. Complete set keys, dowels, pins, etc.
6. Complete mechanical seal.

7. Impeller.
8. Impeller wear ring.
9. One complete set of special tools required to dismantle pump.

PART 2 PRODUCTS

2.01 SUPPLEMENTS

A. Some specific requirements are attached to this section as supplements.

2.02 SHAFT SEALS

A. Sealing system for horizontal split-case centrifugal pump shafts shall be mechanical seal as indicated in pump data sheet.

B. Mechanical Seal Requirements:

1. Nonfretting type requiring no wearing sleeves for the shafts.
2. Shafts for pumps specified with mechanical seals shall be furnished with no reduction in size through the seal area.
3. Split Type:
   a. Requiring no field assembly other than assembly around shaft and insertion into pump or balanced cartridge design in conjunction with a spool type spacer coupling as specified in pump data sheet.
   b. Nonshaft O-rings shall be of ball and socket type requiring no gluing.
   c. Initial seal installation at factory shall be with nonsplit seal faces, with spare seals and spare kits to have split faces.
   d. Unless otherwise specified, shall be capable of 400 psig service, be self-aligning, self-centering, single.
   e. Manufacturer and Product: A.W. Chesterton Company Chesterton; 442, or John Crane Type 3710 mechanical seal.
4. Arrangement shall allow removal of seal without disturbing pump or driver.
5. For clear water services and solids up to 5 percent by weight, face combination shall be hard/soft. Otherwise, hard/hard faces shall be used.
6. Designed so dynamic O-ring moves towards a clean surface as face wears and springs are not in pumped fluid.
7. Face shall be spring loaded to provide self-aligning despite stuffing box misalignment.
8. Where cartridge type mechanical seals are specified:
   a. Single, balanced, flexible stator design.
   b. Capable of 600 psig service.
   c. O-ring secondary seals and setscrew drive with three-point centering to ensure 0.003-inch of maximum perpendicularity of rotary face to shaft.
   d. Gland shall have flush port and be affixed to equipment with adjustable tabs to fit irregular bolt patterns.

e. Manufacturers and Products:
   1) A.W. Chesterton Company; 155.
   2) Crane; 1B.

9. Seal Materials:
   a. Metals:
      1) Loaded Parts Over 0.060-inch Cross Section: Type 316 stainless steel minimum.
      2) Thinner Parts (springs): Hastelloy-C, Alloy 20, AMS5876 Elgiloy, or other alloy that is not vulnerable to chloride stress corrosion.
   b. Elastomers: Fluorocarbon Viton, preferred unless seal manufacturer recommends ethylene propylene for service conditions.
   c. Faces: Homogeneous construction. Surface treatments and plated faces are unacceptable.
      1) Acceptable hard faces include nickel bound tungsten carbide, self sintered silicon carbide, reaction bonded silicon carbide, or graphitized silicon carbide. Silicon carbide is preferred because of its higher pressure-velocity capability.
      2) Acceptable soft face is carbon-graphite, either Union Carbide 658RC or Purecarbon P8412.

10. Seal Environmental Controls:
   a. Pipe seal flush port to drain to wet well or hub drain as shown on Drawings with a 1/8-inch orifice plate in the line. Provide venting of seal chamber.
   b. Mechanical seals for anything other than clear water services shall be fitted with Enviroseal SpiralTrac Version F, N, or D, installation Type I as recommended by A.W. Chesterton Company.
      1) Provide fluid circulation in seal chamber that removes frictional heat from mechanical seal.
      2) Convey particulate matter and contaminants for removal by conveying them from bore to shaft by means of integral machined spiral.
      3) Removes particulate matter from seal chamber, without seal flush water, through integral machined exit groove.
   c. Material of construction shall be Type 316 stainless steel.
   d. Connect mechanical seal to water purge supply where indicated on Drawings.

C. Packing Requirements:

1. Stuffing Box:
   a. Tap to permit introduction of seal liquid.
   b. Hold a minimum of five rows of packing and a lantern ring.
   c. Face attached.

d. Box and shaft shall be suitable for field installation without machining or other modifications of mechanical seal outlined above for applicable pump and operating conditions.

2. Packing Rings:
   a. Three asbestos free die-molded packing rings of braided graphite material free of PTFE.
      1) A.W. Chesterton Company; 1400R for nonpotable water services.
   b. Three die-molded rings of braided PTFE material.
      1) A.W. Chesterton Company; 1725 that is NSF/ANSI 61 acceptable for potable water services.
   c. Glands:
      1) Two-piece split construction.
      2) Fit impeller end of packing with A.W. Chesterton Company; Enviroseal SpiralTrac, Version P, packing protection.
3. Where pumped fluid is clear water:
   a. Pump discharge run through 1/8-inch orifice for packing lubrication.
   b. Otherwise, provide seal water flow control and monitoring as detailed on Drawings.
      1) External Seal Water Flow: 5 gallons to 30 gallons per hour flow rate, plus or minus 10 percent accuracy.
      2) Manufacturer and Product: A.W. Chesterton Company; SingleFlow.
4. Shaft Sleeve:
   a. Fit section of shaft or impeller hub that extends through or into stuffing box with replaceable stainless steel sleeve with a Brinell hardness of not less than 400.
   b. Sleeve shall be held to the shaft to prevent rotation.
   c. Gasketed to prevent leakage between shaft and sleeve.
   d. Thickness: 3/8 inch minimum.

2.03 VIBRATION AND TEMPERATURE TRANSDUCERS AND MONITORING SYSTEM

A. General:

1. Meet requirements specified herein and with motor temperature and vibration sensors specified in Section 16220, Low-Voltage AC Induction Motors.

B. Bearing Housing Vibration Velocity Transducers:

1. Permanently installed accelerometers by pump manufacturer.
2. Transducers:
   a. Located at inboard and outboard bearing housings.

b. Two radial velocity transducers shall be provided with one measuring discharge nozzle direction and one at 90 degrees to discharge nozzle direction.
c. One axial velocity transducer shall be installed at either bearing housing.

C. Bearing Temperature Elements:

1. Provide each pump bearing, radial and thrust, with two 100-ohm platinum resistance type temperature detectors (RTD).
2. Metal of bearings and mountings shall be drilled, milled, and tapped to place element at hottest points of bearings and within 1.6 mm of bearing metal.
3. Pump motor bearing temperature elements shall be permanently installed by motor manufacturer.
4. Motor bearing temperature elements shall be as specified in Section 16220, Low-Voltage AC Induction Motors.

D. Motor Casing Velocity Transducer: As specified in Section 16220, Low-Voltage AC Induction Motors.

E. Vibration and temperature transducers shall be installed in accordance with guidelines provided by API Standard 670.

1. Provide integrated vibration sensor and transmitter with 4 to 20 mA output signal.
a. Features:
1) Mounting: Single 1/4-28 threaded stud for side mount in location to be measured.
2) Enclosure: Hermetically sealed sensor housing with integral 6-foot armored cable for connection in Contractor supplied junction box.
3) Signal Interface: 2-wire, loop powered.
4) Programming: Sensor shall be fully programmable via USB adaptor. Provide a single programming kit that includes software and associated accessories for complete access to all transmitter features.
5) Output Acceleration: User Configurable either Velocity or displacement in rms or peak vibration.
6) Unit: User Configurable either English or SI units.
7) Filters: User selectable three low-pass filters and two high-pass filters.
8) Quantity: As need to comply with API Standard 670.
9) Range and Setpoint: As need to comply with API Standard 670**.**
10) Mounting Location: As needed to comply with API Standard 670**.**

11) Manufacturer/Model: IMI Sensors, 64xxxx Series.

F. Provide two terminal junction boxes mounted on pump lower volute. Provide conduit and cable from pump bearing temperature transducers to one of the terminal junction boxes and provide conduit and cable from pump vibration transducers to other terminal junction box.

2.04 ACCESSORIES

A. Equipment Identification Plate: 16-gauge stainless steel with 1/4-inch die-stamped equipment tag number securely mounted in a readily visible location.

B. Lifting Lugs: Equipment weighing over 100 pounds.

C. Anchor Bolts: Type 316 stainless steel, sized by equipment manufacturer, and as specified in Section 05500, Metal Fabrications. Coat in accordance with Section 09900, Painting and Coating.

2.05 FACTORY FINISHING

A. Prepare and prime, and finish Section 09900, Painting and Coating.

2.06 SOURCE QUALITY CONTROL

A. Factory Inspections: Inspect for required construction, electrical connection, and intended function.

B. Factory Tests and Adjustments: Test all actually furnished.

C. Factory Test Report: Include test data sheets, curve test results, and performance test logs.

D. Functional Test: Perform manufacturer’s standard test, as follows:

1. Dynamically balance rotating parts of each pump and its driving unit before final assembly.
2. Limits:
   a. Driving Unit Alone: NEMA MG 1 limits.
   b. Complete Rotating Assembly Including Coupling, and Motor: limits established in the Hydraulic Institute Standards.

E. Performance Test:

1. Conduct on each pump.
2. Perform under simulated operating conditions.
3. Test for a continuous 3-hour period without malfunction.
4. Test Log: Record the following:
   a. Total head.
   b. Capacity.

c. Horsepower requirements.
d. Flow measured by factory instrumentation and storage volumes.
e. Average distance from suction well water surface to pump discharge centerline for duration of test.
f. Pump discharge pressure converted to feet of liquid pumped and corrected to pump discharge centerline.
g. Driving motor voltage and amperage measured for each phase.

5. Adjust, realign, or modify units and retest Hydraulic Institute Standards if necessary.

F. Motor Test: See Section 16220, Low-Voltage AC Induction Motors.

G. Hydrostatic Tests: Pump casing(s) tested at 150 percent of shutoff head. Test pressure maintained for not less than 5 minutes.

H. Witness of Pump Test: Provide the following for the Owner:

1. Travel costs for two (2) Owner representatives. Cost to include air travel to and from the testing facility and the local airport. The flight shall be non-stop from and to the nearest airport. Provide business class airline tickets for flights outside the Continental USA. Provide lodging, parking fees, ground transportation cost, and a $50 meal allowance per person.
2. Notification at least three (3) weeks prior to testing.
3. Cover above costs if retesting must be performed to obtain satisfactory results.

PART 3 EXECUTION

3.01 INSTALLATION

A. Install in accordance with manufacturer's printed instructions.

B. Level base by means of steel wedges (steelplates and steel shims). Wedge taper not greater than 1/4 inch per foot. Use double wedges to provide a level bearing surface for pump and driver base. Accomplish wedging so there is no change of level or springing of baseplate when anchor bolts are tightened.

C. Adjust pump assemblies such that driving units are properly aligned, plumb, and level with driven units and interconnecting shafts and couplings. Do not compensate for misalignment by use of flexible couplings.

D. After pump and driver have been set in position, aligned, and shimmed to proper elevation, grout space between bottom of baseplate and concrete foundation with a poured, nonshrinking grout of the proper category, as specified in Section 03600, Nonshrink Grouting. Remove wedges after grout is set and pack void with grout.

E. Vibration and Temperature Transducers:

1. Install in accordance with API 670.
2. Install terminal junction boxes mounted on motor housing for temperature transducers.
3. Install conduit and cable from motor bearing temperature transducers to one of the terminal junction boxes.
4. Install conduit and cable from motor vibration transducers to contractor provided junction box mounted independent of pump and motor.

F. Connect suction and discharge piping without imposing strain to pump flanges.

G. Pipe pump drain(s) to hub drain or scupper.

H. Anchor Bolts: Accurately place using equipment templates and as specified in Section 05500 Metal Fabrications.

3.02 FIELD FINISHING

A. As specified in Section 09900, Painting and Coating.

3.03 FIELD QUALITY CONTROL

A. Functional Tests: Conduct on each pump.

1. Alignment: Test complete assemblies for correct rotation, proper alignment and connection, and quiet operation.
2. Vibration Test:
   a. Test with unit installed and in normal operation, and discharging to connected piping systems at rates between low discharge head and high discharge head conditions specified, shall not develop vibration exceeding of limits specified in HIS 9.6.4.
   b. If unit exhibits vibration in excess of limits specified, adjust or modify as necessary. Unit that cannot be adjusted or modified to conform as specified shall be replaced.
3. Flow Output: Measured by plant instrumentation and storage volumes.
4. Operating Temperatures: Monitor bearing areas on pump and motor for abnormally high temperatures.
5. Test for continuous 3-hour period.
6. Test Report Requirements: Provide a complete field test report to include: impact test, flow rates at three discharge pressures, discharge and suction pressers at each flowrate, vibration, rpm, voltage, and current. Provide field test curve comparison to factory test curve.

3.04 MANUFACTURER’S SERVICES

A. Manufacturer’s Representative: Present at Site or classroom designated by Owner, for minimum person-days listed below, travel time excluded:

1. 5 person-days for installation assistance and inspection.
2. 2 person-days for functional and performance testing and completion of Manufacturer's Certificate of Proper Installation.
3. 1 person-day for prestartup classroom or Site training.
4. 2 person-days for facility startup.
5. 1/2 person-day for post-startup training of Owner's personnel. Training shall not commence until an accepted detailed lesson plan for each training activity has been reviewed by Owner.

B. See Section 01650, Facility Startup/Commissioning.

3.05 SUPPLEMENTS

A. The supplements listed below, following "End of Section," are a part of this Specification.

1. Pump Data Sheet.

END OF SECTION

HORIZONTAL SPLIT-CASE CENTRIFUGAL PUMP DATA SHEET, 11211-__

Tag Numbers: P001

Pump Name: Montopolis WRI Pump Station

Manufacturer and Model Number: (1) Flowserve Worthington

(2) Crane Deming

(3) Peerless Pumps

(4) Patterson

SERVICE CONDITIONS

Liquid Pumped (Material and Percent): Reclaimed Water

Pumping Temperature (Fahrenheit): Normal: _____ Max _____ Min _____

Specific Gravity at 60 Degrees F: 1.0 Viscosity Range: 0.98

Vapor Pressure at 60 Degrees F: 0.4 pH: 6.7

Abrasive (Y/N) N Possible Scale Buildup (Y/N): N

Min. NPSH Available (Ft. Absolute): 35

Altitude (Feet above Mean Sea Level): 595

Area Classification: Factory Industrial, F-2 Low Hazard

Ambient Temperature (degrees F.): Max 90 – Min 45

Location: Indoor (Y/N): Y Outdoor (Y/N): N

PERFORMANCE REQUIREMENTS

Capacity (US gpm): Rated: 350 **Secondary: 500**

Total Dynamic Head (Ft): Rated: 150 **Secondary: 100**

BHP at Rated Point: 20 **Secondary: 23**

Min. Pump Hydraulic Efficiency at Rated Capacity (%): 67

Max. NPSH Required at Rated Capacity (Ft. Absolute): 18.5

Max. Pump Speed at Rated Capacity (rpm): 3,530

Constant (Y/N): Y

Adjustable (Y/N): N

DESIGN AND MATERIALS

Pump Type: Horizontal (Y/N) Y Frame-Mounted (Y/N) _____

Vertical (Y/N) N Other _____

Casing Material: Cast Iron ASTM A48

Casing Wear Rings (Y/N) Y Casing Wear Ring Material: Bronze

Impeller: Type: Double Suction Material: Bronze ASTM B148

Impeller Wear Rings (Y/N) Y Impeller Wear Ring Material: Bronze ASTM B148

Shaft Material: 316 SS Shaft Sleeve Material: _____

Shaft Seal: Packing (Y/N) N Mechanical (Y/N) Y Type: Component Seal

Seal Lubrication: _____

ABMA B-10 Bearing Life (hrs): 100,000 Lubrication: Oil

HORIZONTAL SPLIT-CASE CENTRIFUGAL PUMP DATA SHEET, 11211-__

Tag Numbers: _____P001_____

Bearings: Outboard End Type: _____ Inboard End Type: _____

Coupling: Falk (Y/N) ___Y___ Fast: (Y/N) ___N___ Spring-Grid (Y/N) ___N___

Gear Type (Y/N)_____Y_____ Spacer (Y/N) _____Y_____

Manufacturer Standard (Y/N) _____

Baseplate Material: _____Fabricated Steel_____

Drive Type: Direct-Coupled ___X_ Belt _____ Adjustable Speed _____ Other _____

DRIVE MOTOR (See Section 16220, Low-Voltage AC Induction Motors.)

Horsepower: ___30___ Voltage: ___460_ Phase: Synchronous Speed (rpm) __3,600_

Service Factor: _____1.15_____

Motor nameplate horsepower shall not be exceeded at any head-capacity point on pump curve.

Enclosure: DIP _____ EXP _____ ODP _____ TEFC X_____CISD-TEFC _____
TENV _____ WPI _____ WPII _____ SUBM _____

Mounting Type: Horizontal X_____ Vertical Solid Shaft _____
Nonreverse Ratchet (Y/N) _____

REMARKS _____

_____

_____

_____

HORIZONTAL SPLIT-CASE CENTRIFUGAL PUMP DATA SHEET, 11211-__

Tag Numbers: P002

Pump Name: Montopolis WRI Pump Station

Manufacturer and Model Number: (1) Flowserve Worthington

(2) Crane Deming

(3) Peerless Pumps

(4) Patterson

SERVICE CONDITIONS

Liquid Pumped (Material and Percent): Reclaimed Water

Pumping Temperature (Fahrenheit): Normal: _____ Max _____ Min _____

Specific Gravity at 60 Degrees F: 1.0 Viscosity Range: 0.98

Vapor Pressure at 60 Degrees F: 0.4 pH: 6.7

Abrasive (Y/N) N Possible Scale Buildup (Y/N): N

Min. NPSH Available (Ft. Absolute): 35

Altitude (Feet above Mean Sea Level): 595

Area Classification: Factory Industrial, F-2 Low-Hazard

Ambient Temperature (degrees F.): Max 90 – Min 45

Location: Indoor (Y/N): Y Outdoor (Y/N): N

PERFORMANCE REQUIREMENTS

Capacity (US gpm): Rated: 700 **Secondary: 1,220**

Total Dynamic Head (Ft): Rated: 150 **Secondary: 105**

BHP at Rated Point: 36 **Secondary: 52**

Min. Pump Hydraulic Efficiency at Rated Capacity (%): 70

Max. NPSH Required at Rated Capacity (Ft. Absolute): 6

Max. Pump Speed at Rated Capacity (rpm): 1,800

Constant (Y/N): Y

Adjustable (Y/N): N

DESIGN AND MATERIALS

Pump Type: Horizontal (Y/N) Y Frame-Mounted (Y/N) _____

Vertical (Y/N) _____ Other _____

Casing Material: Cast Iron ASTM A48

Casing Wear Rings (Y/N) Y Casing Wear Ring Material: Bronze

Impeller: Type: Double Suction Material: Bronze ASTM B148

Impeller Wear Rings (Y/N) Y Impeller Wear Ring Material: Bronze ASTM B148

Shaft Material: 316 SS Shaft Sleeve Material: 410SS

Shaft Seal: Packing (Y/N) N Mechanical (Y/N) Y Type: Split

Seal Lubrication: _____

ABMA B-10 Bearing Life (hrs): 100,000 Lubrication: Oil

HORIZONTAL SPLIT-CASE CENTRIFUGAL PUMP DATA SHEET, 11211-__

Tag Numbers: _____P002_____

Bearings: Outboard End Type: _____ Inboard End Type: _____

Coupling: Falk (Y/N) ___Y___ Fast: (Y/N) ___N___ Spring-Grid (Y/N) ___N___

Gear Type (Y/N)_____Y_____ Spacer (Y/N) _____Y_____

Manufacturer Standard (Y/N) _____

Baseplate Material: _____Fabricated Steel_____

Drive Type: Direct-Coupled ___X_ Belt _____ Adjustable Speed _____ Other _____

DRIVE MOTOR (See Section 16220, Low-Voltage AC Induction Motors.)

Horsepower: ___60___ Voltage: ___460_ Phase: Synchronous Speed (rpm) __1,800_

Service Factor: _____1.15_____

Motor nameplate horsepower shall not be exceeded at any head-capacity point on pump curve.

Enclosure: DIP _____ EXP _____ ODP _____ TEFC X_____CISD-TEFC _____
TENV _____ WPI _____ WPII _____ SUBM _____

Mounting Type: Horizontal X_____ Vertical Solid Shaft _____
Nonreverse Ratchet (Y/N) _____

REMARKS _____

_____

_____

_____

HORIZONTAL SPLIT-CASE CENTRIFUGAL PUMP DATA SHEET, 11211-__

Tag Numbers: P003

Pump Name: Montopolis WRI Pump Station

Manufacturer and Model Number: (1) Flowserve Worthington

(2) Crane Deming

(3) Peerless Pumps

(4) Patterson

SERVICE CONDITIONS

Liquid Pumped (Material and Percent): Reclaimed Water

Pumping Temperature (Fahrenheit): Normal: _____ Max _____ Min _____

Specific Gravity at 60 Degrees F: 1.0 Viscosity Range: 0.98

Vapor Pressure at 60 Degrees F: 0.4 pH: 6.7

Abrasive (Y/N) N Possible Scale Buildup (Y/N): N

Min. NPSH Available (Ft. Absolute): 35

Altitude (Feet above Mean Sea Level): 595

Area Classification: F-2 Factory Industrial, Low-Hazard

Ambient Temperature (degrees F.): Max 90 – Min 45

Location: Indoor (Y/N): Y Outdoor (Y/N): N

PERFORMANCE REQUIREMENTS

Capacity (US gpm): Rated: 1,400 Secondary: 1,800

Total Dynamic Head (Ft): Rated: 150 Secondary: 128

BHP at Rated Point: 68 Secondary: 72

Min. Pump Hydraulic Efficiency at Rated Capacity (%): 80

Max. NPSH Required at Rated Capacity (Ft. Absolute): 15

Max. Pump Speed at Rated Capacity (rpm): 1,800

Constant (Y/N): Y

Adjustable (Y/N): N

DESIGN AND MATERIALS

Pump Type: Horizontal (Y/N) Y Frame-Mounted (Y/N) _____

Vertical (Y/N) N Other _____

Casing Material: Cast Iron ASTM A48

Casing Wear Rings (Y/N) Y Casing Wear Ring Material: Cast Iron ASTM A48

Impeller: Type: Double Suction Material: Bronze ASTM B148

Impeller Wear Rings (Y/N) _____ Impeller Wear Ring Material: Bronze

Shaft Material: 316 SS Shaft Sleeve Material: 410SS

Shaft Seal: Packing (Y/N) N Mechanical (Y/N) Y Type: Split

Seal Lubrication: _____

ABMA B-10 Bearing Life (hrs): 100,000 Lubrication: Oil

HORIZONTAL SPLIT-CASE CENTRIFUGAL PUMP DATA SHEET, 11211-__

Tag Numbers: _____P003_____

Bearings: Outboard End Type: _____ Inboard End Type: _____

Coupling: Falk (Y/N) ___Y___ Fast: (Y/N) ___N___ Spring-Grid (Y/N) ___N___

Gear Type (Y/N)_____Y___ Spacer (Y/N) _____Y_____

Manufacturer Standard (Y/N) _____

Baseplate Material: _____fabricated steel_____

Drive Type: Direct-Coupled __X__ Belt _____ Adjustable Speed _____ Other _____

DRIVE MOTOR (See Section 16220, Low-Voltage AC Induction Motors.)

Horsepower: ___100__ Voltage: ___460_ Phase: Synchronous Speed (rpm) __1,750_

Service Factor: _____1.15_____

Motor nameplate horsepower shall not be exceeded at any head-capacity point on pump curve.

Enclosure: DIP _____ EXP _____ ODP _____ TEFC X_____CISD-TEFC _____ TENV _____ WPI _____ WPII _____ SUBM _____

Mounting Type: Horizontal Y_____ Vertical Solid Shaft _____ Nonreverse Ratchet (Y/N) _____

REMARKS _____

_____

_____

_____

SECTION 13315
PLC NETWORK REQUIREMENTS

PART 1 GENERAL

1.01 SCOPE

A. This section defines the requirements for Local Area Networks (LAN) to support the system interconnectivity required by the PLC portion of the distributed computing and control systems specified in other sections. The LAN network shall be seamlessly integrated with the systems as required to meet the system performance requirements.

B. The Contractor shall include in the bid all security related LAN equipment as shown on contract drawings. LAN equipment includes network switches, router, fiber optic patch panel, fiber optic patch cable, and Cat-6 patch cable needed. LAN equipment shall not include access control controller, digital video recorder, UPS associated with the security control panel or any security related devices. Security contractor shall provide panel design, all LAN equipment, and security equipment mounting inside the security control panel. Instrumentation contractor shall provide security contractor LAN equipment physical dimension, spacing requirement, and power requirement.

C. The Contractor shall be responsible for the following equipment and software:

1. Industrial Ethernet switch with minimum ports requirement listed in section below.
2. All fiber-optic patch cables needed.
3. All Cat-6 patch cables needed.
4. Fiber optic cables.
5. Fiber optic patch panel.
6. Router.

1.02 SUBMITTALS

A. The following items shall be furnished in the submittal package for this section:

1. Data sheets and catalog literature for the fiber optic cable, the industrial Ethernet switches, the fiber optic transceivers, and the proposed fiber optic patch panels, terminations and connectors.
2. Manufacturer specifications and data which clearly and unambiguously show that the cable meets all of the requirements specified herein.
3. Samples of the specified cable and of the proposed terminators and connectors.

4. Drawings showing the physical dimensions of all products to be furnished.
5. Identification and labeling of cable, cable fibers, and cable terminations.
6. Detailed network riser and connection diagram.
7. Rack-up drawings of all equipment.
8. A list of all network equipment used to make up the LAN and software provided with each.
9. Testing sequence, expected duration and schedule for the network test.
10. Network equipment, cable and system test documentation forms.
11. A list of the personnel who will be conducting the network equipment, cable and system testing, and their qualifications.

1.03 WARRANTY

A. Reference specification 13400.

1.04 SPARE PARTS AND TOOLS

A. Maintenance Materials (Extra Stock): Spare parts shall include the following minimum renewal parts in original packaging complete with wiring diagram and installation guide:

1. Five 10 feet Ethernet Cat-6 molded patch cables.
2. Two of each type of fiber-optic molded patch cables used.
3. One Ethernet cable Cat-6 crimper.
4. Five hundred feet of Cat-6 cable.
5. 100 Cat-6 crimp connectors.
6. One of each type of Ethernet switch used.
7. One of each type of router used.
8. One of each router module used.

PART 2 PRODUCTS

2.01 NETWORK CONFIGURATION

A. The System Network consists of a Local Area Network (LANs) for the Montopolis Pump station. Refer to the drawings for the overall network:

1. The MOPR-PSCP01 – The PLC, the three radios and the power monitors from the Motor Control Centers shall be connected together and exchange data via a 10/100BaseT Local Area Network (LAN).
2. All necessary LAN interconnecting hardware and cables shall be included with the system. The Contractor shall coordinate LAN cable lengths and equipment locations with the Owner and shall be responsible for the total connectivity of the equipment utilizing the LAN. The fiber optic cables shall be terminated in patch panels located in each security enclosure.

2.02 LAN NETWORK FUNCTIONS

A. General Requirements:

1. All necessary information shall be transmitted by the system network to and/or between the following, all PLC's, various other processors connected to the system, all control subsystems, and peripherals.
2. The LANs shall utilize Ethernet.
3. The LANs shall support installation in facilities where RFI/EMI noise is commonly experienced. The LAN's shall be designed to provide efficient and secure data transfer under these conditions.
4. All Cat-6 network connections shall be provided with surge protection at both ends of any runs where the cable leaves a building.
5. In no case shall the LAN fail to meet the data transmission rates and throughput required to meet the system performance requirements for any function defined in this Specification.
6. Each LAN shall have data transmission speeds of a minimum of 100MB. The Contractor shall be responsible for meeting all system performance requirements using these communications links.

B. Local Area Network Requirements: The LANs shall comply with the Ethernet specification and shall support connectivity between all LAN resident devices. The Contractor shall provide all network equipment including cable, cable connectors, amplifiers, splitters, and communication cards required to make a complete and operational network.

C. Network Configuration: It is the Contractor's responsibility to provide a local area network configuration, which provides secure and error free communications between all stations or connections on the Local Area Network. The configuration provided by the Contractor shall take into account distances between any two stations or segments of the Local Area Network and shall provide ample signal-to-noise ratio (S/N) at the receiver, which equates to an average residual bit-error-rate (BER) of 1x10-11.

2.03 INDUSTRIAL ETHERNET SWITCH FOR SCADA

A. The Ethernet Switches shall be IEEE-802.3 compliant.

B. The Ethernet switch shall be industrial rated and can be operated in industrial environments.

C. The Ethernet Switch shall have no moving parts.

D. The Ethernet Switch shall have redundant power inputs for 24 VDC

E. Ethernet Switch shall be configurable via web interface.

F. Ethernet Switch shall be capable of -40ºC to 85 Degree Celsius operating temperature.

G. Manufacturer: The Industrial Network Company

H. Product: N-Tron Ethernet Switch Model 516TX-A (or approved similar industrial Ethernet switch).

2.04 INDUSTRIAL ETHERNET ROUTER FOR SCADA

A. The Router shall be IEEE-802.3 compliant.

B. The Route shall be industrial rated and can be operated in industrial environments.

C. The Router shall have no moving parts.

D. The Router shall enable remote management and monitoring with Simple Network Management Protocol (SNMP), Telnet or HTTP.

E. Ethernet Switch shall support four synchronous/asynchronous serial ports, four fast Ethernet ports, 802.11 a/b/g and 4.9 GHz support and a AC/DC power converter card.

F. Ethernet Switch shall be capable of -40ºC to 85 Degree Celsius operating temperature.

G. Manufacturer: Cisco

2.05 INDUSTRIAL AUTODIALER FOR SCADA

A. The Autodialer shall comply with UL 1459 and 1950 standards.

B. The Autodialer shall be industrial rated and can be operated in industrial environments.

C. The Autodialer Telephone shall:

1. Be compatible with most cellular telephone systems.
2. Be compatible with rotary pulse or tone dialing, keyboard selectable.
3. Allow programming of PBX delays in 1 second increments.
4. Be FCC registered Part 68, “Ringer Equivalence”: 0.3A.
5. Allow for alarm acknowledgment by Touchtone key or by calling back.
6. Provide up to 16 different numbers to be dialed, each up to 60 digits long.

D. The Autodialer shall function with 105-135 VAC, 50/60 HZ, 15 watts maximum or 8-14 VDC at 500 mA maximum.

E. Autodialer shall be provided with a rechargeable gel-cell battery with up to 20 hours of continuous operation in the event of the loss of power.

F. Autodialer shall modular and expandable to provide support for up to 32 digital inputs, 16 analog inputs and 8 digital control outputs.

G. Contractor shall coordinate with the local telephone company and Owner to establish the phone service to initiate the Autodialer.

H. Manufacturer: Raco:

I. Model: Verbatim.

2.06 900 MHZ RADIO

A. The radio shall comply with FCC Part 90 and Part 101 approvals.

B. The radio shall be industrial rated and can be operated in industrial environments.

C. The radio shall:

1. Be operational in simplex and half-duplex modes.
2. Possess operational power from 0.1 to 5 watts, programmable.
3. Include a receiver capable of double conversion.
4. Include a receiver with a sensitivity of -112 dBm at 1X10^-6 BER.
5. Be capable of interfacing with MDS Pulsenet NMS, MDS InSite and MDS Radio Configuration software.

D. The radio shall include the following interfaces:

1. Serial COM1: RS-232, DB-9.
2. Serial COM2: RS-232, RS-485, DB-9.
3. Ethernet: 10/100 BaseT, RJ45.
4. Antenna: TNC Female.

E. The radio shall be enclosed in a rugged die-cast aluminum panel.

F. Manufacturer: GE Digital Energy:

G. Model: SD9.

2.07 NETWORK CABLES

A. Fiber Optic Cable:

1. Physical Characteristics (Overall):
   a. Fiber Type: Single Mode/125/900 Micron.
   b. Number of Fibers: 24.
   c. Buffer Tube Material: Thermoplastic.
   d. Outer Jacket Material: PVC - Polyvinyl Chloride.
   e. Strength Member Material: Aramid Yarn.
   f. Overall Nominal Diameter: 0.260 inches.
2. Mechanical Characteristics (Overall):
   a. Storage Temperature Range: -40°C To 75°C.
   b. Installation Temperature Range: 0°C To +75°C.
   c. Operating Temperature Range: -20°C To +70°C.
   d. Bulk Cable Weight: 34 lbs/1000 Min.
   e. Bend Radius (Install)/Minor Axis: 5.500 inches.
   f. Min. Bend Radius for Long Term Application: 2.800 inches.
   g. Max. Load for Installation: 388 lbs.
   h. Max. Load for Long Term Application: 194 pounds.
3. Applicable Specifications and Agency Compliance Applicable Standards & Environmental Programs:
   a. NEC/(UL) Specification: OFNP.
   b. CEC/C(UL) Specification: OFNP.
   c. EU Directive 2000/53/EC (ELV): Yes.
   d. EU Directive 2002/95/EC (RoHS): Yes.
   e. EU Directive 2002/96/EC (WEEE): Yes.
   f. EU Directive 2003/11/EC (BFR): Yes.
   g. CA Prop 65 (CJ for Wire & Cable): Yes.
   h. MII Order #39 (China RoHS): Yes.
4. Flame Test:
   a. UL Flame Test: UL910 Plenum.
   b. CSA Flame Test: FT.
5. Suitability:
   a. Suitability - Indoor: Yes.
   b. Suitability - Outdoor: Yes.
   c. Suitability - Aerial: No.
   d. Suitability - Burial: Yes.
   e. Sunlight Resistance: Yes.
6. Plenum/Non-Plenum:
   a. Plenum (Y/N): Yes.
7. Optical Characteristics (Overall):
   a. Maximum Attenuation @ 1300nm: .5 dB/km.
   b. Maximum Attenuation @ 1550nm: .5 dB/km.
   c. Maximum Gigabit Ethernet Length @ 1300nm: 5,000.

8. Fibers within the cable shall be color-coded so that each fiber may be individually identified. The color sequence suggested is as follows: blue, orange, green, brown, gray, white, red, black, yellow, purple, rose, and aqua. Dashed versions of the same colors may be used to continue the sequence, depending on the cable structure and fiber count.
9. The outer jackets of the cable shall be continuous, free from holes, splits, blisters or inclusions. The same requirement holds for any inner jackets within a given cable structure as well as for fiber coatings.
10. Materials used for fiber optic cable shall present no environmental or toxicological hazards as defined by current industry standards and shall comply with OSHA and EPA standards or applicable federal or state laws or regulations.
11. The outer jacket material shall be high density polyethylene. The color of the polyethylene jacket material shall be black.
12. The cable jacket shrinkage test measures the shrinkage or expansion of a cable jacket exposed to temperature aging for a specified period of time. Maximum shrinkage shall be less than 5% for each specimen tested. The test procedure is described in EIA-RS-455, FOTP-86.
13. All fiber optic patch cables shall be single mode with stick and click (SC) connectors on each end.
14. The fiber optic cable furnished under this Contract shall be General Cable – AP0241ANU or approved equal.

B. RJ-45 Network Cable and Connectors: The RJ-45 cables shall be plenum rated, Teflon coated, Category 6 (ANSI/TIA-568-B.2-1) cables. Standard RJ-45 quick connectors shall be provided to connect 10/100-BaseT network to LAN resident devices. The network patch bay will be Category 6 rated (ANSI/TIA-568-B.2-1) with punch down type connections on back side and RJ-45 connectors on the front. All patch connections to the hub shall be made to fit at the proper length (no oversized cables). All patch cables will be Category 6 rated (ANSI/TIA-568-B.2-1) and clearly labeled. The cable is designated Cat 6 Ethernet Wiring on Contract Drawings. The wires shall be Belden 2413, or General Cable GenSPEED 6.

C. Fiber Optic Patch Panels: All fiber optic cable (including spares shall be terminated or spliced in fiber optic patch panels. All patch panels indoors not mounted in an instrument panel shall be provided with NEMA 12 enclosures. All panels outdoors shall be located in NEMA 4X 316 Stainless Steel enclosures. Provide patch panels at every structure boundary and in every panel enclosure. Fiber optic patch panel shall be Corning SPH-01P with appropriate CCN connector panels or approval equal.

PART 3 EXECUTION

3.01 TEST REQUIREMENTS

A. Fiber Optic Cable Testing:

1. Prior to final acceptance of the Work, inspection and cable testing may be performed. The Owner's Representative may perform inspections of all equipment and work for general conformance with the requirements of the specification. Testing of the fiber optic cable shall be performed by the Contractor and may be witnessed by the Owner's Representative. All equipment for cable testing shall be furnished by the Contractor; however, this test equipment will not become the property of the Owner.
2. Prior to the physical placement of the fiber optic cable, each fiber shall be tested, while on the spool, with an Optical Time Domain Reflectometer (OTDR) at wavelength of 1300 nm. The OTDR test shall ensure that the fibers conform to the Manufacturers' attenuation specifications and that no damage occurred to the cable during shipping. Hard copy plots of the tests shall be provided to the Owner prior to approval for the placement to proceed.
3. Final inspection and testing shall be conducted after the Contractor has completed the Work. Specific prerequisites are as follows:
   a. All submittals have been received and successfully reviewed.
   b. The fiber optic cable has been installed and terminated at both ends of each cable.
   c. Agreeable dates for inspection and testing have been established.
4. Equipment used for testing of the fiber optic cable shall be furnished by the Contractor and shall be on site.
5. All test equipment used shall have been calibrated within the preceding 30 days using a stabilized laboratory calibration source. Calibration documentation and/or certificates shall be supplied at the time of testing.
6. The following equipment shall be used for testing of the fiber optic cable:
   a. Laser light source (1300 nm), Fluke OptiFiber, or equal.
   b. Laser light source (1550 nm), Fluke OptiFiber, or equal.
   c. Optical Power Meter (1300 & 1500 nm), Fluke OptiFiber, or equal.
   d. Optical Time Domain Reflectometer, Fluke OptiFiber, or equal.
7. Jumpers, connectors, adapters and other miscellaneous items, as required.
8. All testing of the fiber optic cable and inspections shall be scheduled to take place during normal working hours. Any testing witnessed by the Owner's Representative that does not meet with the specified requirements shall be repeated. All tests shall be signed off as successful, by the Contractor and the Owner's Representative. Any test which does not show acceptable results shall be marked as failed by all

parties and a complete description of the test, its results and other important factors shall be prepared on-site by the Owner's Representative with a copy presented to the Owner and the Contractor prior to leaving the test site.

B. Pigtail Splice Loss:

1. The splice loss for each pigtail assembly shall have been tested and documented with an OTDR trace during cable termination. The documentation for this testing shall be submitted as a part of the cable testing procedure. Measurements shall be made at 1300 nm.
2. Documentation shall include the following information for each splice made:
   a. Test date, Tester, OTDR Mfgr, model and serial number.
   b. Fiber ID.
   c. Location.
   d. Wavelength.
   e. Splice Loss.
   f. Witness Signature.
3. No splices having a loss greater than -1 dB shall be accepted.

C. Excess Fiber Coefficient: The Contractor shall determine and record the Excess Fiber Coefficient (EFC). This shall be determined on a single fiber, from either end.

1. Record fiber length from cable meter mark (prior to stripping for splices).
2. Record fiber Index of Refraction (IOR) from Mfg. data.
3. Measure fiber length with OTDR set to proper IOR.
4. Calculate EFC: EFC = OTDR length / Sheath Length:
   a. Document EFC with:
      1) Test date, Tester, OTDR Mfgr, model and serial number.
      2) Calculation values.
      3) EFC.
      4) Fiber ID and location.
      5) Witness signature.

D. Fiber Continuity and Length:

1. The continuity and length of each fiber after termination shall be measured with the OTDR. Each fiber shall be measured from either end, an OTDR trace is required for each measurement. Measurements shall be taken at 1300 nm.
2. The documentation for each fiber shall include the following:
   a. Test date, Tester, OTDR Mfgr, model and serial number.
   b. Fiber ID.

c. Location.
d. Fiber Length.
e. Continuous -- yes/no.
f. Wavelength.
g. OTDR Trace.
h. Witness signature.

3. To be accepted, each fiber shall show that it is continuous from one end to the other, with no severe transmission anomalies showing on the OTDR trace, when compared to OTDR traces taken by the Manufacturer, prior to installation.

E. Insertion Loss Attenuation:

1. Insertion loss attenuation shall be measured for each fiber, from either end. The test shall utilize the stabilized laser light sources and optical power meter. Testing shall be made at both 1,300 nm and 1,550 nm.
2. The test shall require the establishment of a reference power receive level measured with a piece of patch cord and connectors of the same types used on the full cable. Care shall be taken to provide an exact match of connectors and mating hardware used in the reference measurement so that the same setup losses are reproduced when measuring the full cable. The laser source shall not be turned off anytime during the testing. The Contractor shall make sure that all connectors have been properly cleaned.
3. The Contractor shall measure and record the reference receives power level at 1,300 nm.
4. The Contractor shall measure the received power level of each fiber and record the results.
5. Test documentation shall include the following:
   a. Test Date, Tester, Manufacturer, models and serial numbers.
   b. Fiber ID.
   c. Location.
   d. Wavelength.
   e. Reference power reading.
   f. Actual power reading.
   g. Insertion Loss.
6. The measured insertion loss shall be no greater than that calculated by the equation below, as adjusted for actual cable length:

$$IL = 2(L_S) + 2(L_C)(L_A) + 1.5 \text{ dB}$$

Where IL = Insertion loss

L_S = Splice loss at pigtail (1 dB max)

L_C = Connector face loss (1 dB max)

L_A = Manufacturer's cable attenuation

7. If the testing reveals that any of the requirements above are not met, the Contractor shall take immediate steps to identify the cause of the condition. If the cause can be identified and corrected, the Contractor shall notify the Owner's Representative in writing of its nature and shall provide a description of his proposed method or procedure to rectify the problem. This notification shall be made within seven working days after the conclusion of the testing. Upon Owner's Representative concurrence, the Contractor shall perform corrections, and shall retest the cable in accordance with this section. If the cause cannot be identified or cannot be corrected, the Contractor shall replace the fiber optic cable.

F. Ethernet Switch and Router Firmware and Software Update: Update all Ethernet switches provided to latest available firmware and software version at the time of installation. Assign I.P. addresses to all Ethernet switches provided according the Owner Information Technology (IT) I.P. addressing standard. Provide Owner computers with the latest manufacture recommended web browser and associated add-on for monitoring and configure the Ethernet switches if needed.

G. Cat.6 Cable Testing:

1. Each cable shall be tested for continuity on all pairs and/or conductors. Twisted-pair voice cables shall be tested for continuity, pair reversals, shorts, and opens using a “green light” type test set. Twisted-pair data cables shall be tested for the all of the above requirements, plus tests that indicate installed cable performance. These data cables shall be tested using a Level III cable scanner.
2. Continuity - Each pair of each installed cable shall be tested using a “green light” test set that shows opens, shorts, polarity and pair-reversals. Shielded/screened cables shall be tested with a device that verifies shield continuity in addition to the above stated tests. The test shall be recorded as pass/fail as indicated by the test set in accordance with the Manufacturers recommended procedures, and referenced to the appropriate cable identification number and circuit or pair number. Any faults in the wiring shall be corrected and the cable re-tested prior to final acceptance.
3. Length - Each installed cable shall be tested for installed length using a TDR type device. The cables shall be tested from patch panel to patch panel, block to block, patch panel to outlet or block to outlet as appropriate. The cable length shall conform to the maximum distances set forth in the ANSI/TIA/EIA-568-B Standard. Cable lengths shall be recorded, referencing the cable identification number and circuit or pair

number. For multi-pair cables, the longest pair length shall be recorded as the length for the cable.

4. Performance Verification - Category 6 data cabling systems shall be performance verified using an automated test set. This test set shall be capable of testing for the continuity and length parameters defined above, and provide results for the following tests:
   a. Pair-to-Pair Near End Crosstalk (NEXT).
   b. Power Sum Near End Crosstalk (PSNEXT).
   c. Insertion Loss.
   d. Return Loss.
   e. Equal Level Far End Crosstalk (ELFEXT)
   f. Power Sum Equal Level Far End Crosstalk (Power Sum ELFEXT).
   g. Attenuation to Crosstalk Ratio (ACR).
5. Category 6 data cable shall be performance verified using an automated test set. Test results shall be automatically evaluated by the equipment, using the most up-to-date criteria from the ANSI/TIA/EIA-568-B.2.1 Standard, and the result shown as pass/fail. Test results shall be printed directly from the test unit or from a download file using an application from the test equipment Manufacturer. The printed test results shall include all tests performed, the expected test result and the actual test result achieved.

3.02 EQUIPMENT FABRICATION AND ASSEMBLY

A. Cable Terminations: All cable terminations shall be through an industry standard interface which allows proper termination.

B. Cable Runs:

1. All cables in the Control System LAN shall be run inside a metal conduit, and in a manner which protects the cable from damage or electrical noise.
2. Cables shall not be supported by their connections or terminations.
3. Cables shall not run across hinges of doors or panels at 90 degree angles to the hinge or panel.
4. All cables shall be protected from abrasion, multiple flexing at any one spot, and accidental snagging during maintenance.
5. All connectors shall be keyed and allow the connection to fit only one way.

C. Labeling:

1. All cables and connectors shall be labeled. The connector on the cable end and the receptacle into which the cable fits shall be labeled in a way which clearly identifies the proper cable and receptacle connection.

2. The length of each piece of cable shall be recorded on the cable tag and documented in tables or a data base on digital media. The location of each cable splice shall be documented on digital media. This information shall be included in the as-built drawings.

END OF SECTION

COMPONENT SPECIFICATIONS

A. L10 Level Transmitter, Direct Sensing, Flange Mounted:

1. General:
   a. Function: Measure level in a process vessel.
   b. Type:
      1) Capacitive differential pressure cell.
      2) Diaphragm for process fluid isolation.
      3) Flange mounting.
      4) Smart electronics.
      5) Two-wire device.
   c. Service:
      1) Process Liquid: As noted.
      2) Process Temperature Range: Minus 20 degrees F to 400 degrees F, unless otherwise noted.
      3) Ambient Temperature Range: Minus 40 degrees F to 250 degrees F, unless otherwise noted.
      4) Humidity: 0 percent to 100 percent relative.
2. Performance:
   a. Range: As noted.
   b. Accuracy: Plus or minus 0.75 percent of span.
3. Features:
   a. Zero Suppression or Elevation: As noted.
   b. Damping: User-selectable; 0 second to 36 seconds time constant of analog output response to step change input.
4. Transmitter: Two-wire, powered from external power supply.
   a. Zero and Span Adjustments: Local, external, noninteractive, unless otherwise noted.
   b. Process Wetted Parts: Flanged Process Connection (Transmitter High Pressure Side):
   c. Flange Size/Type: 3-inch, Class 150, unless otherwise noted.
   d. Process Diaphragm: Type 316 stainless steel, unless otherwise noted.
   e. Mounting Flange: Stainless steel, unless otherwise noted.
   f. Mounting: Flush, unless otherwise noted.
   g. Extension Materials (if extension mount noted): Type 316 stainless steel, unless otherwise noted.
   h. Extension Length (if extension mount noted): As noted.
   i. Process Fill Fluid (High Pressure Side): Dow Corning Silicone 200, unless otherwise noted.
   j. Reference Process Connection (Transmitter Low Pressure Side) Configuration (Differential, unless otherwise noted):
   k. Drain/Vent: Type 316 stainless steel.
   l. Flange Adapter: Stainless steel.

m. Diaphragm Material: Type 316 stainless steel, unless otherwise noted.
n. Sensor Fill Fluid (Low Pressure Side): Silicone, unless otherwise noted.
o. O-Ring: Glass-filled TFE.
p. Flange and Adapter Bolts: Type 316 stainless steel, unless otherwise noted.
q. LCD Meter: If noted.
r. Integral Transient Protection: If noted.
s. Signal Output Interface:
1) 4 mA to 20 mA dc for load impedance 0 ohm to 580 ohms minimum at 24V dc supply voltage without load adjustment.
2) Superimposed digital signal based on HART protocol.

5. Enclosure: NEMA 4X, polyurethane-covered aluminum, unless otherwise noted.
6. Manufacturers/Model:
a. Emerson Process Rosemount; 3051L, Liquid Level Transmitter.
b. Foxboro IGP20

B. L31 Level Switch, Integral Conductive Probe:

1. General:
a. Function: Actuate contact at preset liquid level.
b. Type: Probe with integral conductance type switch.
c. Parts: Probe; interconnecting cable; relay or indicating controller, as noted; accessories as noted.
d. Coordinate installing applicable parts within panel furnished by PIC Supplier.
2. Service: Reuse water, unless otherwise noted.
3. Performance:
a. Set points: As noted.
b. Relay Operating Temperature Range: 14 degrees F to 140 degrees F.
c. Indicating Controller Operating Temperature Range: 14 degrees F to 140 degrees F.
d. Intrinsically Safe Barrier Operating Temperature Range: 14 degrees F to 140 degrees F.
4. Parts and Features:
a. Probe:
1) Quantity: As noted on the Contract Drawing.
2) Materials: Cast Iron.
3) Length: As noted.
b. Switch Separation Distance: As noted.
c. Cable Length: As noted.
d. Signal Interface:
1) Relay: One set of contacts per relay.
2) Contact Rating: 5 amps resistive at 250V ac.

5. Accessories:
    a. Probe Mounting Kit: Furnish, unless otherwise noted.
        1) Integral cleaning device.
        2) Stainless steel components.
6. Manufacturer and Products:
    a. B/W Controls
        1) Series 6012/6013 Electrodes.
    b. Or equal.

C. P7 Pressure Switch, Adjustable Dead Band:

1. General:
    a. Function: Monitor pressure, activate switch at setpoint, and deactivate switch at reset point.
    b. Type:
        1) Piston-actuated.
        2) Both setpoint and deadband (the differential between setpoint and reset point) adjustable.
2. Performance:
    a. Setpoint: As noted.
    b. Repeatability: Plus or minus 1 percent of range.
    c. Reset Point: As noted.
    d. Range: The noted setpoint shall fall between 20 percent and 80 percent of the range.
    e. Deadband: Adjustable within nominally 25 percent and 85 percent of range.
    f. Overpressure Proof Pressure:
        1) Pressure psi Ranges: At least 400 percent of rated maximum static pressure.
        2) Pressure Inches of Water Ranges: 20 psig.
    g. Compound Range: 250 psig.
    h. Vacuum Range: 250 psig.
    i. Operating Temperature Range:
        1) Dependent on actuator seal materials.
        2) For Buna-N seal, 0 degree F to 150 degrees F.
3. Features:
    a. Actuator Seal: Buna-N, unless otherwise noted.
    b. Adjustable deadband.
    c. Mounting: Surface, unless otherwise noted.
    d. Process Connection:
        1) 1/4-inch NPT female connections, unless otherwise noted.
4. Materials:
    a. Pressure psi Ranges: Type 316 stainless steel, unless otherwise noted.
    b. Pressure Inches of Water Ranges: Epoxy coated carbon steel, unless otherwise noted.
    c. Enclosure: NEMA 4X, unless otherwise noted.

5. Signal Interface:
    a. Contact Type:
        1) SPDT.
        2) Rated for 10 amps minimum at 120V ac.
    b. Hermetically Sealed Switch: If noted.
6. Manufacturers and Products:
    a. Ashcroft; L or P Series.
    b. United Electric; J6 Series.
    c. Or Equal.

D. P9 Pressure Transmitter:

1. General:
    a. Function: Measure pressure and transmit signal proportional to pressure.
    b. Type:
        1) Electronic variable capacitance or silicon strain gauge.
        2) Two-wire transmitter; “smart electronics”.
    c. Parts: Transmitter and accessories.
2. Performance:
    a. Range: As noted.
    b. Select transmitter’s factory upper range limit (URL) such that upper boundary of noted range is as close as possible to 80 percent of factory URL, but does not exceed it.
    c. Accuracy: Plus or minus 0.075 percent of span, unless otherwise noted.
    d. Ambient Operating Temperature: Minus 40 degrees F to plus 175 degrees F, with integral meter.
    e. Process Operating Temperature: Minus 40 degrees F to plus 250 degrees F.
    f. Humidity: 0 to 100 percent relative humidity.
    g. Hazardous Location Certifications: If and as noted.
3. Features:
    a. Type: Gauge pressure, unless otherwise noted.
    b. Adjustable damping.
    c. LCD indicator, unless otherwise noted.
    d. Display in either percent or engineering units, field configurable.
    e. Wetted Metallic Parts: Type 316 stainless steel, unless otherwise noted.
    f. Includes drain/vent valves; process flanges and adapters, and process isolating diaphragm.
    g. Wetted O-Rings: Glass filled TFE, graphite filled PTFE, or Viton, unless otherwise noted.
    h. Bolts and Nuts (if required): Type 316 stainless steel, unless otherwise noted.
    i. Fill Fluid: Silicone, unless otherwise noted.
    j. Process Connections:
        1) Line Size: 1/2 inch.

2) Connection Type: FNPT.

k. Direct/remote Diaphragm Seal: If and as noted.

4. Signal Interface:

a. 4mA to 20 mA dc output with digital signal based on HART protocol, unless otherwise noted below.

b. Nominal Maximum Loop Resistance with External 24V dc Power Supply: 550 ohms.

c. FOUNDATION fieldbus protocol: If noted.

d. Profibus: If noted.

5. Enclosure:

a. Type: NEMA 4X.

1) Materials: Coated aluminum, unless otherwise noted.

2) Mounting bracket, unless otherwise noted.

3) Bracket and Accessories: Stainless steel; suitable for mounting transmitter to panel or 2-inch pipe.

6. Accessories:

a. Two-valve (isolate and vent) Stainless Steel Manifold: If noted.

7. Manufacturers and Products:

a. Gauge Pressure Units:

1) Rosemount; Model 3051 TG.

2) Foxboro; Model IGP20.

b. Absolute Pressure Units:

1) Rosemount; Model 3051 TA.

2) Foxboro; Model IAP20.

E. A18 Chlorine Leak Detector:

1. General:

a. Function: Continuously monitor ambient air for chlorine gas.

b. Sensor Type: Electrochemical gas diffusion.

c. Parts: Sensor/transmitter(s); receiver/controller, automatic test generator (if noted), calibration kit, and ancillaries.

2. Performance:

a. Range: 0 ppm to 10 ppm, unless otherwise noted.

b. Temperature, Operating: 0 degrees F to 105 degrees F.

c. Humidity, Operating: 0 percent to 99 percent relative humidity, noncondensing.

d. Sensor (or Integral Sensor/Transmitter):

e. Number of Sensor(s): One, unless otherwise noted.

f. Gas Monitored: Chlorine gas.

g. Sensor Type: Electrochemical gas diffusion.

h. Mounting: Wall.

i. Controller:

1) Number of Channels/Receivers: One, unless otherwise noted.

2) LCD or LED Display.

3) Audible Alarm: Integral weatherproof horn, 85 dB.

3. Enclosure:
   a. Rating: NEMA 4X.
   b. Mounting: Wall.
4. Power:
   a. Controller: 85-255V ac, 50/60 Hz, unless otherwise noted.
   b. Backup Battery:
      1) Required, unless otherwise noted.
      2) 12V dc, 4-amp hour battery to maintain operation up to 12 hours to a single point unit.
5. Signal Interfaces, Controller:
   a. Analog Output:
      1) If noted.
         a) 4 mA to 20 mA dc analog output capable of driving 600 ohms at 24V dc; one per channel.
   b. Discrete outputs.
      1) SPDT relays rated for 230V ac at 5 amps resistive.
      2) Three per channel, plus one common fault.
   c. Cables: Provide cabling of required length between sensor/transmitter and controller.
6. Ancillaries:
   a. Automatic Test Gas Generator:
      1) If noted.
         a) Assembly includes a chlorine generator for automatic daily test of sensor.
         b) Calibration Kit: Complete with accessories, including regulator and zero and span cylinders of chlorine gas.
         c) Device to allow personnel to nonintrusively calibrate and adjust transmitter.
7. Manufacturers and Products:
   a. Evoqua; Acutec 35 Gas Detection System.
   b. MSA; Trigard Gas Sensor(s) and Monitor.

F. A30 Turbidity Meter

1. General:
   a. Function:
      1) Measure turbidity using using pulse scattered infrared light at 860nm at a 90° angle in accordance with/compliance with DIN EN ISO 7027.
      2) Transmit proportional analog (and, if noted, network) signal.
   b. Type: Nephelometric.
   c. Parts: Analyzer/transmitter, reagent, and accessories.
2. Performance Requirements:
   a. Range

1) 0.0001 to 1000 FNU (1 FNU = 1 NTU)

b. Resolution

1) 0.0001 to 0.9999 / 1.000 to 9.999 / 10.00 to 99.99 / 100 to 1000 FNU (NTU)

c. Precision

1) ±0.008 FNU or ±1% of reading (0 to 10 FNU)

d. Repeatability

1) ±0.003 FNU or ±5% of reading (0 to 2 FNU)

e. Response time

1) 1 to 60 seconds (user adjustable).

3. Certifications:

a. EMC: CE compliant for conducted and radiated emissions CISPR 11 (Class A limits), EMC Immunity EN 61326-1 (Industrial limits) when connected to an sc controller.

b. Safety: General Purpose UL/CSA 61010-1 with cETLus safety mark when connected to an sc controller

c. IP 65 Enclosure Rating

4. Environmental Requirements:

a. Operating Temperature: 36 to 104 °F (2 to 40°C)

b. Sample Temperature: 122 °F (50 °C) maximum

c. Sample Pressure: 87 psi at 68°F (6 bar at 20°C)

d. Sample flow rate

1) Minimum: 0.2 L/min

2) Maximum: 1L/min

5. Wetted Materials:

1) Measuring window: Quartz

2) Measuring Chamber: Noryl GFN2

3) Wiper axle: Stainless Steel 1.4571

4) Wiper profile: Silicone

6. Warranty: The sensor includes a one-year warranty from the date of shipment.

7. Maintenance Service:

a. Scheduled Maintenance

1) Every 1200 Cycles: Replace wiper profile (only on plus and seawater versions)

2) Every Two Years: Replace desiccant and monitor test equipment with CVM Dry Calibration

b. Unscheduled Maintenance

1) Clean measuring chamber: Dependent on substances contained in the water

2) Check Zero Point: Dependent on substances contained in the water

3) Check Gradient: At least once per year

8. Manufacturer:

a. Hach-Lange GmbH, Berlin, Germany: Ultraturb sc Basic/Plus/Seawater Turbidimeter, with the Hach Model SC200 or SC1000 Controller

9. Manufactured Unit:

a. The Ultraturb sc Turbidimeter consists of an 860nm LED light source, detection system, and internal light trap. Sample chamber wiper available for plus and seawater versions.

G. A24 Chlorine Residual Analyzer, Amperometric:

1. General:
   a. Function:
      1) Measure and indicate total and / or free chlorine.
      2) Transmit proportional analog (and, if noted, network) signal.
   b. Type: Amperometric titration.
   c. Parts: Analyzer/transmitter, and accessories.
2. Performance Requirements
   a. Measurement range: 0 to 20 ppm chlorine for either free or total chlorine
   b. Total Chlorine
      1) Low Limit Of Detection (LOD): 30 ppb (0.03 ppm) or better
      2) Limit Of Quantitation (LOQ): 90 ppb (0.09 ppm) or better
      3) Repeatability/precision: 30 ppb or 3%, whichever is greater
      4) Response time: ~100 s for 90% change (T90) (At a stable T and pH)
      5) Interference: Chlorine Dioxide, Ozone, and chalk deposits
   c. Free Chlorine
      1) Low Limit Of Detection (LOD): 30 ppb (0.03 ppm) or better
      2) Limit Of Quantitation (LOQ): 90 ppb (0.09 ppm) or better
      3) Repeatability/precision: 30 ppb or 3%, whichever is greater
      4) Response time: ~140 s for 90% change (T90) (At a stable T and pH)
      5) Interference: Monochloramine, Chlorine Dioxide, Ozone, and chalk deposits
   d. Drift: <10% within one week of calibration at a minimum (application dependent)
   e. Specificity/Selectivity: Non-specific to a certain chlorine form, responds to any chlorine species and other oxidizers as noted in the interference section
   f. Calibration method: Customer has the option to use one (zero or slope) or two point (zero and slope) calibration. Two point calibration with chemical zero is recommended for chlorine concentration <0.5 ppm
   g. Verification procedure: One-point process calibration (slope) against a standard reference method.
3. Environmental Requirements
   a. Operational Criteria
      1) Operating temperature: 5 to 45 °C (41 to 113 °F)
      2) Relative humidity: 0-95%, non condensing
   b. Sample Requirements

1) Maximum back pressure the chlorine sensor can manage without failure:
2) 0.5 bar, no pressure impulses and/or vibrations
3) Temperature: 0 to 45 °C (33 to 113 °F)
4) Temperature compensation range: 5 to 45 °C (41 to 113 °F)
5) Flow: 30-50 L/hr, 40 L/hr - optimal (7.9-13.2 g/hr, 10.6 g/hr - optimal)

c. Storage Requirements
1) Electrolyte: 15 to 25°C (59 to 77°F)
2) Chlorine sensors: 0 to 50°C (32 to 122°F) dry without electrolyte
3) Panel: -20 to 60°C (-4 to 149°F)F.

4. Components:
a. Stainless Steel Mounting Panel
b. Chlorine Sensor with Membrane and Electrolyte
c. Chlorine Sensor flow cell
d. Flow meter with control valve
e. Digital gateway to sc controller with cable
f. User Manual

5. Controller: Hach SC200 or SC1000.
6. Signal Interface:
a. Analog Output:
1) 4 mA to 20 mA dc isolated output suitable for a load impedance up to 500 ohms.
2) Minimum and maximum span values operator programmable.

b. Discrete Outputs:
1) Two alarm outputs.
2) Each with SPDT contacts rated at 5 amp resistive at 230V ac.

c. Process Connections:
1) Sample Inlet: 1/4-inch OD tube, quick-disconnect fitting.
2) Drain Connection: 1/2-inch flexible hose and hose barb.
3) Air Purge: If noted.
4) 1/4-inch OD tubing.

7. Power: 115/230V ac, 50 Hz, switch selectable.
8. Manufacturer and Product: Hach Company; Model CLT10sc with the Controller.

A. <u>F19 Flow Element, Short Form Venturi:</u>

1. <u>General:</u>
a. <u>Function: Provide differential pressure signal proportional to square of flow rate.</u>
b. <u>Type:</u>
1) <u>Differential pressure producers.</u>
2) <u>Cast iron flanged line-size device.</u>

2. <u>Service:</u>

a. Process Fluid: Reclaimed Water, unless otherwise noted.
b. Process Fluid Temperature: Minus 60 degrees F to 400 degrees F, unless otherwise noted.
c. Process Pressure: As noted.
d. Application:
1) Pump Discharge Flow.
2) Other: As noted.

3. Performance:
a. Process Flow Range: As noted.
b. Pressure Differential at Full Scale Flow: Approximately as noted.
c. Maximum Nonrecoverable Head Loss at Flow:
1) Approximately as noted.
2) Nominally not to exceed 10 percent of maximum pressure differential.
d. Accuracy (Excluding Secondary Instrument Inaccuracy): Plus or minus 0.50 percent of actual reading, uncalibrated, unless otherwise noted.
e. Compliant with ASME fluid meter codes MFC-3M-1985, ISO 5167, and BS-7045.

4. Supporting Calculations: Using actual line size, provide comprehensive calculations, including (but not limited to):
a. Pressure differential/flow calculations.
b. Nonrecoverable head loss calculations.
c. Reynolds number analysis.
d. Flashing/cavitation analysis.
e. For installations in which transmitter is above meter centerline, verify both high and low pressure ports on transmitter are below hydraulic grade line.

5. Features:
a. Materials:
1) Body: Cast iron, ASTM A126, Grade B, unless otherwise noted.
2) Throat: Type 304 or Type 316 stainless steel, unless otherwise noted.
3) Tap Sleeves: Type 304 or Type 316 stainless steel, unless otherwise noted.
4) Exterior: Factory primer.
5) Nameplate: Permanent stainless steel engraved with tag number, pipe inside diameter, throat inside diameter, flange size, pressure rating, and flow direction.
6) Available Beta Ratios (Nominal): 0.50, 0.60, and 0.70, plus custom beta ratios.

6. Process Connections:
a. Line Size: As noted.
b. Connection Type:
1) Flanged ends.
2) Flange Rating:
a) ANSI 150 pound, unless otherwise noted.
b) Hydrostatic pressure test at least 1-1/2 times the service pressure, as per code.
c. For installations in which transmitter is above meter centerline:
1) Call out vertical distance transmitter is above meter center line: As noted.

2) Used in supporting calculation above.

7. Pressure Tap Connections:
   a. Two high pressure taps, 3/4-inch NPT.
   b. Two low pressure taps, 3/4-inch NPT.
   c. Vent/drain holes, 3/4-inch NPT.
8. Manufacturers and Products:
   a. Primary Flow Signal; Model HVT-CI.
   b. BIF; UVT Model 20181.

Tag	Code	Dwg No.	Description	Component Options	Surge Suppressor Detail	Installation Detail
LIT-003		I-3	Water Storage Tank Level Transmitter, Direct Sensing, Flange Mounted	Range: 0 – 50 feet		
LE-003		I-3	Water Storage Tank Level Switches, Conductance	Range: Process Connection:		
FE/FIT-005		I-3	Pump Bypass Line Flow Element and Transmitter, Venturi	Size: 16” diameter Range: 0 – 10,000 gpm		
PIT-007		I-3	Pump Main Discharge Line Pressure Indicating Transmitter	Range: 0 – 150 psi	N/A	4091-304A 4091-401
AE/AIT-004		I-3	Pump Bypass Line Chlorine Residual Element and Transmitter	Range:0 – 5 mg/L Total Chlorine		
PIT-101		I-5	Pump 1 Suction Pressure Indicating Transmitter	Range: 0 – 50’ Water	N/A	4091-304A 4091-401
PIT-104		I-5	Pump 1 Discharge Pressure Indicating Transmitter	Range: 0 – 150 psi	N/A	4091-304A 4091-401
PSH-105		I-5	Pump 1 Discharge High Pressure Switch	Scale: Set Point: 120 psi	N/A	4091-304C 4091-401
FE/FIT-110		I-5	Pump 1 Discharge Flow Element and Transmitter, Venturi	Size: 6” diameter Range: 0 – 500 gpm		
TE/TIT 102		I-5	Pump 1 Pump Bearing Temperature Element and Transmitter	Range: Per Pump Manufacturer (See Section 11211)		
TE/TIT 112		I-5	Pump 1 Motor Bearing Temperature Element and Transmitter	Range: Per Pump Manufacturer (See Section 11211)		
TE/TIT 114		I-5	Pump 1 Motor Winding Temperature Element and Transmitter	Range: Per Pump Manufacturer (See Section 11211)		
VT 103		I-5	Pump 1 Pump Vibration Transmitter	Range: Per Pump Manufacturer (See Section 11211)		

Tag	Code	Dwg No.	Description	Component Options	Surge Suppressor Detail	Installation Detail
VT 113		I-5	Pump 1 Motor Vibration Transmitter	Range: Per Pump Manufacturer (See Section 11211)		
PIT-201		I-5	Pump 2 Suction Pressure Indicating Transmitter	Range: 0 – 50' Water	N/A	4091-304A 4091-401
PIT-204		I-5	Pump 2 Discharge Pressure Indicating Transmitter	Range: 0 – 150 psi	N/A	4091-304A 4091-401
PSH-205		I-5	Pump 2 Discharge High Pressure Switch	Scale: Set Point: 120 psi	N/A	4091-304C 4091-401
FE/FIT-210		I-5	Pump 2 Discharge Flow Element and Transmitter, Venturi	Size: 8" diameter Range: 0 – 1300 gpm		
TE/TIT 202		I-5	Pump 2 Pump Bearing Temperature Element and Transmitter	Range: Per Pump Manufacturer (See Section 11211)		
TE/TIT 212		I-5	Pump 2 Motor Bearing Temperature Element and Transmitter	Range: Per Pump Manufacturer (See Section 11211)		
TE/TIT 214		I-5	Pump 2 Motor Winding Temperature Element and Transmitter	Range: Per Pump Manufacturer (See Section 11211)		
VT 203		I-5	Pump 2 Pump Vibration Transmitter	Range: Per Pump Manufacturer (See Section 11211)		
VT 213		I-5	Pump 2 Motor Vibration Transmitter	Range: Per Pump Manufacturer (See Section 11211)		
PIT-301		I-5	Pump 3 Suction Pressure Indicating Transmitter	Range: 0 – 50' Water	N/A	4091-304A 4091-401
PIT-304		I-5	Pump 3 Discharge Pressure Indicating Transmitter	Range: 0 – 150 psi	N/A	4091-304A 4091-401
PSH-305		I-5	Pump 3 Discharge High Pressure Switch	Scale: Set Point: 120 psi	N/A	4091-304C 4091-401
FE/FIT-310		I-5	Pump 3 Discharge Flow Element and Transmitter, Venturi	Size: 12" diameter Range:		

Tag	Code	Dwg No.	Description	Component Options	Surge Suppressor Detail	Installation Detail
TE/TIT 302		I-5	Pump 3 Pump Bearing Temperature Element and Transmitter	Range: Per Pump Manufacturer (See Section 11211)		
TE/TIT 312		I-5	Pump 3 Motor Bearing Temperature Element and Transmitter	Range: Per Pump Manufacturer (See Section 11211)		
TE/TIT 314		I-5	Pump 3 Motor Winding Temperature Element and Transmitter	Range: Per Pump Manufacturer (See Section 11211)		
VT 303		I-5	Pump 3 Pump Vibration Transmitter	Range: Per Pump Manufacturer (See Section 11211)		
VT 313		I-5	Pump 3 Motor Vibration Transmitter	Range: Per Pump Manufacturer (See Section 11211)		
PIT-401		I-5	Pump 4 Suction Pressure Indicating Transmitter	Range: Future	N/A	
PIT-404		I-5	Pump 4 Discharge Pressure Indicating Transmitter	Range: Future	N/A	
PSH-405		I-5	Pump 4 Discharge High Pressure Switch	Range: Future	N/A	
FE/FIT-410		I-5	Pump 4 Discharge Flow Element and Transmitter, Venturi	Range: Future		
TE/TIT 402		I-5	Pump 4 Pump Bearing Temperature Element and Transmitter	Range: Future		
TE/TIT 412		I-5	Pump 4 Motor Bearing Temperature Element and Transmitter	Range: Future		
TE/TIT 414		I-5	Pump 4 Motor Winding Temperature Element and Transmitter	Range: Future		
VT 403		I-5	Pump 4 Pump Vibration Transmitter	Range: Future		
VT 413		I-5	Pump 4 Motor Vibration Transmitter	Range: Future		
AE-043		I-4	Chlorine Leak Detector	Set Point:		

Tag	Code	Dwg No.	Description	Component Options	Surge Suppressor Detail	Installation Detail
TT-017		I-4	Electrical Room Temperature Element and Transmitter	Range:		
TT-010		I-4	Pump Room Temperature Element and Transmitter	Range		
AE/AIT-018		I-3				

SECTION 15208
HYDROPNUEMATIC TANK AND CONTROL SYSTEM

PART 1 GENERAL

1.01 SCOPE

A. The work under this Section includes the furnishing and installation of a hydropnuematic tank system, including hydropneumatic tank, air compressors, air piping, valves, mounting for tank controls, pressure gauges, and all appurtenances, fully tested, as indicated on the drawings, as herein specified.

1.02 REFERENCES

A. The following is a list of standards which may be referenced in this section:

1. National Electrical Manufacturers Association (NEMA): ICS 1, General Standards for Industrial Control and Systems.
2. ASME Code for Unfired Pressure Vessels.
3. ICSI, General Standards for Industrial Control and Systems.
4. National Fire Protection Association (NFPA).
5. Occupational and Safety Health Act (OSHA).

1.03 SYSTEM DESCRIPTION

A. Design Requirements:

1. Descriptive data for hydropnuematic tank control system appears on Hydropnuematic tank Control System Data Sheet (appears at the end of this Specification) and Contract Drawings.
2. System conditions shown represent maximum operating conditions.
3. Arrange hydropnuematic tank control system so operational errors are minimized and failures in automatic operation are detected before damage can result.

1.04 SUBMITTALS

A. Action Submittals: Shop Drawings:

1. Complete dimensional fabrication drawings of hydropnuematic tank accessories and piping.
2. Complete piping schematic drawings showing air and liquid piping, and flows directly associated with hydropneumatic .
3. Fabrication drawings of hydropnuematic control tank panel, including schematic and wiring diagrams.

4. Complete electrical elementary diagrams and electrical interconnection diagrams for hydropnuematic control tank. Diagrams in accordance with NEMA ICS 1.

B. Informational Submittals:

1. Statements of Qualification:
   a. Tank supplier.
   b. Tank welders.
2. Contractor's written plan for installation.
3. Certificate of Compliance, in accordance with Section 01740, Common Product Requirements, that tank is certified and stamped in accordance with American Society of Mechanical Engineers (ASME) Section VIII, Division 1.
4. Test Reports:
   a. Date and time of testing.
   b. Description of method of testing, including pumping combinations and pressure records.
   c. Description of observed leaks and method and date of repair.
   d. Description of catastrophic failures.
5. Manufacturer's Certificate of Proper Installation, in accordance with Section 01670, Manufacturers' Field Services and Training.

1.05 QUALIFICATIONS

A. Tank Welders and Weld Inspectors: ASME certified.

PART 2 PRODUCTS

2.01 HYDROPNUEMATIC TANK SYSTEM SUPPLIER

A. A single supplier shall be responsible for the hydropnuematic tank system specified herein so as to maintain unit responsibility for the complete system. This supplier shall supervise the fabrication and assembly of component equipment and systems into the package system. The supplier shall supervise installation of mechanical equipment, electrical wiring and conduit, and instrumentation and control system components. The supplier shall also be responsible for site services including interconnection, testing, startup, and certification of the installation.

B. Like items of equipment specified herein shall be the end products of one manufacturer in order to achieve standardization of appearance, operation, maintenance, spare parts, and manufacturer's services.

2.02 HYDROPNEUMATIC TANK

A. Physical Data:

1. Actual Net Tank Volume: Not less than 2000 cubic feet.
2. Configuration: Horizontal cylindrical shape with elliptical heads.
3. Diameter: Approximately 10 feet.
4. Overall Length: Approximately 25 feet.
5. Design Pressure: Rated for 200 psi.
6. Design Temperature: 120 degrees F.

B. Design Basis/Criteria:

1. Shell Thickness: Computed according to ASME Pressure Vessel Code, Division 1, Section VIII, UG-27, Equation 1, Page 19.
2. Minimum Weld Efficiency: E = 0.85.

C. The tank shall have the following connections:

1. 24-inch manway.
2. Two 2-inch threaded connections for level probe well.
3. 1-inch air connections.
4. 1-inch secondary air connections (for initial charging).
5. 16-inch force main connections.
6. 2-inch flanged drain.

D. Provide support brackets on hydropnuematic tank for air piping, electrical conduit, the level control panel, and all accessories.

E. Flanges shall be perpendicular to the axis of the pipe. Flange face drilling shall conform to ANSI/ASME B16.1, Class 250.

F. Level Control Systems:

1. The hydropnuematic tank shall be provided with a level control system to control the water level in the tank within the designated range.
2. The level control system shall consist of the following components:
   a. Probe well and probe holder.
   b. B/W electrodes.
   c. 1-inch check valves.
   d. 1-inch solenoid valves (NEMA 4X enclosure) for adding/venting air.
   e. 1-inch air safety relief valve tank mounted.
   f. 1-inch valves for isolation/bypass of solenoid valves and sight glass drain.
   g. Level control panel.
3. Above the normal operating range, air shall be added through a solenoid valve from the air compressor system. Below the normal operating range, air shall be vented from the surge arrestor through a solenoid valve. High and low alarm signals shall be generated when the water level is out of range.

4. Time delays shall be used to prevent adding or venting air during transient and minor fluctuation.
5. Level Control Panel:
   a. Control panel shall meet the requirements of City Standard Technical Specification S16700, Common Control Panel Requirements for Equipment.
   b. The level control panel shall house all relays, time delays, and alarm contacts.
   c. The level control panel shall be housed in a NEMA 4X, 316 stainless steel enclosure.
   d. Electrical service shall be 120 volt, 60 Hz, single phase.
   e. Dry contacts shall be provided for generating a remote general fault alarm in response to alarms indicated above.
   f. Level control panel shall be mounted on the hydropnuematic tank.

2.03 COMPRESSED AIR SYSTEM

A. General:

1. Two reciprocating (piston type) air compressors shall be furnished and installed. Compressors shall be mounted on the air receiving reservoir. Each compressor capacity shall be 5 acfm at 155psig, with maximum pressure capacity of at least 250 psig.
2. The air compressors, receiving tank and control panel shall be mounted on a common skid requiring only a 480 volt, 3 phase power connection and a hook-up to the air piping.
3. The compressed air system shall be suitable for indoor installation. Compressor shall be sound attenuated to not exceed 70 dba <u>10 feet away from the compressor in the same room of the building.</u>

B. Compressors: Compressors shall be two-stage, oil-lubricated, air-cooled, motor-driven compressors. Compressors shall be splash-lubricated with low oil level switch and high temperature switch to shut down the compressor. Drives shall be V-belt type with means for easy adjustment of belt tension. Compressors shall be complete with centrifugal or magnetic unloader and air intake filter-silencer. Furnish sound attenuation to reduce sound levels below 70 dba. Furnish valves where shown on the Drawings, associated with the high pressure air piping including gate valves, check valves and pressure relief valves. Pressure gauges shall also be a part of this system. Provide machine guarding in accordance with OSHA Standard 29 CFR Part 1910, Subpart 0, 1910.211 to 219.

C. Spare Parts and Oil Supply: Furnish the following spare parts for each compressor:

1. Three filter-silencer elements.

2. Sufficient oil for the initial filling of the compressor plus an amount sufficient for two complete oil changes.
3. Two sets of V-belts.

D. Motors: Motors shall be continuous duty and shall meet the requirements of the following:

1. Horsepower: 10 (maximum).
2. Enclosure: TEFC.
3. Service Factor: 1.15.
4. Power Supply: 480 volt, 3 phase, 60 Hz.
5. Speed: 1,800 rpm maximum.
6. 120 volt space heater.
7. Provide motor high temperature switch.

E. A minimum 120 gallon air reservoir shall be provided with the compressors. Vessel shall be designed and inspected in accordance with ASME Code for Unfired Pressure Vessels. The receiver shall be equipped with a condensate drain with solenoid controlled by the control panel.

F. Control Panel:

1. Control panel shall meet the requirements of City Standard Technical Specification S16700, Common Control Panel Requirements for Equipment.
2. Furnish and install a factory control panel for the two air compressors. The panel shall include a control power transformer. Power to the panel shall be 480 volts, 3-phase with a main circuit breaker rated 22,000 AIC. All controls shall operate on a 120 volt, single phase power source.
3. The panel shall contain a Hand-Off-Auto selector switch for each compressor, and an alternator. In Hand, a compressor shall operate continuously. Three dry contacts shall be provided for compressor control: one for Lead Compressor On, one for Lag Compressor On, and one for All Compressors Off. If the lag compressor is turned on, a common fault alarm shall be initiated. If the switch for either compressor is in the Auto position and the switch for the other compressor is in the Off position, the compressor whose switch is in the Auto position will start each time the input signal to start the compressor is received at the panel.
4. Provide starters for compressors. Starters shall be NEMA rated, circuit breaker combination type, with overcurrent protection in each phase. Interrupting capacity is a minimum of 22,000 AIC amperes symmetrical. Equip each starter with loss of phase/phase unbalance relay for single phase protection.

5. All time delays, thermal and oil interlocks, and other devices required to operate the compressors to the manufacturer's requirements shall be provided in this panel.
6. The compressor shall automatically shut down on low oil level, high compressor temperature, and upon other critical faults as determined by the manufacturer. The control panel shall include a red indicator light for each shut down condition to indicate the cause of the shut down.
7. Panel enclosure shall be NEMA 4, 316 stainless steel, and shall be mounted on a common skid with the receiver and compressors at the factory.

G. Insulate small diameter piping (less than 3 inches) for freeze protection.

2.04 FACTORY CONTROL PANELS

A. Factory control panels shall be fabricated from the following components:

1. Control panel shall meet the requirements of City Standard Technical Specification S16700, Common Control Panel Requirements for Equipment.
2. Circuit Breakers: Molded case, thermal magnetic, minimum interrupting capacity as noted. Acceptable manufacturers are GE, Siemens, Square D, and Cutler-Hammer.
3. Starters: NEMA rated, circuit breaker combination type, with overcurrent protection in each phase. Interrupting capacity as noted. Acceptable manufacturers are Allen-Bradley, Furnas, GE, Siemens, and Cutler-Hammer.
4. Relays: Relays which interfere with motor controls or external components shall be heavy duty industrial control type, 10 amp 600 volt reversible contacts, equal to Square D Class 8501 Type X.
5. Selectors and Pushbuttons: 30.5 mm, heavy duty, NEMA 4X rated; contacts rated 10 amps continuous, 6 amps break at 120 VAC, equal to Allen-Bradley type 800H.
6. Timers: Solid state, microprocessor based. SqD JCK70.
7. Indicating Lights: 30.5 mm, heavy duty, NEMA 4X rated, 6 volt transformer type with LED lamp, equal to Allen-Bradley type 800H.
8. Provide lamp or lens colors as follows:

Color	**Function**
Red	Motor Run Valve Closed
Green	Motor Stop Valve Open

Color	Function
Amber	Alarm Fault
White	Control Power On

B. Panel Construction: Route all wiring in Panduit or similar wireways and separate into categories (i.e. 480 volt power, 120 volt control, etc.). AC or DC power wiring shall not run in any raceway with any type instrument wiring. Protect all wiring across panel hinges. Provide numbered terminal strips for all field wiring terminations. Must follow City of Austin Standard Technical Specifications, S16200 General Wiring Methods and S16205 Wire Tagging.

C. Surge Protection: All instrument signal wiring, control wiring and AC power wiring shall be protected against lightning spikes and other transient surges at all control panel termination points.

2.05 LIFTING LUGS

A. Provide suitably attached for equipment assemblies and components weighing over 100 pounds.

2.06 EQUIPMENT IDENTIFICATION PLATES

A. Provide 16-gauge stainless steel identification plate securely mounted on each separate equipment component and control panel in a readily visible location. Plate shall bear 3/8-inch high engraved block type black enamel filled equipment identification number and letters indicated in this Specification**.**

2.07 ANCHOR BOLTS

A. Type 316 stainless steel, sized by equipment manufacturer, and as specified in Section 05500, Metal Fabrications. Coat in accordance with Section 09900, Painting and Coating.

PART 3 EXECUTION

3.01 PAINTING

A. Except for touchup, all painting shall be done in the factory. Painting shall be in accordance with and as specified in Section 09900, Painting and Coating, System No. 5. All atmospherically exposed ferrous metal surfaces of the package, including hydropnuematic tank exterior, air compressors, receiver, motors, baseplate, etc., shall be coated as specified. Coat all related equipment and accessory items to hydropnuematic tank and air compressor similarity.

B. All interior ferrous metal surfaces of the hydropnuematic tank and accessories exposed to plant water shall be coated with System No. 1 as specified in Section 09900, Painting and Coating.

3.02 INSTALLATION

A. Install tank on tank support pedestals in accordance with manufacturer's written instructions.

B. Level tank and grout saddles as specified in Section 03600, Nonshrink Grouting, before anchoring.

C. Assemble Accessories: Make process, control, and electrical connections.

D. Make piping connections such that misalignment stresses are not induced in tank nozzles.

3.03 FIELD QUALITY CONTROL

A. Field Static Test:

1. Hydrostatically test installed hydropnuematic tank for 4 hours minimum at 1.3 times design pressure, before dynamic testing.
2. Repair leaks detected during testing.

B. Functional Test:

1. Simulate normal operational cycle to demonstrate system operation. Simulate alarm conditions and control system response to simulated conditions.
2. Dynamic Test: Perform in response to flow startup and stoppage.
3. Testing with Multiple Pumps: Increase number of pumps, one at a time.
4. Record pressures for dynamic operation of each pump combination in startup and shutdown of flow.
5. Inspect and test components for alignment, operation, and connection, and performance.

3.04 MANUFACTURER'S SERVICES

A. Manufacturer's Representative: Present at Site or classroom designated by Owner, for minimum person-days listed below, travel time excluded:

1. 1 person-day for installation assistance and inspection.
2. 1-1/2 person-day for functional and performance testing and completion of Manufacturer's Certificate of Proper Installation.
3. 1/2 person-day for prestartup classroom or Site training.

B. See Section 01670, Manufacturers' Field Services and Training and Section 01650, Facility Startup/Commissioning.

3.05 SUPPLEMENTS

A. The supplement listed below, following "End of Section," is a part of this Specification.

1. Hydropnuematic Tank Control System Data Sheet.

END OF SECTION

HYDROPNUEMATIC TANK CONTROL SYSTEM
DATA SHEET

	CRITERIA	COMMENTS
Hydropnuematic Tank Design Pressure	200 psig	
Tank Volume	2,000 cubic feet	Minimum Volume
Operating Pressure	155 psig	15 mgd
Approximate Elevation	596	Reference datam for pressures
Operating Flowrate (gpm) at instant of power failure	3,500 gpm	Maximum flowrate
Connecting Pipe Size	12-inch diameter	Water flow in and out of chamber goes through 12-inch pipe
Static Pressure	55 psig	Discharge point elevation 600 feet
Maximum Pressure at Hydropnuematic Tank	155 psig	Maximum pressure occurring during a power outage.
Minimum Pressure at Hydropnuematic Tank	9.7 psig	Minimum pressure occurring during a power outage
Level Controls	**Air Volume – cubic foot**	
High High	640	Emergency Level, Alarms (82-inch water level)
High	700	Compressor On (80-inch water level)
Middle	765	Target operation point (78-inch water level)
Low	824	Compressor Off (75-inch water level)
Low Low	882	Emergency Level, Alarms (73-inch water level

PIPING SCHEDULE

Service	Legend	Size(s) (In.)	Exposure	Piping Material	Specification Section	City of Austin Standard Product List	Operating Pressure (psig)	Test Pressure and Type (psig-x) where X=H for Hydrostatic and x=P for Pneumatic	Pipe Colors and Labels	Insulation Service Type
Floor Drains	FDR	All	All	PVC	510S	WW-227	Gravity	Hydrostatic	Dark Gray	
Reclaimed Water [1]	RCW	> 3 in.	All	CLDI - Class 250	510S	WW-27E/WW-27F	120	250-H	Purple	
Reclaimed Water	RCW	< 3 in.	All	PVC	510S	WW-587	120	150-H	Purple	
Sample	SA	All	All	PVC	510S	WW-587	40	80-H	Match Process	
Sodium Hypochlorite[2]	SHC	All	All	PVC	510S	WW-587	30	60-H	Yellow w/Red Bands	Type 1/F3
Sump Pump Discharge	SPD	All	All	PVC	510S	WW-587	10	20-H		
Sanitary Sewer Gravity	SS	All	All	PVC	510S	WW-227	Gravity	Hydrostatic	Black	
Vent	V	All	All	PVC	510S		Atmospheric	NA		
Water - Potable [1]	W1	> 3"	All	CLDI - Class 250	510S	WW-27F	120	250-H	Light Blue	
Water - Potable	W1	< 3"	Exposed	COP	SP510	WW-613	80	150-H	Light Blue	
Water - Potable	W1	< 3"	Buried	HPDE	SP510	WW-65	120	150-H	Light Blue	
Air High Pressure	AHP	All	All	SP or COP	SP510	WW-613	90	180-P	Light Green	
Miscellaneous Instrument Connections		<1"	All	SS	SP510					
Sanitary Sewer Force Main	FM	All	All	HPDE	510S	WW-65C	40	80-H		
Storage Reservoir Overflow Drain	DRAIN	All	Buried	PVC	510S	WW-227	Gravity	Hydrostatic		
Foundation Underdrain System	UNDERDRA	4 in.			SS02375					

Notes:
1. All Ductile Pipe is restrained. For buried pipe use pipe manufacture's factory restraint system.
2. Outdoor Exposed requires insulation
3. All Exposed Reclaimed Pipe and Fittings to be painted purple.
4. All buried reclaimed ductile pipe to be wrapped with purple poly.

ELECTRIC OPERATOR SCHEDULE

Tag Number	Valve Type		Size (inches)	Fluid	Maximum Operating Flow (gpm)	Maximum Operating Pressure (psi)	Service	Travel Time (Seconds)	Control Features
	AWWA Rubber Seated Ball Valve	V-317 (CH2M HILL no.)	30	Reclaimed Water	14,000	150	O/C	min 120/max 240	
	Pump Control Ball Valve	V-320 (CH2M HILL no.)	12	Reclaimed Water	2,000	150	O/C	min 120/max 240	
	Pump Control Ball Valve	V-320 (CH2M HILL no.)	8	Reclaimed Water	1,200	150	O/C	min 120/max 240	
	Pump Control Ball Valve	V-320 (CH2M HILL no.)	6	Reclaimed Water	500	150	O/C	min 120/max 240	
	Pump Station Bypass Control Ball Valve	V-320 (CH2M HILL no.)	16	Reclaimed Water	5,000	150	O/C	min 120/max 240	

Service: O/C = Open-Close, T = Throttling, M = Modulating

Control Features:
A = LOCAL-OFF-REMOTE selector switch with integral OPEN-STOP-CLOSE pushbutton control in LOCAL mode and provisions for remote OPEN-STOP-CLOSE control in REMOTE mode.
B = Operation from 120-volt, single-phase power.
C = Position feedback circuit which generates a 4 to 20 mA dc signal in proportion to valve position, capable of driving into loads up to 750 ohms at 24-volt dc.
D = Auxiliary contact which closes when the HAND-OFF-AUTO or LOCAL-OFF-REMOTE switch is in the AUTO or REMOTE position.
E = Actuator shall open valve upon loss of signal.
F = Actuator shall remain in last position upon loss of signal.
G = Three SPDT 120-volt interposing relays for remote OPEN-STOP-CLOSE control. Relays powered externally, thereby permitting valve control from greater distances.
H = Motor and control enclosure(s) NEMA 250, Type 7.
I = Valve closed limit switch and auxiliary contact.
J = Valve open limit switch and auxiliary contact.

VALVE SCHEDULE [1]

Tag No.	Valve Type No.	City of Austin Standard Product List	Size (inches)	Inlet Pressure (psig)	Outlet Pressure (psig)	Flow (gpm)	Fluid	Location	Remarks
	Resilient Seated Gate Valve AWWA 515	WW-700	36	45	45	14,000 max	Reclaimed Water	Main connection valve on 36 in. reclaimed water "filling" pipeline to Montopolis storage reservoir	Propriatary restrained joint ends
	Resilient Seated Gate Valve AWWA 515	WW-700	24	45	18	14,000 max	Reclaimed Water	Reservoir Bypass Piping Isolation Valve	Propriatary restrained joint ends
	Resilient Seated Gate Valve AWWA 515	WW-700	36	70	70	8,732 max	Reclaimed Water	Main connection valve on 36 in. reclaimed water discharge pipe from Montopolis pump station	Propriatary restrained joint ends
	Resilient Seated Gate Valve AWWA 515	WW-700	36	70	70	8,732 max	Reclaimed Water	Discharge Header isolation valve	Flange
	Resilient Seated Gate Valve AWWA 515	WW-700	30	45	45	14,000 max	Reclaimed Water	Isolation Valves at Altitude Control Valve Box	Propriatary restrained joint ends
	Resilient Seated Gate Valve AWWA 515	WW-700	30	45	45	14,000 max	Reclaimed Water	Isolation Valves at Altitude Control Valve Box	Propriatary restrained joint ends
	Resilient Seated Gate Valve AWWA 515	WW-700	30	18	18	8,732 max	Reclaimed Water	Storage Reservoir Outet Isolation Valve	Propriatary restrained joint ends
	Resilient Seated Gate Valve AWWA 515	WW-700	30	18	18	8,732 max	Reclaimed Water	Storage Reservoir Outet Isolation Valve	Propriatary restrained joint ends
	Resilient Seated Gate Valve AWWA 515	WW-700	36	18	18	8,732 max	Reclaimed Water	Isolation valve on suction header	Flange
	Resilient Seated Gate Valve AWWA 515	WW-700	16	18	18	8,732 max	Reclaimed Water	Pump suction isolation valve	Flange
	Resilient Seated Gate Valve AWWA 515	WW-700	16	18	18	8,732 max	Reclaimed Water	Pump suction isolation valve	Flange
	Resilient Seated Gate Valve AWWA 515	WW-700	16	18	18	8,732 max	Reclaimed Water	Pump suction isolation valve	Flange
	Resilient Seated Gate Valve AWWA 515	WW-700	16	18	18	8,732 max	Reclaimed Water	Pump suction isolation valve	Flange
	Resilient Seated Gate Valve AWWA 515	WW-700	16	18	18	8,732 max	Reclaimed Water	Isolation valve on pressure relief line in pump station - suction side	Flange
	Resilient Seated Gate Valve AWWA 515	WW-700	16	70	70	8,732 max	Reclaimed Water	Isolation valve on pressure relief line in pump station - discharge side	Flange
1	Resilient Seated Gate Valve AWWA 515	WW-700	16	70	18	8,732 max	Reclaimed Water	Isolation valve on pressure relief line in pump station - in line to meter	Flange
	Resilient Seated Gate Valve AWWA 515	WW-700	12	70	70		Reclaimed Water	Isolation Valve for Hydropneumatic Tank	Propriatary restrained joint ends
1	Resilient Seated Gate Valve AWWA 515	WW-700	12	70	70	8,732 max	Reclaimed Water	Isolation valve on pressure relief line in pump station - pressure side of pressure reducing valve	Flange
	Resilient Seated Gate Valve AWWA 515	WW-700	12	18	18	8,732 max	Reclaimed Water	Isolation valve on pressure relief line in pump station - relief side of pressure reducing valve	Flange
	Resilient Seated Gate Valve AWWA 515	WW-700	12	70	70	8,732 max	Reclaimed Water	Pump discharge isolation valve	Flange
	Resilient Seated Gate Valve AWWA 515	WW-700	12	70	70	8,732 max	Reclaimed Water	Pump discharge isolation valve	Flange
	Resilient Seated Gate Valve AWWA 515	WW-700	12	70	70	8,732 max	Reclaimed Water	Pump discharge isolation valve	Flange
	Resilient Seated Gate Valve AWWA 515	WW-700	12	70	70	8,732 max	Reclaimed Water	Pump discharge isolation valve	Flange
	Resilient Seated Gate Valve AWWA 515	WW-700	6	70	70		Potable Water	Relocation of fire hydrant at Montopolis	Propriatary restrained joint ends
	Resilient Seated Gate Valve AWWA 515	WW-700	6	70	70		Reclaimed Water	Isolation Valve for reclaimed water fire hydrant	Propriatary restrained joint ends
	Resilient Seated Gate Valve AWWA 515	WW-700	6	70	70		Reclaimed Water	Isolation Valve for reclaimed water fire hydrant	Propriatary restrained joint ends
	Fire Hydrant	WW-3	standard		60		Potable Water		
	Fire Hydrant	WW-3	standard		70		Relaimed		Purple color
	Air/vac Combination Relief	WW-462B	4		70		Reclaimed Water	ARV on 36 in. dia. yarc discharge piping	
	Air/vac Combination Relief	WW-462B	4		70		Reclaimed Water	ARV on 36 in. dia. yarc "filling" piping	
	Pressure-Relief Valve	V-732 (CH2M HILL no.)	12		70	8,732 max	Reclaimed Water	Discharge Header pressure relief valve set at 120 psi	Flange
	Swing Check Valve	WW-123A	12		70	2,000 max	Reclaimed Water	Pump discharge header check valve	Flange
	Swing Check Valve	WW-123A	8		70	1,200 max	Reclaimed Water	Pump discharge header check valve	Flange
	Swing Check Valve	WW-123A	6		70	500 max	Reclaimed Water	Pump discharge header check valve	Flange
	Reduced Pressure Backflow Preventer Valve	WW-292	1 2	65	60		Potable Water	Pump Station	
	SAR Elevated Reservoir Altitude Valve	V-780 (CH2M HILL no.)	24	90	90		Reclaimed Water	Altitude Valve feedingSAR Elevated Reservoir	Flange
	Resilient Seated Gate Valve AWWA 515	WW-700	12	90	90		Reclaimed Water	Isolation Valve to SAR WWTP nonpotable system	Flange
	Pressure Reducing Valve (PRV)	V-714 (CH2M HILL no.)	12	90	85		Reclaimed Water	PRV for SAR WWTP nonpotable system	Flange
	Pressure Reducing Valve (PRV)	V-714 (CH2M HILL no.)	10	90	85		Reclaimed Water	PRV for SAR WWTP nonpotable system	Flange
	Pressure Reducing Valve (PRV)	V-714 (CH2M HILL no.)	8	90	85		Reclaimed Water	PRV for SAR WWTP nonpotable system	Flange
	Swing Check Valve	WW-123A	36	90	90		Reclaimed Water	Check Valve at SAR Elevated Reservoir to allow flow out of tank	Flange
	Mud Valve	V-915 (CH2M HILL No.)	4				Reclaimed Water	Mud Valve in Storage Reservoir Overflow Box	
	Flap Valve (duckbill type)	V-694 (CH2M HILL No.)	24				Reclaimed Water	Fap Valve for Storage Reservoir Overflow Pipe	

Notes:
1. All valves shall have minimum design working pressure rating of 200 psi and flanged valves shall have ANSI Class 125 Flanged ends.
2. Schedule only cortains valves 4 inches in diameter and larger and specialty valves.
3. See specifications for all valve requirements and for information on valves less than 4 inch in diameter.
4. Operating pressures for smaller valves can be determined from pressures on piping schedule.
5. All valves associated with building plumbing are in separate specifications and in the ME series drawings.

APPROVAL

SITE PLAN APPROVAL SHEET OF
FILE NUMBER: SPC-2015-0322C APPLICATION DATE: JULY 17, 2015
APPROVED BY COMMISSION ON: _____ UNDER SECTION 142 OF
CHAPTER 25-5 OF THE CITY OF AUSTIN CODE.
EXPIRATION DATE (25-5-81, LDC) _____ CASE MANAGER LYNDA COURTNEY
PROJECT EXPIRATION DATE (ORD.#970905-A) _____ DWPZ _____ DDZ _____

Director, Planning and Development Review
RELEASE FOR GENERAL COMPLIANCE: _____ ZONING P-NP LI-NP
Rev. 1 _____ Correction 1 _____
Rev. 2 _____ Correction 2 _____
Rev. 3 _____ Correction 3 _____
Final plat must be recorded by the Project Expiration Date, if applicable. Subsequent Site Plans which do not comply with the Code current at the time of filing, and all required Building Permits and/or a notice of construction (if a building permit is not required), must also be approved prior to the Project Expiration Date.

STATE OF TEXAS
JOSEPH W. JENKINS
68717
REGISTERED PROFESSIONAL ENGINEER
Joseph W. Jenkins
5-11-2016

NO.	DATE	DSGN	B BERHORST	DR	B BERHORST	CHK	J JENKINS	APVD	J JENKINS	BY	APVD
1	8/23/16					REVISION				WAB	JWJ
						ADDENDUM NO. 3					

Montopolis Water Redamation Initieave (WRI)
Storage Reservoir and Pump Station
2711 Montopolis Drive
Austin Water, Austin, Texas

CH2MHILL®
TBPE FIRM NO. 3699

GENERAL

PIPE AND VALVE SCHEDULES

NTS
VERIFY SCALE
BAR IS ONE INCH ON ORIGINAL DRAWING.
0 1"

DATE	MAY 2016
PROJ	472902
DWG	G-6
SHEET	6 of 126

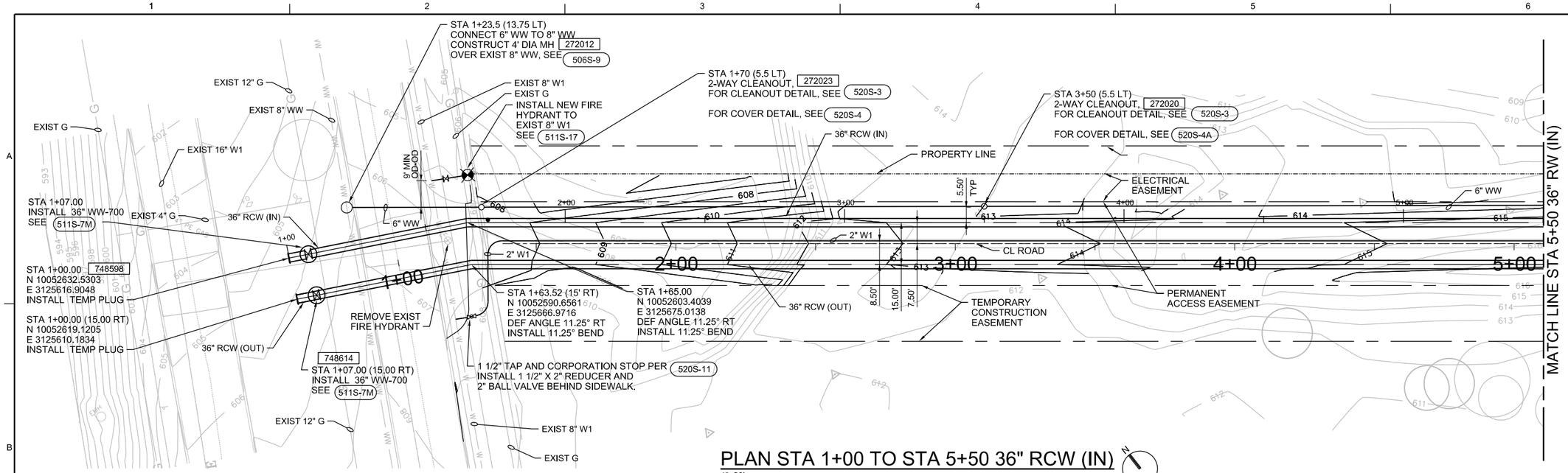

PLAN STA 1+00 TO STA 5+50 36" RCW (IN)

1"=20'

GAS LINE NOTE:

"WHEN DIGGING WITHIN 10' OF A TRANSMISSION OR HPD LINE, PLEASE MAKE CONTACT WITH ANTHONY (TONY) GARCIA AT LEAST 48 HOURS IN ADVANCE SO THAT A TGS REPRESENTATIVE CAN BE SCHEDULED TO BE PRESENT DURING ALL EXCAVATION ACTIVITIES. PLEASE MAINTAIN AT LEAST 5' (OD TO OD) FROM THE TRANSMISSION OR HPD LINE AS WELL."

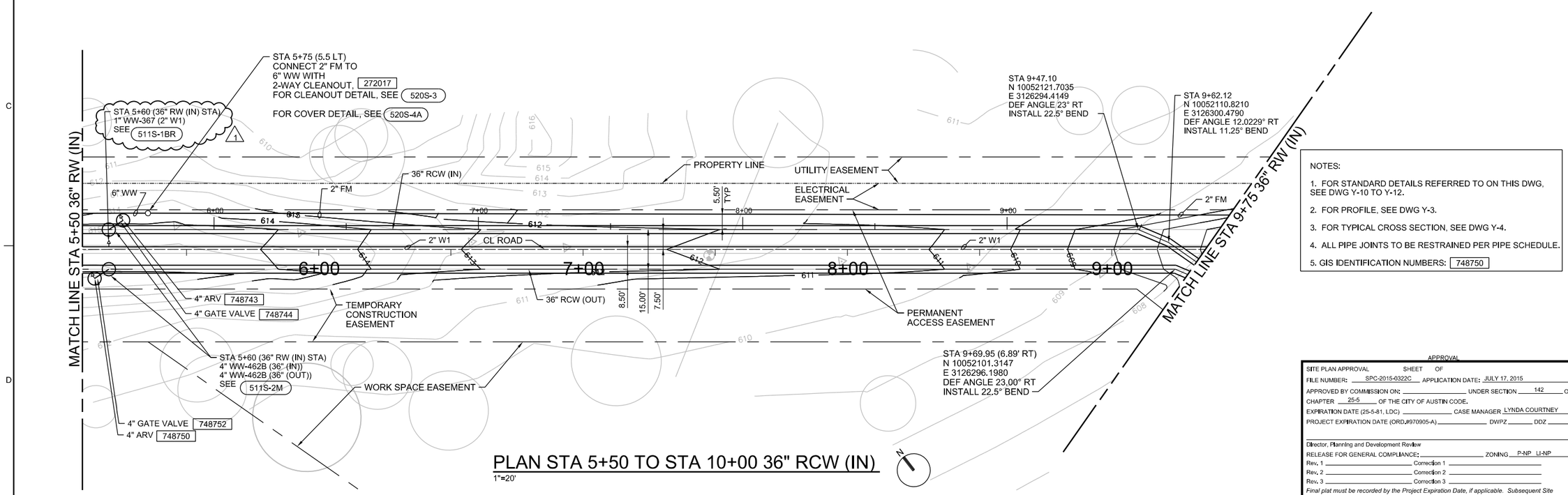

PLAN STA 5+50 TO STA 10+00 36" RCW (IN)

1"=20'

NOTES:

1. FOR STANDARD DETAILS REFERRED TO ON THIS DWG, SEE DWG Y-10 TO Y-12.
2. FOR PROFILE, SEE DWG Y-3.
3. FOR TYPICAL CROSS SECTION, SEE DWG Y-4.
4. ALL PIPE JOINTS TO BE RESTRAINED PER PIPE SCHEDULE.
5. GIS IDENTIFICATION NUMBERS: 748750

APPROVAL

SITE PLAN APPROVAL SHEET OF
FILE NUMBER: SPC-2015-0322C APPLICATION DATE: JULY 17, 2015
APPROVED BY COMMISSION ON: _____ UNDER SECTION 142 OF
CHAPTER 25-5 OF THE CITY OF AUSTIN CODE.
EXPIRATION DATE (25-5-81, LDC) _____ CASE MANAGER LYNDA COURTNEY
PROJECT EXPIRATION DATE (ORD.#970905-A) _____ DWPZ _____ DDZ _____

Director, Planning and Development Review
RELEASE FOR GENERAL COMPLIANCE: _____ ZONING P-NP LI-NP
Rev. 1 _____ Correction 1 _____
Rev. 2 _____ Correction 2 _____
Rev. 3 _____ Correction 3 _____

Final plat must be recorded by the Project Expiration Date, if applicable. Subsequent Site Plans which do not comply with the Code current at the time of filing, and all required Building Permits and/or a notice of construction (if a building permit is not required), must also be approved prior to the Project Expiration Date.

STATE OF TEXAS
JOSEPH W. JENKINS
68717
REGISTERED PROFESSIONAL ENGINEER
5-11-2016

NO.	DATE	DSGN	DR	CHK	APVD	BY	APVD
1	8/23/16	B BERHORST	B BERHORST	J JENKINS	J JENKINS	WAB	JWJ

REVISION: ADDENDUM NO. 3

Montopolis Water Redamation Initiave (WRI)
Storage Reservoir and Pump Station
2711 Montopolis Drive
Austin Water, Austin, Texas

CH2MHILL®
TBPE FIRM NO. 3699

YARD PIPING

YARD PIPING PLAN
1 OF 2

1"=20'
VERIFY SCALE
BAR IS ONE INCH ON ORIGINAL DRAWING.
0 1"

DATE	MAY 2016
PROJ	472902
DWG	Y-1
SHEET	32 of 126

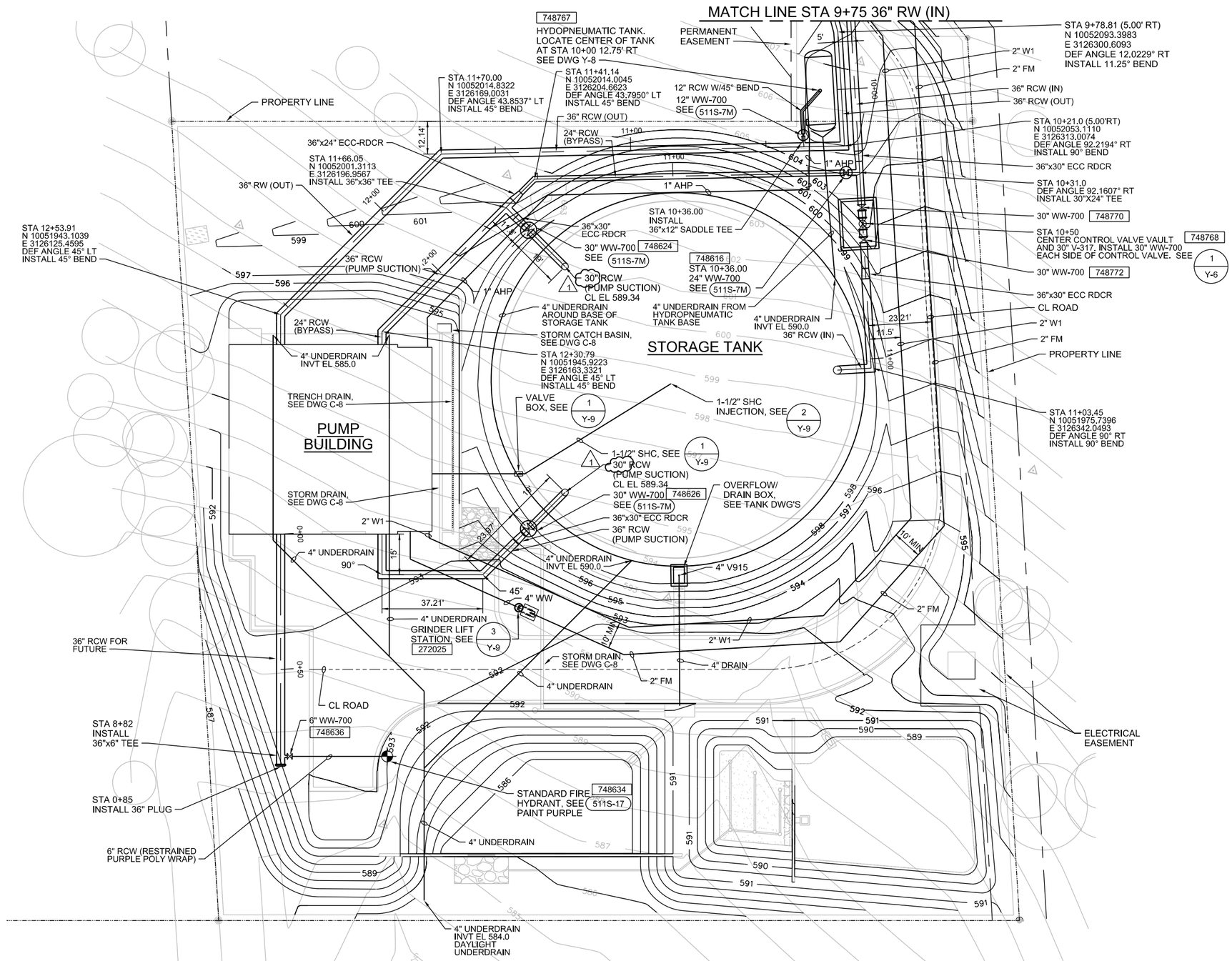

PLAN
1"=20'

NOTES:

1. FOR STANDARD DETAILS REFERRED TO ON THIS DWG, SEE DWG Y-9 TO Y-11.
2. FOR PROFILE, SEE DWG Y-3 & Y-4.
3. FOR TYPICAL CROSS SECTION, SEE DWG Y-4.
4. ALL PIPE JOINTS TO BE RESTRAINED PER PIPE SCHEDULE.
5. GIS IDENTIFICATION NUMBERS: 748770

APPROVAL

SITE PLAN APPROVAL SHEET OF
FILE NUMBER: SPC-2015-0322C APPLICATION DATE: JULY 17, 2015
APPROVED BY COMMISSION ON: _____ UNDER SECTION 142 OF
CHAPTER 25-5 OF THE CITY OF AUSTIN CODE.
EXPIRATION DATE (25-5-81, LDC) _____ CASE MANAGER LYNDA COURTNEY
PROJECT EXPIRATION DATE (ORD.#970905-A) _____ DWPZ _____ DDZ _____

Director, Planning and Development Review
RELEASE FOR GENERAL COMPLIANCE: _____ ZONING P-NP LI-NP
Rev. 1 _____ Correcion 1 _____
Rev. 2 _____ Correction 2 _____
Rev. 3 _____ Correction 3 _____

Final plat must be recorded by the Project Expiration Date, if applicable. Subsequent Site Plans which do not comply with the Code current at the time of filing, and all required Building Permits and/or a notice of construction (if a building permit is not required), must also be approved prior to the Project Expiration Date.

STATE OF TEXAS
JOSEPH W. JENKINS
68717
REGISTERED PROFESSIONAL ENGINEER
Joseph W. Jenkins
5-11-2016

NO.	DATE	DSGN	DR	CHK	APVD
1	8/26/16	B BERHORST	B BERHORST	J JENKINS	J JENKINS

REVISION

NO.	REVISION	BY	APVD
1	ADDENDUM NO. 3	WAB	JWJ

Montopolis Water Reclamation Initiave (WRI)
Storage Reservoir and Pump Station
2711 Montopolis Drive
Austin Water, Austin, Texas

CH2MHILL®
TBPE FIRM NO. 9699

YARD PIPING

YARD PIPING PLAN
2 OF 2

1"=20'
VERIFY SCALE
BAR IS ONE INCH ON ORIGINAL DRAWING.
0 1"

DATE	MAY 2016
PROJ	472902
DWG	Y-2
SHEET	33 of 126

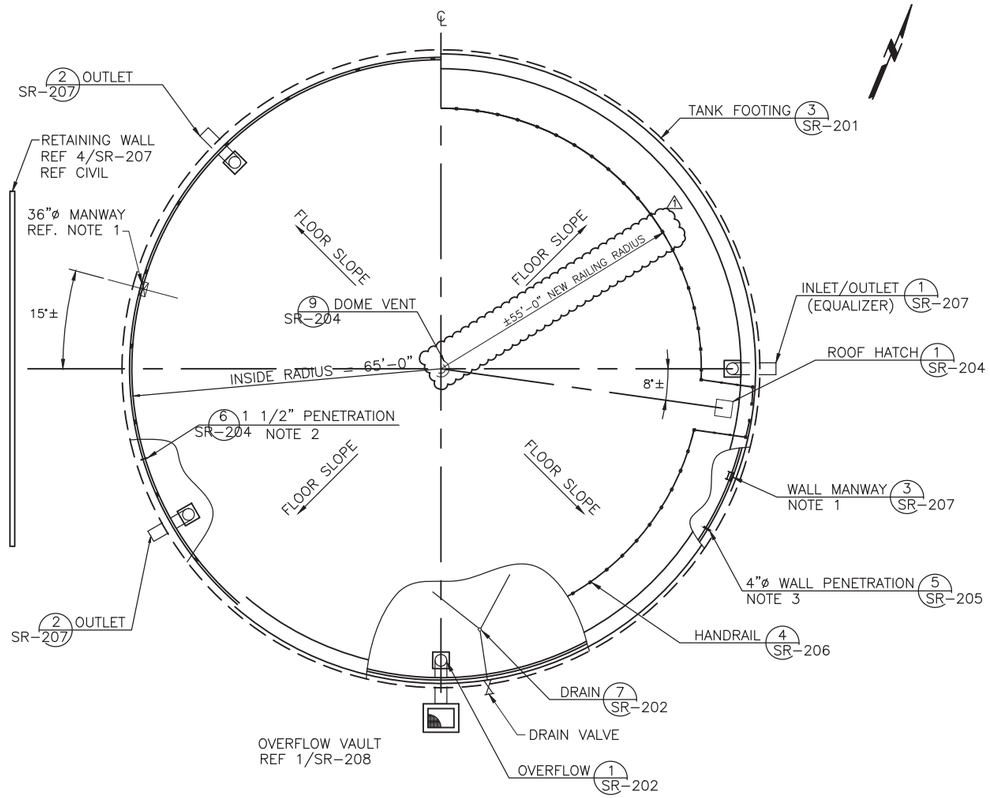

1 ROOF PLAN
NO SCALE

SHEET NOTES:

1. COORDINATE EXACT LOCATIONS OF NEW 36"ø MANWAYS W/ OWNER PRIOR TO INSTALLATION. REF 3/SR-207.
2. COORDINATE EXACT LOCATIONS OF NEW NIPPLE PIPE W/ OWNER PRIOR TO INSTALLATION. REF 6/SR-204
3. COORDINATE EXACT LOCATION OF NEW 4"ø WASHOUT CONNECTION W/ OWNER PRIOR TO INSTALLATION. REF 5/SR-205.
4. SECTIONS OF THE ROOF ARE NOT SHOWN SO THE TANK'S FLOOR CAN BE SHOWN.
5. THE EXTERIOR CONCRETE SURFACES SHALL BE COATED PER SPECIFICATIONS.

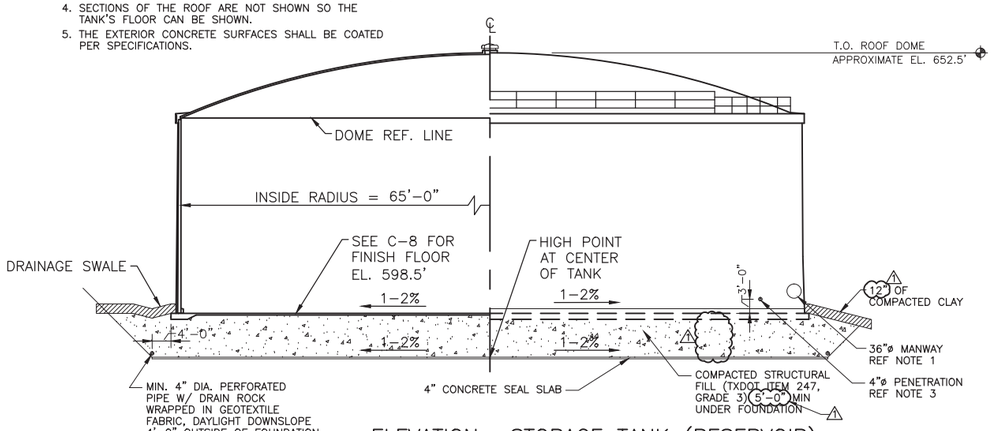

2 ELEVATION– STORAGE TANK (RESERVOIR)
NO SCALE

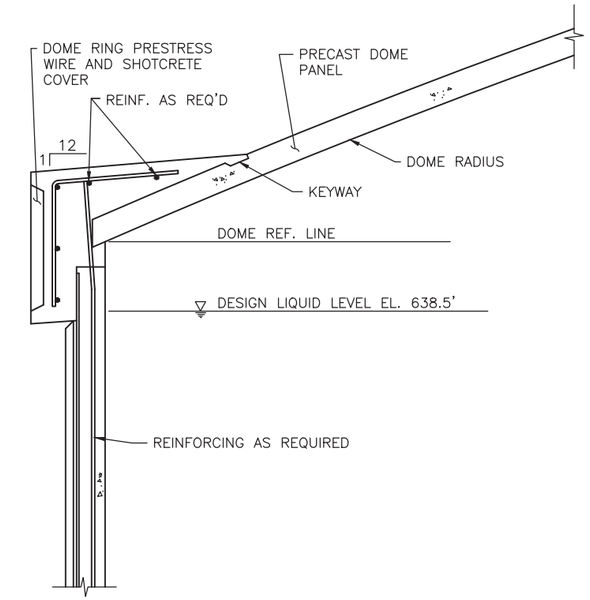

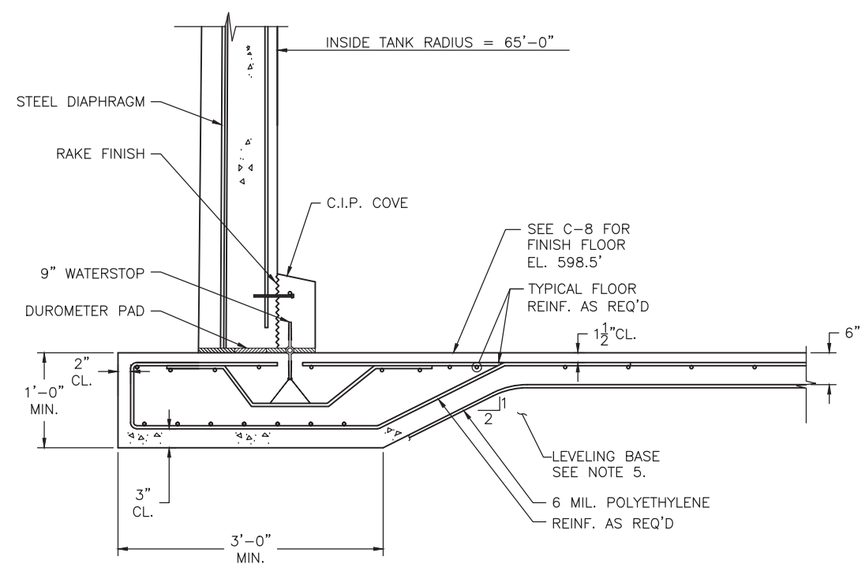

SECTION NOTES:

1. THE TANK FLOOR SLAB SHALL RECEIVE A BULLFLOAT AND/OR A FRESNO FINISH.
2. THE TOP OF THE DOME RING AND DOME SLOTS SHALL RECEIVE A LIGHT BROOM FINISH.
3. FOUNDATION AND FLOOR CONCRETE, f'c = 4,000 psi.
   DOME, COVE AND WALL CONCRETE, f'c = 4,000 psi.
   COREWALL AND WIRE COVER SHOTCRETE, f'c = 4,500 psi, 1:3 MIX.
   COVERCOAT SHOTCRETE, f'c = 4,500 psi, 1:4 MIX.
   ALL REINFORCING SHALL BE GRADE 60.
4. FOOTING REINFORCING SHALL BE DETERMINED BY TANK DESIGNER.
5. REFER TO CONTRACT DOCUMENTS FOR LEVELING BASE SPECIFICATION, COMPACTION REQUIREMENTS, AND FOUNDATION PREPARATION. LEVELING BASE MATERIAL SHALL BE PROVIDED BENEATH THE TANK FLOOR, FOOTING AND BOTTOM OF PIPE ENCASEMENTS.

3 SECTION
NO SCALE

SITE PLAN APPROVAL SHEET OF
FILE NUMBER: SPC-2015-0322C APPLICATION DATE: JULY 17, 2015
APPROVED BY COMMISSION ON: N/A UNDER SECTION 142 OF
CHAPTER 25-5 OF THE CITY OF AUSTIN CODE.
EXPIRATION DATE (25-5-81, LDC) CASE MANAGER LYNDA COURTNEY
PROJECT EXPIRATION DATE (ORD.#970905-A) DWPZ DDZ

Director, Planning and Development Review
RELEASE FOR GENERAL COMPLIANCE: ZONING P-NP LI-NP
Rev. 1 Correction 1
Rev. 2 Correction 2
Rev. 3 Correction 3

Final plat must be recorded by the Project Expiration Date, if applicable. Subsequent Site Plans which do not comply with the Code current at the time of filing, and all required Building Permits and/or a notice of construction (if a building permit is not required), must also be approved prior to the Project Expiration Date.

NO.	DATE	REVISION	BY	APVD
1	08-29-16	ADDENDUM 3	J.R.	J.R.

DSGN	DR	CHK	APVD
B. BETZOLD	F. SOLIS	B. BETZOLD	B. BETZOLD

Jose I. Guerra, Inc.
Consulting Engineers
TBPE FIRM F-3

CH2MHILL.
TBPE FIRM NO. 3699

Montopolis Water Reclamation Intiave (WRI)
Storage Reservoir and Pump Station
2711 Montopolis Drive
Austin Water, Austin, Texas

STRUCTURAL (TANK)
STORAGE TANK
ROOF PLAN & ELEVATION

VERIFY SCALE
BAR IS ONE INCH ON ORIGINAL DRAWING.
0 1"

DATE	MAY 2016
PROJ	472902
DWG	SR-201
SHEET	79 of 126

CADFILE:F:\13023_Montopolis WRI\DRAWINGS\CAD\SR-201 Montopolis Pump Station Storage Tank Plan.dwg Plotted: Aug 30, 16 @ 5:20 pm by: fmuniz Scale: 1:192