CITY OF AUSTIN
AUSTIN WATER

PLANS FOR CONSTRUCTION OF THE

MONTOPOLIS WATER RECLAMATION INITIATIVE (WRI) STORAGE RESERVOIR AND PUMP STATION PROJECT

C.I.P. PROJECT NO. 5267.035
AWU PROJECT NUMBER: R/W-2016-0001
IFB 6100 CLMC601
First advertisement date: JULY 18, 2016

MONTOPOLIS PUMP STATION
2711 MONTOPOLIS DRIVE
AUSTIN, TEXAS
TAX ID NO 828522

SAR WWTP
13009 FALLWELL LANE
DEL VALLEY, TEXAS 78617

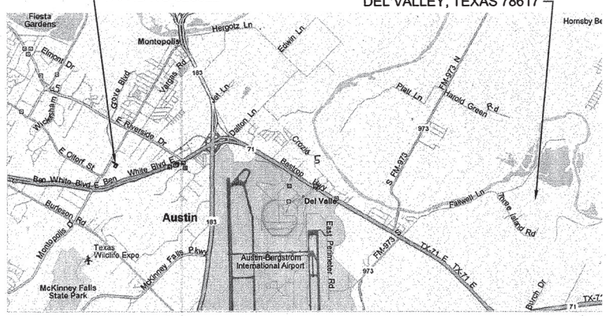

PROJECT LOCATION MAP
COA GRID NO. L17, L18, Q17

NOTES :

1. CONTRACTOR SHALL NOTIFY THE PUBLIC WORKS DEPARTMENT 24 HOURS PRIOR TO STARTING CONSTRUCTION OR CLEARING OPERATIONS.
2. CONTRACTOR SHALL CALL "ONE CALL" CENTER 472-8222 FOR UTILITY LOCATIONS PRIOR TO ANY WORK IN CITY EASEMENTS OR STREET RIGHT-OF-WAY.

1. PROPERTY LEGAL DESCRIPTION: ABS 24 DELVALLE S
2. THIS PROJECT IS LOCATED WITHIN THE COUNTRY CLUB E AND CARSON CREEK WATERSHEDS (CLASSIFIED AS SUBURBAN) AND SHALL BE DEVELOPED, CONSTRUCTED AND MAINTAINED IN ACCORDANCE WITH CHAPTER 25 OF THE CODE OF THE CITY OF AUSTIN.
3. NO PORTION OF THIS SITE IS LOCATED WITHIN PARKLAND OR LAND USED FOR PARK PURPOSES. (IF SUCH LAND IS INCLUDED, DOCUMENTATION OF PARKS AND RECREATION DEPT APPROVAL IS REQUIRED AT THE TIME OF SUBMITTAL FOR GENERAL PERMIT PROGRAM APPROVAL.)
4. NO PORTION OF THIS SITE IS LOCATED WITHIN THE 100-YEAR FLOODPLAIN, PER CITY OF AUSTIN AND FEDERAL EMERGENCY MANAGEMENT AGENCY FLOOD INSURANCE RATE MAP # 48453C0605H, DATED SEPTEMBER 26, 2008.
5. THIS PROJECT IS NOT WITHIN THE EDWARDS AQUIFER RECHARGE ZONE AS DEFINED BY THE CITY OF AUSTIN. THIS PROJECT IS NOT WITHIN THE EDWARDS AQUIFER RECHARGE ZONE AS REGULATED BY THE TEXAS COMMISSION ON ENVIRONMENTAL QUALITY (TCEQ).
6. THERE ARE NO KNOWN CRITICAL ENVIRONMENTAL FEATURES WITHIN 150' OF THIS PROJECT. A FIELD INVESTIGATION HAS BEEN PERFORMED AS A PART OF THIS PROJECT.
7. ADDITIONAL TRENCH E/S CONTROL: TRIANGULAR SEDIMENT FILTER DIKE WILL BE INSTALLED ACROSS FULL WIDTH OF TRAFFIC CLOSURE AND DOWNSTREAM OF CONSTRUCTION AREA IN PAVED AREAS, PERPENDICULAR TO CURB. FILTER DIKE TO FOLLOW ACTIVE CONSTRUCTION. REMOVING AND RE-SETTING FILTER DIKE IS CONSIDERED SUBSIDIARY TO BARRICADES AND TRAFFIC HANDLING.
8. APPROPRIATE EASEMENTS/APPROVALS MUST BE SECURED AND DOCUMENTED FOR PROJECT AREAS LOCATED OUTSIDE OF RIGHT OF WAYS. NO WORK SHALL BE PERFORMED WITHIN THESE AREAS UNTIL ASSOCIATED RIGHT OF ENTRY HAS BEEN SECURED. ADDITIONALLY, THIS PROJECT WILL NOT BE CONSIDERED COMPLETE UNTIL ALL RECORDED EASEMENT DOCUMENT NUMBERS HAVE BEEN OBTAINED AND SHOWN ON PLANS.
9. TWO ADMINISTRATIVE VARIANCES HAVE BEEN GRANTED IN ACCORDANCE WITH LDC 25-8-42(B)(7) TO ALLOW CUT FROM 4 TO 8 FEET AND TO ALLOW FILL FROM 4 TO 8 FEET IN THE DESIRED DEVELOPMENT ZONE.
10. MAPSCO PAGE: 645H AND 646E, GIS GRID: L18
11. PRESSURE ZONE: CENTRAL SOUTH AND SOUTH

NO.	DESCRIPTION	REVISE (R) ADD (A) VOID (V) SHEET NO.'S	TOTAL # SHEETS IN PLAN SET	NET CHANGE IMP. COVER (SQ FT)	TOTAL SITE IMP. COVER (SQ FT) [%]	CITY OF AUSTIN APPROVAL DATE	DATE IMAGED

CITY COUNCIL
MAYOR STEVE ADLER

DISTRICT 1 COUNCIL MEMBER ORA HOUSTON
DISTRICT 2 COUNCIL MEMBER DELIA GARZA
DISTRICT 3 COUNCIL MEMBER SABINO "PIO" RENTERIA
DISTRICT 4 COUNCIL MEMBER GREGORIO "GREG" CASAR
DISTRICT 5 COUNCIL MEMBER ANN KITCHEN
DISTRICT 6 COUNCIL MEMBER DON ZIMMERMAN
DISTRICT 7 COUNCIL MEMBER LESLIE POOL
DISTRICT 8 COUNCIL MEMBER ELLEN TROXCLAIR
DISTRICT 9 COUNCIL MEMBER / MAYOR PRO TEM KATHIE TOVO
DISTRICT 10 COUNCIL MEMBER SHERI GALLO

CITY MANAGER MARC OTT

MAY 2016

STATE OF TEXAS
JOSEPH W. JENKINS
68717
REGISTERED PROFESSIONAL ENGINEER
5-6-2016

SUBMITTED FOR APPROVAL BY:
Joseph W Jenkins 5-6-2016
CH2M HILL ENGINEERS, INC. DATE

REVIEWED BY:
Don L Pecka, P.E.
AUSTIN WATER DATE
FACILITIES ENGINEER

George Reserve 6/28/16
AUSTIN WATER DATE
PIPELINE ENGINEERING

Lynda Courtney 6/30/16
PLANNING AND DEVELOPEMENT DATE
REVIEW DEPARTMENT

Development Services Department
JUL 01 2016

AUSTIN WATER UTILITY
EXPIRATION DATE
JUN 28 2018

CITY OF AUSTIN
CONTACT INFORMATION

JOHN WEPRYK, PE
PROJECT MANAGER
PUBLIC WORKS DEPARTMENT
CITY OF AUSTIN
505 BARTON SPRINGS RD, SUITE 900
AUSTIN, TX 78750
PHONE: 512-974-7010

SWETHA PANDURANGI, PE, CFM
PROJECT SPONSOR
AUSTIN WATER
625 EAST 10TH, SUITE 100
AUSTIN, TX 78701
PHONE: 512-974-3514

CH2MHILL
12301 RESEARCH BLVD.
BLDG 4, SUITE 250
AUSTIN, TX 78759
TBPE FIRM NO. 3699

CasaBella ARCHITECTS
3821 JUNIPER TRACE, SUITE 104
AUSTIN, TEXAS 78738
PHONE: 512.458.5700
FAX: 512.458.5755
www.casabella-architects.com

Jose I. Guerra, Inc.
Consulting Engineers
2401 South IH-35 Suite 210
Austin, Texas 78741
(512) 445-2090
Structural • Civil • Mechanical • Electrical
TBPE FIRM F-3

K•FRIESE + ASSOCIATES
PUBLIC PROJECT ENGINEERING
1120 S. Capital of Texas Highway
CityView 2, Suite 100
Austin, Texas 78746
P - 512.338.1704 F - 512.338.1784
TBPE Firm #6535
www.kfriese.com

ENCOTECH
ENGINEERING CONSULTANTS
TBPE Firm 1141
8500 Bluffstone Cove, Suite B-103
Austin, Texas 78759 |512.338.1101
Project No.: 00000.S.AUS

Inspection Notice:
Please contact Public Works, Construction Inspection Division at 974-7810 for arrangements for payment of inspection fees and job assignment for inspection of the public utilities related to this site. Inspection fees must be paid before any pre-construction meeting can be held

SITE PLAN APPROVAL SHEET 1 OF 47
FILE NUMBER: SPC-2015-0322C APPLICATION DATE: JULY 17, 2015
APPROVED BY COMMISSION ON: N/A UNDER SECTION 142 OF
CHAPTER 25-5 OF THE CITY OF AUSTIN CODE.
EXPIRATION DATE (25-5-81, LDC) 6-30-19 CASE MANAGER LYNDA COURTNEY
PROJECT EXPIRATION DATE (ORD.#970905-A) DWPZ DDZ
Lynda Courtney
Director, Planning and Development Review
RELEASE FOR GENERAL COMPLIANCE: ZONING P-NP LI-NP
Rev. 1 Correction 1
Rev. 2 Correction 2
Rev. 3 Correction 3
Final plat must be recorded by the Project Expiration Date, if applicable. Subsequent Site Plans which do not comply with the Code current at the time of filing, and all required Building Permits and/or a notice of construction (if a building permit is not required), must also be approved prior to the Project Expiration Date.

SPC-2015-0322C

INDEX OF DRAWINGS

SHEET NO.	DWG NO.	DESCRIPTION
		GENERAL
* 1	G-1	COVER SHEET
* 2	G-2	INDEX TO DRAWINGS AND SAR TREATMENT PLANT SITE PLAN
* 3	G-3	GENERAL NOTES
* 4	G-4	ABBREVIATIONS NO. 1
* 5	G-5	ABBREVIATIONS NO. 2 AND GENERAL LEGEND
* 6	G-6	PIPE AND VALVE SCHEDULE
		CIVIL
* 7	C-1	GENERAL NOTES
* 8	C-2	OVERALL SITE PLAN
* 9	C-3	SLOPE MAP
* 10	C-4	PAVING PLAN 01
* 11	C-5	PAVING PLAN 02
* 12	C-6	PAVING PLAN 03
* 13	C-7	PAVING PLAN 04
* 14	C-8	TYPICAL DETAILS
* 15	C-9	SITE GRADING PLAN
* 16	C-10	EXISTING DRAINAGE AREA MAP
* 17	C-11	PROPOSED DRAINAGE AREA MAP
* 18	C-12	CULVERT LAYOUT
* 19	C-13	DETENTION AND WATER QUALITY POND PLAN
* 20	C-14	DETENTION AND WATER QUALITY POND DETAILS
* 21	C-15	WATER QUALITY DETAILS
* 22	C-16	VEGETATIVE FILTER STRIP PLAN
* 23	C-17	EROSION CONTROL AND TREE PROTECTION PLAN
* 24	C-18	EROSION CONTROL DETAILS
* 25	C-19	TRAFFIC CONTROL PLAN PHASE I
* 26	C-20	TRAFFIC CONTROL PLAN PHASE II
* 27	C-21	TRAFFIC CONTROL PLAN PHASE III
* 28	C-22	TRAFFIC CONTROL PLAN DETAILS 01
* 29	C-23	TRAFFIC CONTROL PLAN DETAILS 02
* 30	C-24	MISCELLANEOUS DETAILS
* 31	C-25	LANDSCAPING PLAN
		YARD/SITE PIPING
* 32	Y-1	YARD PIPING PLAN 1 OF 2
* 33	Y-2	YARD PIPING PLAN 2 OF 2
* 34	Y-3	YARD PIPING PROFILES 1 OF 2
* 35	Y-4	YARD PIPING PROFILES 2 OF 2
* 36	Y-5	YARD PIPING & ELECTRICAL PLAN & DETAILS @ SAR TREATMENT PLANT
* 37	Y-6	VALVE VAULT DETAILS
* 38	Y-7	VALVE VAULT DETAILS
* 39	Y-8	HYDROPNUEMATIC TANK DETAILS
* 40	Y-9	MISCELLANEOUS DETAILS
* 41	Y-10	STANDARD DETAILS COA
* 42	Y-11	STANDARD DETAILS COA
* 43	Y-12	STANDARD DETAILS COA
* 44	Y-13	STANDARD DETAILS COA
		ARCHITECTURAL
45	A-100	ARCHITECTURAL SITE PLAN
46	A-101	FLOOR PLAN
47	A-102	CEILING AND ROOF PLAN
* 48	A-201	EXTERIOR ELEVATIONS
* 49	A-202	EXTERIOR ELEVATIONS
50	A-301	BUILDING SECTIONS
51	A-302	BUILDING SECTIONS
52	A-401	BATHROOM ELEVATIONS
53	A-501	WALL SECTIONS
54	A-502	WALL SECTIONS
55	A-503	WALL SECTIONS
56	A-504	WALL SECTION DETAILS
57	A-505	WALL SECTION DETAILS
58	A-507	PLAN DETAILS
59	A-601	DOOR SCHEDULES AND DETAILS
60	A-700	ARCHITECTURAL RENDERING
		STRUCTURAL (PUMP STATION)
61	SP-1	GENERAL NOTES
62	SP-2	GENERAL NOTES
63	SP-3	GENERAL NOTES
64	SP-4	ISOMETRIC VIEW
65	SP-5	FOUNDATION PLAN
66	SP-6	ROOF FRAMING PLAN
67	SP-7	TYPICAL CONCRETE DETAILS
68	SP-8	TYPICAL CONCRETE DETAILS
69	SP-9	FOUNDATION DETAILS
70	SP-10	TYPICAL CMU DETAILS
71	SP-11	TYPICAL CMU DETAILS
72	SP-12	FRAMING DETAILS
73	SP-13	DETENTION POND RETAINING WALL PLAN
74	SP-14	DETENTION POND RETAINING WALL DETAILS
75	SP-15	DETENTION POND RETAINING WALL DETAILS
76	SP-16	DETENTION POND RETAINING WALL DETAILS

SHEET NO.	DWG NO.	DESCRIPTION
		STRUCTURAL (STORAGE TANK)
77	SR-101	GENERAL NOTES & ABBREVIATIONS
78	SR-102	TYPICAL VAULT & WALL DETAILS
* 79	SR-201	STORAGE TANK ROOF PLAN & ELEVATION
80	SR-202	TANK DETAILS SHEET 1 OF 3
81	SR-203	STORAGE TANK DETAILS SHEET 2 OF 3
82	SR-204	TANK DETAIL SHEETS 3 OF 3
83	SR-205	STORAGE TANK DETAILS
84	SR-206	STORAGE TANK DETAILS
85	SR-207	STORAGE TANK SECTIONS AND DETAILS
86	SR-208	STORAGE TANK SECTION AND DETAILS
		STRUCTURAL (YARD/GENERAL)
87	SY-1	MONTOPOLIS CONTROL VALVE VAULT PLAN AND SECTION
88	SY-2	36" WW-123A VAULT (SARPWWTP) PLAN AND SECTION
89	SY-3	24" V-780 VAULT (SARPWWTP) PLAN AND SECTION
90	SY-4	12" V-714 VAULT PLAN AND SECTION
91	SY-5	VALVE VAULT LADDER DETAILS
		PROCESS MECHANICAL
92	M-1	MECHANICAL LEGEND
93	M-2	PUMP STATION PLAN
94	M-3	PUMP STATION SECTION
95	M-4	PUMP STATION SECTIONS
96	M-5	PUMP STATION SECTIONS
97	M-6	STANDARD DETAILS CH2M HILL
98	M-7	STANDARD DETAILS CH2M HILL
99	M-8	STANDARD DETAILS CH2M HILL
100	M-9	STANDARD DETAILS CH2M HILL
101	M-10	STANDARD DETAILS CH2M HILL
		HVAC
102	ME-1	MECHANICAL PLAN
103	ME-2	MECHANICAL DETAILS
104	ME-3	MECHANICAL SCHEDULES
		PLUMBING
105	P-1	PLUMBING PLAN
106	P-2	PLUMBING DETAILS
107	P-3	PLUMBING SCHEDULES
		ELECTRICAL
108	E-1	LEGEND NO. 1
109	E-2	LEGEND NO. 2
110	E-3	SITE PLAN
111	E-4	PUMP STATION PLAN
112	E-5	PUMP STATION ELECTRICAL PLAN
113	E-6	PUMP STATION ONE-LINE DIAGRAM
114	E-7	CONDUIT / CONDUCTOR SCHEDULE
115	E-8	PANEL SCHEDULES AND LUMINAIRE SCHEDULE
116	E-9	SOFT START MOTOR CONTROL DIAGRAM
117	E-10	STANDARD DETAILS CH2M HILL
118	E-11	STANDARD DETAILS CH2M HILL
		INSTRUMENTATION AND CONTROL
119	I-1	LEGEND NO. 1
120	I-2	LEGEND NO. 2
121	I-3	PUMP STATION P&ID
122	I-4	PUMP STATION P&ID
123	I-5	TYPICAL RECYCLE WATER PUMP P&ID
124	I-6	NETWORK ARCHITECTURE P&D
125	I-7	CONTROL PANEL ELEVATION
126	I-8	STANDARD DETAILS CH2M HILL

* INDICATES SHEET INCLUDED IN THE PERMIT PACKAGE

SAR TREATMENT PLANT SITE PLAN

NTS

APPROVAL

SITE PLAN APPROVAL SHEET OF

FILE NUMBER: SPC-2015-0322C APPLICATION DATE: JULY 17, 2015

APPROVED BY COMMISSION ON: _____ UNDER SECTION 142 OF

CHAPTER 25-5 OF THE CITY OF AUSTIN CODE.

EXPIRATION DATE (25-5-81, LDC) _____ CASE MANAGER LYNDA COURTNEY

PROJECT EXPIRATION DATE (ORD.#970905-A) _____ DWPZ _____ DDZ _____

Director, Planning and Development Review

RELEASE FOR GENERAL COMPLIANCE: _____ ZONING P-NP LI-NP

Rev. 1 _____ Correction 1 _____

Rev. 2 _____ Correction 2 _____

Rev. 3 _____ Correction 3 _____

Final plat must be recorded by the Project Expiration Date, if applicable. Subsequent Site Plans which do not comply with the Code current at the time of filing, and all required Building Permits and/or a notice of construction (if a building permit is not required), must also be approved prior to the Project Expiration Date.

STATE OF TEXAS
JOSEPH W. JENKINS
68717
REGISTERED
PROFESSIONAL ENGINEER
5-11-2016

NO.	DATE	REVISION	BY	APVD

DSGN B BERHORST | DR B BERHORST | CHK J JENKINS | APVD J JENKINS

Montopolis Water Reclamation Initiave (WRI)
Storage Reservoir and Pump Station
2711 Montopolis Drive
Austin Water, Austin, Texas

CH2MHILL®
TBPE FIRM NO. 3699

GENERAL

INDEX TO DRAWINGS AND
SAR TREATMENT PLANT SITE PLAN

NTS

VERIFY SCALE

BAR IS ONE INCH ON ORIGINAL DRAWING.
0 1"

DATE	MAY 2016
PROJ	472902
DWG	G-2
SHEET	2 of 126

GENERAL NOTES:

1. FACILITIES ARE SHOWN HEAVY LINED. SCREENING IS USED IN ORDER TO CLARIFY DRAWINGS. FOR EXAMPLE, STRUCTURES ARE SCREENED ON MECHANICAL DRAWINGS TO HIGH-LITE PIPING AND EQUIPMENT.
2. REPETITIVE FEATURES ARE NOT DRAWN IN THEIR ENTIRETY AND SHALL BE COMPLETELY PROVIDED AS IF DRAWN IN FULL.
3. LINE OF EXISTING GRADES, AS SHOWN ON THE BUILDING ELEVATIONS AND SECTIONS ARE APPROXIMATE. THEY ARE AT THE BUILDING FACE, OR ON THE SECTION END EXCEPT AS NOTED.
4. REFER TO ARCHITECTURAL, STRUCTURAL, MECHANICAL, ELECTRICAL AND OTHER CATEGORIES OF DRAWINGS FOR ADDITIONAL NOTES.
5. COORDINATE SIZE AND LOCATION OF ALL OPENINGS THROUGH FLOORS AND WALLS, ACCESS DOORS, FURRING, CURBS, AND ANCHORS AND INSERTS, PROVIDE ALL BASES, BLOCKING REQUIRED FOR ACCESSORIES, MECHANICAL, ELECTRICAL AND OTHER EQUIPMENT.

GENERAL CONSTRUCTION NOTES:

1. CONTRACTOR MUST OBTAIN UTILITY EXCAVATION PERMITS, FOR EACH RIGHT-OF-WAY EXCAVATED, FROM THE CITY OF AUSTIN PUBLIC WORKS DEPARTMENT - CONSTRUCTION INSPECTION DIVISION (512-974-1588) PRIOR TO COMMENCEMENT OF WORK. CONTRACTOR SHALL PROVIDE A ONE CALL CENTER CONFIRMATION NUMBER.
2. PRIOR TO ANY DIRECTIONAL DRILLING OR BORING, CONTRACTOR MUST CONTACT THE CITY OF AUSTIN PUBLIC WORKS DEPARTMENT - CONSTRUCTION INSPECTION DIVISION (512-974-1588) TO SCHEDULE A MANDATORY PRE-BORE INSPECTION.
3. CITY OF AUSTIN UTILITIES REQUIRE A MINIMUM 2' (FOOT) VERTICAL AND 5' (FOOT) HORIZONTAL SEPARATION DISTANCE, MEASURED FROM OUTER DIAMETER TO OUTER DIAMETER. ANY VARIANCE FROM CITY UTILITIES MUST BE OBTAINED IN WRITING AND SUBMITTED TO THE CITY OF AUSTIN PUBLIC WORKS DEPARTMENT - CONSTRUCTION INSPECTION DIVISION (512-974-1588).
4. ALL STREET TRENCH REPAIRS ARE TO BE DONE IN ACCORDANCE WITH CITY OF AUSTIN STANDARD DETAILS FROM THE 1100 SERIES.
5. ALL TRENCH REPAIR IN UNFINISHED SURFACES TO BE DONE IN ACCORDANCE WITH CITY OF AUSTIN STANDARD DETAIL 510S-5.
6. FOR EXCAVATION WITHIN 100 FEET OF A MOONLIGHT TOWER OR WITHIN 100 FEET OF A GUY WIRE SUPPORTING A MOONLIGHT TOWER, EXCAVATION OR CONSTRUCTION PLANS AND SEQUENCING INFORMATION THAT DEMONSTRATES THAT THE MOONLIGHT TOWER WILL BE ADEQUATELY PROTECTED FROM DAMAGE DURING EXCAVATION OR CONSTRUCTION MUST BE SUBMITTED TO CITY OF AUSTIN - PUBLIC WORKS DEPARTMENT - AUSTIN ENERGY (512-505-7611).
7. VERIFY THE LOCATION OF UNDERGROUND UTILITIES AT LEAST 100' (FEET) IN ADVANCE OF ALL PROPOSED UTILITY CROSSINGS, AND ALSO LOCATIONS WHERE THE PROPOSED FACILITIES ARE DEPICTED TO RUN PARALLEL TO AND WITHIN FIVE FEET OF EXISTING FACILITIES.
8. CONTRACTOR SHALL NOTIFY THE DEPARTMENT OF PUBLIC WORKS AT 974-7161 PRIOR TO THE INSTALLATION OF ANY FACILITY WITHIN A DRAINAGE EASEMENT OR STREET R.O.W. THE METHODS OF PLACEMENT AND COMPACTION OF BACKFILL IN THE CITY'S R.O.W. MUST BE APPROVED PRIOR TO START OF THE BACKFILL OPERATION.
9. FOR SLOPES OR TRENCHES MORE THAN FIVE (5) FEET IN DEPTH, A NOTE MUST BE ADDED TO THE GENERAL CONSTRUCTION NOTES STATING THAT: "ALL CONSTRUCTION OPERATIONS SHALL BE ACCOMPLISHED IN ACCORDANCE WITH THE CITY OF AUSTIN STANDARD SPECIFICATIONS ITEM NO. 509 AND APPLICATION REGULATIONS OF THE U.S. OCCUPATIONAL SAFETY AND HEALTH ADMINISTRATION (OSHA)". COPIES OF THE OSHA STANDARDS MAY BE PURCHASED FROM THE U.S. GOVERNMENT PRINTING OFFICE, INFORMATION AND RELATED REFERENCE MATERIALS MAY BE PURCHASED FROM OSHA, 611 E. 6TH STREET, AUSTIN, TEXAS.
10. DEVELOPER INFORMATION

OWNER: CITY OF AUSTIN - AUSTIN WATER
ADDRESS: 625 E. 10TH STREET, AUSTIN, TX 78701
PHONE:

JOHN WEPRYK, PE, PROJECT MANAGER
CITY OF AUSTIN, PUBLIC WORKS DEPARTMENT
ADDRESS: 505 BARTON SPRINGS RD, SUITE 900, AUSTIN, TX 78750
PHONE: 512-974-7010

NAME CH2M HILL, INC
_____PHONE (512) 453-1980
OWNER'S RESPRESENTATIVE RESPONSIBLE FOR PLAN ALTERATIONS

NAME CONTRACTOR_____PHONE_____
PERSON OR FIRM RESPONSIBLE FOR EROSION/SEDIMENTATION CONTROL MAINTENANCE.

NAME CONTRACTOR_____PHONE_____
PERSON OR FIRM RESPONSIBLE FOR TREE/NATURAL AREA PROTECTION MAINTENANCE.

AUSTIN WATER GENERAL CONSTRUCTION NOTES (CIPS) OCTOBER 30, 2013

1. CONTRACTOR MUST OBTAIN A STREET CUT PERMIT FROM WATERSHED PROTECTION AND DEVELOPMENT REVIEW DEPARTMENT, RIGHT OF WAY MANAGEMENT DIVISION BEFORE BEGINNING CONSTRUCTION WITHIN THE RIGHT-OF-WAY OF A PUBLIC STREET OR ALLEY.
2. AT LEAST 48 HOURS BEFORE BEGINNING ANY WATER AND WASTEWATER CONSTRUCTION IN PUBLIC R.O.W. OR PUBLIC EASEMENT, THE CONTRACTOR SHALL NOTIFY WATERSHED PROTECTION AND DEVELOPMENT REVIEW INSPECTION OR WATER AND WASTEWATER UTILITY TAPS INSPECTION AT THE NUMBER INDICATED ON THE PLANS BY THE AWU PLAN REVIEWER.
3. THE CONTRACTOR SHALL CONTACT THE AUSTIN AREA "ONE CALL" SYSTEM AT 1-800-344-8377 FOR EXISTING UTILITY LOCATIONS PRIOR TO ANY EXCAVATION IN ADVANCE OF CONSTRUCTION. THE CONTRACTOR SHALL VERIFY THE LOCATIONS OF ALL UTILITIES TO BE EXTENDED, TIED TO, OR ALTERED, OR SUBJECT TO DAMAGE/INCONVENIENCE BY THE CONSTRUCTION OPERATIONS. THE CITY OF AUSTIN WATER AND WASTEWATER MAINTENANCE RESPONSIBILITY ENDS AT R.O.W./EASEMENT LINES.
4. NO OTHER UTILITY SERVICE/APPURTENANCES SHALL BE PLACED NEAR THE PROPERTY LINE, OR OTHER ASSIGNED LOCATION DESIGNATED FOR WATER AND WASTEWATER UTILITY SERVICE THAT WOULD INTERFERE WITH THE WATER AND WASTEWATER SERVICES.
5. THE CITY SPECIFICATION ITEM 509S WILL BE REQUIRED AS A MINIMUM TRENCH SAFETY MEASURE.
6. PRESSURE TAPS SHALL BE IN ACCORDANCE WITH CITY STANDARD SPECIFICATION ITEM 510.3(24). THE CONTRACTOR SHALL PERFORM EXCAVATION ETC., AND SHALL FURNISH, INSTALL AND AIR TEST THE SLEEVE AND VALVE. WHEN CONTRACTORS MAKE THE TAP A CITY INSPECTOR MUST BE PRESENT AND 2 WORKING DAYS (MIN.) NOTICE MUST BE GIVEN. "SIZE ON SIZE" TAPS WILL NOT BE PERMITTED, UNLESS, IT HAS BEEN DEMONSTRATED THAT A MORE ACCEPTABLE CONNECTION WOULD INVOLVE CONSIDERABLE HARDSHIP TO THE UTILITY SYSTEM. ALL TAPS SHALL BE MADE BY USE OF AN APPROVED FULL CIRCLE-GASKETED CAST IRON OR DUCTILE IRON TAPPING SLEEVE. CONCRETE BLOCKING SHALL BE PLACED UNDER ALL TAP SLEEVES PRIOR TO MAKING THE PRESSURE TAP AND THE USE OF PRECAST BLOCKS MAY BE USED TO HOLD THE TAP IN ITS CORRECT POSITION PRIOR TO BLOCKING. THE BLOCKING BEHIND AND UNDER THE TAP SHALL HAVE A MINIMUM OF 24 HOURS CURING TIME BEFORE THE VALVE CAN BE RE-OPENED FOR SERVICE FROM THAT TAP.
7. THRUST RESTRAINT SHALL BE IN ACCORDANCE WITH CITY STANDARD SPECIFICATION ITEM 510.3 (22).
8. ALL BRANCH CONNECTIONS SHALL HAVE THE VALVE BOLTED TO THE MAIN BY METHODS OF FLANGE OR SWIVEL TEES. FOSTER ADAPTORS MAY BE USED IN LIEU OF FLANGE OR SWIVEL TEES WHEN CALLED OUT ON THE PLANS BY THE DESIGN ENGINEER.
9. A). FIRE HYDRANTS SHALL BE SET IN ACCORDANCE WITH CITY STANDARD SPECIFICATION ITEM 511S.4
   B). FIRE HYDRANTS SHALL BE PAINTED FLYNT ALUMINUM OR EQUAL.
10. WATER LINE TESTING AND STERILIZATION SHALL BE PERFORMED IN ACCORDANCE WITH CITY STANDARD SPECIFICATION ITEMS 510.3 (27)-(29). FORCE MAIN PRESSURE TESTING SHALL BE CONDUCTED AND FALL UNDER THE SPECIFICATIONS AS WATER LINES (PRESSURE PIPE) OR AT THE PRESSURES SHOWN ON THE APPROVED PLANS.
11. ALL MATERIAL USED ON THIS PROJECT MUST BE LISTED ON THE STANDARD PRODUCTS LISTING. ANY MATERIAL NOT LISTED HAS TO GO THROUGH THE REVIEW OF THE STANDARDS COMMITTEE FOR REVIEW AND APPROVAL PRIOR TO START OF PROJECT. TESTING AND EVALUATION OF PRODUCTS ARE REQUIRED BEFORE APPROVAL WILL BE GIVEN ANY CONSIDERATION.
12. WHEN WATER SERVICES ARE DAMAGED AND THE SERVICE MATERIAL IS PE, THE LINE SHALL BE REPAIRED ONLY BY HEAT FUSION WELD OR REPLACED THE FULL LENGTH WITH TYPE K COPPER MATERIAL. ANY TIME PB IS DAMAGED OR TAMPERED WITH IN ANY WAY, THE SERVICE LINE SHALL BE REPLACED FULL LENGTH WITH TYPE K COPPER MATERIAL. NOTE: FULL LENGTH IS FROM CORPORATION STOP TO METER.
13. WHEN AN EXISTING WATERLINE SHUT OUT IS NECESSARY AND POSSIBLE, THE CONTRACTOR SHALL NOTIFY THE CONSTRUCTION INSPECTOR WHO WILL THEN NOTIFY THE AUSTIN WATER UTILITY DISPATCH AND THE AFFECTED CUSTOMERS A MINIMUM OF SEVENTY-TWO (72) HOURS IN ADVANCE.
14. THE CONTRACTOR SHALL NOTIFY THE CONSTRUCTION INSPECTOR SO THAT HE CAN NOTIFY AUSTIN WATER AT 972–0000 AT A MINIMUM OF 72 HOURS PRIOR TO RELOCATING ANY DOMESTIC OR FIRE DEMAND WATER METERS. THE CONTRACTOR SHALL CARFULLY REMOVE ALL METERS AND METERS BOXES THAT ARE INDICATED TO BE RELOCATED OR SALVAGED. THE CONTRACTOR SHALL INSTALL THE REMOVED METER OR CITY PROVIDED METER AT THE NEW LOCATION INDICATED ON THE CONTSTRUCTION PLANS.
15. ALL MANHOLES IN UNPAVED AREAS PROVIDING DIRECT ACCESS TO A WASTEWATER LINE SHALL BE WATERTIGHT AND BEAR THE WORDING AND INSIGNIA FOR THE CITY OF AUSTIN.
16. THE CONTRACTOR SHALL VERIFY ALL VERTICAL AND HORIZONTAL LOCATIONS OF EXISTING UTILITIES PRIOR TO STARTING ONSITE UTILITY WORK.
17. ALL RESPONSIBILITY FOR THE ADEQUACY OF THESE PLANS REMAINS WITH THE ENGINEER WHO PREPARED THEM. APPROVAL OF THESE PLANS BY THE CITY OF AUSTIN DOES NOT REMOVE THESE RESPONSIBILITIES.
18. REVIEW BY AUSTIN WATER APPLIES ONLY TO FACILITIES WITHIN PUBLIC STREETS OR PUBLIC UTILITY EASEMENTS. ALL OTHER WATER AND WASTEWATER FACILITIES INSIDE PRIVATE PROPERTY ARE UNDER THE JURISDICTION OF BUILDING INSPECTION.
19. ALL WATER AND WASTEWATER MAINS SHALL BE INSTALLED IN ACCORDANCE WITH THE SEPARATION DISTANCES INDICATED IN CHAPTER 290 *DRINKING WATER STANDARDS,* AND CHAPTER 217 *DESIGN CRITERIA FOR SEWAERAGE SYSTEMS,* OF TCEQ RULES.
20. CONTRACTOR'S PERSONNEL THAT PERFORM BUTT FUSION AND ELECTROFUSIONON ON OR TO HDPE PIPE AND FITTINGS MUST HAVE CURRENT QUALIFICATION TRAINING CERTIFICATE ISSUED BY MCELROY OR COMPARABLE TRAINING PROGRAM.
21. SHOP DRAWINGS SHALL BE SUBMITTED FOR AUSTIN WATER APPROVAL FOR LARGE DIAMETER PRE-CAST MANHOLES, JUNCTION BOXES, WET WELLS, AND SIMILAR STRUCTURES. THE SHOP DRAWINGS SHALL INCLUDE FLOWLINE ELEVATIONS OF ALL INCOMING AND OUTGOING PIPES, ELEVATION OF TRANSITION FROM LARGE DIAMETER SECTIONS TO 48" ID SECTION, TOP OF MANHOLE ELEVATION, SURROUNDING GROUND ELEVATION, AS WELL AS SPECIAL CONSTRUCTION CONSIDERATIONS THAT ARE SPECIFIED IN THE CONTRACT DRAWINGS.
22. VALVE STEM EXTENSIONS SHALL CONSIST OF A SINGLE PIECE OF IRON ROD OF THE REQUIRED LENGTH WITH A SOCKET ON ONE END AND NUT ON THE OTHER.
23. ASBESTOS CONCRETE PIPE (AC PIPE) HAS BEEN INSTALLED IN THE PAST AS PART OF AUSTIN WATER'S WATER DISTRIBUTION AND WASTEWATER COLLECTION SYSTEMS. AUSTIN WATER'S INFRASTRUCTURE INCLUDES AC PIPE THAT IS CURRENTLY IN SERVICE AS WELL AS AC PIPE THAT HAS BEEN ABANDONED AND IS NO LONGER IN SERVICE. RECORD INFORMATION MAY NOT BE COMPLETE IN YOUR PROJECT AREA. CONTRACTORS AND SUBCONTRACTORS MUST BE ALERT TO THE PRESENCE AC PIPE AND BE KNOWLEDGABLE OF HOW TO IDENTIFY IT. DISTURBANCE, REMOVAL OR CUTTING OF ASBESTOS CONTAINING PIPE IS TO BE CONDUCTED IN ACCORDANCE WITH THE REQUIREMENTS OF TEXAS ADMINISTRATIVE CODE 25, SECTION 15, ARTICLE 4477-3A AND 29 CFR 1926.1101. REFERENCE STANDARD SPECIFICATION SECTION 01901. CONTACT THE CITY OF AUSTIN ASBESTOS MANAGER AT 512-974-7154 THIRTY (30) DAYS PRIOR TO THE PLANNED DISTURBANCE OF THE AC PIPE. ONLY LICENSED PERSONNEL ARE PERMITTED TO DISTURB, REMOVE, TRANSPORT AND DISPOSE OF AC PIPE.
24. ALL POTABLE WATER SYSTEM COMPONENTS INSTALLED AFTER JANUARY 4, 2014, SHALL BE ESSENTIALLY "LEAD FREE" ACCORDING TO THE US SAFE DRINKING WATER ACT. EXAMPLES ARE VALVES (CORPORATION STOP, CURB STOP, AND PRESSURE REDUCING), NIPPLES, BUSHINGS, PIPE, FITTINGS, BACKFLOW PREVENTERS AND FIRE HYDRANTS. GATE VALVES LARGER THAN 2 INCH AND TAPPING SADDLES ARE THE ONLY COMPONENTS EXEMPT FROM THIS REQUIREMENT. COMPONENTS THAT ARE NOT CLEARLY IDENTIFIED BY THE MANUFACTURER AS MEETING THIS REQUIREMENT EITHER BY MARKINGS ON THE COMPONENT OR ON THE PACKAGING SHALL NOT BE INSTALLED.

GENERAL CONSTRUCTION NOTES FOR RECLAIMED WATER PLANS

1 .MAXIMUM JOINT DEFLECTION WILL BE 3° FOR PIPE 12" DIAMETER OR LESS, AND 2° FOR PIPE LARGER THAN 12" DIAMETER.
2. WATER VALVES FOR 6" THROUGH 30" DIAMETER PIPE SHALL BE GATE VALVES.
3. DRAIN VALVE MANHOLES SHALL BE COATED PER THE SPECIFICATIONS.
4. DRAIN LINES SHALL USE 6" PVC C900, SDR-14 PIPE.
5. THE PRESSURE LINE TO DRAIN VALVE MANHOLES SHALL BE 4" DIAMETER.
6. METER BOXES AND VAULTS WILL HAVE THE WORDS "RECLAIMED WATER" CAST INTO THE LID.
7. AIR RELIEF VALVES (AUTOMATIC AIR/VACUUM) SHALL BE PLACED ON 12" MAINS AND LARGER AT HIGH POINTS AND ON THE DOWN-SLOPE SIDE OF ALL VALVE LOCATIONS.
8. PIPE USED FOR RECLAIMED WATER SHALL EITHER BE PURPLE OR BE BAGGED IN PURPLE.
9. PIPE INSTALLED FOR RECLAIMED WATER USE SHALL HAVE A MINIMUM COVER OF 4' IN PAVEMENT AND 3' IN UNPAVED AREAS.
10. VALVE BOXES AND LIDS SHALL BE SQUARE AND HAVE THE WORDS "RECLAIMED WATER" CAST INTO THE LID.
11. VALVES SHALL BE LOCATED EVERY 2000 FEET.
12. THE SEPARATION DISTANCE BETWEEN A RECLAIMED WATER LINE RUNNING PARALLEL TO A POTABLE WATER LINE SHALL BE 9' HORIZONTAL OR 4' HORIZONTAL IF THE RECLAIMED WATER LINE IS 2' OR MORE BELOW THE POTABLE WATER LINE.
13. WHEN A RECLAIMED WATER LINE CROSSES A POTABLE WATER LINE, THE POTABLE WATER LINE MUST BE AT LEAST 6" ABOVE THE RECLAIMED WATER LINE, AND ONE SECTION OF THE RECLAIMED WATER LINE PIPE MUST BE CENTERED OVER THE POTABLE WATER LINE CROSSING.
14. THE SEPARATION DISTANCE BETWEEN A RECLAIMED WATER LINE RUNNING PARALLEL TO A SEWER LINE SHALL BE 3' HORIZONTAL WITH THE RECLAIMED LINE AT OR ABOVE THE SEWER LINE.
15. WHEN A RECLAIMED WATER LINE CROSSES A SEWER LINE, THE RECLAIMED WATER LINE MUST BE AT LEAST 2' ABOVE THE SEWER LINE WITH ONE LENGTH OF RECLAIMED WATER LINE CENTERED OVER THE SEWER LINE CROSSING.
16. WHEN A NEW RECLAIMED WATERLINE CROSSES UNDER A WASTEWATER MAIN OR LATERAL, THE RECLAIMED WATERLINE SHALL BE CONSTRUCTED OF DUCTILE IRON OR STEEL PIPE WITH MECHANICAL OR WELDED JOINTS AS APPROPRIATE. AN ABSOLUTE MINIMUM SEPARATION DISTANCE OF ONE FOOT BETWEEN THE RECLAIMED WATERLINE AND THE WASTEWATER MAIN OR LATERAL SHALL BE PROVIDED. BOTH THE RECLAIMED WATERLINE AND WASTEWATER MAIN OR LATERAL MUST PASS A PRESSURE AND LEAKAGE TEST AS SPECIFIED IN AWWA C600 STANDARDS.

AUSTIN ENERGY GENERAL NOTES:

1. AUSTIN ENERGY HAS THE RIGHT TO PRUNE AND/OR REMOVE TREES, SHRUBBERY AND OTHER OBSTRUCTIONS TO THE EXTENT NECESSARY TO KEEP THE EASEMENTS CLEAR. AUSTIN ENERGY WILL PERFORM ALL TREE WORK IN COMPLIANCE WITH CHAPTER 25-8, SUBCHAPTER B OF THE CITY OF AUSTIN LAND DEVELOPMENT CODE.
2. THE OWNER/DEVELOPER OF THIS SUBDIVISION/LOT SHALL PROVIDE AUSTIN ENERGY WITH ANY EASEMENT AND/OR ACCESS REQUIRED, IN ADDITION TO THOSE INDICATED, FOR THE INSTALLATION AND ONGOING MAINTENANCE OF OVERHEAD AND UNDERGROUND ELECTRIC FACILITIES. THESE EASEMENTS AND/OR ACCESS ARE REQUIRED TO PROVIDE ELECTRIC SERVICE TO THE BUILDING AND WILL NOT BE LOCATED SO AS TO CAUSE THE SITE TO BE OUT OF COMPLIANCE WITH CHAPTER 25-8 OF THE CITY OF AUSTIN LAND DEVELOPMENT CODE.
3. THE OWNER SHALL BE RESPONSIBLE FOR INSTALLATION OF TEMPORARY EROSION CONTROL, REVEGETATION AND TREE PROTECTION. IN ADDITION, THE OWNER SHALL BE RESPONSIBLE FOR ANY INITIAL TREE PRUNING AND TREE REMOVAL THAT IS WITHIN TEN FEET OF THE CENTER LINE OF THE PROPOSED OVERHEAD ELECTRICAL FACILITIES DESIGNED TO PROVIDE ELECTRIC SERVICE TO THIS PROJECT. THE OWNER SHALL INCLUDE AUSTIN ENERGY'S WORK WITHIN THE LIMITS OF CONSTRUCTION FOR THIS PROJECT.
4. THE OWNER OF THE PROPERTY IS RESPONSIBLE FOR MAINTAINING CLEARANCES REQUIRED BY THE NATIONAL ELECTRIC SAFETY CODE, OCCUPATIONAL SAFETY AND HEALTH ADMINISTRATION (OSHA) REGULATIONS, CITY OF AUSTIN RULES AND REGULATIONS AND TEXAS STATE LAWS PERTAINING TO CLEARANCES WHEN WORKING IN CLOSE PROXIMITY TO OVERHEAD POWER LINES AND EQUIPMENT. AUSTIN ENERGY WILL NOT RENDER ELECTRIC SERVICE UNLESS REQUIRED CLEARANCES ARE MAINTAINED. ALL COSTS INCURRED BECAUSE OF FAILURE TO COMPLY WITH THE REQUIRED CLEARANCES WILL BE CHARGE TO THE OWNER.

APPROVAL

SITE PLAN APPROVAL SHEET OF
FILE NUMBER: SPC-2015-0322C APPLICATION DATE: JULY 17, 2015
APPROVED BY COMMISSION ON: _____ UNDER SECTION 142 OF
CHAPTER 25-5 OF THE CITY OF AUSTIN CODE.
EXPIRATION DATE (25-5-81, LDC) _____ CASE MANAGER LYNDA COURTNEY
PROJECT EXPIRATION DATE (ORD.#970905-A) _____ DWPZ _____ DDZ _____

Director, Planning and Development Review
RELEASE FOR GENERAL COMPLIANCE: _____ ZONING P-NP LI-NP
Rev. 1 _____ Correction 1 _____
Rev. 2 _____ Correction 2 _____
Rev. 3 _____ Correction 3 _____

Final plat must be recorded by the Project Expiration Date, if applicable. Subsequent Site Plans which do not comply with the Code current at the time of filing, and all required Building Permits and/or a notice of construction (if a building permit is not required), must also be approved prior to the Project Expiration Date.

STATE OF TEXAS
JOSEPH W. JENKINS
68717
REGISTERED
PROFESSIONAL ENGINEER
5-11-2016

NO.	DATE	REVISION	BY	APVD
DSGN	B BERHORST	DR B BERHORST	CHK J JENKINS	APVD J JENKINS

Montopolis Water Reclamation Initiave (WRI)
Storage Reservoir and Pump Station
2711 Montopolis Drive
Austin Water, Austin, Texas

CH2MHILL®
TBPE FIRM NO. 3699

GENERAL
GENERAL NOTES

NTS
VERIFY SCALE
BAR IS ONE INCH ON ORIGINAL DRAWING.
0 1"

DATE	MAY 2016
PROJ	472902
DWG	G-3
SHEET	3 of 126

ABBREVIATIONS

A	AMMETER, AMPERES, AWNINGS
AB	ANCHOR BOLT, ABOVE
ABDN	ABANDON
AC	ACOUSTICAL, ACOUSTICAL CEILING
AC	ALTERNATING CURRENT
AC	ASPHALTIC CONCRETE
ACFL	ACCESS FLOORING
ACI	AMERICAN CONCRETE INSTITUTE
ACMU	ACOUSTICAL CONCRETE MASONRY UNIT, ACOUSTICAL CMU
ACP	ACOUSTICAL PANELS
ACST	ACOUSTICAL
ACT	ACOUSTICAL TILE
AD	AREA DRAIN
ADDL	ADDITIONAL
ADJ	ADJACENT
ADW	DRY WEATHER AVERAGE
AFD	ADJUSTABLE FREQUENCY DRIVE
AFF	ABOVE FINISHED FLOOR
AFG	ABOVE FINISHED GRADE
AG	ACOUSTICAL, ACOUSTICAL GLASS
AGGR	AGGREGATE
AHP	AIR HIGH PRESSURE
AHR	ANCHOR
AISC	AMERICAN INSTITUTE OF STEEL CONSTRUCTION
AJ	ADJUSTABLE
AL	ALUMINUM
ALKY	ALKALINITY
ALTN	ALTERNATE
AM	AUTO-MANUAL
AMRD	ACOUSTICAL METAL ROOF DECKING
ANDZ	ANODIZE
APPROX	APPROXIMATE
APVD	APPROVED
ARCH	ARCHITECTURAL
AR	ANALOG RELAY
AS	AS SELECTED
ATS	AUTOMATIC TRANSFER SWITCH
AUTO	AUTOMATIC
AUX	AUXILIARY
AVG	AVERAGE
AWW	WET WEATHER AVERAGE
@	AT
B	BELL
BAL	BALANCE
BETW	BETWEEN
BF	BLIND FLANGE, BOTTOM FACE
BFV	BUTTERFLY VALVE
BL	BASELINE
BFP	BACKFLOW PREVENTER
BLDG	BUILDING
BLK	BLOCK
BM	BEAM, BENCHMARK
BO	BOTTOM OF
B.O.B.	BOTTOM OF BEAM
BOD	BOTTOM OF DUCT
BOP	BOTTOM OF PIPE
BOT	BOTTOM
BRG	BEARING
BRK	BRICK
BRKR	BREAKER
BSP	BLACK STEEL PIPE
BV	BALL VALVE, BLOCK VENT
BVC	BEGINNING OF VERTICAL CURVE
C	CONDUIT, CASEMENT
°C	DEGREE CELSIUS
C TO C	CENTER TO CENTER
CAB	CABINET
CARV	COMBINATION AIR RELIEF VALVE
CB	CATCH BASIN, CIRCUIT BREAKER
CC	CENTER OF CIRCLE
CC	CONTROL CABLE
CCP	CENTRAL CONTROL PANEL
CCS	CENTRAL CONTROL SYSTEM
CDF	CONTROLLED DENSITY FILL
CE	CONSTRUCTION ENTRANCE
CFM	CUBIC FEET PER MINUTE
CFS	CUBIC FEET PER SECOND
CHEM	CHEMICAL
CHKD	CHECKERED
CI	CAST IRON
CIP	CAST IRON PIPE, CAST IN PLACE
CIP	CULVERT INLET PROTECTION
CISP	CAST IRON SOIL PIPE
CJ	CONSTRUCTION JOINT
CKT	CIRCUIT
CL	CENTERLINE
CLDI	CEMENT LINED DUCTILE IRON
CLSF	CONTROLLED LOW STRENGTH FILL
CLG	CEILING
CLR	CLEAR, CLEARANCE
CLSM	CONTROLLED LOW STRENGTH MATERIAL
CMP	CENTRAL MONITORING PANEL
CMP	CORRUGATED METAL PIPE
CMU	CONCRETE MASONRY UNIT
CNTR	COUNTER
CO	CLEANOUT, CARBON MONOXIDE
COL	COLUMN, COLOR
CONC	CONCRETE
COND	CONDENSATE
CONDTN	CONDITIONED
CONN	CONNECTION
CONSTR	CONSTRUCTION
CONT	CONTINUED, CONTINUOUS, CONTINUATION
CONTR	CONTRACTOR
COORD	COORDINATE
COP	COPPER
CP	CENTER PIVOT
CP-X	CONTROL PANEL NO. X
CPLG	COUPLING
CPRSR	COMPRESSOR
CPT	CONTROL POWER TRANFORMER, CARPET
CPVC	CHLORINATED PVC
CR	CONTROL RELAY
CRS	COLD ROLLED STEEL
CRS	CONSTRUCTION ROAD STABILIZATION
CT	CERAMIC TILE
CT	CURRENT TRANSFORMER
CTC	COMPUTER TERMINAL CABINET
CTR	CENTER
CTRD	CENTERED
CTSK	COUNTERSUNK
CU	CUBIC
CU FT	CUBIC FOOT
CU IN	CUBIC INCH
CUH	COPPER TUBING, HARD DRAWN
CV	CHECK VALVE
CWR	CABINET DOOR MOUNTED WASTE RECEPTACLE
CY, CU YD	CUBIC YARD
CWS	CLEAN WATER SERVICES
D	DEEP, DRAIN
d	PENNY NAIL SIZE
DA	DUAL ACTION
DAS	DATA ACQUISTION SYSTEM
DBA	DEFORMED BAR ANCHOR
DBL	DOUBLE
DC	DIRECT CURRENT
DEG	DEGREE
DET	DETAIL
DF	DOUGLAS FIR, DRINKING FOUNTAIN
DDI	DROP INLET
DH	DOUBLE HUNG
DI	DUCTILE IRON
DIA	DIAMETER
DIAG	DIAGONAL
DIP	DUCTILE IRON PIPE
DIR	DIRECTION
DISCH	DISCHARGE
DN	DOWN
DO	DISSOLVED OXYGEN
DOL	DIRECT-ON-LINE
DP, DPNL	DISTRIBUTION PANEL
DR	DOOR
DS	DOWNSPOUT
DWG	DRAWING
DWL	DOWEL
△	DELTA
E	EAST, EMPTY
EA	EACH, EXHAUST AIR
EB, EBCT	EMPTY BED CONTACT TIME
ECC	ECCENTRIC
EE	EMERGENCY EYEWASH
EDF	EGG-SHAPED DIGESTER FACILITY
EF	EACH FACE, EXHAUST FAN
EFF	EFFICIENCY, EFFICIENT
EFL	EFFLUENT
EIFS	EXTERIOR INSULATION AND FINISH SYSTEM
EL	ELEVATION
ELB	ELBOW
ELC	ELECTRICAL LOAD CENTER
ELEC	ELECTRIC, ELECTRICAL
ENGR	ENGINEER
EOP	EDGE OF PAVEMENT
ESC	EROSION AND SEDIMENT CONTROL
EP	EXPLOSION PROOF, EDGE OF PAVING
EQL	EQUAL
EQL SP	EQUALLY SPACED
EQPT	EQUIPMENT
ESC	EROSION AND SEDIMENT CONTROL
ETM	ELAPSED TIME METER
EVC	END OF VERTICAL CURVE
EW	EACH WAY
EWC	ELECTRIC WATER COOLER
EXH	EXHAUST
EXP	EXPANSION, EXPOSED
EXP AB	EXPANSION ANCHOR BOLT
EXP JT	EXPANSION JOINT
EXST, EXIST	EXISTING
EXT	EXTERIOR
°F	DEGREE FAHRENHEIT
FB	FLAT BAR
F, FU	FUSE
F, FX	FIXED
FAP	FIRE ALARM PANEL
FC	FLEXIBLE CONDUIT
FCA	FLANGED COUPLING ADAPTER
FCL2	FREE CHLORINE RESIDUAL
FCO	FLOOR CLEANOUT
FCTY	FACTORY
FD	FLOOR DRAIN
FDN	FOUNDATION
FDR	FEEDER
FEXT	FIRE EXTINGUISHER
FF	FINISHED FLOOR
FG	FINISH GRADE, FLOAT GLASS
FH	FLAT HEAD
FHY	FIRE HYDRANT
FIG	FIGURE
FL	FLOW LINE
FLG	FLANGE
FL	FLOOR
FLEX	FLEXIBLE
FLH	FLAT HEAD
FLTR	FILTER
FLUOR	FLUORESCENT
FNSH	FINISH
FOB	FLAT ON BOTTOM
FOT	FLAT ON TOP
FP	FIELD PANEL
FPM	FEET PER MINUTE
FR	FORWARD REVERSE
FRP	FIBERGLASS REINFORCED PLASTIC
FSHS	FOLDING SHOWER SEAT
FT	FOOT OR FEET
FTG	FOOTING
FU	FIXTURE UNIT
FVNR	FULL VOLTAGE NON-REVERSING
FVR	FULL VOLTAGE REVERSING
FWD	FORWARD
G, GND	GROUND
GA	GAUGE
GAL	GALLON
GALV	GALVANIZED
GB	GYPSUM BOARD
GC	GROOVED COUPLING
GCMU	GLAZED CONCRETE MASONRY UNITS
GFA	GROOVED FLANGE ADAPTER
GFI	GROUND FAULT INTERRUPTER
GFR	GROUND FAULT RELAY
GH	GREENHOUSE
GL	GLASS
GPD	GALLONS PER DAY
GPH	GALLONS PER HOUR
GPM	GALLONS PER MINUTE
GPS	GLOBAL POSITION SYSTEM
GRTG	GRATING
GSB	GYPSUM SOFFIT BOARD
GSP	GALVANIZED STEEL PIPE
GV	GATE VALVE
GVL	GRAVEL
GWB	GYPSUM WALLBOARD
GYP	GYPSUM
H	HIGH, HORN OR HOWLER
H2S	HYDROGEN SULFIDE
H.A.S.	HEADED ANCHOR STUD
HC	HOLLOW CORE WOOD
HCL	HYDROCHLORIC ACID
HDNR	HARDENER
HDNS	HARDNESS
HDR	HEADER
HDW	HARDWARE
HGL	HYDRAULIC GRADE LINE
HK	HOOK
HGT	HEIGHT
HH	HANDHOLE
HID	HIGH INTENSITY DISCHARGE
HK	HOOK
HM	HOLLOW METAL
HOA	HAND-OFF-AUTO
HOR	HAND-OFF-REMOTE
HORIZ	HORIZONTAL
HP	HORSEPOWER
HPT	HIGH POINT
HPU	HYDRAULIC POWER UNIT
HR	HOSE RACK, HANDRAIL
HV	HOSE VALVE
HVAC	HEATING, VENTILATING AND AIR CONDITIONING
HWL	HIGH WATER LEVEL
IC	INTERRUPTING CAPACITY
ID	INDUCED DRAFT, INSIDE DIAMETER
IE	INVERT ELEVATION
I.F.	INSIDE FACE
IG	INSULATING, INSULATING GLASS
IN	INCH
INCAND	INCANDESCENT
INFL	INFLUENT
INJS	INJECTIONS
INST	INSTANTANEOUS
INSTM	INSTRUMENT, INSTRUMENTATION
INSUL	INSULATION
INVT	INVERT
IP	INLET PROTECTION, INSTRUMENTATION PANEL
IRRIG	IRRIGATION
ITG	INSULATED TEMPERED GLASS
ITX	ISOLATION TRANSFORMER
IU	INTAKE UNIT
IW	IRRIGATION WELL
J	JALOUSIE
JA	JAL-AWNING
JB	JUNCTION BOX
JAN	JANITOR
JCT	JUNCTION
JT	JOINT
K	KEY GROUP, KEY INTERLOCK
KIP	THOUSAND POUNDS
KIT	KITCHEN
K-PL	KICKPLATE
KSK	KITCHEN SINK
KV	KILOVOLTS
KVA	KILOVOLT AMPERES
KVAR	KILOVOLT AMPERES REACTIVE
KW	KILOWATT
L	ANGLE, LENGTH
LA	LIGHTNING ARRESTER
LAB	LABORATORY
LAM	LAMINATE
LAT	LATITUDE
LB	POUND
LC	LIGHTING CONTACTOR
LD	COMBINATION LOUVER/DAMPER
LDG	LOADING DOCK
LEL	LOWER EXPLOSIVE LIMIT
LF	LINEAR FEET
LG	LONG
LH	LEFT HAND
LHR	LEFT HAND REVERSE
LLH	LONG LEG HORIZONTAL
LLV	LONG LEG VERTICAL
LNTL	LINTEL
LOC	LIMITS OF CONSTRUCTION
LONG	LONGITUDINAL
LOS	LOCK-OUT STOP PUSHBUTTON
LP	LIGHT POLE, LIGHTING PANEL, LOCAL PANEL
LPT	LOW POINT
LR	LATCHING RELAY
LR	LOCAL-REMOTE
LR	LONG RADIUS
LS	LABORATORY SINK
LT	LEFT
LTG, LTS	LIGHTS OR LIGHTING
LTX	LIGHTING TRANSFORMER
LWL	LOW WATER LEVEL
MA	MANUAL-AUTO
MAS	MASONRY
MATL	MATERIAL
MAX	MAXIMUM
MB	MACHINE BOLT
MC	MASONRY CLEARANCE
MC	MODULATE-CLOSE
MCC	MOTOR CONTROL CENTER
MCJ	MASONRY CONTROL JOINT
MDO	MEDIUM DENSITY OVERLAY
MECH	MECHANICAL
MFD	MANUFACTURED
MFR	MANUFACTURER
MGD	MILLION GALLONS PER DAY
MH	MANHOLE, MOUNTING HEIGHT
MIN	MINIMUM
MISC	MISCELLANEOUS
MJ	MECHANICAL JOINT
MLO	MAIN LUGS ONLY
MMDW	DRY WEATHER MAXIMUM MONTH
MMP	MECHANICAL MOUNTING PANEL
MMWW	WET WEATHER MAXIMUM MONTH
MO	MANUAL OPERABLE, MASONRY OPENING
MP	METAL PANEL
MPU	MULTIPURPOSE UNIT
MS	MANUFACTURER'S STANDARD
MSC	MANUFACTURER SUPPLIED CABLE
MSR	GROUPED MOTOR CONTROL
MT	MOUNT
MTD	MOUNTED
MTG	MOUNTING
MTS	MANUAL TRANSFER SWITCH
MTS	MILL TYPE STEEL PIPE
MU	MULCHING
MV	MERCURY VAPOR
MWS	MAXIMUM WATER SURFACE
N	NORTH, NEUTRAL
NA	NOT APPLICABLE
NA	NON-AUTOMATIC
NC	NORMALLY CLOSED
NEUT	NEUTRAL
NG	NATURAL GAS
NGVD	NATIONAL GEODETIC VERTICAL DATUM
NIC	NOT IN CONTRACT
N.O.	NORMALLY OPEN
NO., #	NUMBER
NOM	NOMINAL
NP	NON-PROTECTED
NPT	NATIONAL PIPE THREADS
NS	NON-SHRINK
NTS	NOT TO SCALE
O2	OXYGEN
O TO O	OUT TO OUT
OA	OVERALL, ODOROUS AIR
OC	ON CENTER
OC	OPEN-CLOSE (O)
OCA	OPEN-CLOSE-AUTO
OCR	OPEN-CLOSE-REMOTE
OD	OUTSIDE DIAMETER, OVERFLOW DRAIN
O.F.	OUTSIDE FACE
OFCI	OWNER FURNISHED, CONTRACTOR INSTALLED
OFOI	OWNER FURNISHED, OWNER INSTALLED
OL	OVERLOAD RELAY
OO	ON-OFF
OOA	ON-OFF-AUTO
OOR	ON-OFF-REMOTE
OP	OPAQUE PANEL, OUTLET PROTECTION
OPER	OPERATOR
OPNG	OPENING
OPP	OPPOSITE
OSA	OUTSIDE AIR
OSC	OPEN-STOP-CLOSE
OSD	OPEN SITE DRAIN
OWSJ	OPEN WEB STEEL JOIST
OZ	OUNCE
P	PROJECTED
P	PILASTER, PIPE
PAVT	PAVER TILE
PB	PUSHBUTTON SWITCH
PC	POINT OF CURVE, PHOTOCELL
PC	PRECAST CONCRETE PANEL
PCCP	PRECAST CONCRETE CYLINDER PIPE
PCV	PRESSURE CONTROL VALVE
PE	PLAIN END
PED	PEDESTAL, PEDESTRIAN
PEP	POLYETHYLENE PIPE
PEN.	PENETRATION
PFC	POUNDS PER CUBIC FOOT
PH	PENTHOUSE
pH	HYDROGEN ION CONCENTRATION
PH	PHASE
PI	POINT OF INTERSECTION
PIT	PILOT TUBE TEST STATION
PJF	PREMOULDED JOINT FILLER
PL	PLATE (STEEL)
PL	PROPERTY LINE
PLAM	PLASTIC LAMINATE
PLAS	PLASTER, PLASTIC
PLC	PROGRAMMABLE LOGIC CONTROLLER
PLYWD	PLYWOOD
PNL	PANEL
PP	POWER POLE
P-P	PUSH-PULL
PPL	POLYPROPYLENE LINED
PR	PAIR
PRC	POINT OF REVERSE CURVE
PRCST	PRECAST
PREFAB	PREFABRICATION
PRES	PRESSURE
PRI	PRIMARY
PRM	PERMANENT REFERENCED MARKER
PROJ	PROJECTION
PROP	PROPERTY
PS	PLASTIC SHEET, POLYCARBONATE SHEET
PS	PAINT SYSTEM
PSF	POUNDS PER SQUARE FOOT
PSI	POUNDS PER SQUARE INCH
PSIG	POUNDS PER SQUARE INCH, GAUGE
PT	POINT OF TANGENCY
PT	POTENTIAL TRANSFORMER
PT	PRESSURE TREATED
PTD	PAPER TOWEL DISPENSER
PTN	PARTITION
PV	PLUG VALVE
PVC	POLYVINYL CHLORIDE
PVI	POINT OF VERTICAL INTERSECTION
PVMT	PAVEMENT
PVT	POINT OF VERTICAL TANGENCY
QAA	AVERAGE FLOW
QMM	MAXIMUM 30 DAY FLOW
QPI	PEAK INSTANTANEOUS FLOW
QPP	PEAK PUMPING FLOW
QT	QUARRY TILE
R	RISER
R OR RAD	RADIUS
RA	RETURN AIR
RC	REINFORCED CONCRETE
RCP	REINFORCED CONCRETE PIPE
RCPT	RECEPTACLE
RD	ROAD, ROOF DRAIN
RDCR	REDUCER
RDW	REDWOOD
RECIR	RECIRCULATION
REF	REFER OR REFERENCE
REFR	REFRIGERATE, REFRIGERANT
REINF	REINFORCED, REINFORCING, REINFORCE
REQD	REQUIRED
RESIL	RESILIENT
RFS	ROLL-UP FIRE SHUTTER
RH	RIGHT HAND
RH	RODHOLE
RHR	RIGHT HAND REVERSE
RL	RAIN LEADER
RLS	RUBBER LINED STEEL
RM	ROOM
RO	ROUGH OPENING
ROL	RAISE-OFF-LOWER
RPM	REVOLUTIONS PER MINUTE
RR	RIPRAP

NOTES:

1. FOR ADDITIONAL ABBREVIATIONS OF OTHER DIVISIONS (HVAC, MECHANICAL, AND STRUCTURAL/ARCHITECTURAL) SEE OTHER LEGENDS.

GENERAL NOTE:

1. THIS IS A STANDARD LEGEND SHEET. THEREFORE, NOT ALL OF THE INFORMATION SHOWN MAY BE USED ON THIS PROJECT.

APPROVAL

SITE PLAN APPROVAL SHEET OF
FILE NUMBER: SPC-2015-0322C APPLICATION DATE: JULY 17, 2015
APPROVED BY COMMISSION ON: _____ UNDER SECTION 142 OF
CHAPTER 25-5 OF THE CITY OF AUSTIN CODE.
EXPIRATION DATE (25-5-81, LDC) _____ CASE MANAGER LYNDA COURTNEY
PROJECT EXPIRATION DATE (ORD.#970905-A) _____ DWPZ _____ DDZ _____

Director, Planning and Development Review
RELEASE FOR GENERAL COMPLIANCE: _____ ZONING P-NP LI-NP
Rev. 1 _____ Correction 1 _____
Rev. 2 _____ Correction 2 _____
Rev. 3 _____ Correction 3 _____

Final plat must be recorded by the Project Expiration Date, if applicable. Subsequent Site Plans which do not comply with the Code current at the time of filing, and all required Building Permits and/or a notice of construction (if a building permit is not required), must also be approved prior to the Project Expiration Date.

STATE OF TEXAS
JOSEPH W. JENKINS
68717
REGISTERED
PROFESSIONAL ENGINEER
Joseph W. Jenkins
5-11-2016

NO.	DATE	REVISION	BY	APVD
DSGN	DR	CHK		
J NAGEL	W KENAS	J JENKINS	APVD	J JENKINS

Montopolis Water Reclamation Initiave (WRI)
Storage Reservoir and Pump Station
2711 Montopolis Drive
Austin Water, Austin, Texas

CH2MHILL®
TBPE FIRM NO. 3699

GENERAL
ABBREVIATIONS NO. 1

NTS
VERIFY SCALE
BAR IS ONE INCH ON ORIGINAL DRAWING.
0 1"

DATE	MAY 2016
PROJ	472902
DWG	G-4
SHEET	4 of 126

ABBREVIATIONS

RRUB	RADIAL RUBBER
RS	RIGID STEEL
RST	REINFORCING STEEL
RT	RIGHT
RTN	RETURN
RTO	REGENERATIVE THERMAL OXIDIZER
RUB	RUBBER
RUBC	RUBBER CUSHIONED FLOORING
RUBS	RUBBER ESD CONTROL FLOORING
R/W	RIGHT OF WAY
	I-BEAM
	SLOPE, SOUTH, SWITCH
SA	SUPPLY AIR
SATC	SUSPENDED ACCUSTICAL TILE CEILING
SB	SEDIMENT BASIN
SC	SHOWER CURTAIN, SOLID CORE WOOD
SCADA	SUPERVISORY CONTROL AND DATA ACQUISITION
SCC	SOLID CORE
SCFM	STANDARD CUBIC FEED PER MINUTE
SCHED	SCHEDULE
SCU	SPEED CONTROL UNIT
SDP	SUB-DISTRIBUTION PANEL
SDWK	SIDEWALK
SEC	SECONDARY
SECT	SECTION
SED	SEDIMENTATION
SEW	SEWAGE
SG	LAMINATED SAFETY GLASS, SAFETY
SGWB	SUSPENDED GYPSUM WALL BOARD
SH	SHEET
SHA	SURFACE HARDENING AGENT
SHC	SODIUM HYDROCHLORIDE
SHS	SOLIDS HANDLING SYSTEM
SIM	SIMILAR
SK	SINK
SLGT	SLIDE GATE
SLR	SEALER
SMLS	SEAMLESS EPOXY
SOI	SPRAY- ON INSULATION
SOLN	SOLUTION
SP	SPACE OR SPACES, SPANDREL PANEL, STORMPROOF
SPEC, SPECS	SPECIFICATIONS
SPD	SUMP PUMP DISCHARGE
SPG	SPACING
SPLY	SUPPLY
SQ	SQUARE
SQ FT	SQUARE FOOT, FEET
SQ IN	SQUARE INCH
SR	SHORT RADIUS
SS	START-STOP
SST	STAINLESS STEEL
SSC	SUPERVISORY SET POINT CONTROL
ST	STORM DRAIN
ST	STRAIGHT
STA	STATUS, STATION
STD	STANDARD
STIF	STIFFENER
STIRR	STIRRUP
STL	STEEL
STRL	STRUCTUAL
STRUCT	STRUCTURE
SUBFL	SUBFLOOR
SUSP	SUSPENDED
SV	SOLENOID VALVE
SVIN	SHEET VINYL
SWBD	SWITCHBOARD
SWGR	SWITCHGEAR
SYMM	SYMMETRICAL
T	THERMOSTAT, TREAD
T&B	TOP AND BOTTOM
T&G	TONGUE AND GROOVE
TA	TRANSFER AIR
TAN	TANGENT
TB	TERMINAL BOARD
TBG	TUBING
TC	TIME TO CLOSE
TC	TURBIDITY CURTAIN
TCAD	TIME CLOSE AFTER DE-ENERGIZATION
TCAE	TIME CLOSE AFTER ENERGIZATION
TDH	TOTAL DYNAMIC HEAD
TDR	TIME DELAY RELAY
TECH	TECHNICAL
TEL	TELEPHONE
TEMP	TEMPORARY, TEMPERATURE
TF	TOP FACE
TFG	TEMPERED FLOAT GLASS
TG	TEMPERED
TH	TOP-HINGED
THD	THREAD
THK	THICKNESS
THRU	THROUGH
TJB	TERMINAL JUNCTION BOX
TL	TEFLON LINED PIPE
T.O.	TIME TO OPEN, TOP OF
TOAE	TIME OPEN AFTER ENERGIZATION
TOC	TOP OF CONCRETE
TOC	TOP OF CURB
TOD	TIME ON DELAY, TOP OF DUCT TOTAL OXYGEN DEMAND
TOF	TOP OF FOOTING
TOG	TOP OF GROUT, TOP OF GRATE
T.O.P.	TOP OF PARAPET
TOS	TOP OF SLAB
TOW	TOP OF WALL
TP	TURNING POINT
TR	TRANSOM, TRUSS
TRANS	TRANSFORMER, TRANSITION
TRANSV	TRANSVERSE
TRD	TREAD
TS	TEMPORARY SEEDING, TUBE STEEL
TSHT	THRESHOLD
TSS	TOTAL SUSPENSION SOLIDS
TST	TOP OF STEEL
TTC	TELEPHONE TERMINAL CABINET
TTD	TOILET TISSUE DISPENSER
TU-X	TREATMENT UNIT NO. X
TURB	TURBIDITY
TWP	TRANSLUCENT WALL PANEL
TX	TRANSFORMER
TYP	TYPICAL
UON	UNLESS OTHERWISE NOTED
UNO	UNLESS NOTED OTHERWISE
UPS	UNINTERRUPTIBLE POWER SUPPLY
USB	UNIT SUBSTATION
UVR	UNDER VOLTAGE RELAY
V	VENT, VALVE
V	VOLTMETER, VOLTS
VB	VAPOR BARRIER (RETARDER)
VC	VERTICAL CURVE
VCP	VITRIFIED CLAY PIPE
VCT	VINYL COMPOSITION TILE
VEL	VELOCITY
VERT	VERTICAL
VHC	VOLATILE HYDROCARBONS
VIB	VIBRATION
VIF	VERIFY IN FIELD
VIN	VINYL
VINT, VT	VINYL TILE
VP	VERTICAL PIVOTED
VPS	VENEER PLASTER SYSTEM
VPC	POINT OF VERTICAL CURVATURE
VPI	POINT OF VERTICAL INTERSECTION
VPT	POINT OF VERTICAL TANGENT
VS	VERTICAL SLIDE
VTR	VENT THRU ROOF
VWC	VINYL WALL COVERING
W	WEST
W/	WITH
WC	WATER COLUMN
WEASTRIP	WEATHERSTRIP
WG	WIRE, WIRE GLASS
WH	WATTHOUR METER
WHD	WATTHOUR DEMAND METER
WP	WATERPROOF, WEATHERPROOF, WORKPOINT
WR	WASTE RECEPTACLE
WRB	WATER RESISTANT GWB
WS	WATER SURFACE, WATERSTOP, WELDED STEEL
WSE	WATER SURFACE ELEVATION
WWF	WELDED WIRE FABRIC
WWPH	WET WEATHER PEAK HOUR

NOTES:

1. FOR ADDITIONAL ABBREVIATIONS OF OTHER DIVISIONS (HVAC, MECHANICAL, AND STRUCTURAL/ARCHITECTURAL) SEE OTHER LEGENDS.

SECTION / DETAIL DESIGNATIONS

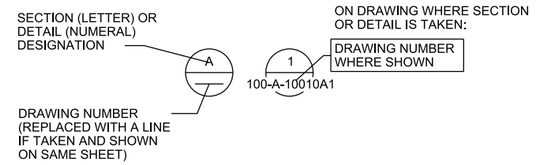

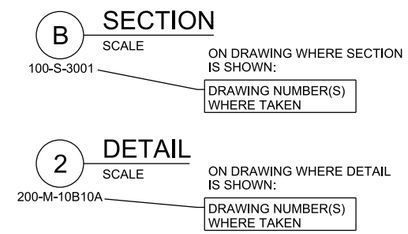

DRAWING TITLE
SCALE

ON DRAWING WHERE ONLY A TITLE IS REQUIRED WITH NO REFERENCE (eg: ELEVATIONS)

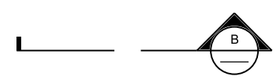

SECTION CALLOUT WHERE SECTION IS ON THE SAME SHEET AND CUT EXTENDS TO A FIXED LIMIT

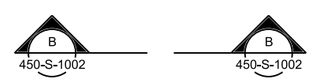

SECTION CALLOUT WHERE SECTION IS ON ANOTHER SHEET AND CUT EXTENDS THROUGHOUT ENTIRE SHEET

1 — GRID LINE INDICATOR

1 — KEYNOTE NUMBER

1 — REVISION / ADDENDA NUMBER

N — NORTH ARROW; CAN BE MODIFIED TO INCLUDE MAGNETIC NORTH ALONG WITH PROJECT NORTH

DESIGN DETAIL DESIGNATION

DESIGN DETAIL DESIGNATION (NUMERAL) — 1234-567

SHOWN ON DESIGN DETAIL DRAWING(S)

NOTES:

1. ALL DESIGN DETAILS ARE TYPICAL AND MUST BE USED IF DESIGN DETAIL DESIGNATION IS NOT SHOWN
2. THE TERM STANDARD DETAIL, OR A FORM OF IT, IS SYNOMONOUS WITH DESIGN DETAIL. THE DESIGN DETAILS REPRESENT THE CHARACTER AND NATURE OF THE WORK REQUIRED THROUGHOUT THE PROJECT. ALL ASSOCIATED WORK SHALL BE IN ACCORDANCE WITH THE DESIGN DETAILS SHOWN WHETHER THE DETAILS ARE SPECIFICALLY REFERENCED OR NOT.

GENERAL NOTE:

1. THIS IS A STANDARD LEGEND SHEET. THEREFORE, NOT ALL OF THE INFORMATION SHOWN MAY BE USED ON THIS PROJECT.

APPROVAL

SITE PLAN APPROVAL SHEET OF
FILE NUMBER: SPC-2015-0322C APPLICATION DATE: JULY 17, 2015
APPROVED BY COMMISSION ON: _____ UNDER SECTION 142 OF
CHAPTER 25-5 OF THE CITY OF AUSTIN CODE.
EXPIRATION DATE (25-5-81, LDC) _____ CASE MANAGER LYNDA COURTNEY
PROJECT EXPIRATION DATE (ORD.#970905-A) _____ DWPZ _____ DDZ _____

Director, Planning and Development Review
RELEASE FOR GENERAL COMPLIANCE: _____ ZONING P-NP LI-NP
Rev. 1 _____ Correction 1 _____
Rev. 2 _____ Correction 2 _____
Rev. 3 _____ Correction 3 _____

Final plat must be recorded by the Project Expiration Date, if applicable. Subsequent Site Plans which do not comply with the Code current at the time of filing, and all required Building Permits and/or a notice of construction (if a building permit is not required), must also be approved prior to the Project Expiration Date.

STATE OF TEXAS — JOSEPH W. JENKINS — 68717 — REGISTERED PROFESSIONAL ENGINEER
Joseph W. Jenkins 5-11-2016

NO.	DATE	REVISION	BY	APVD
DSGN	DR	CHK	APVD	
J NAGEL	W KENAS			

Montopolis Water Reclamation Initiave (WRI)
Storage Reservoir and Pump Station
2711 Montopolis Drive
Austin Water, Austin, Texas

CH2MHILL®
TBPE FIRM NO. 3699

GENERAL
ABBREVIATIONS NO. 2 AND GENERAL LEGEND

NTS
VERIFY SCALE
BAR IS ONE INCH ON ORIGINAL DRAWING.
0 1"

DATE	MAY 2016
PROJ	472902
DWG	G-5
SHEET	5 of 126

PIPING SCHEDULE

Service	Legend	Size(s) (In.)	Exposure	Piping Material	Specification Section	City of Austin Standard Product List	Operating Pressure (psig)	Test Pressure and Type (psig-x) where X=H for Hydrostatic and x=P for Pneumatic	Pipe Colors and Labels	Insulation Service Type
Floor Drains	FDR	All	All	PVC	510S	WW-227	Gravity	Hydrostatic	Dark Gray	
Reclaimed Water [1]	RCW	> 3 in.	All	CLDI - Class 250	510S	WW-27E/WW-27F	120	250-H	Purple	
Reclaimed Water	RCW	< 3 in.	All	PVC	510S	WW-587	120	150-H	Purple	
Sample	SA	All	All	PVC	510S	WW-587	40	80-H	Match Process	
Sodium Hypochlorite[2]	SHC	All	All	PVC	510S	WW-587	30	60-H	Yellow w/Red Bands	Type 1/F3
Sump Pump Discharge	SPD	All	All	PVC	510S	WW-587	10	20-H		
Sanitary Sewer Gravity	SS	All	All	PVC	510S	WW-227	Gravity	Hydrostatic	Black	
Vent	V	All	All	PVC	510S		Atmospheric	NA		
Water - Potable [1]	W1	> 3"	All	CLDI - Class 250	510S	WW-27F	120	250-H	Light Blue	
Water - Potable	W1	< 3"	Exposed	COP	SP510	WW-613	80	150-H	Light Blue	
Water - Potable	W1	< 3"	Buried	HPDE	SP510	WW-65	120	150-H	Light Blue	
Air High Pressure	AHP	All	All	SP or COP	SP510	WW-613	90	180-P	Light Green	
Miscellaneous Instrument Connections		<1"	All	SS	SP510					
Sanitary Sewer Force Main	FM	All	All	HPDE	510S	WW-65C	40	80-H		
Storage Reservoir Overflow Drain	DRAIN	All	Buried	PVC	510S	WW-227	Gravity	Hydrostatic		
Foundation Underdrain System	UNDERDRA	4 in.			SS02375					

Notes:
1. All Ductile Pipe is restrained. For buried pipe use pipe manufacture's factory restraint system.
2. Outdoor Exposed requires insulation
3. All Exposed Reclaimed Pipe and Fittings to be painted purple.
4. All buried reclaimed ductile pipe to be wrapped with purple poly.

ELECTRIC OPERATOR SCHEDULE

Tag Number	Valve Type		Size (inches)	Fluid	Maximum Operating Flow (gpm)	Maximum Operating Pressure (psi)	Service	Travel Time (Seconds)	Control Features
	AWWA Rubber Seated Ball Valve	V-317 (CH2M HILL no.)	30	Reclaimed Water	14,000	150	O/C	min 120/max 240	
	Pump Control Ball Valve	V-320 (CH2M HILL no.)	12	Reclaimed Water	2,000	150	O/C	min 120/max 240	
	Pump Control Ball Valve	V-320 (CH2M HILL no.)	8	Reclaimed Water	1,200	150	O/C	min 120/max 240	
	Pump Control Ball Valve	V-320 (CH2M HILL no.)	6	Reclaimed Water	500	150	O/C	min 120/max 240	
	Pump Station Bypass Control Ball Valve	V-320 (CH2M HILL no.)	16	Reclaimed Water	5,000	150	O/C	min 120/max 240	

Service: O/C = Open-Close, T = Throttling, M = Modulating

Control Features:
A = LOCAL-OFF-REMOTE selector switch with integral OPEN-STOP-CLOSE pushbutton control in LOCAL mode and provisions for remote OPEN-STOP-CLOSE control in REMOTE mode.
B = Operation from 120-volt, single-phase power.
C = Position feedback circuit which generates a 4 to 20 mA dc signal in proportion to valve position, capable of driving into loads up to 750 ohms at 24-volt dc.
D = Auxiliary contact which closes when the HAND-OFF-AUTO or LOCAL-OFF-REMOTE switch is in the AUTO or REMOTE position.
E = Actuator shall open valve upon loss of signal.
F = Actuator shall remain in last position upon loss of signal.
G = Three SPDT 120-volt interposing relays for remote OPEN-STOP-CLOSE control. Relays powered externally, thereby permitting valve control from greater distances.
H = Motor and control enclosure(s) NEMA 250, Type 7.
I = Valve closed limit switch and auxiliary contact.
J = Valve open limit switch and auxiliary contact.

VALVE SCHEDULE [1]

Tag No.	Valve Type No.	City of Austin Standard Product List	Size (inches)	Inlet Pressure (psig)	Outlet Pressure (psig)	Flow (gpm)	Fluid	Location	Remarks
	Resilent Seated Gate Valve AWWA 515	WW-700	36	45	45	14,000 max	Reclaimed Water	Main connection valve on 36 in. reclaimed water "filling" pipeline to Montopolis storage reservoir	Propriatary restrained joint ends
	Resilent Seated Gate Valve AWWA 515	WW-700	24	45	18	14,000 max	Reclaimed Water	Reservoir Bypass Piping Isolation Valve	Propriatary restrained joint ends
	Resilent Seated Gate Valve AWWA 515	WW-700	36	70	70	8,732 max	Reclaimed Water	Main connection valve on 36 in. reclaimed water discharge pipe from Montopolis pump station	Propriatary restrained joint ends
	Resilent Seated Gate Valve AWWA 515	WW-700	36	70	70	8,732 max	Reclaimed Water	Discharge Header isolation valve	Flange
	Resilent Seated Gate Valve AWWA 515	WW-700	30	45	45	14,000 max	Reclaimed Water	Isolation Valves at Altitude Control Valve Box	Propriatary restrained joint ends
	Resilent Seated Gate Valve AWWA 515	WW-700	30	45	45	14,000 max	Reclaimed Water	Isolation Valves at Altitude Control Valve Box	Propriatary restrained joint ends
	Resilent Seated Gate Valve AWWA 515	WW-700	30	18	18	8,732 max	Reclaimed Water	Storage Reservoir Outlet Isolation Valve	Propriatary restrained joint ends
	Resilent Seated Gate Valve AWWA 515	WW-700	30	18	18	8,732 max	Reclaimed Water	Storage Reservoir Outlet Isolation Valve	Propriatary restrained joint ends
	Resilent Seated Gate Valve AWWA 515	WW-700	36	18	18	8,732 max	Reclaimed Water	Isolation valve on suction header	Flange
	Resilent Seated Gate Valve AWWA 515	WW-700	16	18	18	8,732 max	Reclaimed Water	Pump suction isolation valve	Flange
	Resilent Seated Gate Valve AWWA 515	WW-700	16	18	18	8,732 max	Reclaimed Water	Pump suction isolation valve	Flange
	Resilent Seated Gate Valve AWWA 515	WW-700	16	18	18	8,732 max	Reclaimed Water	Pump suction isolation valve	Flange
	Resilent Seated Gate Valve AWWA 515	WW-700	16	18	18	8,732 max	Reclaimed Water	Pump suction isolation valve	Flange
	Resilent Seated Gate Valve AWWA 515	WW-700	16	18	18	8,732 max	Reclaimed Water	Isolation valve on pressure relief line in pump station - suction side	Flange
	Resilent Seated Gate Valve AWWA 515	WW-700	16	70	70	8,732 max	Reclaimed Water	Isolation valve on pressure relief line in pump station - discharge side	Flange
	Resilent Seated Gate Valve AWWA 515	WW-700	30	18	18	8,732 max	Reclaimed Water	Storage Reservoir Outlet Isolation Valve	Propriatary restrained joint ends
	Resilent Seated Gate Valve AWWA 515	WW-700	12	70	70		Reclaimed Water	Isolation Valve for Hydropneumatic Tank	Propriatary restrained joint ends
	Resilent Seated Gate Valve AWWA 515	WW-700	12	70	70	8,732 max	Reclaimed Water	Isolation valve on pressure relief line in pump station - discharge side	Flange
	Resilent Seated Gate Valve AWWA 515	WW-700	12	70	70	8,732 max	Reclaimed Water	Pump discharge isolation valve	Flange
	Resilent Seated Gate Valve AWWA 515	WW-700	12	70	70	8,732 max	Reclaimed Water	Pump discharge isolation valve	Flange
	Resilent Seated Gate Valve AWWA 515	WW-700	12	70	70	8,732 max	Reclaimed Water	Pump discharge isolation valve	Flange
	Resilent Seated Gate Valve AWWA 515	WW-700	12	70	70	8,732 max	Reclaimed Water	Pump discharge isolation valve	Flange
	Resilent Seated Gate Valve AWWA 515	WW-700	6	70	70		Potable Water	Relocation of fire hydrant at Montopolis	Propriatary restrained joint ends
	Resilent Seated Gate Valve AWWA 515	WW-700	6	70	70		Reclaimed Water	Isolation Valve for reclaimed water fire hydrant	Propriatary restrained joint ends
	Resilent Seated Gate Valve AWWA 515	WW-700	6	70	70		Reclaimed Water	Isolation Valve for reclaimed water fire hydrant	Propriatary restrained joint ends
	Fire Hydrant	WW-3	standard		60		Potable Water		
	Fire Hydrant	WW-3	standard		70		Relaimed		Purple color
	Air/Vac Combination Relief	WW-462B	4		70		Reclaimed Water	ARV on 36 in. dia. yard discharge piping	
	Air/Vac Combination Relief	WW-462B	4		70		Reclaimed Water	ARV on 36 in. dia. yard 'filling" piping	
	Pressure-Relief Valve	V-732 (CH2M HILL no.)	12		70	8,732 max	Reclaimed Water	Discharge Header pressure relief valve set at 120 psi	Flange
	Swing Check Valve	WW-123A	12		70	2,000 max	Reclaimed Water	Pump discharge header check valve	Flange
	Swing Check Valve	WW-123A	8		70	1,200 max	Reclaimed Water	Pump discharge header check valve	Flange
	Swing Check Valve	WW-123A	6		70	500 max	Reclaimed Water	Pump discharge header check valve	Flange
	Reduced Pressure Backflow Preventer Valve	WW-292	1	65	60		Potable Water	Pump Station	
	SAR Elevated Reservoir Altitude Valve	V-780 (CH2M HILL no.)	24	90	90		Reclaimed Water	Altitude Valve feeding SAR Elevated Reservoir	Flange
	Resilent Seated Gate Valve AWWA 515	WW-700	12	90	90		Reclaimed Water	Isolation Valve to SAR WWTP nonpotable system	Flange
	Pressure Reducing Valve (PRV)	V-714 (CH2M HILL no.)	12	90	85		Reclaimed Water	PRV for SAR WWTP nonpotable system	Flange
	Pressure Reducing Valve (PRV)	V-714 (CH2M HILL no.)	10	90	85		Reclaimed Water	PRV for SAR WWTP nonpotable system	Flange
	Pressure Reducing Valve (PRV)	V-714 (CH2M HILL no.)	8	90	85		Reclaimed Water	PRV for SAR WWTP nonpotable system	Flange
	Pressure Reducing Valve (PRV)	V-714 (CH2M HILL no.)	8	90	85		Reclaimed Water	PRV for SAR WWTP nonpotable system	Flange
	Swing Check Valve	WW-123A	36	90	90		Reclaimed Water	Check Valve at SAR Elevated Reservoir to allow flow out of tank	Flange
	Mud Valve	V-915 (CH2M HILL No.)	4				Reclaimed Water	Mud Valve in Storage Reservoir Overflow Box	
	Flap Valve (duckbill type)	V-694 (CH2M HILL No.)	24				Reclaimed Water	Flap Valve for Storage Reservoir Overflow Pipe	

Notes:
1. All valves shall have minimum design working pressure rating of 200 psi and flanged valves shall have ANSI Class 125 Flanged ends.
2. Schedule only contains valves 4 inches in diameter and larger and specialty valves.
3. See specifications for all valve requirements and for information on valves less than 4 inch in diameter.
4. Operating pressures for smaller valves can be determined from pressures on piping schedule.
5. All valves associated with building plumbing are in separate specifications and in the ME series drawings.

APPROVAL

SITE PLAN APPROVAL SHEET OF
FILE NUMBER: SPC-2015-0322C APPLICATION DATE: JULY 17, 2015
APPROVED BY COMMISSION ON: _____ UNDER SECTION 142 OF
CHAPTER 25-5 OF THE CITY OF AUSTIN CODE.
EXPIRATION DATE (25-5-81, LDC) _____ CASE MANAGER LYNDA COURTNEY
PROJECT EXPIRATION DATE (ORD.#970905-A) _____ DWPZ _____ DDZ _____

Director, Planning and Development Review
RELEASE FOR GENERAL COMPLIANCE: _____ ZONING P-NP LI-NP
Rev. 1 _____ Correction 1 _____
Rev. 2 _____ Correction 2 _____
Rev. 3 _____ Correction 3 _____
Final plat must be recorded by the Project Expiration Date, if applicable. Subsequent Site Plans which do not comply with the Code current at the time of filing, and all required Building Permits and/or a notice of construction (if a building permit is not required), must also be approved prior to the Project Expiration Date.

STATE OF TEXAS
JOSEPH W. JENKINS
68717
REGISTERED
PROFESSIONAL ENGINEER
5-11-2016

NO.	DATE	REVISION	BY	APVD

DSGN B BERHORST | DR B BERHORST | CHK J JENKINS | APVD J JENKINS

Montopolis Water Reclamation Initiave (WRI)
Storage Reservoir and Pump Station
2711 Montopolis Drive
Austin Water, Austin, Texas

CH2MHILL®
TBPE FIRM NO. 3699

GENERAL

PIPE AND VALVE SCHEDULES

NTS
VERIFY SCALE
BAR IS ONE INCH ON ORIGINAL DRAWING.
0 1"

DATE	MAY 2016
PROJ	472902
DWG	G-6
SHEET	6 of 126

ORDINANCE REQUIREMENTS
1. ALL IMPROVEMENTS SHALL BE MADE IN ACCORDANCE WITH THE RELEASED SITE PLAN. ANY ADDITIONAL IMPROVEMENTS WILL REQUIRE A SITE PLAN AMENDMENT AND APPROVAL FROM THE PLANNING AND DEVELOPMENT REVIEW DEPARTMENT.
2. APPROVAL OF THIS SITE PLAN DOES NOT INCLUDE BUILDING CODE APPROVAL; FIRE CODE APPROVAL; OR BUILDING, DEMOLITION, OR RELOCATION PERMITS APPROVAL. A CITY DEMOLITION OR RELOCATION PERMIT CAN ONLY BE ISSUED ONCE THE HISTORIC REVIEW PROCESS IS COMPLETED.
3. ALL SIGNS MUST COMPLY WITH THE REQUIREMENTS OF THE LAND DEVELOPMENT CODE.
4. THE OWNER IS RESPONSIBLE FOR ALL COSTS OF RELOCATION OF, OR DAMAGE TO, UTILITIES.
5. ADDITIONAL ELECTRIC EASEMENTS MAY BE REQUIRED AT A LATER DATE.
6. A DEVELOPMENT PERMIT MUST BE ISSUED PRIOR TO AN APPLICATION FOR BUILDING PERMIT FOR NON-CONSOLIDATED OR COMMISSION APPROVED SITE PLANS.
7. WATER AND WASTEWATER SERVICE WILL BE PROVIDED BY THE CITY OF AUSTIN [OR IDENTIFY THE SERVICE PROVIDER IF OTHER THAN THE CITY OF AUSTIN].
8. NO CERTIFICATE OF OCCUPANCY MAY BE ISSUED FOR THE PROPOSED RESIDENTIAL CONDOMINIUM PROJECT UNTIL THE OWNER OR OWNERS OF THE PROPERTY HAVE COMPLIED WITH CHAPTER 81 AND 82 OF THE PROPERTY CODE OF THE STATE OF TEXAS OR ANY OTHER STATUTES ENACTED BY THE STATE CONCERNING CONDOMINIUMS.
9. FOR CONSTRUCTION WITHIN THE RIGHT-OF-WAY, A ROW EXCAVATION PERMIT IS REQUIRED.

COMPATIBILITY
1. HIGHLY REFLECTIVE MATERIALS WILL NOT BE USED. MATERIALS MAY NOT EXCEED 20% REFLECTIVITY. THIS REQUIREMENT SHALL NOT APPLY TO SOLAR PANELS OR TO COPPER OR PAINTED METAL ROOFS.
2. THE NOISE LEVEL OF MECHANICAL EQUIPMENT WILL NOT EXCEED 70 D.B.A. AT THE PROPERTY LINE ADJACENT TO RESIDENTIAL USES.
3. ALL EXTERIOR LIGHTING SHALL BE HOODED OR SHIELDED FROM THE VIEW OF ADJACENT RESIDENTIAL USES.
4. ALL EXTERIOR LIGHTING SHALL BE HOODED OR SHIELDED FROM THE VIEW OF ADJACENT RESIDENTIAL PROPERTY.
5. EXTERIOR LIGHTING ABOVE THE SECOND FLOOR IS PROHIBITED WHEN ADJACENT TO RESIDENTIAL PROPERTY.
6. ALL DUMPSTERS AND ANY PERMANENTLY PLACED REFUSE RECEPTACLES WILL BE LOCATED AT A MINIMUM OF TWENTY (20) FEET FROM A PROPERTY USED OR ZONED AS SF-5 OR MORE RESTRICTIVE.

FIRE DEPARTMENT
1. THE AUSTIN FIRE DEPARTMENT REQUIRES ASPHALT OR CONCRETE PAVEMENT PRIOR TO CONSTRUCTION AS AN "ALL-WEATHER DRIVING SURFACE."
2. HYDRANTS MUST BE INSTALLED WITH THE CENTER OF THE FOUR-INCH OPENING AT LEAST 18 INCHES ABOVE FINISHED GRADE. THE FOUR-INCH OPENING MUST FACE THE DRIVEWAY OR STREET WITH THREE- TO SIX-FOOT SETBACKS FROM THE CURBLINE(S). NO OBSTRUCTION IS ALLOWED WITHIN THREE FEET OF ANY HYDRANT AND THE FOUR-INCH OPENING MUST BE TOTALLY UNOBSTRUCTED FROM THE STREET.
3. TIMING OF INSTALLATION: WHEN FIRE PROTECTION FACILITIES ARE INSTALLED BY THE DEVELOPER, SUCH FACILITIES SHALL INCLUDE ALL SURFACE ACCESS ROADS WHICH SHALL BE INSTALLED AND MADE SERVICEABLE PRIOR TO AND DURING THE TIME OF CONSTRUCTION. WHERE ALTERNATIVE METHODS OF PROTECTION, AS APPROVED BY THE FIRE CHIEF, ARE PROVIDED, THE ABOVE MAY BE MODIFIED OR WAIVED.
4. ALL PERVIOUS/DECORATIVE PAVING SHALL BE ENGINEERED AND INSTALLED FOR 80,000 LB. LIVE-VEHICLE LOADS. ANY PERVIOUS/DECORATIVE PAVING WITHIN 100 FEET OF ANY BUILDING MUST BE APPROVED BY THE FIRE DEPARTMENT.
5. COMMERCIAL DUMPSTERS AND CONTAINERS WITH AN INDIVIDUAL CAPACITY OF 1.5 CUBIC YARDS OR GREATER SHALL NOT BE STORED OR PLACED WITHIN TEN FEET OF OPENINGS, COMBUSTIBLE WALLS, OR COMBUSTIBLE EAVE LINES.
6. FIRE LANES DESIGNATED ON SITE PLAN SHALL BE REGISTERED WITH CITY OF AUSTIN FIRE MARSHAL'S OFFICE AND INSPECTED FOR FINAL APPROVAL.
7. VERTICAL CLEARANCE REQUIRED FOR FIRE APPARATUS IS 14 FEET FOR FULL WITH OF ACCESS DRIVE.

GENERAL CONSTRUCTION NOTES
1. THE CITY OF AUSTIN STANDARD SPECIFICATIONS INCLUDED IN THE PROJECT MANUAL SHALL GOVERN MATERIALS AND METHODS USED TO PERFORM THIS WORK. ALL CONSTRUCTION OPERATIONS SHALL BE ACCOMPLISHED IN ACCORDANCE WITH APPLICABLE STATE STATUTES AND U.S. OCCUPATIONAL SAFETY AND HEALTH ADMINISTRATION REGULATIONS (O.S.H.A.). COPIES OF O.S.H.A. STANDARD MAY BE PURCHASED FROM THE U.S. GOVERNMENT PRINTING OFFICE. INFORMATION AND RELATED REFERENCE MATERIALS MAY BE OBTAINED FROM O.S.H.A. @ 611 EAST 6th STREET, ROOM 303, AUSTIN, TEXAS.
2. THE CONTRACTOR SHALL BE RESPONSIBLE FOR ALL COORDINATION BETWEEN HIMSELF AND OTHER CONTRACTORS AND UTILITIES IN THE VICINITY OF THIS PROJECT. IF THE CONTRACTOR BECOMES AWARE OF A POSSIBLE CONFLICT, IT IS HIS RESPONSIBILITY TO NOTIFY THE PROJECT INSPECTOR AND PROJECT MANAGER WITHIN 24 HOURS.
3. THE CONTRACTOR SHALL BE RESPONSIBLE FOR DISPOSING OF ALL SPOILS MATERIAL FROM THE CONSTRUCTION SITE. ALL SPOIL MATERIAL SHALL BE DISPOSED OF BY THE CONTRACTOR AT AN APPROVED SPOIL SITE. THE CONTRACTOR SHALL BE RESPONSIBLE FOR LOCATING AND SECURING A PERMIT FOR THE SITE; AND SHALL NOTIFY THE ENVIRONMENTAL INSPECTION OFFICE (974-2278) AT LEAST 48 HOURS PRIOR TO DISPOSAL OF THE MATERIAL. THIS ITEM WILL NOT BE PAID FOR DIRECTLY, BUT SHALL BE SUBSIDIARY TO THE VARIOUS BID ITEMS.
4. CONTRACTOR WILL BE RESPONSIBLE FOR COSTS INCURRED AS A RESULT OF UTILITY RELOCATIONS PERFORMED FOR CONTRACTOR'S CONVENIENCE AND FOR UTILITIES DAMAGED BY CONTRACTOR.
5. ANY EXISTING SIDEWALKS, CURBS OR DRIVEWAYS DAMAGED BY THE CONTRACTOR SHALL BE REMOVED AND RESTORED WITH MATERIALS EQUAL TO OR BETTER THAN THE ORIGINAL AND SHALL BE AT THE CONTRACTOR'S EXPENSE UNLESS OTHERWISE NOTED.
6. CONTRACTOR SHALL INITIATE AND MAINTAIN DUST CONTROL MEASURES AT ALL TIMES. TREES, STREETS, VEHICLES, ETC. COVERED WITH VISIBLE DUST DUE TO CONSTRUCTION SHALL BE RINSED OFF BY CONTRACTOR WITHOUT COST TO OWNER.
7. CONTRACTOR SHALL BE RESPONSIBLE FOR RESTORING ALL LANDSCAPING AND IRRIGATION LINES DAMAGED DURING CONSTRUCTION.
8. EQUIPMENT AND MATERIALS SHALL BE STORED AT LOCATIONS APPROVED BY THE OWNER'S REPRESENTATIVE.
9. ALL STREET REPAIRS SHALL BE DONE AFTER THE UTILITY LINES HAVE BEEN INSTALLED AND TESTED, AND BACKFILL HAS MET DENSITY REQUIREMENTS.
10. FUEL STORAGE IS ALLOWED ON SITE. THE CONTRACTOR SHALL ADVISE THE ENVIRONMENTAL INSPECTOR IMMEDIATELY, WITH WRITTEN DOCUMENTATION, OF ANY SPILLING OF TOXIC MATERIAL, INCLUDING ACTIONS TO CONTAIN AND CLEAN UP.
11. ALL RESPONSIBILITY FOR THE ADEQUACY OF THESE PLANS REMAINS WITH THE ENGINEER WHO PREPARED THEM. IN REVIEWING THESE PLANS, THE CITY OF AUSTIN MUST RELY ON THE ADEQUACY OF THE WORK OF THE DESIGN ENGINEER.
12. CONTRACTOR SHALL CALL THE ONE CALL CENTER (472-2822) FOR UTILITY LOCATIONS PRIOR TO ANY WORK IN CITY EASEMENTS OR STREET R.O.W.
13. CONTRACTOR SHALL NOTIFY THE CONSTRUCTION INSPECTION DIVISION OF THE CITY'S ONE STOP SHOP (OSS) AT 974-6360 OR 974-7034 AT LEAST 24 HOURS PRIOR TO THE INSTALLATION OF ANY DRAINAGE FACILITY WITHIN A DRAINAGE EASEMENT OR STREET R.O.W. THE METHOD OF PLACEMENT AND COMPACTION OF BACKFILL IN THE CITY'S R.O.W. MUST BE APPROVED PRIOR TO THE START OF BACKFILL OPERATIONS.
14. FOR SLOPES OR TRENCHES GREATER THAN FIVE FEET IN DEPTH, A NOTE MUST BE ADDED STATING: "ALL CONSTRUCTION OPERATIONS SHALL BE ACCOMPLISHED IN ACCORDANCE WITH APPLICABLE REGULATIONS OF THE U.S. OCCUPATIONAL SAFETY AND HEALTH ADMINISTRATION." (OSHA STANDARDS MAY BE PURCHASED FROM THE GOVERNMENT PRINTING OFFICE; INFORMATION AND RELATED REFERENCE MATERIALS MAY BE PURCHASED FROM OSHA, 611 EAST 6TH STREET, AUSTIN TEXAS.)
15. ALL SITE WORK MUST ALSO COMPLY WITH ENVIRONMENTAL REQUIREMENTS.
16. UPON COMPLETION OF THE PROPOSED SITE IMPROVEMENTS AND PRIOR TO THE FOLLOWING, THE ENGINEER SHALL CERTIFY IN WRITING THAT THE PROPOSED DRAINAGE, FILTRATION AND DETENTION FACILITIES WERE CONSTRUCTED IN CONFORMANCE WITH THE APPROVED PLANS.:
   - RELEASE OF THE CERTIFICATE OF OCCUPANCY BY THE PLANNING AND DEVELOPMENT REVIEW DEPARTMENT (INSIDE THE CITY LIMITS); OR
   - INSTALLATION OF AN ELECTRIC OR WATER METER (IN THE FIVE-MILE ETJ),

DEVELOPER INFORMATION
OWNER: CITY OF AUSTIN WATER UTILITY
PROJECT MANAGER:
ADDRESS: P.O BOX 1088, AUSTIN, TX 78767
PHONE #: (512) 974-000

OWNER'S REPRESENTATIVE RESPONSIBLE FOR PLAN ALTERATIONS:
DALE MURPHY, P.E.
PHONE#: (512) 338-1704

PERSON OR FIRM RESPONSIBLE FOR
EROSION/SEDIMENTATION CONTROL MAINTENANCE:
CONTRACTOR
PHONE#: _____.

PERSON OR FIRM RESPONSIBLE FOR
TREE/NATURAL AREA PROTECTION MAINTENANCE:
CONTRACTOR
PHONE#: _____.

AMERICANS WITH DISABILITIES ACT
THE CITY OF AUSTIN HAS REVIEWED THIS PLAN FOR COMPLIANCE WITH CITY DEVELOPMENT REGULATIONS ONLY. THE APPLICANT, PROPERTY OWNER, AND OCCUPANT OF THE PREMISES ARE RESPONSIBLE FOR DETERMINING WHETHER THE PLAN COMPLIES WITH ALL OTHER LAWS, REGULATIONS, AND RESTRICTIONS WHICH MAY BE APPLICABLE TO THE PROPERTY AND ITS USE.

SPECIAL CONSTRUCTION TECHNIQUES ECM 3.5.4(D)
PRIOR TO EXCAVATION WITHIN TREE DRIPLINES OR THE REMOVAL OF TREES ADJACENT TO OTHER TREES THAT ARE TO REMAIN, MAKE A CLEAN CUT BETWEEN DISTURBED AND UNDISTURBED ROOT ZONES WITH A ROCK SAW OR SIMILAR EQUIPMENT TO MINIMUM ROOT DAMAGE.

IN CRITICAL ROOT ZONE AREAS THAT CANNOT BE PROTECTED DURING CONSTRUCTION WITH FENCING AND WHERE HEAVY VEHICULAR TRAFFIC IS ANTICIPATED, COVER THOSE AREAS WITH A MINIMUM OF 12 INCHES OF ORGANIC MULCH TO MINIMIZE SOIL COMPACTION. IN AREAS WITH HIGH SOIL PLASTICITY GEOTEXTILE FABRIC, PER STANDARD SPECIFICATION 620S, SHOULD BE PLACED UNDER THE MULCH TO PREVENT EXCESSIVE MIXING OF THE SOIL AND MULCH. ADDITIONALLY, MATERIAL SUCH AS PLYWOOD AND METAL SHEETS, COULD BE REQUIRED BY THE CITY ARBORIST TO MINIMIZE ROOT IMPACTS FROM HEAVY EQUIPMENT. ONCE THE PROJECT IS COMPLETED, ALL MATERIALS SHOULD BE REMOVED, AND THE MULCH SHOULD BE REDUCED TO A DEPTH OF 3 INCHES.

PERFORM ALL GRADING WITHIN CRITICAL ROOT ZONE AREAS BY HAND OR WITH SMALL EQUIPMENT TO MINIMIZE ROOT DAMAGE.

WATER ALL TREES MOST HEAVILY IMPACTED BY CONSTRUCTION ACTIVITIES DEEPLY ONCE A WEEK DURING PERIODS OF HOT, DRY WEATHER. SPRAY TREE CROWNS WITH WATER PERIODICALLY TO REDUCE DUST ACCUMULATION ON THE LEAVES.
WHEN INSTALLING CONCRETE ADJACENT TO THE ROOT ZONE OF A TREE, USE A PLASTIC VAPOR BARRIER BEHIND THE CONCRETE TO PROHIBIT LEACHING OF LIME INTO THE SOIL."

EROSION CONTROL NOTES:
1. THE CONTRACTOR SHALL INSTALL EROSION/SEDIMENTATION CONTROLS AND TREE/NATURAL AREA PROTECTIVE FENCING PRIOR TO ANY SITE PREPARATION WORK (CLEARING, GRUBBING OR EXCAVATION).
2. THE PLACEMENT OF EROSION/SEDIMENTATION CONTROLS SHALL BE IN ACCORDANCE WITH THE ENVIRONMENTAL CRITERIA MANUAL AND THE APPROVED EROSION AND SEDIMENTATION CONTROL PLAN. THE COA ESC PLAN SHALL BE CONSULTED AND USED AS THE BASIS FOR A TPDES REQUIRED SWPPP. IF A SWPPP IS REQUIRED, IT SHALL BE AVAILABLE FOR REVIEW BY THE CITY OF AUSTIN ENVIRONMENTAL INSPECTOR AT ALL TIMES DURING CONSTRUCTION, INCLUDING AT THE PRE-CONSTRUCTION MEETING. THE CHECKLIST BELOW CONTAINS THE BASIC ELEMENTS THAT SHALL BE REVIEWED FOR PERMIT APPROVAL BY COA EV PLAN REVIEWERS AS WELL AS COA EV INSPECTORS.
   - PLAN SHEETS SUBMITTED TO THE CITY OF AUSTIN MUST SHOW THE FOLLOWING:
      - DIRECTION OF FLOW DURING GRADING OPERATIONS.
      - LOCATION, DESCRIPTION, AND CALCULATIONS FOR OFF-SITE FLOW DIVERSION STRUCTURES.
      - AREAS THAT WILL NOT BE DISTURBED; NATURAL FEATURES TO BE PRESERVED.
      - DELINEATION OF CONTRIBUTING DRAINAGE AREA TO EACH PROPOSED BMP (E.G.,SILT FENCE,SEDIMENT BASIN, ETC.)
      - LOCATION AND TYPE OF E&S BMPS FOR EACH PHASE OF DISTURBANCE.
      - CALCULATIONS FOR BMPS AS REQUIRED.
      - LOCATION AND DESCRIPTION OF TEMPORARY STABILIZATION MEASURES.
      - LOCATION OF ON-SITE SPOILS, DESCRIPTION OF HANDLING AND DISPOSAL OF BORROW MATERIALS, AND DESCRIPTION OF ON-SITE PERMANENT SPOILS DISPOSAL AREAS, INCLUDING SIZE, DEPTH OFFILL AND REVEGETATION PROCEDURES.
      - DESCRIBE SEQUENCE OF CONSTRUCTION AS IT PERTAINS TO ESC INCLUDING THE FOLLOWING ELEMENTS:
1. INSTALLATION SEQUENCE OF CONTROLS (E.G. PERIMETER CONTROLS,THEN SEDIMENT BASINS, THEN TEMPORARY STABILIZATION, THEN PERMANENT, ETC)
2. PROJECT PHASING IF REQUIRED (LOC GREATER THAN 25 ACRES)
3. SEQUENCE OF GRADING OPERATIONS AND NOTATION OFTEMPORARY STABILIZATION MEASURES TO BE USED
4. SCHEDULE FOR CONVERTING TEMPORARY BASINS TO PERMANENT WQ CONTROLS
5. SCHEDULE FOR REMOVAL OF TEMPORARY CONTROLS
6. ANTICIPATED MAINTENANCE SCHEDULE FOR TEMPORARY CONTROLS
   - CATEGORIZE EACH BMP UNDER ONE OF THE FOLLOWING AREAS OF BMP ACTIVITY AS DESCRIBED BELOW:
      3.1 MINIMIZE DISTURBED AREA AND PROTECT NATURAL FEATURES AND SOIL
      3.2 CONTROL STORMWATER FLOWING ONTO AND THROUGH THE PROJECT
      3.3 STABILIZE SOILS
      3.4 PROTECT SLOPES
      3.5 PROTECT STORM DRAIN INLETS
      3.6 ESTABLISH PERIMETER CONTROLS AND SEDIMENT BARRIERS
      3.7 RETAIN SEDIMENT ON-SITE AND CONTROL DEWATERING PRACTICES
      3.8 ESTABLISH STABILIZED CONSTRUCTION EXITS
      3.9 ANY ADDITIONAL BMPS
   - NOTE THE LOCATION OF EACH BMP ON YOUR SITE MAP(S).
   - FOR ANY STRUCTURAL BMPS, YOU SHOULD PROVIDE DESIGN SPECIFICATIONS AND DETAILS AND REFER TO THEM.
   - FOR MORE INFORMATION, SEE CITY OF AUSTIN ENVIRONMENTAL CRITERIA MANUAL 1.4.
1. THE PLACEMENT OF TREE/NATURAL AREA PROTECTIVE FENCING SHALL BE IN ACCORDANCE WITH THE CITY OF AUSTIN STANDARD NOTES FOR TREE AND NATURAL AREA PROTECTION AND THE APPROVED GRADING/TREE AND NATURAL AREA PLAN.
4. A PRE-CONSTRUCTION CONFERENCE SHALL BE HELD ON-SITE WITH THE CONTRACTOR, DESIGN ENGINEER/PERMIT APPLICANT AND ENVIRONMENTAL INSPECTOR AFTER INSTALLATION OF THE EROSION/SEDIMENTATION CONTROLS AND TREE/NATURAL AREA PROTECTION MEASURES AND PRIOR TO BEGINNING ANY SITE PREPARATION WORK. THE OWNER OR OWNER'S REPRESENTATIVE SHALL NOTIFY THE PLANNING AND DEVELOPMENT REVIEW DEPARTMENT,974-2278,AT LEAST THREE DAYS PRIOR TO THE MEETING DATE. COA APPROVED ESC PLAN AND TPDES SWPPP (IF REQUIRED) SHOULD BE REVIEWED BY COA EV INSPECTOR AT THIS TIME.
5. ANY MAJOR VARIATION IN MATERIALS OR LOCATIONS OF CONTROLS OR FENCES FROM THOSE SHOWN ON THE APPROVED PLANS WILL REQUIRE A REVISION AND MUST BE APPROVED BY THE REVIEWING ENGINEER, ENVIRONMENTAL SPECIALIST OR CITY ABORIST AS APPROPRIATE. MAJOR REVISIONS MUST BE APPROVED BY THE PLANNING AND DEVELOPMENT REVIEW DEPARTMENT. MINOR CHANGES TO BE MADE AS FIELD REVISIONS TO THE EROSION AND SEDIMENTATION CONTROL PLAN MAY BE REQUIRED BY THE ENVIRONMENTAL INSPECTOR DURING THE COURSE OF CONSTRUCTION TO CORRECT CONTROL INADEQUACIES.
6. THE CONTRACTOR IS REQUIRED TO PROVIDE A CERTIFIED INSPECTOR WITH EITHER A CERTIFIED PROFESSIONAL IN EROSION AND SEDIMENT CONTROL (CPESC), CERTIFIED EROSION, SEDIMENT AND STORMWATER-LNSPECTOR (CESSWI) OR CERTIFIED INSPECTOR OF SEDIMENTATION AND EROSION CONTROLS (CISEC) CERTIFICATION TO INSPECT THE CONTROLS AND FENCES AT WEEKLY INTERVALS AND AFTER SIGNIFICANT RAINFALL EVENTS TO INSURE THAT THEY ARE FUNCTIONING PROPERLY. THE PERSON(S) RESPONSIBLE FOR MAINTENANCE OF CONTROLS AND FENCES SHALL IMMEDIATELY MAKE ANY NECESSARY REPAIRS TO DAMAGED AREAS. SILT ACCUMULATION AT CONTROLS MUST BE REMOVED WHEN THE DEPTH REACHES SIX (6) INCHES.
7. PRIOR TO FINAL ACCEPTANCE BY THE CITY,HAUL ROADS AND WATERWAY CROSSINGS CONSTRUCTED FOR TEMPORARY CONTRACTOR ACCESS MUST BE REMOVED, ACCUMULATED SEDIMENT REMOVED FROM THE WATERWAY AND THE AREA RESTORED TO THE ORIGINAL GRADE AND REVEGETATED. ALL LAND CLEARING DEBRIS SHALL BE DISPOSED OF IN APPROVED SPOIL DISPOSAL SITES.
8. ALL WORK MUST STOP IF A VOID IN THE ROCK SUBSTRATE IS DISCOVERED WHICH IS;ONE SQUARE FOOT IN TOTAL AREA; BLOWS AIR FROM WITHIN THE SUBSTRATE AND/OR CONSISTENTLY RECEIVES WATER DURING ANY RAIN EVENT. AT THIS TIME IT IS THE RESPONSIBILITY OF THE PROJECT MANAGER TO IMMEDIATELY CONTACT A CITY OF AUSTIN ENVIRONMENTAL INSPECTOR FOR FURTHER INVESTIGATION.
9. TEMPORARY AND PERMANENT EROSION CONTROL: ALL DISTURBED AREAS SHALL BE RESTORED AS NOTED BELOW.
   A. ALL DISTURBED AREAS TO BE REVEGETATED ARE REQUIRED TO PLACE A MINIMUM OF SIX (6) INCHES OF TOPSOIL [SEE STANDARD SPECIFICATION ITEM NO.601S.3(A)]. DO NOT ADD TOPSOIL WITHIN THE CRITICAL ROOT ZONE OF EXISTING TREES.THE TOPSOIL SHALL BE COMPOSED OF 4 PARTS OF SOIL MIXED WITH 1 PART COMPOST,BY VOLUME. THE COMPOST SHALL MEET THE DEFINITION OF COMPOST AS DEFINED BY TXDOT SPECIFICATION ITEM 161. THE SOIL SHALL BE LOCALLY AVAILABLE NATIVE SOIL THAT MEETS THE FOLLOWING SPECIFICATIONS:
      - SHALL BE FREE OF TRASH,WEEDS,DELETERIOUS MATERIALS,ROCKS,AND DEBRIS.
      - 100% SHALL PASS THROUGH A 1.5-INCH (38-MM) SCREEN.
      - SOIL TO BE A LOAMY MATERIAL THAT MEETS THE REQUIREMENTS OF THE TABLE BELOW IN ACCORDANCE WITH THE USDA TEXTURAL TRIANGLE. SOIL KNOWN LOCALLY AS "RED DEATH" IS NOT AN ALLOWABLE SOIL.TEXTURAL COMPOSITION SHALL MEET THE FOLLOWING CRITERIA:

TEXTURAL CLASS	MINIMUM	MAXIMUM
SILT	5%	50%
CLAY	10%	50%
SAND	15%	67%

      - AN OWNER/ENGINEER MAY PROPOSE USE OF ONSITE SALVAGED TOPSOIL WHICH DOES NOT MEET THE SOIL TEXTURE CLASS REQUIRED ABOVE BY PROVIDING A SOIL ANALYSIS AND A WRITTEN STATEMENT FROM A QUALIFIED PROFESSIONAL IN SOILS,LANDSCAPE ARCHITECTURE,OR AGRONOMY INDICATING THE ONSITE TOPSOIL WILL PROVIDE AN EQUIVALENT GROWTH MEDIA AND SPECIFYING WHAT, IF ANY,SOIL AMENDMENTS ARE REQUIRED.
      - SOIL AMENDMENTS SHALL BE WORKED INTO THE EXISTING ONSITE TOPSOIL WITH A DISC OR TILLER TO CREATE A WELL-BLENDED MATERIAL.

TOPSOIL SALVAGED FROM THE EXISTING SITE MAY OFTEN BE USED, BUT IT SHOULD MEET THE SAME STANDARDS AS SET FORTH IN THESE STANDARDS. THE

VEGETATIVE STABILIZATION OF AREAS DISTURBED BY CONSTRUCTION SHALL BE AS FOLLOWS:

TEMPORARY VEGETATIVE STABILIZATION:
1. FROM SEPTEMBER 15 TO MARCH 1, SEEDING SHALL BE WITH COOL SEASON COVER CROPS (WHEAT AT 0.5 POUNDS PER 1000 SF, OATS AT 0.5 POUNDS PER 1000 SF, CEREAL RYE GRAIN AT 0.5 POUNDS PER 1000 SF) WITH A TOTAL RATE OF 1.5 POUNDS PER 1000 SF. COOL SEASON COVER CROPS ARE NOT PERMANENT EROSION CONTROL.
2. FROM MARCH 2 TO SEPTEMBER 14, SEEDING SHALL BE WITH HULLED BERMUDA AT A RATE OF 1 POUNDS PER 1000 SF.
   A. FERTILIZER SHALL BE WATER SOLUBLE WITH AN ANALYSIS OF 15-15-15 TO BE APPLIED ONCE AT PLANTING AND ONCE DURING THE PERIOD OF ESTABLISHMENT AT A RATE OF 1/2 POUND PER 1000 SF.
   B. HYDROMULCH SHALL COMPLY WITH TABLE1, BELOW.
   C. TEMPORARY EROSION CONTROL SHALL BE ACCEPTABLE WHEN THE GRASS HAS GROWN AT LEAST 1'Y.2 INCHES HIGH WITH 95% COVERAGE, PROVIDED NO BARE SPOTS LARGER THAN 16 SQUARE FEET EXIST.
   D. WHEN REQUIRED, NATIVE GRASS SEEDING SHALL COMPLY WITH REQUIREMENTS OF THE CITY OF AUSTIN ENVIRONMENTAL CRITERIA MANUAL.

TABLE 1: HYDROMULCHING FOR TEMPORARY VEGETATIVE STABILIZATION

MATERIAL	DESCRIPTION	LONGEVITY	TYPICAL APPLICATIONS	APPLICATION RATES
100% OR ANY BLEND OF WOOD, CELLULOSE, STRAW, AND/OR COTTON PLANT MATERIAL (EXCEPT NO MULCH SHALL EXCEED 30% PAPER)	70% OR GREATER WOOD/STRAW 30% OR LESS PAPER OR NATURAL FIBERS	0-3 MONTHS	MODERATE SLOPES; FROM FLAT TO 3:1	1500 TO 200 LBS PER ACRE

PERMANENT VEGETATIVE STABILIZATION:
1. FROM SEPTEMBER 15 TO MARCH 1,SEEDING IS CONSIDERED TO BE TEMPORARY STABILIZATION ONLY.IF COOL SEASON COVER CROPS EXIST WHERE PERMANENT VEGETATIVE STABILIZATION IS DESIRED, THE GRASSES SHALL BE MOWED TO A HEIGHT OF LESS THAN ONE-HALF (1/2) INCH AND THE AREA SHALL BE RE-SEEDED IN ACCORDANCE WITH 2. BELOW.
2. FROM MARCH 2 TO SEPTEMBER 14, SEEDING SHALL BE WITH HULLED BERMUDA AT A RATE OF 1 POUND PER 1000 SF WITH A PURITY OF 95% WITH 85% GERMINATION. BERMUDA GRASS IS A WARM SEASON GRASS AND IS CONSIDERED PERMANENT EROSION CONTROL.
   A. FERTILIZER SHALL BE A WATER SOLUBLE WITH AN ANALYSIS OF 15-15-15 TO BE APPLIED ONCE AT PLANTING AND ONCE DURING THE PERIOD OF ESTABLISHMENT AT A RATE OF 1/2 POUND PER 1000 SF.
   B. HYDROMULCH SHALL COMPLY WITH TABLE 2, BELOW.
   C. THE PLANTED AREA SHALL BE IRRIGATED OR SPRINKLED IN A MANNER THAT WILL NOT ERODE THE TOPSOIL, BUT WILL SUFFICIENTLY SOAK THE SOIL TO A DEPTH OF SIX INCHES. THE IRRIGATION SHALL OCCUR AT DAILY INTERVALS (MINIMUM) DURING THE FIRST TWO MONTHS. RAINFALL OCCURRENCES OF 1/2 INCH OR MORE SHALL POSTPONE THE WATERING SCHEDULE FOR ONE WEEK.
   D. PERMANENT EROSION CONTROL SHALL BE ACCEPTABLE WHEN THE GRASS HAS GROWN AT LEAST 1INCHES HIGH WITH 95% COVERAGE,PROVIDED NO BARE SPOTS LARGER THAN 16 SQUARE FEET EXIST.
   E. WHEN REQUIRED, NATIVE GRASS SEEDING SHALL COMPLY WITH REQUIREMENTS OF THE CITY OF AUSTIN ENVIRONMENTAL CRITERIA MANUAL.

TABLE 1: HYDROMULCHING FOR TEMPORARY VEGETATIVE STABILIZATION

MATERIAL	DESCRIPTION	LONGEVITY	TYPICAL APPLICATIONS	APPLICATION RATES
BONDED FIBER MATRIX (BFM)	80% ORGANIC DEFIBRATED FIBERS 10% TACKIFIER	6 MONTHS	ON SLOPES UP TO 2:1 AND EROSIVE SOIL CONDITIONS	2500 TO 4000 LBS PER ACRE (SEE MANUFACTURERS RECOMMENDATIONS)
FIBER REINFORCED MATRIX (FRM)	65% ORGANIC DEFIBRATED FIBERS 25% REINFORCING FIBERS OR LESS 10% TACKIFIER	UP TO 12 MONTHS	ON SLOPES UP TO 1:1 AND EROSIVE SOIL CONDITIONS	3000 TO 4500 LBS PER ACRE (SEE MANUFACTURERS RECOMMENDATIONS)

EROSION CONTROL NOTES: (CONT'D)
10. DEVELOPER INFORMATION: OWNER:_______________ PHONE # ___________
ADDRESS______________
OWNER'S REPRESENTATIVE RESPONSIBLE FOR PLAN ALTERATIONS:_____PHONE# ___
PERSON OR FIRM RESPONSIBLE FOR EROSION/SEDIMENTATION CONTROL MAINTENANCE:_________PHONE# ________ PERSON OR FIRM RESPONSIBLE FOR TREE/NATURAL AREA PROTECTION MAINTENANCE: PHONE# ___
11. THE CONTRACTOR SHALL NOT DISPOSE OF SURPLUS EXCAVATED MATERIAL FROM THE SITE WITHOUT NOTIFYING THE PLANNING AND DEVELOPMENT REVIEW DEPARTMENT AT 974-2278 AT LEAST 48 HOURS PRIOR WITH THE LOCATION AND A COPY OF THE PERMIT ISSUED TO RECEIVE THE MATERIAL.

CITY OF AUSTIN STANDARD NOTES FOR TREE AND NATURAL AREA PROTECTION
1. ALL TREES AND NATURAL AREAS SHOWN ON PLAN TO BE PRESERVED SHALL BE PROTECTED DURING CONSTRUCTION WITH TEMPORARY FENCING.
2. PROTECTIVE FENCES SHALL BE ERECTED ACCORDING TO CITY OF AUSTIN STANDARDS FOR TREE PROTECTION.
3. PROTECTIVE FENCES SHALL BE INSTALLED PRIOR TO THE START OF ANY SITE PREPARATION WORK (CLEARING, GRUBBING OR GRADING), AND SHALL BE MAINTAINED THROUGHOUT ALL PHASES OF THE CONSTRUCTION PROJECT.
4. EROSION AND SEDIMENTATION CONTROL BARRIERS SHALL BE INSTALLED OR MAINTAINED IN A MANNER WHICH DOES NOT RESULT IN SOIL BUILD-UP WITHIN TREE DRIP LINES.
5. PROTECTIVE FENCES SHALL SURROUND THE TREES OR GROUP OF TREES, AND WILL BE LOCATED AT THE OUTERMOST LIMIT OF BRANCHES (DRIP LINE) , FOR NATURAL AREAS, PROTECTIVE FENCES SHALL FOLLOW THE LIMIT OF CONSTRUCTION LINE, IN ORDER TO PREVENT THE FOLLOWING:
   A. SOIL COMPACTION IN THE ROOT ZONE AREA RESULTING FROM VEHICULAR TRAFFIC OR STORAGE OF EQUIPMENT OR MATERIALS;
   B. ROOT ZONE DISTURBANCES DUE TO GRADE CHANGES (GREATER THAN 6 INCHES CUT OR FILL), OR TRENCHING NOT REVIEWED AND AUTHORIZED BY THE CITY ABORIST;
   C. WOUNDS TO EXPOSED ROOTS, TRUNK OR LIMBS BY MECHANICAL EQUIPMENT;
   D. OTHER ACTIVITIES DETRIMENTAL TO TREES SUCH AS CHEMICAL STORAGE, CEMENT TRUCK CLEANING, AND FIRES.
6. EXCEPTIONS TO INSTALLING FENCES AT TREE DRIP LINES MAY BE PERMITTED IN THE FOLLOWING CASES:
   A. WHERE THERE IS TO BE AN APPROVED GRADE CHANGE, IMPERMEABLE PAVING SURFACE, TREE WELL, OR OTHER SUCH SITE DEVELOPMENT, ERECT THE FENCE APPROXIMATELY 2 TO 4 FEET BEYOND THE AREA DISTURBED;
   B. WHERE PERMEABLE PAVING IS TO BE INSTALLED WITHIN A TREE'S DRIP LINE, ERECT THE FENCE AT THE OUTER LIMITS OF THE PERMEABLE PAVING AREA (PRIOR TO SITE GRADING SO THAT THIS AREA IS GRADED SEPARATELY PRIOR TO PAVING INSTALLATION TO MINIMIZED ROOT DAMAGE);
   C. WHERE TREES ARE CLOSE TO PROPOSED BUILDINGS, ERECT THE FENCE TO ALLOW 6 TO 10 FEET OF WORK SPACE BETWEEN THE FENCE AND THE BUILDING;
   D. WHERE THERE ARE SEVERE SPACE CONSTRAINTS DUE TO TRACT SIZE, OR OTHER SPECIAL REQUIREMENTS, CONTACT THE CITY ARBORIST AT 974-1876 TO DISCUSS ALTERNATIVES.

SPECIAL NOTE: FOR THE PROTECTION OF NATURAL AREAS, NO EXCEPTIONS TO INSTALLING FENCES AT THE LIMIT OF CONSTRUCTION LINE WILL BE PERMITTED.
7. WHERE ANY OF THE ABOVE EXCEPTIONS RESULT IN A FENCE BEING CLOSER THAN 4 FEET TO A TREE TRUNK, PROTECT THE TRUNK WITH STRAPPED-ON PLANKING TO A HEIGHT OF 8 FT (OR TO THE LIMITS OF LOWER BRANCHING) IN ADDITION TO THE REDUCED FENCING PROVIDED.
8. TREES APPROVED FOR REMOVAL SHALL BE REMOVED IN A MANNER WHICH DOES NOT IMPACT TREES TO BE PRESERVED.
9. ANY ROOTS EXPOSED BY CONSTRUCTION ACTIVITY SHALL BE PRUNED FLUSH WITH THE SOIL. BACKFILL ROOT AREAS WITH GOOD QUALITY TOP SOIL AS SOON AS POSSIBLE. IF EXPOSED ROOT AREAS ARE NOT BACKFILLED WITHIN 2 DAYS, COVER THEM WITH ORGANIC MATERIAL IN A MANNER WHICH REDUCES SOIL TEMPERATURE AND MINIMIZES WATER LOSS DUE TO EVAPORATION.
10. ANY TRENCHING REQUIRED FOR THE INSTALLATION OF LANDSCAPE IRRIGATION SHALL BE PLACED AS FAR FROM EXISTING TREE TRUNKS AS POSSIBLE.
11. NO LANDSCAPE TOPSOIL DRESSING GREATER THAN 4 INCHES SHALL BE PERMITTED WITHIN THE DRIP LINE OF TREES. NO SOIL IS PERMITTED ON THE ROOT FLARE OF ANY TREE.
12. PRUNING TO PROVIDE CLEARANCE FOR STRUCTURES, VEHICULAR TRAFFIC AND EQUIPMENT SHALL TAKE PLACE BEFORE DAMAGE OCCURS (RIPPING OF BRANCHES, ETC.).
13. ALL FINISHED PRUNING SHALL BE DONE ACCORDING TO RECOGNIZED, APPROVED STANDARDS OF THE INDUSTRY (REFERENCE THE NATIONAL ARBORIST ASSOCIATION PRUNING STANDARDS FOR SHADE TREES AVAILABLE ON REQUEST FROM THE CITY ARBORIST).
14. DEVIATIONS FROM THE ABOVE NOTES MAY BE CONSIDERED ORDINANCE VIOLATIONS IF THERE IS SUBSTANTIAL NON-COMPLIANCE OR IF A TREE SUSTAINS DAMAGE AS A RESULT.

REMEDIAL TREE CARE NOTES AERATION AND SUPPLEMENTAL NUTRIENT REQUIREMENTS FOR TREES WITHIN CONSTRUCTION AREAS
AS A COMPONENT OF AN EFFECTIVE REMEDIAL TREE CARE PROGRAM PER ENVIRONMENTAL CRITERIA MANUAL SECTION 3.5.4, PRESERVED TREES WITHIN THE LIMITS OF CONSTRUCTION MAY REQUIRE SOIL AERATION AND SUPPLEMENTAL NUTRIENTS. SOIL AND/OR FOLIAR ANALYSIS SHOULD BE USED TO DETERMINE THE NEED FOR SUPPLEMENTAL NUTRIENTS. THE CITY ARBORIST MAY REQUIRE THESE ANALYSES AS PART OF A COMPREHENSIVE TREE CARE PLAN. SOIL PH SHALL BE CONSIDERED WHEN DETERMINING THE FERTILIZATION COMPOSITION AS SOIL PH INFLUENCES THE TREE'S ABILITY TO UPTAKE NUTRIENTS FROM THE SOIL. IF ANALYSES INDICATE THE NEED FOR SUPPLEMENTAL NUTRIENTS, THEN HUMATE/NUTRIENT SOLUTIONS WITH MYCORRHIZAE COMPONENTS ARE HIGHLY RECOMMENDED. IN ADDITION, SOIL ANALYSIS MAY BE NEEDED TO DETERMINE IF ORGANIC MATERIAL OR BENEFICIAL MICROORGANISMS ARE NEEDED TO IMPROVE SOIL HEALTH. MATERIALS AND METHODS ARE TO BE APPROVED BY THE CITY ARBORIST (512-974-1876) PRIOR TO APPLICATION. THE OWNER OR GENERAL CONTRACTOR SHALL SELECT A FERTILIZATION CONTRACTOR AND IENSURE COORDINATION WITH THE CITY ARBORIST.
PRE-CONSTRUCTION TREATMENT SHOULD BE APPLIED IN THE APPROPRIATE SEASON, IDEALLY THE SEASON PRECEDING THE PROPOSED CONSTRUCTION. MINIMALLY, AREAS TO BE TREATED INCLUDE THE ENTIRE CRITICAL ROOT ZONE OF TREES AS DEPICTED ON THE CITY APPROVED PLANS. TREATMENT SHOULD INCLUDE, BUT NOT LIMITED TO, FERTILIZATION, SOIL TREATMENT, MULCHING, AND PROPER PRUNING.
POST-CONSTRUCTION TREATMENT SHOULD OCCUR DURING FINAL REVEGETATION OR AS DETERMINED BY A QUALIFIED ARBORIST AFTER CONSTRUCTION. CONSTRUCTION ACTIVITIES OFTEN RESULT IN A REDUCTION IN SOIL MACRO AND MICRO PORES AND AN INCREASE IN SOIL BULK DENSITY. TO AMELIORATE THE DEGRADED SOIL CONDITIONS, AERATION VIA WATER AND/OR AIR INJECTED INTO THE SOIL IS NEEDED OR BY OTHER METHODS AS APPROVED BY THE CITY ARBORIST. THE PROPOSED NUTRIENT MIX SPECIFICATIONS AND SOIL AND/OR FOLIAR ANALYSIS RESULTS NEED TO BE PROVIDED TO AND APPROVED BY THE CITY ARBORIST PRIOR TO APPLICATION (FAX # 512-974-3010). CONSTRUCTION WHICH WILL BE COMPLETED IN LESS THAN 90 DAYS MAY USE MATERIALS AT ½ RECOMMENDED RATES. ALTERNATIVE ORGANIC FERTILIZER MATERIALS ARE ACCEPTABLE WHEN APPROVED BY THE CITY ARBORIST. WITHIN 7 DAYS AFTER FERTILIZATION IS PERFORMED, THE CONTRACTOR SHALL PROVIDE DOCUMENTATION OF THE WORK PERFORMED TO THE CITY ARBORIST, PLANNING AND DEVELOPMENT REVIEW DEPARTMENT. P.O. BOX 1088, AUSTIN, TX 78767. THIS NOTE SHOULD BE REFERENCED AS ITEM #1 IN THE SEQUENCE OF CONSTRUCTION.

SEQUENCE OF CONSTRUCTION
1. TEMPORARY EROSION AND SEDIMENTATION CONTROLS ARE TO BE INSTALLED AS INDICATED ON THE APPROVED SITE PLAN OR SUBDIVISION CONSTRUCTION PLAN AND IN ACCORDANCE WITH THE STORMWATER POLLUTION PREVENTION PLAN (SWPPP) THAT IS REQUIRED TO BE POSTED ON THE SITE. INSTALL TREE PROTECTION AND INITIATE TREE MITIGATION MEASURES.
2. THE ENVIRONMENTAL PROJECT MANAGER OR SITE SUPERVISOR MUST CONTACT THE WATERSHED PROTECTION DEPARTMENT, ENVIRONMENTAL INSPECTION, AT 512-974-2278, 72 HOURS PRIOR TO THE SCHEDULED DATE OF THE REQUIRED ON-SITE PRECONSTRUCTION MEETING.
3. THE ENVIRONMENTAL PROJECT MANAGER, AND/OR SITE SUPERVISOR, AND/OR DESIGNATED RESPONSIBLE PARTY, AND THE GENERAL CONTRACTOR WILL FOLLOW THE STORM WATER POLLUTION PREVENTION PLAN (SWPPP) POSTED ON THE SITE. TEMPORARY EROSION AND SEDIMENTATION CONTROLS WILL BE REVISED, IF NEEDED, TO COMPLY WITH CITY INSPECTORS' DIRECTIVES, AND REVISED CONSTRUCTION SCHEDULE RELATIVE TO THE WATER QUALITY PLAN REQUIREMENTS AND THE EROSION PLAN.
4. ROUGH GRADE THE POND(S) AT 100% PROPOSED CAPACITY. EITHER THE PERMANENT OUTLET STRUCTURE OR A TEMPORARY OUTLET MUST BE CONSTRUCTED PRIOR TO DEVELOPMENT OF EMBANKMENT OR EXCAVATION THAT LEADS TO PONDING CONDITIONS. THE OUTLET SYSTEM MUST CONSIST OF A SUMP PIT OUTLET AND AN EMERGENCY SPILLWAY MEETING THE REQUIREMENTS OF THE DRAINAGE CRITERIA MANUAL AND/OR THE ENVIRONMENTAL CRITERIA MANUAL, AS REQUIRED. THE OUTLET SYSTEM SHALL BE PROTECTED FROM EROSION AND SHALL BE MAINTAINED THROUGHOUT THE COURSE OF CONSTRUCTION UNTIL INSTALLATION OF THE PERMANENT WATER QUALITY POND(S).
5. TEMPORARY EROSION AND SEDIMENTATION CONTROLS WILL BE INSPECTED AND MAINTAINED IN ACCORDANCE WITH THE STORM WATER POLLUTION PREVENTION PLAN (SWPPP) POSTED ON THE SITE.
6. BEGIN SITE CLEARING/CONSTRUCTION (OR DEMOLITION) ACTIVITIES.
7. IN THE BARTON SPRINGS ZONE, THE ENVIRONMENTAL PROJECT MANAGER OR SITE SUPERVISOR WILL SCHEDULE A MID-CONSTRUCTION CONFERENCE TO COORDINATE CHANGES IN THE CONSTRUCTION SCHEDULE AND EVALUATE EFFECTIVENESS OF THE EROSION CONTROL PLAN AFTER POSSIBLE CONSTRUCTION ALTERATIONS TO THE SITE. PARTICIPANTS SHALL INCLUDE THE CITY INSPECTOR, PROJECT ENGINEER, GENERAL CONTRACTOR AND ENVIRONMENTAL PROJECT MANAGER OR SITE SUPERVISOR. THE ANTICIPATED COMPLETION DATE AND FINAL CONSTRUCTION SEQUENCE AND INSPECTION SCHEDULE WILL BE COORDINATED WITH THE APPROPRIATE CITY INSPECTOR.
8. PERMANENT WATER QUALITY PONDS OR CONTROLS WILL BE CLEANED OUT AND FILTER MEDIA WILL BE INSTALLED PRIOR TO/CONCURRENTLY WITH REVEGETATION OF SITE.
9. COMPLETE CONSTRUCTION AND START REVEGETATION OF THE SITE AND INSTALLATION OF LANDSCAPING.
10. UPON COMPLETION OF THE SITE CONSTRUCTION AND REVEGETATION OF A PROJECT SITE, THE DESIGN ENGINEER SHALL SUBMIT AN ENGINEER'S LETTER OF CONCURRENCE TO THE WATERSHED PROTECTION AND DEVELOPMENT REVIEW DEPARTMENT INDICATING THAT CONSTRUCTION, INCLUDING REVEGETATION, IS COMPLETE AND IN SUBSTANTIAL CONFORMITY WITH THE APPROVED PLANS. AFTER RECEIVING THIS LETTER, A FINAL INSPECTION WILL BE SCHEDULED BY THE APPROPRIATE CITY INSPECTOR.
11. UPON COMPLETION OF LANDSCAPE INSTALLATION OF A PROJECT SITE, THE LANDSCAPE ARCHITECT SHALL SUBMIT A LETTER OF CONCURRENCE TO THE WATERSHED PROTECTION AND DEVELOPMENT REVIEW DEPARTMENT INDICATING THAT THE REQUIRED LANDSCAPING IS COMPLETE AND IN SUBSTANTIAL CONFORMITY WITH THE APPROVED PLANS. AFTER RECEIVING THIS LETTER, A FINAL INSPECTION WILL BE SCHEDULED BY THE APPROPRIATE CITY INSPECTOR.
12. AFTER A FINAL INSPECTION HAS BEEN CONDUCTED BY THE CITY INSPECTOR AND WITH APPROVAL FROM THE CITY INSPECTOR, REMOVE THE TEMPORARY EROSION AND SEDIMENTATION CONTROLS AND COMPLETE ANY NECESSARY FINAL REVEGETATION RESULTING FROM REMOVAL OF THE CONTROLS. CONDUCT ANY MAINTENANCE AND REHABILITATION OF THE WATER QUALITY PONDS OR CONTROLS.

APPROVAL
SITE PLAN APPROVAL SHEET 7 OF 126
FILE NUMBER: SPC-2015-0322C APPLICATION DATE: JULY 17, 2015
APPROVED BY COMMISSION ON: N/A UNDER SECTION 142 OF
CHAPTER 25-5 OF THE CITY OF AUSTIN CODE.
EXPIRATION DATE (25-5-81, LDC) ________ CASE MANAGER LYNDA COURTNEY
PROJECT EXPIRATION DATE (ORD.#970905-A) ________ DWPZ ______ DDZ ______
Director, Planning and Development Review
RELEASE FOR GENERAL COMPLIANCE: ________ ZONING P-NP LI-NP
Rev. 1 ________ Correction 1 ________
Rev. 2 ________ Correction 2 ________
Rev. 3 ________ Correction 3 ________
Final plat must be recorded by the Project Expiration Date, if applicable. Subsequent Site Plans which do not comply with the Code current at the time of filing, and all required Building Permits and/or a notice of construction (if a building permit is not required), must also be approved prior to the Project Expiration Date.

STATE OF TEXAS
DALE P. MURPHY
90614
LICENSED PROFESSIONAL ENGINEER
05/09/2016

NO.	DATE	REVISION	BY	APVD

DSGN D Murphy | DR D Murphy | CHK M Gilfillan | APVD D Murphy | D Murphy

K·FRIESE + ASSOCIATES
PUBLIC PROJECT ENGINEERING
TBPE Firm #6535

Montopolis Water Reclamation Initiave (WRI)
Storage Reservoir and Pump Station
2711 Montopolis Drive
Austin Water, Austin, Texas

CH2MHILL
TBPE FIRM NO. 3699

CIVIL

GENERAL NOTES

VERIFY SCALE
BAR IS ONE INCH ON ORIGINAL DRAWING.
0 1"

DATE	MAY 2016
PROJ	472902
DWG	C-1
SHEET	7 of 126

BENCHMARK DESCRIPTION:

BM # 1: ½" IRON ROD WITH RED PLASTIC CAP SET IN GROUND IN THE CENTER GRASS MEDIAN BETWEEN THE NORTHBOUND AND SOUTH BOUND LANES OF MONTOPOLIS DRIVE, +/- 978 FEET NORTH OF CL/INTERSECTION OF EAST OLTORF DRIVE AND MONTOPOLIS DRIVE, +/- 245 FEET NORTH OF THE CENTERLINE OF THE PRAXAIR DISTRIBUTION SITE'S NORTH CONCRETE DRIVEWAY SITUATED ON THE EAST SIDE OF THE NORTHBOUND LANE, 112.3 FEET SOUTHWEST OF A FIRE HYDRANT LOCATED ON THE EAST SIDE OF THE NORTH BOUND LANE, AND 14.8 FEET WEST OF THE BACK OF CURB OF THE WEST SIDE OF THE NORTH BOUND LANE.
N: 10052533.95
E: 3125576.74
ELEV: 608.57

BM # 2 (NOT SHOWN): ½" IRON ROD WITH RED PLASTIC CAP SET IN GROUND IN THE CENTER GRASS MEDIAN BETWEEN THE NORTHBOUND AND SOUTH BOUND LANES OF MONTOPOLIS DRIVE, +/- 640 FEET NORTH OF CL/INTERSECTION OF EAST OLTORF DRIVE AND MONTOPOLIS DRIVE, +/- 98 FEET SOUTH OF THE CENTERLINE OF THE PRAXAIR DISTRIBUTION SITE'S NORTH CONCRETE DRIVEWAY SITUATED ON THE EAST SIDE OF THE NORTHBOUND LANE, +/- 138 FEET NORTH OF A CENTER DRIVEWAY FOR THE SAME SITE, AND 7 FEET EAST OF THE EDGE OF PAVEMENT FOR THE EAST SIDE OF THE SOUTH BOUND LANE.
N: 10052243.95
E: 3125391.44
ELEV: 617.00

BM # 3: ½" IRON ROD WITH RED PLASTIC CAP SET IN GROUND OF A WOODED AREA +/- 630 FEET EAST OF A FIRE HYDRANT LOCATED ON THE EAST SIDE OF THE NORTH BOUND LANE OF MONTOPOLIS DRIVE; FIRE HYDRANT LOCATED +/- 345 FEET NORTH OF THE CENTERLINE OF THE PRAXAIR DISTRIBUTION SITE'S NORTH CONCRETE DRIVEWAY, AND 5 FEET WEST OF A BARBED WIRE FENCE ALIGNED IN A SW-NE DIRECTION.
N: 10052213.66
E: 3126160.25
ELEV: 611.01

BM # 4: ½" IRON ROD WITH RED PLASTIC CAP SET IN GROUND ON THE SOUTH SIDE OF A DIRT ROADWAY/CLEARING FOR GAS LINE MARKERS IN ALIGNMENT FOR A WEST-EAST DIRECTION, 54.4 FEET SOUTHEAST OF A ½" IRON ROD, AND +/- 350 FEET NORTH OF THE NORTH EDGE OF PAVEMENT FOR SH 71 WEST
N: 10051767.39
E: 3126493.01
ELEV: 593.10

ZONING CALCULATIONS

TOTAL SITE AREA (AC)	2.78
ZONING DISTRICT	P
FLOOR TO AREA RATIO	4.3%
ALLOWABLE IMPERVIOUS COVER(AC)	1.75
TOTAL IMPERVIOUS COVER (AC)	0.79
TOTAL IMPERVIOUS COVER (%)	28.4%
TOTAL BUILDING COVERAGE (SF)	5250
TOTAL BUILDING COVERAGE (%)	4.3%

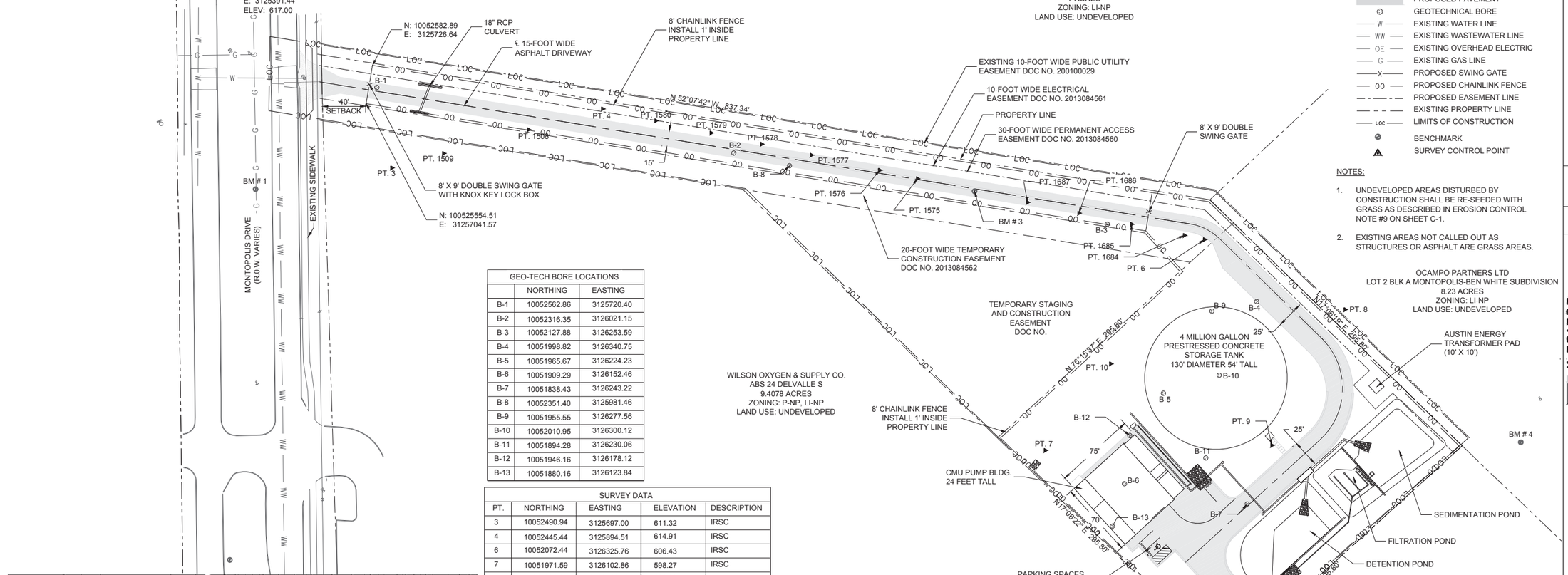

GEO-TECH BORE LOCATIONS

	NORTHING	EASTING
B-1	10052562.86	3125720.40
B-2	10052316.35	3126021.15
B-3	10052127.88	3126253.59
B-4	10051998.82	3126340.75
B-5	10051965.67	3126224.23
B-6	10051909.29	3126152.46
B-7	10051838.43	3126243.22
B-8	10052351.40	3125981.46
B-9	10051955.55	3126277.56
B-10	10052010.95	3126300.12
B-11	10051894.28	3126230.06
B-12	10051946.16	3126178.12
B-13	10051880.16	3126123.84

SURVEY DATA

PT.	NORTHING	EASTING	ELEVATION	DESCRIPTION
3	10052490.94	3125697.00	611.32	IRSC
4	10052445.44	3125894.51	614.91	IRSC
6	10052072.44	3126325.76	606.43	IRSC
7	10051971.59	3126102.86	598.27	IRSC
8	10051953.21	3126409.16	599.69	IRSC
9	10051975.31	3126289.28	593.06	IRSC
10	10052013.06	3126194.52	602.24	60D-POL
11	10051769.14	3126207.11	585.29	IRSC

SURVEY DATA

PT.	NORTHING	EASTING	ELEVATION	DESCRIPTION
1508	10052461.46	3125824.98	612.03	60D-POL
1509	10052479.77	3125745.49	611.91	60D-POL
1575	10052249.25	3126119.45	611.38	60D-POL
1576	10052272.84	3126092.40	612.10	60D-POL
1577	10052315.40	3126043.61	613.30	60D-POL
1578	10052346.30	3126008.18	614.98	60D-POL
1579	10052377.85	3125971.99	613.83	60D-POL
1580	10052412.33	3125932.47	613.12	60D-POL
1684	10052084.75	3126311.33	607.25	60D-POL
1685	10052117.13	3126273.38	609.01	60D-POL
1686	10052149.55	3126235.39	610.19	60D-POL
1687	10052181.10	3126198.41	610.72	60D-POL

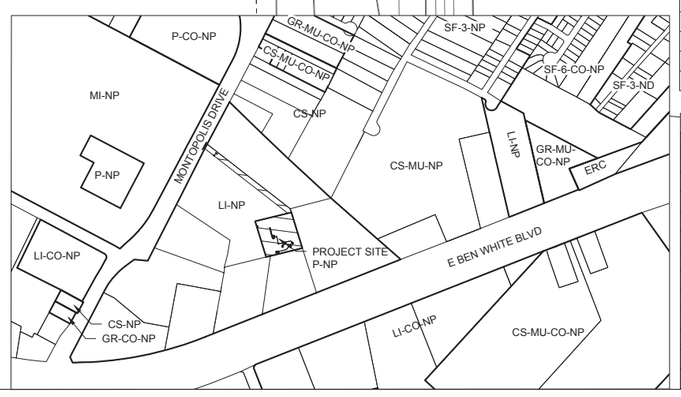

0 50' 100'

LEGEND

- PROPOSED WATER LINE
- PROPOSED FORCE MAIN
- PROPOSED WASTEWATER LINE
- PROPOSED RECLAIMED WATER LINE
- PROPOSED WATER METER
- PROPOSED FIRE HYDRANT
- PROPOSED WATER VALVE
- PROPOSED PAVEMENT
- GEOTECHNICAL BORE
- EXISTING WATER LINE
- EXISTING WASTEWATER LINE
- EXISTING OVERHEAD ELECTRIC
- EXISTING GAS LINE
- PROPOSED SWING GATE
- PROPOSED CHAINLINK FENCE
- PROPOSED EASEMENT LINE
- EXISTING PROPERTY LINE
- LIMITS OF CONSTRUCTION
- BENCHMARK
- SURVEY CONTROL POINT

NOTES:

1. UNDEVELOPED AREAS DISTURBED BY CONSTRUCTION SHALL BE RE-SEEDED WITH GRASS AS DESCRIBED IN EROSION CONTROL NOTE #9 ON SHEET C-1.
2. EXISTING AREAS NOT CALLED OUT AS STRUCTURES OR ASPHALT ARE GRASS AREAS.

APPROVAL

SITE PLAN APPROVAL SHEET 8 OF 126
FILE NUMBER: SPC-2015-0322C APPLICATION DATE: JULY 17, 2015
APPROVED BY COMMISSION ON: N/A UNDER SECTION 142 OF
CHAPTER 25-5 OF THE CITY OF AUSTIN CODE.
EXPIRATION DATE (25-5-81, LDC) _____ CASE MANAGER LYNDA COURTNEY
PROJECT EXPIRATION DATE (ORD.#970905-A) _____ DWPZ _____ DDZ _____

Director, Planning and Development Review
RELEASE FOR GENERAL COMPLIANCE: _____ ZONING P-NP LI-NP
Rev. 1 _____ Correction 1 _____
Rev. 2 _____ Correction 2 _____
Rev. 3 _____ Correction 3 _____

Final plat must be recorded by the Project Expiration Date, if applicable. Subsequent Site Plans which do not comply with the Code current at the time of filing, and all required Building Permits and/or a notice of construction (if a building permit is not required), must also be approved prior to the Project Expiration Date.

STATE OF TEXAS
DALE P. MURPHY
90614
LICENSED
PROFESSIONAL ENGINEER
05/09/2016

NO.	DATE	REVISION	BY	APVD
DSGN	DR	CHK		
D Murphy	M Gilfillan	D Murphy	D Murphy	D Murphy

K FRIESE + ASSOCIATES
PLANNING • ENGINEERING • SURVEYING
TBPE Firm #2533

CH2MHILL.
TBPE FIRM NO. 3699

Montopolis Water Reclamation Initiave (WRI)
Storage Reservoir and Pump Station
2711 Montopolis Drive
Austin Water, Austin, Texas

CIVIL

OVERALL SITE LAYOUT

1" = 50'
VERIFY SCALE
BAR IS ONE INCH ON ORIGINAL DRAWING.
0 1"

DATE	MAY 2016
PROJ	472902
DWG	C-2
SHEET	8 of 126

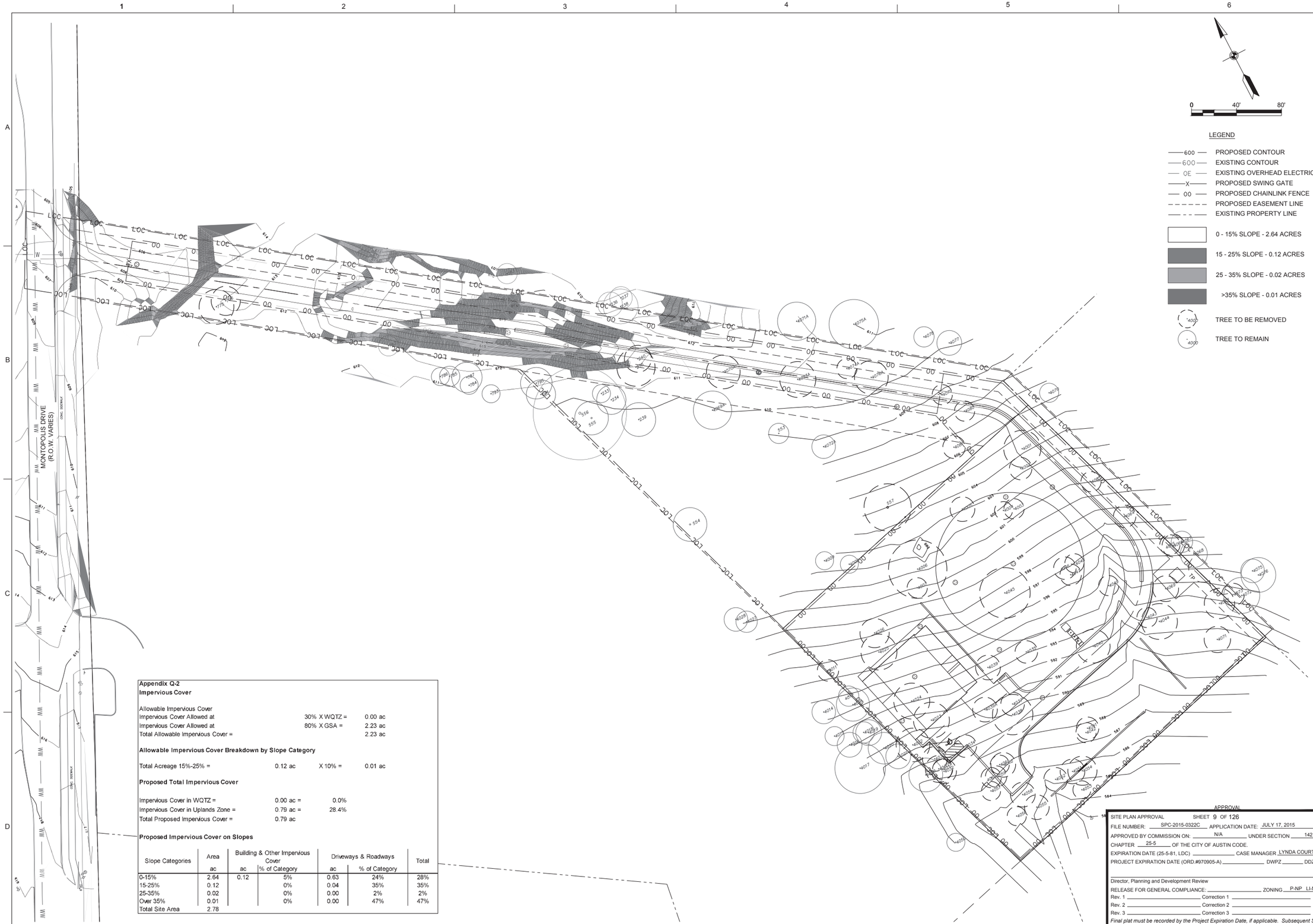

LEGEND

- PROPOSED CONTOUR
- EXISTING CONTOUR
- EXISTING OVERHEAD ELECTRIC
- PROPOSED SWING GATE
- PROPOSED CHAINLINK FENCE
- PROPOSED EASEMENT LINE
- EXISTING PROPERTY LINE
- 0 - 15% SLOPE - 2.64 ACRES
- 15 - 25% SLOPE - 0.12 ACRES
- 25 - 35% SLOPE - 0.02 ACRES
- >35% SLOPE - 0.01 ACRES
- TREE TO BE REMOVED
- TREE TO REMAIN

Appendix Q-2
Impervious Cover

Allowable Impervious Cover			
Impervious Cover Allowed at	30% X WQTZ =	0.00 ac	
Impervious Cover Allowed at	80% X GSA =	2.23 ac	
Total Allowable Impervious Cover =		2.23 ac	

Allowable Impervious Cover Breakdown by Slope Category

Total Acreage 15%-25% =	0.12 ac	X 10% =	0.01 ac

Proposed Total Impervious Cover

Impervious Cover in WQTZ =	0.00 ac =	0.0%
Impervious Cover in Uplands Zone =	0.79 ac =	28.4%
Total Proposed Impervious Cover =	0.79 ac	

Proposed Impervious Cover on Slopes

Slope Categories	Area	Building & Other Impervious Cover		Driveways & Roadways		Total
	ac	ac	% of Category	ac	% of Category	
0-15%	2.64	0.12	5%	0.63	24%	28%
15-25%	0.12		0%	0.04	35%	35%
25-35%	0.02		0%	0.00	2%	2%
Over 35%	0.01		0%	0.00	47%	47%
Total Site Area	2.78					

APPROVAL

SITE PLAN APPROVAL SHEET 9 OF 126
FILE NUMBER: SPC-2015-0322C APPLICATION DATE: JULY 17, 2015
APPROVED BY COMMISSION ON: N/A UNDER SECTION 142 OF
CHAPTER 25-5 OF THE CITY OF AUSTIN CODE.
EXPIRATION DATE (25-5-81, LDC) _____ CASE MANAGER LYNDA COURTNEY
PROJECT EXPIRATION DATE (ORD.#970905-A) _____ DWPZ _____ DDZ _____

Director, Planning and Development Review
RELEASE FOR GENERAL COMPLIANCE: _____ ZONING P-NP LI-NP
Rev. 1 _____ Correction 1 _____
Rev. 2 _____ Correction 2 _____
Rev. 3 _____ Correction 3 _____

Final plat must be recorded by the Project Expiration Date, if applicable. Subsequent Site Plans which do not comply with the Code current at the time of filing, and all required Building Permits and/or a notice of construction (if a building permit is not required), must also be approved prior to the Project Expiration Date.

STATE OF TEXAS
DALE P. MURPHY
90614
LICENSED
PROFESSIONAL ENGINEER
05/09/2016

NO.	DATE	REVISION	BY	APVD
DSGN	D Murphy	DR	M Gilliland	CHK	D Murphy	APVD	D Murphy

K·FRIESE + ASSOCIATES
PROJECT ENGINEERING
TBPE Firm #2535

CH2MHILL.
TBPE FIRM NO. 3899

Montopolis Water Reclamation Initiave (WRI)
Storage Reservoir and Pump Station
2711 Montopolis Drive
Austin Water, Austin, Texas

CIVIL

SLOPE MAP

1" = 40'
VERIFY SCALE
BAR IS ONE INCH ON ORIGINAL DRAWING.
0 1"

DATE	MAY 2016
PROJ	472902
DWG	C-3
SHEET	9 of 126

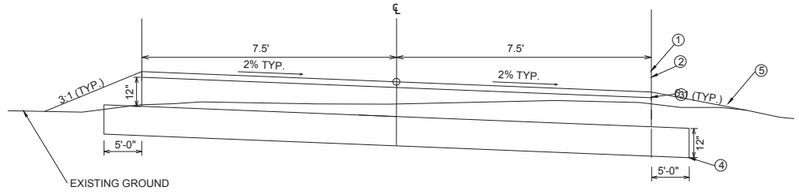

PROPOSED TYPICAL SECTION
15' ACCESS DRIVEWAY

N.T.S.

HORIZONTAL ALIGNMENT DATA

POINT ID	NORTHING	EASTING	STATION
200	10,052,608.22	3,125,647.25	1+00.00
201	10,052,592.97	3,125,676.21	1+32.72

KEY

1. 2" HMAC - TY C - COA ITEM 340S
2. PRIME COAT - COA ITEM 306S
3. 12" FLEXIBLE BASE COA ITEM 260S
4. 12" LIME STABILIZED SUBGRADE COA ITEM 203S
5. 4" TOP SOIL

POINT ID	NORTHING	EASTING	ELEVATION	DESCRIPTION
59	10052633.63	3125674.09	605.80	EDGE OF PAVEMENT
60	10052571.76	3125641.38	607.53	EDGE OF PAVEMENT
62	10052606.60	3125682.47	607.31	EDGE OF PAVEMENT
64	10052587.78	3125695.11	608.13	EDGE OF PAVEMENT
65	10052580.11	3125668.38	607.38	EDGE OF PAVEMENT
66	10052574.33	3125687.96	608.23	EDGE OF PAVEMENT

LEGEND

- 600 — PROPOSED CONTOUR
- W — PROPOSED WATER LINE
- FM — PROPOSED FORCE MAIN
- WW — PROPOSED WASTEWATER LINE
- RW — PROPOSED RECLAIMED WATER LINE
- PROPOSED WATER METER
- EXISTING FIRE HYDRANT
- PROPOSED WATER VALVE
- PROPOSED PAVEMENT
- EXISTING GEOTECHNICAL BORE
- 600 — EXISTING CONTOUR
- W — EXISTING WATER LINE
- WW — EXISTING WASTEWATER LINE
- OE — EXISTING OVERHEAD ELECTRIC
- G — EXISTING GAS LINE
- PROPOSED SWING GATE
- X — PROPOSED CHAINLINK FENCE
- OO — PROPOSED EASEMENT LINE
- EXISTING PROPERTY LINE

0 20' 40'
SCALE 1" : 20'

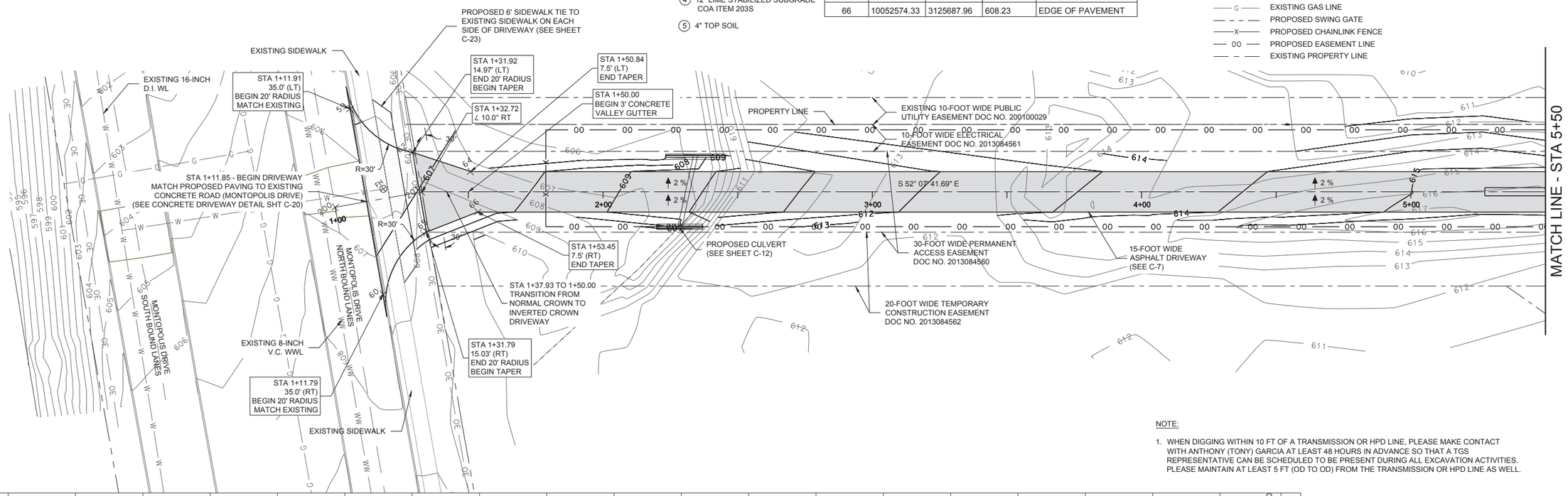

NOTE:

1. WHEN DIGGING WITHIN 10 FT OF A TRANSMISSION OR HPD LINE, PLEASE MAKE CONTACT WITH ANTHONY (TONY) GARCIA AT LEAST 48 HOURS IN ADVANCE SO THAT A TGS REPRESENTATIVE CAN BE SCHEDULED TO BE PRESENT DURING ALL EXCAVATION ACTIVITIES. PLEASE MAINTAIN AT LEAST 5 FT (OD TO OD) FROM THE TRANSMISSION OR HPD LINE AS WELL.

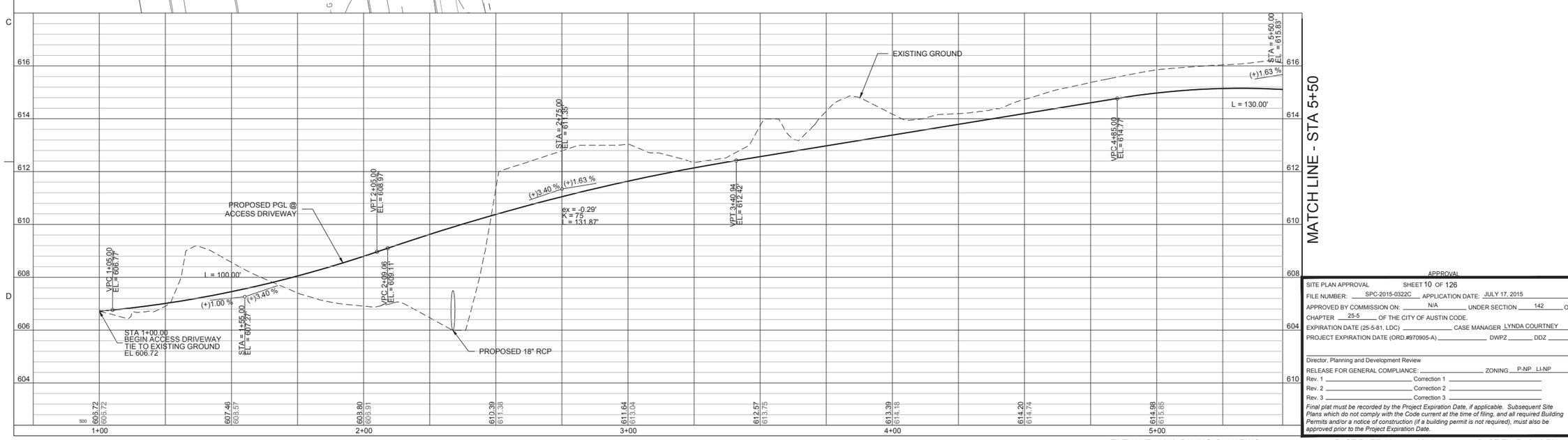

APPROVAL

SITE PLAN APPROVAL SHEET 10 OF 126
FILE NUMBER: SPC-2015-0322C APPLICATION DATE: JULY 17, 2015
APPROVED BY COMMISSION ON: N/A UNDER SECTION 142 OF
CHAPTER 25-5 OF THE CITY OF AUSTIN CODE.
EXPIRATION DATE (25-5-81, LDC) _____ CASE MANAGER LYNDA COURTNEY
PROJECT EXPIRATION DATE (ORD.#970905-A) _____ DWPZ _____ DDZ _____

Director, Planning and Development Review
RELEASE FOR GENERAL COMPLIANCE: _____ ZONING P-NP LI-NP
Rev. 1 _____ Correction 1 _____
Rev. 2 _____ Correction 2 _____
Rev. 3 _____ Correction 3 _____

Final plat must be recorded by the Project Expiration Date, if applicable. Subsequent Site Plans which do not comply with the Code current at the time of filing, and all required Building Permits and/or a notice of construction (if a building permit is not required), must also be approved prior to the Project Expiration Date.

STATE OF TEXAS
DALE P. MURPHY
90614
LICENSED PROFESSIONAL ENGINEER
05/09/2016

NO.	DATE	REVISION	BY	APVD
DSGN	D Murphy	DR M Gilliian	CHK D Murphy	APVD D Murphy

K·FRIESE + ASSOCIATES
Civil and Water Resources Engineering
TBPE Firm #6535

CH2MHILL.
TBPE FIRM NO. 3899

Montopolis Water Reclamation Initiave (WRI)
Storage Reservoir and Pump Station
2711 Montopolis Drive
Austin Water, Austin, Texas

CIVIL

PAVING PLAN 01

1" = 20'
VERIFY SCALE
BAR IS ONE INCH ON ORIGINAL DRAWING.
0 1"

DATE	MAY 2016
PROJ	472902
DWG	C-4
SHEET	10 of 126

FILENAME: 0278_PAVING_PLAN.DWG PLOT DATE: May 11, 2016 PLOT TIME: 3:42 PM SPC-2015-0322C

KEY

1. 2" HMAC - TY C - COA ITEM 340S
2. PRIME COAT - COA ITEM 306S
3. 12" FLEXIBLE BASE COA ITEM 260S
4. 12" LIME STABILIZED SUBGRADE COA ITEM 203S
5. 4" TOP SOIL

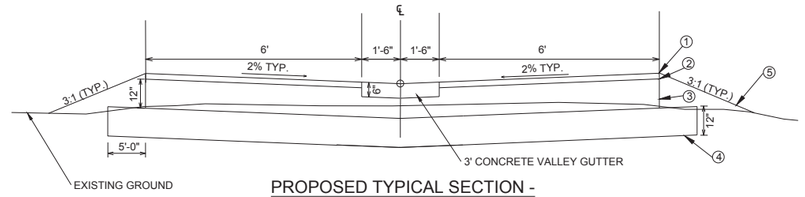

PROPOSED TYPICAL SECTION - VALLEY GUTTER 15' ACCESS DRIVEWAY

N.T.S.

LEGEND

- 600 PROPOSED CONTOUR
- W PROPOSED WATER LINE
- FM PROPOSED FORCE MAIN
- WW PROPOSED WASTEWATER LINE
- RW PROPOSED RECLAIMED WATER LINE
- PROPOSED WATER METER
- EXISTING FIRE HYDRANT
- PROPOSED WATER VALVE
- PROPOSED PAVEMENT
- EXISTING GEOTECHNICAL BORE
- 600 EXISTING CONTOUR
- W EXISTING WATER LINE
- WW EXISTING WASTEWATER LINE
- OE EXISTING OVERHEAD ELECTRIC
- G EXISTING GAS LINE
- X PROPOSED SWING GATE
- OO PROPOSED CHAINLINK FENCE
- PROPOSED EASEMENT LINE
- EXISTING PROPERTY LINE

0 20' 40'

SCALE 1" : 20'

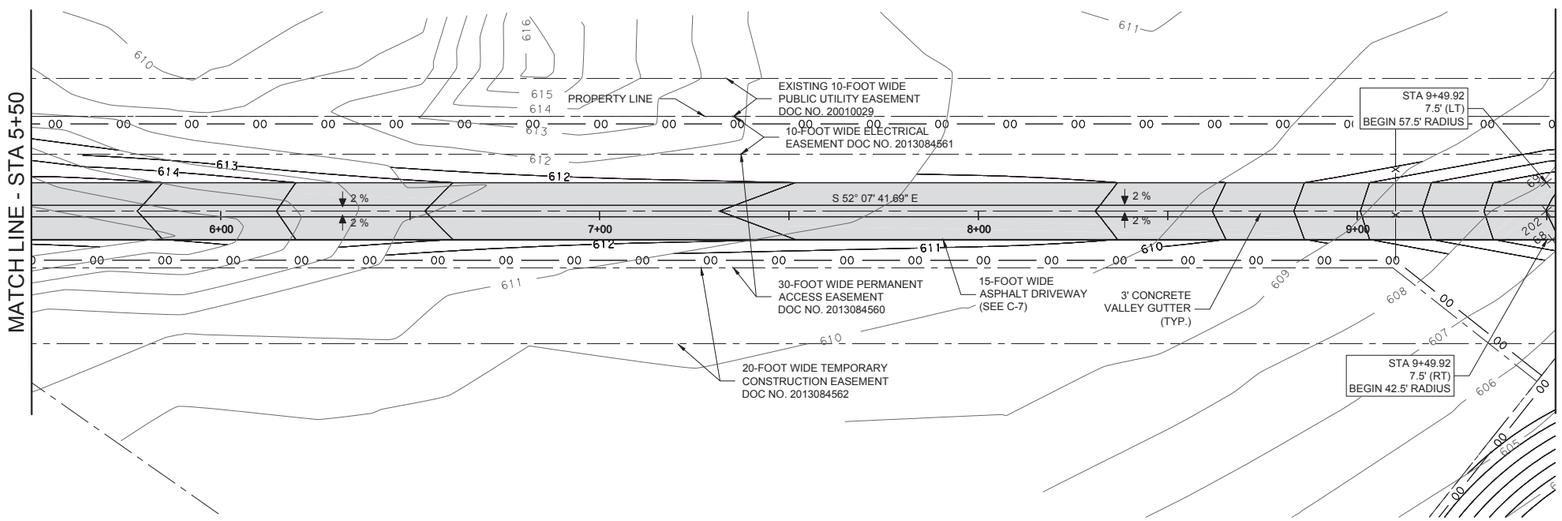

POINT ID	NORTHING	EASTING	ELEVATION	DESCRIPTION
68	10052084.41	3126317.93	605.08	EDGE OF PAVEMENT
69	10052097.22	3126325.90	605.14	EDGE OF PAVEMENT

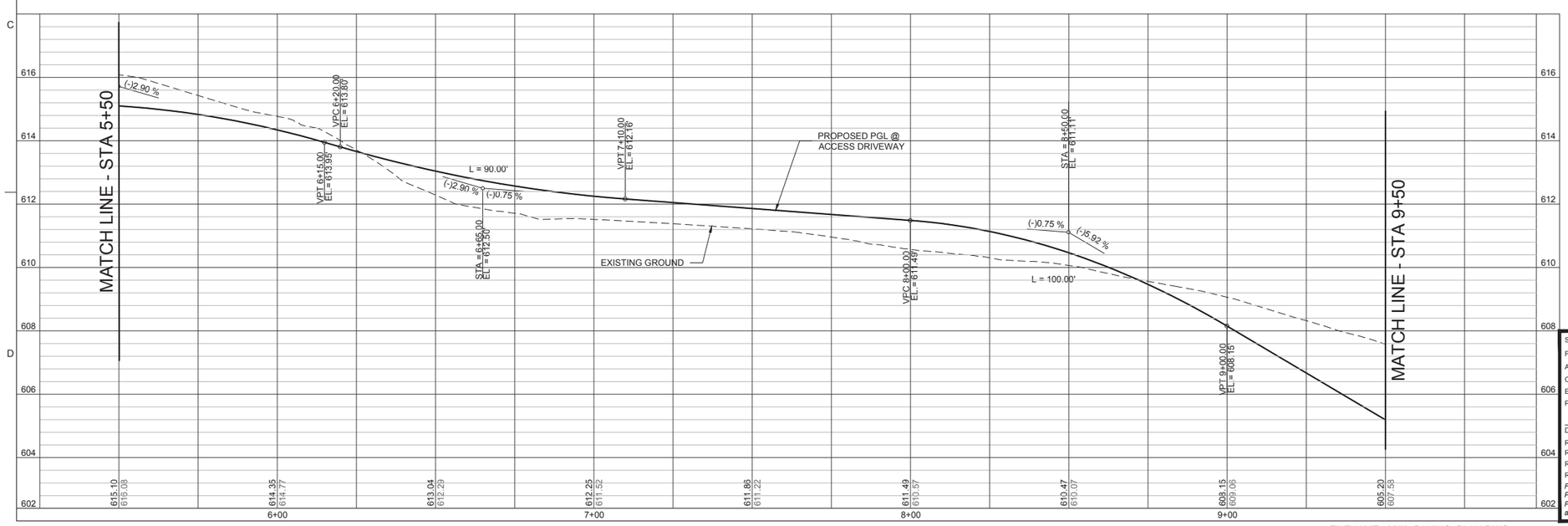

APPROVAL

SITE PLAN APPROVAL SHEET 11 OF 126

FILE NUMBER: SPC-2015-0322C APPLICATION DATE: JULY 17, 2015

APPROVED BY COMMISSION ON: N/A UNDER SECTION 142 OF

CHAPTER 25-5 OF THE CITY OF AUSTIN CODE.

EXPIRATION DATE (25-5-81, LDC) _____ CASE MANAGER LYNDA COURTNEY

PROJECT EXPIRATION DATE (ORD.#970905-A) _____ DWPZ _____ DDZ _____

Director, Planning and Development Review

RELEASE FOR GENERAL COMPLIANCE: _____ ZONING P-NP LI-NP

Rev. 1 _____ Correction 1 _____

Rev. 2 _____ Correction 2 _____

Rev. 3 _____ Correction 3 _____

Final plat must be recorded by the Project Expiration Date, if applicable. Subsequent Site Plans which do not comply with the Code current at the time of filing, and all required Building Permits and/or a notice of construction (if a building permit is not required), must also be approved prior to the Project Expiration Date.

STATE OF TEXAS
DALE P. MURPHY
90614
LICENSED
PROFESSIONAL ENGINEER
05/09/2016

NO.	DATE	REVISION	BY	APVD
DSGN	D Murphy	DR	CHK	D Murphy
		M Gilfillan	D Murphy	APVD

K·FRIESE + ASSOCIATES
FIRM ENGINEERING • SURVEYING
TBPE Firm #6535

CH2MHILL.
TBPE FIRM NO. 3699

Montopolis Water Reclamation Initiave (WRI)
Storage Reservoir and Pump Station
2711 Montopolis Drive
Austin Water, Austin, Texas

CIVIL

PAVING PLAN 02

1" = 20'

VERIFY SCALE

BAR IS ONE INCH ON ORIGINAL DRAWING.
0 1"

DATE	MAY 2016
PROJ	472902
DWG	C-5
SHEET	11 of 126

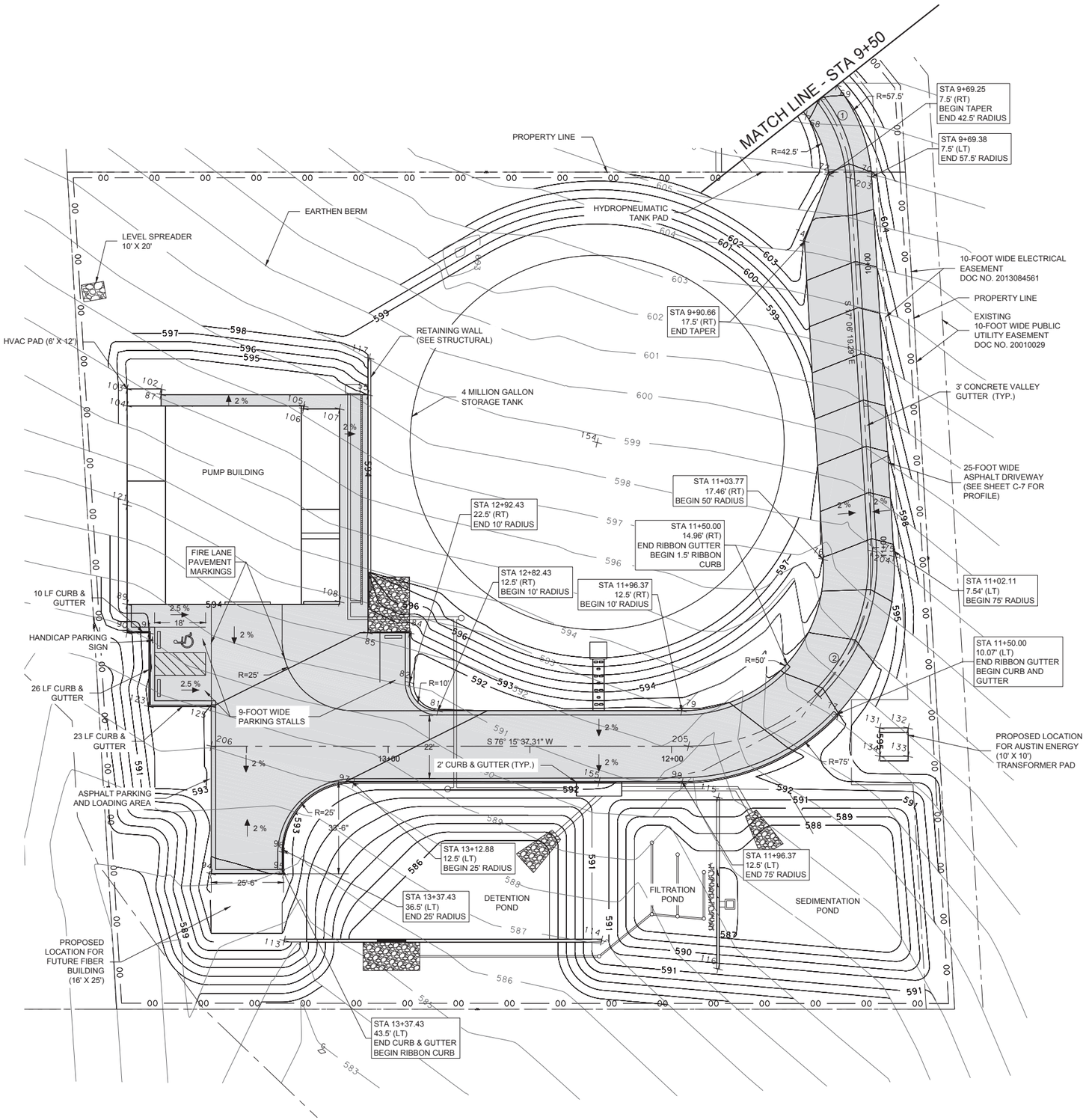

POINTS TABLE

POINT ID	NORTHING	EASTING	ELEVATION	DESCRIPTION
55	10051951.91	3126191.12	593.86	EDGE OF SIDEWALK
68	10052084.41	3126317.93	605.08	EDGE OF PAVEMENT
69	10052097.22	3126325.90	605.14	EDGE OF PAVEMENT
70	10052068.74	3126345.55	603.38	EDGE OF PAVEMENT
72	10052065.77	3126330.75	603.95	EDGE OF PAVEMENT
74	10052041.05	3126327.92	602.83	EDGE OF PAVEMENT
75	10051940.54	3126385.01	595.76	EDGE OF PAVEMENT
76	10051933.61	3126360.98	595.94	EDGE OF PAVEMENT
77	10051881.73	3126378.71	593.58	BACK OF CURB
79	10051869.91	3126325.20	591.72	EDGE OF RIBBON CURB
81	10051849.47	3126241.59	592.17	EDGE OF RIBBON CURB
82	10051856.80	3126229.50	592.47	EDGE OF RIBBON CURB
84	10051873.80	3126225.35	592.71	EDGE OF RIBBON CURB
85	10051870.31	3126211.07	593.00	EDGE OF PAVEMENT
87	10051934.57	3126120.21	593.84	EDGE OF SIDEWALK
89	10051859.84	3126126.13	593.92	EDGE OF ASPHALT AT BUILDING
90	10051850.12	3126128.51	593.92	BACK OF CURB
91	10051851.95	3126135.99	593.88	BACK OF CURB
94	10051774.61	3126177.54	593.17	EDGE OF PAVEMENT
95	10051780.67	3126202.31	593.16	BACK OF CURB
96	10051787.95	3126200.53	593.40	BACK OF CURB
97	10051817.63	3126218.76	592.56	BACK OF CURB
99	10051845.14	3126331.26	591.67	BACK OF CURB
102	10051936.51	3126119.74	593.92	EDGE HVAC PAD
103	10051933.66	3126108.08	593.92	EDGE HVAC PAD
104	10051927.84	3126109.50	593.92	EDGE HVAC PAD
105	10051942.64	3126170.05	593.92	EDGE OF ASPHALT AT BUILDING
106	10051941.67	3126170.29	593.92	EDGE OF ASPHALT AT BUILDING
107	10051944.68	3126182.60	593.92	EDGE OF ASPHALT AT BUILDING
108	10051878.62	3126198.75	593.92	EDGE OF ASPHALT AT BUILDING
110	10051941.67	3126186.68	598.10	TOP OF RETAINING WALL
113	10051757.85	3126208.17	591.00	TOP OF RETAINING WALL
114	10051784.45	3126316.96	591.00	TOP OF RETAINING WALL
115	10051843.25	3126344.88	591.00	TOP OF RETAINING WALL
116	10051784.48	3126359.25	591.00	TOP OF RETAINING WALL
117	10051964.53	3126188.55	598.10	TOP OF RETAINING WALL
118	10051870.43	3126211.56	592.97	PROPOSED GROUND
121	10051893.84	3126117.82	593.92	PROPOSED GROUND AT BUILDING
122	10051927.84	3126109.50	594.00	PROPOSED GROUND
123	10051826.69	3126142.16	593.35	EDGE OF PAVEMENT
125	10051831.92	3126163.53	592.94	BACK OF CURB
131	10051880.61	3126394.52	595.00	PROPOSED GROUND AT BUILDING
132	10051882.98	3126404.23	595.00	PROPOSED GROUND AT BUILDING
133	10051873.27	3126406.61	595.00	PROPOSED GROUND AT BUILDING
134	10051870.89	3126396.89	595.00	PROPOSED GROUND AT BUILDING
154	10051954.71	3126273.72	598.50	CENTER OF TANK
155	10051838.60	3126302.81	591.52	CURB INLET FLOW LINE

① CURVE DATA

P.I. STATION		9+65.70
DELTA	=	35° 01' 22.40" (RT)
DEGREE	=	180° 00' 00.00"
TANGENT	=	15.78
LENGTH	=	19.46
RADIUS	=	50.00
EXTERNAL	=	2.43
LONG CHORD	=	30.09
MID. ORD.	=	2.32
P.C. STATION		9+49.92
P.T. STATION		9+69.38

② CURVE DATA

P.I. STATION		11+70.10
DELTA	=	93° 21' 56.60" (RT)
DEGREE	=	100° 34' 11.01"
TANGENT	=	68.94
LENGTH	=	92.84
RADIUS	=	65
EXTERNAL	=	29.75
LONG CHORD	=	94.58
MID. ORD.	=	20.41
P.C. STATION		11+01.16
P.T. STATION		11+94.00

HORIZONTAL ALIGNMENT DATA

POINT ID	NORTHING	EASTING	STATION
202	10,052,091.30	3,126,321.29	9+49.92
203	10,052,066.54	3,126,338.39	9+69.38
204	10,051,940.58	3,126,377.15	11+01.16
205	10,051,585.33	3,126,330.46	11+94.00
206	10,051,811.27	3,126,138.01	13+92.12

0 20' 40'
SCALE 1" : 20'

LEGEND

600	PROPOSED CONTOUR
W	PROPOSED WATER LINE
FM	PROPOSED FORCE MAIN
WW	PROPOSED WASTEWATER LINE
RW	PROPOSED RECLAIMED WATER LINE
W	PROPOSED WATER METER
	EXISTING FIRE HYDRANT
	PROPOSED WATER VALVE
	PROPOSED PAVEMENT
	EXISTING GEOTECHNICAL BORE
600	EXISTING CONTOUR
W	EXISTING WATER LINE
WW	EXISTING WASTEWATER LINE
OE	EXISTING OVERHEAD ELECTRIC
G	EXISTING GAS LINE
X	PROPOSED SWING GATE
00	PROPOSED CHAINLINK FENCE
	PROPOSED EASEMENT LINE
	EXISTING PROPERTY LINE
	PROPOSED TRENCH DRAIN

Proposed Land Uses	Outdoor Storage/Equipment Servicing
Floor Area	5,250 sq ft
Parking Ratio	1 space / 2,000 sq ft
Number of Spaces Required	2.652
Number of Standard Spaces Provided	2
Number of Handicap Spaces Provided	1

APPROVAL

SITE PLAN APPROVAL SHEET 12 OF 126
FILE NUMBER: SPC-2015-0322C APPLICATION DATE: JULY 17, 2015
APPROVED BY COMMISSION ON: N/A UNDER SECTION 142 OF
CHAPTER 25-5 OF THE CITY OF AUSTIN CODE.
EXPIRATION DATE (25-5-81, LDC) _____ CASE MANAGER LYNDA COURTNEY
PROJECT EXPIRATION DATE (ORD.#970905-A) _____ DWPZ _____ DDZ _____

Director, Planning and Development Review
RELEASE FOR GENERAL COMPLIANCE: _____ ZONING P-NP LI-NP
Rev. 1 _____ Correction 1 _____
Rev. 2 _____ Correction 2 _____
Rev. 3 _____ Correction 3 _____

Final plat must be recorded by the Project Expiration Date, if applicable. Subsequent Site Plans which do not comply with the Code current at the time of filing, and all required Building Permits and/or a notice of construction (if a building permit is not required), must also be approved prior to the Project Expiration Date.

STATE OF TEXAS
DALE P. MURPHY
90614
LICENSED
PROFESSIONAL ENGINEER
05/09/2016

NO.	DATE	REVISION	BY	APVD
DSGN	DR	CHK		
D Murphy	M Gilfillan	D Murphy	D Murphy	D Murphy

K·FRIESE + ASSOCIATES
PUBLIC PROJECT ENGINEERING
TBPE Firm #8535

CH2MHILL.
TBPE FIRM NO. 3699

Montopolis Water Reclamation Initiave (WRI)
Storage Reservoir and Pump Station
2711 Montopolis Drive
Austin Water, Austin, Texas

CIVIL

PAVING PLAN 03

1" = 20'
VERIFY SCALE
BAR IS ONE INCH ON ORIGINAL DRAWING.
0 1"

DATE	MAY 2016
PROJ	472902
DWG	C-6
SHEET	12 of 126

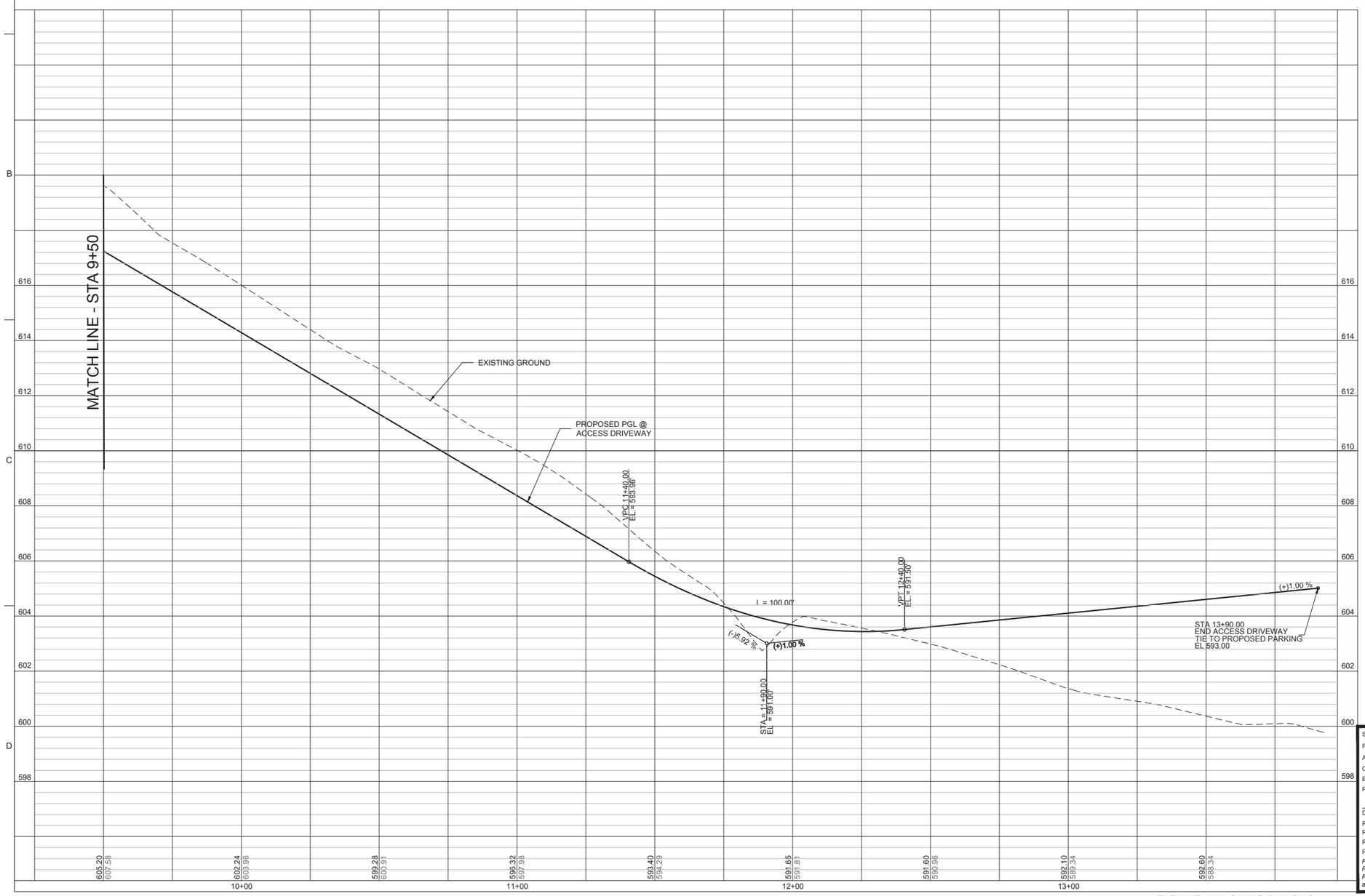

0 20' 40'

SCALE 1" : 20'

LEGEND

—600—	PROPOSED CONTOUR
— W —	PROPOSED WATER LINE
— FM —	PROPOSED FORCE MAIN
— WW —	PROPOSED WASTEWATER LINE
— RW —	PROPOSED RECLAIMED WATER LINE
W	PROPOSED WATER METER
	EXISTING FIRE HYDRANT
	PROPOSED WATER VALVE
	PROPOSED PAVEMENT
	EXISTING GEOTECHNICAL BORE
—600—	EXISTING CONTOUR
— W —	EXISTING WATER LINE
— WW —	EXISTING WASTEWATER LINE
— OE —	EXISTING OVERHEAD ELECTRIC
— G —	EXISTING GAS LINE
—x—	PROPOSED SWING GATE
— OO —	PROPOSED CHAINLINK FENCE
— – —	PROPOSED EASEMENT LINE
— – – —	EXISTING PROPERTY LINE

APPROVAL

SITE PLAN APPROVAL SHEET 13 OF 126

FILE NUMBER: SPC-2015-0322C APPLICATION DATE: JULY 17, 2015

APPROVED BY COMMISSION ON: N/A UNDER SECTION 142 OF

CHAPTER 25-5 OF THE CITY OF AUSTIN CODE.

EXPIRATION DATE (25-5-81, LDC) _____ CASE MANAGER LYNDA COURTNEY

PROJECT EXPIRATION DATE (ORD.#970905-A) _____ DWPZ _____ DDZ _____

Director, Planning and Development Review

RELEASE FOR GENERAL COMPLIANCE: _____ ZONING P-NP LI-NP

Rev. 1 _____ Correction 1 _____

Rev. 2 _____ Correction 2 _____

Rev. 3 _____ Correction 3 _____

Final plat must be recorded by the Project Expiration Date, if applicable. Subsequent Site Plans which do not comply with the Code current at the time of filing, and all required Building Permits and/or a notice of construction (if a building permit is not required), must also be approved prior to the Project Expiration Date.

STATE OF TEXAS
DALE P. MURPHY
90614
LICENSED
PROFESSIONAL ENGINEER
05/09/2016

NO.	DATE	REVISION	BY	APVD
DSGN	D Murphy	DR M Gilliland	CHK D Murphy	APVD D Murphy

K·FRIESE + ASSOCIATES
PROJECT MANAGEMENT ENGINEERING
TBPE Firm #6535

CH2MHILL.
TBPE FIRM NO. 3699

Montopolis Water Reclamation Initiave (WRI)
Storage Reservoir and Pump Station
2711 Montopolis Drive
Austin Water, Austin, Texas

CIVIL

PAVING PLAN 04

1" = 20'

VERIFY SCALE

BAR IS ONE INCH ON ORIGINAL DRAWING.
0 1"

DATE	MAY 2016
PROJ	472902
DWG	C-7
SHEET	13 of 126

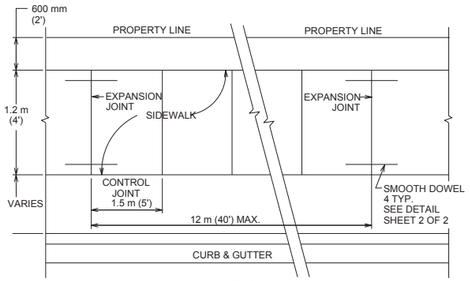

PLAN

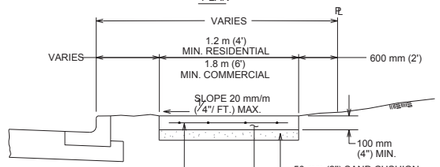

SECTION

CITY OF AUSTIN DEPARTMENT OF PUBLIC WORKS		SIDEWALK	
RECORD COPY SIGNED BY BILL GARDNER	03/26/08 ADOPTED	THE ARCHITECT/ENGINEER ASSUMES RESPONSIBILITY FOR APPROPRIATE USE OF THIS STANDARD.	STANDARD NO. 432S-1 1 OF 3

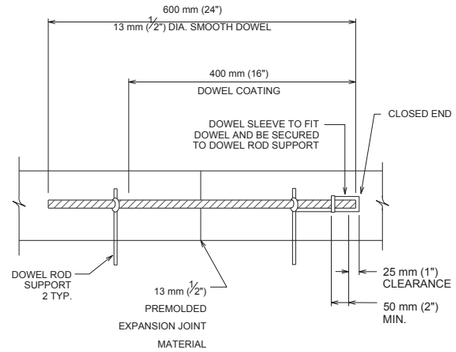

DOWEL DETAIL

CITY OF AUSTIN DEPARTMENT OF PUBLIC WORKS		SIDEWALK	
RECORD COPY SIGNED BY BILL GARDNER	03/26/08 ADOPTED	THE ARCHITECT/ENGINEER ASSUMES RESPONSIBILITY FOR APPROPRIATE USE OF THIS STANDARD.	STANDARD NO. 432S-1 2 OF 3

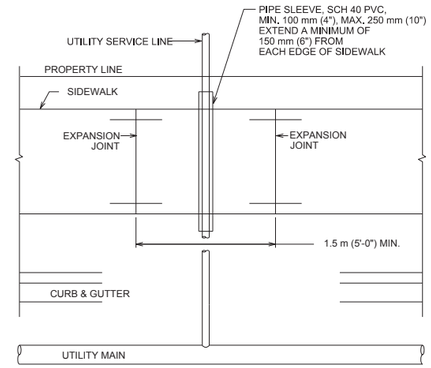

SIDEWALK OVER UTILITY SERVICE LINE PLAN

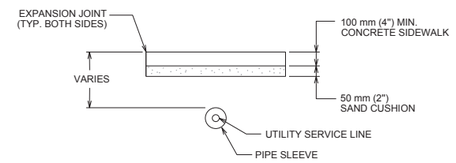

SECTION OF SIDEWALK OVER UTILITY SERVICE LINES

NOTES:
1. THIS STANDARD APPLIES TO THE INSTALLATION OF NEW UTILITIES OR UTILITIES BEING REPLACED BY A NEW LINE.
2. NO JOINTS IN UTILITY SERVICE PIPE TO BE LOCATED INSIDE PVC PIPE SLEEVE.

CITY OF AUSTIN DEPARTMENT OF PUBLIC WORKS		SIDEWALK	
RECORD COPY SIGNED BY BILL GARDNER	03/26/08 ADOPTED	THE ARCHITECT/ENGINEER ASSUMES RESPONSIBILITY FOR APPROPRIATE USE OF THIS STANDARD.	STANDARD NO. 432S-1 3 OF 3

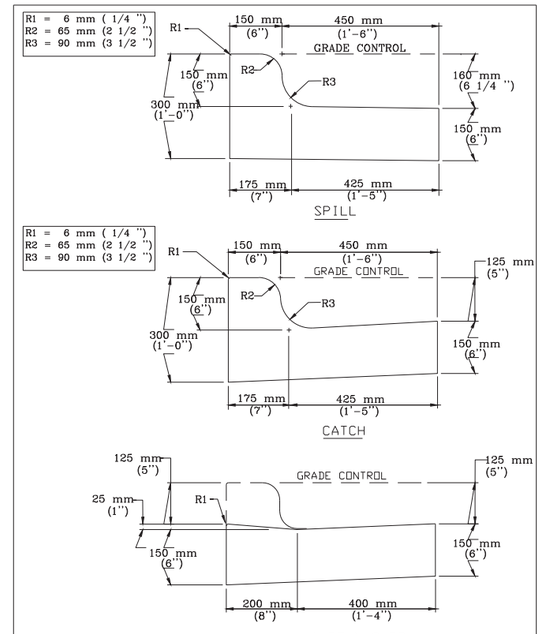

CITY OF AUSTIN DEPARTMENT OF PUBLIC WORKS AND TRANSPORTATION		CURB AND GUTTER SECTION	
RECORD COPY SIGNED BY LINO RIVERA	9/29/99 ADOPTED	THE ARCHITECT/ENGINEER ASSUMES RESPONSIBILITY FOR APPROPRIATE USE OF THIS STANDARD.	STANDARD NO. 430S-1

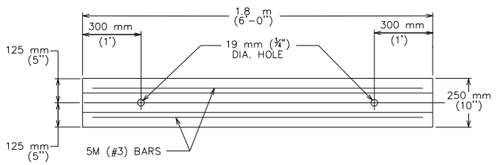

PLAN

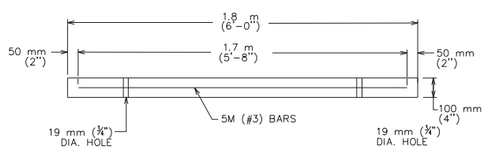

LONGITUDINAL SECTION

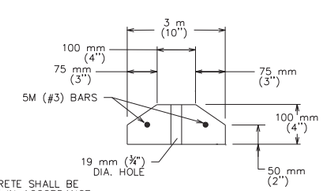

ALL CONCRETE SHALL BE CLASS "A" IN ACCORDANCE WITH ITEM 403S.

CROSS SECTION

CITY OF AUSTIN DEPARTMENT OF PUBLIC WORKS		PARKING LOT BUMPER CURB	
RECORD COPY SIGNED BY BILL GARDNER	3/15/05 ADOPTED	THE ARCHITECT/ENGINEER ASSUMES RESPONSIBILITY FOR APPROPRIATE USE OF THIS STANDARD.	STANDARD NO. 439S-1
APPROVED			

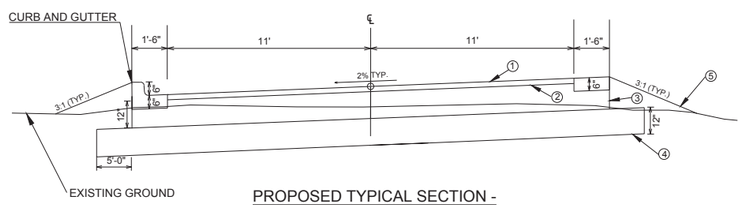

PROPOSED TYPICAL SECTION - RIBBON CURB AND CURB AND GUTTER 25' ACCESS DRIVEWAY
NTS

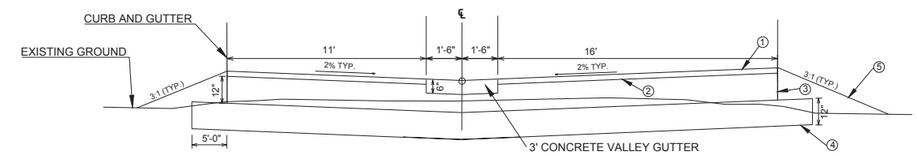

PROPOSED TYPICAL SECTION - VALLEY GUTTER 25' ACCESS DRIVEWAY
NTS

KEY
1. 2" HMAC - TY C - COA ITEM 340S
2. PRIME COAT - COA ITEM 306S
3. 12" FLEXIBLE BASE COA ITEM 260S
4. 12" LIME STABILIZED SUBGRADE COA ITEM 203S
5. 4" TOP SOIL

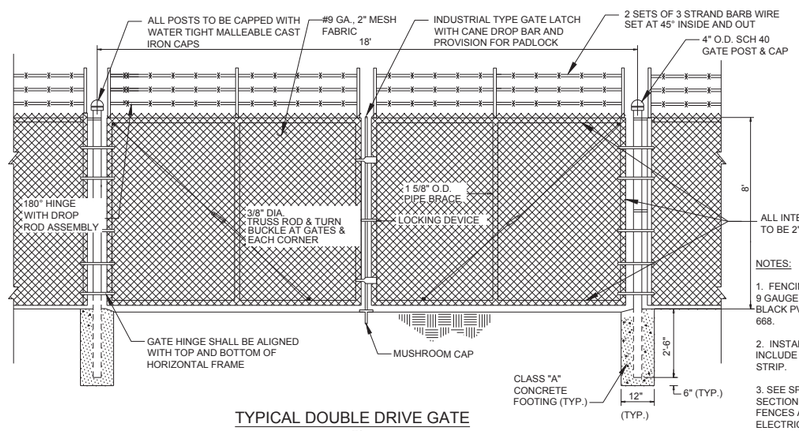

NOTES:
1. FENCING SHALL BE 8-FEET 9 GAUGE STEEL, CLASS 2b, BLACK PVC COATED, ASTM F 668.
2. INSTALLATION SHALL INCLUDE CONCRETE MOW STRIP.
3. SEE SPECIFICATION SECTION 02821 CHAIN LINK FENCES AND GATES AND ELECTRICAL DRAWING E-11, DETAIL 2605-012 FOR FENCE GROUNDING REQUIREMENTS.

TYPICAL DOUBLE DRIVE GATE
NTS

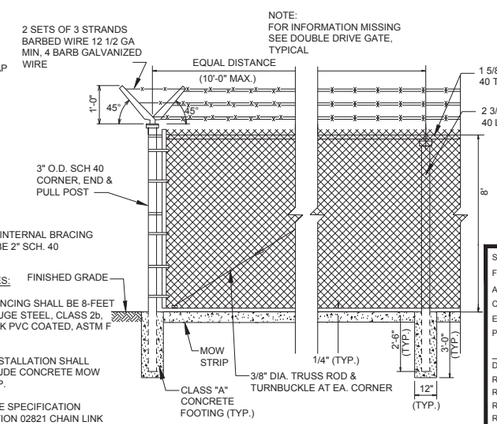

TYPICAL FENCE W/ CORNER & LINE POST
NTS

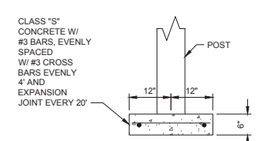

MOW STRIP DETAIL
NTS

APPROVAL

SITE PLAN APPROVAL SHEET 14 OF 126
FILE NUMBER: SPC-2015-0322C APPLICATION DATE: JULY 17, 2015
APPROVED BY COMMISSION ON: N/A UNDER SECTION 142 OF
CHAPTER 25-5 OF THE CITY OF AUSTIN CODE.
EXPIRATION DATE (25-5-81, LDC) _____ CASE MANAGER LYNDA COURTNEY
PROJECT EXPIRATION DATE (ORD.#970905-A) _____ DWPZ _____ DDZ _____

Director, Planning and Development Review
RELEASE FOR GENERAL COMPLIANCE: _____ ZONING P-NP LI-NP
Rev. 1 _____ Correction 1 _____
Rev. 2 _____ Correction 2 _____
Rev. 3 _____ Correction 3 _____
Final plat must be recorded by the Project Expiration Date, if applicable. Subsequent Site Plans which do not comply with the Code current at the time of filing, and all required Building Permits and/or a notice of construction (if a building permit is not required), must also be approved prior to the Project Expiration Date.

STATE OF TEXAS
DALE P. MURPHY
90614
LICENSED
PROFESSIONAL ENGINEER
05/09/2016

NO.	DATE	REVISION	BY	APVD
DSGN	DR	CHK	APVD	
D Murphy	M Gilfillan	D Murphy	D Murphy	D Murphy

K FRIESE + ASSOCIATES
PROFESSIONAL ENGINEERS
TBPE Firm #3535

Montopolis Water Reclamation Initiave (WRI)
Storage Reservoir and Pump Station
2711 Montopolis Drive
Austin Water, Austin, Texas

CH2MHILL.
TBPE FIRM NO. 3699

CIVIL

TYPICAL DETAILS

VERIFY SCALE
BAR IS ONE INCH ON ORIGINAL DRAWING.
0 1"

DATE	MAY 2016
PROJ	472902
DWG	C-8
SHEET	14 of 126

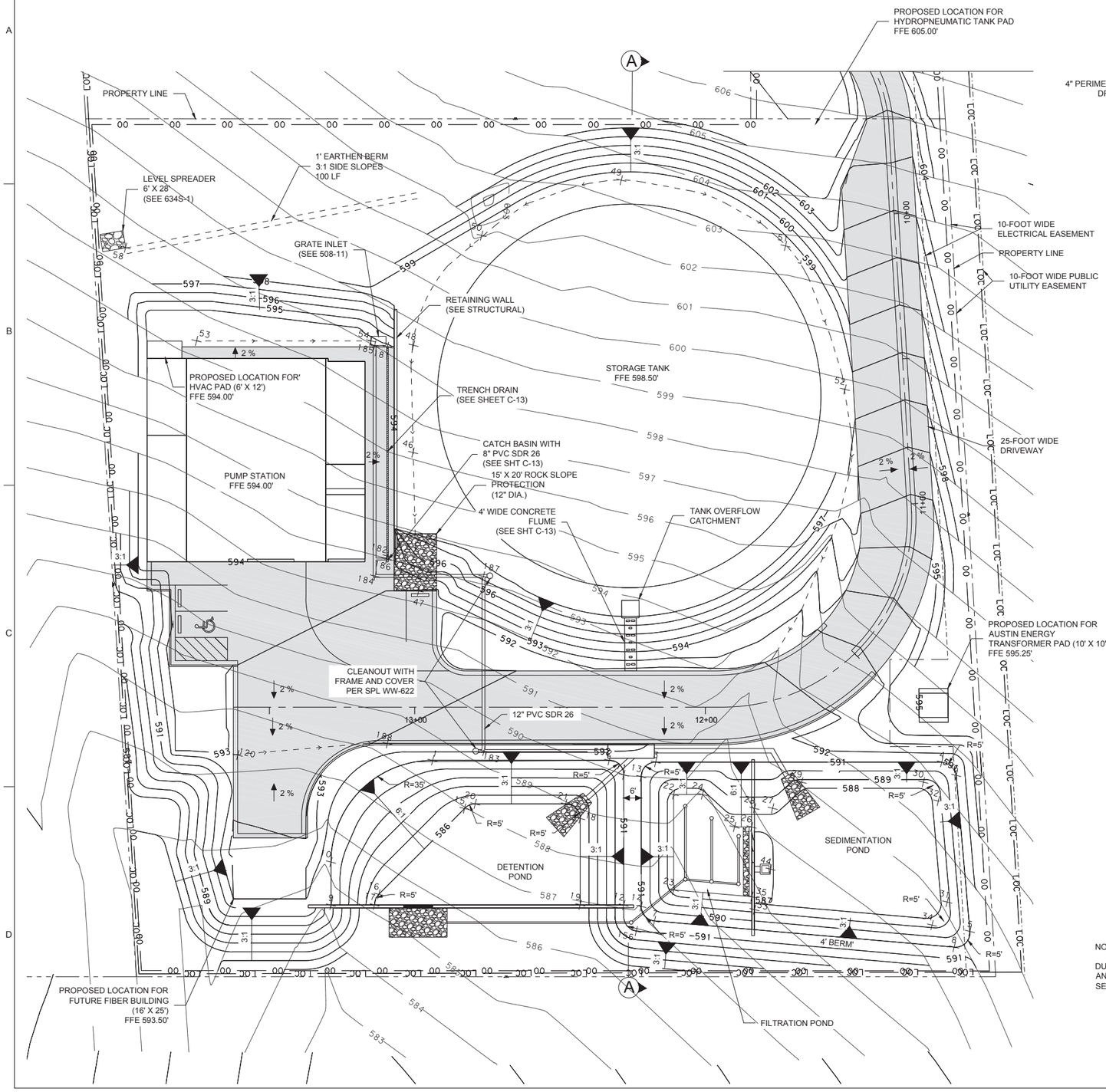

NOTES

1. REFER TO STRUCTURAL PLANS, DETAILS AND SPECIFICATIONS FOR OVEREXCAVATION AND STRUCTURAL FILL REQUIREMENTS AT TANK AND PUMP STATION.
2. EXCAVATION RAMPS SHALL BE CONSTRUCTED OUTSIDE THE AREAS REQUIRING STRUCTURAL FILL.

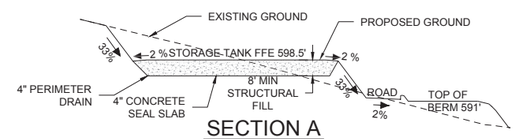

SECTION A

NTS

0 20' 40'

SCALE 1" : 20'

LEGEND

600	PROPOSED CONTOUR
W	PROPOSED WATER LINE
FM	PROPOSED FORCE MAIN
WW	PROPOSED WASTEWATER LINE
RW	PROPOSED RECLAIMED WATER LINE
W	PROPOSED WATER METER
	PROPOSED FIRE HYDRANT
	PROPOSED WATER VALVE
	PROPOSED PAVEMENT
	EXISTING GEOTECHNICAL BORE
600	EXISTING CONTOUR
W	EXISTING WATER LINE
WW	EXISTING WASTEWATER LINE
OE	EXISTING OVERHEAD ELECTRIC
X	EXISTING WIRE FENCE
OO	PROPOSED CHAINLINK FENCE
	PROPOSED EASEMENT LINE
	EXISTING PROPERTY LINE
LOC	PROPOSED LIMITS OF CONSTRUCTION
	PROPOSED TRENCH DRAIN

POINTS TABLE

POINT ID	NORTHING	EASTING	ELEVATION	DESCRIPTION
1	10051816.85	3126237.83	591.00	TOP OF POND
2	10051831.28	3126296.87	591.00	TOP OF POND
3	10051834.48	3126312.56	591.00	TOP OF POND
4	10051857.86	3126408.16	591.00	TOP OF POND
5	10051803.57	3126431.40	591.00	TOP OF POND
6	10051854.61	3126414.08	591.00	TOP OF POND
7	10051781.29	3126325.11	591.00	TOP OF POND
8	10051797.02	3126427.42	591.00	TOP OF POND
9	10051760.15	3126215.66	591.00	TOP OF POND
10	10051774.53	3126212.15	591.00	TOP OF POND
11	10051827.61	3126302.91	591.00	TOP OF POND
12	10051784.09	3126313.55	591.00	TOP OF POND
13	10051784.09	3126308.89	591.00	TOP OF POND
14	10051785.05	3126319.50	591.00	TOP OF POND
15	10051803.34	3126252.42	586.00	BOTTOM OF POND
16	10051767.66	3126230.78	586.00	BOTTOM OF POND
17	10051763.78	3126230.20	586.00	BOTTOM OF POND
18	10051809.48	3126291.90	586.00	BOTTOM OF POND
19	10051780.62	3126298.96	586.00	BOTTOM OF POND
20	10051805.75	3126255.61	586.00	BOTTOM OF POND
21	10051813.15	3126285.86	586.00	BOTTOM OF POND
22	10051825.10	3126321.19	587.28	BOTTOM OF POND
23	10051793.20	3126328.99	587.28	BOTTOM OF POND
24	10051827.46	3126330.84	587.28	BOTTOM OF POND
25	10051819.24	3126344.19	587.28	BOTTOM OF POND
26	10051820.63	3126349.89	587.28	BOTTOM OF POND
27	10051828.60	3126355.41	588.70	BOTTOM OF POND
28	10051827.12	3126349.33	588.70	BOTTOM OF POND
29	10051839.71	3126362.98	588.70	BOTTOM OF POND
30	10051849.65	3126403.66	588.70	BOTTOM OF POND
31	10051811.51	3126421.42	588.70	BOTTOM OF POND
32	10051844.58	3126410.20	588.70	BOTTOM OF POND
33	10051793.26	3126357.61	588.70	BOTTOM OF POND
34	10051802.59	3126418.24	588.70	BOTTOM OF POND
35	10051797.34	3126355.68	587.28	BOTTOM OF POND
44	10051808.08	3126359.65	586.94	BOTTOM OF POND/INLET FLOW LINE
46	10051918.64	3126207.96	597.30	BOTTOM OF DRAINAGE SWALE
47	10051872.32	3126219.29	592.83	BOTTOM OF DRAINAGE SWALE
48	10051954.71	3126198.72	597.90	BOTTOM OF DRAINAGE SWALE
49	10052026.89	3126253.35	598.38	BOTTOM OF DRAINAGE SWALE
50	10051996.29	3126211.30	598.12	BOTTOM OF DRAINAGE SWALE
51	10052018.13	3126313.76	598.00	BOTTOM OF DRAINAGE SWALE
52	10051975.13	3126345.89	597.70	BOTTOM OF DRAINAGE SWALE
53	10051937.78	3126124.58	593.70	BOTTOM OF DRAINAGE SWALE
54	10051952.02	3126182.90	593.40	DROP INLET TOP
58	10051957.37	3126087.35	597.00	TOP OF BERM
118	10051870.43	3126211.56	592.97	PROPOSED GROUND
120	10051802.65	3126172.23	592.54	CURB GUTTER FLOW LINE
181	10051951.37	3126188.93	593.67	TOP OF TRENCH DRAIN
182	10051881.43	3126206.03	592.77	TRENCH DRAIN FLOW LINE INTO CATCH BASIN
183	10051824.27	3126254.11	588.47	12-INCH PVC FLOW LINE
184	10051873.81	3126203.37	589.66	12-INCH PVC FLOW LINE
185	10051950.78	3126184.53	590.90	12-INCH PVC FLOW LINE
186	10051880.36	3126206.01	591.80	8-INCH PVC FLOW LINE
187	10051882.56	3126239.80	589.07	12-INCH PVC FLOW LINE
188	10051817.63	3126218.76	592.16	CURB GUTTER FLOW LINE

NOTE:

DURING OVER-EXCAVATION AND SELECT FILL EMBANKMENT OPERATIONS, ANY CONSTRUCTION RAMPS SHALL BE CONSTRUCTED OUTSIDE OF THE SELECT FILL AREA.

APPROVAL

SITE PLAN APPROVAL SHEET 15 OF 126

FILE NUMBER: SPC-2015-0322C APPLICATION DATE: JULY 17, 2015

APPROVED BY COMMISSION ON: N/A UNDER SECTION 142 OF

CHAPTER 25-5 OF THE CITY OF AUSTIN CODE.

EXPIRATION DATE (25-5-81, LDC) _____ CASE MANAGER LYNDA COURTNEY

PROJECT EXPIRATION DATE (ORD.#970905-A) _____ DWPZ _____ DDZ _____

Director, Planning and Development Review

RELEASE FOR GENERAL COMPLIANCE: _____ ZONING P-NP LI-NP

Rev. 1 _____ Correction 1 _____

Rev. 2 _____ Correction 2 _____

Rev. 3 _____ Correction 3 _____

Final plat must be recorded by the Project Expiration Date, if applicable. Subsequent Site Plans which do not comply with the Code current at the time of filing, and all required Building Permits and/or a notice of construction (if a building permit is not required), must also be approved prior to the Project Expiration Date.

STATE OF TEXAS
DALE P. MURPHY
90614
LICENSED
PROFESSIONAL ENGINEER
05/09/2016

NO.	DATE	REVISION	BY	APVD
DSGN	D Murphy	DR	CHK	D Murphy
		M Gilliland	D Murphy	D Murphy

K·FRIESE + ASSOCIATES
PROFESSIONAL ENGINEERING
TBPE Firm #2535

CH2MHILL.
TBPE FIRM NO. 3699

Montopolis Water Reclamation Initiave (WRI)
Storage Reservoir and Pump Station
2711 Montopolis Drive
Austin Water, Austin, Texas

CIVIL

SITE GRADING PLAN

1" = 20'

VERIFY SCALE

BAR IS ONE INCH ON ORIGINAL DRAWING.
0 1"

DATE	MAY 2016
PROJ	472902
DWG	C-9
SHEET	15 of 126

DRAINAGE BASIN/NODE	AREA (ac)	EXISTING PEAK FLOW (cfs) 2-YEAR	5-YEAR	10-YEAR	25-YEAR	50-YEAR	100-YEAR
EX-A1	5.76	6.5	12.6	17.2	23.7	29.0	34.7
EX-A2	10.24	6.0	14.5	21.6	32.3	41.4	51.6
EX-A3	3.84	3.5	7.2	10.2	14.5	17.9	21.7
POI-1	19.84	16.0	34.2	48.8	70.3	88.0	107.7
POI-2	14.08	9.4	21.6	31.7	46.6	59.1	73.0
EX-B1	9.60	10.1	20.4	28.6	40.4	50.1	60.7
POI-3	9.60	10.1	20.4	28.6	40.4	50.1	60.7

CURVE NUMBER CALCULATIONS

AREA ID	AREA (ac)	LAND USE	CN	(ac)	CN	IC (ac)	IC (%)
EX-A1	5.68	WOODS (B)	60		77	0.00	0.0%
		WOODS (D)	79	4.20			
		BRUSH (B)	48				
		BRUSH (D)	73	1.48			
EX-A2	9.97	WOODS (B)	60	8.69	62	0.92	9.2%
		WOODS (D)	79	0.91			
		BRUSH (B)	48				
		BRUSH (D)	73	0.36			
EX-A3	3.53	WOODS (B)	60	1.03	73	0.00	0.0%
		WOODS (D)	79	2.31			
		BRUSH (B)	48				
		BRUSH (D)	73	0.20			
EX-B1	9.48	WOODS (B)	60	3.10	70	0.98	10.3%
		WOODS (D)	79	1.91			
		BRUSH (B)	48				
		BRUSH (D)	73	4.47			

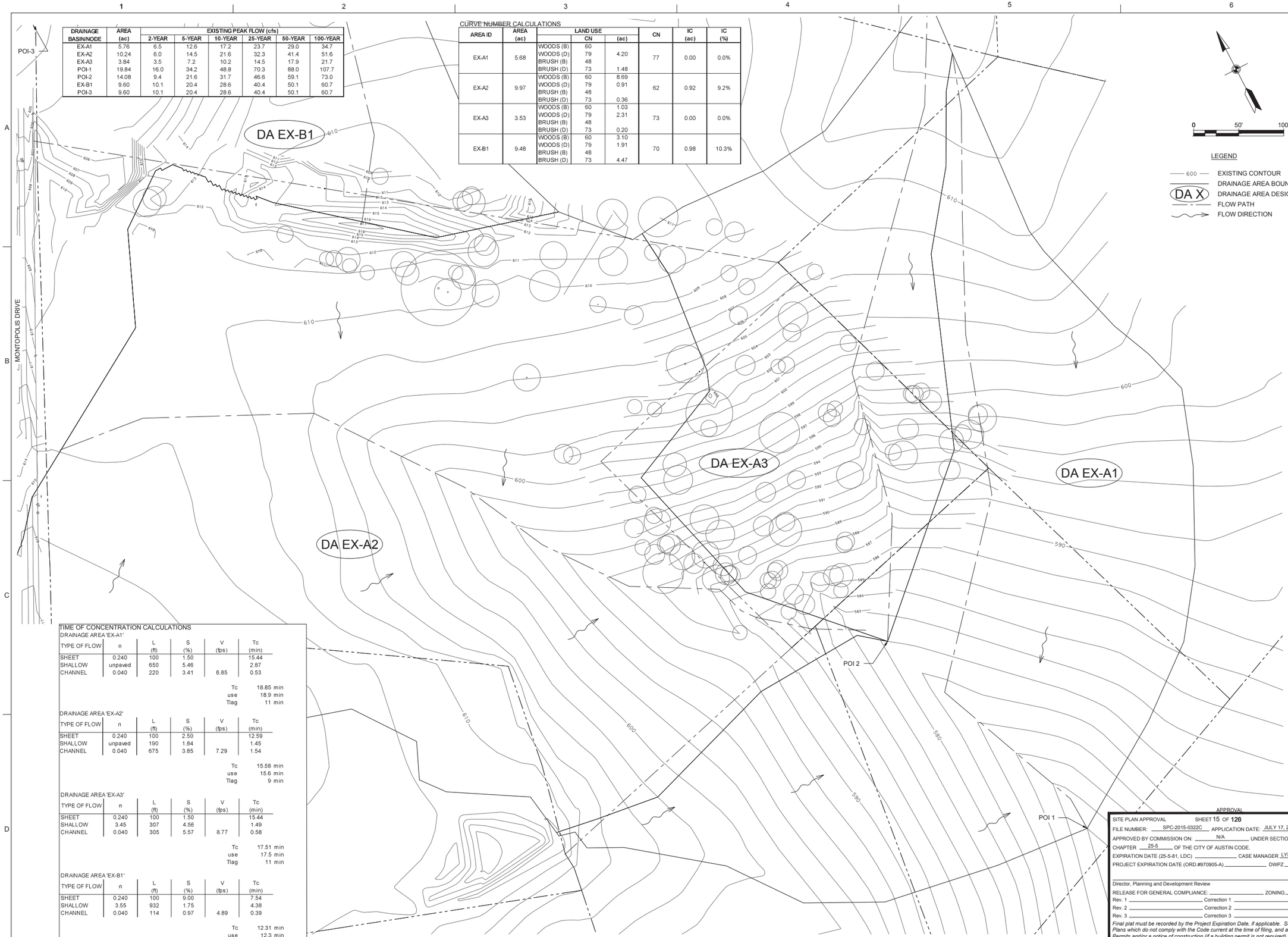

TIME OF CONCENTRATION CALCULATIONS

DRAINAGE AREA 'EX-A1'

TYPE OF FLOW	n	L (ft)	S (%)	V (fps)	Tc (min)
SHEET	0.240	100	1.50		15.44
SHALLOW	unpaved	650	5.46		2.87
CHANNEL	0.040	220	3.41	6.85	0.53

Tc 18.85 min
use 18.9 min
Tlag 11 min

DRAINAGE AREA 'EX-A2'

TYPE OF FLOW	n	L (ft)	S (%)	V (fps)	Tc (min)
SHEET	0.240	100	2.50		12.59
SHALLOW	unpaved	190	1.84		1.45
CHANNEL	0.040	675	3.85	7.29	1.54

Tc 15.58 min
use 15.6 min
Tlag 9 min

DRAINAGE AREA 'EX-A3'

TYPE OF FLOW	n	L (ft)	S (%)	V (fps)	Tc (min)
SHEET	0.240	100	1.50		15.44
SHALLOW	3.45	307	4.56		1.49
CHANNEL	0.040	305	5.57	8.77	0.58

Tc 17.51 min
use 17.5 min
Tlag 11 min

DRAINAGE AREA 'EX-B1'

TYPE OF FLOW	n	L (ft)	S (%)	V (fps)	Tc (min)
SHEET	0.240	100	9.00		7.54
SHALLOW	3.55	932	1.75		4.38
CHANNEL	0.040	114	0.97	4.89	0.39

Tc 12.31 min
use 12.3 min
Tlag 7 min

APPROVAL

SITE PLAN APPROVAL SHEET 15 OF 126
FILE NUMBER: SPC-2015-0322C APPLICATION DATE: JULY 17, 2015
APPROVED BY COMMISSION ON: N/A UNDER SECTION 142 OF
CHAPTER 25-5 OF THE CITY OF AUSTIN CODE.
EXPIRATION DATE (25-5-81, LDC) _____ CASE MANAGER LYNDA COURTNEY
PROJECT EXPIRATION DATE (ORD.#970905-A) _____ DWPZ _____ DDZ _____

Director, Planning and Development Review
RELEASE FOR GENERAL COMPLIANCE: _____ ZONING P-NP LI-NP
Rev. 1 _____ Correction 1 _____
Rev. 2 _____ Correction 2 _____
Rev. 3 _____ Correction 3 _____

Final plat must be recorded by the Project Expiration Date, if applicable. Subsequent Site Plans which do not comply with the Code current at the time of filing, and all required Building Permits and/or a notice of construction (if a building permit is not required), must also be approved prior to the Project Expiration Date.

STATE OF TEXAS
DALE P. MURPHY
90614
LICENSED
PROFESSIONAL ENGINEER
05/09/2016

NO.	DATE	REVISION	BY	APVD
DSGN	D Murphy	DR	CHK	APVD
		M Gilliilan	D Murphy	D Murphy

K·FRIESE + ASSOCIATES
TBPE Firm #6535

CH2MHILL.
TBPE FIRM NO. 3899

Montopolis Water Reclamation Initiave (WRI)
Storage Reservoir and Pump Station
2711 Montopolis Drive
Austin Water, Austin, Texas

CIVIL

EXISTING DRAINAGE AREA MAP

1" = 50'
VERIFY SCALE
BAR IS ONE INCH ON ORIGINAL DRAWING.
0 1"

DATE	MAY 2016
PROJ	472902
DWG	C-10
SHEET	16 of 126

DRAINAGE BASIN/NODE	AREA (ac)	PROPOSED PEAK FLOW (cfs) 2-YEAR	5-YEAR	10-YEAR	25-YEAR	50-YEAR	100-YEAR
PR-A1	5.76	6.5	12.6	17.2	23.7	29.0	34.7
PR-A2	9.60	5.2	13.0	19.7	29.7	38.2	47.7
PR-A3	3.84	5.1	9.1	12.1	16.5	20.1	23.9
POI-1	19.20	14.4	29.4	41.2	58.3	72.2	87.5
POI-2	13.44	8.0	16.8	24.1	34.6	43.2	52.9
PR-B1	8.32	9.4	18.5	25.7	36.0	44.4	53.7
PR-B2	0.64	0.8	1.5	2.0	2.8	3.5	4.3
POI-3	8.96	10.1	19.9	27.6	38.8	48.0	58.0

CURVE NUMBER CALCULATIONS

AREA ID	AREA (ac)	LAND USE	CN	(ac)	CN	IC (ac)	IC (%)
PR-A1	5.60	WOODS (B)	60	0.00	77	0.00	0.0%
		WOODS (D)	79	4.13			
		BRUSH (B)	48	0.00			
		BRUSH (D)	73	1.47			
PR-A2	9.71	WOODS (B)	60	8.43	62	0.68	7.0%
		WOODS (D)	79	0.91			
		BRUSH (B)	48	0.00			
		BRUSH (D)	73	0.36			
PR-A3	3.81	WOODS (B)	60	1.11	73	0.93	24.4%
		WOODS (D)	79	2.50			
		BRUSH (B)	48	0.00			
		BRUSH (D)	73	0.20			
PR-B1	8.61	WOODS (B)	60	2.26	71	0.99	11.5%
		WOODS (D)	79	1.88			
		BRUSH (B)	48	0.00			
		BRUSH (D)	73	4.47			
PR-B2	0.94	WOODS (B)	60	0.85	62	0.25	26.9%
		WOODS (D)	79	0.09			
		BRUSH (B)	48	0.00			
		BRUSH (D)	73	0.00			

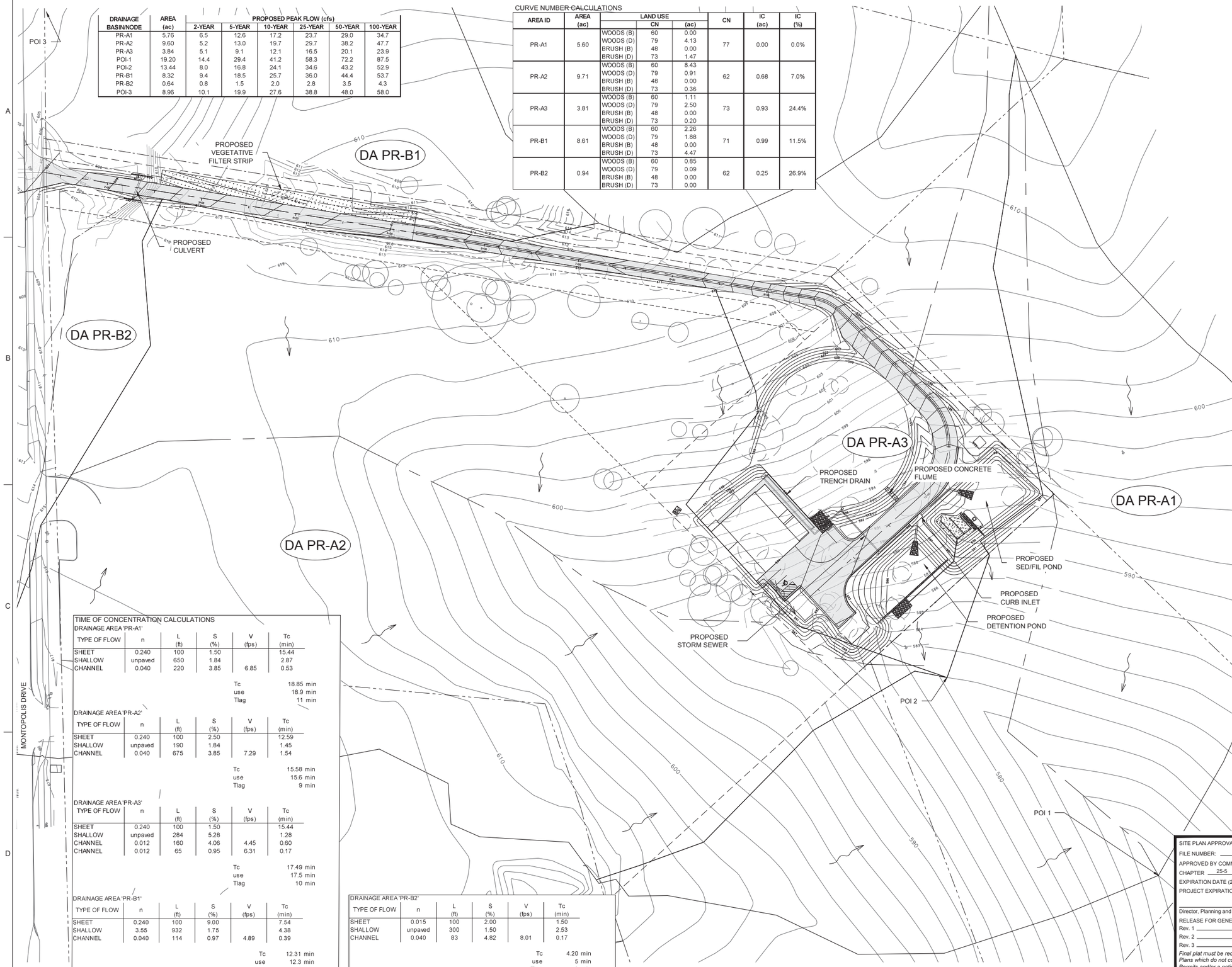

TIME OF CONCENTRATION CALCULATIONS

DRAINAGE AREA 'PR-A1'

TYPE OF FLOW	n	L (ft)	S (%)	V (fps)	Tc (min)
SHEET	0.240	100	1.50		15.44
SHALLOW	unpaved	650	1.84		2.87
CHANNEL	0.040	220	3.85	6.85	0.53
				Tc	18.85 min
				use	18.9 min
				Tlag	11 min

DRAINAGE AREA 'PR-A2'

TYPE OF FLOW	n	L (ft)	S (%)	V (fps)	Tc (min)
SHEET	0.240	100	2.50		12.59
SHALLOW	unpaved	190	1.84		1.45
CHANNEL	0.040	675	3.85	7.29	1.54
				Tc	15.58 min
				use	15.6 min
				Tlag	9 min

DRAINAGE AREA 'PR-A3'

TYPE OF FLOW	n	L (ft)	S (%)	V (fps)	Tc (min)
SHEET	0.240	100	1.50		15.44
SHALLOW	unpaved	284	5.28		1.28
CHANNEL	0.012	160	4.06	4.45	0.60
CHANNEL	0.012	65	0.95	6.31	0.17
				Tc	17.49 min
				use	17.5 min
				Tlag	10 min

DRAINAGE AREA 'PR-B1'

TYPE OF FLOW	n	L (ft)	S (%)	V (fps)	Tc (min)
SHEET	0.240	100	9.00		7.54
SHALLOW	3.55	932	1.75		4.38
CHANNEL	0.040	114	0.97	4.89	0.39
				Tc	12.31 min
				use	12.3 min
				Tlag	7 min

DRAINAGE AREA 'PR-B2'

TYPE OF FLOW	n	L (ft)	S (%)	V (fps)	Tc (min)
SHEET	0.015	100	2.00		1.50
SHALLOW	unpaved	300	1.50		2.53
CHANNEL	0.040	83	4.82	8.01	0.17
				Tc	4.20 min
				use	5 min
				Tlag	3 min

0 50' 100'

LEGEND

- 600 — EXISTING CONTOUR
- 600 — PROPOSED CONTOUR
- DRAINAGE AREA BOUNDARY
- DA X — DRAINAGE AREA DESIGNATION
- FLOW PATH
- FLOW DIRECTION

NOTES:

1. UPON COMPLETION OF THE PROPOSED SITE IMPROVEMENTS, THE DESIGN ENGINEER SHALL CERTIFY IN WRITING THAT THE PROPOSED DETENTION POND AND FILTRATION FACILITIES WERE CONSTRUCTED IN CONFORMANCE WITH THE APPROVED PLANS.
2. CONTRACTOR SHALL CALL ONE CALL CENTER (1-800-344-8377) FOR UTILITY LOCATIONS PRIOR TO ANY WORK IN CITY EASEMENTS OR STREET R.O.W.

FLOODPLAIN NOTE:
THIS PROJECT IS LOCATED IN UNSHADED ZONE X AS DEPICTED ON TRAVIS COUNTY FIRM PANEL NO. 48453C0605H DATED SEPTEMBER 26, 2008.

HMS ID	DESCRIPTION	2-YR
POI-1	EXISTING (CFS)	15.95
	PROPOSED (CFS)	14.44
	DIFFERENCE (CFS)	-1.51
	DIFFERENCE (%)	-9.47%
POI-2	EXISTING (CFS)	9.43
	PROPOSED (CFS)	7.96
	DIFFERENCE (CFS)	-1.47
	DIFFERENCE (%)	-15.59%
POI-3	EXISTING (CFS)	10.08
	PROPOSED (CFS)	10.07
	DIFFERENCE (CFS)	-0.01
	DIFFERENCE (%)	-0.10%

MEETS THE REQUIREMENTS OF ECM 1.6.8(B).

APPROVAL

SITE PLAN APPROVAL SHEET 17 OF 126
FILE NUMBER: SPC-2015-0322C APPLICATION DATE: JULY 17, 2015
APPROVED BY COMMISSION ON: N/A UNDER SECTION 142 OF
CHAPTER 25-5 OF THE CITY OF AUSTIN CODE.
EXPIRATION DATE (25-5-81, LDC) _____ CASE MANAGER LYNDA COURTNEY
PROJECT EXPIRATION DATE (ORD.#970905-A) _____ DWPZ _____ DDZ _____

Director, Planning and Development Review
RELEASE FOR GENERAL COMPLIANCE: _____ ZONING P-NP LI-NP
Rev. 1 _____ Correction 1 _____
Rev. 2 _____ Correction 2 _____
Rev. 3 _____ Correction 3 _____

Final plat must be recorded by the Project Expiration Date, if applicable. Subsequent Site Plans which do not comply with the Code current at the time of filing, and all required Building Permits and/or a notice of construction (if a building permit is not required), must also be approved prior to the Project Expiration Date.

STATE OF TEXAS
DALE P. MURPHY
90614
LICENSED
PROFESSIONAL ENGINEER
05/09/2016

NO.	DATE	REVISION	BY	APVD
DSGN	D Murphy	DR M Gilliland	CHK D Murphy	APVD D Murphy

K·FRIESE + ASSOCIATES
PROFESSIONAL ENGINEERING
TBPE Firm #535

Montopolis Water Reclamation Initiave (WRI)
Storage Reservoir and Pump Station
2711 Montopolis Drive
Austin Water, Austin, Texas

CH2MHILL.
TBPE FIRM NO. 3699

CIVIL

PROPOSED DRAINAGE AREA MAP

1" = 50'
VERIFY SCALE
BAR IS ONE INCH ON ORIGINAL DRAWING.
0 1"

DATE	MAY 2016
PROJ	472902
DWG	C-11
SHEET	17 of 126

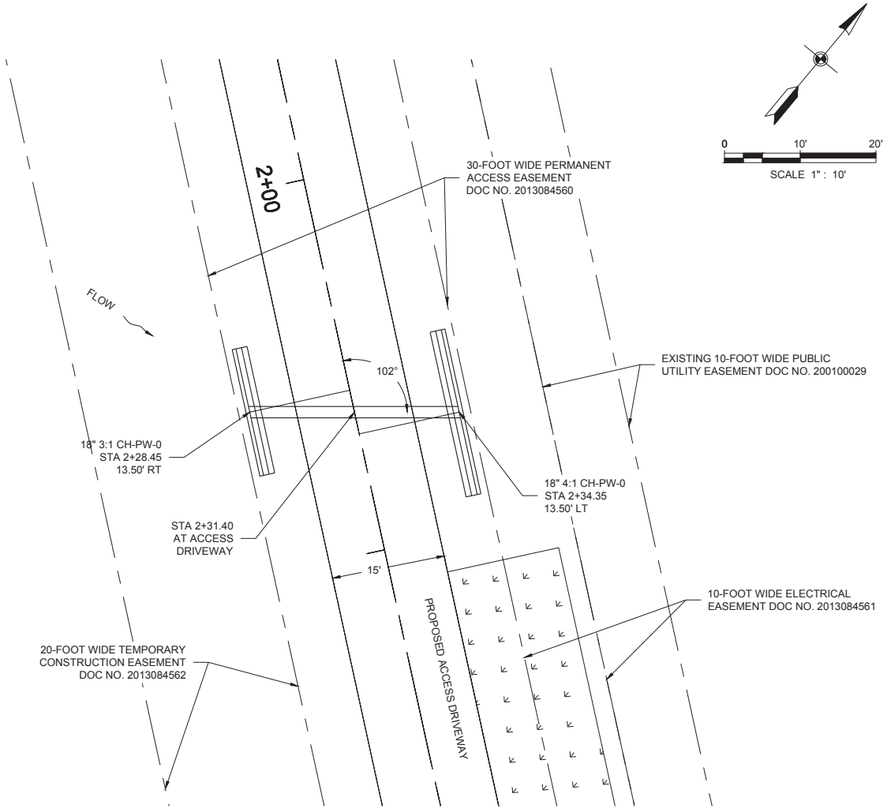

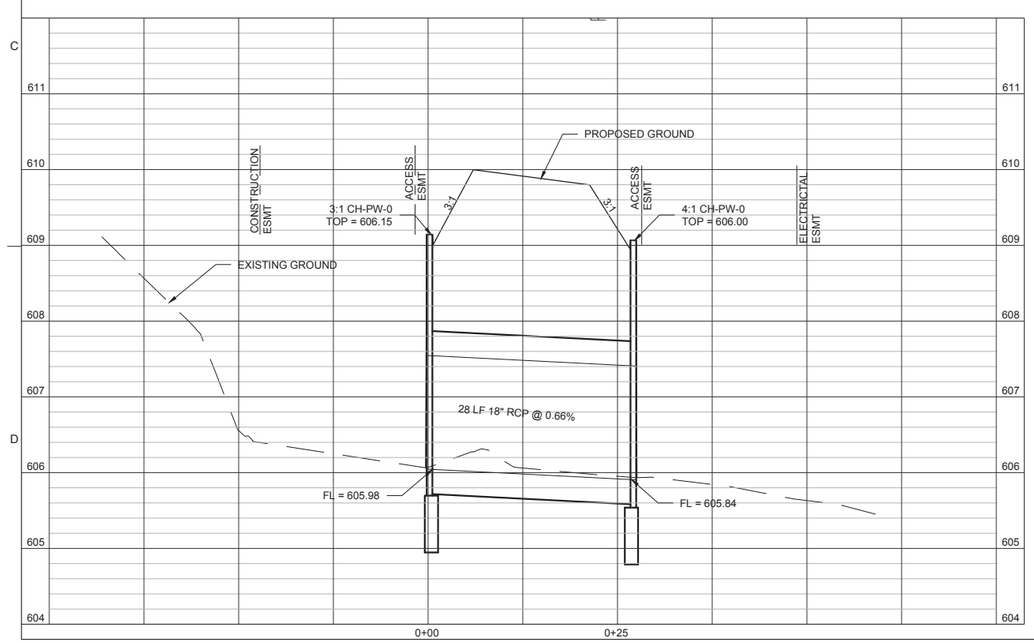

Site Data: Proposed

Inlet Station: 0.00 ft
Inlet Elevation: 605.98 ft
Outlet Station: 28.00 ft
Outlet Elevation: 605.84 ft
Number of Barrels: 1

Culvert Data Summary: Proposed

Barrel Shape: Circular
Barrel Diameter: 1.50 ft
Barrel Material: Concrete
Embedment: 0.00 in
Barrel Manning's n: 0.0120
Culvert Type: Straight
Inlet Configuration: Square Edge with Headwall
Inlet Depression: NONE

Roadway Data: Proposed

Irregular Roadway Cross-Section:

Coord No.	Station (ft)	Elevation (ft)
0	0.00	607.60
1	25.00	608.23
2	50.00	609.01
3	75.00	609.83
4	100.00	610.56
5	125.00	611.21
6	150.00	611.78

Roadway Surface: Paved
Roadway Top Width: 15 ft

Tailwater Channel Data: Proposed

Tailwater Channel Option: Triangular
Side Slope (H:V) 3.00 :1
Channel Slope: 0.0163 ft/ft
Channel Manning's n: 0.040
Channel Invert Elevation: 605.84 ft

SUMMARY OF FLOWS AT CROSSING: PROPOSED

Headwater Elevation (ft)	Total Discharge (cfs)	Proposed Discharge (cfs)	Roadway Discharge (cfs)
606.43	0.8	0.8	0.0
606.53	1.2	1.2	0.0
606.61	1.5	1.5	0.0
606.68	1.9	1.9	0.0
606.76	2.2	2.2	0.0
606.84	2.6	2.6	0.0
606.89	2.8	2.8	0.0
606.97	3.3	3.3	0.0
607.04	3.6	3.6	0.0
607.10	4.0	4.0	0.0
607.16	4.3	4.3	0.0
608.23	9.9	9.9	0.0

DOWNSTREAM CHANNEL RATING CURVE: PROPOSED

Flow (cfs)	Water Surface Elevation (ft)	Depth (ft)	Velocity (ft/s)	Shear (psf)	Froude Number
0.8	606.25	0.41	1.59	0.42	0.62
1.2	606.31	0.47	1.74	0.48	0.63
1.5	606.36	0.52	1.86	0.53	0.64
1.9	606.40	0.56	1.96	0.57	0.65
2.2	606.44	0.60	2.05	0.61	0.66
2.6	606.47	0.63	2.13	0.64	0.67
2.8	606.49	0.65	2.18	0.67	0.67
3.3	606.53	0.69	2.26	0.70	0.68
3.6	606.56	0.72	2.32	0.73	0.68
4.0	606.59	0.75	2.37	0.76	0.68
4.3	606.61	0.77	2.42	0.78	0.69

CULVERT SUMMARY TABLE: PROPOSED

Total Discharge (cfs)	Culvert Discharge (cfs)	Headwater Elevation (ft)	Inlet Control Depth (ft)	Outlet Control Depth (ft)	Flow Type	Normal Depth (ft)	Critical Depth (ft)	Outlet Depth (ft)	Tailwater Depth (ft)	Outlet Velocity (ft/s)	Tailwater Velocity (ft/s)
0.8	0.8	606.43	0.45	0.27	1-JS1t	0.31	0.33	0.41	0.41	2.05	1.59
1.2	1.2	606.53	0.55	0.34	1-JS1t	0.38	0.40	0.47	0.47	2.43	1.74
1.5	1.5	606.61	0.63	0.40	1-JS1t	0.44	0.45	0.52	0.52	2.76	1.86
1.9	1.9	606.68	0.70	0.45	1-S2n	0.49	0.51	0.49	0.56	3.73	1.96
2.2	2.2	606.76	0.78	0.51	1-S2n	0.53	0.56	0.53	0.60	3.89	2.05
2.6	2.6	606.84	0.86	0.56	1-S2n	0.58	0.60	0.58	0.63	4.05	2.13
2.8	2.8	606.89	0.91	0.52	1-S2n	0.61	0.63	0.61	0.66	4.16	2.18
3.3	3.3	606.97	1.00	0.65	1-S2n	0.66	0.69	0.66	0.69	4.32	2.26
3.6	3.6	607.04	1.06	0.71	1-S2n	0.70	0.73	0.70	0.72	4.44	2.32
4.0	4.0	607.10	1.12	0.77	1-S2n	0.74	0.76	0.74	0.75	4.53	2.37
4.3	4.3	607.16	1.18	0.83	1-S2n	0.78	0.79	0.78	0.77	4.64	2.42

APPROVAL

SITE PLAN APPROVAL SHEET 18 OF 126
FILE NUMBER: SPC-2015-0322C APPLICATION DATE: JULY 17, 2015
APPROVED BY COMMISSION ON: N/A UNDER SECTION 142 OF
CHAPTER 25-5 OF THE CITY OF AUSTIN CODE.
EXPIRATION DATE (25-5-81, LDC) _____ CASE MANAGER LYNDA COURTNEY
PROJECT EXPIRATION DATE (ORD.#970905-A) _____ DWPZ _____ DDZ _____

Director, Planning and Development Review
RELEASE FOR GENERAL COMPLIANCE: _____ ZONING P-NP LI-NP
Rev. 1 _____ Correction 1 _____
Rev. 2 _____ Correction 2 _____
Rev. 3 _____ Correction 3 _____

Final plat must be recorded by the Project Expiration Date, if applicable. Subsequent Site Plans which do not comply with the Code current at the time of filing, and all required Building Permits and/or a notice of construction (if a building permit is not required), must also be approved prior to the Project Expiration Date.

STATE OF TEXAS
DALE P. MURPHY
90614
LICENSED
PROFESSIONAL ENGINEER
05/09/2016

NO.	DATE	DR	REVISION	CHK	APVD	BY	APVD
DSGN	D Murphy	M Gilfillan		D Murphy	D Murphy		D Murphy

K·FRIESE + ASSOCIATES
PROFESSIONAL ENGINEERING
TBPE Firm #3525

CH2MHILL.
TBPE FIRM NO. 3699

Montopolis Water Redamation Initiave (WRI)
Storage Reservoir and Pump Station
2711 Montopolis Drive
Austin Water, Austin, Texas

CIVIL

CULVERT LAYOUT

1" = 20'
VERIFY SCALE
BAR IS ONE INCH ON ORIGINAL DRAWING.
0 1"

DATE	MAY 2016
PROJ	472902
DWG	C-12
SHEET	18 of 126

DETENTION POND

POND AREA/STORAGE SUMMARY

ELEVATION FT	AREA SF	AREA AC	VOLUME CF	CUM. VOL. CF
585.25	0	0.000		0
586.00	1,754	0.040	877	877
587.00	2,204	0.051	1,979	2,856
588.00	2,707	0.062	2,456	5,312
589.00	3,258	0.075	2,983	8,294
590.00	3,857	0.089	3,558	11,852
591.00	4,499	0.103	4,178	16,030

DETENTION POND SUMMARY

DESIGN STORM	WSEL FT	STORAGE AC-FT	STORAGE CF	OUTFLOW CFS
2	587.13	0.06	2,614	3.20
5	588.66	0.16	6,970	4.58
10	589.17	0.25	10,890	4.96
25	589.57	0.41	17,860	5.23
50	589.92	0.56	24,394	5.46
100	590.21	0.68	29,621	8.15

RUNOFF CALCULATIONS

STORM EVENT	ACRE AC	FLOW RATE CFS
25-YEAR	9.71	16.50
100-YEAR	9.71	23.93

CITY OF AUSTIN ENVIRONMENTAL CRITERIA MANUAL APPENDIX R-2

FULL SEDIMENTATION/FILTRATION POND CALCULATIONS FOR DEVELOPMENT PERMITS

		REQUIRED		PROVIDED	
DRAINAGE AREA DATA:					
DRAINAGE AREA (DA)		3.81	AC		
IMPERVIOUS COVER (IC)		20.4	%		
CAPTURE DEPTH (CD)		0.50	IN		
WATER QUALITY CONTROL CALCULATIONS					
THE WATER QUALITY CONTROL IS FULL SEDIMENTATION FILTRATION					
25-YEAR PEAK FLOW RATE TO CONTROL (Q25)		16.50	CFS		
100-YEAR PEAK FLOW RATE TO CONTROL (Q100)		23.93	CFS		
WATER QUALITY VOLUME (WQV=CD*DA*3630)		6,970	CF		
MAXIMUM DEPTH IN SEDIMENTATION POND (H)				3.75	FT
SEDIMENTATION POND AREA (WQV/10)		697	SF	2,075	SF
SEDIMENTATION POND VOLUME (MINIMUM=WQV)		6,970	CF	6,963	CF
FILTRATION POND AREA (WQV/7+2.33*H)		443	SF	810	SF
FILTRATION POND VOLUME (MINIMUM = 0.2*WQV)		1,394	CF	3,590	CF
WATER QUALITY ELEVATION		590.05	MSL		
ELEVATION OF SPLITTER/OVERFLOW WEIR		590.05	MSL	590.05	MSL
LENGTH OF SPLITTER WEIR				16.00	FT
REQUIRED HEAD TO PASS Q100	MAX	1.00	FT	0.63	FT
POND FREEBOARD TO PASS Q100	MIN	0.25	FT	0.32	FT

SEDIMENTATION POND

ELEVATION FT	AREA SF	STORAGE CF
587.25	0	0
588.00	2,075	778
589.00	3,116	3,374
590.05	3,722	6,970
590.05	3,721	6,963
591.00	4,351	10,797

FILTRATION POND

ELEVATION FT	AREA SF	STORAGE CF
587.00	810	0
588.00	987	899
588.43	1,136	1,394
589.00	1,336	2,060
590.00	1,724	3,590
591.00	2,118	5,511

SPLITTER STRUCTURE

Q_{100} WEIR PASS	23.93 CFS
FREEBOARD	0.32 FT
TOP OF POND	591.00 FT
WEIR ELEVATION	590.05 FT
WEIR DEPTH	0.63 FT
WEIR LENGTH	16.00 FT
WEIR COEFFICIENT, C	3.00
VELOCITY	1.50 FPS

Q_{25} WEIR PASS	16.50 CFS
FREEBOARD	0.46 FT
TOP OF POND	591.00 FT
WEIR ELEVATION	590.05 FT
WEIR DEPTH	0.49 FT
WEIR LENGTH	16.00 FT
WEIR COEFFICIENT, C	3.00
VELOCITY	1.03 FPS

LEGEND

- 600 — PROPOSED CONTOUR
- W — PROPOSED WATER LINE
- FM — PROPOSED FORCE MAIN
- WW — PROPOSED WASTEWATER LINE
- RW — PROPOSED RECLAIMED WATER LINE
- W — PROPOSED WATER METER
- PROPOSED FIRE HYDRANT
- PROPOSED WATER VALVE
- PROPOSED PAVEMENT
- EXISTING GEOTECHNICAL BORE
- 600 — EXISTING CONTOUR
- W — EXISTING WATER LINE
- WW — EXISTING WASTEWATER LINE
- OE — EXISTING OVERHEAD ELECTRIC
- X — EXISTING WIRE FENCE
- OO — PROPOSED CHAINLINK FENCE
- PROPOSED EASEMENT LINE
- EXISTING PROPERTY LINE

0 20' 40'

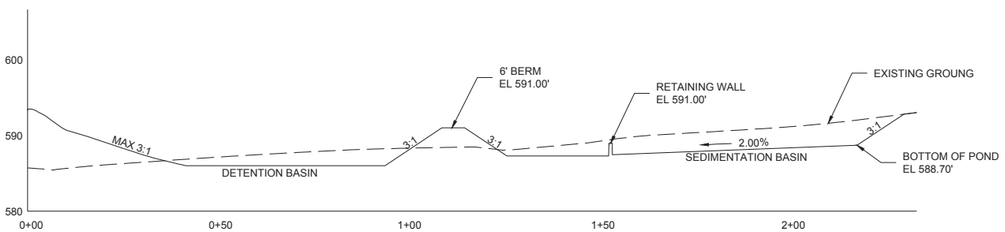

SECTION A

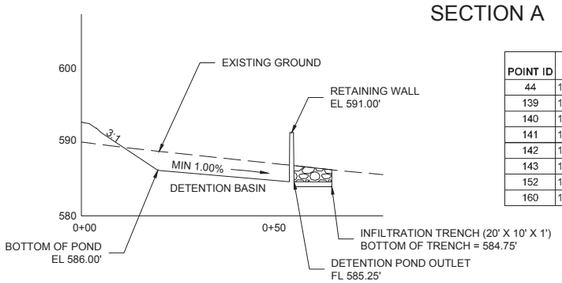

SECTION B

POINT ID	NORTHING	EASTING	ELEVATION	DESCRIPTION
44	10051808.08	3126359.65	587.25	INLET FLOW LINE
139	10051837.57	3126308.73	589.02	PIPE FLINE
140	10051847.80	3126350.57	591.25	PIPE FLOW LINE
141	10051840.05	3126357.99	588.70	PIPE OUTLET
142	10051833.75	3126304.06	588.02	PIPE FLOW LINE
143	10051816.29	3126292.19	586.00	PIPE OUTLET
152	10051767.24	3126244.81	585.25	POND OUTLET FLOW LINE
160	10051834.86	312698.06	588.02	PIPE FLOW LINE

CONTROL POINT NOTES:

1. SAFETY END TREATMENT CONTROL POINTS ARE TO THE END OF PAYMENT FOR THE PIPE AS SHOWN ON THE STANDARD DETAIL.
2. INFILTRATION TRENCH CONTROL POINTS ARE TO THE END OF PAYMENT FOR PIPE.
3. CLEANOUT CONTROL POINTS ARE TO THE CENTERLINE OF CLEANOUT.

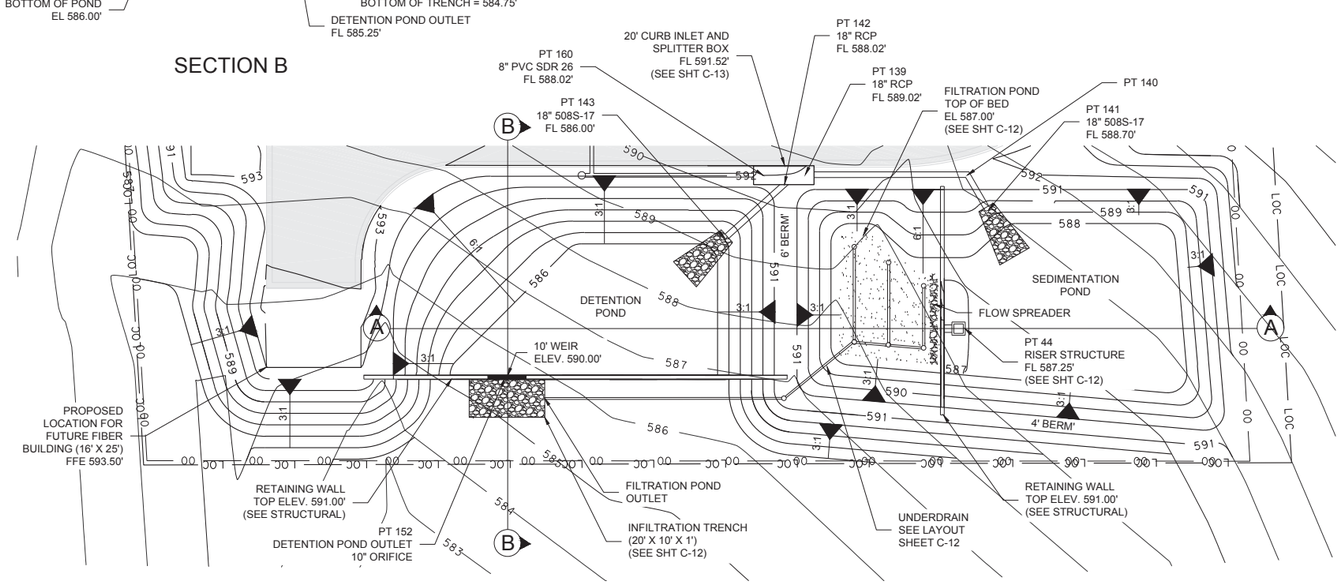

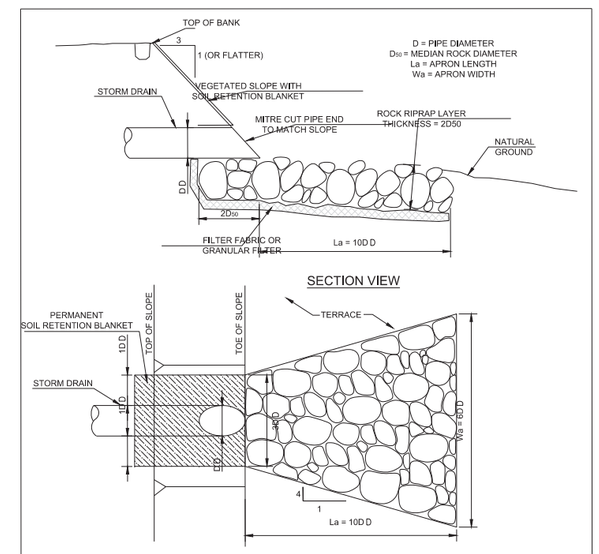

NOTE:
1. ROCK RIPRAP SHALL BE SOUND MATERIAL AND GRADED PER REQUIREMENTS SPECIFIED IN STANDARD SPECIFICATION ITEM NO. 591S.

2. ROCK SIZE (D_{50}) AND GRADATION SHALL BE STABLE FOR THE DESIGN HYDRAULIC CONDITIONS AND IN ACCORDANCE WITH THE ECM 1.4.6.D PERMANENT STRUCTURAL PRACTICES, STONE RIPRAP OR OTHERENGINEERING STANDARD OF PRACTICE FOR SIZING ROCK RIPRAP, ROCK RIPRAP D_{50} AND FILTER TYPESHALL BE NOTED ON PLANS.3.GEOTEXTILE FILTER FABRIC SHALL MEET THE REQUIREMENTS SPECIFIED IN STANDARD SPECIFICATIONITEM NO. 620S.4.AGGREGATE FOR GRANULAR FILTER SHALL MEET THE REQUIREMENTS SPECIFIED IN STANDARDSPECIFICATION ITEM NO. 403. AGGREGATE SIZE CLASSIFICATION/GRADE, NUMBER OF LAYERS AND LAYERTHICKNESS SHOULD BE NOTED ON THE PLANS.

CITY OF AUSTIN WATERSHED PROTECTION DEPARTMENT	STORMDRAIN OUTFALL PROTECTION PIPE DISCHARGE ON TERRACE/UPLANDS	
RECORD COPY SIGNED BY MORGAN BYARS *09/01/2011* ADOPTED	THE ARCHITECT/ENGINEER ASSUMES RESPONSIBILITY FOR APPROPRIATE USE OF THIS STANDARD.	STANDARD NO. 508S-17

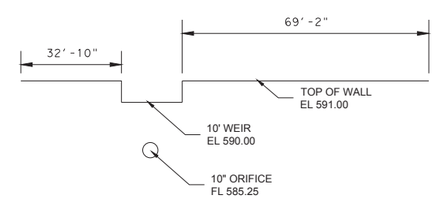

DETENTION POND OUTLET DETAIL

APPROVAL

SITE PLAN APPROVAL SHEET 19 OF 126

FILE NUMBER: SPC-2015-0322C APPLICATION DATE: JULY 17, 2015

APPROVED BY COMMISSION ON: N/A UNDER SECTION 142 OF

CHAPTER 25-5 OF THE CITY OF AUSTIN CODE.

EXPIRATION DATE (25-5-81, LDC) CASE MANAGER LYNDA COURTNEY

PROJECT EXPIRATION DATE (ORD.#970905-A) DWPZ DDZ

Director, Planning and Development Review

RELEASE FOR GENERAL COMPLIANCE: ZONING P-NP LI-NP

Rev. 1 Correction 1

Rev. 2 Correction 2

Rev. 3 Correction 3

Final plat must be recorded by the Project Expiration Date, if applicable. Subsequent Site Plans which do not comply with the Code current at the time of filing, and all required Building Permits and/or a notice of construction (if a building permit is not required), must also be approved prior to the Project Expiration Date.

STATE OF TEXAS
DALE P. MURPHY
90614
LICENSED
PROFESSIONAL ENGINEER
05/09/2016

NO.	DATE	REVISION	BY	APVD
DSGN	DR	CHK		
D Murphy	M Gilliland	D Murphy	D Murphy	D Murphy

K·FRIESE + ASSOCIATES
PROFESSIONAL ENGINEERING
TBPE Firm #6535

Montopolis Water Reclamation Initiave (WRI)
Storage Reservoir and Pump Station
2711 Montopolis Drive
Austin Water, Austin, Texas

CH2MHILL.
TBPE FIRM NO. 3699

CIVIL

DETENTION AND WATER QUALITY POND PLAN

1" = 20'
VERIFY SCALE
BAR IS ONE INCH ON ORIGINAL DRAWING.
0 1"

DATE	MAY 2016
PROJ	472902
DWG	C-13
SHEET	19 of 126

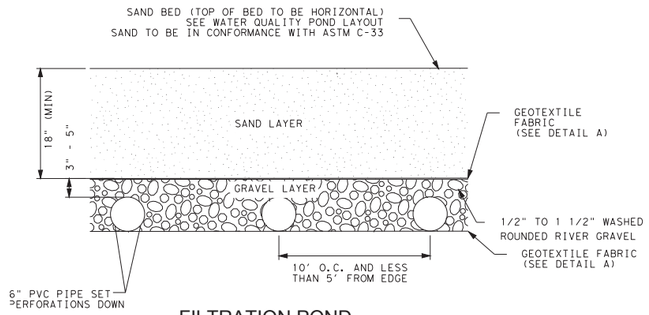

FILTRATION POND
SAND BED PROFILE WITH GRAVEL FILTER

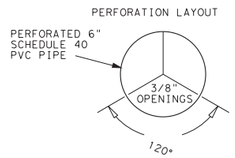

ROWS OF PERFORATIONS SHALL BE SPACED NO MORE THAN 6" APART

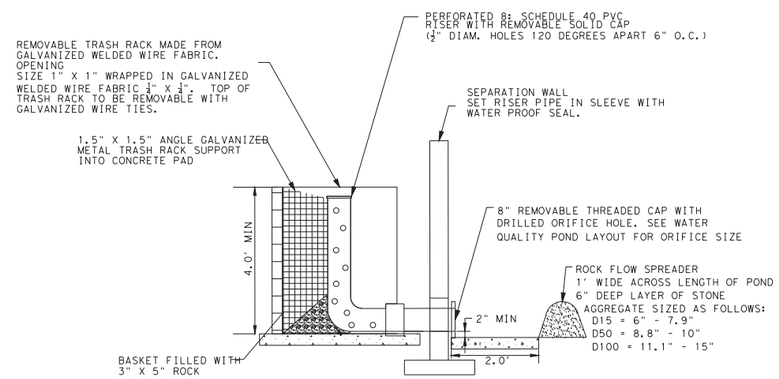

SIDE VIEW SEDIMENTATION FILTRATION
OUTLET RISER DETAIL WITH SEPARATION WALL

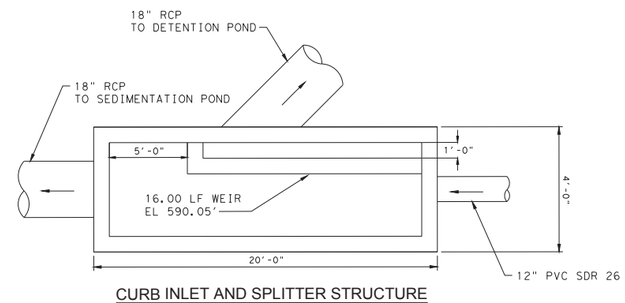

CURB INLET AND SPLITTER STRUCTURE
TOP VIEW
N.T.S.

NOTE: SEE DETAIL 508S-4 FOR CURB INLET.

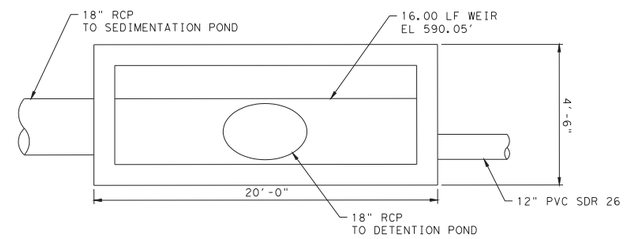

CURB INLET AND SPLITTER STRUCTURE
SIDE VIEW
N.T.S.

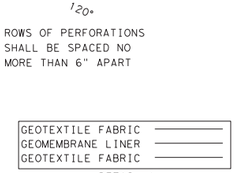

DETAIL A

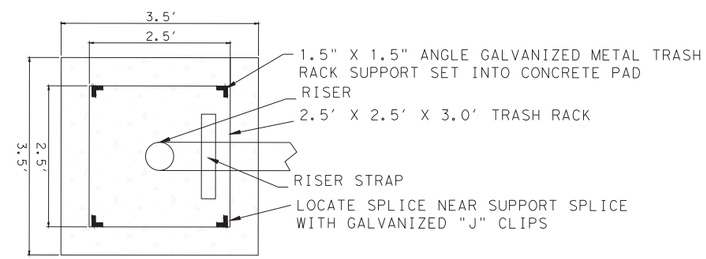

TOP VIEW OF RISER

POINT ID	NORTHING	EASTING	FLOW LINE ELEVATION	DESCRIPTION
144	10051763.78	3126255.95	584.20	OUTLET
145	10051778.82	3126317.46	584.68	CLEANOUT
146	10051797.72	3126332.00	584.92	CLEANOUT
147	10051800.54	3126350.18	585.12	CLEANOUT
148	10051816.47	3126346.33	585.28	CLEANOUT
149	10051822.17	3126326.03	585.17	CLEANOUT
150	10051820.29	3126335.84	585.24	CLEANOUT
151	10051799.13	3126341.09	585.02	CLEANOUT

CONTROL POINT NOTES:

1. SAFETY END TREATMENT CONTROL POINTS ARE TO THE END OF PAYMENT FOR THE PIPE AS SHOWN ON THE STANDARD DETAIL.

2. INFILTRATION TRENCH CONTROL POINTS ARE TO THE END OF PAYMENT FOR PIPE.

3. CLEANOUT CONTROL POINTS ARE TO THE CENTERLINE OF CLEANOUT.

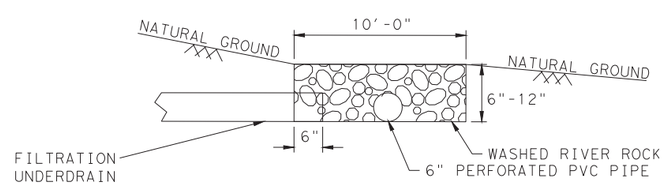

INFILTRATION TRENCH

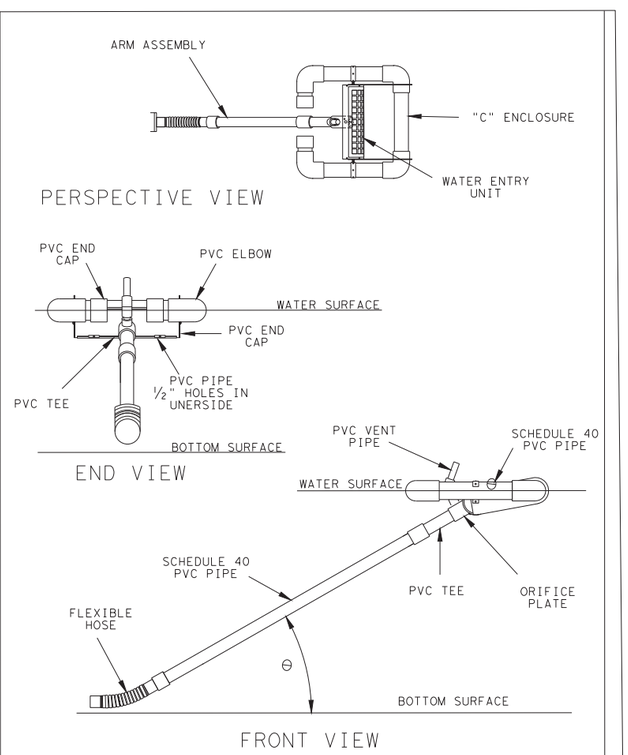

DEWATERING SKIMMER DETAIL
ECM FIG 1.4.5.K.1

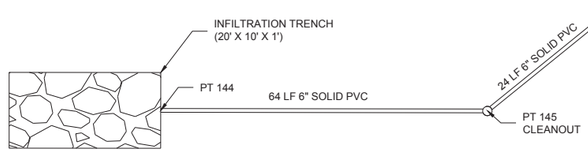

UNDERDRAIN LAYOUT DETAIL

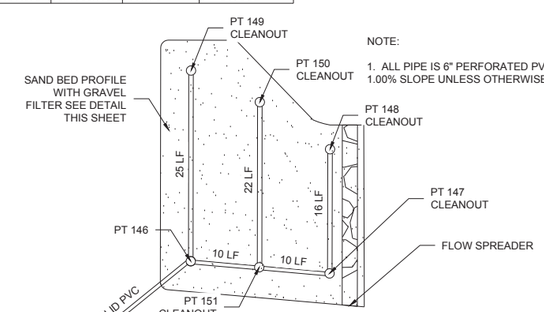

NOTE:

1. ALL PIPE IS 6" PERFORATED PVC AT A 1.00% SLOPE UNLESS OTHERWISE NOTED.

APPROVAL

SITE PLAN APPROVAL SHEET 20 OF 126
FILE NUMBER: SPC-2015-0322C APPLICATION DATE: JULY 17, 2015
APPROVED BY COMMISSION ON: N/A UNDER SECTION 142 OF
CHAPTER 25-5 OF THE CITY OF AUSTIN CODE.
EXPIRATION DATE (25-5-81, LDC) _____ CASE MANAGER LYNDA COURTNEY
PROJECT EXPIRATION DATE (ORD.#970905-A) _____ DWPZ _____ DDZ _____

Director, Planning and Development Review
RELEASE FOR GENERAL COMPLIANCE: _____ ZONING P-NP LI-NP
Rev. 1 _____ Correction 1 _____
Rev. 2 _____ Correction 2 _____
Rev. 3 _____ Correction 3 _____

Final plat must be recorded by the Project Expiration Date, if applicable. Subsequent Site Plans which do not comply with the Code current at the time of filing, and all required Building Permits and/or a notice of construction (if a building permit is not required), must also be approved prior to the Project Expiration Date.

STATE OF TEXAS
DALE P. MURPHY
90614
LICENSED
PROFESSIONAL ENGINEER
05/09/2016

NO.	DATE	REVISION	BY	APVD
DSGN	D Murphy	DR M Gilliland	CHK D Murphy	APVD D Murphy

K·FRIESE + ASSOCIATES
PROFESSIONAL ENGINEERING
TBPE Firm #6535

CH2MHILL.
TBPE FIRM NO. 3699

Montopolis Water Reclamation Initiave (WRI)
Storage Reservoir and Pump Station
2711 Montopolis Drive
Austin Water, Austin, Texas

CIVIL

DETENTION AND WATER QUALITY POND DETAILS

1" = 20'
VERIFY SCALE
BAR IS ONE INCH ON ORIGINAL DRAWING.
0 1"

DATE	MAY 2016
PROJ	472902
DWG	C-14
SHEET	20 of 126

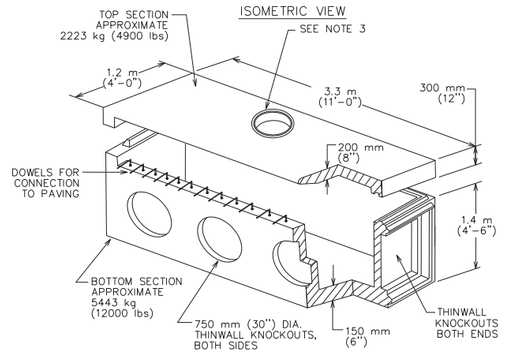

NOTES:
1. ALL CONCRETE SHALL BE CLASS "A" AS PER ITEM 403S.
2. ALL REINFORCING STEEL SHALL BE GRADE 60
3. MANHOLE FRAME AND COVER SHALL BE IN ACCORDANCE WITH CITY OF AUSTIN STANDARD 503S-1.
4. DIMENSIONS RELATING TO REINFORCING STEEL ARE TO CENTERS OF BARS.
5. IN AREAS OF CONFLICT BETWEEN REINFORCING STEEL, PIPES AND MANHOLE FRAME, THE REINFORCEMENT SHALL BE BENT OR ADJUSTED TO CLEAR AS DIRECTED BY THE ENGINEER.
6. PAYMENT FOR INLET AT THE CONTRACT PRICE SHALL INCLUDE THE TRANSITION CURB, IN ACCORDANCE WITH CITY OF AUSTIN STANDARD INLET DESIGN.
7. INVERT OF INLET SHALL BE SLOPED 1:20 WITH FILL CONCRETE BY CONTRACTOR, SHAPED AS "V" SECTION
8. THE INLET AS DESIGNED EXCEEDS THE REQUIREMENTS OF ASTM C478.
9. THIS STANDARD COMPLIES WITH THE CITY OF AUSTIN STANDARD SPECIFICATIONS ITEM NO. 508S.
10. FOR INLET CONNECTION VARIATIONS FOR MAKING A 6 m (20'-0") CURB INLET FROM STANDARD 3 m (10'-0") INLETS, SEE DALWORTH CURB INLET CONNECTION DETAIL SHEET DQ-86-103.

CITY OF AUSTIN DEPARTMENT OF PUBLIC WORKS		CURB INLET 3 m (10') PRECAST TYPE 1 OR TYPE 1-R	
RECORD COPY SIGNED BY BILL GARDNER	12/09/08 ADOPTED	THE ARCHITECT/ENGINEER ASSUMES RESPONSIBILITY FOR APPROPRIATE USE OF THIS STANDARD.	STANDARD NO. 508S-4 1 OF 5

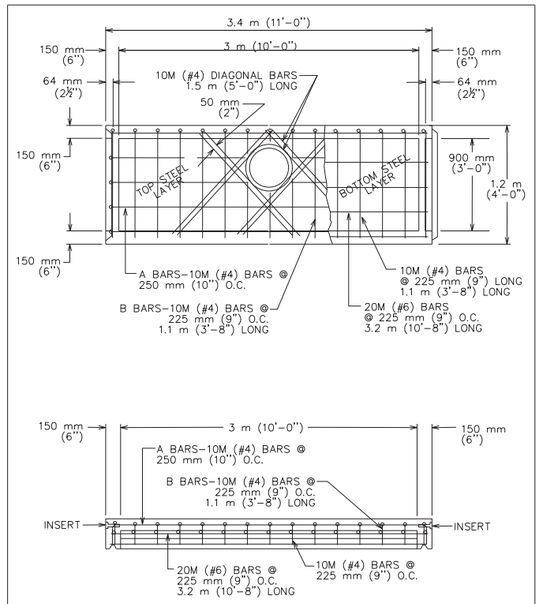

CITY OF AUSTIN DEPARTMENT OF PUBLIC WORKS		CURB INLET 3 m (10') PRECAST TYPE 1 OR TYPE 1-R	
RECORD COPY SIGNED BY BILL GARDNER	12/09/08 ADOPTED	THE ARCHITECT/ENGINEER ASSUMES RESPONSIBILITY FOR APPROPRIATE USE OF THIS STANDARD.	STANDARD NO. 508S-4 2 OF 5

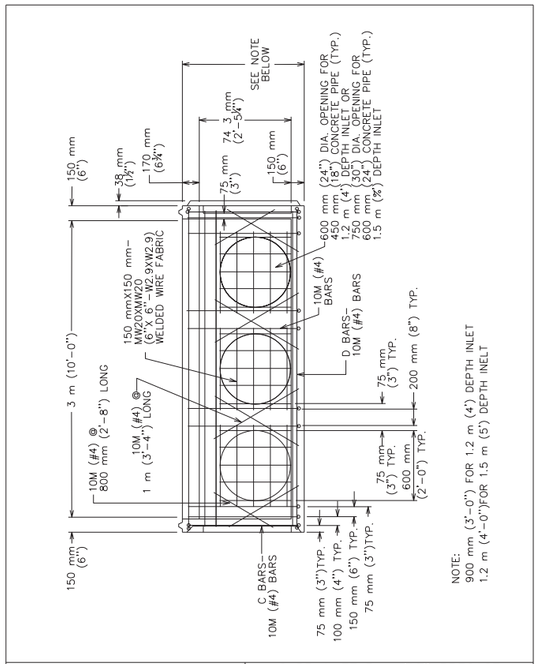

CITY OF AUSTIN DEPARTMENT OF PUBLIC WORKS		CURB INLET 3 m (10') PRECAST TYPE 1 OR TYPE 1-R	
RECORD COPY SIGNED BY BILL GARDNER	12/09/08 ADOPTED	THE ARCHITECT/ENGINEER ASSUMES RESPONSIBILITY FOR APPROPRIATE USE OF THIS STANDARD.	STANDARD NO. 508S-4 3 OF 5

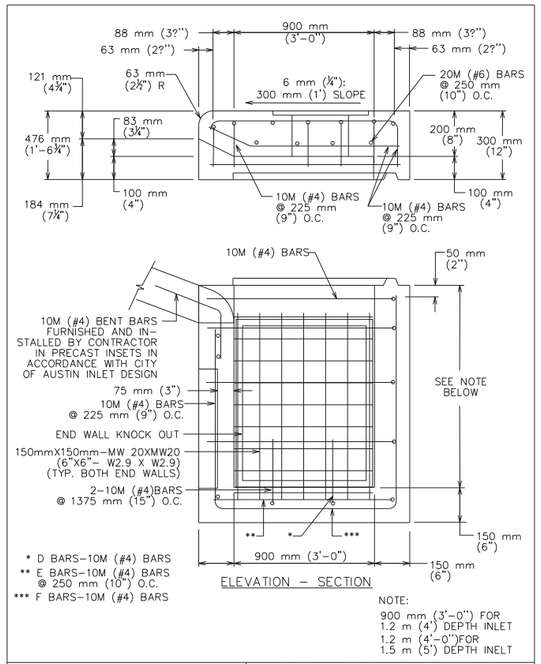

CITY OF AUSTIN DEPARTMENT OF PUBLIC WORKS		CURB INLET 3 m (10') PRECAST TYPE 1 OR TYPE 1-R	
RECORD COPY SIGNED BY BILL GARDNER	12/09/08 ADOPTED	THE ARCHITECT/ENGINEER ASSUMES RESPONSIBILITY FOR APPROPRIATE USE OF THIS STANDARD.	STANDARD NO. 508S-4 4 OF 5

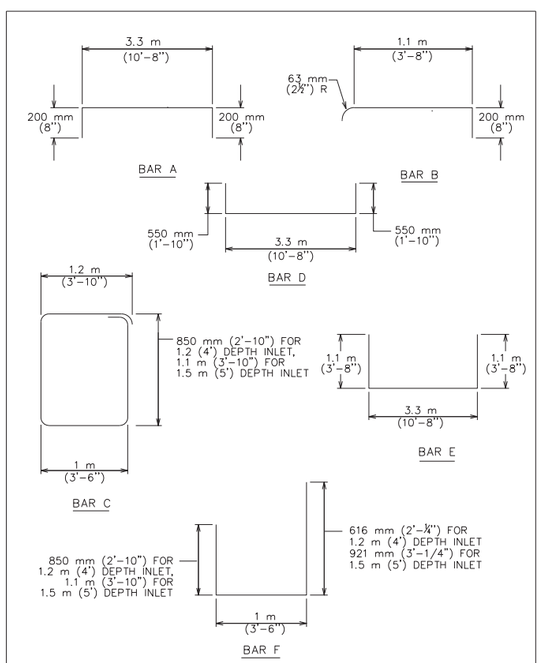

CITY OF AUSTIN DEPARTMENT OF PUBLIC WORKS		CURB INLET 3 m (10') PRECAST TYPE 1 OR TYPE 1-R	
RECORD COPY SIGNED BY BILL GARDNER	12/09/08 ADOPTED	THE ARCHITECT/ENGINEER ASSUMES RESPONSIBILITY FOR APPROPRIATE USE OF THIS STANDARD.	STANDARD NO. 508S-4 5 OF 5

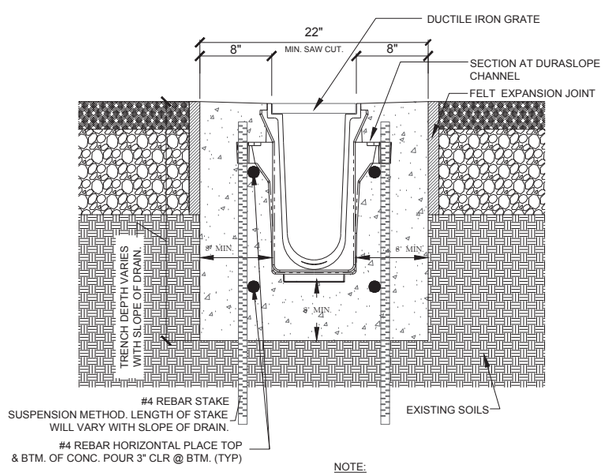

NOTE:

CHANNELS TO BE INSTALLED WITH BLANK GRATE. GRATE TO BE PROTECTED FROM CONCRETE POUR (COVER HOLES WITH TAPE).

TRENCH DRAIN SECTION

N.T.S.

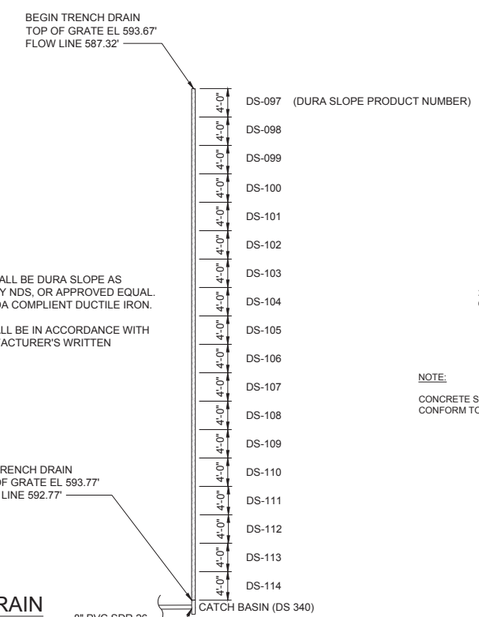

NOTES:

1. TRENCH DRAIN SHALL BE DURA SLOPE AS MANUFACTURED BY NDS, OR APPROVED EQUAL. GRATING TO BE ADA COMPLIENT DUCTILE IRON.
2. INSTALLATION SHALL BE IN ACCORDANCE WITH APPROVED MANUFACTURER'S WRITTEN INSTRUCTIONS.

TRENCH DRAIN PLAN VIEW

N.T.S.

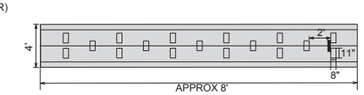

CONCRETE FLUME DETAIL - PLAN VIEW

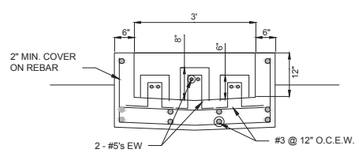

NOTE:

CONCRETE SHALL BE 4000 PSI & CONFORM TO THE SPECIFICATIONS

SECTION

APPROVAL

SITE PLAN APPROVAL SHEET 21 OF 126

FILE NUMBER: SPC-2015-0322C APPLICATION DATE: JULY 17, 2015

APPROVED BY COMMISSION ON: N/A UNDER SECTION 142 OF

CHAPTER 25-5 OF THE CITY OF AUSTIN CODE.

EXPIRATION DATE (25-5-81, LDC) _____ CASE MANAGER LYNDA COURTNEY

PROJECT EXPIRATION DATE (ORD.#970905-A) _____ DWPZ _____ DDZ _____

Director, Planning and Development Review

RELEASE FOR GENERAL COMPLIANCE: _____ ZONING P-NP LI-NP

Rev. 1 _____ Correction 1 _____

Rev. 2 _____ Correction 2 _____

Rev. 3 _____ Correction 3 _____

Final plat must be recorded by the Project Expiration Date, if applicable. Subsequent Site Plans which do not comply with the Code current at the time of filing, and all required Building Permits and/or a notice of construction (if a building permit is not required), must also be approved prior to the Project Expiration Date.

STATE OF TEXAS
DALE P. MURPHY
90614
LICENSED
PROFESSIONAL ENGINEER
05/09/2016

NO.	DATE	REVISION	BY	APVD
DSGN	DR	CHK	APVD	
	D Murphy	M Gilfillan	D Murphy	D Murphy

K·FRIESE + ASSOCIATES
PUBLIC PROJECT: SHEPHERDSWILD
TBPE Firm #5535

CH2MHILL.
TBPE FIRM NO. 3699

Montopolis Water Reclamation Initiave (WRI)
Storage Reservoir and Pump Station
2711 Montopolis Drive
Austin Water, Austin, Texas

CIVIL

WATER QUALITY DETAILS

VERIFY SCALE
BAR IS ONE INCH ON ORIGINAL DRAWING.
0 1"

DATE	MAY 2016
PROJ	472902
DWG	C-15
SHEET	21 of 126

CITY OF AUSTIN ENVIRONMENTAL CRITERIA MANUAL APPENDIX R-9
VEGETATIVE FILTER STRIP FOR DEVELOPMENT PERMITS

DRAINAGE AREA AND WATER QUALITY VOLUME DATA:

DRAINAGE AREA (DA)	0.15 AC	
TOTAL SITE PERCENT IMPERVIOUS COVER (IC)	81.5 %	0.12 AC
CAPTURE DEPTH (CD)	1.12 IN	
TOTAL SITE REQUIRED WATER QUALITY VOLUME (WQV=CD*DA*3630)	591 CF	

VEGETATIVE FILTER STRIP CALCULATIONS:

DRAINAGE AREA TO PROPOSED VEGETATIVE FILTER STRIP	0.15 AC
IMPERVIOUS COVER OF AREA TREATED BY VEGETATIVE FILTER STRIP (TREATED IC)	0.12 AC
SOIL TYPE (TYPE A, B, C, AMENDED C, OR AMENDED D)	TYPE B

	REQUIRED	PROVIDED
SIZE OF VEGETATIVE FILTER STRIP PER ECM 1.6.7(B)	0.06 AC	0.09 AC
WIDTH OF VEGETATIVE FILTER STRIP (VFSwidth)		15 FT
HYDRAULIC LOADING RATE (HLRvfs=Qpeak/VFSwidth)		0.01 CFS/FT

WATER QUALITY CREDIT:

IMPERVIOUS AREA FACTOR (IAF=TREATED IC/IC)	MAX	1.0	1.00
PERCENT INFILTRATION PROVIDED BY VFS PER ECM 1.6.7.5(B) (Ivfs)			65 %
BMP DESIGN FACTOR (BMPDF)			
FOR HLR<0.05 CFS/FT: BMPDF=Ivfs/65	MAX	1.0	1.00
FOR HLR>0.05 AND <0.15 CFS/FT: BMPDF=(Ivfs/65)*(0.05/HLRvfs)			N/A
WATER QUALITY CREDIT (WQC=IAF*BMPDF)	MAX	1.0	1.00
WATER QUALITY VOLUME REDUCTION (WQVR=WQV*WQC)			591 CF

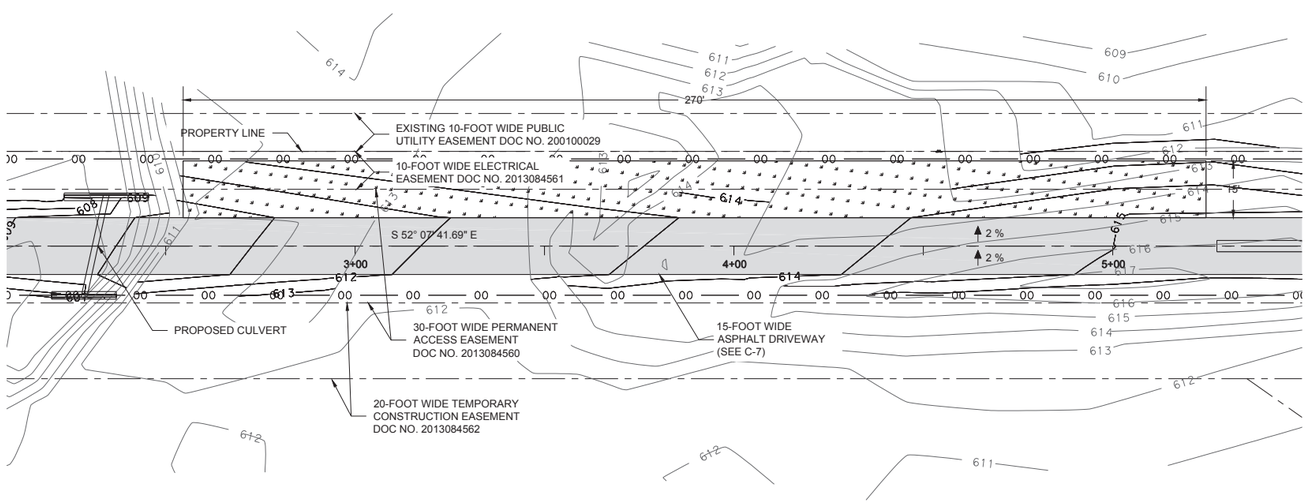

0 20' 40'
SCALE 1" : 20'

LEGEND

600	PROPOSED CONTOUR
	PROPOSED PAVEMENT
600	EXISTING CONTOUR
00	PROPOSED CHAINLINK FENCE
	PROPOSED EASEMENT LINE
	EXISTING PROPERTY LINE

APPROVAL

SITE PLAN APPROVAL SHEET 22 OF 126
FILE NUMBER: SPC-2015-0322C APPLICATION DATE: JULY 17, 2015
APPROVED BY COMMISSION ON: N/A UNDER SECTION 142 OF
CHAPTER 25-5 OF THE CITY OF AUSTIN CODE.
EXPIRATION DATE (25-5-81, LDC) _____ CASE MANAGER LYNDA COURTNEY
PROJECT EXPIRATION DATE (ORD.#970905-A) _____ DWPZ _____ DDZ _____

Director, Planning and Development Review
RELEASE FOR GENERAL COMPLIANCE: _____ ZONING P-NP LI-NP
Rev. 1 _____ Correction 1 _____
Rev. 2 _____ Correction 2 _____
Rev. 3 _____ Correction 3 _____

Final plat must be recorded by the Project Expiration Date, if applicable. Subsequent Site Plans which do not comply with the Code current at the time of filing, and all required Building Permits and/or a notice of construction (if a building permit is not required), must also be approved prior to the Project Expiration Date.

STATE OF TEXAS
DALE P. MURPHY
90614
LICENSED
PROFESSIONAL ENGINEER
05/09/2016

NO.	DATE	REVISION	BY	APVD
DSGN	D Murphy	DR M Gilliland	CHK D Murphy	APVD D Murphy

K·FRIESE + ASSOCIATES
PROFESSIONAL ENGINEERING
TBPE Firm #F-535

CH2MHILL.
TBPE FIRM NO. 3699

Montopolis Water Reclamation Initiave (WRI)
Storage Reservoir and Pump Station
2711 Montopolis Drive
Austin Water, Austin, Texas

CIVIL
VEGETATIVE FILTER STRIP PLAN

1" = 20'
VERIFY SCALE
BAR IS ONE INCH ON ORIGINAL DRAWING
0 1"

DATE	MAY 2016
PROJ	472902
DWG	C-16
SHEET	22 of 126

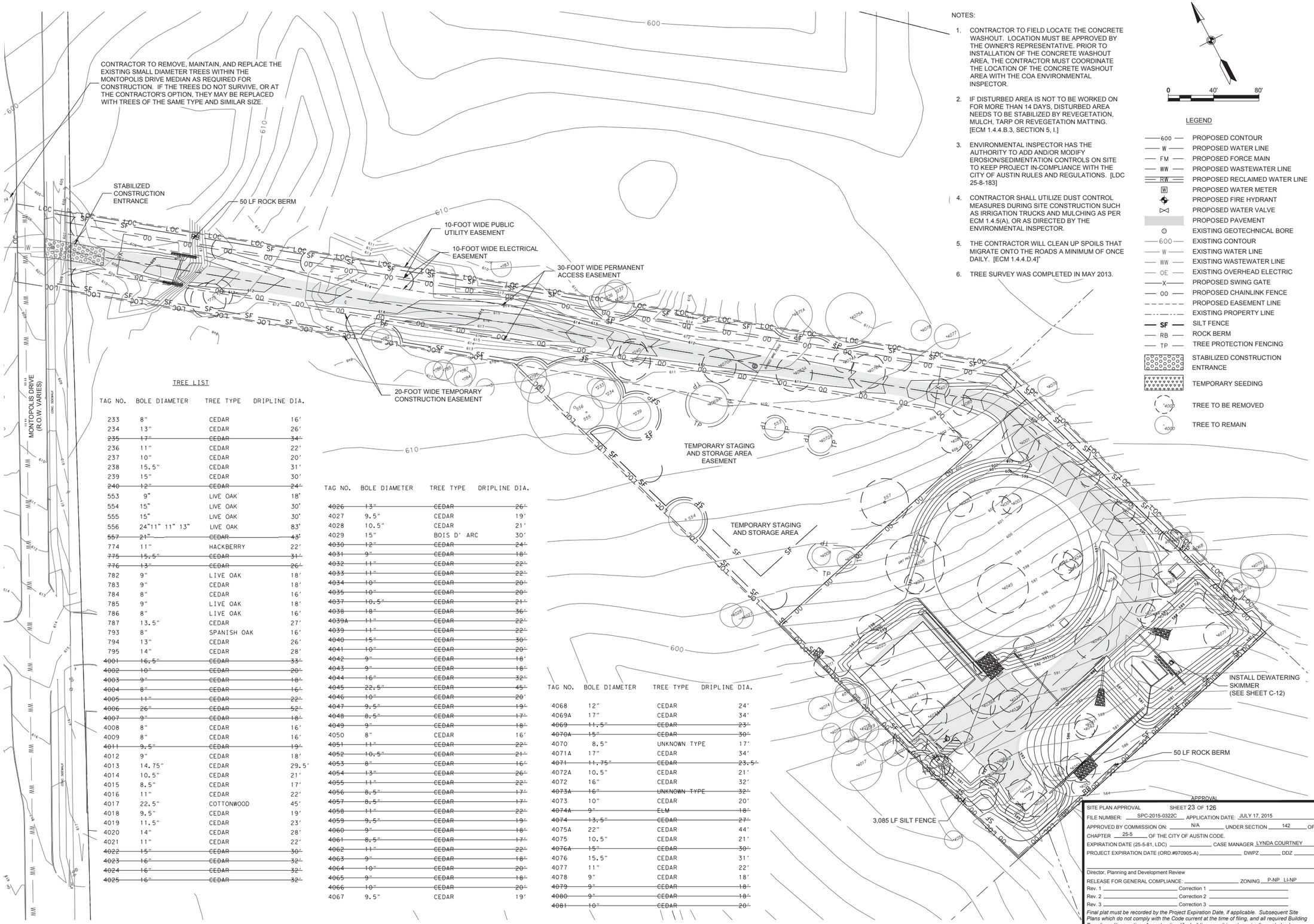

NOTES:

1. CONTRACTOR TO FIELD LOCATE THE CONCRETE WASHOUT. LOCATION MUST BE APPROVED BY THE OWNER'S REPRESENTATIVE. PRIOR TO INSTALLATION OF THE CONCRETE WASHOUT AREA, THE CONTRACTOR MUST COORDINATE THE LOCATION OF THE CONCRETE WASHOUT AREA WITH THE COA ENVIRONMENTAL INSPECTOR.
2. IF DISTURBED AREA IS NOT TO BE WORKED ON FOR MORE THAN 14 DAYS, DISTURBED AREA NEEDS TO BE STABILIZED BY REVEGETATION, MULCH, TARP OR REVEGETATION MATTING. [ECM 1.4.4.B.3, SECTION 5, I.]
3. ENVIRONMENTAL INSPECTOR HAS THE AUTHORITY TO ADD AND/OR MODIFY EROSION/SEDIMENTATION CONTROLS ON SITE TO KEEP PROJECT IN-COMPLIANCE WITH THE CITY OF AUSTIN RULES AND REGULATIONS. [LDC 25-8-183]
4. CONTRACTOR SHALL UTILIZE DUST CONTROL MEASURES DURING SITE CONSTRUCTION SUCH AS IRRIGATION TRUCKS AND MULCHING AS PER ECM 1.4.5(A), OR AS DIRECTED BY THE ENVIRONMENTAL INSPECTOR.
5. THE CONTRACTOR WILL CLEAN UP SPOILS THAT MIGRATE ONTO THE ROADS A MINIMUM OF ONCE DAILY. [ECM 1.4.4.D.4]"
6. TREE SURVEY WAS COMPLETED IN MAY 2013.

LEGEND

600	PROPOSED CONTOUR
W	PROPOSED WATER LINE
FM	PROPOSED FORCE MAIN
WW	PROPOSED WASTEWATER LINE
RW	PROPOSED RECLAIMED WATER LINE
W	PROPOSED WATER METER
	PROPOSED FIRE HYDRANT
	PROPOSED WATER VALVE
	PROPOSED PAVEMENT
	EXISTING GEOTECHNICAL BORE
600	EXISTING CONTOUR
W	EXISTING WATER LINE
WW	EXISTING WASTEWATER LINE
OE	EXISTING OVERHEAD ELECTRIC
X	PROPOSED SWING GATE
OO	PROPOSED CHAINLINK FENCE
	PROPOSED EASEMENT LINE
	EXISTING PROPERTY LINE
SF	SILT FENCE
RB	ROCK BERM
TP	TREE PROTECTION FENCING
	STABILIZED CONSTRUCTION ENTRANCE
	TEMPORARY SEEDING
4000	TREE TO BE REMOVED
4000	TREE TO REMAIN

TREE LIST

TAG NO.	BOLE DIAMETER	TREE TYPE	DRIPLINE DIA.
233	8"	CEDAR	16'
234	13"	CEDAR	26'
~~235~~	~~17"~~	~~CEDAR~~	~~34'~~
236	11"	CEDAR	22'
237	10"	CEDAR	20'
238	15.5"	CEDAR	31'
239	15"	CEDAR	30'
~~240~~	~~12"~~	~~CEDAR~~	~~24'~~
553	9"	LIVE OAK	18'
554	15"	LIVE OAK	30'
555	15"	LIVE OAK	30'
556	24"11" 11" 13"	LIVE OAK	83'
~~557~~	~~21"~~	~~CEDAR~~	~~43'~~
774	11"	HACKBERRY	22'
~~775~~	~~15.5"~~	~~CEDAR~~	~~31'~~
~~776~~	~~13"~~	~~CEDAR~~	~~26'~~
782	9"	LIVE OAK	18'
783	9"	CEDAR	18'
784	8"	CEDAR	16'
785	9"	LIVE OAK	18'
786	8"	LIVE OAK	16'
787	13.5"	CEDAR	27'
793	8"	SPANISH OAK	16'
794	13"	CEDAR	26'
795	14"	CEDAR	28'
~~4001~~	~~16.5"~~	~~CEDAR~~	~~33'~~
~~4002~~	~~10"~~	~~CEDAR~~	~~20'~~
~~4003~~	~~9"~~	~~CEDAR~~	~~18'~~
~~4004~~	~~8"~~	~~CEDAR~~	~~16'~~
~~4005~~	~~11"~~	~~CEDAR~~	~~22'~~
~~4006~~	~~26"~~	~~CEDAR~~	~~52'~~
~~4007~~	~~9"~~	~~CEDAR~~	~~18'~~
4008	8"	CEDAR	16'
4009	8"	CEDAR	16'
~~4011~~	~~9.5"~~	~~CEDAR~~	~~19'~~
4012	9"	CEDAR	18'
4013	14.75"	CEDAR	29.5'
4014	10.5"	CEDAR	21'
4015	8.5"	CEDAR	17'
4016	11"	CEDAR	22'
4017	22.5"	COTTONWOOD	45'
4018	9.5"	CEDAR	19'
4019	11.5"	CEDAR	23'
4020	14"	CEDAR	28'
4021	11"	CEDAR	22'
~~4022~~	~~15"~~	~~CEDAR~~	~~30'~~
~~4023~~	~~16"~~	~~CEDAR~~	~~32'~~
~~4024~~	~~16"~~	~~CEDAR~~	~~32'~~
~~4025~~	~~16"~~	~~CEDAR~~	~~32'~~

TAG NO.	BOLE DIAMETER	TREE TYPE	DRIPLINE DIA.
~~4026~~	~~13"~~	~~CEDAR~~	~~26'~~
4027	9.5"	CEDAR	19'
4028	10.5"	CEDAR	21'
4029	15"	BOIS D' ARC	30'
~~4030~~	~~12"~~	~~CEDAR~~	~~24'~~
~~4031~~	~~9"~~	~~CEDAR~~	~~18'~~
~~4032~~	~~11"~~	~~CEDAR~~	~~22'~~
~~4033~~	~~11"~~	~~CEDAR~~	~~22'~~
~~4034~~	~~10"~~	~~CEDAR~~	~~20'~~
~~4035~~	~~10"~~	~~CEDAR~~	~~20'~~
~~4037~~	~~10.5"~~	~~CEDAR~~	~~21'~~
~~4038~~	~~18"~~	~~CEDAR~~	~~36'~~
~~4039A~~	~~11"~~	~~CEDAR~~	~~22'~~
~~4039~~	~~11"~~	~~CEDAR~~	~~22'~~
~~4040~~	~~15"~~	~~CEDAR~~	~~30'~~
~~4041~~	~~10"~~	~~CEDAR~~	~~20'~~
~~4042~~	~~9"~~	~~CEDAR~~	~~18'~~
~~4043~~	~~9"~~	~~CEDAR~~	~~18'~~
~~4044~~	~~16"~~	~~CEDAR~~	~~32'~~
~~4045~~	~~22.5"~~	~~CEDAR~~	~~45'~~
~~4046~~	~~10"~~	~~CEDAR~~	~~20'~~
~~4047~~	~~9.5"~~	~~CEDAR~~	~~19'~~
~~4048~~	~~8.5"~~	~~CEDAR~~	~~17'~~
~~4049~~	~~9"~~	~~CEDAR~~	~~18'~~
4050	8"	CEDAR	16'
~~4051~~	~~11"~~	~~CEDAR~~	~~22'~~
~~4052~~	~~10.5"~~	~~CEDAR~~	~~21'~~
~~4053~~	~~8"~~	~~CEDAR~~	~~16'~~
~~4054~~	~~13"~~	~~CEDAR~~	~~26'~~
~~4055~~	~~11"~~	~~CEDAR~~	~~22'~~
~~4056~~	~~8.5"~~	~~CEDAR~~	~~17'~~
~~4057~~	~~8.5"~~	~~CEDAR~~	~~17'~~
~~4058~~	~~11"~~	~~CEDAR~~	~~22'~~
~~4059~~	~~9.5"~~	~~CEDAR~~	~~19'~~
~~4060~~	~~9"~~	~~CEDAR~~	~~18'~~
~~4061~~	~~8.5"~~	~~CEDAR~~	~~17'~~
~~4062~~	~~11"~~	~~CEDAR~~	~~22'~~
~~4063~~	~~9"~~	~~CEDAR~~	~~18'~~
~~4064~~	~~10"~~	~~CEDAR~~	~~20'~~
~~4065~~	~~9"~~	~~CEDAR~~	~~18'~~
~~4066~~	~~10"~~	~~CEDAR~~	~~20'~~
4067	9.5"	CEDAR	19'

TAG NO.	BOLE DIAMETER	TREE TYPE	DRIPLINE DIA.
4068	12"	CEDAR	24'
4069A	17"	CEDAR	34'
~~4069~~	~~11.5"~~	~~CEDAR~~	~~23'~~
~~4070A~~	~~15"~~	~~CEDAR~~	~~30'~~
4070	8.5"	UNKNOWN TYPE	17'
4071A	17"	CEDAR	34'
~~4071~~	~~11.75"~~	~~CEDAR~~	~~23.5'~~
4072A	10.5"	CEDAR	21'
4072	16"	CEDAR	32'
~~4073A~~	~~16"~~	~~UNKNOWN TYPE~~	~~32'~~
4073	10"	CEDAR	20'
~~4074A~~	~~9"~~	~~ELM~~	~~18'~~
~~4074~~	~~13.5"~~	~~CEDAR~~	~~27'~~
4075A	22"	CEDAR	44'
4075	10.5"	CEDAR	21'
~~4076A~~	~~15"~~	~~CEDAR~~	~~30'~~
4076	15.5"	CEDAR	31'
4077	11"	CEDAR	22'
4078	9"	CEDAR	18'
~~4079~~	~~9"~~	~~CEDAR~~	~~18'~~
~~4080~~	~~9"~~	~~CEDAR~~	~~18'~~
~~4081~~	~~10"~~	~~CEDAR~~	~~20'~~

APPROVAL

SITE PLAN APPROVAL SHEET 23 OF 126
FILE NUMBER: SPC-2015-0322C APPLICATION DATE: JULY 17, 2015
APPROVED BY COMMISSION ON: N/A UNDER SECTION 142 OF
CHAPTER 25-5 OF THE CITY OF AUSTIN CODE.
EXPIRATION DATE (25-5-81, LDC) _____ CASE MANAGER LYNDA COURTNEY
PROJECT EXPIRATION DATE (ORD.#970905-A) _____ DWPZ _____ DDZ _____

Director, Planning and Development Review
RELEASE FOR GENERAL COMPLIANCE: _____ ZONING P-NP LI-NP
Rev. 1 _____ Correction 1 _____
Rev. 2 _____ Correction 2 _____
Rev. 3 _____ Correction 3 _____

Final plat must be recorded by the Project Expiration Date, if applicable. Subsequent Site Plans which do not comply with the Code current at the time of filing, and all required Building Permits and/or a notice of construction (if a building permit is not required), must also be approved prior to the Project Expiration Date.

STATE OF TEXAS
DALE P. MURPHY
90614
LICENSED
PROFESSIONAL ENGINEER
05/09/2016

NO.	DATE	REVISION	BY	APVD
DSGN	D Murphy	DR M Gilliland	CHK D Murphy	APVD D Murphy

K·FRIESE + ASSOCIATES
PROFESSIONAL ENGINEERS
TBPE Firm #2535

CH2MHILL.
TBPE FIRM NO. 3699

Montopolis Water Reclamation Initiave (WRI)
Storage Reservoir and Pump Station
2711 Montopolis Drive
Austin Water, Austin, Texas

CIVIL

EROSION CONTROL AND TREE PROTECTION PLAN

1" = 40'
VERIFY SCALE
BAR IS ONE INCH ON ORIGINAL DRAWING.
0 1"

DATE	MAY 2016
PROJ	472902
DWG	C-17
SHEET	23 of 126

FILENAME: 0278_ESC_TREES.DWG PLOT DATE: May 11, 2016 PLOT TIME: 3:44 PM SPC-2015-0322C

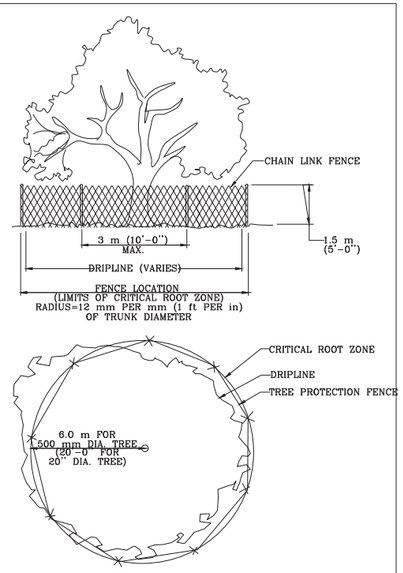

CITY OF AUSTIN
WATERSHED PROTECTION DEPARTMENT

TREE PROPTECTION FENCE
TYPE A - CHAIN LINK

RECORD COPY SIGNED BY J. PATRICK MURPHY 11/15/99 ADOPTED

THE ARCHITECT/ENGINEER ASSUMES RESPONSIBILITY FOR APPROPRIATE USE OF THIS STANDARD.

STANDARD NO. 610S-2

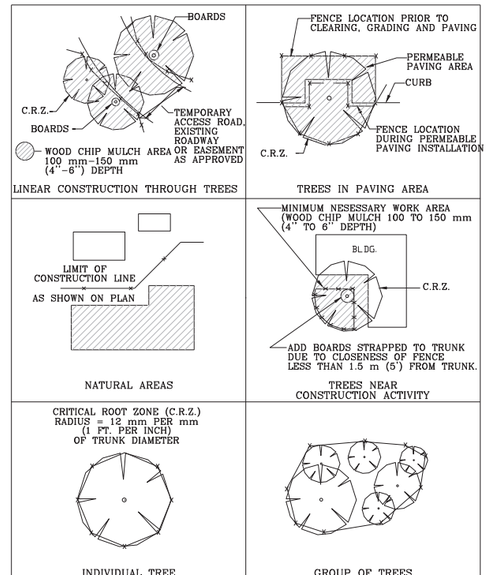

CITY OF AUSTIN
WATERSHED PROTECTION DEPARTMENT

TREE PROTECTION FENCE LOCATIONS

RECORD COPY SIGNED BY J. PATRICK MURPHY 11/15/99 ADOPTED

THE ARCHITECT/ENGINEER ASSUMES RESPONSIBILITY FOR APPROPRIATE USE OF THIS STANDARD.

STANDARD NO. 610S-1

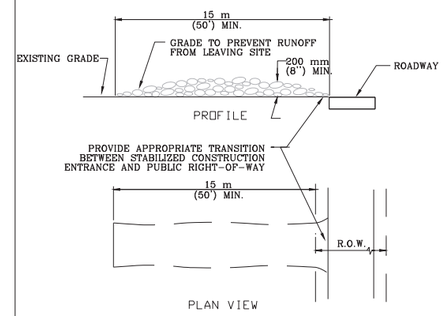

NOTES:
1. STONE SIZE: 75-125 mm (3-5") OPEN GRADED ROCK.
2. LENGTH: AS EFFECTIVE BUT NOT LESS THAN 15 m (50').
3. THICKNESS: NOT LESS THAN 200 mm (8").
4. WIDTH: NOT LESS THAN FULL WIDTH OF ALL POINTS OF INGRESS/EGRESS.
5. WASHING: WHEN NECESSARY, VEHICLE WHEELS SHALL BE CLEANED TO REMOVE SEDIMENT PRIOR TO ENTRANCE ONTO PUBLIC ROADWAY. WHEN WASHING IS REQUIRED, IT SHALL BE DONE ON AN AREA STABILIZED WITH CRUSHED STONE AND DRAINS INTO AN APPROVED TRAP OR SEDIMENT BASIN. ALL SEDIMENT SHALL BE PREVENTED FROM ENTERING ANY STORM DRAIN, DITCH OR WATERCOURSE USING APPROVED METHODS.
6. MAINTENANCE: THE ENTRANCE SHALL BE MAINTAINED IN A CONDITION THAT WILL PREVENT TRACKING OR FLOWING OF SEDIMENT ONTO PUBLIC ROADWAY. THIS MAY REQUIRE PERIODIC TOP DRESSING WITH ADDITIONAL STONE AS CONDITIONS DEMAND, AS WELL AS REPAIR AND CLEAN OUT OF ANY MEASURE DEVICES USED TO TRAP SEDIMENT. ALL SEDIMENTS THAT IS SPILLED, DROPPED, WASHED OR TRACKED ONTO PUBLIC ROADWAY MUST BE REMOVED IMMEDIATELY.
7. DRAINAGE: ENTRANCE MUST BE PROPERLY GRADED OR INCORPORATE A DRAINAGE SWALE TO PREVENT RUNOFF FROM LEAVING THE CONSTRUCTION SITE.

CITY OF AUSTIN
WATERSHED PROTECTION DEPARTMENT

STABILIZED CONSTRUCTION ENTRANCE

RECORD COPY SIGNED BY J. PATRICK MURPHY 5/23/00 ADOPTED

THE ARCHITECT/ENGINEER ASSUMES RESPONSIBILITY FOR APPROPRIATE USE OF THIS STANDARD.

STANDARD NO. 641S-1

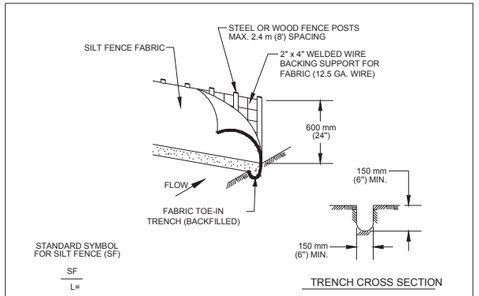

1. STEEL OR WOOD POSTS WHICH SUPPORT THE SILT FENCE SHALL BE INSTALLED ON A SLIGHT ANGLE TOWARD THE ANTICIPATED RUNOFF SOURCE. POST MUST BE EMBEDDED A MINIMUM OF 300 mm (12 INCHES). IF WOOD POSTS CANNOT ACHIEVE 300 mm (12 inches) DEPTH, USE STEEL POSTS.

2. THE TOE OF THE SILT FENCE SHALL BE TRENCHED IN WITH A SPADE OR MECHANICAL TRENCHER, SO THAT THE DOWNSLOPE FACE OF THE TRENCH IS FLAT AND PERPENDICULAR TO THE LINE OF FLOW.

3. THE TRENCH MUST BE A MINIMUM OF 150 mm (6 inches) DEEP AND 150 mm (6 inches) WIDE TO ALLOW FOR THE SILT FENCE FABRIC TO BE LAID IN THE GROUND AND BACKFILLED WITH COMPACTED MATERIAL.

4. SILT FENCE FABRIC SHOULD BE SECURELY FASTENED TO EACH STEEL OR WOOD SUPPORT POST OR TO WOVEN WIRE , WHICH IS IN TURN ATTACHED TO THE STEEL OR WOOD FENCE POST.

5. INSPECTION SHALL BE MADE WEEKLY OR AFTER EACH RAINFALL EVENT AND REPAIR OR REPLACEMENT SHALL BE MADE PROMPTY AS NEEDED.

6. SILT FENCE SHALL BE REMOVED WHEN THE SITE IS COMPLETELY STABILIZED SO AS NOT TO BLOCK OR IMPEDE STORM FLOW OR DRAINAGE.

7. ACCUMULATED SILT SHALL BE REMOVED WHEN IT REACHES A DEPTH OF 150 mm (6 inches). THE SILT SHALL BE DISPOSED OF ON AN APPROVED SITE AND IN SUCH A MANNER THAT WILL NOT CONTRIBUTE TO ADDITIONAL SILTATION.

CITY OF AUSTIN
WATERSHED PROTECTION DEPARTMENT

SILT FENCE

RECORD COPY SIGNED BY MORGAN BYARS 09/01/2011 ADOPTED

THE ARCHITECT/ENGINEER ASSUMES RESPONSIBILITY FOR APPROPRIATE USE OF THIS STANDARD.

STANDARD NO. 642S-1

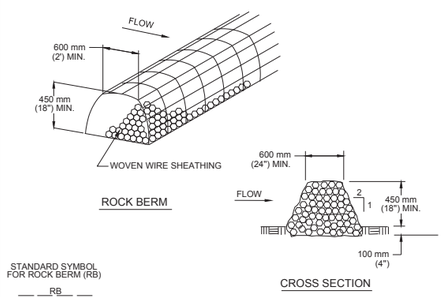

NOTES:
1. USE ONLY OPEN GRADED ROCK 75 to 125 mm (3 to 5") DIAMETER FOR ALL CONDITIONS.
2. THE ROCK BERM SHALL BE SECURED WITH A WOVEN WIRE SHEATHING HAVING MAXIMUM 25 mm (1") OPENING AND MINIMUM WIRE DIAMETER OF 12.9 mm (20 GAUGE).
3. THE ROCK BERM SHALL BE INSPECTED DAILY OR AFTER EACH RAIN, AND THE STONE AND/OR FABRIC CORE-WOVEN SHEATHING SHALL BE REPLACED WHEN THE STRUCTURE CEASES TO FUNCTION AS INTENDED, DUE TO SEDIMENT ACCUMULATION AMONG THE ROCKS, WASHOUT, CONSTRUCTION TRAFFIC DAMAGE, ETC.
4. IF SEDIMENT REACHES A DEPTH EQUAL TO ONE-THIRD THE HEIGHT OF THE BERM OR 150 mm (6"), WHICHEVER IS LESS, THE SEDIMENT SHALL BE REMOVED AND DISPOSED OF ON AN APPROVED SITE AND IN A MANNER THAT WILL NOT CREATE A SEDIMENTION PROBLEM.
5. WHEN THE SITE IS COMPLETELY STABILIZED,THE BERM AND ACCUMULATED SEDIMENT SHALL BE REMOVED AND DISPOSED OF IN AN APPROVED MANNER.

CITY OF AUSTIN
WATERSHED PROTECTION DEPARTMENT

ROCK BERM

RECORD COPY SIGNED BY MORGAN BYARS 8/24/2010 ADOPTED

THE ARCHITECT/ENGINEER ASSUMES RESPONSIBILITY FOR APPROPRIATE USE OF THIS STANDARD.

STANDARD NO. 639S-1

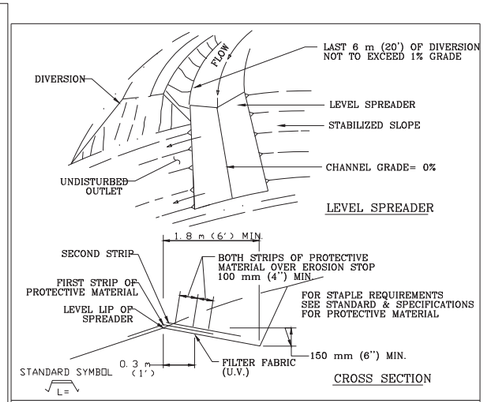

GENERAL NOTES:
1. LEVEL SPREADERS SHALL BE INSTALLED UNDER THE DIRECT SUPERVISION OF THE ENGINEER.
2. CONSTRUCT LEVEL LIP ON ZERO PERCENT GRADE TO INSURE UNIFORM SPREADING OF SEDIMENT-FREE RUNOFF (CONVERTING CHANNEL FLOW TO SHEET FLOW).
3. LEVEL SPREADER SHALL BE CONSTRUCTED ON UNDISTURBED SOIL (NOT ON FILL).
4. A MATTING EROSION STOP SHALL BE PLACED VERTICALLY AND AT LEAST 150 mm (6") DEEP IN A SILT TRENCH 0.3 m (1') BACK OF AND PARALLEL WITH THE LIP. THIS EROSION STOP SHALL EXTEND THE ENTIRE LENGTH OF THE LEVEL LIP AND SHALL BE TRIMMED AFTER BACKFILLING WITH TAMPED SOIL, SO THAT THE UPPER EDGE IS FLUSH WITH THE SOIL SURFACE.
5. THE ENTIRE LEVEL LIP AREA SHALL BE PROTECTED BY PLACING 2 STRIPS OF JUTE, EXCELSIOR OR OTHER APPROVED PROTECTIVE MATERIAL AS SHOWN ABOVE.
6. THE ENTRANCE CHANNEL SHALL NOT EXCEED A 1% GRADE FOR AT LEAST 6 m (20') BEFORE ENTERING SPREADER.
7. STORM RUNOFF CONVERTED TO SHEET FLOW SHALL OUTLET ONTO STABILIZED AREAS. WATER SHALL NOT BE RECONCENTRATED IMMEDIATELY BELOW THE POINT OF DISCHARGE.
8. PERIODIC INSPECTION AND REQUIRED MAINTENANCE SHALL BE PROVIDED.

CITY OF AUSTIN
WATERSHED PROTECTION DEPARTMENT

LEVEL SPREADER

RECORD COPY SIGNED BY J. PATRICK MURPHY 3/27/00 ADOPTED

THE ARCHITECT/ENGINEER ASSUMES RESPONSIBILITY FOR APPROPRIATE USE OF THIS STANDARD.

STANDARD NO. 634S-1

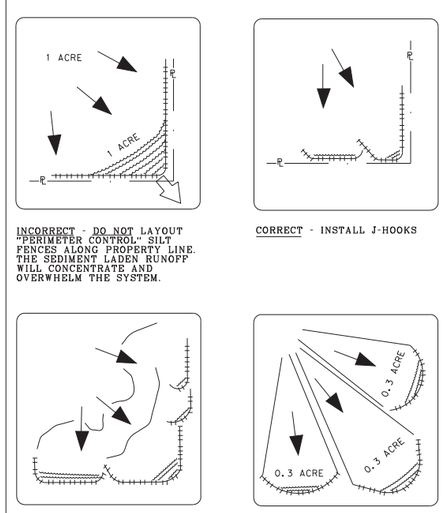

SILT FENCE PLACEMENT FOR PERIMETER CONTROL

ECM FIG 1.4.5.G.3

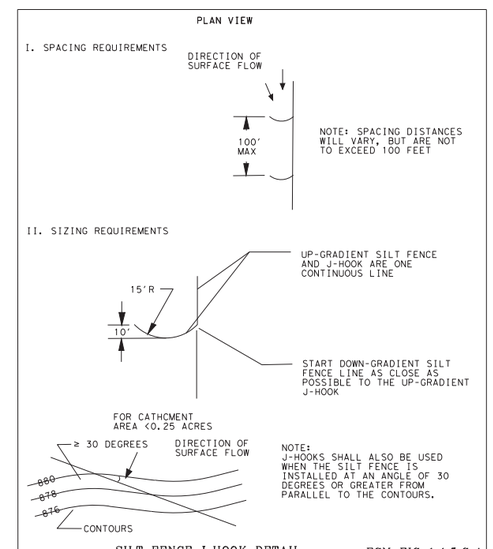

SILT FENCE J-HOOK DETAIL

ECM FIG 1.4.5.G.4

APPROVAL

SITE PLAN APPROVAL SHEET 24 OF 126
FILE NUMBER: SPC-2015-0322C APPLICATION DATE: JULY 17, 2015
APPROVED BY COMMISSION ON: N/A UNDER SECTION 142 OF
CHAPTER 25-5 OF THE CITY OF AUSTIN CODE.
EXPIRATION DATE (25-5-81, LDC) _____ CASE MANAGER LYNDA COURTNEY
PROJECT EXPIRATION DATE (ORD.#970905-A) _____ DWPZ _____ DDZ _____

Director, Planning and Development Review
RELEASE FOR GENERAL COMPLIANCE: _____ ZONING P-NP LI-NP
Rev. 1 _____ Correction 1 _____
Rev. 2 _____ Correction 2 _____
Rev. 3 _____ Correction 3 _____

Final plat must be recorded by the Project Expiration Date, if applicable. Subsequent Site Plans which do not comply with the Code current at the time of filing, and all required Building Permits and/or a notice of construction (if a building permit is not required), must also be approved prior to the Project Expiration Date.

STATE OF TEXAS
DALE P. MURPHY
90614
LICENSED
PROFESSIONAL ENGINEER
05/09/2016

NO.	DATE	REVISION	BY	APVD
DSGN	D Murphy	DR	M Gilfillan	CHK	D Murphy	APVD	D Murphy

K·FRIESE + ASSOCIATES
PUBLIC PROJECT ENGINEERING
TBPE Firm #3535

Montopolis Water Reclamation Initiave (WRI)
Storage Reservoir and Pump Station
2711 Montopolis Drive
Austin Water, Austin, Texas

CH2MHILL.
TBPE FIRM NO. 3699

CIVIL

EROSION CONTROL DETAILS

VERIFY SCALE
BAR IS ONE INCH ON ORIGINAL DRAWING.
0 1"

DATE	MAY 2016
PROJ	472902
DWG	C-18
SHEET	24 of 126

STANDARD RIGHT OF WAY NOTES:

1. FOR RIGHT OF WAY VIOLATIONS INCLUDING BUT NOT LIMITED TO WORKING WITHOUT A PERMIT OR AN EXPIRED PERMIT WITHIN THE CITY OF AUSTIN ROW AN INVESTIGATION FEE WILL BE ASSESSED FOR EACH OFFENSE UNTIL THE VIOLATION IS CORRECTED. FOLLOWING IS THE INVESTIGATION FEE SCHEDULE FOR VIOLATIONS OF PUBLIC SAFETY:
   - A. NO OR EXPIRED PERMIT = EQUAL TO THE COST OF THE PERMIT
   - B. VIOLATION OF PERMIT CONDITIONS, RESTRICTION LIMITS, TIMES AND LOCATIONS ON ROW PERMIT = $250
   - C. IMPROPER ADVANCE WARNING SIGN = $250
   - D. IMPROPER USE OF DEVICE = $250
   - E. FAILURE TO CORRECT DEFICIENCY = $500
   - F. RESTRICTING TRAFFIC DURING PEAK HOURS = EQUAL TO THE COST OF THE PERMIT
   - G. MULTIPLE VIOLATIONS = UP TO A 4 DAY SUSPENSION OF WORK
2. CONTRACTORS AND THEIR SUBCONTRACTORS MUST BE LICENSED BY THE CITY OF AUSTIN FOR CONDUCTING WORK WITHIN THE RIGHT OF WAY.
3. CONTRACTOR MUST OBTAIN RIGHT OF WAY EXCAVATION PERMITS FROM RIGHT OF WAY MANAGEMENT DIVISION, FOR EACH STREET PRIOR TO COMMENCEMENT OF WORK. PLEASE CALL (512) 974-1150 FOR ADDITIONAL INFORMATION REGARDING PERMITTING PROCESS AND THE MOST CURRENT RIGHT OF WAY PERMITTING FEE SCHEDULE.
4. FOR WORK AT SIGNALIZED INTERSECTIONS CONTRACTOR MUST DIAL 311 OR (512) 974-2000 TO INITIATE A CITIZENS SERVICE REQUEST (CSR) FOR THE TRAFFIC SIGNALS GROUP; TO COORDINATE AND GAIN APPROVAL A MINIMUM OF 1 WEEK PRIOR TO CHANGE OF PROJECT LOCATION OR PHASE.
5. CONTRACTOR SHALL HAVE AN APPROVED RIGHT OF WAY PERMIT ON SITE AT ALL TIMES WHEN WORKING IN THE ROW.
6. CONTRACTOR MUST DIAL 311 OR (512) 974-2000 TO INITIATE A CITIZENS SERVICE REQUEST (CSR) FOR RIGHT OF WAY MANAGEMENT A MINIMUM OF 1 WEEK PRIOR TO START OF EACH PHASE. CONTRACTOR MUST ALSO COMPLETE AND SUBMIT A CITY OF AUSTIN STANDARD FORM REGARDING NOTIFICATION OF EMS 1 WEEK IN ADVANCE OF EACH PHASE.
7. CONTRACTOR MUST PROVIDE TRAINING CERTIFICATION OF COMPETENT PERSON THAT WILL BE RESPONSIBLE FOR THE TRAFFIC CONTROL PLACEMENT, TO RIGHT OF WAY INSPECTOR, PRIOR TO START OF WORK.
8. STORAGE OF EQUIPMENT AND/OR MATERIAL WITHIN THE ROW.
   - A. STORAGE OF EQUIPMENT IN THE ROW IS PERMISSIBLE ONLY WITHIN THE CURRENT LIMITS OF LONG-TERM OR INTERMEDIATE-TERM CLOSURES AND SHALL BE LIMITED TO THE EQUIPMENT REQUIRED FOR THE CURRENT WORK ACTIVITY. THIS EQUIPMENT SHALL BE PROTECTED BEHIND BARRICADES.
   - B. STORAGE OF MATERIAL IN THE ROW IS PERMISSIBLE ONLY WITHIN THE CURRENT LIMITS OF LONG-TERM OR INTERMEDIATE-TERM CLOSURES AND SHALL BE LIMITED TO NO MORE THAN THE MATERIAL REQUIRED FOR THREE DAYS OF PRODUCTION. THIS MATERIAL SHALL BE PROTECTED BEHIND WATER-FILLED BARRIER.
   - C. EQUIPMENT OR MATERIAL STORED IN THE ROW SHALL NOT CREATE A VISUAL BARRIER TO TRAFFIC.
9. NO MORE THAN ONE WORK ZONE LOCATION MAY BE SET AT ONE TIME.
10. PEAK HOURS FOR ARTERIAL AND COLLECTOR STREETS ARE 6AM TO 9AM AND 4PM TO 6 PM, MONDAY THROUGH FRIDAY. NO DISRUPTION OR REDUCTION OF ACTIVE ROADWAY OR PEDESTRIAN ROUTE CAPACITY SHALL OCCUR DURING THESE TIMES, UNLESS ALLOWED BY TRAFFIC CONTROL PLAN.
11. EXCAVATIONS SHALL BE BACKFILLED OR PLATED WHEN REQUIRED TO OPEN IMPACTED TRAFFIC LANES. FOR EXCAVATIONS EXCEEDING A TRANSVERSE WIDTH OF 6 FEET, THE CONTRACTOR SHALL PROVIDE AN ENGINEERED PLATING PLAN TO THE OWNER'S REPRESENTATIVE FOR REVIEW BY RIGHT OF WAY MANAGEMENT DIVISION.
12. EXISTING SIDEWALKS AND BEATEN PATHS SHALL BE MAINTAINED AS ADA COMPLIANT THROUGHOUT THE PROJECT DURATION WITH THE EXCEPTION O F FINAL FLATWORK AND UTILITY TIE- INS. ANY WORK OVERHEAD WITHIN 25 FEET OF EXISTING PEDESTRIAN PATHWAYS WILL REQUIRE PEDESTRIAN COVERED WALKWAYS. SIDEWALK CLOSURES FOR MAJOR SIDEWALK IMPROVEMENTS HAVE A 14-DAY MAXIMUM PERIOD AND SHALL BE COMPLETED IN PHASES AS TO NOT CLOSE MORE THAN ONE BLOCK AT A TIME.
13. "ROAD WORK AHEAD" AND "CONSTRUCTION ENTRANCE AHEAD" SIGNS MUST BE PLACED AT ALL APPROACHES TO STABILIZED CONSTRUCTION ENTRANCE. SEE THE CITY OF AUSTIN STANDARD DETAILS FOR SIGN SPACING.
14. DRIVEWAYS SHALL NOT BE CLOSED FOR MORE THAN 3 CONSECUTIVE CALENDAR DAYS
15. ADA COMPLIANCE SHALL BE MAINTAINED THROUGH STABILIZED CONSTRUCTION ENTRANCE.
16. BARRIER SHALL BE PLACED WITHIN GUIDELINES SET FORTH BY THE TMUTCD CRASH TESTING REQUIREMENTS (NCHRP REPORT 350) FOR THAT PART ICULAR BARRIER USED. ANY MODIFICATIONS TO THAT TESTING APPLICATION SHALL BE APPROVED BY THE ENGINEER OF RECORD.
17. FOR OVERNIGHT PROTECTION OF WORK ZONES WITHIN THE ROW, REFER TO CITY OF AUSTIN STANDARD 804S-4 SERIES DETAILS.
18. ALL TEMPORARY PAVING SHALL CONFORM TO CITY OF AUSTIN STANDARD DETAIL 1100S-4.
19. INITIAL AND PHASE CHANGE TRAFFIC CONTROL CHANGES SHALL BE INSTALLED ON THE WEEKENDS.
20. THE NAME AND TELEPHONE NUMBER OF THE CONTRACTOR OR SUPPLIER SHALL BE SHOWN ON THE NON-REFLECTIVE SURFACE OF ALL CHANNELIZING DEVICES IN ACCORDANCE WITH THE CITY OF AUSTIN STANDARD 800 SERIES DETAILS.

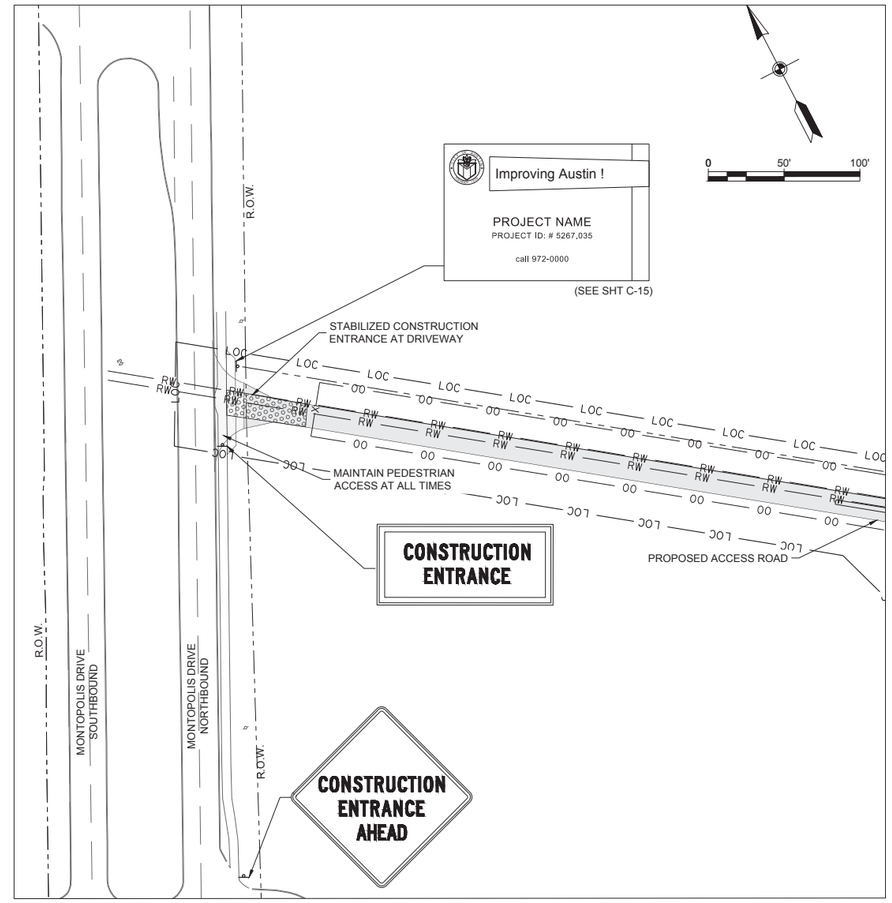

PHASE I: SITE CONSTRUCTION

PHASE I NOTES:

1. PHASE I TRAFFIC CONTROLS SHALL BE INSTALLED FOR ALL SITE WORK.
2. REFER TO COA DETAIL 804S-2 FOR OPERATIONS REQUIRING SHORT-TERM PARTIAL LANE CLOSURES IN MONTOPOLIS DRIVE.

TRAFFIC CONTROL PHASING SUMMARY:

1. PHASE I TRAFFIC CONTROL WILL BE IN PLACE DURING ALL SITE WORK LOCATED OUTSIDE THE MONTOPOLIS DRIVE RIGHT-OF-WAY.
2. PHASE II TRAFFIC CONTROL WILL BE UTILIZED WHEN THE EXISTING SIDEWALK IS REQUIRED TO BE CLOSED (AND PEDESTRIANS DETOURED) FOR PIPELINE CONSTRUCTION, DRIVEWAY CONSTRUCTION, AND SIDEWALK CONSTRUCTION. NORTHBOUND MONTOPOLIS DRIVE WILL BE CLOSED AND PEDESTRIANS WILL BE DETOURED PER THE PLAN ONTO MONTOPOLIS DRIVE. THIS PHASE IS ONLY PERMITTED BETWEEN THE HOURS OF 11:30 PM AND 6:00 AM.
3. PHASE III TRAFFIC CONTROL WILL BE UTILIZED FOR WORK WITHIN THE MONTOPOLIS RIGHT-OF-WAY (PIPELINE CONSTRUCTION, DRIVEWAY CONSTRUCTION, REPAVING, ETC.). PHASE III REQUIRES THAT THE SIDEWALK REMAIN OPEN AT ALL TIMES FOR PEDESTRIANS, TEMPORARY PAVING FOR THE SIDEWALK SHALL BE INSTALLED TO MAINTAIN THE SIDEWALK WHEN REQUIRED.

BARRICADING SUMMARY TABLES

Streets

Street	Classsification	Protection	Street From	Street To	Planned Improvements	Traffic Control Plan Sheet / Detail	Allowed Barricading Times	Duration	Comments
Montopolis Drive (Phase II)	Arterial	Not Protected	E Oltorf Street	Grove Boulevard	Reclaimed Water Main Installation (Open Cut), Excavation, Backfill, Repaving with existing sidewalk closed and pedestrians detoured	Sheet 22A / 804S-2 5 of 8	11:30pm-6am Mon-Fri	5 nights	Detour pedestrians per Sidewalk and Driveway Construction details.
Montopolis Drive (Phase III)	Arterial	Not Protected	E Oltorf Street	Grove Boulevard	Reclaimed Water Main Installation (Open Cut), Excavation, Backfill, Repaving with existing sidewalk open	Sheet 33 / 804S-1 1 of 9	9am-4pm Mon-Fri; 7am-6pm Weekends	1 month	

APPROVAL

SITE PLAN APPROVAL SHEET 25 OF 126

FILE NUMBER: SPC-2015-0322C APPLICATION DATE: JULY 17, 2015

APPROVED BY COMMISSION ON: N/A UNDER SECTION 142 OF CHAPTER 25-5 OF THE CITY OF AUSTIN CODE.

EXPIRATION DATE (25-5-81, LDC) _____ CASE MANAGER LYNDA COURTNEY

PROJECT EXPIRATION DATE (ORD.#970905-A) _____ DWPZ _____ DDZ _____

Director, Planning and Development Review

RELEASE FOR GENERAL COMPLIANCE: _____ ZONING P-NP LI-NP

Rev. 1 _____ Correction 1 _____

Rev. 2 _____ Correction 2 _____

Rev. 3 _____ Correction 3 _____

Final plat must be recorded by the Project Expiration Date, if applicable. Subsequent Site Plans which do not comply with the Code current at the time of filing, and all required Building Permits and/or a notice of construction (if a building permit is not required), must also be approved prior to the Project Expiration Date.

STATE OF TEXAS
DALE P. MURPHY
90614
LICENSED
PROFESSIONAL ENGINEER
05/09/2016

NO.	DATE	REVISION	BY	APVD
DSGN	D Murphy	DR	CHK	M Gilliland	D Murphy	APVD	D Murphy

K·FRIESE + ASSOCIATES
PROFESSIONAL ENGINEERING
TBPE Firm #6535

Montopolis Water Reclamation Initiave (WRI)
Storage Reservoir and Pump Station
2711 Montopolis Drive
Austin Water, Austin, Texas

CH2MHILL.
TBPE FIRM NO. 3699

CIVIL

TRAFFIC CONTROL PLAN
PHASE I

1" = 50'
VERIFY SCALE
BAR IS ONE INCH ON ORIGINAL DRAWING.
0 1"

DATE	MAY 2016
PROJ	472902
DWG	C-19
SHEET	25 of 126

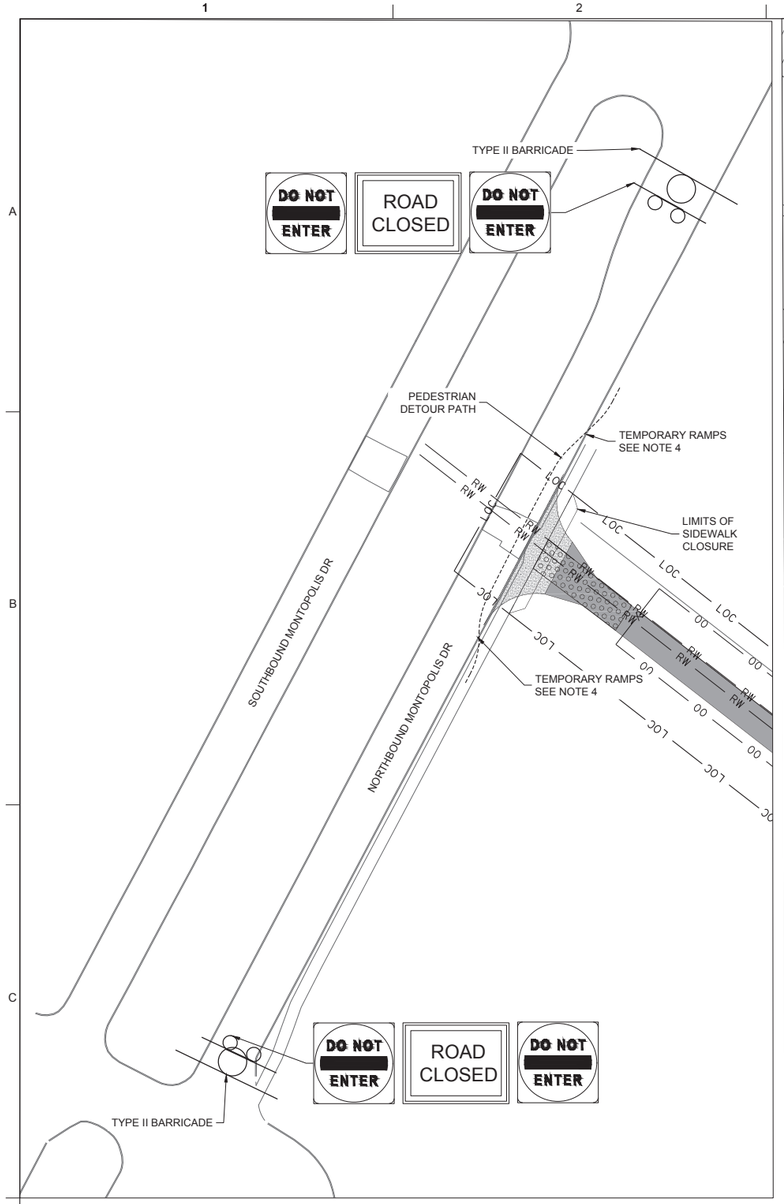

SIDEWALK AND DRIVEWAY CONSTRUCTION

(N.T.S.)

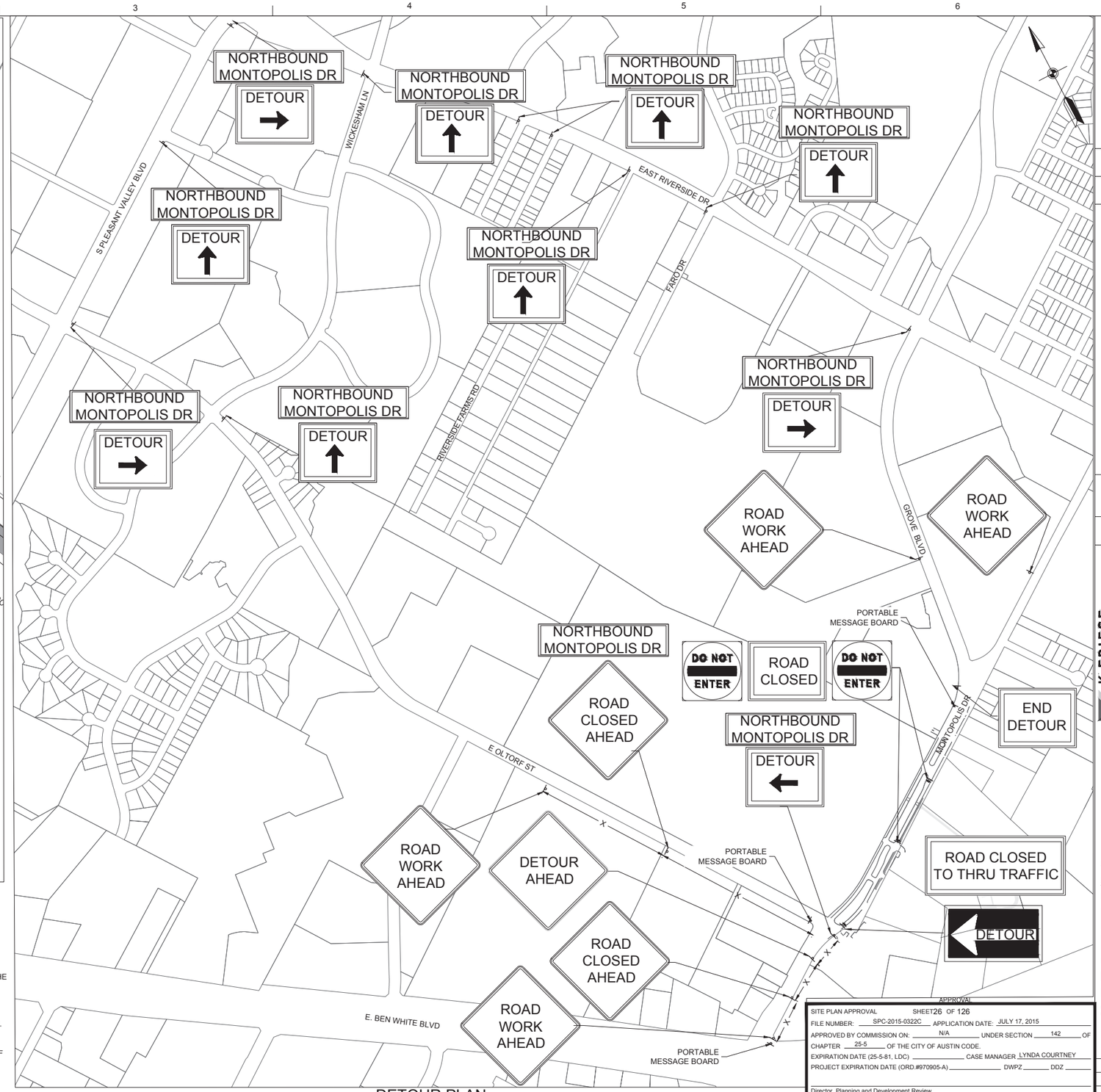

DETOUR PLAN

(N.T.S.)

PHASE II NOTES:

1. PHASE II SHALL BE FOR EXCAVATION AND CONSTRUCTION OF THE PROPOSED RECLAIMED WATER MAINS ACROSS THE EXISTING SIDEWALK AND CONSTRUCTION OF THE PROPOSED DRIVEWAY AND SIDEWALK.
2. PEDESTRIAN TRAFFIC TO BE DIVERTED TO NORTHBOUND MAINLANE TRAFFIC LANES DURING NIGHT CONSTRUCTION.
3. INSTALL APPROPRIATE SIGNAGE AND BARRICADES AS NECESSARY FOR SAFETY.
4. TEMPORARY RAMPS SHALL BE CONSTRUCTED FROM EXISTING SIDEWALK TO ROADWAY. RAMPS WILL BE REMOVED WHEN ROADWAY OPEN TO VEHICULAR TRAFFIC.
5. AT 6:00 AM EACH DAY, A MINIMUM OF 1 LANE OF NORTHBOUND MONTOPOLIS DRIVE SHALL BE REOPENED TO TRAFFIC. SINGLE LANE CLOSURES SHALL BE PER DETAIL 804S-1, SHEET 1 OF 9.
6. TRAFFIC TO BE MAINTAINED ON SOUTHBOUND LANE OF MONTOPOLIS DRIVE.
7. COORDINATION WITH CAP METRO WILL BE REQUIRED. APPROPRIATE MESSAGE BOARDS AND ROAD CLOSURE NOTIFICATIONS WILL BE REQUIRED TO DIRECT TRAFFIC AND EMERGENCY VEHICLES. EACH MESSAGE BOARD SHALL BE VISIBLE FROM A DISTANCE OF $\frac{1}{2}$ MILE UNDER IDEAL DAY AND NIGHT CONDITIONS AND SHALL BE LEGIBLE AT A DISTANCE OF 650 FEE.

PORTABLE MESSAGE BOARD NOTES:

1. PORTABLE MESSAGE BOARDS SHALL BE PLACED AT THE INTERSECTION OF MONTOPOLIS DRIVE WITH: BEN WHITE BOULEVARD, OLTORF STREET, AND GROVE BOULEVARD .
2. MESSAGES SHALL PROVIDE ADEQUATE INFORMATION FOR ROAD AND LANE CLOSURES INCLUDING DETOURS.
3. EACH MESSAGE BOARD SHALL BE VISIBLE FROM A DISTANCE OF $\frac{1}{2}$ MILE UNDER IDEAL DAY AND NIGHT CONDITIONS AND SHALL BE LEGIBLE AT A DISTANCE OF 650 FEET.

APPROVAL

SITE PLAN APPROVAL SHEET 26 OF 126
FILE NUMBER: SPC-2015-0322C APPLICATION DATE: JULY 17, 2015
APPROVED BY COMMISSION ON: N/A UNDER SECTION 142 OF
CHAPTER 25-5 OF THE CITY OF AUSTIN CODE.
EXPIRATION DATE (25-5-81, LDC) _____ CASE MANAGER LYNDA COURTNEY
PROJECT EXPIRATION DATE (ORD.#970905-A) _____ DWPZ _____ DDZ _____

Director, Planning and Development Review
RELEASE FOR GENERAL COMPLIANCE: _____ ZONING P-NP LI-NP
Rev. 1 _____ Correction 1 _____
Rev. 2 _____ Correction 2 _____
Rev. 3 _____ Correction 3 _____

Final plat must be recorded by the Project Expiration Date, if applicable. Subsequent Site Plans which do not comply with the Code current at the time of filing, and all required Building Permits and/or a notice of construction (if a building permit is not required), must also be approved prior to the Project Expiration Date.

STATE OF TEXAS
DALE P. MURPHY
90614
LICENSED
PROFESSIONAL ENGINEER
05/09/2016

NO.	DATE	REVISION	BY	APVD
DSGN	D Murphy	DR M Gilliilan	CHK D Murphy	APVD D Murphy

K·FRIESE + ASSOCIATES
PROFESSIONAL ENGINEERS
TBPE Firm #2535

CH2MHILL.
TBPE FIRM NO. 3699

Montopolis Water Reclamation Initiave (WRI)
Storage Reservoir and Pump Station
2711 Montopolis Drive
Austin Water, Austin, Texas

CIVIL

TRAFFIC CONTROL PLAN PHASE II

NTS
VERIFY SCALE
BAR IS ONE INCH ON ORIGINAL DRAWING.
0 1"

DATE	MAY 2016
PROJ	472902
DWG	C-20
SHEET	26 of 126

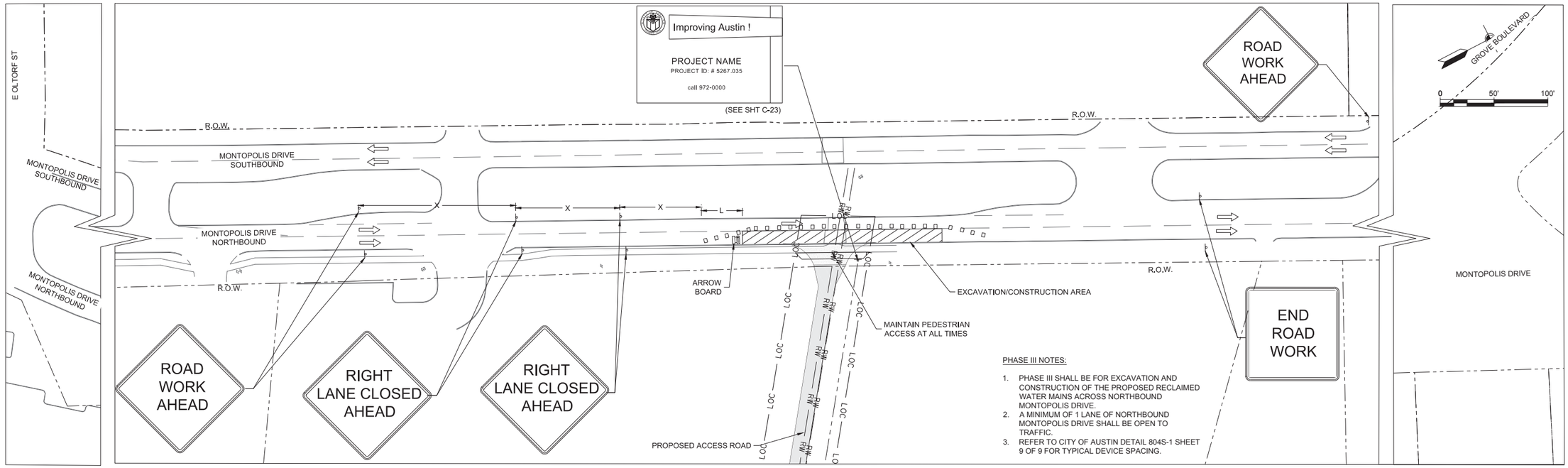

PHASE III NOTES:

1. PHASE III SHALL BE FOR EXCAVATION AND CONSTRUCTION OF THE PROPOSED RECLAIMED WATER MAINS ACROSS NORTHBOUND MONTOPOLIS DRIVE.
2. A MINIMUM OF 1 LANE OF NORTHBOUND MONTOPOLIS DRIVE SHALL BE OPEN TO TRAFFIC.
3. REFER TO CITY OF AUSTIN DETAIL 804S-1 SHEET 9 OF 9 FOR TYPICAL DEVICE SPACING.

NORTHBOUND LANE CLOSURE

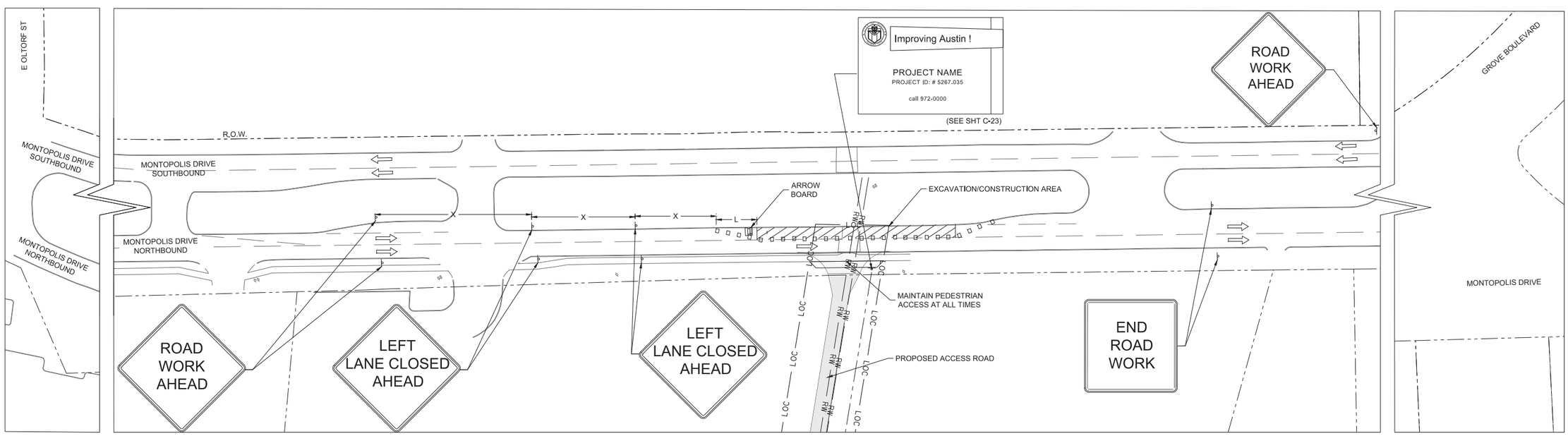

NORTHBOUND LANE CLOSURE

APPROVAL

SITE PLAN APPROVAL SHEET 27 OF 126

FILE NUMBER: SPC-2015-0322C APPLICATION DATE: JULY 17, 2015

APPROVED BY COMMISSION ON: N/A UNDER SECTION 142 OF

CHAPTER 25-5 OF THE CITY OF AUSTIN CODE.

EXPIRATION DATE (25-5-81, LDC) _____ CASE MANAGER LYNDA COURTNEY

PROJECT EXPIRATION DATE (ORD.#970905-A) _____ DWPZ _____ DDZ _____

Director, Planning and Development Review

RELEASE FOR GENERAL COMPLIANCE: _____ ZONING P-NP LI-NP

Rev. 1 _____ Correction 1 _____

Rev. 2 _____ Correction 2 _____

Rev. 3 _____ Correction 3 _____

Final plat must be recorded by the Project Expiration Date, if applicable. Subsequent Site Plans which do not comply with the Code current at the time of filing, and all required Building Permits and/or a notice of construction (if a building permit is not required), must also be approved prior to the Project Expiration Date.

STATE OF TEXAS
DALE P. MURPHY
90614
LICENSED
PROFESSIONAL ENGINEER
05/09/2016

NO.	DATE	REVISION	BY	APVD
DSGN	D Murphy	DR	CHK M Gilliland	APVD D Murphy

K·FRIESE + ASSOCIATES
FIRM ID #F-PROJECT ENGINEERING
TBPE Firm #6535

CH2MHILL.
TBPE FIRM NO. 3689

Montopolis Water Reclamation Initiave (WRI)
Storage Reservoir and Pump Station
2711 Montopolis Drive
Austin Water, Austin, Texas

CIVIL
TRAFFIC CONTROL PLAN
PHASE III

1" = 50'
VERIFY SCALE
BAR IS ONE INCH ON ORIGINAL DRAWING.
0 1"

DATE	MAY 2016
PROJ	472902
DWG	C-21
SHEET	27 of 126

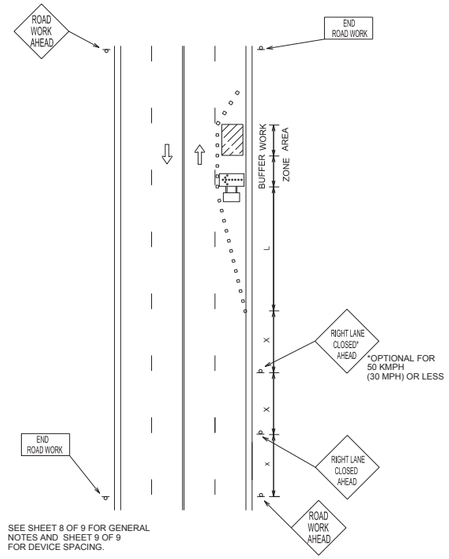

SEE SHEET 8 OF 9 FOR GENERAL NOTES AND SHEET 9 OF 9 FOR DEVICE SPACING.

CITY OF AUSTIN DEPARTMENT OF PUBLIC WORKS		ARTERIAL ONE LANE CLOSURE	
RECORD COPY SIGNED BY KERI JUAREZ	01/04/11 ADOPTED	THE ARCHITECT/ENGINEER ASSUMES RESPONSIBILITY FOR APPROPRIATE USE OF THIS STANDARD.	STANDARD NO. 804S-1 1 OF 9

1. ALL SETUPS SHALL BE IN ACCORDANCE WITH THE CURRENT ADDITION OF THE TEXAS MANUAL ON UNIFORM TRAFFIC CONTROL DEVICES AND THE CITY OF AUSTIN TRANSPORTATION CRITERIA MANUAL.
2. TO DETERMINE APPROPRIATE DEVICES AND SIGN SIZES TO BE USED, REFER TO STANDARD 804S-5. SHEETS 5, 6 AND 7 OF 11.
3. FOR INTERMEDIATE-TERM SITUATIONS, WHEN IT IS NOT FEASIBLE TO REMOVE AND RESTORE PAVEMENT MARKINGS, THE CHANNELIZATION MUST BE MADE DOMINANT BY USING A VERY CLOSE DEVICE SPACING. THIS IS ESPECIALLY IMPORTANT IN LOCATIONS OF CONFLICTING INFORMATION, SUCH AS WHERE TRAFFIC IS DIRECTED OVER A DOUBLE YELLOW CENTERLINE. IN SUCH LOCATIONS, A MAXIMUM CHANNELIZING DEVICE SPACING OF 3 m (10') IS REQUIRED.
4. FOR LONG TERM STATIONARY WORK, ALL CONFLICTING PAVEMENT MARKINGS MUST BE REMOVED AND CENTERLINE STRIPING PROVIDED WHERE TWO WAY TRAFFIC IS IN ADJACENT LANES.
5. FOR TEMPORARY PAVEMENT MARKING REQUIREMENTS SEE STANDARD 804S-3.
6. FOR ONE-WAY AND MULTI-LANE ROADWAYS THE "LANE BLOCKED" SIGN MAY BE USED IN LIEU OF THE "LANE CLOSED AHEAD" SIGN. THE NUMBER OF DIGITS ON THE SIGN SHALL NOT BE GREATER THAN THE NUMBER OF LANES PRESENT ON THE ROADWAY. THE "X" SHALL BE PLACED UNDER THE NUMBER OF LANE(S) BLOCKED.
7. FOR FLAGGING OPERATION REQUIREMENTS SEE STANDARD 804S-2.
8. CONTRACTOR SHALL PROVIDE SIDEWALK CLOSURES, CROSSWALK CLOSURES OR WALKWAY BYPASS WHEREVER PEDESTRIAN MOVEMENTS ARE AFFECTED BY CONSTRUCTION ACTIVITIES. ALL SIDEWALKS AND CROSSWALKS SHALL BE ACCESSIBLE WHEN CONTRACTOR IS NOT WORKING UNLESS APPROVED BY THE TRANSPORTATION DIVISION.
9. FOR EXCAVATION PROTECTION AND SAFETY FENCE REQUIREMENTS SEE STANDARD 804S-4.
10. THE USE OF ARROW DISPLAYS ARE REQUIRED ON ALL LANE CLOSURES. THE CONTRACTOR SHALL PROVIDE ONE (1) STAND-BY UNIT IN GOOD WORKING CONDITION AT THE JOB SITE, READY FOR USE IF THE OPERATION REQUIRES 24-HOUR A DAY LANE CLOSURE SET-UPS.

CITY OF AUSTIN DEPARTMENT OF PUBLIC WORKS		GENERAL NOTES	
RECORD COPY SIGNED BY KERI JUAREZ	01/04/11 ADOPTED	THE ARCHITECT/ENGINEER ASSUMES RESPONSIBILITY FOR APPROPRIATE USE OF THIS STANDARD.	STANDARD NO. 804S-1 8 OF 9

Typical Transition Lengths and Suggested Maximum Spacing of Devices

Speed KMPH	Posted Speed MPH	Formula	Minimum Desirable Taper Lengths (L) Meters (Feet): 3.0(10) Offset Meters (feet)	3.3(11) Offset Meters (feet)	3.6(12) Offset Meters (feet)	Suggested Max. Device Spacing: On a taper Meters (feet)	On a tangent Meters (feet)	Suggested Sign Spacing Meters (Feet): "X" Dimension
50	30	L=WS²/60	45 (150)	50 (165)	55 (180)	9 (30)	15-20 (60-75)	40 (120)
55	35		65 (205)	70 (225)	75 (245)	10 (35)	25-25 (70-90)	50 (160)
65	40		80 (265)	90 (295)	100 (320)	12 (40)	25-30 (80-100)	75 (240)
70	45	L=WS	135 (450)	150 (495)	165 (540)	13 (45)	25-30 (90-110)	100 (320)
80	50		150 (500)	165 (550)	180 (600)	15 (50)	30-35 (100-125)	120 (400)
90	55		165 (550)	185 (605)	200 (660)	16 (55)	35-40 (110-140)	150 (500)
95	60		180 (600)	200 (660)	220 (720)	18 (60)	40-45 (120-150)	180 (600)
105	65		195 (650)	215 (715)	235 (780)	19 (65)	40-50 (130-165)	210 (700)
115	70		215 (700)	235 (770)	255 (840)	21 (70)	45-55 (140-175)	240 (800)

LEGEND
- Channelizing devices
- Trailer mounted flashing arrow board
- Flagger

CITY OF AUSTIN DEPARTMENT OF PUBLIC WORKS		DEVICE SPACING	
RECORD COPY SIGNED BY KERI JUAREZ	01/04/11 ADOPTED	THE ARCHITECT/ENGINEER ASSUMES RESPONSIBILITY FOR APPROPRIATE USE OF THIS STANDARD.	STANDARD NO. 804S-1 9 OF 9

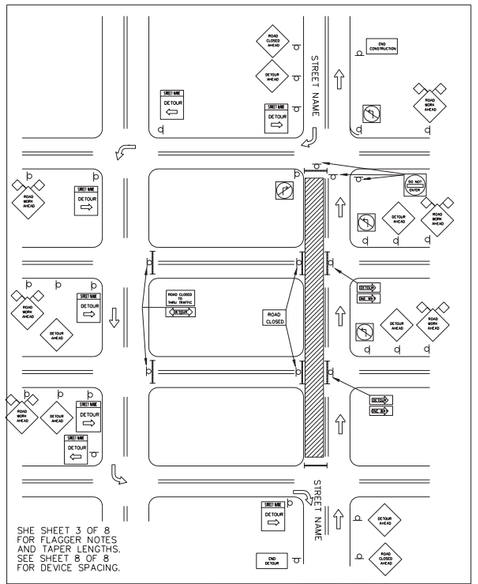

DEPARTMENT OF PUBLIC WORKS		STREET DETOUR SINGLE DIRECTION	
RECORD COPY SIGNED BY BILL GARDNER	03/13/06 ADOPTED	THE ARCHITECT/ENGINEER ASSUMES RESPONSIBILITY FOR APPROPRIATE USE OF THIS STANDARD.	STANDARD NO. 804S-2 5 OF 8

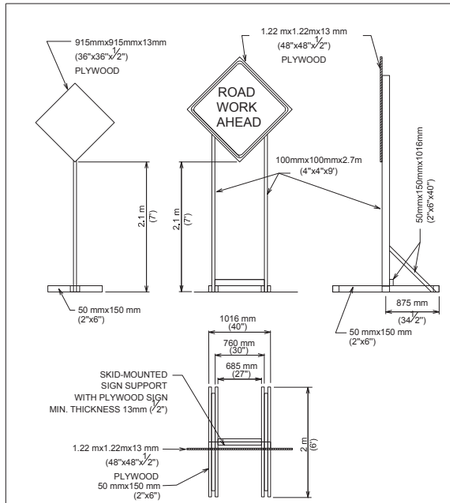

(LONG TERM AND INTERMEDIATE-TERM STATIONARY WORK)

TEMPORARY SIGN SUPPORT

SEE STANDARD 804S-5
SHEET 12 OF 13 AND SHEET 13 OF 13
FOR GENERAL NOTES AND DEVICE SPACING.

CITY OF AUSTIN DEPARTMENT OF PUBLIC WORKS		TRAFFIC CONTROL SIGNS	
RECORD COPY SIGNED BY SAM ANGOORI	01/04/10 ADOPTED	THE ARCHITECT/ENGINEER ASSUMES RESPONSIBILITY FOR APPROPRIATE USE OF THIS STANDARD.	STANDARD NO. 804S-5 5 OF 13

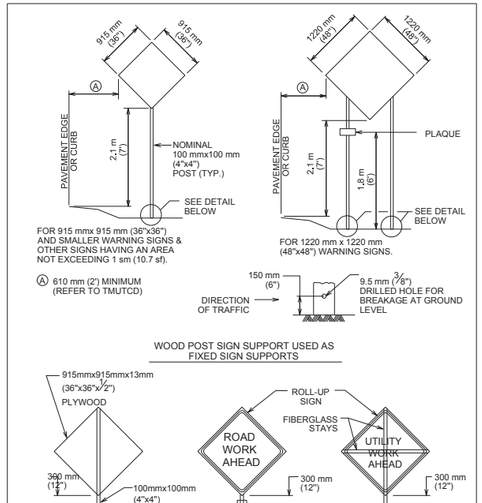

WOOD POST SIGN SUPPORT USED AS FIXED SIGN SUPPORTS

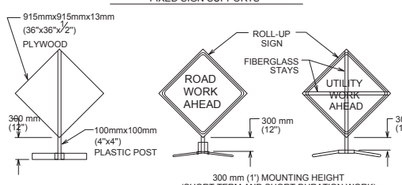

300 mm (1') MOUNTING HEIGHT (SHORT TERM AND SHORT DURATION WORK)

SEE STANDARD 804S-5
SHEET 12 OF 13 AND
SHEET 13 OF 13 FOR
GENERAL NOTES AND DEVICE SPACING.

PORTABLE SIGN SUPPORT

CITY OF AUSTIN DEPARTMENT OF PUBLIC WORKS		TRAFFIC CONTROL SIGNS	
RECORD COPY SIGNED BY SAM ANGOORI	01/04/10 ADOPTED	THE ARCHITECT/ENGINEER ASSUMES RESPONSIBILITY FOR APPROPRIATE USE OF THIS STANDARD.	STANDARD NO. 804S-5 6 OF 13

1. WARNING SIGNS SHALL BE ORANGE, FLUORESCENT RED-ORANGE OR FLUORESCENT YELLOW-ORANGE IN COLOR. THE FLUORESCENT VERSIONS OF ORANGE PROVIDE HIGHER CONSPICUITY THAN STANDARD ORANGE, ESPECIALLY DURING TWILGHT. ALL SIGNS USED AT NIGHT SHALL BE EITHER RETRORE-FLECTIVE, WITH A MATERIAL THAT HAS A SMOOTH, SEALED OUTER SURFACE, OR ILLUMINATED TO SHOW SIMILAR SHAPE AND COLOR BOTH DAY AND NIGHT. SIGN ILLUMINATION MAY BE EITHER IN-TERNAL OR EXTERNAL. ROADWAY LIGHTING DOES NOT MEET THE REQUIREMENTS FOR SIGN ILLUMINATION.
2. TYPE A FLASHING WARNING LIGHTS MAY BE USED IN CONJUNCTION WITH SIGNS AT NIGHT. STANDARD ORANGE FLAGS MAY BE USED FOR DAY TIME OPERATIONS. HOWEVER, NEITHER LIGHTS NOR FLAGS MAY BLOCK THE SIGN LEGEND.
3. SIGNS SHOULD BE LOCATED ON THE RIGHT-HAND SIDE OF THE ROADWAY. WHEN SPECIAL EMPHASIS IS NEEDED, SIGNS MAY BE PLACE ON BOTH THE LEFT AND RIGHT SIDES OF ROADWAY. SIGNS SHALL BE PLACED ON BOTH THE LEFT AND RIGHT SIDES OF ONE-WAY OR DIVIDED ROADWAYS. SIGNS USED FOR LONG-TERM STATIONARY AND INTERMEDIATE-TERM STATIONARY WORK SHALL BE MOUNTED AT A HEIGHT OF AT LEAST 2.1 m (7'), MEASURED FROM THE BOTTOM OF THE SIGN. THE HEIGHT TO THE BOTTOM OF A SECONDARY SIGN MOUNTED BELOW ANOTHER SIGN MAY BE 0.3 m (1') LESS THAN THE APPROPRIATE HEIGHT ABOVE.
4. SIGNS MAY BE MOUNTED ON PORTABLE SUPPORTS FOR SHORT-TERM, SHORT DURATION, MOBILE CON-DITIONS AND EMERGENCIES. SIGNS MOUNTED ON PORTABLE SUPPORTS SHALL BE AT A HEIGHT OF AT LEAST 0.3 m (1'), MEASURED FROM THE BOTTOM OF THE SIGN.
5. ALL SIGN SYSTEMS SHOULD BE CRASHWORTHY. NO SIGN MOUNTS SHALL BLOCK OR IMPEDE SIDEALKS UNLESS NO OTHER OPTION IS AVAILABLE. ONLY SANDBAGS SHOULD BE USED FOR BALLASTING SIGN MOUNTS.

TABLE VI-3 TYPICAL CONSTRUCTION WARNING SIGN SIZE AND SPACING

Roadway Classification	Posted Speed	Sign Spacing ★	Long-term Stationary Or Intermediate-term Stationary Approaching Warning Signs CW20 Series And CW22-1 Sign: Standard	Minimum#	Short-term Stationary Or Short Duration Approach Warning Signs CW22 Series: Standard	Minimum#	Other Warning Signs: Standard
Conven.	KPH (MPH)	meter (feet)	mm (inches)	mm (inches)	mm (inches)	mm (inches)	mm (inches)
	50 (30)	40 (120)	1220x1220 (48x48)	915x915 (36x36)			
	55 (35)	50 (160)			915x915 (36x36)		915x915 (36x36)
	65 (40)	75 (240)					
	70 (45)	100 (320)		Use Standard Size		Use Standard Size	
	80 (50)	120 (400)					
	90 (55)	150 (500) 2					
	100 (60)	180 (600) 2			1220x1220 (48x48)		1220x1220 (48x48)
	105 (65)	210 (700) 2					
	115 (70)	240 (800) 2					
Exp. or Fwy	★★	★★ 3			★★★	★★★	★★★

★ MINIMUM DISTANCE FROM WORK TO 1st ADVANCE WARNING SIGN AND/OR DISTANCE BETWEEN EACH ADDITIONAL SIGN.
★★ FOR TYPICAL SIGN SPACINGS ON EXPRESSWAYS AND FREEWAYS, REFER TO THE CURRENT ADDITION OF TMUTCD.
★★★ SMALLER SIGN SIZES MAY BE USED WHERE SIGN DESIGNS HAVE NOT BEEN INCLUDED IN THE "STANDARD HIGHWAY SIGNS DESIGN MANUAL".

1. SPECIAL OR LARGER SIZE SIGNS MAY BE USED AS NECESSARY.
2. DISTANCE BETWEEN SIGNS SHOULD BE INCREASED AS REQUIRED TO HAVE 450 m (1500') OR MORE ADVANCE WARNING.
3. DISTANCE BETWEEN SIGNS SHOULD BE INCREASED AS REQUIRED TO HAVE A 0.8 km (1/2 MILE) OR MORE ADVANCE WARNING.
4. FOR USE ONLY ON SECONDARY ROADS OR CITY STREETS WHERE SPEEDS ARE LOW.

CITY OF AUSTIN DEPARTMENT OF PUBLIC WORKS		TRAFFIC CONTROL SIGNS	
RECORD COPY SIGNED BY SAM ANGOORI	01/04/10 ADOPTED	THE ARCHITECT/ENGINEER ASSUMES RESPONSIBILITY FOR APPROPRIATE USE OF THIS STANDARD.	STANDARD NO. 804S-5 7 OF 13

1. ALL TRAFFIC CONTROL DEVICES, SIGNS, BARRICADES AND WARNING SIGNS SHALL BE FURNISHED, PLACED, CONSTRUCTED AND MAINTAINED IN THE APPROPRIATE TYPES AND SIZES AND FLAGGER OPERATIONS EXECUTED IN ACCORDANCE WITH THE CURRENT EDITION OF THE TEXAS MANUAL ON UNIFORM CONTROL DEVICES (TMUTCD), THE CITY OF AUSTIN STANDARD SPECIFICATIONS SERIES 800 AND THE CITY OF AUSTIN TRANS-PORTATION CRITERIA MANUAL, OR AS DIRECTED BY THE ENGINEER OR DESIGNATED RE-PRESENTATIVE. IF A CONFLICT ARISES THEN THE CITY OF AUSTIN TRANSPORTATION CRITERIA MANUAL SHALL CONTROL UNLESS OTHERWISE INSTRUCTED BY THE ENGINEER OR DESIGNATED REPRESENTATIVE.
2. THE CONTRACTOR SHALL NOTIFY THE TRANSPORTATION DIVISION OF THE DEPARTMENT OF PUBLIC WORKS AT 974-7024 NO LATER THAN THE MONDAY OF THE WEEK DURING WHICH THE CONTRACTOR INTENDS TO SET UP BARRICADES TO START CONSTRUCTION.
3. PROPOSED CONSTRUCTION TRAFFIC MOVEMENTS MAY REQUIRE EXISTING SIGNAL HEADS TO BE RELOCATED. THE CITY OF AUSTIN WILL REVIEW SIGNAL HEAD LOCATIONS DURING CONSTRUCTION AND PERFORM THE REQUIRED ADJUSTMENTS. THE CONTRACTOR SHALL CONTACT THE TRANSPORTATION DIVISION OF THE DEPARTMENT OF PUBLIC WORKS AT 974-7024, THREE (3) DAYS PRIOR TO PLACMENT ANY TRAFFIC CONTROLS WHICH MAY REQUIRE SIGNAL HEAD ADJUSTMENTS/RELOCATION.
4. THE CONTRACTOR SHALL PROVIDE ONE (1) FULL-TIME OFF-DUTY, UNIFORMED AUSTIN POLICE DEPARTMENT CERTIFIED PEACE OFFICER AND ONE (1) VEHICLE OF THE TYPE APPROVED BY THE ENGINEER OR DESIGNATED REPRESENTATIVE FOR TEMPORARY LANE CLOSURES WHEN UNDERSEALING, MILLING, PAVING AND WHEN WORKING IN INTERSECTIONS AS PART OF THE TRAFFIC CONTROL OPERATIONS. THE PEACE OFFICER SHALL BE ABLE TO SHOW PROOF OF CERTIFICATION BY THE TEXAS COMMISSION ON LAW ENFORCEMENT OFFICER STANDARDS.
5. THE CONTRACTOR SHALL NOTIFY ALL OTHER GOVERNMENTAL AGENCIES WHOSE RIGHTS-OF-WAY ARE AFFECTED BY HIS WORK ACTIVITIES. THE CONTRACTOR SHALL PROVIDE ANY ADDITIONAL TRAFFIC CONTROL DEVICES THAT THEY MAY NEED.
6. THE CONTRACTOR SHALL MAINTAIN ONE (1) DUST-FREE LANE OF TRAFFIC IN EACH DIRECTION AT ALL TIMES, UNLESS OTHERWISE NOTED IN THE DRAWINGS OR APPROVED THE ENGINEER OR DESIGNATED REPRESENTATIVE.
7. THERE SHALL BE A MINIMUM OF THREE (3) METERS (10 FEET) CLEAR WIDTH FOR EACH LANE OF TRAFFIC IN CHANNELIZED AREAS, UNLESS OTHERWISE NOTED ON THE DRAWINGS OR APPROVED BY THE ENGINEER OR DESIGNATED REPRESENTATIVE.
8. THE CONTRACTOR SHALL MAINTAIN DRIVEWAY ACCESS AT ALL TIMES. IF ACCESS CANNOT BE MAINTAINED, THE CONTRACTOR WITH THE APPROVAL OF THE ENGINEER OR DESIGNATED REPRESENTATIVE SHALL PROVIDE AT LEAST 24 HOUR WRITTEN NOTICE OF LIMITED ACCESS TO AFFECTED PROPERTY OWNERS. THE CONTRACTOR SHALL PROVIDE BUSINESS ACCESS SIGNS AS NEEDED TO NFORM DRIVERS OF THE LOCATIONS OF ALL DRIVEWAYS.
9. TEMPORARY LANE CLOSURES IN THE CENTRAL BUSINESS DISTRICT (CBD) OR ON ARTERIAL STREETS SHALL NOT BE PERMITTED DURING THE HOURS OF 7 AM TO 9 AM AND 4 PM TO 6PM MONDAY THROUGH FRIDAY UNLESS PRIOR APPROVAL HAS BEEN OBTAINED FROM THE TRANSPORTATION DIVISION.
10. TRAFFIC CONTROL SHOWN ON STANDARD DETAILS IS TYPICAL. ADDITIONAL SIGNING AND/OR BARRICADING, AS WELL AS TEMPORARY PAVEMENT MARKINGS AND OBLITERATION/RESTORATION OF EXISTING PAVEMENT MARKINGS, MAY BE REQUIRED DEPENDING ON FIELD CONDITIONS. FIELD ADJUSTMENTS TO TRAFFIC CONTROLS WILL NOT BE PAID FOR DIRECTLY, BUT WILL BE CONSIDERED SUBSIDIARY TO ITEM NO. 803S "BARRICADES, SIGNS AND TRAFFIC HANDLING".
11. THE CONTRACTOR SHALL DESIGNATE A COMPETENT PERSON FOR TRAFFIC CONTROL. THE COMPETENT PERSON SHALL MAKE INSPECTIONS OF THE TRAFFIC CONTROL DEVICES AT LEAST TWO (2) TIMES A DAY (ONCE AT THE BEGINNING OF THE DAY AND ONCE AT THE END OF THE DAY), INCLUDING NON-WORKING DAYS, ENSURING THAT ALL DEVICES ARE IN THEIR PROPER PLACE AND ARE IN WORKING ORDER.
12. ALL DEVICES SHALL BE MADE USING MATERIALS LISTED ON THE TxDOT APPROVED PRODUCTS LIST.

CITY OF AUSTIN DEPARTMENT OF PUBLIC WORKS		GENERAL TRAFFIC CONTROL NOTES	
RECORD COPY SIGNED BY SAM ANGOORI	01/04/10 ADOPTED	THE ARCHITECT/ENGINEER ASSUMES RESPONSIBILITY FOR APPROPRIATE USE OF THIS STANDARD.	STANDARD NO. 804S-5 12 OF 13

APPROVAL

SITE PLAN APPROVAL SHEET 28 OF 126
FILE NUMBER: SPC-2015-0322C APPLICATION DATE: JULY 17, 2015
APPROVED BY COMMISSION ON: N/A UNDER SECTION 142 OF
CHAPTER 25-5 OF THE CITY OF AUSTIN CODE.
EXPIRATION DATE (25-5-81, LDC) _____ CASE MANAGER LYNDA COURTNEY
PROJECT EXPIRATION DATE (ORD.#970905-A) _____ DWPZ _____ DDZ _____

Director, Planning and Development Review
RELEASE FOR GENERAL COMPLIANCE: _____ ZONING P-NP LI-NP
Rev. 1 _____ Correction 1 _____
Rev. 2 _____ Correction 2 _____
Rev. 3 _____ Correction 3 _____

Final plat must be recorded by the Project Expiration Date, if applicable. Subsequent Site Plans which do not comply with the Code current at the time of filing, and all required Building Permits and/or a notice of construction (if a building permit is not required), must also be approved prior to the Project Expiration Date.

STATE OF TEXAS
DALE P. MURPHY
90614
LICENSED
PROFESSIONAL ENGINEER
05/09/2016

NO.	DATE	REVISION	BY	APVD
DSGN	DR	CHK		
D Murphy	M Gilfillan	D Murphy		D Murphy

K·FRIESE + ASSOCIATES
PUBLIC PROJECT ENGINEERING
TBPE Firm #6535

Montopolis Water Reclamation Initiave (WRI)
Storage Reservoir and Pump Station
2711 Montopolis Drive
Austin Water, Austin, Texas

CH2MHILL.
TBPE FIRM NO. 3699

CIVIL

TRAFFIC CONTROL DETAILS 01

VERIFY SCALE
BAR IS ONE INCH ON ORIGINAL DRAWING.
0 1"

DATE	MAY 2016
PROJ	472902
DWG	C-22
SHEET	28 of 126

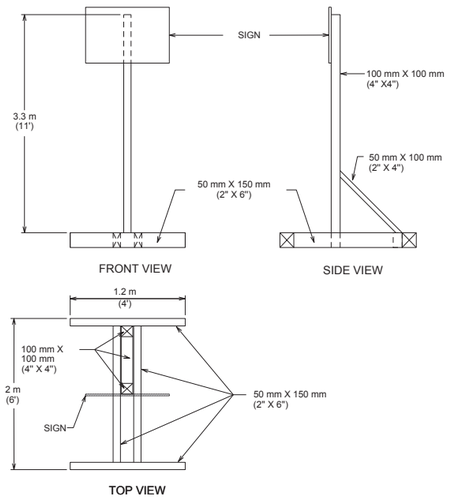

NOTES:

1. ALL MATERIALS SHALL BE FURNISHED BY THE CONTRACTOR.
2. LUMBER DIMENSIONS ARE NOMINAL.
3. SIGN MUST BE IN COLOR.

CITY OF AUSTIN DEPARTMENT OF PUBLIC WORKS		600mm x 900mm (24"x36") JOINT C. I. P. MOVABLE SIGN TYPE II	
RECORD COPY SIGNED BY KERI JUAREZ	01/04/11 ADOPTED	THE ARCHITECT/ENGINEER ASSUMES RESPONSIBILITY FOR APPROPRIATE USE OF THIS STANDARD.	STANDARD NO. 802S-2A 1 OF 2

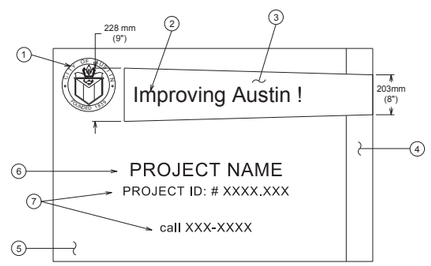

1. 225 mm (9") CITY SEAL (4 COLOR PROCESS)
2. 50 mm (2")- WHITE LETTERS
3. TRANSPARENT BLUE PAINT
4. 75 mm (3") WIDE- TRANSPARENT YELLOW PAINT STRIPE
5. HIGH INTENSITY WHITE REFLECTIVE SHEETING, .080 ALUMINUM 2290, 3M CO. OR EQUAL
6. 63 mm (2 1/2"- BLUE LETTERS
7. 22 mm (1"- BLUE LETTERS

CITY OF AUSTIN DEPARTMENT OF PUBLIC WORKS		600mm x 900mm (24"x36") C. I. P. MOVABLE SIGN TYPE II	
RECORD COPY SIGNED BY KERI JUAREZ	01/04/11 ADOPTED	THE ARCHITECT/ENGINEER ASSUMES RESPONSIBILITY FOR APPROPRIATE USE OF THIS STANDARD.	STANDARD NO. 802S-2 2 OF 2

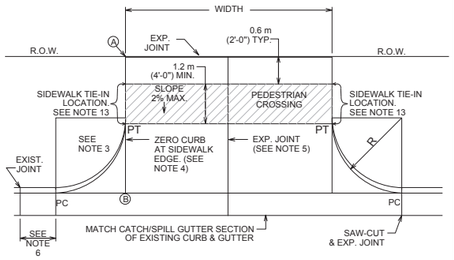

PLAN

NOTE: ALL DRIVEWAYS SHALL BE SLOPED TOWARDS THE STREET FROM THE R.O.W. LINE. ELEVATION OF POINT (A) ABOVE POINT (B) IS, TYPICALLY A MINIMUM OF 150 mm (6") PLUS 20 mm/m (¼" RISE/FOOT) OVER DISTANCE "X" IN METERS (FEET).

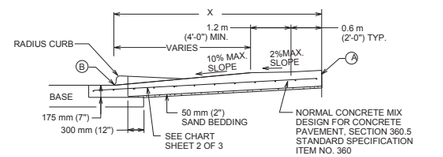

CROSS SECTION

CITY OF AUSTIN DEPARTMENT OF PUBLIC WORKS		TYPE II DRIVEWAY	
RECORD COPY SIGNED BY CUONG TRAN	02/24/10 ADOPTED	THE ARCHITECT/ENGINEER ASSUMES RESPONSIBILITY FOR APPROPRIATE USE OF THIS STANDARD.	STANDARD NO. 433S-2 1 OF 2

USE	THICKNESS	REINFORCEMENT
DRIVEWAYS FOR PASSENGER VEHICLE PARKING LOTS	150 mm (6") MIN.	125 mm (5") MIN. CONCRETE WITH ONE LAYER OF 13M (#4) BARS PLACED ON CHAIRS AT MIDDEPTH OF SLAB AT NO MORE THAN 450 mm (18") O.C. BOTH DIRECTIONS
ALL OTHERS	175 mm (7") MIN.	125 mm (5") MIN. CONCRETE WITH ONE LAYER OF 13M (#4) BARS PLACED ON CHAIRS AT MIDDEPTH OF SLAB AT NO MORE THAN 450 mm (18") O.C. BOTH DIRECTIONS

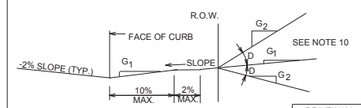

ALLOWABLE GRADES

DRIVEWAY VOLUME (ADT)	D=GRADE CHANGE	
	STD.	MAX
>1500	0%	3%
500-1500	3%	6%
< 500	6%	15%

NOTES:

1. ALL TYPE II DRIVEWAYS SHALL HAVE RADIUS ENDS.
2. DRIVEWAY WIDTHS AND RADII DIMENSIONS, ONE/TWO WAY TRAVEL REQUIREMENTS, AND GEOMETRIC LAY-OUT ARE HIGHLY VARIABLE, SUBJECT TO SITE SPECIFIC CONDITIONS AND REQUIREMENTS. SEE TRANSPORTATION CRITERIA MANUAL, SECTION 5 "DRIVEWAYS".
3. THE DRIVEWAY EDGE SHALL BE SMOOTHLY TRANSITITIONED INTO THE SIDEWALK TIE-IN LOCATION BEGINNING AT THE RADIUS PC LINE.
4. "ZERO" CURB AT PT OR SIDEWALK EDGE, WHICHEVER IS ENCOUNTERED FIRST.
5. PLACE AN EXPANSION JOINT DOWN THE CENTER OF DRIVEWAY ALL DRIVEWAYS.
6. IF DIMENSION IS LESS THAN 1.5 METERS (5 FEET), REMOVE CURB AND GUTTER TO EXISTING JOINT AND POUR MONOLITHICALLY WITH DRIVEWAY.
7. IF THE BASE IS OVER-EXCAVATED WHERE THE CURB AND GUTTER WERE REMOVED, BACKFILL WITH CONCRETE MONOLITHICALLY WITH THE DRIVEWAY.
8. TYPE II DRIVEWAYS ARE TO BE LOCATED NO CLOSER TO THE CORNER OF INTERSECTING RIGHT OF WAY THAN 60% OF PARCEL FRONTAGE AT 30 METERS (100 FEET); WHICHEVER IS LESS.
9. DRIVEWAY SHALL NOT BE CONSTRUCTED WITHIN THE CURB RETURN OF A STREET INTERSECTION.
10. WHILE THE PROPERTY OWNER REMAINS RESPONSIBLE FOR GRADE BREAKS WITHIN PRIVATE PROPERTY, THE FIRE DEPARTMENT SHALL BE CONSULTED WHERE THE DRIVEWAY IS ESSENTIAL TO EMERGENCY VEHICLE ACCESS AND "G2 IS GREATER THAN 15%.
11. USE 12 MM (1/2") ASPHALT BOARD OR OTHER APPROVED MATERIAL FOR CURB AND GUTTER EXPANSION JOINTS. SIDEWALK, AT THE R.O.W. LINE AND AT MIDWIDTH, SEE NOTE 5.
12. SEE TRANSPORTATION CRITERIA MANUAL, SECTION 5 FOR OTHER DRIVEWAY REQUIREMENTS.
13. THE SIDEWALK, REGARDLESS OF ITS LOCATION WITH RESPECT TO THE CURB OR PROPERTY LINE, SHALL BE CONNECTED TO THE DRIVEWAY AT THESE LOCATIONS.
14. WATER METER BOXES AND WASTEWATER CLEAN OUTS ARE PROHIBITED FROM BEING LOCATED IN DRIVEWAY AREAS.

CITY OF AUSTIN DEPARTMENT OF PUBLIC WORKS		TYPE II DRIVEWAY	
RECORD COPY SIGNED BY CUONG TRAN	02/24/10 ADOPTED	THE ARCHITECT/ENGINEER ASSUMES RESPONSIBILITY FOR APPROPRIATE USE OF THIS STANDARD.	STANDARD NO. 433S-2 2 OF 2

APPROVAL

SITE PLAN APPROVAL SHEET 29 OF 126

FILE NUMBER: SPC-2015-0322C APPLICATION DATE: JULY 17, 2015

APPROVED BY COMMISSION ON: N/A UNDER SECTION 142 OF

CHAPTER 25-5 OF THE CITY OF AUSTIN CODE.

EXPIRATION DATE (25-5-81, LDC) _____ CASE MANAGER LYNDA COURTNEY

PROJECT EXPIRATION DATE (ORD.#970905-A) _____ DWPZ _____ DDZ _____

Director, Planning and Development Review

RELEASE FOR GENERAL COMPLIANCE: _____ ZONING P-NP LI-NP

Rev. 1 _____ Correction 1 _____

Rev. 2 _____ Correction 2 _____

Rev. 3 _____ Correction 3 _____

Final plat must be recorded by the Project Expiration Date, if applicable. Subsequent Site Plans which do not comply with the Code current at the time of filing, and all required Building Permits and/or a notice of construction (if a building permit is not required), must also be approved prior to the Project Expiration Date.

STATE OF TEXAS
DALE P. MURPHY
90614
LICENSED
PROFESSIONAL ENGINEER
05/09/2016

NO.	DATE	REVISION	BY	APVD
DSGN	D Murphy	CHK M Gilfillan	DR D Murphy	APVD D Murphy

K·FRIESE + ASSOCIATES
PROFESSIONAL ENGINEERS
TBPE Firm #6535

CH2MHILL.
TBPE FIRM NO. 3699

Montopolis Water Reclamation Initiave (WRI)
Storage Reservoir and Pump Station
2711 Montopolis Drive
Austin Water, Austin, Texas

CIVIL

TRAFFIC CONTROL DETAILS 02

VERIFY SCALE
BAR IS ONE INCH ON ORIGINAL DRAWING.
0 1"

DATE	MAY 2016
PROJ	472902
DWG	C-23
SHEET	29 of 126

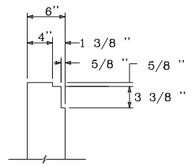

DIMENSIONS BASED ON
GRATE AND FRAME
NEENAH R-6673L OR EQUIVALENT

DETAIL # 1

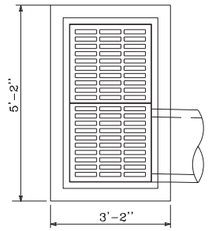

PLAN VIEW

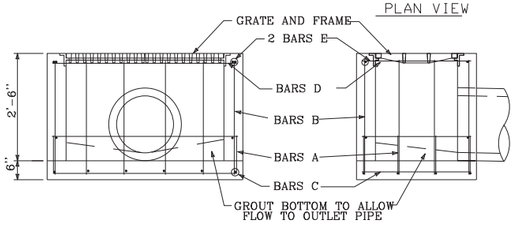

SIDE ELEVATION SECTION

END ELEVATION SECTION

REINFORCING STEEL SCHEDULE

BAR	QTY	SIZE	SPACING	LENGTH	WEIGHT
A	4	4	12"	6'-8"	18
B	16	4	12"	3'-0"	32
C	8	4	12"	2'-10"	15
D	4	4	12"	5'-2"	14
E	4	5	12"	2'-10"	12
TOTAL WEIGHT---91 LB.					

REV. DATE 1-27-96 DESCRIPTION STANDARD MANUAL

CITY OF AUSTIN
DRAINAGE UTILITY

STANDARD DROP INLET

RECORD COPY SIGNED BY ALLEN BRECHER 5/24/88
APPROVED DATE

ADOPTED: 04-01-88
SCALE: N. T. S.
INITIAL: B. H.

STANDARD NO. 508-11

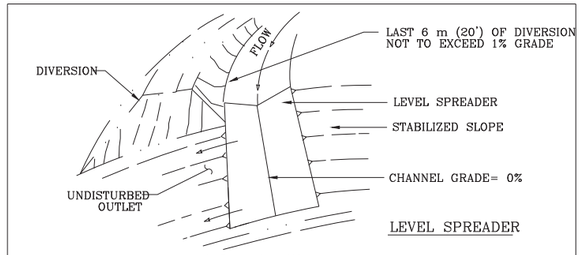

LEVEL SPREADER

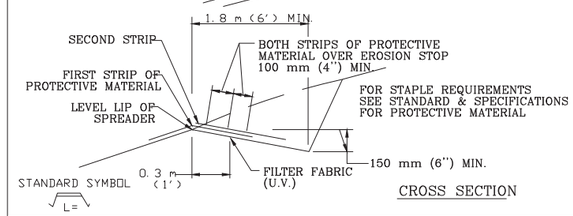

CROSS SECTION

GENERAL NOTES:

1. LEVEL SPREADERS SHALL BE INSTALLED UNDER THE DIRECT SUPERVISION OF THE ENGINEER.
2. CONSTRUCT LEVEL LIP ON ZERO PERCENT GRADE TO INSURE UNIFORM SPREADING OF SEDIMENT-FREE RUNOFF (CONVERTING CHANNEL FLOW TO SHEET FLOW).
3. LEVEL SPREADER SHALL BE CONSTRUCTED ON UNDISTURBED SOIL (NOT ON FILL).
4. A MATTING EROSION STOP SHALL BE PLACED VERTICALLY AND AT LEAST 150 mm (6") DEEP IN A SILT TRENCH 0.3 m (1') BACK OF AND PARALLEL WITH THE LIP. THIS EROSION STOP SHALL EXTEND THE ENTIRE LENGTH OF THE LEVEL LIP AND SHALL BE TRIMMED AFTER BACKFILLING WITH TAMPED SOIL, SO THAT THE UPPER EDGE IS FLUSH WITH THE SOIL SURFACE.
5. THE ENTIRE LEVEL LIP AREA SHALL BE PROTECTED BY PLACING 2 STRIPS OF JUTE, EXCELSIOR OR OTHER APPROVED PROTECTIVE MATERIAL AS SHOWN ABOVE.
6. THE ENTRANCE CHANNEL SHALL NOT EXCEED A 1% GRADE FOR AT LEAST 6 m (20') BEFORE ENTERING SPREADER.
7. STORM RUNOFF CONVERTED TO SHEET FLOW SHALL OUTLET ONTO STABILIZED AREAS. WATER SHALL NOT BE RECONCENTRATED IMMEDIATELY BELOW THE POINT OF DISCHARGE.
8. PERIODIC INSPECTION AND REQUIRED MAINTENANCE SHALL BE PROVIDED.

CITY OF AUSTIN
WATERSHED PROTECTION DEPARTMENT

LEVEL SPREADER

RECORD COPY SIGNED BY J. PATRICK MURPHY 3/27/00
ADOPTED

THE ARCHITECT/ENGINEER ASSUMES RESPONSIBILITY FOR APPROPRIATE USE OF THIS STANDARD.

STANDARD NO. 634S-1

STATE OF TEXAS
DALE P. MURPHY
90614
LICENSED
PROFESSIONAL ENGINEER
05/09/2016

NO.	DATE	REVISION	BY	APVD
DSGN	D Murphy	DR	M Gilfillan	CHK	D Murphy	APVD	D Murphy

K. FRIESE + ASSOCIATES
PUBLIC PROJECT ENGINEERING
TBPE Firm #8535

CH2MHILL.
TBPE FIRM NO. 3699

Montopolis Water Reclamation Initiave (WRI)
Storage Reservoir and Pump Station
2711 Montopolis Drive
Austin Water, Austin, Texas

CIVIL

MISCELLANEOUS DETAILS

APPROVAL

SITE PLAN APPROVAL SHEET 30 OF 126
FILE NUMBER: SPC-2015-0322C APPLICATION DATE: JULY 17, 2015
APPROVED BY COMMISSION ON: N/A UNDER SECTION 142 OF
CHAPTER 25-5 OF THE CITY OF AUSTIN CODE.
EXPIRATION DATE (25-5-81, LDC) _____ CASE MANAGER LYNDA COURTNEY
PROJECT EXPIRATION DATE (ORD.#970905-A) _____ DWPZ _____ DDZ _____

Director, Planning and Development Review
RELEASE FOR GENERAL COMPLIANCE: _____ ZONING P-NP LI-NP
Rev. 1 _____ Correction 1 _____
Rev. 2 _____ Correction 2 _____
Rev. 3 _____ Correction 3 _____
Final plat must be recorded by the Project Expiration Date, if applicable. Subsequent Site Plans which do not comply with the Code current at the time of filing, and all required Building Permits and/or a notice of construction (if a building permit is not required), must also be approved prior to the Project Expiration Date.

VERIFY SCALE
BAR IS ONE INCH ON ORIGINAL DRAWING.
0 1"

DATE	MAY 2016
PROJ	472902
DWG	C-24
SHEET	30 of 126

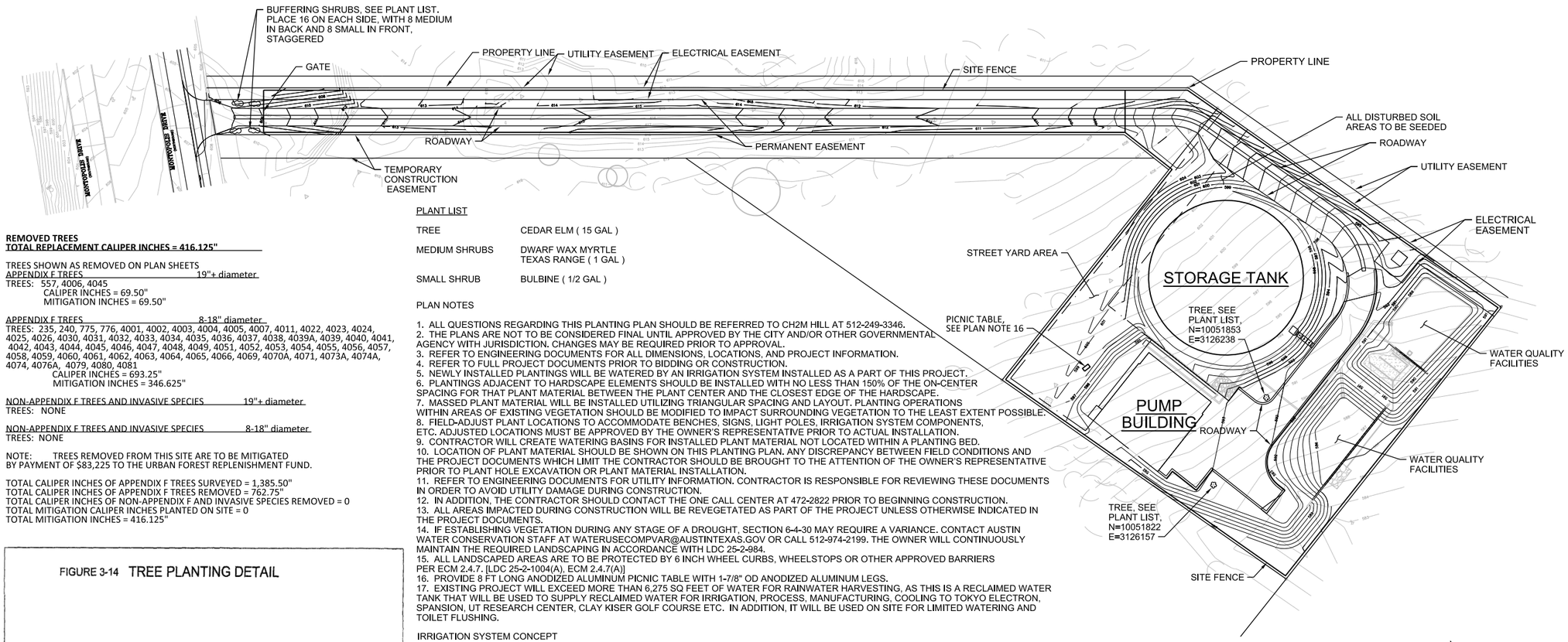

SITE PLAN LANDSCAPING

1"=50' 0 50 100 150

1"=50'

REMOVED TREES
TOTAL REPLACEMENT CALIPER INCHES = 416.125"

TREES SHOWN AS REMOVED ON PLAN SHEETS
APPENDIX F TREES 19"+ diameter
TREES: 557, 4006, 4045
CALIPER INCHES = 69.50"
MITIGATION INCHES = 69.50"

APPENDIX F TREES 8-18" diameter
TREES: 235, 240, 775, 776, 4001, 4002, 4003, 4004, 4005, 4007, 4011, 4022, 4023, 4024, 4025, 4026, 4030, 4031, 4032, 4033, 4034, 4035, 4036, 4037, 4038, 4039A, 4039, 4040, 4041, 4042, 4043, 4044, 4045, 4046, 4047, 4048, 4049, 4051, 4052, 4053, 4054, 4055, 4056, 4057, 4058, 4059, 4060, 4061, 4062, 4063, 4064, 4065, 4066, 4069, 4070A, 4071, 4073A, 4074A, 4074, 4076A, 4079, 4080, 4081
CALIPER INCHES = 693.25"
MITIGATION INCHES = 346.625"

NON-APPENDIX F TREES AND INVASIVE SPECIES 19"+ diameter
TREES: NONE

NON-APPENDIX F TREES AND INVASIVE SPECIES 8-18" diameter
TREES: NONE

NOTE: TREES REMOVED FROM THIS SITE ARE TO BE MITIGATED BY PAYMENT OF $83,225 TO THE URBAN FOREST REPLENISHMENT FUND.

TOTAL CALIPER INCHES OF APPENDIX F TREES SURVEYED = 1,385.50"
TOTAL CALIPER INCHES OF APPENDIX F TREES REMOVED = 762.75"
TOTAL CALIPER INCHES OF NON-APPENDIX F AND INVASIVE SPECIES REMOVED = 0
TOTAL MITIGATION CALIPER INCHES PLANTED ON SITE = 0
TOTAL MITIGATION INCHES = 416.125"

FIGURE 3-14 TREE PLANTING DETAIL

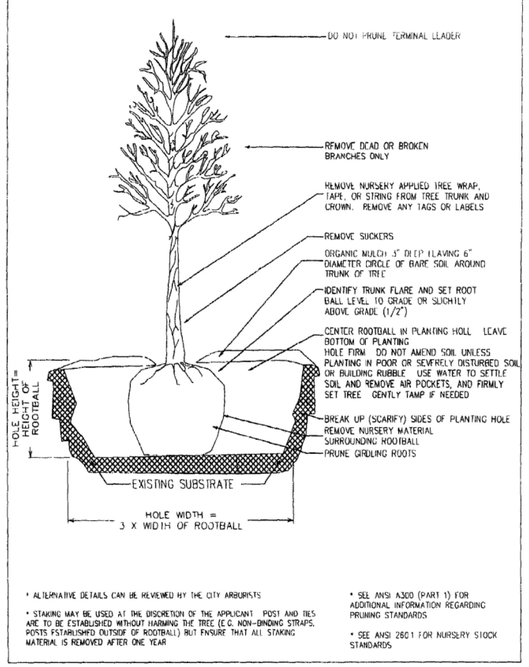

1 TREE PLANTING DETAIL
NTS

PLANT LIST

TREE	CEDAR ELM (15 GAL)
MEDIUM SHRUBS	DWARF WAX MYRTLE TEXAS RANGE (1 GAL)
SMALL SHRUB	BULBINE (1/2 GAL)

PLAN NOTES

1. ALL QUESTIONS REGARDING THIS PLANTING PLAN SHOULD BE REFERRED TO CH2M HILL AT 512-249-3346.
2. THE PLANS ARE NOT TO BE CONSIDERED FINAL UNTIL APPROVED BY THE CITY AND/OR OTHER GOVERNMENTAL AGENCY WITH JURISDICTION. CHANGES MAY BE REQUIRED PRIOR TO APPROVAL.
3. REFER TO ENGINEERING DOCUMENTS FOR ALL DIMENSIONS, LOCATIONS, AND PROJECT INFORMATION.
4. REFER TO FULL PROJECT DOCUMENTS PRIOR TO BIDDING OR CONSTRUCTION.
5. NEWLY INSTALLED PLANTINGS WILL BE WATERED BY AN IRRIGATION SYSTEM INSTALLED AS A PART OF THIS PROJECT.
6. PLANTINGS ADJACENT TO HARDSCAPE ELEMENTS SHOULD BE INSTALLED WITH NO LESS THAN 150% OF THE ON-CENTER SPACING FOR THAT PLANT MATERIAL BETWEEN THE PLANT CENTER AND THE CLOSEST EDGE OF THE HARDSCAPE.
7. MASSED PLANT MATERIAL WILL BE INSTALLED UTILIZING TRIANGULAR SPACING AND LAYOUT. PLANTING OPERATIONS WITHIN AREAS OF EXISTING VEGETATION SHOULD BE MODIFIED TO IMPACT SURROUNDING VEGETATION TO THE LEAST EXTENT POSSIBLE.
8. FIELD-ADJUST PLANT LOCATIONS TO ACCOMMODATE BENCHES, SIGNS, LIGHT POLES, IRRIGATION SYSTEM COMPONENTS, ETC. ADJUSTED LOCATIONS MUST BE APPROVED BY THE OWNER'S REPRESENTATIVE PRIOR TO ACTUAL INSTALLATION.
9. CONTRACTOR WILL CREATE WATERING BASINS FOR INSTALLED PLANT MATERIAL NOT LOCATED WITHIN A PLANTING BED.
10. LOCATION OF PLANT MATERIAL SHOULD BE SHOWN ON THIS PLANTING PLAN. ANY DISCREPANCY BETWEEN FIELD CONDITIONS AND THE PROJECT DOCUMENTS WHICH LIMIT THE CONTRACTOR SHOULD BE BROUGHT TO THE ATTENTION OF THE OWNER'S REPRESENTATIVE PRIOR TO PLANT HOLE EXCAVATION OR PLANT MATERIAL INSTALLATION.
11. REFER TO ENGINEERING DOCUMENTS FOR UTILITY INFORMATION. CONTRACTOR IS RESPONSIBLE FOR REVIEWING THESE DOCUMENTS IN ORDER TO AVOID UTILITY DAMAGE DURING CONSTRUCTION.
12. IN ADDITION, THE CONTRACTOR SHOULD CONTACT THE ONE CALL CENTER AT 472-2822 PRIOR TO BEGINNING CONSTRUCTION.
13. ALL AREAS IMPACTED DURING CONSTRUCTION WILL BE REVEGETATED AS PART OF THE PROJECT UNLESS OTHERWISE INDICATED IN THE PROJECT DOCUMENTS.
14. IF ESTABLISHING VEGETATION DURING ANY STAGE OF A DROUGHT, SECTION 6-4-30 MAY REQUIRE A VARIANCE. CONTACT AUSTIN WATER CONSERVATION STAFF AT WATERUSECOMPVAR@AUSTINTEXAS.GOV OR CALL 512-974-2199. THE OWNER WILL CONTINUOUSLY MAINTAIN THE REQUIRED LANDSCAPING IN ACCORDANCE WITH LDC 25-2-984.
15. ALL LANDSCAPED AREAS ARE TO BE PROTECTED BY 6 INCH WHEEL CURBS, WHEELSTOPS OR OTHER APPROVED BARRIERS PER ECM 2.4.7. [LDC 25-2-1004(A), ECM 2.4.7(A)]
16. PROVIDE 8 FT LONG ANODIZED ALUMINUM PICNIC TABLE WITH 1-7/8" OD ANODIZED ALUMINUM LEGS.
17. EXISTING PROJECT WILL EXCEED MORE THAN 6,275 SQ FEET OF WATER FOR RAINWATER HARVESTING, AS THIS IS A RECLAIMED WATER TANK THAT WILL BE USED TO SUPPLY RECLAIMED WATER FOR IRRIGATION, PROCESS, MANUFACTURING, COOLING TO TOKYO ELECTRON, SPANSION, UT RESEARCH CENTER, CLAY KISER GOLF COURSE ETC. IN ADDITION, IT WILL BE USED ON SITE FOR LIMITED WATERING AND TOILET FLUSHING.

IRRIGATION SYSTEM CONCEPT

1. CONTRACTOR IS RESPONSIBLE FOR THE DESIGN AND INSTALLATION OF A TEMPORARY IRRIGATION SYSTEM TO BE USED THROUGHOUT THE EXTENDED LANDSCAPE MAINTENANCE PERIOD ESTABLISHED FOR THIS PROJECT. IRRIGATION SYSTEM WILL COVER ALL LANDSCAPE PLANTINGS INSTALLED AS A PART OF THIS PROJECT.
2. TURF REINFORCEMENT MATTING WILL NOT BE CUT FOR THE INSTALLATION OF THE IRRIGATION SYSTEM. DOCUMENTS PREPARED BY THE CONTRACTOR FOR APPROVAL BY PROJECT TEAM MUST CLEARLY ADDRESS THIS CONCEPT.
3. WATER SOURCE FOR IRRIGATION SYSTEM WILL BE RECLAIMED WATER CONNECTIONS, DIRECTED BY THE OWNER.
4. CONTRACTOR WILL DISMANTLE IRRIGATION SYSTEM AFTER SATISFACTION OF EXTENDED LANDSCAPE MAINTENANCE PERIOD ESTABLISHED FOR HIS PROJECT AND UPON NOTIFICATION FROM THE PROJECT TEAM. ALL SYSTEM COMPONENTS WILL BE PROVIDED TO CITY OF AUSTIN PARKS AND RECREATION DEPARTMENT (PARD) AND DELIVERED BY CONTRACTOR TO A LOCATION CHOSEN BY PARD AND WITHIN CITY LIMITS OF AUSTIN.

APPENDIX C
LANSCAPE CALCULATIONS

STREET YARD

	Required	Provided
Total Site Area	N/A	87,025 sf
Total Street-yard Area	N/A	12, 550 sf
Street-yard/ Landscape (20%)	2,510 sf	11,000 sf (88%)

TREES (street yard)

	Required	Provided
	12	0 (including existing tree credit)

EXISTING TREES CREDIT

2" diameter to 6" diameter	0 ea x 1 =	0 ea
6" diameter or greater	0 ea x 2 =	0 ea
Proposed Trees (street yard)	12 ea	12 ea

Replacement Trees

Required caliper inches replace	416 tree mitigation
Number & Size of replacement tree total	0

ISLANDS, MEDIANS, OR PENINSULAS
3 Parking Spaces in non-street area

	Required	Provided
Street-yard area	0 sf	0 sf
Non street-yard area	0 sf	375 sf

INNOVATIVE WATER MANAGEMENT

Required Landscape Area (Section 2.4.9.1)	12,550 sf
50 Percent of Required Landscape Area	6,275

	Required	Provided
Landscaping Receiving Stormwater Runoff	6, 275 sf	6, 275 sf
Undisturbed Natural Areas	0 sf	0 sf
Undisturbed Existing Trees	0 sf	0 sf
Total	6,275 sf	6,275 sf

Rain water harvested on reclaimed water storage tank used to irrigate landscape

BUFFERING POINTS

	SIZE	Required QUANTITY	30 PREFERRED	Total Provided 32 OTHER
Larger Trees	0	0	0 pts.	0 pts.
Small Trees	0	0	0 pts.	0 pts.
Large Shrubs	0	0	0 pts.	0 pts.
Medium Shrubs	1 gal	16	16 pts.	0 pts.
Small Shrubs	1/2 gal	32	16 pts.	0 pts.

Decorative Wall (3' minimum height) ____ lf x 3 _____pts.
Berm (3' min @ no <4:1 slope) ____ lf x 1 _____pts.

ALTERNATIVE COMPLIANCE CALCULATIONS

Landscape area / Street-yard	0 pts.
Islands, medians & penninsula	0 pts.
Trees / Street-yard	-15 pts.
Trees / parking areas	0 pts.
Islands, medians, peninsulas within 50' of parking	0 pts.
Trees with in 50' of parking	0 pts.
Total Negative	0 pts.

ALTERNATIVE COMPLIANCE - COMPENSATION

% of installed Street-yard trees	0 pts.
% of increased Buffering	0 pts.
X Other (Picnic Table in Street-yard	15 pts.
Rainwater Storage in Reclaimed Water Tank	0 pts.
All native Plants	0 pts.
Total Compensation	0 pts.

APPENDIX O: - LANDSCAPE/IRRIGATION NOTES
SITE DEVELOPMENT PERMIT - IRRIGATION NOTES

Automatic irrigation systems shall comply with the following requirements. These requirements shall be noted on the Site Development Permit and shall be implemented as part of the landscape inspection:
1. A new commercial and multi-family irrigation system must be designed and installed so that:
   (a) there is not direct overspray onto non-irrigated areas;
   (b) the system does not include spray irrigation on areas less than six (6) feet wide (such as medians, buffer strips, and parking lot islands)
   (c) above-ground irrigation emission devices are set back at least six (6) inches from impervious surfaces;
   (d) the irrigation system has a master valve;
   (e) circuit remote control valves have adjustable flow controls;
   (f) serviceable in-head check valves are adjacent to paved areas where elevation differences may cause low head drainage;
   (g) the irrigation system has a City- approved weather based controller;
   (h) an automatic rain shut-off device shuts off the irrigation system automatically after not more than a one-half inch (½"?) rainfall;
   (i) zone valves and circuits are separated based on plant water requirements;
   (j) an irrigation emission device (such as spray, rotor, or drip emitter) does not exceed the manufacturer's recommended operating pressure; and
   (k) no component of the irrigation system deviates from the manufacturer's recommended use of the product.
2. The maximum spacing between spray or rotary sprinkler heads must not exceed the radius of throw of the head unless manufacturer of the sprinkler head specifically recommends a greater spacing. The radius of throw is determined by reference to the manufacturer's specifications for a specific nozzle at a specific operating pressure.
3. The irrigation installer shall develop and provide an as-built design plan and water budget to the City at the time the final plumbing inspection is performed. The water budget shall include:
   (a) a chart containing zone numbers, precipitation rate, and gallons per minute; and
   (b) the location of the emergency irrigation system shut-off valve. A laminated copy of the water budget shall be permanently installed inside the irrigation controller door.
4. The irrigation installer shall provide a report to the City on a form provided by the Austin Water Utility Department certifying compliance with Subsection 1 when the final plumbing inspection is performed by the City.

APPROVAL
SITE PLAN APPROVAL SHEET OF
FILE NUMBER: SPC-2015-0322C APPLICATION DATE: JULY 17, 2015
APPROVED BY COMMISSION ON: _____ UNDER SECTION 142 OF
CHAPTER 25-5 OF THE CITY OF AUSTIN CODE.
EXPIRATION DATE (25-5-81, LDC) _____ CASE MANAGER LYNDA COURTNEY
PROJECT EXPIRATION DATE (ORD.#970905-A) _____ DWPZ _____ DDZ _____
Director, Planning and Development Review
RELEASE FOR GENERAL COMPLIANCE: _____ ZONING P-NP LI-NP
Rev. 1 _____ Correction 1 _____
Rev. 2 _____ Correction 2 _____
Rev. 3 _____ Correction 3 _____
Final plat must be recorded by the Project Expiration Date, if applicable. Subsequent Site Plans which do not comply with the Code current at the time of filing, and all required Building Permits and/or a notice of construction (if a building permit is not required), must also be approved prior to the Project Expiration Date.

11 MAY 2016

NO.	DATE	REVISION	BY	APVD
DSGN	B BERHORST	DR B BERHORST	CHK J JENKINS	APVD J JENKINS

Montopolis Water Reclamation Initiave (WRI)
Storage Reservoir and Pump Station
2711 Montopolis Drive
Austin Water, Austin, Texas

CH2MHILL®
TBPE FIRM NO. 3689

CIVIL
LANDSCAPING PLAN

1"=50'
VERIFY SCALE
BAR IS ONE INCH ON ORIGINAL DRAWING.
0 1"

DATE	MAY 2016
PROJ	472902
DWG	C-25
SHEET	31 of 126

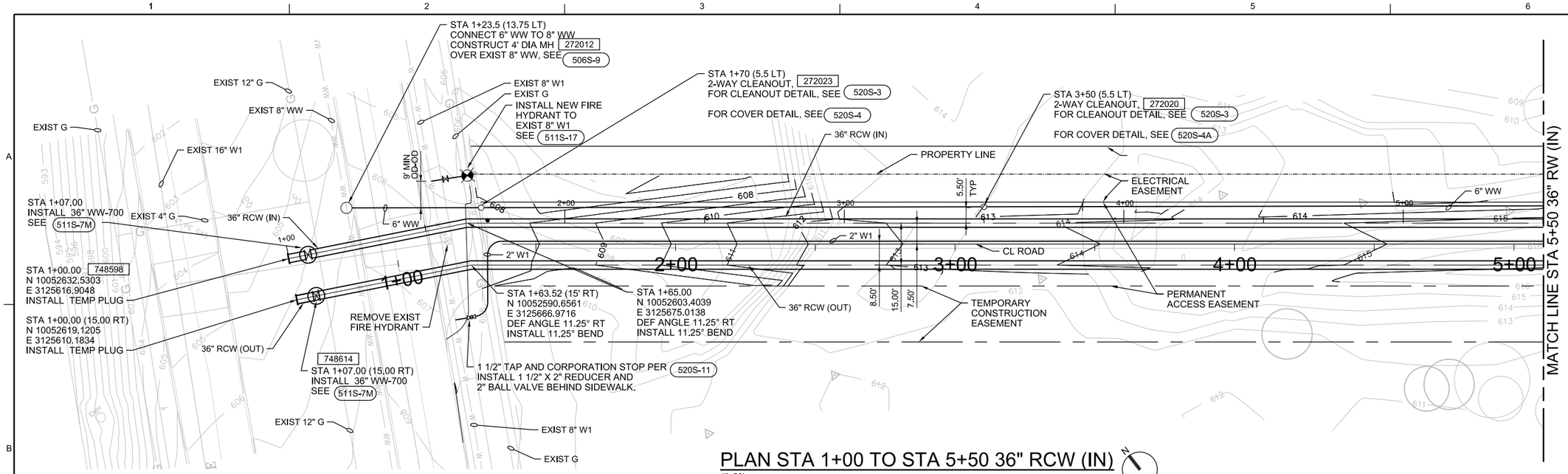

PLAN STA 1+00 TO STA 5+50 36" RCW (IN)

1"=20'

GAS LINE NOTE:

"WHEN DIGGING WITHIN 10' OF A TRANSMISSION OR HPD LINE, PLEASE MAKE CONTACT WITH ANTHONY (TONY) GARCIA AT LEAST 48 HOURS IN ADVANCE SO THAT A TGS REPRESENTATIVE CAN BE SCHEDULED TO BE PRESENT DURING ALL EXCAVATION ACTIVITIES. PLEASE MAINTAIN AT LEAST 5' (OD TO OD) FROM THE TRANSMISSION OR HPD LINE AS WELL."

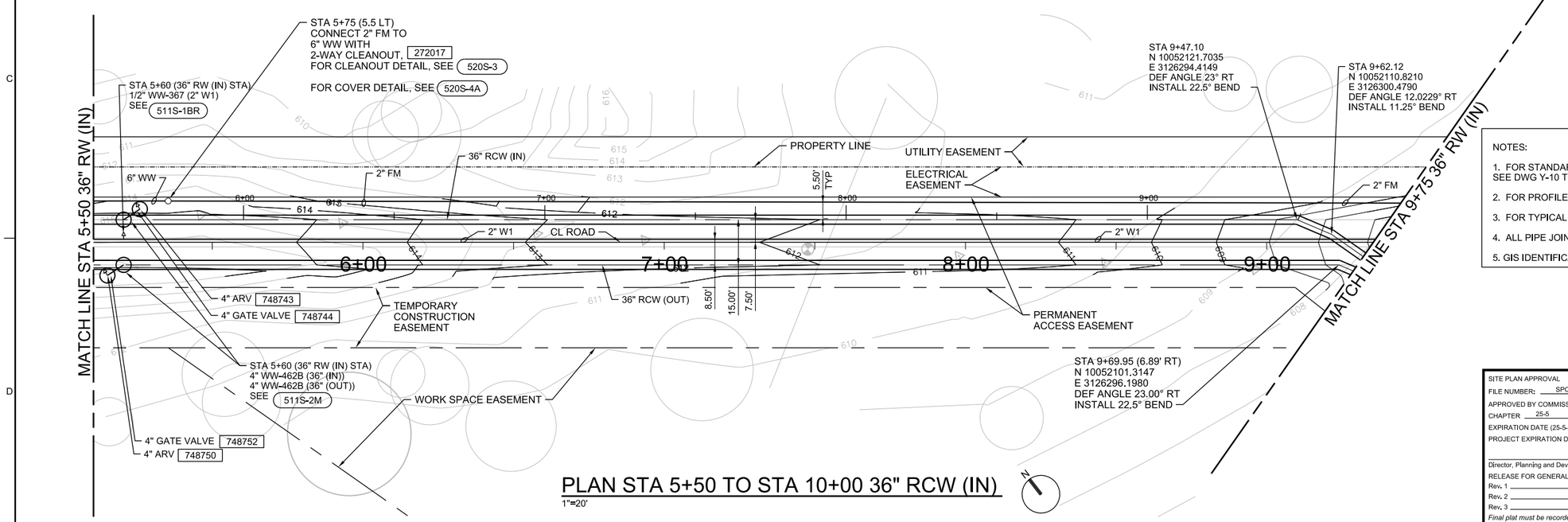

PLAN STA 5+50 TO STA 10+00 36" RCW (IN)

1"=20'

NOTES:

1. FOR STANDARD DETAILS REFERRED TO ON THIS DWG, SEE DWG Y-10 TO Y-12.
2. FOR PROFILE, SEE DWG Y-3.
3. FOR TYPICAL CROSS SECTION, SEE DWG Y-4.
4. ALL PIPE JOINTS TO BE RESTRAINED PER PIPE SCHEDULE.
5. GIS IDENTIFICATION NUMBERS: 748750

APPROVAL

SITE PLAN APPROVAL SHEET OF
FILE NUMBER: SPC-2015-0322C APPLICATION DATE: JULY 17, 2015
APPROVED BY COMMISSION ON: _____ UNDER SECTION 142 OF
CHAPTER 25-5 OF THE CITY OF AUSTIN CODE.
EXPIRATION DATE (25-5-81, LDC) _____ CASE MANAGER LYNDA COURTNEY
PROJECT EXPIRATION DATE (ORD.#970905-A) _____ DWPZ _____ DDZ _____

Director, Planning and Development Review
RELEASE FOR GENERAL COMPLIANCE: _____ ZONING P-NP LI-NP
Rev. 1 _____ Correction 1 _____
Rev. 2 _____ Correction 2 _____
Rev. 3 _____ Correction 3 _____

Final plat must be recorded by the Project Expiration Date, if applicable. Subsequent Site Plans which do not comply with the Code current at the time of filing, and all required Building Permits and/or a notice of construction (if a building permit is not required), must also be approved prior to the Project Expiration Date.

STATE OF TEXAS
JOSEPH W. JENKINS
68717
REGISTERED
PROFESSIONAL ENGINEER
5-11-2016

NO.	DATE	REVISION	BY	APVD
DSGN	B BERHORST	DR B BERHORST	CHK J JENKINS	APVD J JENKINS

Montopolis Water Reclamation Initiave (WRI)
Storage Reservoir and Pump Station
2711 Montopolis Drive
Austin Water, Austin, Texas

CH2MHILL®
TBPE FIRM NO. 3699

YARD PIPING

YARD PIPING PLAN
1 OF 2

1"=20'
VERIFY SCALE
BAR IS ONE INCH ON ORIGINAL DRAWING.
0 1"

DATE	MAY 2016
PROJ	472902
DWG	Y-1
SHEET	32 of 126

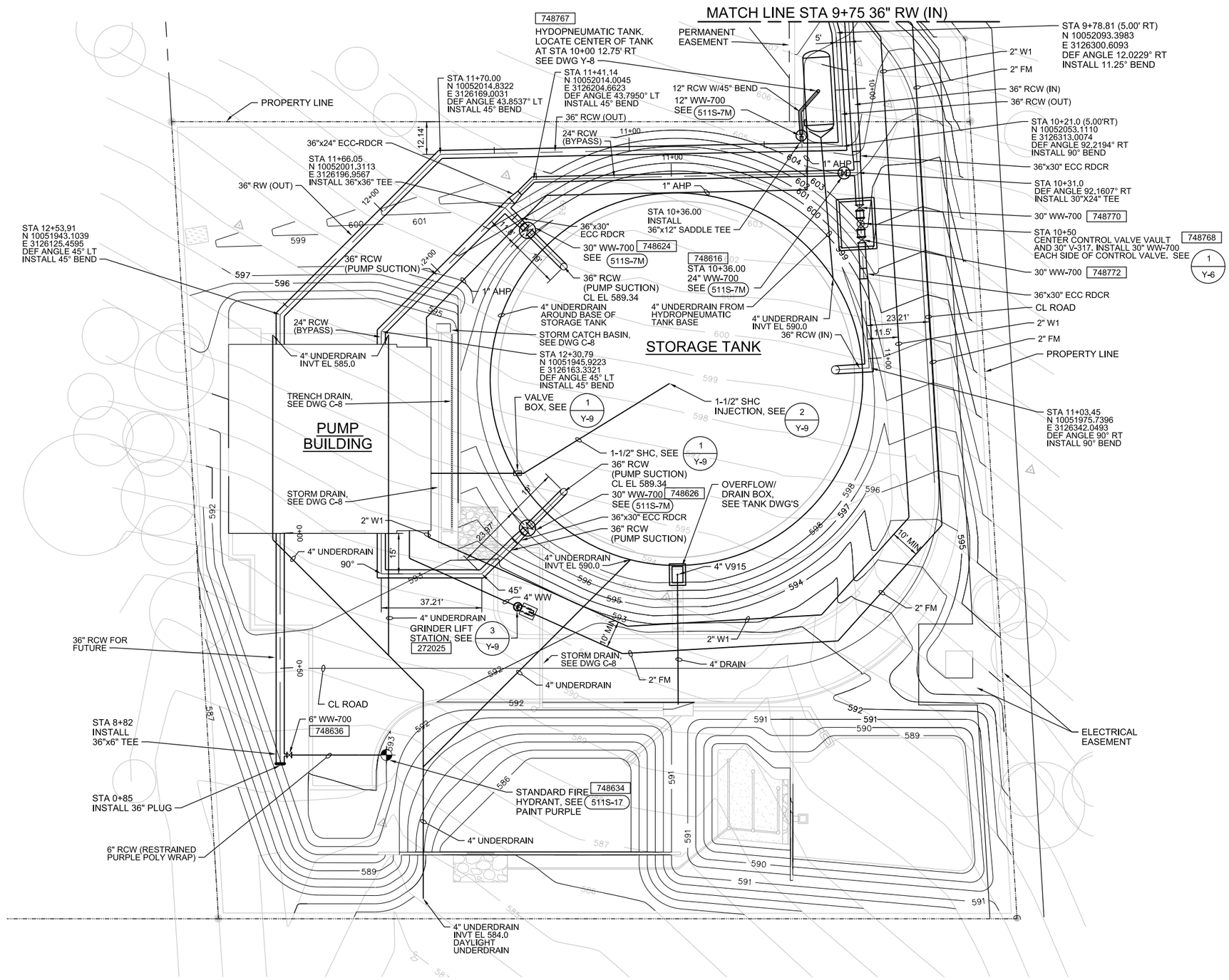

PLAN
1"=20'

NOTES:

1. FOR STANDARD DETAILS REFERRED TO ON THIS DWG, SEE DWG Y-9 TO Y-11.
2. FOR PROFILE, SEE DWG Y-3 & Y-4.
3. FOR TYPICAL CROSS SECTION, SEE DWG Y-4.
4. ALL PIPE JOINTS TO BE RESTRAINED PER PIPE SCHEDULE.
5. GIS IDENTIFICATION NUMBERS: 748770

APPROVAL

SITE PLAN APPROVAL SHEET OF
FILE NUMBER: SPC-2015-0322C APPLICATION DATE: JULY 17, 2015
APPROVED BY COMMISSION ON: _____ UNDER SECTION 142 OF
CHAPTER 25-5 OF THE CITY OF AUSTIN CODE.
EXPIRATION DATE (25-5-81, LDC) _____ CASE MANAGER LYNDA COURTNEY
PROJECT EXPIRATION DATE (ORD.#970905-A) _____ DWPZ _____ DDZ _____

Director, Planning and Development Review
RELEASE FOR GENERAL COMPLIANCE: _____ ZONING P-NP LI-NP
Rev. 1 _____ Correction 1 _____
Rev. 2 _____ Correction 2 _____
Rev. 3 _____ Correction 3 _____

Final plat must be recorded by the Project Expiration Date, if applicable. Subsequent Site Plans which do not comply with the Code current at the time of filing, and all required Building Permits and/or a notice of construction (if a building permit is not required), must also be approved prior to the Project Expiration Date.

STATE OF TEXAS
JOSEPH W. JENKINS
68717
REGISTERED PROFESSIONAL ENGINEER
Joseph W. Jenkins
5-11-2016

NO.	DATE	REVISION	BY	APVD
DSGN	B BERHORST	DR B BERHORST	CHK J JENKINS	APVD J JENKINS

Montopolis Water Reclamation Initiative (WRI)
Storage Reservoir and Pump Station
2711 Montopolis Drive
Austin Water, Austin, Texas

CH2MHILL®
TBPE FIRM NO. 3699

YARD PIPING

YARD PIPING PLAN 2 OF 2

1"=20'

VERIFY SCALE
BAR IS ONE INCH ON ORIGINAL DRAWING.
0 1"

DATE	MAY 2016
PROJ	472902
DWG	Y-2
SHEET	33 of 126

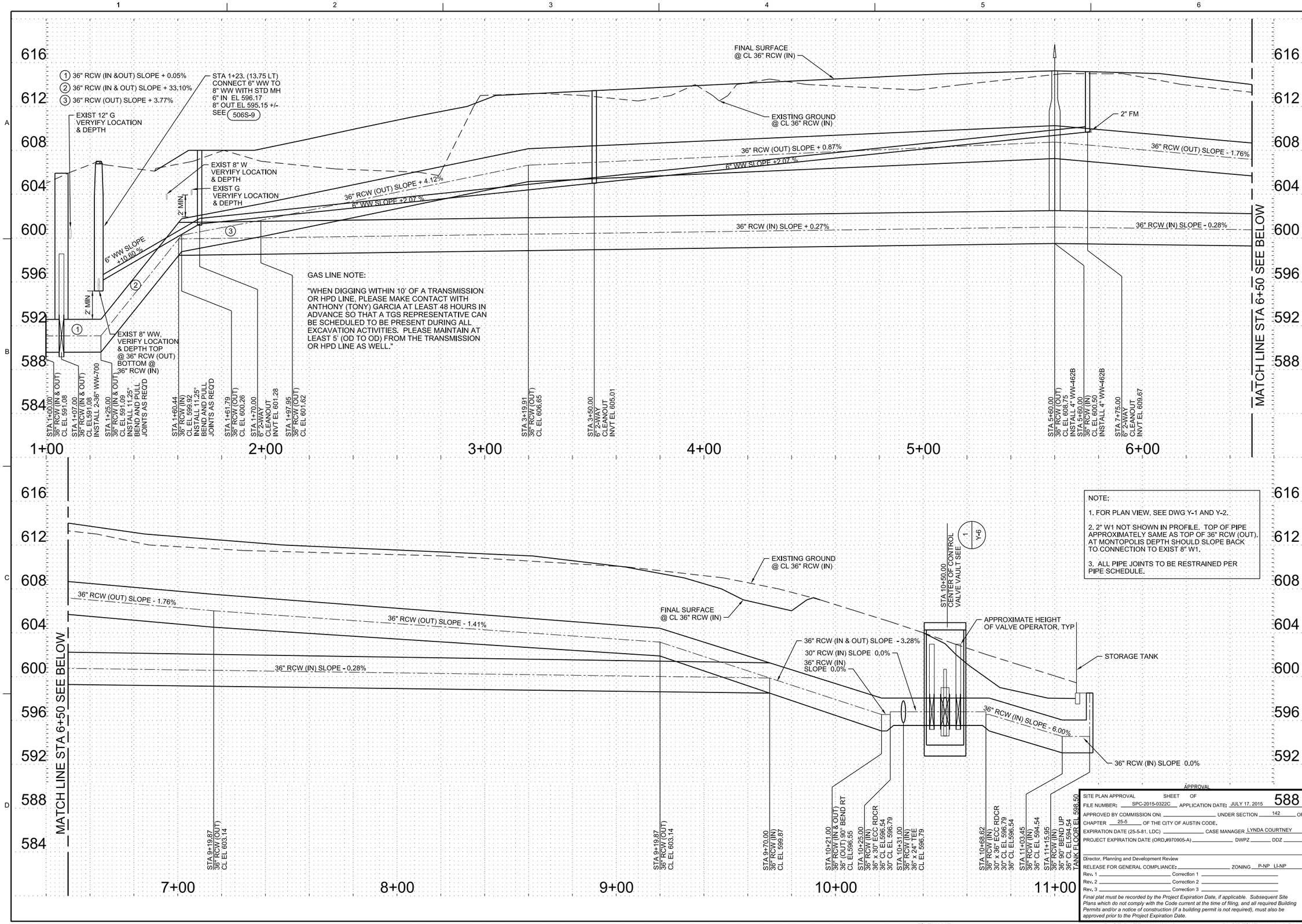

APPROVAL

SITE PLAN APPROVAL SHEET OF 588

FILE NUMBER: SPC-2015-0322C APPLICATION DATE: JULY 17, 2015

APPROVED BY COMMISSION ON: _____ UNDER SECTION 142 OF

CHAPTER 25-5 OF THE CITY OF AUSTIN CODE.

EXPIRATION DATE (25-5-81, LDC) _____ CASE MANAGER LYNDA COURTNEY

PROJECT EXPIRATION DATE (ORD.#970905-A) _____ DWPZ _____ DDZ _____

Director, Planning and Development Review

RELEASE FOR GENERAL COMPLIANCE: _____ ZONING P-NP LI-NP

Rev. 1 _____ Correction 1 _____

Rev. 2 _____ Correction 2 _____

Rev. 3 _____ Correction 3 _____

Final plat must be recorded by the Project Expiration Date, if applicable. Subsequent Site Plans which do not comply with the Code current at the time of filing, and all required Building Permits and/or a notice of construction (if a building permit is not required), must also be approved prior to the Project Expiration Date.

STATE OF TEXAS
JOSEPH W. JENKINS
68717
REGISTERED PROFESSIONAL ENGINEER

Joseph W. Jenkins
5-11-2016

NO.	DATE	REVISION	BY	APVD

DSGN B BERHORST | DR B BERHORST | CHK J JENKINS | APVD J JENKINS

Montopolis Water Reclamation Initiave (WRI)
Storage Reservoir and Pump Station
2711 Montopolis Drive
Austin Water, Austin, Texas

CH2MHILL®
TBPE FIRM NO. 9699

YARD PIPING

YARD PIPING PROFILES 1 OF 2

1"=20' H 1"=4' V

VERIFY SCALE

BAR IS ONE INCH ON ORIGINAL DRAWING.
0 1"

DATE	MAY 2016
PROJ	472902
DWG	Y-3
SHEET	34 of 126

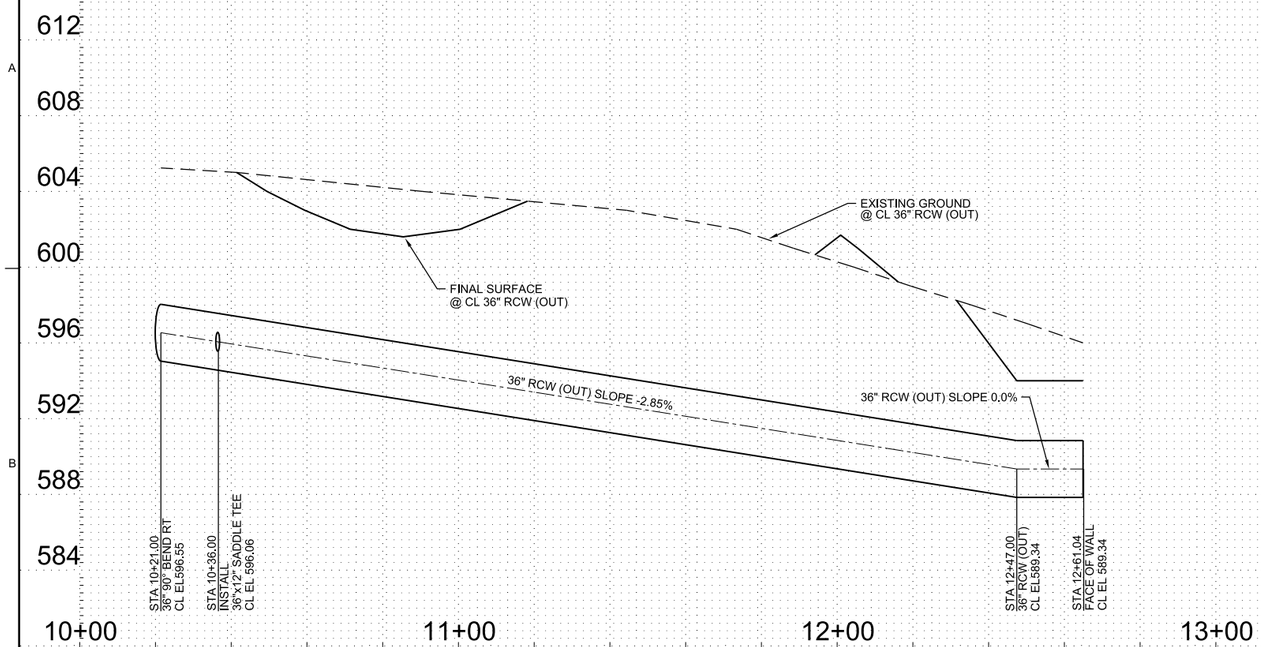

36" RCW OUT

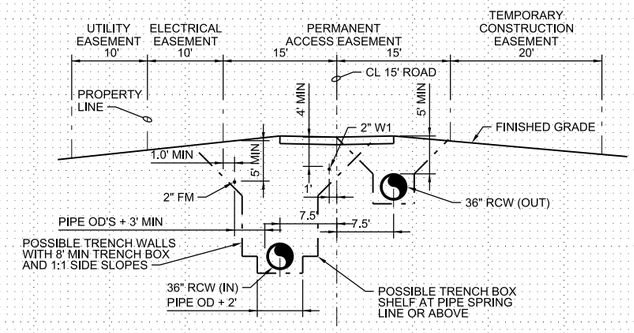

TYPICAL PIPE SECTION LAYOUT

1"=10' SECTION SHOWN AT STA 5+60 (36" RCW (IN) STATIONS)

NOTE:

1. FOR PLAN VIEW, SEE DWG Y-2..
2. ALL PIPE JOINTS TO BE RESTRAINED PER PIPE SCHEDULE.

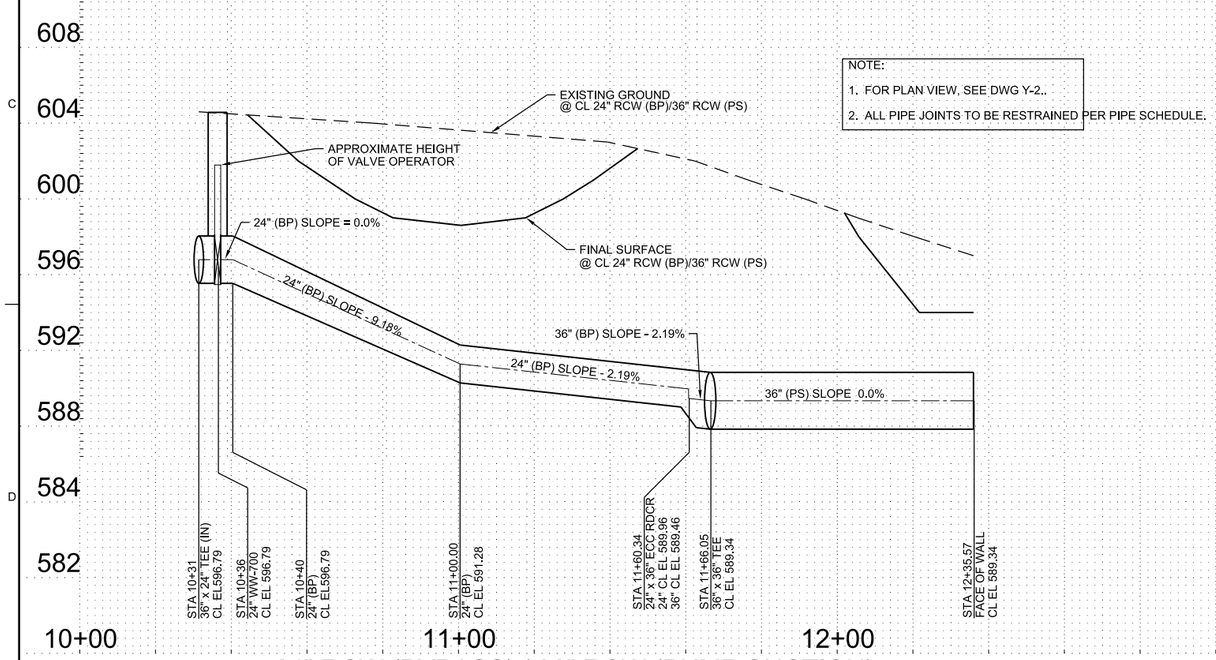

24" RCW (BYPASS) / 36" RCW (PUMP SUCTION)

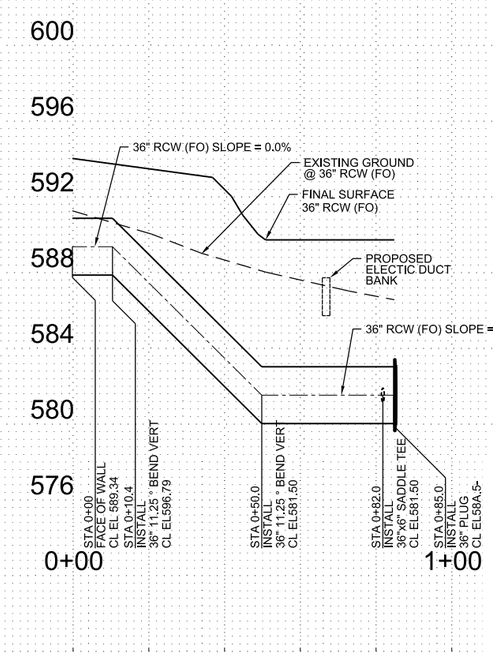

36" RCW (FUTURE OUT)

APPROVAL

SITE PLAN APPROVAL SHEET OF

FILE NUMBER: SPC-2015-0322C APPLICATION DATE: JULY 17, 2015

APPROVED BY COMMISSION ON: _____ UNDER SECTION 142 OF

CHAPTER 25-5 OF THE CITY OF AUSTIN CODE.

EXPIRATION DATE (25-5-81, LDC) _____ CASE MANAGER LYNDA COURTNEY

PROJECT EXPIRATION DATE (ORD.#970905-A) _____ DWPZ _____ DDZ _____

Director, Planning and Development Review

RELEASE FOR GENERAL COMPLIANCE: _____ ZONING P-NP LI-NP

Rev. 1 _____ Correction 1 _____

Rev. 2 _____ Correction 2 _____

Rev. 3 _____ Correction 3 _____

Final plat must be recorded by the Project Expiration Date, if applicable. Subsequent Site Plans which do not comply with the Code current at the time of filing, and all required Building Permits and/or a notice of construction (if a building permit is not required), must also be approved prior to the Project Expiration Date.

STATE OF TEXAS
JOSEPH W. JENKINS
68717
REGISTERED
PROFESSIONAL ENGINEER
5-11-2016

NO.	DATE	REVISION	BY	APVD
DSGN	B BERHORST	DR B BERHORST	CHK J JENKINS	APVD J JENKINS

Montopolis Water Reclamation Initiave (WRI)
Storage Reservoir and Pump Station
2711 Montopolis Drive
Austin, Austin, Texas

CH2MHILL®
TBPE FIRM NO. 3699

YARD PIPING

YARD PIPING PROFILES 2 OF 2

1"=20' H 1"=4' V

VERIFY SCALE

BAR IS ONE INCH ON ORIGINAL DRAWING.
0 1"

DATE	MAY 2016
PROJ	472902
DWG	Y-4
SHEET	35 of 126

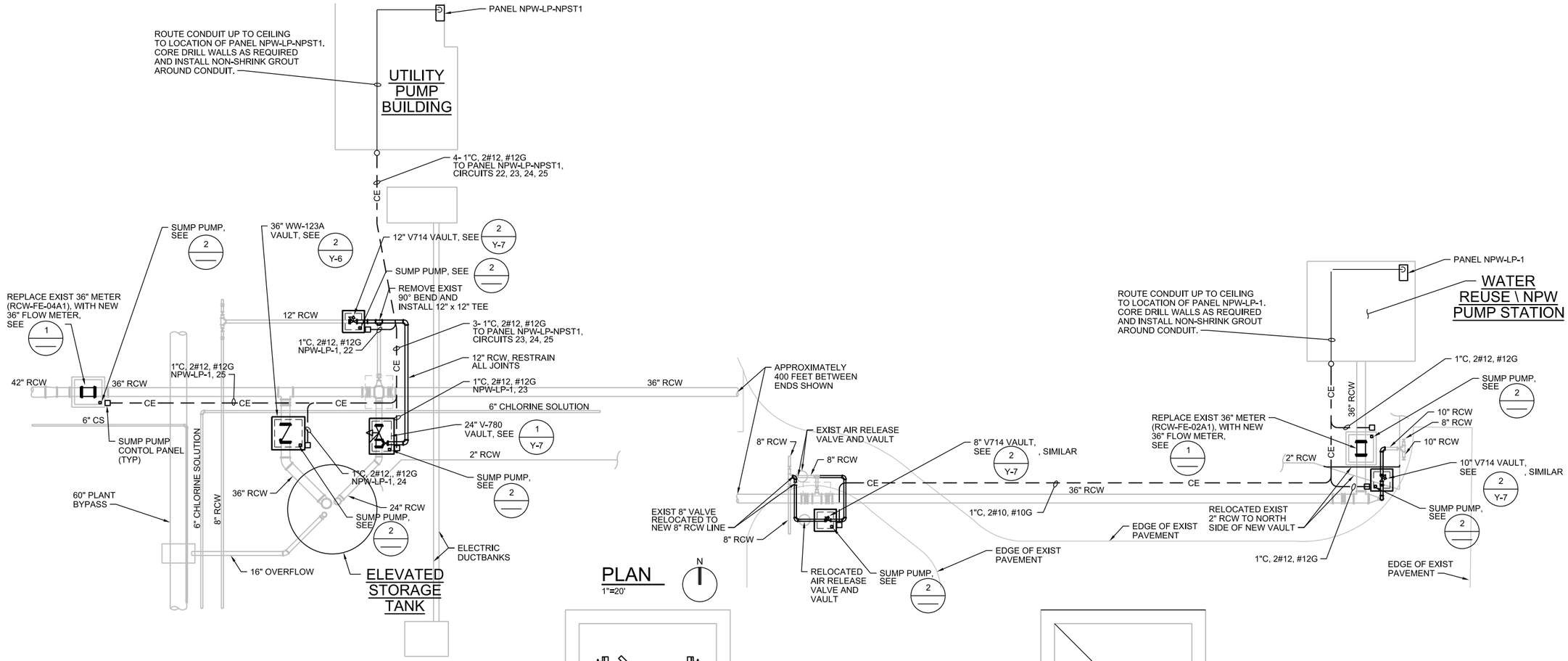

NOTES:

1. REPLACE EXIST FLOW METER (RCW-FE-04A1) WITH NEW METER. EXIST 36" RCW CL EL 413.00. TOP OF STRUCTURE SLAB EL 427.0.

2. REPLACE EXIST FLOW METER (RCW-FE-02A1) WITH NEW METER. EXIST 36" RCW CL EL 411.50. TOP OF STRUCTURE SLAB EL 428.0.

3. SEE 4091-219G ON DWG I-8.

1 TYPICAL METER REPLACEMENT DETAIL
1/4"=1'-0"

2 TYPICAL SUMP PUMP DETAIL
1/4"=1'-0"
Y-6, Y-7

APPROVAL

SITE PLAN APPROVAL SHEET OF
FILE NUMBER: SPC-2015-0322C APPLICATION DATE: JULY 17, 2015
APPROVED BY COMMISSION ON: _____ UNDER SECTION 142 OF
CHAPTER 25-5 OF THE CITY OF AUSTIN CODE.
EXPIRATION DATE (25-5-81, LDC) _____ CASE MANAGER LYNDA COURTNEY
PROJECT EXPIRATION DATE (ORD.#970905-A) _____ DWPZ _____ DDZ _____

Director, Planning and Development Review
RELEASE FOR GENERAL COMPLIANCE: _____ ZONING P-NP LI-NP
Rev. 1 _____ Correction 1 _____
Rev. 2 _____ Correction 2 _____
Rev. 3 _____ Correction 3 _____

Final plat must be recorded by the Project Expiration Date, if applicable. Subsequent Site Plans which do not comply with the Code current at the time of filing, and all required Building Permits and/or a notice of construction (if a building permit is not required), must also be approved prior to the Project Expiration Date.

STATE OF TEXAS
JOSEPH W. JENKINS
68717
REGISTERED PROFESSIONAL ENGINEER
5-11-2016

NO.	DATE	REVISION	BY	APVD

DSGN B BERHORST | DR B BERHORST | CHK J JENKINS | APVD J JENKINS

Montopolis Water Reclamation Initiave (WRI)
Storage Reservoir and Pump Station
2711 Montopolis Drive
Austin Water, Austin, Texas

CH2MHILL®
TBPE FIRM NO. 3699

YARD PIPING
YARD PIPING & ELECTRICAL PLAN AND DETAILS @ SAR TREATMENT PLANT

1"=20'
VERIFY SCALE
BAR IS ONE INCH ON ORIGINAL DRAWING.
0 1"

DATE	MAY 2016
PROJ	472902
DWG	Y-5
SHEET	36 of 126

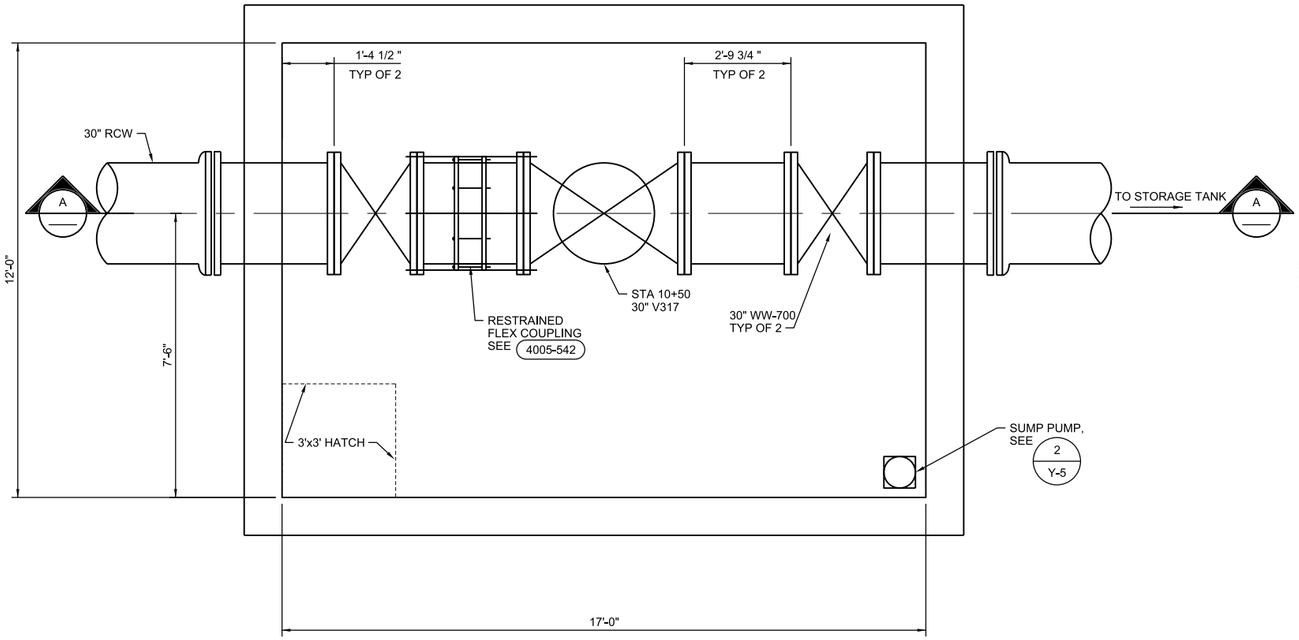

1 CONTROL VALVE VAULT (MONTOPOLIS PS SITE)
Y-2
1/2"=1'-0"
0 2 4 6
1/2"=1'-0"

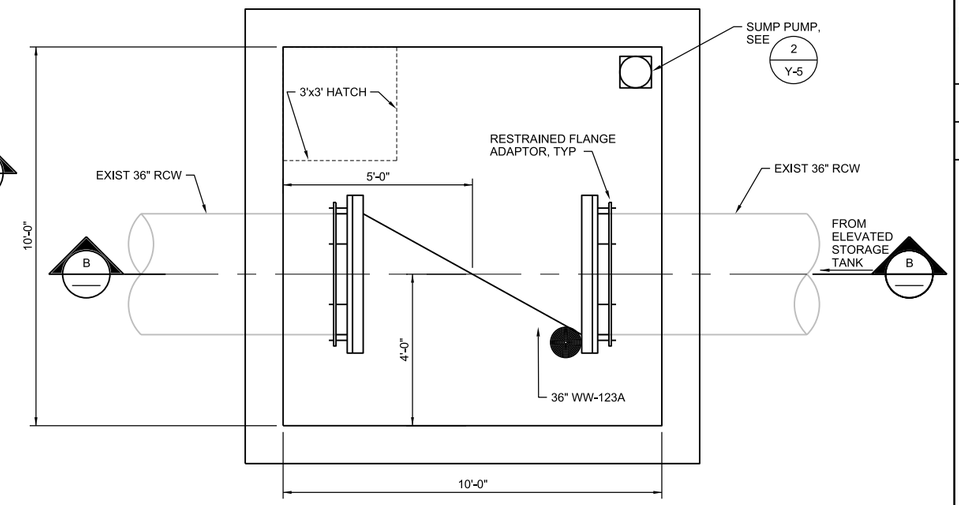

2 36" WW-123A VAULT (SAR SITE)
Y-5
1/2"=1'-0"
0 2 4 6
1/2"=1'-0"

NOTE:

1. FOR STANDARD DETAILS REFERRED TO ON THIS DWG, SEE DWG M-6 TO M-10.

2. FOR STRUCTURAL DRAWINGS SEE DWG SY-1 & SY-2.

3. ALL EXPOSED PIPING TO BE PAINTED PER PIPE SCHEDULE.

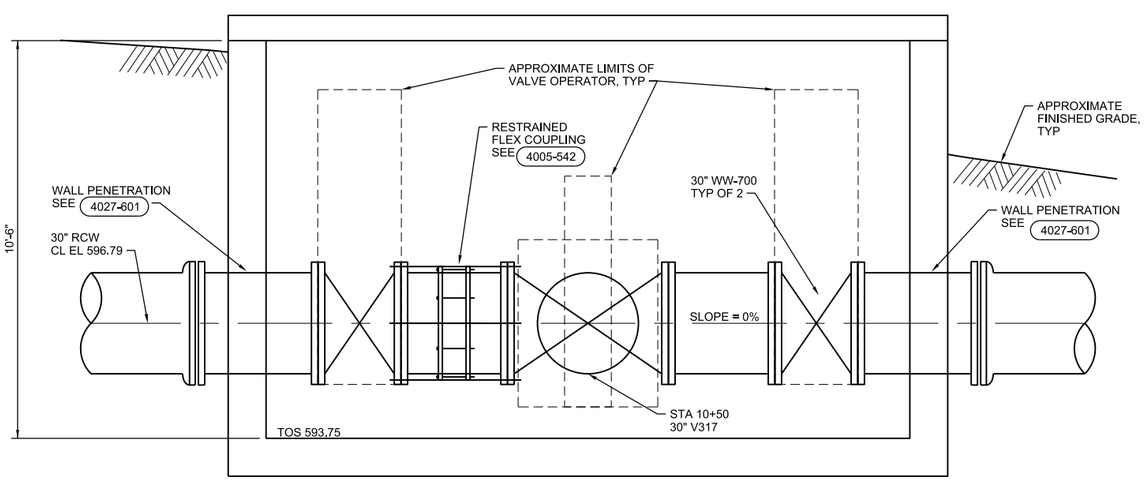

A SECTION
1/2"=1'-0"
0 2 4 6
1/2"=1'-0"

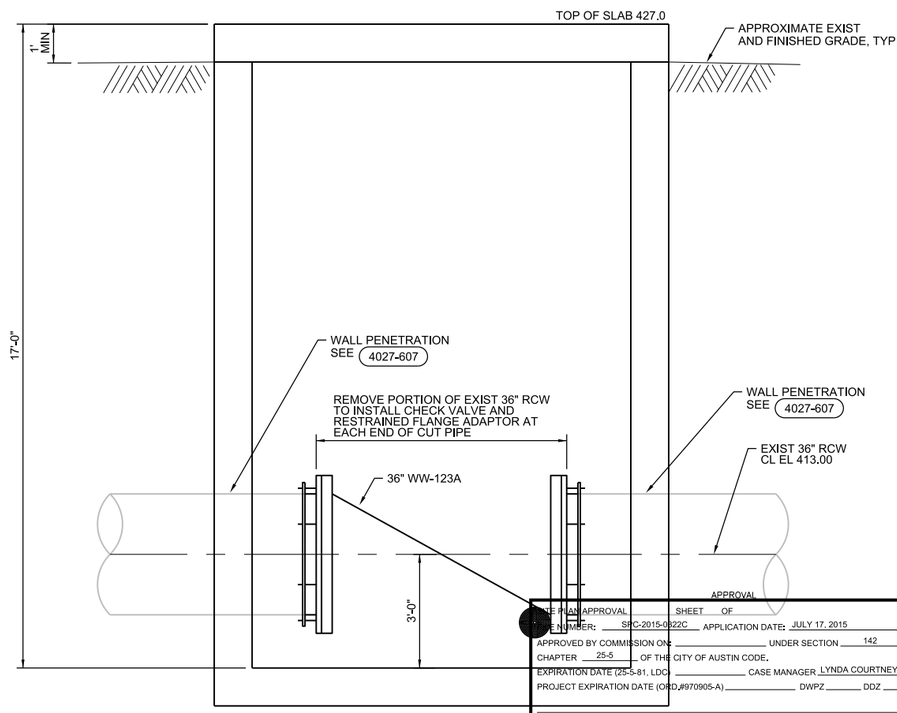

B SECTION
1/2"=1'-0"
0 2 4 6
1/2"=1'-0"

APPROVAL

SITE PLAN APPROVAL SHEET OF
CASE NUMBER: SPC-2015-0322C APPLICATION DATE: JULY 17, 2015
APPROVED BY COMMISSION ON _____ UNDER SECTION 142 OF
CHAPTER 25-5 OF THE CITY OF AUSTIN CODE.
EXPIRATION DATE (25-5-81, LDC) _____ CASE MANAGER LYNDA COURTNEY
PROJECT EXPIRATION DATE (ORD.#970905-A) _____ DWPZ _____ DDZ _____

Director, Planning and Development Review
RELEASE FOR GENERAL COMPLIANCE: _____ ZONING P-NP LI-NP
Rev. 1 _____ Correction 1 _____
Rev. 2 _____ Correction 2 _____
Rev. 3 _____ Correction 3 _____

Final plat must be recorded by the Project Expiration Date, if applicable. Subsequent Site Plans which do not comply with the Code current at the time of filing, and all required Building Permits and/or a notice of construction (if a building permit is not required), must also be approved prior to the Project Expiration Date.

STATE OF TEXAS
JOSEPH W. JENKINS
68717
REGISTERED
PROFESSIONAL ENGINEER
5-11-2016

NO.	DATE	REVISION	BY	APVD
DSGN	B BERHORST	DR B BERHORST	CHK J JENKINS	APVD J JENKINS

Montopolis Water Reclamation Initiave (WRI)
Storage Reservoir and Pump Station
2711 Montopolis Drive
Austin Water, Austin, Texas

CH2MHILL®
TBPE FRM NO. 3699

YARD PIPING

VALVE VAULT DETAILS

1/2"=1'-0"
VERIFY SCALE
BAR IS ONE INCH ON ORIGINAL DRAWING.
0 1"

DATE	MAY 2016
PROJ	472902
DWG	Y-6
SHEET	37 of 126

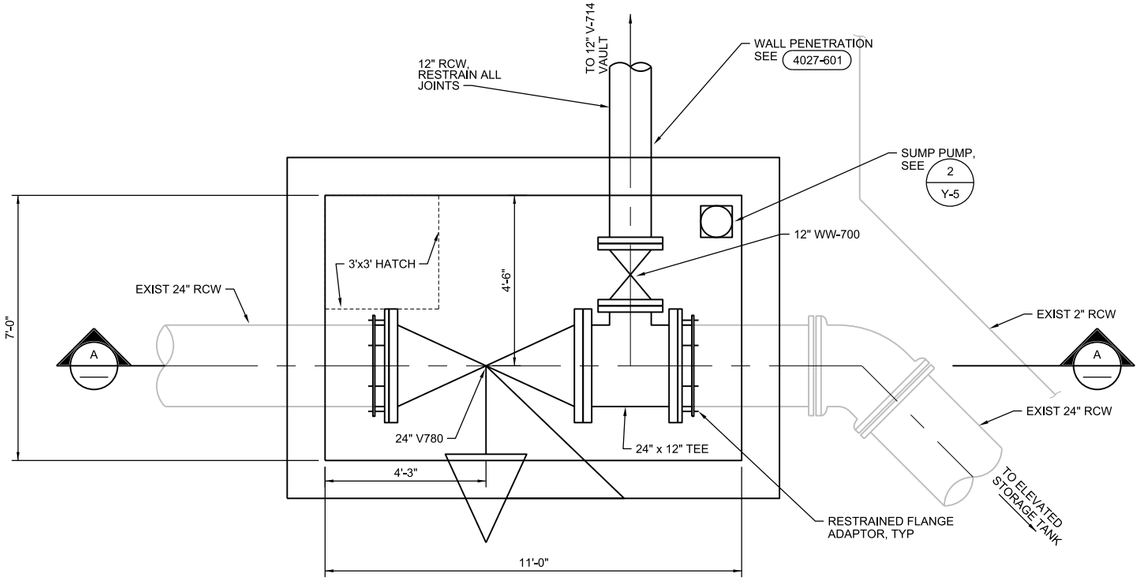

1 Y-2 **24" V-780 VAULT** (SAR SITE)
1/2"=1'-0"
0 2 4 6
1/2"=1'-0"

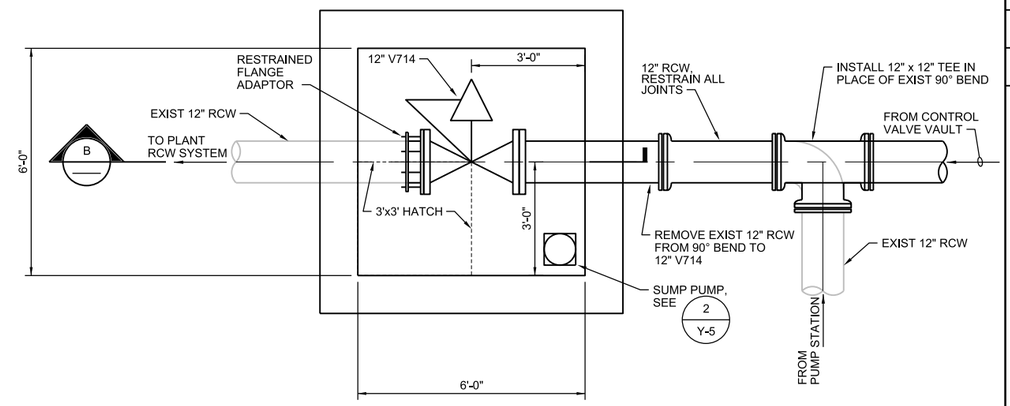

2 Y-5 **12" V-714 VAULT** (SAR SITE)
1"=1'
0 2 4 6
1/2"=1'-0"

NOTE:

1. FOR STANDARD DETAILS REFERRED TO ON THIS DWG, SEE DWG M-6 TO M-10.

2. FOR STRUCTURAL DRAWINGS SEE DWG SY-3 & SY-4.

3. ALL EXPOSED PIPING TO BE PAINTED PER PIPE SCHEDULE.

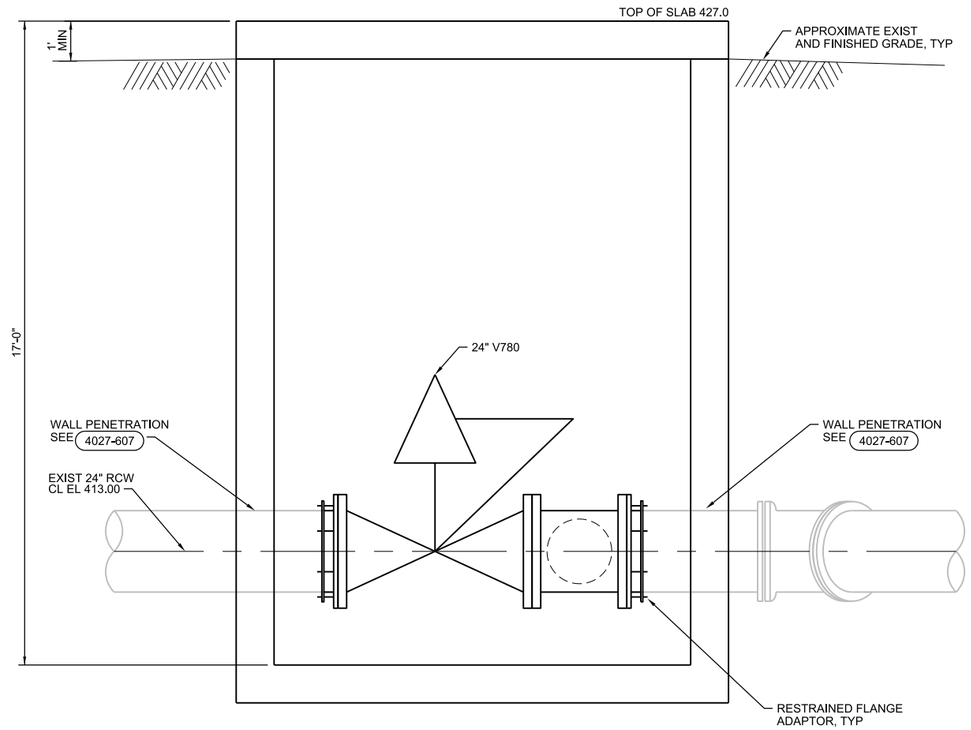

A **SECTION**
1/2"=1'-0"
0 2 4 6
1/2"=1'-0"

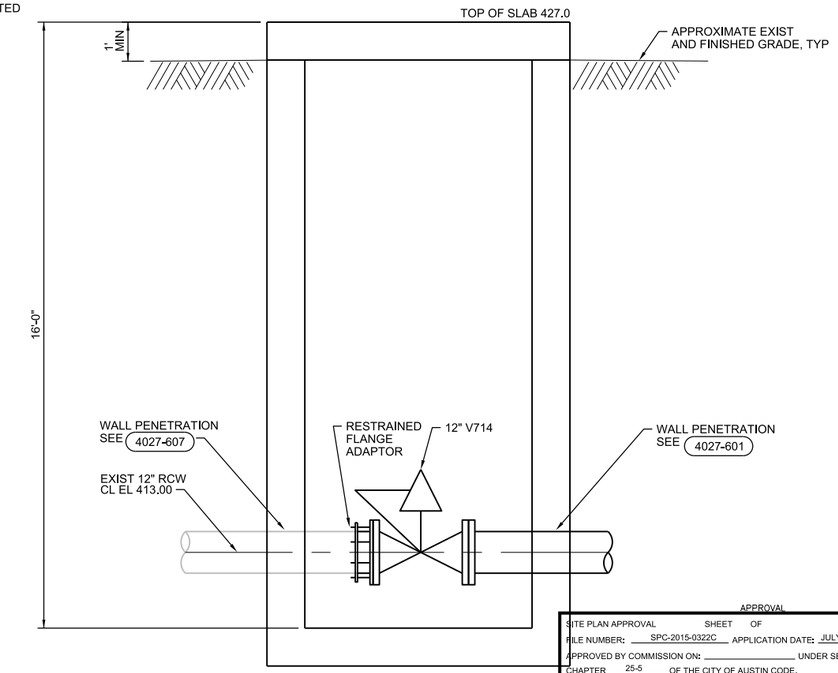

B **SECTION**
1/2"=1'-0"
0 2 4 6

APPROVAL

SITE PLAN APPROVAL SHEET OF
FILE NUMBER: SPC-2015-0322C APPLICATION DATE: JULY 17, 2015
APPROVED BY COMMISSION ON: _____ UNDER SECTION 142 OF
CHAPTER 25-5 OF THE CITY OF AUSTIN CODE.
EXPIRATION DATE (25-5-81, LDC) _____ CASE MANAGER LYNDA COURTNEY
PROJECT EXPIRATION DATE (ORD.#970905-A) _____ DWPZ _____ DDZ _____

Director, Planning and Development Review
RELEASE FOR GENERAL COMPLIANCE: _____ ZONING P-NP LI-NP
Rev. 1 _____ Correction 1 _____
Rev. 2 _____ Correction 2 _____
Rev. 3 _____ Correction 3 _____

Final plat must be recorded by the Project Expiration Date, if applicable. Subsequent Site Plans which do not comply with the Code current at the time of filing, and all required Building Permits and/or a notice of construction (if a building permit is not required), must also be approved prior to the Project Expiration Date.

STATE OF TEXAS
JOSEPH W. JENKINS
68717
REGISTERED PROFESSIONAL ENGINEER
Joseph W. Jenkins
5-11-2016

NO.	DATE	REVISION	BY	APVD
DSGN	B BERHORST	DR B BERHORST	CHK J JENKINS	APVD J JENKINS

Montopolis Water Reclamation Initiave (WRI)
Storage Reservoir and Pump Station
2711 Montopolis Drive
Austin Water, Austin, Texas

CH2MHILL®
TBPE FIRM NO. 3699

YARD PIPING

VALVE VAULT DETAILS

1/2"=1'-0"
VERIFY SCALE
BAR IS ONE INCH ON ORIGINAL DRAWING.
0 1"

DATE	MAY 2016
PROJ	472902
DWG	Y-7
SHEET	38 of 126

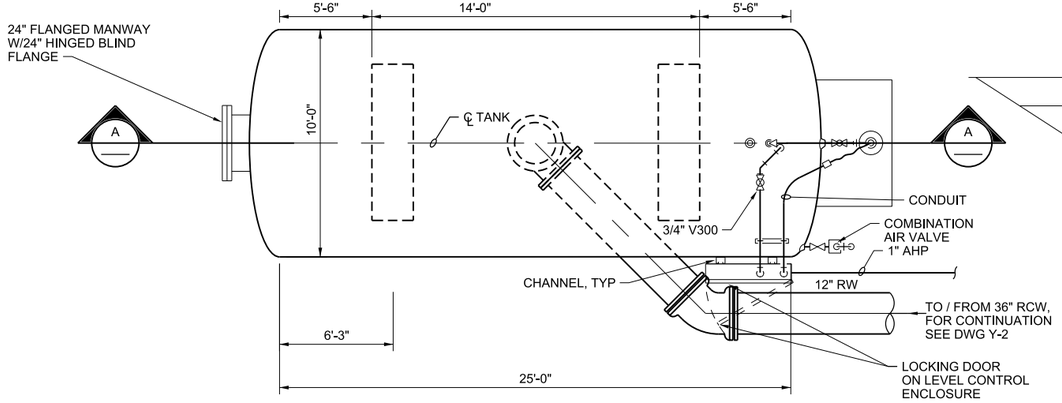

1 HYDROPNEUMATIC TANK

NTS

Y-2

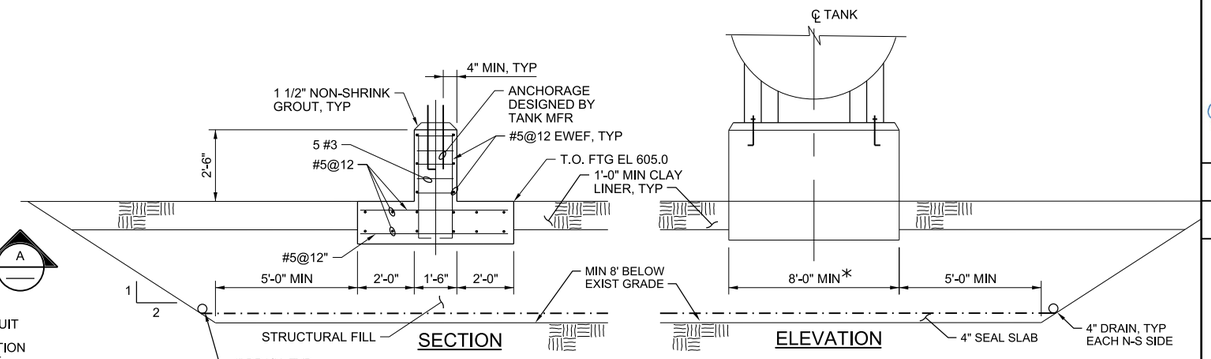

2 FOOTING DETAIL

NTS

*CONFIRM WITH TANK SADDLE REQUIREMENTS

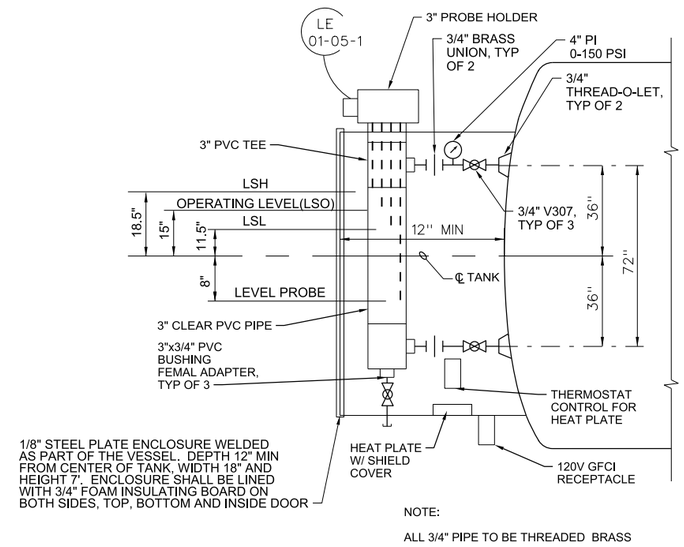

NOTE:

ALL 3/4" PIPE TO BE THREADED BRASS

3 LEVEL CONTROL PROBE CHAMBER

NTS

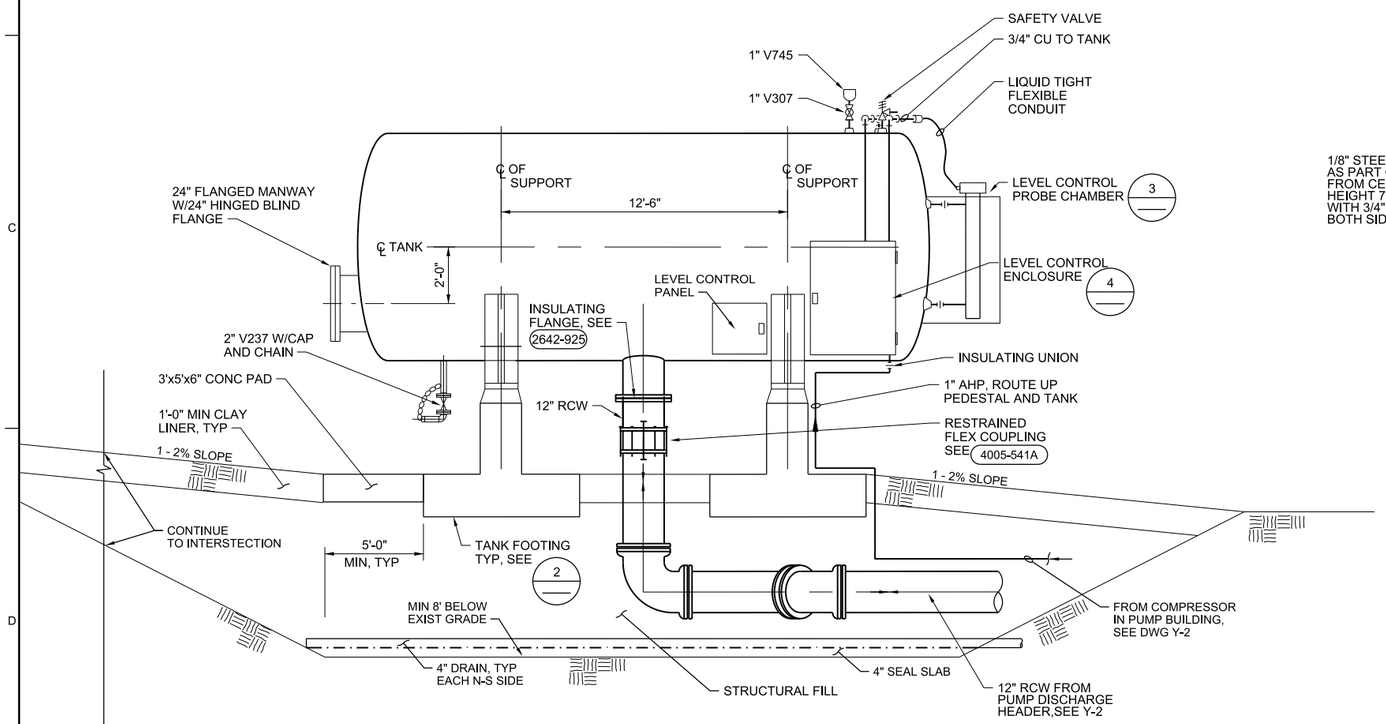

A SECTION

NTS

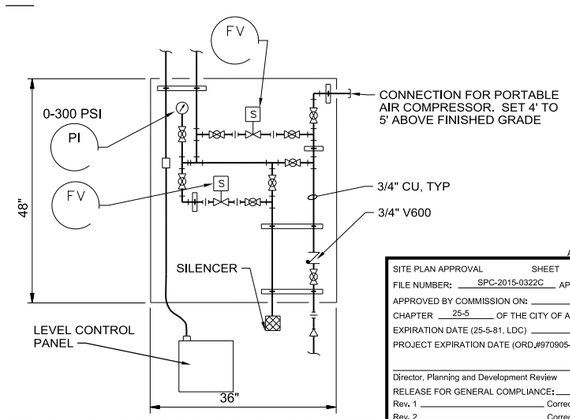

4 LEVEL CONTROL ENCLOSURE

NTS

APPROVAL

SITE PLAN APPROVAL SHEET OF

FILE NUMBER: SPC-2015-0322C APPLICATION DATE: JULY 17, 2015

APPROVED BY COMMISSION ON: _____ UNDER SECTION 142 OF

CHAPTER 25-5 OF THE CITY OF AUSTIN CODE.

EXPIRATION DATE (25-5-81, LDC) _____ CASE MANAGER LYNDA COURTNEY

PROJECT EXPIRATION DATE (ORD.#970905-A) _____ DWPZ _____ DDZ _____

Director, Planning and Development Review

RELEASE FOR GENERAL COMPLIANCE: _____ ZONING P-NP LI-NP

Rev. 1 _____ Correction 1 _____

Rev. 2 _____ Correction 2 _____

Rev. 3 _____ Correction 3 _____

Final plat must be recorded by the Project Expiration Date, if applicable. Subsequent Site Plans which do not comply with the Code current at the time of filing, and all required Building Permits and/or a notice of construction (if a building permit is not required), must also be approved prior to the Project Expiration Date.

STATE OF TEXAS
JOSEPH W. JENKINS
68717
REGISTERED PROFESSIONAL ENGINEER

Joseph W. Jenkins
5-11-2016

NO.	DATE	REVISION	BY	APVD

DSGN B BERHORST | DR B BERHORST | CHK J JENKINS | APVD J JENKINS

Montopolis Water Reclamation Initiave (WRI)
Storage Reservoir and Pump Station
2711 Montopolis Drive
Austin Water, Austin, Texas

CH2MHILL®
TBPE FIRM NO. 3699

YARD PIPING

HYDROPNEUMATIC TANK DETAILS

3/8"=1'-0"

VERIFY SCALE

BAR IS ONE INCH ON ORIGINAL DRAWING.
0 1"

DATE	MAY 2016
PROJ	472902
DWG	Y-8
SHEET	39 of 126

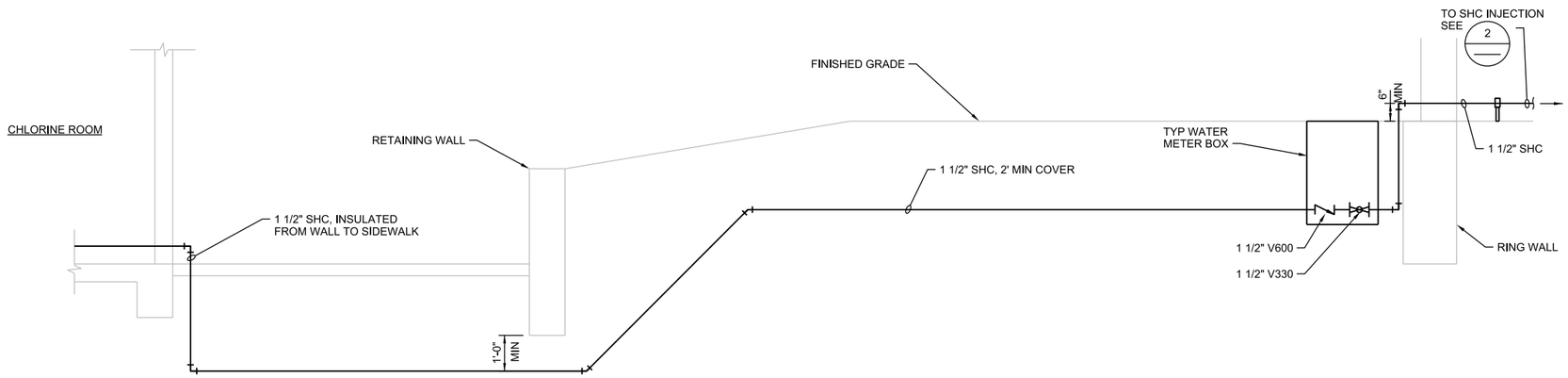

1 SHC PROFILE FROM CHLORINE ROOM TO TANK

1/2"=1'-0"

Y-2

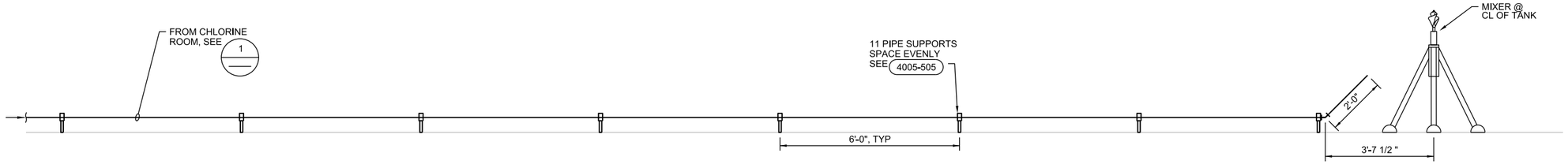

2 SHC INJECTION

1/2"=1'-0"

Y-2

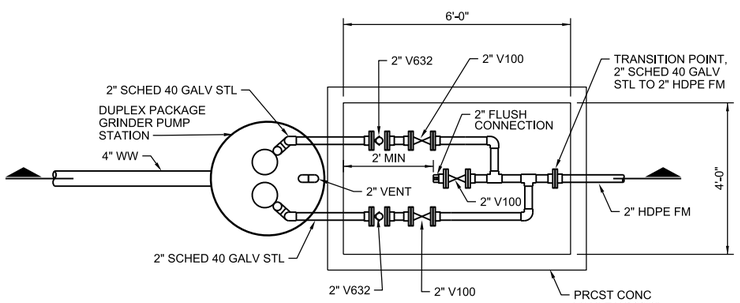

PLAN

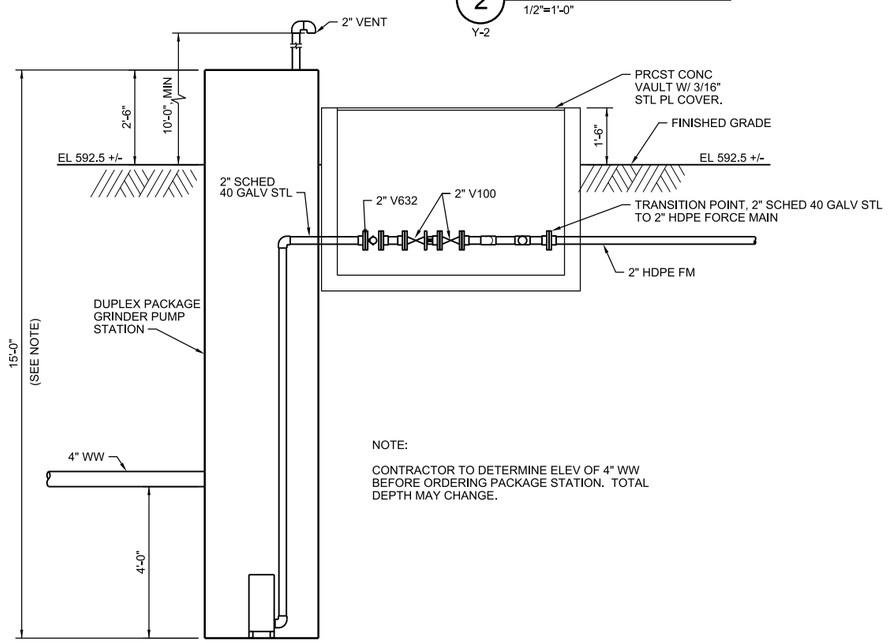

SECTION

NOTE:

CONTRACTOR TO DETERMINE ELEV OF 4" WW BEFORE ORDERING PACKAGE STATION. TOTAL DEPTH MAY CHANGE.

3 GRINDER LIFT STATION

NTS

Y-2

APPROVAL

SITE PLAN APPROVAL SHEET OF

FILE NUMBER: SPC-2015-0322C APPLICATION DATE: JULY 17, 2015

APPROVED BY COMMISSION ON: _____ UNDER SECTION 142 OF

CHAPTER 25-5 OF THE CITY OF AUSTIN CODE.

EXPIRATION DATE (25-5-81, LDC) _____ CASE MANAGER LYNDA COURTNEY

PROJECT EXPIRATION DATE (ORD.#970905-A) _____ DWPZ _____ DDZ _____

Director, Planning and Development Review

RELEASE FOR GENERAL COMPLIANCE: _____ ZONING P-NP LI-NP

Rev. 1 _____ Correction 1 _____

Rev. 2 _____ Correction 2 _____

Rev. 3 _____ Correction 3 _____

Final plat must be recorded by the Project Expiration Date, if applicable. Subsequent Site Plans which do not comply with the Code current at the time of filing, and all required Building Permits and/or a notice of construction (if a building permit is not required), must also be approved prior to the Project Expiration Date.

STATE OF TEXAS
JOSEPH W. JENKINS
68717
REGISTERED
PROFESSIONAL ENGINEER

Joseph W. Jenkins
5-11-2016

NO.	DATE	REVISION	BY	APVD

DSGN B BERHORST | DR B BERHORST | CHK J JENKINS | APVD J JENKINS

Montopolis Water Reclamation Initiave (WRI)
Storage Reservoir and Pump Station
2711 Montopolis Drive
Austin Water, Austin, Texas

CH2MHILL®
TBPE FIRM NO. 3699

YARD PIPING

MISCELLANEOUS DETAILS

VARIES

VERIFY SCALE

BAR IS ONE INCH ON ORIGINAL DRAWING.
0 1"

DATE	MAY 2016
PROJ	472902
DWG	Y-9
SHEET	40 of 126

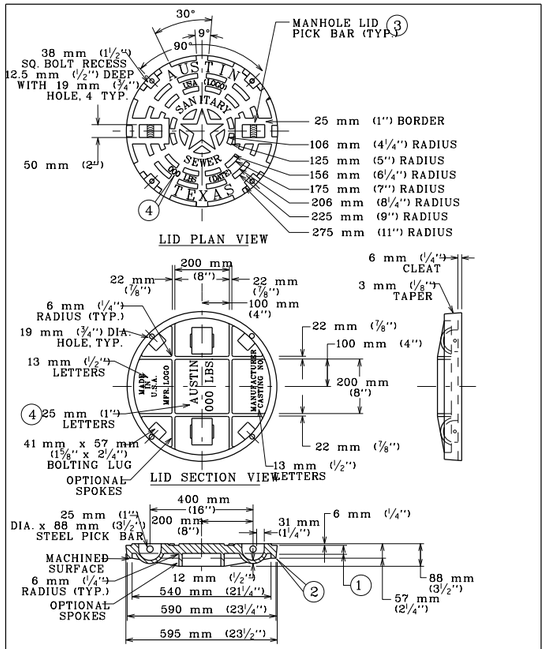

CITY OF AUSTIN AUSTIN WATER UTILITY		BOLTED SANITARY SEWER MANHOLE RING AND 610 mm (24") COVER	STANDARD NO.
RECORD COPY SIGNED BY KATHI L. FLOWERS	3/9/04 ADOPTED	THE ARCHITECT/ENGINEER ASSUMES RESPONSIBILITY FOR APPROPRIATE USE OF THIS STANDARD.	503S-3W 1 OF 3

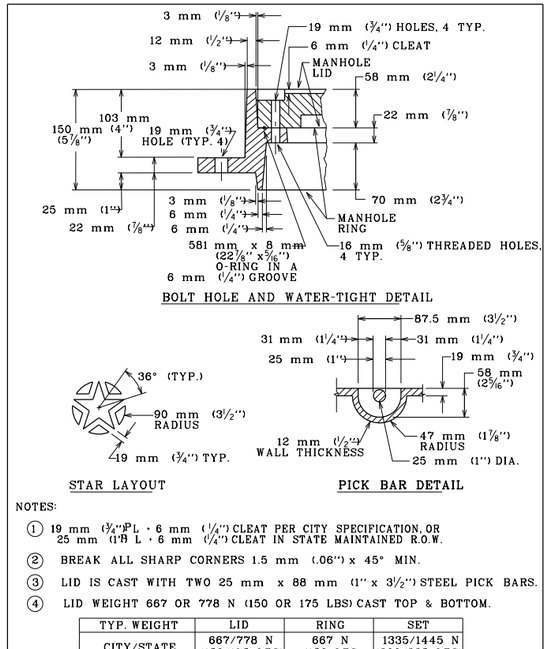

NOTES:

1. 19 mm (¾") PL + 6 mm (¼") CLEAT PER CITY SPECIFICATION, OR 25 mm (1") PL + 6 mm (¼") CLEAT IN STATE MAINTAINED R.O.W.
2. BREAK ALL SHARP CORNERS 1.5 mm (.06") x 45° MIN.
3. LID IS CAST WITH TWO 25 mm x 88 mm (1" x 3½") STEEL PICK BARS.
4. LID WEIGHT 667 OR 778 N (150 OR 175 LBS) CAST TOP & BOTTOM.

TYP. WEIGHT	LID	RING	SET
CITY/STATE	667/778 N (150/175 LBS)	667 N (150 LBS	1335/1445 N (300/325 LBS)

CITY OF AUSTIN AUSTIN WATER UTILITY		BOLTED SANITARY SEWER MANHOLE RING AND 610 mm (24") COVER	STANDARD NO.
RECORD COPY SIGNED BY KATHI L. FLOWERS	3/9/04 ADOPTED	THE ARCHITECT/ENGINEER ASSUMES RESPONSIBILITY FOR APPROPRIATE USE OF THIS STANDARD.	503S-3W 3 OF 3

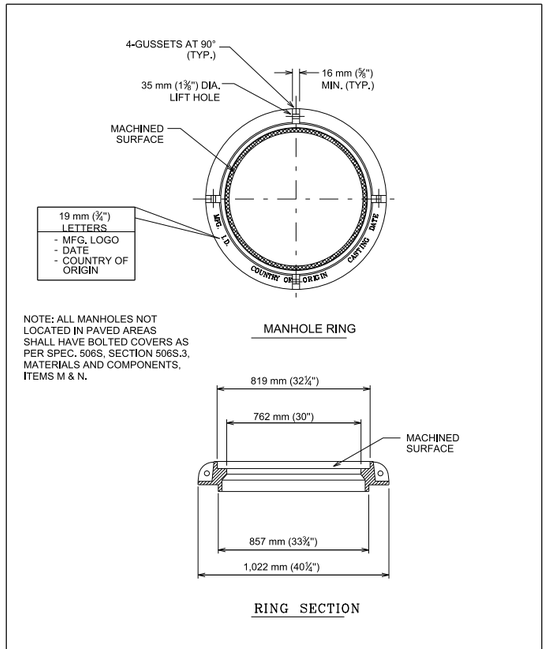

CITY OF AUSTIN AUSTIN WATER UTILITY		SANITARY SEWER MANHOLE RING AND 813 mm (32") COVER	STANDARD NO.
RECORD COPY SIGNED BY KATHI L. FLOWERS	3/9/04 ADOPTED	THE ARCHITECT/ENGINEER ASSUMES RESPONSIBILITY FOR APPROPRIATE USE OF THIS STANDARD.	503S-4W 2 OF 3

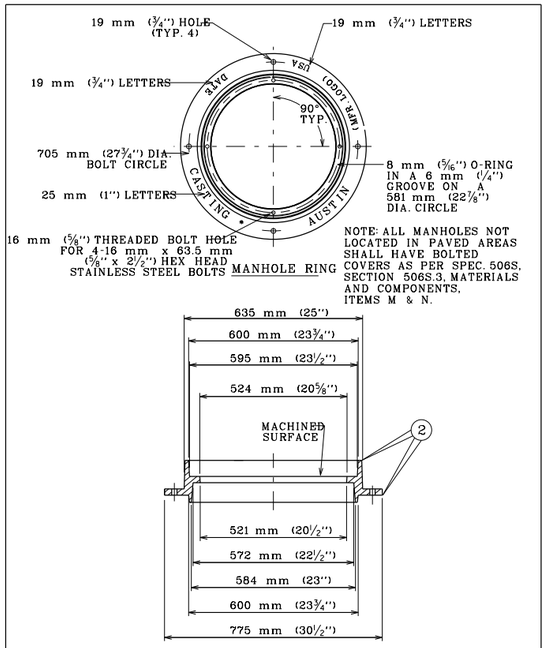

CITY OF AUSTIN AUSTIN WATER UTILITY		BOLTED SANITARY SEWER MANHOLE RING AND 610 mm (24") COVER	STANDARD NO.
RECORD COPY SIGNED BY KATHI L. FLOWERS	3/9/04 ADOPTED	THE ARCHITECT/ENGINEER ASSUMES RESPONSIBILITY FOR APPROPRIATE USE OF THIS STANDARD.	503S-3W 2 OF 3

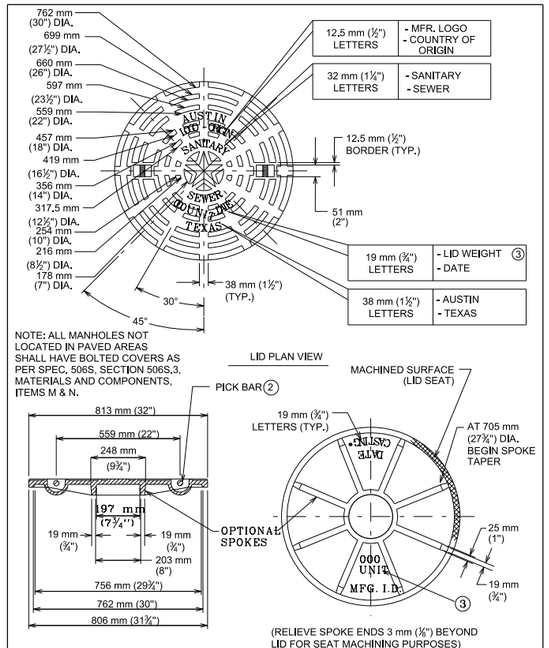

CITY OF AUSTIN AUSTIN WATER UTILITY		SANITARY SEWER MANHOLE RING AND 813 mm (32") COVER	STANDARD NO.
RECORD COPY SIGNED BY KATHI L. FLOWERS	3/9/04 ADOPTED	THE ARCHITECT/ENGINEER ASSUMES RESPONSIBILITY FOR APPROPRIATE USE OF THIS STANDARD.	503S-4W 1 OF 3

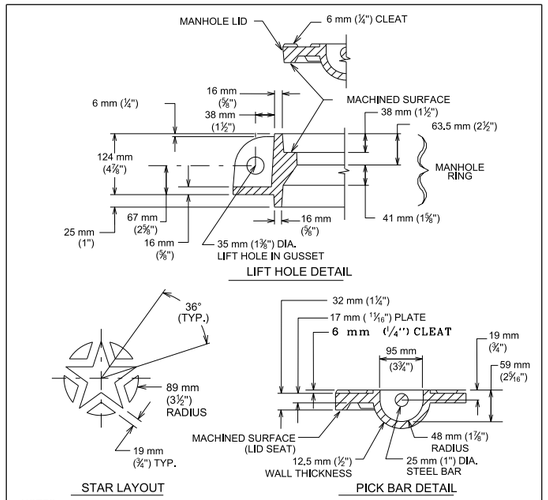

NOTES:

1. ALL CORNERS AND EDGES SHALL HAVE A 1.5 mm (1/16") MINIMUM RADIUS.
2. LIDS SHALL BE CAST WITH TWO 25 mm (1") DIA. STEEL PICK BARS.
3. LID WEIGHTS SHALL BE 935 N (210 LBS.) FOR CAST IRON OR 779 N (175 LBS.) FOR DUCTILE IRON. WEIGHT SHALL BE CAST ON BOTH TOP AND BOTTOM OF LID.
4. MANUFACTURER SHALL PROVIDE INDEPENDENT TESTING LABORATORY REPORT ON 40,000 POUND PROOF LOAD TEST CONDUCTED ACCORDING TO AASHTO M-306.
5. FILLETS SHALL BE 6 mm (¼") RADIUS UNLESS OTHERWISE SPECIFIED.
6. MANUFACTURER SHALL REMOVE EXCESS IRON AND MACHINE FINISH SEATING SURFACES TO NOTED DIMENSIONS.

NOTE: ALL MANHOLES NOT LOCATED IN PAVED AREAS SHALL HAVE BOLTED COVERS AS PER SPEC. 506S, SECTION 506S.3, MATERIALS AND COMPONENTS, ITEMS M & N.

CITY OF AUSTIN AUSTIN WATER UTILITY		SANITARY SEWER MANHOLE RING AND 813 mm (32") COVER	STANDARD NO.
RECORD COPY SIGNED BY KATHI L. FLOWERS	3/9/04 ADOPTED	THE ARCHITECT/ENGINEER ASSUMES RESPONSIBILITY FOR APPROPRIATE USE OF THIS STANDARD.	503S-4W 3 OF 3

STATE OF TEXAS
JOSEPH W. JENKINS
68717
REGISTERED PROFESSIONAL ENGINEER
5-11-2016

NO.	DATE	REVISION	BY	APVD
DSGN	B BERHORST	DR B BERHORST / CHK J JENKINS	APVD J JENKINS	

Montopolis Water Reclamation Initiative (WRI)
Storage Reservoir and Pump Station
2711 Montopolis Drive
Austin Water, Austin, Texas

CH2MHILL®
TBPE FIRM NO. 3699

YARD PIPING

STANDARD DETAILS
COA

APPROVAL

SITE PLAN APPROVAL SHEET OF
FILE NUMBER: SPC-2015-0322C APPLICATION DATE: JULY 17, 2015
APPROVED BY COMMISSION ON: _____ UNDER SECTION 142 OF
CHAPTER 25-5 OF THE CITY OF AUSTIN CODE.
EXPIRATION DATE (25-5-81, LDC) _____ CASE MANAGER LYNDA COURTNEY
PROJECT EXPIRATION DATE (ORD.#970905-A) _____ DWPZ _____ DDZ _____

Director, Planning and Development Review
RELEASE FOR GENERAL COMPLIANCE: _____ ZONING P-NP LI-NP
Rev. 1 _____ Correction 1 _____
Rev. 2 _____ Correction 2 _____
Rev. 3 _____ Correction 3 _____

Final plat must be recorded by the Project Expiration Date, if applicable. Subsequent Site Plans which do not comply with the Code current at the time of filing, and all required Building Permits and/or a notice of construction (if a building permit is not required), must also be approved prior to the Project Expiration Date.

1:1
VERIFY SCALE
BAR IS ONE INCH ON ORIGINAL DRAWING.
0 1"

DATE	MAY 2016
PROJ	472902
DWG	Y-10
SHEET	41 of 126

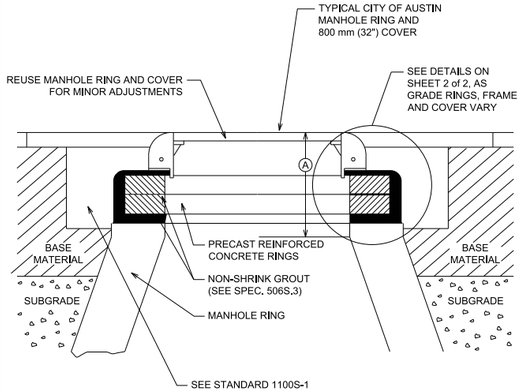

Ⓐ VERTICAL FACE = ALLOWABLE THROAT OR CHIMNEY HEIGHT
= NEW CONSTRUCTION = 525mm = (21") Max.
= EXISTING CONSTRUCTION = 675mm (27") Max.

NOTES:
1. NON-SHRINK GROUT SHALL NOT EXCEED 25 mm (1") IN ANY DIMENSION.
2. SUB-GRADE AND BASE MATERIALS SHALL BE COMPACTED ACCORDING TO ITEMS 201S AND 210S, RESPECTIVELY, OF THE CITY OF AUSTIN STANDARD SPECIFICATIONS.
3. REFER TO STANDARD 1100S-1 FOR REPAIRS AROUND MANHOLES.
4. SEE STANDARD 506S-4A FOR HDPE RING INSTALLATION (FOR USE IN PAVED AREAS ONLY).

CITY OF AUSTIN AUSTIN WATER UTILITY	MINOR MANHOLE ADJUSTMENT & NEW MANHOLE CONSTRUCTION	
RECORD COPY SIGNED BY KATHI L FLOWERS 08/31/2011	THE ARCHITECT/ENGINEER ASSUMES RESPONSIBILITY FOR APPROPRIATE USE OF THIS STANDARD.	STANDARD NO. 506S-4 1 OF 2

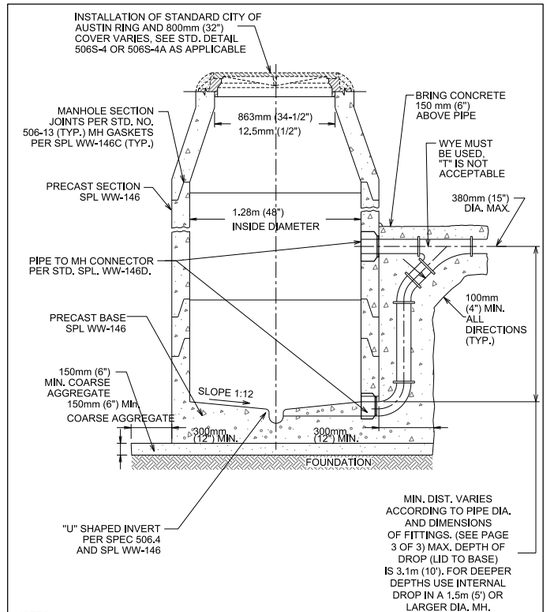

NOTES:
1. THE MANHOLE BASE SHALL BE BEDDED ON 150mm (6") COARSE AGGREGATE. THE CONTRACTOR SHALL LEVEL AND PLUMB THE BASE PRIOR TO SETTING THE PRECAST MANHOLE RISER SECTIONS ON THE PRECAST CONCRETE BASE.
2. MANHOLE FOUNDATION SHALL MEET OR EXCEED STD. SPEC 506.5B.

CITY OF AUSTIN AUSTIN WATER UTILITY	PRECAST MANHOLE WITH DROP INLET ON PRECAST BASE	
RECORD COPY SIGNED BY KATHI L FLOWERS 08/31/2011	THE ARCHITECT/ENGINEER ASSUMES RESPONSIBILITY FOR APPROPRIATE USE OF THIS STANDARD.	STANDARD NO. 506S-8 1 OF 3

STANDARD DROP CONNECTIONS MINIMUM DIMENSIONS (FOR INFORMATION ONLY)

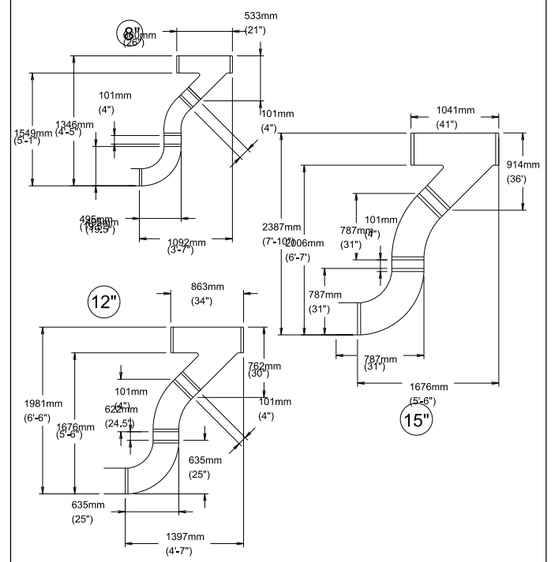

CITY OF AUSTIN AUSTIN WATER UTILITY	PRECAST MANHOLE WITH DROP INLET ON PRECAST BASE	
RECORD COPY SIGNED BY KATHI L FLOWERS 08/31/2011	THE ARCHITECT/ENGINEER ASSUMES RESPONSIBILITY FOR APPROPRIATE USE OF THIS STANDARD.	STANDARD NO. 506S-8 3 OF 3

INSIDE PAVEMENT DETAIL

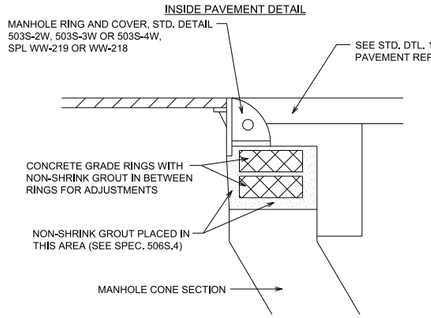

OUTSIDE PAVEMENT DETAIL

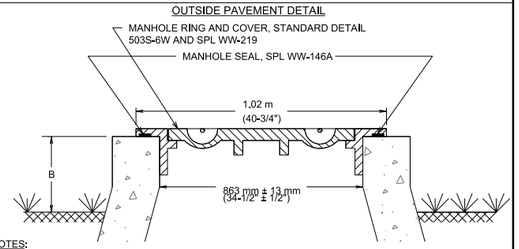

NOTES:
1. FOR USE IN UNPAVED AREAS ONLY
2. WHEN USED WITHIN 100-YEAR FLOODPLAIN, SEE DTL. 506S-6 FOR ADDITIONAL M.H. REQUIREMENTS.
3. DIMENSION B=150-300 mm (6"-12") FOR M.H. LOCATED IN 100-YR FLOOD PLAN.
=50-300 mm (2"-12") FOR M.H. OUTSIDE 100-YR FLOOD PLAN.

CITY OF AUSTIN AUSTIN WATER UTILITY	MINOR MANHOLE ADJUSTMENT & NEW MANHOLE CONSTRUCTION	
RECORD COPY SIGNED BY KATHI L FLOWERS 08/31/2011	THE ARCHITECT/ENGINEER ASSUMES RESPONSIBILITY FOR APPROPRIATE USE OF THIS STANDARD.	STANDARD NO. 506S-4 2 OF 2

INVERT DETAIL

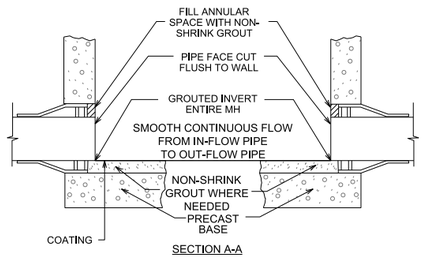

SECTION A-A

INVERT PLAN VIEW

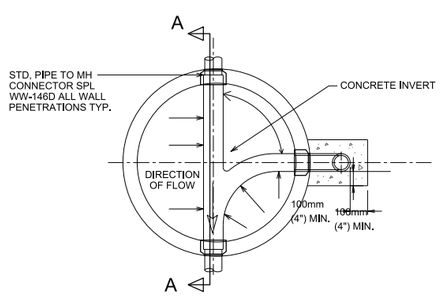

CITY OF AUSTIN AUSTIN WATER UTILITY	PRECAST MANHOLE WITH DROP INLET ON PRECAST BASE	
RECORD COPY SIGNED BY KATHI L FLOWERS 08/31/2011	THE ARCHITECT/ENGINEER ASSUMES RESPONSIBILITY FOR APPROPRIATE USE OF THIS STANDARD.	STANDARD NO. 506S-8 2 OF 3

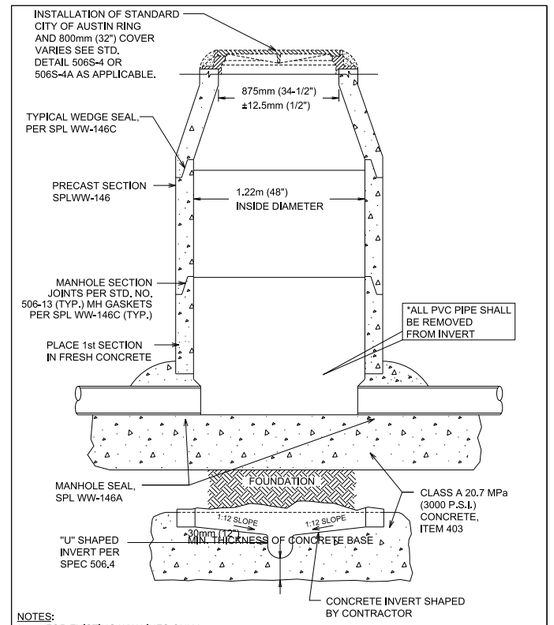

NOTES:
1. FOR EXISTING WW LINES ONLY.
2. MANHOLE FOUNDATION SHALL MEET OR EXCEED STD. SPEC 506.5B
3. FIRST RISER SECTION SHALL BE PLACED PLUMB & LEVEL PRIOR TO SETTING ANY ADDITIONAL SECTIONS.

CITY OF AUSTIN AUSTIN WATER UTILITY	PRECAST MANHOLE ON. CAST IN PLACE BASE	
RECORD COPY SIGNED BY KATHI L FLOWERS 08/31/2011	THE ARCHITECT/ENGINEER ASSUMES RESPONSIBILITY FOR APPROPRIATE USE OF THIS STANDARD.	STANDARD NO. 506S-9

APPROVAL

SITE PLAN APPROVAL SHEET OF
FILE NUMBER: SPC-2015-0322C APPLICATION DATE: JULY 17, 2015
APPROVED BY COMMISSION ON: _____ UNDER SECTION 142 OF
CHAPTER 25-5 OF THE CITY OF AUSTIN CODE.
EXPIRATION DATE (25-5-81, LDC) _____ CASE MANAGER LYNDA COURTNEY
PROJECT EXPIRATION DATE (ORD.#970905-A) _____ DWPZ _____ DDZ _____

Director, Planning and Development Review
RELEASE FOR GENERAL COMPLIANCE: _____ ZONING P-NP LI-NP
Rev. 1 _____ Correction 1 _____
Rev. 2 _____ Correction 2 _____
Rev. 3 _____ Correction 3 _____

Final plat must be recorded by the Project Expiration Date, if applicable. Subsequent Site Plans which do not comply with the Code current at the time of filing, and all required Building Permits and/or a notice of construction (if a building permit is not required), must also be approved prior to the Project Expiration Date.

STATE OF TEXAS
JOSEPH W. JENKINS
68717
REGISTERED
PROFESSIONAL ENGINEER
Joseph W. Jenkins
5-11-2016

NO.	DATE	REVISION	BY	APVD
DSGN	B BERHORST	DR B BERHORST	CHK J JENKINS	APVD J JENKINS

Montopolis Water Reclamation Initiave (WRI)
Storage Reservoir and Pump Station
2711 Montopolis Drive
Austin Water, Austin, Texas

CH2MHILL®
TBPE FIRM NO. 3699

YARD PIPING

STANDARD DETAILS
COA

1:1
VERIFY SCALE
BAR IS ONE INCH ON ORIGINAL DRAWING.
0 1"

DATE	MAY 2016
PROJ	472902
DWG	Y-11
SHEET	42 of 126

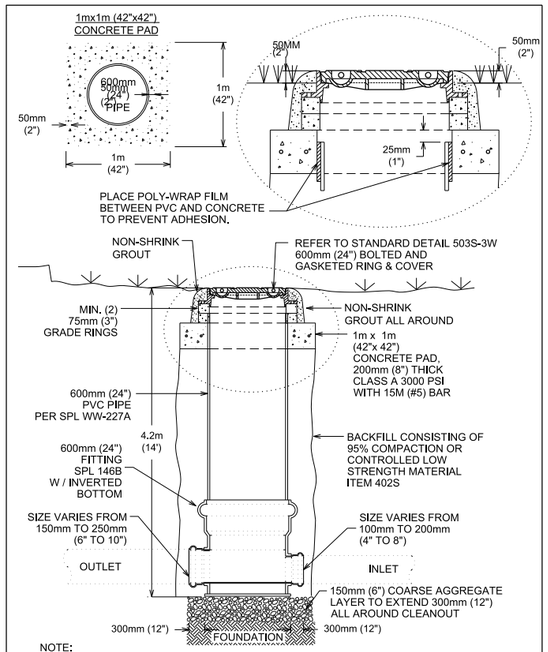

NOTE:
1. CLEAN OUT FOUNDATION SHALL MEET OR EXCEED STD, SPEC 506.5B.

CITY OF AUSTIN AUSTIN WATER UTILITY	LARGE DIAMETER CLEANOUT	
RECORD COPY SIGNED BY KATHI L FLOWERS 08/31/2011	THE ARCHITECT/ENGINEER ASSUMES RESPONSIBILITY FOR APPROPRIATE USE OF THIS STANDARD.	STANDARD NO. 506S-14

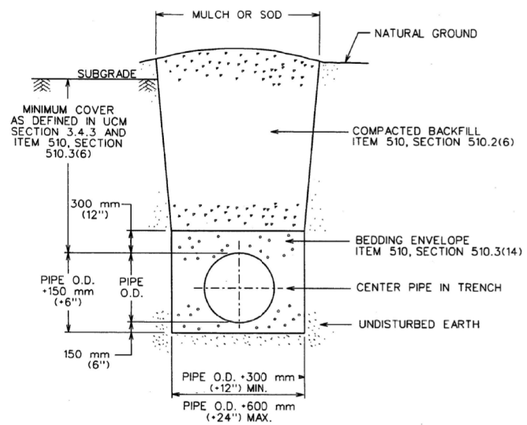

REFERENCES:
1. UTILITY CRITERIA MANUAL SECTION 3.4.3, "FINAL DESIGN"
2. STANDARD SPECIFICATION MANUAL ITEM 510,
   SECTION 510.2(6), "SELECT BACKFILL OR BORROW";
   SECTION 510.3(6), "TRENCH DEPTH AND DEPTH OF COVER";
   SECTION 510.3(14), "PIPE BEDDING ENVELOPE"

CITY OF AUSTIN DEPARTMENT OF PUBLIC WORKS	TYPICAL TRENCH DETAIL WITH UNFINISHED SURFACE	
3/13/06 ADOPTED	THE ARCHITECT/ENGINEER ASSUMES RESPONSIBILITY FOR APPROPRIATE USE OF THIS STANDARD.	STANDARD NO. 510S-5

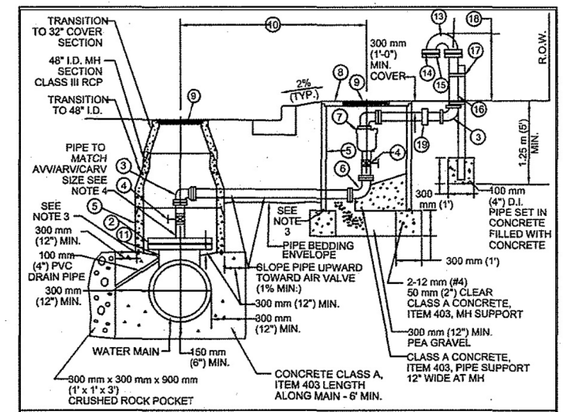

(2) INSULATED FLANGE CONNECTION	(11) 24-INCH FLANGED OUTLET, PER ANSI B16.1
(3) 90° BEND (MJ X MJ)	(13) RETURN BEND (FLG X FLG)
(4) GATE VALVE WITH HAND WHEEL (FLG X FLG)	(14) NO. 16 MESH BRASS CLOTH
(5) CLASS III R.C.P. MANHOLE SECTIONS *1.524 m (60") MIN. I.D.*	(15) COMPANION FLANGE (SEE NOTE 7)
(6) 90° BEND (FLG. X FLG.)	(16) AIR VENT PIPE
(7) COMBINATION AIR RELEASE VALVE	(17) 6 mm X 25 mm (1/4 " X 1") GALV. STRAPS DRILLED TO 100 mm (4") D.I. PIPE FILLED WITH CONCRETE
(8) REINFORCED PRECAST CONCRETE LID (AASHTO H-20 LOADING) WITH LIFTING LUGS	(18) 1.25 m (5') MIN. (UNDEV. AREAS) 355 mm (14") MAX. (DEV. AREAS) AND > 100-YR FLOOD PLAIN AS INDICATED ON DRAWINGS
(9) C.O.A. RING AND 813 mm (32") COVER EJIW - V1816 ZPT FRAME AND V2432-1 APT DI COVER (OR APPROVED EQUAL)	(19) FLEXIBLE COUPLING
(10) PER PLAN DIMENSION OR AS DETERMINED BY ENGINEER OR DESIGNATED REPRESENTATIVE	

CITY OF AUSTIN AUSTIN WATER UTILITY	TYPE II-76 mm (3") OR LARGER VENTED AIR/VACUUM VALVE INSTALLATION	
REVISION OF COA STD DETAIL	THE ARCHITECT/ENGINEER ASSUMES RESPONSIBILITY FOR APPROPRIATE USE OF THIS STANDARD.	STANDARD NO. 511S-2M 1 OF 2

THIS DETAIL FOR USE ONLY ON CITY OF AUSTIN C.I.P. PROJECTS.

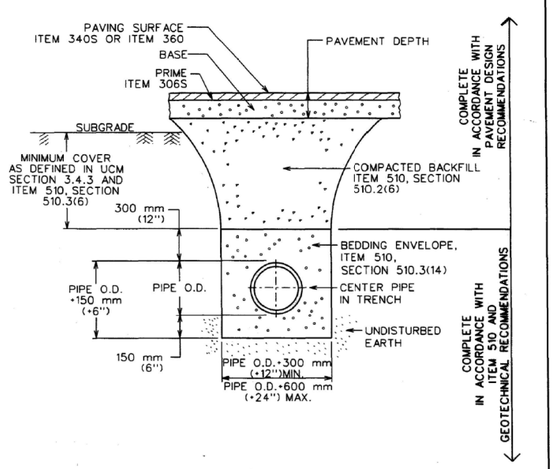

REFERENCES:
1. UTILITY CRITERIA MANUAL SECTION 3.4.3, "FINAL DESIGN"
2. STANDARD SPECIFICATION MANUAL ITEM 510,
   SECTION 510.2(6), "SELECT BACKFILL OR BORROW";
   SECTION 510.3(6), "TRENCH DEPTH AND DEPTH OF COVER";
   SECTION 510.3(14), "PIPE BEDDING ENVELOPE"

CITY OF AUSTIN DEPARTMENT OF PUBLIC WORKS	TYPICAL DETAIL FOR PROPOSED STREET	
3/13/06 ADOPTED	THE ARCHITECT/ENGINEER ASSUMES RESPONSIBILITY FOR APPROPRIATE USE OF THIS STANDARD.	STANDARD NO. 510S-4

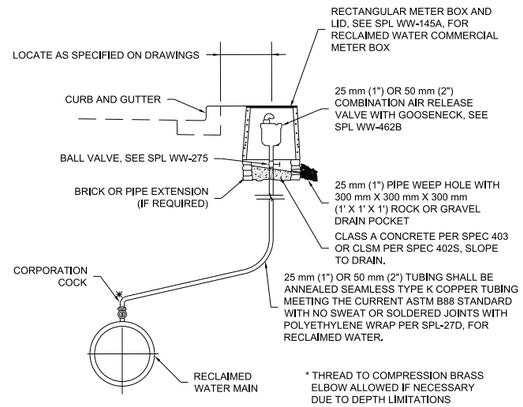

NOTES:
1. LID AND METER BOX TO BE RECTANGULAR WITH "RECLAIMED WATER" CAST INTO IT.
2. ALL RECLAIMED WATER PIPING AND APPURTENANCES TO BE MANUFACTURED PURPLE, WRAPPED IN PURPLE POLYETHYLENE PER SPL WW-27D OR PAINTED PURPLE PER SPL WW-3C.
3. IF INSTALLED IN AN UNDEVELOPED AREA, INSTALL A 100 mm (4") DIA. STEEL PIPE WHICH HAS BEEN PAINTED PURPLE (SEE NOTE 2) AND FILLED WITH CONCRETE (STEEL PIPE SHALL BE 1.8 m (6') LONG, BURIED IN CLASS A CONCRETE OR CLSM 0.9 m (3') BELOW FINAL GRADE AND EXTENDING 0.9 m (3') ABOVE FINAL GRADE). FLEXSTAKE SOIL ANCHOR DELINEATOR OR EQUIVALENT 1.8 m (6'), PURPLE, SHALL BE PLACED WITHIN 0.9 m (3') OF METER BOX ON THE VEHICULAR ACCESS SIDE OF METER BOX OR AS DIRECTED BY AWU.
4. THE AIR VALVE AND ASSOCIATED PIPING SHALL BE INSTALLED ABOVE THE HIGHEST ELEVATION OF THE RECLAIMED WATER MAIN. AIR VALVE PIPING, FROM THE RECLAIMED WATER MAIN TO THE AIR VALVE, SHALL MAINTAIN A CONSTANT RISE, WITH NO DIPS, TO THE TOP OF THE GROUND.
5. AIR VALVE SHALL BE INSTALLED IN THE RIGHT-OF-WAY BUT NOT IN A DRIVEWAY, SIDEWALK OR AREAS OF VEHICULAR TRAFFIC.

CITY OF AUSTIN AUSTIN WATER UTILITY	RECLAIMED WATER CONNECTION 25 mm (1") OR 50 mm (2") RECLAIMED WATER AUTOMATIC AIR RELEASE VALVE	
RECORD COPY SIGNED BY KATHI L FLOWERS 8/31/11	THE ARCHITECT/ENGINEER ASSUMES RESPONSIBILITY FOR APPROPRIATE USE OF THIS STANDARD.	STANDARD NO. 511S-1BR

NOTES:
1. ON 250 mm (10") AND LARGER TWO PIECE COMBINATION AIR VALVES, THE OUTLET PIPING OF THE SMALL VALVE SHALL BE VENTED WITHIN THE VAULT INTO THE LARGER VENT PIPE
2. AIR VENT PIPE 150 mm (6") AND LARGER SHALL BE D.I. (CLASS 350 MIN.) PIPE FLANGE FITTINGS AND EXTERIOR SURFACES OF ALL EXPOSED PIPE SHALL BE PAINTED PER SPL WW-3C. POTABLE WATER PIPE SHALL BE SAFETY BLUE. SURFACE PREPARATION SHALL BE PER PAINT MANUFACTUR'S REQUIREMENTS.
3. AIR VENT PIPE INSTALLATION SHALL BE AS NEAR AS PRACTICAL TO THE RIGHT-OF-WAY LINE.
4. CONCRETE PIPE PENETRATIONS SHALL BE CORE BIT DRILLED. VOID SHALL BE SEALED W/LINKSEAL LS 300 OR APPROVED EQUAL.
5. AIR/VACUUM VALVE SHALL BE INSTALLED IN A MANNER WHICH WILL ALLOW REMOVAL OF ASSEMBLY WITHOUT REMOVAL OF PRECAST CONCRETE LID.
6. THE AIR RELEASE SHALL BE 200mm (8") TO 300mm (12") IN HEIGHT AND LOCATED NOT TO CONFLICT WITH SIDEWALK, DRIVEWAY, OR OTHER PEDESTRIAN TRAFFIC.

AIR VALVE	GATE VALVE	VENT PIPE (MIN.)	VAULT DIA. (MIN.)
76 mm (3")	76 mm (3")	76 mm (3")	1.524 m (5')
102 mm (4")	102 mm (4")	102 mm (4")	1.829 m (6')
152 mm (6")	152 mm (6")	152 mm (6")	1.829 m (6')
203 mm (8")	203 mm (8")	203 mm (8")	1.829 m (6')
254 mm (10")	254 mm (10")	254 mm (10")	2.134 m (7')
305 mm (12")	305 mm (12")	305 mm (12")	2.134 m (7')

CITY OF AUSTIN AUSTIN WATER UTILITY	TYPE II-76 mm (3") OR LARGER VENTED AIR/VACUUM VALVE INSTALLATION	
REVISION OF COA STD DETAIL	THE ARCHITECT/ENGINEER ASSUMES RESPONSIBILITY FOR APPROPRIATE USE OF THIS STANDARD.	STANDARD NO. 511S-2M 2 OF 2

APPROVAL

SITE PLAN APPROVAL SHEET OF
FILE NUMBER: SPC-2015-0322C APPLICATION DATE: JULY 17, 2015
APPROVED BY COMMISSION ON: _____ UNDER SECTION 142 OF
CHAPTER 25-5 OF THE CITY OF AUSTIN CODE.
EXPIRATION DATE (25-5-81, LDC) _____ CASE MANAGER LYNDA COURTNEY
PROJECT EXPIRATION DATE (ORD.#970905-A) _____ DWPZ _____ DDZ _____

Director, Planning and Development Review
RELEASE FOR GENERAL COMPLIANCE: _____ ZONING P-NP LI-NP
Rev. 1 _____ Correction 1 _____
Rev. 2 _____ Correction 2 _____
Rev. 3 _____ Correction 3 _____

Final plat must be recorded by the Project Expiration Date, if applicable. Subsequent Site Plans which do not comply with the Code current at the time of filing, and all required Building Permits and/or a notice of construction (if a building permit is not required), must also be approved prior to the Project Expiration Date.

STATE OF TEXAS
JOSEPH W. JENKINS
68717
REGISTERED PROFESSIONAL ENGINEER
5-11-2016

NO.	DATE	REVISION	DR	CHK	APVD	BY	APVD
DSGN	B BERHORST		B BERHORST	J JENKINS			J JENKINS

Montopolis Water Reclamation Initiave (WRI)
Storage Reservoir and Pump Station
2711 Montopolis Drive
Austin Water, Austin, Texas

CH2MHILL®
TBPE FIRM NO. 3699

YARD PIPING

STANDARD DETAILS
COA

1:1
VERIFY SCALE
BAR IS ONE INCH ON ORIGINAL DRAWING.
0 1"

DATE	MAY 2016
PROJ	472902
DWG	Y-12
SHEET	43 of 126

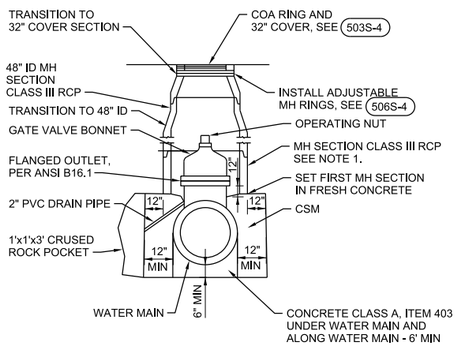

NOTE:

1. 60" MIN ID FOR 24" AND SMALLER, 72" MIN ID FOR 30" AND LARGER.

CITY OF AUSTIN AUSTIN WATER UTILITY	TYPICAL GATE VALVE 100 mm-900 mm (4"-36")	
REVISION OF COA STANDARD	THE ARCHITECT/ENGINEER ASSUMES RESPONSIBILITY FOR APPROPRIATE USE OF THIS STANDARD.	STANDARD NO. 511S-7M

NOTES:

1. DIMENSION FROM GUTTER FACE OF CURB TO OUTERMOST PART OF ANY NOZZLE CAP SHALL BE NOT LESS THAN 0.9m (3'), NOR MORE THAN 1.8m (6'). NO PART OF A HYDRANT OR ITS NOZZLE CAPS SHALL BE WITHIN 150mm (6") OF ANY SIDEWALK OR PEDESTRIAN RAMP. ANY FIRE HYDRANT PLACED NEAR A STREET CORNER SHALL BE LOCATED OUTSIDE THE CURVE RADIUS AND A MINIMUM OF 1.2m (4') FROM RAMPS.
2. ONE BARREL EXTENSION NOT EXCEEDING 600 mm (2') LENGTH MAY BE INSTALLED DIRECTLY BELOW THE FIRE HYDRANT IN ORDER TO MEET THE REQUIRED BURY DEPTH OF 1.2m TO 1.5m (4' TO 5'). BREAK AWAY BOLTS (SHOE TYPES) SHALL BE PROPERLY SPACED AND PLACED WHEN EXTENSIONS ARE NEEDED TO ACCOMMODATE FIRE HYDRANTS. SEE STD. DETAIL 511S-17A FOR FIRE HYDRANTS ON DEEP WATER MAINS.
3. FIRE LINE SHALL HAVE ALL JOINTS RESTRAINED FROM MAIN TO FIRE HYDRANT. JOINTS SHOWN MAY VARY. SEE SPL WW-27, WW-27A, AND WW-27B FOR RESTRAINT OPTIONS.
4. BELOW EACH HYDRANT, A DRAINAGE PIT 0.6m (2') IN DIAMETER AND 0.3m (1') DEEP SHALL BE EXCAVATED AND FILLED WITH COMPACTED COARSE GRAVEL OR BROKEN STONE MIXED WITH COARSE SAND UNDER AND AROUND THE BOWL OF THE HYDRANT, AND TO A LEVEL 150mm (6") ABOVE THE HYDRANT DRAIN OPENING (SEE STD. SPEC. 510). THE HYDRANT DRAINAGE PIT SHALL NOT BE CONNECTED TO A SANITARY SEWER. THE DRAIN GRAVEL SHALL BE COVERED WITH FILTER FABRIC TO PREVENT BLOCKAGE OF VOIDS IN THE GRAVEL BY MIGRATION OF BACKFILL MATERIAL. THE BOWL OF EACH HYDRANT SHALL BE WELL BRACED AGAINST UNEXCAVATED EARTH AT THE END OF THE TRENCH TAKING CARE NOT TO OBSTRUCT THE HYDRANT DRAIN HOLES, IF THE HYDRANT LEAD IS NOT RESTRAINED TO THE MAIN.
5. WELD SOCKET 64mm x 51mm (2-1/2" x 2") TO 25mm (1") SCH. 40 ROUND STEM EXTENSION. FIT ON OPERATING NUT. USE SCH. 80 ROUND STEM EXTENSION FOR LENGTHS OVER 3m (10'). VALVE STEM EXTENSIONS SHALL CONSIST OF A SINGLE PIECE OF REQUIRED LENGTH WITH A SOCKET ON ONE END AND A NUT ON THE OTHER.
6. VALVE STEM EXTENSIONS ARE REQUIRED ON ALL VALVES THAT EXCEED 0.9 m (3') DEEP FROM FINISHED GRADE. VALVE STEM EXTENSIONS SHALL BE PLACED SUCH THAT THE EXTENSION NUT IS BETWEEN 450 AND 600 mm (18" AND 24") FROM FINISHED GRADE.
7. FOR FIRE HYDRANT LEADS AT A MAIN OUTLET LARGER THAN 150mm (6") DIAMETER, OUTLET SHALL BE FLANGED AND A FLANGE x FLANGE REDUCER SHALL BE INSTALLED DIRECTLY ON THE OUTLET.
8. WRAP 8 mil POLY-FILM WRAP ON ALL BURIED PIPE AND FITTINGS.
9. THRUST BLOCKING REQUIRED FOR PIPE SIZE & SOIL CONDITION (SEE STD. DETAIL 510-6)

CITY OF AUSTIN AUSTIN WATER UTILITY	STANDARD FIRE HYDRANT INSTALLATION	
RECORD COPY SIGNED BY KATHI L FLOWERS 08/31/2011	THE ARCHITECT/ENGINEER ASSUMES RESPONSIBILITY FOR APPROPRIATE USE OF THIS STANDARD.	STANDARD NO. 511S-17 2 OF 2

MATERIAL LIST

- (A) SERVICE CLAMP REQUIRED ON ALL PLASTIC AND ASBESTOS CEMENT PIPE AND ON ALL IRON PIPE 300mm (12") AND SMALLER.
- (B) 50mm (2") CORPORATION STOP MALE THREAD INLET BY COMPRESSION OUTLET, SPL WW-68.
- (C) 50mm (2") SERVICE TUBING.
- (D) COUPLING: 50mm (2") COMPRESSION TO 38mm (1-1/2") MALE I.P.T.
- (E) 38mm (1-1/2") BALL VALVE: SEE SPL WW-275 AND NOTE 9.
- (F) BRONZE BUSHING, 38mm x 25mm (1-1/2" x 1") I.P.T.
- (G) 25mm (1") COUPLING: COMPRESSION TO MALE I.P.T.
- (H) 25mm (1") SERVICE TUBING PER SPL WW-65.
- (I) ANGLE METER STOP: SERVICE TUBING INLET x SWIVEL COUPLING NUT OUTLET AND BRASS BUSHING:
  - -FOR 16mm AND 19mm (5/8" AND 3/4") METERS: 25mm x 19mm (1" x 3/4") BRASS BUSHING.
  - -FOR 25mm (1") METERS BRASS METER BUSHING NOT REQUIRED.
  - -FOR ALL SEE SPL WW-68.
- (J) WATER METER COUPLING: MALE I.P.T. x SWIVEL COUPLING NUT:
  - -FOR 16mm AND 19mm (5/8" AND 3/4") METERS: 19mm x 213mm (3/4" x 8-1/2") LONG.
  - -FOR 25 mm (1") METERS: 25mm x 213mm (1" x 8-1/2") LONG.
- (K) BALL VALVE 19mm OR 25mm (3/4" OR 1") (PROPERTY OWNER'S CUT-OFF VALVE, SEE SPL WW-276).
- (L) 19mm OR 25mm (3/4" OR 1") TUBING MEETING CITY OF AUSTIN PLUMBING CODE REQUIREMENTS
- (M) METER BOX PER SPL WW-145 OR WW-145A.
- (N) AMR/AMI READY LID-FOR METER BOX. LID FURNISHED WITH APPROVED BOX.
- (O) PROPERTY OWNER'S CUT-OFF VALVE BOX-RETANGULAR PLASTIC BOX.
- (P) RECTANGULAR PLASTIC BOX LID. 300mm x 425mm x 300mm (12" x 17" x 12") OR EQUAL.
- (Q) ANGLE METER STOP: SERVICE TUBING INLET x SWIVEL COUPLING NUT OUTLET:
  - -FOR 16mm and 19mm (5/8" and 3/4") METERS: 25mm x 19mm (1" x 3/4")
  - -FOR 25mm (1") METERS: 25mm x 25mm (1" x 1")

NOTES:

1. SERVICE SADDLE SHALL BE WRAPPED COMPLETELY WITH 0.2mm (8 MIL) POLYETHYLENE FILM.
2. TOP OF BOXES SHOULD BE 25mm (1") ABOVE GROUND OR FLUSH WITH PAVEMENT SURFACE.
3. PIPING AND TUBING IN STREET RIGHT-OF-WAY SHALL BE BEDDED IN GRANULAR MATERIALS AS REQUIRED BY SECTION 510.3 (14) OF THE CITY OF AUSTIN STANDARD SPECIFICATIONS: BACKFILL ABOVE GRANULAR BEDDING AS REQUIRED BY SECTION 510.3 (25).
4. BOX MUST BE BEHIND CURB NEXT TO PROPERTY LINE AND/OR SIDEWALK AND OUT OF VEHICULAR TRAFFIC AREA.
5. INSTALL METALLIC WARNING TAPE (MAGNETIC TRACER TAPE) MIN. 300mm (1') ABOVE P.E. TUBING FROM TAP CONNECTION TO METER.
6. TUBING SHALL BE PLACED SO THAT IT IS RELAXED AND "SNAKES" LOOSELY IN THE TRENCH.
7. TUBING, WHEN BENT, SHALL HAVE A RADIUS NO SMALLER THAN THE VALUE SHOWN IN TABLE 1.
8. IF A FITTING WILL BE INSTALLED WITHIN A BENT SECTION OF TUBING, THE TUBING SHALL HAVE A RADIUS NO SMALLER THAN THE VALUE SHOWN IN TABLE 2.
9. B.V. (E) SHALL NOT BE LOCATED UNDER CURB OR PAVEMENT, AND NOT BE LOCATED MORE THAN 600mm (24") HORIZONTALLY FROM METER BOX OR 900mm (36") BELOW FINAL GRADE.
10. INSERT STIFFENERS FOR P.E. TUBING PER SPL WW-65B TO BE INSTALLED INSIDE TUBING AT ALL COMPRESSION FITTINGS.

CITY OF AUSTIN AUSTIN WATER UTILITY	POTABLE HDPE SERVICE & 16mm, 19mm, AND 25mm (5/8", 3/4", AND 1") METER INSTALLATION	
RECORD COPY SIGNED BY KATHI L FLOWERS 08/31/2011	THE ARCHITECT/ENGINEER ASSUMES RESPONSIBILITY FOR APPROPRIATE USE OF THIS STANDARD.	STANDARD NO. 520S-11B 2 OF 2

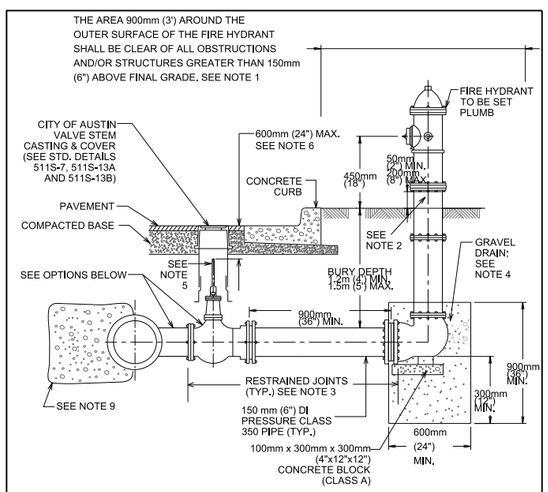

CITY OF AUSTIN AUSTIN WATER UTILITY	STANDARD FIRE HYDRANT INSTALLATION	
RECORD COPY SIGNED BY KATHI L FLOWERS 08/31/2011	THE ARCHITECT/ENGINEER ASSUMES RESPONSIBILITY FOR APPROPRIATE USE OF THIS STANDARD.	STANDARD NO. 511S-17 1 OF 2

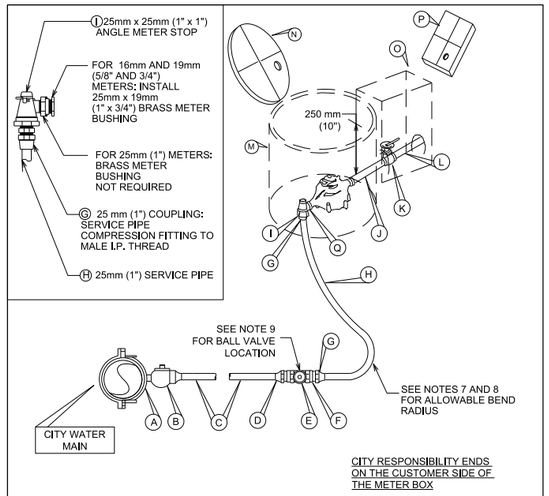

CITY RESPONSIBILITY ENDS ON THE CUSTOMER SIDE OF THE METER BOX

TABLE 1 (SEE NOTE 7)	
Nominal Tubing Dia.	Bend Radius of at Least
25mm (1")	0.9m (3')
38mm (1-1/2")	1.2m (4')
50mm (2")	1.5m (5')

TABLE 2 (SEE NOTE 8)	
Nominal Tubing Dia.	Bend Radius of at Least
25mm (1")	3.66m (12')
38mm (1-1/2")	4.86m (16')
50mm (2")	6.06m (20')

CITY OF AUSTIN AUSTIN WATER UTILITY	POTABLE HDPE SERVICE & 16mm, 19mm, AND 25mm (5/8", 3/4", AND 1") METER INSTALLATION	
RECORD COPY SIGNED BY KATHI L FLOWERS 08/31/2011	THE ARCHITECT/ENGINEER ASSUMES RESPONSIBILITY FOR APPROPRIATE USE OF THIS STANDARD.	STANDARD NO. 520S-11B 1 OF 2

APPROVAL

SITE PLAN APPROVAL SHEET OF
FILE NUMBER: SPC-2015-0322C APPLICATION DATE: JULY 17, 2015
APPROVED BY COMMISSION ON: _____ UNDER SECTION 142 OF
CHAPTER 25-5 OF THE CITY OF AUSTIN CODE.
EXPIRATION DATE (25-5-81, LDC) _____ CASE MANAGER LYNDA COURTNEY
PROJECT EXPIRATION DATE (ORD.#970905-A) _____ DWPZ _____ DDZ _____

Director, Planning and Development Review
RELEASE FOR GENERAL COMPLIANCE: _____ ZONING P-NP LI-NP
Rev. 1 _____ Correction 1 _____
Rev. 2 _____ Correction 2 _____
Rev. 3 _____ Correction 3 _____

Final plat must be recorded by the Project Expiration Date, if applicable. Subsequent Site Plans which do not comply with the Code current at the time of filing, and all required Building Permits and/or a notice of construction (if a building permit is not required), must also be approved prior to the Project Expiration Date.

STATE OF TEXAS
JOSEPH W. JENKINS
68717
REGISTERED
PROFESSIONAL ENGINEER
5-11-2016

NO.	DATE	REVISION	BY	APVD
DSGN	B BERHORST	DR B BERHORST	CHK J JENKINS	APVD J JENKINS

Montopolis Water Reclamation Initiave (WRI)
Storage Reservoir and Pump Station
2711 Montopolis Drive
Austin Water, Austin, Texas

CH2MHILL®
TBPE FIRM NO. 3699

YARD PIPING
STANDARD DETAILS
COA

1:1
VERIFY SCALE
BAR IS ONE INCH ON ORIGINAL DRAWING.
0 1"

DATE	MAY 2016
PROJ	472902
DWG	Y-13
SHEET	44 of 126

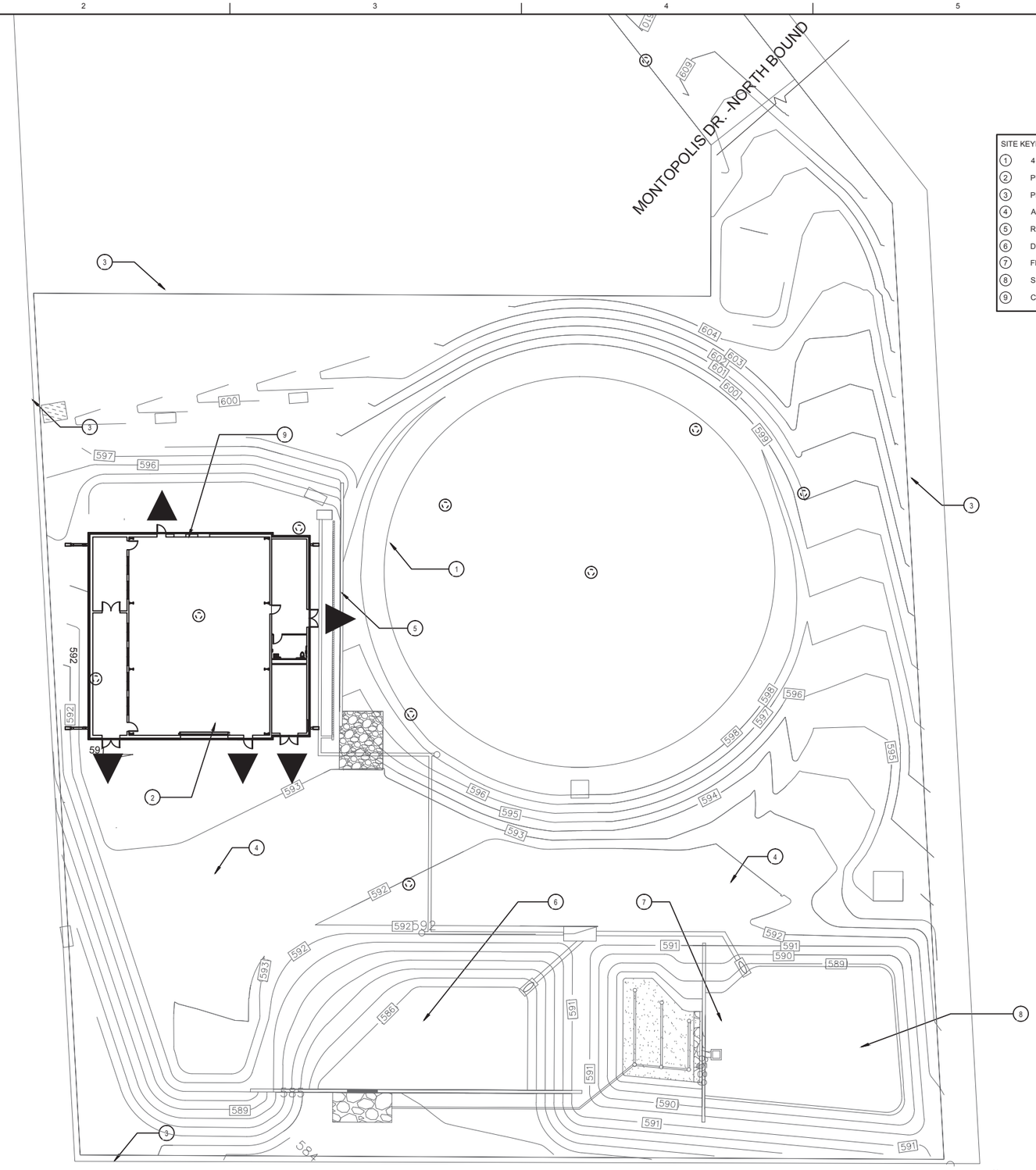

1 Arch Site Plan
1" = 20'-0"

SITE KEYED NOTES:

1. 4 MILLION GALLON STORAGE TANK
2. PUMP STATION
3. PROPERTY LINE
4. ASPHALT DRIVEWAY -RE: CIVIL
5. RETAINING WALL -RE: CIVIL
6. DETENTION POND -RE: CIVIL
7. FILTRATION -RE: CIVIL
8. SEDIMENTATION -RE: CIVIL
9. CONCRETE SIDEWALK -RE: CIVIL

SITE KEYED NOTES:

1. 4 MILLION GALLON STORAGE TANK
2. PUMP STATION
3. PROPERTY LINE
4. ASPHALT DRIVEWAY -RE: CIVIL
5. RETAINING WALL -RE: CIVIL
6. DETENTION POND -RE: CIVIL
7. FILTRATION -RE: CIVIL
8. SEDIMENTATION -RE: CIVIL
9. CONCRETE SIDEWALK -RE: CIVIL

APPROVAL

SITE PLAN APPROVAL SHEET OF

FILE NUMBER: SPC-2015-0322C APPLICATION DATE: JULY 17, 2015

APPROVED BY COMMISSION ON: N/A UNDER SECTION 142 OF CHAPTER 25-5 OF THE CITY OF AUSTIN CODE.

EXPIRATION DATE (25-5-81, LDC) _____ CASE MANAGER LYNDA COURTNEY

PROJECT EXPIRATION DATE (ORD.#970905-A) _____ DWPZ _____ DDZ _____

Director, Planning and Development Review

RELEASE FOR GENERAL COMPLIANCE: _____ ZONING P-NP LI-NP

Rev. 1 _____ Correction 1 _____

Rev. 2 _____ Correction 2 _____

Rev. 3 _____ Correction 3 _____

Final plat must be recorded by the Project Expiration Date, if applicable. Subsequent Site Plans which do not comply with the Code current at the time of filing, and all required Building Permits and/or a notice of construction (if a building permit is not required), must also be approved prior to the Project Expiration Date.

REGISTERED ARCHITECT JAMES F. PALOMO 15665 STATE OF TEXAS

05.11.2016

Revision Number	Revision Date	Revision Description	CHK	APVD	Issued by
DSGN	J. Palomo	D. Campos	DR	XXX	XXXX

CasaBella Architects
3821 JUNIPER TRACE, SUITE 104
AUSTIN, TX 78738 512-498-5700

Montopolis Water Reclamation Initiative (WRI)
Storage Reservoir and Pump Station
2711 Montopolis Drive
Austin Water, Austin, Texas

CH2MHILL.
TBPE FIRM NO. 3699

ARCHITECTURAL
ARCHITECTURAL SITE PLAN

REUSE OF DOCUMENTS

BAR IS ONE INCH ON ORIGINAL DRAWING
0 1"

DATE	MAY 2016
PROJ	472902
DWG	A-100
SHEET	45 OF 126

GRAPHIC SYMBOLS LEGEND

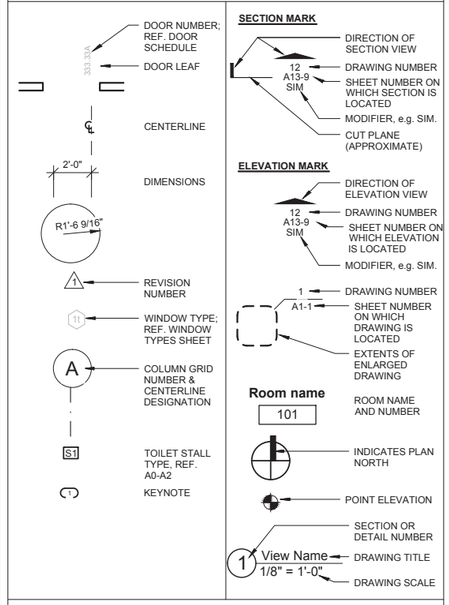

ABBREVIATIONS

A.F.F.	ABOVE FINISHED FLOOR	INSUL.	INSULATION
A.F.G.	ABOVE FINISHED GRADE	INT.	INTERIOR
ACOUS.	ACOUSTICAL	INV.	INVERT
ADJ.	ADJUSTABLE	JT.	JOINT
ALUM	ALUMINUM	JB	JUNCTION BOX
ANCH.	ANCHOR	LAM.	LAMINATE
APPROX.	APPROXIMATELY	LAV.	LAVATORY
ATTEN.	ATTENUATION	LT.WT.	LIGHT WEIGHT
BM.	BEAM	MACH.	MACHINE
BD.	BOARD	M.H.	MAN HOLE
BLK.	BLOCK	MB.	MARKER BOARD
BTM.	BOTTOM	MANUF.	MANUFACTURER
BLDG.	BUILDING	MK.	MARK
CAB.	CABINET	M.O.	MASONRY OPENING
CLG.	CEILING	MAX.	MAXIMUM
CEM.	CEMENT	MECH.	MECHANICAL
CL	CENTER LINE	MTL.	METAL
CER.	CERAMIC	MIN.	MINIMUM
C.T.	CERAMIC TILE	NEC'Y	NECESSARY
CB	CHALK BOARD	NOM.	NOMINAL
C.O.	CLEAN OUT	N.I.C.	NOT IN CONTRACT
C.R.	COLD ROLLED	O.C.	ON CENTER
C.R.C.	COLD ROLLED CHANNEL	O.P.C.I.	OWNER PROVIDED CONTRACTOR INSTALLED
COL.	COLUMN		
CONC.	CONCRETE	OPG.	OPENING
C.M.U.	CONCRETE MASONRY UNIT	O.P.O.I.	OWNER PROVIDED OWNER INSTALLED
CONST.	CONSTRUCTION	O.H.	OPPOSITE HAND
CONT.	CONTINUOUS	O.D.	OUTSIDE DIAMETER
C.J.	CONTROL JOINT	PTN.	PARTITION
C.G.	CORNER GUARD	PLAS.	PLASTER
DEF.	DEFINITION	PL.	PLATE
DIAG.	DIAGONAL	PLWD.	PLYWOOD
DIA.	DIAMETER	PORC.	PORCELAIN
DIM.	DIMENSION	PS	PROJECTION SCREEN
DISP.	DISPENSER	Q.T.	QUARRY TILE
DBL.	DOUBLE	RAD.	RADIUS
DN.	DOWN	REC.	RECESSED
DWG.	DRAWING	RE	REFERENCE
EA.	EACH	REINF.	REINFORCED
E.W.	EACH WAY	REQ'D	REQUIRED
E.W.C.	ELECTRIC WATER COOLER	RESIL.	RESILIENT
ELECT.	ELECTRICAL	RES.	RESISTANT
ELEV.	ELEVATION	RET.	RETAINING
EL.	ELEVATOR	R.	RISERS
ENAM.	ENAMEL	R.D.	ROOF DRAIN
EQ.	EQUAL	RM.	ROOM
EQUIP.	EQUIPMENT	R.O.	ROUGH OPENING
EXIST.	EXISTING	SCHED.	SCHEDULE
EXP.	EXPANSION	SECT.	SECTION
E.J.	EXPANSION JOINT	SHT.	SHEET
EXT.	EXTERIOR	S.V	SHEET VINYL
F.O.S.	FACE OF STUD	SIM.	SIMILAR
FIN.	FINISH	SPEC.	SPECIFICATION
F.E.C.	FIRE EXTINGUISHER CABINET (INCLUDING FIRE EXTINGUISHER)	SQ.	SQUARE
		SF	SQUARE FEET
		S.S	STAINLESS STEEL
F.H.	FLAT HEAD	STD.	STANDARD
FL.	FLOOR	STL.	STEEL
F.D.	FLOOR DRAIN	STRUCT.	STRUCTURAL
FLUOR.	FLUORESCENT	SUSP.	SUSPENDED
FT.	FOOT	TB	TACK BOARD
FTG.	FOOTING	TEL.	TELEPHONE
FDN.	FOUNDATION	THRU	THROUGH
FRM.	FRAME	T. & G.	TONGUE AND GROOVE
GALV.	GALVANIZED	T. & B.	TOP AND BOTTOM
G.I.	GALVANIZED IRON	T.O.C.	TOP OF CONCRETE
GA.	GAUGE	T.O.S.	TOP OF STEEL
GEN.	GENERAL	T.	TREADS
GL.	GLASS	TYP.	TYPICAL
GRD.	GRADE	U.N.O.	UNLESS NOTED OTHERWISE
GRT.	GROUT	UR.	URINAL
GYP.	GYPSUM	V.I.F.	VERIFY IN FIELD
H.R.	HANDRAIL	VERT.	VERTICAL
HDWD.	HARDWOOD	V.C.T.	VINYL COMPOSITION TILE
HD.	HEAD	V.C.P.	VITRIFIED CLAY PIPE
HT.	HEIGHT	W.C.	WATER CLOSET
H.M.	HOLLOW METAL	W.P.	WATERPROOF
HORIZ.	HORIZONTAL	WR	WATER-RESISTANT
H.B.	HOSE BIB	W.W.F.	WELDED WIRE FABRIC
IN.	INCH	W.F.	WIDE FLANGE
I.D.	INSIDE DIAMETER	W/	WITH
		WD.	WOOD

CODE REVIEW DOCUMENT

2012 INTERNATIONAL BUILDING CODE

PROJECT SUMMARY

1. BUILDING HEIGHT:	25'-4"
2. BUILDING AREA:	GROUND FLOOR 4,347 S. F
3. NUMBER OF STORIES:	ONE STORY
4. CONSTRUCTION TYPE:	IIB
5. USE OF GROUP:	F-2 FACTORY INDUSTRIAL LOW-HAZARD
6. EXIT WIDTH:	4,347/100 = 43.47X0.2= 9 INCHES
PROVIDING:	72 INCHES

CHAPTER 3: USE AND OCCUPANCY CLASSIFICATION

306.3 FACTORY INDUSTRIAL F-2 LOW-HAZARD OCCUPANCY.
FACTORY INDUSTRIAL USES THAT INVOLVE THE FABRICATION OR MANUFACTURING OF NONCOMBUSTIBLE MATERIALS WHICH DURING FINISHING, PACKING OR PROCESSING DO NOT INVOLVE A SIGNIFICANT FIRE HAZARD SHALL BE CLASSIFIED AS F-2 OCCUPANCIE.

CHAPTER 4: SPECIAL DETAILED REQUIREMENTS BASED ON USE AND OCCUPANCY

410.3.2 GALLERIES,GRIDIRONS, CATWALKS AND PINRAILS.
BEAMS DESIGNED ONLY FOR THE ATTACHMENT OF PORTABLE OR FIXED THEATER EQUIPMENT, GRIDIRONS, GALLERIES AND CATWALKS SHALL BE REQUIREMENTS FOR THE TYPE OF CONSTRUCTION OF THE BUILDING; AND A FIRE-RESISTANCE RATING SHALL NOT BE REQUIRED. THESE AREAS SHALL NOT BE CONSIDERED TO BE FLOORS, STORIES, MEZZANINES OR LEVELS IN APPLYING THIS CODE.

CHAPTER 5: GENERAL BUILDING HEIGHT AND AREAS
TABLE 503: TYPE IIB CONSTRUCTION/GROUP F-2 ALLOWS 3 STORIES AND 23,000 SQUARE FOOTAGE.
HEIGHT OF 55 FEET.
ACTUAL SQUARE FOOTAGE:4,347
ACTUAL HEIGHT: 25' - 4"

CHAPTER 6: TYPES OF CONSTRUCTION
602.2 TYPES I AND II. TYPES I AND II CONSTRUCTION ARE THOSE TYPES OF CONSTRUCTION IN WHICH THE BUILDING ELEMENTS LISTED IN TABLE 601 ARE OF NONCOMBUSTIBLE MATERIALS, EXCEPT AS PERMITTED IN SECTION603 AND ELSEWHERE IN THIS CODE.

TABLE 601 FIRE-RESISTANCE RATING REQUIREMENTS FOR BUILDING ELEMENTS

	TYPE IIB
PRIMARY STRUCTURAL FRAME	0 HOUR
BEARING WALLS	
EXTERIOR	0 HOUR
INTERIOR	0 HOUR
NONBEARING WALLS AND PARTITIONS EXTERIOR	SEE TABLE 602
NONBEARING WALLS AND PARTITIONS INTERIOR	0 HOUR
FLOOR CONSTRUCTION AND SECONDARY MEMBERS	0 HOUR
ROOF CONSTRUCTION AND SECONDARY MEMBERS	0 HOUR

TABLE 602 FIRE-RESISTANCE RATING REQUIREMENTS FOR EXTERIOR WALLS BASED ON FIRI SEPARATION DISTANCE
FIRE SEPARATION DISTANCE = X < 5/GROUP F-2 1 HOUR
X >10 1 HOUR

CHAPTER 7 FIRE AND SMOKE PROTECTION

705.1 GENERAL
EXTERIOR WALL SHALL COMPLY WITH THIS SECTION.

705.5 FIRE-RESISTANCE RATINGS.
EXTERIOR WALLS SHALL BE FIRE-RESISTANCE RATED IN ACCORDANCE WITH TABLE 601 AND 602 AND THIS SECTION. THE REQUIRED FIRE-RESISTANCE RATING OF EXTERIOR WALLS WITH A FIRE SEPARATION DISTANCE RATING OF EXTERIOR WALLS WITH A FIRE SEPARATION DISTANCE OF GREATER THAN 10 FEET SHALL BE RATED FOR EXPOSURE TO FIRE FROM THE INSIDE. THE REQUIRED FIRE RESISTANCE RATING OF EXTERIOR WALLS WITH A FIRE SEPARATION DISTANCE OF LESS THAN OR EQUAL TO 10 FEET SHALL BE RATED FOR EXPOSURE TO FIRE FROM BOTH SIDES.

705.8 OPENINGS. OPENINGS IN EXTERIOR WALLS SHALL COMPLY WITH SECTIONS 705.8.1 THOUGHT 705.8.6 .

705.8.1 ALLOWABLE AREA OF OPENINGS.
THE MAXIMUM AREA OF UNPROTECTED AND PROTECTED OPENINGS PERMITTED IN AN EXTERIOR WALL IN ANY STORY OF A BUILDING SHALL NOT EXCEED THE PERCENTAGES SPECIFIED IN TABLE 705.8.

TABLE 705.8 MAXIMUM AREA OF EXTERIOR WALL OPENINGS BASED ON FIRE SEPARATION DISTANCE AND DEGREE OF OPENING PROTECTION

FIRE SEPARATION	DEGREE OF OPENING PROTECTION		ALLOWABLE AREA
25 TO LESS THAN 30	UNPROTECTED, NONSPRINKLERED	70%	
30 OR GREATER	UNPROTECTED, NONSPRINKLERED		NO LIMIT

CHAPTER 9 AUTOMATIC SPRINKLER SYSTEMS

906.1 WHERE REQUIRED.
PORTABLE FIRE EXTINGUISHERS SHALL BE INSTALLED IN THE FOLLOWING LOCATIONS.
1. IN NEW AND EXISTING GROUP A,B,F,H,I,M,R-1,R-2, R-4 AND S OCCUPANCIES,
5. WHERE REQUIRED BY THE INTERNATIONAL FIRE CODE SECTIONS INDICATED IN TABLE 906.1.

CHAPTER 10 MEANS OF EGRESS

1005.1 MINIMUM REQUIRED EGRESS WIDTI.
THE MEANS OF EGRESS WIDTH SHALL NOT BE LESS THAN REQUIRED BY THIS SECTION. THE TOTAL WIDTH OF MEANS OF EGRESS IN INCHES SHALL NOT BE LESS THAN THE TOTAL OCCUPANT LOAD SERVED BY THE MEANS OF EGRESS MULTIPLIED BY 0.3 IN PER OCCUPANT FOR STAIRS AND BY 0.2 INCHES PER OCCUPANT FOR OTHER EGRESS COMPONENTS. THE WIDTH SHALL NOT BE LESS THAN SPECIFIED ELSEWHERE IN THIS CODE. MULTIPLE MEANS OF EGRESS SHALL BE SIZED SUCH THAT THE LOSS OF ANY ONE MEANS OF EGRESS SHALL NOT REDUCE THE AVAILABLE CAPACITY TO LESS THAN 50 PERCENT OF THE REQUIRED CAPACITY. THE MAXIMUM CAPACITY REQUIRED FORM ANY STORY OF A BUILDING SHALL BE MAINTAINED TO THE TERMINATION OF THE MEANS OF EGRESS.

TABLE 1016.1 EXIT ACCESS TRAVEL DISTANCE
OCCUPANCY GROUP F-2 WITHOUT SPRINKLER SYSTEM = 300 FT.

1021.1 EXITS FROM STORIES ALL SPACES WITHIN EACH STORY SHALL HAVE ACCESS TO THE MINIMUM NUMBER OF APPROVED INDEPENDENT EXITS AS SPECIFIED IN TABLE 1021.1 BASED ON THE OCCUPANT LOAD OF THE STORY. FOR THE PURPOSES OF THIS CHAPTER, OCCUPIED ROOFS SHALL BE PROVIDED WITH EXITS AS REQUIRED STORIES.

TABLE 1021.1 MINIMUM NUMBER OF EXITS FOR OCCUPAI LOAD
OCCUPANT LOAD (PERSONS PER STORY) : 1-500,
MINIMUM NUMBER OF EXITS (PER STORY): 2
PROVIDED EXITS: 2

TAS ANALYSIS

203.5 MACHINERY SPACES. SPACES FREQUENTED ONLY BY SERVICE PERSONNEL FOR MAINTENANCE, REPAIR, OR OCCASIONAL MONITORING OF EQUIPMENT SHALL NOT BE REQUIRED TO COMPLY WITH THESE REQUIREMENTS OR TO BE ON AN ACCESSIBLE ROUTE. MACHINERY SPACES INCLUDE, BUT ARE NOT LIMITED TO, ELEVATOR PITS OR ELEVATOR PENTHOUSES; MECHANICAL, ELECTRICAL OR COMMUNICATIONS EQUIPMENT ROOMS; PIPING OR EQUIPMENT CATWALKS; WATER OR SEWAGE TREATMENT PUMP ROOMS AND STATIONS; ELECTRIC SUBSTATIONS AND TRANSFORMER VAULTS; AND HIGHWAY AND TUNNEL UTILITY FACILITIES.

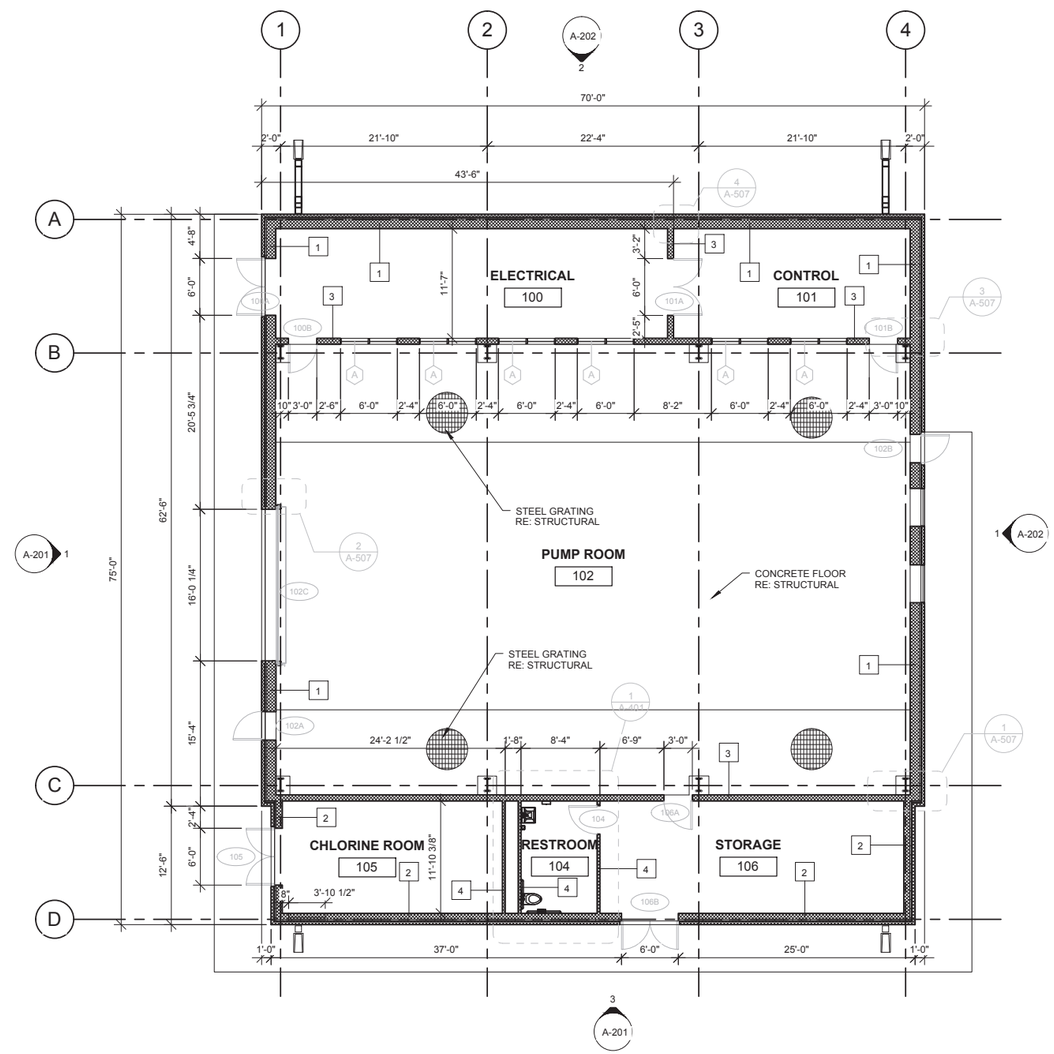

1 NEW CONSTRUCTION PLAN
1/8" = 1'-0"

GENERAL NOTES:

1. CONTRACTOR SHALL VISIT THE SITE AND VERIFY FIELD CONDITIONS PRIOR TO STARTING WORK.

2. CONTRACTOR SHALL NOTIFY THE ARCHITECT OF ANY DISCREPANCIES IN THE DRAWINGS AND ACTUAL FIELD CONDITIONS PRIOR TO START WORK.

3. CONTRACTOR SHALL BE RESPONSIBLE FOR ALL DAMAGE TO THE EXISTING PROPERTY, BUILDINGS OR OWNER'S EQUIPMENT INCURRED BY HIS STAFF OR SUBCONTRACTORS.

4. CONTRACTOR TO PROTECT AREAS AND SURFACES ADJACENT TO THE CONSTRUCTION AREA FROM DAMAGE AND DEBRIS. ALL AREAS TO BE CLEAN AND SERVICEABLE AT THE COMPLETION OF DEMOLITION, PRIOR TO COMMENCEMENT OF NEW CONSTRUCTION.

5. WRITTEN DIMENSIONS GOVERN; DO NOT SCALE DRAWINGS.

6. CONTRACTOR SHALL COORDINATE THE LOCATION OF ALL EXISTING UTILITIES: TO BE REMOVED, TO BE RELOCATED TEMPORARLY, OR TO REMAIN.

7. THE ARCHITECT WILL NOT BE RESPONSIBLE FOR, NOR HAVE CONTROL OF, NOR BE IN CHARGE OF CONSTRUCTION MEANS, METHODS, TECHINQUES, SEQUENCES OR PROCEDURES, NOR FOR SAFETY PREACUTIONS AND PROGRAMS IN CONNECTION WITH THE WORK, AND WILL NOT BE RESPONSIBLE FOR THE CONTRACTOR'S FAILURE TO CARRY OUT THE WORK IN ACCORDANCE WITH THE CONTRACT DOCUMENTS. THE ARCHITECT WILL NOT BE RESPONSIBLE, NOR HAVE CONTROL, NOR BE IN CHARGE OF THE ACTS OT OMISSIONS OF THE CONTRACTOR, SUBCONTRACTOR, OR ANY OF THERI AGENTS OR EMPLOYEES, OR ANY OTHER PERSONS PERFORMING ANY OF THE WORK.

9. ANY REFERENCE TO SPECIFIC MANUFACTURES'S PRODUCTS IS FOR THE PURPOSE OF STABLISHING A STANDARD OF PATTERNS, COLORS AND TEXTURES. IT IS NOT INTENTED TO LIMIT SELECTIONS OF ANOTHER MANUFACTURER'S PRODUCTS.

APPROVAL

SITE PLAN APPROVAL SHEET OF
FILE NUMBER: SPC-2015-0322C APPLICATION DATE: JULY 17, 2015
APPROVED BY COMMISSION ON: N/A UNDER SECTION 142 OF
CHAPTER 25-5 OF THE CITY OF AUSTIN CODE.
EXPIRATION DATE (25-5-81, LDC) _____ CASE MANAGER LYNDA COURTNEY
PROJECT EXPIRATION DATE (ORD.#970905-A) _____ DWPZ _____ DDZ _____

Director, Planning and Development Review
RELEASE FOR GENERAL COMPLIANCE: _____ ZONING P-NP LI-NP
Rev. 1 _____ Correction 1 _____
Rev. 2 _____ Correction 2 _____
Rev. 3 _____ Correction 3 _____
Final plat must be recorded by the Project Expiration Date, if applicable. Subsequent Site Plans which do not comply with the Code current at the time of filing, and all required Building Permits and/or a notice of construction (if a building permit is not required), must also be approved prior to the Project Expiration Date.

REGISTERED ARCHITECT JAIME E. PALOMO 15565 STATE OF TEXAS
05.11.2016

Revision Number	Revision Date	Revision Description	Issued by
DSGN	DR	CHK	APVD
	J. Palomo	D. Campos	XXX	XXXX

CasaBella Architects
3821 JUNIPER TRACE, SUITE 104
AUSTIN, TX 78738 512-263-0100

Montopolis Water Reclamation Initiative (WRI)
Storage Reservoir and Pump Station
2711 Montopolis Drive
Austin Water, Austin, Texas

CH2MHILL.
TBPE FIRM NO. 3699

ARCHITECTURAL
FLOOR PLAN

BAR IS ONE INCH ON ORIGINAL DRAWING
0 1"

DATE	MAY 2016
PROJ	472902
DWG	A-101
SHEET 46	OF 126

REUSE OF DOCUMENTS

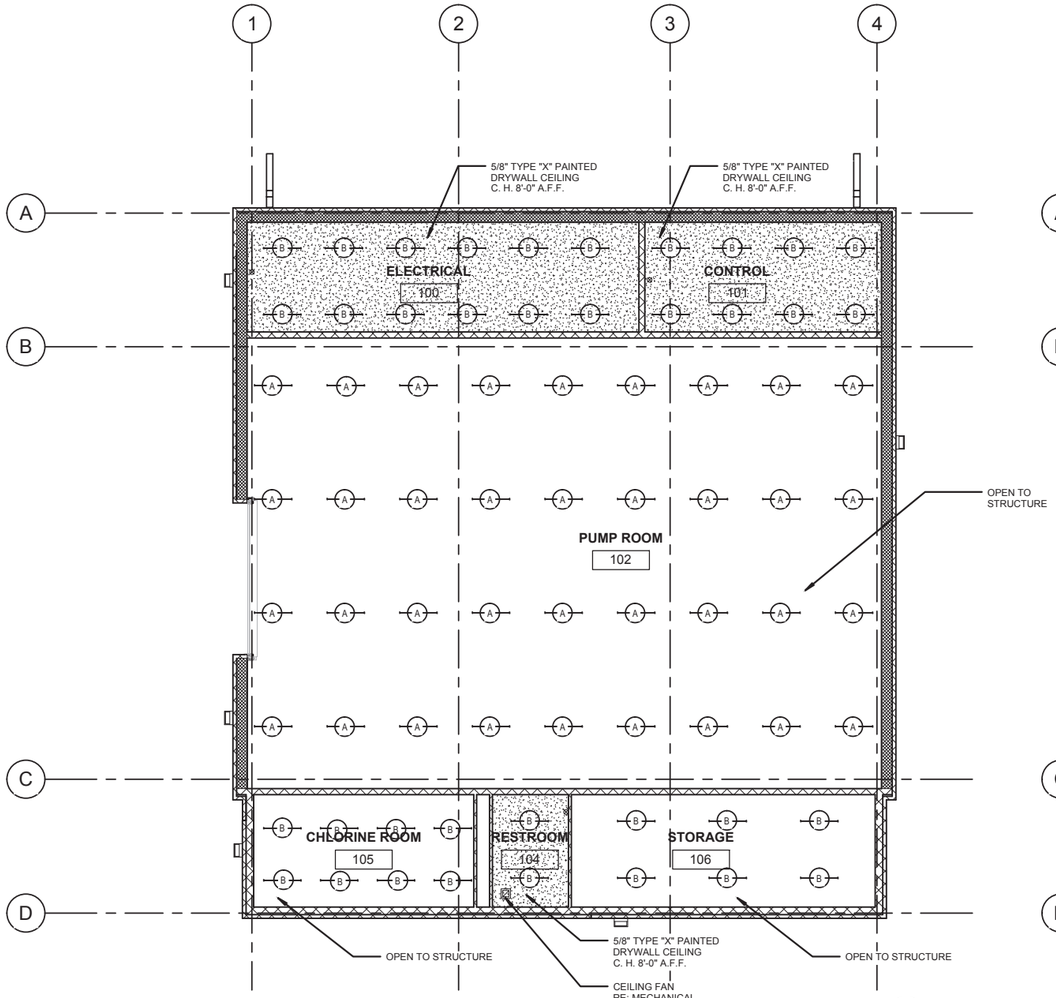

A REFLECTED CEILING PLAN
1/8" = 1'-0"

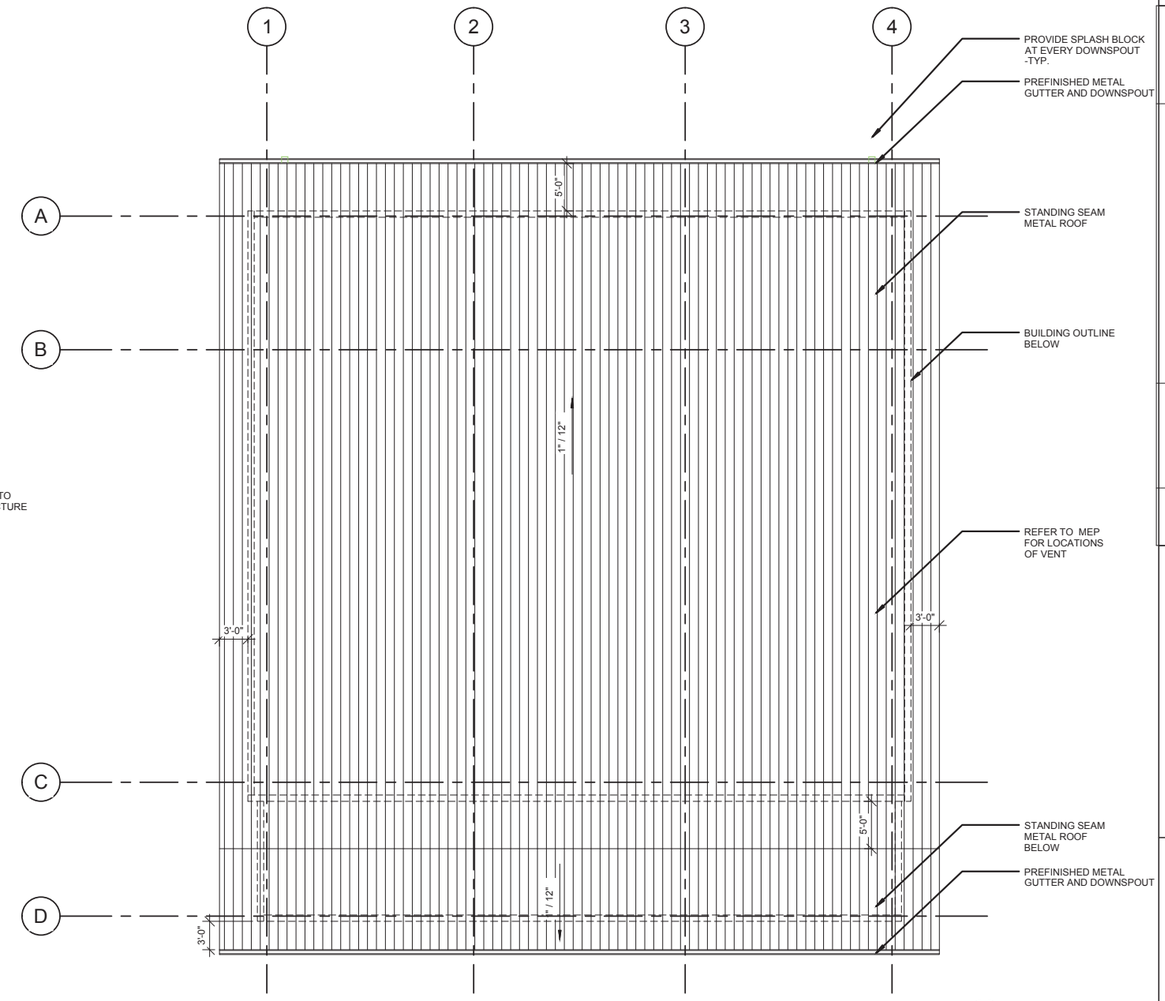

1 ROOF PLAN
1/8" = 1'-0"

OPEN TO STRUCTURE

NEW GYPSUM BOARD CEILING

LED ENCLOSED & GASKETED LUMINAIRE

LED ENCLOSED & GASKETED LUMINAIRE

WALL SCONCE

EXIT SIGN

SUPPLY AIR - REF MEP

RETURN AIR - REF MEP

SPRINKLER HEAD

SMOKE DETECTOR

STROBE/SPEAKER

GENERAL ROOF NOTES:

1. GENERAL CONTRACTOR TO COORDINATE SIZE AND LOCATION OF ROOF PENETRATIONS WITH MECHANICAL, ELECTRICAL AND PLUMBING.

2. PROVIDE SPLASH BLOCKS AT ALL DOWNSPOUTS.

3. WRITTEN DIMENSIONS GOVERN; DO NOT SCALE DRAWINGS.

4. THE ARCHITECT WILL NOT BE RESPONSIBLE FOR, NOR HAVE CONTROL OF, NOR BE IN CHARGE OF CONSTRUCTION MEANS, METHODS, TECHINQUES, SEQUENCES OR PROCEDURES, NOR FOR SAFETY PREACUTIONS AND PROGRAMS IN CONNECTION WITH THE WORK, AND WILL NOT BE RESPONSIBLE FOR THE CONTRACTOR'S FAILURE TO CARRY OUT THE WORK IN ACCORDANCE WITH THE CONTRACT DOCUMENTS. THE ARCHITECT WILL NOT BE RESPONSIBLE, NOR HAVE CONTROL, NOR BE IN CHARGE OF THE ACTS OT OMISSIONS OF THE CONTRACTOR, SUBCONTRACTOR, OR ANY OF THERI AGENTS OR EMPLOYEES, OR ANY OTHER PERSONS PERFORMING ANY OF THE WORK.

5. ANY REFERENCE TO SPECIFIC MANUFACTURES'S PRODUCTS IS FOR THE PURPOSE OF STABLISHING A STANDARD OF PATTERNS, COLORS AND TEXTURES. IT IS NOT INTENTED TO LIMIT SELECTIONS OF ANOTHER MANUFACTURER'S PRODUCTS.

APPROVAL

SITE PLAN APPROVAL SHEET OF
FILE NUMBER: SPC-2015-0322C APPLICATION DATE: JULY 17, 2015
APPROVED BY COMMISSION ON: N/A UNDER SECTION 142 OF
CHAPTER 25-5 OF THE CITY OF AUSTIN CODE.
EXPIRATION DATE (25-5-81, LDC) CASE MANAGER LYNDA COURTNEY
PROJECT EXPIRATION DATE (ORD.#970905-A) DWPZ DDZ

Director, Planning and Development Review
RELEASE FOR GENERAL COMPLIANCE: ZONING P-NP LI-NP
Rev. 1 Correction 1
Rev. 2 Correction 2
Rev. 3 Correction 3

Final plat must be recorded by the Project Expiration Date, if applicable. Subsequent Site Plans which do not comply with the Code current at the time of filing, and all required Building Permits and/or a notice of construction (if a building permit is not required), must also be approved prior to the Project Expiration Date.

REGISTERED ARCHITECT JAMES F. PALOMO 15665 STATE OF TEXAS
05.11.2016

Revision Number	Revision Date	Revision Description	Issued by
DSGN	DR	CHK	APVD
	J. Palomo	D. Campos	XXX	XXXX

CasaBella Architects
3821 JUNIPER TRACE, SUITE 104
AUSTIN, TX 78738 512-498-5700

Montopolis Water Reclamation Initiative (WRI)
Storage Reservoir and Pump Station
2711 Montopolis Drive
Austin Water, Austin, Texas

CH2MHILL.
TBPE FIRM NO. 3699

ARCHITECTURAL
CEILING AND ROOF PLAN

REUSE OF DOCUMENTS

BAR IS ONE INCH ON ORIGINAL DRAWING
0 1"

DATE	MAY 2016
PROJ	472902
DWG	A-102
SHEET	47 OF 126

FILE PATH: C:\Users\cad-22\Documents\Montopolis Reuse VC_RED.cab_cad-22.rvt
PLOTTED: 7/14/2015 1:29:02 PM

FILENAME:
PLOT DATE:May 11, 2016 PLOT TIME:4:16 PM

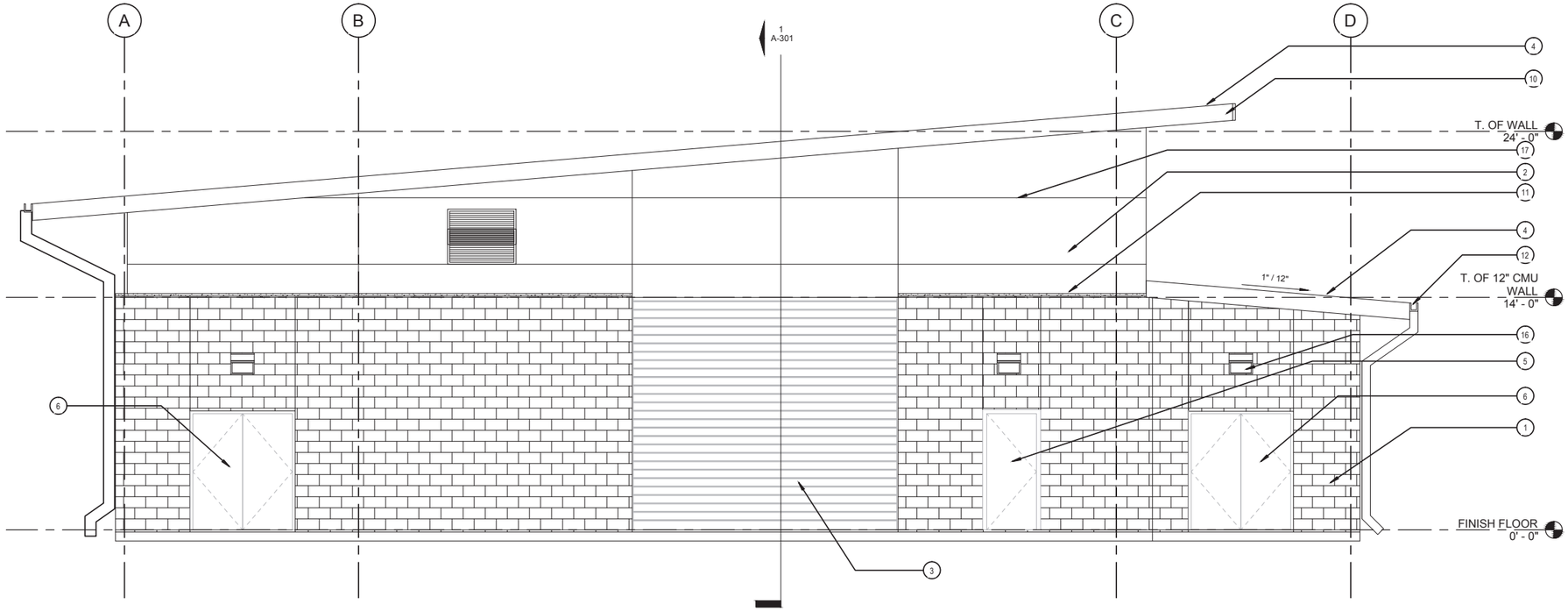

1 PUMP BUILDING SOUTH ELEVATION
1/4" = 1'-0"

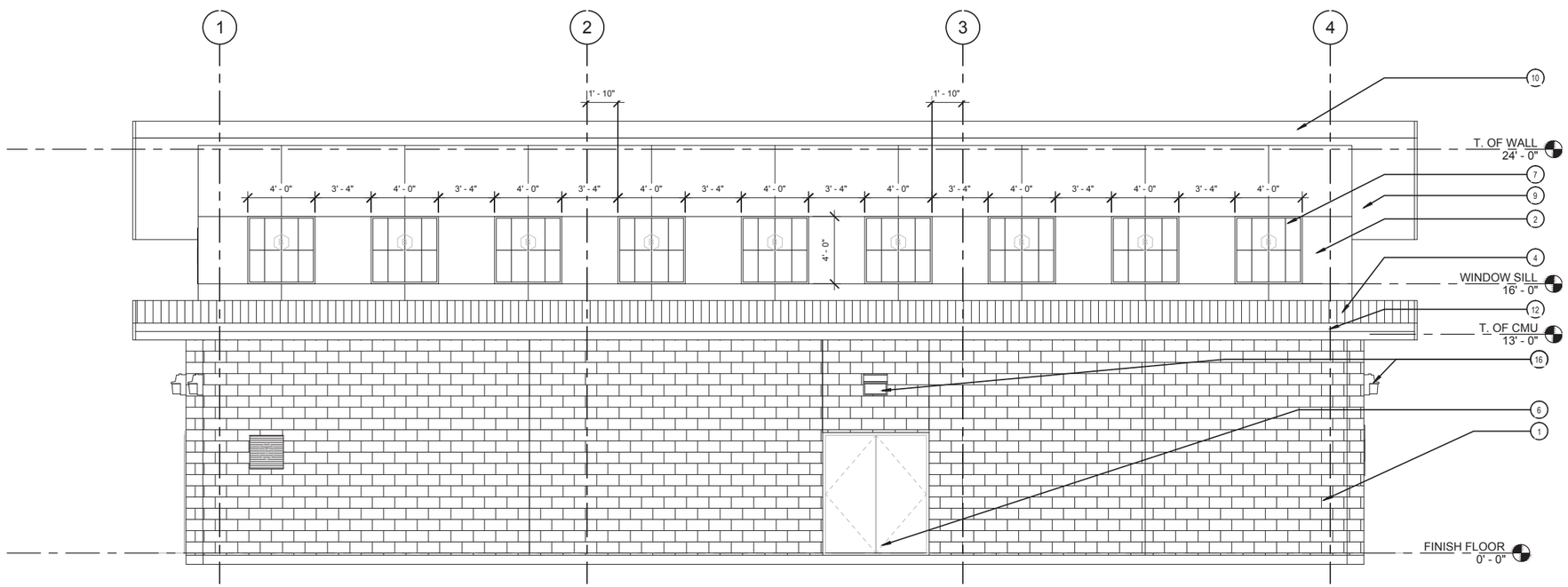

3 PUMP BUILDING EAST ELEVATION
1/4" = 1'-0"

ELEVATION KEYED NOTES:

1. 4" CMU VENEER
2. EIFS FINISH
3. INSULATED ROLL-UP DOOR
4. STANDING SEAM METAL ROOF
5. INSULATED SINGLE DOOR
6. INSULATED DOUBLE DOOR
7. TRANSLUSCENT WINDOW SYSTEM -TYP.
8. CONTROL JOINT -TYPICAL
9. SOFFIT
10. METAL FASCIA
11. CONTINUOUS STONE CAP
12. PRE-FINISHED METAL GUTTER
13. 48"X48" LOUVER 16' A.F.F. RE: MECH.
14. 48"X36" LOUVER 4'-8" A.F.F. RE: MECH.
15. FOUNDATION RE: STRUCTURAL
16. LIGHT FIXTURE RE: ELECTRICAL -TYP.
17. CONTROL JOINT -TYP

APPROVAL

SITE PLAN APPROVAL SHEET OF
FILE NUMBER: SPC-2015-0322C APPLICATION DATE: JULY 17, 2015
APPROVED BY COMMISSION ON: N/A UNDER SECTION 142 OF
CHAPTER 25-5 OF THE CITY OF AUSTIN CODE.
EXPIRATION DATE (25-5-81, LDC) _____ CASE MANAGER LYNDA COURTNEY
PROJECT EXPIRATION DATE (ORD.#970905-A) _____ DWPZ _____ DDZ _____

Director, Planning and Development Review
RELEASE FOR GENERAL COMPLIANCE: _____ ZONING P-NP LI-NP
Rev. 1 _____ Correction 1 _____
Rev. 2 _____ Correction 2 _____
Rev. 3 _____ Correction 3 _____

Final plat must be recorded by the Project Expiration Date, if applicable. Subsequent Site Plans which do not comply with the Code current at the time of filing, and all required Building Permits and/or a notice of construction (if a building permit is not required), must also be approved prior to the Project Expiration Date.

REGISTERED ARCHITECT JAIME PALOMO STATE OF TEXAS
ISSUED
05.11.2016

Revision Number	Revision Date	Revision Description			Issued by
DSGN	DR	CHK	D. Campos	APV'D	XXXX
	J. Palomo		XXX		

CasaBella Architects
3821 JUNIPER TRACE, SUITE 104
AUSTIN, TX 78738 512-266-5700

Montopolis Water Reclamation Initiative (WRI)
Storage Reservoir and Pump Station
2711 Montopolis Drive
Austin Water, Austin, Texas

CH2MHILL.
TBPE FIRM NO. 3699

ARCHITECTURAL
EXTERIOR ELEVATIONS

REUSE OF DOCUMENTS

BAR IS ONE INCH ON ORIGINAL DRAWING
0 1"

DATE	MAY 2016
PROJ	472902
DWG	A-201
SHEET 48	OF 126

FILE PATH: C:\Users\cad-22\Documents\Montopolis Reuse VC_RED.cab_cad-22.rvt
PLOTTED: 7/14/2015 1:29:02 PM

FILENAME:
PLOT DATE:May 11, 2016 PLOT TIME:4:14 PM

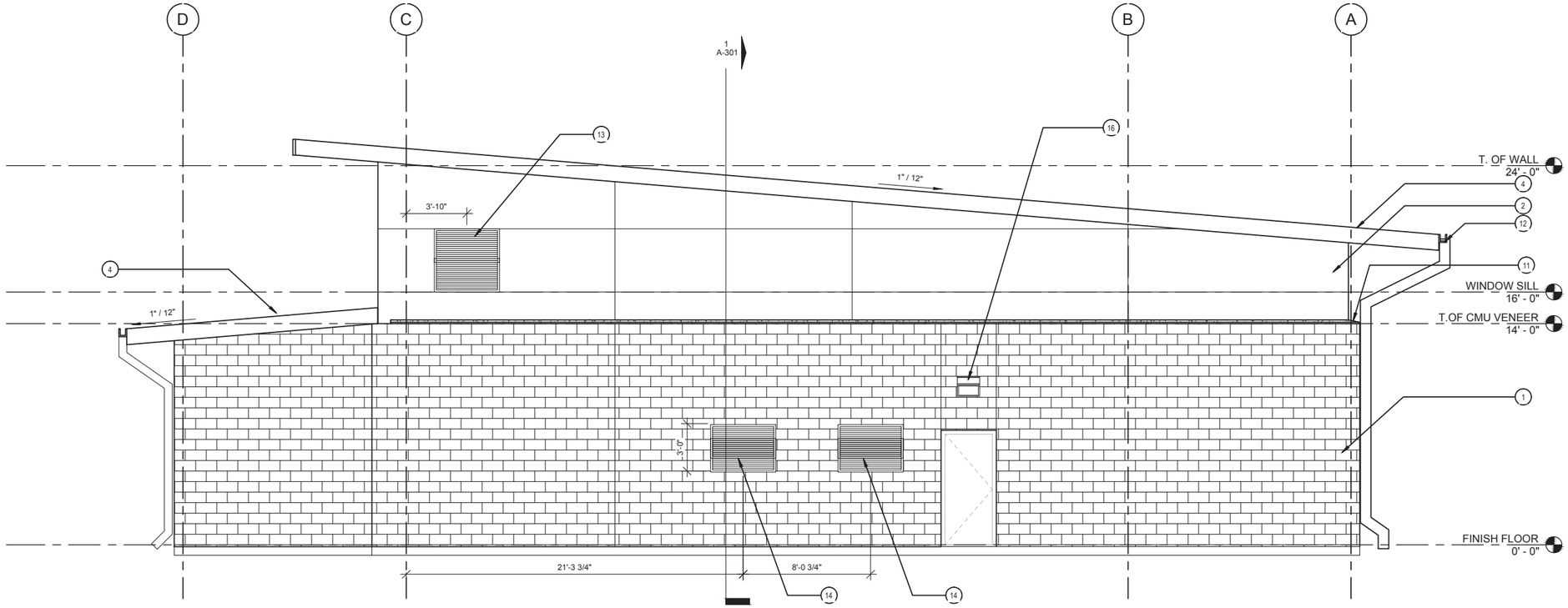

1 PUMP BUILDING NORTH ELEVATION
1/4" = 1'-0"

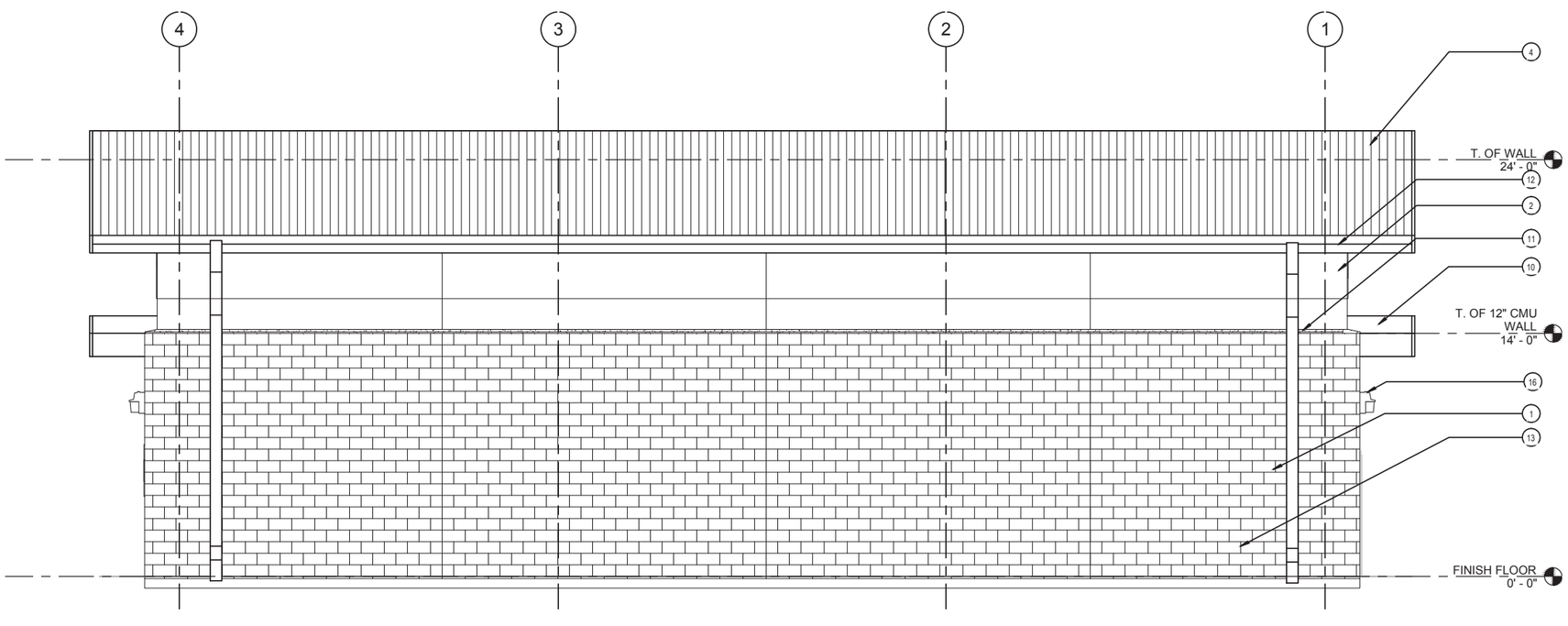

2 PUMP BUILDING WEST ELEVATION
1/4" = 1'-0"

ELEVATION KEYED NOTES:

1 4" CMU VENEER
2 EIFS FINISH
3 INSULATED ROLL-UP DOOR
4 STANDING SEAM METAL ROOF
5 INSULATED SINGLE DOOR
6 INSULATED DOUBLE DOOR
7 TRANSLUSCENT WINDOW SYSTEM -TYP.
8 CONTROL JOINT -TYPICAL
9 SOFFIT
10 METAL FASCIA
11 CONTINUOUS STONE CAP
12 PRE-FINISHED METAL GUTTER
13 48"X48" LOUVER 16' A.F.F. RE: MECH.
14 48"X36" LOUVER 4'-8" A.F.F. RE: MECH.
15 FOUNDATION RE: STRUCTURAL
16 LIGHT FIXTURE RE: ELECTRICAL -TYP.
17 CONTROL JOINT -TYP

APPROVAL

SITE PLAN APPROVAL SHEET OF
FILE NUMBER: SPC-2015-0322C APPLICATION DATE: JULY 17, 2015
APPROVED BY COMMISSION ON: N/A UNDER SECTION 142 OF
CHAPTER 25-5 OF THE CITY OF AUSTIN CODE.
EXPIRATION DATE (25-5-81, LDC) _____ CASE MANAGER LYNDA COURTNEY
PROJECT EXPIRATION DATE (ORD.#970905-A) _____ DWPZ _____ DDZ _____

Director, Planning and Development Review
RELEASE FOR GENERAL COMPLIANCE: _____ ZONING P-NP LI-NP
Rev. 1 _____ Correction 1 _____
Rev. 2 _____ Correction 2 _____
Rev. 3 _____ Correction 3 _____
Final plat must be recorded by the Project Expiration Date, if applicable. Subsequent Site Plans which do not comply with the Code current at the time of filing, and all required Building Permits and/or a notice of construction (if a building permit is not required), must also be approved prior to the Project Expiration Date.

REGISTERED ARCHITECT JAIME F. PALOMO 15565 STATE OF TEXAS
05.11.2016

Revision Number	Revision Date	Revision Description			Issued by
DSGN	DR	CHK	D. Campos	APVD	XXXX
	J. Palomo			XXX	

CasaBella Architects
3821 JUNIPER TRACE, SUITE 104
AUSTIN, TX 78738 512-263-0700

Montopolis Water Reclamation Initiative (WRI)
Storage Reservoir and Pump Station
2711 Montopolis Drive
Austin Water, Austin, Texas

CH2MHILL.
TBPE FIRM NO. 3699

ARCHITECTURAL
EXTERIOR ELEVATIONS

REUSE OF DOCUMENTS

BAR IS ONE INCH ON ORIGINAL DRAWING
0 1"

DATE	MAY 2016
PROJ	472902
DWG	A-202
SHEET 49	OF 126

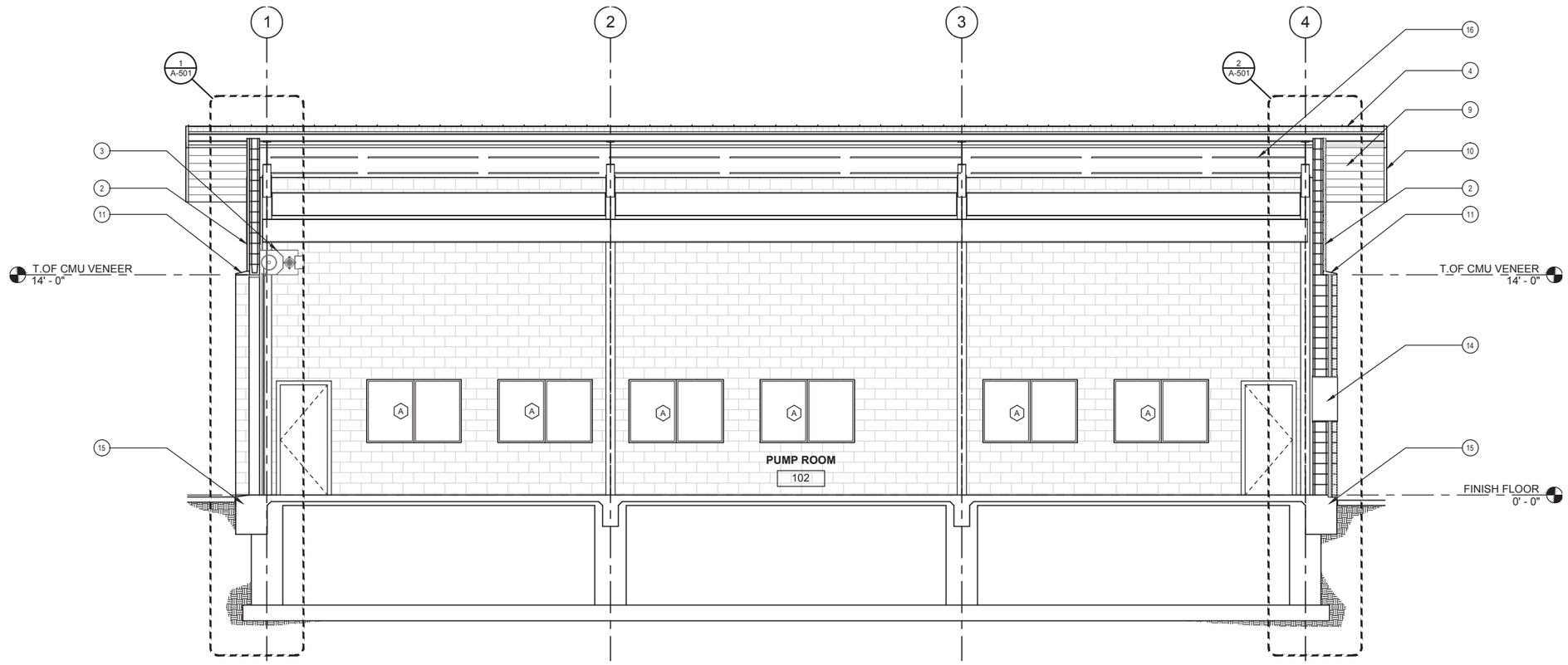

2 BUILDING SECTION 1
1/4" = 1'-0"

ELEVATION KEYED NOTES:

1 4" CMU VENEER
2 EIFS FINISH
3 INSULATED ROLL-UP DOOR
4 STANDING SEAM METAL ROOF
5 INSULATED SINGLE DOOR
6 INSULATED DOUBLE DOOR
7 TRANSLUSCENT WINDOW SYSTEM -TYP.
8 CONTROL JOINT -TYPICAL
9 SOFFIT
10 METAL FASCIA
11 CONTINUOUS STONE CAP
12 PRE-FINISHED METAL GUTTER
13 48"X48" LOUVER 16' A.F.F. RE: MECH.
14 48"X36" LOUVER 4'-8" A.F.F. RE: MECH.
15 FOUNDATION RE: STRUCTURAL
16 LIGHT FIXTURE RE: ELECTRICAL -TYP.
17 CONTROL JOINT -TYP

APPROVAL

SITE PLAN APPROVAL SHEET OF
FILE NUMBER: SPC-2015-0322C APPLICATION DATE: JULY 17, 2015
APPROVED BY COMMISSION ON: N/A UNDER SECTION 142 OF
CHAPTER 25-5 OF THE CITY OF AUSTIN CODE.
EXPIRATION DATE (25-5-81, LDC) _____ CASE MANAGER LYNDA COURTNEY
PROJECT EXPIRATION DATE (ORD.#970905-A) _____ DWPZ _____ DDZ _____

Director, Planning and Development Review
RELEASE FOR GENERAL COMPLIANCE: _____ ZONING P-NP LI-NP
Rev. 1 _____ Correction 1 _____
Rev. 2 _____ Correction 2 _____
Rev. 3 _____ Correction 3 _____

Final plat must be recorded by the Project Expiration Date, if applicable. Subsequent Site Plans which do not comply with the Code current at the time of filing, and all required Building Permits and/or a notice of construction (if a building permit is not required), must also be approved prior to the Project Expiration Date.

STATE OF TEXAS REGISTERED ARCHITECT JAIME F. PALOMO 15566
05.11.2016

Revision Number	Revision Date	Revision Description			Issued by
DSGN	DR	CHK	APVD		XXXX
	J. Palomo	D. Campos	XXX		

CasaBella Architects
3821 JUNIPER TRACE, SUITE 104
AUSTIN, TX 78738 512-436-0700

Montopolis Water Reclamation Initiative (WRI)
Storage Reservoir and Pump Station
2711 Montopolis Drive
Austin Water, Austin, Texas

CH2MHILL.
TBPE FIRM NO. 3699

ARCHITECTURAL
ARCHITECTURAL SITE PLAN

REUSE OF DOCUMENTS

BAR IS ONE INCH ON ORIGINAL DRAWING
0 1"

DATE	MAY 2016
PROJ	472902
DWG	A-301
SHEET 50	OF 126

FILE PATH: C:\Users\cad-22\Documents\Montopolis Reuse VC_RED.cab_cad-22.rvt
PLOTTED: 7/14/2015 1:29:02 PM

FILENAME:
PLOT DATE:May 11, 2016 PLOT TIME:4:21 PM

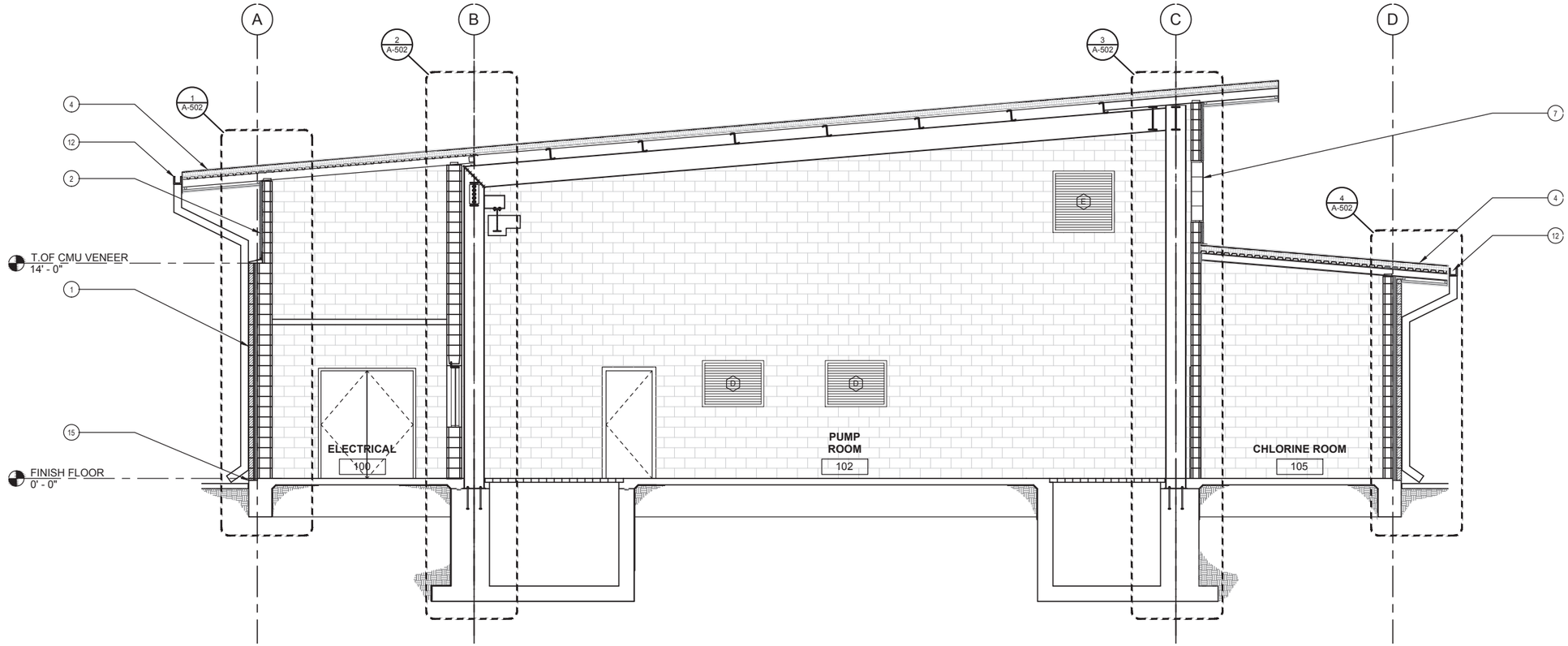

1 BUILDING SECTION 2
1/4" = 1'-0"

ELEVATION KEYED NOTES:

1 4" CMU VENEER
2 EIFS FINISH
3 INSULATED ROLL-UP DOOR
4 STANDING SEAM METAL ROOF
5 INSULATED SINGLE DOOR
6 INSULATED DOUBLE DOOR
7 TRANSLUSCENT WINDOW SYSTEM -TYP.
8 CONTROL JOINT -TYPICAL
9 SOFFIT
10 METAL FASCIA
11 CONTINUOUS STONE CAP
12 PRE-FINISHED METAL GUTTER
13 48"X48" LOUVER 16' A.F.F. RE: MECH.
14 48"X36" LOUVER 4'-8" A.F.F. RE: MECH.
15 FOUNDATION RE: STRUCTURAL
16 LIGHT FIXTURE RE: ELECTRICAL -TYP.
17 CONTROL JOINT -TYP

APPROVAL

SITE PLAN APPROVAL SHEET OF
FILE NUMBER: SPC-2015-0322C APPLICATION DATE: JULY 17, 2015
APPROVED BY COMMISSION ON: N/A UNDER SECTION 142 OF
CHAPTER 25-5 OF THE CITY OF AUSTIN CODE.
EXPIRATION DATE (25-5-81, LDC) _____ CASE MANAGER LYNDA COURTNEY
PROJECT EXPIRATION DATE (ORD.#970905-A) _____ DWPZ _____ DDZ _____

Director, Planning and Development Review
RELEASE FOR GENERAL COMPLIANCE: _____ ZONING P-NP LI-NP
Rev. 1 _____ Correction 1 _____
Rev. 2 _____ Correction 2 _____
Rev. 3 _____ Correction 3 _____
Final plat must be recorded by the Project Expiration Date, if applicable. Subsequent Site Plans which do not comply with the Code current at the time of filing, and all required Building Permits and/or a notice of construction (if a building permit is not required), must also be approved prior to the Project Expiration Date.

REGISTERED ARCHITECT JAIME F. PALOMO 15565 STATE OF TEXAS
05.11.2016

Revision Number	Revision Date	Revision Description	Issued by
DSGN	DR	CHK	APVD
	J. Palomo	D. Campos	XXX	XXXX

CasaBella Architects
3821 JUNIPER TRACE, SUITE 104
AUSTIN, TX 78738 512-263-0700

Montopolis Water Reclamation Initiative (WRI)
Storage Reservoir and Pump Station
2711 Montopolis Drive
Austin Water, Austin, Texas

CH2MHILL.
TBPE FIRM NO. 3699

ARCHITECTURAL
BUILDING SECTIONS

BAR IS ONE INCH ON ORIGINAL DRAWING
0 1"

DATE	MAY 2016
PROJ	472902
DWG	A-302
SHEET 51	OF 126

REUSE OF DOCUMENTS

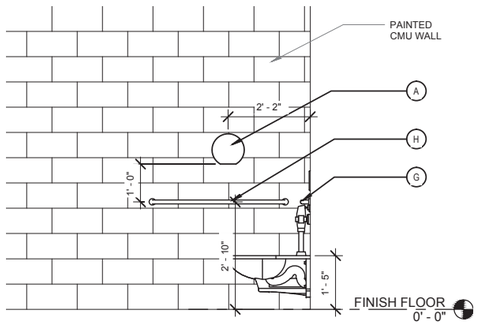

5 BATHROOM ELEVATION 4
1/2" = 1'-0"

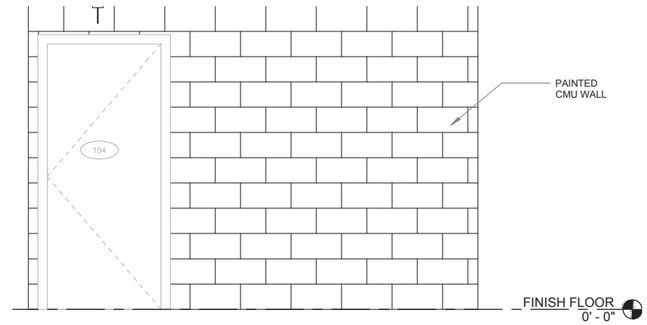

4 BATHROOM ELEVATION 3
1/2" = 1'-0"

	RESTROOM KEYED NOTES
A	WALL MOUNTED TOILET TISSUE DISPENSER
B	WALL MOUNTED PAPER TOWEL DISPENSER
C	WALL MOUNTED PAPER TOWEL DISPOSAL
D	WALL MOUNTED SOAP DISPENSER
E	FRAMED MIRROR
F	-NOT USED
G	GRAB BAR 36" LONG
H	GRAB BAR 42" LONG

RESTROOM GENERAL NOTES

1 G. C. TO PROVIDE SHOP DRAWINGS FOR OWNERS AND ARCHITECTS APPROVAL

2 REFER TO PLUMBING PLANS FOR TOILET, URINAL AND SINK FIXTURE MODELS

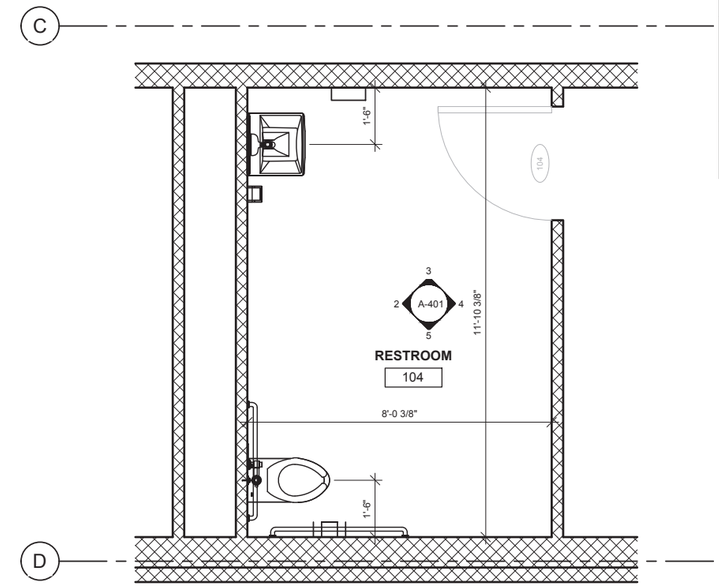

1 ENLARGED RESTROOM FLOOR PLAN
1/2" = 1'-0"

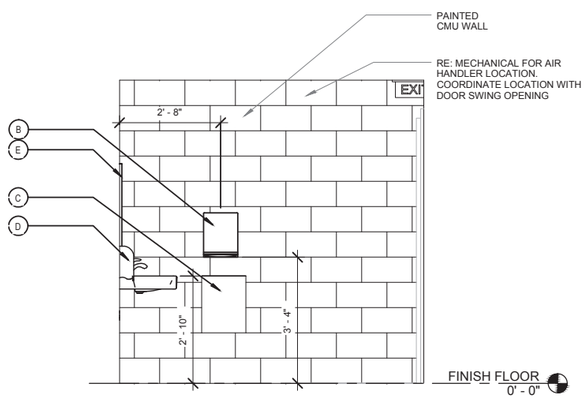

3 BATHROOM ELEVATION 2
1/2" = 1'-0"

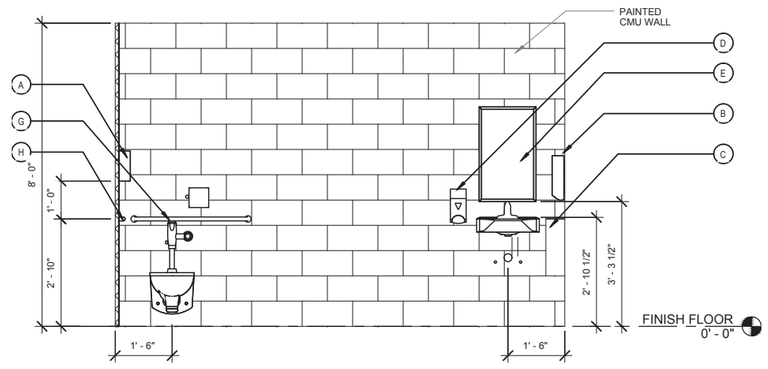

2 BATHROOM ELEVATION 1
1/2" = 1'-0"

APPROVAL

SITE PLAN APPROVAL SHEET OF
FILE NUMBER: SPC-2015-0322C APPLICATION DATE: JULY 17, 2015
APPROVED BY COMMISSION ON: N/A UNDER SECTION 142 OF
CHAPTER 25-5 OF THE CITY OF AUSTIN CODE.
EXPIRATION DATE (25-5-81, LDC) CASE MANAGER LYNDA COURTNEY
PROJECT EXPIRATION DATE (ORD.#970905-A) DWPZ DDZ

Director, Planning and Development Review
RELEASE FOR GENERAL COMPLIANCE: ZONING P-NP LI-NP
Rev. 1 Correction 1
Rev. 2 Correction 2
Rev. 3 Correction 3
Final plat must be recorded by the Project Expiration Date, if applicable. Subsequent Site Plans which do not comply with the Code current at the time of filing, and all required Building Permits and/or a notice of construction (if a building permit is not required), must also be approved prior to the Project Expiration Date.

REGISTERED ARCHITECT JAIME E. PALOMO 15565 STATE OF TEXAS
05.11.2016

Revision Number	Revision Date	Revision Description	Issued by
DSGN	DR	CHK	APVD
	J. Palomo	D. Campos	XXX	XXXX

CasaBella Architects
3821 JUNIPER TRACE, SUITE 104
AUSTIN, TX 78738 512-263-0700

Montopolis Water Reclamation Initiative (WRI)
Storage Reservoir and Pump Station
2711 Montopolis Drive
Austin Water, Austin, Texas

CH2MHILL.
TBPE FIRM NO. 3699

ARCHITECTURAL
BATHROOM ELEVATIONS

REUSE OF DOCUMENTS

BAR IS ONE INCH ON ORIGINAL DRAWING
0 1"

DATE	MAY 2016
PROJ	472902
DWG	A-401
SHEET 52	OF 126

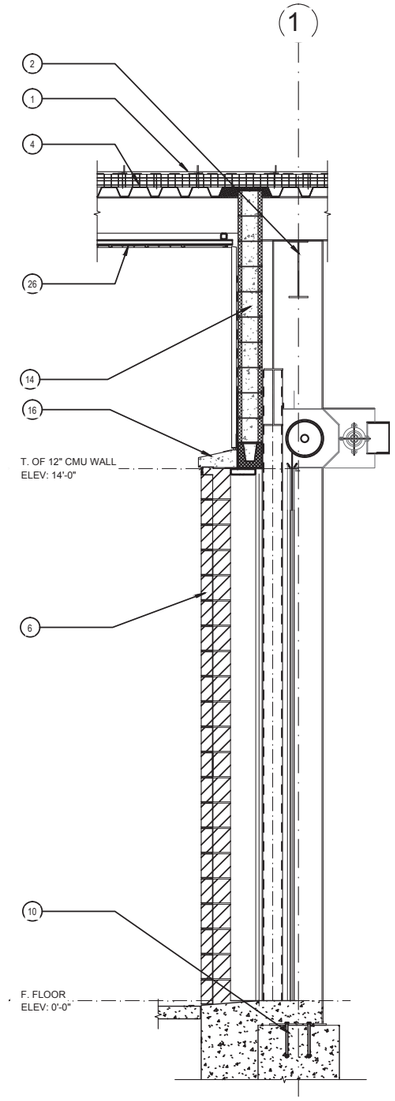

2 WALL SECTION -SOUTH O.H.D.
1/2" = 1'-0"

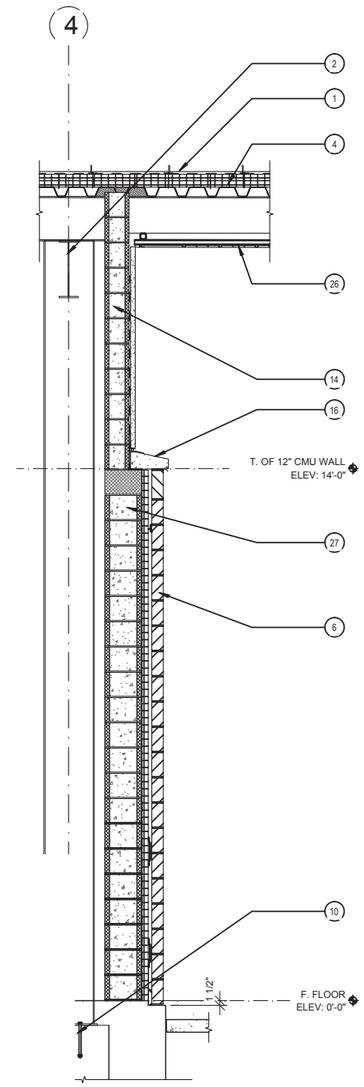

1 WALL SECTION -NORTH
1/2" = 1'-0"

KEYED NOTES
(KEYED NOTES APPLY TO THIS SHEET ONLY)

1 STANDING SEAM METAL ROOF -SLOPE 1:12
2 PRE-ENGINEERED METAL BUILDING -RIGID FRAME SYSTEM
3 ROOF PURLIN
4 DOUBLE LAYER OF 2.00" ISO
OFFSET JOINTS 12"
TOTAL INSULATION VALUE -R-23
5 PREFINISHED ROOF GUTTER AND DOWNSPOUT: 6"X6" GUTTER AND 5"X5" DOWNSPOUT. TYPICAL
6 4" CMU VENEER
7 ADJUSTABLES WALL TIES AT 16" O. C. VERTICAL
8 DOWNSPOUT HANGER STRAPS ATTACHED TO CMU VENEER
9 48" HT X 16 GA. PREFINISHED METAL DOWNSPOUT BOOT
10 STRUCTURAL FOUNDATION. REFER TO STRUCTURAL DRAWINGS.
11 CONCRETE WALKWAY. REFER TO CIVIL DRAWINGS
12 SCHEDULE BASE. TYPICAL
13 SCHEDULE FLOOR FINISH. TYPICAL
14 8" CMU WALL
15 EIFS SYSTEM
16 CONTINUOUS STONE CAP SILL
17 SCHEDULED FLOOR FINISH. TYPICAL
18 SCHEDULED BASE. TYPICAL
19 ROLL UP DOOR HOOD. REFER TO SPECIFICATIONS
20 ROLL UP DOOR SLATS. REFER TO SPECIFICATIONS
21 ROLL UP HEADER -GALVANIZED
22 22 ROLL UP DOOR JAMB -GALVANIZED
23 23 ROLL UP DOOR ASTRAGAL
24 1/2" SLAB RECESS W/ 1/2" SLOPED APRON.
25 DOWNSPOUT BEYOND
26 METAL SOFFIT
27 12" CMU WALL
28 TRANSLUSCENT WINDOW SYSTEM
29 INTERIOR DOUBLE PANNED WINDOWS. 0.5" CLEARANCE
30 STRUCTURAL LINTEL -TYP. REFER TO STRUCTURAL SHEETS.

REGISTERED ARCHITECT JAMES F. CASCIO 15565 STATE OF TEXAS
05.11.2016

Revision Number	Revision Date	Revision Description	Issued by
DSGN	DR	CHK	APVD
	J. Palomo	D. Campos	XXX	XXXX

CasaBella Architects
3821 JUNIPER TRACE, SUITE 104
AUSTIN, TX 78738 512-266-3700

Montopolis Water Reclamation Initiative (WRI)
Storage Reservoir and Pump Station
2711 Montopolis Drive
Austin Water, Austin, Texas

CH2MHILL.
TBPE FIRM NO. 3699

ARCHITECTURAL
WALL SECTIONS

REUSE OF DOCUMENTS

APPROVAL

SITE PLAN APPROVAL SHEET OF
FILE NUMBER: SPC-2015-0322C APPLICATION DATE: JULY 17, 2015
APPROVED BY COMMISSION ON: N/A UNDER SECTION 142 OF
CHAPTER 25-5 OF THE CITY OF AUSTIN CODE.
EXPIRATION DATE (25-5-81, LDC) _____ CASE MANAGER LYNDA COURTNEY
PROJECT EXPIRATION DATE (ORD.#970905-A) _____ DWPZ _____ DDZ _____

Director, Planning and Development Review
RELEASE FOR GENERAL COMPLIANCE: _____ ZONING P-NP LI-NP
Rev. 1 _____ Correction 1 _____
Rev. 2 _____ Correction 2 _____
Rev. 3 _____ Correction 3 _____
Final plat must be recorded by the Project Expiration Date, if applicable. Subsequent Site Plans which do not comply with the Code current at the time of filing, and all required Building Permits and/or a notice of construction (if a building permit is not required), must also be approved prior to the Project Expiration Date.

BAR IS ONE INCH ON ORIGINAL DRAWING
0 1"

DATE	MAY 2016
PROJ	472902
DWG	A-501
SHEET 53	OF 126

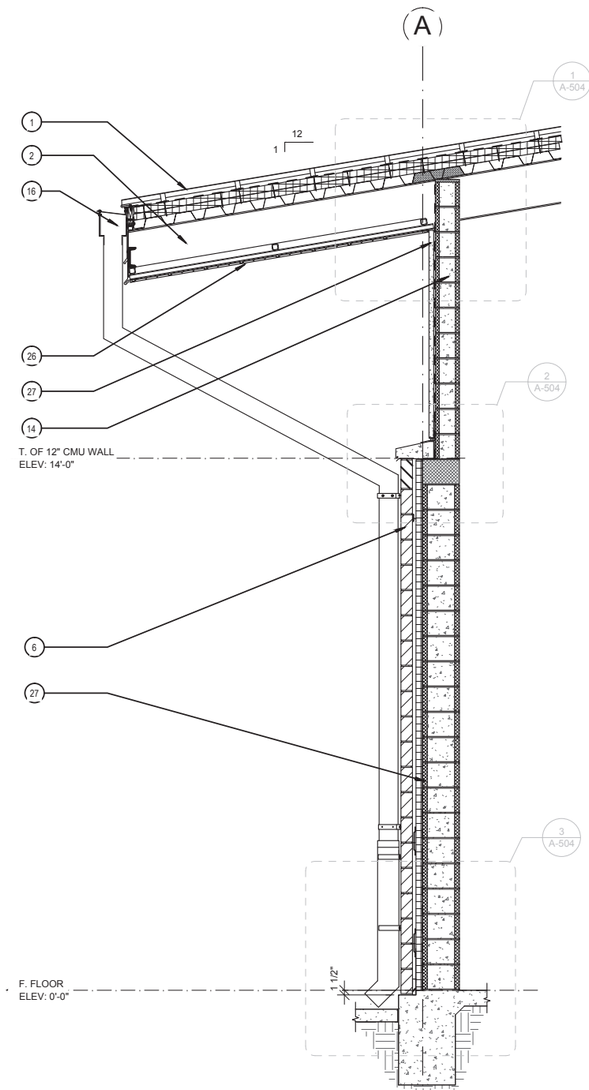

4 EXTERIOR WALL SECTION -WEST
1/2" = 1'-0"

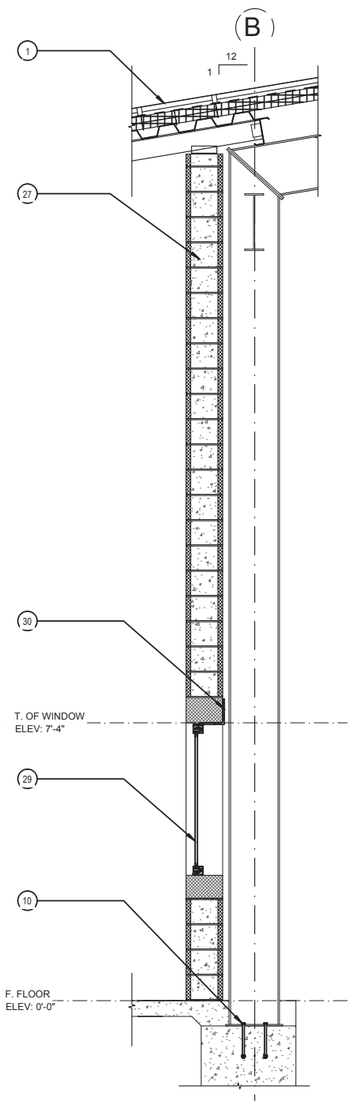

3 INTERIOR WALL SECTION
1/2" = 1'-0"

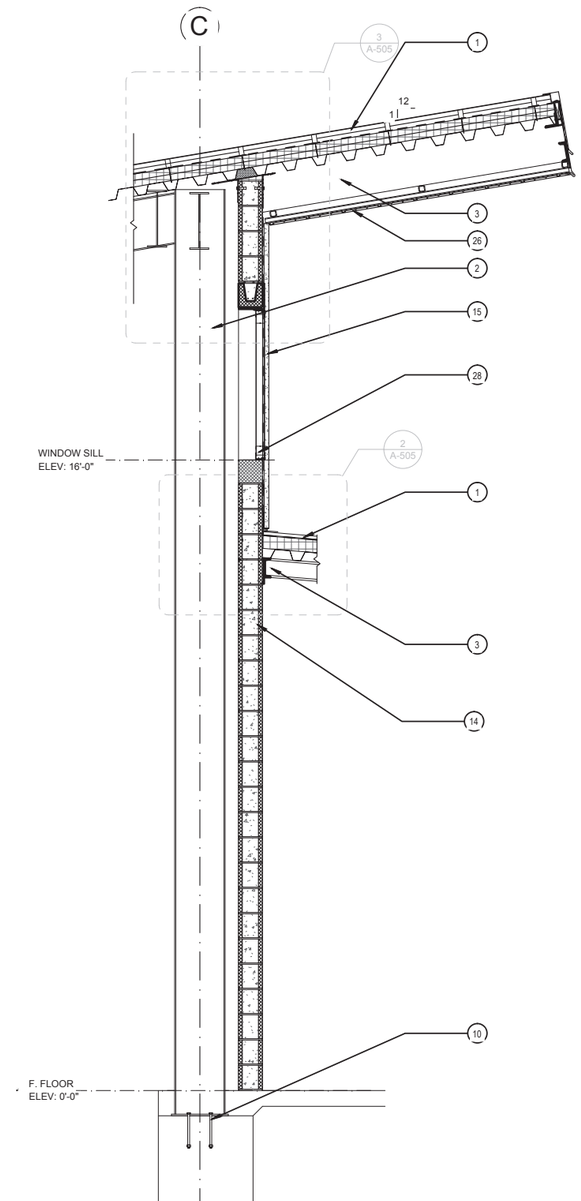

5 EXTERIOR WALL SECTION AT CLERESTORY
1/2" = 1'-0"

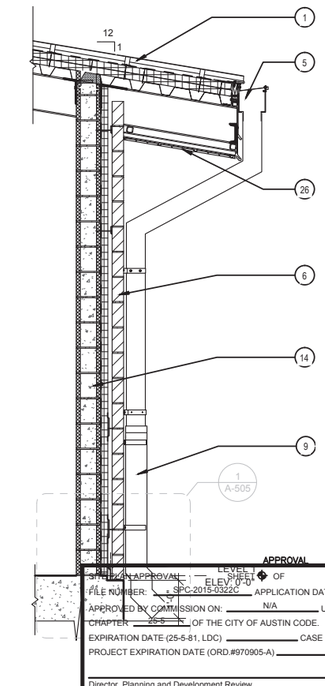

1 EXTERIOR WALL SECTION -EAST
1/2" = 1'-0"

KEYED NOTES
(KEYED NOTES APPLY TO THIS SHEET ONLY)

1 STANDING SEAM METAL ROOF -SLOPE 1:12
2 PRE-ENGINEERED METAL BUILDING -RIGID FRAME SYSTEM
3 ROOF PURLIN
4 DOUBLE LAYER OF 2.00" ISO
OFFSET JOINTS 12"
TOTAL INSULATION VALUE -R-23
5 PREFINISHED ROOF GUTTER AND DOWNSPOUT: 6"X6" GUTTER AND 5"X5" DOWNSPOUT. TYPICAL
6 4" CMU VENEER
7 ADJUSTABLES WALL TIES AT 16" O. C. VERTICAL
8 DOWNSPOUT HANGER STRAPS ATTACHED TO CMU VENEER
9 48" HT X 16 GA. PREFINISHED METAL DOWNSPOUT BOOT
10 STRUCTURAL FOUNDATION. REFER TO STRUCTURAL DRAWINGS.
11 CONCRETE WALKWAY. REFER TO CIVIL DRAWINGS
12 SCHEDULE BASE. TYPICAL
13 SCHEDULE FLOOR FINISH. TYPICAL
14 8" CMU WALL
15 EIFS SYSTEM
16 CONTINUOUS STONE CAP SILL
17 SCHEDULED FLOOR FINISH. TYPICAL
18 SCHEDULED BASE. TYPICAL
19 ROLL UP DOOR HOOD. REFER TO SPECIFICATIONS
20 ROLL UP DOOR SLATS. REFER TO SPECIFICATIONS
21 ROLL UP HEADER -GALVANIZED
22 22 ROLL UP DOOR JAMB -GALVANIZED
23 23 ROLL UP DOOR ASTRAGAL
24 1/2" SLAB RECESS W/ 1/2" SLOPED APRON.
25 DOWNSPOUT BEYOND
26 METAL SOFFIT
27 12" CMU WALL
28 TRANSLUSCENT WINDOW SYSTEM
29 INTERIOR DOUBLE PANNED WINDOWS. 0.5" CLEARANCE
30 STRUCTURAL LINTEL -TYP. REFER TO STRUCTURAL SHEETS.

REGISTERED ARCHITECT JAMES F. PALOMO 15565 STATE OF TEXAS
05.11.2016

Revision Number	Revision Date	Revision Description	Issued by
DSGN	DR	CHK	APVD
	J. Palomo	D. Campos	XXX	XXXX

CasaBella Architects
3821 JUNIPER TRACE, SUITE 104
AUSTIN, TX 78738 512-436-9700

Montopolis Water Reclamation Initiative (WRI)
Storage Reservoir and Pump Station
2711 Montopolis Drive
Austin Water, Austin, Texas

CH2MHILL.
TBPE FIRM NO. 3699

ARCHITECTURAL
WALL SECTIONS

REUSE OF DOCUMENTS

APPROVAL
SITE PLAN APPROVAL: LEVEL: SHEET OF
FILE NUMBER: SPC-2015-0322C ELEV. 0'-0" APPLICATION DATE: JULY 17, 2015
APPROVED BY COMMISSION ON: N/A UNDER SECTION 142 OF
CHAPTER 25-5 OF THE CITY OF AUSTIN CODE.
EXPIRATION DATE (25-5-81, LDC) CASE MANAGER LYNDA COURTNEY
PROJECT EXPIRATION DATE (ORD.#970905-A) DWPZ DDZ

Director, Planning and Development Review
RELEASE FOR GENERAL COMPLIANCE: ZONING P-NP LI-NP
Rev. 1 Correction 1
Rev. 2 Correction 2
Correction 3
Final plat must be recorded by the Project Expiration Date, if applicable. Subsequent Site Plans which do not comply with the Code current at the time of filing, and all required Building Permits and/or a notice of construction (if a building permit is not required), must also be approved prior to the Project Expiration Date.

BAR IS ONE INCH ON ORIGINAL DRAWING
0 1"

DATE	MAY 2016
PROJ	472902
DWG	A-502
SHEET 54	OF 126

FILE PATH: C:\Users\cad-22\Documents\Montopolis Reuse VC_RED.cab_cad-22.rvt
PLOTTED: 7/14/2015 1:29:02 PM

FILENAME:
PLOT DATE:May 11, 2016 PLOT TIME:3:36 PM

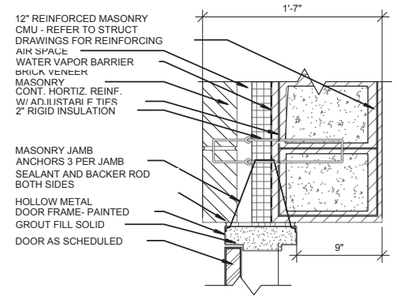

11 EXTERIOR DOOR JAMB
1 1/2" = 1'-0"

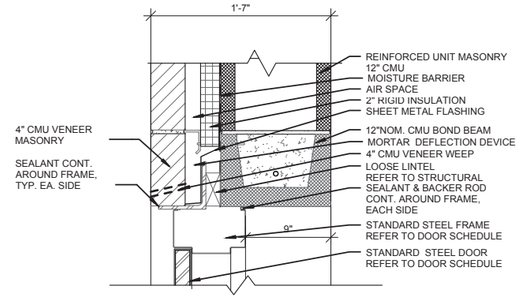

10 EXTERIOR DOOR HEAD
1 1/2" = 1'-0"

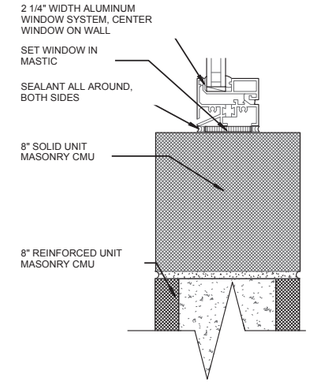

9 TYP. INTERIOR WINDOW SILL DETAIL
3" = 1'-0"

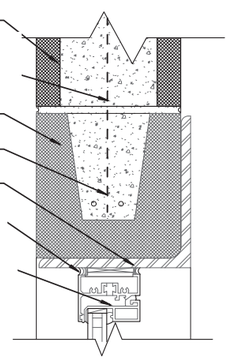

8 TYP. INTERIOR WINDOW HEAD
3" = 1'-0"

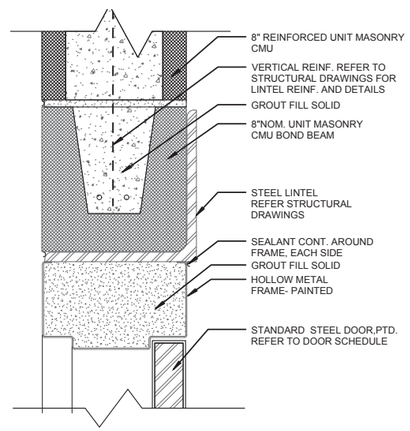

7 TYP. INTERIOR DOOR HEAD
3" = 1'-0"

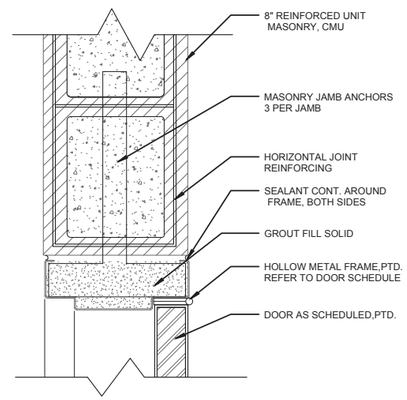

6 TYP. INTERIOR DOOR JAMB
3" = 1'-0"

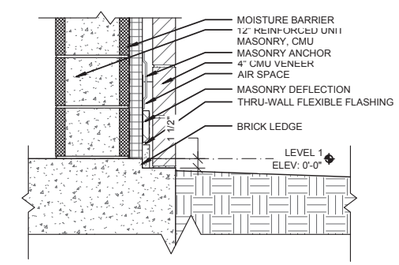

5 TYP. BRICK LEDGE DETAIL
1" = 1'-0"

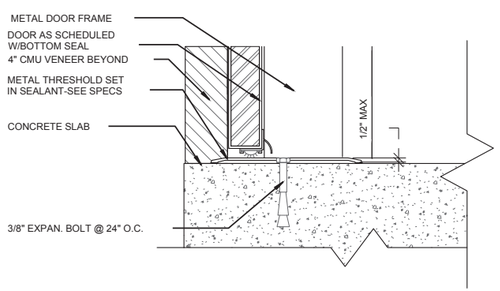

4 TYP. DOOR THRESHOLD
3" = 1'-0"

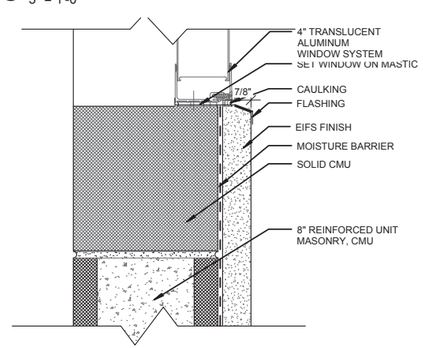

3 EXTERIOR TRANSLUCENT WINDOW SILL
3" = 1'-0"

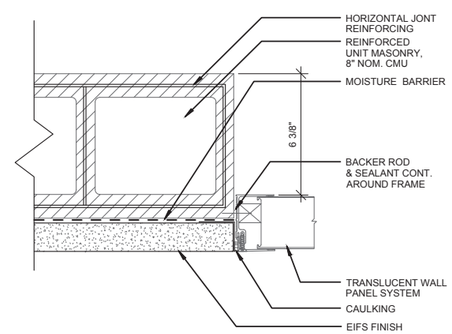

2 EXTERIOR TRANSLUCENT WINDOW JAMB
3" = 1'-0"

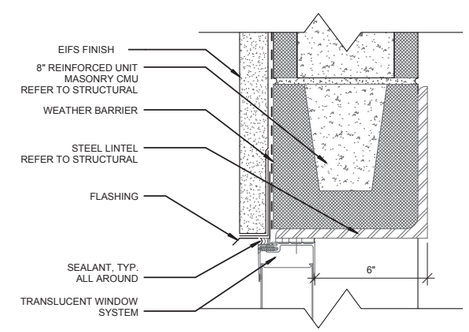

1 EXTERIOR TRANSLUCENT WINDOW HEAD DETAIL
3" = 1'-0"

APPROVAL

SITE PLAN APPROVAL SHEET OF
FILE NUMBER: SPC-2015-0322C APPLICATION DATE: JULY 17, 2015
APPROVED BY COMMISSION ON: N/A UNDER SECTION 142 OF
CHAPTER 25-5 OF THE CITY OF AUSTIN CODE.
EXPIRATION DATE (25-5-81, LDC) _____ CASE MANAGER LYNDA COURTNEY
PROJECT EXPIRATION DATE (ORD.#970905-A) _____ DWPZ _____ DDZ _____

Director, Planning and Development Review
RELEASE FOR GENERAL COMPLIANCE: _____ ZONING P-NP LI-NP
Rev. 1 _____ Correction 1 _____
Rev. 2 _____ Correction 2 _____
Rev. 3 _____ Correction 3 _____

Final plat must be recorded by the Project Expiration Date, if applicable. Subsequent Site Plans which do not comply with the Code current at the time of filing, and all required Building Permits and/or a notice of construction (if a building permit is not required), must also be approved prior to the Project Expiration Date.

REGISTERED ARCHITECT JAIME F. PALOMO 15580 STATE OF TEXAS
05.11.2016

Revision Number	Revision Date	Revision Description			Issued by
DSGN	DR	CHK	APVD		XXXX
	J. Palomo	D. Campos	XXX		

CasaBella Architects
3821 JUNIPER TRACE, SUITE 104
AUSTIN, TX 78738 512-436-0700

Montopolis Water Reclamation Initiative (WRI)
Storage Reservoir and Pump Station
2711 Montopolis Drive
Austin Water, Austin, Texas

CH2MHILL.
TBPE FIRM NO. 3699

ARCHITECTURAL
WALL SECTIONS

REUSE OF DOCUMENTS

BAR IS ONE INCH ON ORIGINAL DRAWING
0 1"

DATE	MAY 2016
PROJ	472902
DWG	A-503
SHEET 55	OF 126

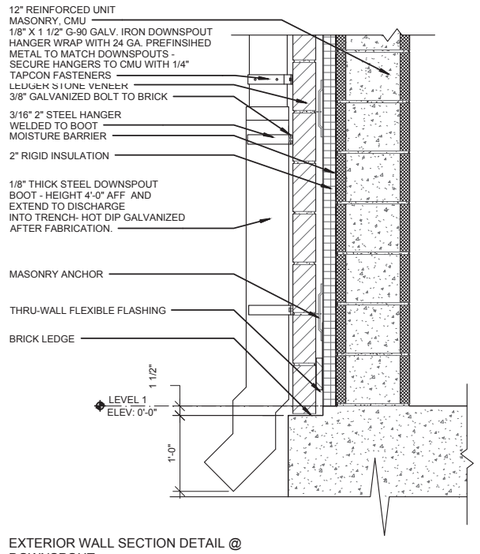

3 EXTERIOR WALL SECTION DETAIL @ DOWNSPOUT
1" = 1'-0"

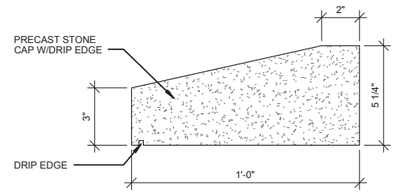

4 PRECAST STONE DETAIL
3" = 1'-0"

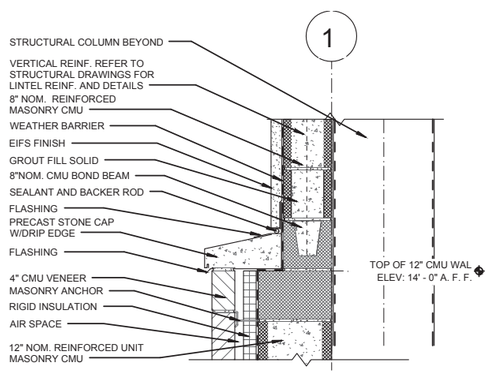

2 EXTERIOR WALL SECTION DETAIL @ STONE CAP
1" = 1'-0"

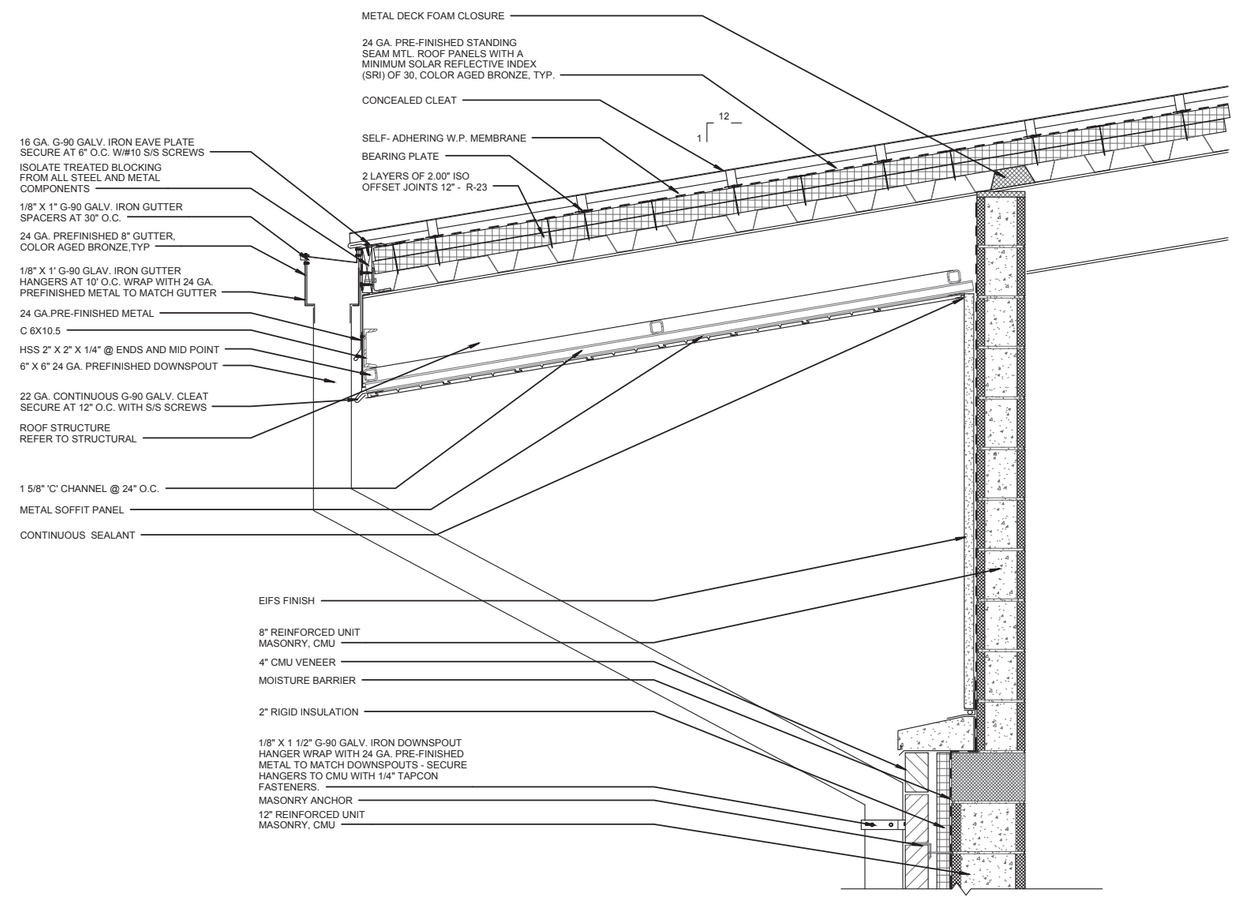

1 EXTERIOR WALL SECTION DETAIL -WEST
1" = 1'-0"

APPROVAL

SITE PLAN APPROVAL SHEET OF
FILE NUMBER: SPC-2015-0322C APPLICATION DATE: JULY 17, 2015
APPROVED BY COMMISSION ON: N/A UNDER SECTION 142 OF
CHAPTER 25-5 OF THE CITY OF AUSTIN CODE.
EXPIRATION DATE (25-5-81, LDC) _____ CASE MANAGER LYNDA COURTNEY
PROJECT EXPIRATION DATE (ORD.#970905-A) _____ DWPZ _____ DDZ _____

Director, Planning and Development Review
RELEASE FOR GENERAL COMPLIANCE: _____ ZONING P-NP LI-NP
Rev. 1 _____ Correction 1 _____
Rev. 2 _____ Correction 2 _____
Rev. 3 _____ Correction 3 _____

Final plat must be recorded by the Project Expiration Date, if applicable. Subsequent Site Plans which do not comply with the Code current at the time of filing, and all required Building Permits and/or a notice of construction (if a building permit is not required), must also be approved prior to the Project Expiration Date.

REGISTERED ARCHITECT JAMES F. PALOMO 15565 STATE OF TEXAS
05.11.2016

Revision Number	Revision Date	Revision Description	Issued by
DSGN	DR	CHK	APV'D
	J. Palomo	D. Campos	XXX	XXXX

CasaBella Architects
3821 JUNIPER TRACE, SUITE 104
AUSTIN, TX 78738 512-436-9100

Montopolis Water Reclamation Initiative (WRI)
Storage Reservoir and Pump Station
2711 Montopolis Drive
Austin Water, Austin, Texas

CH2MHILL.
TBPE FIRM NO. 3699

ARCHITECTURAL
WALL SECTION DETAILS

REUSE OF DOCUMENTS

BAR IS ONE INCH ON ORIGINAL DRAWING
0 1"

DATE	MAY 2016
PROJ	472902
DWG	A-504
SHEET 56	OF 126

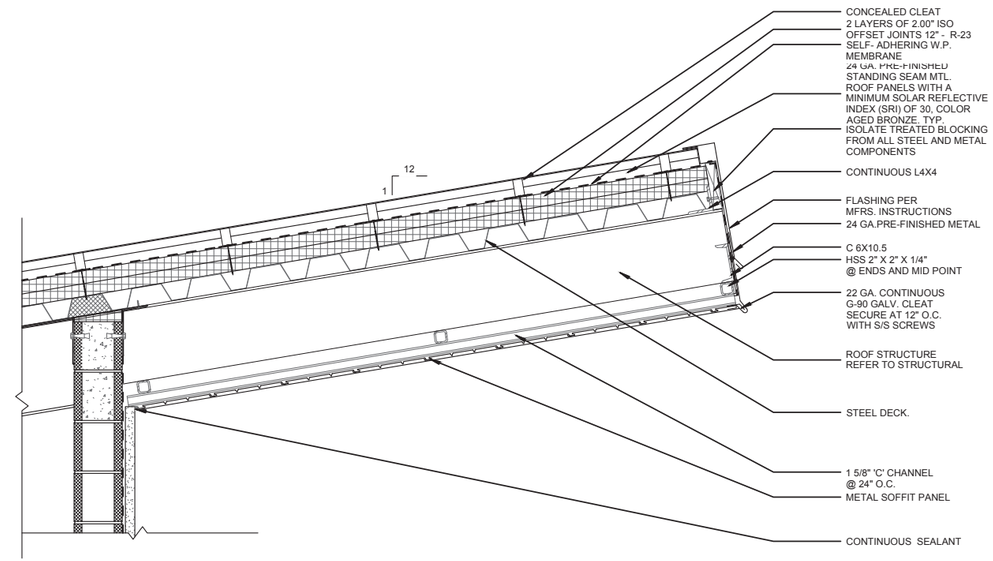

3 EXTERIOR WALL SECTION DETAIL -TOP
1" = 1'-0"

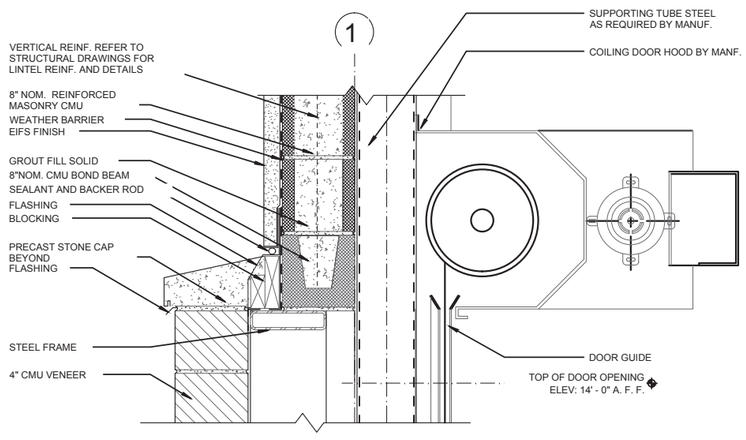

5 EXTERIOR COILING DOOR HEAD
1 1/2" = 1'-0"

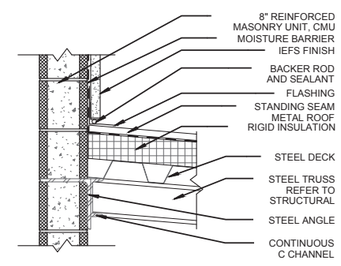

2 EXTERIOR WALL SECTION DETAIL -EAST
1" = 1'-0"

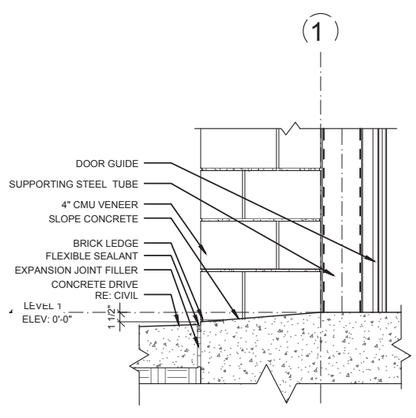

4 EXTERIOR COILING DOOR THRESHOLD
1" = 1'-0"

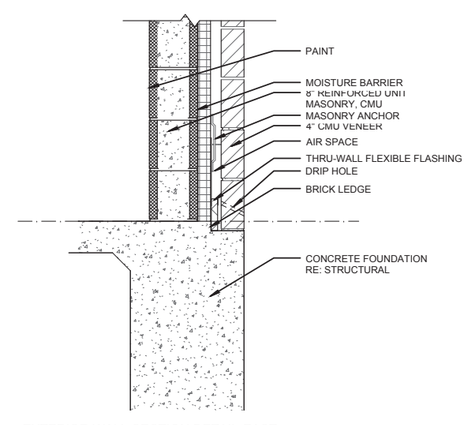

1 EXTERIOR WALL SECTION DETAIL-EAST
1" = 1'-0"

APPROVAL

SITE PLAN APPROVAL SHEET OF
FILE NUMBER: SPC-2015-0322C APPLICATION DATE: JULY 17, 2015
APPROVED BY COMMISSION ON: N/A UNDER SECTION 142 OF
CHAPTER 25-5 OF THE CITY OF AUSTIN CODE.
EXPIRATION DATE (25-5-81, LDC) _____ CASE MANAGER LYNDA COURTNEY
PROJECT EXPIRATION DATE (ORD.#970905-A) _____ DWPZ _____ DDZ _____

Director, Planning and Development Review
RELEASE FOR GENERAL COMPLIANCE: _____ ZONING P-NP LI-NP
Rev. 1 _____ Correction 1 _____
Rev. 2 _____ Correction 2 _____
Rev. 3 _____ Correction 3 _____

Final plat must be recorded by the Project Expiration Date, if applicable. Subsequent Site Plans which do not comply with the Code current at the time of filing, and all required Building Permits and/or a notice of construction (if a building permit is not required), must also be approved prior to the Project Expiration Date.

REGISTERED ARCHITECT JAMES F. PALOMO 15565 STATE OF TEXAS
05.11.2016

Revision Number	Revision Date	Revision Description	Issued by
DSGN	DR	CHK	APVD
	J. Palomo	D. Campos	XXXX

CasaBella Architects
3621 JUNIPER TRACE, SUITE 104
AUSTIN, TX 78738 512-436-3100

Montopolis Water Reclamation Initiative (WRI)
Storage Reservoir and Pump Station
2711 Montopolis Drive
Austin Water, Austin, Texas

CH2MHILL.
TBPE FIRM NO. 3889

ARCHITECTURAL
WALL SECTION DETAILS

BAR IS ONE INCH ON ORIGINAL DRAWING
0 1"

DATE	MAY 2016
PROJ	472902
DWG	A-505
SHEET 57	OF 126

REUSE OF DOCUMENTS

FILE PATH: C:\Users\cad-22\Documents\Montopolis Reuse VC_RED.cab_cad-22.rvt
PLOTTED: 7/14/2015 1:29:02 PM

FILENAME:
PLOT DATE:May 11, 2016 PLOT TIME:3:59 PM

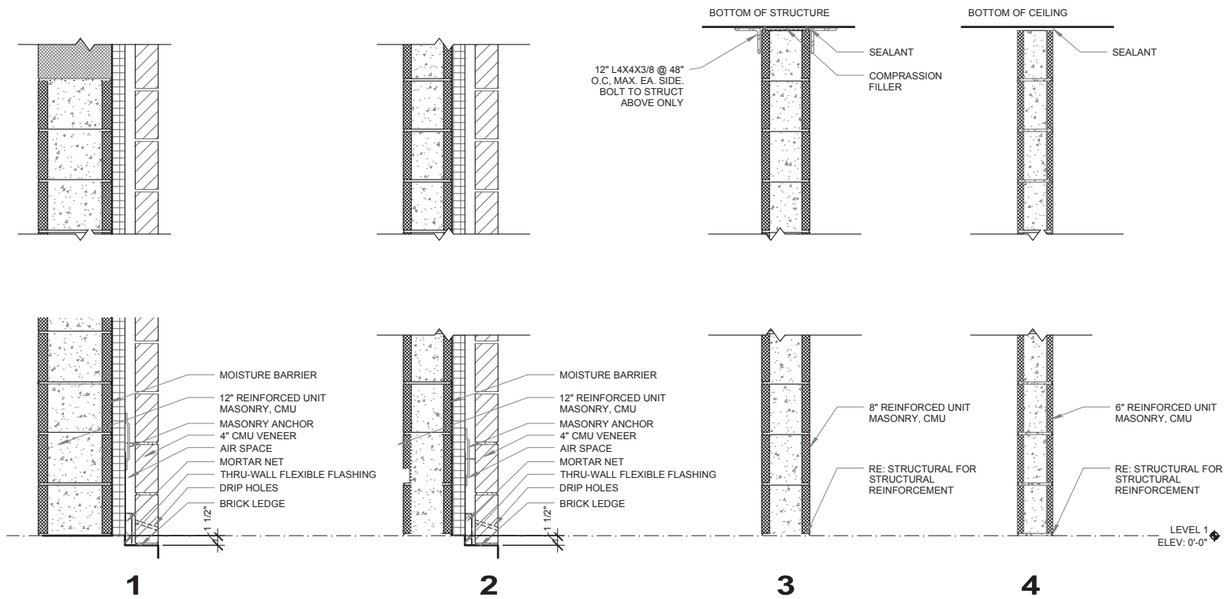

5 WALL TYPES
1" = 1'-0"

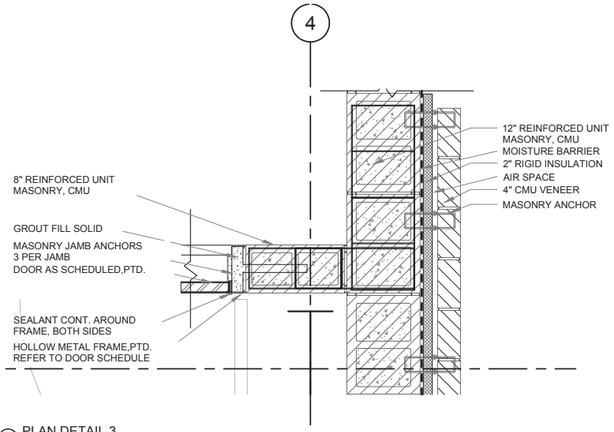

3 PLAN DETAIL 3
1" = 1'-0"

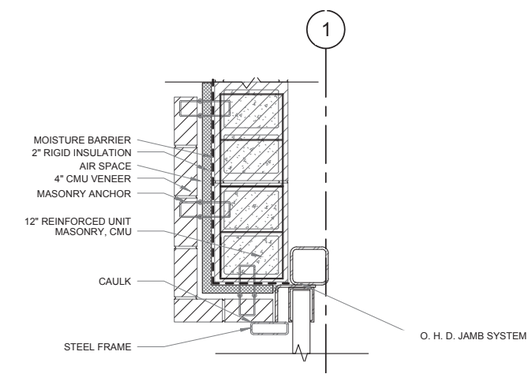

2 PLAN DETAIL 2
1" = 1'-0"

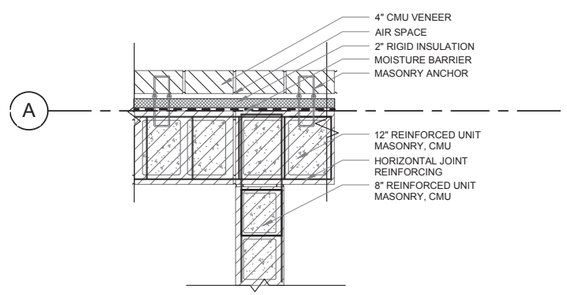

4 PLAN DETAIL 4
1" = 1'-0"

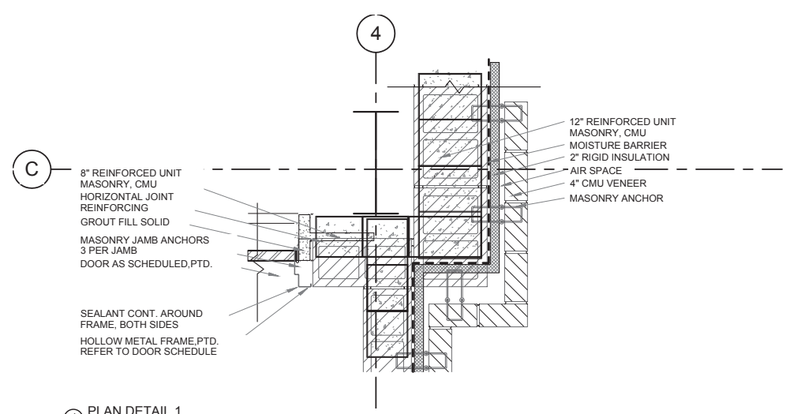

1 PLAN DETAIL 1
1" = 1'-0"

APPROVAL

SITE PLAN APPROVAL SHEET OF
FILE NUMBER: SPC-2015-0322C APPLICATION DATE: JULY 17, 2015
APPROVED BY COMMISSION ON: N/A UNDER SECTION 142 OF
CHAPTER 25-5 OF THE CITY OF AUSTIN CODE.
EXPIRATION DATE (25-5-81, LDC) _____ CASE MANAGER LYNDA COURTNEY
PROJECT EXPIRATION DATE (ORD.#970905-A) _____ DWPZ _____ DDZ _____

Director, Planning and Development Review
RELEASE FOR GENERAL COMPLIANCE: _____ ZONING P-NP LI-NP
Rev. 1 _____ Correction 1 _____
Rev. 2 _____ Correction 2 _____
Rev. 3 _____ Correction 3 _____

Final plat must be recorded by the Project Expiration Date, if applicable. Subsequent Site Plans which do not comply with the Code current at the time of filing, and all required Building Permits and/or a notice of construction (if a building permit is not required), must also be approved prior to the Project Expiration Date.

STATE OF TEXAS REGISTERED ARCHITECT JAIME E. PALOMO
ISSUED
05.11.2016

Revision Number	Revision Date	Revision Description			Issued by
DSGN	DR	CHK	D. Campos	APVD	XXXX
	J. Palomo	XXX			

CasaBella Architects
3801 JUNIPER TRACE, SUITE 104
AUSTIN, TX 78738 512-426-5700

Montopolis Water Reclamation Initiative (WRI)
Storage Reservoir and Pump Station
2711 Montopolis Drive
Austin Water, Austin, Texas

CH2MHILL.
TBPE FIRM NO. 3699

ARCHITECTURAL
ARCHITECTURAL SITE PLAN

REUSE OF DOCUMENTS

BAR IS ONE INCH ON ORIGINAL DRAWING
0 1"

DATE	MAY 2016
PROJ	472902
DWG	A-507
SHEET 58	OF 126

FILE PATH: C:\Users\cad-22\Documents\Montopolis Reuse VC_RED.cab_cad-22.rvt
PLOTTED: 7/14/2015 1:29:02 PM

FILENAME:
PLOT DATE:May 11, 2016 PLOT TIME:4:03 PM

HARDWARE SCHEDULE

HW1
DOOR 100A, 105; TO HAVE:

2 PC HINGE	SL24HD
1 PANIC	EL9927NL
1 PANIC	9927EO
1 CYLINDER	34
1 TRANSFER	EPT10
1 POWER SUPPLY	PS914-2RS
2 OH STOP	GJ90H - TB
1 THRESHOLD	425
2 SWEEP	102V
1 SEAL	5050 - BN
1 SET ASTRAGAL	115NA
1 RAIN DRIP	16A + 4"

HW2
DOOR 100B; TO HAVE:

1-1/2 PR HINGES	BB1279 - 4-1/2 X 4-1/2
1 PANIC	99L
1 CYLINDER	34
1 CLOSER	P4041 - TB
1 STOP	1214ES
1 SEAL	5050 - BN

HW3
DOOR 101A; TO HAVE:

3 PR HINGES	BB1279 - 4-1/2 X 4-1/2
1 PANIC	9927NL
1 PANIC	9927EO
1 CYLINDER	34
2 CLOSER	P4041 - TB
2 STOP	1214ES
1 SEAL	5050 - BN
1 SET ASTRAGAL	115NA

HW4
DOOR 101B, 106A; TO HAVE:

1-1/2 PR HINGES	BB1279 - NRP - 4-1/2 X 4-1/2
1 LOCKSET	8225-LNL
1 CLOSER	P4041 - TB
1 STOP	1214ES - 2-1/4"
1 THRESHOLD	425
1 SWEEP	102V
1 SEAL	5050 - BN

HW5
DOOR 102A, 102B; TO HAVE:

1 PC HINGE	SL24HD
1 LOCKSET	8204-LNL
1 ELEC STRIKE	VD6211 - 24V DC - FSE
1 CLOSER	P4041 - TB
1 STOP	1214ES - 2-1/4"
1 THRESHOLD	425
1 SWEEP	102V
1 SEAL	5050 - BN
1 RAIN DRIP	16A + 4"

HW6
DOOR 102C; TO HAVE:

NOTE: ALL HARDWARE BY DOOR SUPPLIER.

HW7
DOOR 104; TO HAVE:

1-1/2 PR HINGES	BB1279 - 4-1/2 X 4-1/2
1 PRIVACY	8265-LNL
1 STOP	1270WV
3 SILENCER	GJ64

HW8
DOOR 106B; TO HAVE:

2 PC HINGE	SL24HD
2 FLUSHBOLT	3917
1 LOCKSET	8204-LNL
1 ELEC STRIKE	VD6223 - 24V DC - FSE
1 LOCK GUARD	LG12
2 OH STOP	GJ90H - TB
1 THRESHOLD	425
2 SWEEP	102V
1 SEAL	5050 - BN
1 SET ASTRAGAL	115NA
1 RAIN DRIP	16A + 4"

DOOR SCHEDULE

Door Mark	DOOR Type	DOOR Height	DOOR Width	DOOR Thickness	DOOR Material	DOOR Finish	FRAME Type	FRAME Material	FRAME Finish	Hardware	Fire Rating	Comments
100A		7' - 0"	6' - 0"	2"	MTL	PT	2	MTL	PT	HW1		INSULATED
100B		7' - 0"	3' - 0"	2"	MTL	PT	1	MTL	PT	HW2		INSLUATED
101A		7' - 0"	6' - 0"	2"	MTL	PT	2	MTL	PT	HW3		INSULATED
101B		7' - 0"	3' - 0"	2"	MTL	PT	1	MTL	PT	HW4		INSULATED
102A		7' - 0"	3' - 0"	2"	MTL	PT	1	MTL	PT	HW5		INSULATED
102B		7' - 0"	3' - 0"	2"	MTL	PT	1	MTL	PT	HW5		INSULATED
102C		14' - 0"	16' - 0"	1"						(none)	As Specified in 08 33 23	INSULATED
104		7' - 0"	3' - 0"	2"	MTL	PT	1	MTL	PT	HW7		INSULATED
105		7' - 0"	6' - 0"	2"	MTL	PT	2	MTL	PT	HW1		INSULATED
106A		7' - 0"	3' - 0"	2"	MTL	PT	1	MTL	PT	HW4		INSULATED
106B		7' - 0"	6' - 0"	2"	MTL	PT	2	MTL	PT	HW8		INSULATED

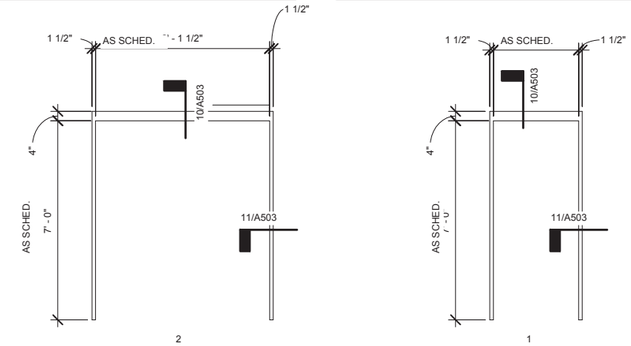

WHERE GLASS IS INDICATED PROVIDE:
1/4" CLEAR TEMPERED GLASS AT NON-FIRE RATED ASSEMBLIES
1/4" WIRE GLASS AT FIRE RATED ASSEMBLIES

CLEAR TEMPERED GLASS INDICATED BY T
REF. DESIGN SELECTIONS FOR THICKNESS

OR & FRAMES TYPES

ROOM FINISH SCHEDULE

ROOM #	ROOM NAME	FLOOR	NORTH WALL	NORTH BASE	EAST WALL	EAST BASE	SOUTH WALL	SOUTH BASE	WES WALL	WES BASE	CEILING	COMMENTS
100	ELECTRICAL	Concrete -Steel Trowel Finish									Finishes - GWB ceiling	FLOOR: NON-SKID EPOXY
101	CONTROL	Concrete -Steel Trowel Finish									Finishes - GWB ceiling	FLOOR: NON-SKID EPOXY
102	PUMP ROOM	Concrete -Steel Trowel Finish										FLOOR: STAIN W/ACRYLIC SEALER
104	RESTROOM	Concrete -Steel Trowel Finish	PAINT		PAINT		PAINT		PAINT		Finishes - GWB ceiling	FLOOR: STAIN W/ACRYLIC SEALER
105	CHLORINE ROOM	Concrete -Steel Trowel Finish										FLOOR: STAIN W/ACRYLIC SEALER
106	STORAGE	Concrete -Steel Trowel Finish										FLOOR: STAIN W/ACRYLIC SEALER

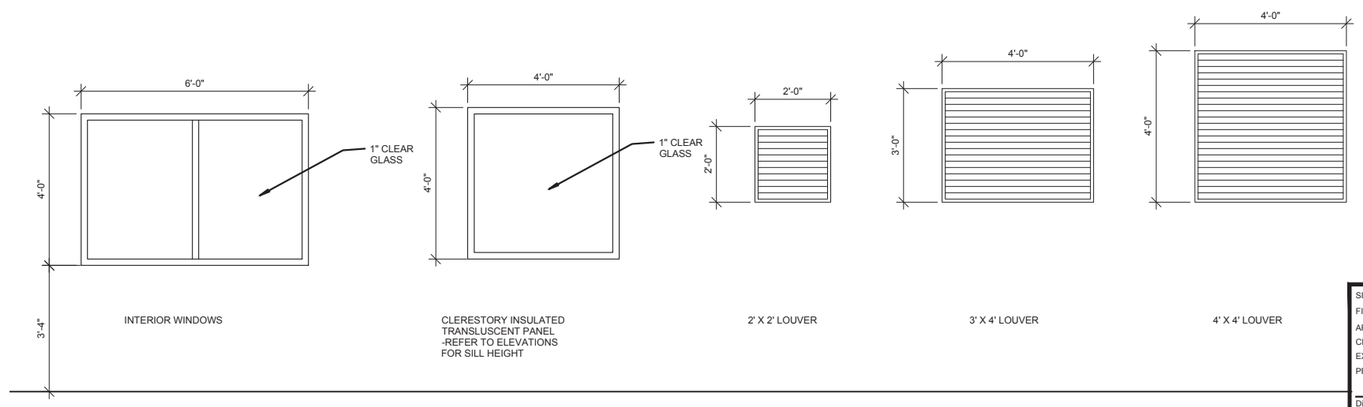

1 WINDOW TYPES
1/2" = 1'-0"

APPROVAL

SITE PLAN APPROVAL SHEET OF
FILE NUMBER: SPC-2015-0322C APPLICATION DATE: JULY 17, 2015
APPROVED BY COMMISSION ON: N/A UNDER SECTION 142 OF
CHAPTER 25-5 OF THE CITY OF AUSTIN CODE.
EXPIRATION DATE (25-5-81, LDC) CASE MANAGER LYNDA COURTNEY
PROJECT EXPIRATION DATE (ORD.#970905-A) DWPZ DDZ

Director, Planning and Development Review
RELEASE FOR GENERAL COMPLIANCE: ZONING P-NP LI-NP
Rev. 1 Correction 1
Rev. 2 Correction 2
Rev. 3 Correction 3
Final plat must be recorded by the Project Expiration Date, if applicable. Subsequent Site Plans which do not comply with the Code current at the time of filing, and all required Building Permits and/or a notice of construction (if a building permit is not required), must also be approved prior to the Project Expiration Date.

REGISTERED ARCHITECT JAMES ALCONES 15565 STATE OF TEXAS
05.11.2016

Revision Number	Revision Date	Revision Description	Issued by
DSGN	DR	CHK	APVD
	J. Palomo	D. Campos	XXX	XXXX

CasaBella Architects
3821 JUNIPER TRACE, SUITE 104
AUSTIN, TX 78738 512-263-0700

Montopolis Water Reclamation Initiative (WRI)
Storage Reservoir and Pump Station
2711 Montopolis Drive
Austin Water, Austin, Texas

CH2MHILL.
TBPE FIRM NO. 3699

ARCHITECTURAL
DOOR SCHEDULES AND DETAILS

REUSE OF DOCUMENTS

BAR IS ONE INCH ON ORIGINAL DRAWING
0 1"

DATE	MAY 2016
PROJ	472902
DWG	A-601
SHEET 59	OF 126

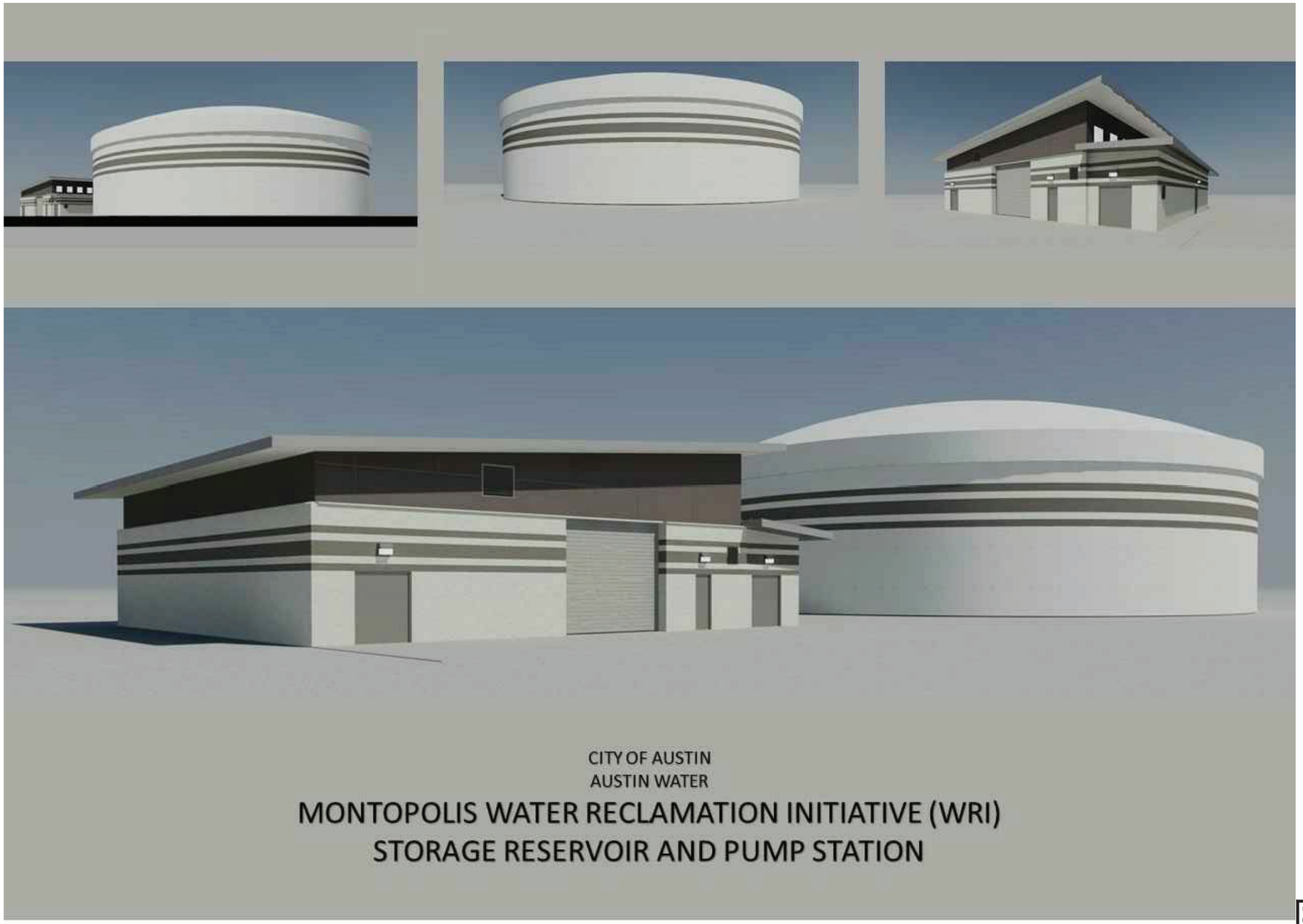

APPROVAL

SITE PLAN APPROVAL SHEET OF

FILE NUMBER: SPC-2015-0322C APPLICATION DATE: JULY 17, 2015

APPROVED BY COMMISSION ON: N/A UNDER SECTION 142 OF

CHAPTER 25-5 OF THE CITY OF AUSTIN CODE.

EXPIRATION DATE (25-5-81, LDC) _____ CASE MANAGER LYNDA COURTNEY

PROJECT EXPIRATION DATE (ORD.#970905-A) _____ DWPZ _____ DDZ _____

Director, Planning and Development Review

RELEASE FOR GENERAL COMPLIANCE: _____ ZONING P-NP LI-NP

Rev. 1 _____ Correction 1 _____

Rev. 2 _____ Correction 2 _____

Rev. 3 _____ Correction 3 _____

Final plat must be recorded by the Project Expiration Date, if applicable. Subsequent Site Plans which do not comply with the Code current at the time of filing, and all required Building Permits and/or a notice of construction (if a building permit is not required), must also be approved prior to the Project Expiration Date.

REGISTERED ARCHITECT JAME F. PALOMO 15565 STATE OF TEXAS

05.11.2016

Revision Number	Revision Date	Revision Description	Issued by
DSGN	J. Palomo	DR D. Campos	CHK XXX	APVD XXXX

CasaBella Architects
3821 JUNIPER TRACE, SUITE 104
AUSTIN, TX 78738 512-458-5700

Montopolis Water Reclamation Initiative (WRI)

Storage Reservoir and Pump Station
2711 Montopolis Drive
Austin Water, Austin, Texas

CH2MHILL.
TBPE FIRM NO. 3699

ARCHITECTURAL

ARCHITECTURAL RENDERINGS

REUSE OF DOCUMENTS

BAR IS ONE INCH ON ORIGINAL DRAWING
0 1"

DATE	MAY 2016
PROJ	472902
DWG	A-700
SHEET 60	OF 126

FILE PATH: C:\Usersicad-22\Documents\Montopolis Reuse VC_RED.cab_cad-22.rvt
PLOTTED: 7/14/2015 1:29:02 PM

FILENAME:

PLOT DATE:May 11, 2016 PLOT TIME:4:44 PM

GENERAL

1. THE GENERAL CONTRACTOR IS RESPONSIBLE FOR COORDINATION OF ALL RESULTING REVISIONS TO THE STRUCTURAL SYSTEM OR OTHER TRADES AS A RESULT OF ACCEPTANCE OF CONTRACTOR PROPOSED ALTERNATIVES OR SUBSTITUTIONS.

2. METHODS, PROCEDURES, AND SEQUENCES OF CONSTRUCTION ARE THE RESPONSIBILITY OF THE CONTRACTOR AND MUST SATISFY THE MINIMUM REQUIREMENTS OF THE 2012 INTERNATIONAL BUILDING CODE. THE CONTRACTOR SHALL TAKE ALL NECESSARY PRECAUTIONS TO MAINTAIN AND INSURE THE INTEGRITY OF THE STRUCTURE AT ALL STAGES OF CONSTRUCTION.

3. THE GENERAL CONTRACTOR AND SUB-CONTRACTORS SHALL DETERMINE THE SCOPE OF THE STRUCTURAL WORK FROM THE CONTRACT DOCUMENTS TAKEN AS A WHOLE. THE STRUCTURAL DRAWINGS SHALL NOT BE CONSIDERED SEPARATELY FOR PURPOSES OF BIDDING THE STRUCTURAL WORK. DUE CONSIDERATION SHALL BE GIVEN TO OTHER STRUCTURAL WORK OR WORK RELATED TO THE STRUCTURE, INCLUDING NECESSARY COORDINATION DESCRIBED OR IMPLIED BY THE ARCHITECTURAL, CIVIL AND MEP DRAWINGS.

4. THE REPRODUCTIVE USE OF THE STRUCTURAL CONTRACT DOCUMENTS OR ELECTRONIC FILES AS STRUCTURAL SHOP DRAWING DOCUMENTS BY THE CONTRACTOR OR SUB-CONTRACTORS IS NOT ALLOWED.

5. SCALES NOTED ON THE DRAWINGS ARE FOR GENERAL REFERENCE ONLY. NO DIMENSIONAL INFORMATION SHALL BE OBTAINED BY DIRECT SCALING OF THE DRAWING.

6. STRUCTURAL MEMBERS HAVE BEEN LOCATED AND DESIGNED TO ACCOMMODATE THE MECHANICAL EQUIPMENT OPENINGS SPECIFIED BY THE MECHANICAL CONSULTANT. ANY SUBMISSIONS RESULTING IN REVISIONS TO THE STRUCTURE SHALL BE THE RESPONSIBILITY OF THE CONTRACTOR TO COORDINATE WITH EEC.

7. PRINCIPAL OPENINGS IN THE STRUCTURE ARE INDICATED ON THE CONTRACT DOCUMENTS, REFER TO THE ARCHITECTURAL, MECHANICAL, ELECTRICAL, AND PLUMBING DRAWINGS FOR SLEEVES, CURBS, INSERTS, ETC. NOT HEREIN INDICATED. OPENINGS IN SLABS WITH A MAXIMUM SIDE DIMENSION OR DIAMETER OF 12 INCHES OR LESS SHALL NOT REQUIRE ADDITIONAL FRAMING OR REINFORCEMENT, UNLESS NOTED OTHERWISE. THE LOCATION OF SLEEVES OR OPENINGS IN STRUCTURAL MEMBERS SHALL BE SUBMITTED TO EEC FOR REVIEW.

8. GENERAL CONTRACTOR IS TO VERIFY AND COORDINATE THE SIZE AND LOCATION OF ALL PENETRATIONS THROUGH THE STRUCTURE WITH SHOP DRAWINGS FROM MECHANICAL EQUIPMENT SUPPLIERS AND INSTALLERS PRIOR TO CONSTRUCTION.

9. THESE DRAWINGS DO NOT, NOR ARE INTENDED TO, LOCATE PROPERTY LINES, BUILDING SET BACKS NOR HEIGHT LIMITATIONS. IT IS THE CONTRACTOR'S RESPONSIBILITY TO LOCATE THE BUILDING AND CONSTRUCT IT TO, AND WITHIN, APPLICABLE CODE RESTRICTIONS. FURTHER, IT IS THE CIVIL ENGINEER'S RESPONSIBILITY TO ADDRESS SITE DRAINAGE APPROPRIATE TO THE SITE AND IN CONSIDERATION TO ADJOINING PROPERTIES.

CODES

1. THE STRUCTURE AND COMPONENTS SHOWN IN THESE DRAWINGS HAVE BEEN DESIGNED UNDER THE GUIDELINES OF THE STRUCTURAL REQUIREMENTS LISTED IN THE 2012 INTERNATIONAL BUILDING CODE WITH REQUIRED AMENDMENTS.

2. MINIMUM DESIGN LOADS FOR BUILDINGS & OTHER STRUCTURES, ASCE/SEI 7-10.

3. STRUCTURAL STEEL: AISC STEEL CONSTRUCTION MANUAL, FOURTEENTH EDITION.

4. STRUCTURAL CONCRETE: AMERICAN CONCRETE INSTITUTE, ACI 318-11.

5. STRUCTURAL MASONRY: 2011 MASONRY STANDARDS JOINT COMMITTEE, ACI530-11/ASCE 5-11/TMS 402-11.

6. COLD-FORMED STEEL FRAMING (HEADERS AND WALLS): AISI S212-07 AND S211-07 RESPECTIVELY OR AISI S100-07.
COLD-FORMED STEEL FRAMING (LATERAL DESIGN): AISI S213-07.
COLD-FORMED STEEL FRAMING (TRUSSES): AISI S214-07.

DESIGN LOADS

1. SUPERIMPOSED DEAD LOADS (INCLUDED, BUT NOT LIMITED TO):

MECHANICAL AND CEILING:	10 PSF
ROOF ASSEMBLIES:	10 PSF
UTILITIES	10 PSF
CURB/PARTITIONS	5 PSF
FLOOR ASSEMBLIES:	10 PSF
FINISHES:	AS REQUIRED
SPRINKLER SYSTEMS:	AS REQUIRED

(FIRE SPRINKLER PIPING SUPPORTED BY THE STRUCTURAL SYSTEM IS TO BE DISTRIBUTED SO THAT THE WEIGHT OF THE WATER-FILLED PIPE DIVIDED BY TRIBUTARY AREA OF THE SUPPORTING MEMBER DOES NOT EXCEED 5 POUNDS PER SQUARE FOOT, AND THE LOADING IMPARTED TO ANY ONE STRUCTURAL MEMBER DOES NOT EXCEED 50 POUNDS PER LINEAR FOOT. EACH STRUCTURAL SUPPORT OF THE PIPING SHALL BE DESIGNED TO SUPPORT A LOAD EQUAL TO THE WEIGHT OF THE WATER-FILLED PIPE PLUS 250 POUNDS).

2. LIVE LOADS:

ROOF:	20PSF
FLOOR, GRATING, TYP. U.N.O.:	100PSF
PUMP STATION FLOOR:	300PSF

CRANE LOADS:
(SINGLE GIRDER, BRIDGE CRANE)

RATED CAPACITY:	5 TONS
IMPACT FACTORS:	
VERTICAL:	1.10
LATERAL:	0.20
LONGITUDINAL:	0.10

3. WIND LOADS

THE STRUCTURE HAS BEEN DESIGNED TO WITHSTAND THE WIND PRESSURES SPECIFIED IN ASCE 7-10 BASED ON THE FOLLOWING:

BASIC WIND SPEED (3 SECOND GUST)	Vult = 120 MPH; Vasd = 93 MPH
RISK CATEGORY	IV
WIND EXPOSURE	B
INTERNAL PRESSURE COEFFICIENT	± 0.18.

4. SEE THE FOLLOWING FOR DESIGN WIND PRESSURES PER ZONE FOR COMPONENTS & CLADDING:

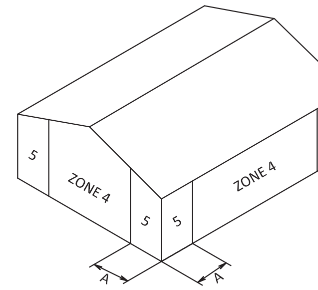

ISOMETRIC VIEW

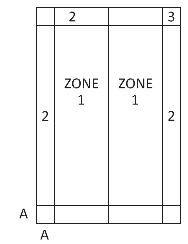

PLAN VIEW

NET DESIGN WIND PRESSURE, Pnet, (PSF) FOR COMPONENTS & CLADDING

	EFFECTIVE WIND AREA (SQ. FT.)				
	10	20	50	100	500
ZONE 1	16 -25.9	16 -25.2	16 -24.4	16 -23.7	
ZONE 2	16 -43.5	16 -38.8	16 -32.7	16 -28.1	
ZONE 3	16 -65.4	16 -54.2	16 -39.3	16 -28.1	
ZONE 4	25.9 -28.1	24.7 -26.9	23.2 -25.4	22.0 -24.2	19.3 -21.5
ZONE 5	25.9 -34.7	24.7 -32.4	23.2 -29.3	22.0 -26.9	19.3 -21.5

REFER TO INTERNATIONAL BUILDING CODE, 2012 EDITION FOR ZONE DEFINITION AND LOCATIONS. "A" SHALL BE TAKEN AS 7'-8".

NOTE 1: EFFECTIVE AREAS BETWEEN THOSE GIVEN ABOVE, THE PRESSURE IS PERMITTED TO BE LINEARLY INTERPOLATED.

NOTE 2: NET DESIGN WIND PRESSURES HAVE BEEN DETERMINED USING PART 2 WHICH REPRESENT THE NET PRESSURES (SUM OF INTERNAL AND EXTERNAL PRESSURES) APPLIED NORMAL TO BUILDING SURFACES.

5. GROUND SNOW LOAD Pg = 5 PSF

6. EARTHQUAKE LOADS

THE SEISMIC LATERAL LOAD ON THE STRUCTURE IS BASED ON THE FOLLOWING:

SEISMIC IMPORTANCE FACTOR, Ie	1.5
RISK CATEGORY	IV
MAPPED SPECTRAL RESPONSE ACCELERATIONS:	
Ss	0.064
S1	0.033
SITE CLASS	D (ASSUMED)
SPECTRAL RESPONSE COEFFICIENTS:	
Sds	0.068
Sd1	0.052
SEISMIC DESIGN CATEGORY	A
DESIGN BASE SHEAR	0.01W, W= EFFECTIVE SEISMIC WEIGHT OF THE STRUCTURE
SEISMIC RESPONSE COEFFICIENT(S), Cs	0.01
RESPONSE MODIFICATIONS FATOR(S), R	3.5

BASIC SEISMIC FORCE RESISTING SYSTEM(S):
STEEL FRAMED SUPERSTRUCTURE WITH STEEL MOMENT FRAMES.

ANALYSIS PROCEDURE USED:
EQUIVALENT LATERAL FORCE PROCEDURE

7. HANDRAILS AND GUARDRAILS SHALL BE DESIGNED IN ACCORDANCE WITH TABLE 1607.1 OF THE INTERNATIONAL BUILDING CODE AS FOLLOWS:

a. HANDRAIL ASSEMBLIES AND GUARDS SHALL BE DESIGNED TO SUPPORT LATERAL LOAD OF 50 POUNDS PER LINEAR FOOT (PLF) APPLIED IN ANY DIRECTION AT THE TOP AND TO TRANSFER THIS LOAD THROUGH THE SUPPORTS TO THE STRUCTURE.

b. INTERMEDIATE RAILS, BALUSTERS, AND PANEL FILLERS SHALL BE DESIGNED TO SUPPORT A HORIZONTALLY APPLIED NORMAL LOAD OF 50 POUNDS ON AN AREA NOT TO EXCEED ONE SQUARE FOOT INCLUDING OPENINGS AND SPACE BETWEEN RAILS. REACTIONS DUE TO THIS LOADING ARE NOT REQUIRED TO BE SUPERIMPOSED WITH THOSE IN NOTE (A) ABOVE OR NOTE (C) BELOW.

c. HANDRAIL ASSEMBLIES AND GUARDS SHALL BE DESIGNED TO SUPPORT A LOAD OF 200 POUNDS APPLIED IN ANY DIRECTION AT ANY POINT ON THE RAIL. THESE LOADS NEED NOT BE ASSUMED TO ACT CUMULATIVELY WITH THOSE IN NOTE (B) ABOVE.

BUILDING MOVEMENTS

1. THE BUILDING MOVEMENTS SPECIFIED HEREIN ARE ANTICIPATED TO OCCUR AND SHALL BE TAKEN INTO ACCOUNT BY THE CONTRACTOR IN THE DESIGN, DETAILING, AND INSTALLATION OF THE BUILDING ELEMENTS.

2. INTERIOR FLOOR/ROOF DEFLECTIONS: PROVISIONS SHALL BE MADE IN INTERIOR PARTITIONS AND OTHER ELEMENTS SUPPORTED BY OR ATTACHED TO THE FLOORS OR ROOFS FOR RELATIVE FLOOR TO FLOOR VERTICAL DEFLECTIONS OF 1/2".

3. LATERAL BUILDING DRIFT: PROVISIONS SHALL BE MADE IN BUILDING CLADDING AND OTHER ARCHITECTURAL FINISHES FOR RELATIVE FLOOR TO FLOOR LATERAL DEFLECTIONS OF STORY HEIGHT/400.

SPECIAL INSPECTIONS (REF. SP-3 FOR STATEMENT OF SPECIAL INSPECTIONS)

1. INSPECTION OF FABRICATORS: WHERE FABRICATION OF STRUCTURAL LOAD-BEARING MEMBERS AND ASSEMBLIES IS BEING PERFORMED ON THE PREMISES OF A FABRICATOR'S SHOP, SPECIAL INSPECTION OF THE FABRICATED ITEMS SHALL BE REQUIRED BY THE 2012 IBC AND THE BUILDING OFFICIAL.

2. STEEL CONSTRUCTION: THE SPECIAL INSPECTIONS FOR STEEL ELEMENTS OF BUILDINGS AND STRUCTURES SHALL BE AS REQUIRED BY THE 2012 IBC AND THE BUILDING OFFICIAL.

3. CONCRETE CONSTRUCTION: THE SPECIAL INSPECTIONS AND VERIFICATIONS FOR CONCRETE CONSTRUCTION SHALL BE AS REQUIRED BY THE 2012 IBC AND THE BUILDING OFFICIAL.

4. MASONRY CONSTRUCTION: MASONRY CONSTRUCTION SHALL BE INSPECTED AND EVALUATED IN ACCORDANCE WITH THE REQUIREMENTS OF THE 2012 IBC AND THE BUILDING OFFICIAL. DEPENDING ON THE CLASSIFICATION OF THE BUILDING OR STRUCTURE OR NATURE OF THE OCCUPANCY, AS DEFINED BY THE BUILDING CODE. THE INSPECTION AGENCY SHALL FURNISH (BUT NOT LIMITED TO) INSPECTION RESULTS AND REPORTS PROMPTLY TO THE ARCHITECT, ENGINEER OF RECORD, AND CONTRACTOR AND A FINAL SIGNED REPORT STATING WHETHER WORK INSPECTED WAS, TO THE BEST OF THE INSPECTION AGENCY'S KNOWLEDGE, IN CONFORMANCE WITH THE CONSTRUCTION DOCUMENTS AND SPECIFICATIONS.

5. SOILS: SPECIAL INSPECTIONS FOR FILL PLACEMENT SHALL BE AS REQUIRED BY THE 2012 IBC AND THE BUILDING OFFICIAL.. THE APPROVED SOILS REPORT, REQUIRED BY SECTION 1802.2, AND THE DOCUMENTS PREPARED BY THE REGISTERED DESIGN PROFESSIONAL IN RESPONSIBLE CHANGE SHALL BE USED TO DETERMINE COMPLIANCE. DURING FILL PLACEMENT, THE SPECIAL INSPECTOR SHALL DETERMINE THAT PROPER MATERIALS AND PROCEDURES ARE USED IN ACCORDANCE WITH THE PROVISIONS AND THE APPROVED SOILS REPORT, AS SPECIFIED IN SECTION 1803.5.

6. PIER FOUNDATIONS: SPECIAL INSPECTIONS SHALL BE PERFORMED DURING INSTALLATION AND TESTING OF PIER FOUNDATIONS AS REQUIRED BY THE 2012 IBC. THE APPROVED SOILS REPORT, REQUIRED BY SECTION 1802.2, AND THE DOCUMENTS PREPARED BY THE REGISTERED DESIGN PROFESSIONAL IN RESPONSIBLE CHARGE SHALL BE USED TO DETERMINE COMPLIANCE.

7. SPECIAL CASES: SPECIAL INSPECTIONS SHALL BE REQUIRED FOR PROPOSED WORK THAT IS, IN THE OPINION OF THE BUILDING OFFICIAL, UNUSUAL IN ITS NATURE, SUCH AS, BUT NOT LIMITED TO THE FOLLOWING EXAMPLES:

a. CONSTRUCTION MATERIALS AND SYSTEMS THAT ARE ALTERNATIVES TO MATERIALS AND SYSTEMS PRESCRIBED BY THIS CODE.

b. UNUSUAL DESIGN APPLICATIONS OF MATERIALS DESCRIBED IN THIS CODE.

c. MATERIALS AND SYSTEMS REQUIRED TO BE INSTALLED IN ACCORDANCE WITH ADDITIONAL MANUFACTURER'S INSTRUCTIONS THAT PRESCRIBE REQUIREMENTS NOT CONTAINED IN THIS CODE OR IN STANDARDS REFERENCED BY THIS CODE.

DEFERRED SUBMITTALS

1. PRE-ENGINEERED STEEL BUILDING WITH LIGHT GAUGE PURLINS

FOUNDATION BUILDING PAD

1. THE SUBSURFACE INFORMATION AND FOUNDATION DESIGN ARE BASED ON A REPORT PREPARED BY CH2M HILL DATED OCTOBER 2015. THE CONTRACTOR SHALL PERFORM EXCAVATIONS, FOUNDATION CONSTRUCTION, AND PREPARATION OF THE SUBGRADE IN ACCORDANCE WITH THE RECOMMENDATIONS CONTAINED IN THE GEOTECHNICAL REPORT AND PROJECT SPECIFICATIONS.

TESTING LABORATORY SHALL CONFIRM THE PROPER BEARING STRATA PER GEOTECHNICAL REPORT.

2. FOUNDATION CONDITIONS NOTED DURING CONSTRUCTION, WHICH DIFFER FROM THOSE DESCRIBED IN THE GEOTECHNICAL REPORT SHALL BE REPORTED TO THE ARCHITECT, GEOTECHNICAL ENGINEER AND EEC, BEFORE FURTHER CONSTRUCTION IS ATTEMPTED.

3. STRUCTURAL FILL (TxDOT ITEM 247, TYPE A, GRADE 2) SHALL BE PLACED ADJACENT TO FOUNDATION BEAMS AND WALLS IN 8-INCH LIFTS AND COMPACTED TO AT LEAST 100 PERCENT OF THE MAXIMUM DRY DENSITY AS DETERMINED BY TxDOT TEST METHOD Tex-113-E.

4. EXPOSED SUBGRADES SHOULD BE PROTECTED FROM PONDING WATER BY BACKFILLING AS QUICKLY AS PRACTICABLE AND PROVIDING POSITIVE SURFACE DRAINAGE.

5. A SUB-DRAIN CONSISTING OF A PERFORATED DRAIN PIPE WRAPPED IN A FILTER SOCK SHOULD BE INSTALLED WITHIN THE VOID BELOW THE TROUGHS.

6. VAPOR BARRIER SHALL CONFORM TO THE PROJECT SPECIFICATIONS AND SHALL BE CONTINUOUS UNDER ALL GRADE BEAMS.

7. THE PLASTICITY INDEX AND LIQUID LIMIT OF MATERIAL USED AS SELECT FILL MATERIAL SHALL BE ROUTINELY VERIFIED DURING PLACEMENT USING LABORATORY TESTS. VISUAL OBSERVATION AND CLASSIFICATION SHALLL NOT BE RELIED UPON TO CONFIRM THE MATERIAL TO BE USED AS SELECT FILL MATERIALS SATISFIES THE ABOVE ATTERBERG-LIMIT CRITERIA.

8. A MINIMUM FIFTEEN MIL THICK, 0.1 PERM VAPOR RETARDER SHALL BE INSTALLED AROUND ALL GRADE BEAMS AND UNDER SLABS CAST ON GRADE. VAPOR RETARDER MUST MEET ASTM E 1745 CLASS A, B, & C. THE PLACEMENT OF THE VAPOR RETARDER SHOULD COMPLY WITH THE GUIDELINES SET FORTH IN ACI 302 AMENDMENT NO. 2. CARE SHOULD BE TAKEN NOT TO PUNCTURE THE VAPOR RETARDER. INSTALL PER MANUFACTURER'S RECOMMENDATIONS.

9. THE FOUNDATION DESIGN ASSUMPTIONS DO ALLOW FOR A LIMITED AMOUNT OF POTENTIAL VERTICAL RISE THAT WILL NOT AFFECT STRUCTURAL STABILITY. THIS ALLOWANCE IN DESIGN DOES NOT COVER ARCHITECTURAL, MECHANICAL, ELECTRICAL OR PLUMBING FEATURES.

10. REFER TO PROJECT SPECIFICATIONS FOR ALL INFORMATION CONCERNING FOUNDATION CONSTRUCTION. THE CONTRACTOR SHALL PERFORM EXCAVATIONS, FOOTING CONSTRUCTION AND PREPARATION OF THE SUBGRADE IN ACCORDANCE WITH THE PROJECT SPECIFICATIONS.

DRILLED PIERS

1. PIERS SHALL BE LOCATED ON CENTERLINE OF COLUMN ABOVE UNLESS DIMENSIONED OTHERWISE ON PLAN. WHERE NO COLUMN OCCURS, LOCATE ON CENTERLINE OF WALL OR BEAM ABOVE.

2. ELEVATION OF TOP OF PIERS, UNLESS NOTED OTHERWISE ON DRAWINGS, SHALL BE AT BOTTOM OF DEEPEST INTERSECTING BEAM OR WALL SUPPORTED BY THE PIER. CONTRACTOR SHALL CALCULATE AND SUBMIT TO ENGINEER ALL TOP OF PIER ELEVATIONS BEFORE PROCEEDING WITH PIER DRILLING OPERATIONS.

3. PIER LENGTH SHALL MEET REQUIREMENTS PER TABLE BELOW (PROVIDED BY GEOTECH)

DRILLED SHAFT (PIER) DATA TABLE

DRILLED SHAFT LOCATION	DRILLED SHAFT NUMBERS	CUT-OFF ELEVATION (FEET)	TIP ELEVATION (FEET)[1]	LENGTH (FEET)	MAXIMUM FACTORED LOAD IN COMPRESSION (TONS)[2]	ALLOWABLE AXIAL RESISTANCE (TONS)[3]
PUMP STATION, BOTTOM-OF-SLAB	P1 - P7, P22 - P28, P43 - P49	592	559	33	37	175/275
PUMP STATION, PIPE GALLERY BOTTOM-OF-SLAB	P8 -P21, P29 - P42	585	568	17	62	144/200

[1] TIP ELEVATION CONTROLLED BY SWELL UPLIFT PRESSURES AND MINIMUM PILE DEAD LOAD, WHICH IS THE SAME FOR 2 FEET AND 2.5 FEET DIAMETER SHAFTS

[2] INCLUDES DEAD AND LIVE LOADS

[3] ALLOWABLE AXIAL RESISTANCE IN COMPRESSION, 175 AND 144 TONS FOR 2 FEET DIAMETER SHAFT, 275 AND 200 TONS FOR 2.5 FEET DIAMETER SHAFT

4. REINFORCING CAGE SHALL BE HELD SECURELY AWAY FROM EARTH SIDES AND BOTTOM BY SETS OF 3 PRECAST CONCRETE SPACER BLOCKS EVERY 8 FEET ALONG CAGE AND AT BOTTOM.

5. TEMPORARY STEEL CASING MAY BE REQUIRED DURING PIER DRILLING OPERATIONS. PRIOR TO THE PLACEMENT OF CONCRETE, ANY SEEPAGE WATER SHALL BE REMOVED FROM THE PIER HOLES. SPECIAL CONSTRUCTION PROCEDURES IN ACCORDANCE WITH PUBLISHED STANDARDS AND SPECIFICATIONS SHALL BE FOLLOWED DURING EXTRACTION OF THE CASINGS AND DURING CONCRETE PLACEMENT. ACI-336.1 AND ACI 336.3A-72 WILL BE HELPFUL IN THIS REGARD. CONTRACTOR SHALL INCLUDE IN BID DOCUMENTS, UNIT COSTS FOR CASING IF REQUIRED (TO BE DETERMINED ON JOB SITE BY SOILS ENGINEER) AND UNIT COST FOR GREATER AND LESSER DEPTH OF DRILLING FOR EACH PIER SIZE.

6. PIER SHALL BE DRILLED PLUMB ALONG ITS TOTAL LENGTH.

7. ALL PIERS SHALL BE INSPECTED BY A PERSON WHO IS KNOWLEDGEABLE OF THE MATERIALS AND CONDITIONS IN ORDER TO INSURE THAT THE PROPOSED BEARING MATERIAL HAS BEEN REACHED IN ACCORDANCE WITH THE RECOMMENDATIONS PROVIDED IN THE GEOTECHNICAL REPORT.

8. THE PIER EXCAVATIONS SHALL BE CHECKED FOR SIZE AND INSPECTED TO INSURE THAT ALL LOOSE MATERIAL HAS BEEN REMOVED PRIOR TO THE PLACEMENT OF CONCRETE. PRECAUTION SHALL BE TAKEN DURING THE PLACEMENT OF THE PIER REINFORCEMENT AND CONCRETE TO PREVENT THE LOOSE EXCAVATED MATERIAL FROM FALLING INTO THE EXCAVATION. ACCURATE RECORDS OF THE PIER DEPTHS, BEARING STRATUM, DEPTH OF PENETRATION ONTO THE BEARING STRATUM, DIAMETER AND LOCATION (INCLUDING OFF CENTER ECCENTRICITIES) SHALL BE MADE, MAINTAINED AND SUBMITTED TO THE ENGINEER.

9. TO PREVENT DETERIORATION OF THE SIDES OF THE PIER SHAFT EXCAVATIONS, REINFORCEMENT AND CONCRETE SHALL BE PLACED IMMEDIATELY AFTER DRILLING OPERATIONS ARE COMPLETE AND IN NO CASE SHALL A PIER BE DRILLED THAT CANNOT BE POURED BY THE END OF THE WORK DAY.

10. SEE PLAN AND DETAILS FOR PIER LOCATIONS, SIZES, REINFORCEMENT, AND DEPTHS.

11. THE CONTRACTOR SHALL VERIFY DEPTHS OF PIERS BEFORE PIER STEEL IS CUT. PIER STEEL MAY BE DELIVERED TO THE JOB SITE IN STANDARD LENGTHS AND CUT AS REQUIRED.

12. REINFORCING STEEL SHOP DRAWINGS SHALL INCLUDE PLACING DRAWINGS FOR TEMPLATES TO SET DOWELS IN PIERS.

VOID FORM CONSTRUCTION

1. VOID FORMS SHALL BE 8 INCH THICK, CORRUGATED PAPER CARTON FORMS WITH A MOISTURE RESISTANT EXTERIOR. SEE DRAWINGS FOR WIDTHS. CARTON FORMS SHALL BE GRADE BEAM FORMS BY SUREVOID PRODUCTS, INC. WAX COATED VERTICAL CELL RECTANGULAR BOXES (OR APPROVED EQUAL). TRAPEZOIDAL VOID BOXES SHALL NOT BE USED. DIAGONAL CELL BOXES SHALL NOT BE USED. SEAM PADS SHALL BE INSTALLED TO COVER JOINTS IN FORMS TO PREVENT MOISTURE AND CONCRETE FROM FLOWING INTO THE JOINTS.

2. SOIL RETAINERS SHALL BE USED ON EACH SIDE OF BEAM TO PREVENT SOIL FROM SLOUGHING OFF IN VOID. RETAINERS SHALL BE SURE-RETAINER BY MOTZBLOCK (OR APPROVED EQUAL) OR BACKFILL RETAINER PRODUCED BY SUREVOID PRODUCTS, INC.

3. VOID FORMS SHALL BE PROTECTED FROM CRUSHING AND MOISTURE DURING CONSTRUCTION USING A PROTECTIVE COVER BOARD AS NEEDED.

4. DRILLED PIER TOP FORMS SHALL BE PROVIDED TO PROPERLY FORM AND CONTAIN UPPER PORTION OF THE PIERS. PIER VOID FORMS SHALL BE PROVIDED TO PROPERLY CREATE VOID SPACE ADJACENT TO THE UPPER PORTION OF THE DRILLED PIERS AT SLAB OR BEAM INTERSECTION.

5. REPLACE WET OR DAMAGED VOID FORMS BEFORE PLACING CONCRETE. VOID FORMS AND ACCESSORIES SHALL BE INSTALLED IN ACCORDANCE WITH MANUFACTURER'S RECOMMENDATIONS.

6. CONTRACTOR TO SUBMIT MANUFACTURER PRODUCT DATA ON PRODUCT TO BE USED PRIOR TO CONSTRUCTION FOR REVIEW AND APPROVAL.

STATE OF TEXAS
RACHEL A. H. MALDOMADO
117500
LICENSED PROFESSIONAL ENGINEER
05/11/2016

NO.	DATE	REVISION	BY	APVD

DSGN RACHEL MALDOMADO
DR MELISSA SIBLEY
CHK TOM CALDERWOOD
APVD RACHEL MALDOMADO

ENCOTECH ENGINEERING CONSULTANTS
TBPE Firm 1141 | 8500 Bluffstone Cove, Suite B-103 Austin, Texas 78759 | 512.338.1101 Project No.: 13006.MS.AUS

CH2MHILL®
TBPE FIRM NO. 3699

Montopolis Water Reclamation Initiative (WRI)
Storage Reservoir and Pump Station
2711 Montopolis Drive
Austin Water, Austin, Texas

GENERAL NOTES

AS SHOWN
VERIFY SCALE
BAR IS ONE INCH ON ORIGINAL DRAWING.
0 1"

DATE	MAY 2016
PROJ	13006.MS.AUS
DWG	SP-1
SHEET	61 of 126

CONCRETE

1. CONCRETE IN THE FOLLOWING AREAS SHALL MEET THE FOLLOWING MIX DESIGN:

PIERS	CLASS "S" CONCRETE PER COA STD. SPEC. 403S
FOOTINGS	CLASS "S" CONCRETE PER COA STD. SPEC. 403S
GRADE BEAMS	CLASS "S" CONCRETE PER COA STD. SPEC. 403S
SLABS	CLASS "S" CONCRETE PER COA STD. SPEC. 403S

2. ALL CONCRETE MIX DESIGNS SHALL BE SUBMITTED TO THE ENGINEER OF RECORD FOR APPROVAL.

3. USE THE FOLLOWING CEMENTITIOUS MATERIALS, OF THE SAME TYPE, BRAND AND SOURCE THROUGHOUT THE PROJECT:

   PORTLAND CEMENT: ASTM C 150, TYPE I/II

4. PROVIDE AGGREGATES FROM A SINGLE SOURCE CONFORMING TO THE FOLLOWING:

   MAXIMUM COARSE-AGGREGATE SIZE: TYPICALLY 1" NOMINAL DIAMETER

   FINE AGGREGATE: FREE OF MATERIALS WITH DELETERIOUS REACTIVITY TO ALKALI IN CEMENT

5. WATER SHALL CONFORM TO ASTM C 94/C 94M AND BE POTABLE.

6. ADMIXTURES, IF USED, SHALL MEET THE REQUIREMENTS OF COA STD SPECIFICATION 403S AND BE SUBJECT TO THE APPROVAL OF THE STRUCTURAL ENGINEER.

7. MIXING, TRANSPORTING, AND PLACING OF CONCRETE SHALL CONFORM TO ACI 301 AND ASTM C 94.

8. CONFORMANCE TO ACI 305.1 "SPECIFICATION FOR HOT WEATHER CONCRETING" IS REQUIRED WHEN AIR TEMPERATURE IS ABOVE 90 DEG F.

9. CONFORMANCE TO ACI 306 "COLD WEATHER CONCRETING" IS REQUIRED WHEN A PERIOD FOR MORE THAN THREE (3) CONSECUTIVE DAYS, THE AVERAGE DAILY AIR TEMPERATURE IS BELOW 40 DEG F AND THE AIR TEMPERATURE IS NOT GREATER THAN 50 DEG F FOR MORE THAN ONE-HALF OF ANY 24 HOUR PERIOD.

10. GENERAL CONTRACTOR SHALL NOTIFY THE ARCHITECT AND EEC 48 HOURS PRIOR TO PLACEMENT OF CONCRETE IN THE FOUNDATION.

11. DURING CONSTRUCTION, THE CONTRACTOR SHALL PROVIDE TEMPORARY SHORING OF WALLS WHICH ARE ULTIMATELY SUPPORTED TOP AND BOTTOM. SUCH SHORING SHALL NOT BE REMOVED UNTIL THE SUPPORTING ELEMENTS ARE IN PLACE, THE CONCRETE IN THE WALLS AND SUPPORTING ELEMENTS HAS ATTAINED THE SPECIFIED 28 DAY COMPRESSIVE STRENGTH (FC') AND COMPACTION OF THE BACKFILL AGAINST THE WALL HAS BEEN COMPLETED.

12. A GRAVITY DRAINAGE SYSTEM IS REQUIRED TO PREVENT THE BUILD-UP OF HYDROSTATIC PRESSURE BEHIND THE WALLS.

13. DETAILING OF CONCRETE REINFORCEMENT BARS AND ACCESSORIES SHALL CONFORM TO THE RECOMMENDATIONS OF ACI 315 "DETAILS AND DETAILING OF CONCRETE REINFORCEMENT" AND ACI SP-66 "DETAILING MANUAL". PLACING OF REINFORCING BARS SHALL CONFORM TO THE RECOMMENDATIONS OF ACI 315R "MANUAL OF ENGINEERING" AND PLACING DRAWINGS FOR REINFORCED CONCRETE STRUCTURES" AND CRSI "MANUAL OF STANDARD PRACTICE".

14. NO CONDUIT OR PIPING LARGER THAN 1" I.D. SHALL BE RUN IN STRUCTURAL CONCRETE MEMBERS UNLESS SHOWN ON STRUCTURAL DRAWINGS.

15. ALL PIPE SLEEVES IN CONCRETE MEMBERS SHALL BE SCHEDULE 40 PIPE UNLESS SHOWN OTHERWISE ON THE STRUCTURAL DRAWINGS. LOCATION OF THE SLEEVES SHALL BE AS APPROVED BY THE STRUCTURAL ENGINEER. PROVIDE 3 ADDITIONAL STIRRUPS EACH SIDE OF EACH SLEEVE IN BEAMS AND SPACE AS DIRECTED BY THE ENGINEER.

16. REINFORCED STEEL SHALL BE DEFORMED NEW BILLET STEEL BARS IN ACCORDANCE WITH A.S.T.M. SPECIFICATION A615 GRADE 60 EXCEPT #3 BARS SHALL BE GRADE 40.

17. SLABS ON GRADE SHALL HAVE CONSTRUCTION JOINTS OR CRACK CONTROL JOINTS AT EACH COLUMN LINE AND MID BAY IN EACH DIRECTION. ADDITIONAL CRACK CONTROL JOINTS SHALL BE PROVIDED, SUCH THAT NO AREA BOUNDED BY CONSTRUCTION AND/OR CRACK CONTROL JOINTS CONTAINS MORE THAN 450 SQUARE FEET OF SLAB AREA, THE SPACING OF THE JOINTS DOES NOT EXCEED 36 TIMES THE SLAB THICKNESS, AND THE RESULTING ASPECT RATIO OF THE DIMENSIONS OF SLAB AREA DOES NOT EXCEED 1.5 TO 1. CRACK CONTROL JOINTS SHALL BE MADE USING A "SOFT-CUT" CONCRETE SAW AS SOON AS THE SLAB WILL SUPPORT THE WEIGHT OF THE SAW AND OPERATOR WITHOUT DISTURBING THE FINAL FINISH. THE CRACK CONTROL JOINTS SHALL BE CUT A MAXIMUM WIDTH OF 1/8 INCH AND A MINIMUM DEPTH OF 1/3 THE SLAB THICKNESS. REFER TO THE DRAWINGS FOR INFORMATION ON CONTROL JOINTS, CONSTRUCTION JOINTS, REINFORCEMENT DETAILS AND JOINT SEALANT DETAILS. REFERENCE ACI 302.1R-04 GUIDE FOR CONCRETE FLOOR AND SLAB CONSTRUCTION. CONTRACTOR TO SUBMIT JOINT LAYOUT PLAN FOR APPROVAL PRIOR TO CONSTRUCTION.

18. ALL STIRRUPS SHALL BE GRADE 40 WITH STANDARD 90 DEGREE HOOKS.

19. PROVIDE "L" SHAPED BARS TOP AND BOTTOM AT ALL CORNERS AND "T" INTERSECTIONS OF BEAMS PER TYPICAL DETAILS.

20. ALL HOOKS AND BENDS IN REINFORCING BARS SHALL CONFORM TO ACI STANDARDS UNLESS SHOWN OTHERWISE.

21. REINFORCEMENT DESIGNATED AS "CONTINUOUS" MAY BE SPLICED USING TYPE "B" SPLICES. REINFORCEMENT BAR SPLICE LENGTHS IN BEAMS WHICH ARE LOCATED AT THE CENTERLINE OF SUPPORTS FOR BOTTOM BARS AND AT MID-SPAN FOR TOP BARS MAY BE 36 BAR DIAMETERS, UNLESS NOTED OTHERWISE. PROVIDE STANDARD ACI HOOKS FOR TOP AND BOTTOM BARS AT DISCONTINUOUS ENDS OF ALL GRADE BEAMS.

22. VERTICAL JOINTS MAY OCCUR AT CENTER OF SPANS AT LOCATIONS REVIEWED BY EEC.

23. HORIZONTAL CONSTRUCTION JOINTS IN CONCRETE POURS SHALL BE PERMITTED ONLY WHERE INDICATED ON THE DRAWINGS. ALL CONSTRUCTION JOINTS SHALL BE MADE IN THE CENTER OF SPANS - SEE DRAWINGS FOR TYPICAL DETAIL. THE LOCATION OF THE CONSTRUCTION JOINTS SHALL BE AS APPROVED BY THE ARCHITECT AND THE STRUCTURAL ENGINEER. ADDITIONAL REINFORCING AT CONSTRUCTION JOINTS SHALL BE AS SPECIFIED BY THE ENGINEER WITHOUT ADDITIONAL COST TO THE OWNER.

24. CONSTRUCTION JOINTS BETWEEN PIERS AND PIER CAPS, FOOTINGS AND WALLS OR COLUMNS, OR WALLS, COLUMNS, BEAMS, AND THE FLOOR SYSTEM THEY SUPPORT SHALL BE PREPARED BY ROUGHENING THE CONTACT SURFACE TO A FULL AMPLITUDE OF APPROXIMATELY 1/4 INCH LEAVING THE CONTACT SURFACE CLEAN AND FREE OF LAITANCE.

25. REINFORCEMENT BARS SHALL NOT BE TACK WELDED, WELDED, HEATED, OR CUT UNLESS INDICATED ON THE CONTRACT DOCUMENTS OR REVIEWED BY THE STRUCTURAL ENGINEER.

26. WELDING OF REINFORCEMENT BARS, WHEN ACCEPTED BY THE STRUCTURAL ENGINEER, SHALL CONFORM TO THE AMERICAN WELDING SOCIETY STANDARD D1.4. ELECTRODES FOR SHOP AND FIELD WELDING OF REINFORCEMENT BARS SHALL CONFORM TO ASTM A233, CLASS E90XX.

27. MINIMUM CONCRETE COVER PROTECTION FOR REINFORCEMENT BARS SHALL BE AS FOLLOWS: (SEE ACI 318 SECTION 7.7 FOR CONDITIONS NOT NOTED)

CONCRETE EXPOSED TO WEATHER	
#5 BARS AND SMALLER	1 - 1/2 INCHES
ALL OTHER BARS	2 INCHES
CONCRETE CAST AGAINST EARTH	3 INCHES
GRADE BEAMS:	
TOP	1 - 1/2 INCHES
BOARD FORMED SIDES	2 INCHES
EARTH FORMED SIDES	3 INCHES
BOTTOM	3 INCHES
SLABS ON GRADE:	
SINGLE LAYER OR TOP LAYER	2 INCHES
BOTTOM LAYER CAST AGAINST SOIL	3 INCHES
BOTTOM LAYER NOT CAST AGAINST SOIL	2 INCHES
COLUMNS	1 - 1/2 INCHES
PILASTERS & PLINTHS	2 INCHES
SLABS ON METAL FORMS	3/4 INCHES (TOP)
WALLS BELOW GRADE (BACKFILLED SIDE)	2 INCHES
WALLS BELOW GRADE (NO BACKFILL)	3/4 INCHES

PRE-ENGINEERED STEEL BUILDING AND LIGHT GAGE PURLINS

1. THE DESIGN OF THE PREFABRICATED METAL BUILDING IS TO BE DESIGNED BY A PROFESSIONAL REGISTERED ENGINEER LICENSED IN THE STATE OF TEXAS.

2. ALL COMPONENTS SHALL BE DESIGNED, FABRICATED AND ERECTED IN ACCORDANCE WITH THE LATEST SPECIFICATIONS OF THE AMERICAN INSTITUTE OF STEEL CONSTRUCTION AND THE AMERICAN IRON AND STEEL INSTITUTE.

3. METAL ROOF DOES NOT PROVIDE LATERAL BRACING FOR THE PURLINS, THEREFORE BRIDGING SHALL BE DESIGNED AND SUPPLIED BY THE PURLIN MANUFACTURER.

4. PRE-ENGINEERED METAL BUILDING SHALL ALSO BE DESIGNED FOR ADDITIONAL LOADS NOTED IN STRUCTURAL PLANS AND DETAILS.

5. METAL ROOF DOES NOT PROVIDE A DIAPHRAGM TO TRANSFER LATERAL LOADS TO FRAMES. HORIZONTAL ROD BRACING SHALL BE DESIGNED FOR THIS LOAD TRANSFER AND SUPPLIED BY THE PRE-ENGINEERED STEEL BUILDING MANUFACTURER.

6. MANUFACTURER/FABRICATOR SHALL UTILIZE RIGID AND PORTAL FRAMES TO RESIST ALL WIND FORCES PER IBC 2012 AS SHOWN ON DRAWINGS. IN THE PERPENDICULAR DIRECTION, MANUFACTURER/FABRICATOR SHALL COORDINATE WITH ARCHITECTURAL AND LOCATE BRACING SO AS NOT TO CONFLICT WITH DOOR AND WINDOW OPENINGS.

7. THE HORIZONTAL DRIFT OF THE METAL BUILDING FRAME SHALL NOT BE MORE THAN 1" (OR H/400, WHICHEVER IS LESS) WHEN FULLY LOADED PER IBC LOAD REQUIREMENTS.

   NOTE: EXTENSIVE COORDINATION OF THE CONNECTION OF THE METAL BUILDING FRAME TO THE CMU WALLS MUST BE MADE AT THE ROOF LEVEL BY THE METAL BUILDING DESIGNER.

8. WELDED JOINTS SHALL COMPLY WITH REQUIREMENTS OF A.W.S.DI.1. CONTRACTOR SHALL RETAIN AN INDEPENDENT TESTING LABORATORY TO INSPECT AND TEST SHOP FABRICATION OF WELDED JOINTS TO VERIFY COMPLIANCE. COPIES OF TEST REPORTS SHALL BE SENT TO ENGINEER OF RECORD. JOINTS THAT FAIL TESTS SHALL BE REWORKED AND RETESTED AT FABRICATOR'S EXPENSE UNTIL ACCEPTABLE.

9. RIGID FRAME COLUMN BASE CONNECTION SHALL BE DESIGNED AS "PINNED" WITH NO BENDING MOMENT TRANSFERRED TO FOUNDATION.

10. BASE PLATES AND ANCHOR BOLTS SHALL BE DESIGNED AND SUPPLIED BY THE PRE-ENGINEERED STEEL BUILDING MANUFACTURER.

11. REFER TO MECHANICAL DRAWINGS FOR STEEL FRAME SUPPORTED HVAC UNITS AND PROVIDE SUPPORT FOR ADDITIONAL LOADS AS REQUIRED. SHOW UNIT LOCATIONS AND DESIGN WEIGHTS ON SHOP DRAWINGS.

12. SHOP DRAWINGS AND CALCULATIONS SHALL BE PERFORMED AND SEALED BY AN ENGINEER LICENSED TO PRACTICE IN TEXAS AND SUBMITTED FOR REVIEW BY ENGINEER. SHOP DRAWINGS SHALL SHOW ALL MEMBER SIZES, LOCATIONS, AND CONNECTIONS. PROVIDE DESIGN CALCULATIONS FOR ALL STRUCTURAL FRAMES, PURLINS, GIRTS, BRACING, CONNECTIONS, AND ANCHOR BOLTS.

CONCRETE MASONRY UNITS

1. MASONRY CONSTRUCTION SHALL BE PERFORMED IN ACCORDANCE WITH 2012 INTERNATIONAL BUILDING CODE (IBC).

2. THE NET AREA COMPRESSIVE STRENGTH OF MASONRY, F'M, SHALL BE A MINIMUM OF 1500 PSI (UNLESS NOTED OTHERWISE ON PLAN) AND DETERMINED IN ACCORDANCE WITH THE UNIT STRENGTH METHOD.

3. MASONRY UNITS SHALL BE TYPE I, GRADE N, LIGHT WEIGHT HOLLOW UNITS CONFORMING TO ASTM C90. SEE DRAWINGS FOR REQUIRED NOMINAL DIMENSIONS.

4. MORTAR SHALL BE TYPE S OR M AND SHALL CONFORM TO THE REQUIREMENTS OF ASTM C270 AND CONFORM TO THE PROPORTION SPECIFICATION TABLE OF THE 2012 IBC.

5. GROUT SHALL BE COARSE AND CONFORM TO ASTM C476 BY PROPORTION WITH A COMPRESSIVE STRENGTH GREATER OR EQUAL TO F'M, BUT NO LESS THAN 2000 PSI. SLUMP SHALL BE WITHIN THE RANGE OF 8" TO 11".

6. REINFORCING STEEL SHALL BE DEFORMED NEW BILLET STEEL BARS IN ACCORDANCE WITH A.S.T.M. SPECIFICATION A615 GRADE 60 EXCEPT #3 BARS MAY BE GRADE 40. REINFORCEMENT SHALL BE LAP SPLICED A MINIMUM OF 36 BAR DIAMETERS UNLESS OTHERWISE NOTED. JOINT REINFORCEMENT WHERE INDICATED SHALL COMPLY WITH ASTM A951.

7. PROVIDE (1) ADDITIONAL SCHEDULED VERTICAL BAR AT EACH END, CORNERS, AND INTERSECTIONS, OF ALL WALLS AS SPECIFIED ON THE DRAWINGS.

8. ALL MASONRY CORES CONTAINING VERTICAL REINFORCEMENT SHALL BE SOLID GROUTED. CELLS TO BE GROUTED SHALL BE CLEAN AND FREE OF EXCESS MORTAR AND FOREIGN MATERIALS.

9. UNLESS NOTED OTHERWISE, PROVIDE CONTINUOUS BOND BEAM AT ALL TOP OF WALL LOCATIONS AS WELL AS AT INTERMEDIATE FLOOR LINES. BOND BEAMS SHALL BE GROUTED AND REINFORCED W/ (2) CONTINUOUS #5 BARS. IF WALL IS PARTIALLY GROUTED, PROVIDE A BARRIER TO CONTROL GROUT FLOW.

10. CONTROL JOINTS SHALL BE PLACED IN COORDINATION WITH THE ARCHITECT. IT IS RECOMMENDED THAT THE PANEL LENGTH TO HEIGHT RATIO OF THE WALL DOES NOT EXCEED 1.5 AND THAT THE MAXIMUM PANEL LENGTH DOES NOT EXCEED 25'-0". ADDITIONAL JOINTS SHOULD BE ADDED WHERE ABRUPT CHANGES IN WALL SECTION OCCUR. AT BOND BEAMS, DEBOND BAR AT JOINT, 8" EACH SIDE FROM JOINT, TOOL W/ TRIANGULAR JOINTER.

11. MASONRY ACCESSORIES ARE NOT INDICATED ON STRUCTURAL DRAWINGS.

12. REFER TO LINTEL SCHEDULE AND DETAILS FOR MASONRY LINTEL REQUIREMENTS.

13. THE CONTRACTOR SHALL SUBMIT THE FOLLOWING TO THE ENGINEER OF RECORD:
    A. FOR EACH MORTAR MIX - MIX DESIGNS INDICATING TYPE AND PROPORTION OF INGREDIENTS IN COMPLIANCE WITH THE ABOVE SPECIFIED REQUIREMENTS.
    B. GROUT MIX DESIGNS INDICATING TYPE AND PROPORTIONS OF THE INGREDIENTS ACCORDING TO THE ABOVE SPECIFIED REQUIREMENTS.
    C. CONTROL JOINT LOCATION PLAN
    D. MATERIAL CERTIFICATES CERTIFYING PROJECT COMPLIANCE FOR THE FOLLOWING:
       1. REINFORCEMENT
       2. ANCHORS, TIES, FASTENERS, AND METAL ACCESSORIES
       3. MASONRY UNITS
       4. MORTAR AND GROUT MATERIALS

14. QUALITY INSURANCE AND INSPECTIONS OF MASONRY CONSTRUCTION SHALL BE EMPLOYED IN COMPLIANCE WITH THE PROVISIONS SPECIFIED IN THE 2012 IBC LEVEL C SPECIAL INSPECTION CRITERIA.

POST-INSTALLED ANCHORS

1. POST-INSTALLED ANCHORS SHALL ONLY BE USED WHERE SPECIFIED ON THE DRAWINGS.

2. CONTRACTOR SHALL OBTAIN APPROVAL FROM ENGINEER OF RECORD PRIOR TO USING POST-INSTALLED ANCHORS FOR MISSING OR MISPLACED CAST-IN-PLACE ANCHORS.

3. CARE SHALL BE GIVEN TO AVOID CONFLICTS WITH EXISTING REBAR. HOLES SHALL BE DRILLED AND CLEANED PER THE MANUFACTURER'S INSTRUCTIONS. ANCHORS SHALL BE INSTALLED PER THE MANUFACTURER'S INSTALLATION INSTRUCTIONS AT NOT LESS THAN MINIMUM EDGE DISTANCES AND/OR SPACINGS INDICATED IN THE MANUFACTURER'S LITERATURE.

4. UNLESS SPECIFIED OTHERWISE, ANCHORS SHALL BE EMBEDDED IN THE APPROPRIATE SUBSTRATE WITH A MINIMUM EMBEDMENT OF 8 TIMES THE NOMINAL ANCHOR DIAMETER OR THE EMBEDMENT REQUIRED TO SUPPORT THE INTENDED LOAD.

5. CONTRACTOR TO NOTIFY ENGINEER PRIOR TO INSTALLATION FOR ANCHOR PRODUCT APPROVAL CHOSEN FROM LIST BELOW.

6. SUBSTITUTION REQUESTS, FOR PRODUCTS OTHER THAN THOSE SPECIFIED, SHALL BE SUBMITTED TO THE ENGINEER WITH CALCULATIONS THAT ARE PREPARED & SEALED BY A REGISTERED PROFESSIONAL ENGINEER SHOWING THAT THE SUBSTITUTED PRODUCT WILL ACHIEVE AN EQUIVALENT CAPACITY USING THE APPROPRIATE DESIGN PROCEDURE REQUIRED BY THE BUILDING CODE.

7. CONTACT SIMPSON STRONG-TIE AT (800) 999-5099 OR HILTI AT (800) 879-6000 X7980 FOR PRODUCT RELATED QUESTIONS AND AVAILABILITY.

8. ACCEPTABLE PRODUCTS FOR INSTALLATION IN CONCRETE ARE AS FOLLOWS:

   A. EXPANSION ANCHORS SHALL BE:
      - SIMPSON STRONG-TIE "STRONG-BOLT" PER ICC ESR-1771
      - SIMPSON STRONG-TIE "STRONG-BOLT 2" PER ICC ESR-3037
      - HILTI "KWIK BOLT TZ" PER ICC ESR-1917

   B. SCREW ANCHORS SHALL BE:
      - SIMPSON STRONG-TIE "TITEN HD" PER ICC ESR-2713

   C. ADHESIVE ANCHORS SHALL BE:
      - SIMPSON STRONG-TIE "SET-XP EPOXY-TIE ADHESIVE" PER ICC ESR-2508
      - HILTI "RE500-SD EPOXY ADHESIVE" PER ICC ESR-2322

   D. POWDER ACTUATED FASTENERS SHALL BE:
      - SIMPSON STONG-TIE "POWDER-DRIVEN FASTENERS" PER ICC ESR-2138
      - HILTI "X-U POWDER-DRIVEN FASTENERS" PER ICC ESR-2269

9. ACCEPTABLE PRODUCTS FOR INSTALLATION IN GROUT FILLED CONCRETE BLOCK ARE AS FOLLOWS:

   A. EXPANSION ANCHORS SHALL BE:
      - SIMPSON STRONG-TIE "WEDGE-ALL" PER ICC ESR-1396
      - HILTI "KWIK BOLT 3" PER ICC ESR-1385

   B. SCREW ANCHORS SHALL BE:
      - SIMPSON STRONG-TIE "TITEN HD" PER ICC ESR-1056

   C. ADHESIVE ANCHORS SHALL BE:
      - SIMPSON STRONG-TIE "SET EPOXY-TIE ADHESIVE" PER ICC ESR-1772
      - HILTI "HIT-HY150 ADHESIVE ANCHORING SYSTEM" PER ICC ESR-5193

10. ACCEPTABLE PRODUCTS FOR INSTALLATION IN THE SOFFIT OF CONCRETE OVER PROFILE METAL DECK ARE AS FOLLOWS:

   A. EXPANSION ANCHORS SHALL BE:
      - SIMPSON STRONG-TIE "STRONG-BOLT" PER ICC ESR-1771
      - HILTI "KWIK BOLT TZ" PER ICC ESR-1917
      - SIMPSON STRONG-TIE "STRONG-BOLT 2" PER ICC ESR-3037

   B. SCREW ANCHORS SHALL BE:
      - SIMPSON STRONG-TIE "TITEN HD" PER ICC ESR-2713

COORDINATION

1. ONLY CERTAIN OF THE REQUIRED SLEEVE OPENINGS IN STRUCTURAL FRAMING COMPONENT MEMBERS, AND ONLY CERTAIN OF THE REQUIRED FRAMED OPENINGS IN AND/OR THROUGH STRUCTURAL ASSEMBLY ARE INDICATED ON THE STRUCTURAL SERIES DRAWINGS. HOWEVER, ALL SLEEVES, INSERTS AND OPENINGS, INCLUDING FRAMES AND/OR SLEEVES, THEREFORE, SHALL BE PROVIDED FOR PASSAGE, PROVISION AND/OR INCORPORATION OF THE WORK OF THE CONTRACT, INCLUDING BUT NOT LIMITED TO MECHANICAL, ELECTRICAL, AND PLUMBING WORK. THE PROVIDING FOR SLEEVES OR FRAMED OPENINGS SHALL INCLUDE THE VERIFICATION OF SIZES, ALIGNMENT, DIMENSION, POSITION, LOCATIONS, ELEVATIONS, AND GRADES AS REQUIRED TO SERVE THE INTENDED PURPOSE. OPENINGS NOT INDICATED ON THE STRUCTURAL SERIES DRAWINGS, BUT REQUIRED AS ABOVE, SHALL HAVE BEEN APPROVED BY THE ENGINEER.

2. REFER TO ARCHITECTURAL, MECHANICAL, ELECTRICAL, AND PLUMBING SERIES DRAWINGS FOR FLOOR ELEVATIONS, SLOPES, DRAINS, AND LOCATION OF DEPRESSED AND ELEVATED FLOOR AREAS.

3. STRUCTURAL SERIES DRAWINGS SHALL BE COMPARED WITH DRAWINGS OF OTHER SERIES; DIFFERENCES SHALL BE REFERRED TO THE ARCHITECT FOR INSTRUCTION.

4. COMPATIBILITY OF ACCOMMODATION AND PROVISION FOR BUILDING EQUIPMENT SUPPORTED ON OR FROM STRUCTURAL COMPONENTS SHALL BE VERIFIED AS TO SIZE, DIMENSION, CLEARANCES, ACCESSIBILITY, WEIGHTS, AND REACTION WITH THE EQUIPMENT FOR WHICH THE ACCOMMODATION HAS BEEN DESIGNED PRIOR TO SUBMISSION OF SHOP DRAWINGS AND SUBMITTAL DATA FOR EACH EQUIPMENT AND FOR STRUCTURAL COMPONENTS; DIFFERENCES SHALL BE REFERRED TO THE ARCHITECT FOR REVIEW AND APPROVAL AND NOTATION.

5. THE STRUCTURAL SYSTEM OF THIS BUILDING IS DESIGNED TO PERFORM AS A COMPLETED UNIT. PRIOR TO COMPLETION OF THE STRUCTURE, STRUCTURAL COMPONENTS MAY BE UNSTABLE AND IT IS THE RESPONSIBILITY OF THE CONTRACTOR, OR THE CLIENT IN THE ABSENCE OF A GENERAL CONTRACTOR, TO PROVIDE TEMPORARY SHORING AND/OR BRACING AS REQUIRED FOR THE STABILITY OF THE INCOMPLETE STRUCTURE AND FOR THE SAFETY OF ALL ON-SITE PERSONNEL.

STATE OF TEXAS
RACHEL A. H. MALDOMADO
117500
LICENSED PROFESSIONAL ENGINEER
05/11/2016

NO.	DATE	REVISION	BY	APVD

DSGN RACHEL MALDOMADO | DR MELISSA SIBLEY | CHK TOM CALDERWOOD | APVD RACHEL MALDOMADO

ENCOTECH ENGINEERING CONSULTANTS
TBPE Firm 1141 | 8500 Bluffstone Cove, Suite B-103 Austin, Texas 78759 | 512.338.1101 Project No.: 13006.MS.AUS

CH2MHILL® TBPE FIRM NO. 3699

Montopolis Water Reclamation Initiative (WRI)
Storage Reservoir and Pump Station
2711 Montopolis Drive
Austin Water, Austin, Texas

GENERAL NOTES

AS SHOWN
VERIFY SCALE
BAR IS ONE INCH ON ORIGINAL DRAWING.
0 1"

DATE	MAY 2016
PROJ	13006.MS.AUS
DWG	SP-2
SHEET	62 of 126

STATEMENT OF SPECIAL INSPECTIONS FOR PUMP STATION BUILDING:

Statement of Special Inspections Per IBC 2012 Chapter 17

Per Section 1704.2.3: The applicant shall submit a statement of *special inspection* in accordance with Section 107.1 as a condition for permit issuance. The statement shall be in accordance with Section 1704.3.

Project Name: Montopolis Water Reclamation Initiative (WRI) Storage Reservoir and Pump Station _

(This Statement applies to the Pump Station Building only) ______________________________

Project Address: 2707 Montopolis Drive, Austin, Texas ______________________________

Building Permit Number: ______________________________

Architect of Record: Dan Campos, CasaBella Architects ______________________________

Structural Engineer of Record: Rachel A. H. Maldomado, P.E., Encotech Engineering Consultants __

Registered Design Professional in Responsible Charge (RDPiRC) Acting as Owner's Agent:
(Required if Structural Engineer of record is not involved during the construction of this project)

Name of Design Professional/Applicant completing the Statement of Special Inspection:

Name: Rachel A. H. Maldomado, P.E. ____________________

Date: 06/13/2016 ______________________________

STATE OF TEXAS
RACHEL A. H. MALDOMADO
117500
LICENSED
PROFESSIONAL ENGINEER
06/13/2016

Design Engineer (or Design Architect if no engineer) provide Design Professional stamp, signature and date completing the Statement of Special Inspections.

SECTION 1705: REQUIRED VERIFICATION AND INSPECTION

Section 1705 of the *International Building Code 2012*, the following is a list of the required special inspections applicable for this project:

2012 IBC Section	Inspection/ Assurance	Type of Special Inspections and Extent	Applicable	Non Applicable
1705.2	AISC 360	Steel Construction	☒	☐
1705.2.2	IBC Table 17052.2	Steel Construction Other Than Structural Steel	☒	☐
1705.2.2.1.1	AWS D1.3	Cold-Formed Welding Inspection	☒	☐
1705.2.2.1.2	AWS D1.4 and ACI 318	Reinforced Steel Welding Inspection	☐	☒
1705.2.2.2	Indicated in Section	Cold-Formed Steel Trusses Spanning 60 Feet or Greater	☐	☒
1705.3	IBC Table 1705.3	Concrete Construction	☒	☐
1705.4	Inspection: TMS 420/ACI 530/ASCE 5 Assurance: TMS 602/ACI 530.1/ASCE 6	Masonry Construction	☒	☐
1705.5	Indicated in Section	Wood Construction: High-Load Diaphragm/Metal-Plate-Connected Wood Trusses Spanning 60 Feet or Greater	☐	☒
1705.6	Indicated in Section	Soils	☒	☐
1705.7	Indicated in Section	Driven Deep Foundations	☐	☒
1705.8	Indicated in Section	Cast-in-Place Deep Foundations (Piers)	☒	☐
1705.9	Indicated in Section	Helical Pile Foundations	☐	☒
1705.10	Indicated in Section	Special Inspection for Wind Resistance	☐	☒
1705.11	Indicated in Section	Special Inspection for Seismic Resistance	☐	☒
1705.12	Indicated in Section	Testing and Qualification For Seismic Resistance	☐	☒
1705.13	Indicated in Section	Sprayed Fire-Resistance Materials	☐	☒
1705.14	AWCI 12-B	Mastic and Intumescent Fire-Resistant Coatings	☐	☒
1705.15	Indicated in Section & ASTM E 2570	Exterior Insulation and Finish Systems/Water-Resistive Barrier Coating	☐	☒
1705.16	Indicated in Section	Fire-Resistance Penetrations and Joints	☐	☒
1705.17	Indicated in Section	Special Inspection for Smoke Control	☐	☒

Special Inspection Reports are to conform to the requirements stated in Section 1704.2.4.

Exceptions of Special Inspection as permitted per Section 1704.2

1. Special inspections are not required for construction of a minor nature or as warranted by conditions in the jurisdiction as approved by the building official.
2. Unless otherwise required by the building official, special inspections are not required for Group U occupancies that are accessory to a residential occupancy including, but not limited to, those listed in IBC section 312.1.
3. Special inspections are not required for portions of structures designed and constructed in accordance with the cold-formed steel light-frame construction provisions of IBC Section 2211.7 or the conventional light-frame construction provisions of IBC Section 2308.

Additional Special inspections shall also be required for proposed work that is, in the opinion of the building official, unusual in nature.

Additional Special Inspection per *International Building Code 2012*, the following is a list of the required special inspections applicable for this project:

2012 IBC Section	Type of Special Inspection and Extent	Applicable	Not Applicable	Details
1706	Design Strengths of Materials	☐	☒	
1707	Alternative Test Procedures	☐	☒	
1708	Test Safe Load	☐	☒	
1709	In-Situ Load Tests	☐	☒	
1710	Preconstruction Load Tests	☐	☒	
1711	Material and Test Standards	☐	☒	

Per Section 1704.5 Structural Observations:

Prior to the commencement of observations, the structural observer shall submit to the *building official* a written statement identifying the frequency and extent of structural observations.

At the conclusion of work included in the permit, the structural observer shall submit to the *building official* a written statement that the site visits have been made and identified any reported noting deficiencies which, to the best of the structural observer's knowledge, have not been resolved.

STRUCTURAL ABBREVIATIONS

ADDITIONAL	ADD'L.
ADJACENT	ADJ.
AGGREGATE	AGGR.
ALTERNATE	ALT.
ANCHOR ROD	A.R.
ARCHITECT(URAL)	ARCH('L).
AIR CONDITIONER	A/C
AIR HANDLING UNIT	AHU
APPROXIMATE(LY)	APPROX.
AXIAL LOAD	P
BACK FACE	B.F.
BEAM	BM.
BEARING	BRG.
BETWEEN	BTWN.
BLOCKING	BLKG.
BLOCK-OUT	B.O.
BOTTOM	BOT.
BOTTOM OF STEEL	B.O.S.
BRICK LEDGE	BR.L.
BRIDGING	BRDG.
BUILDING	BLDG.
BUILDING LINE	B.L.
CAST-IN-PLACE	C.I.P.
CENTER LINE	C.L. OR ℄
CENTER LINE OF STEEL	C.L.S.
CENTER OF GRAVITY	C.G.
CLEAR(ANCE)	CLR.
COLUMN	COL.
COMPRESSION	C OR COMP.
CONCRETE	CONC.
CONCRETE MASONRY UNIT	C.M.U.
CONNECTIONS	CONX(S).
CONTINUOUS	CONT.
CONTRACTOR	CONTR.
CONTROL JOINT	CT.J.
CONSTRUCTION	CONST.
CONSTRUCTION JOINT	C.J.
COVER PLATE	COV. PL.
DEFORMED BAR ANCHOR(S)	DBA('S).
DETAIL	DET.
DEAD LOAD	D.L.
DIAGONAL	DIAG.
DIAMETER	DIA.
DIMENSION(S)	DIM(S).
DRAWING(S)	DWG(S).
DOUBLE	DBL.
DOUBLE EXTRA STRONG	XXS
DOWEL(S)	DWL(S).
EACH	EA.
EACH FACE	E.F.
EACH WAY	E.W.
ELECTRICAL	ELEC.
ELEVATION	EL.
ELEVATOR	ELEV.
EMBEDMENT	EMBED.
ENGINEER	ENGR.
EQUAL	EQ.
EQUIPMENT	EQUIP.
EXPANSION	EXP.
EXPANSION JOINT	E.J.
EXISTING	EXIST.
EXTERIOR	EXT.
EXTRA STRONG	XS
FACE TO FACE	F. TO F.
FABRICATE(ION)(OR)	FAB.
FAR SIDE	F.S.
FINISH(ED)	FIN('D)
FINISHED FLOOR	F.F.
FIREPROOF	F.P.
FLANGE	FLG.
FLOOR	FL.
FLOOR DRAIN	F.D.
FOOTING	FTG.
FOUNDATION	FDN.
GALVANIZED	GALV.
GENERAL	GEN.
GLUE LAMINATED TIMBER	GLULAM
GRADE	GR.
GRADE BEAM	GR.BM.
HOT DIP(PED)	H.D.
HEADED STUD(S)	H.S.
HEADER	HDR.
HEIGHT	HT.
HORIZONTAL	HORIZ.
HOOK	HK.
INSIDE DIAMETER	I.D.
INSIDE FACE	I.F.
INTERIOR	INT.
INTERMEDIATE	INTERM.
JOINT	JT.
JOIST(S)	JST(S).
LAMINATED VENEER LUMBER	LVL
LIGHTWEIGHT	LWT.
LIVE LOAD	L.L.
LONGITUDINAL	LONG.
LONG LEG HORIZONTAL	LLH.
LONG LEG VERTICAL	LLV.
LONG SIDE HORIZONTAL	LSH.
LONG SIDE VERTICAL	LSV.
MANUFACTURE(R)	MFR.
MASONRY	MAS.
MATERIAL	MAT'L.
MECHANICAL	MECH('L).
METAL	MTL.
MEZZANINE	MEZZ.
MIDDLE	MID.
MISCELLANEOUS	MISC.
MOMENT	M.
MOMENT CONNECTION(S)	M.C.
NEAR FACE	N.F.
NOMINAL	NOM.
NON-SHRINK	N.S.
NORMAL WEIGHT	N.W.
NOT IN CONTRACT	N.I.C.
NOT TO SCALE	N.T.S.
ON CENTER	O.C.
OPEN WEB STEEL JOIST	OWSJ
OPENING(S)	OPNG(S).
OPPOSITE	OPP.
OPPOSITE HAND	O.H.
ORIENTED STRAND BOARD	OSB
OUTSIDE FACE	O.F.
OUTSIDE DIAMETER	O.D.
PARALLEL	PAR.
PARALLEL STRAND LUMBER	PSL
PENETRATION	PEN.
PERPENDICULAR	PERP.
PIECE	PC.
PLATE	PL. OR ℘
PLYWOOD	PLYWD.
POINT	PT.
POST-TENSION(ED)	P.T.
POUND(S) X1000	KIP(S)
POUNDS PER LINEAR FOOT	PLF
POUNDS PER SQUARE FOOT	PSF
POUNDS PER CUBIC FOOT	PCF
POUNDS PER CUBIC YARD	PCY
PRECAST CONCRETE	P/C
PREFABRICATED	PREFAB.
PRELIMINARY	PRELIM.
PRESSURE	PRESS.
PROJECT(ION)	PROJ.
RADIUS	R.
REFER TO / REFERENCE	REF.
REINFORCED CONCRETE PIPE	RCP.
REINFORCE(ING)(ED)(MENT)	REINF.
REMAINDER	REM.
REQUIRE	REQ.
REQUIRED	REQ'D
RETURN	RET.
ROOF DRAIN	R.D.
ROUGH OPENING	R.O.
ROUND	RND.
SCHEDULE(D)	SCHED.
SECTION	SECT.
SHEAR FORCE	V
SHEET	SHT.
SIMILAR	SIM.
SPACE(S)(ING)	SPA.
SPECIFICATION(S)	SPEC(S).
SPECIFIED	SPEC'D
SQUARE	SQ.
STAINLESS STEEL	S.S.
STANDARD	STD.
STEEL	STL.
STIFFENER	STIFF
STRAIGHT	STR.
STIRRUPS	STIR
STRUCTURE OR STRUCTURAL	STRUCT.
SUPPORT(S)	SUPT(S)
TENSION	T
THICK(NESS)	THK.
TONGUE AND GROOVE	T&G
TOP AND BOTTOM	T&B
TOP OF BEAM	T.O.BM.
TOP OF FOOTING	T.O.FTG.
TOP OF PIER	T.O.PIER
TOP OF PIER CAP	T.O.P.C.
TOP OF STEEL	T.O.S.
TOP OF STRUCTURAL CONCRETE	T.O.S.C.
TOP OF WALL	T.O.W.
TREATED	TRTD.
TYPICAL	TYP.
UNLESS NOTED OTHERWISE	U.N.O.
VERTICAL	VERT.
VOLUME	VOL.
WATER STOP	W.S.
WELDED WIRE MESH	W.W.M.
WIND BRACE	WB
WIND LOAD	W.L.
WITH	W/
WITHOUT	W/O
WATER PROOFING	W.P.
WORK POINT	W.P.
WOOD	WD.

MATERIALS LEGEND

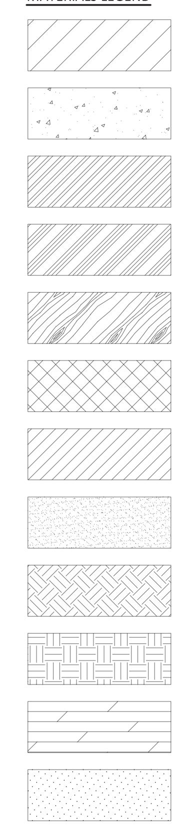

EXISTING CONSTRUCTION
CONCRETE
STEEL IN SECTION
PLYWOOD IN SECTION
WOOD
CMU
BRICK OR STONE IN SECTION
GROUT/SAND
EARTH (UNDISTURBED)
EARTH/FILL (COMPACTED)
ROCK
MECH. UNIT OR ZONE

DRAFTING SYMBOLS

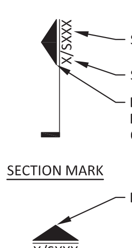

SHEET NUMBER
SECTION NUMBER
DIRECTION OF VIEW FOR SECTION CUT OR ELEVATION

SECTION MARK

DIRECTION OF VIEW

ELEVATION MARK

PLAN/DETAIL DESIGNATION

PLAN NAME/DETAIL TITLE ______________
SCALE:

STATE OF TEXAS
RACHEL A. H. MALDOMADO
117500
LICENSED
PROFESSIONAL ENGINEER
06/13/2016

NO.	DATE	REVISION	BY	APVD

DSGN RACHEL MALDOMADO
DR MELISSA SIBLEY
CHK TOM CALDERWOOD
APVD RACHEL MALDOMADO

ENCOTECH ENGINEERING CONSULTANTS
TBPE Firm 1141 | 8500 Bluffstone Cove, Suite B-103 Austin, Texas 78759 | 512.338.1101 Project No.: 13006.MS.AUS

CH2MHILL®
TBPE FIRM NO. 3699

Montopolis Water Reclamation Initiative (WRI)
Storage Reservoir and Pump Station
2711 Montopolis Drive
Austin Water, Austin, Texas

GENERAL NOTES

AS SHOWN
VERIFY SCALE
BAR IS ONE INCH ON ORIGINAL DRAWING.
0 1"

DATE	MAY 2016
PROJ	13006.MS.AUS
DWG	SP-3
SHEET	63 of 126

$PWURL $PWPATH FILENAME: ANSI_D.DWG PLOT DATE: $PLOTDATE PLOT TIME: $PLOTTIME

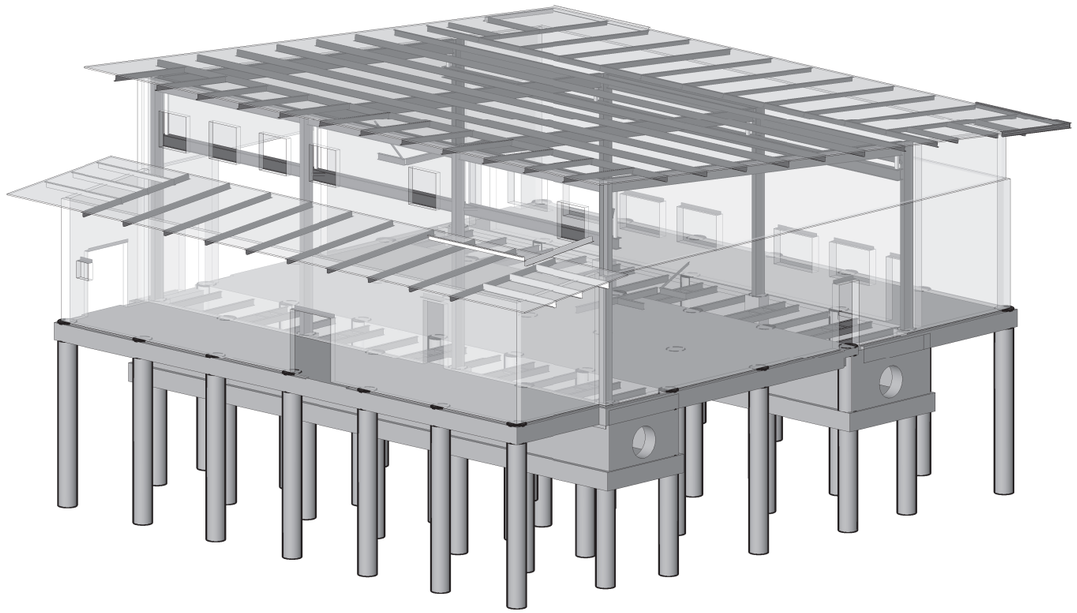

1 ISOMETRIC VIEW - FRONT
N.T.S.

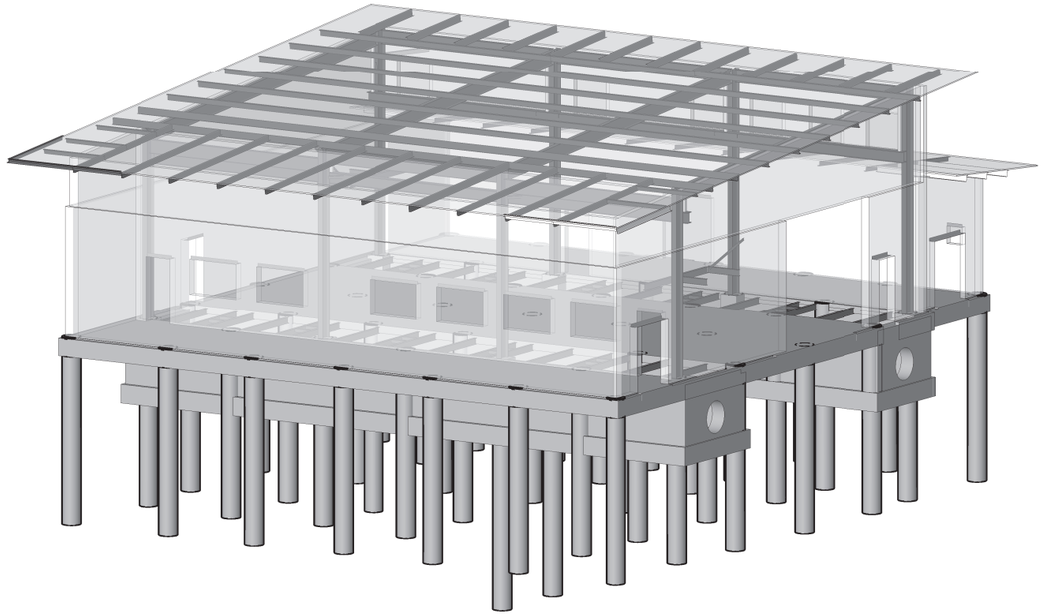

2 ISOMETRIC VIEW - BACK
N.T.S.

STATE OF TEXAS
RACHEL A. H. MALDOMADO
117500
LICENSED PROFESSIONAL ENGINEER
05/11/2016

NO.	DATE	REVISION	BY	APVD

DSGN RACHEL MALDOMADO | DR HAMZAH KHATAW | CHK TOM CALDERWOOD | APVD RACHEL MALDOMADO

ENCOTECH
ENGINEERING CONSULTANTS
TBPE Firm 1141 | 8000 Bluffstone Cove, Suite B-103 Austin, Texas 78759 | 512.338.1101

Montopolis Water Reclamation Initiative (WRI)
Storage Reservoir and Pump Station
2711 Montopolis Drive
Austin Water, Austin, Texas

CH2MHILL®
TBPE FIRM NO. 3689

STRUCTURAL (PUMP STATION)
ISOMETRIC VIEW

AS SHOWN
VERIFY SCALE
BAR IS ONE INCH ON ORIGINAL DRAWING.
0 1"

DATE	MAY 2016
PROJ	13006.MS.AUS
DWG	SP-4
SHEET	64 of 126

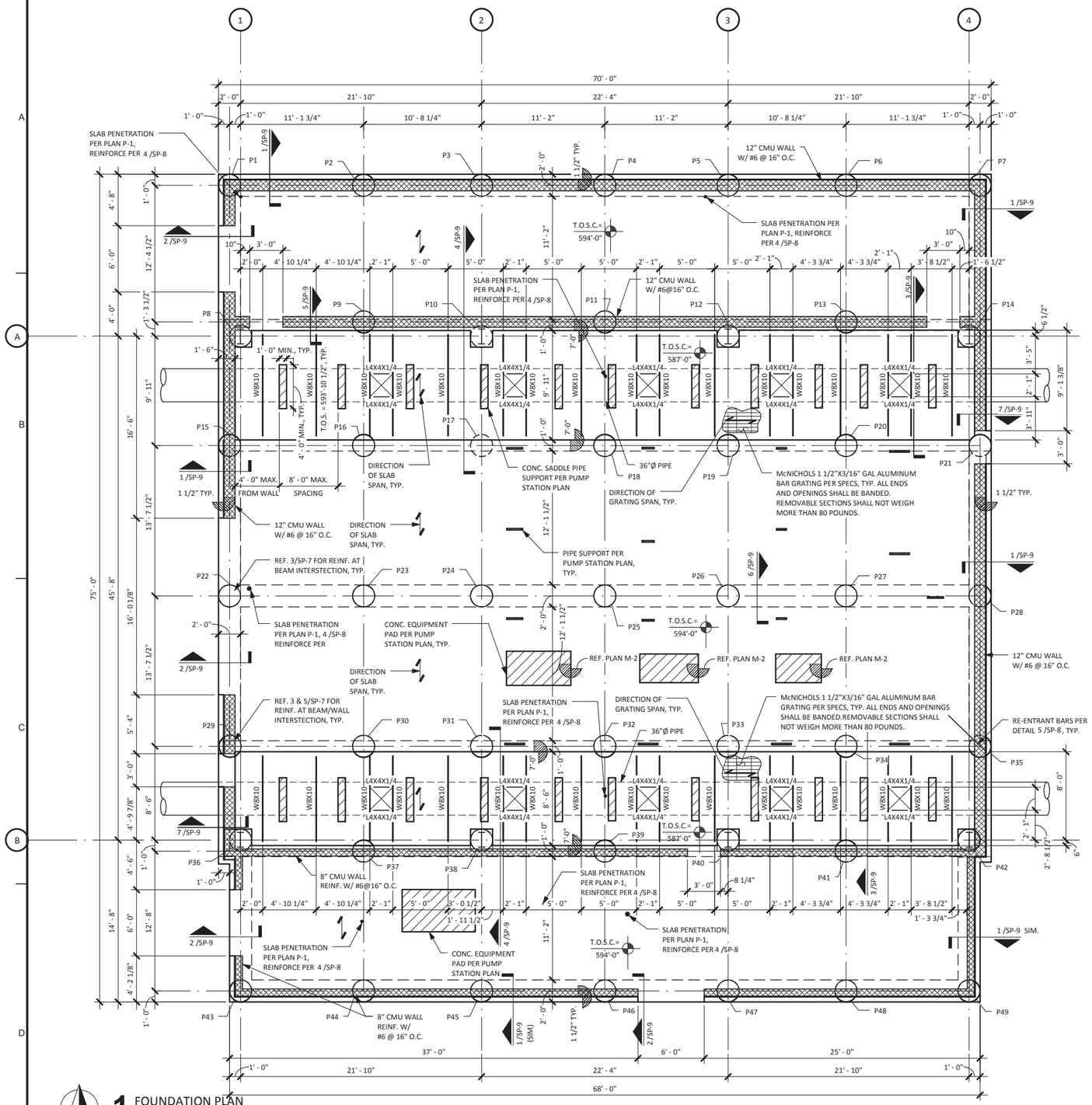

1 FOUNDATION PLAN

SCALE: 3/16" = 1'-0"

FOUNDATION PLAN NOTES

1. REFERENCE FINISH FLOOR ELEVATION = 594'-0"
2. T.O.S.C.= 590'-0" , FOR EXAMPLE DENOTES TOP OF STRUCTURAL CONCRETE OR LUG ELEVATION BELOW REFERENCE FINISH FLOOR ELEVATION.
3. P1 , FOR EXAMPLE DENOTES PIER NUMBER REFERENCED IN PIER DATA TABLE ON GENERAL NOTES SHEET SP-1.
4. 10" THICK STRUCTURAL SLAB REINF. W/ #6 @ 6" O.C. TOP AND BOTTOM IN DIRECTION SHOWN. PROVIDE #4 @ 10" O.C. TEMP. AND SHRINK REINF. PERPENDICULAR TO SPAN.
5. ALL GRADE BEAMS ARE 2'-0" WIDE AND 2'-0" DEEP, U.N.O. ON PLAN, REINF. W/ (3) #8 CONT. TOP AND BOTTOM AND #4 CLOSED STIRRUPS @ 10" O.C.
6. ALL INTERIOR GRADE BEAMS ARE DIMENSIONED TO THE CENTERLINE OF THE BEAM.
7. VERIFY ALL DIMENSIONS, ELEVATIONS, FINISH SURFACES, SLOPES, DRAINS, DEPRESSIONS, CURBS, ETC. WITH ARCHITECTURAL DRAWINGS PRIOR TO START OF CONSTRUCTION.
8. FABRICATE MILD STEEL WITH BENDS AS APPLICABLE AT SLAB STEPS OR DROPS, TYPICAL.
9. DENOTES LOAD BEARING CMU WALLS, REF. TYPICAL CMU DETAILS. REF. ARCH. & MECH. FOR ALL REQ'D PENETRATIONS THROUGH CMU WALLS.
10. ALL EARTHWORK SHALL BE IN STRICT ACCORDANCE WITH THE GEOTECHNICAL REPORT. REF. GENERAL NOTES.
11. REF. DETAIL 4027-601 ON SHEET M-10 FOR PIPE SLEEVE DETAIL AT TROUGH.
12. THESE STRUCTURAL DRAWINGS DO NOT ADDRESS WATER ISSUES AS IT RELATES TO BUT NOT LIMITED TO SITE DRAINAGE, ROOF RUNOFF, OR WATER INTRODUCED BY ADJACENT PROPERTIES. ADEQUATE DRAINAGE SHALL BE PROVIDED TO LIMIT THE EFFECTS OF EROSION AND TO MAINTAIN THE INTEGRITY OF THE STRUCTURAL SYSTEM DESCRIBED. WATER ISSUES AND/OR WATERPROOFING ARE THE RESPONSIBILITY OF THE ARCHITECT AND CONTRACTOR AND ARE BEYOND THE SCOPE OF THESE DOCUMENTS.
13. REFER TO SP-1 THRU SP-3 FOR GENERAL NOTES.
14. REFER TO SP-7 & SP-8 FOR TYPICAL CONCRETE DETAILS.
15. REF. SHEET SP-10 FOR CMU WALL REINF. NOT NOTED ON PLAN.
16. REFER TO SP-10 &SP-11 SERIES FOR TYPICAL CMU DETAILS.
17. PRE-FABRICATED METAL ROOF SUPERSTRUCTURE SHALL BE DESIGNED BY THE PRE-FABRICATED MANUFACTURER. SHOP DRAWINGS AND FOUNDATION REACTIONS SHALL BE SUBMITTED TO THE ENGINEER OF RECORD FOR REVIEW PRIOR TO FABRICATION.
18. ALL WIDE FLANGE BEAMS AND ANGLES AT TROUGH SHALL BE GALVANIZED.
19. ONCE EQUIPMENT AND PIPING HAVE BEEN SELECTED, SUBMIT WEIGHT INFORMATION TO STRUCTURAL ENGINEER BEFORE CONSTRUCTION TO VERIFY LOADING ASSUMPTIONS.

METAL BUILDING NOTES

GRIDLINES NOTED IN STRUCTURAL DRAWINGS ARE NOT INTENDED TO LOCATE THE CENTERLINE OF THE METAL BUILDING COLUMNS. STEEL COLUMNS ARE TO BE LOCATED WITH A MINIMUM 2" CLEARANCE FROM ALL ADJACENT CMU WALLS. STEEL BEAMS SHALL ALSO MAINTAIN A 2" CLEARNACE AND SHALL BE LOCATED ON THE GRIDLINES WHERE POSSIBLE.

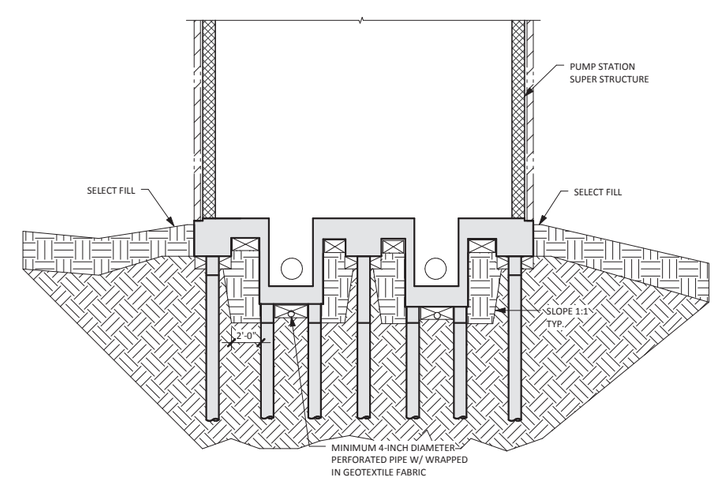

2 BUILDING PAD DETAIL

N.T.S.

STATE OF TEXAS — RACHEL A. H. MALDOMADO — 117500 — LICENSED PROFESSIONAL ENGINEER — 05/11/2016

NO.	DATE	REVISION	BY	APVD

DSGN RACHEL MALDOMADO | DR HAMZAH KHATAW | CHK TOM CALDERWOOD | APVD RACHEL MALDOMADO

ENCOTECH ENGINEERING CONSULTANTS — TBPE Firm 5141 | 8500 Bluffstone Cove, Suite B-103 Austin, Texas 78759 | 512.338.1101

Montopolis Water Reclamation Initiative (WRI)
Storage Reservoir and Pump Station
2711 Montopolis Drive
Austin Water, Austin, Texas

CH2MHILL® TBPE FIRM NO. 3699

STRUCTURAL (PUMP STATION)
FOUNDATION PLAN

AS SHOWN
VERIFY SCALE
BAR IS ONE INCH ON ORIGINAL DRAWING. 0 — 1"

DATE	MAY 2016
PROJ	13006.MS.AUS
DWG	SP-5
SHEET	65 of 126

FRAMING PLAN NOTES

1. DENOTES LOAD BEARING CMU WALLS, REF. TYPICAL CMU DETAILS. REF. ARCH. & MECH. FOR ALL REQ'D PENETRATIONS THROUGH CMU WALLS.
2. "CMU HDR" DENOTES LOAD BEARING CMU HEADER, REF. TYPICAL CMU DETAILS.
3. ROOF DECK SHALL BE PER THE PRE-FAB. MFR. REF SP-2 FOR ADD'L PRE-ENGINEERED STEEL BUILDING REQUIREMENTS
4. REF. SHEET SP-10 FOR CMU WALL REINF. NOT INDICATED ON PLAN.
5. REF. SHEETS SP-10 & SP-11 FOR TYPICAL CMU DETAILS.
6. REF. SHEETS SP-1 THROUGH SP-3 FOR GENERAL NOTES.
7. PRE-FABRICATED METAL ROOF SUPERSTRUCTURE SHALL BE DESIGNED BY THE PRE-FABRICATED MANUFACTURER. SHOP DRAWINGS AND FOUNDATION REACTIONS SHALL BE SUBMITTED TO THE ENGINEER OF RECORD FOR REVIEW PRIOR TO FABRICATION.

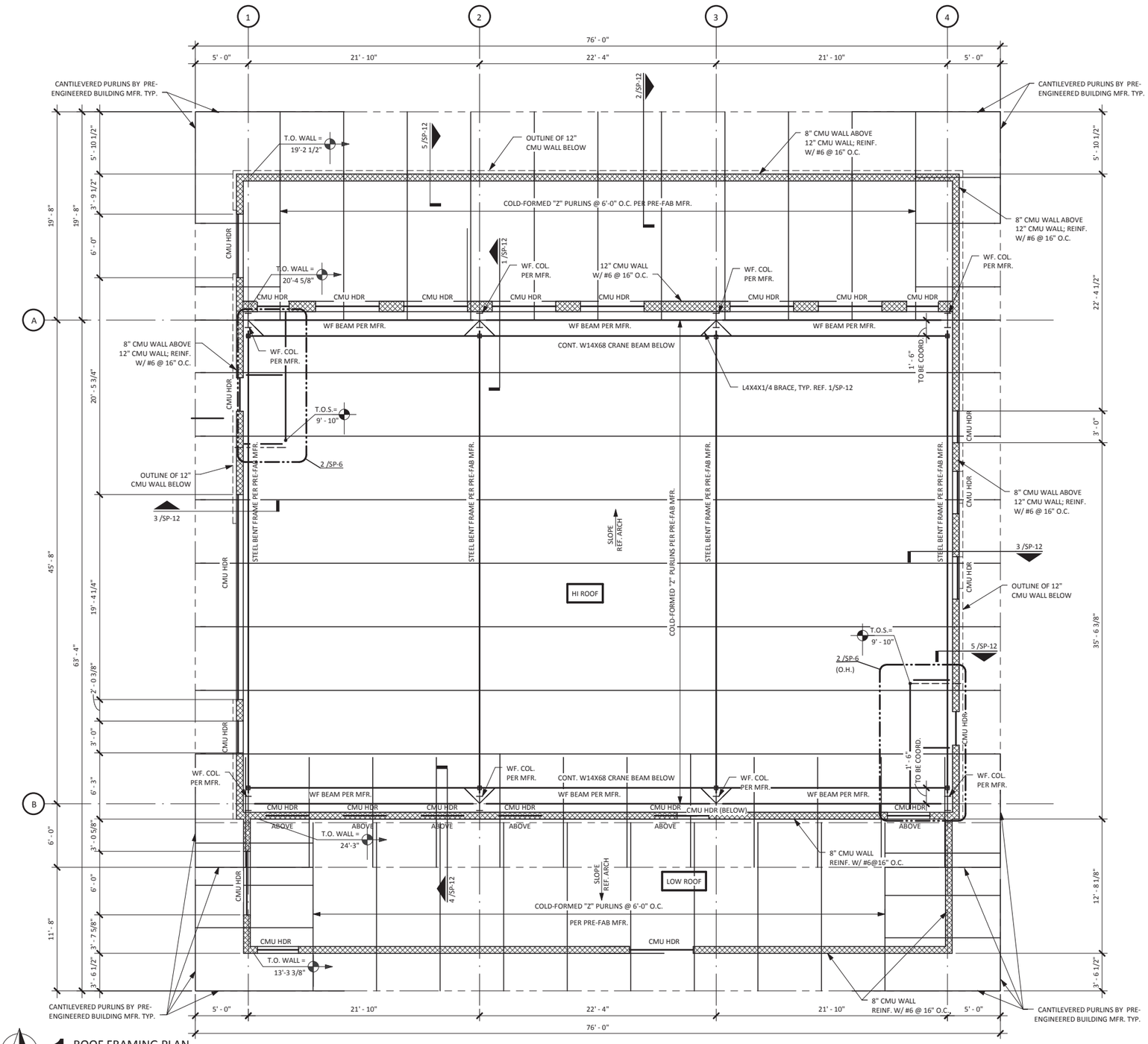

1 ROOF FRAMING PLAN
SCALE: 3/16" = 1'-0"

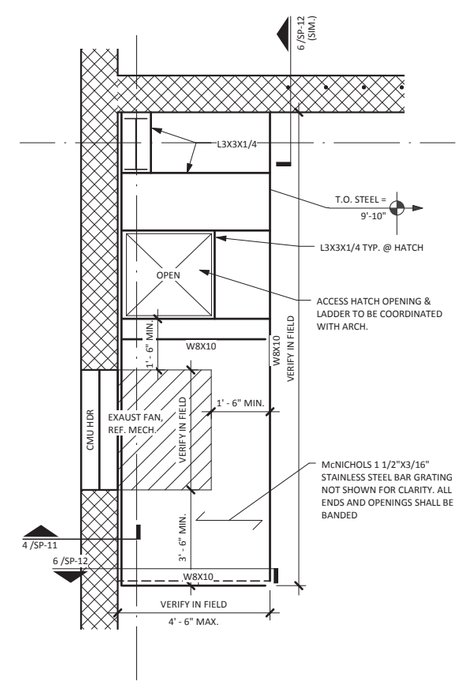

2 EXHAUST FAN WORK PLATFORM ENLARGED PLAN
SCALE: 1/2" = 1'-0"

STATE OF TEXAS — RACHEL A. H. MALDOMADO — 117500 — LICENSED PROFESSIONAL ENGINEER — 05/11/2016

NO.	DATE	REVISION	BY	APVD

DSGN RACHEL MALDOMADO | DR HAMZAH KHATAW | CHK TOM CALDERWOOD | APVD RACHEL MALDOMADO

ENCOTECH ENGINEERING CONSULTANTS
TBPE Firm 8000 Bluffstone Cove, Suite B-103 Austin, Texas 78759 | 512.338.1101
3141

CH2MHILL® TBPE FIRM NO. 3089

Montopolis Water Reclamation Initiative (WRI)
Storage Reservoir and Pump Station
2711 Montopolis Drive
Austin Water, Austin, Texas

STRUCTURAL (PUMP STATION)
ROOF FRAMING PLAN

AS SHOWN
VERIFY SCALE
BAR IS ONE INCH ON ORIGINAL DRAWING. 0 1"

DATE	MAY 2016
PROJ	13006.MS.AUS
DWG	SP-6
SHEET	66 of 126

REINFORCEMENT SPLICE LENGTH BEAM SCHEDULE												
	f'c=3000 psi CONCRETE		f'c=4000 psi CONCRETE		f'c=5000 psi CONCRETE		f'c=6000 psi CONCRETE		f'c=7000 psi CONCRETE		f'c=8000 psi CONCRETE	
CLASS / BAR SIZE	"A"	"B"	"A"	"B"	"A"	"B"	"A"	"B"	"A"	"B"	"A"	"B"
#3	1'-5"	1'-10"	1'-3"	1'-7"	1'-1"	1'-5"	1'-0"	1'-4"	1'-0"	1'-4"	1'-0"	1'-4"
#4	1'-10"	2'-5"	1'-7"	2'-1"	1'-5"	1'-10"	1'-4"	1'-8"	1'-3"	1'-7"	1'-2"	1'-6"
#5	2'-4"	3'-0"	2'-0"	2'-7"	1'-10"	2'-4"	1'-8"	2'-1"	1'-6"	2'-0"	1'-5"	1'-10"
#6	2'-9"	3'-7"	2'-5"	3'-1"	2'-2"	2'-9"	2'-0"	2'-7"	1'-10"	2'-4"	1'-8"	2'-2"
#7	4'-0"	5'-3"	3'-6"	4'-6"	3'-1"	4'-1"	2'-10"	3'-8"	2'-8"	3'-5"	2'-6"	3'-2"
#8	4'-7"	6'-0"	4'-0"	5'-2"	3'-7"	4'-7"	3'-3"	4'-3"	3'-0"	3'-11"	2'-10"	3'-8"
#9	5'-2"	6'-10"	4'-6"	5'-10"	4'-0"	5'-3"	3'-8"	4'-9"	3'-5"	4'-5"	3'-2"	4'-1"
#10	5'-10"	7'-8"	5'-1"	6'-7"	4'-6"	5'-10"	4'-1"	5'-4"	3'-10"	4'-11"	3'-7"	4'-8"
#11	6'-6"	8'-6"	5'-7"	7'-3"	5'-0"	6'-6"	4'-7"	5'-11"	4'-3"	5'-6"	4'-0"	5'-2"

NOTE

1. WHERE SPLICE TYPE IS NOT INDICATED, USE CLASS "B" SPLICE.
2. LAP LENGTHS LISTED ABOVE APPLY UNDER THE FOLLOWING CONDITIONS:
   A. BEAM & COLUMN BARS ARE SPACED AT LEAST 1 BAR DIAMETER O.C. WITH CLEAR COVER NOT LESS THAN 1 BAR DIA.
   B. WALL & SLAB BARS ARE SPACED AT LEAST 2 BAR DIA. O.C.
   C. FOR UNCOATED AND ZINC-COATED (GALVANIZED) REINFORCEMENT.
   D. FOR REINFORCEMENT THAT CONFORMS DEFORMED NEW BILLET STEEL BARS IN ACCORDANCE TO ASTM A615 GR. 60.
3. FOR LIGHTWEIGHT CONCRETE, MULTIPLY TABULATIONS BY 1.3.
4. FOR HORIZ. TOP BARS W/ 12" OF CONCRETE CAST BELOW, MULTIPLY TABULATIONS BY 1.3.
6. WHERE A LARGER BAR LAPS A SMALLER BAR, THE SMALLER SCHEDULED LAP LENGTH APPLIES.
7. REFER TO "CONCRETE REINFORCING" SECTION OF THE GENERAL NOTES FOR FURTHER INFORMATION.
8. FOR CMU REINFORCEMENT SPLICE LENGTH SCHEDULE, SEE CMU DETAILS.

1 TYPICAL CONCRETE DETAIL - LAP SPLICE SCHEDULE
N.T.S.

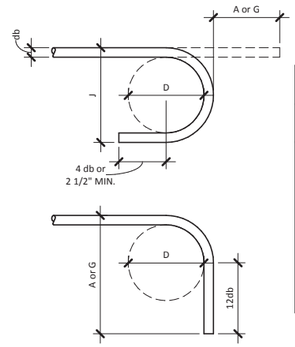

STANDARD HOOK SCHEDULE				
BAR SIZE	D	180" HOOK		90" HOOK
		A or G	J	A or G
#3	2 1/4"	5"	3"	6"
#4	3"	6"	4"	8"
#5	3 3/4"	7"	5"	10"
#6	4 1/2"	8"	6"	1'-0"
#7	5 1/4"	10"	7"	1'-2"
#8	6"	11"	8"	1'-4"
#9	9 1/2"	1'-3"	11 3/4"	1'-7"
#10	10 3/4"	1'-5"	1'-1 1/4"	1'-10"
#11	1'-0"	1'-7"	1'-2 3/4"	2'-0"

HOOK DEVELOPMENT LENGTH SCHEDULE, Ldh						
BAR SIZE	3000 psi	4000 psi	5000 psi	6000 psi	7000 psi	8000 psi
#3	9"	8"	7"	6"	6"	6"
#4	11"	10"	9"	8"	8"	7"
#5	1'-2"	1'-0"	11"	10"	9"	9"
#6	1'-5"	1'-3"	1'-1"	1'-0"	11"	11"
#7	1'-8"	1'-5"	1'-3"	1'-2"	1'-1"	1'-0"
#8	1'-10"	1'-7"	1'-5"	1'-4"	1'-3"	1'-2"
#9	2'-1"	1'-10"	1'-8"	1'-6"	1'-5"	1'-4"
#10	2'-4"	2'-0"	1'-10"	1'-8"	1'-7"	1'-6"
#11	2'-7"	2'-3"	2'-0"	1'-10"	1'-9"	1'-7"

NOTE

1. TABULATED VALUES ARE BASED ON GRADE 60 REINFORCING BARS AND NORMAL WEIGHT CONCRETE.
2. FOR TABULATED BARS SIZES ONLY:
   A. IF CONCRETE COVER PER ACI 318-08, SECTION 12.5.3(a), THEN A MODIFICATION FACTOR OF 0.7 MAY BE APPLIED BUT THE LENGTH MUST NOT BE LESS THAN 8 x db NOR 6 IN.
   B. IF HOOK IS ENCLOSED IN TIES OR STIRRUPS PER ACI 318-08, SECTION 12.5.3(b),(c), THEN A MODIFICATION FACTOR OF 0.8 MAY BE APPLIES BUT THE LENGTH MUST NOT BE LESS THAN 8 x db NOR 6 IN.
3. FOR EPOXY-COATED HOOKS, MULTIPLY THE TABULATED VALUES BY 1.2.
4. FOR LIGHTWEIGHT CONCRETE, MULTIPLY THE TABULATED VALUES BY 1.3.

2 SCHEDULE - HOOK DEVELOPMENT LENGTHS
N.T.S.

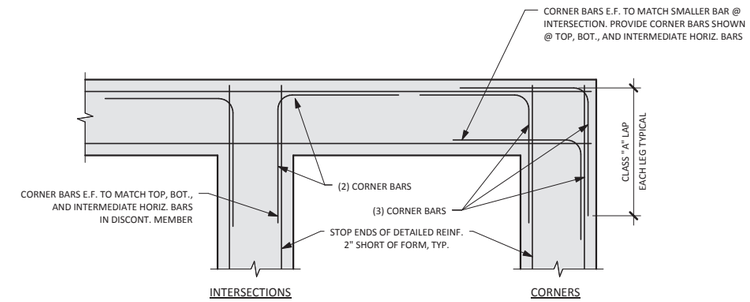

PLAN - TWO CURTAINS OF REINFORCEMENT

NOTE

1. WHERE 90 DEGREE HOOKS ARE SCHEDULED OR DETAILED FOR TOP BARS, CORNER BARS MAY BE OMITTED FOR THAT LAYER.
2. MATCH SIZE, LOCATION AND NUMBER OF HORIZONTAL BEAM AND WALL BARS, EXCEPT THAT WHERE THERE ARE MORE THAN 2 TOP OR BOTTOM BARS, ONLY THE INSIDE AND OUTSIDE BARS MUST BE MATCHED.

3 TYPICAL CONCRETE DETAIL - WALL OR GRADE BEAM REINFORCING
N.T.S.

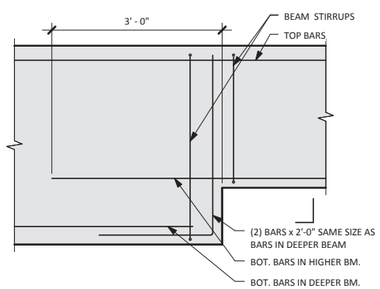

4 TYPICAL CONCRETE DETAIL - STEP IN BOTTOM GRADE BEAM
N.T.S.

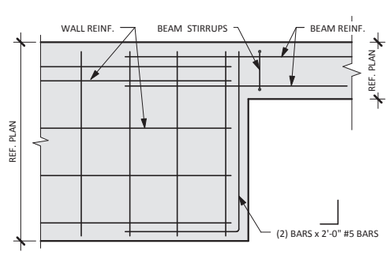

5 TYPICAL CONCRETE DETAIL - GRADE BEAM TO WALL
N.T.S.

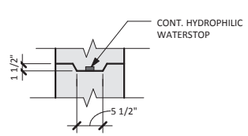

6 TYPICAL CONCRETE DETAIL - TYPICAL KEYWAY AND WATERSTOP DETAIL
N.T.S.

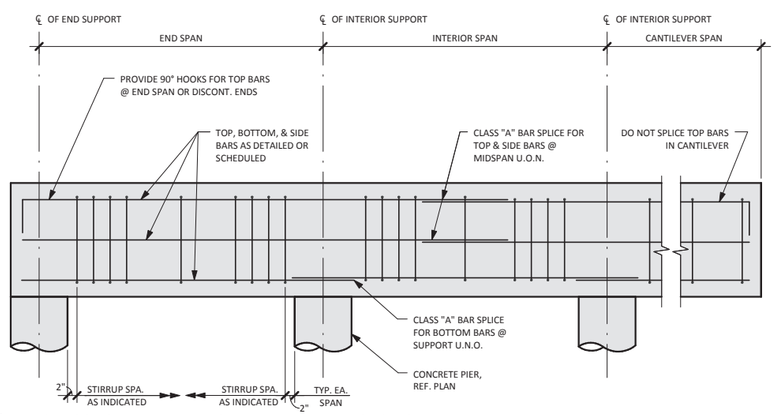

7 TYPICAL CONCRETE DETAIL - GRADE BEAM REINFORCING
SCALE: 3/4" = 1'-0"

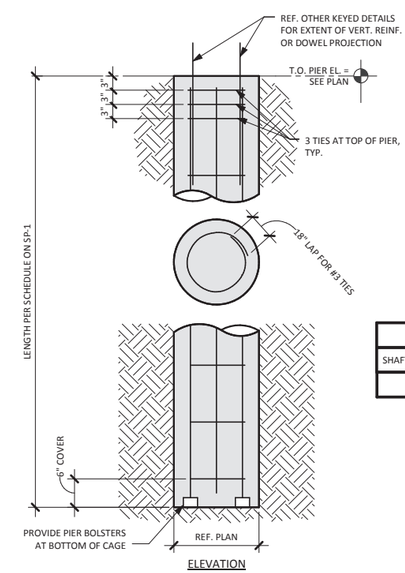

NOTE

1. PROVIDE CASING PER GEOTECH. IF REQUIRED.
2. NOTIFY STRUCTURAL ENGINEER 48 HOURS PRIOR TO DRILLING & POURING PIERS.
3. VERT. REINF. SHALL BE CLASS "A" SPLICED, TYP.
4. CONTRACTOR TO PROVIDE + OR - UNIT PRICE FOR EACH PIER SIZE FOR ADJUSTING COSTS FOR PIER DEPTH OVERRUN OR UNDERRUN TO OWNER AND ARCHITECT.

PIER SCHEDULE		
SHAFT DIAMETER (IN.)	VERTICAL REINFORCING	CIRCULAR TIES
24	8 - #7	#3 @ 12" O.C.

8 STRAIGHT SHAFT PIER DETAIL AND SCHEDULE
SCALE: 3/4" = 1'-0"

STATE OF TEXAS
RACHEL A. H. MALDOMADO
117500
LICENSED PROFESSIONAL ENGINEER
05/11/2016

NO.	DATE	REVISION	BY	APVD

DSGN RACHEL MALDOMADO
DR HAMZAH KHATAW
CHK TOM CALDERWOOD
APVD RACHEL MALDOMADO

ENCOTECH
ENGINEERING CONSULTANTS
TBPE Firm # 3141 | 8000 Bluffstone Cove, Suite B-103 Austin, Texas 78759 | 512.338.1101

CH2MHILL®
TBPE FIRM NO. 3909

Montopolis Water Reclamation Initiative (WRI)
Storage Reservoir and Pump Station
2711 Montopolis Drive
Austin Water, Austin, Texas

STRUCTURAL (PUMP STATION)
TYPICAL CONCRETE DETAILS

AS SHOWN
VERIFY SCALE
BAR IS ONE INCH ON ORIGINAL DRAWING.
0 1"

DATE	MAY 2016
PROJ	13006.MS.AUS
DWG	SP-7
SHEET	67 of 126

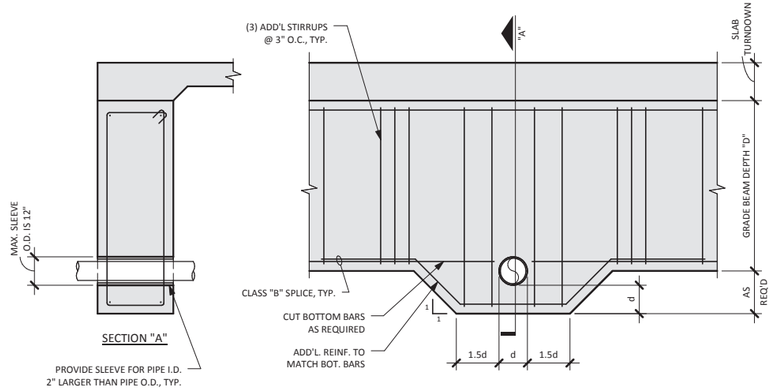

1 TYPICAL CONCRETE DETAIL - HORIZONTAL PENETRATIONS THROUGH BOTTOM OF GRADE BEAM
N.T.S.

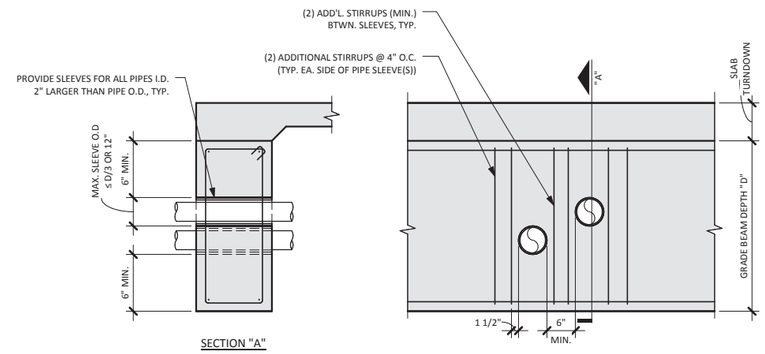

2 TYPICAL CONCRETE DETAIL - HORIZONTAL PIPE PENETRATIONS THROUGH GRADE BEAM
N.T.S.

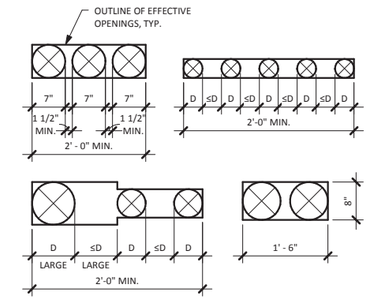

NOTE

1. ALL THESE CONDITIONS NEED (1) #3 TRIM BARS ALL AROUND EFFECTIVE OPENING W/ 1'-0" EMBED. PAST THE OPENING EDGE. DIAGONAL BARS ARE NOT NECESSARY AT THESE CONDITIONS.

3 TYPICAL CONCRETE DETAIL - MULTIPLE SLAB OPENING
N.T.S.

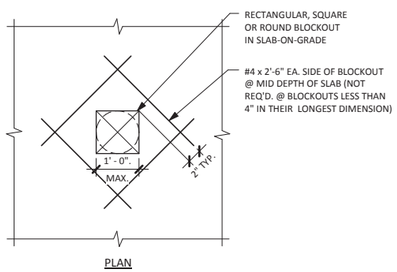

4 TYPICAL CONCRETE DETAIL -
ADDITIONAL REINFORCING AT BLOCKOUT IN SLAB
N.T.S.

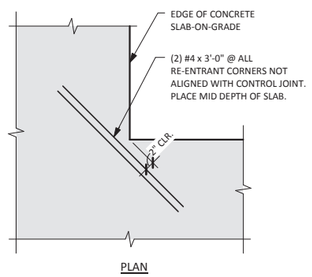

5 TYPICAL CONCRETE DETAIL -
SLAB-ON-GRADE RE-ENTRANT CORNER REINF.
N.T.S.

NOTE

1. CONSTRUCTION JOINT SHALL BE LOCATED IN THE MIDDLE THIRD OF THE SPAN BETWEEN SUPPORTS.
2. CONTRACTOR SHALL NOTE THE PROPOSED CONSTRUCTION JOINT LOCATION ON THE ERECTION PLAN FOR THE BEAM REINFORCEMENT STEEL SHOP DRAWINGS.

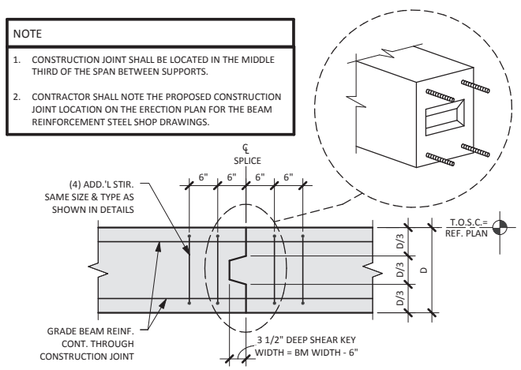

6 TYPICAL CONCRETE DETAIL - GRADE BEAM CONSTRUCTION JOINT
N.T.S.

NOTE

WHERE A PLUMBING PIPE OR SLEEVE PENETRATES A FOUNDATION BEAM, INCREASE THE WIDTH OF THE BEAM BY A DIMENSION AT LEAST EQUAL TO THE GREATEST DIMENSION OF THE SLEEVE OR PIPE. EXTEND THE INCREASED WIDTH 1'-6" PAST THE PENETRATION, THEN TRANSITION AT 1:6. ADD (1) #5 TOP AND BOTTOM @ EACH SIDE OF SLEEVE(S) FOR THE FULL LENGTH OF THE THICKENED BEAM.

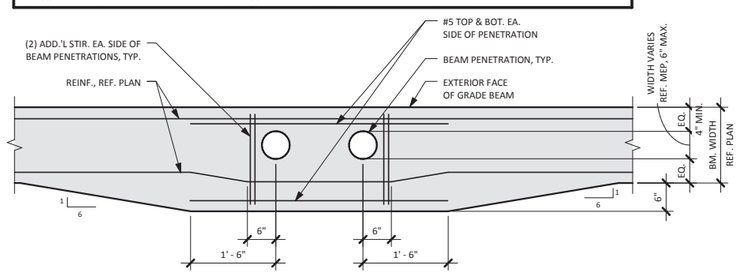

7 TYPICAL CONCRETE DETAIL - VERTICAL PENETRATIONS THRU GRADE BEAM
N.T.S.

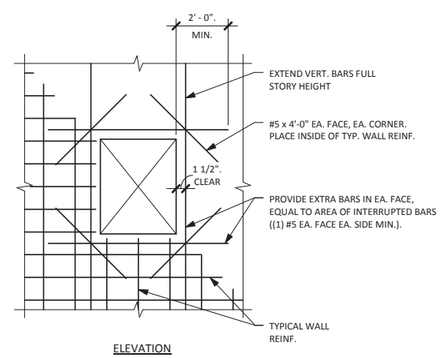

8 TYPICAL CONCRETE DETAIL - REINF. AT CONCRETE WALL OPENING
SCALE: 3/4" = 1'-0"

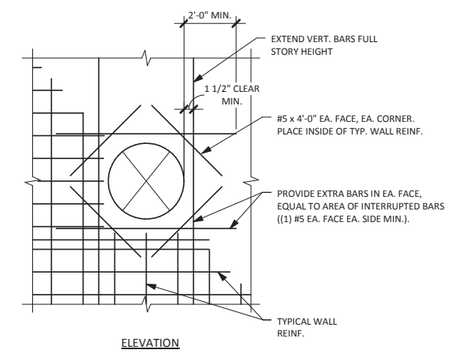

9 TYPICAL CONCRETE DETAIL - REINF. AT CONCRETE WALL ROUND OPENING
SCALE: 3/4" = 1'-0"

STATE OF TEXAS
RACHEL A. H. MALDOMADO
117500
LICENSED PROFESSIONAL ENGINEER
05/11/2016

NO.	DATE	REVISION	BY	APVD

DSGN RACHEL MALDOMADO
DR HAMZAH KHATAW
CHK TOM CALDERWOOD
APVD RACHEL MALDOMADO

ENCOTECH
ENGINEERING CONSULTANTS
TBPE Firm 1141 | 8000 Bluffstone Cove, Suite B-103 Austin, Texas 78759 | 512.338.9393

Montopolis Water Reclamation Initiative (WRI)
Storage Reservoir and Pump Station
2711 Montopolis Drive
Austin Water, Austin, Texas

CH2MHILL®
TBPE FIRM NO. 3809

STRUCTURAL (PUMP STATION)
TYPICAL CONCRETE DETAILS

AS SHOWN
VERIFY SCALE
BAR IS ONE INCH ON ORIGINAL DRAWING.
0 1"

DATE	MAY 2016
PROJ	13006.MS.AUS
DWG	SP-8
SHEET	68 of 126

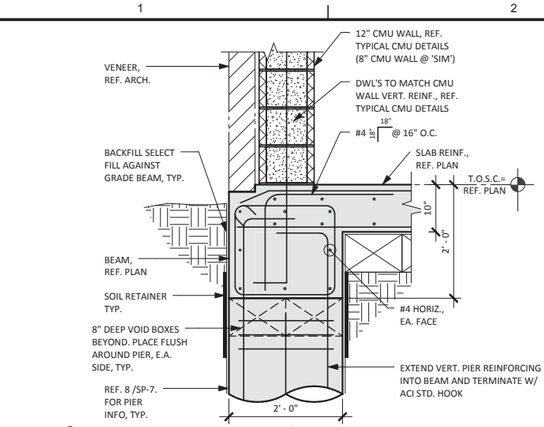

1 PERIMETER GRADE BEAM W/ LUG
SCALE: 3/4" = 1'-0"

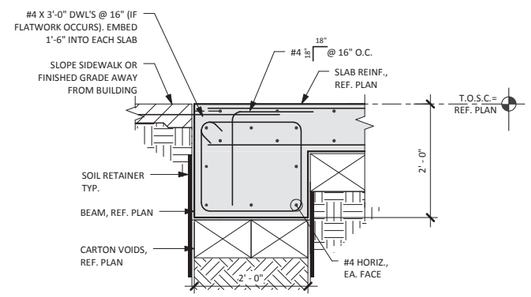

2 PERIMETER GRADE BEAM @ DOOR
SCALE: 3/4" = 1'-0"

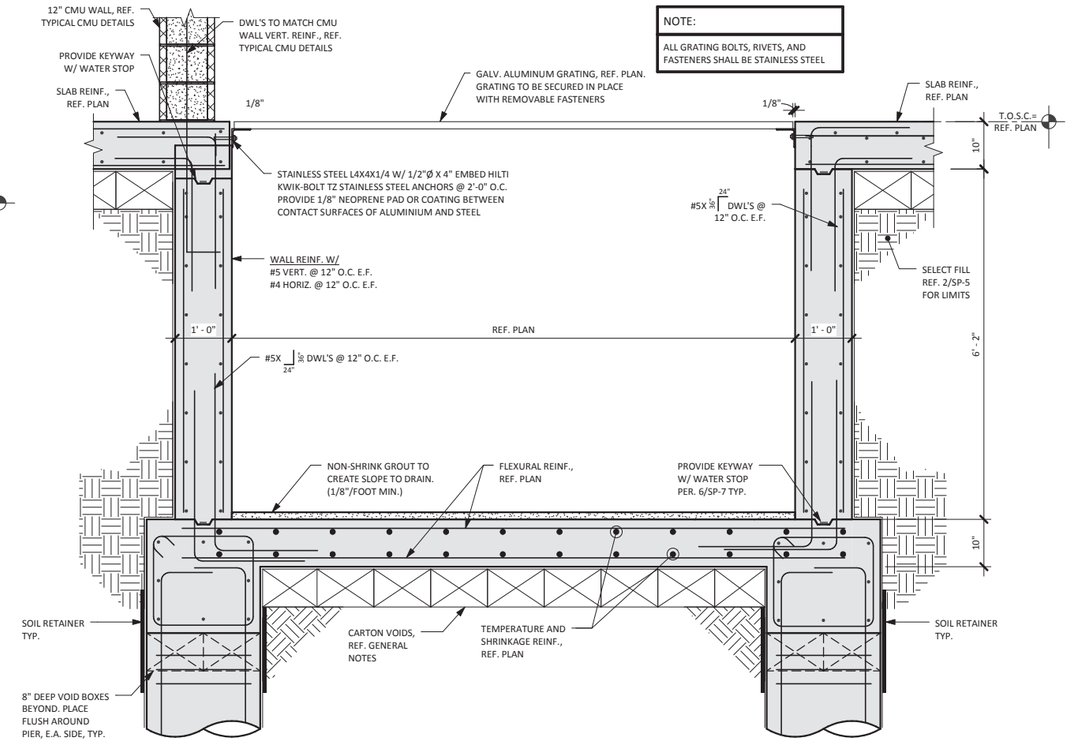

NOTE:
ALL GRATING BOLTS, RIVETS, AND FASTENERS SHALL BE STAINLESS STEEL

3 SECTION @ TROUGH
SCALE: 3/4" = 1'-0"

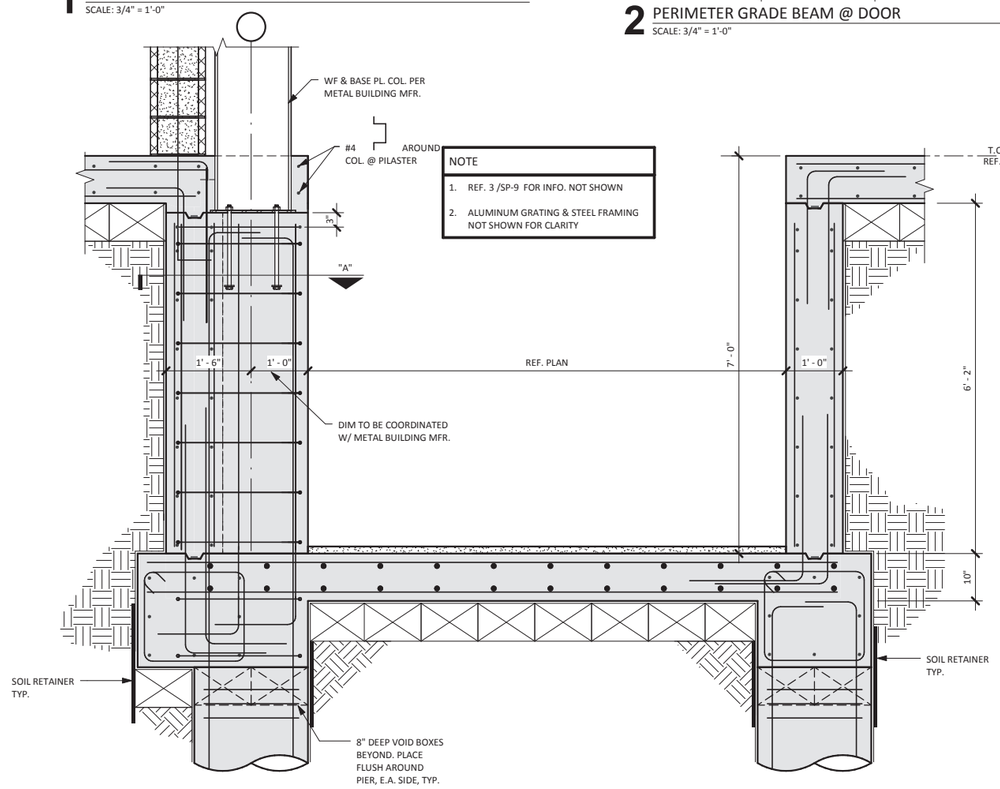

NOTE
1. REF. 3 /SP-9 FOR INFO. NOT SHOWN
2. ALUMINUM GRATING & STEEL FRAMING NOT SHOWN FOR CLARITY

4 SECTION @ TROUGH W/ COLUMN
SCALE: 3/4" = 1'-0"

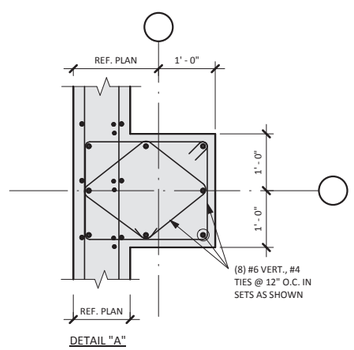

DETAIL "A"

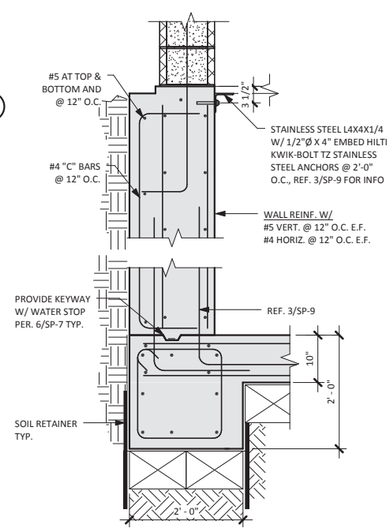

7 CMU WALL @ TROUGH DETAIL
SCALE: 3/4" = 1'-0"

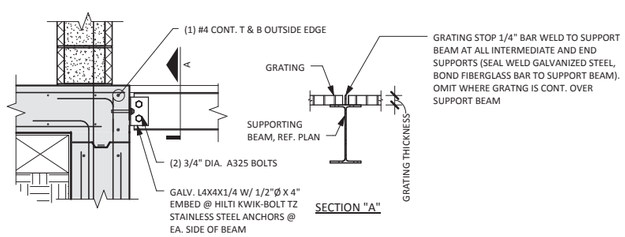

SECTION "A"

5 TROUGH BEAM CONNECTION DETAIL
SCALE: 3/4" = 1'-0"

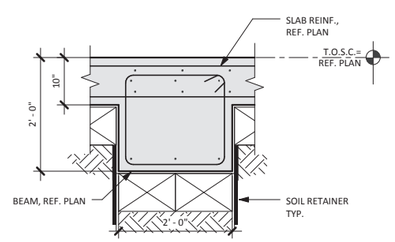

6 SECTION @ INTERIOR GRADE BEAM
SCALE: 3/4" = 1'-0"

STATE OF TEXAS
RACHEL A. H. MALDOMADO
117500
LICENSED PROFESSIONAL ENGINEER
05/11/2016

NO.	DATE	REVISION	BY	APVD

DSGN	DR	CHK	APVD
RACHEL MALDOMADO	HAMZAH KHATAW	TOM CALDERWOOD	RACHEL MALDOMADO

ENCOTECH
ENGINEERING CONSULTANTS
TBPE Firm 1341 | 8500 Bluffstone Cove, Suite B-103 Austin, Texas 78759 | 512.338.1101

Montopolis Water Reclamation Initiative (WRI)
Storage Reservoir and Pump Station
2711 Montopolis Drive
Austin Water, Austin, Texas

CH2MHILL®
TBPE FIRM NO. 3609

STRUCTURAL (PUMP STATION)
FOUNDATION DETAILS

AS SHOWN
VERIFY SCALE
BAR IS ONE INCH ON ORIGINAL DRAWING.
0 1"

DATE	MAY 2016
PROJ	13006.MS.AUS
DWG	SP-9
SHEET	69 of 126

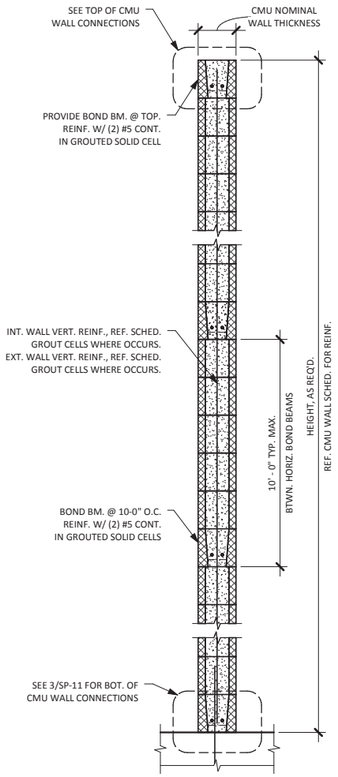

1 TYPICAL CMU DETAIL - WALL SECTION
N.T.S.

INTERIOR LOAD-BEARING CMU WALL VERTICAL REINFORCING SCHEDULE			
f'm=1500 psi MASONRY, fy=60,000 psi			
	8" CMU	10" CMU	12" CMU
H < 9'-0"	MIN.	MIN.	MIN.
9'-0" < H < 12'-0"	MIN.	MIN.	MIN.
12'-0" < H < 14'-0"	#5 @ 2'-8" O.C.	MIN.	MIN.
14'-0" < H < 16'-0"	#5 @ 2'-8" O.C.	#5 @ 2'-8" O.C.	MIN.
16'-0" < H < 18'-0"	#5 @ 2'-0" O.C.	#5 @ 2'-8" O.C.	#5 @ 2'-8" O.C.
18'-0" < H < 20'-0"	#5 @ 2'-0" O.C.	#5 @ 2'-0" O.C.	#5 @ 2'-8" O.C.
20'-0" < H < 22'-0"	#5 @ 1'-4" O.C.	#5 @ 2'-0" O.C.	#5 @ 2'-0" O.C.
22'-0" < H < 24'-0"	#5 @ 0'-8" O.C.	#5 @ 1'-4" O.C.	#5 @ 2'-0" O.C.
24'-0" < H < 26'-0"	N.A.	#5 @ 0'-8" O.C.	#5 @ 1'-4" O.C.
26'-0" < H < 28'-0"	N.A.	N.A.	#5 @ 1'-4" O.C.
28'-0" < H < 30'-0"	N.A.	N.A.	#6 @ 1'-4" O.C.

NOTE

1. DEFINITIONS:

   "H" - CLEAR WALL HEIGHT, FEET, BETWEEN CONNECTIONS TO STRUCTURE

   "MIN." - PROVIDE THE FOLLOWING MINIMUM REINFORCEMENT: BOND BEAM @ T&B OF WALL W/ (2) #5 LONG. CONT. BAR, VERT. #5 BARS @ 4'-0" O.C., AND REINF. AT CORNER & ENDS OF OPENINGS REF. 5/SP-10.

   "N.A." - NOT ALLOWABLE, THICKER WALL REQUIRED FOR THE SPAN

2. BASED ON 5 PSF OUT-OF-PLANE LIVE LOAD & H/240 MIDSPAN DEFLECTION LIMIT.
3. SPECIFIED REINFORCING STEEL SHALL BE PLACED IN THE CENTER OF THE WALL.
4. SEE GENERAL NOTES AND SPECIFICATIONS FOR REQUIRED HORIZONTAL REINFORCEMENT REQUIREMENTS.
5. THIS TABLE SHALL ONLY BE USED FOR VERTICALLY SPANNING, INTERIOR CMU WALLS WHICH DO NOT RESIST WIND LOADS.
6. SEE TYPICAL DETAILS FOR BRACING REQUIREMENTS AT THE TOP/ENDS OF THE WALL AND DOWELS TO THE STRUCTURE. REINFORCING STEEL SHALL BE CENTERED IN THE CMU WALL BY USING BURO-O-WALL BAR POSITIONERS (D/A 810 OR D/A 812 OR SIMILAR) AT 8'-0" O.C., VERTICALLY.
7. SPLICING OF VERTICAL STEEL: SEE TYPICAL DETAIL FOR REQUIRED LAP SPLICE LENGTHS.
8. FOR USE WITH TYPE S PORTLAND CEMENT/LIME MORTAR.
9. THIS SCHEDULE SHALL NOT BE USED FOR STACK BOND MASONRY.
10. USE REINFORCING SCHEDULED U.N.O. ON PLAN.

2 TYPICAL CMU DETAIL - INTERIOR LOAD-BEARING CMU WALL VERTICAL REINFORCING SCHEDULE
N.T.S.

EXTERIOR LOAD-BEARING CMU WALL VERTICAL REINFORCING SCHEDULE			
f'm=1500 psi MASONRY, fy=60,000 psi			
	8" CMU	10" CMU	12" CMU
H < 6'-0"	MIN.	MIN.	MIN.
6'-0" < H < 8'-0"	#4 @ 4'-0" O.C.	#4 @ 4'-0" O.C.	#4 @ 4'-0" O.C.
8'-0" < H < 10'-0"	#4 @ 4'-0" O.C.	#4 @ 4'-0" O.C.	#4 @ 4'-0" O.C.
10'-0" < H < 12'-0"	#5 @ 4'-0" O.C.	#4 @ 4'-0" O.C.	#4 @ 4'-0" O.C.
12'-0" < H < 14'-0"	#5 @ 4'-0" O.C.	#5 @ 4'-0" O.C.	#5 @ 4'-0" O.C.
14'-0" < H < 16'-0"	#5 @ 2'-8" O.C.	#5 @ 2'-8" O.C.	#5 @ 4'-0" O.C.
16'-0" < H < 18'-0"	#5 @ 2'-0" O.C.	#5 @ 2'-8" O.C.	#5 @ 2'-8" O.C.
18'-0" < H < 20'-0"	#6 @ 1'-4" O.C.	#5 @ 2'-0" O.C.	#5 @ 2'-8" O.C.
20'-0" < H < 22'-0"	#6 @ 1'-4" O.C.	#6 @ 2'-0" O.C.	#5 @ 2'-0" O.C.
22'-0" < H < 24'-0"	N.A.	#6 @ 1'-4" O.C.	#5 @ 1'-4" O.C.
24'-0" < H < 26'-0"	N.A.	N.A.	#5 @ 1'-4" O.C.
26'-0" < H < 28'-0"	N.A.	N.A.	#5 @ 1'-4" O.C.
28'-0" < H < 30'-0"	N.A.	N.A.	N.A.

NOTE

1. DEFINITIONS:

   "H" - CLEAR WALL HEIGHT, FEET, BETWEEN CONNECTIONS TO STRUCTURE

   "MIN." - PROVIDE THE FOLLOWING MINIMUM REINFORCEMENT: BOND BEAM @ T&B OF WALL W/ (2) #5 LONG. CONT. BAR, VERT. #4 BARS @ 10'-0" O.C., AND REINF. AT CORNER & ENDS OF OPENINGS REF. 5/SP-10.

   "N.A." - NOT ALLOWABLE, THICKER WALL REQUIRED FOR THE SPAN

2. BASED ON 30 PSF OUT-OF-PLANE WIND LOAD & H/240 MIDSPAN DEFLECTION LIMIT.
3. SPECIFIED REINFORCING STEEL SHALL BE PLACED IN THE CENTER OF THE WALL.
4. SEE GENERAL NOTES AND SPECIFICATIONS FOR REQUIRED HORIZONTAL REINFORCEMENT REQUIREMENTS.
5. THIS TABLE SHALL ONLY BE USED FOR VERTICALLY SPANNING, EXTERIOR CMU WALLS.
6. SEE TYPICAL DETAILS FOR BRACING REQUIREMENTS AT THE TOP/ENDS OF THE WALL AND DOWELS TO THE STRUCTURE. REINFORCING STEEL SHALL BE CENTERED IN THE CMU WALL BY USING BURO-O-WALL BAR POSITIONERS (D/A 810 OR D/A 812 OR SIMILAR) AT 8'-0" O.C., VERTICALLY.
7. SPLICING OF VERTICAL STEEL: SEE TYPICAL DETAIL FOR REQUIRED LAP SPLICE LENGTHS.
8. FOR USE WITH TYPE S PORTLAND CEMENT/LIME MORTAR.
9. THIS SCHEDULE SHALL NOT BE USED FOR STACK BOND MASONRY.
10. USE REINFORCING SCHEDULED U.N.O. ON PLAN.

3 TYPICAL CMU DETAIL - EXTERIOR LOAD-BEARING CMU WALL VERTICAL REINFORCING SCHEDULE
N.T.S.

REINFORCEMENT SPLICE LENGTH SCHEDULE	
f'm=1500 psi MASONRY	
BAR SIZE	MASONRY
#3	1'-4"
#4	1'-9"
#5	2'-8"
#6	4'-6"
#7	5'-3" [2]
#8	6'-0" [2]
#9	6'-9" [2]

NOTE

1. CLEAR COVER ASSUMED TO BE 2 1/2" FOR BAR SIZES OF #6 AND LESS.
2. CLEAR COVER ASSUMED TO BE 3" FOR #7 BARS AND 4" FOR #8 AND #9 BARS. WHERE CLEAR COVER OR CLEAR SPACING FOR MASONRY REINF. IS LESS, INCREASE SPLICE LENGTHS SHOWN BY MULTIPLYING LENGTHS BY MAX. RATIO OF ASSUMED CLEAR COVER TO ACTUAL CLEAR COVER.
3. LAP LENGTHS LISTED ABOVE APPLY UNDER THE FOLLOWING CONDITIONS:

   A. REINFORCING BARS ARE GRADE 60 (Fy=60,000 PSI)
   B. MASONRY STRENGTH IS AT LEAST 1,500 PSI
   C. WALL BARS ARE SPACED AT LEAST 5 BAR DIA. O.C.

4. WHERE A LARGER BAR LAPS A SMALLER BAR, THE SMALLER SCHEDULED LAP LENGTH APPLIES.
5. SEE CONCRETE TYPICAL DETAILS FOR DOWELS AND HOOK LENGTHS.

4 TYPICAL CMU DETAIL - LAP SPLICE SCHEDULE
N.T.S.

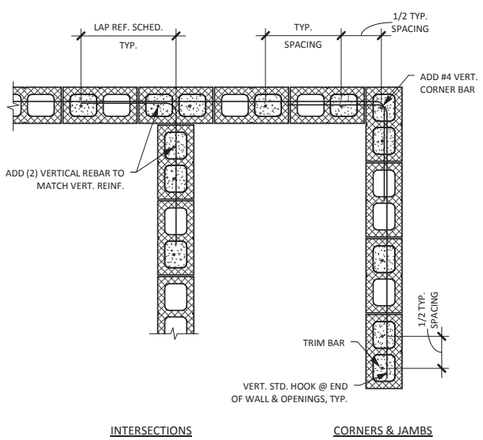

5 TYPICAL CMU DETAIL - BOND BEAM CMU WALL REINFORCING
N.T.S.

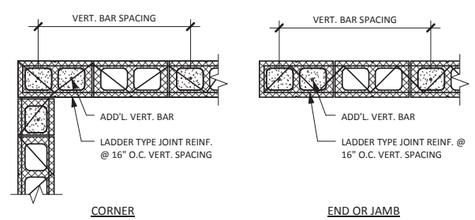

6 TYPICAL CMU DETAIL - CMU WALL REINFORCING
N.T.S.

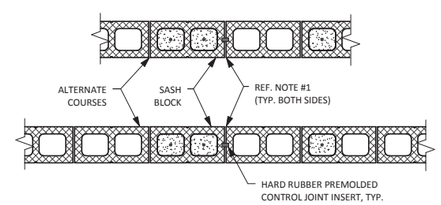

NOTE

1. USE SEALANT BOTH SIDES FULL HEIGHT OF WALL.
2. MAXIMUM CONTROL JOINT SPACING IS 20'-0" O.C.
3. WHERE POSSIBLE, POSITION CMU WALL CONTROL JOINT TO COINCIDE WITH SLAB-ON-GRADE CONTROL/CONSTRUCTION JOINTS.
4. CONTRACTOR TO SUBMIT A CMU CONTROL JOINT PLAN TO THE ARCHITECT AND ENGINEER FOR REVIEW AND APPROVAL.
5. IN LIEU OF HARD RUBBER PREMOLDED CONTROL JOINT INSERT AND SPECIAL SASH BLOCKS, A CONTROL JOINT SHEAR BAR (12" LONG x 1" WIDE x 1/4" THICK) MAY BE GROUTED INTO THE WALL AT THE CONTROL JOINT AT 16" O.C.

7 TYPICAL CMU DETAIL - WALL CONTROL JOINT
N.T.S.

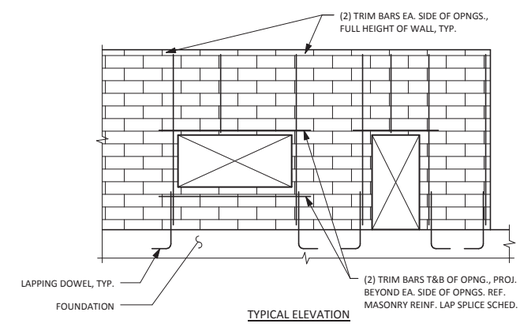

NOTE

1. TRIM BAR SIZES TO MATCH WALL REINFORCING, #5 MIN.
2. TRIM BARS ARE IN ADDITION TO TYPICAL WALL REINFORCING
3. VERTICAL STEEL SHALL BE FULL HEIGHT EACH SIDE OF OPENINGS. PROVIDE LAP PLICES TO MATCH VERTICAL STEEL.
4. APPLIED ONLY TO WALLS 2'-0" OR THINNER. FOR OPENINGS THROUGH THICKER WALLS, SEE STRUCTURAL ENGINEER FOR SPECIAL DETAILS.

8 TYPICAL CMU DETAIL - MINIMUM REINFORCEMENT AROUND CMU WALL OPENINGS
N.T.S.

STATE OF TEXAS
RACHEL A. H. MALDOMADO
117500
LICENSED PROFESSIONAL ENGINEER
05/11/2016

NO.	DATE	REVISION	BY	APVD

DSGN RACHEL MALDOMADO | DR HAMZAH KHATAW | CHK TOM CALDERWOOD | APVD RACHEL MALDOMADO

ENCOTECH
ENGINEERING CONSULTANTS
TBPE Firm 8500 Bluffstone Cove, Suite B-103
3141 Austin, Texas 78759 | 512.338.1101

Montopolis Water Reclamation Initiative (WRI)
Storage Reservoir and Pump Station
2711 Montopolis Drive
Austin Water, Austin, Texas

CH2MHILL®
TBPE FIRM NO. 3890

STRUCTURAL (PUMP STATION)
TYPICAL CMU DETAILS

AS SHOWN
VERIFY SCALE
BAR IS ONE INCH ON ORIGINAL DRAWING.
0 1"

DATE	MAY 2016
PROJ	13006.MS.AUS
DWG	SP-10
SHEET	70 of 126

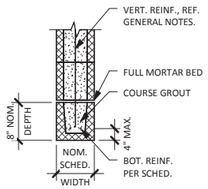

8" NOM. DEPTH

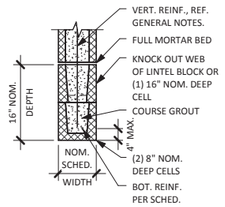

16" NOM. DEPTH

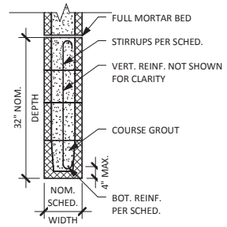

32" NOM. DEPTH

LOAD-BEARING CMU WALL LINTEL BEAM REINFORCEMENT SCHEDULE					
f'm=1500 psi MASONRY, fy=60,000 psi					
CLEAR SPAN	8" CMU			12" CMU	
	8" NOM. DEPTH	16" NOM. DEPTH	32" NOM. DEPTH	8" NOM. DEPTH	16" NOM. DEPTH
0' - 4'-0"	(1) #5 BOT.	-	-	N.A.	(2) #5 BOT.
4'-0" - 6'-0"	N.A.	(1) #5 BOT.	-	N.A.	(2) #5 BOT.
6'0" - 16'0"	N.A.	N.A.	(2) #5 TOP (2) #5 BOT. #4 STIRR. @ 9" O.C.	-	-

NOTE

1. DEFINITIONS: "N.A." - NOT ALLOWABLE, DEEPER AND/OR WIDER LINTEL BEAM REQUIRED FOR THE SPAN.
2. SEE ARCHITECTURAL DRAWINGS FOR SIZE AND LOCATION OF OPENINGS.
3. PROVIDE 1" OF BEARING AT EACH JAMB FOR EACH FOOT OF CLEAR SPAN, BUT NOT LESS THAN 7-5/8". REINFORCEMENT SHALL PROJECT A MINIMUM OF 6" INTO THE BEARING.
4. LINTELS SCHEDULED AS '16" NOM. DEPTH' MAY BE EITHER MADE OF (2) 8" NOM. DEEP CELLS OR (1) 16" NOM. DEEP CELL DETAILED ABOVE.
5. REINFORCING STEEL SHALL BE CONTINUOUS ACROSS THE ENTIRE SPAN OF THE LINTEL BEAM.
6. FOR USE WITH TYPE S PORTLAND CEMENT/LIME MORTAR AND ASTM 460 COURSE GROUT, BY PROPORTION.
7. SCHEDULE ASSUMES RUNNING BOND.

1 TYPICAL CMU DETAIL - LOAD-BEARING CMU WALL LINTEL BEAM REINFORCEMENT SCHEDULE

N.T.S.

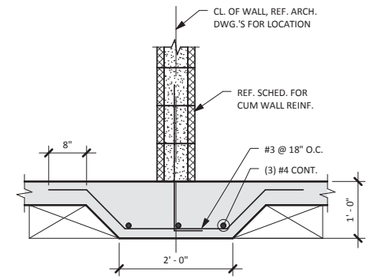

2 TYPICAL CMU DETAIL - STIFFENER BEAM

N.T.S.

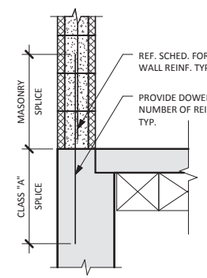

CAST-IN-PLACE (STRAIGHT BAR)

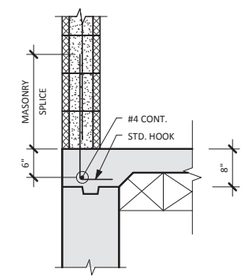

CAST-IN-PLACE (HOOKED BAR)

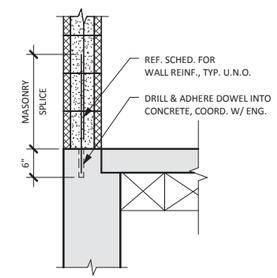

DRILLED-IN-ADHESIVE ALTERNATE

NOTE

1. MASONRY DOWEL TO MATCH SIZE & SPACING OF VERTICAL WALL REINF. TYP.
2. REF. TO REINFORCEMENT SPLICE LENGTH SCHEDULE ON SP-10 FOR ADD'L INFO.

3 TYPICAL CMU DETAIL - WALL ANCHORAGE

N.T.S.

NOTE:

ALL GRATING BOLTS, RIVETS, AND FASTENERS SHALL BE STAINLESS STEEL

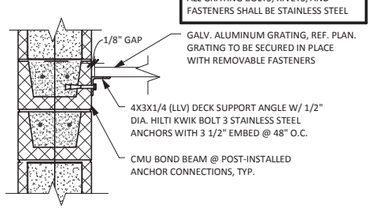

4 WORK PLATFORM DECK SUPPORT

SCALE: 1" = 1'-0"

MASONRY LOOSE LINTEL SCHEDULE	
OPENING	LINTEL SIZE
UP TO 5'-0"	L4X4X1/4
5'-0" TO 7'-0"	L6X4X5/16 LLV
7'-0" TO 8'-0"	L6X4X3/8 LLV

NOTE

1. LINTEL ANGLES SHALL BE HOT DIP GALVANIZED
2. PROVIDE 3/8" GAP IN MORTAR AT ENDS OF ANGLE. FORM GAP WITH BACKER ROD.
3. PROVIDE 8.5" BEARING AT EACH END OF LINTEL ANGLE.

5 TYPICAL STEEL DETAIL - MASONRY LOOSE LINTEL SCHEDULE

SCALE: 3/4" = 1'-0"

STATE OF TEXAS
RACHEL A. H. MALDOMADO
117500
LICENSED PROFESSIONAL ENGINEER
05/11/2016

NO.	DATE	REVISION	BY	APVD

DSGN RACHEL MALDOMADO | DR HAMZAH KHATAW | CHK TOM CALDERWOOD | APVD RACHEL MALDOMADO

ENCOTECH ENGINEERING CONSULTANTS
TBPE Firm 8000 Bluffstone Cove, Suite B-103 Austin, Texas 78759 | 512.338.1101
3141

Montopolis Water Reclamation Initiative (WRI)
Storage Reservoir and Pump Station
2711 Montopolis Drive
Austin Water, Austin, Texas

CH2MHILL®
TBPE FIRM NO. 3909

STRUCTURAL (PUMP STATION)
TYPICAL CMU DETAILS

AS SHOWN
VERIFY SCALE
BAR IS ONE INCH ON ORIGINAL DRAWING.
0 1"

DATE	MAY 2016
PROJ	13006.MS.AUS
DWG	SP-11
SHEET	71 of 126

NOTES

1. THIS CONNECTION IS A SUGGESTION & TO BE COORDINATED WITH OVERHEAD CRANE SPEC'S & PRE-MF. STEEL BUILING MFR.
2. ALL CRANE LOADS TO BE VERIFIED ONCE CRANE MAKE AND MODEL HAS BEEN SELECTED.
3. COORDINATE LOCATION OF OVERHEAD CRANE ELEVATION & CONN. LOCATION W/ PUMP PIPING & SYSTEMS.

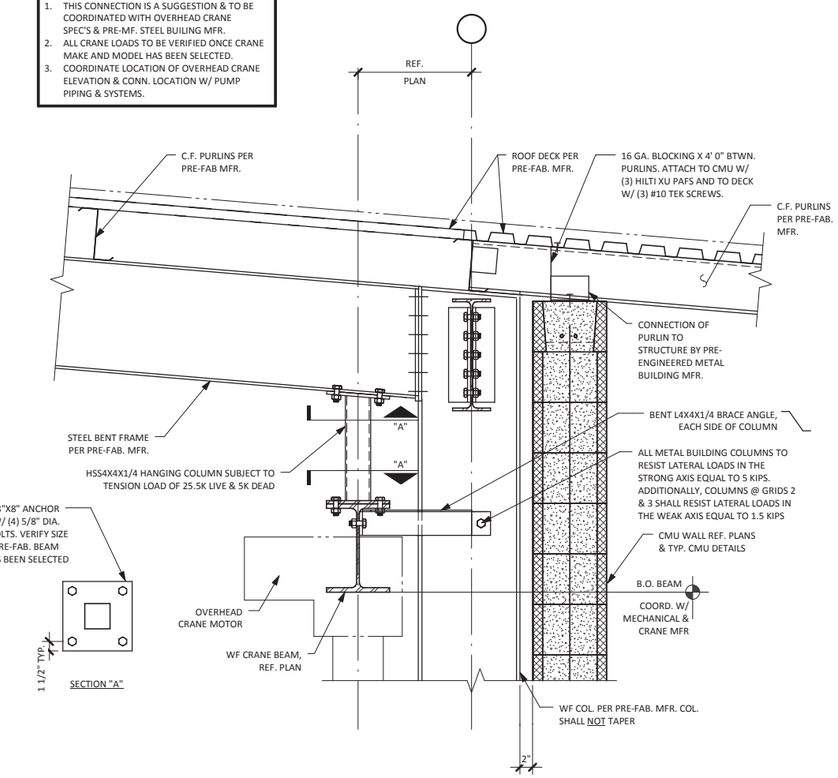

1 SECTION @ CRANE BEAM & ROOF FRAMING
SCALE: 1" = 1'-0"

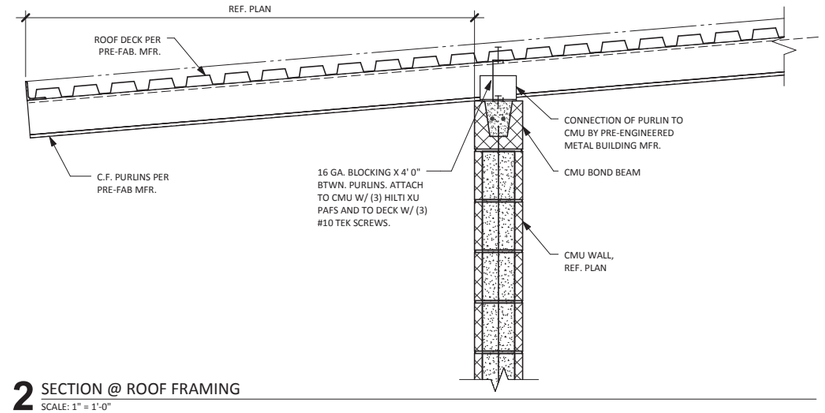

2 SECTION @ ROOF FRAMING
SCALE: 1" = 1'-0"

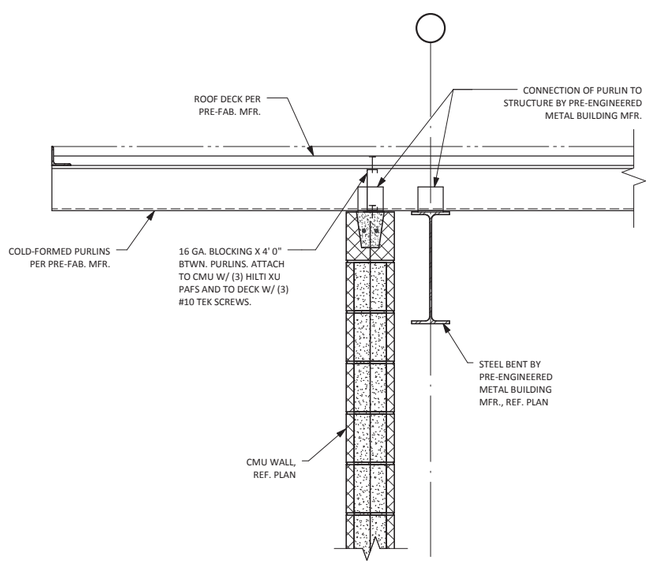

3 SECTION @ ROOF FRAMING
SCALE: 1" = 1'-0"

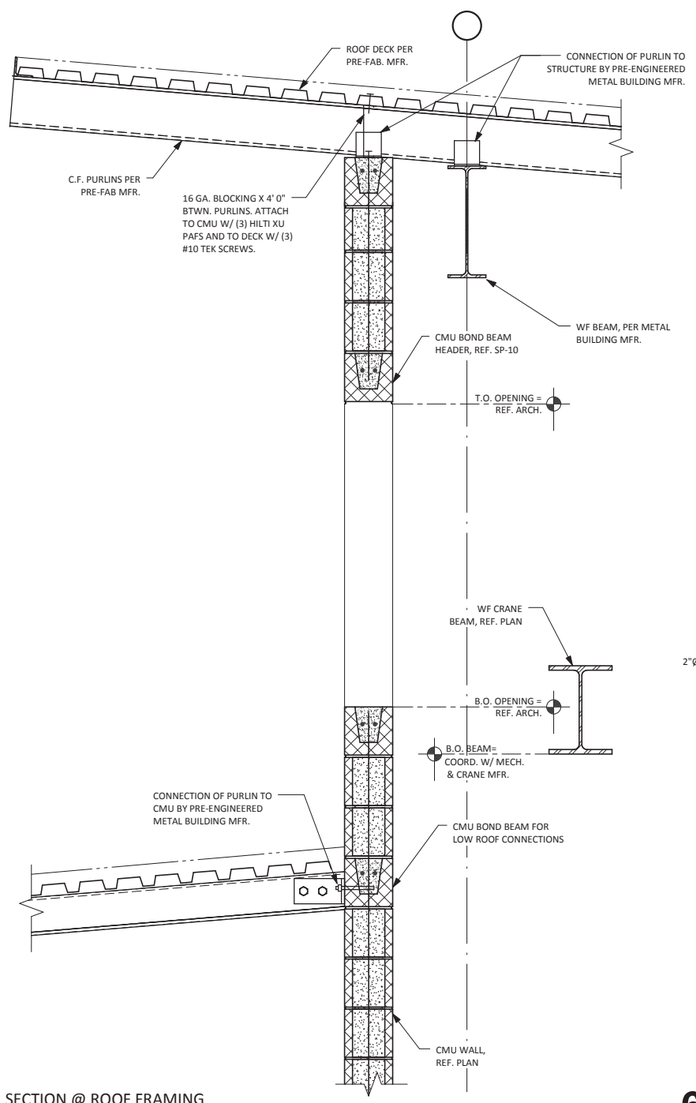

4 SECTION @ ROOF FRAMING
SCALE: 1" = 1'-0"

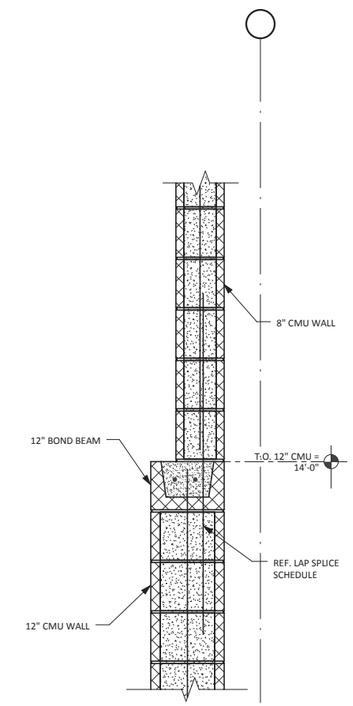

5 SECTION @ WALL TRANSITION
SCALE: 1" = 1'-0"

NOTE

STEEL GRATING & SUPPORT ANGLE NOT SHOWN FOR CLARITY. SEE DETAIL 4/SP-11

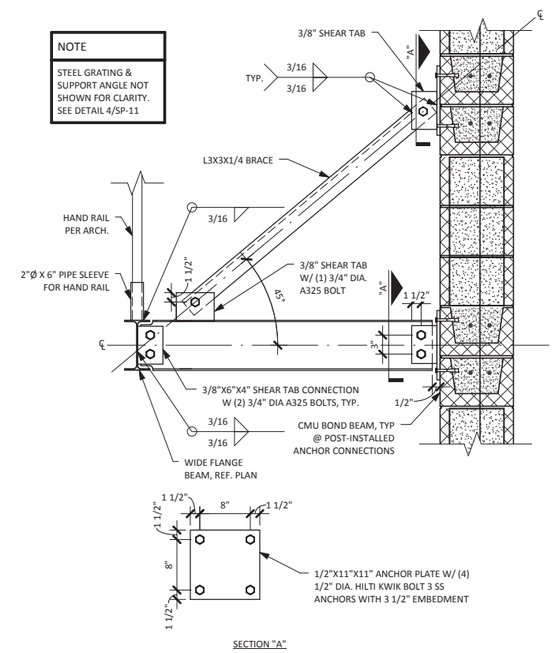

6 SECTION @ WORK PLATFORM
SCALE: 1" = 1'-0"

STATE OF TEXAS
RACHEL A. H. MALDOMADO
117500
LICENSED PROFESSIONAL ENGINEER
05/11/2016

NO.	DATE	REVISION	BY	APVD

DSGN RACHEL MALDOMADO | DR HAMZAH KHATAW | CHK TOM CALDERWOOD | APVD RACHEL MALDOMADO

ENCOTECH
ENGINEERING CONSULTANTS
TBPE Firm 1141 | 8500 Bluffstone Cove, Suite B-103 Austin, Texas 78759 | 512.338.1101

CH2MHILL®
TBPE FIRM NO. 3899

Montopolis Water Reclamation Initiative (WRI)
Storage Reservoir and Pump Station
2711 Montopolis Drive
Austin Water, Austin, Texas

STRUCTURAL (PUMP STATION)
FRAMING DETAILS

AS SHOWN
VERIFY SCALE
BAR IS ONE INCH ON ORIGINAL DRAWING.
0 1"

DATE	MAY 2016
PROJ	13006.MS.AUS
DWG	SP-12
SHEET	72 of 126

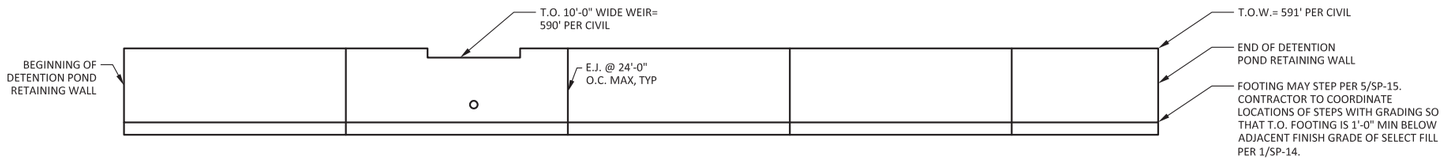

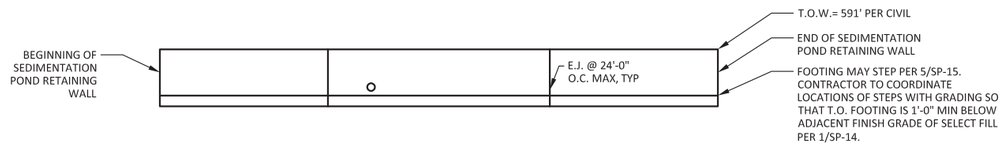

NOTE: JOINT LOCATIONS MAY BE MODIFIED AT CONTRACTOR'S OPTION. SUBMIT ANY REVISIONS TO LAYOUT TO ENGINEER FOR APPROVAL

2 RETAINING WALL EXPANSION JOINT LOCATION PROFILES

N.T.S.

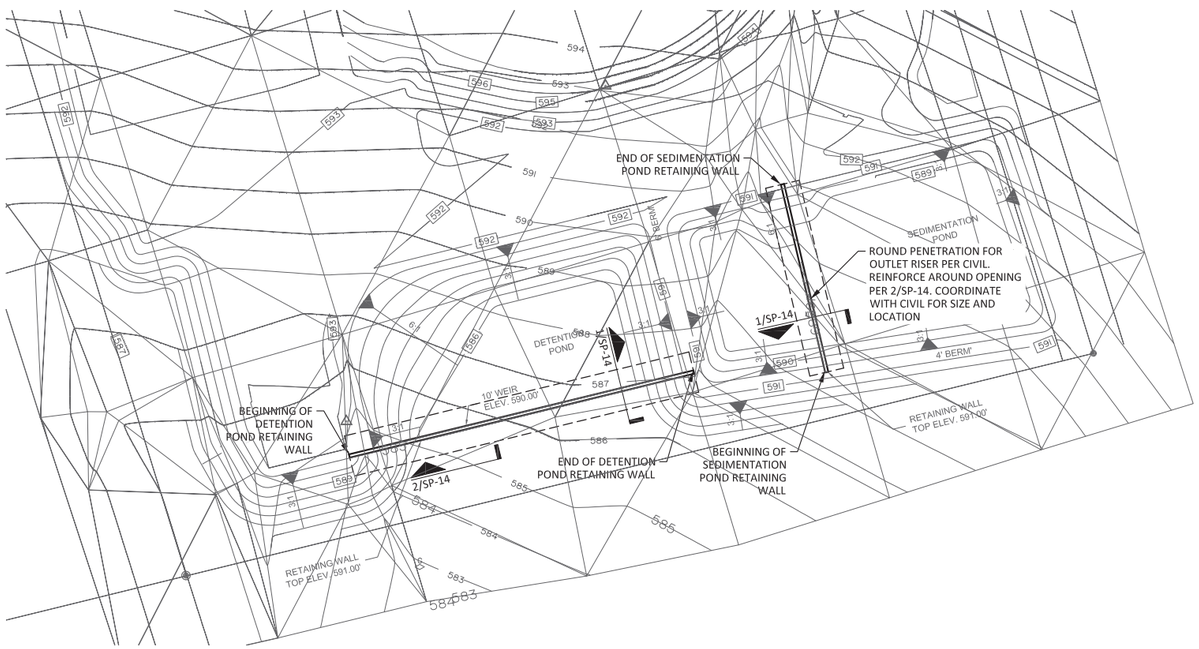

1 RETAINING WALL PLAN

N.T.S.

NOTES

1. THE SUBSURFACE INFORMATION AND FOUNDATION DESIGN ARE BASED ON A REPORT PREPARED BY CH2M HILL, DATED OCTOBER 2015. THE CONTRACTOR SHALL PERFORM EXCAVATIONS, FOUNDATION CONSTRUCTION, AND PREPARATION OF THE SUBGRADE UNDER THE SLAB ON GRADE IN ACCORDANCE WITH THE RECOMMENDATIONS CONTAINED IN THE ORIGINAL GEOTECHNICAL REPORT AND PROJECT SPECIFICATIONS. TO LIMIT PVR TO 2 INCHES, OVER-EXCAVATE 2 FEET BELOW WALL FOOTING AND REPLACE WITH COMPACTED TxDOT ITEM 247, TYPE A, GRADE 2 AGGREGATE BASE, 100% RELATIVE COMPACTION PER METHOD TEX-113-E.

   TESTING LABORATORY SHALL CONFIRM THE PROPER BEARING STRATA PER GEOTECHNICAL REPORT.

2. CONCRETE MIX DESIGN SHALL MEET CLASS "S" MIX PER THE CITY OF AUSTIN STANDARD SPECIFICATION 403S

3. CONTRACTOR TO ADVISE ENGINEER OF ANY CONFLICTS BETWEEN RETAINING WALLS AND EXISTING CONDITIONS INCLUDING SITE UTILITIES PRIOR TO FABRICATION AND CONSTRUCTION.

4. SEE CIVIL PLANS FOR LOCATIONS, ELEVATIONS, AND DIMENSIONS OF POND.

5. RETAINING WALL DESIGN SUMMARY REPORT:

   DESIGN ASSUMPTIONS
   a. CANTILEVER RETAINING WALL
   b. SATURATED SOIL CONDITION
   c. WATER TO TOP OF ONE SIDE OF WALL OR SATURATED SOIL WITH SURCHARGE

   DESIGN PARAMETERS
   a. EQUIVALENT FLUID PRESSURE ABOVE GROUNDWATER TABLE:
      ACTIVE: 40 PSF/FT
      PASSIVE: 360 PSF/FT
   b. EQUIVALENT FLUID PRESSURE BELOW GROUNDWATER TABLE:
      ACTIVE: 83 PSF/FT
      PASSIVE: 250 PSF/FT
   c. NOMINAL ALLOWABLE BEARING PRESSURE: 2,000 PSF
   d. SURCHARGE: 100 PSF (SOIL ONLY)
      0 PSF (WATER TO TOP OF WALL)
   e. SOIL FRICTION FACTOR: 0.4
   f. CONCRETE STRENGTH: 4,000 PSI (COA STD CLASS S MIX)
   g. REINFORCING STRENGTH: 60,000 PSI
   h. CONCRETE DENSITY: 150 PCF
   i. SOIL DENSITY: 135 PCF (TOTAL OR WET UNIT WEIGHT)

   FACTORS OF SAFETY

WALL HT	SLIDING (1.5 MIN)	OVERTURNING (2.0 MIN)	BEARING
5-0"	1.55	3.07	1.64
8'-0"	1.53	3.28	1.41

STATE OF TEXAS
RACHEL A. H. MALDOMADO
117500
LICENSED PROFESSIONAL ENGINEER
05/11/2016

NO.	DATE	REVISION	BY	APVD

DSGN	DR	CHK	APVD
RACHEL MALDOMADO	MELISSA SIBILEY	TOM CALDERWOOD	RACHEL MALDOMADO

ENCOTECH
TBPE Firm F-10183 | 8500 Bluffstone Cove, Suite B-103, Austin, Texas 78759 | (512) 339-1101 | Project No. 13006.MS.AUS

Montopolis Water Reclamation Initiative (WRI)
Storage Reservoir and Pump Station
2711 Montopolis Drive
Austin Water, Austin, Texas

CH2MHILL.
TBPE FIRM NO. 3699

STRUCTURAL (PUMP STATION)
DETENTION POND
RETAINING WALL PLAN

AS SHOWN
VERIFY SCALE
BAR IS ONE INCH ON ORIGINAL DRAWING.
0 1"

DATE	MAY 2016
PROJ	13006.MS.AUS
DWG	SP-13
SHEET	73 of 126

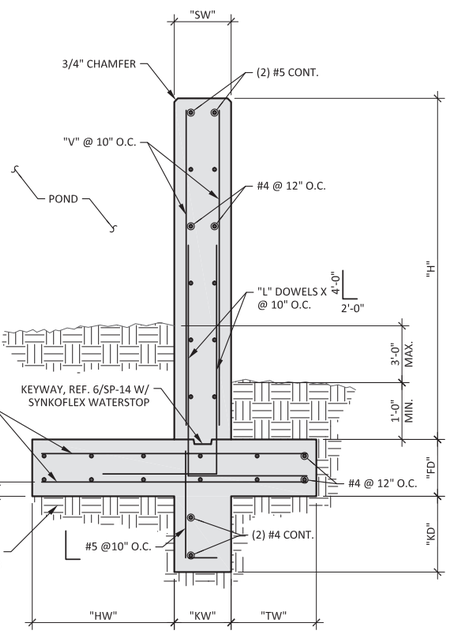

1 DETENTION POND RETAINING WALL

SCALE: 3/4"=1'-0"

NOTES

1. DRAWINGS ARE BASED OFF CIVIL DRAWINGS. IF ANY CONFLICTS ARE FOUND, PLEASE CONTACT STRUCTURAL AND CIVIL ENGINEER BEFORE PROCEEDING.
2. PROVIDE EXPANSION JOINT IN WALL AT 24'-0" O.C. MAXIMUM SPACING, SEE EXPANSION JOINT DETAILS ON SP-15.
3. REF. CIVIL ENGINEER FOR LOCATION OF STRUCTURE.

RETAINING WALL SCHEDULE (MINIMUM VALUES REQUIRED)

"H"	"SW"	"HW"	"TW"	"FD"	"KW"	"KD"	"V"	"B"	"L"
< 5'-0"	1'-2"	3'-0"	1'-6"	1'-2"	1'-2"	1'-2"	#4	#4	#4
5'-0" TO 8'-0"	1'-2"	4'-4"	3'-0"	1'-4"	1'-2"	1'-6"	#5	#5	#5

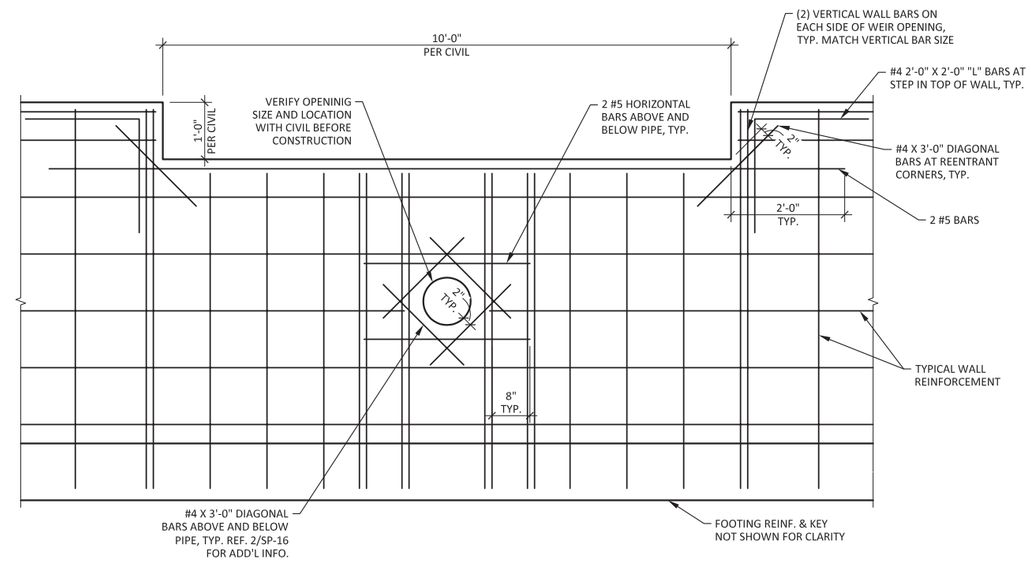

2 ELEVATION OF RETAINING WALL AT DETENTION POND OUTFALL WEIR

SCALE: 3/4"=1'-0"

STATE OF TEXAS
RACHEL A. H. MALDOMADO
117500
LICENSED
PROFESSIONAL ENGINEER
05/11/2016

NO.	DATE	REVISION	BY	APVD

DSGN RACHEL MALDOMADO | DR MELISSA SIBLEY | CHK TOM CALDERWOOD | APVD RACHEL MALDOMADO

ENCOTECH
TBPE Firm 1181 | 8500 Bluffstone Cove, Suite B-103 Austin, Texas 78759 | 512.338.1101 Fingerprints, 1.800.446.4646

CH2MHILL®
TBPE FIRM NO. 3699

Montopolis Water Reclamation Initiative (WRI)
Storage Reservoir and Pump Station
2711 Montopolis Drive
Austin Water, Austin, Texas

STRUCTURAL (PUMP STATION)
DETENTION POND
RETAINING WALL DETAILS

AS SHOWN
VERIFY SCALE
BAR IS ONE INCH ON ORIGINAL DRAWING.
0 1"

DATE	MAY 2016
PROJ	13006.MS.AUS
DWG	SP-14
SHEET	74 of 126

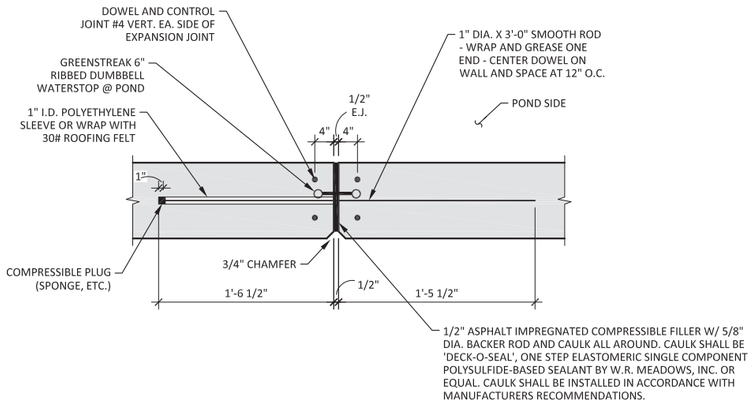

1 RETAINING WALL - EXPANSION JOINT
N.T.S.

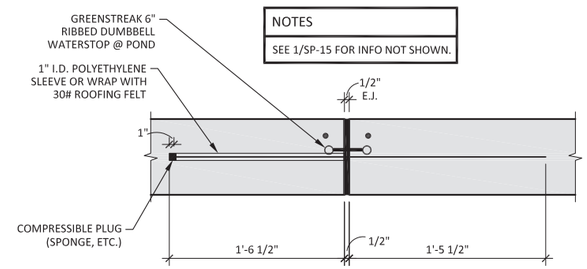

NOTES

SEE 1/SP-15 FOR INFO NOT SHOWN.

2 RETAINING WALL FOOTING - EXPANSION JOINT
N.T.S.

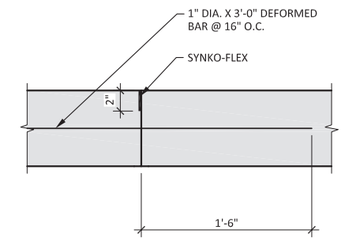

3 RETAINING WALL - CONSTRUCTON JOINT
N.T.S.

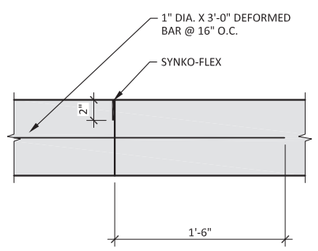

4 RETAINING WALL FOOTING - CONSTRUCTON JOINT
N.T.S.

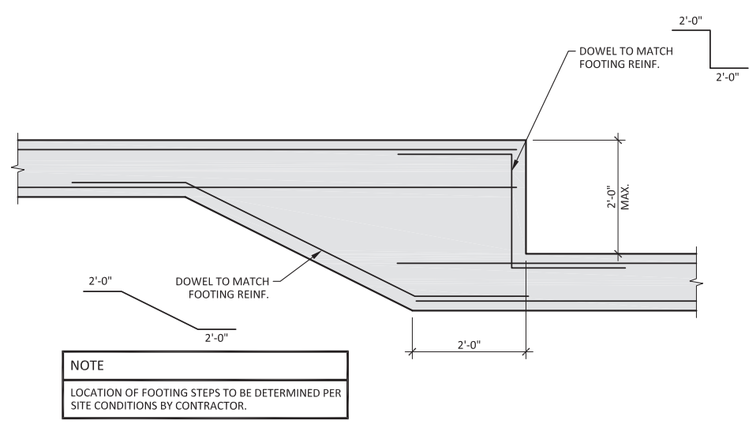

NOTE

LOCATION OF FOOTING STEPS TO BE DETERMINED PER SITE CONDITIONS BY CONTRACTOR.

5 TYPICAL CONCRETE FOOTING STEP
N.T.S.

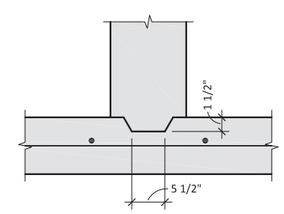

6 TYPICAL KEYWAY DIMENSIONS
N.T.S.

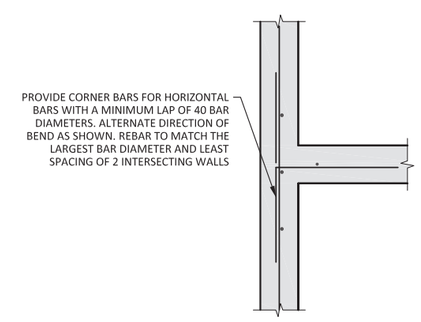

7 TYPICAL CORNER CONNECTION PLAN
N.T.S.

STATE OF TEXAS
RACHEL A. H. MALDOMADO
117500
LICENSED PROFESSIONAL ENGINEER
05/11/2016

NO.	DATE	REVISION	BY	APVD

DSGN RACHEL MALDOMADO | DR MELISSA SIBLEY | CHK TOM CALDERWOOD | APVD RACHEL MALDOMADO

ENCOTECH
TBPE Firm 1141 | 8500 Bluffstone Cove, Suite B-103 Austin, Texas 78759 | 512.338.1101 Fax 512.338.1102

CH2MHILL®
TBPE FIRM NO. 3699

Montopolis Water Reclamation Initiative (WRI)
Storage Reservoir and Pump Station
2711 Montopolis Drive
Austin Water, Austin, Texas

STRUCTURAL (PUMP STATION)
DETENTION POND
RETAINING WALL DETAILS

AS SHOWN
VERIFY SCALE
BAR IS ONE INCH ON ORIGINAL DRAWING.
0 1"

DATE	MAY 2016
PROJ	13006.MS.AUS
DWG	SP-15
SHEET	70 of 126

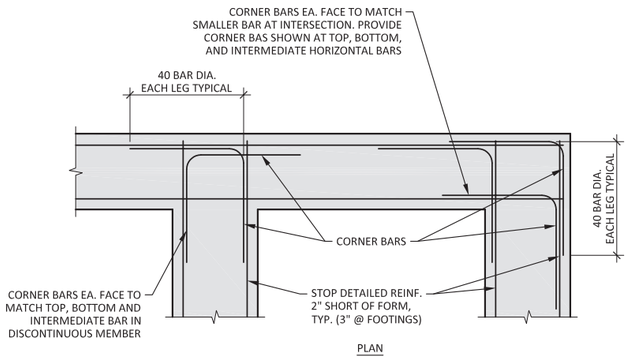

PLAN

NOTES
1. WHERE 90 DEGREE HOOKS ARE SCHEDULED OR DETAILED FOR TYP. BARS, CORNER BARS MAY BE OMITTED.
2. MATCH SIZE, LOCATION, AND NUMBER OF HORIZONTAL BEAM AND WALL BARS, EXCEPT THAT WHERE THERE ARE MORE THAN 2 TOP OR BOTTOM BARS, ONLY THE INSIDE AND OUTSIDE BARS MUST BE MATCHED.

1 TYPICAL WALL/FOOTING CORNER & TEE CONDITION
N.T.S.

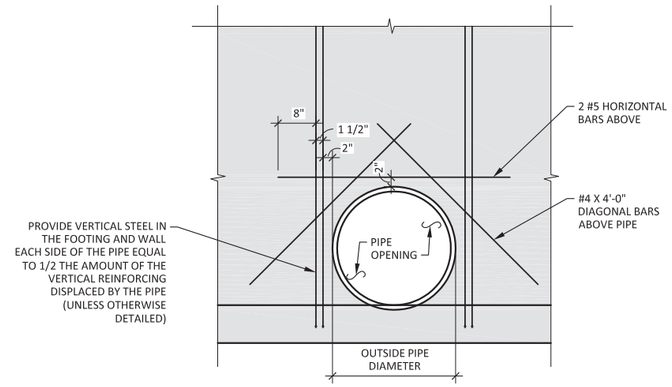

2 TYPICAL REINFORCING AT ROUND OPENING
N.T.S.

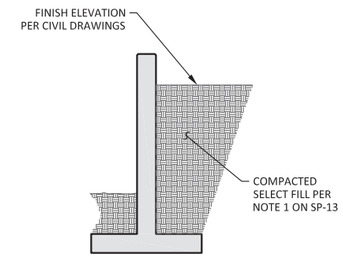

NOTE
CONTRACTOR MUST MEET O.S.H.A. EXCAVATION SLOPE REQUIREMENTS.

3 LIMITS OF FILL FOR RETAINING WALLS
N.T.S.

STATE OF TEXAS
RACHEL A. H. MALDOMADO
117500
LICENSED PROFESSIONAL ENGINEER
05/11/2016

NO.	DATE	REVISION	DR	CHK	APVD	BY	APVD
DSGN	RACHEL MALDOMADO		MELISSA SIBLEY	TOM CALDERWOOD	RACHEL MALDOMADO		

ENCOTECH
TBPE Firm 1141 | 8500 Bluffstone Cove, Suite B-103 Austin, Texas 78759 | 512.338.1101 Registration: TX3056-0401

Montopolis Water Reclamation Initiative (WRI)
Storage Reservoir and Pump Station
2711 Montopolis Drive
Austin Water, Austin, Texas

CH2MHILL®
TBPE FIRM NO. 3699

STRUCTURAL (PUMP STATION)
DETENTION POND
RETAINING WALL DETAILS

AS SHOWN
VERIFY SCALE
BAR IS ONE INCH ON ORIGINAL DRAWING.
0 1"

DATE	MAY 2016
PROJ	13006.MS.AUS
DWG	SP-16
SHEET	71 of 126

STRUCTURAL GENERAL NOTES

THESE GENERAL NOTES SHALL APPLY UNLESS OTHERWISE SPECIFICALLY NOTED ON PLANS AND DETAILS. THE CONTRACTOR SHALL VERIFY ALL DIMENSIONS BEFORE STARTING WORK. THE ENGINEER SHALL BE NOTIFIED OF ANY DISCREPANCIES PRIOR TO CONSTRUCTION. DESIGN, CONSTRUCTION, WORKMANSHIP AND MATERIALS SHALL COMPLY WITH THE IBC 2012.

1. THE STRUCTURAL DRAWINGS ARE NOT TO BE SCALED FOR DETERMINATION OF QUANTITIES, LENGTHS, OR FIT OF MATERIALS.
2. THE STRUCTURAL DRAWINGS REPRESENT THE FINISHED STRUCTURE. THEY DO NOT INDICATE THE METHODS OF CONSTRUCTION UNLESS SO STATED OR NOTED. THE CONTRACTOR SHALL PROVIDE ALL MEASURES NECESSARY TO PROTECT THE WORKMEN AND ALL OTHER PERSONS DURING CONSTRUCTION.
3. THE CONTRACTOR SHALL PROVIDE TEMPORARY BRACING AND SHORING OF ALL STRUCTURAL WORK AS REQUIRED FOR STABILITY OF THE STRUCTURE DURING ALL PHASES OF CONSTRUCTION.
4. THE CONTRACTOR SHALL IMMEDIATELY NOTIFY THE ENGINEER OF ANY CONDITION WHICH, IN HIS/HER OPINION, MIGHT ENDANGER THE STABILITY OF THE STRUCTURE OR CAUSE DISTRESS IN THE STRUCTURE.
5. ALL EXISTING CONDITIONS AND DIMENSIONS SHALL BE FIELD VERIFIED PRIOR TO PREPARATION OF SHOP DRAWINGS AND THE BEGINNING OF THE CONSTRUCTION PROCESS.

CODES:

- THE GENERAL BUILDING CODE USED AS THE BASIS FOR THE STRUCTURAL DESIGN IS AS FOLLOWS:
  - 2012 INTERNATIONAL BUILDING CODE (IBC) W/ CITY OF AUSTIN AMENDMENTS
- STRUCTURAL CONCRETE: AMERICAN CONCRETE INSTITUTE, ACI 318-11, BUILDING CODE REQUIREMENTS FOR STRUCTURAL CONCRETE
- WIRE- AND STRAND-WOUND, CIRCULAR PRESTRESSED CONCRETE WATER TANKS, AWWA D110, LATEST EDITION

GRAVITY LOADS:

- DEAD LOADS WHERE APPLICABLE
- SUPERIMPOSED LIVE LOADS :

  PLATFORMS- 100 PSF

  DAVIT ARM SLEEVE - 1000 LB VERTICAL AND 2500 FT-LB (MOMENT AND TORSION)

LATERAL LOADS:

WIND:

- 115 MPH BASIC WIND SPEED, EXPOSURE C
- Iw= 1.0

FOUNDATIONS:

- SEE PROJECT MANUAL SECTION 4015 "STRUCTURAL EXCAVATION AND BACKFILL"

CONCRETE:

- **MINIMUM 28 DAY COMPRESSIVE STRENGTH 4,000 PSI AS FOLLOWS: (TYPE II, U.N.O)**

  RETAINING WALLS AND VAULTS----------4,000 PSI

- MECHANICALLY VIBRATE ALL CONCRETE WHEN PLACED. IF PLASTICIZER IS USED, A HIGHER FINAL SLUMP MAY BE ALLOWED UPON STRUCTURAL ENGINEER'S APPROVAL.
- NO FLY ASH ADDITIVES SHALL BE USED IN FLATWORK OR ARCHITECTURALLY EXPOSED CONCRETE.
- FLY ASH- IF PERMITTED BY ARCHITECTURAL SPECIFICATIONS- SHALL BE LIMITED TO 25% OF CEMENTITIOUS MATERIALS AND SHALL HAVE A REPLACEMENT FACTOR OF 1.2 RELATIVE TO CEMENT REPLACED.
- CONCRETE WORK SHALL CONFORM TO THE AMERICAN CONCRETE INSTITUTE (ACI) SPECIFICATION, ACI #301 BUILDING CODE REQUIREMENTS, ACI #318, LATEST EDITION, FOR BUILDING STRUCTURES & BUILDING CODE REQUIREMENTS, ACI #350-06, FOR ENVIRONMENTAL STRUCTURES.
- DETAILING, FABRICATION AND ERECTION OF REINFORCING BARS, UNLESS OTHERWISE NOTED, MUST FOLLOW THE ACI "MANUAL OF STANDARD PRACTICE FOR DETAILING REINFORCED CONCRETE", ACI #315, LATEST EDITION.
- UNLESS INDICATED OTHERWISE, CONCRETE SHALL BE CLASS 'S' CONCRETE WITH 4000 PSI MINIMUM COMPRESSIVE STRENGTH AT 28 DAYS. ALSO REFER TO SPECIFICATIONS FOR ADDITIONAL CONCRETE MIX DESIGN REQUIREMENTS.
- ACCESSORIES SHALL BE IN ACCORDANCE WITH THE ACI "MANUAL OF STANDARD PRACTICE FOR DETAILING REINFORCED CONCRETE", ACI #315, LATEST EDITION. ACCESSORIES FOR INTERIOR CONCRETE SURFACES EXPOSED TO VIEW SHALL HAVE PLASTIC COATED FEET. ACCESSORIES FOR CONCRETE SURFACES EXPOSED TO EARTH, WEATHER, WATER, OR HIGH HUMIDITY SHALL BE FABRICATED OF STAINLESS STEEL OR PLASTIC. PROVIDE BOLSTERS AT SUSPENDED SLABS, WALLS AND WIDE BEAMS. PROVIDE STANDEES AT ALL SLABS WITH TWO LAYERS OF REINFORCING. FOR SLAB-ON-GRADE REINFORCING, PROVIDE CHAIRS MANUFACTURED FROM HOT-DIPPED GALVANIZED STEEL, STAINLESS STEEL, PLASTIC, OR PRECAST CONCRETE BLOCKS OF EQUAL OR GREATER COMPRESSIVE STRENGTH AS THE CONCRETE BEING POURED.
- CONCRETE PLACED BY PUMPING SHALL MEET THE FOLLOWING REQUIREMENTS:
  - COARSE AGGREGATE (AGG) SHALL BE GRADED FROM A MAXIMUM OF 1 1/2".
  - MAXIMUM ALLOWABLE INCREASE IN CEMENT FACTOR SHALL BE 1/2 SACK PER CUBIC YARD OVER NORMAL MIX DESIGN.
  - MAXIMUM WATER CEMENT RATIO WILL CONFORM TO REQUIREMENTS STATED IN THE PROJECT SPECIFICATIONS. IF MORE WORKABILITY IS REQUIRED, AN APPROVED ADMIXTURE MAY BE USED. SEE CONCRETE ADMIXTURE SECTION 4055 OF THE SPECIFICATION FOR REQUIREMENTS.
  - MAXIMUM WEIGHT RATIO OF FINE AGGREGATES TO COARSE AGGREGATES (AGG) SHALL NOT EXCEED 2/3.
  - REFER TO ACI 301, LATEST EDITION, SECTION 800, FOR OTHER PUMPING REQUIREMENTS.
  - IN NO CASE SHALL CONCRETE BE PUMPED THROUGH AN ALUMINUM TUBE.
- REINFORCING BARS SHALL BE NEW BILLET STEEL CONFORMING TO ASTM SPECIFICATION A615, GRADE 60.
- STANDARD PROTECTIVE COVER OF REINFORCING BARS UNLESS OTHERWISE NOTED SHALL BE:
  - WHERE CAST AGAINST EARTH OR FILL ..... 3 IN.
  - EXPOSED TO EARTH, WATER OR WEATHER ..... 2 IN.
  - SLABS AND WALLS ..... 2 IN.
  - OTHER ..... 2 IN.

POST-INSTALLED ANCHORS:

EXPANSION AND SCREW ANCHORS IN CONCRETE:

USE STUD TYPE EXPANSION ANCHOR WITH A SINGLE PIECE WEDGE ONLY WHERE NOTED ON PLANS. IF USE IS REQUESTED FOR OTHER THAN WHERE NOTED, CONTACT STRUCTURAL ENGINEER THROUGH ARCHITECT FOR APPROVAL. CONTRACTOR SHALL SUBMIT MANUFACTURER'S SIZE AND STRENGTH DATA TO THE STRUCTURAL ENGINEER THROUGH ARCHITECT PRIOR TO CONSTRUCTION. INSTALL ALL BOLTS AS OUTLINED IN MANUFACTURER'S SPECIFICATIONS- UTILIZING PROPER SIZE AND TYPE OF DRILL, CLEANING HOLE, DRIVING AND TIGHTENING BOLT.

IN CONCRETE:

ANCHORS USED MUST HAVE ICC APPROVAL AND INCLUDE HILTI KWIK BOLT TZ (ICC-ES ESR-1917), AND SIMPSON STRONG BOLT 2 (ICC-ES ESR-3037), AND SIMPSON TITEN HD (ICC-ES ESR-2713), HILTI KWIK HUS-EZ (ICC-ES ESR-3027), OR APPROVED EQUAL.

EPOXY ANCHORS IN CONCRETE:

INJECTABLE ADHESIVE SHALL BE USED FOR INSTALLATION OF REINFORCING STEEL DOWELS OR THREADED ANCHOR RODS AND INSERTS INTO NEW OR EXISTING CONCRETE OR SOLID GROUTED CONCRETE MASONRY UNITS ONLY WHERE SPECIFIED ON PLANS. IF USE IS REQUEST FOR OTHER THAN WHERE NOTED CONTACT STRUCTURAL ENGINEER THROUGH ARCHITECT FOR APPROVAL. ADHESIVE SHALL BE FURNISHED IN SIDE BY SIDE PACKS WHICH KEEP COMPONENT A AND COMPONENT B SEPARATE. USE ONLY INJECTION TOOLS AND STATIC MIXING NOZZLES RECOMMENDED BY MANUFACTURER. MANUFACTURER'S INSTRUCTIONS SHALL BE FOLLOWED.

IN CONCRETE:

ANCHORS USED MUST HAVE ICC APPROVAL IN CRACKED CONCRETE AND INCLUDE SIMPSON SET-XP (ICC-ES ESR-2508), HILTI HIT-RE 500-SD (ICC-ES ESR-2322), OR APPROVED EQUIVALENT. THE USE OF ANY EPOXY ANCHOR MUST BE APPROVED BY THE ENGINEER OF RECORD PRIOR TO INSTALLATION.

STATEMENT OF SPECIAL INSPECTION PER IBC 2012, CHAPTER 17- (FOR JOSE I. GUERRA, INC. SPECIFIED DESIGN ONLY)

PER SECTION 1705 OF THE 2012 INTERNATIONAL BUILDING CODE, THE FOLLOWING IS A LIST OF THE REQUIRED SPECIAL INSPECTIONS APPLICABLE FOR THIS PROJECT (REF: AWWA D110 FOR ADDITIONAL INSPECTION REQUIREMENTS FOR THE PRESTRESSED TANK):

2012 IBC SECTION	TYPE OF SPECIAL INSPECTIONS AND EXTENT	APPLICABLE	NON APPLICABLE	NON STRUCTURAL
1705.2	STEEL CONSTRUCTION	■	□	□
1705.2.2	STEEL CONSTRUCTION OTHER THAN STRUCTURAL STEEL	■	□	□
1705.2.2.1.1	COLD-FORMED WELDING INSPECTION	□	■	□
1705.2.2.1.2	REINFORCING STEEL WELDING INSPECTION	□	■	□
1705.2.2.2	COLD-FORMED STEEL TRUSSES SPANNING 60 FEET OR GREATER	□	■	□
1705.3	CONCRETE CONSTRUCTION	■	□	□
1705.4	MASONRY CONSTRUCTION	□	■	□
1705.5	WOOD CONSTRUCTION	□	■	□
1705.6	SOILS	■	□	□
1705.7	DRIVEN DEEP FOUNDATIONS	□	■	□
1705.8	CAST-IN-PLACE DEEP FOUNDATIONS (PIERS)	□	■	□
1705.9	HELICAL PILE FOUNDATIONS	□	■	□
1705.10	SPECIAL INSPECTION FOR WIND RESISTANCE	□	■	□
1705.11	SPECIAL INSPECTION FOR SEISMIC RESISTANCE	□	■	□
1705.12	TESTING AND QUALIFICATION FOR SEISMIC RESISTANCE	□	■	□
1705.13	SPRAYED FIRE-RESISTANCE MATERIALS	□	□	■
1705.14	MASTIC AND INTUMESCENT FIRE-RESISTANT COATINGS	□	□	■
1705.15	EXTERIOR INSULATION AND FINISH SYSTEMS/ WATER-RESISTIVE BARRIER COATING	□	□	■
1705.16	FIRE-RESISTANCE PENETRATIONS AND JOINTS	□	□	■
1705.17	SPECIAL INSPECTION FOR SMOKE CONTROL	□	□	■

PER SECTION 1705 OF THE 2012 INTERNATIONAL BUILDING CODE, THE FOLLOWING IS A LIST OF THE REQUIRED SPECIAL INSPECTIONS APPLICABLE FOR THIS PROJECT :

2012 IBC SECTION	TYPE OF SPECIAL INSPECTIONS AND EXTENT	APPLICABLE	NON APPLICABLE	DETAILS
1706	DESIGN STRENGTH OF MATERIALS	□	■	
1707	ALTERNATIVE TEST PROCEDURES	□	■	
1708	TEST SAFE LOAD	□	■	
1709	IN-SITU LOAD TESTS	□	■	
1710	PRECONSTRUCTION LOAD TESTS	□	■	
1711	MATERIAL AND TEST STANDARDS	□	■	

SHOP DRAWINGS:

- SHOP DRAWINGS SHALL BE SUBMITTED FOR ALL STRUCTURAL ITEMS IN ADDITION TO THE ITEMS REQUIRED BY ARCHITECTURAL SPECIFICATIONS.
- THE CONTRACTOR SHALL SUBMIT ALL SHOP DRAWINGS PRIOR TO SUBMITTAL. ITEMS NOT IN ACCORDANCE WITH THE CONTRACT DOCUMENTS SHALL BE FLAGGED UPON CONTRACTOR'S REVIEW.
- VERIFY ALL DIMENSIONS WITH ARCHITECT AND ALL FINISHED GRADE WITH CIVIL DRAWINGS.
- ANY CHANGES, SUBSTITUTIONS, OR DEVIATIONS FROM CONTRACT DOCUMENTS SHALL BE CLOUDED BY FABRICATOR OR MANUFACTURER. ANY OF THE AFOREMENTIONED WHICH ARE NOT CLOUDED OR FLAGGED BY SUBMITTING PARTIES, SHALL NOT BE CONSIDERED APPROVED AFTER ENGINEER'S REVIEW, UNLESS NOTED ACCORDINGLY.
- THE ENGINEER HAS THE RIGHT TO APPROVE OR DISAPPROVE ANY CHANGES TO THE CONTRACT DOCUMENTS AT ANY TIME BEFORE OR AFTER SHOP DRAWING REVIEW.
- THE SHOP DRAWINGS DO NOT REPLACE THE CONTRACT DOCUMENTS.
- THE ADEQUACY OF ENGINEERING DESIGNS AND LAYOUT PERFORMED BY OTHERS RESTS WITH THE DESIGNING OR SUBMITTING AUTHORITY.
- REVIEWING IS INTENDED ONLY AS AN AID TO THE CONTRACTOR IN OBTAINING CORRECT SHOP DRAWINGS. RESPONSIBILITY FOR CORRECTNESS SHALL REST WITH THE CONTRACTOR.

GENERAL:

- ENTIRE CONTRACT DOCUMENTS SHALL BE USED TO CONSTRUCT BUILDING AND OTHER STRUCTURAL ELEMENTS. SOME CRITICAL ITEMS REQUIRED BY OTHER DISCIPLINES MAY NOT BE SHOWN ON STRUCTURAL DRAWINGS (i.e. WALL AND ROOF OPENINGS, ARCHITECTURAL, MECHANICAL, AND PLUMBING LOADS, SUPPORT PLATES, ETC.)
- ITEMS SHOWN BY OTHER DISCIPLINES WITH REFERENCE TO STRUCTURAL DRAWING BUT NOT SHOWN ON THIS STRUCTURAL DOCUMENT SHALL BE DESIGNED BY OTHERS. CONTRACTOR SHALL SUBMIT DESIGN BY OTHERS FOR REVIEW.
- THE STRUCTURAL CONSTRUCTION DOCUMENTS REPRESENT THE FINISHED STRUCTURE. THEY DO NOT INDICATE THE METHOD OF CONSTRUCTION. THE CONTRACTOR SHALL PROVIDE ALL MEASURES NECESSARY TO PROTECT THE STRUCTURE DURING CONSTRUCTION. SUCH MEASURES SHALL INCLUDE- BUT ARE NOT LIMITED TO- BRACING, SHORING FOR LOADS DUE TO CONSTRUCTION EQUIPMENT, ETC. THE STRUCTURAL ENGINEER SHALL NOT BE RESPONSIBLE FOR THE CONTRACTOR'S MEANS, METHODS, TECHNIQUES, SEQUENCES FOR PROCEDURE OF CONSTRUCTION OR THE SAFETY PRECAUTIONS, SYSTEMS, AND PROGRAMS (NOR SHALL OBSERVATION VISITS TO THE SITE INCLUDE INSPECTION OF THESE ITEMS).
- CONSTRUCTION MATERIALS SHALL BE SPREAD OUT IF PLACED ON FRAMED CONSTRUCTION. LOAD SHALL NOT EXCEED THE DESIGN LIVE LOAD PER SQUARE FOOT.
- WHERE REFERENCE IS MADE TO VARIOUS TEST STANDARDS FOR MATERIALS, SUCH STANDARDS SHALL BE THE LATEST EDITION AND/OR ADDENDA, UNLESS NOTED OTHERWISE.
- CONTRACTOR TO ESTABLISH AND VERIFY ALL OPENINGS AND INSERTS FOR ARCHITECTURAL, MECHANICAL, PLUMBING AND ELECTRICAL WITH APPROPRIATE TRADES, DRAWINGS AND SUBCONTRACTORS PRIOR TO CONSTRUCTION.

ABBREVIATIONS

AB	ANCHOR BOLT
ADDL	ADDITIONAL
AL	ALUMINUM
ALT	ALTERNATE
ANC	ANCHOR
APVD	APPROVED
ARCH	ARCHITECT, ARCHITECTURAL
BC	BOTTOM CHORD
BOC	BOTTOM OF CONCRETE
BOS	BOTTOM OF STEEL
BOT	BOTTOM, BOTTOM OF TRENCH
BM	BEAM
BP	BID PACKAGE
BRG	BEARING
BTWN	BETWEEN
CC	CENTER TO CENTER
CHKD	CHECKERED
CIP	CAST IN PLACE
CJ	CONSTRUCTION JOINT
CL, ℄	CENTERLINE
CLR	CLEARANCE
CMU	CONCRETE MASONRY UNIT
COL	COLUMN
CONC	CONCRETE
CONN	CONNECTION
CONT	CONTINUOUS
CTR	CENTER
CTRD	CENTERED
DBA	DEFORMED BAR ANCHOR
DIA.	DIAMETER
DP	DEEP
DWG	DRAWING
EA	EACH
ECS	EPOXY COATED STEEL
EE	EACH END
EF	EACH FACE
EL, ELEV	ELEVATION
EQ	EQUALLY SPACED
ES	EACH SIDE
EW	EACH WAY
EXP	EXPANSION
EXST	EXISTING
FD	FLOOR DRAIN
FDN	FOUNDATION
FIN	FINISH
FLG	FLANGE
FLR	FLOOR
FO	FACE OF
FRMG	FRAMING
FRP	FIBER REINFORCED PLASTIC
FS	FAR SIDE
FTG	FOOTING
GA	GAUGE, GAGE
GALV	GALVANIZED
GRD	GRADE
GRT	GROUT
GRTG	GRATING
H	HIGH
HCA	HEADED CONCRETE ANCHOR
HORIZ	HORIZONTAL
HSB	HIGH STRENGTH BOLT
ID	INSIDE DIAMETER
IF	INSIDE FACE
IN	INCHES
JT	JOINT
L	LOW
LONG	LONGITUDINAL
LLH	LONG LEG HORIZONTAL
LLV	LONG LEG VERTICAL
LSH	LONG SLOTTED HOLE
MFR	MANUFACTURER
MAX	MAXIMUM
MB	MACHINE BOLT
MECH	MECHANICAL
MIN	MINIMUM
MTL	METAL
NDT	NON-DESTRUCTIVE TESTING
NIC	NOT IN CONTRACT
NS	NEAR SIDE
NTS	NOT TO SCALE
OC	ON CENTER
OD	OUTSIDE DIAMETER
OF	OUTSIDE FACE
O/O	OUT TO OUT
OPNG	OPENING
OPP	OPPOSITE
OSH	OVERSIZED HOLE
PC	PRECAST
PLCS	PLACES
PJF	PREMOLDED JOINT FILLER
PL, ▱	PLATE
PROJ	PROJECTION
PVC	POLYVINYL CHLORIDE
RD	ROOF DRAIN
REF	REFERENCE
REINF	REINFORCE, REINFORCING
REQD	REQUIRED
RT	RADIOGRAPHIC TESTING
RTN	RETURN
SBD	SCHED. BEAM DEPTH
SJD	SCHED. JOIST DEPTH
SHT	SHEET
SIB	STRUCTURAL ISOLATION BREAK
SIM	SIMILAR
SLV	SHORT LEG VERTICAL
SPCG	SPACING
SPCS	SPACES
SPECS	SPECIFICATIONS
SQ	SQUARE
SS	STAINLESS STEEL
SSD	SCHEDULED SLAB DEPTH
SSH	SHORT SLOTTED HOLE
STD	STANDARD
STIFF	STIFFENER
STL	STEEL
SW	STUD WELD
SYM	SYMMETRICAL
T&B	TOP & BOTTOM
T/SL	TOP OF SLAB
TC	TOP CHORD
TD	TRUSS DIAGONAL
THCK	THICK
TO.	TOP OF
TOC	TOP OF CONCRETE
TOF	TOP OF FOOTING
TOG	TOP OF GRATING
TOS	TOP OF STEEL
TOW	TOP OF WALL
TRANS	TRANSVERSE
TV	TRUSS VERTICAL
TYP	TYPICAL
UNO	UNLESS NOTED OTHERWISE
UT	ULTRASONIC TESTING
VERT	VERTICAL
W	WIDE
W/	WITH
WS	WATERSTOP
WWF	WELDED WIRE FABRIC

- NOTES AND DETAILS ON DRAWINGS SHALL TAKE PRECEDENCE OVER GENERAL STRUCTURAL NOTES AND TYPICAL DETAILS. WHERE NO DETAILS ARE SHOW, CONSTRUCTION SHALL CONFORM TO SIMILAR WORK ON THE PROJECT.
- NOTES AND DETAILS ON DRAWINGS SHALL TAKE PRECEDENCE OVER GENERAL STRUCTURAL NOTES AND TYPICAL DETAILS. WHERE NO DETAILS ARE SHOW, CONSTRUCTION SHALL CONFORM TO SIMILAR WORK ON THE PROJECT.
- ALL DIMENSIONS SHOWN (INCLUDING ELEVATIONS) ON STRUCTURAL DRAWINGS ARE TO ASSIST CONTRACTOR IN VERIFICATION. SCALING DIMENSIONS FROM DRAWINGS IS NOT PERMITTED. LOCATION OF ALL ITEMS SHALL BE DETERMINED BY DIMENSIONS OR NOTES ONLY. DO NOT USE GRAPHIC APPEARANCE TO ASSUME SPECIFIC LOCATIONS.
- CONTRACTOR SHALL BE RESPONSIBLE FOR VERIFCATION OF ALL DIMENSIONS WITH ARCHITECTURAL AND CIVIL DRAWINGS PRIOR TO START OF CONSTRUCTION. RESOLVE ANY DISCREPANCY WITH THE ARCHITECT
- TYPICAL DETAILS MAY NOT NECESSARILY BE CUT ON PLANS, BUT APPLY UNLESS NOTED OTHERWISE.
- WHERE DISCREPANCIES OCCUR BETWEEN PLANS, DETAILS, GENERAL STRUCTURAL NOTES AND SPECIFICATIONS, THE MORE STRINGENT OF REQUIREMENTS SHALL GOVERN (AS DETERMINED BY THE STRUCTURAL ENGINEER AND ARCHITECT OF RECORD).
- ANY ENGINEERING DESIGN PROVIDED BY OTHERS AND SUBMITTED FOR REVIEW, SHALL BEAR THE SEAL OF AN ENGINEER REGISTERED IN THE STATE OF JURISDICTION.
- SUPPLIERS OF ENGINEERED STRUCTURAL COMPONENTS (i.e. SIGNS, STEEL JOISTS, STAIRS, PRECAST ITEMS) SHALL BE RESPONSIBLE FOR COMPLETE DESIGN AND SHALL USE ENTIRE CONTRACT DOCUMENTS TO INCLUDE ALL LOADS AND DETAIL REQUIREMENTS FROM ALL DISCIPLINES. SUPPLIER SHALL PROVIDE ADDITIONAL MATERIAL REQUIRED TO MEET ALL THEIR REQUIREMENTS FOR INSTALLATION (i.e. WIDER BEARING PLATES, SHIM, ERECTION BOLTS, ETC.).
- STRUCTURAL STEEL SUPPLIER SHALL FURNISH BOLTS FOR OSHA CONNECTIONS

MISCELLANEOUS:

- REFER TO ARCHITECTURAL, ELECTRICAL, CIVIL, ELEVATOR, OR OTHER SPECIALTY ENGINEERING DRAWINGS FOR DIMENSIONS NOT SHOWN. CONTRACTOR SHALL VERIFY DIMENSIONS AND RESOLVE DISCREPANCIES OR CONFLICTS PRIOR TO CONSTRUCTION.

NO.	DATE	REVISION	BY	APVD
DSGN	B. BETZOLD	DR F. SOLIS	CHK B. BETZOLD	APVD B. BETZOLD

Jose I. Guerra, Inc. Consulting Engineers
TBPE FIRM F-3

Montopolis Water Redamation Initiave (WRI)
Storage Reservoir and Pump Station
2711 Montopolis Drive
Austin Water, Austin, Texas

CH2MHILL®
TBPE FIRM NO. 3699

STRUCTURAL (TANK)
GENERAL NOTES & ABBREVIATIONS

VERIFY SCALE
BAR IS ONE INCH ON ORIGINAL DRAWING.
0 1"

DATE	JUNE 2016
PROJ	472902
DWG	SR-101
SHEET	77 of 126

CADFILE:F:\13023_Montopolis WRI\DRAWINGS\CAD\SR-101 Montopolis Pump Station Storage Tank General Notes.dwg Plotted: Jun 15, 16 @ 2:51 pm by: rhinojosa Scale: 1:16

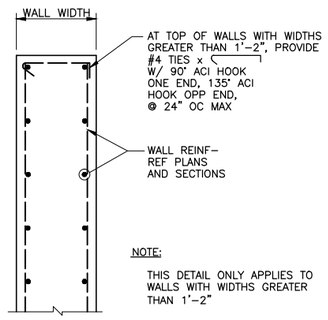

NOTE:

THIS DETAIL ONLY APPLIES TO WALLS WITH WIDTHS GREATER THAN 1'-2"

1 TYPICAL TOP OF WALL REINFORCING DETAIL

SCALE: NTS

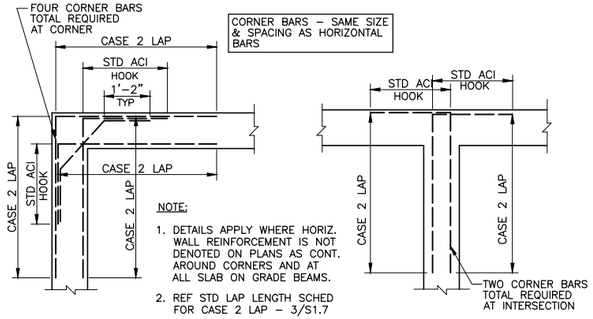

PLAN - SECTION AT CORNER

PLAN - SECTION AT "T" SECTION

NOTE:

1. DETAILS APPLY WHERE HORIZ. WALL REINFORCEMENT IS NOT DENOTED ON PLANS AS CONT. AROUND CORNERS AND AT ALL SLAB ON GRADE BEAMS.
2. REF STD LAP LENGTH SCHED FOR CASE 2 LAP - 3/S1.7
3. REF. WALL SECTIONS FOR WALL REINF.

2 TYPICAL WATER RETAINING CONCRETE WALLS CORNER BAR DETAILS

SCALE: NTS

STANDARD LAP LENGTHS

BAR SIZE	BAR POSITION	
	CASE 1	CASE 2
#3	19"	24"
#4	25"	32"
#5	31"	40"
#6	36"	48"
#7	60"	72"
#8	62"	80"
#9	70"	90"
#10	80"	102"
#11	88"	114"

CASE 1: HORIZONTAL BARS WITH LESS THAN 12" OF CONC BELOW BARS, AND ALL VERTICAL BARS.

CASE 2: HORIZONTAL BARS W/ 12" OR MORE CONC BELOW BARS.

3 STANDARD LAP LENGTHS

SCALE: NTS

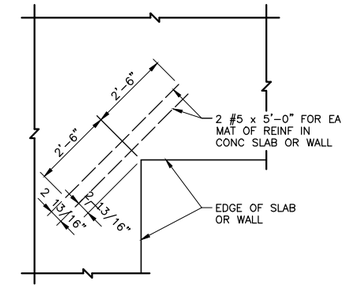

NOTE:

PROVIDE ADDL REINF BARS AT ALL SLAB AND WALL CONDITIONS WITH RE-ENTRANT CORNERS, OPENINGS, ISOLATION JOINTS, OR POUR JOINTS

4 TYPICAL CONCRETE RE-ENTRANT CORNER REINFORCEMENT DETAIL

SCALE: NTS

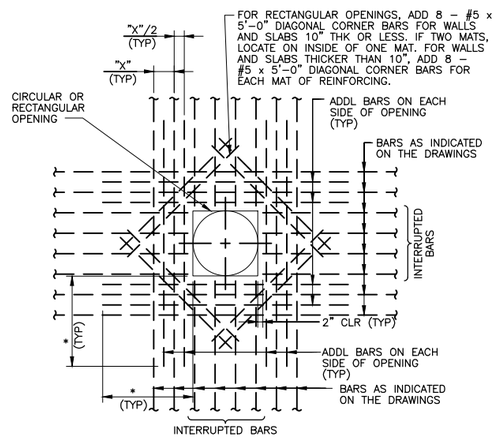

NOTE:

1. AREA OF ADDNL BARS AT EACH EDGE OF OPENING IN EACH DIRECTION SHALL MATCH 1/2 THE CROSS SECTIONAL AREA OF THE INTERRUPTED BARS. ADDNL BARS IN ONE DIRECTION SHALL BE FULL LENGTH OF SLAB LESS CONCRETE COVER.
2. THE '*' DIMENSION EQUALS OPENING DIMENSION MEASURED PERPENDICULAR TO ADDL BARS PLUS TENSION LAP LENGTH.
3. PROVIDE STD ACI HOOKS ON BARS IF STRAIGHT EXTENSIONS DO NOT FIT.
4. PLACE DIAGONAL BARS ON THE INSIDE OF MAIN REINF.

5 TYPICAL CONCRETE REINFORCEMENT AT WALL/ SLAB PENETRATIONS

SCALE: NTS

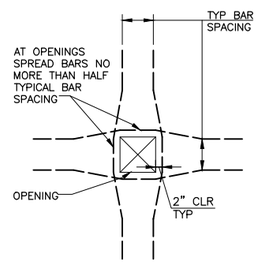

OPENINGS 12" OR LESS

6 TYPICAL CONCRETE REINFORCING AT WALL/ SLAB SMALL OPENINGS

SCALE: NTS

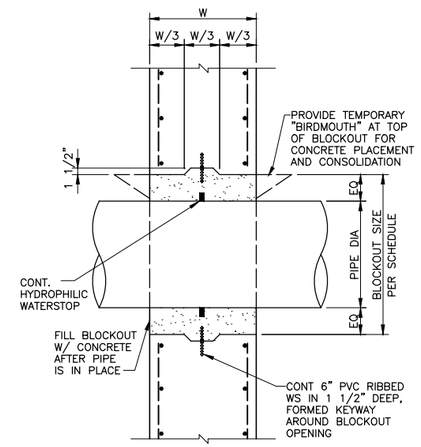

PIPE PENETRATION BLOCKOUT SCHEDULE

NOMINAL PIPE DIAMETER (IN)	BLOCKOUT SIZE (IN)
18	30
20	32
24	36
30	42
36	50
42	58
48	64
54	72
60	76
64	80

NOTES:

1. BLOCKOUT TO BE AT CONTRACTORS OPTION FOR PIPES 18" AND LARGER.
2. REF 5/S1.7 FOR TYPICAL, ADDITIONAL REINF AROUND BLOCKOUT.
3. PROVIDE "BIRDMOUTH" AT TOP OF BLOCKOUT FOR CONCRETE PLACEMENT. REMOVE "BIRDMOUTH" AFTER FORMS HAVE BEEN REMOVED.

7 TYPICAL CONCRETE WALL BLOCKOUT AT PIPE PENETRATION

SCALE: NTS

NO.	DATE	REVISION	BY	APVD
DSGN	B. BETZOLD	DR	F. SOLIS	CHK	B. BETZOLD	APVD	B. BETZOLD

Jose I. Guerra, Inc.
Consulting Engineers
TBPE FIRM F-3

Montopolis Water Reclamation Initiave (WRI)
Storage Reservoir and Pump Station
2711 Montopolis Drive
Austin Water, Austin, Texas

CH2MHILL.
TBPE FIRM NO. 3699

STRUCTURAL (TANK)

TYPICAL VAULT & WALL DETAILS

VERIFY SCALE
BAR IS ONE INCH ON ORIGINAL DRAWING.
0 1"

DATE	MAY 2016
PROJ	472902
DWG	SR-102
SHEET	78 of 126

CADFILE:F:\13023_Montopolis WRI\DRAWINGS\CAD\SR-102 Montopolis Pump Station Storage Typical Vault & Wall Details.dwg Plotted: May 11, 16 @ 5:21 pm by: rhinojosa Scale: 1:16

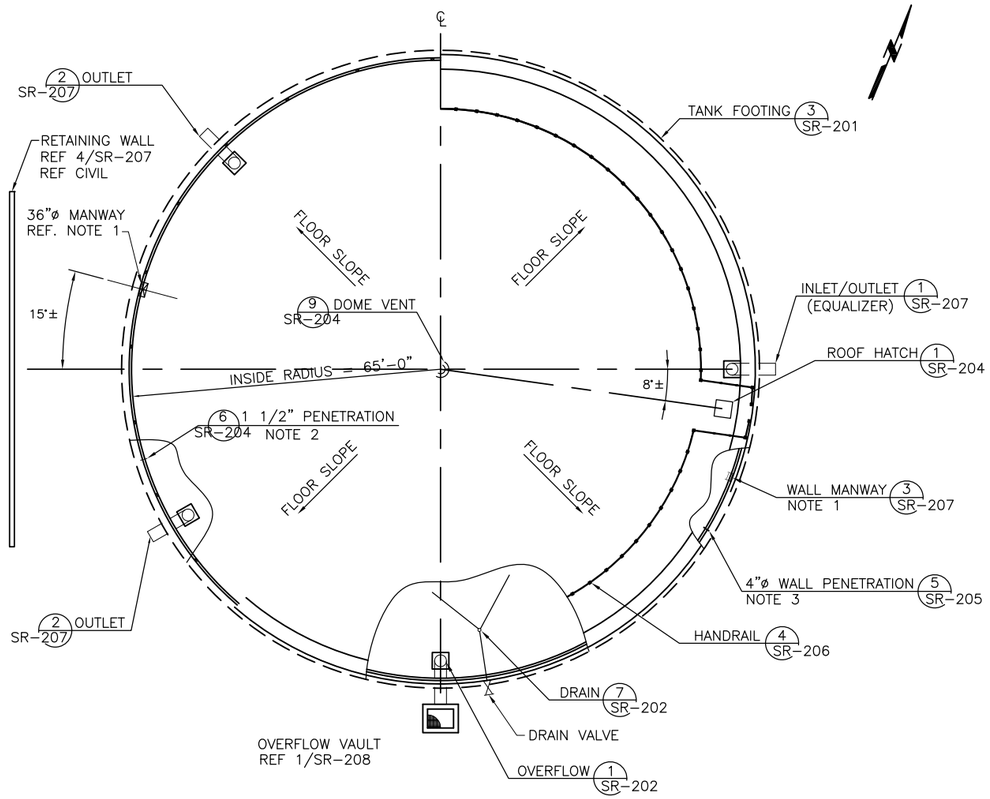

1 ROOF PLAN
NO SCALE

SHEET NOTES:

1. COORDINATE EXACT LOCATIONS OF NEW 36"ø MANWAYS W/ OWNER PRIOR TO INSTALLATION. REF 3/SR-207.
2. COORDINATE EXACT LOCATIONS OF NEW NIPPLE PIPE W/ OWNER PRIOR TO INSTALLATION. REF 6/SR-204
3. COORDINATE EXACT LOCATION OF NEW 4"ø WASHOUT CONNECTION W/ OWNER PRIOR TO INSTALLATION. REF 5/SR-205.
4. SECTIONS OF THE ROOF ARE NOT SHOWN SO THE TANK'S FLOOR CAN BE SHOWN.
5. THE EXTERIOR CONCRETE SURFACES SHALL BE COATED PER SPECIFICATIONS.

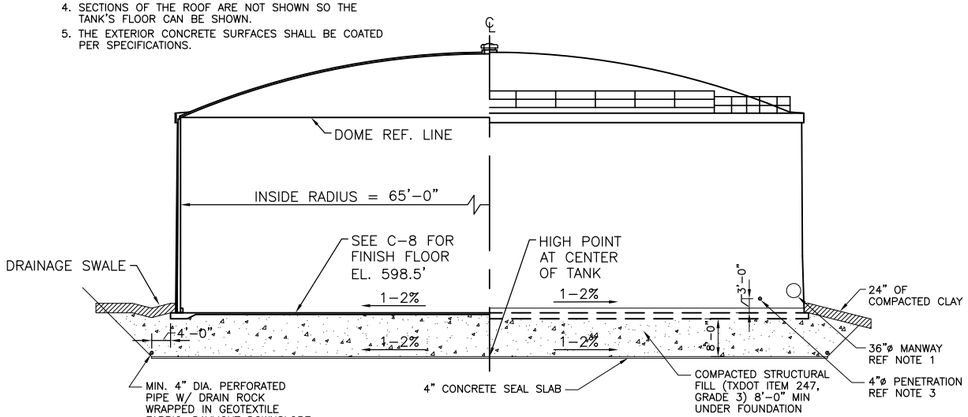

2 ELEVATION– STORAGE TANK (RESERVOIR)
NO SCALE

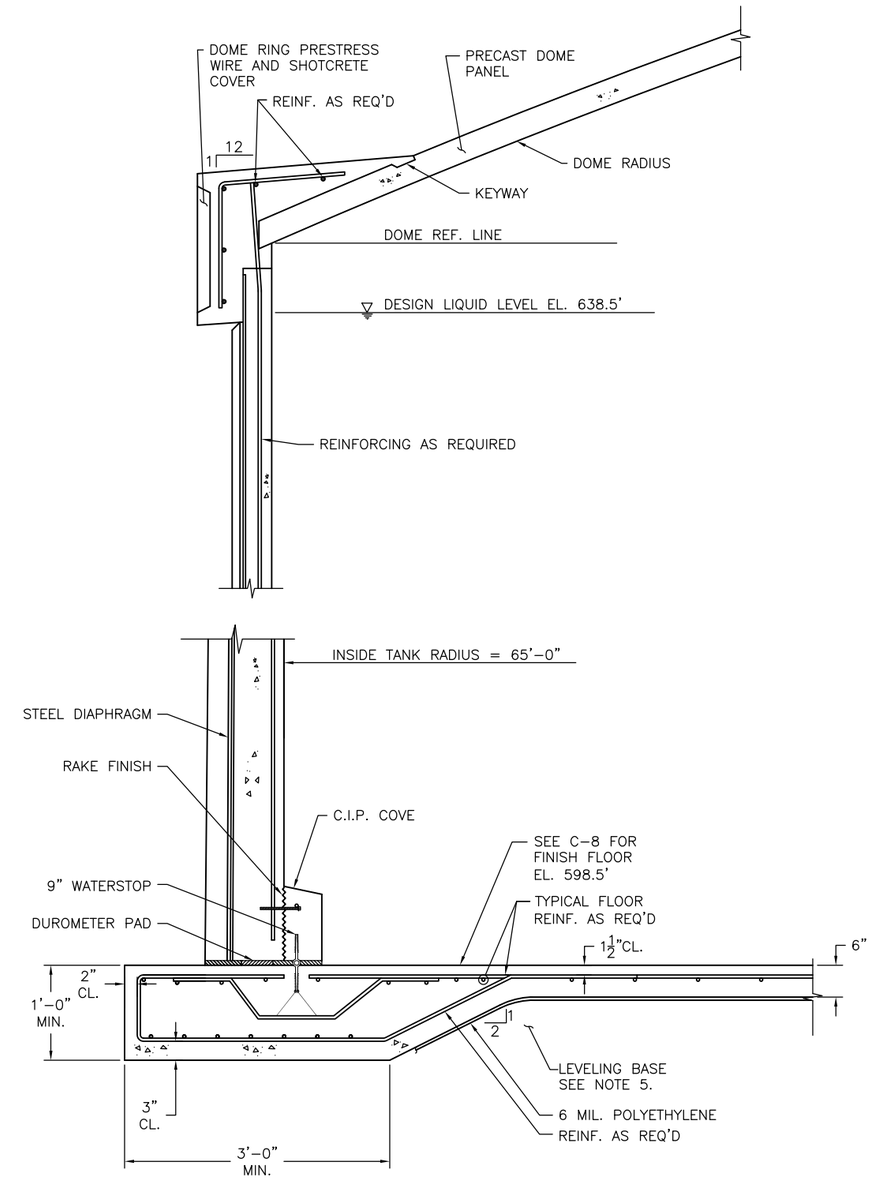

SECTION NOTES:

1. THE TANK FLOOR SLAB SHALL RECEIVE A BULLFLOAT AND/OR A FRESNO FINISH.
2. THE TOP OF THE DOME RING AND DOME SLOTS SHALL RECEIVE A LIGHT BROOM FINISH.
3. FOUNDATION AND FLOOR CONCRETE, f'c = 4,000 psi.
   DOME, COVE AND WALL CONCRETE, f'c = 4,000 psi.
   COREWALL AND WIRE COVER SHOTCRETE, f'c = 4,500 psi, 1:3 MIX.
   COVERCOAT SHOTCRETE, f'c = 4,500 psi, 1:4 MIX.
   ALL REINFORCING SHALL BE GRADE 60.
4. FOOTING REINFORCING SHALL BE DETERMINED BY TANK DESIGNER.
5. REFER TO CONTRACT DOCUMENTS FOR LEVELING BASE SPECIFICATION, COMPACTION REQUIREMENTS, AND FOUNDATION PREPARATION. LEVELING BASE MATERIAL SHALL BE PROVIDED BENEATH THE TANK FLOOR, FOOTING AND BOTTOM OF PIPE ENCASEMENTS.

3 SECTION
NO SCALE

SITE PLAN APPROVAL SHEET OF
FILE NUMBER: SPC-2015-0322C APPLICATION DATE: JULY 17, 2015
APPROVED BY COMMISSION ON: N/A UNDER SECTION 142 OF
CHAPTER 25-5 OF THE CITY OF AUSTIN CODE.
EXPIRATION DATE (25-5-81, LDC) CASE MANAGER LYNDA COURTNEY
PROJECT EXPIRATION DATE (ORD.#970905-A) DWPZ DDZ

Director, Planning and Development Review
RELEASE FOR GENERAL COMPLIANCE: ZONING P-NP LI-NP
Rev. 1 Correction 1
Rev. 2 Correction 2
Rev. 3 Correction 3

Final plat must be recorded by the Project Expiration Date, if applicable. Subsequent Site Plans which do not comply with the Code current at the time of filing, and all required Building Permits and/or a notice of construction (if a building permit is not required), must also be approved prior to the Project Expiration Date.

NO.	DATE	REVISION	BY	APVD
DSGN	B. BETZOLD	DR F. SOLIS	CHK B. BETZOLD	APVD B. BETZOLD

Jose I. Guerra, Inc.
Consulting Engineers
TBPE FIRM F-3

CH2MHILL®
TBPE FIRM NO. 3699

Montopolis Water Redamation Initiave (WRI)
Storage Reservoir and Pump Station
2711 Montopolis Drive
Austin Water, Austin, Texas

STRUCTURAL (TANK)
STORAGE TANK
ROOF PLAN & ELEVATION

VERIFY SCALE
BAR IS ONE INCH ON ORIGINAL DRAWING.
0 1"

DATE	MAY 2016
PROJ	472902
DWG	SR-201
SHEET	79 of 126

CADFILE:F:\13023_Montopolis WRI\DRAWINGS\CAD\SR-201 Montopolis Pump Station Storage Tank Plan.dwg Plotted: May 11, 16 @ 5:38 pm by: rhinojosa Scale: 1:192

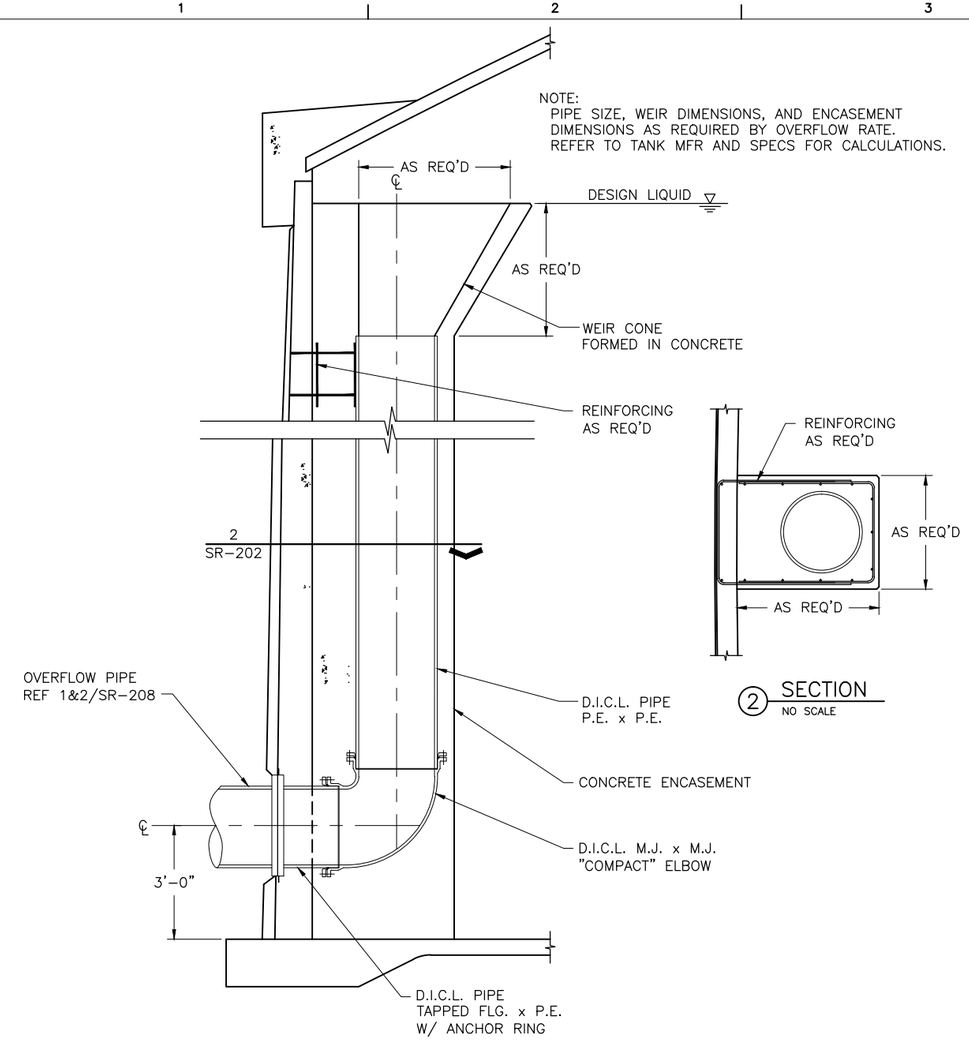

1 OVERFLOW
NO SCALE

2 SECTION
NO SCALE

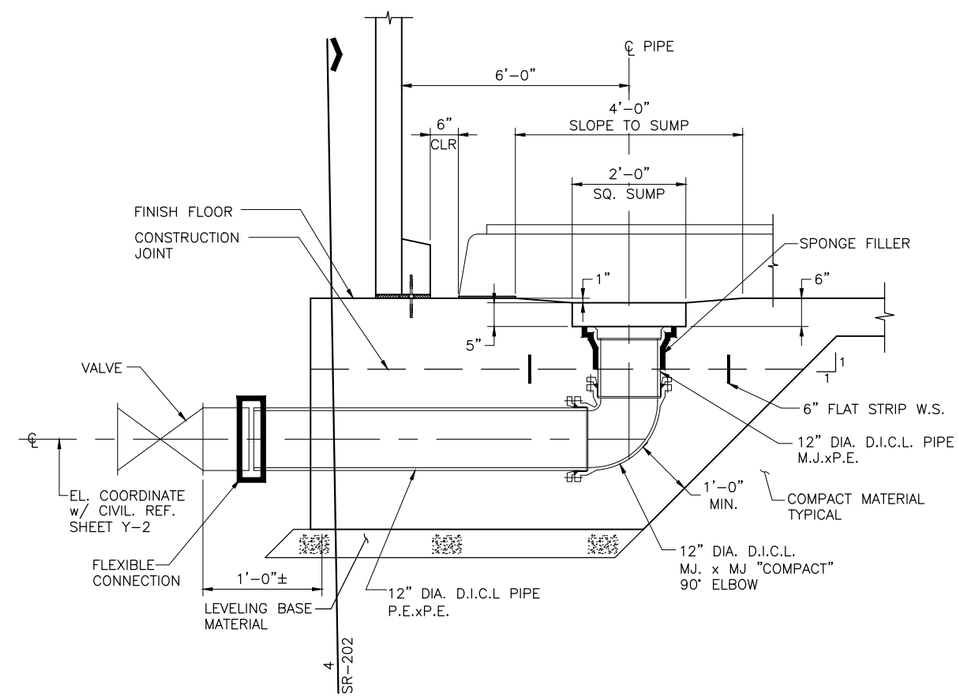

3 12"ø DRAIN
NO SCALE

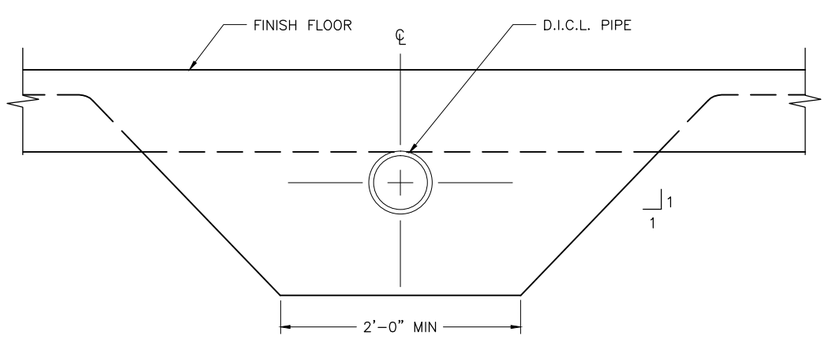

4 SECTION
NO SCALE

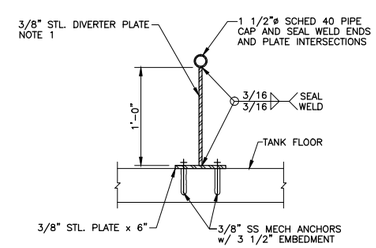

5 DETAIL
SCALE: 1 1/2" = 1'-0"

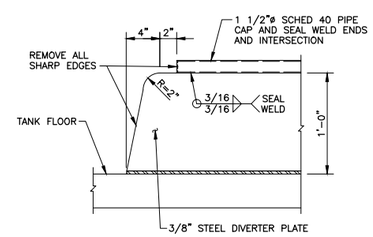

6 DETAIL
SCALE: 1 1/2" = 1'-0"

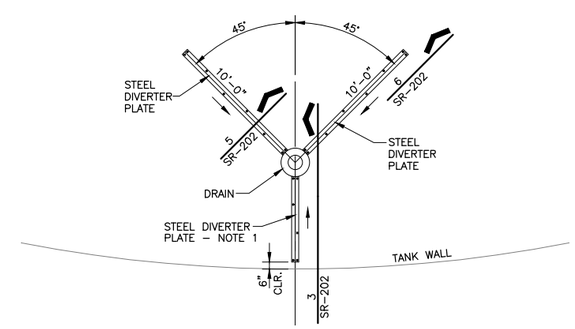

7 DRAIN & DIVERTER PLATE – PLAN
SCALE: 3/16" = 1'-0"

NOTE :
1. DIVERTER PLATES SHALL INTERSECT AT THE CENTER LINE OF THE DRAIN PIPE AND BE SEAL WELDED TOGETHER.

NO.	DATE	REVISION	BY	APVD
DSGN	B. BETZOLD	DR F. SOLIS	CHK B. BETZOLD	APVD B. BETZOLD

STATE OF TEXAS — BRIAN MITREY BETZOLD — 121236 — LICENSED PROFESSIONAL ENGINEER — 9/11/15

Jose I. Guerra, Inc. Consulting Engineers
TBPE FIRM F-3

CH2MHILL.
TBPE FIRM NO. 3699

Montopolis Water Reclamation Initiave (WRI)
Storage Reservoir and Pump Station
2711 Montopolis Drive
Austin Water, Austin, Texas

STRUCTURAL (TANK)
TANK DETAILS
SHEET 1 OF 3

VERIFY SCALE
BAR IS ONE INCH ON ORIGINAL DRAWING.
0 1"

DATE	MAY 2016
PROJ	472902
DWG	SR-202
SHEET	80 of 126

CADFILE:F:\13023_Montopolis WRI\DRAWINGS\CAD\SR-202 Montopolis Pump Station Storage Tank Details-1.dwg Plotted: May 11, 16 @ 5:22 pm by: rhinojosa Scale: 1:16

TYPICAL DETAIL NOTES :

1. RAILING NOT SHOWN IN ITS ENTIRETY FOR CLARITY.
2. KICK PLATES SHOWN AT RAIL POSTS ONLY FOR CLARITY.
3. TANK DESIGNER TO SPECIFY FRAMING AND SUPPORT FOR PLATFORM AND DAVIT ARM. TANK DESIGNER SHALL DESIGN FOR SUPERIMPOSED PLATFORM LIVE LOADING OF 100 PSF (SERVICE) AND DAVIT ARM LIVE LOADS – AS INDICATED. DAVIT ARM MOMENT AND TWISTING OF 2.5 KIP–FT. IS BASED ON 2'–5" MAX. ARM LENGTH.
4. PLATFORM, GRATING, RAILING, LADDERS, DAVIT ARM FRAMING SUPPORTS, AND CONNECTIONS TO THE TANK SHALL BE SPECIFIED BY THE TANK DESIGNER. THESE DETAILS ARE FOR SCHEMATIC AND LAYOUT PURPOSES ONLY.

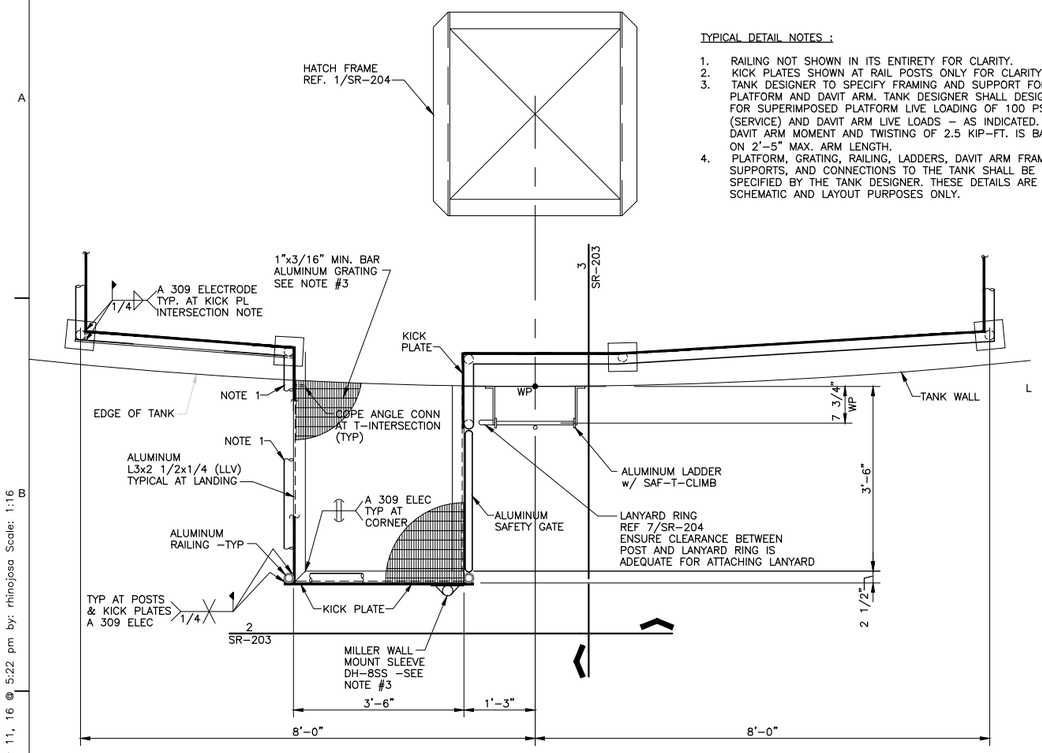

1 ROOF LANDING PLAN (SCHEMATIC)
SCALE: 3/4" = 1'–0"

1. RAILING NOT SHOWN IN ITS ENTIRETY FOR CLARITY.
2. KICK PLATES SHOWN AT RAIL POSTS ONLY FOR CLARITY.

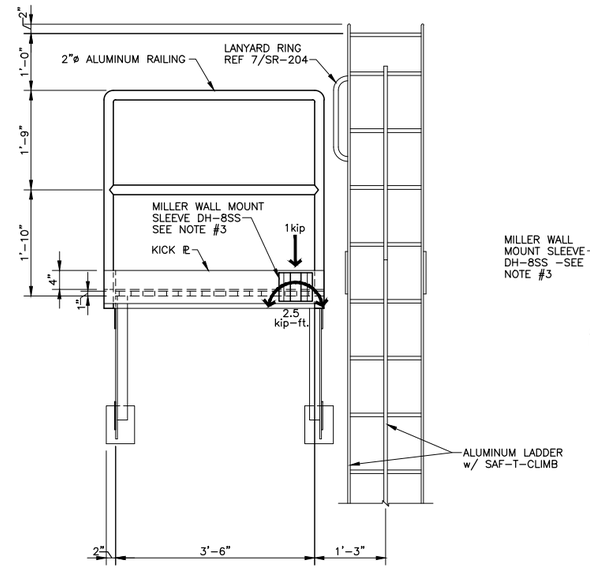

2 ROOF LANDING ELEVATION (SCHEMATIC)
SCALE: 3/4" = 1'–0"

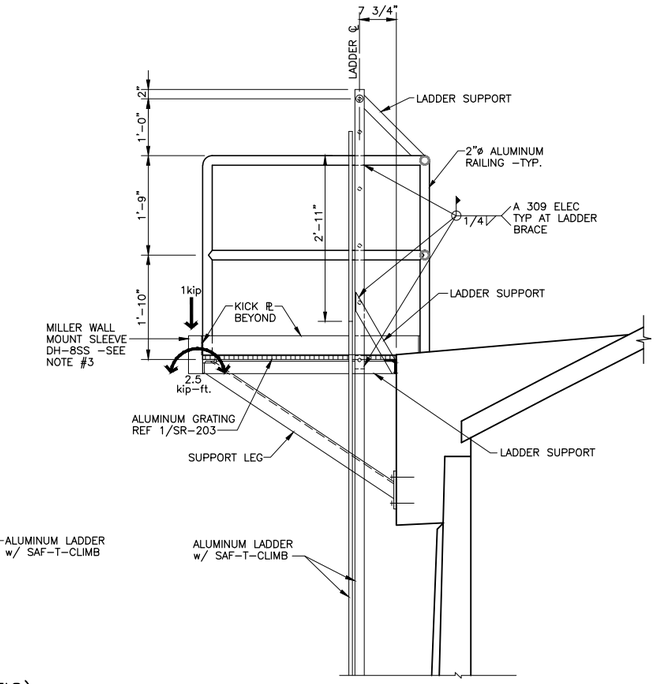

3 ROOF LANDING SECTION (SCHEMATIC)
SCALE: 3/4" = 1'–0"

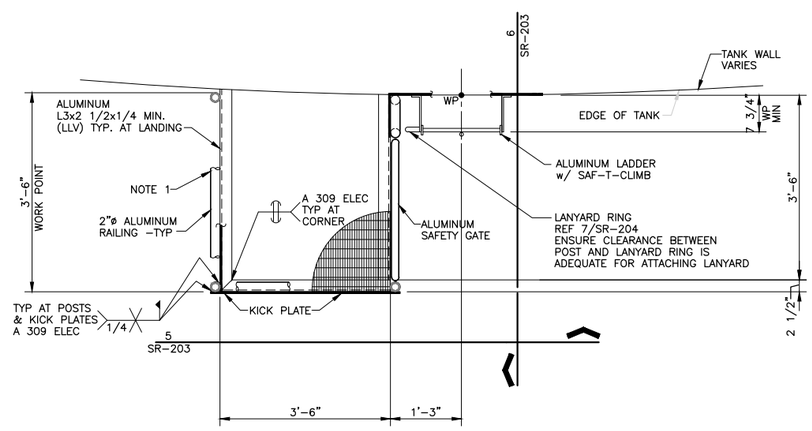

4 INTERMEDIATE ROOF LANDING PLAN (SCHEMATIC)
SCALE: 3/4" = 1'–0"

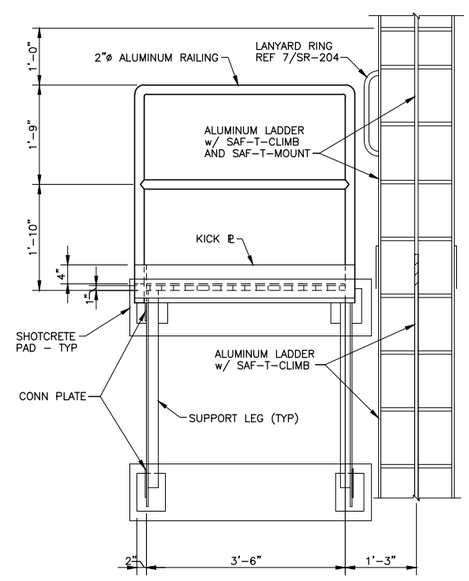

5 INTERMEDIATE ROOF LANDING ELEVATION (SCHEMATIC)
SCALE: 3/4" = 1'–0"

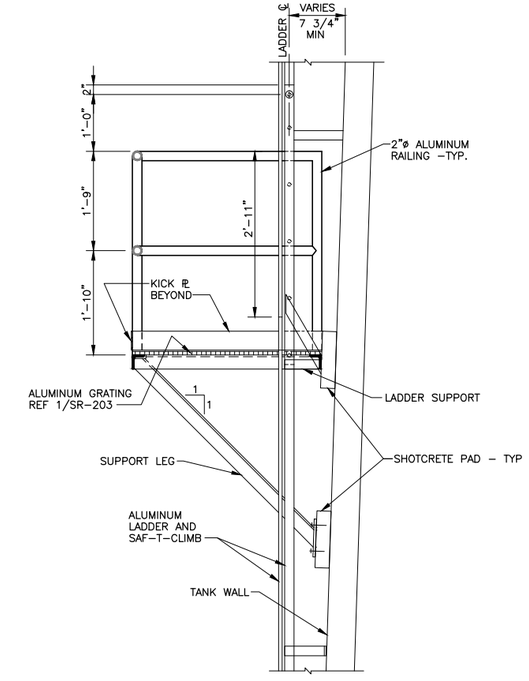

6 INTERMEDIATE ROOF LANDING SECTION (SCHEMATIC)
SCALE: 3/4" = 1'–0"

NO.	DATE	REVISION	BY	APVD
DSGN	B. BETZOLD	DR F. SOLIS	CHK B. BETZOLD	APVD B. BETZOLD

Jose I. Guerra, Inc.
Consulting Engineers
TBPE FIRM F-3

Montopolis Water Reclamation Initiave (WRI)
Storage Reservoir and Pump Station
2711 Montopolis Drive
Austin Water, Austin, Texas

CH2MHILL.
TBPE FIRM NO. 3699

STRUCTURAL (TANK)
STORAGE TANK DETAILS
SHEET 2 OF 3

VERIFY SCALE
BAR IS ONE INCH ON ORIGINAL DRAWING.
0 1"

DATE	MAY 2016
PROJ	472902
DWG	SR-203
SHEET	81 of 126

CADFILE:F:\13023_Montopolis WRI\DRAWINGS\CAD\SR-203 Montopolis Pump Station Storage Tank Details-2.dwg,DWG Plotted: May 11, 16 @ 5:22 pm by: rhinojosa Scale: 1:16

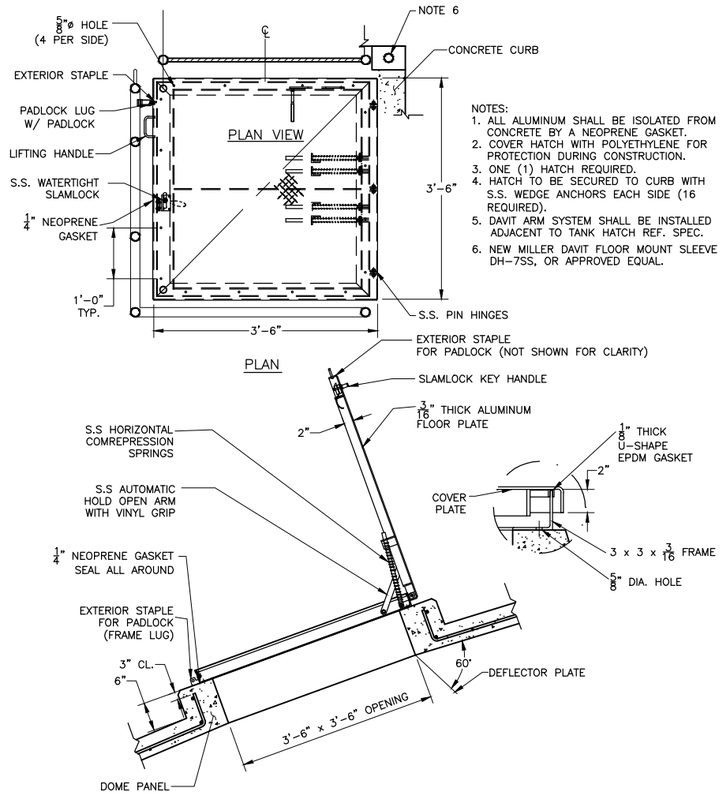

NOTES:
1. ALL ALUMINUM SHALL BE ISOLATED FROM CONCRETE BY A NEOPRENE GASKET.
2. COVER HATCH WITH POLYETHYLENE FOR PROTECTION DURING CONSTRUCTION.
3. ONE (1) HATCH REQUIRED.
4. HATCH TO BE SECURED TO CURB WITH S.S. WEDGE ANCHORS EACH SIDE (16 REQUIRED).
5. DAVIT ARM SYSTEM SHALL BE INSTALLED ADJACENT TO TANK HATCH REF. SPEC.
6. NEW MILLER DAVIT FLOOR MOUNT SLEEVE DH-7SS, OR APPROVED EQUAL.

1 ROOF HATCH PLAN
NO SCALE

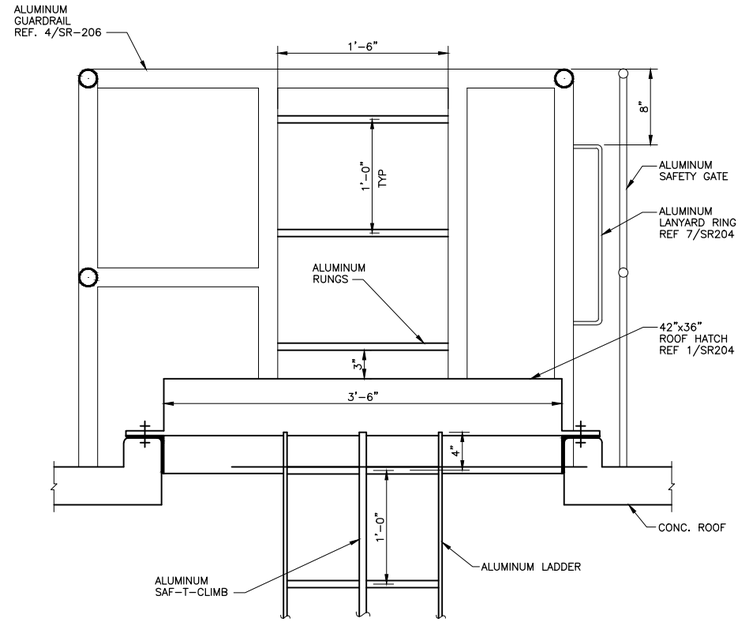

2 SECTION: ROOF HATCH
SCALE: 1 1/2" = 1'-0"

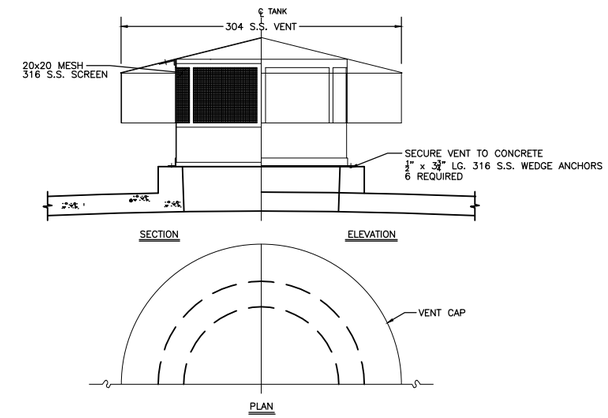

NOTE: VENT SIZE AS REQUIRED BY DESIGN.

9 VENT
NO SCALE

3 DETAIL (NOT USED)
SCALE: AS NOTED

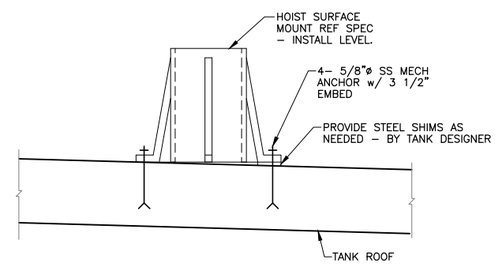

4 DETAIL
SCALE: 3" = 1'-0"

5 DETAIL (NOT USED)
SCALE: AS NOTED

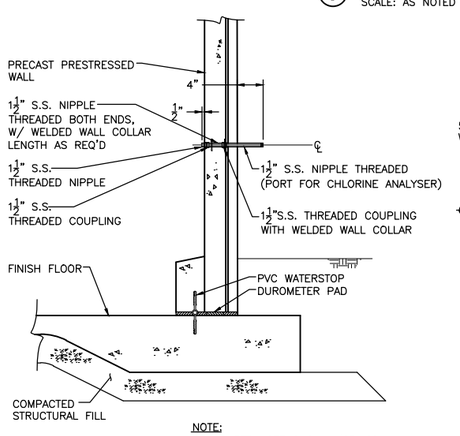

NOTE:
REF SHEET NOTE 2 ON 1/SR-201

6 NIPPLE PIPE
NO SCALE

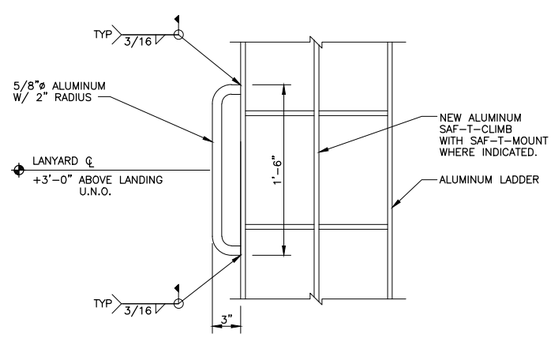

7 LANDING LANYARD RING DETAIL
SCALE: 1 1/2" = 1'-0"

NO.	DATE	REVISION	BY	APVD
DSGN	B. BETZOLD	DR F. SOLIS	CHK B. BETZOLD	APVD B. BETZOLD

Jose I. Guerra, Inc.
Consulting Engineers
TBPE FIRM F-3

Montopolis Water Reclamation Initiave (WRI)
Storage Reservoir and Pump Station
2711 Montopolis Drive
Austin Water, Austin, Texas

CH2MHILL.
TBPE FIRM NO. 3699

STRUCTURAL (TANK)
TANK DETAILS
SHEET 3 OF 3

VERIFY SCALE
BAR IS ONE INCH ON ORIGINAL DRAWING.
0 1"

DATE	MAY 2016
PROJ	472902
DWG	SR-204
SHEET	82 of 126

CADFILE:F:\13023_Montopolis WRI\DRAWINGS\CAD\SR-204 Montopolis Pump Station Storage Tank Details-3.dwg Plotted: May 11, 16 @ 5:22 pm by: rhinojosa Scale: 1:16

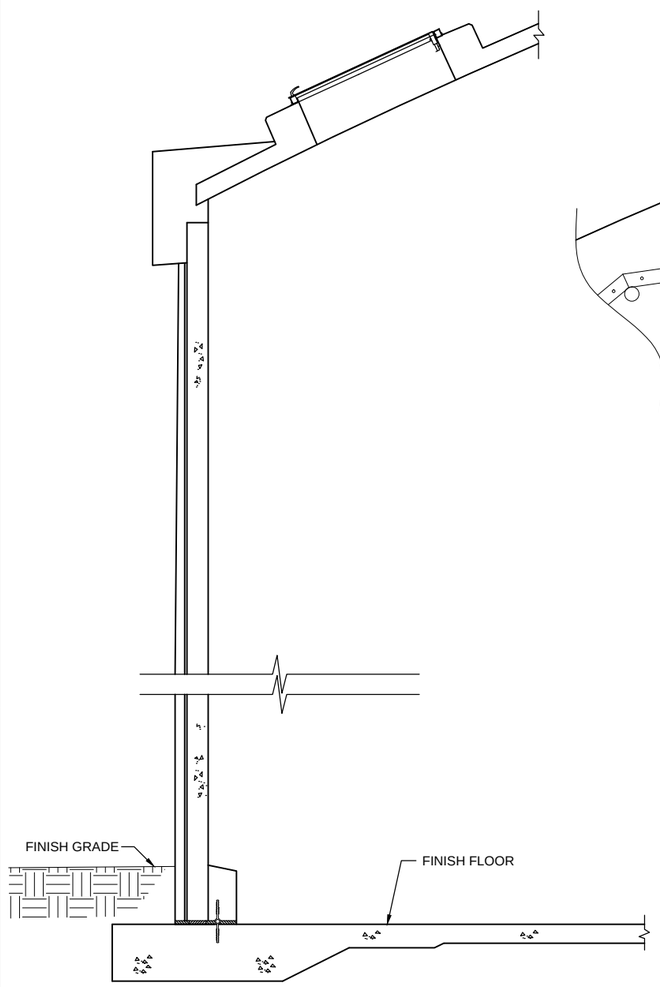

NOTES:
1. LADDER SHALL BE ALUMINUM.
2. LADDERS SHALL BE CONNECTED TO TANK USING STAINLESS STEEL WEDGE ANCHORS.
3. OSHA COMPLIANT FALL PREVENTION DEVICE TO BE INSTALLED (STAINLESS STEEL).

1 ROOF HATCH ELEVATION
NO SCALE

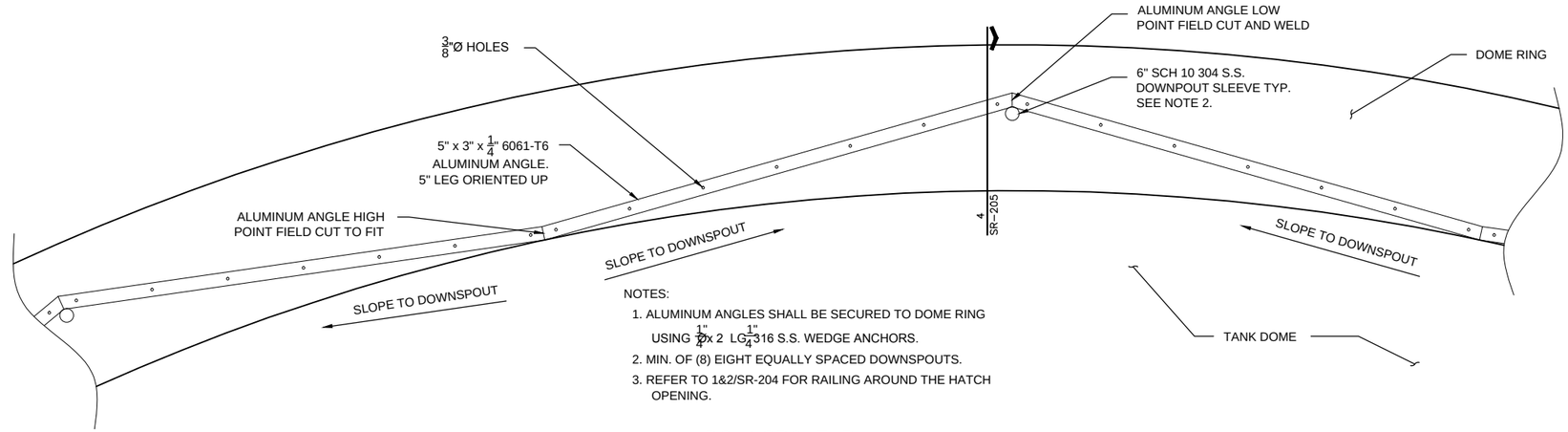

NOTES:
1. ALUMINUM ANGLES SHALL BE SECURED TO DOME RING USING 1/4"Ø x 2 LG 1/4" 316 S.S. WEDGE ANCHORS.
2. MIN. OF (8) EIGHT EQUALLY SPACED DOWNSPOUTS.
3. REFER TO 1&2/SR-204 FOR RAILING AROUND THE HATCH OPENING.

3 DOWNSPOUT PLAN
NO SCALE

NOT USED

2 INTERIOR LADDER ELEVATION
NO SCALE

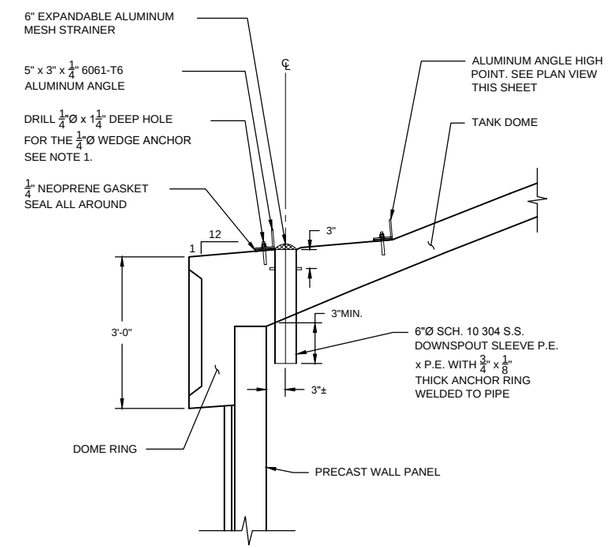

4 DOWNSPOUT SECTION
NO SCALE

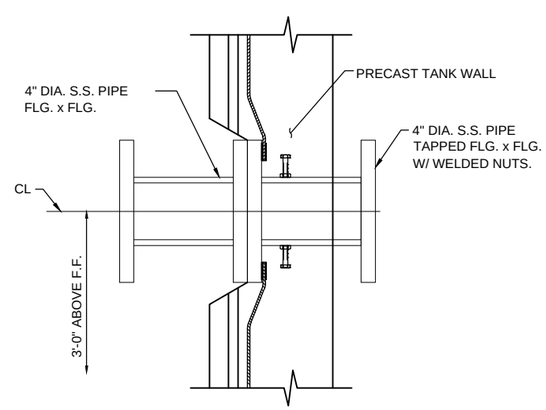

5 4"ø WALL PENETRATION
NO SCALE

NO.	DATE	REVISION	BY	APVD
DSGN	DR	CHK		
B. BETZOLD	F. SOLIS	B. BETZOLD	B. BETZOLD	B. BETZOLD

Jose I. Guerra, Inc.
Consulting Engineers
TBPE FIRM F-3

Montopolis Water Reclamation Initiave (WRI)
Storage Reservoir and Pump Station
2711 Montopolis Drive
Austin Water, Austin, Texas

CH2MHILL.
TBPE FIRM NO. 3699

STRUCTURAL (TANK)
STORAGE TANK DETAILS

VERIFY SCALE
BAR IS ONE INCH ON ORIGINAL DRAWING.
0 1"

DATE	MAY 2016
PROJ	472902
DWG	SR-205
SHEET	83 of 126

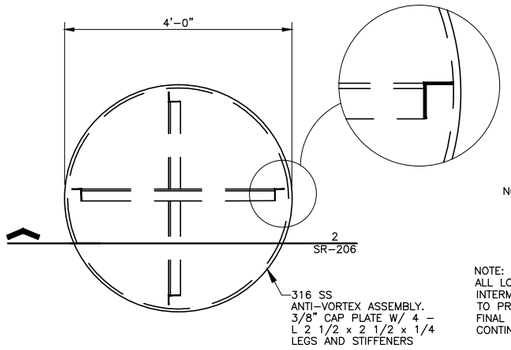

1 ANTI-VORTEX ASSEMBLY
SCALE: 3/4" = 1'-0"

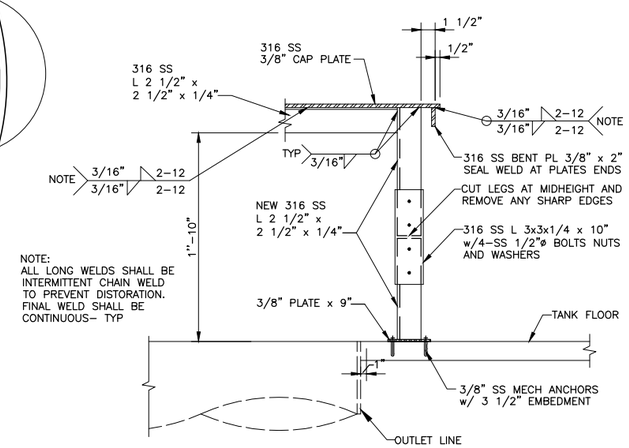

3 DETAIL
SCALE: 1 1/2" = 1'-0"

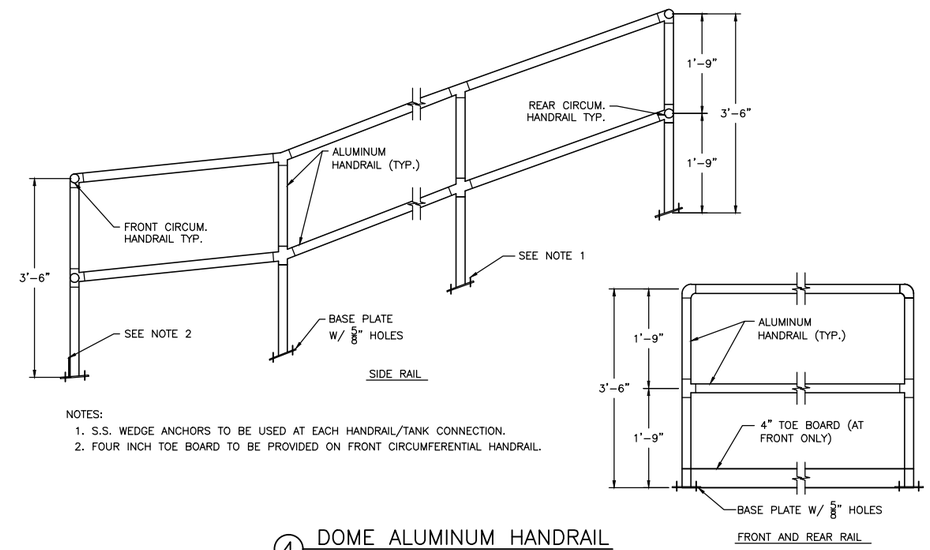

NOTES:
1. S.S. WEDGE ANCHORS TO BE USED AT EACH HANDRAIL/TANK CONNECTION.
2. FOUR INCH TOE BOARD TO BE PROVIDED ON FRONT CIRCUMFERENTIAL HANDRAIL.

4 DOME ALUMINUM HANDRAIL
NO SCALE

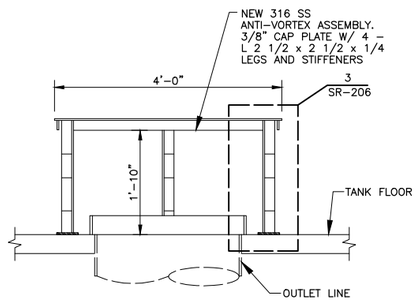

2 SECTION
SCALE: 3/4" = 1'-0"

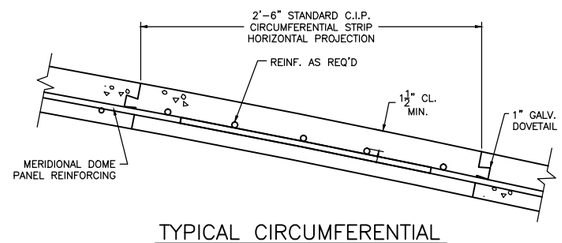

TYPICAL CIRCUMFERENTIAL
DOME JOINT REINFORCING
6 SCALE : 1"=1'-0"

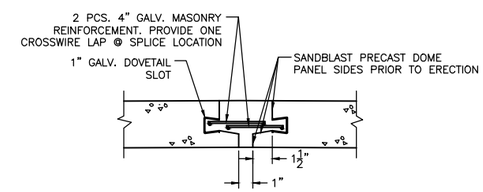

TYPICAL RADIAL
DOME JOINT REINFORCING
7 SCALE : 1"=1'-0"

NOTE:
1. WALL PANELS SHALL RECEIVE A HORIZONTAL RAKE FINISH FOR THE BOTTOM 1'-0" OF THE PANEL AND A HORIZONTAL LIGHT BROOM FINISH FOR THE REST OF THE PANEL.

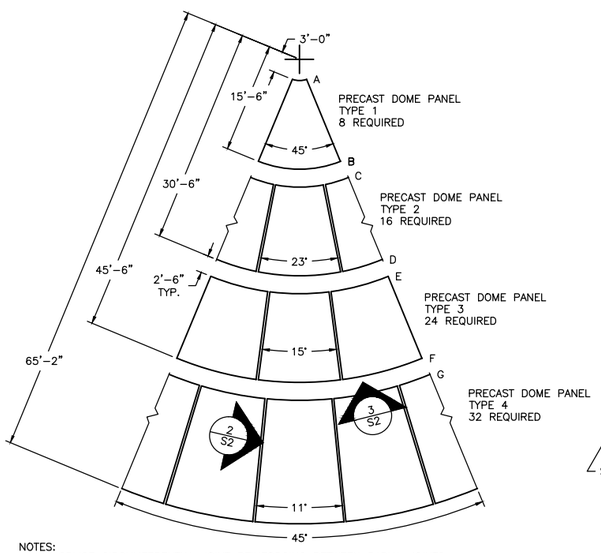

NOTES:
1. SPLICE CIRCUMFERENTIAL JOINT REINFORCING BETWEEN RADIAL JOINTS.
2. RADIAL DIMENSIONS ARE HORIZONTAL PROJECTIONS.
3. DOME PANELS, DOME RING, AND DOME SLOTS SHALL RECEIVE A LIGHT BROOM FINISH.

5 TYPICAL DOME SECTOR
NOT TO SCALE

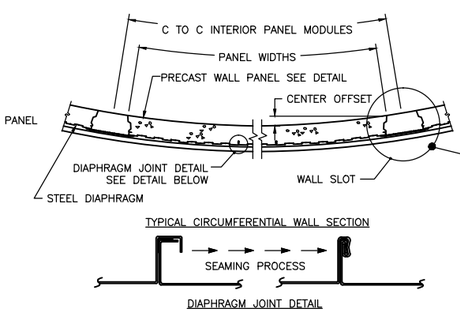

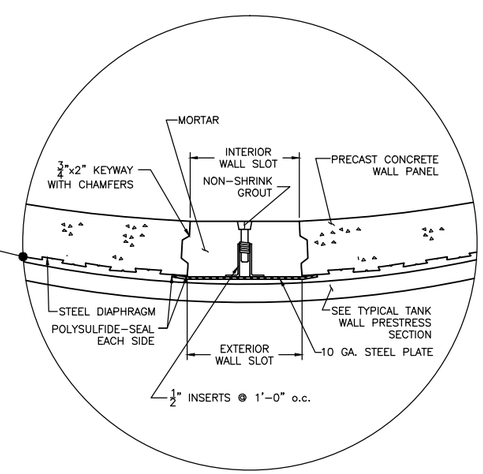

8 TYPICAL WALL PANEL & JOINT
SCALE: 3/4" = 1'-0"

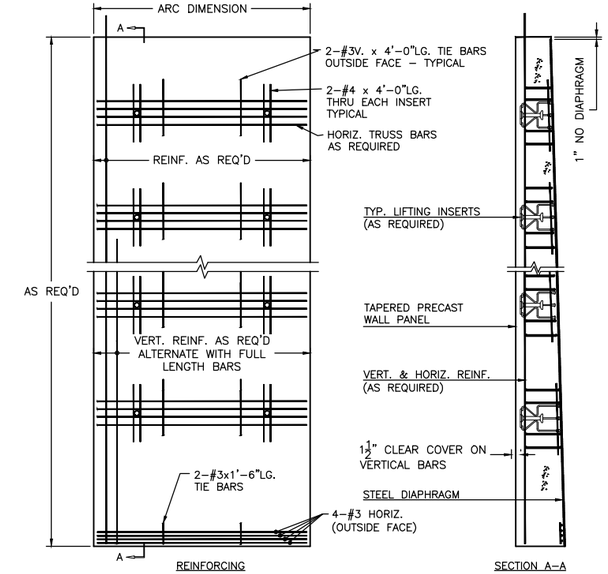

9 TYPICAL WALL PANEL & JOINT
SCALE: 3/4" = 1'-0"

NO.	DATE	REVISION	BY	APVD
DSGN	B. BETZOLD	DR F. SOLIS	CHK B. BETZOLD	APVD B. BETZOLD

Jose I. Guerra, Inc.
Consulting Engineers
TBPE FIRM F-3

Montopolis Water Reclamation Initiave (WRI)
Storage Reservoir and Pump Station
2711 Montopolis Drive
Austin Water, Austin, Texas

CH2MHILL.
TBPE FIRM NO. 3699

STRUCTURAL (TANK)
STORAGE TANK DETAILS

VERIFY SCALE
BAR IS ONE INCH ON ORIGINAL DRAWING.
0 1"

DATE	MAY 2016
PROJ	472902
DWG	SR-206
SHEET	84 of 126

CADFILE:F:\13023_Montopolis WRI\DRAWINGS\CAD\SR-206 Montopolis Pump Station Storage Tank Details.dwg Plotted: May 11, 16 @ 5:22 pm by: rhinojosa Scale: 1:16

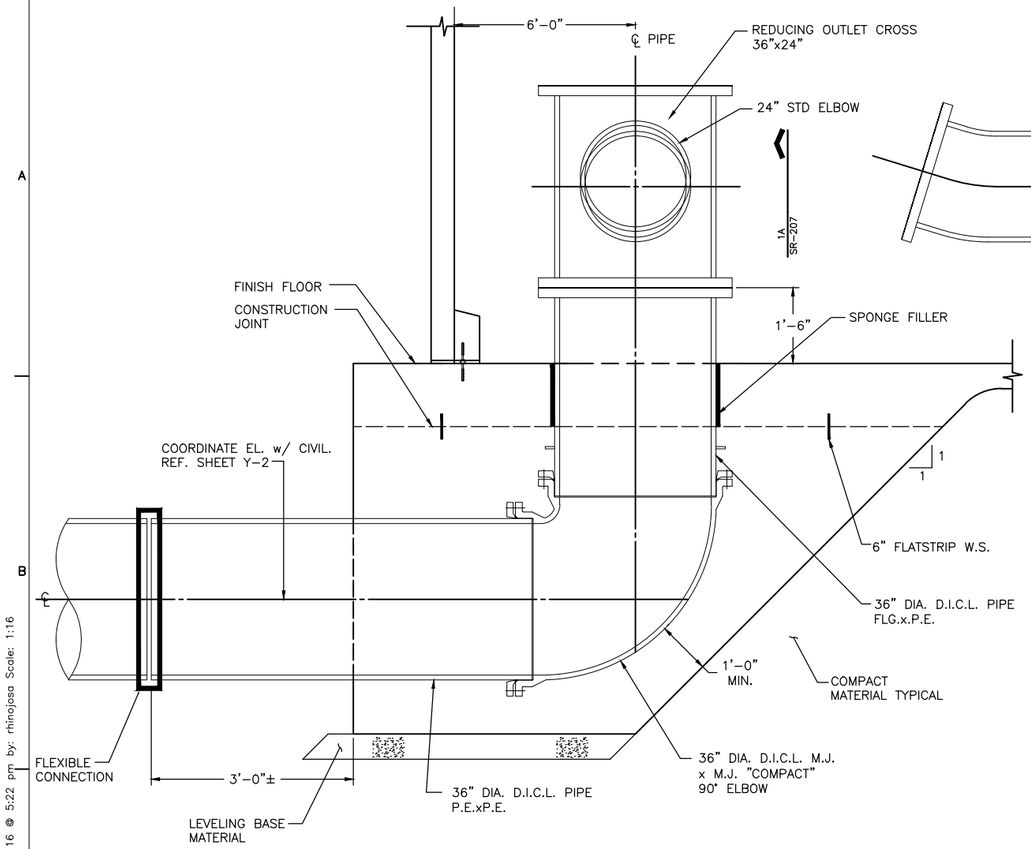

1 36"ø INLET/OUTLET (EQUALIZER)
NO SCALE

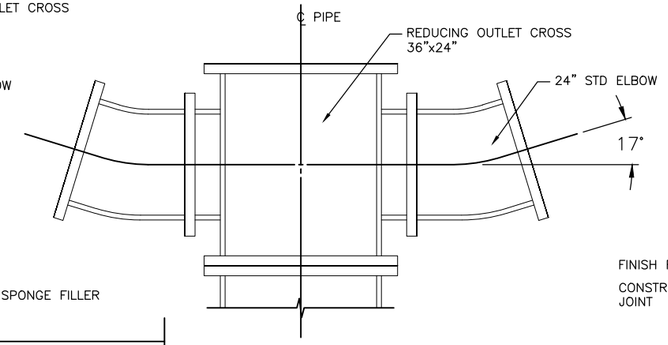

1A 36"ø INLET/OUTLET (EQUALIZER) ELEVATION
NO SCALE

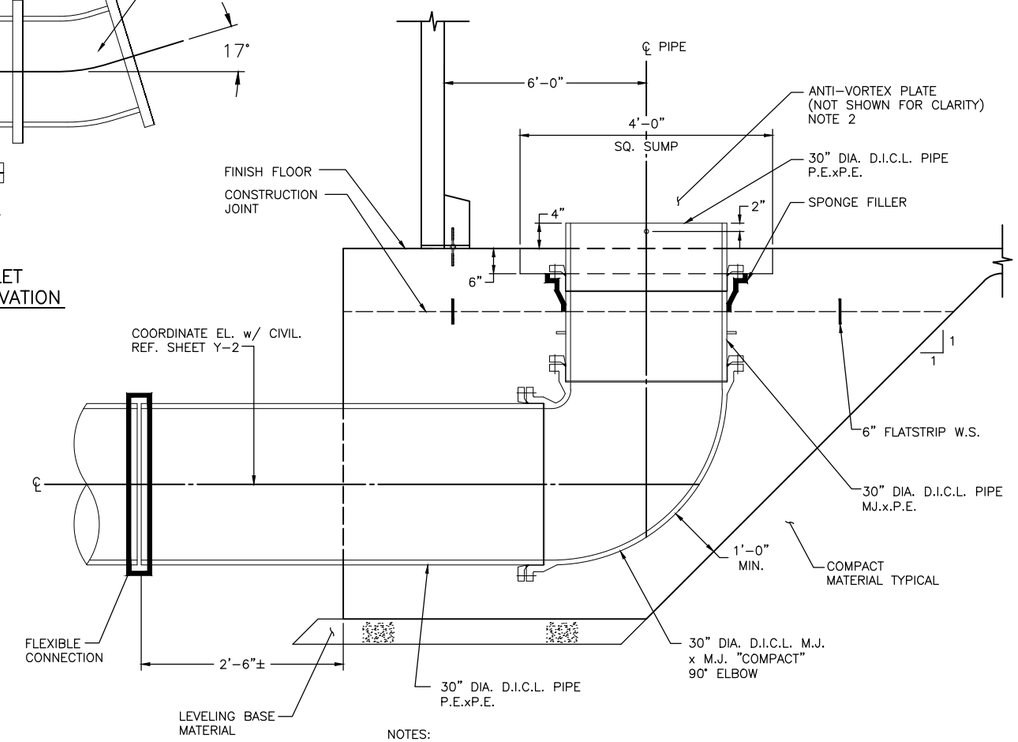

NOTES:
1. TWO (2) REQUIRED THIS LAYOUT.
2. 316 S.S. ANTI-VORTEX REFER TO 1-3/SR-206.

2 30"ø OUTLET
NO SCALE

NOTES:
1. TWO (2) WALL MANWAYS REQUIRED THIS LAYOUT.
2. MANWAY TO BE LOCATED IN THE MIDDLE OF TYPE "A" WALL PANEL WIDTHS.

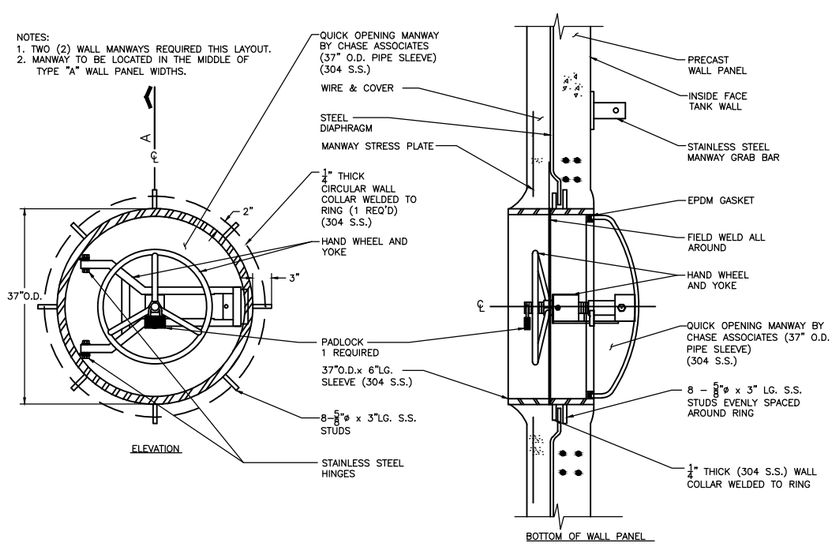

SECTION A

3 36"ø WALL MANWAY
NO SCALE

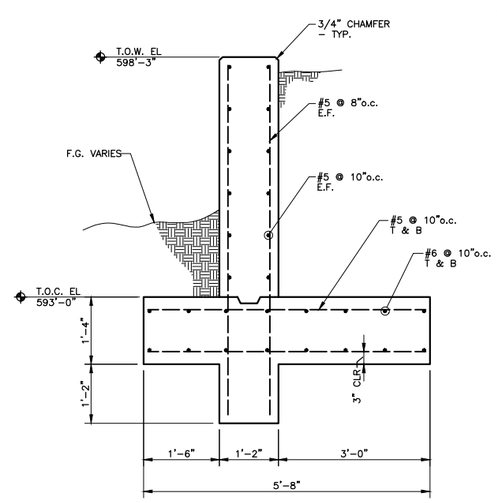

RETAINING WALL SUMMARY REPORT:

1. DESIGN ASSUMPTIONS:
   a.CANTILEVER RETAINING WALL
   b.DRAINED SOIL CONDITION
   c.SOIL TO TOP OF WALL
2. DESIGN PARAMETERS:
   a. DESIGNED I.A.W. AASHTO LRFD
   b. EQUIVALENT FLUID PRESSURE - 60 psf
   c. ALLOWABLE BEARING PRESSURE - 3000 psf
   d. PASSIVE SOIL PRESSURE - 350 psf
   e. SURCHARGE - 100 psf
   f. SOIL FRICTION FACTOR - 0.40
   g. CONCRETE STRENGTH - 4000 psi
   h. REINFORCING STRENGTH - 60,000 psi
   i. CONCRETE DENSITY - 150 pcf
   j. SOIL DENSITY - 115 pcf
3. FACTORS OF SAFETY (FOS):

WALL	SLIDING (1.5 MIN)	OVERTURNING (2.0 MIN)
5'-3'	2.10	3.75

4 RETAINING WALL SECTION
NO SCALE

NO.	DATE	REVISION	BY	APVD
DSGN	B. BETZOLD	DR F. SOLIS	CHK B. BETZOLD	APVD B. BETZOLD

STATE OF TEXAS — BENJAMIN MITCHEY BETZOLD — 72,735 — LICENSED PROFESSIONAL ENGINEER — 9/15/16

Jose I. Guerra, Inc. Consulting Engineers
TBPE FIRM F-3

CH2MHILL.
TBPE FIRM NO. 3699

Montopolis Water Reclamation Initiave (WRI)
Storage Reservoir and Pump Station
2711 Montopolis Drive
Austin Water, Austin, Texas

STRUCTURAL (TANK)
STORAGE TANK
SECTIONS AND DETAILS

VERIFY SCALE
BAR IS ONE INCH ON ORIGINAL DRAWING.
0 1"

DATE	MAY 2016
PROJ	472902
DWG	SR-207
SHEET	85 of 126

CADFILE:F:\13023_Montopolis WRI\DRAWINGS\CAD\SR-207 Montopolis Pump StationStorage Tank Details.dwg Plotted: May 11, 16 @ 5:22 pm by: rhinojosa Scale: 1:16

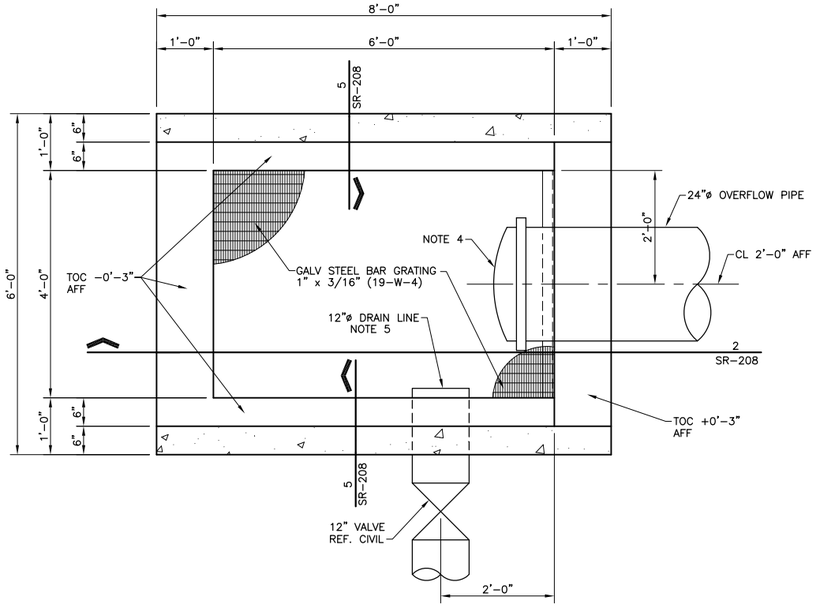

TOP VIEW

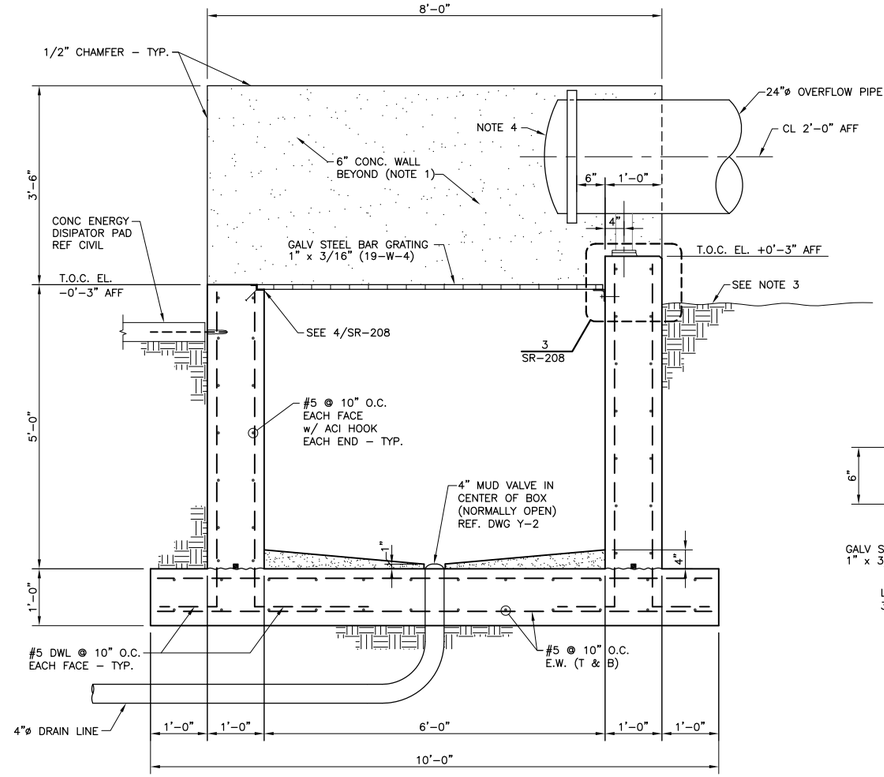

2 OVERFLOW CATCHMENT SECTION
SCALE: 3/4" = 1'-0"

SHEET NOTES:

1. CONCRETE SIDE WALLS HAVE VERTICAL AND HORIZONTAL REINF. AS SHOWN IN 5/SR-208.
2. CONSTRUCT THE OVERFLOW CATCHMENT STRUCTURE WITH A TOP OF WALL ELEVATION THAT IS 3" BELOW THE AFF.
3. OVERFLOW OUTFALL. GRADE AREA BETWEEN THE NEW OVERFLOW CATCHMENT AND THE TANK CONCRETE FOUNDATION SO ALL WATER WILL DRAIN AROUND STRUCTURE.
4. SEE VALVE SCHEDULE FOR OVERFLOW VALVE. REFER TO SHEET G-6.
5. 12" DRAIN LINE FLOW SET AT 1'-0" ABOVE OVERFLOW CATCHMENT SLAB.

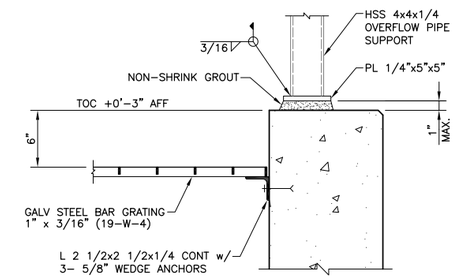

3 DETAIL
SCALE : 1 1/2" = 1'-0"

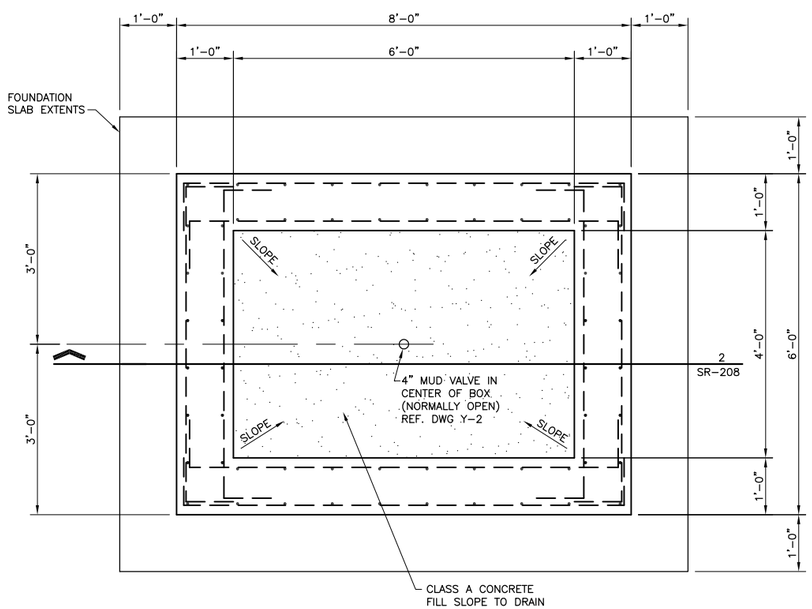

1 OVERFLOW CATCHMENT FOUNDATION PLAN
SCALE: 3/4" = 1'-0"

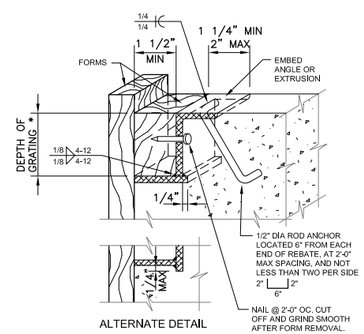

ALTERNATE DETAIL

GRATING REBATE

NOTES:

1. REBATE ANGLE AND PLATE MATERIAL SHALL MATCH GRATING MATERIAL (IE USE SS ANGLE, PLATE AND ROD ANCHORS TO SUPPORT GRATING CALLED OUT AS SS GRATING, ETC).
2. REBATE ANGLE TO BE CONTINUOUS AROUND ENTIRE OPENING.
3. ANGLE AND BEARING PLATE SHALL BE 1/4" MIN THICK.
4. REBATE MAY BE EXTRUDED, SUBJECT TO ENGINEER'S ACCEPTANCE.
5. COAT ALL ALUMINUM IN CONTACT WITH CONCRETE PER SPECIFICATIONS.
6. * = DIMENSION AS REQUIRED BY GRATING MANUFACTURER.

4 GRATING REBATE AND SEAT
NO SCALE

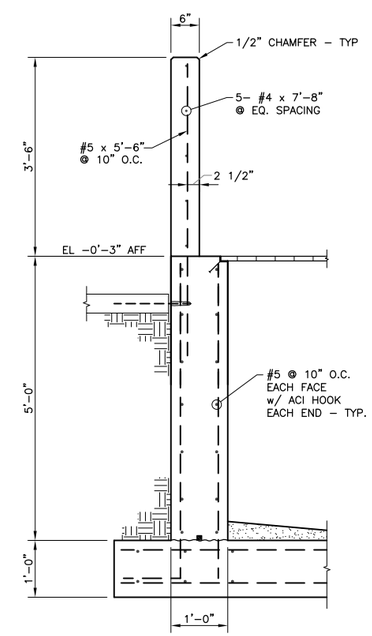

5 SPLASH WALL DETAIL
SCALE : 3/4" = 1'-0"

NO.	DATE	REVISION	BY	APVD
DSGN	B. BETZOLD	DR F. SOLIS	CHK B. BETZOLD	APVD B. BETZOLD

Jose I. Guerra, Inc.
Consulting Engineers
TBPE FIRM F-3

Montopolis Water Redamation Initiave (WRI)
Storage Reservoir and Pump Station
2711 Montopolis Drive
Austin Water, Austin, Texas

CH2MHILL®
TBPE FIRM NO. 3699

STRUCTURAL (TANK)
STORAGE TANK
SECTION AND DETAILS

VERIFY SCALE
BAR IS ONE INCH ON ORIGINAL DRAWING.
0 1"

DATE	MAY 2016
PROJ	472902
DWG	SR-208
SHEET	86 of 126

CADFILE:F:\13023_Montopolis WRI\DRAWINGS\CAD\SR-208 Montopolis Pump Station Storage Tank Details.dwg Plotted: May 11, 16 @ 5:39 pm by: rhinojosa Scale: 1:16

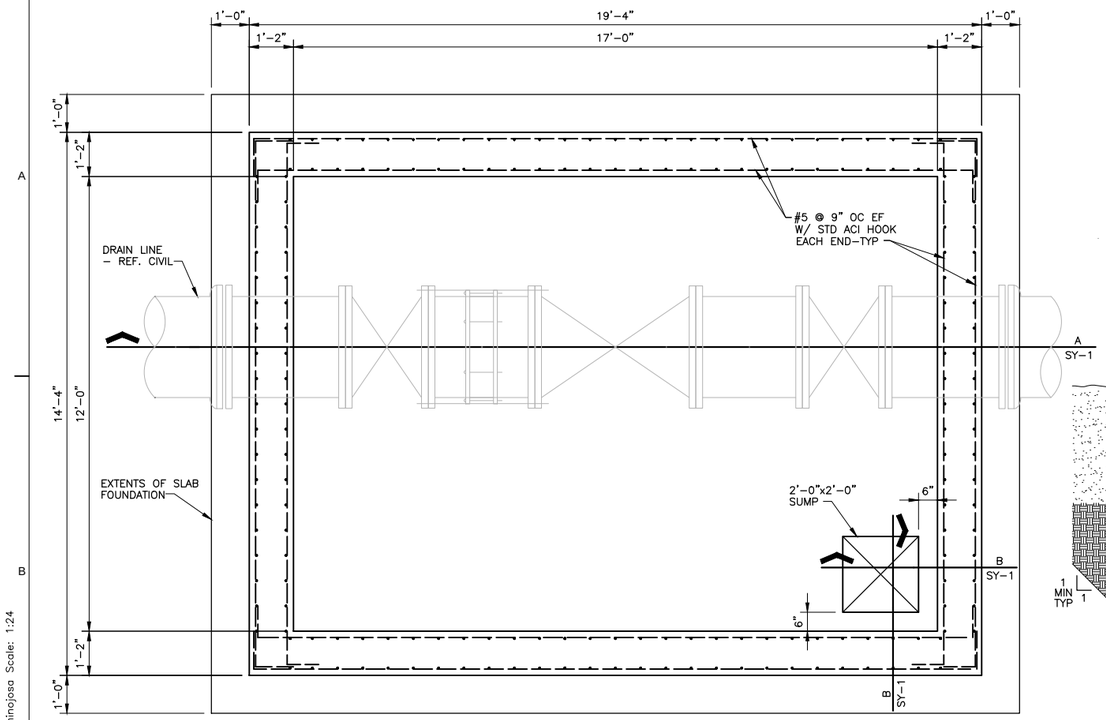

1 MONTOPOLIS CONTROL VALVE VAULT FOUNDATION PLAN
SCALE: 1/2" = 1'-0"

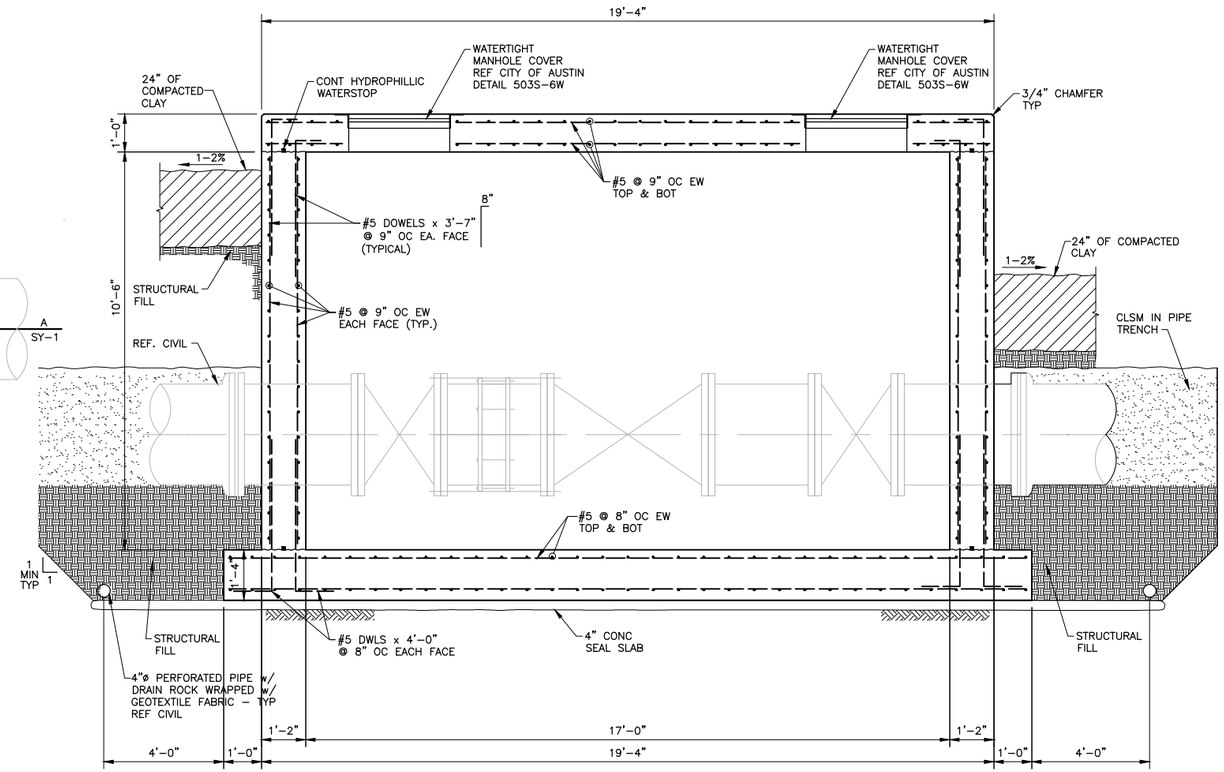

A SECTION
SCALE: 1/2" = 1'-0"

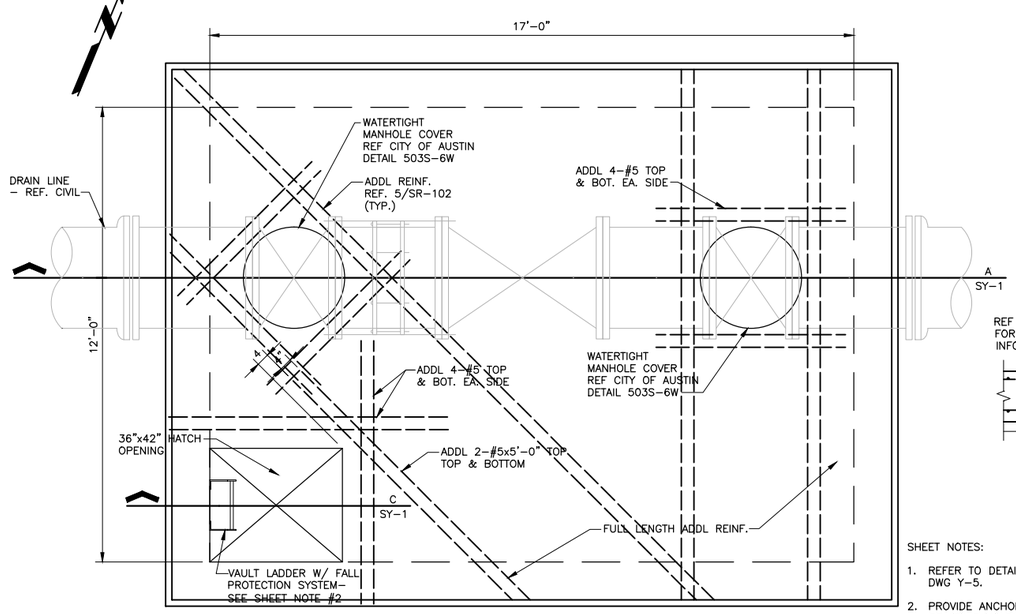

2 CONTROL VALVE VAULT ROOF PLAN
SCALE: 1/2" = 1'-0"

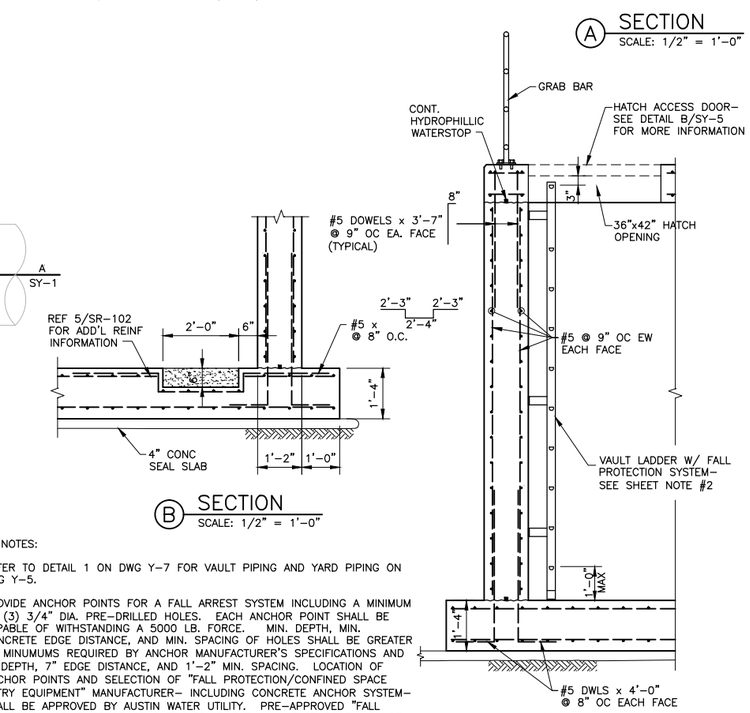

B SECTION
SCALE: 1/2" = 1'-0"

C SECTION
SCALE: 1/2" = 1'-0"

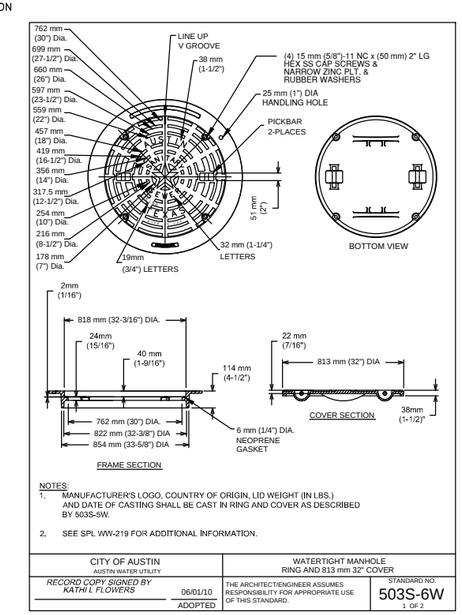

NOTES:
1. MANUFACTURER'S LOGO, COUNTRY OF ORIGIN, LID WEIGHT (IN LBS.) AND DATE OF CASTING SHALL BE CAST IN RING AND COVER AS DESCRIBED BY 503S-5W.
2. SEE SPL WW-219 FOR ADDITIONAL INFORMATION.

CITY OF AUSTIN AUSTIN WATER UTILITY	WATERTIGHT MANHOLE RING AND 813 mm 32" COVER	
RECORD COPY SIGNED BY KATHI L. FLOWERS 06/01/10 ADOPTED	THE ARCHITECT/ENGINEER ASSUMES RESPONSIBILITY FOR APPROPRIATE USE OF THIS STANDARD.	STANDARD NO. 503S-6W 1 OF 2

SHEET NOTES:

1. REFER TO DETAIL 1 ON DWG Y-7 FOR VAULT PIPING AND YARD PIPING ON DWG Y-5.
2. PROVIDE ANCHOR POINTS FOR A FALL ARREST SYSTEM INCLUDING A MINIMUM OF (3) 3/4" DIA. PRE-DRILLED HOLES. EACH ANCHOR POINT SHALL BE CAPABLE OF WITHSTANDING A 5000 LB. FORCE. MIN. DEPTH, MIN. CONCRETE EDGE DISTANCE, AND MIN. SPACING OF HOLES SHALL BE GREATER OF MINUMUMS REQUIRED BY ANCHOR MANUFACTURER'S SPECIFICATIONS AND 6" DEPTH, 7" EDGE DISTANCE, AND 1'-2" MIN. SPACING. LOCATION OF ANCHOR POINTS AND SELECTION OF "FALL PROTECTION/CONFINED SPACE ENTRY EQUIPMENT" MANUFACTURER- INCLUDING CONCRETE ANCHOR SYSTEM- SHALL BE APPROVED BY AUSTIN WATER UTILITY. PRE-APPROVED "FALL PROTECTION/CONFINED SPACE ENTRY EQUIPMENT" MANUFACTURERS INCLUDE "MILLER BY HONEYWELL" AND "DBI/SALA".

NO.	DATE	REVISION	BY	APVD
DSGN	B. BETZOLD	DR F. SOLIS	CHK B. BETZOLD	APVD B. BETZOLD

Jose I. Guerra, Inc.
Consulting Engineers
TBPE FIRM F-3

Montopolis Water Reclamation Initiave (WRI)
Storage Reservoir and Pump Station
2711 Montopolis Drive
Austin Water, Austin, Texas

CH2MHILL.
TBPE FIRM NO. 3699

STRUCTURAL (YARD GENERAL)
MONTOPOLIS CONTROL VALVE VAULT
PLAN AND SECTION

VERIFY SCALE
BAR IS ONE INCH ON ORIGINAL DRAWING.
0 1"

DATE	MAY 2016
PROJ	472902
DWG	SY-1
SHEET	87 of 126

CADFILE:F:\13023_Montopolis WRI\DRAWINGS\CAD\SY-1 Structural Control Valve Vault Plan and Sections.dwg Plotted: May 11, 16 @ 5:22 pm by: rhinojosa Scale: 1:24

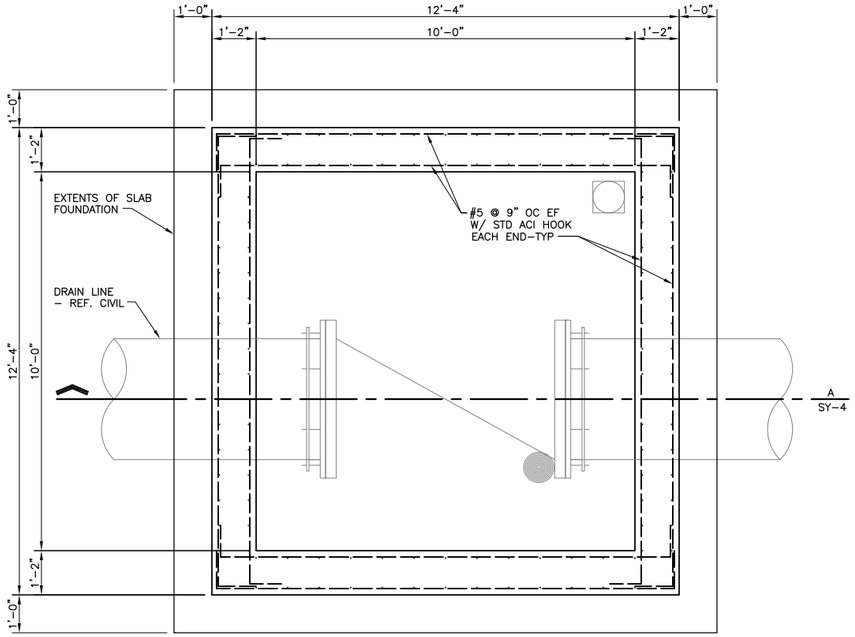

1 36" WW – 123A VAULT FOUNDATION PLAN, (SARWWTP)
SCALE: 1/2" = 1'-0"

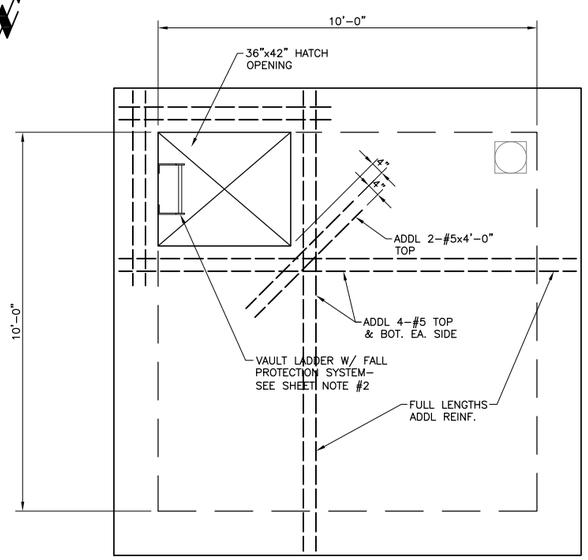

2 36" WW – 123A VAULT ROOF PLAN
SCALE: 1/2" = 1'-0"

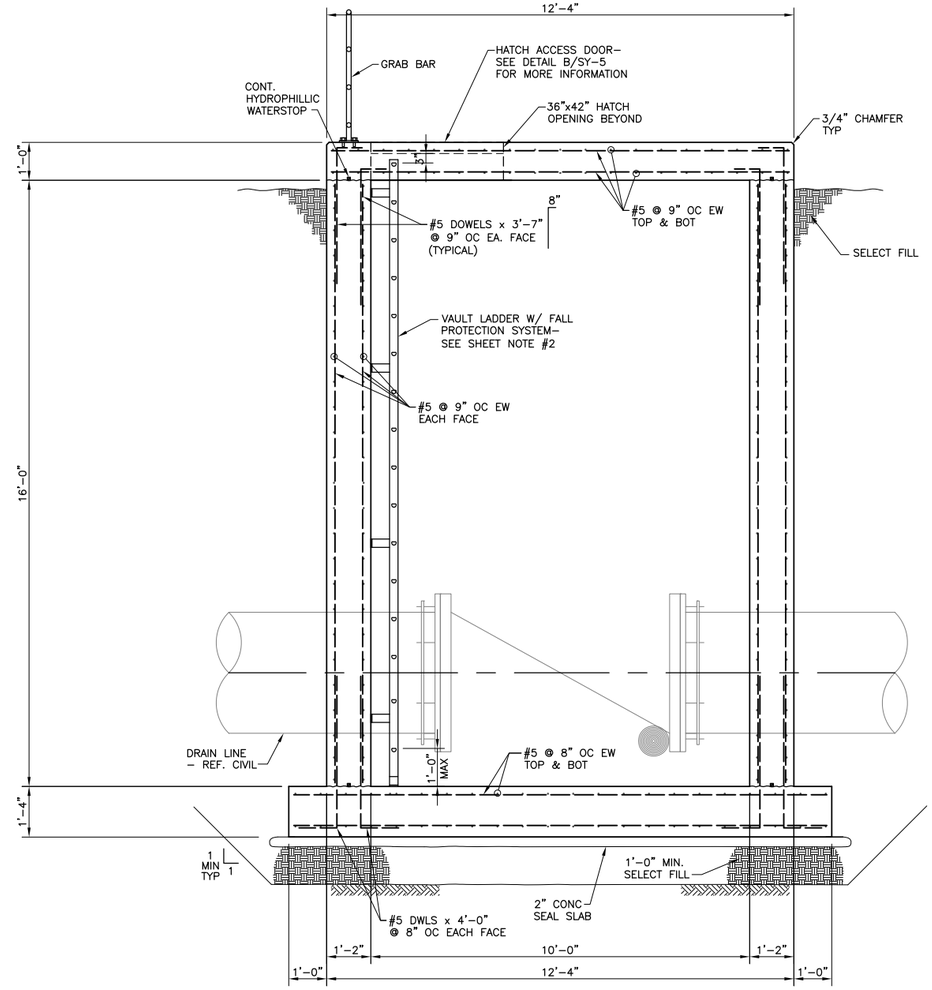

A SECTION
SCALE: 1/2" = 1'-0"

SHEET NOTES:

1. REFER TO DETAIL 1 ON DWG Y-7 FOR VAULT PIPING AND YARD PIPING ON DWG Y-5.
2. PROVIDE ANCHOR POINTS FOR A FALL ARREST SYSTEM INCLUDING A MINIMUM OF (3) 3/4" DIA. PRE-DRILLED HOLES. EACH ANCHOR POINT SHALL BE CAPABLE OF WITHSTANDING A 5000 LB. FORCE. MIN. DEPTH, MIN. CONCRETE EDGE DISTANCE, AND MIN. SPACING OF HOLES SHALL BE GREATER OF MINUMUMS REQUIRED BY ANCHOR MANUFACTURER'S SPEOIFICATIONS AND 6" DEPTH, 7" EDGE DISTANCE, AND 1'-2" MIN. SPACING. LOCATION OF ANCHOR POINTS AND SELECTION OF "FALL PROTECTION/CONFINED SPACE ENTRY EQUIPMENT" MANUFACTURER- INCLUDING CONCRETE ANCHOR SYSTEM- SHALL BE APPROVED BY AUSTIN WATER UTILITY. PRE-APPROVED "FALL PROTECTION/CONFINED SPACE ENTRY EQUIPMENT" MANUFACTURERS INCLUDE "MILLER BY HONEYWELL" AND "DBI/SALA".

NO.	DATE	REVISION	BY	APVD
DSGN	B. BETZOLD	DR B. BETZOLD	CHK F. SOLIS	APVD B. BETZOLD

Jose I. Guerra, Inc.
Consulting Engineers
TBPE FIRM F-3

Montopolis Water Reclamation Initiave (WRI)
Storage Reservoir and Pump Station
2711 Montopolis Drive
Austin Water, Austin, Texas

CH2MHILL®
TBPE FIRM NO. 3699

STRUCTURAL (YARD GENERAL)
36" W W - 123A VAULT (SARWWTP)
PLAN AND SECTION

VERIFY SCALE
BAR IS ONE INCH ON ORIGINAL DRAWING.
0 1"

DATE	MAY 2016
PROJ	472902
DWG	SY-2
SHEET	88 of 126

CADFILE:F:\13023_Montopolis WRI\DRAWINGS\CAD\SY-2 Structural Control Valve Vault Plan and Section.dwg Plotted: May 11, 16 @ 5:40 pm by: rhinojosa Scale: 1:24

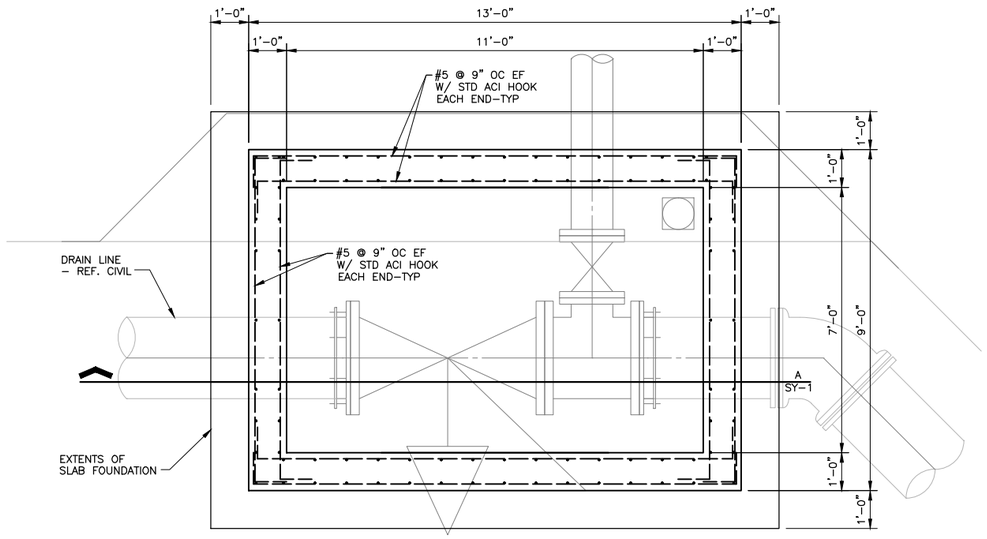

1 24" V-780 VAULT FOUNDATION PLAN, (SARWWTP)

SCALE: 1/2" = 1'-0"

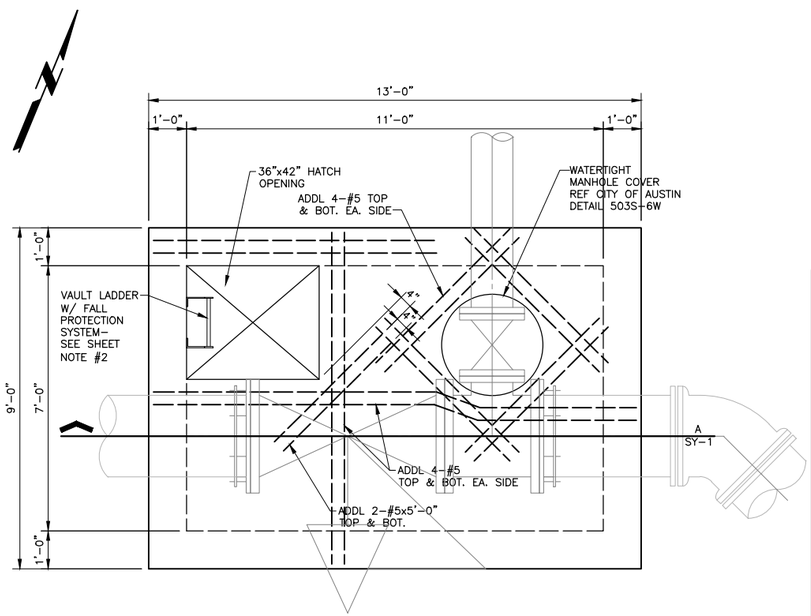

2 24" V-780 VAULT ROOF PLAN

SCALE: 1/2" = 1'-0"

SHEET NOTES:

1. REFER TO DETAIL 1 ON DWG Y-7 FOR VAULT PIPING AND YARD PIPING ON DWG Y-5.
2. PROVIDE ANCHOR POINTS FOR A FALL ARREST SYSTEM INCLUDING A MINIMUM OF (3) 3/4" DIA. PRE-DRILLED HOLES. EACH ANCHOR POINT SHALL BE CAPABLE OF WITHSTANDING A 5000 LB. FORCE. MIN. DEPTH, MIN. CONCRETE EDGE DISTANCE, AND MIN. SPACING OF HOLES SHALL BE GREATER OF MINUMUMS REQUIRED BY ANCHOR MANUFACTURER'S SPECIFICATIONS AND 6" DEPTH, 7" EDGE DISTANCE, AND 1'-2" MIN. SPACING. LOCATION OF ANCHOR POINTS AND SELECTION OF "FALL PROTECTION/CONFINED SPACE ENTRY EQUIPMENT" MANUFACTURER- INCLUDING CONCRETE ANCHOR SYSTEM- SHALL BE APPROVED BY AUSTIN WATER UTILITY. PRE-APPROVED "FALL PROTECTION/CONFINED SPACE ENTRY EQUIPMENT" MANUFACTURERS INCLUDE "MILLER BY HONEYWELL" AND "DBI/SALA".

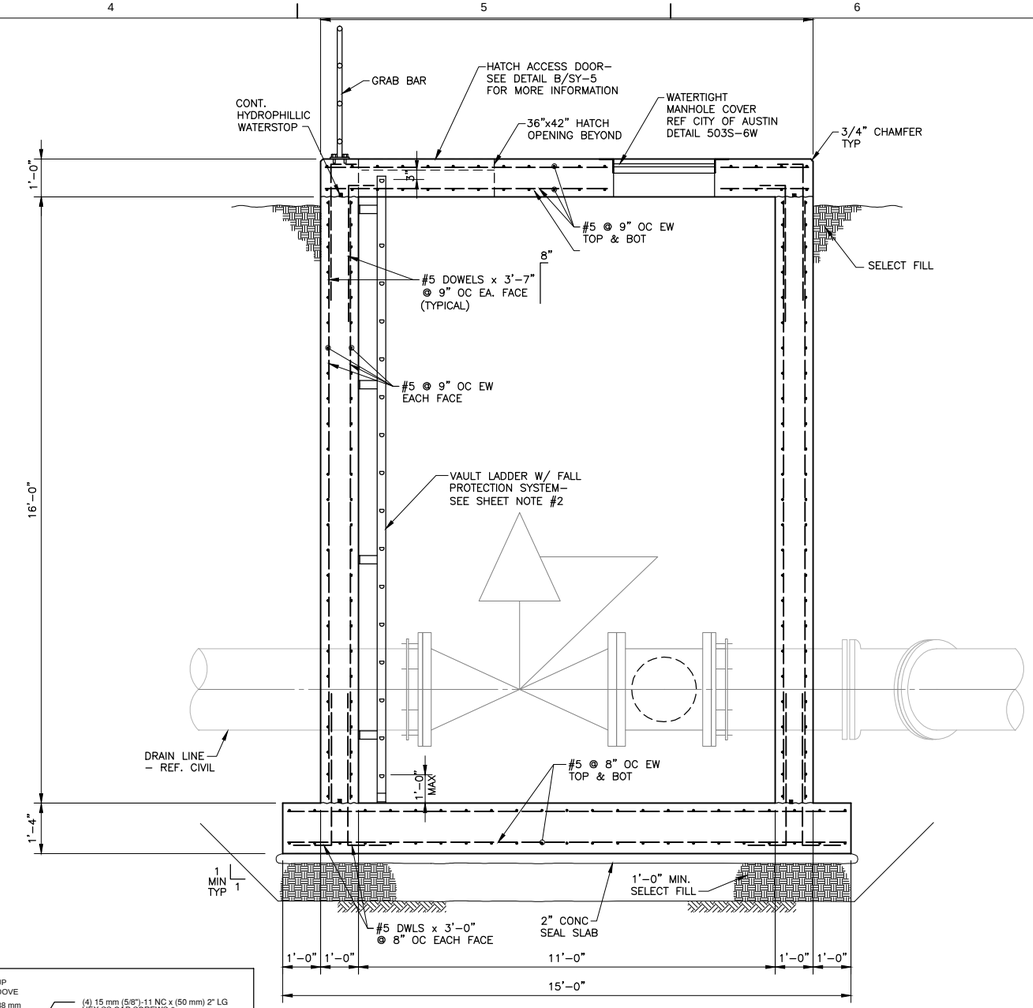

A SECTION

SCALE: 1/2" = 1'-0"

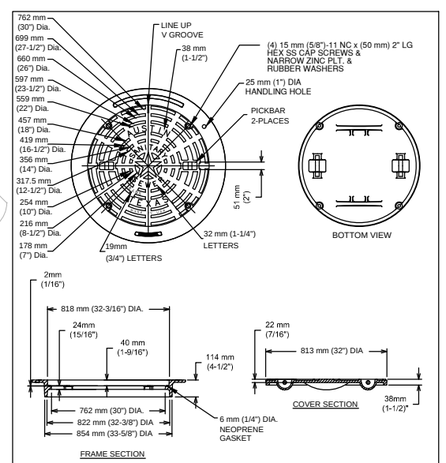

NOTES:

1. MANUFACTURER'S LOGO, COUNTRY OF ORIGIN, LID WEIGHT (IN LBS.) AND DATE OF CASTING SHALL BE CAST IN RING AND COVER AS DESCRIBED BY 503S-5W.
2. SEE SPL WW-219 FOR ADDITIONAL INFORMATION.

CITY OF AUSTIN AUSTIN WATER UTILITY		WATERTIGHT MANHOLE RING AND 813 mm 32" COVER	
RECORD COPY SIGNED BY KATHI L FLOWERS	06/01/10 ADOPTED	THE ARCHITECT/ENGINEER ASSUMES RESPONSIBILITY FOR APPROPRIATE USE OF THIS STANDARD.	STANDARD NO. 503S-6W 1 OF 2

NO.	DATE	REVISION	BY	APVD
DSGN	B. BETZOLD	DR	F. SOLIS	CHK
B. BETZOLD		B. BETZOLD		APVD

Jose I. Guerra, Inc.
Consulting Engineers
TBPE FIRM F-3

Montopolis Water Reclamation Initiave (WRI)
Storage Reservoir and Pump Station
2711 Montopolis Drive
Austin Water, Austin, Texas

CH2MHILL.
TBPE FIRM NO. 3699

STRUCTURAL (YARD GENERAL)

24" V-780 VAULT, (SARWWTP)
PLAN AND SECTION

VERIFY SCALE
BAR IS ONE INCH ON ORIGINAL DRAWING.
0 1"

DATE	MAY 2016
PROJ	472902
DWG	SY-3
SHEET	89 of 126

CADFILE:F:\13023_Montopolis WRI\DRAWINGS\CAD\SY-3 Structural Control Valve Vault Plan and Section.dwg Plotted: May 11, 16 @ 5:23 pm by: rhinojosa Scale: 1:24

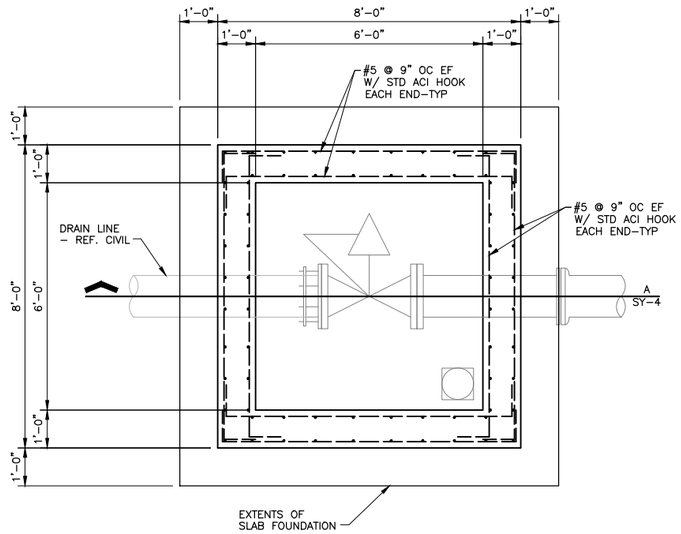

8" THRU 12" V-714 VAULT FOUNDATION PLAN, (SARWWTP) TYP. OF 4

(1) SCALE: 1/2" = 1'-0"

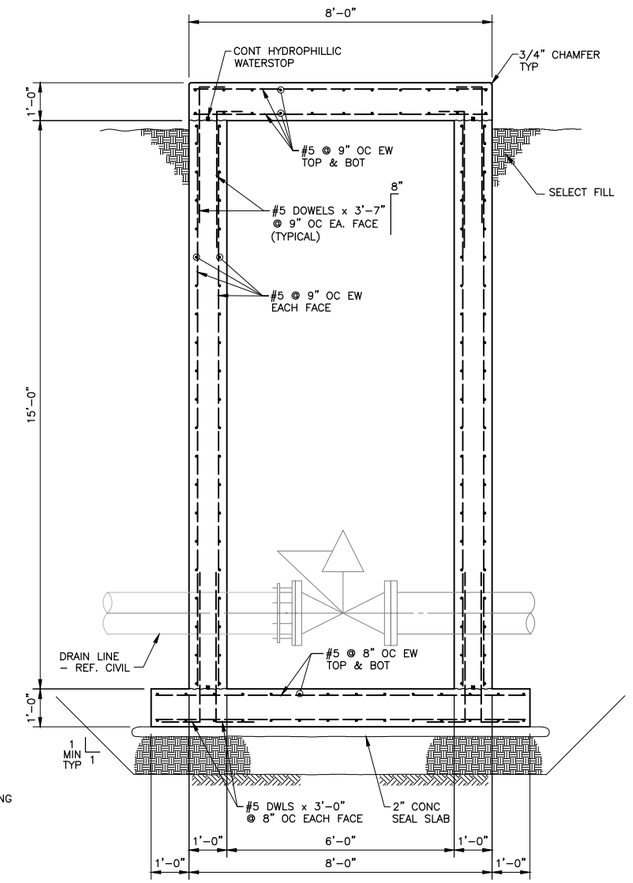

SECTION

(A) SCALE: 1/2" = 1'-0"

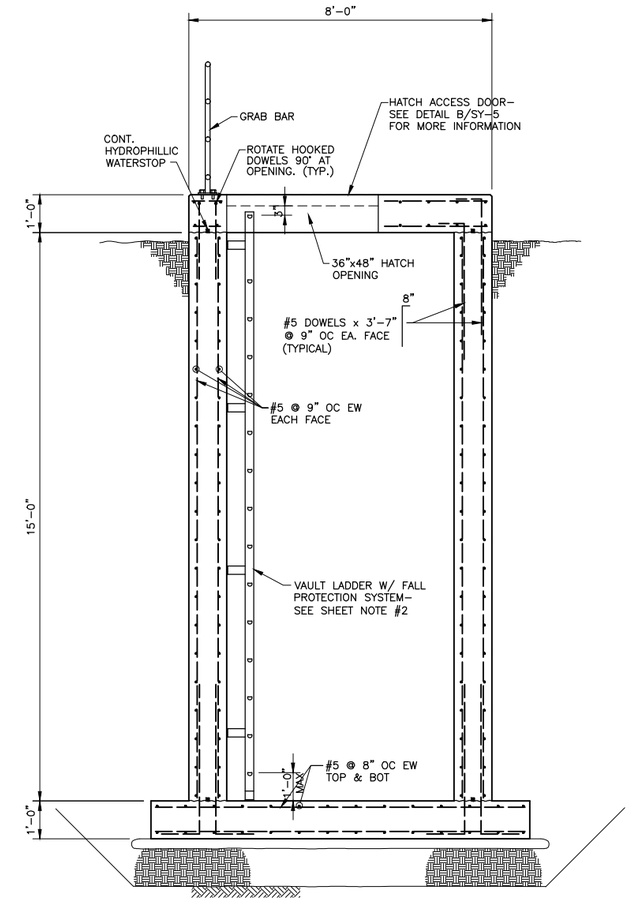

SECTION

(B) SCALE: 1/2" = 1'-0"

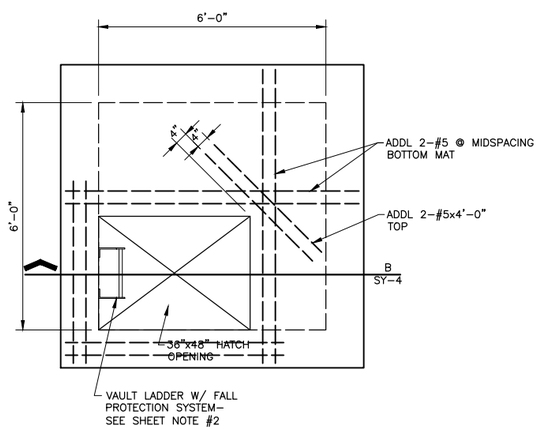

12" V-714 VAULT ROOF PLAN

(2) SCALE: 1/2" = 1'-0"

SHEET NOTES:

1. REFER TO DETAIL 1 ON DWG Y-7 FOR VAULT PIPING AND YARD PIPING ON DWG Y-5.

2. PROVIDE ANCHOR POINTS FOR A FALL ARREST SYSTEM INCLUDING A MINIMUM OF (3) 3/4" DIA. PRE-DRILLED HOLES. EACH ANCHOR POINT SHALL BE CAPABLE OF WITHSTANDING A 5000 LB. FORCE. MIN. DEPTH, MIN. CONCRETE EDGE DISTANCE, AND MIN. SPACING OF HOLES SHALL BE GREATER OF MINUMUMS REQUIRED BY ANCHOR MANUFACTURER'S SPECIFICATIONS AND 6" DEPTH, 7" EDGE DISTANCE, AND 1'-2" MIN. SPACING. LOCATION OF ANCHOR POINTS AND SELECTION OF "FALL PROTECTION/CONFINED SPACE ENTRY EQUIPMENT" MANUFACTURER- INCLUDING CONCRETE ANCHOR SYSTEM- SHALL BE APPROVED BY AUSTIN WATER UTILITY. PRE-APPROVED "FALL PROTECTION/CONFINED SPACE ENTRY EQUIPMENT" MANUFACTURERS INCLUDE "MILLER BY HONEYWELL" AND "DBI/SALA".

NO.	DATE	REVISION	BY	APVD
DSGN	B. BETZOLD	DR	F. SOLIS	CHK	B. BETZOLD	APVD	B. BETZOLD

Jose I. Guerra, Inc.
Consulting Engineers
TBPE FIRM F-3

Montopolis Water Reclamation Initiave (WRI)
Storage Reservoir and Pump Station
2711 Montopolis Drive
Austin Water, Austin, Texas

CH2MHILL.
TBPE FIRM NO. 3699

STRUCTURAL (YARD GENERAL)
12" V-714 VAULT
PLAN AND SECTION

VERIFY SCALE
BAR IS ONE INCH ON ORIGINAL DRAWING.
0 1"

DATE	MAY 2016
PROJ	472902
DWG	SY-4
SHEET	90 of 126

CADFILE:F:\13023_Montopolis WRI\DRAWINGS\CAD\SY-4 Structural Control Valve Vault Plan and Sections.dwg Plotted: May 11, 16 @ 5:23 pm by: rhinojosa Scale: 1:24

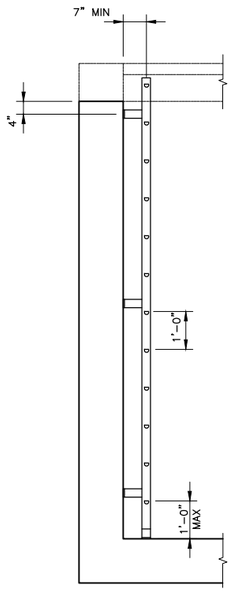

SECTION

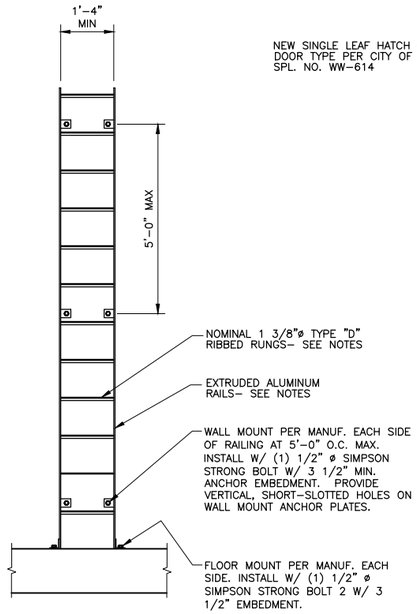

ELEVATION

(A) VAULT LADDER
SCALE: 1/2" = 1'-0"

GENERAL LADDER NOTES:

1. ALUMINUM LADDER AND MOUNT SUPPORTS SHALL BE DESIGNED BY LADDER MANUFACTURER PER REQUIREMENTS OF OSHA 3124-12R 2003, AA ADM-05 (ALUMINUM DESIGN MANUAL),AND AWS D1.2.

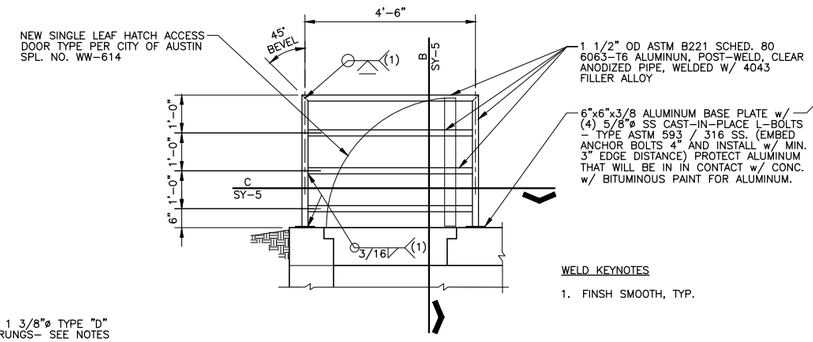

GRAB BAR ELEVATION

WELD KEYNOTES

1. FINSH SMOOTH, TYP.

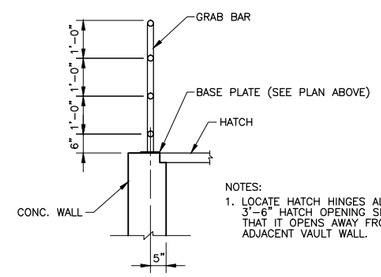

SECTION

NOTES:

1. LOCATE HATCH HINGES ALONG 3'-6" HATCH OPENING SIDE SUCH THAT IT OPENS AWAY FROM THE ADJACENT VAULT WALL.

(B) GRAB BAR
SCALE: 1/2" = 1'-0"

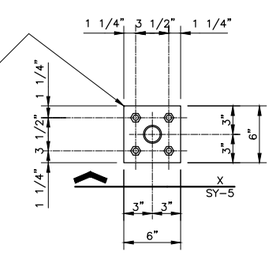

BASE PLATE PLAN
SCALE : 1 1/2" = 1'-0"

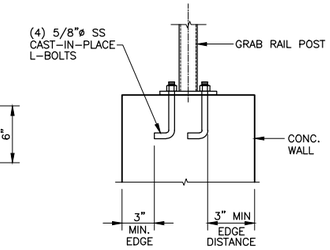

(X) SECTION
1 1/2" = 1'-0"

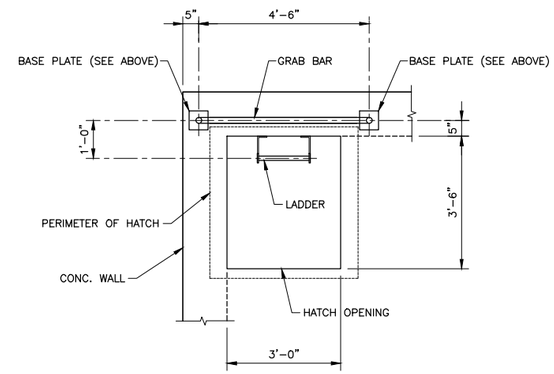

(C) HATCH OPENING PLAN
SCALE: 1/2" = 1'-0"

NO.	DATE	REVISION	BY	APVD
DSGN	DR	CHK	APVD	
B. BETZOLD	B. BETZOLD	F. SOLIS	B. BETZOLD	B. BETZOLD

Jose I. Guerra, Inc.
Consulting Engineers
TBPE FIRM F-3

Montopolis Water Reclamation Initiave (WRI)
Storage Reservoir and Pump Station
2711 Montopolis Drive
Austin Water, Austin, Texas

CH2MHILL.
TBPE FIRM NO. 3699

STRUCTURAL (YARD GENERAL)
VALVE VAULT
LADDER DETAILS

VERIFY SCALE
BAR IS ONE INCH ON ORIGINAL DRAWING.
0 1"

DATE	MAY 2016
PROJ	472902
DWG	SY-5
SHEET	91 of 126

CADFILE:F:\13023_Montopolis WRI\DRAWINGS\CAD\SY-5 Structural Control Valve Vault Ladder Details.dwg Plotted: May 11, 16 @ 5:23 pm by: rhinojosa Scale: 1:3

PIPE AND FITTING SYMBOLS

DOUBLE LINE	SINGLE LINE	
		EXISTING PIPE
		NEW PIPE
		EXISTING PIPE TO BE ABANDONED
		EXISTING PIPE TO BE REMOVED
		WELDED JOINT
		GROOVED END JOINT
		FLANGED JOINT
		MECHANICAL JOINT & PROPRIETARY RESTRAINED JOINT
		BELL & SPIGOT JOINT (LEADED)
		HUB & SPIGOT JOINT (RUBBER GASKET)
		BALL JOINT
		ADAPTER SIDE GROOVED END ADAPTER FLANGE
		FLANGED COUPLING ADAPTER
		FLEXIBLE COUPLING
		METAL BELLOWS EXP JOINT
		ELASTOMER BELLOWS EXP JOINT
		ELBOW UP
		ELBOW DOWN
		TEE UP
		TEE DOWN
		LATERAL UP
		LATERAL DOWN
		CONCENTRIC REDUCER
		ECCENTRIC REDUCER

DOUBLE LINE	SINGLE LINE	
		REDUCING BUSHING
		UNION
		CAP
		ANCHOR
		ELBOW, 90 DEGREE
		CROSS
		TEE
		ELBOW, 45 DEGREE
		LATERAL

NOTES:

1. ONLY FLANGED END CONNECTIONS ARE SHOWN HERE FOR DOUBLE LINE FITTINGS. FITTINGS WITH OTHER END PATTERNS ARE SHOWN SIMILARLY ON THE CONSTRUCTION DRAWINGS. ALSO SEE PIPING SPECIFICATIONS.
2. SYMBOLS SHOWN HERE FOR SINGLE LINE FITTINGS ARE GENERIC ONLY. REFER TO PIPING SPECIFICATIONS FOR SPECIFIC END CONNECTIONS FOR SINGLE LINE PIPE AND FITTINGS.
3. EXISTING PIPE AND EQUIPMENT IS SHOWN LIGHT-LINED AND/OR SCREENED AND IS NOTED AS EXISTING. NEW PIPING AND EQUIPMENT IS SHOWN HEAVY-LINED.

VALVE SYMBOLS

SINGLE LINE		DOUBLE LINE
	GATE	
K	KNIFE GATE	OR
	BUTTERFLY	OR
	GLOBE	OR
	BALL	OR
	SEATING PORT ECCENTRIC PLUG	OR
	PLUG OR COCK	OR
	NEEDLE	OR
	DIAPHRAGM	OR
	PINCH	OR
	SWING CHECK	OR
	BALL CHECK	OR
	REGULATED SIDE PRESSURE CONTROL (INTERNAL PILOT)	
	REGULATED SIDE PRESSURE CONTROL (EXTERNAL PILOT)	
	HOSE VALVE (HV- X) OR (V-X) X = NO. IN SPECS	
S	SAMPLE	
	MUD	
	PRESSURE RELIEF	
	AIR AND/OR VACUUM RELEASE	
	MULTI-PORT VALVE, ARROWS INDICATE FLOW PATTERN. SEATING PORTS ARE IMPLIED BY INDICATED FLOW PATTERN.	
	TELESCOPING SCUM VALVE	

VALVE DESIGNATIONS

MANUAL VALVES AND CHECK VALVES

V 500

VALVE DESIGNATION

VALVE TYPE, SEE SPECIFICATIONS

CONTROL VALVES

M

UNIT PROCESS

VALVE FUNCTION

20FV 6112

UNIQUE TAG NUMBER

NOTE:

SEE I&C LEGENDS FOR FURTHER DEFINITIONS AND ACTUATOR TYPES.

SELF-CONTAINED REGULATING VALVES

20PRV8011

UNIQUE TAG NUMBER, SEE SELF-CONTAINED REGULATION VALVE SCHEDULE IN THE SPECIFICATIONS

VALVE TYPE AND FUNCTON, SEE I&C LEGENDS FOR FURTHER DEFINITIONS

PROCESS OR FACILITY NUMBER.
05 = YARD
95 = CONTROL BUILDING
SEE P&IDS FOR PROCESS VALVES

PIPING DESIGNATION

EXAMPLE:

2" RW

16" RW

SERVICE, SEE DWG G-6 FOR PIPE SCHEDULE

PIPE DIAMETER

ACTUATOR SYMBOLS

PNEUMATIC DIAPHRAGM

PNEUMATIC CYLINDER

M — ELECTRIC MOTOR

H — HYDRAULIC

MANUAL

S — SOLENOID

E/H — ELECTRO HYDRAULIC

MECHANICAL LEGEND AND NOTES

GENERIC PIPING NOTES

1. LAY PIPE TO UNIFORM GRADE BETWEEN INDICATED ELEVATION POINTS.
2. SIZE OF FITTINGS SHOWN ON PLANS SHALL CORRESPOND TO ADJACENT STRAIGHT RUN OF PIPE, UNLESS OTHERWISE INDICATED. TYPE OF JOINT AND FITTING MATERIAL SHALL BE THE SAME AS SHOWN FOR ADJACENT STRAIGHT RUN OF PIPE.
3. LOCATION AND NUMBER OF PIPE HANGERS AND PIPE SUPPORTS SHOWN IS ONLY APPROXIMATE. CONTRACTOR SHALL DESIGN SUPPORTS AS SPECIFIED.
4. ALL JOINTS SHALL BE WATERTIGHT. WALL PIPES SHALL BE USED WHEREVER PIPING PASSES FROM A STRUCTURE TO BACKFILL.
5. ALL FLEXIBLE CONNECTORS AND FLANGED COUPLING ADAPTERS SHALL BE PROVIDED WITH THRUST TIES AND ANCHORS, UNLESS OTHERWISE NOTED. THRUST PROTECTION SHALL BE ADEQUATE FOR TEST PRESSURES SPECIFIED.
6. SYMBOLS, LEGENDS, AND PIPE USE IDENTIFICATIONS SHOWN SHALL BE FOLLOWED THROUGHOUT THE DRAWINGS, WHEREVER APPLICABLE. NOT ALL OF THE VARIOUS PIPING COMPONENTS ARE NECESSARILY USED IN THE PROJECT.
7. ALL BURIED PIPING SPECIFIED TO BE PRESSURE TESTED, EXCEPT FLANGED, WELDED, OR SCREWED PIPING, SHALL BE PROVIDED WITH THRUST RESTRAINT. THRUST RESTRAINT FOR NEW PIPING SHALL BE AS SPECIFIED IN SECTION 15020.
8. NUMBER AND LOCATION OF UNIONS SHOWN ON DRAWINGS IS ONLY APPROXIMATE. PROVIDE ALL UNIONS NECESSARY TO FACILITATE CONVENIENT REMOVAL OF VALVES AND MECHANICAL EQUIPMENT.
9. WHERE A GROOVED END COUPLING IS SHOWN, IT SHALL BE THE RIGID JOINT TYPE, UNLESS OTHERWISE SPECIFIED. WHERE A FLANGED COUPLING ADAPTER IS SHOWN, A STANDARD FLANGE SHALL BE JOINED TO THE COUPLING ADAPTER.

STATE OF TEXAS — JOSEPH W. JENKINS — 68717 — REGISTERED PROFESSIONAL ENGINEER

5-11-2016

NO.	DATE	REVISION	BY	APVD

DSGN B BERHORST | DR W KENAS | CHK J JENKINS | APVD J JENKINS

Montopolis Water Reclamation Initiave (WRI)
Storage Reservoir and Pump Station
2711 Montopolis Drive
Austin Water, Austin, Texas

CH2MHILL®
TBPE FIRM NO. 3699

MECHANICAL

LEGEND

NTS

VERIFY SCALE

BAR IS ONE INCH ON ORIGINAL DRAWING.
0 1"

DATE	MAY 2016
PROJ	472902
DWG	M-1
SHEET	92 of 126

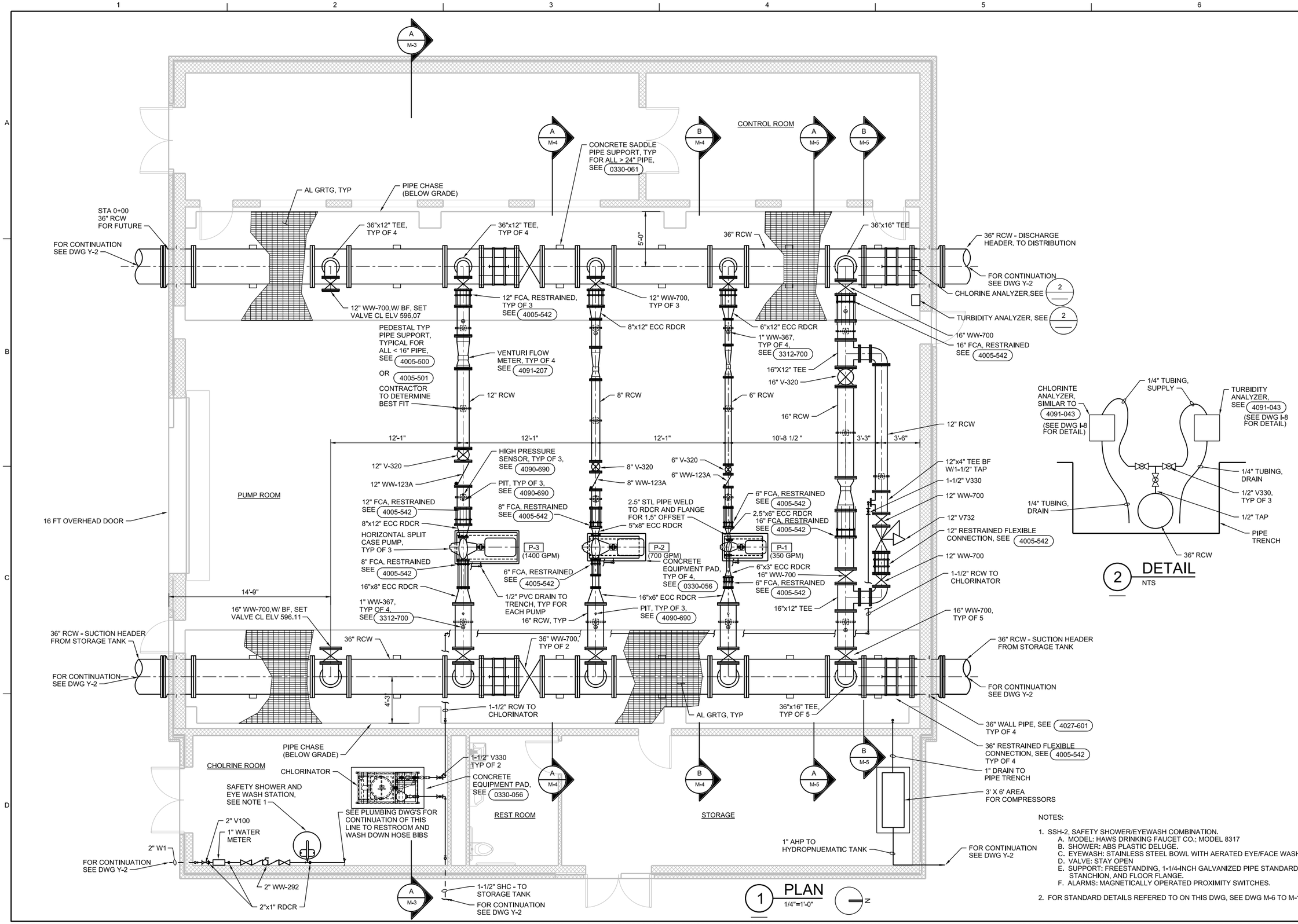

NOTES:

1. SSH-2, SAFETY SHOWER/EYEWASH COMBINATION.
   A. MODEL: HAWS DRINKING FAUCET CO.; MODEL 8317
   B. SHOWER: ABS PLASTIC DELUGE.
   C. EYEWASH: STAINLESS STEEL BOWL WITH AERATED EYE/FACE WASH.
   D. VALVE: STAY OPEN
   E. SUPPORT: FREESTANDING, 1-1/4-INCH GALVANIZED PIPE STANDARD, STANCHION, AND FLOOR FLANGE.
   F. ALARMS: MAGNETICALLY OPERATED PROXIMITY SWITCHES.
2. FOR STANDARD DETAILS REFERED TO ON THIS DWG, SEE DWG M-6 TO M-10

STATE OF TEXAS
JOSEPH W. JENKINS
68717
REGISTERED
PROFESSIONAL ENGINEER
Joseph W. Jenkins
5-11-2016

NO.	DATE	REVISION	BY	APVD
DSGN	B BERHORST	DR B BERHORST	CHK J JENKINS	APVD J JENKINS

Montopolis Water Reclamation Initiave (WRI)
Storage Reservoir and Pump Station
2711 Montopolis Drive
Austin Water, Austin, Texas

CH2MHILL®
TBPE FIRM NO. 9699

MECHANICAL
PUMP STATION
PLAN

3/8"=1'-0"
VERIFY SCALE
BAR IS ONE INCH ON ORIGINAL DRAWING.
0 1"

DATE	MAY 2016
PROJ	472902
DWG	M-2
SHEET	93 of 126

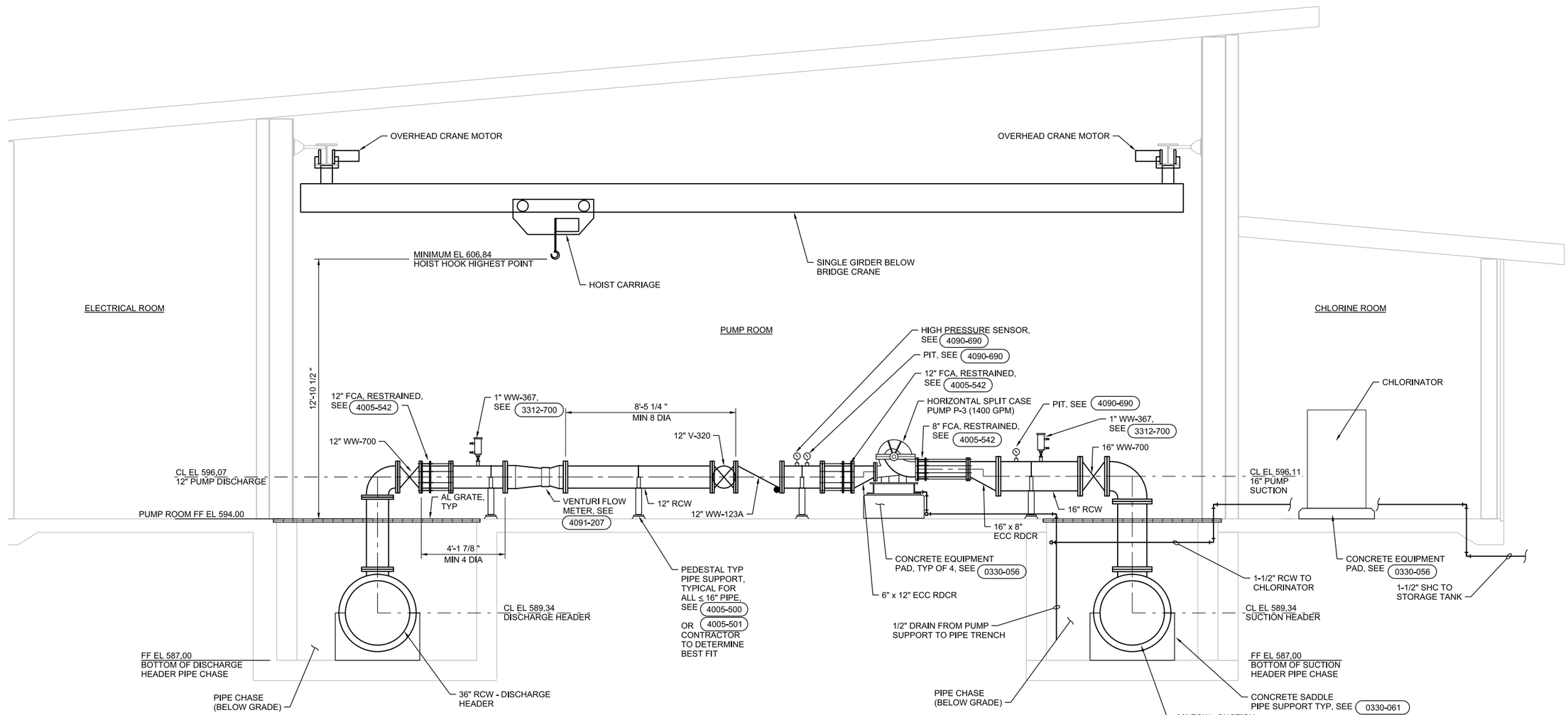

A SECTION
3/8"=1'-0"
M-2

NOTE:

FOR STANDARD DETAILS REFERED TO
ON THIS DWG, SEE DWG M-6 TO M-10

STATE OF TEXAS
JOSEPH W. JENKINS
68717
REGISTERED
PROFESSIONAL ENGINEER
Joseph W. Jenkins
5-11-2016

NO.	DATE	REVISION	BY	APVD

DSGN B BERHORST | DR B BERHORST | CHK J JENKINS | APVD J JENKINS

Montopolis Water Reclamation Initiave (WRI)
Storage Reservoir and Pump Station
2711 Montopolis Drive
Austin Water, Austin, Texas

CH2MHILL®
TBPE FIRM NO. 3699

MECHANICAL
PUMP STATION
SECTION

3/8"=1'-0"
VERIFY SCALE
BAR IS ONE INCH ON ORIGINAL DRAWING.
0 1"

DATE	MAY 2016
PROJ	472902
DWG	M-3
SHEET	94 of 126

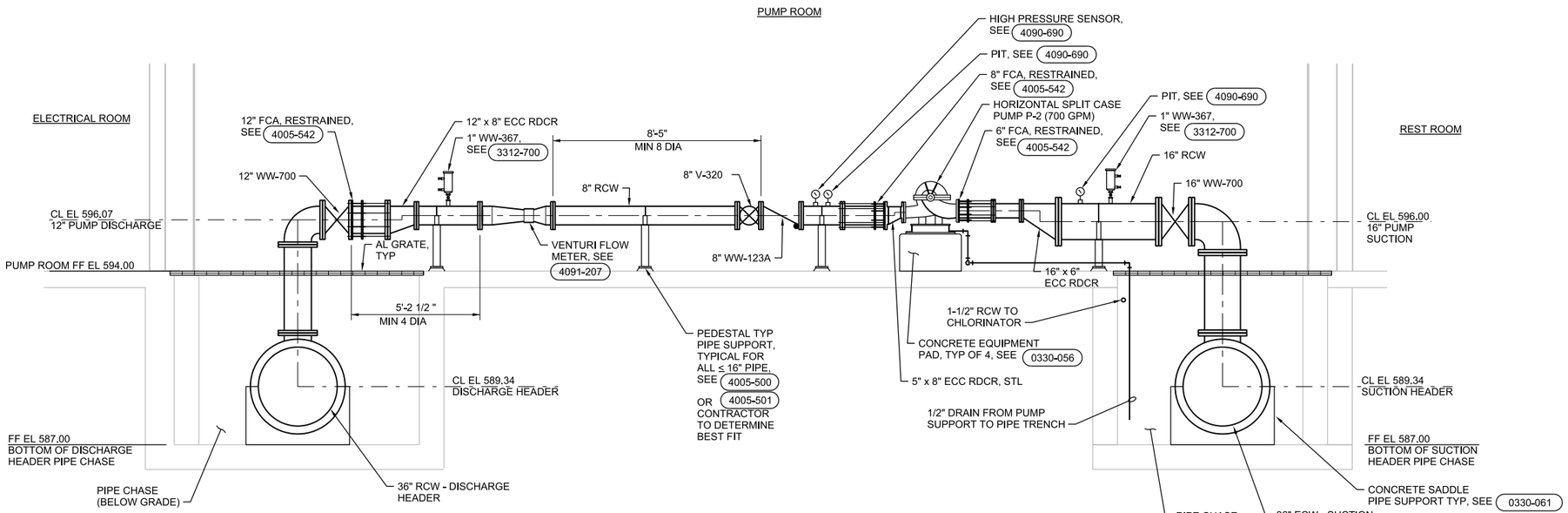

A SECTION
3/8"=1'-0"
M-2

NOTE:

FOR STANDARD DETAILS REFERED TO ON THIS DWG, SEE DWG M-6 TO M-10

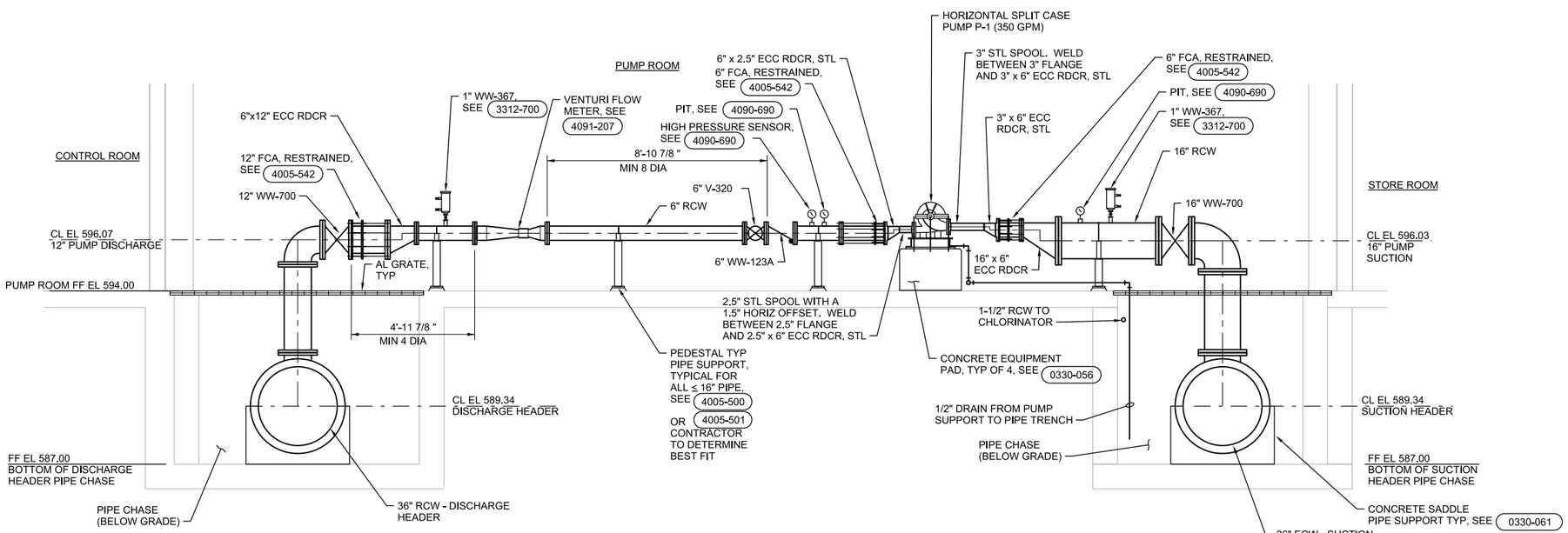

B SECTION
3/8"=1'-0"
M-2

NOTE:

FOR STANDARD DETAILS REFERED TO ON THIS DWG, SEE DWG M-6 TO M-10

STATE OF TEXAS
JOSEPH W. JENKINS
68717
REGISTERED PROFESSIONAL ENGINEER
Joseph W. Jenkins
5-11-2016

NO.	DATE	REVISION	BY	APVD

DSGN B BERHORST | DR B BERHORST | CHK J JENKINS | APVD J JENKINS

Montopolis Water Reclamation Initiave (WRI)
Storage Reservoir and Pump Station
2711 Montopolis Drive
Austin Water, Austin, Texas

CH2MHILL®
TBPE FIRM NO. 3699

MECHANICAL
PUMP STATION SECTIONS

3/8
VERIFY SCALE
BAR IS ONE INCH ON ORIGINAL DRAWING.
0 1"

DATE	MAY 2016
PROJ	472902
DWG	M-4
SHEET	95 of 126

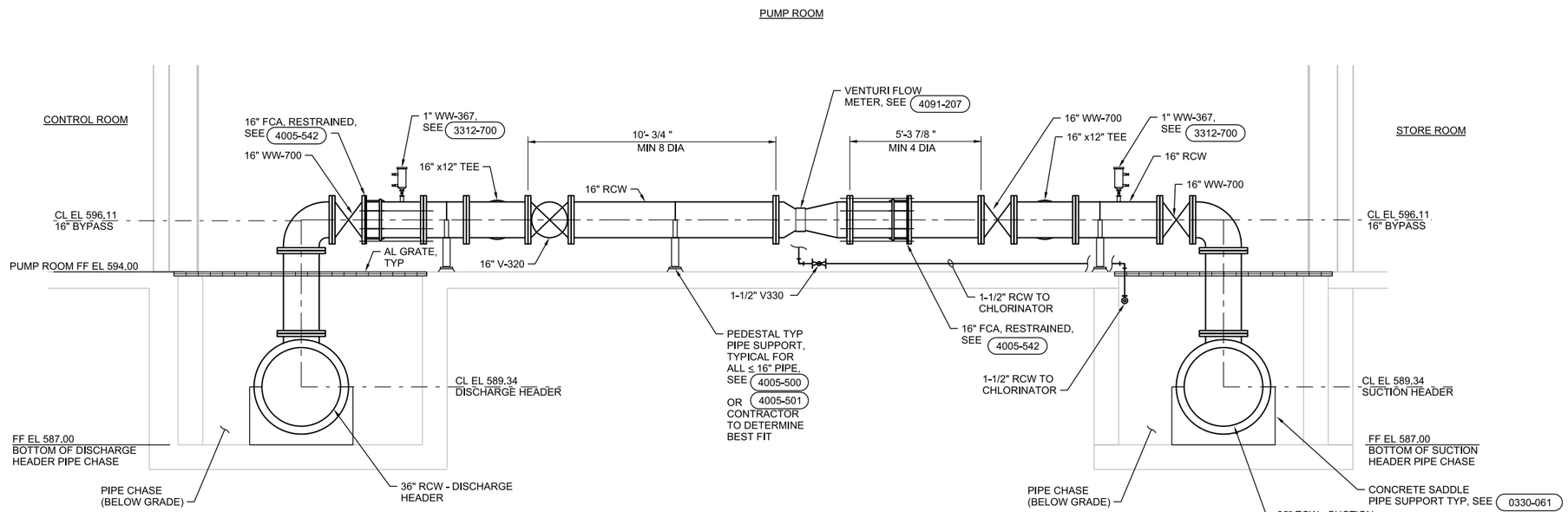

A SECTION
3/8"=1'-0"
M-2

NOTE:

FOR STANDARD DETAILS REFERED TO ON THIS DWG, SEE DWG M-6 TO M-10

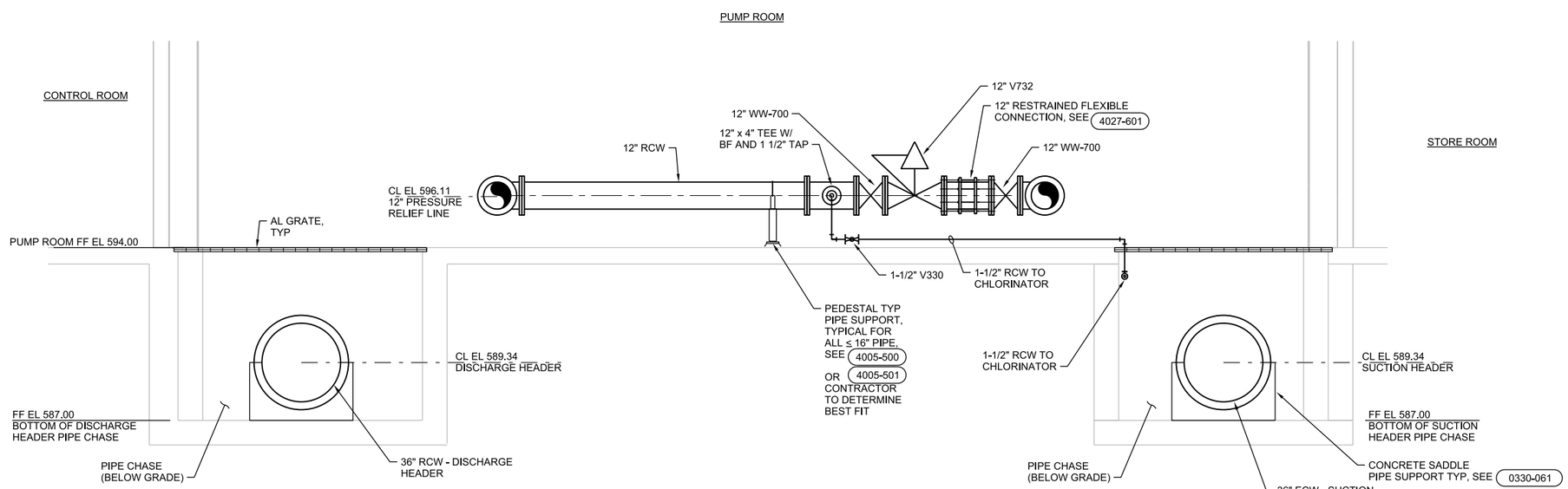

B SECTION
3/8"=1'-0"
M-2

NOTE:

FOR STANDARD DETAILS REFERED TO ON THIS DWG, SEE DWG M-6 TO M-10

STATE OF TEXAS
JOSEPH W. JENKINS
68717
REGISTERED
PROFESSIONAL ENGINEER
Joseph W. Jenkins
5-11-2016

NO.	DATE	REVISION	BY	APVD

DSGN B BERHORST | DR B BERHORST | CHK J JENKINS | APVD J JENKINS

Montopolis Water Reclamation Initiave (WRI)
Storage Reservoir and Pump Station
2711 Montopolis Drive
Austin Water, Austin, Texas

CH2MHILL®
TBPE FIRM NO. 3699

MECHANICAL
PUMP STATION SECTIONS

3/8
VERIFY SCALE
BAR IS ONE INCH ON ORIGINAL DRAWING.
0 1"

DATE	MAY 2016
PROJ	472902
DWG	M-5
SHEET	96 of 126

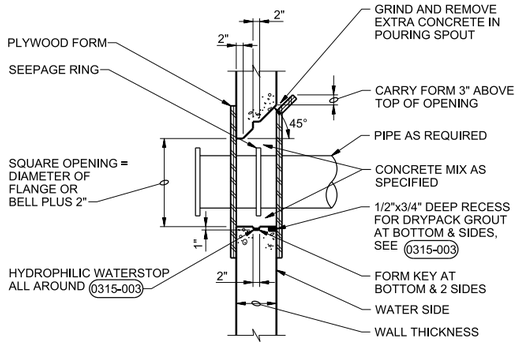

NOTES:

1. PIPE BLOCKOUT NOT TO BE USED WITHOUT WRITTEN APPROVAL OF ENGINEER UNLESS SPECIFICALLY INDICATED ON PLANS.
2. COAT CONCRETE ENCASED PORTION OF PIPE WITH SPECIFIED COATING SYSTEM.
3. REINFORCE AROUND BLOCKOUT OPENING PER 0330-001
4. CONTINUE TYPICAL WALL REINFORCING THROUGH BLOCKOUT. FIELD CUT REINFORCING ONLY AS REQUIRED TO CLEAR PIPE.

PIPE BLOCKOUT

NTS

0310-061

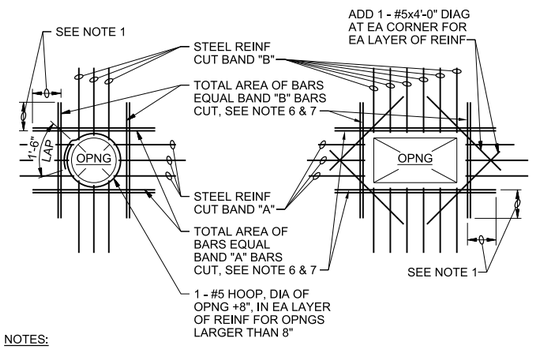

NOTES:

1. PROVIDE MINIMUM LAP, SEE GENERAL STRUCTURAL NOTES.
2. TYPICAL FOR ALL OPENINGS IN CONCRETE WALLS OF BELOW GRADE AND HYDRAULIC STRUCTURES AND ALL STRUCTURAL CONCRETE SLABS UNLESS INDICATED OTHERWISE ON PLANS.
3. DO NOT WELD REINFORCEMENT TO PIPE SLEEVES AND INSERTS.
4. PROVIDE A MINIMUM OF 2 "A" BARS AND 2 "B" BARS EACH SIDE OF OPENING (1 EACH FACE), INCLUDING DOWELS AND CORNER BARS, TYPICAL.
5. FOR OPENINGS LARGER THAN 8'-0", REINFORCE SAME AS FOR 8'-0" OPENINGS.
6. SPACE AT 3 BAR DIAMETERS (OR 3" MINIMUM) ON CENTER. LOCATE HALF OF TOTAL AREA ON EACH SIDE OF OPENING.
7. AT OPENINGS WITHIN 12" OF AN INTERSECTING WALL OR SLAB, PROVIDE ONLY THE EXTRA REINFORCEMENT WHICH WILL FIT, AT THE BAR SPACING IN NOTE 6.

OPENING REINFORCING

NTS

0330-001

NOTES:

1. PAD SIZE SHALL BE MINIMUM INDICATED OR AS SHOWN ON THE PLANS OR AS INDICATED BY THE MANUFACTURER AND APPROVED BY THE ENGINEER.
2. THE SIZE, NUMBER, TYPE, LOCATION, AND THREAD PROJECTION OF THE ANCHOR BOLTS SHALL BE DETERMINED BY THE EQUIPMENT MANUFACTURER AND AS APPROVED BY THE ENGINEER. ANCHOR BOLTS SHALL BE HELD IN POSITION WITH A TEMPLATE OR OTHER ACCEPTABLE MEANS, MATCHING THE BASE PLATE, WHILE PAD IS BEING PLACED.
3. ANCHOR BOLT SLEEVES SHALL BE USED TO PROVIDE MINIMUM ANCHOR BOLT MOVEMENT OF 1/2" IN ALL HORIZONTAL DIRECTIONS. THE MINIMUM SLEEVE LENGTH SHALL BE 8 TIMES THE BOLT DIAMETER.
4. ANCHOR BOLT SLEEVES SHALL HAVE A MINIMUM INTERNAL DIAMETER 1" GREATER THAN BOLT DIAMETER AND A MAXIMUM INTERNAL DIAMETER 3" GREATER THAN ANCHOR BOLT DIAMETER. SLEEVES SHALL BE FILLED WITH NON-SHRINK GROUT AFTER BOLTS ARE ALIGNED. SEE 0330-057.
5. EQUIPMENT BASES SHALL BE INSTALLED LEVEL UNLESS INDICATED OTHERWISE.
6. WEDGES, SHIMS, OR LEVELING NUTS SHALL BE USED TO SUPPORT THE BASE WHILE THE GROUT IS PLACED. WEDGES OR SHIMS SHALL BE REMOVED AFTER GROUT IS SET AND PACK VOID WITH GROUT.
7. HEIGHT OF PADS SHALL BE MINIMUM REQUIRED FOR ANCHOR BOLT CLEARANCE TO KEEP ANCHOR BOLT ABOVE SUPPORTING SLAB (SEE TABLE BELOW). WHERE EQUIPMENT OR PIPING ELEVATION REQUIRE A PAD HEIGHT LESS THAN THE MINIMUM SHOWN, USE TYPE "B" EQUIPMENT PAD WITH BLOCKOUT. FOR ELECTRICAL EQUIPMENT, THE MINIMUM HEIGHT IS 3 1/2 INCHES.
8. TYPE "D" PAD SHALL BE USED ONLY WHERE SPECIFICALLY INDICATED. PLACE THE SURROUNDING FLOOR SLAB AFTER THE EQUIPMENT PAD.
9. AT CONTRACTOR'S OPTION, CONCRETE ANCHORS MAY BE USED IN LIEU OF CAST-IN-PLACE ANCHOR BOLTS FOR EQUIPMENT ANCHOR BOLTS LESS THAN 3/4" DIAMETER WHEN APPROVED BY THE EQUIPMENT MANUFACTURER AND APPROVED BY THE ENGINEER. ANCHORS SHALL BE INSTALLED WITH 4" MINIMUM EDGE DISTANCE IN EACH DIRECTION.

AB DIA (IN.)	1/2	5/8	3/4	7/8	1	1 1/4	1 3/8	1 1/2	1 3/4	2
MIN PAD HT (IN.)	7	8 1/2	10	11	12 1/2	15	16 1/2	18	21	24

CONCRETE EQUIPMENT PAD - NOTES

NTS

DETAIL 2 OF 2

0330-056

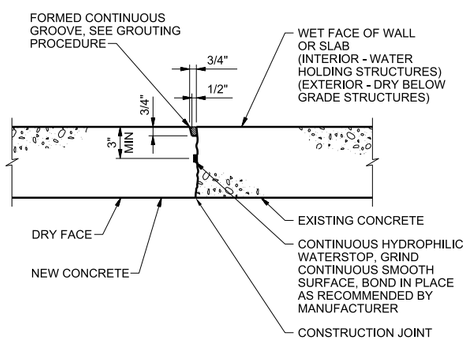

NOTE:

FOR USE IN NON-MOVING CONSTRUCTION JOINTS AND ONLY WHERE SPECIFICALLY INDICATED ON PLANS.

GROUTING PROCEDURE:

1. WAIT UNTIL NEW CONCRETE MINIMUM 28 DAYS OLD PRIOR TO GROUTING GROOVE.
2. ROUGHEN AND CLEAN SURFACES OF GROOVE WITH POWER WIRE BRUSH OR SANDBLASTING.
3. SATURATE AREA FOR 24 HOURS PRIOR TO GROUTING.
4. DRY PACK WITH TYPE II NON-SHRINK GROUT.
5. USE STEEL HAMMER AND STEEL TOOL TO DENSELY PACK GROUT INTO GROOVE.
6. WATER CURE GROUT FOR 4 DAYS MINIMUM.

HYDROPHILIC/GROOVE WATERSTOP

NTS

0315-003

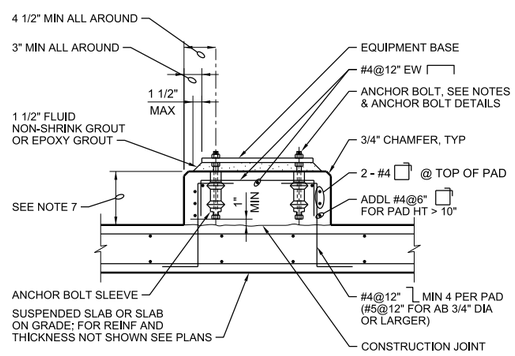

TYPE A

GENERAL NOTE:

FOR GENERAL NOTES SEE DETAIL X OF X.

CONCRETE EQUIPMENT PAD - TYPE A

NTS

DETAIL 1 OF 2

0330-056

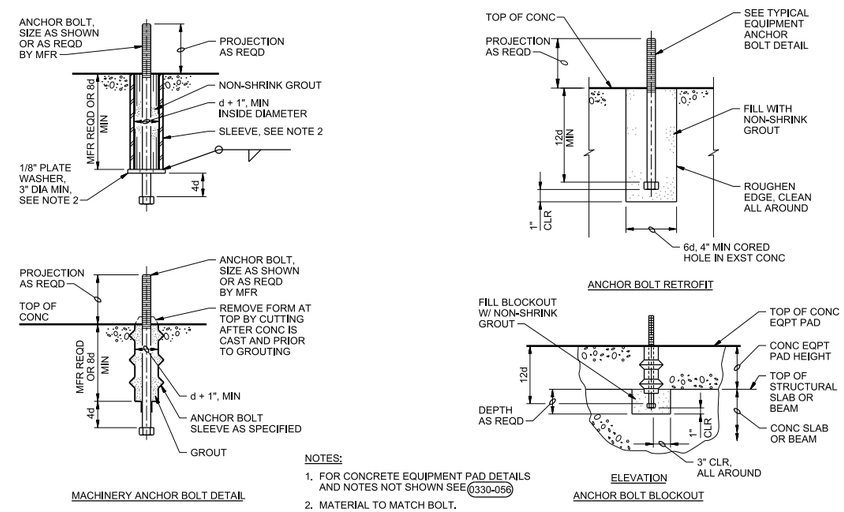

NOTES:

1. FOR CONCRETE EQUIPMENT PAD DETAILS AND NOTES NOT SHOWN SEE 0330-056
2. MATERIAL TO MATCH BOLT.

ANCHOR BOLT DETAILS

NTS

0330-057

STATE OF TEXAS
JOSEPH W. JENKINS
68717
REGISTERED
PROFESSIONAL ENGINEER
Joseph W. Jenkins
5-11-2016

NO.	DATE	REVISION	BY	APVD
DSGN	B BERHORST	DR	B BERHORST	CHK	J JENKINS	APVD	J JENKINS

Montopolis Water Reclamation Initiave (WRI)
Storage Reservoir and Pump Station
2711 Montopolis Drive
Austin Water, Austin, Texas

CH2MHILL®
TBPE FIRM NO. 3699

PROCESS MECHANICAL

STANDARD DETAILS
CH2M HILL

1:1
VERIFY SCALE
BAR IS ONE INCH ON ORIGINAL DRAWING.
0 1"

DATE	MAY 2016
PROJ	472902
DWG	M-6
SHEET	97 of 126

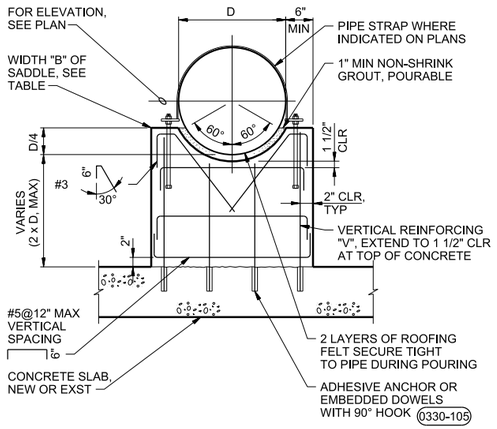

TYPE "A" SADDLE

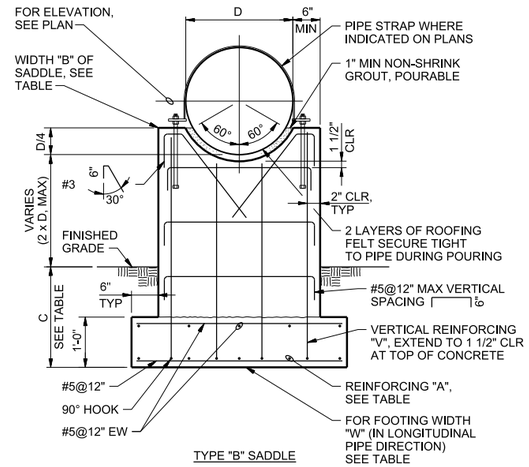

TYPE "B" SADDLE

PIPE SUPPORT - CONCRETE SADDLE

NTS

DETAIL 1 OF 2

0330-061

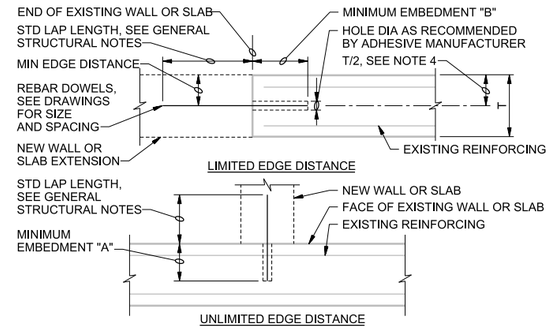

DOWEL SIZE	MINIMUM EDGE DIST	MINIMUM EMBEDMENT A	MINIMUM EMBEDMENT B
#3	2 1/2"	5"	8"
#4	3 1/2"	7"	11"
#5	4"	8"	13"
#6	5"	10 1/2"	16"
#7	6"	12 1/2"	20"
#8	7"	14"	22"
#9	7 1/2"	15"	24"

NOTES:

1. CONFORM TO THE REQUIREMENTS OF SPECIFICATION SECTION 03 63 00, CONCRETE DOWELING.
2. FOLLOW ADHESIVE MANUFACTURER'S INSTRUCTIONS FOR INSTALLATION.
3. USE MINIMUM EMBEDMENTS SHOWN, EXCEPT USE MANUFACTURER'S MINIMUM RECOMMENDED EMBEDMENT IF GREATER.
4. LOCATE DOWELS CENTERED IN WALL OR SLAB UNLESS OTHERWISE NOTED ON DRAWINGS. WHERE 2 ROWS OF DOWELS INDICATED, STAGGER SPACING & LOCATE ALTERNATING DOWELS AT MINIMUM EDGE DISTANCE FROM OPPOSITE FACES.

ADHESIVE DOWEL

NTS

0330-105

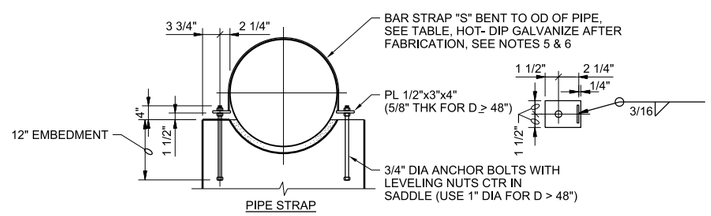

PIPE STRAP

PIPE SADDLE TABLE								
PIPE DIAMETER D	SADDLE WIDTH B	LAYERS OF REINFORCING	VERTICAL REINFORCING V	PIPE STRAP SIZE S	NO. OF STRAPS	FOOTING WIDTH W	REINFORCING A	FOOTING DEPTH C
D<12"	6"	1 (CTRD)	#5@12"	3/16"x2"	1	1'-6"	#5@12"	2'-0"
12"<D<24"	8"	1 (CTRD)	#5@12"	3/16"x2 1/2"	1	2'-0"	#5@12"	2'-0"
24"<D<36"	10"	2 (EF)	#5@12"	1/4"x2"	1	3'-0"	#5@12"	2'-0"
36"<D<48"	12"	2 (EF)	#5@12"	1/4"x3"	1	4'-0"	#5@12"	2'-0"
48"<D<60"	16"	2 (EF)	#6@12"	3/8"x3"	2	6'-0"	#5@6"	2'-0"
60"<D<72"	18"	2 (EF)	#6@12"	3/8"x3"	2	8'-0"	#5@6"	2'-0"

NOTES:

1. FOR "B"≥10" OR THICKER, USE 2 LAYERS OF REINFORCING, TURN HORIZONTAL BARS 90° TO HOOK AROUND VERTICALS [ ], 1 1/2" CLEAR OF CONCRETE
2. FORM 3/4" BEVEL ON ALL EXPOSED CORNERS OF SUPPORT.
3. USE TYPE 'A' SADDLE IN ALL LOCATIONS WHERE A SLAB (NEW OR EXISTING) OCCURS. USE TYPE 'B' IN OTHER LOCATIONS.
4. FOR LOCATIONS WHERE PIPE STRAP IS REQUIRED, SEE DRAWINGS. UNLESS INDICATED OTHERWISE A STRAP IS NOT REQUIRED.
5. AT SUBMERGED CONDITIONS, STRAP SHALL BE STAINLESS STEEL.
6. PROVIDE 3/4" BY STRAP WIDTH PLUS 1" WIDE NEOPRENE PAD BELOW STRAP.

PIPE SUPPORT - CONCRETE SADDLE

NTS

DETAIL 2 OF 2

0330-061

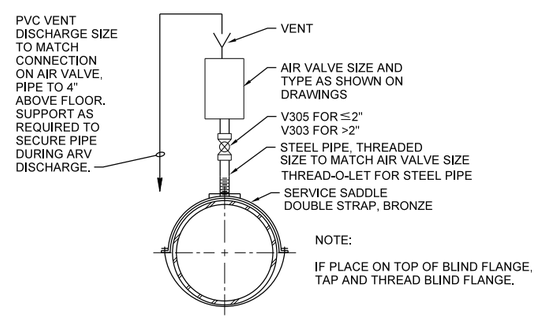

NOTE:

IF PLACE ON TOP OF BLIND FLANGE, TAP AND THREAD BLIND FLANGE.

AIR RELEASE VALVE ASSEMBLY

NTS

3312-700

STATE OF TEXAS
JOSEPH W. JENKINS
68717
REGISTERED PROFESSIONAL ENGINEER
5-11-2016

NO.	DATE	REVISION	BY	APVD

DSGN B BERHORST | DR B BERHORST | CHK J JENKINS | APVD J JENKINS

Montopolis Water Reclamation Initiave (WRI)
Storage Reservoir and Pump Station
2711 Montopolis Drive
Austin Water, Austin, Texas

CH2MHILL®
TBPE FRM NO. 3699

PROCESS MECHANICAL

STANDARD DETAILS
CH2M HILL

1:1

VERIFY SCALE

BAR IS ONE INCH ON ORIGINAL DRAWING.
0 1"

DATE	MAY 2016
PROJ	472902
DWG	M-7
SHEET	98 of 126

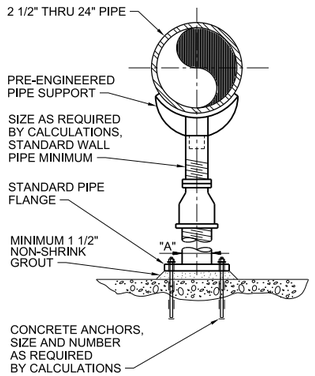

DIMENSION TABLE	
PIPE SIZE	"A" MINIMUM NOMINAL PIPE SIZE
2-1/2"	2-1/2"
3"	2-1/2"
4"	3"
6"	3"
8"	3"
10"	3"
12"	3"
14"	4"
16"	4"
20"	6"
24"	6"

NOTE:
SUBMIT FINAL DESIGN AND CALCULATIONS FOR SUPPORT AND ANCHORAGE AS SPECIFIED.

PIPE SUPPORT
SADDLE SUPPORT PEDESTAL TYPE - ADJUSTABLE
NTS

4005-500

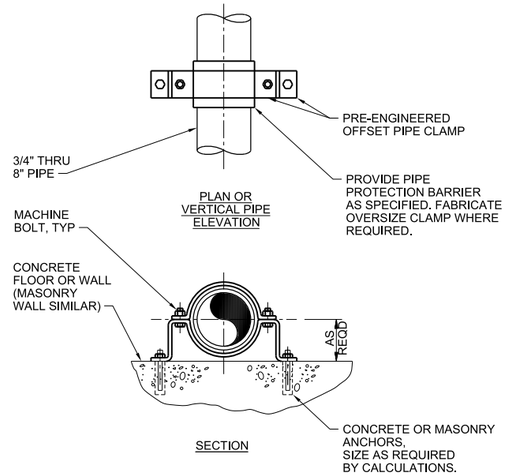

NOTES:
1. ONLY FOR VERTICAL OR FLOOR MOUNTED PIPES.
2. SUBMIT FINAL DESIGN AND CALCULATIONS FOR SUPPORT AND ANCHORAGE AS SPECIFIED.

PIPE SUPPORT - WALL MOUNTED
NTS

4005-505

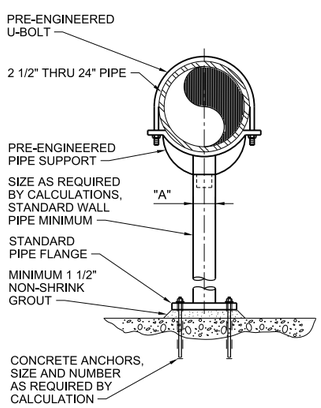

DIMENSION TABLE	
PIPE SIZE	"A" MINIMUM NOMINAL PIPE SIZE
2-1/2"	2-1/2"
3"	2-1/2"
4"	3"
6"	3"
8"	3"
10"	3"
12"	3"
14"	3"
16"	3"
20"	4"
24"	4"

NOTE:
SUBMIT FINAL DESIGN AND CALCULATIONS FOR SUPPORT AND ANCHORAGE AS SPECIFIED.

PIPE SUPPORT
SADDLE SUPPORT PEDESTAL TYPE - NON-ADJUSTABLE
NTS

4005-501

STATE OF TEXAS
JOSEPH W. JENKINS
68717
REGISTERED
PROFESSIONAL ENGINEER
Joseph W. Jenkins
5-11-2016

NO.	DATE	REVISION	BY	APVD

DSGN B BERHORST | DR B BERHORST | CHK J JENKINS | APVD J JENKINS

Montopolis Water Reclamation Initiave (WRI)
Storage Reservoir and Pump Station
2711 Montopolis Drive
Austin Water, Austin, Texas

CH2MHILL®
TBPE FIRM NO. 3699

PROCESS MECHANICAL

STANDARD DETAILS
CH2M HILL

1:1
VERIFY SCALE
BAR IS ONE INCH ON ORIGINAL DRAWING.
0 1"

DATE	MAY 2016
PROJ	472902
DWG	M-8
SHEET	99 of 126

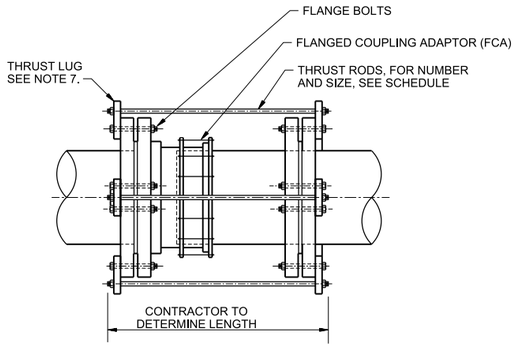

RESTRAINED FLANGE COUPLING ADAPTOR (FCA)

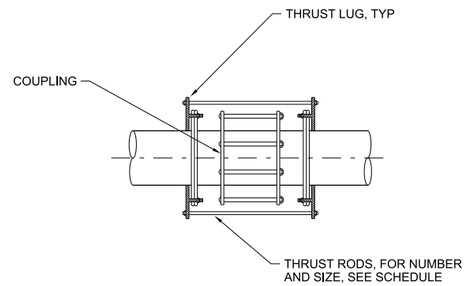

RESTRAINED FLEXIBLE CONNECTION

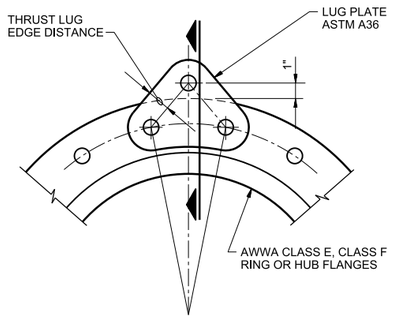

FRONT ELEVATION

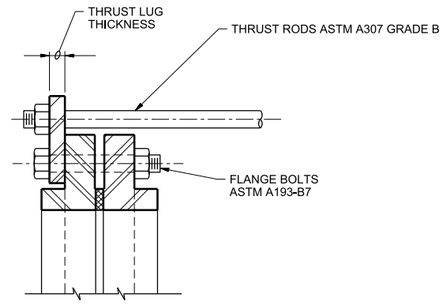

SECTION

LUG

NOTES:

1. THRUST RODS SHALL CONFORM TO ASTM A307 GRADE B. NUTS SHALL CONFORM TO ASTM A563.
2. LUG PLATES SHALL CONFORM TO ASTM A36.
3. THRUST ROD NUTS SHALL BE TIGHTENED GRADUALLY AND EQUALLY IN STAGES TO PREVENT UNEVEN ALIGNMENT AND TO ALLOW EQUAL STRESS ON ALL RODS UNDER PRESSURE. TIGHTEN UNTIL SNUG. THREADS SHALL PROTRUDE FROM NUTS. PEEN THREADS AFTER TIGHTENING NUTS.
4. LUG PLATES SHALL BE EQUALLY SPACED AROUND PIPE.
5. PROVIDE CATHODIC PROTECTION FOR COUPLINGS AS NOTED ON PLANS OR IN THE SPECIFICATIONS.
6. CONTRACTOR SHALL USE SCHEDULE DATA FOR ONLY THOSE PIPE SIZES AND TEST PRESSURES SPECIFIED IN THIS CONTRACT.
7. FOR THRUST LUG DIMENSIONS SEE THRUST ROD AND LUG SCHEDULE. ADJUST HEIGHT OF THRUST ROD LUG SO THAT THRUST ROD IS PARALLEL TO PIPE AXIS.

IF YOU HAVE A PIPE SIZE OR PRESSURE NOT IN THE TABLE, CONTACT CHRIS SUNDBERG/SEA AND THE CALCS AND SCHEDULE WILL BE PROVIDED.

RESTRAINED COUPLINGS

THRUST ROD AND LUG PLATE SCHEDULE

WORKING PRESSURE (PSI)	AWWA C207 FLANGE CLASS	NUMBER OF THRUST RODS	PUBLISHED FLANGE THICKNESS (IN)	REQ'D RING FLANGE THICKNESS (IN)	THRUST ROD DIA. (IN)	THRUST ROD FORCE (KIPS)	THRUST LUG THICKNESS (IN)	THRUST LUG EDGE DISTANCE (IN)	REQ'D FLANGE BOLT SPEC
100	6" Class E	4	1.31	0.67	0.63	1.2	0.25	1.50	A 193, B7
100	6" Class F	6	1.31	0.75	0.63	1.0	0.25	1.50	A 193, B7
100	8" Class E	4	1.50	0.80	0.63	2.0	0.38	1.50	A 193, B7
100	8" Class F	6	1.31	0.87	0.63	1.5	0.38	1.50	A 193, B7
100	10" Class E	6	1.56	0.63	0.63	2.0	0.38	1.50	A 193, B7
100	10" Class F	8	1.50	0.99	0.63	1.7	0.38	1.50	A 193, B7
100	12" Class E	6	1.75	1.08	0.63	3.0	0.38	1.50	A 193, B7
100	12" Class F	8	1.63	1.13	0.63	2.4	0.38	1.53	A 193, B7
100	14" Class E	6	1.88	1.17	0.63	3.5	0.38	1.50	A 193, B7
100	14" Class F	10	1.94	1.26	0.63	2.5	0.38	1.53	A 193, B7
100	16" Class E	6	2.00	1.30	0.63	3.6	0.38	1.50	A 193, B7
100	16" Class F	10	2.14	1.37	0.63	3.1	0.38	1.69	A 193, B7
100	18" Class E	8	2.13	1.37	0.63	4.2	0.50	1.53	A 193, B7
100	18" Class F	12	2.25	1.49	0.63	3.2	0.50	1.69	A 193, B7
100	20" Class E	10	2.38	1.49	0.63	4.1	0.50	1.53	A 193, B7
100	20" Class F	12	2.33	1.61	0.63	3.9	0.50	1.69	A 193, B7
100	22" Class E	10	2.50	1.58	0.63	4.9	0.50	1.69	A 193, B7
100	22" Class F	12	2.50	1.72	0.63	4.7	0.50	1.69	A 193, B7
100	24" Class E	10	2.63	1.70	0.63	5.8	0.50	1.69	A 193, B7
100	24" Class F	12	2.69	1.85	0.63	5.6	0.50	2.00	A 193, B7
100	30" Class E	14	2.88	2.02	0.75	6.3	0.50	1.69	A 193, B7
100	30" Class F	14	3.15	2.16	0.75	7.3	0.50	2.31	A 193, B7
100	36" Class E	16	3.13	2.34	0.75	7.9	0.63	2.00	A 193, B7
100	36" Class F	16	3.46	2.46	0.88	8.9	0.50	2.63	A 193, B7
100	42" Class E	18	3.38	2.65	0.88	9.5	0.63	2.00	A 193, B7
100	42" Class F	18	3.81	2.76	0.88	10.5	0.63	2.63	A 193, B7
100	48" Class E	20	3.50	2.93	0.88	10.1	0.63	2.00	A 193, B7
100	48" Class F	20	4.50	3.08	1.00	12.8	0.63	2.63	A 193, B7
200	6" Class E	4	1.31	0.95	0.63	2.5	0.38	1.50	A 193, B7
200	6" Class F	6	1.31	1.06	0.63	2.1	0.38	1.50	A 193, B7
200	8" Class E	4	1.50	1.14	0.63	4.0	0.50	1.50	A 193, B7
200	8" Class F	6	1.31	1.24	0.63	3.2	0.38	1.50	A 193, B7
200	10" Class E	6	1.56	1.32	0.63	4.1	0.50	1.50	A 193, B7
200	10" Class F	8	1.50	1.40	0.63	3.4	0.50	1.50	A 193, B7
200	12" Class E	6	1.75	1.53	0.63	6.0	0.50	1.50	A 193, B7
200	12" Class F	8	1.63	1.59	0.63	4.7	0.50	1.53	A 193, B7
200	14" Class E	6	1.88	1.66	0.75	7.3	0.63	1.50	A 193, B7
200	14" Class F	10	1.94	1.78	0.63	5.0	0.50	1.53	A 193, B7
200	16" Class E	6	2.00	1.83	0.75	7.2	0.63	1.50	A 193, B7
200	16" Class F	10	2.14	1.94	0.75	6.3	0.63	1.69	A 193, B7
200	18" Class E	8	2.13	1.94	0.75	8.3	0.63	1.53	A 193, B7
200	18" Class F	12	2.25	2.11	0.75	6.5	0.63	1.69	A 193, B7
200	20" Class E	10	2.38	2.11	0.75	8.2	0.63	1.53	A 193, B7
200	20" Class F	12	2.33	2.27	0.75	7.8	0.63	1.69	A 193, B7
200	22" Class E	10	2.50	2.24	0.88	9.7	0.63	1.69	A 193, B7
200	22" Class F	12	2.50	2.44	0.88	9.3	0.75	1.69	A 193, B7
200	24" Class E	10	2.63	2.41	0.88	11.6	0.75	1.69	A 193, B7
200	24" Class F	12	2.69	2.62	0.88	11.1	0.75	2.00	A 193, B7
200	30" Class E	14	2.88	2.86	1.00	12.6	0.75	1.69	A 193, B7
200	30" Class F	14	3.15	3.05	1.00	14.6	0.75	2.31	A 193, B7
200	36" Class E	16	3.13	3.31	1.13	15.7	0.75	2.00	A 193, B7
200	36" Class F	16	3.46	3.47	1.13	17.7	0.75	2.63	A 193, B7
200	42" Class E	18	3.38	3.75	1.13	19.0	0.88	2.00	A 193, B7
200	42" Class F	18	3.81	3.90	1.25	21.1	0.88	2.63	A 193, B7
200	48" Class E	20	3.50	4.14	1.25	20.2	0.88	2.00	A 193, B7
200	48" Class F	20	4.50	4.35	1.38	25.5	0.88	2.63	A 193, B7
300	6" Class E	4	1.31	1.16	0.63	3.7	0.50	1.50	A 193, B7
300	6" Class F	6	1.31	1.30	0.63	3.1	0.50	1.50	A 193, B7
300	8" Class E	4	1.50	1.39	0.63	6.1	0.50	1.50	A 193, B7
300	8" Class F	6	1.31	1.51	0.63	4.8	0.50	1.50	A 193, B7
300	10" Class E	6	1.56	1.62	0.63	6.1	0.50	1.50	A 193, B7
300	10" Class F	8	1.50	1.72	0.63	5.1	0.50	1.50	A 193, B7
300	12" Class E	6	1.75	1.88	0.88	9.0	0.63	1.50	A 193, B7
300	12" Class F	8	1.63	1.95	0.75	7.1	0.63	1.53	A 193, B7
300	14" Class E	6	1.88	2.03	0.88	10.9	0.75	1.50	A 193, B7
300	14" Class F	10	1.94	2.18	0.75	7.5	0.63	1.53	A 193, B7
300	16" Class E	8	2.00	2.24	0.88	10.8	0.75	1.50	A 193, B7
300	16" Class F	10	2.14	2.38	0.88	9.4	0.63	1.69	A 193, B7
300	18" Class E	8	2.13	2.38	1.00	12.5	0.75	1.53	A 193, B7
300	18" Class F	12	2.25	2.58	0.88	9.7	0.75	1.69	A 193, B7
300	20" Class E	10	2.38	2.59	1.00	12.2	0.75	1.53	A 193, B7
300	20" Class F	12	2.33	2.78	0.88	11.7	0.75	1.69	A 193, B7
300	22" Class E	10	2.50	2.74	1.00	14.6	0.75	1.69	A 193, B7
300	22" Class F	12	2.50	2.99	1.00	14.0	0.88	1.69	A 193, B7
300	24" Class E	10	2.63	2.95	1.13	17.3	0.88	2.00	A 193, B7
300	24" Class F	12	2.69	3.21	1.13	16.7	0.88	2.00	A 193, B7
300	30" Class E	14	2.88	3.50	1.13	19.0	0.88	1.69	A 193, B7
300	30" Class F	14	3.15	4.08	1.25	21.8	0.88	2.31	A 193, B7
300	36" Class E	16	3.13	4.26	1.25	23.6	1.00	2.00	A 193, B7
300	36" Class F	16	3.46	2.46	1.38	26.6	0.88	2.63	A 193, B7
300	42" Class E	18	3.38	4.59	1.38	28.5	1.00	2.00	A 193, B7
300	42" Class F	18	3.81	4.78	1.50	31.6	1.00	2.63	A 193, B7
300	48" Class E	22	3.50	5.07	1.50	30.2	1.13	2.00	A 193, B7
300	48" Class F	20	4.50	5.33	1.63	38.3	1.13	2.63	A 193, B7

4005-542

STATE OF TEXAS
JOSEPH W. JENKINS
68717
REGISTERED
PROFESSIONAL ENGINEER
Joseph W. Jenkins
5-11-2016

NO.	DATE	REVISION	BY	APVD

DSGN B BERHORST | DR B BERHORST | CHK J JENKINS | APVD J JENKINS

Montopolis Water Reclamation Initiave (WRI)
Storage Reservoir and Pump Station
2711 Montopolis Drive
Austin Water, Austin, Texas

CH2MHILL®
TBPE FIRM NO. 3699

PROCESS MECHANICAL

STANDARD DETAILS
CH2M HILL

1:1
VERIFY SCALE
BAR IS ONE INCH ON ORIGINAL DRAWING.
0 1"

DATE	MAY 2016
PROJ	472902
DWG	M-9
SHEET	100 of 126

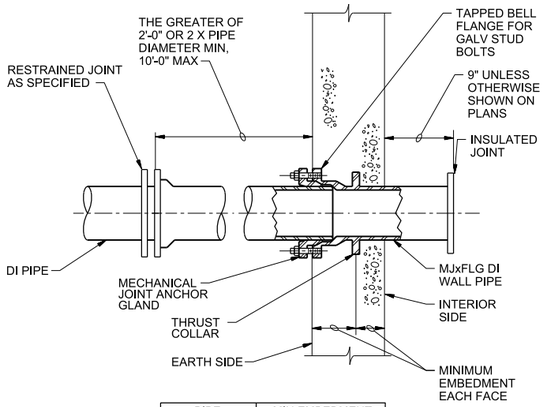

PIPE DIAMETER (IN)	MIN EMBEDMENT EACH FACE (IN)

NOTES:

1. COAT WALL PIPE WITH SPECIFIED PAINT SYSTEM PRIOR TO CONCRETE PLACEMENT.

MECHANICAL JOINT WALL PIPE FOR DIP

NTS

4027-601

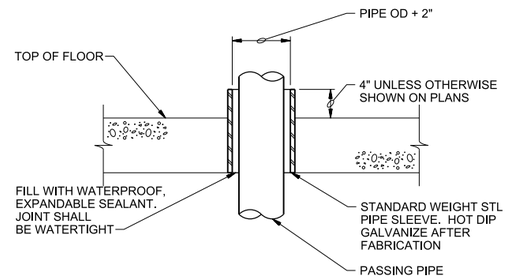

NOTES:

1. COAT FLOOR SLEEVE WITH SPECIFIED PAINT SYSTEM BEFORE CONCRETE PLACEMENT.

FLOOR SLEEVE

NTS

4027-620

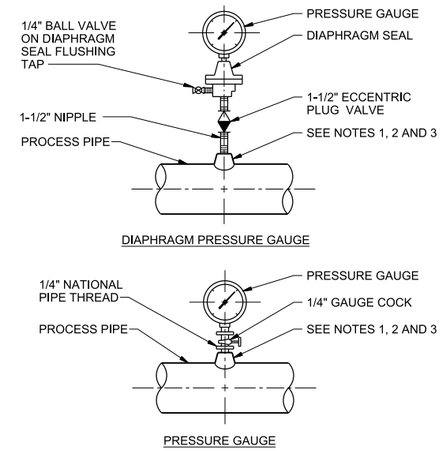

NOTES:

1. FOR STEEL, GALVANIZED STEEL, AND PVC 2 1/2" AND SMALLER USE A BUSHING IN A TEE.
2. FOR DUCTILE IRON AND FIBERGLASS REINFORCED PLASTIC PIPE, ALL SIZES, USE PIPE SADDLE WITH BUSHING.
3. FOR STEEL AND STAINLESS STEEL PIPES 3" AND LARGER, AND PRESSURE VESSELS, USE THRED-O-LET AS SHOWN.
4. PROVIDE SNUBBER FOR POSITIVE DISPLACEMENT PUMP INSTALLATIONS.

PRESSURE GAUGE MOUNTING

NTS

4090-690

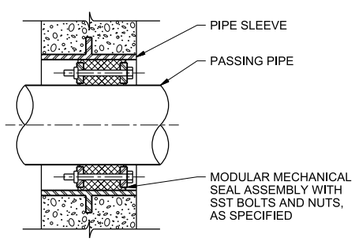

WALL PIPE PENETRATION SEAL

NTS

4027-607

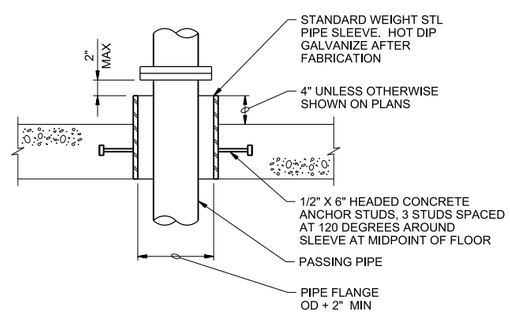

FLOOR SLEEVE

NTS

4027-621

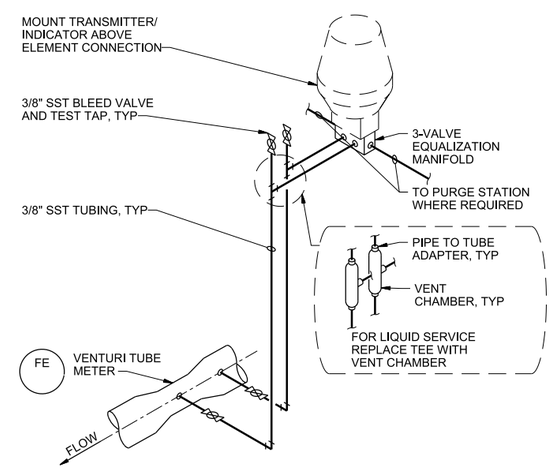

NOTES:

1. FOR GAS SERVICE, SLOPE ALL LINES UPWARD TOWARD INSTRUMENT.
2. FOR LIQUID SERVICE, SLOPE ALL LINES UPWARD TOWARD VENT CHAMBER.
3. ALL LINES SHALL HAVE A CONTINUOUS SLOPE OF 1/4" PER FOOT MIN (1" PER FOOT PREFERRED).

PRESSURE DIFFERENTIAL TRANSMITTER/INDICATOR FOR FLOW SERVICE

NTS

4091-207

STATE OF TEXAS
JOSEPH W. JENKINS
68717
REGISTERED PROFESSIONAL ENGINEER
Joseph W. Jenkins
5-11-2016

NO.	DATE	REVISION	BY	APVD

DSGN B BERHORST | DR B BERHORST | CHK J JENKINS | APVD J JENKINS

Montopolis Water Reclamation Initiave (WRI)
Storage Reservoir and Pump Station
2711 Montopolis Drive
Austin Water, Austin, Texas

CH2MHILL®
TBPE FIRM NO. 3699

PROCESS MECHANICAL

STANDARD DETAILS
CH2M HILL

1:1
VERIFY SCALE
BAR IS ONE INCH ON ORIGINAL DRAWING.
0 1"

DATE	MAY 2016
PROJ	472902
DWG	M-10
SHEET	101 of 126

SPECIAL NOTES

A. REFER TO MECHANICAL GENERAL NOTES ON ME-3

B. COORDINATE ALL ROOF PENETRATIONS WITH ARCHITECT AND ROOFING CONTRACTOR.

C. CONTRACTOR TO COORDINATE ACTUAL DUCT AND EQUIPMENT IN CEILING WITH STRUCTURAL MEMBERS.

D. MAINTAIN 10' CLEARANCE FROM EXHAUST TO ANY OPENING TO BUILDING OR OUTSIDE AIR INTAKE.

E. COORDINATE WITH ARCHITECT FOR ALL WALL PENETRATIONS.

F. MECHANICAL CONTRACTOR SHALL SIZE REFRIGERANT PIPING PER MANUFACTURER'S REQUIREMENTS.

F. COORDINATE EXACT LOCATIONS OF PUMP ROOM EQUIPMENT WITH BRIDGE CRANE.

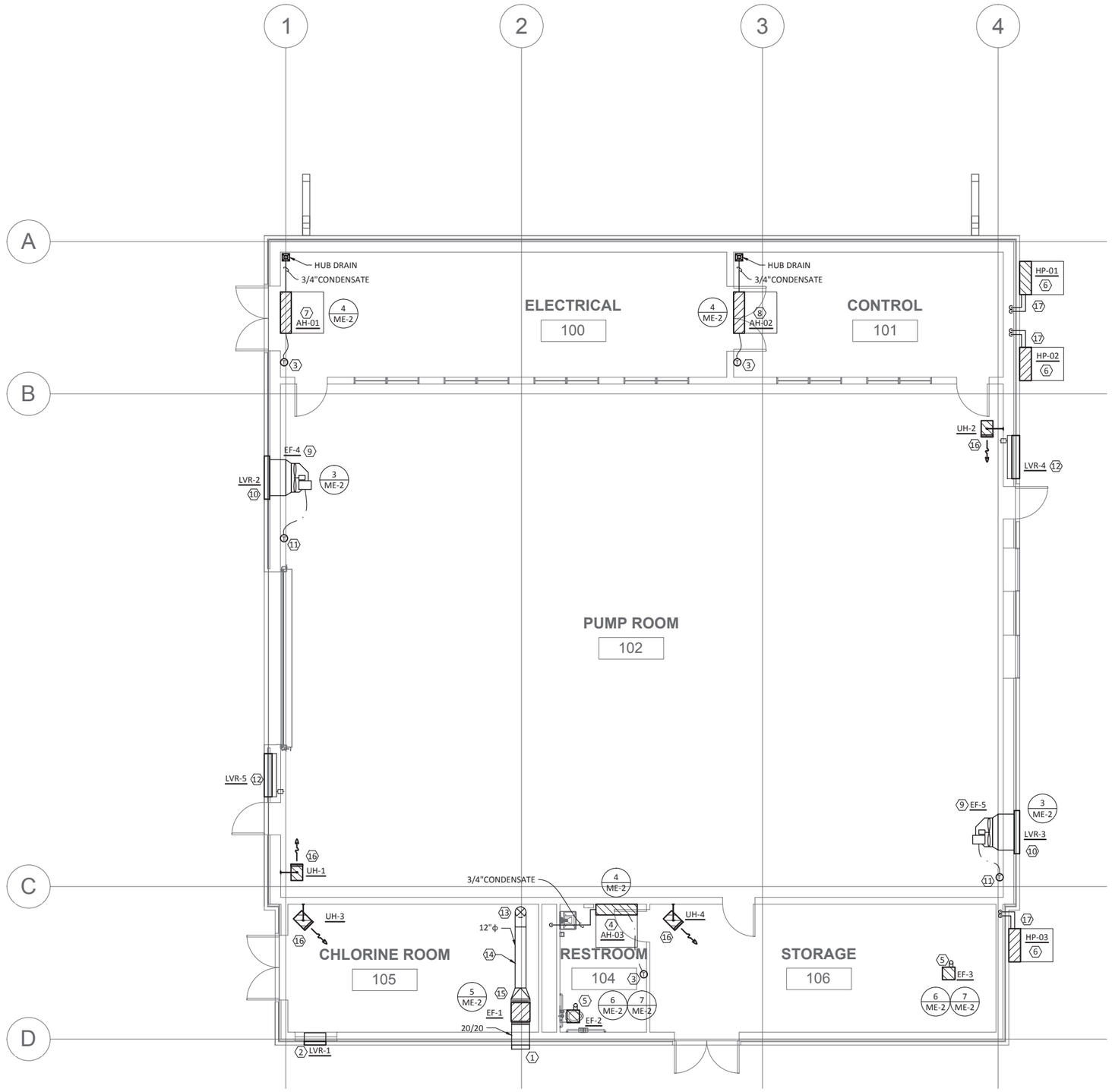

1 PUMP STATION MECHANICAL PLAN
SCALE: 3/16" = 1'-0"

KEYED NOTES

1. ROUTE 20/20 DUCT AS HIGH AS POSSIBLE FROM EXHAUST FAN TO WEATHER HOOD ON EXTERIOR WALL. TERMINATE MINIMUM 3 FEET FROM DOOR AND 10 FEET FROM AIR INTAKE.
2. PROVIDE AND INSTALL WALL LOUVER FOR CHLORINE ROOM. SEE LOUVER SCHEDULE ON SHEET M-03 FOR MORE INFORMATION. COORDINATE WITH ARCHITECT FOR EXACT LOCATION, MOUNTING HEIGHT, FINISH AND INSTALLATION REQUIREMENTS.
3. MOUNT PROGRAMMABLE THERMOSTAT ON WALL AT 48" A.F.F. CONFIRM EXACT LOCATION WITH ARCHITECT AND OWNER PRIOR TO ROUGH-IN.
4. DUCTLESS AIR HANDLER SHALL BE MOUNTED SECURELY AS HIGH AS POSSIBLE ON WALL IN RESTROOM. ROUTE 3/4" INSULATED CONDENSATE DRAIN FROM CONDENSATE PUMP TO TAILPIECE ABOVE TRAP AT LAVATORY.
5. EXHAUST FAN SHALL BE SECURELY SUSPENDED FROM STRUCTURAL MEMBER WITH R.I.S. VIBRATION ISOLATORS. ROUTE 4"Ø EXHAUST AIR DUCT UP THROUGH ROOF TO ROOF CAP WITH BIRDSCREEN AND FLASHING. MAINTAIN 10' CLEARANCE FROM ANY OUTSIDE INLET AND OPENING INTO BUILDING.
6. HEAT PUMP SHALL BE MOUNTED ON 4" CONCRETE PAD. PAD BY GENERAL CONTRACTOR. AIR CONDITIONING REFRIGERANT CIRCUIT ACCESS PORTS LOCATED OUTDOORS SHALL BE PROTECTED FROM UNAUTHORIZED ACCESS WITH LOCKING-TYPE RESISTANT CAPS OR IN A MANNER APPROVED BY THE AUTHORITY HAVING JURISDICTION.
7. DUCTLESS AIR HANDLER SHALL BE MOUNTED SECURELY AS HIGH AS POSSIBLE ON WALL IN ELECTRICAL ROOM. ROUTE 3/4" INSULATED CONDENSATE DRAIN FROM CONDENSATE PUMP TO 2" ABOVE RIM OF HUB DRAIN. COORDINATE WITH PLUMBING CONTRACTOR FOR EXACT LOCATION OF HUB DRAIN.
8. DUCTLESS AIR HANDLER SHALL BE MOUNTED SECURELY AS HIGH AS POSSIBLE ON WALL IN CONTROL ROOM. ROUTE 3/4" INSULATED CONDENSATE DRAIN FROM CONDENSATE PUMP TO 2" ABOVE RIM OF HUB DRAIN. COORDINATE WITH PLUMBING CONTRACTOR FOR EXACT LOCATION OF HUB DRAIN.
9. PUMP ROOM VENTILATION EXHAUST FAN. SECURELY SUSPEND EXHAUST FAN TO STRUCTURAL MEMBER AT 13'-0" A.F.F. TO CENTER OF FAN. MAINTAIN 10 FT CLEARANCE FROM ANY OUTSIDE AIR INTAKE OR OPENING TO BUILDING. COORDINATE WITH ARCHITECT FOR EXACT LOCATION AND MOUNTING HEIGHT.
10. PROVIDE AND INSTALL EXHAUST LOUVER AND GRAVITY BACKDRAFT DAMPER AT 13'-0" A.F.F. TO CENTER OF FAN. COORDINATE WITH ARCHITECT FOR EXACT LOCATION, MOUNTING HEIGHT, FINISH AND REQUIREMENTS.
11. PROVIDE AND INSTALL SINGLE LINE VOLTAGE THERMOSTAT ON INSULATED SUB-BASE AT 48" A.F.F. SET THERMOSTAT AT 80°F (ADJUSTABLE).
12. PROVIDE AND INSTALL OUTSIDE AIR LOUVER WITH LINE VOLTAGE MOTORIZED DAMPER AT 56" A.F.F. COORDINATE WITH ARCHITECT FOR EXACT LOCATION AND MOUNTING HEIGHT. INTERLOCK DAMPER WITH VENTILATION EXHAUST FANS EF-4 AND EF-5. REFER TO SEQUENCE OF OPERATIONS ON ME-3
13. ROUTE DUCT DOWN ALONG WALL TO TERMINATE IN CHLORINE ROOM AT 12" AFF TO BOTTOM OF DUCT.
14. ALL CHLORINE ROOM EXHAUST DUCT SHALL BE PVC.
15. EXHAUST FAN SHALL BE SECURELY SUSPENDED FROM STRUCTURAL MEMBER WITH RUBBER-IN-SHEAR VIBRATION ISOLATORS AND FLEX CONNECTIONS AT INLET AND OUTLET.
16. MOUNT UNIT HEATER WITH INTEGRAL THERMOSTAT TO WALL WITH MANUFACTURER'S MOUNTING BRACKET AT 9'-0" AFF. REFER TO DETAIL 8/ME-2.
17. ROUTE INSULATED REFRIGERANT LINES UP IN WALL TO AIR HANDLING UNIT. SIZE PIPING PER MANUFACTURER'S INSTRUCTIONS BASED ON REFRIGERANT LINE LENGTHS.

STATE OF TEXAS
LYNN C. BROWN
55248
LICENSED PROFESSIONAL ENGINEER
05/11/2016

NO.	DATE	REVISION	BY	APVD

DSGN	DR	CHK	APVD
RICHARD SNIFF	JOHN COFFEEN	BORIS BLANC	LYNN BROWN

ENGOTECH FIRM REGISTERED CONSULTANTS
TBPE Firm F-1580 | 8000 Bluffstone Cove, Suite B-103, Austin, Texas 78759 | 512.345.8111
Project No: 13006.MS.AUS

Montopolis Water Reclamation Initiative (WRI)
Storage Reservoir and Pump Station
2711 Montopolis Drive
Austin Water, Austin, Texas

CH2MHILL.
TBPE FIRM NO. 3699

HVAC
MECHANICAL PLAN

AS SHOWN
VERIFY SCALE
BAR IS ONE INCH ON ORIGINAL DRAWING.
0 1"

DATE	MAY 2016
PROJ	13006.MS.AUS
DWG	ME-1
SHEET	102 of 126

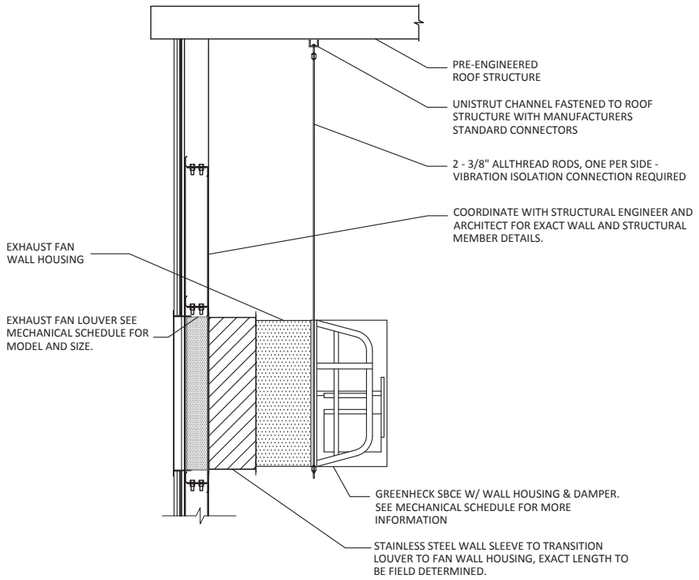

3 SIDEWALL FAN DETAIL
NOT TO SCALE

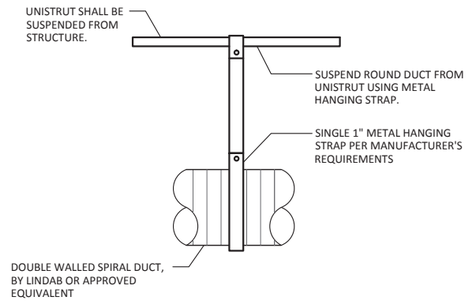

2 ROUND DUCT HANGER DETAIL
NOT TO SCALE

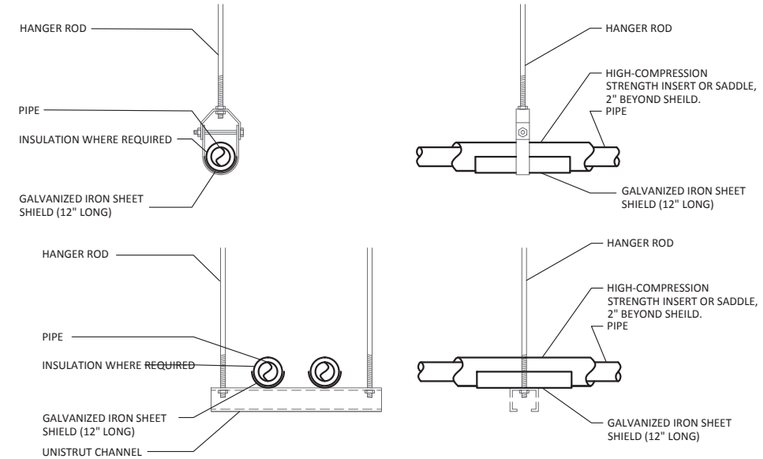

NOTE:
1. ATTACH SUPPORTS FOR ALL PIPING SUSPENDED FROM THE STEEL STRUCTURE TO THE TOP CORD OF JOISTS OR BEAM.

2. PROVIDE COPPER OR PLASTIC COATED HANGERS FOR NON-INSULATED COPPER PIPE

1 PIPE HANGERS DETAIL
NOT TO SCALE

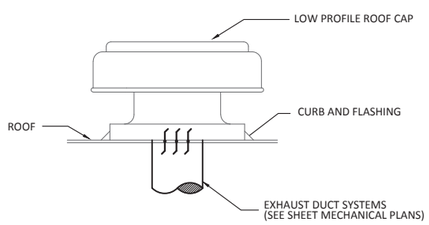

7 ROOF CAP DETAIL
NOT TO SCALE

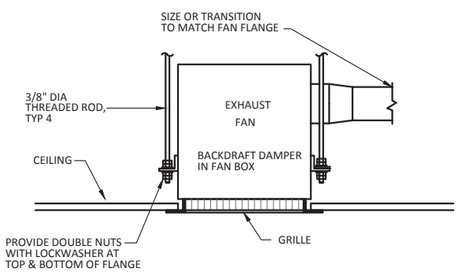

6 CEILING EXHAUST FAN DETAIL
NOT TO SCALE

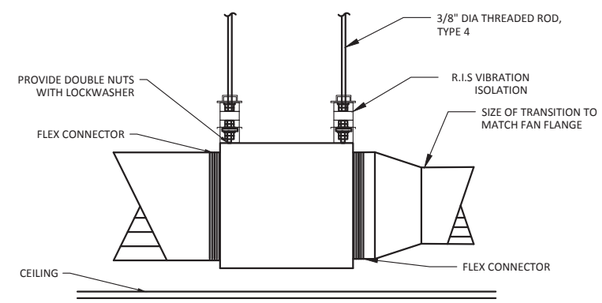

NOTE:
1. ALL MATERIALS IN CHLORINE ROOM SHALL BE CORROSION RESISTANT

5 INLINE EXHAUST FAN DETAIL
NOT TO SCALE

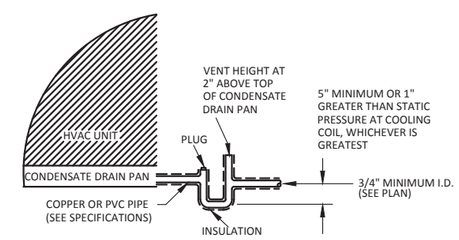

4 CONDENSATE DRAIN DETAIL
NOT TO SCALE

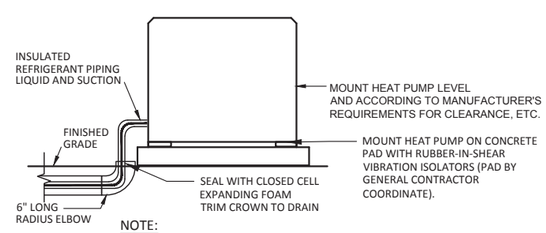

NOTE:
1. ALL CLOSED CELL POLYMER INSULATION SHALL HAVE GLUED JOINTS WITH COMPLETE COVERAGE OF ALL METAL SURFACES. ALL INSULATION EXPOSED TO EXTERIOR SHALL BE PAINTED WITH TWO COATS AS PER INSULATION MANUFACTURER'S SPECIFICATIONS.

2. PROVIDE INSULATION SHIELD AT ALL SUPPORTS.

9 HEAT PUMP DETAIL
NOT TO SCALE

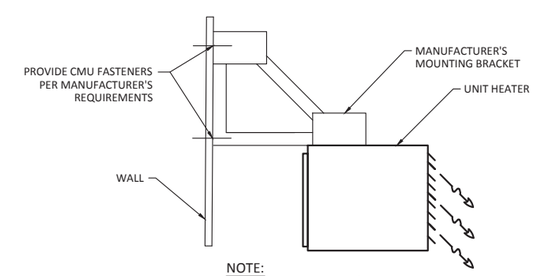

NOTE:
1. MOUNT UNIT HEATER 9' AFF.

8 UNIT HEATER DETAIL
NOT TO SCALE

STATE OF TEXAS
LYNN C. BROWN
55248
LICENSED PROFESSIONAL ENGINEER
05/11/2016

NO.	DATE	REVISION	BY	APVD

DSGN	DR	CHK	APVD
RICHARD SNIFF	JOHN COFFEEN	BORIS BLANC	LYNN BROWN

ENGOTECH FIRM REG. NO. F-10173
TBPE Firm | 8000 Bluffstone Cove, Suite B-103, Austin, Texas 78759 | 512.345.1101 | Project No. 13006.MS.AUS

Montopolis Water Reclamation Initiative (WRI)
Storage Reservoir and Pump Station
2711 Montopolis Drive
Austin Water, Austin, Texas

CH2MHILL.
TBPE FIRM NO. 3699

HVAC
MECHANICAL DETAILS

AS SHOWN
VERIFY SCALE
BAR IS ONE INCH ON ORIGINAL DRAWING.
0 1"

DATE	MAY 2016
PROJ	13006.MS.AUS
DWG	ME-2
SHEET	103 of 126

AIR HANDLER UNIT SCHEDULE

UNIT	AIR CAPACITY				UNIT TYPE	COOLING CAPACITY						HEATING		ELECTRICAL DATA			SEER	UNIT		
	TOTAL CFM	O/A CFM	MOTOR CU	E.S.P.		ENTER AIR		AMBIENT		MBH		MBH	HSPF	MCA	MOCP	VOLT/ PHASE		MAKE	AIR HANDLER	NOTES
						D.B.	W.B.	D.B.	W.B.	TOTAL	SENSIBLE									
AH-01	549	N/A	N/A	N/A	WALL	80	67	105	79	18.0	11.5	21.6	11.0	POWERED FROM OUTDOOR UNIT			16.3	DAIKIN	FTXS18HVJU	F, T, C
AH-02	549	N/A	N/A	N/A	WALL	80	67	105	79	18.0	11.5	21.6	11.0	POWERED FROM OUTDOOR UNIT			16.3	DAIKIN	FTXS18HVJU	F, T, C
AH-03	201	N/A	N/A	N/A	WALL	80	67	105	79	12.0	8.2	13.5	8.5	POWERED FROM OUTDOOR UNIT			18.0	DAIKIN	FTXN12KEVJU	F, T, C

NOTES:
1. FEATURE NOTE:
- F: MANUFACTURER'S FILTER
- T: MANUFACTURER'S 24V REMOTE WALL THERMOSTAT
- C: BUILT-IN CONDENSATE PUMP.
2. PROVIDE MANUFACTURERS WALL BRACKET.
3. AH-01 AND AH-02 SHALL BE ON EMERGENCY POWER. COORDINATE WITH ELECTRICAL CONTRACTOR.

OUTDOOR HEAT PUMP UNIT SCHEDULE

UNIT	NOMINAL CAPACITY (TONS)	ELECTRICAL DATA			SEER	UNIT			
		MCA	MOCP	VOLT/ PHASE		MAKE	MODEL	WEIGHT (LBS)	NOTES
HP-01	1.5	14.1	20	208V/1Ø	16.3	DAIKIN	RXS18DVJU	133	1, 2
HP-02	1.5	14.1	20	208V/1Ø	16.3	DAIKIN	RXS18DVJU	133	1, 2
HP-03	1.0	7.0	15	208V/1Ø	18.0	DAIKIN	RXN12KEVJU	92	1, 2

NOTES:
1. PROVIDE DISCONNECT, TO BE FIELD MOUNTED BY ELECTRICAL CONTRACTOR.
2. THERMAL EXPANSION VALVE REQUIRED ON HEAT PUMP.

GENERAL NOTES FOR HVAC

1. ALL DUCT SIZES SHOWN ARE INSIDE CLEAR DIMENSIONS.
2. DRAWINGS ARE DIAGRAMATIC ONLY. DO NOT SCALE DRAWINGS FOR EXACT LOCATION OF ITEMS SHOWN. COORDINATE WITH STRUCTURE AND OTHER TRADES IN THE FIELD.
3. MECHANICAL CONTRACTOR SHALL COORDINATE ALL CUTTINGS AND PENETRATIONS WITH GENERAL CONTRACTOR. MAKE ALL PENETRATIONS WITH A CUTTING TOOL. COORDINATE ALL ROOFING WORK WITH ROOFING CONTRACTOR.
4. COORDINATE ANY ROOF PENETRATION WITH ROOFING CONTRACTOR, ROOF SYSTEM MANUFACTURER AND ARCHITECT.
5. MOUNT THERMOSTAT @ 48" AFF. CONFIRM EXACT LOCATION WITH OWNER BEFORE ROUGH-IN.
6. COORDINATE FINAL LOCATION OF DUCTWORK WITH STRUCTURAL MEMBERS.
10. ALL ROOF WORK SHALL BE COORDINATED WITH ROOF SYSTEM MANUFACTURER ,OWNER AND ARCHITECT.ALL ROOF PENETRATIONS SHALL BE REVIEWED AND APPROVED BY ROOF SYSTEM MANUFACTURER TO COMPLIANCE ROOFING WARRANTY.
11. COORDINATE CONDENSATE DRAIN ROUTING WITH PLUMBING CONTRACTOR.
12. ALL EQUIPMENT LOCATED OUTSIDE BUILDING SHALL BE WATERPROOF CONSTRUCTION AND SHALL HAVE WATERPROOF JOINTS AND PAINT COLOR AS SELECTED BY ARCHITECT.
13. MAINTAIN 10 FOOT CLEARANCE BETWEEN OUTSIDE AIR INTAKE AND ALL EXHAUST OUTLETS.

FAN SCHEDULE

UNIT	AREA SERVED	AIR CAPACITY			ELECTRICAL DATA		LOCATION	DRIVE	INTERLOCK	UNIT DETAIL				
		TOTAL CFM	S.P.	RPM	POWER (WATTS)	VOLT/ PHASE				MAKE	MODEL	TYPE	WEIGHT	FEATURES
EF-1	CHLORINE ROOM	550	0.25	704	1219 W	115/1	CHLORINE ROOM	DIRECT	CONTINUOUS	GREENHECK	SQ-130-VG	CENTRIFUGAL EXHAUST	46	SEE NOTE 2
EF-2	RESTROOM	75	0.25	700	50 W	115/1	RESTROOM CEILING	DIRECT	LIGHT SWITCH	GREENHECK	SP-B90	CENTRIFUGAL	15#	DISC, BDD, TD
EF-3	STORAGE	75	0.25	700	50 W	115/1	STORAGE CEILING	DIRECT	LIGHT SWITCH	GREENHECK	SP-B90	CEILING CENTRIFUGAL	15#	DISC, BDD, TD
EF-4	PUMP ROOM	7500	0.25	782	567 W	208/1	WALL MOUNTED	BELT	HOA SWITCH	GREENHECK	SBCE-3L30-7	CENTRIFUGAL	140	DISC, BDD, BS, T
EF-5	PUMP ROOM	7500	0.25	782	567 W	208/1	WALL MOUNTED	BELT	HOA SWITCH	GREENHECK	SBCE-3L30-7	CENTRIFUGAL	140	DISC, BDD, BS, T

NOTES:
1. FEATURE NOTES:
BS = BIRD SCREEN
DISC = DISCONNECT SWITCH
BDD = BACKDRAFT DAMPER
T = PROVIDE AND INSTALL LINE VOLTAGE THERMOSTATS TO CONTROL EACH FAN EF-4 AND EF-5, SEE SEQUENCE OF OPERATION AND HVAC FLOOR PLAN FOR MORE INFORMATION
2. ACCESSORIES FOR EF-1:
- SWITCH: NEMA-7&9, TOGGLE, MOUNTED & WIRE, DIV. 1 WIRING
- HI-PRO POLYESTER - IVORY, COAT ENTIRE FAN
- MOTOR WITH THERMAL OVERLOADS
- ALUMINUM BIRDSCREEN
- ALUMINUM RUB RING
- DAMPER WD-330-PB-9X9, GRAVITY OPERATED, COATED
- WALL WEATHER HOOD

HVAC SYMBOL LIST

- SUPPLY AIR GRILLE
- RETURN AIR GRILLE
- EXHAUST AIR GRILLE
- TEMPERATURE THERMOSTAT
- DUCT SMOKE DETECTOR
- MECHANICAL EQUIPMENT, SEE SCHEDULES
- FLEX CONNECTOR
- MANUAL DAMPER
- CONTROL WIRE
- CONDENSATE DRAIN
- REFERENCE DETAIL (DETAIL NUMBER 1, SHEET NUMBER ME-2)

SEQUENCE OF OPERATION

AH-01, AH-02, AH-03
AIR HANDLER SHALL CYCLE ON/OFF BASED ON TEMPERATURE PER THERMOSTAT

EF-1
EXHAUST FAN SHALL OPERATE CONTINUOUSLY, 24 HOURS/DAY.

EF-2
EXHAUST FAN SHALL OPERATE CONTINUOUSLY DURING OCCUPIED MODE PER AH-03 THERMOSTAT.

EF-3
EXHAUST FAN SHALL BE INTERLOCKED WITH STORAGE ROOM LIGHTING TO TURN ON WHEN ROOM IS OCCUPIED.

SUMMER AND SHOULDER SEASON OPERATION

EF-4, EF-5
EXHAUST FANS SHALL CYCLE ON/OFF BASED ON TEMPERATURE PER THERMOSTAT.

LVR-4
LOUVER SHALL OPEN WHEN EXHAUST FAN EF-4 IS ON.

LVR-5
LOUVER SHALL OPEN WHEN EXHAUST FAN EF-5 IS ON.

WINTER OPERATION

LVR-4, LVR-5
LOUVERS SHALL BE OPEN

EF-4, EF-5
EXHAUST FANS SHALL BE OFF

LOUVER SCHEDULE

TAG	NOMINAL SIZE	FREE AREA (FT2)	TYPE	MAKE	MODEL
LVR-1	24"x24"	1.73	HIGH PERFORMANCE DUAL DRAINABLE LOUVER WITH 4" DEEP FRAME, POLYPROPYLENE COATING	GREENHECK	EDD-401
LVR-2	48"x48"	8.21	DUAL DRAINABLE BLADE LOUVER, 6" FRAME, J STYLE ALUM BLADES	GREENHECK	EDD-601
LVR-3	48"x48"	8.21	DUAL DRAINABLE BLADE LOUVER, 6" FRAME, J STYLE ALUM BLADES	GREENHECK	EDD-601
LVR-4	48"x36"	6.03	DUAL DRAINABLE BLADE LOUVER, 6" FRAME, J STYLE ALUM BLADES	GREENHECK	EDD-601
LVR-5	48"x36"	6.03	DUAL DRAINABLE BLADE LOUVER, 6" FRAME, J STYLE ALUM BLADES	GREENHECK	EDD-601

NOTES:
1. COORDINATE EXACT LOCATION AND MOUNTING HEIGHT OF LOUVER WITH ARCHITECTURAL ELEVATION.
2. COORDINATE FINISH WITH ARCHITECT.
3. PROVIDE AND INSTALL TRANSITION AS REQUIRED TO CONNECT SMALL DUCT TO LOUVER.

HVAC MANUFACTURER EQUIVALENT

EQUIPMENT	EQUIVALENT MANUFACTURER	REMARK
SPLIT AIR CONDITIONING UNIT	- DAIKIN - CARRIER - YORK - LENNOX	
UNIT HEATERS	- MARKEL - REZNOR - TRANE	
FAN	- GREENHECK - A.C.M.E. - BREIDERT - COOK - PENN	

NOTES:
1. COORDINATE SPACE AND CLEARANCE REQUIREMENTS WITH SCHEDULED UNIT BEFORE PURCHASING APPROVED SUBSTITUTION UNIT.

UNIT HEATER SCHEDULE

UNIT	INPUT	CFM	MOTOR		TEMP RISE °F	RECOMMEDNED MOUNTING HT. (FT)	UNIT DATA			WEIGHT (LBS)
			AMPS	VOLT/ PHASE			MAKE	MODEL	TYPE	
UH-1	34,100 BTUH 10 KW	575	48	208V/1PH	55	9'	MARKEL	F1FUH10CA1	HORIZONTAL FAN FORCED	42
UH-2	34,100 BTUH 10 KW	575	48	208V/1PH	55	9'	MARKEL	F1FUH10CA1	HORIZONTAL FAN FORCED	42
UH-3	11,200 BTUH 3.3 KW	400	16	208V/1PH	26	9'	MARKEL	FIFUH03003	HORIZONTAL FAN FORCED	36
UH-4	11,200 BTUH 3.3 KW	400	16	208V/1PH	26	9'	MARKEL	FIFUH03003	HORIZONTAL FAN FORCED	36

NOTES:
1. PROVIDE DISCONNECT, TO BE FIELD MOUNTED BY ELECTRICAL CONTRACTOR
2. UNIT SHALL INCLUDE INTEGRAL THERMOSTAT SET AT 50° F
3. PROVIDE MANUFATURER'S MOUNTING BRACKET UHB-1.
4. UNIT COMES STANDARD WITH COATED EPOXY FINISH FOR COROSSIVE ATMOSPHERES.

STATE OF TEXAS
LYNN C. BROWN
55248
LICENSED PROFESSIONAL ENGINEER
05/11/2016

NO.	DATE	REVISION	CHK	DR	DSGN
			APVD	BY	APVD

DSGN: RICHARD SNIFF
DR: JOHN COFFEEN
CHK: BORIS BLANC
APVD: LYNN BROWN

ENGOTECH FIRM REG. NO. F-10165
TBPE Firm | 8000 Bluffstone Cove, Suite B-103, Austin, Texas 78759 | 512.345.1195 | Project No. 13006.MS.AUS

CH2MHILL.
TBPE FIRM NO. 3699

Montopolis Water Reclamation Initiative (WRI)
Storage Reservoir and Pump Station
2711 Montopolis Drive
Austin Water, Austin, Texas

HVAC
MECHANICAL SCHEDULES

AS SHOWN
VERIFY SCALE
BAR IS ONE INCH ON ORIGINAL DRAWING.
0 1"

DATE	MAY 2016
PROJ	13006.MS.AUS
DWG	ME-3
SHEET	104 of 126

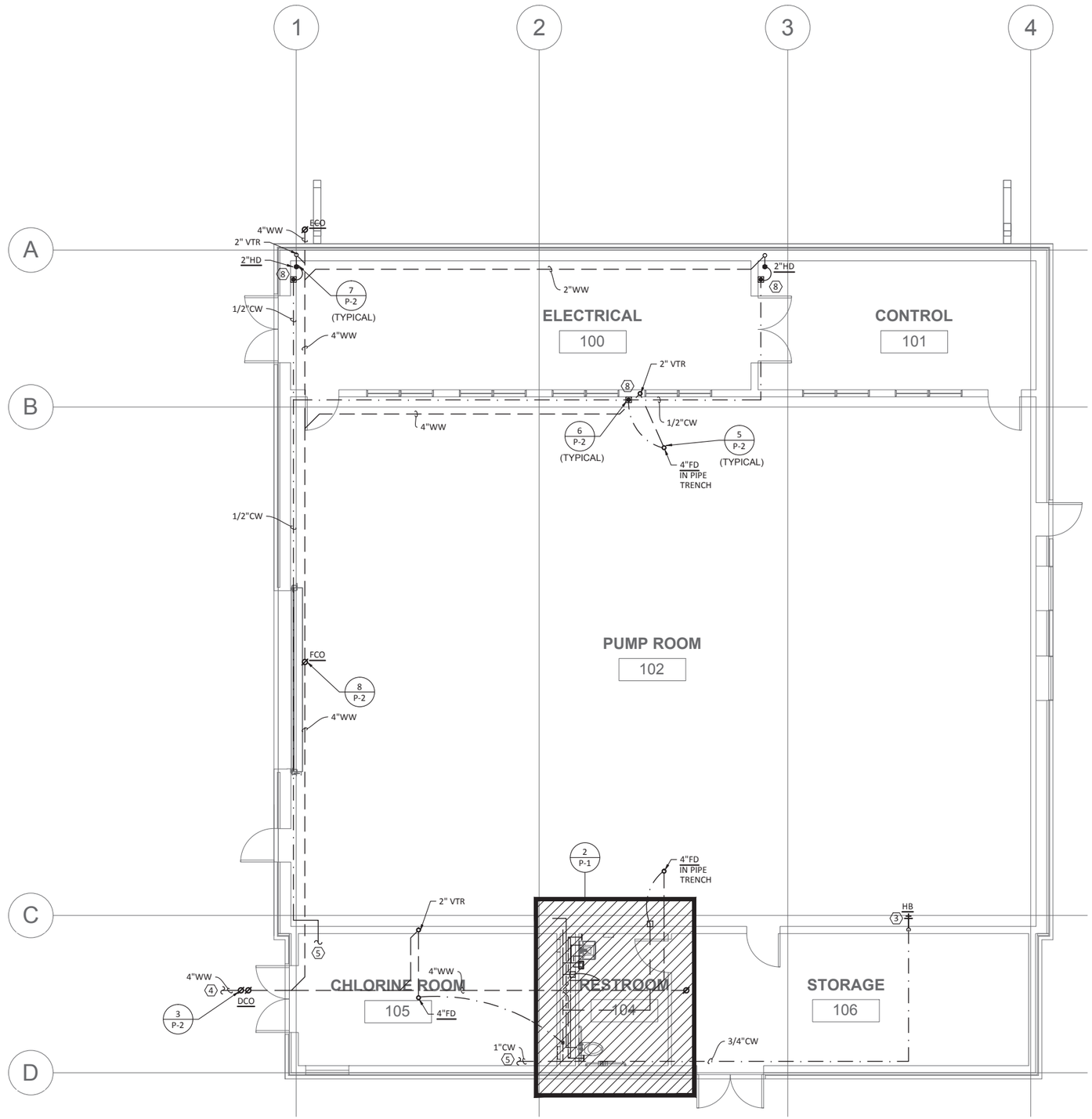

1 PUMP STATION PLUMBING PLAN

SCALE: 3/16" = 1'-0"

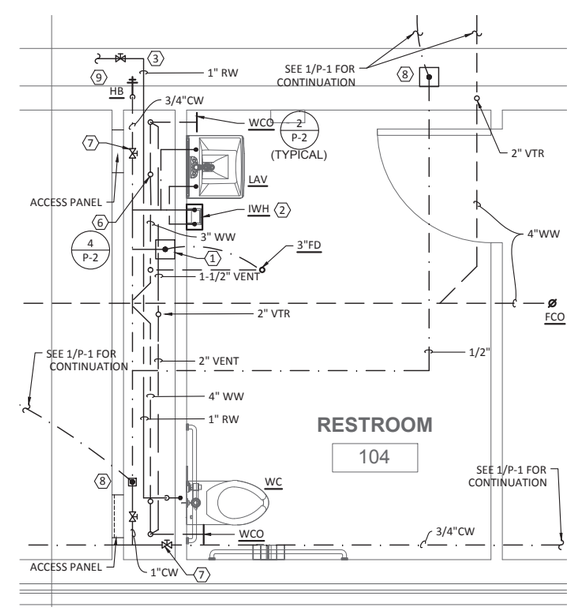

2 ENLARGED RESTROOM PLUMBING PLAN

SCALE: 1/2" = 1'-0"

KEYED NOTES

1. PROVIDE AND INSTALL TRAP PRIMER TO FLOOR DRAIN WITH ACCESSIBLE SHUT-OFF VALVE IN WALL.
2. PROVIDE AND INSTALL WALL MOUNTED INSTANT WATER HEATER BELOW LAVATORY WITH HOT AND COLD WATER SHUT OFF VALVES. COORDINATE WITH ELECTRICAL CONTRACTOR FOR POWER CONNECTION.
3. DROP 3/4" COLD WATER PIPE DOWN IN WALL TO WALL HYDRANT. INSTALL WALL HYDRANT 24" ABOVE FINISHED FLOOR.
4. REFER TO CIVIL ENGINEERING DRAWINGS FOR CONTINUATION OF PIPING.
5. REFER TO SHEET M-2 FOR CONTINUATION OF DOMESTIC WATER PIPING.
6. PROVIDE AND INSTALL TRAP TAILPIECE FOR CONDENSATE PIPING. ROUTE 3/4" INSULATED CONDENSATE PIPING UP IN WALL FROM TAILPIECE TO ABOVE CEILING. COORDINATE WITH MECHANICAL CONTRACTOR FOR FINAL CONNECTION. SEE SHEET P-2 FOR MORE INFORMATION.
7. PROVIDE AND INSTALL ACCESSIBLE SHUT-OFF VALVE FOR HOSE BIBB. COORDINATE WITH OWNER FOR EXACT LOCATION AND REQUIREMENTS PRIOR TO CONSTRUCTION.
8. PROVIDE TRAP PRIMER FOR HUB DRAIN / FLOOR DRAIN WITH PRO SET TRAP GUARD OR EQUIVALENT AND SHUT OFF VALVE SECURE TO WALL.
9. TAP 1" RECYCLED WATER (RW) FOR WATER CLOSET UPSTREAM OF CHLORINATOR TURBIDITY METER W/ SHUTOFF VALVE

SPECIAL NOTES

A. REFER TO PLUMBING GENERAL NOTES ON P-3

B. COORDINATE ALL ROOF PENETRATIONS WITH ARCHITECT AND ROOFING CONTRACTOR.

C. COORDINATE WITH ARCHITECT FOR ALL WALL PENETRATIONS.

D. DO NOT ROUTE PIPING ABOVE ELECTRICAL PANEL.

STATE OF TEXAS
LYNN C. BROWN
55248
LICENSED PROFESSIONAL ENGINEER
05/11/2016

NO.	DATE	REVISION	BY	APVD

DSGN	DR	CHK	APVD
RICHARD SNIFF	JOHN COFFEEN	BORIS BLANC	LYNN BROWN

ENGOTECH CONSULTING, INC.
TBPE Firm | 8000 Bluffstone Cove, Suite B-103, Austin, Texas 78759 | 512-345-7822
Project No. 13006.MS.AUS

Montopolis Water Reclamation Initiative (WRI)
Storage Reservoir and Pump Station
2711 Montopolis Drive
Austin Water, Austin, Texas

CH2MHILL.
TBPE FIRM NO. 3699

PLUMBING
PLUMBING PLAN

AS SHOWN
VERIFY SCALE
BAR IS ONE INCH ON ORIGINAL DRAWING.
0 1"

DATE	MAY 2016
PROJ	13006.MS.AUS
DWG	P-1
SHEET	105 of 126

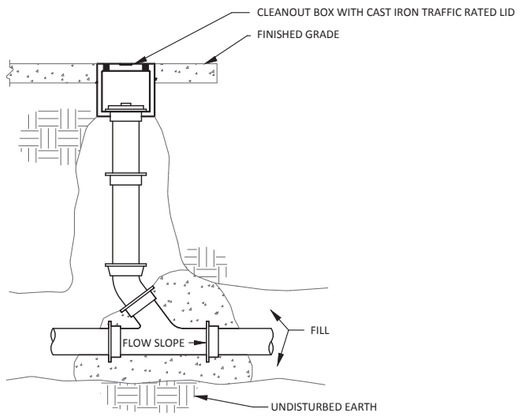

3 EXTERIOR CLEANOUT DETAIL
NOT TO SCALE

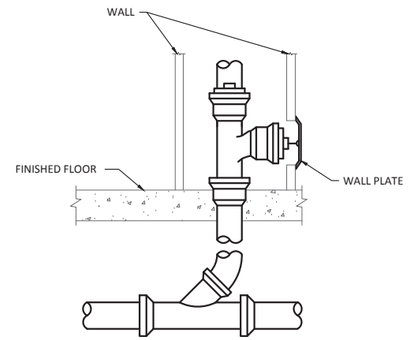

2 WALL CLEANOUT DETAIL
NOT TO SCALE

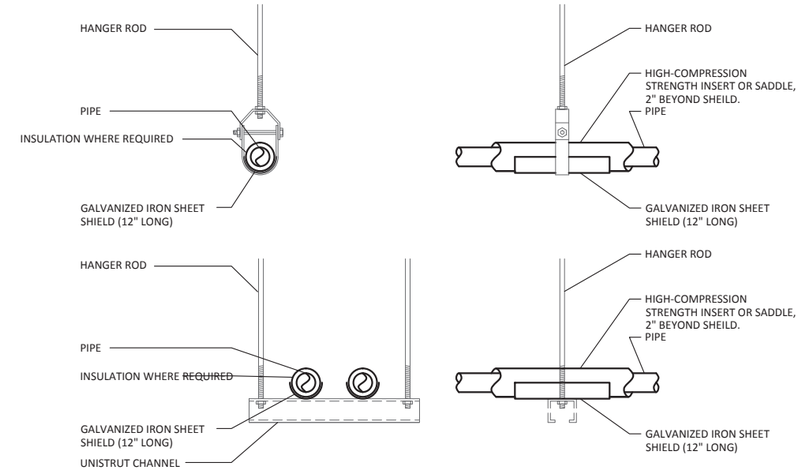

NOTE:
1.
ATTACH SUPPORTS FOR ALL PIPING SUSPENDED FROM THE STEEL STRUCTURE TO THE TOP CORD OF JOISTS OR BEAM.
2.
PROVIDE COPPER OR PLASTIC COATED HANGERS FOR NON-INSULATED COPPER PIPE

1 PIPE HANGERS DETAIL
NOT TO SCALE

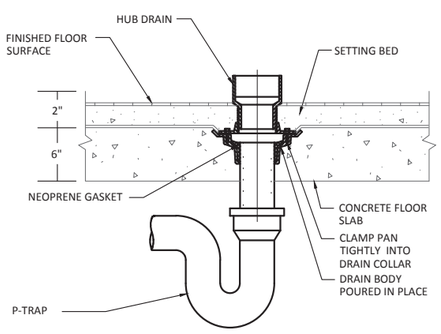

7 HUB DRAIN DETAIL
NOT TO SCALE

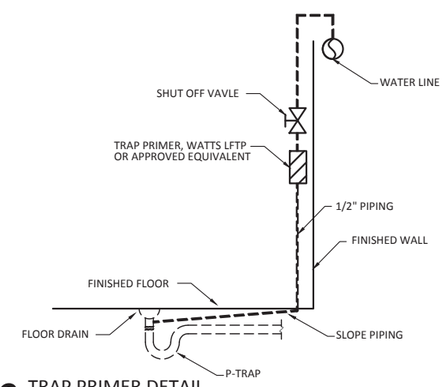

6 TRAP PRIMER DETAIL
NOT TO SCALE

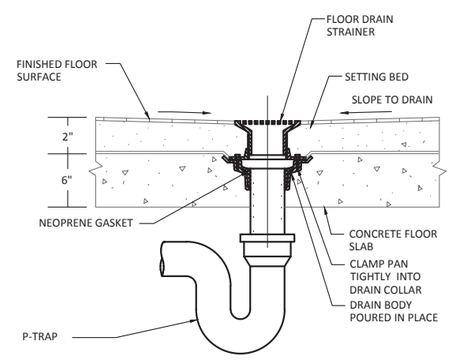

5 FLOOR DRAIN DETAIL
NOT TO SCALE

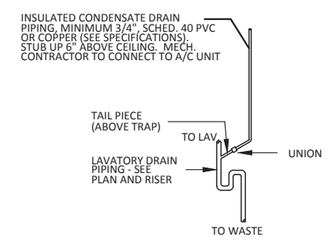

4 CONDENSATE DRAIN - LAVATORY TAILPIECE DETAIL
NOT TO SCALE

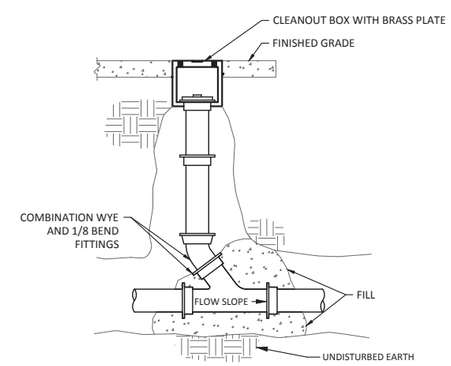

8 FLOOR CLEANOUT DETAIL
NOT TO SCALE

STATE OF TEXAS
LYNN C. BROWN
55248
LICENSED PROFESSIONAL ENGINEER
05/11/2016

NO.	DATE	REVISION	BY	APVD

DSGN RICHARD SNIFF | DR JOHN COFFEEN | CHK BORIS BLANC | APVD LYNN BROWN

ENGOTECH ENGINEERING CONSULTANTS
TBPE Firm Reg. No. F-10153 | TBPLS Firm Reg. No. 10193 | Project No. 13006.MS.AUS
8000 Bluffstone Cove, Suite B-103, Austin, Texas 78759 | 512.346.4448

Montopolis Water Reclamation Initiative (WRI)
Storage Reservoir and Pump Station
2711 Montopolis Drive
Austin Water, Austin, Texas

CH2MHILL.
TBPE FIRM NO. 3699

PLUMBING
PLUMBING DETAILS

AS SHOWN
VERIFY SCALE
BAR IS ONE INCH ON ORIGINAL DRAWING.
0 1"

DATE	MAY 2016
PROJ	13006.MS.AUS
DWG	P-2
SHEET	106 of 126

WATER CALCULATION

WATER CLOSET, FLUSH VALVE	1 x *	F.U. =	40.0 F.U.
LAVATORY	1 x	1.0 F.U. =	1.0 F.U.
FIRST HOSE BIBB	1 x	2.5 F.U. =	2.5 F.U.
ADDITIONAL HOSE BIBBS	1 x	1.0 F.U. =	1.0 F.U.
TOTAL FIXTURE UNITS		=	44.5 F.U.
44.5 FIXTURE UNITS		=	27.6 GPM

HIGHEST FIXTURE = 10 FEET
(10 FT.) x 0.43 = 4.3 PSI STATIC LOSS

HORIZONTAL PIPE LENGTH TAP TO METER	=	10 FEET
HORIZONTAL PIPE LENGTH METER TO BUILDING	=	20 FEET
HORIZONTAL PIPE LENGTH BUILDING TO LAST FIXTURE	=	75 FEET
VERTICAL PIPE LENGTH BUILDING RISE TO HIGHEST FIXTURE	=	10 FEET
TOTAL PIPE LENGTH	=	115 FEET

(115 FT.) x 1.25 (FITTING LOSS) = 144 FEET TOTAL DEVELOPED LENGTH

SIZE	DEVICE		PSI LOSS
1"	METER	=	5.3 PSI
	STATIC	=	4.3 PSI
	FIXTURE (FLUSH VALVE)	=	15.0 PSI
	TOTAL BUILDING LOSS	=	24.6 PSI

PRESSURE AT STREET	=	50.0 PSI
BUILDING LOSS	=	24.6 PSI
DIFFERENCE	=	25.4 PSI

(25.4 / 144) x 100 = 17.7 MAX PSI DROP ALLOWABLE PER 100 FT. PIPE LENGTH

USE 1" METER AND 1" MAIN WATER LINE TO BUILDING

WATER CALCULATION NOTES

- THIS CALCULATION IS BASED ON UNIFORM PLUMBING CODE 2012.
* VERIFY PRESSURE AT TIME OF CONSTRUCTION. IF GREATER THAN 65 PSI PROVIDE AND INSTALL PRESSURE REDUCING VALVE TO REDUCE WATER PRESSURE TO 65 PSI MAXIMUM.

PLUMBING GENERAL NOTES

1. VERIFY ALL DIMENSIONS AT JOBSITE.
2. PLUMBING CONTRACTOR SHALL COMPLY WITH ALL FEDERAL, STATE AND LOCAL CODES AND AUTHORITIES HAVING JURISDICTION, AND MAKE FINAL CONNECTIONS TO FIXTURES AND EQUIPMENT.
3. INSULATE ALL DOMESTIC WATER PIPING SUBJECTED TO FREEZING TEMPERATURE.
4. INSULATE HOT WATER LINES WITH 1" MOLDED FIBERGLASS INSULATION.
5. DO NOT SCALE DRAWINGS. REFER TO ARCHITECTURAL DOCUMENTS FOR EXACT LOCATION OF FIXTURES, EQUIPMENT.
6. ALL WALL HUNG PLUMBING FIXTURES ARE TO BE SUPPORTED BY MEANS OF A CARRIER AS MANUFACTURED BY J.R. SMITH, JOSAM, OR ZURN.
7. PLUMBING CONTRACTOR SHALL COORDINATE ALL PIPING AND EQUIPMENT WITH OTHER TRADES PRIOR TO INSTALLATION OF ANY PIPING OR EQUIPMENT.
8. PLUMBING CONTRACTOR SHALL VERIFY THE EXACT SIZE, LOCATION, DEPTH AND PRESSURE OF ALL EXISTING UTILITY LINES BEFORE COMMENCING WORK.
9. VENT PIPING TO BE 2" UNLESS OTHERWISE NOTED.
10. VENT PENETRATIONS THROUGH ROOF TO HAVE CLEARANCE OF 10 FEET, MINIMUM, FROM ANY INTAKE FOR FRESH AIR.
11. CONTRACTOR SHALL VERIFY THE EXISTING DEPTH, SLOPE, AND PRESSURE OF EXISTING UTILITY LINE BEING TAPPED.
12. COORDINATE ALL WORK WITH OWNER OR REPRESENTATIVES.
13. ALL PIPING SHALL BE RUN CONCEALED UNLESS OTHERWISE NOTED.
14. ALL UNDERGROUND WATER LINES SHALL BE TYPE "K" COPPER TUBING WITH 1/2" ARMAFLEX INSULATION.
15. SANITARY AND WATER SERVICE MAY VARY; SEE SITE PLAN.
16. REFERENCE ARCHITECTURAL DRAWINGS FOR DIMENSIONS AFFECTING THIS WORK.
17. ALL WORK SHALL BE SUBJECT TO THE APPROVAL OF THE ARCHITECT.

PLUMBING MANUFACTURER EQUIVALENT

EQUIPMENT	EQUIVALENT MANUFACTURER	REMARK
WATER CLOSET LAVATORY	- CRANE - AMERICAN STANDARD - KOHLER - ELJER	
FAUCET	- DELTA -SLOAN - KOHLER - AMERICAN STANDARD - CHICAGO FAUCET - T&S BRASS - MOEN	
FLOOR CLEAN OUT FLOOR DRAIN HUB DRAIN FLOOR SINK	- SMITH - JOSAM - WADE - ZURN	
INSTANT WATER HEATER	- STEIBEL ELTRON - EEMAX	
HOSE BIBB	- WOODFORD - ZURN	

PLUMBING SYMBOL LIST

- COLD WATER PIPING
- HOT WATER PIPING
- WASTE WATER PIPING
- VENT PIPING
- RECYCLED WATER PIPING
- SHUT OFF VALVE
- TRAP PRIMER W/ SHUT OFF VALVE
- ECO/FCO • EXTERIOR CLEANOUT / FLOOR CLEANOUT
- DCO • DOUBLE EXTERIOR CLEAN OUT
- WCO • WALL CLEAN OUT
- FD/HD • FLOOR DRAIN / HUB DRAIN
- AIR LOCK
- HB • HOSE BIBB

MARK	CW	HW	VENT	S&W	MODEL NUMBER	DESCRIPTION
WC	1"	-	2"	4"	WATER CLOSET: CRANE MODEL: HYMONT 3H701 (HANDICAP USE) SEAT: CHURCH MODEL: 295SSC FLUSH VALVE: SLOAN MODEL: ROYAL #111	HYMONT, FLOOR MOUNTED, FLUSH VALVE, 1.28 GAL. PER FLUSH, VITREOUS CHINA, ELONGATED BOWL, SIPHON ACTION, BACKFLOW PREVENTER, 1-1/2" TOP SPUD, 17-1/4" HIGH BOWL, HANDICAP ACCESSIBLE OPEN FRONT, SOLID WHITE PLASTIC ELONGATED SEAT WITH STAINLESS STEEL TOP-LOC HINGE.
LAV	1/2"	1/2"	1-1/2"	2"	LAVATORY: CRANE MODEL: HARWICH 1412-S (HANDICAP USE) FAUCET: SLOAN MODEL: ETF-80 MIXING VALVE: LEONARD MODEL 270 LF CONDENSATE TAILPIECE: SIOUX MODEL 213	WALL HUNG, VITREOUS CHINA, 20"x18" BOWL, HANDICAP ACCESSIBLE. INSULATE ALL EXPOSED DRAIN AND WATER PIPING UNDER LAVATORY PER ADA REQUIREMENTS, WITH TRUEBRO MODEL #102 (WHITE), OR EQUIVALENT SENSOR ACTIVATED FAUCET WITH MANUFACTURER'S PLUG-IN LOW VOLTAGE TRANSFORMER, 0.5 GPM AERATOR, TRIM PLATE SET 105degF. PROVIDE AND INSTALL TAILPIECE FOR CONDENSATE DRAIN WHERE NOTED ON PLAN
IWH	1/2"	1/2"	-	-	INSTANT WATER HEATER: STEIBEL ELTRON MODEL: SHC-2.5	MINI TANK WATER HEATER, 140 DEGF WATER TEMPERATURE, 18 MINUTE RECOVERY TIME, 1300 WATTS, 120V, 20 AMP RECEPTACLE ELECTRICAL CONNECTION
FD	1/2"	-	2"	*	FLOOR DRAIN: SMITH MODEL: 2005	FLOOR DRAIN, 6" DIAMETER, NICKEL-BRONZE ADJUSTABLE STRAINER HEAD. ALL FLOOR DRAINS TO BE EQUIPPED WITH TRAP PRIMERS AND PRO SET TRAP GUARD OR EQUIVALENT
FCO	-	-	-	*	FLOOR CLEANOUT: SMITH MODEL: 4020	FINISHED FLOOR CLEANOUTS WITH HEAVY DUTY, ADJUSTABLE, NICKEL-BRONZE TOPS. * SIZE AS PER PIPE SIZE SHOWN.
WCO	-	-	-	*	WALL CLEANOUT: ZURN MODEL: 1441	WALL CLEANOUT SMOOTH ACCESS COVER WITH HEAVY DUTY, ADJUSTABLE, NICKEL-BRONZE TOPS. * SIZE AS PER PIPE SIZE SHOWN.
HB	1/2"	-	-	-	HOSE BIBB: WOODFORD MODEL: 74	EXPOSED, STANDARD WALL HYDRANT, ANTI-SIPHON VACUUM BREAKER, AUTOMATIC DRAIN.

NOTE:
1) PLUMBING FIXTURES, ACCESSORIES AND INSTALLATION SHALL MEET ALL FEDERAL, STATE, ADA AND LOCAL REQUIREMENTS.
* SEE PLAN FOR SIZING.

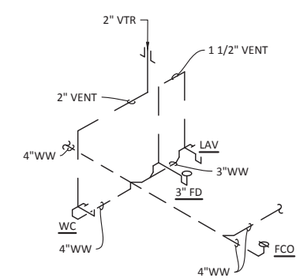

2 SANITARY RISER
NOT TO SCALE

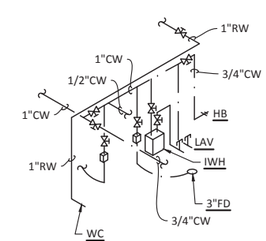

1 DOMESTIC WATER RISER
NOT TO SCALE

STATE OF TEXAS
LYNN C. BROWN
55248
LICENSED PROFESSIONAL ENGINEER
05/11/2016

NO.	DATE	REVISION	BY	APVD

DSGN RICHARD SNIFF | DR JOHN COFFEEN | CHK BORIS BLANC | APVD LYNN BROWN

CH2MHILL.
TBPE FIRM NO. 3699

ENGOTECH FIRM ENTRYPOINT CONSULTANTS
TBPE Firm: 8000 Burthorne Drive, Suite B-100, Austin, Texas 78757 | 512.371.1100
Project No: 13006.MS.AUS

Montopolis Water Reclamation Initiative (WRI)
Storage Reservoir and Pump Station
2711 Montopolis Drive
Austin Water, Austin, Texas

PLUMBING
PLUMBING SCHEDULES

AS SHOWN
VERIFY SCALE
BAR IS ONE INCH ON ORIGINAL DRAWING.
0 1"

DATE	MAY 2016
PROJ	13006.MS.AUS
DWG	P-3
SHEET	107 of 126

SYMBOL	DESCRIPTION
ONE LINE DIAGRAMS-1	
	DRAWOUT AIR CIRCUIT BREAKER, LOW VOLTAGE
400	CIRCUIT BREAKER, THERMAL MAGNETIC TRIP SHOWN, 3 POLE, UNO
AS/AF or AT/AF	CIRCUIT BREAKER, STATIC TRIP UNIT, SENSOR AMP TRIP AND FRAME RATINGS SHOWN, 3 POLE, UNO
100/M	CIRCUIT BREAKER, MAGNETIC TRIP ONLY, TRIP RATING SHOWN, 3 POLE, UNO
400 400	CIRCUIT BREAKER WITH CURRENT LIMITING FUSES, TRIP AND FUSE RATING INDICATED, 3 POLE, UNO
400 225	FUSED SWITCH, SWITCH AND FUSE CURRENT RATING INDICATED, 3 POLE, UNO
100	SWITCH, CURRENT RATING INDICATED, 3 POLE, UNO
60 (3)	FUSE, CURRENT RATING AND QUANTITY INDICATED
1	MAGNETIC STARTER WITH OVERLOAD, NEMA SIZE INDICATED, FVNR UNO
AFD	ELECTRONIC STARTER/SPEED CONTROL RVSS = REDUCED VOLTAGE SOFT STARTER AFD = AC ADJUSTABLE FREQUENCY DRIVE DC = DC ADJUSTABLE SPEED DRIVE RVAT = REDUCED VOLTAGE AUTO TRANSFORMER TYPE RVRT = REDUCED VOLTAGE REACTOR TYPE
	CABLE OR BUS CONNECTION POINT
K	KEY INTERLOCK
	SURGE ARRESTER (GAP TYPE)
10	CAPACITOR - KVAR INDICATED, 3 PHASE
3	AC MOTOR, SQUIRREL CAGE INDUCTION - HORSEPOWER INDICATED
G 500/625	GENERATOR, KW/KVA RATING SHOWN
VS V 0-600V	ANALOG METER WITH SWITCH - SCALE RANGE SHOWN V = VOLTAGE KW = KILOWATTS A = AMPERAGE KVAR = KILOVARS PF = POWER FACTOR
DPM	DIGITAL POWER METER (MULTIFUNCTION)
	UTILITY REVENUE METER
	GROUND
15 KVA 480-120/240V 1 PH	TRANSFORMER, SIZE, VOLTAGE RATINGS, AND PHASE INDICATED
	SHIELDED ISOLATION TRANSFORMER
480-120V (3)	POTENTIAL TRANSFORMER, VOLTAGE RATING AND QUANTITY INDICATED
100:5 (3)	CURRENT TRANSFORMER, RATIO(100:5) AND QUANTITY INDICATED (3)
	CONNECTION POINT TO EQUIPMENT SPECIFIED IN OTHER DIVISIONS. RACEWAY, CONDUCTOR AND CONNECTION IN THIS DIVISION
TVSS	TRANSIENT VOLTAGE SURGE SUPPRESSOR

SYMBOL	DESCRIPTION
ONE LINE DIAGRAMS-2	
	DRAWOUT POWER CIRCUIT BREAKER, MEDIUM VOLTAGE
	NON DRAWOUT FUSED SWITCH, MEDIUM VOLTAGE
	DRAWOUT FUSED SWITCH AND CONTACTOR, MEDIUM VOLTAGE
	DRAWOUT FUSED SWITCH AND VACUUM CONTACTOR, MEDIUM VOLTAGE
	DRAWOUT VACUUM CONTACTOR, MEDIUM VOLTAGE
	MEDIUM VOLTAGE CABLE STRESS CONE TYPE TERMINATION, OPEN TERMINATOR OR ELBOW
	SWITCH - LOAD BREAK, GROUP OPERATED, MEDIUM VOLTAGE
	SWITCH W/ARCING HORNS, MEDIUM VOLTAGE
	DISCONNECTING FUSE - SOLID MATERIAL, MEDIUM VOLTAGE
	SWITCH - HOOK STICK OPERATED, SINGLE POLE, MEDIUM VOLTAGE
	FUSE - EXPULSION, HOOK STICK OPERATED, SINGLE POLE, MEDIUM VOLTAGE
	GROUND SWITCH, GANG OPERATED
	TERMINAL BLOCK LUG
	DELTA CONNECTION
	WYE GROUNDED CONNECTION, SOLID GROUND
R or Z	WYE NEUTRAL GROUND RESISTOR OR IMPEDANCE CONNECTION
86	RELAY OR DEVICE, FUNCTION NUMBER AS INDICATED
50:5 (1)	CURRENT TRANSFORMER, ZERO SEQUENCE, RATIO AND QUANTITY INDICATED
800/1200:5 (3)	BUSHING CURRENT TRANSFORMER, MULTI-RATIO AND QUANTITY INDICATED
MO	MOTOR OPERATOR, BREAKER OR SWITCH
EUM	ENERGY MONITORING UNIT
MRP	MOTOR PROTECTION RELAY

NOTES:

1. THESE ARE STANDARD LEGEND SHEETS. SOME SYMBOLS AND ABBREVIATIONS MAY APPEAR ON THE LEGEND AND NOT ON THE DRAWINGS.
2. FOR ADDITIONAL ABBREVIATIONS OF OTHER DIVISIONS (HVAC, MECHANICAL, AND STRUCTURAL/ARCHITECTURAL) SEE OTHER LEGENDS.

SYMBOL	DESCRIPTION
CONTROL DIAGRAMS-1	
	PUSH-BUTTON SWITCH, MOMENTARY CONTACT, NORMALLY OPEN
	PUSH-BUTTON SWITCH, MOMENTARY CONTACT, NORMALLY CLOSED
	PUSH BUTTON SWITCH, MAINTAINED CONTACTS WITH MECHANICAL INTERLOCK
	3 POSITION SELECTOR SWITCH MAINTAINED CONTACT
HAND OFF REMOTE	SELECTOR SWITCH - MAINTAINED CONTACT - CHART IDENTIFIES OPERATION WHEN NEEDED FOR CLARITY:

	POSITION		
CKT	HAND	OFF	REMOTE
1	X	O	O
2	O	O	X

X - CLOSED CONTACT
O - OPEN CONTACT

SYMBOL	DESCRIPTION
	TOGGLE SWITCH, ON-OFF TYPE
ON OFF	SELECTOR SWITCH, ON-OFF TYPE
	MUSHROOM HEAD PUSHBUTTON SWITCH
A	INDICATING LIGHT, PUSH-TO-TEST, LETTER INDICATES COLOR
A	INDICATING LIGHT - LETTER INDICATES COLOR A - AMBER G - GREEN S - STROBE B - BLUE R - RED C - CLEAR W - WHITE
ETM	ELAPSED TIME METER
M	MOTOR STARTER CONTACTOR COIL
CRX	CONTROL RELAY, X INDICATES NUMERICAL ORDER IN CIRCUIT
TDR X	TIME DELAY RELAY, X INDICATES NUMERICAL ORDER IN CIRCUIT
SV X	SOLENOID VALVE, X INDICATES NUMERICAL ORDER IN CIRCUIT
	CONTACT - NORMALLY OPEN
	CONTACT - NORMALLY CLOSED
	REMOTE DEVICE
	TIME DELAY RELAY CONTACT, NORMALLY OPEN, CLOSES WHEN ENERGIZED AND TIMED OUT
	TIME DELAY RELAY CONTACT, NORMALLY CLOSED, OPENS WHEN ENERGIZED AND TIMED OUT
	TIME DELAY RELAY CONTACT, NORMALLY OPEN, CLOSES WHEN ENERGIZED, OPENS WHEN DE-ENERGIZED AND TIMED OUT
	TIME DELAY RELAY CONTACT, NORMALLY CLOSED, OPENS WHEN ENERGIZED, CLOSES WHEN DE-ENERGIZED AND TIMED OUT
	MOTOR SPACE HEATER
	TERMINAL BLOCK, REMOTE
	TERMINAL BLOCK, INTERNAL
	FUSED TERMINAL BLOCK
	FUSE, RATING INDICATED
CPT 120V	TRANSFORMER, CONTROL POWER
	THERMOCOUPLE

SYMBOL	DESCRIPTION
CONTROL DIAGRAMS-2	
	CAPACITOR
+ −	BATTERY
	LIMIT SWITCH, NORMALLY OPEN, CLOSES AT END OF TRAVEL
	LIMIT SWITCH, NORMALLY CLOSED, OPENS AT END OF TRAVEL
	TEMPERATURE SWITCH, NORMALLY CLOSED, OPENS ON TEMPERATURE RISE
	TEMPERATURE SWITCH, NORMALLY OPEN, CLOSES ON TEMPERATURE RISE
	FLOAT SWITCH, NORMALLY CLOSED, HELD OPEN WHEN SUBMERSED, CLOSES ON DESCENDING LEVEL
	FLOAT SWITCH, NORMALLY OPEN, CLOSES ON RISING LEVEL
	PRESSURE SWITCH, NORMALLY CLOSED, OPENS ON RISING PRESSURE
	PRESSURE SWITCH, NORMALLY OPEN, CLOSES ON RISING PRESSURE
	FLOW SWITCH, NORMALLY OPEN, CLOSES ON INCREASED FLOW
	FLOW SWITCH, NORMALLY CLOSED, OPENS ON INCREASED FLOW
NGR	NEUTRAL GROUND CURRENT LIMITING RESISTOR
RES	CALIBRATING RESISTOR
T GEN	TACHOMETER GENERATOR
GFS	GROUND FAULT SENSOR
	FLASHER
	SEALED CONTACT
	BUZZER
	POTENTIOMETER
	RESISTOR
	BLOWN FUSE INDICATOR
	COAXIAL CABLE
	MULTICONDUCTOR SHIELDED CABLE
	DUPLEX RECEPTACLE
L U	RELAY, WITH MECHANICAL LATCH
	FULLWAVE DIODE BRIDGE (AC TO DC)

STATE OF TEXAS
JAMES M. O'CONNOR
83116
LICENSED
PROFESSIONAL ENGINEER
5/11/2016

NO.	DATE	REVISION	DR	CHK	BY	APVD
DSGN	J O'CONNOR	W KENAS	J JENKINS	APVD	J O'CONNOR	

Montopolis Water Reclamation Initiave (WRI)
Storage Reservoir and Pump Station
2711 Montopolis Drive
Austin Water, Austin, Texas

CH2MHILL®
TBPE FIRM NO. 3699

ELECTRICAL
LEGEND NO. 1

NTS
VERIFY SCALE
BAR IS ONE INCH ON ORIGINAL DRAWING.
0 1"

DATE	MAY 2016
PROJ	472902
DWG	E-1
SHEET	108 of 126

SYMBOL	DESCRIPTION

POWER SYSTEM PLAN-1

	CONNECTION POINT TO EQUIPMENT SPECIFIED. RACEWAY, CONDUCTOR,TERMINATION AND CONNECTION IN THIS DIVISION.
MCC-A	MAJOR ELECTRICAL COMPONENT OR DEVICE - NAME OR IDENTIFYING SYMBOL AS SHOWN.
LPXXA	PANELBOARD - SURFACE MOUNTED
	PANELBOARD LETTER OR NUMBER
	FACILITY NUMBER
	LP - LOW VOLTAGE PANEL DP - DISTRIBUTION PANEL
	PANELBOARD - FLUSH MOUNTED
	TERMINAL JUNCTION BOX
M	MOTOR, SQUIRREL CAGE INDUCTION
G	GENERATOR, VOLTAGE AND SIZE AS INDICATED.
LPXXA	HOME RUN - DESTINATION SHOWN
or G	EXPOSED CONDUIT AND CONDUCTORS*
or G	UNDERGROUND CONDUIT AND CONDUCTORS* (FOR ALL OR PART OF THE CONDUIT RUN)

NOTE:
ALL UNMARKED CONDUIT RUNS CONSIST OF TWO NO. 12, ONE NO. 12 GROUND CONDUCTORS IN 3/4" CONDUIT. RUNS MARKED WITH CROSSHATCHES INDICATE NUMBER OF NO. 12 CONDUCTORS. CROSSHATCH WITH SUBSCRIPT "G" INDICATES GREEN GROUND WIRE.

G	CROSSHATCHES WITH BAR INDICATE NO.10 CONDUCTOR. SIZE CONDUIT ACCORDING TO SPECIFICATIONS AND APPLICABLE CODE.
[A1]	CONDUIT AND CONDUCTOR CALLOUT, SEE LEGEND.
X	CALLOUT TO CONDUIT AND CONDUCTOR SCHEDULE
	CONDUIT DOWN
	CONDUIT UP
G	DIRECT BURIED BARE 4/0 CU, 36-INCHES DEEP
	CONDUIT, STUBBED AND CAPPED
	CONDUIT TERMINATION AT CABLE TRAY
EX	EXISTING CONDUIT/ DUCT BANK
BD	BUS DUCT - SEE SPECIFICATIONS
CE	CONCRETE ENCASED CONDUIT
DB	DIRECT BURIED CONDUIT
FO	FIBER OPTIC CONDUIT
XXXX	CONCRETE ENCASED DUCT BANK WHERE XXXX IS THE DUCT BANK NAME. SEE CIRCUIT AND RACEWAY CODING DEFINITION
	CONCEALED CONDUIT ROUTING AREA
	CONDUIT ROUTING AREA
	CABLE TRAY
T	TRANSFORMER
HH	UNDERGROUND HANDHOLE
J	JUNCTION
CS	CONTROL STATION, SEE CONTROL DIAGRAMS FOR CONTROL DEVICE(S) REQUIRED.
30 XX	NONFUSED DISCONNECT SWITCH, CURRENT RATING INDICATED, 3 POLE, XX- NEMA RATING
60/40	FUSED DISCONNECT SWITCH, CURRENT RATING INDICATED (60/40, 60=SWITCH RATING / 40=FUSE RATING) 3 POLE
2	COMBINATION CIRCUIT BREAKER AND MAGNETIC STARTER, NEMA SIZE INDICATED

POWER SYSTEM PLAN-2

100/40	BREAKER, SEPARATELY MOUNTED, CURRENT RATING INDICATED (100/40, 100 = FRAME SIZE; 40 = TRIP RATING) 3 POLE
C 2	CONTACTOR, MAGNETIC, NEMA SIZE INDICATED
L 30	LIGHTING CONTACTOR, CURRENT RATING INDICATED
2	STARTER, MAGNETIC NEMA SIZE INDICATED
XX 2	CONVENIENCE RECEPTACLE - DUPLEX UNLESS NOTED OTHERWISE WP - WEATHERPROOF C - CLOCK HANGER TL - TWIST LOCK CRE - CORROSION RESISTANT GFCI - GROUND FAULT CIRCUIT INTERRUPTER SUBSCRIPT NUMBER AT RECEPTACLE INDICATES CIRCUIT
	240V RECEPTACLE
	CONVENIENCE RECEPTACLE - QUADRUPLEX
	MULTI OUTLET ASSEMBLY
	DUPLEX CONVENIENCE RECEPTACLE - FLUSH IN FLOOR
	CONVENIENCE RECEPTACLE, PEDESTAL, DUPLEX SINGLE FACE UNLESS INDICATED OTHERWISE
L20R 20	RECEPTACLE, SPECIAL PURPOSE-NEMA CONFIGURATION AND AMPERAGE INDICATED
T	THERMOSTAT
	UTILITY REVENUE METERING FACILITY
P	PHONE OUTLET / BOX
EUH	ELECTRIC UNIT HEATER
AC	ELECTRIC AIR CONDITIONER (SELF CONTAINED UNIT)
	UTILITY POLE

LIGHTING SYSTEM PLAN

1 or 1	LUMINAIRE, SEE SCHEDULE
1	LUMINAIRE, SEE SCHEDULE
1 or	LUMINAIRE WITH INTERNAL BATTERY BACKUP, SEE SCHEDULE
1	STRIP LUMINAIRE, SEE SCHEDULE
4 or 4	LUMINAIRE AND POLE, SEE SCHEDULE
5 or 5	WALL MOUNTED LUMINAIRE, SEE SCHEDULE
1	FLOOD LIGHTS - AIM IN THE DIRECTION SHOWN
	STANDBY LIGHTING UNIT, SURFACE MOUNTED, SEE SCHEDULE
XX or	EXIT LIGHTS - FILLED SECTION INDICATES LIGHTED FACE, ARROW INDICATES EGRESS DIRECTIONAL INDICATORS, XX = FIXTURE NUMBER, SEE SCHEDULE
$a or 2a	SMALL LETTER SUBSCRIPT AT SWITCH AND LUMINAIRE INDICATES SWITCHING. SUBSCRIPT NUMBER AT LUMINAIRE INDICATES CIRCUIT
$3	WALL SWITCH: 2- DOUBLE POLE P- PILOT LIGHT 3- THREE WAY K- KEY OPERATED 4- FOUR WAY D- DIMMER WP- WEATHERPROOF CRE- CORROSION RESISTANT EX- EXPLOSIONPROOF L- MOMENTARY 3-WAY M- MANUAL STARTER (1-POLE) MS- MANUAL STARTER WITH OVERLOADS
OS	OCCUPANCY SENSOR
LC	LIGHTING CONTACTOR
MD	MOTION DETECTOR
PC	PHOTOCELL

POWER SYSTEM PLAN-3

29	UNDERGROUND CONCRETE ENCASED DUCTBANK TAG. TAG NUMBER AS INDICATED.
	FADED LINES REPRESENT EXISTING WORK
	DARK LINES REPRESENT NEW WORK
	GROUND ROD IN GROUND WELL BOX
G	UNDERGROUND GROUND CABLE SPLICE EXOTHERMIC WELD

GENERAL NOTES:

1. NOT ALL SYMBOLS ARE USED ON DRAWINGS.

ONE LINE PROTECTION RELAYING AND ELEMENTARY DIAGRAMS-1

51 or 52	DEVICE FUNCTION NUMBER INDICATED, SEE DEVICE TABLE
CS T	CONTROL SWITCH TRIP
CS C	CONTROL SWITCH CLOSE
43/CS	43-DEVICE FUNCTION NUMBER, SEE DEVICE TABLE
VS	VOLTMETER SWITCH
AS	AMMETER SWITCH
A	INDICATING LAMP-SWITCHBOARD TYPE INDICATING LAMP LENS COLORS INDICATED AS FOLLOWS: A - AMBER R - RED B - BLUE W - WHITE G - GREEN
V	VOLTMETER
A	AMMETER
W	WATTMETER
F	FREQUENCY METER
PF	POWER FACTOR METER
WH	WATT-HOUR METER
ETM	ELAPSED TIME METER
RPM	TACHOMETER
W XD	WATTS TRANSDUCER
PF XD	POWER FACTOR TRANSDUCER
TD	TIME DELAY
4	RELAY COIL, DEVICE FUNCTION NUMBER PER ANSI 37.2 - AMERICAN STANDARD MANUAL AND AUTOMATIC STATION CONTROL, SUPERVISORY AND ASSOCIATED TELEMETRY EQUIPMENT
7 8	NORMALLY OPEN CONTACT
3 4	NORMALLY CLOSED CONTACT
	REMOTE DEVICE
	TEST SWITCH CURRENT ELEMENT
	TEST SWITCH POTENTIAL ELEMENT
	NEUTRAL CONNECTION
	DIODE
	INSTRUMENTATION CABLE, SHIELDED
NGR	NEUTRAL GROUNDING RESISTOR
PST	PHASE SHIFTING TRANSFORMER

STATE OF TEXAS
JAMES M. O'CONNOR
83116
LICENSED
PROFESSIONAL ENGINEER
5/11/2016

NO.	DSGN	DATE	DR	REVISION	CHK	BY	APVD
	J O'CONNOR		W KENAS		J JENKINS	J O'CONNOR	APVD

Montopolis Water Reclamation Initiave (WRI)
Storage Reservoir and Pump Station
2711 Montopolis Drive
Austin Water, Austin, Texas

CH2MHILL®
TBPE FIRM NO. 3699

ELECTRICAL
LEGEND NO. 2

NTS
VERIFY SCALE
BAR IS ONE INCH ON ORIGINAL DRAWING.
0 1"

DATE	MAY 2016
PROJ	472902
DWG	E-2
SHEET	109 of 126

NOTES:

1. GROUND CONNECTION TO LADDER AND HATCH. NUMBER OF GROUND CONDUCTORS AS REQUIRED. BOND ALL OTHER METAL COMPONENTS OF TANK TO GROUND GRID.
2. BOND BUILDING STEEL AND FOUNDATION TO GROUND GRID AT BUILDING CORNERS.
3. PROVIDE GROUND PLATES AT BUILDING CORNERS AND BOND TO GROUND GRID. TYPICAL OF FOUR. THE GROUND PLATE SHALL BE ERICO, ERITECH, PART NO. GPECEEK0362Q060 OR EQUAL,
4. FOR ALL LOCATIONS WHERE GROUNDING CONDUCTOR PENITATES THE CONCRETE SLAB, PROVIDE A 1 1/4" PVC CONDUIT AS SLEEVE PER DETAIL 2605-310
5. STUB CONDUITS FOR FUTURE SECOND POWER SOURCE OUTSIDE BUILDING AS SHOWN HERE AND ON ONE-LINE DIAGRAM. INSTALL PULL STRING IN EACH CONDUIT AND PROVIDE PERMANENT REMOVABLE CAPS ON BOTH ENDS OF ALL CONDUITS.
6. THE CONDUCTOR FOR THE MAIN GROUND GRID SHALL BE 4/0 AWG BARE. LEADERS FROM THE MAIN GROUND GRID CONDUCTOR TO STRUCTURES, EQUIPMENT, MCC AND PANELS SHALL BE 1/0 AWG BARE.
7. TRANSITION DUCT BANK AND GROUND GRID CONDUCTOR DEEPER TO MAINTAIN MINIMUM DEPTH IN THE AREA OF THE RETAINING WALL AND ASSOCIATED TRANSITION IN GRADE.

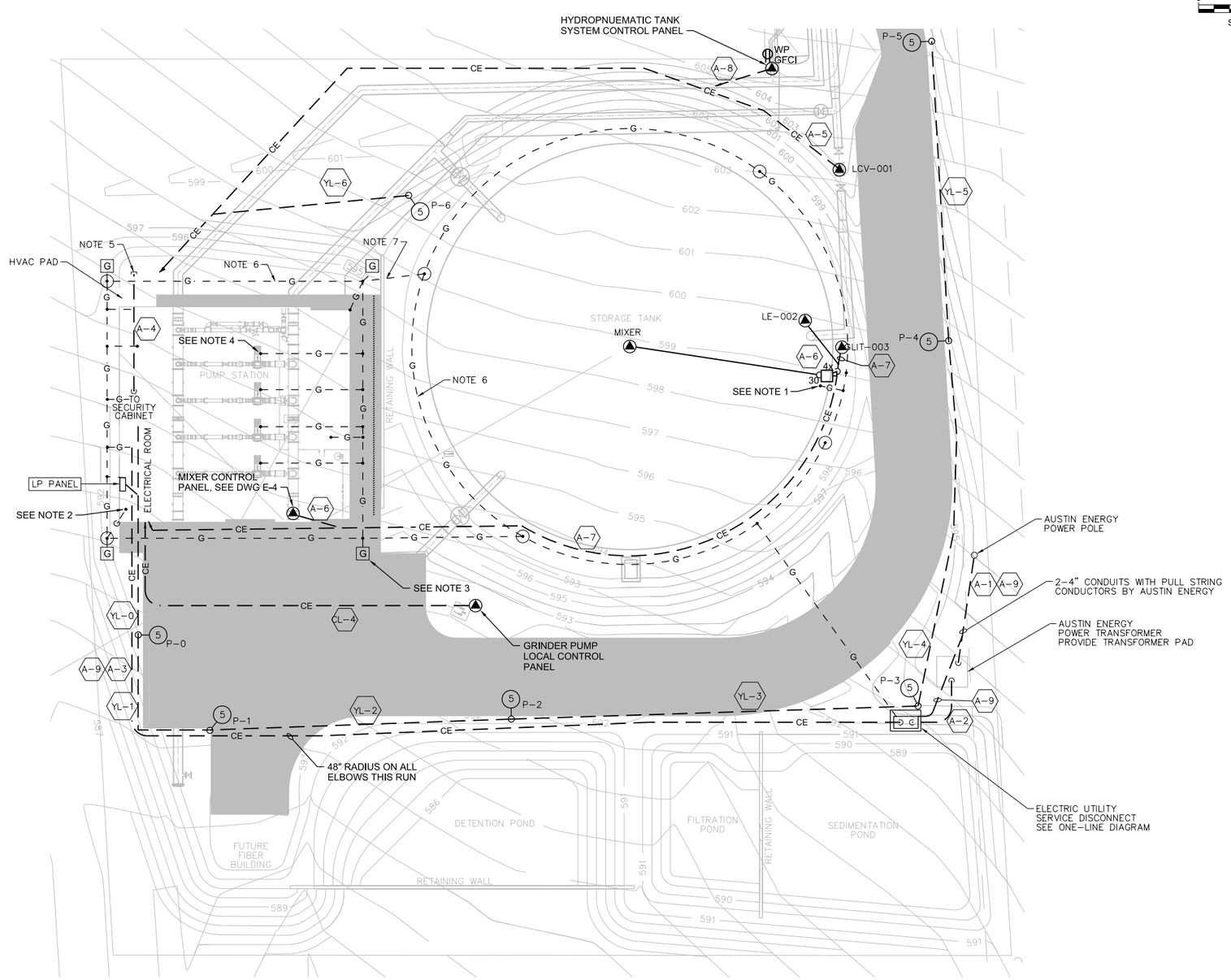

0 20' 40'
SCALE: 1" = 20'

STATE OF TEXAS
JAMES M. O'CONNOR
83116
LICENSED
PROFESSIONAL ENGINEER
5/11/2016

NO.	DATE	REVISION	BY	APVD

DSGN J O'CONNOR | DR J EFAW | CHK J JENKINS | APVD J O'CONNOR

Montopolis Water Reclamation Initiave (WRI)
Storage Reservoir and Pump Station
2711 Montopolis Drive
Austin Water, Austin, Texas

CH2MHILL®
TBPE FIRM NO. 3689

ELECTRICAL
SITE PLAN

NTS
VERIFY SCALE
BAR IS ONE INCH ON ORIGINAL DRAWING.
0 1"

DATE	MAY 2016
PROJ	472902
DWG	E-3
SHEET	110 of 126

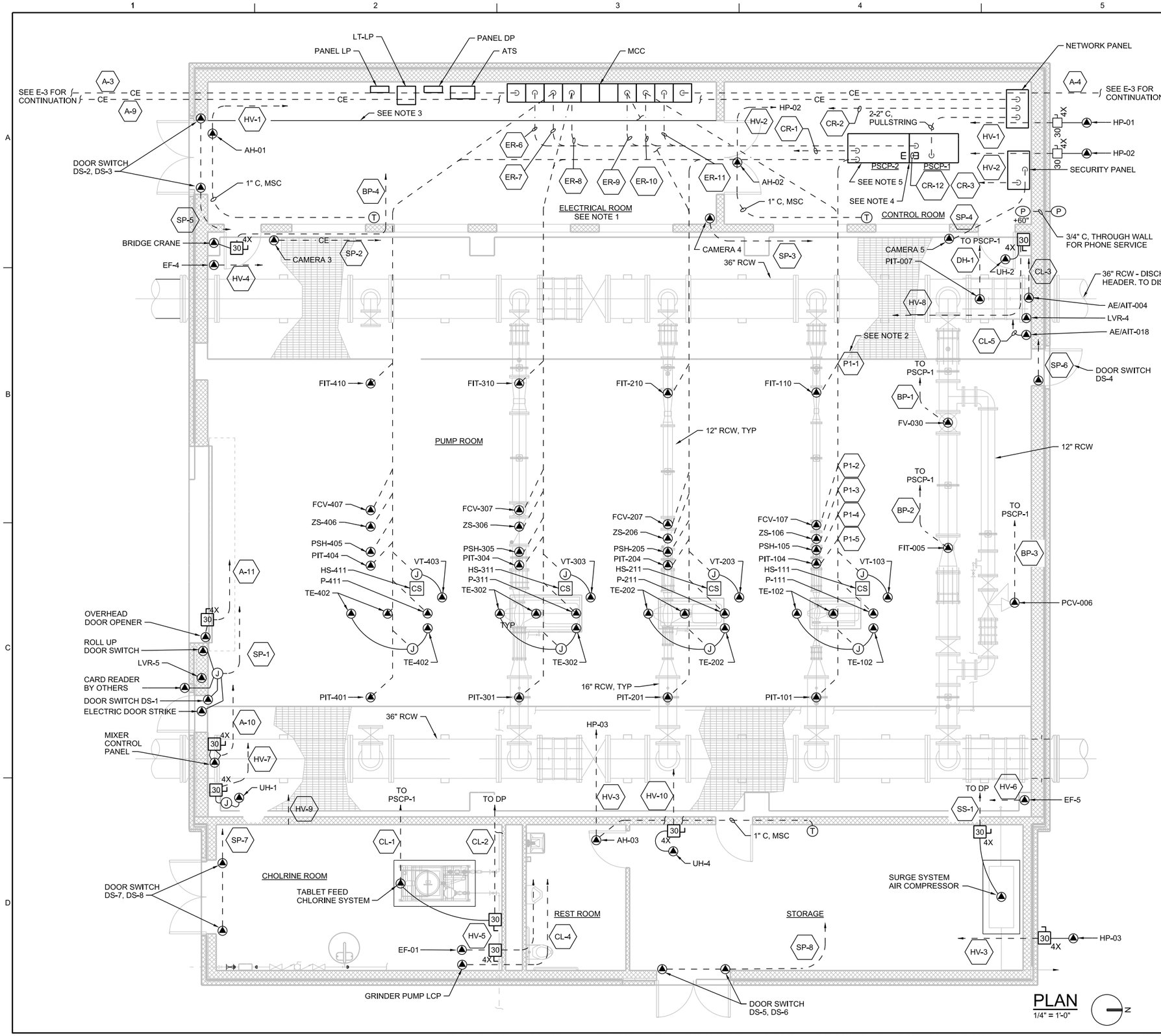

PLAN
1/4" = 1'-0"

NOTES:

1. SEE ONE-LINE DIAGRAM FOR CONDUIT AND CONDUCTORS IN ELECTRICAL ROOM.
2. CONDUIT AND CONDUCTOR CALLOUTS FOR PUMP NO. 1 ASSOCIATED DEVICES START AT P1-1 THROUGH P1-X FROM TOP TO BOTTOM ON SHEET. PUMP NO. 2 CONDUIT AND CONDUCTOR CALLOUTS ARE NUMBERED P2-1 THROUGH P2-X. SIMILAR FOR PUMPS 3 AND 4. SEE CONDUIT AND CONDUCTOR SCHEDULE FOR DETAILED INFORMATION.
3. PROVIDE EQUIPMENT PAD THE LENGTH OF THE ELECTRIC ROOM AS SHOWN. SEE 0330-056
4. PROVIDE EQUIPMENT PAD (S) FOR ALL FREE STANDING EQUIPMENT OR ENCLOSURE IN THE CONTROL ROOM. SEE 0330-056
5. FOR PSCP-2 PANEL LAYOUT, SEE 1 / E-7

STATE OF TEXAS
JAMES M. O'CONNOR
83116
LICENSED
PROFESSIONAL ENGINEER
5/11/2016

NO.	DATE	REVISION	BY	APVD
DSGN	J O'CONNER	DR	J EFAW	CHK	J JENKINS	APVD	J O'CONNOR

Montopolis Water Reclamation Initiative (WRI)
Storage Reservoir and Pump Station
2711 Montopolis Drive
Austin Water, Austin, Texas

CH2MHILL®
TBPE FIRM NO. 9699

ELECTRICAL
PUMP STATION POWER PLAN

3/8"=1'-0"
VERIFY SCALE
BAR IS ONE INCH ON ORIGINAL DRAWING.
0 1"

DATE	MAY 2016
PROJ	472902
DWG	E-4
SHEET	111 of 126

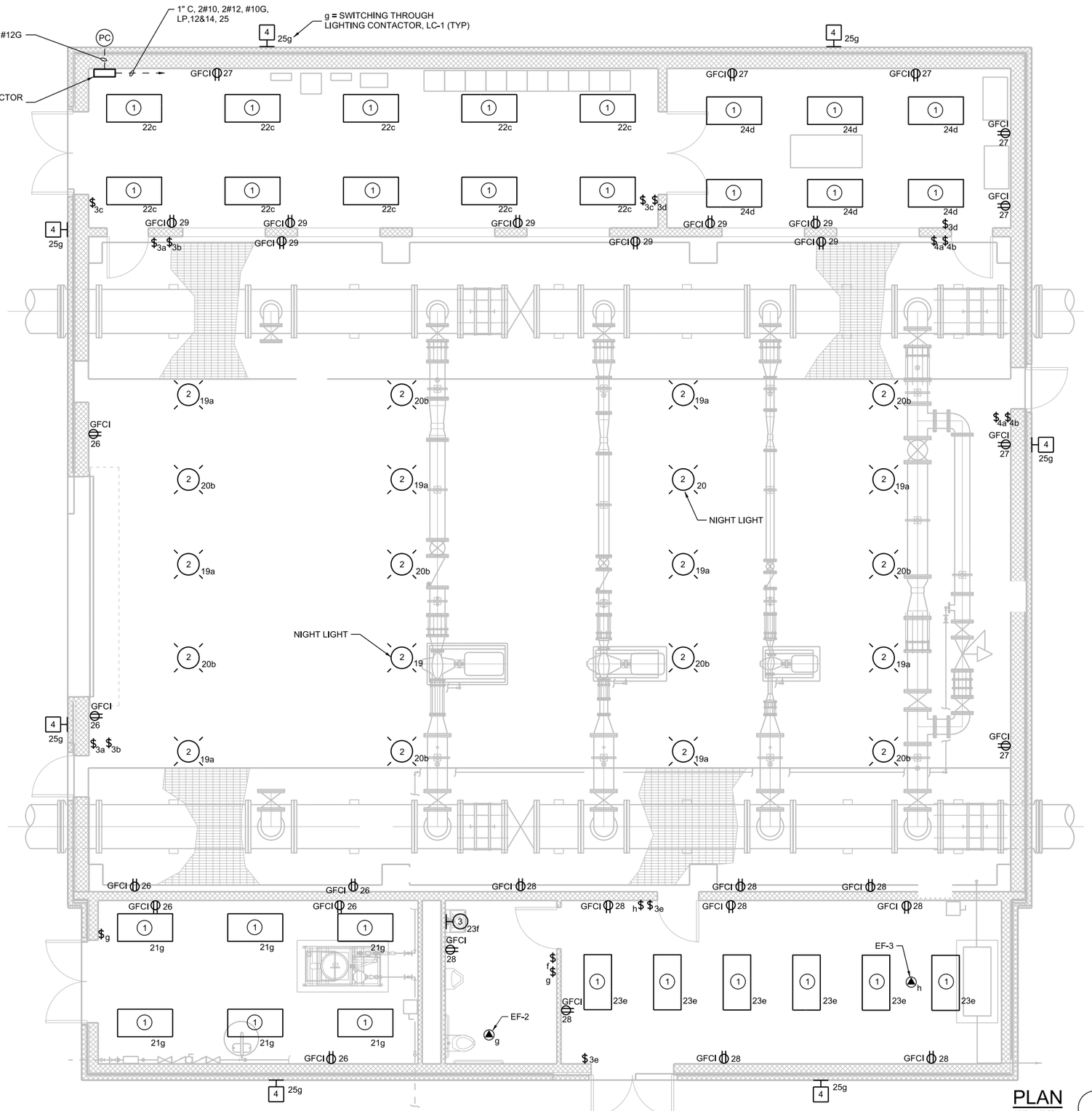

PLAN

1/4" = 1'-0"

GENERAL NOTES:

1. CONDUIT AND CONDUCTORS FOR LIGHTING AND RECEPTACLES NOT SHOWN FOR CLARITY. CONTRACTOR RESPONSIBLE TO PROVIDE CONDUIT AND CONDUCTORS IN ACCORDANCE WITH LOCAL AND NATIONAL CODES BASED ON THE CIRCUIT BREAKERS SHOWN IN PANEL SCHEDULES AND SWITCHING FUNCTIONS SHOWN.

2. RECEPTACLES IN ELECTRIC AND CONTROL ROOMS SHALL BE MOUNTED AT 18-INCHES TO BOTTOM OF BOX AND ALL OTHER RECEPTACLES MOUNTED AT 48-INCHES TO BOTTOM OF BOX.

STATE OF TEXAS
JAMES M. O'CONNOR
83116
LICENSED
PROFESSIONAL ENGINEER
5/11/2016

NO.	DATE	REVISION	BY	APVD

DSGN J O'CONNER | DR J EFAW | CHK J JENKINS | APVD J O'CONNOR

Montopolis Water Reclamation Initiave (WRI)
Storage Reservoir and Pump Station
2711 Montopolis Drive
Austin Water, Austin, Texas

CH2MHILL®
TBPE FIRM NO. 3889

ELECTRICAL
PUMP STATION
ELECTRICAL PLAN

3/8"=1'-0"
VERIFY SCALE
BAR IS ONE INCH ON ORIGINAL DRAWING.
0 1"

DATE	MAY 2016
PROJ	472902
DWG	E-5
SHEET	112 of 126

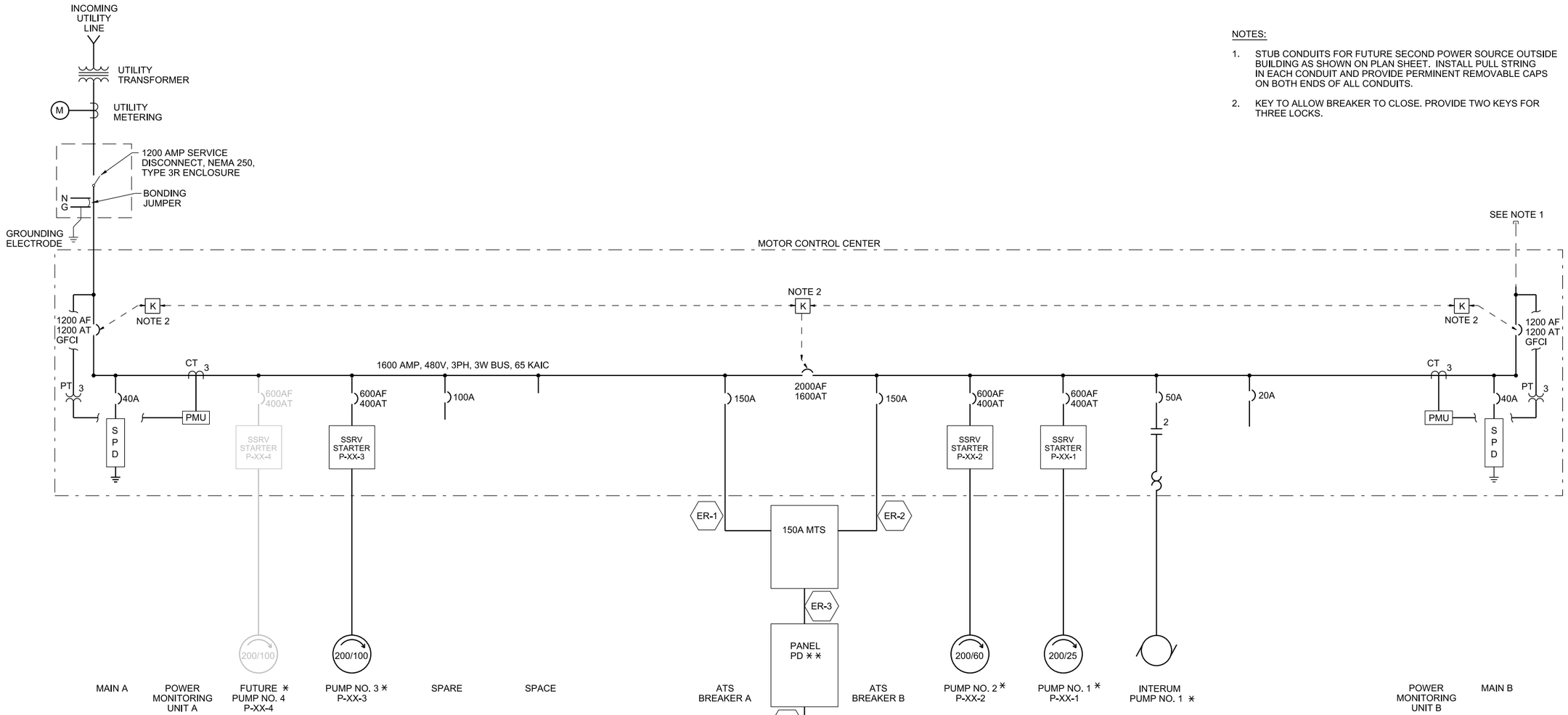

NOTES:

1. STUB CONDUITS FOR FUTURE SECOND POWER SOURCE OUTSIDE BUILDING AS SHOWN ON PLAN SHEET. INSTALL PULL STRING IN EACH CONDUIT AND PROVIDE PERMINENT REMOVABLE CAPS ON BOTH ENDS OF ALL CONDUITS.
2. KEY TO ALLOW BREAKER TO CLOSE. PROVIDE TWO KEYS FOR THREE LOCKS.

* INDICATES AN INITIAL PUMP SIZE WITH PREVISIONS FOR THE EVENTUAL PUMP SIZE SHOWN. PUMP NO. 1 INITIAL RATING SHALL BE 30-HP WITH A NEMA SIZE 3 FVNR STARTER IN SECTION 9 AND PREVISIONS FOR THE EVENTUAL PUMP RATED FOR 200-HP WITH A SSRV STARTER IN SECTION 8. PUMP NO. 2 INITIAL RATING SHALL BE 60-HP WITH A NEMA SIZE 4 FVNR STARTER IN SECTION 7 AND PREVISIONS FOR THE EVENTUAL PUMP RATED FOR 200-HP WITH A SSRV STARTER IN SECTION 7. THE PREVISIONS ARE FOR THE REMOVAL OF THE SIZE 4 STARTERS AND THE INSTALLATION OF SSRV STARTERS. PUMP NO. 3 INITIAL RATING SHALL BE 100-HP WITH A NEMA SIZE 4 FVNR STARTER IN SECTION 4 WITH PROVISIONS FOR INSTALLATION OF A SSRV STARTER RATED FOR THE EVENTUAL 200-HP PUMP PROVIDED UNDER THIS CONTRACT. PROVIDE POWER FACTOR CORRECTION CAPACITORS ON INDIVIDUAL PUMP MOTOR STARTERS TO MAINTAIN POWER FACTOR AT 90-PERCENT. PROVIDE CAPACITORS THAT ISOLATES THE LINE AND LOAD SIDE OF THE CAPACITORS FROM THE SOURCE AND MOTOR WHEN THE PUMP IS NOT IN SERVICE AND DISCHARGES THE CAPACITOR WHEN ISOLATED.

MAIN A	SPD A	FUTURE PUMP NO. 4 *	PUMP NO. 3 *	AUTOMATIC TRANSFER CONTROLER	TIE BREAKER	PUMP NO. 2 *	PUMP NO. 1 *	SPD B	MAIN B
	POWER MONITORING UNIT (PMU) A							POWER MONITORING UNIT (PMU) B	
	SPACE							PUMP NO. 1 *	
	SPARE							SPARE	
	ATS BREAKER A							ATS BREAKER B	
	SPACE							SPACE	

* 42 CIRCUIT PANEL LP 120/208V, 3PH

* * 42 CIRCUIT PANEL PD 480/277V, 3PH

LEGEND:

SSRV = SOLID STATE REDUCED VOLTAGE
PFR = PHASE FAILURE RELAY
LT = LIGHTING TRANSFORMER
LP = LIGHTING PANEL
SPD = SURGE PROTECTION DEVICE
PMU = POWER METERING UNIT

DESCRIPTION	SIZE/TYPE	VOLTAGE/PHASE	DEMAND LOAD	COMMENTS
PUMP MOTOR	4 X 200 HP 3-DUTY AND 1-STANDBY	480 VOLTS, 3 PHASE	650 KVA	MOTOR HORSEPOWER IS BASED ON RECENT PUMP DESIGN INFORMATION
LIGHTING	7.5 KVA	208 VOLTS, 1 PHASE	5.8 KVA	GENERAL LIGHTING
FIELD INSTRUMENTS	2.2 KVA	120 VOLTS, 1 PHASE	2.2 KVA	GENERAL LIGHTING
HVAC (15 TONS COOLING)	78.0 KVA	480 VOLTS, 3 PHASE	62.0 KVA	BUILDING COOLING
RECEPTACLES	1.8 KVA	120 VOLTS, 1 PHASE	1.8 KVA	GENERAL PURPOSE 120V
PUMP STATION CONTROL AND APPURTENANCES	2.8 KVA	120 VOLTS, 1 PHASE	2.8 KVA	INCLUDES CONTROL PANEL, SPACE HEATER, AND VENTILATION
TOTAL DEMAND LOAD	2.8 KVA	120 VOLTS, 1 PHASE	725 KVA	872 AMPS AT 480 VOLT

STATE OF TEXAS
JAMES M. O'CONNOR
83116
LICENSED
PROFESSIONAL ENGINEER
5/11/2016

NO.	DATE	REVISION	BY	APVD
DSGN	J O'CONNOR	DR J EFAW	CHK J JENKINS	APVD J O'CONNOR

Montopolis Water Reclamation Initiave (WRI)
Storage Reservoir and Pump Station
2711 Montopolis Drive
Austin Water, Austin, Texas

CH2MHILL®
TBPE FRM NO. 3699

ELECTRICAL
PUMP STATION
ONE-LINE DIAGRAM

NTS
VERIFY SCALE
BAR IS ONE INCH ON ORIGINAL DRAWING.
0 1"

DATE	MAY 2016
PROJ	472902
DWG	E-6
SHEET	113 of 126

Conduit No.	From	To	Conduit Size	Conductor Fill	Notes
A-1	AUSTIN ENERGY POWER POLE	AUSTIN ENERGY TRANSFORMER PAD	2 - 4.00-INCH	PULL STRING	INSTALL PER AUSTIN ENERGY REQUIREMENTS. COORDINATE ALL WORK WITH AUSTIN ENERGY.
A-2	AUSTIN ENERGY TRANSFORMER PAD	ELECTRIC UTILITY SERVICE DISCONNECT	4 - 4.00-INCH	4 - 3#600KCMIL, #4/0N	POWER FROM AUSTIN ENERGY TRANSFORMER TO SERVICE DISCONNECT
A-3	ELECTRIC UTILITY SERVICE DISCONNECT	MCC, MAIN A	4 - 4.00-INCH	4 - 3#600KCMIL, #4/0G	POWER TO MCC FROM SERVICE DISCONNECT.
A-4	5' BEYOND CONCRETE	MCC, MAIN B	4 - 4.00-INCH	PULL STRING	SPARE CONDUITS FOR FUTURE SECOND FEED TO PUMP STATION.
A-5	LEVEL CONTROL VALVE, LCV-001 VAULT SUMP PUMP	PANEL DP, 26, 28, 30 PSCP-1 PANEL LP, 35	1.00-INCH 1.00-INCH 1.00-INCH	3#10, #10G 14#14, #14G 2#10, #10G	POWER TO VALVE ACTUATOR VALVE MONITORING AND CONTROL SUMP PUMP POWER
A-6	MIXER	MIXER CONTROL PANEL PANEL LP	1.00-INCH 1.00-INCH	MSC SPARE	REFER TO MANUFACTURER'S LITERATURE FOR CONDUIT AND CABLE INSTALLATION
A-7	LE-002 LE-002 LIT-003 ANTENNA ON TANK	PSCP-1 PSCP-1 PSCP-1 NETWORK PANEL	1.00-INCH 1.00-INCH 1.00-INCH 1.50-INCH	4#14, #14G 2#12, #12G 1-TYPE 3 CABLE ANTENNA CABLE (DIV 40)	THE ANTENNA CABLE TO BE PROVIDE WITH SCADA SYSTEM RADIO PER MANUFACTURERS RECOMMENDATIONS AND REQUIREMENTS.
A-8	HYDROPNEUMATIC CONTROL SYSTEM	PANEL LP, 15, 37 PSCP-1	1.00-INCH 1.00-INCH	4#10, #10G 4#14, #14G	PROVIDE MAINTENANCE RECEPTACLE NEXT TO SURGE CONTROL PANEL WITH WEATHER PROOF COVER AND GFCI.
A-9	NETWORK AND COMM. PANEL	AUSTIN ENERGY SERVICE POLE	2-2.00-INCH	PULL STRING	FACILITY COMMUNICATIONS SERVICE CONDUITS. TURN-UP AND CAP CONDUITS 2-FEET FROM POWER POLE. PROVIDE A MINIMUM OF 2-FEET SEPARATION BETWEEN POWER CONDUITS AND COMMUNICATIONS CONDUITS.
A-10	MIXER CONTROL PANEL	PANEL LP, 31 PSCP-1 PSCP-1	1.00-INCH 1.00-INCH 1.00-INCH	3#12, #12G 6#14, #14G 1-TYPE 3 CABLE	POWER TO MIXER CONTROL PANEL VIA DISCONNECT SWITCH RUN COMMAND, ON STATUS AND FAULT ALARM
A-11	OVERHEAD DOOR OPENER	PANEL LP, 33	1.00-INCH	2#12, #12G	POWER TO OVERHEAD DOOR OPENER. PROVIDE 3/4" C, 6#12, #12G FROM DOOR OPENER TO CONTROL STATION
BP-1	FV-005	PANEL PD, 13,15,17 PSCP-1	1.00-INCH 1.00-INCH	3#10, #10G 14#14, #14G	POWER TO VALVE ACTUATOR VALVE MONITORING AND CONTROL
BP-2	FIT-005	PSCP-1	1.00-INCH	1-TYPE 3 CABLE	ANALOG SIGNAL FROM BY-PASS FLOW METER
BP-3	PCV-006	PSCP-1	1.00-INCH	4#14, #14G	DISCRETE SIGNALS ON BY-PASS VALVE OPEN/CLOSE POSITION
BP-4	BRIDGE CRANE	PANEL PD, 19, 21, 23	1.00-INCH	3#10, #10G	COORDINATE POWER TO BRIDGE CRANE WITH EQUIPMENT PROVIDED
CL-1	CL2 FEEDER	PSCP-1 PSCP-1	1.00-INCH 1.00-INCH	6#14, #14G 1-TYPE 3 CABLE	DISCRETE SIGNALS FOR PUMP FAIL, VALVE FAIL, LOW TABLETS ANALOG SIGNAL FOR CL2 CONTROL
CL-2	CL2 FEEDER	PANEL PD, 35,27,29	1.00-INCH	3#10, #10G	POWER TO CL2 FEEDER
CL-3	AE/AIT-004	PANEL LP, 2 PSCP-1	1.00-INCH 1.00-INCH	2#12, #12G 1-TYPE 3 CABLE	POWER TO CL2 RESIDUAL ANALYZER ANALOG SIGNAL OF CL2 RESIDUAL
CL-4	GRINDER PUMP LCP	PANEL PD, 31. 33, 35 PSCP-1	1.00-INCH 1.00-INCH	3#10, #10G 2#14, #14G	GRINDER PUMP POWER HIGH LEVEL ALARM SIGNAL
CL-5	AE/AIT-018	PANEL LP, 30 PSCP-1	1.00-INCH 1.00-INCH	2#12, #12G 1-TYPE 3 CABLE	POWER TO TURBIDITY METER ANALOG SIGNAL OF RECYCLED WATER TURBIDITY
CR-1	PSCP-1	PANEL LP, 17	1.00-INCH	2#12, #12G	
CR-2	NETWORK PANEL	PANEL LP, 18	1.00-INCH	2#12, #12G	
CR-3	SECURITY PANEL	PANEL LP, 16	1.00-INCH	2#12, #12G	
DH-1	PIT-007	PSCP-1	1.00-INCH	1-TYPE 3 CABLE	ANALOG SIGNAL OF DISCHARGE HEADER PRESSURE TRANSMITTER TO PUMP STATION CONTROL PANEL (PSCP)
ER-1	MCC	MTS	2.00-INCH	4#1/0, #5G	POWER TO ATS FROM MAIN A
ER-2	MCC	MTS	2.00-INCH	4#1/0, #5G	POWER TO ATS FROM MAIN B
ER-3	MTS	PANEL PD	2.00-INCH	4#1/0, #5G	
ER-4	PANEL PD	TRANS LT-LP	2.50-INCH	4#1, #6G	
ER-5	TRANS LT-LP	PANEL LP	2.50-INCH	4#4/0, #4G	PANEL LP IS FEED WITH A SEPARATELY DERIVED SOURCE. PROVIDE GROUNDING ELECTRODE, GROUNDING ELECTRODE CONDUCTOR AND GROUND/NEUTRAL BONDING JUMPER AT PANEL LP
ER-6	MCC, SECTION 2	PSCP-1	1.00-INCH	1-TYPE 30 CABLE	NETWORK CABLE TO POWER MONITORING UNIT (PMU)
ER-7	MCC, SECTION 3	PSCP-1 PSCP-2	1.00-INCH 1.50-INCH	2-TYPE 30 CABLE 30#14, #14G	NETWORK CABLE TO RVSS AND MMR FOR PUMP NO. 4 CONTROL CONDUCTORS BETWEEN MOTOR STARTER AND MANUAL PUMP CONTROLS AND RELAYS
ER-8	MCC, SECTION 4	PSCP-1 PSCP-2	1.00-INCH 1.50-INCH	2-TYPE 30 CABLE 30#14, #14G	NETWORK CABLE TO RVSS AND MMR FOR PUMP NO. 3 CONTROL CONDUCTORS BETWEEN MOTOR STARTER AND MANUAL PUMP CONTROLS AND RELAYS
ER-9	MCC, SECTION 7	PSCP-1 PSCP-2	1.00-INCH 1.50-INCH	2-TYPE 30 CABLE 30#14, #14G	NETWORK CABLE TO RVSS AND MMR FOR PUMP NO. 2 CONTROL CONDUCTORS BETWEEN MOTOR STARTER AND MANUAL PUMP CONTROLS AND RELAYS
ER-10	MCC, SECTION 8	PSCP-1 PSCP-2	1.00-INCH 1.50-INCH	2-TYPE 30 CABLE 30#14, #14G	NETWORK CABLE TO RVSS AND MMR FOR PUMP NO. 1 CONTROL CONDUCTORS BETWEEN MOTOR STARTER AND MANUAL PUMP CONTROLS AND RELAYS
ER-11	MCC, SECTION 9	PSCP-1	1.00-INCH	1-TYPE 30 CABLE	NETWORK CABLE TO POWER MONITORING UNIT (PMU)
ER-12	PSCP-2	PSCP-1	4-1.50-INCH	4-36#14, #14G	MONITORING AND CONTROL CONDUCTORS FROM MANUAL PUMP CONTROLS AND RELAYS TO PUMP STATION PLC/SCADA SYSTEM
HV-1	HP-01	PANEL LP, 1,3 AH-01 AH-01	1.00-INCH 1.00-INCH 1.00-INCH	2#10, #10G 2#10, #10G MSC	POWER FROM PANEL LP POWER FROM HP-01 TO AH-01 CONTROL CONDUCTORS PROVIDED BY EQUIPMENT SUPPLIER
HV-2	HP-02	PANEL LP, 5,7 AH-02 AH-02	1.00-INCH 1.00-INCH 1.00-INCH	2#10, #10G 2#10, #10G MSC	POWER FROM PANEL LP POWER FROM HP-02 TO AH-02 CONTROL CONDUCTORS PROVIDED BY EQUIPMENT SUPPLIER
HV-3	HP-03	PANEL LP, 9,11 AH-03 AH-03	1.00-INCH 1.00-INCH 1.00-INCH	2#12, #12G 2#12, #12G MSC	POWER FROM PANEL LP POWER FROM HP-03 TO AH-03 CONTROL CONDUCTORS PROVIDED BY EQUIPMENT SUPPLIER
HV-4	EF-4	PANEL LP, 4,6 LVR-4	1.00-INCH 1.00-INCH	2#12, #12G 2#12, #12G	POWER TO EXHAUST FAN POWER TO OPEN LOUVER WHEN FAN IS RUNNING
HV-5	EF-01	PANEL LP, 13	1.00-INCH	2#12, #12G	POWER TO EXHAUST FAN
HV-6	EF-5	PANEL LP, 8,10 LVR-5	1.00-INCH 1.00-INCH	2#12, #12G 2#12, #12G	POWER TO EXHAUST FAN POWER TO OPEN LOUVER WHEN FAN IS RUNNING
HV-7	UH-1	PANEL DP, 32, 34	1.00-INCH	2#10, #10G	POWER TO UNIT HEATER
HV-8	UH-2	PANEL DP, 36, 38	1.00-INCH	2#10, #10G	POWER TO UNIT HEATER
HV-9	UH-3	PANEL LP, 32, 34	1.00-INCH	2#10, #10G	POWER TO UNIT HEATER
HV-10	UH-4	PANEL LP, 36, 38	1.00-INCH	2#10, #10G	POWER TO UNIT HEATER

P1-1	FIT-110	PSCP-1	1.00-INCH	1-TYPE 3 CABLE	ANALOG SIGNAL FROM PUMP NO. 1 FLOW METER
P1-10	PIT-101	PSCP-1	1.00-INCH	1-TYPE 3 CABLE	ANALOG SIGNAL FROM PUMP NO. 1 SUCTION PRESSURE TRANSMITTER
P1-2	FCV-107	PANEL PD, 1,3,5 PSCP-2	1.00-INCH 1.00-INCH	3#10, #10G 14#14, #14G	POWER TO VALVE ACTUATOR VALVE MONITORING AND CONTROL TO PSCP-2 PUMP NO. 1 CONTROLS
P1-3	ZS-106	PSCP-2	1.00-INCH	2#14, #14G	DISCRETE SIGNAL ON CHECK VALVE OPEN POSITION
P1-4	PSH-106	PSCP-2	1.00-INCH	2#14, #14G	DISCRETE SIGNAL ON HIGH DISCHARGE PRESSURE
P1-5	PIT-106	PSCP-1	1.00-INCH	1-TYPE 3 CABLE	ANALOG SIGNAL FROM PUMP NO. 1 DISCHARGE PRESSURE TRANSMITTER
P1-6	VT-103	PUMP NO. 1 MCC	1.00-INCH	4-TYPE 3 CABLE	ANALOG SIGNALS FROM PUMP/MOTOR VIBRATION TRANSMITTERS (2EA)
P1-7	HS-111	PSCP-2	1.00-INCH	2#14, #14G	LOCAL E-STOP SWITCH AT PUMP
P1-8	P-111	PUMP NO. 1 MCC	2 - 4.00-INCH	3#4, #8G	POWER CONDUCTORS TO PUMP MOTOR. 2 - 3#350KCMIL, #1/0G TO BE INSTALLED IN THE FUTURE FOR 200 HP PUMP.
P1-9	TE-102	PUMP NO. 1 SSMO	1.50-INCH	12 - TYPE 4 CABLE	RTD TEMPERATURE SIGNALS FROM PUMP AND PUMP MOTOR
P2-1	FIT-210	PSCP-1	1.00-INCH	1-TYPE 3 CABLE	ANALOG SIGNAL FROM PUMP NO. 2 FLOW METER
P2-10	PIT-201	PSCP-1	1.00-INCH	1-TYPE 3 CABLE	ANALOG SIGNAL FROM PUMP NO. 2 SUCTION PRESSURE TRANSMITTER
P2-2	FCV-207	PANEL PD, 2,4,6 PSCP-2	1.00-INCH 1.00-INCH	3#10, #10G 14#14, #14G	POWER TO VALVE ACTUATOR VALVE MONITORING AND CONTROL TO PSCP-2 PUMP NO. 2 CONTROLS
P2-3	ZS-206	PSCP-2	1.00-INCH	2#14, #14G	DISCRETE SIGNAL ON CHECK VALVE OPEN POSITION
P2-4	PSH-206	PSCP-2	1.00-INCH	2#14, #14G	DISCRETE SIGNAL ON HIGH DISCHARGE PRESSURE
P2-5	PIT-206	PSCP-1	1.00-INCH	1-TYPE 3 CABLE	ANALOG SIGNAL FROM PUMP NO. 2 DISCHARGE PRESSURE TRANSMITTER
P2-6	VT-203	PUMP NO. 2 MCC	1.00-INCH	4-TYPE 3 CABLE	ANALOG SIGNALS FROM PUMP/MOTOR VIBRATION TRANSMITTERS (2EA)
P2-7	HS-211	PSCP-2	1.00-INCH	2#14, #14G	LOCAL E-STOP SWITCH AT PUMP
P2-8	P-211	PUMP NO. 2 MCC	2 - 4.00-INCH	3#2, #6G	POWER CONDUCTORS TO PUMP MOTOR. 2 - 3#350KCMIL, #1/0G TO BE INSTALLED IN THE FUTURE FOR 200 HP PUMP.
P2-9	TE-202	PUMP NO. 2 SSMO	1.50-INCH	12 - TYPE 4 CABLE	RTD TEMPERATURE SIGNALS FROM PUMP AND PUMP MOTOR
P3-1	FIT-310	PSCP-1	1.00-INCH	1-TYPE 3 CABLE	ANALOG SIGNAL FROM PUMP NO. 3 FLOW METER
P3-10	PIT-301	PSCP-1	1.00-INCH	1-TYPE 3 CABLE	ANALOG SIGNAL FROM PUMP NO. 3 SUCTION PRESSURE TRANSMITTER
P3-2	FCV-307	PANEL PD, 7,9,11 PSCP-2	1.00-INCH 1.00-INCH	3#10, #10G 14#14, #14G	POWER TO VALVE ACTUATOR VALVE MONITORING AND CONTROL TO PSCP-2 PUMP NO. 3 CONTROLS
P3-3	ZS-306	PSCP-2	1.00-INCH	2#14, #14G	DISCRETE SIGNAL ON CHECK VALVE OPEN POSITION
P3-4	PSH-306	PSCP-2	1.00-INCH	2#14, #14G	DISCRETE SIGNAL ON HIGH DISCHARGE PRESSURE
P3-5	PIT-306	PSCP-1	1.00-INCH	1-TYPE 3 CABLE	ANALOG SIGNAL FROM PUMP NO. 3 DISCHARGE PRESSURE TRANSMITTER
P3-6	VT-303	PUMP NO. 3 MCC	1.00-INCH	4-TYPE 3 CABLE	ANALOG SIGNALS FROM PUMP/MOTOR VIBRATION TRANSMITTERS (2EA)
P3-7	HS-311	PUMP NO. 3 MCC	1.00-INCH	2#14, #14G	LOCAL E-STOP SWITCH AT PUMP
P3-8	P-311	PUMP NO. 3 MCC	2 - 4.00-INCH	3#3/0, #2G	POWER CONDUCTORS TO PUMP MOTOR. 2 - 3#350KCMIL, #1/0G TO BE INSTALLED IN THE FUTURE FOR 200 HP PUMP AND CAP PUMP END.
P3-9	TE-302	PUMP NO. 3 SSMO	1.50-INCH	12 - TYPE 4 CABLE	RTD TEMPERATURE SIGNALS FROM PUMP AND PUMP MOTOR
P4-1	FIT-410	PSCP-1	1.00-INCH	1-TYPE 3 CABLE	ANALOG SIGNAL FROM PUMP NO. 4 FLOW METER WHEN INSTALLED. PROVIDE PULL STRING AND CAP PUMP END.
P4-10	PIT-401	PSCP-1	1.00-INCH	1-TYPE 3 CABLE	ANALOG SIGNAL FROM PUMP NO. 4 SUCTION PRESSURE TRANSMITTER WHEN INSTALLED. PROVIDE PULL STRING AND CAP PUMP END.
P4-2	FCV-407	PANEL PD, 8,10,12 PSCP-2	1.00-INCH 1.00-INCH	3#10, #10G 14#14, #14G	POWER TO VALVE ACTUATOR WHEN INSTALLED. PROVIDE PULL STRING AND CAP PUMP END. VALVE MONITORING AND CONTROL TO PSCP-2 PUMP NO. 4 CONTROLS WHEN INSTALLED. PROVIDE PULL STRING AND CAP PUMP END.
P4-3	ZS-406	PSCP-2	1.00-INCH	2#14, #14G	DISCRETE SIGNAL ON CHECK VALVE OPEN POSITION WHEN INSTALLED. PROVIDE PULL STRING AND CAP PUMP END.
P4-4	PSH-406	PSCP-2	1.00-INCH	2#14, #14G	DISCRETE SIGNAL ON HIGH DISCHARGE PRESSURE WHEN INSTALLED. PROVIDE PULL STRING AND CAP PUMP END.
P4-5	PIT-406	PSCP-1	1.00-INCH	1-TYPE 3 CABLE	ANALOG SIGNAL FROM PUMP NO. 4 DISCHARGE PRESSURE TRANSMITTER WHEN INSTALLED. PROVIDE PULL STRING AND CAP PUMP END.
P4-6	VT-403	PUMP NO. 4 MCC	1.00-INCH	4-TYPE 3 CABLE	ANALOG SIGNAL FROM PUMP VIBRATION TRANSMITTERS WHEN INSTALLED. PROVIDE PULL STRING AND CAP PUMP END.
P4-7	HS-411	PSCP-2	1.00-INCH	2#14, #14G	LOCAL E-STOP SWITCH AT PUMP WHEN INSTALLED. PROVIDE PULL STRING AND CAP PUMP END.
P4-8	P-411	PUMP NO. 4 MCC	2 - 4.00-INCH	PULL STRINGS	POWER CONDUCTORS TO PUMP MOTOR. 2 - 3#350KCMIL, #1/0G TO BE INSTALLED IN THE FUTURE FOR 200 HP PUMP AND CAP PUMP END.
P4-9	TE-402	PUMP NO. 4 SSMO	1.50-INCH	12 - TYPE 4 CABLE	RTD TEMPERATURE SIGNALS FROM PUMP AND PUMP MOTOR WHEN INSTALLED. PROVIDE PULL STRING AND CAP PUMP END.
SP-1	CARD READER ROLLUP DOOR SW DOOR SWITCH DS-1 ELECT DOOR STRIKE	SECURITY PANEL	1.00-INCH 1.00-INCH 1.00-INCH 1.00-INCH	PULL STRINGS	
SP-2	CAMERA 3	SECURITY PANEL	2 - 1.00-INCH	PULL STRINGS	
SP-3	CAMERA 4	SECURITY PANEL	2 - 1.00-INCH	PULL STRINGS	
SP-4	CAMERA 5	SECURITY PANEL	2 - 1.00-INCH	PULL STRINGS	
SP-5	DOOR SWITCH DS-2 DOOR SWITCH DS-3	SECURITY PANEL	1.00-INCH 1.00-INCH	PULL STRINGS	
SP-6	DOOR SWITCH DS-4	SECURITY PANEL	1.00-INCH	PULL STRINGS	
SP-7	DOOR SWITCH DS-5 DOOR SWITCH DS-6	SECURITY PANEL	1.00-INCH 1.00-INCH	PULL STRINGS	
SP-8	DOOR SWITCH DS-7 DOOR SWITCH DS-8	SECURITY PANEL	1.00-INCH 1.00-INCH	PULL STRINGS	
SS-1	SURGE SYSTEM AIR COMPRESSOR	PANEL PD, 20,22,24	1.00-INCH	3#8, #8G	
YL-0	P-0	LIGHTING CONTACTOR LC-1 SECURITY CABINET	1.00-INCH 2 - 1.00-INCH	2#10, #10G PULL STRING	SWITCHED POWER FOR POLE LIGHTING VIA LIGHTING CONTACTOR
YL-1	P-0	P-1	1.00-INCH 2 - 1.00-INCH	2#10, #10G PULL STRING	POWER FOR POLE LIGHTING CONDUITS FOR SECURITY SYSTEM
YL-2	P-1	P-2	1.00-INCH 2 - 1.00-INCH	2#10, #10G PULL STRING	POWER FOR POLE LIGHTING CONDUITS FOR SECURITY SYSTEM
YL-3	P-2	P-3	1.00-INCH 2 - 1.00-INCH	2#10, #10G PULL STRING	POWER FOR POLE LIGHTING CONDUITS FOR SECURITY SYSTEM
YL-4	P-3	P-4	1.00-INCH	3#10, #10G	POWER TO POLE LIGHTING
YL-5	P-4	P-5	1.00-INCH	3#10, #10G	POWER TO POLE LIGHTING
YL-6	P-6	LIGHTING CONTACTOR LC-1 SECURITY CABINET	1.00-INCH 2 - 1.00-INCH	2#10, #10G PULL STRING	SWITCHED POWER FOR POLE LIGHTING VIA LIGHTING CONTACTOR

STATE OF TEXAS
JAMES M. O'CONNOR
83116
LICENSED
PROFESSIONAL ENGINEER
5/11/2016

NO.	DATE	REVISION	CHK	DR	DSGN
			APVD	APVD	J O'CONNOR
			BY	J JENKINS	J O'CONNOR

Montopolis Water Reclamation Initiave (WRI)
Storage Reservoir and Pump Station
2711 Montopolis Drive
Austin Water, Austin, Texas

CH2MHILL®
TBPE FIRM NO. 3689

ELECTRICAL
CONDUIT / CONDUCTOR SCHEDULE

NTS
VERIFY SCALE
BAR IS ONE INCH ON ORIGINAL DRAWING.
0 1"

DATE	MAY 2016
PROJ	472902
DWG	E-7
SHEET	114 of 126

ELECTRICAL PANELBOARD SCHEDULE

PANEL: PD (NEW) (NEW)
VOLTAGE: 480/277V, 3Ph, 4W.
BUS SIZE: 200A 200A
MAINS: 150A Main Breaker 150A Main Breaker
Isc: 22 KA

WALL MOUNTED (SURFACE)

LOCATION: BUILDING'S MAIN ELECTRICAL ROOM
MOUNTING: WALL MOUNTED (SURFACE)
FED FROM: MCC via ATS

CIRCUIT TITLE	BREAKER CKT NO.	AMP	POLE	LOAD, VA PHASE A	B	C	LOAD TYPE	LOAD TYPE	LOAD, VA PHASE A	B	C	BREAKER POLE	AMP	CKT NO.	CIRCUIT TITLE
PUMP NO. 1 DISCHARGE VALVE	1	20	3	200			G	G	200			3	20	2	PUMP NO. 2 DISCHARGE VALVE
|	3	|	|		200		G	G		200		|	|	4	|
|	5	|	|			200	G	G			200	|	|	6	|
PUMP NO. 3 DISCHARGE VALVE	7	20	3	200			G	G	200			3	20	8	PUMP NO. 4 DISCHARGE VALVE
|	9	|	|		200		G	G		200		|	|	10	|
|	11	|	|			200	G	G			200	|	|	12	|
BYPASS VALVE	13	20	3	200			G	C	13,082			3	125	14	PANEL LP
|	15	|	|		200		G	C		11,060		|	|	16	|
|	17	|	|			200	G	C			10,287	|	|	18	|
BRIDGE CRANE	19	30	3	3,878			G	G	3,880			3	30	20	SURGE SYSTEM AIR COMPRESSORS
|	21	|	|		3,878		G	G		3,880		|	|	22	|
|	23	|	|			3878	G	G			3,880	|	|	24	|
TABLET CHLORINE FEED SYSTEM	25	20	3	2105			C	G	200			3	20	26	TANK LEVEL CONTROL VALVE, LCV-001
|	27	|	|		2105		C	G		200		|	|	28	|
|	29	|	|			2105	C	G			200	|	|	30	|
GRINDER PUMP LCP	31	20	3	350			M		5000			2	30	32	UNIT HEATER UH-1
|	33	|	|		350		M			5000		|	|	34	|
|	35	|	|			350	M				5000	2	30	36	UNIT HEATER UH-2
SPARE	37	20	3				M		5000			|	|	38	|
|	39	|	|				M					2	30	40	SPARE
|	41	|	|				M					|	|	42	
NOTES:	TOTAL LOAD			6933	6933	6933			27562	20540	19767				

PHASE A LOAD (VA) = 34,495
PHASE B LOAD (VA) = 27,473
PHASE C LOAD (VA) = 26,700
TOTAL LOAD (VA)= 88,668 Demand Load 113% 100.3 KVA 121 AMPS

Integral TVSS Unit

LUMINAIRE SCHEDULE

NUMBER	DESCRIPTION	VOLTAGE	LAMP	SPECIFICATION/MODEL	MOUNTING	OPTIONS
1	4-FOOT SURFACE MOUNT LED WRAPAROUND WITH METAL HOUSING AND ACRYLIC DEFUSER WITH A 4000 LUMEN OUTPUT AND AN LIFE OF 50,000 HOURS.	120V	LED 4000K CRI=85	COOPER LIGHTING, MODEL 4SLWP3940ND-120	SURFACE	CENTER WIRING ACCESS
2	HIGH BAY LED LUMINAIRE TWO-PIECE DIE CAST ALUMINUM HOUSING SEALED WITH SILICONE GASKET FOR AN IP66 RATING, IMPACT RESISTAN TEMPERED CLEAR GLASS DEFUSER, BLLAK ANODIZE FINISH ON ALUMINUM EXTRUSIONS AND POWER DOATED PAIN ON HOUSING. FIXTURE OUTPUT OF 9500 LUMENS AND EXPECTED LIFE OF 60,000 HOURS.	120 - 277V	LED 5000K	COOPER LIGHTING, MODEL FHL-9L-50-2A-UNV-TL	3/4-INCH PENDANT	PENDANT LENGTH TO OBTAIN MOUNTING HIGHT SHOWN.
3	4-FOOT WALL MOUNT LED LUMINAIRE WITH OPTICAL GRADE ACRYLIC LENS FOR LOW GLARE DIFFUSION MOUNTED TO EXTRUDED ALUMINUM AND DIE-FORMED 20 GAUGE COLD ROLLED STEEL HOUSING FINISHED IN A REFLECTIVE WHITE POLYESTER POWR COAT PAINT. FIXTURE OUTPUT OF 3384 LUMENS AND EXPECTED LIFE OF 50,000 HOURS.	120V	LED 4000K CRI≥82	COOPER LIGHTING, CORELITE, MODEL DWI-WA-5L40-1B-120-SU-WA4-LUTSC	WALL	
4	WALL MOUNT EXTERIOR LED LUMINAIRE (WAL-PAK) WITH DIE-CAST ALUMINUM HOUSING, STAINLESS STEEL HARDWARE AND GASKETED BOROSILICATE REFRACTIVE GLASS WITH AN IP65 RATING. FIXTURE OUTPUT OF 4000 LUMENS AND EXPECTED LIFE OF 50,000 HOURS.	120V	LED 5000K CRI=67	COOPER LIGHTING, LUMARK, MODEL, LD-WP-GL-4A-120V-AP	WALL	
5	ROADWAY LED LUMINAIRE WITH CAST ALUMINUM HOUSING AND EXTRUDED ALUMINUM HEAT SINK WITH TOOL-LESS ENTRY, 3G VIBRATION RATING AND MOUNTED ON A 30-FOOT ROUND TAPERED STEEL POLE WITH 4-FOOT MOUNTING ARM. FIXTURE OUTPUT OF 13,080 LUMENS AND EXPECTED LIFE OF 50,000 HOURS.	120V	LED 4000K	COOPER LIGHTING, LUMARK, MODEL, NAV-AE-04-E-UNV-5MQ-10K-IP66-AP	POLE	POLE AND LUMINAIRE ASSEMBLY SHALL HAVE A MINIMUM 100 MPH WIND RATING. MODEL NUMBER RTS6D30SG214B. PROVIDE TAPPED HUBS 20-FEET ABOVE BASE AND IN SAME DIRECTION AS ARM. PROVIDE ENGINEERED POLE BASE DESIGN FOR POLE AND LUMINAIRE INSTALLATION ON SITE.

ELECTRICAL PANELBOARD SCHEDULE

PANEL: LP (NEW) (NEW)
VOLTAGE: 208/120V, 3Ph, 4W.
BUS SIZE: 200A 200A
MAINS: 200A Main Breaker 200A Main Breaker
Isc: 22 KA

WALL MOUNTED (SURFACE)

LOCATION: BUILDING'S MAIN ELECTRICAL ROOM
MOUNTING: WALL MOUNTED (SURFACE)
FED FROM: PANEL PD VIA LT-LP
NOTE: PANEL TO BE SERVICE ENTRANCE RATED

CIRCUIT TITLE	BREAKER CKT NO.	AMP	POLE	LOAD, VA PHASE A	B	C	LOAD TYPE	LOAD TYPE	LOAD, VA PHASE A	B	C	BREAKER POLE	AMP	CKT NO.	CIRCUIT TITLE
HVAC UNIT HP-01 AND AH-01	1	20	2	1,692			H	C	200			1	20	2	CL2 ANALYSER AE/AIT-304
|	3	|	|		1,692		H	C		284		2	20	4	EXHAUST FAN EF-04
HVAC UNIT HP-02 AND AH-02	5	20	2			1,692	H	C			284	|	|	6	|
|	7	|	|	1,692			H	C	284			2	20	8	EXHAUST FAN EF-05
HVAC UNIT HP-03 AND AH-03	9	15	2		840		H	C		284		|	|	10	|
|	11	|	|			840	H	L			315	2	20	12	POLE MOUNTED YARD LIGHTING
EXHAUST FAN EF-01	13	20	1	1,219			C	L	315			|	|	14	|
SURGE CONTROL SYSTEM	15	20	1		1,450		C	G		1,530		1	20	16	SECURITY PANEL
CONTROL PANEL PSCP-1	17	20	1			1600	C	G			1,300	1	20	18	NETWORK AND COMMUNICATIONS PANEL
PUMP ROOM LIGHTS	19	20	1	1,140			L	L	1,140			1	20	20	PUMP ROOM LIGHTS
CHLORINE ROOM LIGHTS	21	20	1		240		L	L		390		1	20	22	ELECTRIC ROOM LIGHTS
STORAGE ROOM & RESTROOM LIGHTS	23	20	1			696	L	L			240	1	20	24	CONTROL ROOM LIGHTS
EXTERIOR WALL LIGHTS	25	20	1	240			L	R	1260			1	20	26	CL2 ROOM &SOUTH PUMP ROOM OUTLETS
PUMP RM NORTH & CONTROL RM OUTLETS	27	20	1		1260		R	R		1440		1	20	28	STORAGE RM & EAST PUMP ROOM OUTLETS
PUMP WEST, CNTRL & ELECT RMS OUTLETS	29	20	1			1440	R	C			230	1	20	30	TURBIDITY METER
STORAGE TANK MIXER	31	20	1	600			M	H	1650			3	30	32	UNIT HEATER UH-3
SPARE	33	20	1							1650		|	|	34	|
SPARE	35	20	1								1650	2	30	36	UNIT HEATER UH-4
SPACE	37								1650			|	|	38	|
SPACE	39													40	SPACE
SPACE	41													42	SPACE
NOTES:	TOTAL LOAD			6583	5482	6268			6499	5578	4019				

PHASE A LOAD (VA) 13,082
PHASE B LOAD (VA) 11,060
PHASE C LOAD (VA) 10,287
TOTAL LOAD (VA)= 34,429 Demand Load 109% 37.5 KVA 104 AMPS

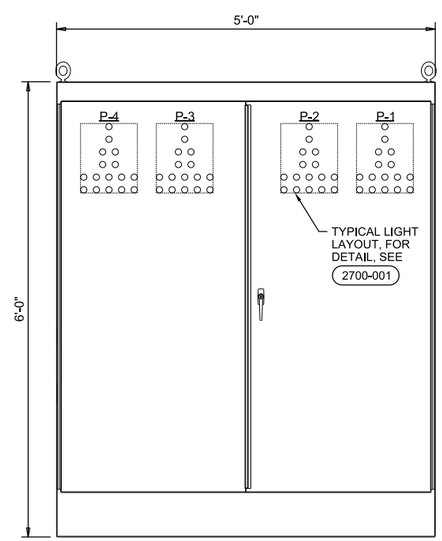

FRONT PANEL

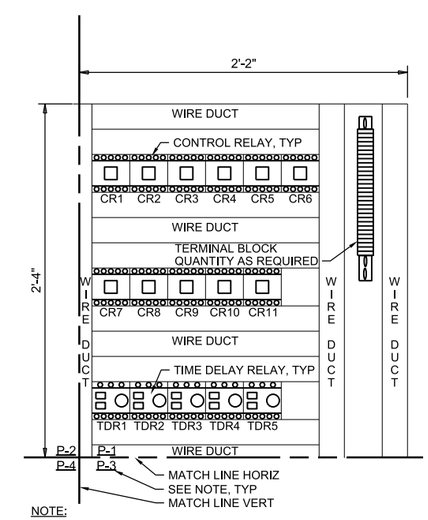

NOTE:

RELAY PANEL SHOWN FOR P-1 IN UPPER RIGHT CORNER. PLACE P-2 RELAYS TO LEFT OF MATCH LINE VERT. PLACE P-3, AND P-4 RELAYS BELOW MATCH LINE HORZ.

RELAY LAYOUT

1 PSCP-2 DETAIL
E-4 NTS

STATE OF TEXAS
JAMES M. O'CONNOR
83116
LICENSED
PROFESSIONAL ENGINEER
5/11/2016

NO.	DATE	REVISION	BY	APVD

DSGN J O'CONNOR | DR J EFAW | CHK J JENKINS | APVD J O'CONNOR

Montopolis Water Reclamation Initiave (WRI)
Storage Reservoir and Pump Station
2711 Montopolis Drive
Austin Water, Austin, Texas

CH2MHILL®
TBPE FIRM NO. 3699

ELECTRICAL
PANEL SCHEDULES AND LUMINAIRE SCHEDULE

NTS
VERIFY SCALE
BAR IS ONE INCH ON ORIGINAL DRAWING.
0 1"

DATE	MAY 2016
PROJ	472902
DWG	E-8
SHEET	115 of 126

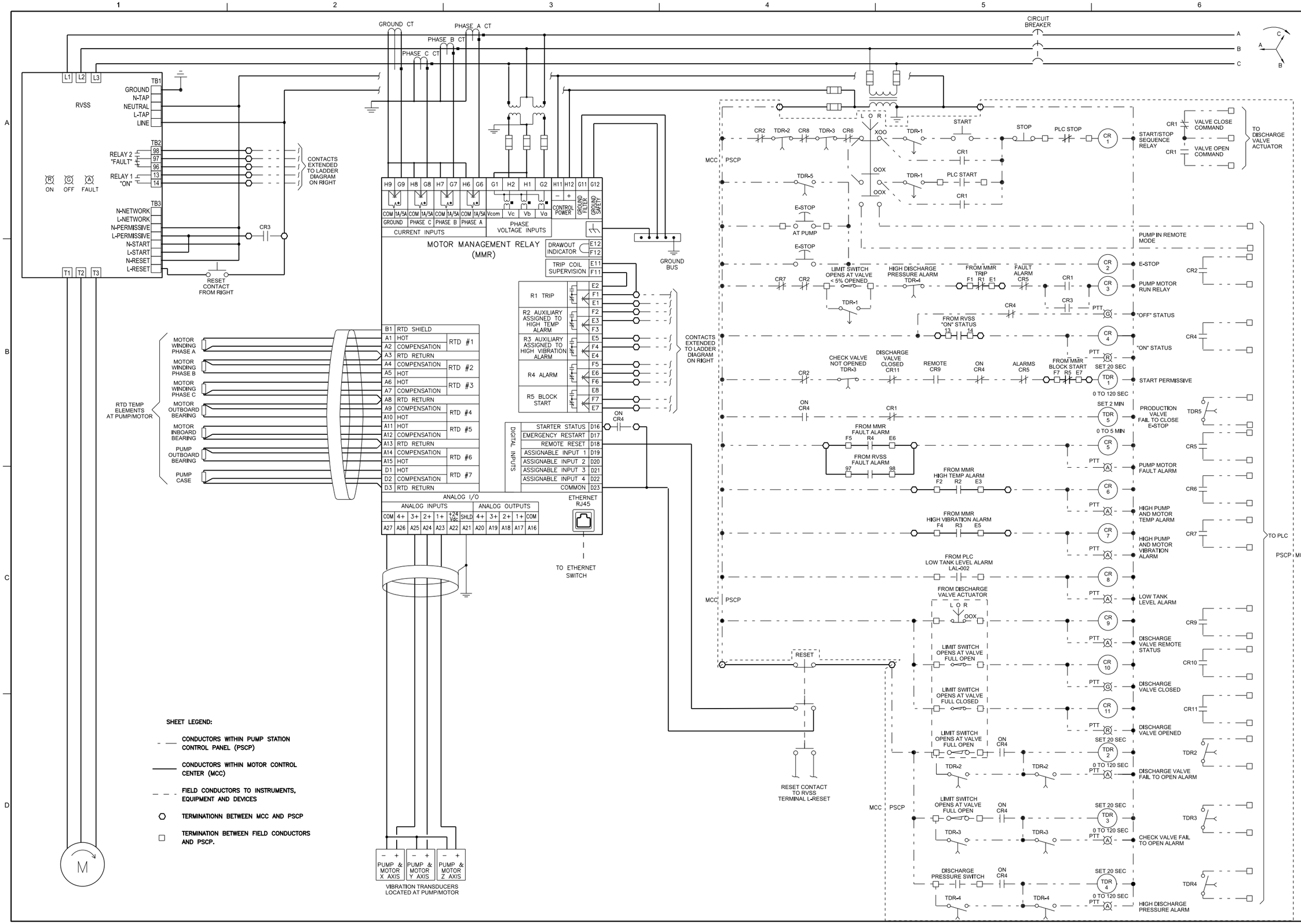

STATE OF TEXAS
JAMES M. O'CONNOR
83116
LICENSED
PROFESSIONAL ENGINEER
5/11/2016

NO.	DATE	REVISION	DR	CHK	APVD	BY	APVD
DSGN	J O'CONNOR		B BERHORST	J JENKINS			J O'CONNOR

Montopolis Water Reclamation Initiave (WRI)
Storage Reservoir and Pump Station
2711 Montopolis Drive
Austin Water, Austin, Texas

CH2MHILL®
TBPE FIRM NO. 3689

ELECTRICAL
SOFT START
MOTOR CONTROL DIAGRAM

NTS
VERIFY SCALE
BAR IS ONE INCH ON ORIGINAL DRAWING.
0 1"

DATE	MAY 2016
PROJ	472902
DWG	E-9
SHEET	116 of 126

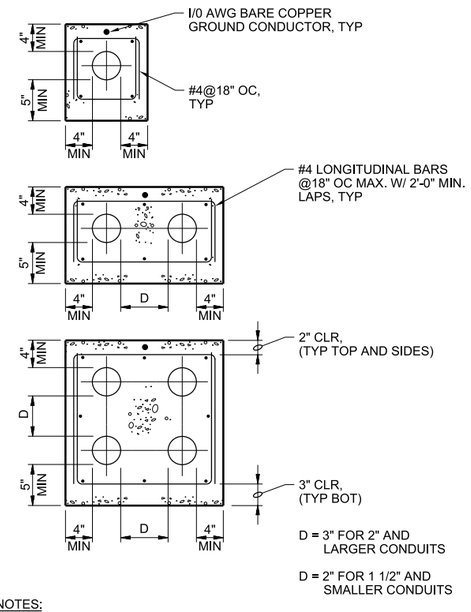

NOTES:
1. PROVIDE 6" MINIMUM COMPACTED GRAVEL, 3/4" MINUS, UNDER ALL CONCRETE ENCASED DUCT RUNS.
2. MAINTAIN SEPARATION OF CONDUITS WITH PLASTIC CHAIRS EVERY 3 FEET

DUCT BANK (2605-400b)
NTS

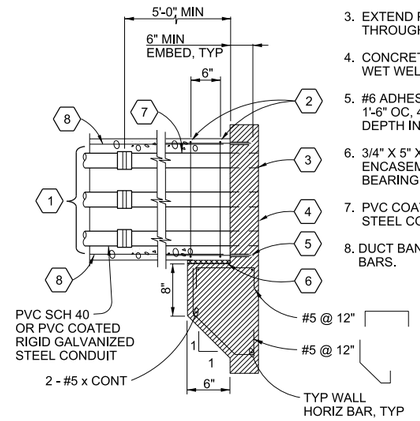

1. NUMBER OF CONDUITS AS REQUIRED.
2. 2#5 HOOPS 2" CLEAR.
3. EXTEND PVC-COATED RGS THROUGH STRUCTURE.
4. CONCRETE STRUCTURE, WET WELL OR VALVE VAULT
5. #6 ADHESIVE DOWELS AT 1'-6" OC, 4 MIN REQD. 6" MIN DEPTH INTO WALL.
6. 3/4" X 5" X FULL WIDTH OF ENCASEMENT NEOPRENE BEARING PAD.
7. PVC COATED RIGID GALV. STEEL CONDUIT
8. DUCT BANK LONGITUDINAL BARS.

NOTES:

A. DETAIL APPLIES TO CONDUIT EMBEDDED IN STRUCTURAL CONCRETE AT BUILDING INTERFACES AND VERTICAL STRUCTURES.

B. DETAIL SHOWN IS ELEVATION SECTION.

NOTE TO DESIGNER:
CONFIRM CORBEL DESIGN WITH STRUCTURAL

CONCRETE ENCASED DUCT TERMINATION WITH STRUCTURAL CONCRETE
NTS

PROVIDE A PVC SLEEVE AND FILL WITH A SUITABLE PLASTIC EXPANDABLE COMPOUND WHERE CONDUIT PASSES THROUGH SLAB

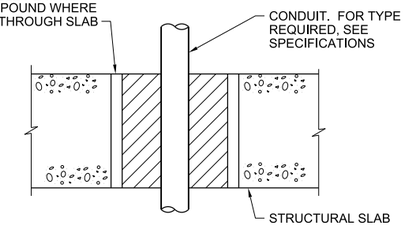

NOTES:
1. ALL CONDUITS THROUGH CONCRETE FLOOR SLABS AND EQUIPMENT PADS SHALL BE INSTALLED IN ACCORDANCE WITH THIS DETAIL.

SLAB PENETRATION (2605-310)
NTS

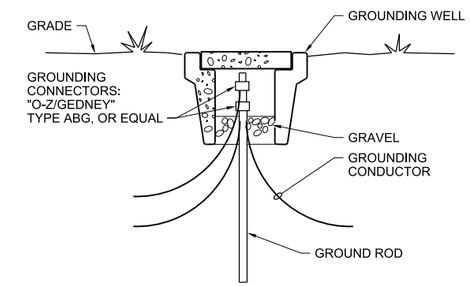

GROUND TEST WELL (2605-202)
NTS

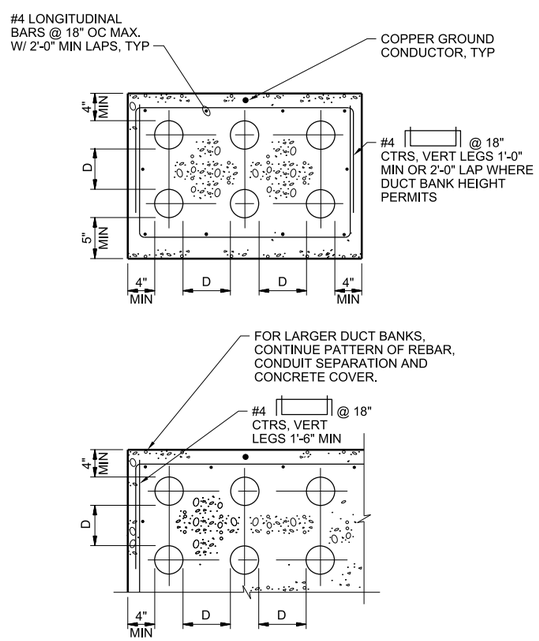

DUCT BANK (2605-400c)
NTS

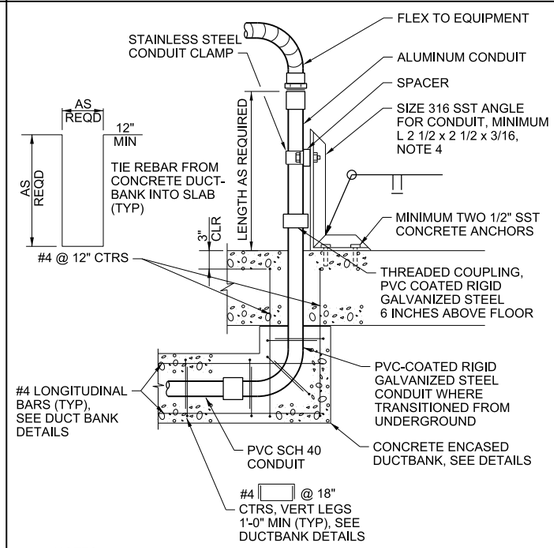

NOTES:
1. PROVIDE SUPPORT FOR ALL METAL CONDUITS WHICH EXTEND MORE THAN 18 INCHES OUT OF THE SLAB WITHIN 3 INCHES OF THE END OF THE CONDUIT.
2. PROVIDE SUPPORT FOR ALL PVC CONDUIT WITHIN 3 INCHES OF THE END OF THE CONDUIT.
3. THIS DETAIL SHALL BE USED FOR SUPPORT OF ALL CONDUITS WHICH ARE NOT OTHERWISE SUPPORTED IN A RIGID MANNER SUCH AS AGAINST AN EQUIPMENT BASE, WALL, COLUMN, ETC, AS REQUIRED ABOVE.

DUCT BANK/CONDUIT TRANSITION AND SUPPORT (2605-305A)
NTS

PROVIDE A PVC SLEEVE AND FILL WITH ONE PART POLYURETHANE IMMERSIBLE SEALANT WHERE CONDUIT PASSES THROUGH SLAB

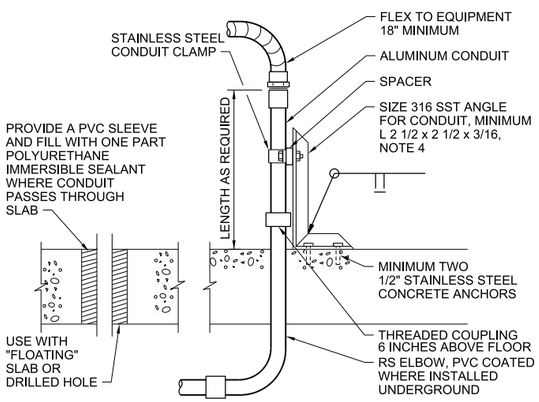

NOTES:
1. PROVIDE SUPPORT FOR ALL METAL CONDUITS WHICH EXTEND MORE THAN 18 INCHES OUT OF THE SLAB WITHIN 3 INCHES OF THE END OF THE CONDUIT.
2. PROVIDE SUPPORT FOR ALL PVC CONDUIT WITHIN 3 INCHES OF THE END OF THE CONDUIT.
3. THIS DETAIL SHALL BE USED FOR SUPPORT OF ALL CONDUITS WHICH ARE NOT OTHERWISE SUPPORTED IN A RIGID MANNER SUCH AS AGAINST AN EQUIPMENT BASE, WALL, COLUMN, ETC, AS REQUIRED ABOVE.
4. FOR ANY ANCHOR GREATER THAN 2'-6" TALL, SIZE ANGLE SUPPORT AND ANCHORS FOR SEISMIC LOADS.
5. WHERE CONDUIT STUBS INTO EQUIPMENT PAD, USE BELL-END FITTING.

CONDUIT TRANSITION AND SUPPORT (2605-305B)
NTS

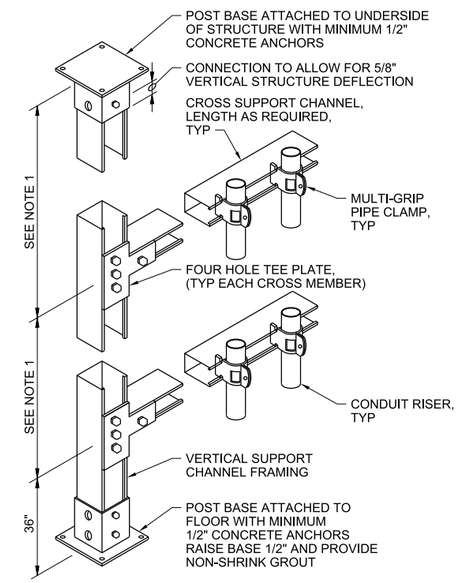

NOTES:
1. LENGTH AS REQUIRED TO LIMIT UNSUPPORTED CONDUIT LENGTH TO MAXIMUM VALUES ALLOWED BY NEC.
2. SIZE SUPPORT POST, CROSS CHANNELS, AND CONNECTIONS FOR VERTICAL AND LATERAL LOADS, SEE GENERAL ELECTRICAL CONSTRUCTION NOTES ON DRAWING.
3. ALL CHANNELS AND FITTINGS SHALL BE 316 SST.

VERTICALCONDUIT SUPPORT (2605-318)
NTS

STATE OF TEXAS
JAMES M. O'CONNOR
83116
LICENSED PROFESSIONAL ENGINEER
5/11/2016

NO.	DATE	REVISION	BY	APVD
DSGN	J O'CONNOR	DR J EFAW	CHK J JENKINS	APVD J O'CONNOR

Montopolis Water Reclamation Initiave (WRI)
Storage Reservoir and Pump Station
2711 Montopolis Drive
Austin Water, Austin, Texas

CH2MHILL®
TBPE FIRM NO. 3699

ELECTRICAL
STANDARD DETAILS
CH2M HILL

NTS
VERIFY SCALE
BAR IS ONE INCH ON ORIGINAL DRAWING.
0 1"

DATE	MAY 2016
PROJ	472902
DWG	E-10
SHEET	117 of 126

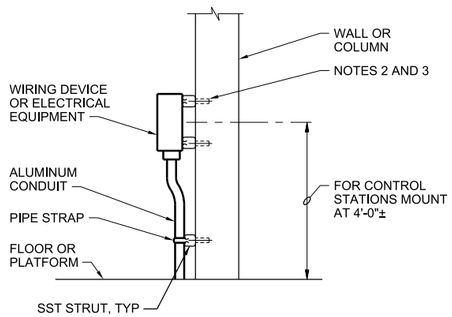

NOTES:

1. ALL MOUNTING HARDWARE SHALL BE 316 SST. USE WASHER AND SPLIT-LOCK WASHERS UNDER ALL NUTS.
2. ON CONCRETE WALLS USE 316 SST CONCRETE ANCHORS. MOUNT ENCLOSURE ON 1/2" SPACERS OF 1/2" SCHEDULE 80 PVC CONDUIT.
3. BOXES 6 INCHES SQUARE AND LESS SHALL BE SUPPORTED BY TWO ANCHORS. LARGER BOXES SHALL BE SUPPORTED BY AT LEAST FOUR.

DEVICE MOUNTING, WALL OR COLUMN

NTS

2605-002

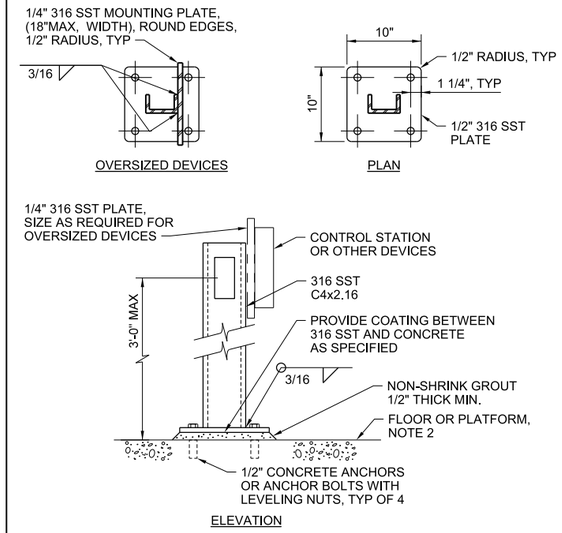

NOTES:

1. USE 316 SST MOUNTING HARDWARE. USE WASHERS AND SPLIT-LOCK WASHERS UNDER ALL NUTS.
2. FOR YARD LOCATIONS, PROVIDE 2'-0" SQUARE x 6" THICK CONCRETE PAD AT GRADE WITH 3#4 REBAR EACH WAY, CENTERED.
3. CONTROL STATIONS DEVICES AND EQUIPMENT HAVING A FRONTAL AREA NOT GREATER THAN 2'-0" SQ FT SHALL BE PEDESTAL MOUNTED UNLESS OTHERWISE INDICATED.

DEVICE MOUNTING, MOTOR CONTROL STATION

NTS

2605-005b

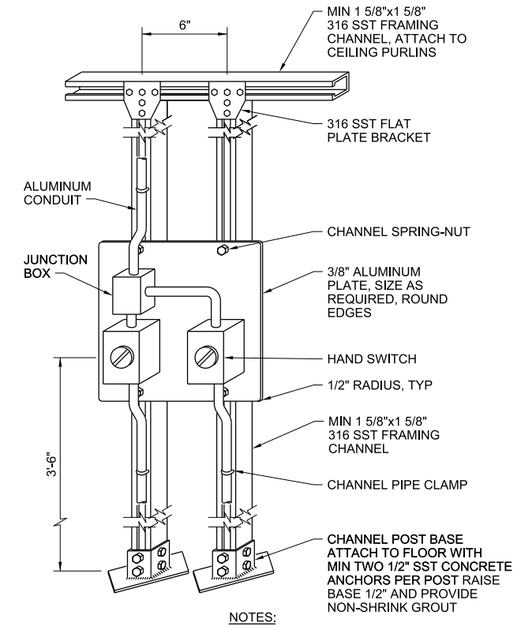

NOTES:

1. SIZE SUPPORT POST, CROSS CHANNELS, AND CONNECTIONS FOR VERTICAL AND LATERAL LOADS.

DEVICE MOUNTING, FROM FLOOR

NTS

2605-009b

GENERAL NOTES:

1. REFER TO DIVISION 16, ELECTRICAL FOR ALL FENCE AND GATE BONDING MATERIAL AND COMPONENTS.

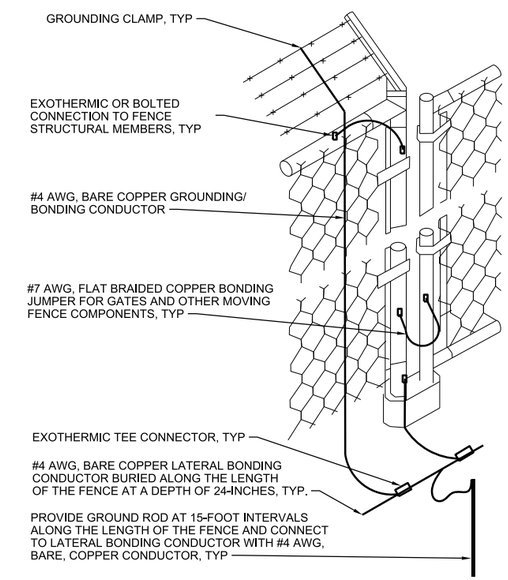

TYPICAL FENCE & GATE BONDING

NTS

2605-012

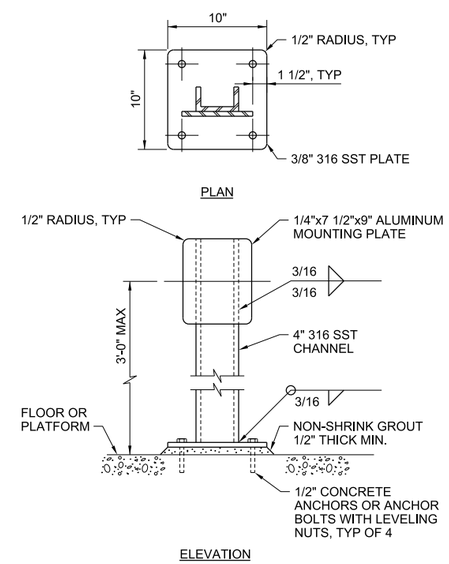

NOTES:

1. HOT-DIP GALVANIZE ASSEMBLY AFTER FABRICATION.
2. USE GALVANIZED MOUNTING HARDWARE. USE WASHERS AND SPLIT-LOCK WASHERS UNDER ALL NUTS AND BOLTS.

DEVICE MOUNTING, CONTROL STATION PEDESTAL

NTS

2605-005a

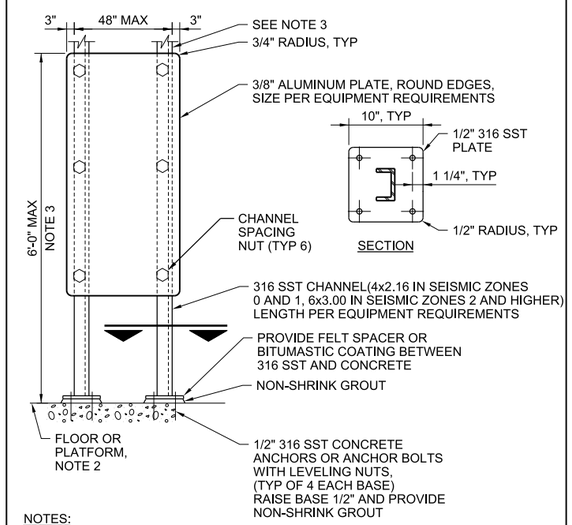

NOTES:

1. USE 316 SST MOUNTING HARDWARE. USE WASHER AND SPLIT LOCK WASHER UNDER ALL NUTS.
2. FOR YARD LOCATIONS PROVIDE A 6 INCH THICK CONCRETE PAD AT GRADE WITH #4 BAR @ 12" OC EACH WAY, CENTERED. THE PAD SHALL BE 12 INCHES LONGER THAN THE MOUNTING PLATE BY ONE HALF THE HEIGHT OF THE MOUNTING PLATE ABOVE FINISHED GRADE. MINIMUM WIDTH 24 INCHES.
3. FOR HEIGHTS EXCEEDING 5'-0" OR WEIGHT OF MOUNTED EQUIPMENT EXCEEDING 200 LBS, SIZE POSTS AND CONNECTIONS FOR LATERAL LOADS. EXTEND POSTS TO STRUCTURE ABOVE WHERE REQUIRED BY CALCULATION, SEE GENERAL ELECTRICAL CONSTRUCTION NOTES ON DRAWINGS.

DEVICE MOUNTING, EQUIPMENT PEDESTAL

NTS

2605-008b

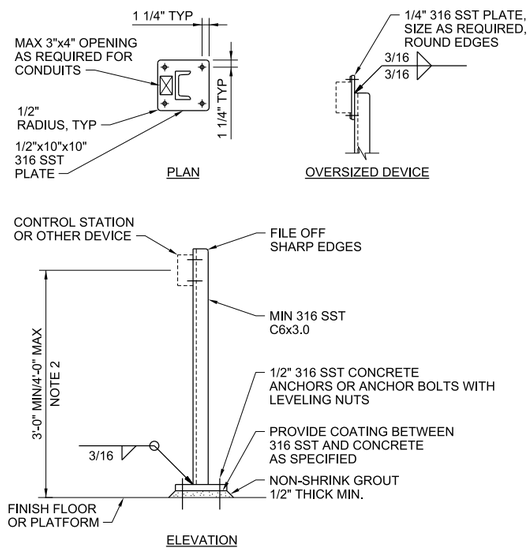

NOTES:

1. ALL MOUNTING HARDWARE SHALL BE 316 SST. USE WASHERS AND SPLIT-LOCK WASHERS UNDER ALL NUTS AND BOLTS.
2. FOR HEIGHTS EXCEEDING 4'-0" OR WEIGHTS OF MOUNTED EQUIPMENT EXCEEDING 200 LBS, SIZE POST AND CONNECTION FOR LATERAL LOADS. EXTEND POSTS TO STRUCTURE ABOVE WHERE REQUIRED BY CALCULATION.
3. ROUTE CONDUITS TO AVOID CONFLICT WITH BASE PLATE.

DEVICE MOUNTING, PEDESTAL

NTS

2605-011b

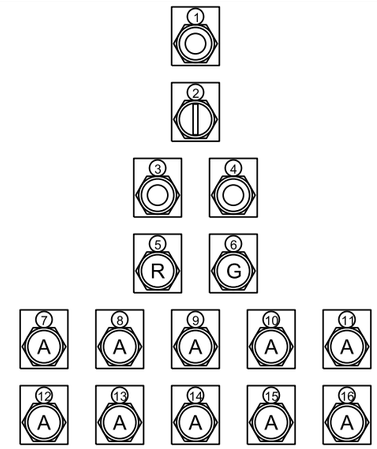

NOTES:

1. LIGHT LAYOUT IS FOR 1 PUMP. TYPICAL FOR 4 PUMPS.
2. BUTTON AND LIGHTS TO BE 2-INCHES ON CENTER MIN.
3. SEE LIGHT LABEL TABLE FOR TEXT TO BE PLACE ABOVE EACH.

CONTROL AND LIGHT LABEL TABLE

1	EMERGENCY STOP *	9	PUMP MOTOR FAIL ****
2	LOCAL, OFF, REMOTE **	10	HIGH PUMP VIBRATION ****
3	START ***	11	HIGH DISCHARGE PRESSURE ****
4	STOP ***	12	DISCHARGE VALVE FAIL TO OPEN ****
5	ON ****	13	DISCHARGE VALVE REMOTE ****
6	OFF ****	14	DISCHARGE VALVE OPENED ****
7	LOW TANK LEVEL ****	15	DISCHARGE VALVE CLOSED ****
8	PUMP HIGH TEMP ****	16	CHECK VALVE FAIL TO OPEN ****

* MUSHROOM PUSH BUTTON
** SELECTOR SWITCH
*** PUSH BUTTON
**** INDICATOR LIGHT

TYPICAL CONTROL PANEL LAYOUT

NTS

2700-001

STATE OF TEXAS
JAMES M. O'CONNOR
83116
LICENSED
PROFESSIONAL ENGINEER
5/11/2016

NO.	DATE	REVISION	BY	APVD
DSGN	J O'CONNOR	DR J EFAW	CHK J JENKINS	APVD J O'CONNOR

Montopolis Water Reclamation Initiave (WRI)
Storage Reservoir and Pump Station
2711 Montopolis Drive
Austin Water, Austin, Texas

CH2MHILL®
TBPE FRM NO. 3699

ELECTRICAL
STANDARD DETAILS
CH2M HILL

NTS
VERIFY SCALE
BAR IS ONE INCH ON ORIGINAL DRAWING.
0 1"

DATE	MAY 2016
PROJ	472902
DWG	E-11
SHEET	118 of 126

INSTRUMENT IDENTIFICATION

EXAMPLE SYMBOLS

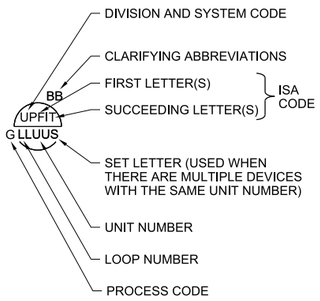

DIGITAL SYSTEM INTERFACES

- ▲ ANALOG INPUT
- ▼ ANALOG OUTPUT
- Δ_X DISCRETE INPUT
- ∇_X DISCRETE OUTPUT

INSTRUMENT IDENTIFICATION LETTERS TABLE

	FIRST-LETTER		SUCCEEDING-LETTERS		
LETTER	PROCESS OR INITIATING VARIABLE	MODIFIER	READOUT OR PASSIVE FUNCTION	READOUT OR PASSIVE FUNCTION	READOUT OR PASSIVE FUNCTION
A	ANALYSIS (+)		ALARM		
B	BURNER, COMBUSTION		USER'S CHOICE (*)	USER'S CHOICE (*)	USER'S CHOICE (*)
C	USER'S CHOICE (*)			CONTROL	
D	DENSITY (S.G.)	DIFFERENTIAL			
E	VOLTAGE		PRIMARY ELEMENT, SENSOR		
F	FLOW RATE	RATIO (FRACTION)			
G	USER'S CHOICE (*)		GLASS, GAUGE VIEWING DEVICE	GATE	
H	HAND (MANUAL)				HIGH
I	CURRENT (ELECTRICAL)		INDICATE		
J	POWER	SCAN			
K	TIME, TIME SCHEDULE	TIME RATE OF CHANGE		CONTROL STATION	
L	LEVEL		LIGHT (PILOT)		LOW
M	MOTION	MOMENTARY			MIDDLE, INTERMEDIATE
N	TORQUE		USER'S CHOICE (*)	USER'S CHOICE (*)	USER'S CHOICE (*)
O	USER'S CHOICE (*)		ORIFICE, RESTRICTION		
P	PRESSURE, VACUUM		POINT (TEST) CONNECTION		
Q	QUANTITY	INTEGRATE, TOTALIZE			
R	RADIATION		RECORD OR PRINT		
S	SPEED, FREQUENCY	SAFETY		SWITCH	
T	TEMPERATURE			TRANSMIT	
U	MULTI VARIABLE		MULTI FUNCTION	MULTI FUNCTION	MULTI FUNCTION
V	VIBRATION, MECHANICAL ANALYSIS			VALVE, DAMPER, LOUVER	
W	WEIGHT, FORCE		WELL		
X	UNCLASSIFIED (*)	X AXIS	UNCLASSIFIED (*)	UNCLASSIFIED (*)	UNCLASSIFIED (*)
Y	EVENT, STATE OR PRESENCE	Y AXIS		RELAY, COMPUTE, CONVERT	
Z	POSITION	Z AXIS		DRIVE, ACTUATOR, UNCLASSIFIED FINAL CONTROL ELEMENT	

TABLE BASED ON THE INTERNATIONAL SOCIETY OF AUTOMATION (ISA) STANDARD.

(+) WHEN USED, EXPLANATION IS SHOWN ADJACENT TO INSTRUMENT SYMBOL. SEE ABBREVIATIONS AND LETTER SYMBOLS.
(*) WHEN USED, DEFINE THE MEANING HERE FOR THE PROJECT.

GENERAL INSTRUMENT OR FUNCTIONAL SYMBOLS

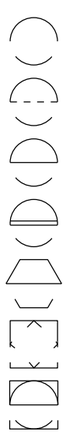

- FIELD MOUNTED
- REAR-OF-PANEL MOUNTED (OPERATOR INACCESSIBLE)
- PANEL MOUNTED (OPERATOR ACCESSIBLE)
- MCC MOUNTED
- COMPUTER FUNCTION
- PLC FUNCTION
- SHARED DISPLAY, SHARED CONTROL

TRANSDUCERS

A	ANALOG	I	CURRENT
D	DIGITAL	P	PNEUMATIC
E	VOLTAGE	PF	PULSE FREQUENCY
F	FREQUENCY	PD	PULSE DURATION
H	HYDRAULIC	R	RESISTANCE

EXAMPLE

CURRENT TO PNEUMATIC TRANSDUCER (BACK OF PANEL, IN A FLOW LOOP)

ACCESSORY DEVICES

A	ALARM
C	CONTROLLER
I	INDICATOR
R	RECORDER
S	SWITCH
T	TRANSMITTER
X	UNCLASSIFIED

EXAMPLE

TRANSMITTER AS AN ACCESSORY TO A FLOW ELEMENT

SPECIAL CASES

ON AND OFF EVENT LIGHTS

ON-OFF HAND SWITCH, MAINTAINED CONTACT SWITCH (CONTROLLED DEVICE WILL RESTART ON RETURN OF POWER AFTER POWER FAILURE).

STOP-START HAND SWITCH MOMENTARY CONTACT SWITCHES (CONTROLLED DEVICE WILL NOT RESTART ON RETURN OF POWER AFTER POWER FAILURE).

LINE LEGEND

- PRIMARY PROCESS (CLOSED CONDUIT, DASHED LINE INDICATES ALTERNATE FLOW STREAM)
- SECONDARY PROCESS
- BYPASS PROCESS
- PROCESS (OPEN CHANNEL)
- ANALOG SIGNAL (4 TO 20 mAdc, ETC.)
- DISCRETE (ON/OFF, ETC.)
- PNEUMATIC SIGNAL
- FILLED SYSTEM SIGNAL
- HYDRAULIC SYSTEM SIGNAL
- DATA LINK
- BUILDING OR FACILITY BOUNDARY
- PACKAGE SYSTEM EQUIPMENT
- TYPICAL BREAK

PARALLELING LINES

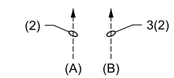

(A) TOTAL OF 2 SIGNALS

(B) 3 TYPICAL SETS OF 2 SIGNALS EACH. TOTAL OF 6 SIGNALS.

CONNECTING LINES

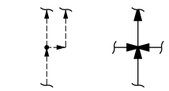

NON-CONNECTING LINES

INTERFACE SYMBOLS

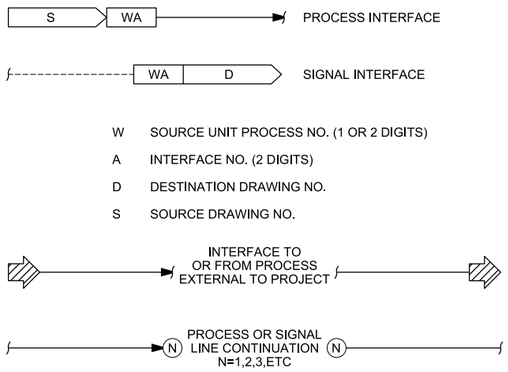

- W SOURCE UNIT PROCESS NO. (1 OR 2 DIGITS)
- A INTERFACE NO. (2 DIGITS)
- D DESTINATION DRAWING NO.
- S SOURCE DRAWING NO.

SELF CONTAINED VALVE & EQUIPMENT TAG NUMBERS

SEE SPECIFICATION SECTION 40 90 01 INSTRUMENTATION AND CONTROL FOR PROCESS SYSTEMS FOR TAG NUMBER REQUIREMENTS.

ABBREVIATIONS & LETTER SYMBOLS

AC	ALTERNATING CURRENT
AM	AUTO-MANUAL
CAM	COMPUTER-AUTO-MANUAL
CCS	CENTRAL CONTROL SYSTEM
CL_2 etc.	CHLORINE (TYPICAL: USE STANDARD CHEMICAL ELEMENT ABBREVIATIONS)
CM	COMPUTER-MANUAL
COD	CHEMICAL OXYGEN DEMAND
CP-X	CONTROL PANEL NO. X
DC	DIRECT CURRENT
DCS	DISTRIBUTED CONTROL SYSTEM
DCU	DISTRIBUTED CONTROL UNIT
DO	DISSOLVED OXYGEN
FCL_2	FREE CHLORINE RESIDUAL
F	FAULT
FC	FULLY CLOSED
FO	FULLY OPENED
FOS	FAST-OFF-SLOW
FOSA	FAST-OFF-SLOW-AUTO
FOSR	FAST-OFF-SLOW-REMOTE
FP-W-X	FIELD PANEL NO. WX (W=UNIT PROCESS NUMBER X=PANEL NUMBER)
FR	FORWARD-REVERSE
HOA	HAND-OFF-AUTO
HOR	HAND-OFF-REMOTE
ISR	INTRINSICALLY SAFE RELAY
LEL	LOWER EXPLOSIVE LIMIT
LOR	LOCAL-OFF-REMOTE
LOS	LOCKOUT STOP
LR	LOCAL-REMOTE
MA	MANUAL-AUTO
MC	MODULATE-CLOSE
MCC-X	MOTOR CONTROL CENTER NO. X
MSC	MANUFACTURER SUPPLIED CABLE
OC	OPEN-CLOSE (SPRING-RETURN TO CENTER)
OCA	OPEN-CLOSE-AUTO
OCR	OPEN-CLOSE-REMOTE
OO	ON-OFF
OOA	ON-OFF-AUTO
OOR	ON-OFF-REMOTE
ORP	OXIDATION REDUCTION POTENTIAL
OSC	OPEN-STOP-CLOSE
pH	HYDROGEN ION CONCENTRATION
PLC	PROGRAMMABLE LOGIC CONTROLLER
R	RUNNING
RIO	REMOTE I/O UNIT
RM-X	REMOTE MULTIPLEXING MODULE NO. X
RTU-X	REMOTE TELEMETRY UNIT NO. X
S	STOPPED
SA	SCADA AUTO MODE
SF	SLOWER-FASTER
SP	STOP
SS	START-STOP
ST	START
SSC	SUPERVISORY SET POINT CONTROL
TCL_2	TOTAL CHLORINE RESIDUAL
TOC	TOTAL ORGANIC CARBON
TOD	TOTAL OXYGEN DEMAND
TURB	TURBIDITY
VHC	VOLATILE HYDROCARBONS
VIB	VIBRATION
Δ	DIFFERENCE
Σ	SUM
×	MULTIPLY
÷	DIVIDE
F(X)	CHARACTERIZED
X^n	RAISED TO THE Nth POWER
$\sqrt{\ }$	SQUARE ROOT
AVG	AVERAGE
1:1	REPEAT OR BOOST
>	SELECT HIGHEST SIGNAL
<	SELECT LOWEST SIGNAL
}	BIAS
%	GAIN OR ATTENUATE

INSTRUMENTATION AND CONTROL GENERAL NOTES

1. COMPONENTS AND PANELS SHOWN WITH A SINGLE ASTERISK (✳) ARE TO BE PROVIDED AS PART OF A PACKAGE SYSTEM.
2. COMPONENTS AND PANELS SHOWN WITH A DIAMOND (◆) ARE TO BE PROVIDED UNDER DIVISION 26, ELECTRICAL.
3. THIS IS A STANDARD LEGEND. THEREFORE, NOT ALL OF THIS INFORMATION MAY BE USED ON THE PROJECT.

NO.	DATE	REVISION	BY	APVD

DSGN DHUMAL ATURALIYE | DR W KENAS | CHK J JENKINS | APVD DHUMAL ATURALIYE

Montopolis Water Reclamation Initiave (WRI)
Storage Reservoir and Pump Station
2711 Montopolis Drive
Austin Water, Austin, Texas

CH2MHILL®
TBPE FIRM NO. 3699

INSTRUMENTATION AND CONTROL

LEGEND NO. 1

NTS
VERIFY SCALE
BAR IS ONE INCH ON ORIGINAL DRAWING.
0 1"

DATE	MAY 2016
PROJ	472902
DWG	I-1
SHEET	119 of 126

VALVE SYMBOLS

- GATE
- KNIFE GATE
- BUTTERFLY
- GLOBE
- BALL
- VEE-BALL
- PLUG
- SEAT PORT ECCENTRIC PLUG
- DIAPHRAGM
- PINCH
- NEEDLE
- SWING CHECK
- BALL CHECK
- BACKFLOW PREVENTER
- ROTARY
- TELESCOPE
- SAMPLE
- MUD
- PRESSURE RELIEF
- AIR AND/OR VACUUM RELEASE
- REGULATED SIDE PRESSURE CONTROL
- PRESSURE REGULATION (CLAY-TYPE)
- MULTI-PORT VALVE (GATE VALVE SHOWN. FOR OTHER VALVE TYPES, APPROPRIATE VALVE SYMBOL SHOWN.) SEAT PORTS ARE IMPLIED BY INDICATED FLOW PATTERN.
- ANGLE GATE

GATE SYMBOLS

- SLUICE
- BUTTERFLY
- FABRICATED SLIDE
- FLAP
- STOP LOG
- SHEAR

ACTUATOR SYMBOLS

- PNEUMATIC DIAPHRAGM SPRING-OPPOSED, SINGLE OR DOUBLE ACTING
- PNEUMATIC CYLINDER SINGLE OR DOUBLE ACTING ACTUATED BY ONE INPUT
- ELECTRIC MOTOR
- SOLENOID
- VALVE POSITIONER
- HYDRAULIC
- DIAPHRAGM, DIFFERENTIAL PRESSURE
- ELECTROHYDRAULIC
- MANUAL

NOTE:
ON LOSS OF PRIMARY POWER (PNEUMATIC, ELECTRICAL, OR HYDRAULIC)

XX:
- FO FAIL OPEN
- FC FAIL CLOSED
- FLP FAIL TO LAST POSITION

PRIMARY ELEMENT SYMBOLS

- PARSHALL FLUME
- WEIR
- ORFICE PLATE
- FLOW TUBE
- PITOT-STATIC
- VORTEX METER
- ULTRASONIC FLOWMETER
- ELECTROMAGNETIC FLOWMETER
- PROPELLER OR TURBINE METER
- THERMAL FLOWMETER
- LEVEL (BUBBLER TUBE)
- LS — LEVEL (FLOAT)
- FI — ROTAMETER
- DE — DENSITY METER
- XX — GENERIC
- LE — LEVEL

MISCELLANEOUS SYMBOLS

- VENT TO ATMOSPHERE
- AIR GAP
- DRIP TRAP
- PIG INSERT POINT
- PIG CATCH POINT
- SELF CONTAINED AIR SUPPLY
- AIR PURGE SET
- FLUSHING CONNECTION
- SEAL WATER SET
- WATER PURGE SET
- FLEXIBLE CONNECTION
- AERATOR
- DIAPHRAGM SEAL
- ANNULAR DIAPHRAGM SEAL
- COMPOSITE SAMPLER
- FLAME TRAP
- CALIBRATION COLUMN
- INLINE SILENCER
- BLIND FLANGE
- PIPE CAP
- STRAINER
- BASKET STRAINER
- FILTER
- PULSATION DAMPENER
- EXPANSION CHAMBER
- FFLCPLLLX — PANEL CONTINUED ON SAME OR OTHER DRAWING; PANEL OUTLINE; PANEL NAME
- 120V — 120 VOLT, 60 HZ POWER
- 480V — 480 VOLT, 60 HZ POWER
- XX — AIR SET XX = SUPPLY PRESSURE IN PSIG.
- PLUG
- RECEPTACLE
- RUPTURE DISK (VACUUM)
- RUPTURE DISK (PRESSURE)
- TV — TV MONITOR
- TV — TV CAMERA
- AND — LOGIC ELEMENT: IF A AND NOT B THEN C
- OR — LOGIC ELEMENT: IF A OR B THEN C
- RADIO ANTENNA
- OR — INTERLOCK, SEE CONTROL DIAGRAMS
- VOICE COMMUNICATION POINT
- SKIMMING MECHANISM
- SCREW CONVEYOR
- MIXER
- ELECTRIC MOTOR

PUMP AND COMPRESSOR SYMBOLS

- CENTRIFUGAL PUMP (DRY PIT)
- CENTRIFUGAL WET PIT PUMP OR TURBINE PUMP
- RECIPROCATING OR METERING PUMP (POSITIVE DISPLACEMENT)
- DIAPHRAGM PUMP
- GEAR PUMP OR BLOWER (POSITIVE DISPLACEMENT)
- PROGESSING CAVITY PUMP
- COMPRESSOR (CENTRIFUGAL)
- COMPRESSOR (PISTON)
- BLOWER OR FAN (CENTRIFUGAL)
- EJECTOR
- PISTON PUMP
- SUBMERSIBLE SUMP PUMP
- ROTARY PUMP
- VACUUM PUMP
- SCREW PUMP

XX:
- AS ADJUSTABLE SPEED
- CS-1 CONSTANT SPEED (SINGLE SPEED)
- CS-2 CONSTANT SPEED (TWO SPEED)

LINE SIZE AND MATERIAL IDENTIFICATION

(FOR REFERENCE ONLY. SEE SITE AND MECHANICAL DRAWINGS)

18CLDI — PIPE DIAMETER IN INCHES; PIPE MATERIAL ABBREVIATION

CISP	CAST IRON SOIL PIPE
CLDI	CEMENT LINED DUCTILE IRON
CLSTL	CEMENT LINED STEEL
CU	COPPER
FRP	FIBERGLASS REINFORCED PLASTIC
PVC	POLYVINYL CHLORIDE
SST	STAINLESS STEEL
STL	STEEL

FLOW STREAM IDENTIFICATION

AHP	AIR, HIGH PRESSURE PROCESS
AI	AIR, INSTRUMENT
AL	ALUM
ALP	AIR, LOW PRESSURE PROCESS
ASH	SODA ASH
B	BRINE
BDS	BLENDED DIGESTED SLUDGE
BFE	BIO-FILTER EFFLUENT
BFI	BIO-FILTER INFLUENT
BFR	BIO-FILTER RECYCLE
BFW	BRINE FEEDWATER
BS	BRINE SLUDGE
BWS	BACKWASH SUPPLY
BYP	BYPASS
C	CARBON SLURRY
CD	CARBON DIOXIDE GAS
CG	CHLORINE GAS (PRESSURE)
CGV	CHLORINE GAS (VACUUM)
CHS	CHEMICAL SLUDGE
CL	CHLORINE LIQUID
CO	CONDENSATE DRAIN
CS	CHLORINE SOLUTION
CWR	COOLING WATER RETURN
CWS	COOLING WATER SUPPLY
D	DRAIN (SANITARY)
DAS	DIGESTED ACTIVATED SLUDGE
DG	DIGESTER GAS
DIW	DEIONIZED WATER
DS	DIGESTED SLUDGE
DW	DISTILLED WATER
F	FILTRATE
FC	FERRIC CHLORINE
FE	FILTER EFFLUENT
FI	FILTER INFLUENT
FOR	FUEL OIL RETURN
FOS	FUEL OIL SUPPLY
FTW	FILTER TO WASTE
G	NATURAL GAS
GAS	GASOLINE
GR	GRIT SLURRY
H	HYDROGEN GAS
HPR	HIGH PRESSURE RETURN (CONDENSATE)
HPS	HIGH PRESSURE STEAM
HS	HEAVY SOLIDS
HWR	HEATING WATER RETURN
HWS	HEATING WATER SUPPLY
LD	DRY LIME
LPO	LIQUID POLYMER
LPR	LOW PRESSURE RETURN (CONDENSATE)
LPS	LOW PRESSURE STEAM
LS	LIME SLURRY
LSD	LIME SLUDGE
ML	MIXED LIQUOR
MPR	MEDIUM PRESSURE RETURN (CONDENSATE)
MPS	MEDIUM PRESSURE STEAM
NA	SODIUM HYDROXIDE
NT	NITROGEN TRICHLORIDE
OF	OVERFLOW
P	PROPANE GAS
PDS	PRIMARY DIGESTED SLUDGE
PE	PRIMARY EFFLUENT
PI	PRIMARY INFLUENT
PLE	PLANT EFFLUENT
PO	POLYMER SOLUTION
PS	PRESSURE SEWER
PSD	PRIMARY SLUDGE
PSM	PRIMARY SCUM
RAS	RETURN ACTIVATED SLUDGE
RB	RAW BRINE
RCS	RECARBONATION SLUDGE
RCY	RECYCLE
RHW	RECIRCULATED HOT WATER
RS	RAW SEWAGE
RSD	RECIRCULATED SLUDGE
S	SANITARY SEWER (GRAVITY)
SA	SAMPLE
SAS	SODA ASH SOLUTION
SB	SPENT BRINE
SC	COLD SLUDGE
SDG	SULFUR DIOXIDE GAS
SDL	SULFUR DIOXIDE LIQUID
SDS	SULFUR DIOXIDE SOLUTION
SDV	SULFUR DIOXIDE GAS (VACUUM)
SE	SECONDARY EFFLUENT
SH	HEATED SLUDGE
SSD	SECONDARY DIGESTED SLUDGE
SSM	SECONDARY SCUM
SW	SURFACE WASH
TAS	THICKENED ACTIVATED SLUDGE
TB	TREATED BRINE
TBS	THICKENER BOTTOM SLUDGE
TDS	THICKENED DIGESTED SLUDGE
TPS	THICKENED PRIMARY SLUDGE
TUF	THICKENER UNDERFLOW
UD	UNDERDRAIN
V	VENT
VAC	VACUUM
W1	NO. 1 (POTABLE) WATER
W2	NO. 2 (NON-POTABLE) WATER
W3	NO. 3 WATER
W4	NO. 4 WATER
WAS	WASTE ACTIVATED SLUDGE

DHUMAL N. ATURALIYE — STATE OF TEXAS — 105693 — LICENSED PROFESSIONAL ENGINEER — 05/11/16

NO.	DATE	REVISION	BY	APVD

DSGN DHUMAL ATURALIYE | DR DHUMAL ATURALIYE | CHK W KENAS | APVD J JENKINS

Montopolis Water Reclamation Initiave (WRI)
Storage Reservoir and Pump Station
2711 Montopolis Drive
Austin Water, Austin, Texas

CH2MHILL®
TBPE FIRM NO. 3699

INSTRUMENTATION AND CONTROL

LEGEND NO. 2

NTS

VERIFY SCALE

BAR IS ONE INCH ON ORIGINAL DRAWING.
0 — 1"

DATE	MAY 2016
PROJ	472902
DWG	I-2
SHEET	120 of 126

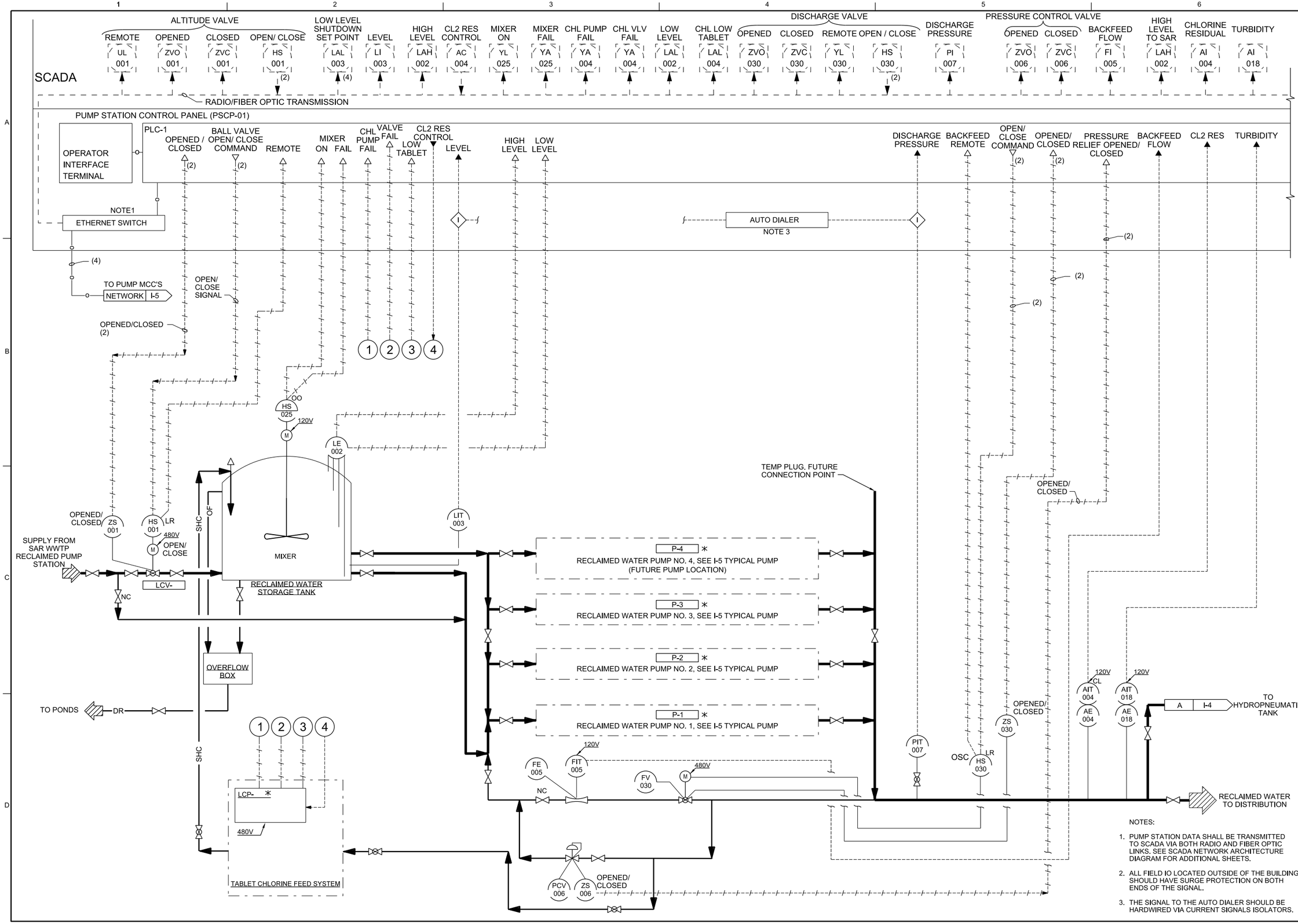

NOTES:

1. PUMP STATION DATA SHALL BE TRANSMITTED TO SCADA VIA BOTH RADIO AND FIBER OPTIC LINKS. SEE SCADA NETWORK ARCHITECTURE DIAGRAM FOR ADDITIONAL SHEETS.
2. ALL FIELD IO LOCATED OUTSIDE OF THE BUILDING SHOULD HAVE SURGE PROTECTION ON BOTH ENDS OF THE SIGNAL.
3. THE SIGNAL TO THE AUTO DIALER SHOULD BE HARDWIRED VIA CURRENT SIGNALS ISOLATORS.

STATE OF TEXAS
DHUMAL N. ATURALIYE
105693
LICENSED
PROFESSIONAL ENGINEER
05/11/16

NO.	DATE	REVISION	BY	APVD

DSGN DHUMAL ATURALIYE | DR B BERHORST | CHK J JENKINS | APVD DHUMAL ATURALIYE

Montopolis Water Redamation Initiave (WRI)
Storage Reservoir and Pump Station
2711 Montopolis Drive
Austin Water, Austin, Texas

CH2MHILL®
TBPE FIRM NO. 3699

INSTRUMENTATION AND CONTROL

PUMP STATION P&ID

NTS
VERIFY SCALE
BAR IS ONE INCH ON ORIGINAL DRAWING.
0 1"

DATE	MAY 2016
PROJ	472902
DWG	I-3
SHEET	121 of 126

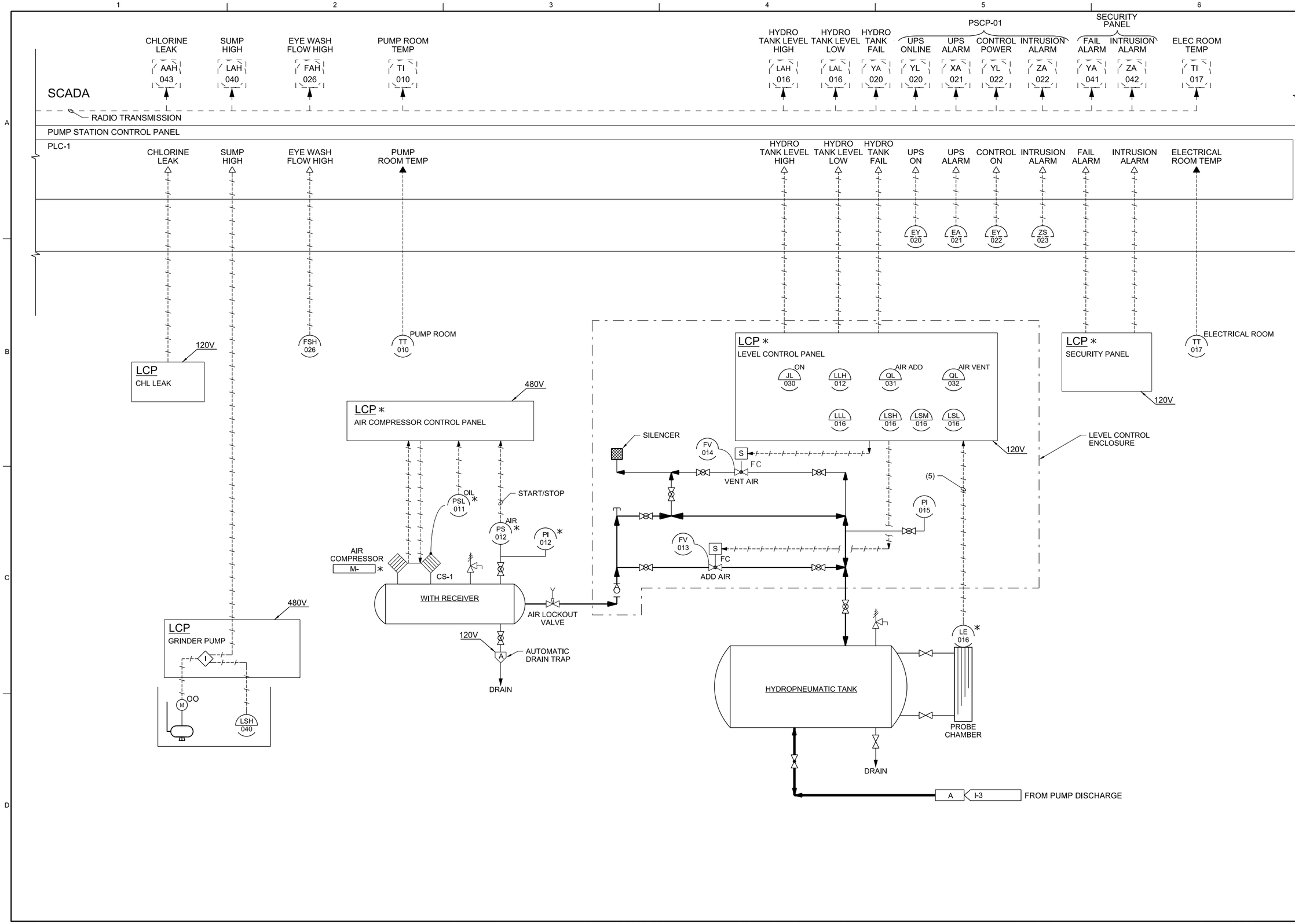

NO.	DATE	REVISION	BY	APVD

DSGN DHUMAL ATURALIYE | DR B BERHORST | CHK J JENKINS | APVD DHUMAL ATURALIYE

Montopolis Water Reclamation Initiave (WRI)
Storage Reservoir and Pump Station
2711 Montopolis Drive
Austin Water, Austin, Texas

CH2MHILL®
TBPE FIRM NO. 3699

INSTRUMENTATION AND CONTROL

PUMP STATION P&ID

NTS
VERIFY SCALE
BAR IS ONE INCH ON ORIGINAL DRAWING.
0 1"

DATE	MAY 2016
PROJ	472902
DWG	I-4
SHEET	122 of 126

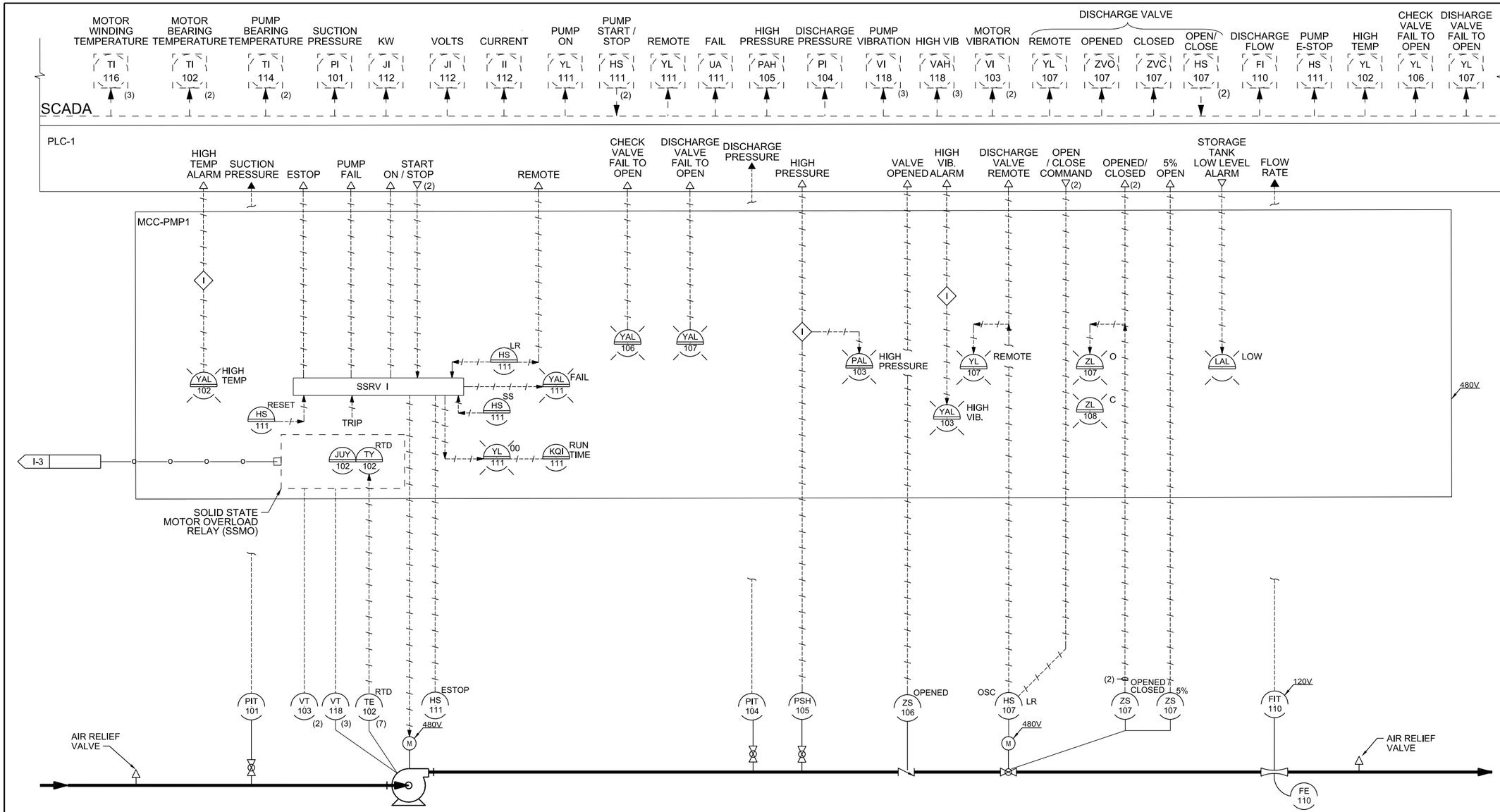

PUMP SAFETY TABLE

LOCATION	VIBRATION	TEMPERATURE
INBOARD MOTOR	VT0103	TE-102
OUTBOARD MOTOR	VT-113	TE-112
INBOARD AXIAL	VT-118	TE-114
OUTBOARD AXIAL	VT-119	TE-115
RADIAL	VT-120	
MOTOR WINDINGS		TE-116 TE-117 TE-118

NOTE:

INSTRUMENTATION AND SIGNALS ARE TYPICAL FOR ALL PUMPS.
THE FIRST DIGIT OF THE LOOP NUMBER WILL BE THE SAME AS
THE PUMP NUMBER. THE LOOPS SHOWN ABOVE ARE FOR PUMP NO. 1.

DHUMAL N. ATURALIYE
STATE OF TEXAS
105693
LICENSED
PROFESSIONAL ENGINEER
05/11/16

NO.	DATE	REVISION	BY	APVD

DSGN DHUMAL ATURALIYE | DR J EFAW | CHK J JENKINS | APVD DHUMAL ATURALIYE

Montopolis Water Reclamation Initiave (WRI)
Storage Reservoir and Pump Station
2711 Montopolis Drive
Austin Water, Austin, Texas

CH2MHILL®
TBPE FRM NO. 3699

INSTRUMENTATION AND CONTROL

TYPICAL RECLAIMED WATER PUMP P&ID

NTS

DATE	MAY 2016
PROJ	472902
DWG	I-5
SHEET	123 of 126

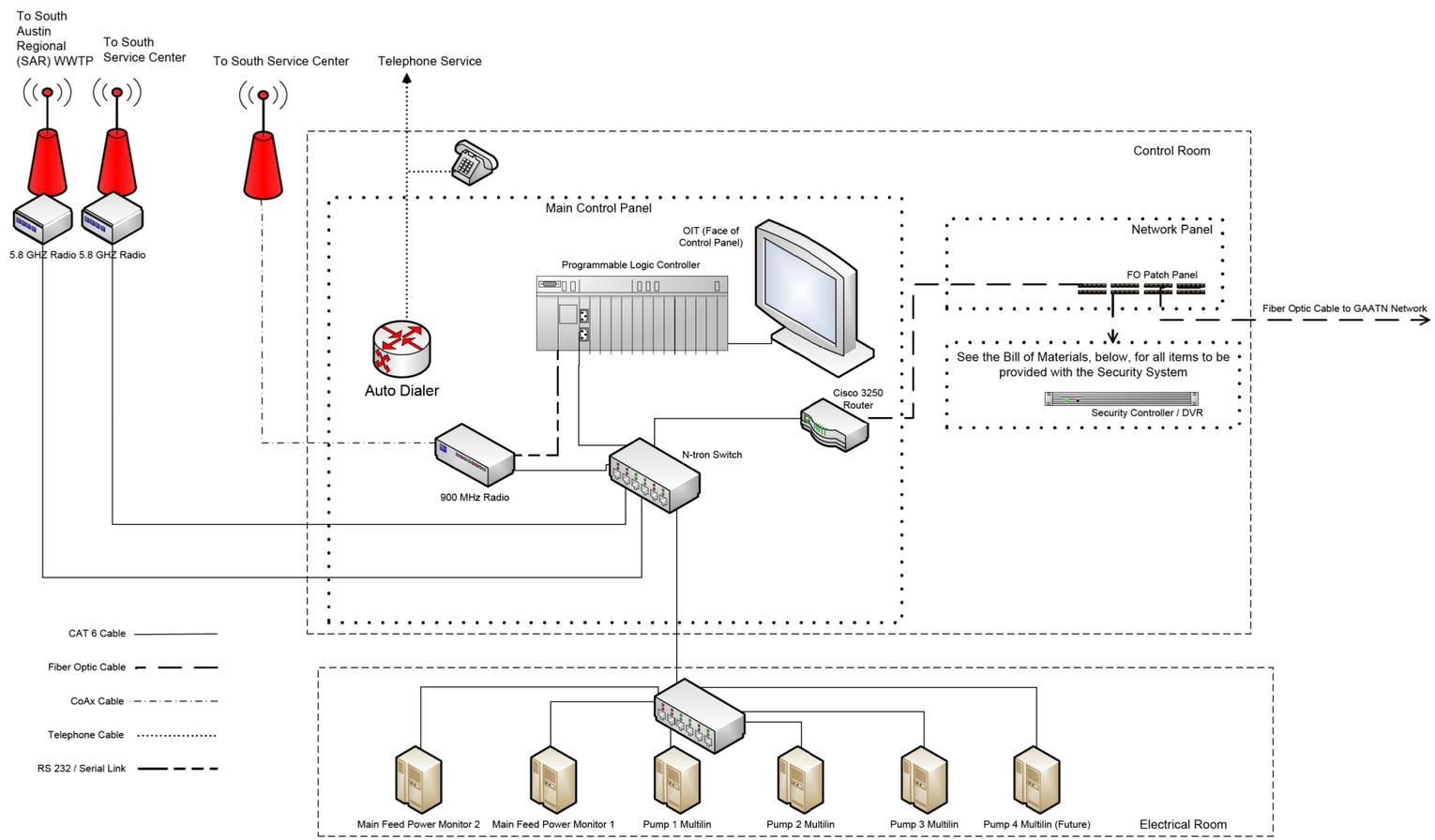

NETWORK ARCHITECTURE

NTS

SECURITY EQUIPMENT TABLE

Device	Manufacturer and Model	Comments
Three Pan Tilt Zoom (PTZ) Exterior Cameras	Pelco Spectra 4 35x	Pole mounted, exterior housing IP Camera SD435-PG-E1 with TXB-IP Module. Pole Mounted.
Two Pan Tilt Zoom (PTZ) Interior Cameras	Pelco Spectra SD4N-W1	Interior pendant mounted 14 feet from north and south wall views crossed.
One Fixed Interior Camera	Pelco FD2-IRV Series	Varifocal Lens (mounted similar to the two interior cameras)
One Network Video Recorder	Pelco DSSRV-030 DVD-US	3 terabytes + DVD maker and license for 6 IP cameras.
One Client User Interface	Pelco DS ControlPoint	To be used in the Administration Control Room
One Digital Sentry Capture Card System	Pelco ENC5400 Capture Card	
One Encorder	Pelco ENC-5416 H.264	
Eight Power Supplies for the Cameras	Pelco MCS-8	
Three Camera Poles	12' in height, round / tapered / galvanized.	With ¾ conduit access at 10' and 9' (for the camera at 10 and motion detector at 9).
Three Exterior Motion Detectors	Protech Piramid Motion Detector SDI-77 XL2	Pole mounted
Three Interior Motion Detectors	Bosch ISC-PLD-1-WA18X	Wall mounted
One Ladder Motion Detector	Protech Piramid LT	
One Uninterruptable Power Supply	APC Smart UPS - X series with Mount Part # SMX48RMBP2U	External Battery Pack Rack
Two Card Readers	Proxmity, 8 bit- HID RK 40/ Proximity plus key pad	For Corporate 1000 cards for the two personnel doors.
Two Knox Box Pad Lock for the Gate	Knox Box Pad lock #3770	
One Pump Station Single Lock	Knox Box #4444 Recess Mount Box	With Tamper Switch
One Knox Recessed Mounting Kit	Knox 4470	
Eight Personnel Entry Door Contacts	GE Sentrol 2500 Series	One for each door.
One Overhead Door Contact	GE Sentrol 2200 Series	
IP Communication Device	Network Switch	

STATE OF TEXAS
DHUMAL N. ATURALIYE
105693
LICENSED
PROFESSIONAL ENGINEER
05/11/16

NO.	DATE	REVISION	BY	APVD

DSGN DHUMAL ATURALIYE | DR B BERHORST | CHK J JENKINS | APVD DHUMAL ATURALIYE

Montopolis Water Redamation Initiave (WRI)
Storage Reservoir and Pump Station
2711 Montopolis Drive
Austin Water, Austin, Texas

CH2MHILL®
TBPE FIRM NO. 3699

INSTRUMENTATION AND CONTROL

NETWORK ARCHITECTURE
P&ID

NTS
VERIFY SCALE
BAR IS ONE INCH ON ORIGINAL DRAWING.
0 1"

DATE	MAY 2016
PROJ	472902
DWG	I-6
SHEET	124 of 126

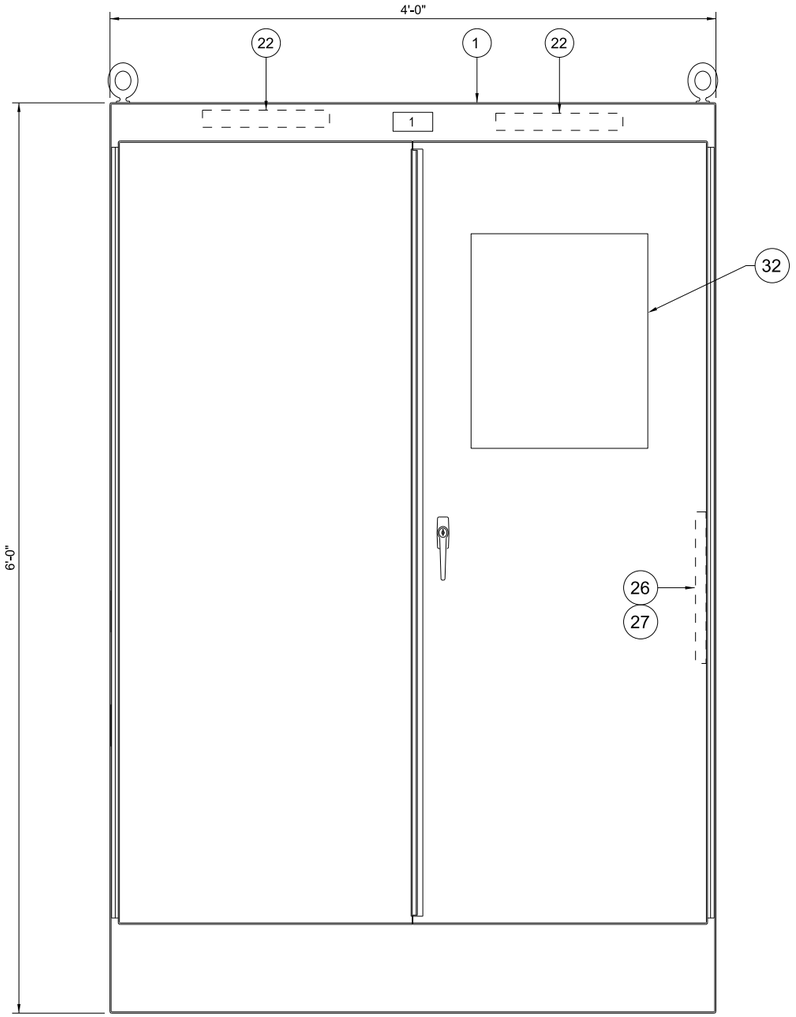

FRONT DOOR ENCLOSURE

(NOTE 2)

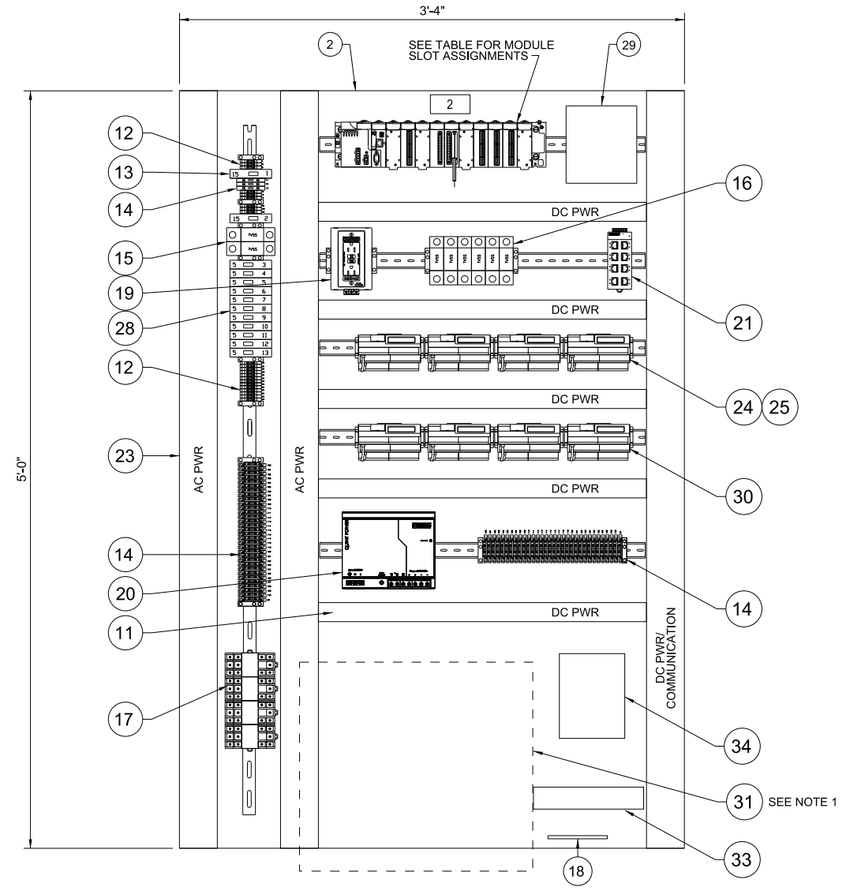

BACK PANEL

(NOTE 2)

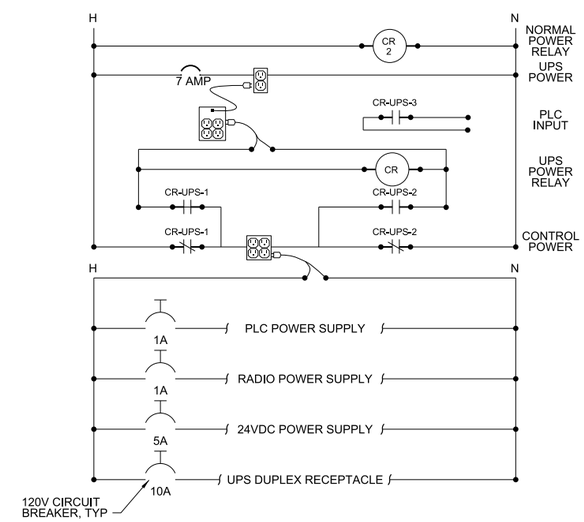

UPS POWER DISTRIBUTION

NTS

PARTS LIST		
ITEM	MANUFACTURER	DESCRIPTION
1	HOFFMAN	ENCL,NEMA 12, 72X48X24, A724824FSD
2	HOFFMAN	BACK PANEL, 60X48, A-72P48F1
3	MODICON	12 SLOT CHASSIS 1756-A17
4	MODICON	PS, BMXCPS2000
5	MODICON	CPU, BMEP582020
6	MODICON	AI, BMXAMI0810
7	MODICON	AO, BMXAMO0410
8	MODICON	DI, BMXDAI1604
9	MODICON	DO, BMXDRA0805
10	MODICON	NOE, BMXNOC0402
11	PANEL SHOP	WIREWAY 2"X4"
12	ENTRELEC	TERMINAL, TYPE M4/GT
13	ALLEN-BRADLEY	CIRCUIT BREAKER 1492-CB1GXXX
14	ENTRELEC	TERMINAL, FUSE, TYPE MIO/137.5F6
15	EDCO	SURGE SUPPRESOR 120V, HSP-121
16	EDCO	SURGE SUPPRESOR 24V, PC-642
17	POTTER BROWNFIELD	INTERPOSING RELAY, KUP
18	SQUARE D	GROUND BAR
19	PHOENIX CONTACT	RECEPTACLE, 15A, GF1, EM/DUO
20	PHOENIX CONTACT	24V06 POWER SUPPLY, QUINT-PS

PARTS LIST (CONT)		
ITEM	MANUFACTURER	DESCRIPTION
21	N-TRON	NETWORK SWITCH 516TX
22	HOFFMAN	LIGHT KIT, DOOR SWITCH, ALF16D18R
23	PANEL SHOP	WIREWAY 3"X4"
24	MODICON	ANALOG TERM MODULE, ABE7CPA410
25	MODICON	ANALOG TERM MODULE, ABE7CPA21
26	HOFFMAN	FOLDING SHELF, 12X12, ACSHELF12
27	HOFFMAN	SIDE PANEL, 14" A72SMP14
28	ALLEN BRADLEY	CIRCUIT BREAKER 1492-SP1CXXX
29	MDS	RADIO TRANSCEIVER, S9
30	MODICON	DISCRETE TERM MODULE, ABE7H161221
31	EATON	POWERWARE, 5125
32	SCHNEIDER	MAGELIS TYPE XBT
33	CISCO	ROUTER, 3250
34	RACO	AUTODIALER, VERBATIM
35		
36		
37		
38		

NAMEPLATE SCHEDULE			
ITEM	SIZE	LINE 1	LINE 2
1	2" X 6" X 1/2"	MASTER PLC	
2	1" X 3" X 5/16"	PLC-1	

MODULE ASSIGNMENTS													
PANEL	SLOT												
	1	2	3	4	5	6	7	8	9	10	11	12	
PSCP-01	4	5	6	6	7	7	7	8	8	8	9	10	PARTS LIST ITEM

NOTES:

1. UPS TO BE INSTALLED ON FLOOR OF PANEL. BUILD FIBER GLASS GRATING STAND FOR CLEARANCE OF CONDUIT STUB-UPS.
2. MAJOR COMPONENTS AND GENERAL ARRANGEMENT SHOWN ONLY. CONTRACTOR SHALL PROVIDE ALL REQUIRED DEVICES AND MATERIALS AND SHALL SUBMIT PROPOSED ARRANGEMENT FOR APPROVAL.

STATE OF TEXAS
DHUMAL N. ATURALIYE
105693
LICENSED
PROFESSIONAL ENGINEER
05/11/16

NO.	DATE	REVISION	BY	APVD

DSGN DHUMAL ATURALIYE | DR B BERHORST | CHK J JENKINS | APVD DHUMAL ATURALIYE

Montopolis Water Reclamation Initiave (WRI)
Storage Reservoir and Pump Station
2711 Montopolis Drive
Austin Water, Austin, Texas

CH2MHILL®
TBPE FIRM NO. 3699

INSTRUMENTATION AND CONTROL

CONTROL PANEL ELEVATION

NTS

VERIFY SCALE

BAR IS ONE INCH ON ORIGINAL DRAWING.
0 1"

DATE	MAY 2016
PROJ	472902
DWG	I-7
SHEET	125 of 126

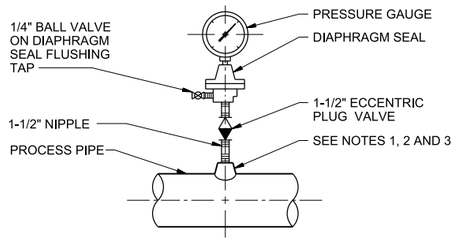

DIAPHRAGM PRESSURE GAUGE

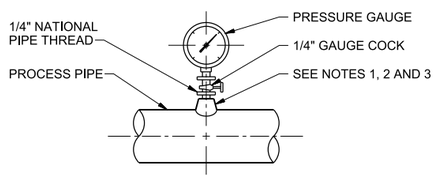

PRESSURE GAUGE

NOTES:

1. FOR STEEL, GALVANIZED STEEL, AND PVC 2 1/2" AND SMALLER USE A BUSHING IN A TEE.
2. FOR DUCTILE IRON AND FIBERGLASS REINFORCED PLASTIC PIPE, ALL SIZES, USE PIPE SADDLE WITH BUSHING.
3. FOR STEEL AND STAINLESS STEEL PIPES 3" AND LARGER, AND PRESSURE VESSELS, USE THRED-O-LET AS SHOWN.
4. PROVIDE SNUBBER FOR POSITIVE DISPLACEMENT PUMP INSTALLATIONS.

PRESSURE GAUGE MOUNTING

NTS

4090-690

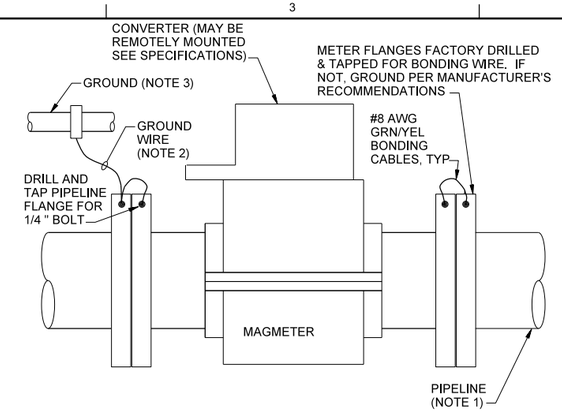

NOTES:

1. USE THIS DETAIL WHEN PIPELINE IS ELECTRICALLY CONDUCTIVE (METAL PIPE WITH NO INSIDE COATING OR LINING).
2. NO. 12 AWG INSULATED IF LENGTH IS LESS THAN 6'. IF MORE THAN 6', INSTALL CONDUCTOR IN 3/4 " CONDUIT.
3. BOND MAGMETER TO ONE OF THE FOLLOWING ACCEPTABLE GROUNDS:
   A) METALLIC WATER PIPE IF BURIED PORTION IS MORE THAN 10'.
   B) STRUCTURAL STEEL
   C) IF BOTH OF THE ABOVE NOT AVAILABLE, INSTALL 3/4 " DIA x 10'-0" LONG COPPER CLAD STEEL GROUND ROD IN GROUND OUTSIDE OF STRUCTURE

CONDUCTIVE PIPELINE MAGMETER GROUNDING

NTS

4091-219G

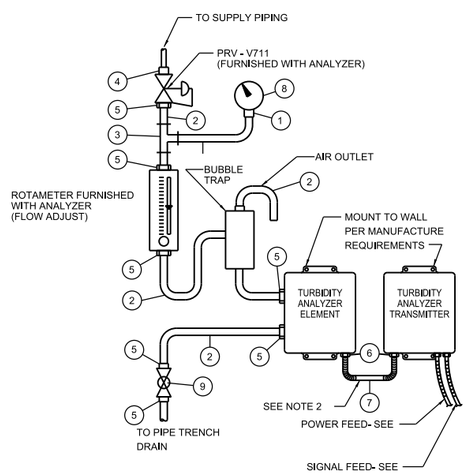

NOTES
1. PRESSURE REGULATOR VALVE AND PRESSURE GAUGE TO BE MOUNTED NEAR ENTRANCE TO BUILDING AS SHOWN ON DRAWINGS.
2. CABLE BETWEEN ELEMENT AND TRANSMITTER FURNISHED WITH INSTRUMENT.
3. MATERIALS OF CONSTRUCTION SHALL MATCH FLOWING MEDIA MATERIALS, AREA CLASSIFICATION AND PLANT STANDARDS REQUIREMENTS.

ITEM	QTY	SIZE	DESCRIPTION	ITEM	QTY	SIZE	DESCRIPTION
1	1	1/2"x 1/4"	ADAPT. FEM. TO MALE PIPE	6	2	1/2"	FLEX CONNECTOR
2	AR	1/4"	SEAMLESS TUBING (NOTE 4)	7	AR	1/2"	FLEX CONDUIT (MAX. 48")
3	1	1/4"	TUBING TEE (NOTE 4)	8	1	2 1/2"	0-60 PSIG PRESS. GAUGE
4	1	1/4"x 1/4"	ADAPT. FEM. PIPE TO TUBE	9	1	1/2"	TUBING BALL VALVE - V330
5	7	1/4"x 1/4"	NPT- TUBE CONNECTOR				

TURBIDITY ANALYZER

4091-043

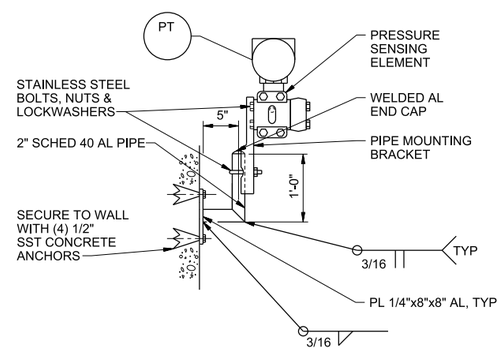

CONCRETE WALL

NOTES:

1. ALTERNATIVELY, WALL MOUNT BRACKET SHALL BE O'BRIEN CORP. MODEL WE16M WITH 9 MIL ARC SPRAY ZINC METALLIZED COATING, OR EQUAL.
2. PAINT ALUMINUM IN CONTACT WITH CONCRETE ACCORDING TO SPECIFICATIONS FOR PAINTING.
3. ALL MOUNTING BRACKETS ARE TO BE INSTALLED APPROXIMATELY 4'-0" ABOVE FLOOR OR AS REQUIRED BY PROCESS CONNECTION, SEE (X) .

PRESSURE AND PRESSURE DIFFERENTIAL TRANSMITTER INSTALLATION

NTS

4091-303

STATE OF TEXAS
DHUMAL N. ATURALIYE
105693
LICENSED
PROFESSIONAL ENGINEER
05/11/16

NO.	DATE	REVISION	BY	APVD

DSGN DHUMAL ATURALIYE | DR B BERHORST | CHK J JENKINS | APVD DHUMAL ATURALIYE

Montopolis Water Reclamation Initiave (WRI)
Storage Reservoir and Pump Station
2711 Montopolis Drive
Austin Water, Austin, Texas

CH2MHILL®
TBPE FRM NO. 3699

INSTRUMENTATION AND CONTROL

STANDARD DETAILS
CH2M HILL

1:1
VERIFY SCALE
BAR IS ONE INCH ON ORIGINAL DRAWING.
0 1"

DATE	MAY 2016
PROJ	472902
DWG	I-8
SHEET	126 of 126