CITY OF AUSTIN
AUSTIN ENERGY

PROJECT MANUAL
Contract Documents and Technical Specifications

VOLUME 1 of 2

CHILLED WATER PIPING CONSTRUCTION IN THE RIGHT OF WAY

SOLICITATION NUMBER
CLMC 606

C.I.P. PROJECT NUMBER:
7190.006

STATE OF TEXAS
JOHN M. ROUTH
85572
LICENSED
PROFESSIONAL ENGINEER
7-12-2016

CITY OF AUSTIN
Austin Energy
721 Barton Springs Road
Austin, TX 78704-1145

August 8, 2016

Document Number		Title

VOLUME 1

INTRODUCTORY INFORMATION

Cover Page	08/01/16	
Table of Contents	07/06/16	

BIDDING REQUIREMENTS, CONTRACT FORMS, & CONDITIONS OF THE CONTRACT

Pre-Bid Information

00020IDIQ	01/15/16	Invitation for Bids

Instructions to Bidders

00100	06/01/16	Instructions to Bidders

Information Available to Bidders

00220	05/06/11	Geotechnical Data

Bid Forms

00300UIDIQ	06/01/16	Bid Form (Unit Price)

Supplements to Bid Forms

00400	06/01/16	Statement of Bidder's Experience
00405	09/25/05	Certificate of Non-Suspension or Debarment
00410	01/15/16	Statement of Bidder's Safety Experience
00440	10/19/15	Affidavit - Prohibited Activities
00475	05/11/15	Nonresident Bidder Provisions

Agreement Form

00500IDIQ	1/15/16	Agreement

Bonds and Certificates

00610	02/23/10	Performance Bond
00620	02/23/10	Payment Bond
00630	05/11/15	Nondiscrimination Certificate
00631	03/06/14	Title VI Assurances Appendix A
00650	06/01/16	Certificate of Insurance
00670	03/20/14	Sales Tax Exemption Certificate
00680	06/05/06	Non-Use of Asbestos Affidavit (Prior to Construction)
00681	06/05/06	Non-Use of Asbestos Affidavit (After Construction)

General Conditions

00700	05/03/16	General Conditions

Supplementary Conditions

00810IDIQ	01/15/16	Supplemental General Conditions
00820IDIQ	03/02/15	Modifications to Bidding Requirements and Contract Forms
00830	05/03/16	Wage Rates and Payroll Reporting
00830BC	07/06/16	Wage Rates Building Construction Trades
00830HH	05/03/16	Wage Rates Highway Heavy

Document Number		Title

SPECIFICATIONS

Division 1 - General Requirements

01010IDIQ	03/02/15	Summary of Work *{Define scope of Work}*
01020IDIQ	*03/02/15*	Allowances *{Define Allowances if included in Bid}*
01050	10/19/15	Grades Lines & Levels
01095	07/21/03	Reference Standards and Definitions
1100IDIQ	03/02/15	Emergency Response
01200	08/09/12	Project Meetings
01300	04/22/13	Submittals
01353	08/09/12	Construction Equipment Emissions Reduction Plan
01500	08/09/12	Temporary Facilities
01505	04/22/13	Construction and Demolition Waste Management
01510	02/23/10	Construction Indoor Air Quality Management Plan
01550	08/09/12	Public Safety and Convenience
01600	06/28/16	Materials and Equipment *{e.g. Qualified Products List}*
01700	10/17/14	Contract Closeout *{e.g. additional Record Document requirements}*
01730	08/18/15	Operation and Maintenance Data
01900	03/12/12	Prohibition of Asbestos Containing Materials
01900a	06/05/06	Statement of Non-Inclusion of Asbestos Containing Material (E/A Prior to Design)
01900b	06/05/06	Statement of Non-Inclusion of Asbestos Containing Material (E/A After Design)

City Standard Technical Specifications

110S	11/18/04	Street Excavation
301S	08/20/07	Asphalts, Oils, and Emulsions
402S	11/13/07	Controlled Low Strength Material
430S	11/15/11	P.C. Concrete Curb and Gutter
432S	01/04/10	Portland Cement Concrete Sidewalks
501S	9/26/12	Jacking or Boring Piping
503S	2/17/00	Frames, Grates, Rings and Covers
505S	2/24/10	Concrete Encasement and Encasement Pipe
506	3/15/11	Manholes
509S	9/26/12	Excavation Safety Systems
510	10/3/13	Pipe
610S	9/26/12	Preservation of Trees and Other Vegetation
628S	12/31/13	Sediment Containment Dike
803S	11/15/11	Barricades, Signs, and Traffic Handling

Special Provisions to City Standard Technical Specifications

SP501S	02/04/16	Jacking or Boring Piping
SP506	02/04/16	Manholes
SP510	07/11/16	Pipe

Special Specifications
Division 2- Site Construction

SS02426	02/04/16	Low Density Cellular Grout
SS09900	09/13/13	Coating for Carbon Steel Pipe & fittings

Document Number		Title
Division 23 – Mechanical		
SS230190	03/31/14	Pipe inspections Internal
SS230517	02/04/16	Sleeve and sleeve seals for HVAC piping
SS230524	02/04/16	General Duty Valves for HVAC piping
SS232113	05/20/16	Hydronic Piping
SS232114	05/20/16	Pre-insulated buried chilled water piping
SS232115	05/20/16	Hydronic Piping Hot Taps
SS232500	05/20/15	ROW CW Flush- Chemical Treatment
Division 26 – Electrical		
SS 260533	05/20/16	Raceway and Boxes
Division 27 – Communications		
SS 271300	02/04/12	Communications Backbone Cabling
DETAILS		
City Standard Details		
1100S-1	01/04/10	Casting Adjustment
1100S-2	01/04/11	Flexible Base with Asphalt Surface/Trench Repair-Existing Pavement
1100S-3	09/14/05	Asphalt Overlay of Reinforced and Non-Reinforced PC PVT. -Trench Repair
1100S-4	12/09/08	Temporary Trench Repair/Asphalt Surface
1100S-5	09/14/05	Full Depth Asphaltic Concrete Pavement Trench Repair
1100S-6B	09/14/05	Excavations Parallel to the Curb
1100S-6D	09/14/05	Transverse Excavations
1100S-7	09/14/05	Street Repair Requirements
1100S-8A	02/24/10	Traffic Lane Replacement for Outer Lane Excavations
1100S-8B	02/24/10	Traffic Lane Replacement for Interior Lane Excavations
Austin Energy Standard Details		
R1	11/05/13	Standard Trench Detail
R2	11/15/13	Air Release Valve Assembly
R3	11/15/13	Communication Vault
R4	11/13/15	Communication Conduit Innerduct
R5	01/27/14	Chilled Water Connection – Horizontal Valve Shaft
R6	01/27/14	Valve Box Detail
R6A	01/17/14	Valve Box Frame
R7	01/17/14	Valve Box Cover- Supply
R8	01/17/14	Valve Box Cover – Return
R9	11/15/13	32” Cast Iron Ring Detail
R10	11/15/13	32” Cast Iron Cover Detail
R11	11/15/13	Encasement Detail with Casing Spacers
R12	01/28/14	Pipe Penetration Trough Exterior Wall
R13	01/17/14	Air Release Valve Assembly Lid and Frame
R14	11/15/13	Hot Tap Saddle Welding Detail
R15	01/28/14	Hot Tap Using Split Tee with Gate Valve
R16	01/17/14	Gear Operator/Valve Box Connection Detail Horizontal Valve Shaft
R16A	01/27/14	Valve Box Base/ Gear Operator Detail

Document Number	Title
VOLUME 2	MBE/WBE PROCUREMENT PROGRAM

END

Following is a summary of information for this Project. Bidder is cautioned to refer to other sections of the Project Manual, Drawings and Addenda (Bid Documents) for further details.

The City of Austin, hereafter called OWNER, is requesting sealed written Bids for furnishing all labor, materials, equipment, supervision, and incidentals, and for performing all Work required for the following Project:

Chilled Water Piping Construction in the Right Of Way

Located at: Various locations to be determined

CIP ID# 7190.066 IFB# CLMC 606

Provision of pipe, piping hot taps; excavation, tunneling, or boring as required for pipe installation, along with all required casing spacers, tunnel supports, tunnel safety provisions, tunnel dewatering, traffic control provisions including barricades, signage, and safety fencing, valve boxes with traffic rated lids, valve operator stem extensions; butterfly valves and gear operators; air elimination assemblies to include buried traffic-rated enclosure and lid, 2" riser piping, concrete base, shutoff ball valves, automatic air release devices, and associated piping tees and fittings; sediment containment, tree protection, CLSM, pea gravel and grouting, pipe wall penetration seals; assisting Owner's chemical testing company; soil compaction; street, curb, and sidewalk repair, communications manholes, with inner duct, raceways, and hooks for communications fiber optic cabling, installation of fiber optic cabling, removal of excavated materials and spoils; along with associated appurtenances and services.

This Contract is an Indefinite Delivery, Indefinite Quantity (IDIQ) CONTRACT. A Work Assignment will be issued to the Contractor for each specific Work Assignment location. The Work Assignment will include project location, Contract Time, engineering design, and other required documentation. The Contract Documents consist of all the applicable City of Austin standard details and specifications with the understanding that full design documents will be provided with each Work Assignment.

The CONTRACTOR is required to meet the OWNER in the field to discuss details of each potential Work Assignment. The final scope of the Work Assignment will be determined at that time and, if additional details are desired, the CONTRACTOR must request them at that time

The Contract will be for an initial 24 month term, with 3 possible one year extensions. Extension of the Contract will be at the mutual agreement of both the OWNER and the CONTRACTOR. If the CONTRACTOR chooses not to renew, a hold over extension of the Contract term for up to 120 calendar days may be implemented by the OWNER to allow time for re-bidding. The OWNER reserves the right not to offer an extension. Work Assignments may be issued at any time during the term of the Contract. Work Assignments not completed by the expiration date of the Contract are subject to the terms and conditions of the Contract which will continue in full force and effect.

The initial Contract Amount will not exceed $6,000,000 for the initial Contract Term and 3,000,000 for each extension option for a total potential Contract Amount not to exceed a total of 5 years (one two year term and 3 one year terms totaling $15,000,000, which may be increased subject to the availability of funding and further approval of the Austin City Council.

The CONTRACTOR will base its bid amount on the CONTRACTOR's unit prices and the estimated

quantities of Work set forth in the Bid Form, which will only be used for the purpose of the comparison and evaluation of Bids. The OWNER will subsequently issue Work Assignments based on the OWNER's needs and not in accordance with the estimated quantities contained in the Bid documents up to the aggregated Contract Amount of $15,000,000, subject to further appropriations.
Each Work Assignment must be finally completed within the Contract Time established by the OWNER for each Assignment. The OWNER will consult with the CONTRACTOR regarding the duration of each Work Assignment, but the OWNER will have the ultimate discretion on the duration of the Assignment, which shall be reasonably determined. Work must continue through successive Working Days and approved working hours.

The unit prices bid by the successful bidder shall remain firm throughout the initial term of the Contract. Bid prices may be adjusted for Contract extensions on the basis of an increase or decrease of the existing prices upwards or downwards in accordance with the 20 City average Engineering News Record Construction Cost Index (CCI) (at the time of the notice of contract extension) divided by the current area CCI at the time of bid. The adjusted prices will be included in a change order and will remain firm throughout the Contract extension period. Upon receipt of the notice of the exercise of the option for an additional contract term by the OWNER, the CONTRACTOR must request a Bid price adjustment in writing or the then current Bid prices will remain in full force and effect. The prevailing wage rates, Section 00830, will be replaced at the time of an adjusted bid price increase with the then current prevailing wage rates.

Bid Documents may be obtained at One Texas Center, 505 Barton Springs Road, Ste. 1045-B Austin, TX 78704. Copies will be available in CD format at no cost.

At the time Bid Documents are obtained, Bidder must provide a working e-mail address, so that they will receive any addenda or clarification issued by the OWNER.

Sealed Bids will be received at the Contract Procurement Division, 505 Barton Springs Rd., Suite 1045-C, Austin, Texas 78704 and then publicly opened and read aloud in the **SUITE 1045-C, Congress Conference Room**.

ALL BIDS ARE DUE PRIOR TO (Austin time) 9:30 a.m on September 15, 2016.

ALL COMPLIANCE PLANS ARE DUE PRIOR TO (Austin time) 1:30 p.m. on September 15, 2016.

BIDS WILL BE OPENED AT (Austin time) 1:30 a.m. on September 15, 2016. .

ALL BIDS AND COMPLIANCE PLANS NOT RECEIVED PRIOR TO THE DATE AND TIME SET FORTH ABOVE WILL NOT BE ACCEPTED FOR CONSIDERATION. The time stamp clock in **SUITE 1045-C** is the time of record and is verified with www.time.gov, the official U.S. time.

All Contractors must be registered to do business with OWNER prior to Contract award. All Subcontractors must be registered with the OWNER prior to execution of a contract. Prime Contractors are responsible for ensuring that their Subcontractors are registered as vendors with the City of Austin. Registration can be done through the OWNER's on-line Vendor Connection system. Log onto https://www.ci.austin.tx.us/financeonline/vendor_connection/index.cfm and follow the directions.

All City procurements are subject to the City's Minority-Owned and Women-Owned Business Enterprise Procurement Program found at Chapter 2-9-A of the City Code, as amended. The Program provides Minority-Owned and Women-Owned Business Enterprises (MBEs/WBEs) or Disadvantaged Business Enterprises (DBEs) full opportunity to participate in all City contracts. Goals for MBE/WBE or DBE participation are stated for each solicitation. Information on achieving the goals or documenting good faith efforts to achieve the goals are contained in the MBE/WBE Procurement Program Package or DBE Procurement Program Package attached to the solicitation. When goals are established, Bidders are required to complete and return the MBE/WBE or DBE Compliance Plan with their Bid. If a Compliance Plan is not submitted prior to the date and time set forth in the solicitation, the Bid will not be accepted for consideration. (See Section 00820 for MBE/WBE requirements on "no goal" solicitations.)

All Bids shall be accompanied by an acceptable Bid guaranty in an amount of not less than five percent (5%) of the total Bid, as specified in Section 00100, Instructions to Bidders.

Performance and payment bonds for the initial term of the Contract shall be executed on forms furnished by OWNER. Each bond shall be issued in an amount of one hundred percent (100%) of the not to exceed Contract Amount by a solvent surety company authorized to do business in the State of Texas, and shall meet any other requirements established by law or by OWNER pursuant to applicable law. In the event that the Contract is renewed for additional one year terms, a new bond or rider to the then existing bond in the full amount of the total not to exceed Contract Amount must be provided for the additional term(s).

Minimum insurance requirements are specified in Section 00810-IDIQ, Supplemental General Conditions. Prevailing wage rates have been established and are specified in Section 00830, Wage Rates and Payroll Reporting.

Contract Time is of the essence and all Work Assignments shall be completed within the number of days specified in the Notice to Proceed. Work under this Contract will be issued as individual Work Assignments, as defined within Supplemental General Conditions, Section 00810-IDIQ. In addition, Work to be performed is generally outlined in the Summary of Work, Section 01010-IDIQ. Work duration and designations of substantial and/or final completion will be specific to each Work Assignment. Failure by the CONTRACTOR to satisfy the substantial/final completion requirements of any Work Assignment may be cause to stop issuance of further Work Assignments. The CONTRACTOR shall note that there may be multiple individual Work Assignments active at any given time.

Work contained within individual Work Assignments will vary based on the scope of Work. An individual Work Assignment may designate a substantial and/or final completion date, after which liquidated damages will be assessed until substantial and/or final completion is achieved, in accordance with the Bid Form, Section 00300U-IDIQ.

In addition, the CONTRACTOR will be required to have someone available and on-call at all times during the Contract to provide emergency on-call services as discussed in Section 01010-IDIQ, Summary of Work - Emergency Response & Section 01100-IDIQ, "Special Project Procedures". A CONTRACTOR who fails to meet the emergency response obligations of this Contract may be found in breach of this Contract.

OWNER reserves the right to reject any or all Bids and to waive any minor informality in any Bid or solicitation procedure (a minor informality is one that does not affect the competitiveness of the

Bid).

A **mandatory** Pre-Bid Conference will be held on August 16, 2016 at 1:30 a.m.

(Austin time) at 721 Barton Springs Road, Suite 130, Austin, Texas 78704
(Location)

Austin, Texas. Attendance is mandatory unless otherwise stated. Bidders must attend any mandatory Pre-Bid Conference and are encouraged to attend any non-mandatory Pre-Bid Conference to ensure their understanding of OWNER's bidding and contracting requirements, particularly MBE/WBE or DBE Procurement Program requirements. If the Pre-Bid Conference is mandatory the Bidder must arrive and sign-in within fifteen (15) minutes of the scheduled start time of the meeting, otherwise the Bidder will not be allowed to submit a Bid for the project.

The persons listed below may be contacted for information regarding the Invitation for Bid. If the Bidder contacts any other City employee, including Council Members and members of Boards and Commissions, the Bidder may be found in violation of Ordinance No. 20111110-052, dated November 10, 2011, regarding Anti-Lobbying and Procurement. The text of that Ordinance may be viewed at http://www.cityofaustin.org/edims/document.cfm?id=161145.

AUTHORIZED CONTACT PERSONS:

PROJECT MANAGER: James Matlock Jr. telephone (512) 322-6273 email James.Matlock@austinenergy.com

CONTRACT COMPLIANCE REP.: Monica Lopez telephone (512) 974-7057 email Monica.Lopez@austintexas.gov

END

1. Preparation of Bid

a. **Bid Documents.** Each Bidder must prepare its Bid in ink on forms furnished by OWNER or as otherwise specified or permitted. Blank spaces for each item in Bid form must be filled. Bidder must submit a price for each item in Bid. In case of conflict between unit prices and extensions, unit prices shall govern. The Bid must be executed in the complete and correct legal name of individual, partnership, firm, corporation or other legal entity constituting the Bidder.

b. **Vendor Registration.** All CONTRACTORS must be registered to do business with OWNER prior to Contract Award. All Subcontractors must be registered with the OWNER prior to execution of a contract. Prime Contractors are responsible for ensuring that their Subcontractors are registered as vendors with the City of Austin. Registration can be done through the OWNER's on- line Vendor Registration system. Log onto https://www.ci.austin.tx.us/vss/Advantage and follow the directions.

c. **Pre-Bid Conference.** Unless otherwise notified, Bidders must attend the Pre-Bid Conference to ensure their understanding of OWNER's bidding and contracting requirements, particularly MBE/WBE Procurement Program requirements.

d. **Sales Tax Exemption.** The Owner is a tax-exempt organization as defined by Chapter 11 of the Property Tax Code of Texas. Bid prices shall not include sales tax on materials, supplies, or equipment that are incorporated into the real property interest of the OWNER or are otherwise completely used and consumed in the performance of the Contract. OWNER will furnish CONTRACTOR with a Sales Tax Exemption Certificate to be issued to Suppliers in lieu of the tax.

e. **Minimum Wages.** Workers on Project shall be paid not less than wage rates, including fringe benefits, as published by the Department of Labor (DOL) for Building Construction and Heavy and Highway Trades "AS APPLICABLE" and/or the $13.03 minimum wage required by City of Austin Ordinance No. 20160324-015, whichever is higher. The Total Minimum Wage required can be met using any combination of cash and non-cash qualified fringe benefits provided the cash component meets or exceeds the $13.03 minimum wage required.

f. **Addenda.** Bidder shall be knowledgeable of all Addenda issued and shall acknowledge all Addenda in spaces provided on Bid form. Further information regarding the Bid documents and the Project may be obtained from the Project Manager listed at the end of Section 00020, Invitation for Bids.

g. **Required Items.** Bids must include all specified items in this section and be submitted in accordance with paragraph No. 7 below. Any additional requirement to the bid submittal is specified in Section 00820. Any corrections to a Bid shall be initialed by the person signing the Bid.

h. **Professional Services.** Bidders must secure any required professional services that are defined as professional services under the Professional Services Procurement Act, Chapter 2254 of the Texas Government Code (for example: registered professional land surveyors and professional engineers) using the qualifications based selection process prescribed by that chapter. (Note: It is a violation of State Law to solicit Bids for professional services.)

i. **Further Information.** Prospective Bidders desiring further information or

interpretation of Project Manual or Drawings must make a written request for such information to OWNER addressed to the Authorized Contact Person listed in Section 00020 no later than seven (7) Working Days before Bid opening. Interpretation of Project Manual or Drawings will be made by Addendum only and a copy of each Addendum will be provided to each person to whom a set of Bid Documents has been furnished. Any verbal communications will not be binding on the OWNER.

j. **Anti-Lobbying and Procurement.** Article 6, Chapter 2-7, Austin City Code, prohibits lobbying activities or representations by the Bidder between the date that the Invitation for Bid (IFB) is issued and the date of contract execution. The text of the pertinent City Ordinance may be viewed at http://www.cityofaustin.org/edims/document.cfm?id=161145.

(1) Definitions

(A) "Agent" means a person authorized by a bidder to act for or in place of bidder, including a person acting at the request of bidder, a person acting with the knowledge and consent of a bidder, or a person acting with any arrangement, coordination, or direction between the person and the bidder.

(B) "Authorized Contact Person" means the Project Manager listed in Section 00020, IFB, or other persons specifically identified in the IFB as the contact regarding the solicitation, or the authorized contact person's designee during the course of the no-contact period.

(C) "City Employee" means a person employed by the City.

(D) "City Official" is defined in Section 2-7-2 of the City Code.

(E) "No-Contact Period" means the period of time from the date the IFB is issued until a contract is executed. If the City withdraws the IFB or rejects all bids with the stated intention to reissue the same or a similar IFB for the same or similar project, the no-contact period continues during the time period between the withdrawal and reissue.

(F) "Response" means a bid.

(G) "Respondent" means a bidder. The term "respondent" also includes:

(i) an owner, board member, officer, employee, contractor, subsidiary, joint enterprise, partnership, agent, lobbyist, or other representative of a bidder;

(ii) a person or representative of a person that is involved in a joint venture with the bidder, or a subcontractor in connection with the bidder's bid; and

(iii) a bidder who has withdrawn a bid or who has had a bid rejected or disqualified by the City.

(H) "Representation" means a communication related to a bid to a council member, official, employee, or City representative that is intended to or that is reasonably likely to:

(i) provide information about the bid;

(ii) advance the interests of the bidder;

(iii) discredit the bid of another bidder;

(iv) encourage the City to withdraw the IFB;

(v) encourage the City to reject all of the bids;

(vi) convey a complaint about a particular bid; or

(vii) directly or indirectly ask, influence, or persuade any City official, City employee, or body to favor or oppose, recommend

or not recommend, vote for or against, consider or not consider, or take action or refrain from taking action on any vote, decision, or agenda item regarding the solicitation.

(I) "Solicitation" means an opportunity to compete to conduct business with the City that requires City Council approval under City Charter Article VII Section 15 (Purchase Procedure).

(J) "City" means Owner.

(2) Restriction on Contacts.

(A) During a no-contact period, a bidder shall make a representation only through the authorized contact person.

(B) During the no-contact period, a bidder may not make a representation to a City official or to a City employee other than to the authorized contact person. This prohibition also applies to a vendor that makes a representation and then becomes a bidder.

(C) The prohibition of a representation during the no-contact period applies to a representation initiated by a bidder, and to a representation made in response to a communication initiated by a City official or a City employee other than the authorized contact person.

(D) If the City withdraws an IFB or rejects all bids with a stated intention to reissue the same or similar IFB for the same or similar project, the no-contact period shall expire after the ninetieth day after the date the IFB is withdrawn or all bids are rejected if the IFB has not been reissued during the ninety day period.

(E) The no-contact period shall expire when the first of the following occurs: contract is executed or solicitation is cancelled.

(F) The purchasing officer or the Capital Contracting Office Director may allow bidders to make representations to city employees or city representatives in addition to the authorized contact person for a solicitation that the purchasing officer or the Capital Contracting Office Director finds must be conducted in an expedited manner; an expedited solicitation is one conducted for reasons of health or safety under the shortest schedule possible with no extensions. The purchasing officer's or Capital Contracting Office Director's finding and additional city employees or city representatives who may be contacted must be included in the solicitation documents.

(G) Representations to an independent contractor hired by the City to conduct or assist with a solicitation will be treated as representations to a City employee.

(H) A current employee, director, officer, or member of a bidder, or a person related within the first degree of consanguinity or affinity to a current employee, director, officer or member of a bidder, is presumed to be an agent of the bidder for purposes of making a representation. This presumption is rebuttable by a preponderance of the evidence as determined by the purchasing officer or Capital Contracting Office Director.

(I) A bidder's representative is a person or entity acting on a bidder's behalf with the bidder's request and consent. For example, a bidder may email their membership list and ask members to contact council members on the bidder's behalf. The members are then acting per bidder's request and with their consent, and the members have become bidder representatives.

(3) Permitted Representations

(A) If City seeks additional information from bidder, the bidder shall submit the

representation in writing only to the authorized contact person. The authorized contact person will then distribute the written representation in accordance with the terms of the IFB. A bidder cannot amend or add information to a bid after the bid deadline.

(B) If bidder wishes to send a complaint to the City, the bidder shall submit the complaint in writing only to the authorized contact person. The authorized contact person will then distribute a complaint regarding the process to members of the city council or members of the City board, to the Capital Contracting Office Director, and to all bidders on the IFB. However, the Capital Contracting Office Director or purchasing officer shall not permit distribution of any complaint that promotes or disparages the qualifications of a bidder, or that amends or adds information to a bid. A determination of what constitutes promoting or disparaging the qualifications of a bidder or constitutes amending or adding information is at the Capital Contracting Office Director's or purchasing officer's sole discretion. Bid protests are not subject to this subsection. Documents related to a bid protest may not be forwarded to council under this subsection.

(C) If a bidder submits a written inquiry regarding an IFB, the authorized contact person will provide a written answer and distribute both the inquiry and answer to all bidders on the IFB.

(D) If a bidder does not receive a response from the authorized contact person, the bidder may contact the Capital Contracting Office Director or purchasing officer as appropriate.

(E) A bidder may ask a purely procedural question, for example a question regarding the time or location of an event, or where information may be obtained, of a City employee other than the authorized contact person. This provision does not permit a bidder to make suggestions or complaints about the contract process that constitute a representation to a City employee other than the authorized contact person. Notwithstanding this provision, a bidder may not ask a procedural question of a councilmember, a councilmember's aide, or of a City board member except in a meeting held under the Texas Government Code, Chapter 551 (Open Meetings Act).

(F) Article 6 of the City Code allows representations:

(i) made at a meeting convened by the authorized contact person, including meetings to evaluate bids or negotiate a contract;

(ii) required by Financial Services Department protest procedures for vendors;

(iii) made at a Financial Services Department protest hearing;

(iv) provided to the Small & Minority Business Resources Department in order to obtain compliance with Chapter 2-9A-D (the Minority-Owned and Women-Owned Business Enterprise Procurement Program);

(v) made to the City Risk Management coordinator about insurance requirements for a bid;

(vi) made in public at a meeting held under the Texas Open Meetings Act; or

(vii) made from a bidder's attorney to an attorney in the Law Department in compliance with Texas Disciplinary Rules of Professional Conduct.

(G) Communication regarding the solicitation is permitted between or among City officials or City employees acting in their official capacity.

(H) A contribution or expenditure as defined in Chapter 2-2 (Campaign Finance)

is not a representation.

(4) Contract Voidable.

If a contract is awarded to a bidder who has violated these Anti- Lobbying & Procurement provisions, the contract is voidable by the Owner.

(5) Debarment.

If a bidder has been disqualified under these provisions more than two times in a sixty month period, the purchasing officer shall debar the bidder from bidding for a period not to exceed three years, provided the bidder is given written notice and a hearing in advance of the debarment.

k. **City's Minority-Owned and Women-Owned Business Enterprise / Disadvantaged Business Enterprise (MBE/WBE or DBE) Program Requirements. Good Faith Efforts.** When a bidder cannot achieve the MBE/WBE or DBE goals or subgoals established for the project, the bidder must document its Good Faith Efforts to meet the goals or subgoals. Good Faith Effort evaluations will consider, at a minimum, the bidder's efforts to do the following:

(1) Soliciting through at least two reasonable, available and verifiable means MBEs/WBEs within the Significant Local Business Presence boundaries at least seven (7) business days prior to the bid opening date to allow the MBEs/WBEs or DBEs to respond to the bid.

(2) Providing interested MBEs/WBEs or DBEs adequate information about the bid documents and requirements, including addenda, in a timely manner to assist them in responding to the bid.

(3) Negotiating in good faith with interested MBEs/WBEs DBEs that have submitted bids to the bidder.

(4) Publishing notice in a local publication such as a newspaper, trade association publication or via electronic/social media.

(5) Not rejecting MBEs/WBEs or DBEs as being unqualified without sound reasons based on a thorough investigation of their capabilities.

(6) Making economically feasible portions of the work available to MBE/WBE or DBE subcontractors and suppliers and to select those portions of the work or material needs consistent with the available MBE/WBE or DBE subcontractors and suppliers, so as to facilitate meeting the goals or subgoals.

(7) The ability or desire of the bidder to perform the project work with its own organization does not relieve the bidder of the responsibility to make Good Faith Efforts.

(8) Bidders are not required to accept higher quotes in order to meet the goals or subgoals.

(9) Effectively using the services of Minority Person/Women community organizations; Minority Person/Women Contractors groups; local, state and federal Minority Person/Women business assistance offices; and other organizations to provide assistance in solicitation and utilization of MBEs, WBEs and/or DBEs.

(10) In assessing minimum Good Faith Efforts, the OWNER may consider (1) whether the bidder sought guidance from the City of Austin Small and Minority Business Resources Department (SMBR) on any question regarding compliance with these requirements; and (2) the performance of other bidders in meeting the goals.

For additional information, refer to the MBE/WBE or DBE Compliance Program Requirements Volume of the Project Manual.

Bid shopping is not allowed in conjunction with this solicitation and may result in the disqualification of prospective bidders and subcontractors.

2. Estimates of Quantities (Unit Price Contracts Only)

Quantities listed in unit price Bid form are to be considered approximate quantities and will be used only for comparison of Bids. Payment to CONTRACTOR will be made only for actual quantities of Work performed or materials furnished in accordance with Contract and it is understood that quantities may be increased or decreased as provided in Section 00700, General Conditions, and as may be modified by Section 00810, Supplemental General Conditions.

3. Drawings, Project Manual and Site (s) of Work

Before submitting a Bid, the Bidder shall carefully examine the Bid Documents, site(s) of the proposed Work, soils, and other conditions that may affect the performance of the Work to satisfy the Bidder as to character, quality and quantities of Work to be performed and materials to be furnished. By submitting a Bid, the Bidder will be deemed to have certified that the Bidder has complied with these requirements. If, during preparation of the Bid, the Bidder discovers any suspected discrepancies or errors, the Bidder must immediately notify the Authorized Contact Person in writing of the suspected discrepancy or error. Failure to provide written notice of any suspected discrepancies or errors may be cause for rejection of the Bid.

4. Bid Guaranty

All Bids shall be accompanied by a Bid guaranty in an amount of not less than five percent (5%) of the total Bid. If the total Bid amount is $100,000 or less, Bidder has the option of providing a cashier's or certified check, made payable to City of Austin accompanied by a letter from a surety company indicating that Bidder can be bonded for the amount of the Project, or a Bid bond with Power of Attorney attached, issued by a solvent surety authorized under laws of the State of Texas and acceptable to OWNER. If the total Bid amount exceeds $100,000, the only acceptable Bid guaranty will be a Bid bond with Power of Attorney attached, issued by a solvent surety authorized under laws of the State of Texas and acceptable to OWNER.

The Bid guaranty accompanying the Bid of the three (3) apparent low Bidders will be retained until Contract is awarded and successful Bidder executes Contract and furnishes required bonds and insurance, after which Bid guaranty will be returned to the Bidders. All other Bid guaranties will be returned after Bid certification. In the event that the Bidder to whom the Contract is awarded fails to timely execute the Contract, the Bidder agrees that the OWNER in its discretion may rescind the initial award and award the Contract to the next lowest responsible Bidder.

5. Performance and Payment Bonds

When performance and/or payment bonds are required, each shall be issued in an amount equal to the Contract Amount as security for the faithful performance and/or payment of all Contractor's obligations under the Contract Documents. Performance and payment bonds shall be issued by a solvent corporate surety authorized to do business in the State of Texas, and shall meet any other requirements established by law or by OWNER pursuant to applicable law.

6. Consideration of Bid Amount

For purpose of award, after Bids are opened, read aloud, reviewed, and certified, the total

amount of the Bid, including accepted Bid alternates, will be considered the amount of the Bid. Upon request, certified Bid tabulations will be made available to the public. OWNER reserves the right to reject any or all Bids and to waive any minor informality in any Bid or solicitation procedure (a minor informality is one that does not affect the competitiveness of the Bids).

7. Submission of Bid

Each Bid must be completed and signed by person(s) authorized to bind individual, partnership, firm, corporation, or any other legal entity submitting the Bid, and, shall include the following in one envelope furnished by OWNER:

(a) One copy of Bid form (Section 00300L or 00300U) completed and signed.
(b) Acknowledgment of receipt of Addenda issued in spaces provided in Bid form.
(c) Required Bid guaranty.
(d) Copy of statement of legal entity status, as applicable, including but not limited to, as applicable, Statement of Sole Proprietorship, Articles of Partnership or Incorporation and resolution, or corporate board minutes, empowering signatory to bind Bidder, attested to by an officer of Bidder. The required information is set forth in Section 00100, Paragraph 15.
(e) One copy of the Insurance Cost Form (Section 00425A), completed and signed (ROCIP projects only).
(f) One copy of the Affidavit - Prohibited Activities (Section 00440), completed and signed.
(g) One copy of the Nonresident Bidder Provisions (Section 00475), completed and signed.
(h) One copy of the Nondiscrimination Certificate (Section 00630), completed and signed.
(i) Required information indicated in Drawings or Project Manual.

Bid must be accompanied by a MBE/WBE or DBE Compliance Plan, signed by the authorized representative described above, that should be submitted separately in a second envelope furnished by OWNER, or other appropriate packaging accompanied by the furnished envelope, prior to the date and time set forth in Section 00020, Invitation for Bids. The Compliance Plan forms are included in the MBE/WBE Procurement Program Package or DBE Procurement Program Package (a separately bound volume).

Bid shall include all specified items in this section and be placed in envelopes furnished by OWNER, or other appropriate packaging, accompanied by and attached to the OWNER furnished envelopes, sealed and clearly identified on outside as a Bid to OWNER, with Bidder's name and address, and project name. Failure to submit Bid appropriately may subject Bidder to disqualification. Bid may be mailed or delivered (in person or by Federal Express, Express Mail or other delivery service) to:

City of Austin
Capital Contracting Office
One Texas Center
505 Barton Springs Rd.
Suite 1045-C
Austin, Texas 78704

When sent by mail, Federal Express, Express Mail, or other delivery service, sealed Bid (marked as indicated above) shall be enclosed in an additional envelope, or other appropriate packaging, clearly identified on outside as a Bid to OWNER with Bidder's name and address, Project name, and Bid date and time. It is the sole responsibility of the Bidder to ensure timely delivery of Bid. OWNER will not be responsible for failure of service on the part of the U.S. Post Office, courier services, or any other form of

delivery service chosen by the Bidder. (See Section 00820, Modifications to Bidding Requirements and Contract Forms, for modifications to solicitations without MBE/WBE or DBE goals.)

In submitting its Bid, Bidder certifies that it has not lobbied the City or its officials, managers, employees, consultants, or contractors in such a manner as to influence or to attempt to influence the bidding process. In the event it reasonably appears that the Bidder influenced or attempted to influence the bidding process, the City may, in its discretion, reject the Bid.

8. Withdrawal of Bid

A Bid may be withdrawn by a Bidder, provided an authorized individual of the Bidder submits a written request to withdraw the Bid prior to the time set for opening the Bids.

9. Rejection of Bids

A. The following **will** be cause to reject a Bid:

(1) Failure to submit Section 00300 (Bid Form) and signed by an individual empowered to bind the Bidder.

(2) Bids which are not accompanied by acceptable Bid guaranty, with Power of Attorney attached, or a letter certifying the Bidder's ability to be bonded, from a surety company, in accordance with Paragraph 4 above.

(3) More than one Bid for same Work from an individual, firm, partnership or corporation.

(4) Evidence of collusion among Bidders.

(5) Sworn testimony or discovery in pending litigation with OWNER which discloses misconduct or willful refusal by contractor to comply with subject contract or instructions of OWNER.

(6) Failure to submit MBE/WBE or DBE Compliance Plan in accordance with the separately bound volume titled MBE/WBE Procurement Program Package or DBE Procurement Program Package.

(7) Failure to have an authorized agent of the Bidder attend the mandatory Pre- Bid Conference, if applicable.

(8) Bids received from a Bidder who has been debarred or suspended by OWNER's Purchasing Officer.

(9) Bids received from a Bidder when Bidder or principals are currently debarred or suspended by Federal, State or City governmental agencies. (Applicable for Bid amounts equal to or in excess of $25,000.00).

(10) Failure to submit any of the items specified above in paragraph 7, "Submission of Bid".

B. The following **may** be cause to reject a Bid:

(1) Poor performance in execution of work under a previous City of Austin contract.

(2) Failure to achieve reasonable progress on an existing City of Austin contract.

(3) Default on previous contracts or failure to execute Contract after award.

(4) Evidence of failure to pay Subcontractors, Suppliers or employees in accordance with Contract requirements.

(5) Bids containing omissions, alterations of form, additions, qualifications or conditions not called for by OWNER, or incomplete Bids may be rejected. In any case of ambiguity or lack of clarity in the Bid, OWNER reserves right to determine most advantageous Bid or to reject the Bid.

(6) Failure to acknowledge receipt of Addenda.

(7) Failure to submit any of the items specified below in paragraph 11, "Submission of Post Bid Information".

(8) Failure to identify a dollar amount (price) of a unit price(s) in the 00300U

(9) Failure to submit post-Bid information within the allotted time(s) (see paragraph 11 for post-Bid requirements)

(10) Failure to timely execute Contract after award.

(11) Previous environmental violations resulting in fines or citations by a governmental entity (i.e. U.S. Environmental Protection Agency, Texas Commission on Environmental Quality, etc.).

(12) Safety record as set forth in Section 00410, Statement of Bidder's Safety Experience.

(13) Failure of Bidder to demonstrate the minimum experience required as specified in Section 00400 if that Section is included in the bidding documents.

(14) Evidence of Bidder's lack of sufficient resources, workforce, equipment or supervision, if required by inclusion of appropriate attachments in Section 00400.

(15) Evidence of poor performance on previous Projects as documented in Owner's project performance evaluations.

(16) Unbalanced Unit Price Bid: "Unbalanced Bid" means a Bid, which includes a Bid that is based on unit prices which are significantly less than cost for some Bid items and significantly more than cost for others. This may be evidenced by submission of unit price Bid items where the cost are significantly higher/lower than the cost of the same Bid items submitted by other Bidders on the project.

10. Protest Procedures

The OWNER's Capital Contracting Office Director has the authority to settle or resolve any claim of an alleged deficiency or protest. The procedures for notifying OWNER of an alleged deficiency or filing a protest are listed below. If you fail to comply with any of these requirements, the Capital Contracting Office Director may dismiss your complaint or protest.

Prior to Bid opening: If you are a prospective Bidder and you become aware of the facts regarding what you believe is a deficiency in the solicitation process before the Bid is opened, you must notify OWNER in writing of the alleged deficiency before that date,

giving OWNER an opportunity to resolve the situation prior to the Bid opening.

After Bid opening: If you submit a Bid to OWNER and (1) you have been found non-responsive, or
(2) you believe that there has been a deficiency in the solicitation process or the award, you have the opportunity to protest the solicitation process or the recommended award as follows:

1. You must file written notice of your intent to protest within four (4) calendar days of the date that you know or should have known of the facts relating to the protest. If you do not file a written notice of intent within this time, you have waived all rights to protest the solicitation process or the award.
2. You must file your written protest within fourteen (14) calendar days of the date that you know or should have known of the facts relating to the protest unless you know of the facts before the Bid has been opened. If you know of the facts before that date, you must notify OWNER as stated above.
3. You must submit your protest in writing and must include the following information:
    a. your name, address, telephone, and email address;
    b. the solicitation number and the CIP number, if applicable;
    c. a detailed statement of the factual grounds for the protest, including copies of any relevant documents.
4. Your protest must be concise and presented logically and factually to help with OWNER's review.
5. When OWNER receives a timely written protest, the Capital Contracting Office Director will determine whether the grounds for your protest are sufficient. If the Capital Contracting Office Director decides that the grounds are sufficient, the Capital Contracting Office will schedule a protest hearing, usually within five (5) working days. If the Capital Contracting Office Director determines that your grounds are insufficient, you will be notified of that decision in writing.
6. The protest hearing is informal and is not subject to the Open Meetings Act. The purpose of the hearing is to give you a chance to present your case; it is not an adversarial proceeding. Those who may attend from OWNER are: representatives from the department that requested the purchase, the Law Department, the Capital Contracting Office, and other appropriate City staff. You may bring a representative or anyone else that will present information to support the factual grounds for your protest with you to the hearing.
7. A decision will usually be made within fifteen (15) calendar days after the hearing.
8. The Capital Contracting Office Director will send you a copy of the hearing decision after the appropriate City staff has reviewed the decision.
9. When a protest is filed, OWNER usually will not make an award until a decision on the protest is made. However, OWNER will not delay an award if the City Manager or the Capital Contracting Office Director determines that:
    a. OWNER urgently requires the supplies or services to be purchased, or
    b. Failure to make an award promptly will unduly delay delivery or performance.

In those instances, the Capital Contracting Office will notify you and make every effort to resolve your protest before the award.

The protest or notice of intent and the protest shall be submitted in writing to the following address:

City of Austin
Capital Contracting Office
ATTN: Capital Contracting Officer
One Texas Center
505 Barton Springs Rd.
Suite 1045-A
Austin, Texas 78704
PHONE: 512/974-7141

11. Submission of Post Bid Information

Prior to determination of the certified low Bidder, the three (3) apparent low Bidders must submit to OWNER the following information within three (3) business days of receipt of notice of apparent low Bidder status by the OWNER:

1. One copy of Attachments A-J and any other specifically designated Attachments of the Statement of Bidder's Experience (Section 00400), completed and signed. (Unless provided to the contrary in Section 00820 Modifications to Bidding Requirements and Contract Forms).
2. One Copy of the Certificate of Non-Suspension or Debarment (Section 00405), completed and signed. (Applicable for Bid amounts equal to or in excess of $25,000.00.)
3. One copy of Section 00410, Statement of Bidder's Safety Experience, including required attachments, completed and signed.
4. One copy of the Title VI Assurances Appendix A (Section 00631), completed and signed.
5. One copy of Exhibit A Federal Provisions (Section 00810A, pages 1-9) completed and signed. (Federal projects only)
6. Such other information as is required to evaluate Bid or Bidder.

Upon notification of status as certified low Bidder, Bidder shall submit the following information to OWNER within three (3) business days:

1. Letter(s) of intent between Bidder and all subcontractor(s) and all supplier(s) identified in the MBE/WBE Compliance Plan.
2. Section 00425B, VII Subcontractor Affidavit of Receipt and Provision of ROCIP Information (for Subcontractor(s) of all tiers identified in the MBE/WBE Compliance Plan). For ROCIP projects.
3. Such other information as required. (Note: OWNER reserves the right to solely determine whether the comparable experience documentation provided by the Bidder is sufficient and relevant to the Work described in the Contract Documents for the Bidder to be considered a responsible Bidder. In addition, the Bidder acknowledges and agrees that the failure to timely provide the additional information required by this section will result in a determination that, for the purposes of this solicitation, the Bidder has not provided sufficient information for the OWNER to be able to determine that the Bidder is a responsible Bidder.)

12. Award and Execution of Contract

OWNER will process Bids expeditiously. Award of Contract will be to the lowest, responsible Bidder meeting all requirements of the Bid Documents. OWNER may not award Contract to a nonresident Bidder unless the nonresident underbids the lowest Bid submitted by a responsible resident Bidder by an amount that is not less than the amount by which a resident Bidder would be required to underbid the nonresident Bidder to obtain a comparable contract in the state in which the nonresident's principal place of business is located.

Award of Contract will occur within the period identified on the Bid form, unless mutually agreed between the parties. Capital Contracting Office Director shall submit recommendation for award to the City Council for those project awards requiring City Council action. Contract will be signed by City Manager or his/her designee after award and submission of required documentation by Bidder. Contract will not be binding upon OWNER until it has been executed by both parties. OWNER will process the Contract expeditiously. However, OWNER will not be liable for any delays prior to the award or execution of Contract.

Upon contract award, the selected Bidder must submit either their existing or an updated personnel policy (on letterhead) documenting conformity with City Code, Chapter 5-4, § 5-4-2. If the company does not submit a copy of their personnel policy incorporating the non-discrimination policy, the City of Austin Nondiscrimination Policy (Section 00630) will be considered the Bidder's nondiscrimination policy.

In any case of ambiguity or lack of clarity in the Bid, OWNER reserves the right to determine the most advantageous Bid or to reject the Bid.

Notwithstanding anything in this Section 00100 to the contrary, the OWNER may award a contract for construction services in an amount of less than $100,000 to a bidder whose principal place of business is in the City of Austin and whose bid is within 5% of the lowest bid price received from a bidder whose principal place of business is not within the City of Austin, if the City finds that the local bidder offers the City the best combination of contract price and additional economic development opportunities for the City created by the contract award including the employment of resident of the City and increased tax revenues to the City.

13. Partnering

In order to complete the Work in a manner that is most beneficial to the OWNER and CONTRACTOR, OWNER and CONTRACTOR may form a "Partnering Team", which will include the E/A, and any major Subcontractors. This partnering relationship will draw on the strength of all parties to identify and achieve mutual goals. The objectives of this partnering relationship are effective and efficient communication and Contract performance, which is intended to ensure that the Project is completed within budget, on schedule, and in accordance with the Drawings and Specifications and other Contract requirements. While the partnering relationship will be multilateral in makeup and participation will be totally voluntary, the OWNER and CONTRACTOR agree to cooperate and use reasonable good faith efforts to discuss and resolve any and all Project issues and disputes. Section 01100, Special Project Procedures and/or Section 01200, Project Meetings contain additional information regarding the intent of the partnering relationship and responsibilities of the entities entering into the partnering charter.

14. ROCIP Requirements

If the insurance on this Project will be under the Rolling Owner Controlled Insurance Program (ROCIP), the Bidder is directed to Section 00810, Supplemental General Conditions, Section 00820, Modifications to Bidding Requirements and Contract

Forms, and the Project Safety Manual included with these contract documents for information and bidding requirements.

The Insurance Cost Form, Section 00425A, Rolling Owner Controlled Insurance Program Information Section 00425B, VI Contractor Affidavit of Receipt and Provision of ROCIP Information must be accurately completed and submitted with the Bid to indicate insurance removed from Base Bid and Alternates. CONTRACTOR shall remove from the Bid the cost of insurance for the CONTRACTOR and Subcontractors of all tiers working on site.

The Statement of Bidder's Safety Experience, Section 00410, must be accurately completed and submitted with the Bid.

The Rolling Owner Controlled Insurance Program Information, Section 00425 B, VII Subcontractor Affidavit of Receipt and Provision of ROCIP Information for subcontractor(s) of all tiers identified in the MBE/WBE Compliance Plan must be accurately completed and submitted as a post bid submittal and further Subcontractor Affidavits must be submitted throughout the duration of the Contract as Subcontractor(s) are added.

15. Signature Requirements

The Bid and any subsequent supporting Bid documents and Contract must be executed in the Bidder's full name and legal entity status by an authorized representative of the Bidder and accompanied by sufficient documentation, which clearly indicates not only the legal name and entity status of Bidder, but also the capacity and authority of the person signing on behalf of Bidder. Accordingly, a partnership/joint venture must file its partnership/joint venture agreement, a corporation must file its articles and bylaws, a limited liability company must file its certificate of organization and article of organization and regulations, and a limited partnership must file not only limited partnership agreement and the certificate of limited partnership, but also the documentation for its general partner, and any Bidder must file a copy of any assumed name certificate, or such limited portion of such documents reasonably establishing signature authority.

The following samples show the entity information and signature requirements that will apply to all Bid and contract execution documents for the type of entity indicated:

1. Individual/Sole Proprietor (sample)

   The individual/sole proprietor must sign the document in his or her personal capacity or in any assumed name capacity accompanied by a copy of any assumed name certificate.

   Name of Contractor (d/b/a, if appropriate), a sole

   proprietor By: _____

   Printed Name:_____

2. Partnership/Joint Venture (sample)

   A partner/joint venturer must sign the document in his or her capacity as a partner/joint venturer and in any assumed name capacity accompanied by a copy of the assumed name certificate, if any, and a copy of the partnership or joint venture agreement, as applicable, with additional documentation, if necessary, establishing the authority of the signatory individual.

   Name of Partnership/Joint Venture, a Texas Partnership/JV, as

appropriate By: _____

Printed or Typed Name: _____

Title:_____(Partner, managing partner, venturer, managing venturer, as approp.)
Authorized Representative

3. Corporation (sample)

An authorized officer or agent of the corporation must sign the documents on behalf of the corporation in his or her capacity as the authorized representative of the corporation accompanied by a copy of a corporate resolution and minutes granting such authority with a certificate of an officer of the corporation as to the authority of the signatory to bind the CONTRACTOR signed and dated no more than one week before the date of execution of the document.

Name of Contractor, Inc. or Co., a Texas corporation, as

appropriate By: _____

Printed or Typed Name: _____

Title:_____(Officer or Agent (as appropriate)) Authorized Representative

4. Limited Liability Company (sample)

An authorized manager or member of the LLC must sign the document in his or her capacity as a manager or member accompanied by a copy of the LLC's certificate of organization and articles of organization and regulations evidencing such person's signatory authority.

Name of Contractor, L.L.C., a Texas limited liability company,

as appropriate By:_____,

Printed or Typed Name:_____

Title:_____, (Manager or Member (as appropriate)) Authorized Representative

5. Limited Partnership (sample)

The general partner of a limited partnership must execute the documents on behalf of the limited partnership, accompanied by copy of the limited partnership agreement and the certificate of limited partnership. In addition, the signatory must sign the documents in his or her capacity as an authorized officer or agent of the corporation or member or manager of the LLC, as appropriate, accompanied by a copy of the corporate or LLC documentation stipulated above.

Name of Contractor, Ltd., a Texas limited partnership, as

appropriate By: Name of General Partner (usually a

Texas corporation or an L.L.C.) By: _____

Printed or Typed Name:_____

Title:_____Officer or Agent of

Corporation or LLC Authorized Representative

16. Contractor Evaluation

The Owner will review and evaluate the Contractor's Work and performance on the Project and provide the Contractor with a written Contractor Evaluation Report in accordance with City of Austin Administrative Rule R161-13.37. Rule R161-13.37 provides an appeal process.

http://www.austintexas.gov/department/contract-management

17. Texas Ethics Commission Certificate of Interested Parties Disclosure Form

(1) Definitions:

(A) "Interested Party" – means a person who has a controlling interest in a Business Entity with whom the Owner contacts or who actively participates in facilitating the Contract or negotiating the terms of the Contract, including a broker, intermediary, adviser, or attorney for the Business Entity.

(B) "Business Entity" – means any entity recognized by law through which business is conducted, including a sole proprietorship, partnership, or corporation.

(2) As a condition to entering the Contract, the Business Entity constituting the successful Bidder must provide a Texas Ethics Commission Certificate of Interested Parties Form to the Owner at the time the Business Entity/Bidder submits the signed Contract to the Owner in full compliance with the following requirements under which the successful Bidder shall:

(i) go to the Ethics Commission's website (www.ethics.state.tx.us),

(ii) complete the "Interested Parties" information, in accordance with the requirements of the Texas Ethics Commission Rules published at Title 1, Part 2, Chapter 46, of the Texas Administrative Code and available on the referenced website,

(iii) include the City's contract identification number,

(iv) include a short description of the goods or services to be used by the City, and

(v) indicate whether each interested party has a controlling interest in the business entity, is an intermediary in the contract for which the disclosure is being filed, or both.

(3) In accordance with the Commission Rules, the Certificate of Filing and completed Certificate of Interested Parties must be (i) printed, (ii) signed by an authorized agent of the business entity, and (iii) submitted to the City at the time of the submission of the signed contract to the City. The City then must notify the Ethics Commission in electronic format of receipt of the document within 30 days of contracting and the Commission will make the disclosure of interested parties available to the public on its website.

End

Geotechnical Data

Section 00220

Depending on Project requirements, OWNER may have obtained geotechnical information, which may include laboratory test results and logs of borings from geotechnical consultants. That information will be included in this section and/or on the Drawings. The CONTRACTOR shall be familiar with the subsurface materials and conditions on the Project and shall be knowledgeable of how they will affect the Work. The following is a partial listing of sources of information available to the CONTRACTOR about subsurface materials and conditions: the geotechnical information provided by the OWNER; geologic maps, publications and reports available from the University of Texas Bureau of Economic Geology at the J.J. Pickle Research Center in Austin, Texas; subcontractors familiar with local ground conditions; and, local consulting geologists and geotechnical engineers. The CONTRACTOR may make their own subsurface investigations.

End

The undersigned, in compliance with the Invitation for Bids for construction of the following Project: Chilled Water Piping Construction in the Right of Way (CIP ID# 7190.006, IFB# CLMC 606) for the City of Austin, Texas, having examined the Project Manual, Drawings and Addenda, and having conducted all inquiries, tests and investigations deemed necessary and proper; hereby proposes to furnish all labor, permits, material, machinery, tools, supplies and equipment, and incidentals, and to perform all Work required for construction of the Project in accordance with the Project Manual within the time indicated for the following prices of:

Note: The Bidder will enter the line item subtotal in the "Amount" column below, which is the product of the estimated "Quantity" multiplied by the "Unit Price". Any mathematical errors will be corrected for the purpose of determining the correct Amount to be entered in the Bid Form. The Amounts, including any corrected Amounts, will then be totaled to determine the actual amount of the Bid.

MINIMUM WAGES: Workers on Project shall be paid not less than wage rates, including fringe benefits, as published by the Department of Labor (DOL) for Building Construction and Heavy and Highway Trades "AS APPLICABLE" and/or the $13.03 minimum Wage required by City of Austin Ordinance No. 20160324-015, whichever is higher. The Total Minimum Wage required can be met using any combination of cash and non-cash qualified fringe benefits provided the cash component meets or exceeds the $13.03 minimum wage required.

Bid Item	Quantity	Unit	Item Description	Unit Price	Amount
430S-A	25	LF	P.C. Concrete Curb and Gutter (Excavation)	$_____	$_____
430S-B	25	LF	P.C. Concrete Curb and Gutter (Fine Grading)	$_____	$_____
430S-C	25	LF	P.C Concrete Curb (Excavation)	$_____	$_____
430S-D	25	LF	P.C. Concrete Curb (Fine Grading)	$_____	$_____
430S-E	25	LF	P.C Concrete Laydown Curb (Excavation)	$_____	$_____
430S-F	25	LF	P.C Concret Laydown Curb (Fine Grading)	$_____	$_____

Bid Item	Quantity	Unit	Item Description	Unit Price	Amount
432SR-4	25	SF	Reconstruct Concrete Sidewalks to 4 inch thickness, including removal of existing sidewalk	$_____	$_____
432SR-5	25	SF	Reconstruct Concrete Sidewalks to 5 inch thickness, including removal of existing sidewalk	$_____	$_____
432SR-6	25	SF	Reconstruct Concrete Sidewalks to 6 inch thickness, including removal of existing sidewalk	$_____	$_____
509S-1	600	LF	Trench Excavation Safety Protective System (all depths)	$_____	$_____
610S-A	100	LF	Protective Fencing Type A Chain Link Fence (Typical Application high damage potential)	$_____	$_____
610S-B	50	LF	Protective Fencing Type B Wood Fence (Typical Application-high damage potential)	$_____	$_____
610S-C:	40	LF	Protective Fencing Type C Other Material (Limited Application minimal damage potential)	$_____	$_____
610S-D	40	EA	Tree Well (Tree Protection)	$_____	$_____
628S-A	75	LF	Sediment Containment Dikes with hay bales	$_____	$_____

Bid Item	Quantity	Unit	Item Description	Unit Price	Amount
628S-B	75	LF	Sediment Containment Dikes with filter fabric	$_____	$_____
803S-SF	200	LF	Safety Fence	$_____	$_____
SP501S-ROCK-10	2000	LF	Underground dig via tunnel or jack & bore method, minimum 40 feet and up to 300 feet long, min. 12 feet and up to 20 feet cover depth above top of excavation , **IN ROCK**, 12" CHS and CHR pipes, two 4" conduits, grout	$_____	$_____
SP501S-ROCK-12	2000	LF	Underground dig via tunnel or jack & bore method, minimum 40 feet and up to 300 feet long, min. 12 feet and up to 20 feet cover depth above top of excavation , **IN ROCK**, 12" CHS and CHR pipes, two 4" conduits, grout	$_____	$_____
SP501S-ROCK-18	2000	LF	Underground dig via tunnel or jack & bore method, minimum 40 feet and up to 300 feet long, min 12 feet and up to 20 feet cover depth above top of excavation , **IN ROCK**, 18" CHS and CHR pipes , two 4" conduits, grout.	$_____	$_____
SP501S-ROCK-24	2000	LF	Underground dig via tunnel or jack & bore method, minimum 40 feet and up to 300 feet long, min 12 feet and up to 20 feet cover depth above top of excavation, **IN ROCK**, 24" CHS and CHR pipes, two 4" conduits, grout	$_____	$_____
SP501S-SOIL-10	2000	LF	Underground dig via tunnel or jack & bore method, minimum 40 feet and up to 300 feet long, min. 12 feet and up to 20 feet cover depth above top of excavation, **IN SOIL,** 12" CHS and CHR pipes, two 4" conduits, grout.	$_____	$_____

Bid Item	Quantity	Unit	Item Description	Unit Price	Amount
SP501S-SOIL-12	2000	LF	Underground dig via tunnel or jack & bore method, minimum 40 feet and up to 300 feet long, min. 12 feet and up to 20 feet cover depth above top of excavation, **IN SOIL,** 12" CHS and CHR pipes, two 4" conduits, grout.	$_____	$_____
SP501S-SOIL-18	2000	LF	Underground dig via tunnel or jack & bore method, minimum 40 feet and up to 300 feet long, min. 12 feet and up to 20 feet cover depth above top of excavation, **IN SOIL**, 18" CHS and CHR pipes, two 4" conduits grout.	$_____	$_____
SP501S-SOIL-24	2000	LF	Underground dig via tunnel or jack & bore method, minimum 40 feet and up to 300 feet long, min. 12 feet and up to 20 feet cover depth above top of excavation, **IN SOIL,** 24" CHS and CHR pipes, tow 4" conduits, grout.	$_____	$_____
SP501S-SOIL SMALLPIT	125	CY	Excavation pit for tunnel or jack & bore head and /or access to existing CHW pipe for hot tap **IN SOIL**, up to 10' x 22' by 20' deep, including shoring, excavation, debris haul off, backfill & compaction, CLSM.	$_____	$_____
SP501S-SOIL LARGEPIT	250	CY	Excavation pit for tunnel or jack & bore head and /or access to existing CHW pipe for hot tap **IN SOIL** up to 12'x35' by 20' deep, including shoring, excavation, debris haul off, backfill & compaction, CLSM.	$_____	$_____
SP506S	3	EA	Communications manhole, per Austin Energy Standard Detail #R3 "Communication Vault".	$_____	$_____

Bid Item	Quantity	Unit	Item Description	Unit Price	Amount
SP506S-MHCV	3	EA	Excavation for communications manhole, per Austin Energy's Standard Detail #R3 "Communications Vault".	$_____	$_____
SP-510-ROCK-12	2000	LF	Open trench minimum 30 feet and up to 100 feet long, up to 18 feet cover depth (above pipes), thru rock, 12" CHS and CHR pipes, two 4" conduits , excavation & backfill.	$_____	$_____
SP-510-ROCK-18	2000	LF	Open trench minimum 30 feet and up to 100 feet long, up to 18 feet cover depth (above pipes), thru rock, 18" CHS and CHR pipes, two 4" conduits , excavation & backfill.	$_____	$_____
SP-510-ROCk-24	2000	LF	Open trench minimum 30 feet and up to 100 feet long, up to 18 feet cover depth (above pipes), thru rock, 24" CHS and CHR pipes, two 4" conduits , excavation & backfill.	$_____	$_____
SP-510-SOIL-12	2000	LF	Open trench, minimum 30 feet and up to 100 feet long, up to 18 feet cover depth (above pipes), Type A or B soil conditions, 12" CHS and CHR pipes, two 4" conduits, excavation and backfill.	$_____	$_____
SP-510-SOIL-18	2000	LF	Open trench, minimum 30 feet and up to 100 feet long, up to 18 feet cover depth (above pipes), Type A or B soil conditions, 18" CHS and CHR pipes, two 4" conduits, excavation and backfill.	$_____	$_____
SP-510-SOIL-24	2000	LF	Open trench, min. 30 feet and up to 100 ft long, up to 18 feet cover depth (above pipes), Type A or B soil conditions, 12" CHS and CHR pipes, two 4" conduits, excavation and backfill	$_____	$_____

Bid Item	Quantity	Unit	Item Description	Unit Price	Amount
SS230190-VIDEO	5	EA	Video inspection of newly installed chilled water piping from 12 t0 24”.	$_____	$_____
803S-CD	20	CD	Barricades, Signs, and Traffic Handling. Single Lane closure.	$_____	$_____
803S-WD	20	WD	Barricades, Signs, and Traffic Handling. Single Lane closure.	$_____	$_____
803S-MO	1	MO	Barricades, Signs, and Traffic Handling. Single Lane closure.	$_____	$_____
803S-D-CD	20	CD	Barricades, Signs, and Traffic Handling. Double Lane closure.	$_____	$_____
803S-D-WD	20	WD	Barricades, Signs, and Traffic Handling. Double Lane closure.	$_____	$_____
803S-D-MO	1	MO	Barricades, Signs, and Traffic Handling. Double Lane closure.	$_____	$_____
SS-230517-1	2	EA	Pipe Seals for up to 12" pipe size	$_____	$_____
SS-230517-2	2	EA	Pipe Seals for 13" to 18” pipe size	$_____	$_____
SS230524 BFV-8	2	EA	8” butterfly valve	$_____	$_____
SS230524 BFV-10	2	EA	10” butterfly valves	$_____	$_____

Bid Item	Quantity	Unit	Item Description	Unit Price	Amount
SS-230524-BFV-12	2	EA	12” butterfly valves	$_____	$_____
SS-230524-BFV-18	2	EA	18” butterfly valves	$_____	$_____
SS-230524-BFV-24	2	EA	24” butterfly shutoff valves	$_____	$_____
SS 230524-BFV-30	2	EA	30” butterfly shutoff valves	$_____	$_____
SS-230524-AIR	4	EA	Air release assembly per standard AE detail #R2	$_____	$_____
SS232115-HT-8	1	EA	Hot tap for 8” pipe onto 24” to 30” pipe to include both chilled water supply and return piping.	$_____	$_____
SS232115-HT-10	2	EA	Hot tap for 10” pipe onto 24” to 30” pipe to include both chilled water supply and return piping.	$_____	$_____
SS-232115-HT-12 on 18	2	EA	Hot tap for 12” pipes onto 18” pipe, to include both chilled water supply and return piping.	$_____	$_____
SS-232115-HT-12 on 24	2	EA	Hot tap for 12” pipes onto 24” pipe, to include both chilled water supply and return piping.	$_____	$_____

Bid Item	Quantity	Unit	Item Description	Unit Price	Amount
SS-232115-HT-12 on 30	2	EA	Hot tap for 12” pipes onto 30” pipe to include both chilled water supply and return piping.	$_____	$_____
SS-232115 HT18 on 24	2	EA	Hot tap for 18” pipe onto 24” pipe to include both chilled water supply and return piping.	$_____	$_____
SS-232115-HT 18 on 30	2	EA	Hot tap for 18” pipe onto 30” pipe to include both chilled water supply and return piping.	$_____	$_____
SS-232115-HT24 on 24	2	EA	Hot tap for 24” piping onto 24” piping to include both chilled water supply and return piping.	$_____	$_____
SS-232115 HT 24 on 30	2	EA	Hot tap for 24” piping onto 30” piping to include both chilled water supply and return piping.	$_____	$_____
SS-232500 - RCHEMA	5	Per 100 Gal.	Cleaning and flushing for 12" piping and lower.	$_____	$_____
SS- 232500 RCHEMB	5	Per 100 Gal.	Cleaning and Flushing for 14” to 20” piping and lower.	$_____	$_____
SS-232500 RCHEMC	5	Per 100 Gal	Cleaning and Flushing for 24” and 30” in piping.	$_____	$_____
SS232500-R CHEM1	100	Per Hour	Pump Watch	$_____	$_____

Bid Item	Quantity	Unit	Item Description	Unit Price	Amount
SS232500-R CHEM2	5	Per Gallon	Chemistry from 0 to 5,000 gallons of treated water	$_____	$_____
SS232500-R CHEM 3	5	Per Gallon	Chemistry from 5,001 to 80,000 gallons of treated water.	$_____	$_____
SS-260533- Innerduct -A	150	LF	Installation of 3 single raceway Owner provided inner ducts within 4" non-metallic conduit.	$_____	$_____
SS-260533- Innerduct -B	150	LF	Installation of 3 single raceway Contractor provided inner ducts within vendor provided 4" non-metallic conduit	$_____	$_____
SS-271300- Fiberoptic	150	LF	Fiber Optic Cable installed within Innerduct and manholes	$_____	$_____

Allowance (Mobilization) **$_____57,000___**

BASE BID (INCLUDING ALLOWANCE(S))..... **$_____**

TOTAL BID:.....……..……. **$_____**

In the event of a mathematical error, the correct product, determined by using the "Unit Price" and "Quantity", and the correct sum, determined by totaling the correct line item Amounts will prevail over the amount entered by the Bidder. The unit prices shown above will be the unit prices used to tabulate the Bid and used in the Contract, if awarded by the City.

The CONTRACTOR will base its bid amount on the CONTRACTOR'S unit prices and the estimated quantities of Work set forth in the Bid Form, which will only be used for the purpose of comparison and evaluation of Bids. The OWNER will subsequently issue Work Assignments based on the OWNER's needs and not in accordance with the estimated quantities contained in the Bid documents up to the aggregated Contract Amount of, ***$15,000,000,*** subject to further appropriations. The unit prices bid by the successful bidder shall remain firm throughout the initial term of the CONTRACT.

Bid prices may be adjusted for the Contract extension on the basis of an increase or decrease of the existing prices upwards or downwards in accordance with the 20 City average Engineering News Record Construction Cost Index (CCI) (at the time of notice of contract extension) divided by the current area CCI at the time of bid. The adjusted prices will be included in a change order and will remain firm throughout the Contract extension period. Upon receipt of the notice of the exercise of the option for an additional contract term by the OWNER, the CONTRACTOR must request a Bid price adjustment in writing or the then current Bid prices will remain in force and effect.

Note: For a more detailed explanation of Bid Allowances, see Section 00810-IDIQ and 01020-IDIQ.

Optional Information on Bid Prices Submitted by Computer Printout

In lieu of handwritten unit prices in figures in ink on the Bid forms above, Bidders, at their option, may submit an original computer printout sheet bearing certification by, and signature for, the Bidding firm. The unit prices shown on acceptable printouts will be the unit prices used to tabulate the Bid and used in the Contract if awarded by the City. As a minimum, computer printouts must contain all information and in the format shown on the attached page: "Example of Bid Prices Submitted by Computer Printout" form.

If a computer printout is used, the Bidder must still execute that portion of the unit price Bid form which acknowledges the Bid Guaranty, Time of Completion, Liquidated Damages, and all addenda that may have been issued.

Bids with unit prices by computer printout may be rejected, if:

1. The computer printout does not include the required certification, set forth in the attached "Example".
2. The computer printout is not signed in the name of the firm to whom the Project Manual was issued.
3. The computer printout is non-responsive or otherwise omits required Bid items or includes items not shown on the Bid forms in the Project Manual.
4. The other required Bid documents issued by the City are not fully executed as provided above.
5. The signed Section 00300U-IDIQ is not returned with the signed computer printout.

If the Bid submitted by the Bidder contains both the form furnished by the City, completed according the instructions, and also a computer printout, completed according to the instructions, unit prices of only one will be considered. In this situation, the unit Bid prices shown on the computer printout will be used to determine the Bid.

BID GUARANTY: A Bid guaranty must be enclosed with this Bid, as required in Section 00020-IDIQ, in the amount of not less than five percent (5%) of the total Bid. Following the Bid opening, submitted Bids may not be withdrawn for a period of Ninty (90) Calendar Days. Award of contract will occur within this period, unless mutually agreed between the parties. The Bid guaranty may become the property of the OWNER, or the OWNER may pursue any other action allowed by law, if:

- Bidder withdraws a submitted Bid within the period stated above;
- Bidder fails to submit the required post Bid information within the period specified in Section 00020-IDIQ or 00100, or any mutually agreed extension of that period; or
- Bidder fails to execute the Contract and furnish the prescribed documentation (bonds, insurance, etc.) needed to complete execution of the Contract within five (5) Working Days after notice of award, or any mutually agreed extension of that period.

TIME OF COMPLETION: The undersigned Bidder agrees to commence work on the date specified in each written "Notice to Proceed" to be issued by the OWNER and to **finally** complete construction of the improvements, as required by the Project Manual, Drawings and Addenda for the Work within the time indicated in each Work Assignment. The Bidder further agrees that should the Bidder fail to **finally** complete the Work within the number of days indicated in the Work Assignment or as subsequently adjusted, Bidder shall pay the liquidated damages for each consecutive day thereafter as provided below; unless the OWNER elects to pursue any other action allowed by law.

WAIVER OF ATTORNEY FEES: In submitting its bid, in consideration for the waiver of its right to attorney's fees by the OWNER, the Bidder knowingly and intentionally agrees to and shall waive the right to attorney's fees under Section 271.153 of the Texas Local Government Code in any administrative proceeding, alternative dispute resolution proceeding, or litigation arising out of or connected to any Contract awarded pursuant to this solicitation process.

LIQUIDATED DAMAGES: The Bidder understands and agrees that the timely completion of the described Work in each Work Assignment is of the essence. The Bidder and OWNER further agree that the OWNER's actual damages for delay caused by failure to timely complete the Project are difficult, if not impossible to measure. However, with respect to the additional administrative and consultant costs to be incurred by OWNER, the reasonable estimate of such damages has been calculated and agreed to by OWNER and Bidder. Therefore, the Bidder and the OWNER agree that for each and every **Calendar Day** the Work or any portion thereof, remains incomplete after the **Final Completion** date as established by the above paragraph, "Time of Completion", payment will be due to the OWNER in the amount of **Eleven hundred Dollars ($1,100) per Calendar Day Day** as liquidated damages, not as a penalty, but for delay damages to the OWNER. **If both** Such amount shall be deducted by the OWNER from any Contract payment due. In the event of a default or breach by the CONTRACTOR and demand is made upon the surety to complete the project, in accordance with the Contract Documents, the surety shall be liable for liquidated damages pursuant to the Contract Documents in the same manner as the CONTRACTOR would have been.

OWNER reserves the right to reject any or all Bids and to waive any minor informality in any Bid or solicitation procedure (a minor informality is one that does not affect the competitiveness of the Bids).

The undersigned acknowledges receipt of the following addenda:

Addendum No. 1 dated _____ Received _____

Addendum No. 2 dated _____ Received _____

Addendum No. 3 dated _____ Received _____

Addendum No. 4 dated _____ Received _____

Addendum No. 5 dated _____ Received _____

BID DOCUMENT EXECUTION AND ACKNOWLEDGEMENT:

The undersigned Bidder certifies that he/she has read and understands the Section 00020 Invitation for Bids, the Section 00100 Instructions to Bidders, and all other requirements applicable to the bidding process provided in the Bid and Contract Documents.

Bidder will initial each of the blanks set forth below to represent and certify that the Bidder has completed, executed, and enclosed the corresponding supplemental Bid Documents with its Bid.

Bidder acknowledges and agrees by its signature below that in addition to any signatures required to be set forth in the following supplemental Bid Documents, Bidder i bound to the terms and conditions of each of the following documents, which are incorporated herein by reference:

____ 00425A Insurance Cost Form (ROCIP projects only)
____ 00440 Affidavit - Prohibited Activities
____ 00475 Nonresident Bidder Provisions
____ 00630 Non-Discrimination and Non-Retaliation Certificate
(NOTE: THIS FORM MUST STILL BE SEPARATELY SIGNED AND PROPERLY NOTARIZED
____ MBE/WBE Compliance Document

Secretary, *if Bidder is a Corporation

(Seal)

Bidder

Authorized Signature

Title

Date

Address

Telephone Number / FAX Number

Email Address for Person Signing Bid

Email Address for Bidder's Primary Contact Person

* Copy of Corporate Resolution and minutes with certificate of officer of Bidder as to authority of signatory to bind Bidder is to be signed and dated no earlier than one week before Bid date, and attached to this document.

EXAMPLE: BID PRICES SUBMITTED BY COMPUTER PRINTOUT

Project Name:
CIP ID #:
IFB #:

Bid Item #	***Bid Item Description***	***Unit***	***Qty***	***Unit Bid Price***	***Total Amount***
				Total Bid:	

(YOUR FIRM'S NAME) certifies that the unit prices shown on this completed computer printout for all of the bid items and the alternates contained in this proposal are the unit prices intended and that its Bid will be tabulated using these unit prices and no other information from this printout. (YOUR FIRM'S NAME) acknowledges and agrees that the total bid amount shown will be read as its total bid. *In the event of a mathematical error*, the correct product, determined by using the "Unit Price" and "Quantity", and the correct sum, determined by totaling the correct line item Amounts, will prevail over the amount entered by the Bidder.

Signed: _____

Title: _____

Date: _____

End

STATEMENT OF BIDDERS EXPERIENCE

Section 00400

Project Name: Chilled Water Piping Construction in the Right of Way

IFB Number: 7190.006

CIP ID Number: CLMC 606

Bidder's Name: _____

Bidder must complete all Attachments to Section 00400 clearly and comprehensively. If necessary, responses may be continued on separately attached sheets.

To be considered a responsive and responsible bidder, the apparent three (3) low Bidders must complete and submit within three (3) working days of notification of low bidder status Attachments A through I in accordance with Article 11, Section 00100. Any information in Attachments A through I that indicates the Bidder or a "Subcontractor" is not responsible or that might negatively impact a Bidder's ability to complete the Work within the Contract Time and for the Contract Price may result in the Bid being rejected.

The Bidder is responsible for the accuracy and completeness of all of the information provided by the Bidder or a proposed Subcontractor in response to this Invitation for Bids.

POST-BID SUBMITTALS

ATTACHMENT A – BIDDER'S INFORMATION

ATTACHMENT B – EXPERIENCE REQUIREMENTS (GENERAL CONTRACTOR)

ATTACHMENT C – PROJECT MANAGER AND SUPERINTENDENT EXPERIENCE

ATTACHMENT D– EXPERIENCE REQUIREMENTS (SPECIFIC CONSTRUCTION OR TECHNICAL EXPERIENCE)

ATTACHMENT E – AVAILABLE EQUIPMENT

ATTACHMENT F – AVAILABLE WORKFORCE

ATTACHMENT G – CURRENT PROJECTS

ATTACHMENT H – COMPLETED PROJECTS

ATTACHMENT I – BIDDER'S AUTHENTICATION

ATTACHMENT A

BIDDER'S INFORMATION

(Complete and return within three (3) days of notification of the three (3) low bidders' status)

IFB Number: CLMC 606_____

CIP ID Number: 7190.006_____

A. ***Name of Bidder:*** _____

B. ***Bidder's Permanent Address:*** _____

C. ***Bidder's Phone No.: ( ) _____-_____***

D. ***Number of years in business under current company name:*** ____

(Note: Bidder must have been in existence for a minimum of one (1) year under its current company name. Changes in company name during the experience period are acceptable, if the continuity of the company can be demonstrated. Attach separate documentation, if applicable.)

If Bidder answers "YES" for <u>any</u> of questions D through G, Bidder must attach separate sheets with a brief description or explanation of the answer and provide pertinent contact information (parties' names, addresses and telephone numbers).

E. ***Has the Bidder ever defaulted on a contract?***

YES (____) NO (____)

F. ***Are there currently any pending judgments, claims, or lawsuits against the Bidder?***

YES (____) NO (____)

G. ***Does Bidder currently have any pending claims, judgments or lawsuits against any prior client?***

YES (____) NO (____)

H. ***Is the Bidder or its principals involved in any bankruptcy or reorganization proceedings?***

YES (____) NO (____)

ATTACHMENT B

EXPERIENCE REQUIREMENTS (GENERAL CONTRACTOR)

(Complete and return within three (3) days of notification of the three (3) low bidders' status)

IFB Number: CLMC 606_____

CIP ID Number: 7190.006 _____

GENERAL CONTRACTOR EXPERIENCE

Bidder must list and describe Bidder's (not proposed subcontractors') construction experience as a general contractor for a minimum of three (3) successfully completed projects of comparable size, scope and complexity to the Work described in the Contract Documents. Bidders should refer to the 1.2 Description of Work section in contract document 01010 Summary of Work to determine what is reasonably comparable. Decisions on "comparability" are at the complete discretion of the OWNER.

Bidder must have completed the projects within the past five (5) years.

PROJECT NO. 1:

Name of Project: _____

Location: _____

OWNER's Name and Address: _____

OWNER's Contact Person (Print): _____

Phone/Fax No.: _____/_____

Initial Contract Price: _____

Final Contract Price: _____

Contract Start Date: _____ *(Date of Notice To Proceed)*

Contract Time: _____( ) *Calendar Days* ( ) *Working Days*

Contract Substantial Completion Date: _____

Actual Substantial Completion Date: _____

If contract time extensions were added to the contract as a result of Bidder's responsibilities, provide a short explanation of each.

_____

_____

_____

Project Description and why it is comparable to this Contract:

_____

_____

_____

_____

_____

_____

_____

_____

_____

_____

_____

PROJECT NO. 2:

Name of Project: _____

Location: _____

OWNER's Name and Address: _____

OWNER's Contact Person (Print): _____

Phone/Fax No.:_____/_____

Initial Contract Price: _____

Final Contract Price: _____

Contract Start Date: _____ *(Date of Notice To Proceed)*

Contract Time: _____( ) *Calendar Days* ( ) *Working Days*

Contract Substantial Completion Date: _____

Actual Substantial Completion Date: _____

If contract time extensions were added to the contract as a result of Bidder's responsibilities, provide a short explanation of each.

_____

_____

_____

Project Description and why it is comparable to this Contract:

_____

_____

_____

_____

_____

_____

_____

_____

_____

_____

_____

PROJECT NO. 3:

Name of Project: _____

Location: _____

OWNER's Name and Address: _____

OWNER's Contact Person (Print): _____

Phone/Fax No.:_____/_____

Initial Contract Price: _____

Final Contract Price:_____

Contract Start Date: _____ *(Date of Notice To Proceed)*

Contract Time: _____( ) *Calendar Days* ( ) *Working Days*

Contract Substantial Completion Date: _____

Actual Substantial Completion Date: _____

If contract time extensions were added to the contract as a result of Bidder's responsibilities, provide a short explanation of each.

_____

_____

_____

Project Description and why it is comparable to this Contract:

_____

_____

_____

_____

_____

_____

ATTACHMENT C

PROJECT MANAGER & SUPERINTENDENT EXPERIENCE

(Complete and return within three (3) days of notification of the three (3) low bidders' status)

IFB Number: CLMC 606_____

CIP ID Number: 7190.006 _____

Bidder must attach resumes for the Project Manager and Superintendent who will be assigned to this project. The resumes must demonstrate that these individuals have worked on at least three (3) similar, successfully completed projects in the capacity of Project Manager or Superintendent, or other responsible supervisory capacity, as applicable, during the last 10 years.

Project Manager (name): _____

Superintendent (name): _____

(Insert Resumes & Experience)

ATTACHMENT D

(Complete and return within three (3) days of notification of the three (3) low bidders' status)

SPECIFIC CONSTRUCTION EXPERIENCE (GENERAL CONTRACTOR OR SUBCONTRACTOR PERFORMING THE WORK)

Bidder must provide the following project history information for each Construction Experience requirement listed below. OWNER may in its reasonable discretion deem the provided experience information insufficient and reject the Bid.

For each Construction Experience item listed below, list and describe the applicable Construction Experience for a minimum of three (3) successfully completed projects of comparable size, scope, and complexity to the Work described for this project. Comparability requirements may be spread among the three (3) projects per item submitted, e.g. One Project may demonstrate comparable size, another Project may demonstrate comparable scope and another may demonstrate comparable complexity. Decisions on "comparability" are at the complete discretion of the OWNER.

The Work must have been performed within the past five (5) years.

Bidder must provide all requested information in a complete, clear, and accurate manner. If necessary, additional information may be provided on separate attached sheets. Failure to provide any requested information may cause the Bid to be rejected by OWNER as non-responsive.

If the Bidder proposes to fulfill any specific construction experience requirement with subcontracted resources, the applicable Subcontractor must be included in the Bidder's Original MBE/WBE Compliance Plan. Failure to include subcontractors on the MBE/WBE Compliance Plan may render your bid non-responsive.

SPECIFIC CONSTRUCTION EXPERIENCE ITEMS REQUIRED:

ITEM 1. Furnish and installation of Chilled Water Piping in accordance with Welding Specification B31.1.

ITEM 2. Furnish and installation of Furnish and/or installation of Chilled Water Piping in the ROW via Jack and Bore in a major metropolitan area.

ITEM 3. Furnish and installation of chilled water piping 24" and larger in a major metropolitan area.

The Bidder shall complete and duplicate the following specific Construction Experience Form as required to provide the requested documentation for a minimum of three (3) successfully completed projects for each of the above specific Construction Experience requirements.

CONSTRUCTION EXPERIENCE DOCUMENTATION FORM

EXPERIENCE ITEM NUMBER: _____

Project Number: _____

Does Bidder plan to self perform this work? YES (_____) NO (_____)

If "NO", provide the following Subcontractor information:

Company Name: _____

Permanent Address: _____

Phone Number: _____

Number of years Subcontractor has been in business under current company name: _____

Name of Project: _____

Location: _____

OWNER's Name: _____

OWNER's Address: _____

OWNER's Contact Person (Print): _____

Phone/Fax No.:_____/_____

Initial Contract Price: _____

Final Contract Price: _____

Contract Start Date: _____ *(Date of Notice To Proceed)*

Contract Time: _____( ) *Calendar Days* ( ) *Working Days*

Contract Substantial Completion Date: _____

Actual Substantial Completion Date: _____

If contract time extensions were added to the contract as a result of Bidder's responsibilities, provide a short explanation of each.

_____

_____

_____

Project Description and why it is comparable to the size, scope, and/or complexity for this item:

_____

_____

_____

_____

_____

_____

ATTACHMENT E

AVAILABLE EQUIPMENT LIST

(Complete and return within three (3) days of notification of the three (3) low bidders' status)

Name of Bidder: _____

IFB Number: CLMC 606_____

CIP ID Number: 7190.006 _____

Provide a list of equipment that is available to the CONTRACTOR or its Subcontractor(s) and is specifically intended to be used on the Work under this Contract. Also indicate whether the equipment is owned or will be leased by the CONTRACTOR and/or Subcontractor(s).

EQUIPMENT	OWNED OR LEASED	COMMITTED TO ANOTHER PROJECT? (Yes / No)	AVAILABLE / RELEASE DATE

Use additional pages, as necessary

ATTACHMENT F

AVAILABLE WORKFORCE

(Complete and return within three (3) days of notification of the three (3) low bidders' status)

Name of Bidder: _____

IFB Number: CLMC 606_____

CIP ID Number: 7190.006 _____

Provide a list of the available workforce for the various disciplines and crafts required for the Work on this Project, including the number of work crews, and number and worker classification for each equipment operator, mechanic, and laborer for that portion of the Work that Bidder will actually perform.

Number of Anticipated Work Crews: _____

DISCIPLINE OR CRAFT	NO. OF EMPLOYEES	COMMITTED TO ANOTHER PROJECT? (Yes / No)	AVAILABLE / RELEASE DATE
Professional (specify)			
Superintendent			
Technical (specify)			
Skilled Workers (specify)			
Semiskilled Workers (specify)			
Equipment Operators (list)			
Other			
Other			

Use additional pages, as necessary

ATTACHMENT G

CURRENT PROJECT LISTING (INCLUDING ALL CITY OF AUSTIN PROJECTS)

(Complete and return within three (3) days of notification of the three (3) low bidders' status)

Name of Bidder: _____

IFB Number: CLMC 606_____

CIP ID Number: 7190.006 _____

Provide a list of <u>all current projects</u>, including *<u>all City of Austin projects</u>*. Include the following for all jobs that Bidder is currently committed to or has currently underway: brief statement regarding the job type; estimated project duration; project contact; and project description.

Name of Project: _____ Location: _____

Type of Job: _____ City of Austin Job? ☐ Yes / ☐ No

Project Start Date: _____ Estimated Completion Date: _____

Project Contact: _____

Brief Description: _____

_____

Name of Project: _____ Location: _____

Type of Job: _____ City of Austin Job? ☐ Yes / ☐ No

Project Start Date: _____ Estimated Completion Date: _____

Project Contact: _____

Brief Description: _____

_____

Name of Project: _____ Location: _____

Type of Job: _____ City of Austin Job? ☐ Yes / ☐ No

Project Start Date: _____ Estimated Completion Date: _____

Project Contact: _____

Brief Description: _____

_____

Name of Project: _____ Location: _____

Type of Job: _____ City of Austin Job? ☐ Yes / ☐ No

Project Start Date: _____ Estimated Completion Date: _____

Project Contact: _____

Brief Description: _____

_____

Use additional pages, as necessary

ATTACHMENT H

COMPLETED PROJECTS (INCLUDING ALL CITY OF AUSTIN PROJECTS)

(Complete and return within three (3) days of notification of the three (3) low bidders' status)

Name of Bidder: _____

IFB Number: CLMC 606_____

CIP ID Number: 7190.006 _____

Provide a list of <u>all completed projects</u>, including *<u>all City of Austin projects</u>* that Bidder has completed in the past five (5) years by calendar year (or life of company if less than five (5) years). Include the following: a brief statement regarding the job type, the estimated project duration, project contact, and project description.

Calendar Year of _____

Name of Project: _____ Location: _____

Type of Job: _____ City of Austin Job? ☐ Yes / ☐ No

Project Duration: _____ Project Contact: _____

Brief Description: _____

_____

_____

Name of Project: _____ Location: _____

Type of Job: _____ City of Austin Job? ☐ Yes / ☐ No

Project Duration: _____ Project Contact: _____

Brief Description: _____

_____

_____

Name of Project: _____ Location: _____

Type of Job: _____ City of Austin Job? ☐ Yes / ☐ No

Project Duration: _____ Project Contact: _____

Brief Description: _____

_____

_____

Name of Project: _____ Location: _____

Type of Job: _____ City of Austin Job? ☐ Yes / ☐ No

Project Duration: _____ Project Contact: _____

Brief Description: _____

_____

_____

Use additional pages as necessary to achieve a representative listing covering 5 years

ATTACHMENT I

BIDDERS AUTHENTICATION

(Complete and return within three (3) days of notification of the three (3) low bidders' status)

Name of Bidder: _____

IFB Number: CLMC 606_____

CIP ID Number: 7190.006 _____

THE STATE OF TEXAS

COUNTY OF TRAVIS

I certify that my responses and the information provided in Attachments A-H are true and correct to the best of my personal knowledge and belief and that I have made no willful misrepresentations in this Section, nor have I withheld any relevant information in my statements and answers to questions. I am aware that any information given by me in this Section may be investigated and I hereby give my full permission for any such investigation and I fully acknowledge that any misrepresentations or omissions in my responses and information may cause my bid to be rejected.

Bidder's full name and entity status:

_____

Company's Name

_____

Signature, Authorized Representative of Bidder

_____

Title

_____

Date

CERTIFICATE OF NON-SUSPENSION OR DEBARMENT

Section 00405

The City of Austin is prohibited from contracting with or making prime or sub-awards to parties that are suspended or debarred or whose principals are suspended or debarred from Federal, State, or City of Austin Contracts. Covered transactions include procurement contracts for goods or services equal to or in excess of $25,000.00 and all non-procurement transactions. This certification is required for all bidders on all City of Austin Contracts to be awarded with values equal to or in excess of $25,000.00 and all non-procurement transactions.

The CONTRACTOR hereby certifies that its firm and its principals are not currently suspended or debarred from bidding on any Federal, State, or City of Austin Contracts.

PROJECT: Name Chilled Water Piping Construction in the Right of Way

PROJECT Address: Various locations

CONTRACTOR'S Name _____

Signed by (Authorized Representative) _____

Printed Name: _____

Title _____

Date _____

END

SAFETY RECORD QUESTIONNAIRE & STATEMENT OF BIDDER'S SAFETY EXPERIENCE

(To Be Submitted Post-Bid)

Project: Chilled Water Piping Construction in the Right of Way

CIP ID Number: 7190.006

IFB Number: CLMC 606

Pursuant to Section 252.0435 of the Local Government Code, the Austin City Council will consider the safety records of potential contractors prior to awarding bids on City contracts. The City of Austin has adopted the following written definitions and criteria for accurately determining the safety record of a Bidder prior to awarding bids on City contracts. The term "Bidder" includes the firm, corporation, partnership, or other legal entity represented by the Bidder or anyone acting for such firm, corporation, partnership or other entity submitting the bid. The definitions and criteria for determining the safety record of a Bidder are:

> "Citations" include notices of violation, notices of enforcement, suspension/revocations of state or federal licenses or registrations, fines assessed pending criminal complaints, indictments, or convictions, administrative orders, draft orders, final orders, and judicial final judgments. Notice of Violations and Notice of Enforcement received from the TCEQ shall include those classified as major violations and moderate violations under the TCEQ'S regulations for documentation of Compliance History, 30 Texas Administrative Code, Chapter 60.2 (c) (1) and (2).
>
> "Environmental Protection Agency" includes, but is not limited to the Texas Commission on Environmental Quality (TCEQ), the U.S. Environmental Protection Agency, the U.S. Fish and Wildlife Service, the U.S. Army Corps of Engineers, the Texas Department of Health, the Texas Parks and Wildlife Department, the Structural Pest Control Service, agencies of local governments responsible for enforcing environmental protection laws or regulations, and similar regulatory agencies of other states of the United States.

1. If the Bidder's response to the following questions reveals more than two (2) cases in which final orders have been entered by the Occupational Safety and Health Review Commission (OSHRC) against the Bidder for serious violations of Occupational Safety & Health Administration (OSHA) regulations within the past five (5) years, the City will, at its discretion, determine whether to disqualify the Bidder.
2. If the Bidder's response to the following questions reveals more than one (1) case in which Bidder has received a citation or for which final orders have been entered from an environmental protection agency for violations within the past five (5) years, the City will, at its discretion, determine whether to disqualify the Bidder.
3. If the Bidder's response to the following questions reveals that the Bidder has been convicted of a criminal offense within the past ten (10) years or has been subject to a judgment for a negligent act or omission, which resulted in serious bodily harm or death, at its discretion, the City will determine whether to disqualify the Bidder.
4. The City may consider the responses to each question listed below separately when making a discretionary determination of whether to disqualify a Bidder and it may consider the cumulative impact of the information generated by the Bidder's responses in making the determination.

5. The Bidder acknowledges the requirements for Safety Training (listed in Section 00700) must be met before any work commences on the project.
6. In order to consider the safety records of potential contractors prior to awarding bids on City contracts, the City requires that Bidders answer the following questions and submit them upon request:

QUESTION ONE

Has the Bidder received any Citations for violations of OSHA within the past five (5) years? ❒ Yes ❒ No

QUESTION TWO

Has the Bidder received any Citations for violations of environmental protection laws or regulations within the past five (5) years? ❒ Yes ❒ No

QUESTION THREE

Has the Bidder ever been convicted, within the past ten (10) years, of a criminal offense or has been subject to a judgment for a negligent act or omission, which resulted in serious bodily injury or death? ❒ Yes ❒ No

---

If the Bidder has indicated "Yes" to any question above, the Bidder must provide to the City, with its bid submission, the following information:

Date of Citation or offense and location where violation or offense occurred, type of violation or offense, final disposition of violation or offense, if any, and penalty assessed.

In addition, the City will utilize the following information and in its discretion, as additional support to make any discretionary determination of whether to disqualify a Bidder. Accordingly, Bidder must answer the following questions and provide evidence that it meets minimum OSHA construction safety standards and has a lost time injury rate that does not exceed the limits established below:

1. Does the Bidder have a written construction safety program? ❒ Yes ❒ No
2. Does the Bidder conduct regular construction site safety inspections? ❒ Yes ❒ No
3. Does the Bidder have an active construction safety training program? ❒ Yes ❒ No
4. Does the Bidder or affected subcontractors have competent persons in the following areas (as applicable to the scope of the current Project):

A. Scaffolding	❒ Yes	❒ No	❒ N/A
B. Excavation	❒ Yes	❒ No	❒ N/A
C. Cranes & Hoists	❒ Yes	❒ No	❒ N/A
D. Electrical	❒ Yes	❒ No	❒ N/A
E. Fall Protection	❒ Yes	❒ No	❒ N/A
F. Confined Spaces	❒ Yes	❒ No	❒ N/A
G. Material Handling	❒ Yes	❒ No	❒ N/A
H. Demolition	❒ Yes	❒ No	❒ N/A
I. Steel Erection	❒ Yes	❒ No	❒ N/A

J. Underground Construction ❒ Yes ❒ No ❒ N/A

5. Does the company have a lost time injury rate and a total recordable injury rate of less than or equal to the national average for North American Industrial Classification System (NAICS) Category 23 for each of the past five (5) years? (Attach the Bidder's OSHA 300 and 300A logs for the past five (5) years) ❒ Yes ❒ No

6. Does the Bidder have an experience modifier rate of 1.0 or less? (Attach the Bidder's NCCI workers compensation experience rating sheets for the past five (5) years) ❒ Yes ❒ No

7. Has the Bidder had any OSHA inspections within the past six (6) months? ❒ Yes ❒ No
(If "YES", provide sufficient documentation to indicate the nature of the inspection, the findings, and magnitude of the issues.)

ACKNOWLEDGEMENT

THE STATE OF TEXAS

COUNTY OF TRAVIS

I certify that my responses and the information provided are true and correct to the best of my personal knowledge and belief and that I have made no willful misrepresentations in this Questionnaire, nor have I withheld any relevant information in my statements and answers to questions. I am aware that any information given by me in this questionnaire may be investigated and I hereby give my full permission for any such investigation and I fully acknowledge that any misrepresentations or omissions in my responses and information may cause my bid to be rejected.

Bidder's full name and entity status:

_____

Company's Name

_____

Signature, Authorized Representative of Bidder

_____

Title

_____

Date

END

CITY OF AUSTIN

BIDDER'S AFFIDAVIT OF NON-COLLUSION,

NON-CONFLICT OF INTEREST, AND ANTI-LOBBYING FOR

IFB NO. CLMC 606_____

FOR **CHILLED WATER PIPING CONSTRUCTION IN THE RIGHT OF WAY**

CIP ID Number: 7190.006

State of Texas

County of Travis

The undersigned "Affiant" is a duly authorized representative of the bidder for the purpose of making this Affidavit, and, after being first duly sworn, has deposed and stated and hereby deposes and states, to the best of his or her personal knowledge and belief as follows:

The term **"Bidder"**, as used herein, includes the individual or business entity submitting the bid and for the purpose of this Affidavit includes the directors, officers, partners, managers, members, principals, owners, agents, representatives, employees, other parties in interest of the Bidder, and anyone or any entity acting for or on behalf of the Bidder, including a subcontractor in connection with this bid.

The terms **"City"** and **"Owner"** are synonymous.

1. **Anti-Collusion Statement.** The Bidder has not and will not in any way directly or indirectly:
   a. colluded, conspired, or agreed with any other person, firm, corporation, bidder or potential bidder to the amount of this bid or the terms or conditions of this bid.
   b. paid or agreed to pay any other person, firm, corporation bidder or potential bidder any money or anything of value in return for assistance in procuring or attempting to procure a contract or in return for establishing the prices in the attached bid or the bid of any other bidder.

2. **Preparation of Invitation for Bid and Contract Documents**. The Bidder has not received any compensation or a promise of compensation for participating in the preparation or development of the underlying bid or contract documents., In addition, the Bidder has not otherwise participated in the preparation or development of the underlying bid or contract documents, except to the extent of any comments or questions and responses in the bidding process, which are available to all bidders, so as to have an unfair advantage over other bidders, provided that the Bidder may have provided relevant product or process information to a consultant in the normal course of its business.

3. **Participation in Decision Making Process.** The Bidder has not participated in the evaluation of bids or proposals or other decision making process for this solicitation, and, if Bidder is awarded a contract hereunder, no individual, agent, representative, consultant or sub contractor or consultant associated with Bidder, who may have been involved in the evaluation or other decision making process for this solicitation, will have any direct or indirect financial interest in the Contract, provided that the Bidder may have provided relevant product or process information to a consultant in the normal course of its business.

4. **Present Knowledge.** Bidder is not presently aware of any potential or actual conflicts of interest regarding this solicitation, which either enabled Bidder to obtain an advantage over other bidders or would prevent Bidder from advancing the best interests of OWNER in the course of the performance of the Contract.

5. **City Code.** As provided in Sections 2-7-61 through 2-7-65 of the City Code, no individual with a substantial interest in Bidder is a City official or employee or is related to any City official or employee within the first or second degree of consanguinity or affinity.

6. **Chapter 176 Conflict of Interest Disclosure.** In accordance with Chapter 176 of the Texas Local Government Code, the Bidder:

   a. does not have an employment or other business relationship with any local government officer of OWNER or a family member of that officer that results in the officer of family member receiving taxable income;

   b. has not given a local government officer of OWNER one or more gifts, other than gifts of food lodging transportation or entertainment accepted as a guest, that have an aggregate value of more than $100 in the twelve month period preceding the date the officer becomes aware of the execution of the Contract or that OWNER is considering doing business with the Bidder; and

   c. does not have a family relationship with a local government officer of OWNER in the third degree of consanguinity or the second degree of affinity.

   As required by Chapter 176, Bidder must file the Conflicts of Interest Questionnaire with the Purchasing Department no later than the seventh business day after the commencement of contract discussions or negotiations with the City or the submission of a Bid, response to a request for proposals, or other writing related to a potential contract with OWNER. The questionnaire must be updated not later than the seventh day after the date of an event that would make a statement in the questionnaire inaccurate or incomplete. There are statutory penalties for failure to comply with Chapter 176.

7. **Anti-Lobbying Ordinance.** As set forth in paragraph 1.i. of the Instructions to Bidders Section 00100, between the date that the Invitation for Bid was issued and the date of full execution of the Contract, Bidder has not made and will not make a representation to a member of the City Council, a member of a City Board, or any other official, employee or agent of the City, other than the authorized contact person for the solicitation, except as permitted by the Ordinance.

If the Bidder cannot affirmatively swear and subscribe to the forgoing statements, the Bidder shall provide a detailed written explanation in the space provided below or, as necessary, on separate pages to be annexed hereto.

Signature: _____ Date: _____

Printed Name: _____

Title: _____

Firm/Entity: _____

Subscribed and sworn to before me this ____ day of _____, 20__.

_____ My Commission Expires _____
Notary Public

BIDDER'S EXPLANATION:

_____

END

NONRESIDENT BIDDER PROVISIONS

Section 00475

CIP ID Number: 7190.006

Bidder must answer the following questions in accordance with Vernon's Texas Statutes and Codes Annotated Government Code § 2252.002, as amended:

A. Is the bidder that is making and submitting this bid a "resident bidder" or a "non-resident bidder"?

Answer: _____

(1) Texas Resident Bidder - A bidder whose principal place of business is in Texas and includes a Contractor whose ultimate parent company or majority owner has its principal place of business in Texas.

(2) Nonresident Bidder - A bidder who is not a Texas Resident Bidder.

B. If the Bidder is a "Nonresident Bidder", does the state, in which the Nonresident Bidder's principal place of business is located, have a law requiring a Nonresident Bidder of that state to bid a certain amount or percentage under the bid of a Resident Bidder of that state in order for the nonresident bidder of that state to be awarded a contract on his bid in such state?

Answer: Yes or No Which state? _____

If the answer to Question B is "yes", then what amount or percentage must a Texas Resident Bidder bid under the bid price of a Resident Bidder of that state in order to be awarded a contract on such bid in said state?

Answer: _____

_____

Signature

END

STATE OF TEXAS
COUNTY OF TRAVIS

THIS AGREEMENT is made and entered into this _____ day of _____, 20____, by and between the City of Austin, Texas, a municipal corporation, organized and existing under laws of State of Texas, acting through its City Manager or other duly authorized designee, hereinafter referred to as the "OWNER," and _____, of the City of _____, County of _____, and State of _____, hereinafter referred to as the "CONTRACTOR."
In consideration of the promises, performances, payments and agreements set forth herein CONTRACTOR hereby agree to commence and complete the following Project:
<_____>

The Contract will be for an initial 36-month term, with 3 possible 1-year extension(s) option(s). Extension of the Contract will be at the mutual agreement of both the OWNER and the CONTRACTOR. If the CONTRACTOR chooses not to renew, a hold over extension of the Contract term for up to 120 calendar days may be implemented by the OWNER to allow time for re-bidding. The OWNER reserves the right not to offer an extension. Work Assignments may be issued at any time during the term of the Contract. Work Assignments not completed by the expiration date of the Contract are subject to the terms and conditions of the Contract which will continue in full force and effect.

Subject to the further approval of the Austin City Council, the initial Contract Amount will not exceed $6,000,000 for the initial Contract Term and $2,000,000 for each extension option for a total potential Contract Amount not to exceed $15,000,000, which may be increased subject to the availability of funding and further approval of the Austin City Council.

The CONTRACTOR will base its bid amount on the CONTRACTOR's unit prices and the estimated quantities of Work set forth in the Bid Form, which will only be used for the purpose of the comparison and evaluation of Bids. The OWNER will subsequently issue Work Assignments based on the OWNER's needs and not in accordance with the estimated quantities contained in the Bid documents up to the aggregated Contract Amount of **$15,000,000**, subject to further appropriations.

In consideration of the award and execution of this Contract, and in consideration of the waiver of its right to attorney's fees by the OWNER, the CONTRACTOR knowingly and intentionally waives its right to attorney's fees under Section 271.153 of the Texas Local Government Code in any administrative proceeding, alternative dispute resolution proceeding, or litigation arising out of or connected to this Contract.

OWNER agrees to pay CONTRACTOR from available funds for performance of the Contract in accordance with the Bid and the provisions of the Contract Documents, subject to additions and deductions, as provided therein.

The OWNER's payment obligations are payable only and solely from funds available for the purposes of this Agreement.

Although drafted by OWNER, this Agreement, in event of any disputes over its meaning or application, shall be interpreted fairly and reasonably, and neither more strongly for nor against either party.

OWNER

By:_____
City of Austin (Signature)

_____
Date

_____
Title of Signatory

APPROVED AS TO FORM:

By:_____
Law Department

_____
Date

§ CONTRACTOR
§
§ By:_____
§ (Signature)

§ _____
§ Date
§ _____
§ Printed Name of Signatory
§
§ _____
§ Title of Signatory, Authorized Representative
§
§ ATTEST (as applicable)
§
§_____
§ Secretary of Corporate Bidder or Corporate General Partner *

*Copy of Corporate Resolution and minutes with certificate of officer of CONTRACTOR as to authority of signatory to bind CONTRACTOR is to be signed, dated no earlier than one week before the date of award of Contract, and attached to this document.

END

PERFORMANCE BOND

Section 00610

STATE OF TEXAS

COUNTY OF TRAVIS

Bond No. _____

C.I.P. ID No. 7190.006

Project Name: Chilled Water Piping Construction in the Right of Way

Know All Men By These Presents: That _____ of the City of _____, County of _____, and State of _____, as Principal, and _____, a solvent company authorized under laws of the State of Texas to act as surety on bonds for principals, are held and firmly bound unto _____ (OWNER), in the penal sum of _____ ($_____ U.S.) for payment whereof, well and truly to be made, said Principal and Surety bind themselves and their heirs, administrators, executors, successors and assigns, jointly and severally, by these presents:
Conditions of this Bond are such that, whereas, Principal has entered into a certain written contract with OWNER, dated the _____ day of _____, _____, which Agreement is hereby referred to and made a part hereof as fully and to the same extent as if copied at length herein.

Now, therefore, the condition of this obligation is such, that if said Principal shall faithfully perform said Agreement and shall in all respects duly and faithfully observe and perform all and singular covenants, conditions and agreements in and by said contract agreed and covenanted by Principal to be observed and performed, and according to true intent and meaning of said Agreement hereto annexed, then this obligation shall be void; otherwise to remain in full force and effect. If OWNER notifies Principal and Surety the OWNER is considering declaring Principal in default, Surety agrees to meet with OWNER and Principal no later than fifteen days after receipt of such notice to discuss methods of performing the Work of the Contract.

Provided, however, that this bond is executed pursuant to provisions of Chapter 2253, Texas Government Code as amended and all liabilities on this bond shall be determined in accordance with provisions of said Article to same extent as if it were copied at length herein.

Surety, for value received, stipulates and agrees that no change in Contract Time or Contract Amount shall in anywise affect its obligation on this bond, and it does hereby waive notice of any such change in Contract Time or Contract Amount.

In witness whereof, said Principal and Surety have signed and sealed this instrument this _____day of _____, _____.

Principal	Surety
By_____	By_____
(Signature)	(Signature)
Title_____	Title_____
Address_____	Address_____
_____	_____
_____	_____
	Telephone_____Fax_____
	E-Mail Address _____

Name and address of Resident Agent of Surety:

_____

_____

Note: Bond shall be issued by a solvent Surety company authorized to do business in Texas, and shall meet any other requirements established by law or by OWNER pursuant to applicable law. A copy of surety agent's "Power of Attorney" must be attached hereto.

END

PAYMENT BOND

Section 00620

STATE OF TEXAS

COUNTY OF TRAVIS _____

Bond No. _____

C.I.P. ID No. 7190.006

Project Name Chilled Water Piping Construction in the Right of Way_____

Know All Men By These Presents: That _____ of the City of _____, County of _____, and State of _____, as Principal, and _____, a solvent company authorized under laws of the State of Texas to act as surety on bonds for principals, are held and firmly bound unto _____ (OWNER), and all Subcontractors, workers, laborers, mechanics and suppliers as their interests may appear, all of whom shall have right to sue upon this bond in the penal sum of _____ U.S. Dollars ($ _____U.S.) for payment whereof, well and truly to be made, said Principal and Surety bind themselves and their heirs, administrators, executors, successors and assigns, jointly and severally, by these presents:

Conditions of this Bond are such that, whereas, Principal has entered into a certain written contract with OWNER, dated the _____ day of _____, _____, which Agreement is hereby referred to and made a part hereof as fully and to the same extent as if copied at length herein.

Now, therefore, condition of this obligation is such, that if the said Principal shall well and truly pay all Subcontractors, workers, laborers, mechanics, and suppliers, all monies to them owing by said Principals for subcontracts, work, labor, equipment, supplies and materials done and furnished for the construction of improvement of said Agreement, then this obligation shall be and become null and void; otherwise to remain in full force and effect.

Provided, however, that this bond is executed pursuant to provisions of Chapter 2253, Texas Government Code as amended and all liabilities on this bond shall be determined in accordance with provisions of said Article to same extent as if it were copied at length herein.

Surety, for value received, stipulates and agrees that no change in Contract Time or Contract Amount shall in anywise affect its obligation on this bond, and it does hereby waive notice of any such change in Contract Time or Contract Amount.

In witness whereof, said Principal and Surety have signed and sealed this instrument this _____day of _____, _____.

_____	_____
Principal	Surety
By_____	By_____
(Signature)	(Signature)
Title_____	Title_____
Address_____	Address_____
_____	_____
_____	_____

Telephone_____Fax_____

E-Mail Address _____

Name and address of Resident Agent of Surety:

_____

_____

Note: Bond shall be issued by a solvent Surety company authorized to do business in Texas, and shall meet any other requirements established by law or by OWNER pursuant to applicable law. A copy of surety agent's "Power of Attorney" must be attached hereto.

END

CIP ID Number:

City of Austin, Texas
Equal Employment/Fair Housing Office

To: City of Austin, Texas, ("OWNER")

I hereby certify that our firm conforms to the Code of the City of Austin Section 5-4-2 as reiterated below:

Chapter 5-4. Discrimination in Employment by City Contractors.

Sec. 4-2 Discriminatory Employment Practices Prohibited. (B) As an Equal Employment Opportunity (EEO) employer, the Contractor will conduct its personnel activities in accordance with established federal, state and local EEO laws and regulations and agrees:

(1) Not to engage in any discriminatory employment practice defined in this chapter.

(2) To take affirmative action to ensure that applicants are employed, and that employees are treated during employment, without discrimination being practiced against them as defined in this chapter. Such affirmative action shall include, but not be limited to: all aspects of employment, including hiring, placement, upgrading, transfer, demotion, recruitment, recruitment advertising; selection for training and apprenticeship, rates of pay or other forms of compensation, and layoff or termination.

(3) To post in conspicuous places, available to employees and applicants for employment, notices to be provided by OWNER setting forth the provisions of this chapter.

(4) To state in all solicitations or advertisements for employees placed by or on behalf of Contractor, that all qualified applicants will receive consideration for employment without regard to race, creed, color, religion, national origin, sexual orientation, gender identity, disability, veteran status, sex or age.

(5) To obtain a written statement from any labor union or labor organization furnishing labor or service to Contractors in which said union or organization has agreed not to engage in any discriminatory employment practices as defined in this chapter and to take affirmative action to implement policies and provisions of this chapter.

(6) To cooperate fully with OWNER's Equal Employment/Fair Housing Office in connection with any investigation or conciliation effort of said Equal Employment/Fair Housing Office to ensure that the purpose of the provisions against discriminatory employment practices are being carried out.

(7) To require compliance with provisions of this chapter by all subcontractors having fifteen or more employees who hold any subcontract providing for expenditure of $2,000.00 or more in connection with any contract with OWNER subject to the terms of this chapter. .

For the purposes of this Bid and any resulting Contract, Contractor adopts the provisions of the City's Minimum Standard Nondiscrimination and Non-Retaliation Policy as set forth below.

City of Austin

Minimum Standard Non-Discrimination and Non-Retaliation in Employment Policy

As an Equal Employment Opportunity (EEO) employer, the Contractor will conduct its personnel activities in accordance with established federal, state and local EEO laws and regulations.

The Contractor will not discriminate against any applicant or employee based on race, creed, color, national origin, sex, age, religion, veteran status, gender identity, disability, or sexual orientation. This policy covers all aspects of employment, including hiring, placement, upgrading, transfer, demotion, recruitment, recruitment advertising, selection for training and apprenticeship, rates of pay or other forms of compensation, and layoff or termination.

The Contractor agrees to prohibit retaliation, discharge or otherwise discrimination against any employee or applicant for employment who has inquired about, discussed or disclosed their compensation.

Further, employees who experience discrimination, sexual harassment, or another form of harassment should immediately report it to their supervisor. If this is not a suitable avenue for addressing their complaint, employees are advised to contact another member of management or their human resources representative. No employee shall be discriminated against, harassed, intimidated, nor suffer any reprisal as a result of reporting a violation of this policy. Furthermore, any employee, supervisor, or manager who becomes aware of any such discrimination or harassment should immediately report it to executive management or the human resources office to ensure that such conduct does not continue.

Contractor agrees that to the extent of any inconsistency, omission, or conflict with its current non-discrimination and non- retaliation employment policy, the Contractor has expressly adopted the provisions of the City's Minimum Non-Discrimination Policy contained in Section 5-4-2 of the City Code as set forth above and the City's Non-Retaliation Policy, as the Contractor's Non-Discrimination and Non-Retaliation Policy or as an amendment to such Policy and such provisions are intended to not only supplement the Contractor's policy, but will also supersede the Contractor's policy to the extent of any conflict.

UPON CONTRACT AWARD, THE CONTRACTOR SHALL PROVIDE A COPY TO THE CITY OF THE CONTRACTOR'S NON-DISCRIMINATION AND NON-RETALIAITON POLICY ON COMPANY LETTERHEAD, WHICH CONFORMS IN FORM, SCOPE, AND CONTENT TO THE CITY'S MINIMUM NON-DISCRIMINATION AND NON-RETALIATION POLICY, AS SET FORTH HEREIN, ***OR*** *THIS NON-DISCRIMINATION AND NON-RETALIATION POLICY, WHICH HAS BEEN ADOPTED BY THE CONTRACTOR FOR ALL PURPOSES (THE FORM OF WHICH HAS BEEN APPROVED BY THE CITY'S EQUAL EMPLOYMENT/FAIR HOUSING OFFICE), WILL BE CONSIDERED THE CONTRACTOR'S NON-DISCRIMINATION AND NON-RETALIATION POLICY WITHOUT THE REQUIREMENT OF A SEPARATE SUBMITTAL. (http://austintexas.gov/page/bid-docs).*

Sanctions:

Our firm understands that non-compliance with Chapter 5-4 may result in sanctions, including termination of the contract and suspension or debarment from participation in future City contracts until deemed compliant with the requirements of Chapter 5-4.

Term:

The Contractor agrees that this Section 00630 Non-Discrimination and Non-Retaliation Certificate or the Contractor's separate conforming policy, which the Contractor has executed and filed with the Owner, will remain in force and effect for one year from the date of filing. The Contractor further agrees that, in consideration of the receipt of continued Contract payments, the Contractor's Non-Discrimination Policy will automatically renew from year-to-year for the term of the underlying Contract.

Dated this _____ day of _____, _____.

CONTRACTOR _____

Authorized Signature _____

Title _____

END

During the performance of this contract, the contractor, for itself, its assignees and successors in interest (hereinafter referred to as the "contractor") agrees as follows:

1. Compliance with Regulations: The contractor shall comply with the Regulations relative to nondiscrimination in Federally-assisted programs of the Department of Transportation (hereinafter, "DOT") Title 49, Code of Federal Regulations, Part 21, as they may be amended from time to time, (hereinafter referred to as the Regulations), which are herein incorporated by reference and made a part of this contract.

2. Nondiscrimination: The contractor, with regard to the work performed by it during the contract, shall not discriminate on the grounds of race, color, or national origin in the selection and retention of subcontractors, including procurements of materials and leases of equipment. The contractor shall not participate either directly or indirectly in the discrimination prohibited by section 21.5 of the Regulations, including employment practices when the contract covers a program set forth in Appendix B of the Regulations.

3. Solicitations for Subcontracts, Including Procurements of Materials and Equipment: In all solicitations either by competitive bidding or negotiation made by the contract for work to be performed under a subcontract, including procurements of materials or leases of equipment, each potential subcontractor or supplier shall be notified by the contractor of the contractor's obligations under this contract and the Regulations relative to nondiscrimination on the grounds of race, color, or national origin.

4. Information and Reports: The contractor shall provide all information and reports required by the Regulations or directives issued pursuant thereto, and shall permit access to its book, records, accounts, other sources of information, and its facilities as may be determined by the Recipient or the Texas Department of Transportation to be pertinent to ascertain compliance with such Regulations, orders and instructions. Where any information required of a contractor is in the exclusive possession of another who fails or refuses to furnish this information the contractor shall so certify to the Recipient, or the Texas Department of Transportation as appropriate, and shall set forth what efforts it has made to obtain the information.

5. Sanctions for Noncompliance: In the event of the contractor's noncompliance with the nondiscrimination provisions of this contract, the Recipient shall impose such contract sanctions as it or the Texas Department of Transportation may determine to be appropriate, including, but not limited to:

   (a) withholding of payments to the contractor under the contract until the contractor complies, and or (b) cancellation, termination or suspension of the contract, in whole or in part.

6. Incorporation of Provisions: The contractor shall include the provisions of paragraphs (1) through (6) in every subcontract, including procurements of materials and leases of equipment, unless exempt by the Regulations, or directives issued pursuant thereto. The contractor shall take such action with respect to any subcontract or procurement as the Recipient or the Texas Department of Transportation may direct as a means of enforcing such provisions including sanctions for non-compliance: Provided, however, that, in the event a contractor becomes involved in, or is threatened with, litigation with a subcontractor or supplier as a result of such direction, the contractor may request the Recipient to enter into such litigation to protect the

interests of the Recipient, and, in addition, the contractor may request the United States to enter into such litigation to protect the interests of the United States.

(DOT 1050.2, 08/24/71)

Contractor's full name and entity status:

_____

Signature, Authorized Representative of Contractor

_____

Title

_____

Date

END

CERTIFICATE OF INSURANCE

Section 00650

This Certificate shall be completed by a licensed insurance agent:

Name and Address of Agency:

_____

_____

_____

Phone: _____ / _____

Name and Address of Insured:

_____

_____

_____

Phone: _____ / _____

Prime or Sub-Contractor?: _____

Name of Prime Contractor, if different from Insured: _____

City of Austin Reference:

Project Name: _____

C.I.P. No.: _____

Project Location: _____

_____

Managing Dept.: _____

Contract No.: _____

Project Mgr.: _____

Insurers Affording Coverages:

Insurer A:

_____

Insurer B:

_____

Insurer C:

_____

Insurer D:

_____

INSR LTR	TYPE OF INSURANCE	POLICY NUMBER	POLICY EFFE-CTIVE DATE (MM/DD/YYYY)	POLICY EXPIR-ATION DATE (MM/DD/YYYY)	LIMITS OF LIABILITY	
	Commercial General Liability Policy As defined in the Policy, does the Policy provide:				Each Occurrence	$
					General Aggregate	$
	☐ Yes ☐ No -- Completed Operations/Products				Completed Operations /Products Aggregate	$
	☐ Yes ☐ No -- Contractual Liability				Personal & Advertising Injury	$
	☐ Yes ☐ No -- Explosion				Deductible or Self Insured Retention	$
	☐ Yes ☐ No -- Collapse					
	☐ Yes ☐ No -- Underground					
	☐ Yes ☐ No -- Contractors/ Subcontractors Work					
	☐ Yes ☐ No -- Aggregate Limits per Project Form CG 2503					
	☐ Yes ☐ No -- Additional Insured Form – CG 2010					
	☐ Yes ☐ No -- 30 Day Notice of Cancellation Form – CG 0205					
	☐ Yes ☐ No -- Waiver of Subrogation Form – CG 2404					
	Pollution/ Environmental Impairment Policy				Occurrence	$
					Aggregate	$

INSR LTR	TYPE OF INSURANCE	POLICY NUMBER	POLICY EFFE-CTIVE DATE (MM/DD/YYYY)	POLICY EXPIR-ATION DATE (MM/DD/YYYY)	LIMITS OF LIABILITY	
	Auto Liability Policy As defined in the Policy, does the Policy provide:				CSL	$
					Bodily Injury (Per Accident)	$
	☐ Yes ☐ No -- Any Auto				Bodily Injury (Per Person)	$
	☐ Yes ☐ No -- All Owned Autos				Property Damage (Per Accident)	$
	☐ Yes ☐ No -- Non-Owned Autos					
	☐ Yes ☐ No -- Hired Autos					
	☐ Yes ☐ No -- Waiver of Subrogation – CA0444					
	☐ Yes ☐ No -- 30 Day Notice of Cancellation – CA0244					
	☐ Yes ☐ No -- Additional Insured – CA2048					
	☐ Yes ☐ No -- MCS 90					
	Excess Liability ☐ Umbrella Form ☐ Excess Liability Follow Form				Occurrence	$
					Aggregate	$
	Workers Compensation and Employers Liability As defined in the Policy, does the Policy provide:				☐ Statutory	
					Each Accident	$
	☐ Yes ☐ No -- Waiver of Subrogation – WC420304				Disease – Policy Limit	$
	☐ Yes ☐ No -- 30 Day Notice of Cancellation – WC420601				Disease – Each Employee	$
	Is a Builders Risk or Installation Insurance Policy provided? ☐ Yes ☐ No					$
	☐ Yes ☐ No -- Is the City shown as loss payee/mortgagee?					
	Professional Liability As defined in the Policy, does the Policy provide:				Each Claim	$
	☐ Yes ☐ No -- 30 Day Notice of Cancellation Retroactive Date: _____				Deductible or Self Insured Retention	$

This form is for informational purposes only and certifies that policies of insurance listed above have been issued to insured named above and are in force at this time. Not withstanding any requirements, term or condition of any contract or other document with respect to which this certificate may be issued or may pertain, insurance afforded by policies described herein is subject to all terms, exclusions and conditions of such policies.

CERTIFICATE HOLDER:

City of Austin
Capital Contracting Office
P.O. Box 1088
Austin, Texas 78767

DATE ISSUED: _____

_____
AUTHORIZED REPRESENTATIVE SIGNATURE
Licensed Insurance Agent

END

TEXAS SALES AND USE TAX EXEMPTION CERTIFICATE

Section 00670

City of Austin, Texas
P.O. Box 1088
Austin, Texas 78767

CONTRACTOR/PURCHASER: _____

Street Address: _____

City, State, ZIP Code: _____

PROJECT: _____

Project Manager: _____

FDU No.: _____

CIP ID No._____

Description of items to be purchased or as described on the attached order or invoice:

_____

_____

The Contractor may purchase all labor, materials, supplies, and equipment to be incorporated in the City of Austin realty, including easements, or completely consumed at the Project jobsite and services required by or integral to the performance of the contract for the Project without paying sales or use tax in accordance with State Comptroller Rule 3.291.

Contractor/Purchaser claims this exemption for the following reason: This contract is to be performed for the City of Austin, a tax exempt entity under the Texas Tax Code.

I understand that I will be liable for payment of sales and use taxes which may become due for failure to comply with the provisions of the Tax Code. I also understand that it is a criminal offense to give an exemption certificate to the contractor for taxable items that I know, at the time of purchase, will be used in a manner other than that expressed in this certificate and depending on the amount of tax evaded, the offense may range from a Class B misdemeanor to a felony of the second degree.

City of Austin, Texas	Title	Date
Elaine Hart		
ELAINE HART	CHIEF FINANCIAL OFFICER	March 20, 2014

CONTRACTOR/PURCHASER: _____

By: _____

Title: _____

Date: _____

NOTE: This certificate cannot be issued for the purchase, lease, or rental of a motor vehicle. THIS CERTIFICATE DOES NOT REQUIRE A NUMBER TO BE VALID. Sales and Use Tax "Exemption Numbers" or "Tax Exempt" Numbers do not exist. This certificate should be furnished to the supplier. Do not send the completed certificate to the Comptroller of Public Accounts.

End

NON-USE OF ASBESTOS AFFIDAVIT (CONTRACTOR PRIOR TO CONSTRUCTION)

Section 00680

STATE OF TEXAS
COUNTY OF TRAVIS

BEFORE ME, the undersigned authority, personally appeared the Affiant who, being by me first duly sworn, upon oath deposed and stated:

"My name is _____, hereinafter known as Affiant.

"I am over the age of 18 years and I have never been convicted of a crime. I am the _____ of _____ hereinafter known as CONTRACTOR.

"I am fully competent to make this affidavit. I have personal knowledge of the facts set forth below and they are all true and correct.

"WHEREAS CONTRACTOR has submitted a bid to the City of Austin as the Prime CONTRACTOR and anticipates being awarded a contract for the construction of _____ _____, located at _____, Austin, Texas, hereinafter known as Project, for the City of Austin, Texas, hereinafter known as OWNER, and

"WHEREAS asbestos in a dust form is a recognized health hazard, and

"WHEREAS the OWNER desires not to have any asbestos containing materials used or incorporated into the construction of the Project;

"THEREFORE the CONTRACTOR affirms and understands the following:

1. The CONTRACTOR, any person, firm or organization representing or represented by the CONTRACTOR, or employed by the CONTRACTOR shall not cause or allow any material to be incorporated into the construction of the project, or allow any building material on the project site that is an asbestos containing material or any other material defined as containing asbestos by any laws, rules or regulations promulgated by the United States Government, the State of Texas or any governmental organization or agency operating under the authority of either of those entities.
2. Realizing that there might be some materials in which a satisfactory non-asbestos containing material could not be obtained, the Consultant has received prior approval from the OWNER before specifying any such asbestos containing material. Those approved materials are the only asbestos containing materials that are exempt from the above prohibition.
3. The CONTRACTOR certifies and affirms their understanding that if any asbestos containing materials not approved by the City of Austin for inclusion into the Project, are determined, as a result of any inspection and sample analysis performed by an individual(s) and/or firm(s) certified and/or licensed to perform such inspection by the United States Government and/or the State of Texas, to have been incorporated into the construction of the Project, or brought onto the site of the Project, the OWNER shall look to the CONTRACTOR for reimbursement of any and all costs incurred in the removal and/or other abatement of said asbestos containing materials.

4. CONTRACTOR further understands that OWNER shall also look to the CONTRACTOR for any and all damages to OWNER which result from the inability of the OWNER to use any portion or all of the Project due to the incorporation of asbestos containing materials that have not been approved by OWNER.
5. CONTRACTOR further understands that OWNER will pursue reimbursement of any said cost and compensation for any said damages from the CONTRACTOR by any and every means within OWNER's right and power.

Signature of Affiant:_____

STATE OF TEXAS
COUNTY OF TRAVIS

ON _____, 20_____, personally appeared _____ _____ and been duly sworn by me, subscribed to the foregoing affidavit and has stated that the facts stated therein are true and correct.

_____
Notary Public, State of Texas

_____
Printed Name of Notary

My Commission Expires: _____

End

NON-USE OF ASBESTOS AFFIDAVIT (CONTRACTOR AFTER CONSTRUCTION)

Section 00681

STATE OF TEXAS
COUNTY OF TRAVIS

BEFORE ME, the undersigned authority, personally appeared the Affiant who, being by me first duly sworn, upon oath deposed and stated:

"My name is _____, hereinafter known as Affiant.

"I am over the age of 18 years and I have never been convicted of a crime. I am the _____ of _____ hereinafter known as CONTRACTOR.

"I am fully competent to make this affidavit. I have personal knowledge of the facts set forth below and they are all true and correct.

"WHEREAS CONTRACTOR was awarded a Contract for, and was the Prime CONTRACTOR for the construction of _____ _____, located at _____, Austin, Texas, hereinafter known as Project, for the City of Austin, Texas, hereinafter known as OWNER, and

"WHEREAS asbestos in a dust form is a recognized health hazard, and

"WHEREAS the OWNER desires not to have any asbestos containing materials used or incorporated into the construction of the Project;

"THEREFORE the CONTRACTOR affirms and understands the following:

1. The CONTRACTOR, any person, firm or organization representing or represented by the CONTRACTOR, or employed by the CONTRACTOR has not caused or allowed any material to be incorporated into the construction of the project, or allowed any building material on the project site that is an asbestos containing material or any other material defined as containing asbestos by any laws, rules or regulation promulgated by the United States Government, the State of Texas or any governmental organization or agency operating under the authority of either of those entities.

2. Realizing that there were some materials in which a satisfactory non-asbestos containing material could not be obtained, the Consultant received prior approval from the OWNER before specifying any such asbestos containing material. Those approved materials were the only asbestos containing materials incorporated into the construction of the Project and are listed below, with their locations:

   _____

   _____

   _____

3. The CONTRACTOR certifies and affirms their understanding that if any asbestos containing materials not approved by the City of Austin for inclusion into the Project, are determined, as a result of any inspection and sample analysis performed by an individual(s) and/or firm(s) certified and/or licensed to perform such inspection by the United States Government and/or the State of Texas, to have been incorporated into the

construction of the Project, or brought onto the site of the Project, the OWNER shall look to the CONTRACTOR for reimbursement of any and all costs incurred in the removal and/or other abatement of said asbestos containing materials.

4. CONTRACTOR further understands that OWNER shall also look to the CONTRACTOR for any and all damages to OWNER which result from the inability of the OWNER to use any portion or all of the Project due to the incorporation of asbestos containing materials that have not been approved by OWNER.

5. CONTRACTOR further understands that OWNER will pursue reimbursement of any said cost and compensation for any said damages from the CONTRACTOR by any and every means within OWNER's right and power.

Signature of Affiant:_____

STATE OF TEXAS
COUNTY OF TRAVIS

ON _____, 20_____, personally appeared _____ _____ and been duly sworn by me, subscribed to the foregoing affidavit and has stated that the facts stated therein are true and correct.

_____
Notary Public, State of Texas

_____
Printed Name of Notary

My Commission Expires: _____

End

General Conditions Table of Contents

ARTICLE 1 - DEFINITIONS 2
ARTICLE 2 - PRELIMINARY MATTERS 5
ARTICLE 3 - CONTRACT DOCUMENTS: INTENT, AMENDING, REUSE 8
ARTICLE 4 - AVAILABILITY OF LANDS; SUBSURFACE AND PHYSICAL CONDITIONS; REFERENCE POINTS 9
ARTICLE 5 - BONDS AND INSURANCE 12
ARTICLE 6 - CONTRACTOR'S RESPONSIBILITIES 15
ARTICLE 7 - OTHER WORK 27
ARTICLE 8 - OWNER'S RESPONSIBILITIES 27
ARTICLE 9 - ENGINEER/ARCHITECT'S STATUS DURING CONSTRUCTION 28
ARTICLE 10 - CHANGES IN THE WORK 30
ARTICLE 11 - CHANGE OF CONTRACT AMOUNT 32
ARTICLE 12 - CHANGE OF CONTRACT TIMES 34
ARTICLE 13 - TESTS AND INSPECTIONS; CORRECTION, REMOVAL OR ACCEPTANCE OF DEFECTIVE WORK 37
ARTICLE 14 - PAYMENTS TO CONTRACTOR AND COMPLETION 40
ARTICLE 15 - SUSPENSION OF WORK AND TERMINATION 45
ARTICLE 16 - DISPUTE RESOLUTION 48
ARTICLE 17 - MISCELLANEOUS 50

ARTICLE 1 – DEFINITIONS

Whenever used in these General Conditions or in the other Contract Documents the following terms have the meanings indicated which are applicable to both the singular and plural thereof:

1.1 Addendum - Written instruments issued by the Contract Awarding Authority which clarify, correct or change the bidding requirements or the Contract Documents prior to the Due Date. "Addenda" is the plural form of Addendum.

1.2 Agreement - Prescribed form, Section 00500.

1.3 Alternative Dispute Resolution - The process by which a disputed Claim may be settled if the OWNER and the CONTRACTOR cannot reach an agreement between themselves, as an alternative to litigation.

1.4 Bid - A complete, properly signed response to an Invitation for Bid that, if accepted, would bind the Bidder to perform the resultant Contract.

1.5 Bidder - A person, firm, or entity that submits a Bid in response to a Solicitation. Any Bidder may be represented by an agent after submitting evidence demonstrating the agent's authority. The agent cannot certify as to his own agency status.

1.6 Bid Documents - The advertisement or Invitation for Bids, instructions to Bidders, the Bid form, the Contract Documents and Addenda.

1.7 Calendar Day - Any day of the week; no days being excepted. Work on Saturdays, Sundays, and/or Legal Holidays shall be coordinated with OWNER.

1.8 Change Directive - A written directive to CONTRACTOR, signed by OWNER, ordering a change in the Work and stating a proposed basis for adjustment, if any, in the Contract Amount or Contract Time, or both. A Change Directive may be used in the absence of total agreement on the terms of a Change Order. A Change Directive does not change the Contract Amount or Contract Time, but is evidence that the parties expect that the change directed or documented by a Change Directive will be incorporated in a subsequently issued Change Order.

1.9 Change Orders - Written agreements entered into between CONTRACTOR and OWNER authorizing an addition, deletion, or revision to the Contract, issued on or after the Execution Date of the Agreement.

1.10 Claim - A written demand seeking, as a matter of right, adjustment or interpretation of Contract terms, payment of money, extension of time or other relief with respect to the terms of the Contract.

1.11 Contract - The binding legal agreement between the OWNER and the CONTRACTOR. The Contract represents the entire and integrated agreement between OWNER and CONTRACTOR for performance of the Work, as evidenced by the Contract Documents.

1.12 Contract Amount - The moneys payable by OWNER to CONTRACTOR for completion of the Work in accordance with the Contract Documents.

1.13 Contract Awarding Authority - A City department authorized to enter into Contracts on behalf of the City.

1.14 Contract Documents - Project Manual, Drawings, Addenda and Change Orders.

1.15 Contract Time - The number of days allowed for completion of the Work as defined by the Contract. When any period is referred to in days, it will be computed to exclude the first and include the last day of such period. A day of twenty-four hours measured from midnight to the next midnight will constitute a day.

1.16 CONTRACTOR - The individual, firm, corporation, or other business entity with whom OWNER has entered into the Contract for performance of the Work.

1.17 Critical Path - The longest series of tasks that runs consecutively from the beginning to the end of the project, as determined by duration and workflow sequence. This longest path sets the managerial standard for how quickly a project can be completed, given appropriate resources.

1.18 Drawings - Those portions of the Contract Documents which are graphic representations of the scope, extent and character of the Work to be furnished and performed by CONTRACTOR and which have been approved by OWNER. Drawings may include plans, elevations, sections, details, schedules and diagrams. Shop Drawings are not Drawings as so defined.

1.19 Due Date - The date and time specified for receipt of Bids.

1.20 Engineer/Architect (E/A) - The OWNER's design professional identified as such in the Contract. The titles of "Architect/Engineer," "Architect" and "Engineer" used in the Contract Documents shall read the same as Engineer/Architect (E/A). Nothing contained in the Contract Documents shall create any contractual or agency relationship between E/A and CONTRACTOR.

1.21 Equal - The terms "equal" or "approved equal" shall have the same meaning.

1.22 Execution Date - Date of last signature of the parties to the Agreement.

1.23 Field Order - A written order issued by Owner's Representative which orders minor changes in the Work and which does not involve a change in the Contract Amount or the Contract Time.

1.24 Final Completion - The point in time when OWNER determines that all Work has been completed and final payment to CONTRACTOR will be made in accordance with the Contract Documents.

1.25 Force Account - a basis of payment for the direct performance of Work with payment based on the actual cost of the labor, equipment and materials furnished and consideration for overhead and profit as set forth in Section 11.5.

1.26 Inspector - The authorized representative of any regulatory agency that has jurisdiction over any portion of the Work.

1.27 Invitation for Bid (IFB) - a Solicitation requesting pricing for a specified Good or Service which has been advertised for Bid in a newspaper and/or the Internet.

1.28 Legal Holidays

1.28.1 The following are recognized by the OWNER:

Holiday	Date Observed
New Year's Day	January 1
Martin Luther King, Jr.'s Birthday	Third Monday in January
President's Day	Third Monday in February
Memorial Day	Last Monday in May
Independence Day	July 4
Labor Day	First Monday in September
Veteran's Day	November 11
Thanksgiving Day	Fourth Thursday in November
Friday after Thanksgiving	Friday after Thanksgiving
Christmas Eve	December 24
Christmas Day	December 25

1.28.2 If a Legal Holiday falls on Saturday, it will be observed on the preceding Friday. If a Legal Holiday falls on Sunday, it will be observed on the following Monday.

1.28.3 Christmas Eve is observed only if it falls on a Monday through Thursday. If Christmas Eve falls on a Friday, that day is observed as the Christmas Day holiday.

1.29 Milestones - A significant event specified in the Contract Documents relating to an intermediate completion date or time prior to Substantial Completion of all the Work.

1.30 Notice to Proceed - A Written Notice given by OWNER to CONTRACTOR fixing the date on which the Contract Times will commence to run and on which CONTRACTOR shall start to perform CONTRACTOR's obligations under the Contract Documents.

1.31 OWNER - City of Austin, Texas, a municipal corporation, home rule city and political subdivision organized and existing under the laws of the State of Texas, acting through the City Manager or his/her designee, officers, agents or employees to administer design and construction of the Project.

1.32 Owner's Representative - The designated representative of the OWNER. The Owner's Representative will be identified at the pre-construction conference.

1.33 Partial Occupancy or Use - Use by OWNER of a substantially completed part of the Work for the purpose for which it is intended (or a related purpose) prior to Substantial Completion of all the Work, provided OWNER and CONTRACTOR have accepted in writing the responsibilities assigned to each of them for payments, retainage if any, security, maintenance, utilities, corrective work, insurance and warranties.

1.34 Project - The subject of the Work and its intended result.

1.35 Project Manual - That portion of the Contract Documents which may include the following: introductory information; bidding requirements, Contract forms and General and Supplemental General Conditions; General Requirements; Specifications; Drawings; MBE/WBE or DBE Procurement Program Package; Project Safety Manual; and Addenda.

1.36 Resident Project Representative - The authorized representative of E/A who may be assigned to the site or any part thereof.

1.37 Shop Drawings - All drawings, diagrams, illustrations, schedules and other data or information which are specifically prepared or assembled by or for CONTRACTOR and submitted by CONTRACTOR as required by the Contract Documents.

1.38 Specifications - Those portions of the Contract Documents consisting of written technical descriptions as applied to the Work, which set forth to CONTRACTOR, in detail, the requirements which must be met by all materials, equipment, construction systems, standards, workmanship, equipment and services in order to render a completed and useful project.

1.39 Solicitation - Solicitation means, as applicable, an Invitation for Bid or a Request for Proposal.

1.40 Substantial Completion - The stage in the progress of the Work when the Work, or designated portion thereof, is sufficiently complete in accordance with the Contract Documents so OWNER can occupy or utilize the Work for its intended use, as evidenced by a Certificate of Substantial Completion approved by OWNER.

1.41 Subcontractor - An individual, firm, corporation, or other business entity having a direct contract with CONTRACTOR for the performance of a portion of the Work under the Contract.

1.42 Sub-Subcontractor - A person or entity who has a direct or indirect contract with a Subcontractor to perform a portion of the work.

1.43 Superintendent - The representative of CONTRACTOR authorized in writing to receive and fulfill instructions from the Owner's Representative, and who shall supervise and direct construction of the Work.

1.44 Supplemental General Conditions - The part of the Contract Documents which amends or supplements the General Conditions. All General Conditions which are not so amended or supplemented remain in full force and effect.

1.45 Supplier - An individual or entity having a direct contract with CONTRACTOR or with any Subcontractor to furnish materials or equipment to be incorporated in the Work by CONTRACTOR or any Subcontractor.

1.46 Time Extension Request - An approved request for time extension on a form acceptable to OWNER.

1.47 Work - The entire completed construction, or the various separately identifiable parts thereof, required to be furnished under the Contract Documents.

1.48 Working Day - Any day of the week, not including Saturdays, Sundays, or Legal Holidays in which conditions under the CONTRACTOR's control will permit work for a continuous period of not less than seven (7) hours between 7:00 a.m. and 6:00 p.m. Upon agreement with Owner's Representative, work on Saturdays, Sundays and/or Legal Holidays may be allowed and will be considered a Working Day.

1.49 Working Hours

1.49.1 Working Day Contract: All Work shall be done between 7:00 a.m. and 6:00 p.m. unless authorized by Owner's Representative. However, emergency work may be done without prior permission as indicated in paragraph 6.11.5. If night Work is authorized and conditions under CONTRACTOR's control will permit Work for a continuous period of not less than seven (7) hours between 12:00 a.m. and 11:59 p.m. it will be considered a Working Day. Night Work may be revoked at any time by OWNER if CONTRACTOR fails to maintain adequate equipment and supervision for the prosecution and control of the night Work.

1.49.2 Calendar Day Contract: All Work shall be done between 7:00 a.m. and 6:00 p.m. unless authorized by Owner’s Representative. However, emergency work may be done without prior permission as indicated in paragraph 6.11.5. Night Work may be revoked at any time by OWNER if CONTRACTOR fails to maintain adequate equipment and supervision for the prosecution and control of the night Work.

1.50 Written Notice - Written communication between OWNER and CONTRACTOR. Written Notice shall be deemed to have been duly served if delivered in person to Owner's Representative or CONTRACTOR's duly authorized representative, or if delivered at or sent by registered or certified mail to the attention of Owner's Representative or CONTRACTOR's duly authorized representative at the last business address known to the party giving notice.

ARTICLE 2 - PRELIMINARY MATTERS

2.1 Delivery of Agreement, Bonds, Insurance, etc.: Within five (5) Working Days after written notification of award of Contract, CONTRACTOR shall deliver to OWNER signed Agreement, Bond(s), Insurance Certificate(s) and other documentation required for execution of Contract.

2.2 Copies of Documents: OWNER shall furnish to CONTRACTOR one (1) Project Manual with original signatures, one (1) copy of the executed Project Manual, one (1) set of Drawings

and one (1) copy of the Contract Documents in .pdf format. Additional copies will be furnished, upon request, at the cost specified in the Supplemental General Conditions."

2.3 Commencement of Contract Times; Notice to Proceed: The Contract Time(s) will begin to run on the day indicated in the Notice to Proceed. Notice to Proceed will be given at any time within sixty (60) calendar days after the Execution Date of the Agreement, unless extended by written agreement of the parties.

2.4 Before Starting Construction:

2.4.1 No Work shall be done at the site prior to the preconstruction conference without OWNER's approval. Before undertaking each part of the Work, CONTRACTOR shall carefully study the Contract Documents to check and verify pertinent figures shown thereon compare accurately to all applicable field measurements. CONTRACTOR shall promptly report in writing to Owner's Representative any conflict, error, ambiguity or discrepancy which CONTRACTOR may discover and shall obtain a written interpretation or clarification from Owner's Representative before proceeding with any Work affected thereby. CONTRACTOR shall be liable to OWNER for failure to report any conflict, error, ambiguity or discrepancy in the Contract Documents of which CONTRACTOR knew or reasonably should have known.

2.4.2 It is mutually agreed between CONTRACTOR and OWNER that successful completion of the Work within the Contract completion date is of primary importance. Therefore, the CONTRACTOR hereby agrees to submit to the Owner's Representative for review and approval, or acceptance, as appropriate, all information requested within this section, including a Baseline Schedule, no later than five working days prior to the preconstruction conference. The Owner's Representative will schedule the preconstruction conference upon the timely submittal of the required documents, unless time is extended by written mutual agreement. CONTRACTOR will submit the following:

.1 A proposed Baseline Schedule developed using Microsoft Project software, unless otherwise approved by Owner's Representative ("Baseline Schedule") to confirm that all Work will be completed within the Contract time. The Baseline Schedule must (i) indicate the times (number of days or dates) for starting and completing the various stages of the Work, including any Milestones specified in the Contract Documents, (ii) identify the Critical Path for completing the Work, (iii) identify when all Subcontractors will be utilized, and (iv) take into consideration any limitations on Working Hours, including baseline Rain Days on Calendar Day Contracts, and (v) be prepared accordance with Section 01310, Schedules and Reports, if applicable; otherwise in accordance with Section 01300, Submittals. This Baseline Schedule, a copy of which shall be made available at the job site(s), must contain sufficient detail to indicate that the CONTRACTOR has properly identified required Work elements and tasks, has provided for a sufficient and proper workforce and integration of Subcontractors, has provided sufficient resources and has considered the proper sequencing of the Work required to result in a successful Project that can be completed within the Contract time;

.2 An organizational chart showing the principals and management personnel who will be involved with the Work, including each one's responsibilities for the Work;

.3 To the extent not set forth in the Section 00400 Statement of Contractor's Experience, a complete listing of the CONTRACTOR's employees proposed for the Work. List each one by name and job title, and show length of employment with CONTRACTOR;

.4 To the extent not set forth in the Section 00410 Statement of Bidder's Safety Experience, a discussion and confirmation of the CONTRACTOR's commitment to safety by providing a copy of its employee's safety handbook and the safety records for the past three years of CONTRACTOR's proposed project manager and Superintendent;

.5 A preliminary schedule of Shop Drawing and sample submittals;

.6 A preliminary schedule of values for all of the Work, subdivided into component parts in sufficient detail to serve as the basis for progress payments during construction. Such prices will be deemed to include an appropriate amount of overhead and profit applicable to each item of Work;

.7 To the extent not set forth in the Section 00400 Statement of Contractor's Experience, a letter designating CONTRACTOR's Superintendent and project manager, and a confirmation of past project experience for the CONTRACTOR's Superintendent and project manager specifically intended for the Work;

.8 A letter from CONTRACTOR and Subcontractor(s) listing salaried specialists. A salaried specialist is anyone except an hourly worker whose wage rate is governed by Section 00830 of this agreement;

.9 A letter designating the "Competent Person(s)" on general safety and excavation safety measures along with certifications or other documentation of the safety representative's qualifications;

.10 If applicable, an excavation safety system plan;

.11 If applicable, a plan illustrating proposed locations of temporary facilities;

.12 A completed Non-Use of Asbestos Affidavit (Prior to Construction);

.13 A letter designating the Texas Registered Professional Land Surveyor for layout of the Work, if the Work requires the services of a surveyor; and

.14 Appropriate safety training certificates for workers that will initially be on site;

.15 A certificate of worker's compensation insurance coverage for all persons providing services on the Project (refer to 5.2.1.3 in Section 00700 for definition of persons providing services on the Project);

.16 A Construction Equipment Emissions Reduction Plan.

2.4.3 Neither the acceptance nor the approval of any of the submittals required in paragraph 2.4.2, above, will constitute the adoption, affirmation, or direction of the CONTRACTOR'S means and methods.

2.5 **Preconstruction Conference:** Prior to commencement of Work at the site, CONTRACTOR must attend a preconstruction conference with Owner's Representative and others, as set forth in Division 1. Additionally, prior to commencement of work, the CONTRACTOR shall host a preconstruction conference for the Subcontractors identified on the originally approved compliance plan, Owner's Representative and others, as set forth in Division 1. The CONTRACTOR shall notify all Subcontractors five (5) working days prior to the preconstruction conference. If the CONTRACTOR has included Subcontractors in the initial preconstruction conference, the additional Subcontractor preconstruction conference will not be required.

2.6 **Initially Acceptable Schedules:** Unless otherwise provided in the Contract Documents, CONTRACTOR shall obtain approval of Owner's Representative on the Baseline Schedule submitted in accordance with paragraph 2.4.2.1 and Division 1 before the first progress payment will be made to CONTRACTOR. The Baseline Schedule must provide for an orderly

progression of the designated portion of the Work to completion within any specified Milestones and Contract Times. Acceptance of the schedule by Owner's Representative will neither impose on Owner's Representative responsibility or liability for the sequencing, scheduling or progress of the Work nor interfere with or relieve CONTRACTOR from CONTRACTOR's full responsibility for such Work. CONTRACTOR's schedule of Shop Drawings and sample submissions must provide an acceptable basis for reviewing and processing the required submittals. CONTRACTOR's schedule of values must conform to the requirements set forth in Division 1.

ARTICLE 3 - CONTRACT DOCUMENTS: INTENT, AMENDING, REUSE

3.1 Intent:

3.1.1 The intent of the Contract Documents is to include all information necessary for the proper execution and timely completion of the Work by CONTRACTOR. The CONTRACTOR will execute the Work described in and reasonably inferable from the Contract Documents as necessary to produce the results indicated by the Contract Documents. The Contract Documents are complementary, and what is required by one shall be as binding as if required by all. In cases of disagreement, the following order of precedence shall generally govern (top item receiving priority of interpretation):

Signed Agreement
Addendum to the Contract Documents, including approved changes
Supplemental General Conditions
General Conditions
Other Bidding Requirements and Contract Forms
Special Provisions to the Standard Technical Specifications
Special Specifications
Standard Technical Specifications
Drawings (figured dimensions shall govern over scaled dimensions)
Project Safety Manual (if applicable),

with the understanding that a common sense approach will be utilized as necessary so that the Contract Documents produce the intended response.

3.1.2 Unless otherwise stated in the Contract Documents, words that have well-known technical or construction industry meanings are used in the Contract Documents in accordance with such recognized meanings.

3.2 Reporting and Resolving Discrepancies: If, during the performance of the Work, CONTRACTOR discovers any conflict, error, ambiguity or discrepancy within the Contract Documents or between the Contract Documents and any provisions of any such law or regulation applicable to the performance of the Work or of any such standard, specification, manual or code or instructions of any Supplier, CONTRACTOR shall report it to Owner's Representative in writing at once, and CONTRACTOR shall not proceed with the Work affected thereby until an amendment or supplement to the Contract Documents has been issued by one of the methods indicated in paragraph 3.3.1 or 3.3.2. CONTRACTOR shall be liable to OWNER for failure to report any such conflict, error, ambiguity or discrepancy of which CONTRACTOR knew or reasonably should have known.

3.3 Amending and Supplementing Contract Documents:

3.3.1 The Contract Documents may be amended to provide for additions, deletions and revisions in the Work or to modify the terms and conditions thereof in one or more of the following ways:

.1 Change Order.

.2 Change Directive.

.3 Time Extension Request.

3.3.2 In addition, the requirements of the Contract Documents may be supplemented, and minor variations and deviations in the Work may be authorized, in one or more of the following ways:

.1 Field Order.

.2 Review of a Shop Drawing or sample.

.3 Written interpretation or clarification.

3.4 Reuse of Documents Prohibited: CONTRACTOR and any Subcontractor or Supplier or other person or organization performing or furnishing any of the Work under a direct or indirect contract with OWNER: (i) shall not have or acquire any title to or ownership rights in any of the Drawings, Specifications or other documents (or copies of any thereof) prepared by or bearing the seal of E/A or E/A's consultant, and (ii) shall not reuse any of such Drawings, Specifications, other documents or copies on extensions of the Project or any other project without written consent of OWNER and E/A.

3.5 In the event of the breach by the OWNER or CONTRACTOR of any of its obligations under the Contract, so as to support a claim by the other party, the provisions of this Contract will be equitably construed to allow the resolution of such a claim and all of the other provisions of this Contract shall continue in full force and effect as to the rights, responsibilities, and remedies of the OWNER and CONTRACTOR.

ARTICLE 4 - AVAILABILITY OF LANDS; SUBSURFACE AND PHYSICAL CONDITIONS; REFERENCE POINTS

4.1 **Availability of Lands:** The OWNER will provide access to all land and interests in land required for the Work and will notify CONTRACTOR of any restrictions in such access. CONTRACTOR may make a claim if OWNER fails to provide timely access to the Work. CONTRACTOR must obtain any additional temporary construction facilities, stockpiling or storage sites not otherwise provided.

4.2 **Subsurface and Physical Conditions:**

4.2.1 CONTRACTOR specifically represents that it has carefully examined the plans, the geotechnical report, if any, and the site of the proposed Work and is thoroughly familiar with all of the conditions surrounding construction of the Project, having had the opportunity to conduct any and all additional inquiry, tests and investigation that he/she deems necessary and proper. CONTRACTOR acknowledges the receipt of the geotechnical report, if any, and agrees that the report, while it is an accurate record of the geotechnical conditions at the boring locations, is not a guarantee of specific site conditions which may vary between boring locations.

4.2.2 CONTRACTOR must notify OWNER in writing as soon as reasonably possible, but no later than three (3) calendar days, if unforeseen conditions are encountered at the site which are (i) subsurface or otherwise concealed physical conditions that differ materially from those indicated in the Contract Documents or (ii) unknown physical conditions of an unusual nature, that differ materially from those normally encountered in the type of work being performed under this Contract. CONTRACTOR may not disturb the conditions until OWNER conducts an investigation. Owner's Representative and E/A will promptly investigate such

conditions with E/A. If it is determined that such conditions differ materially and cause an increase or decrease in the CONTRACTOR's cost of or time required for performance of any part of the Work, Owner's Representative will recommend an equitable adjustment in the Contract Amount or Contract Time, or both. If it is determined that such conditions are not materially different from those indicated in the Contract Documents, Owner's Representative will notify CONTRACTOR in writing of such findings and the Contract will not be adjusted. CONTRACTOR may dispute such a determination in accordance with Article 16.

4.2.3 Notwithstanding any other provision of this Contract, CONTRACTOR is solely responsible for the location and protection of any and all public utility lines and utility customer service lines in the Work area. "Public utility lines" means the utility distribution and supply system, and "utility customer service lines" means the utility lines connecting customers to the utility distribution and collection system. Generally, existing utility customer service line connections are not shown on the Drawings. CONTRACTOR shall notify "One Call" and exercise due care to locate, mark, uncover and otherwise protect all such lines in the construction zone and any of CONTRACTOR's work or storage areas. CONTRACTOR's responsibility for the location and protection of utilities is primary and nondelegable. CONTRACTOR shall indemnify or reimburse such expenses or costs (including fines that may be levied against OWNER) that may result from unauthorized or accidental damage to all public lines and utility customer service lines in the work area. OWNER reserves the right to repair any damage CONTRACTOR causes to such utilities at CONTRACTOR's expense. If a public line and/or customer service line is damaged by CONTRACTOR, CONTRACTOR shall give verbal notice within one (1) hour and written notice within twenty-four (24) hours to the Owner's Representative.

4.2.4 CONTRACTOR shall take reasonable precaution to avoid disturbing primitive records and antiquities of archaeological, paleontological or historical significance. No objects of this nature shall be disturbed without written permission of OWNER and Texas Historical Commission. When such objects are uncovered unexpectedly, CONTRACTOR shall stop all Work in close proximity and notify Owner's Representative and Texas Historical Commission of their presence and shall not disturb them until written permission and permit to do so is granted. All primitive rights and antiquities uncovered on OWNER's property shall remain property of State of Texas, Texas Historical Commission conforming to Texas Natural Resources Code. If it is determined by OWNER, in consultation with Texas Historical Commission, that exploration or excavation of primitive records or antiquities on Project site is necessary to avoid loss, CONTRACTOR shall cooperate in salvage work attendant to preservation. If the Work stoppage or salvage work causes an increase in CONTRACTOR's cost of, or time required for, performance of the Work, the Contract Amount and/or Contract Time will be equitably adjusted.

4.3 Reference Points: Unless otherwise specified, all control lines and bench marks suitable for use in layout will be furnished by OWNER. Lay out of the Work shall be performed in accordance with Division 1. Controls, bench marks and property boundary markers shall be carefully preserved by CONTRACTOR by use of flags, staffs or other visible devices and in case of destruction or removal by CONTRACTOR or its employees, such controls and bench marks shall be replaced by a Registered Professional Land Surveyor at CONTRACTOR's expense. City of Austin survey monuments damaged by CONTRACTOR will be reestablished by OWNER at CONTRACTOR's expense.

4.4 Hazardous Materials:

4.4.1 To the extent provided by applicable law, OWNER shall be responsible for any hazardous material uncovered or revealed at the site which was not shown,

indicated or identified in the Contract Documents to be within the scope of the Work and which may present a substantial danger to persons or property exposed thereto in connection with the Work at the site. CONTRACTOR shall immediately notify Owner's Representative of any suspected hazardous materials encountered before or during performance of the Work and shall take all necessary precautions to avoid further disturbance of the materials.

4.4.2 CONTRACTOR shall be responsible for any hazardous materials brought to the site by CONTRACTOR, Subcontractor, Suppliers or anyone else for whom CONTRACTOR is responsible.

4.4.3 No asbestos-containing materials shall be incorporated into the Work or brought on Project site without prior approval of OWNER. The CONTRACTOR shall not knowingly use, specify, request or approve for use any asbestos containing materials or lead-based paint without the OWNER'S written approval. When a specific product is specified, the CONTRACTOR shall endeavor to verify that the product does not include asbestos containing material.

4.4.4 Refer to Division 1 for hazardous material definitions and procedures.

.1 Unless otherwise expressly provided in the Contract Documents to be part of the Work, CONTRACTOR is not responsible for any unexpected Hazardous Materials encountered at the site. Upon encountering any Hazardous Conditions, CONTRACTOR must stop Work immediately in the affected area and duly notify OWNER and, if required by applicable law or regulations, all government or quasi-government entities with jurisdiction over the Project or site.

.2 Upon receiving notice of the presence of suspected Hazardous Materials, OWNER shall take the necessary measures required to ensure that the Hazardous Materials are remediated or rendered harmless. Such necessary measures shall include OWNER retaining qualified independent experts to (i) ascertain whether Hazardous Materials have actually been encountered, and, if they have been encountered, (ii) prescribe the remedial measures that OWNER must take either to remove the Hazardous Materials or render the Hazardous Materials harmless.

.3 CONTRACTOR shall be obligated to resume Work at the affected area of the Project only after OWNER’s Representative provides written certification that (i) the Hazardous Materials have been removed or rendered harmless and (ii) all necessary approvals have been obtained from all government and quasi-government entities having jurisdiction over the Project or site. The CONTRACTOR shall be responsible for continuing the Work in the unaffected portion of the Project and site.

.4 CONTRACTOR will be entitled, in accordance with these General Conditions, to an adjustment in its Contract Amount and/or Contract Time(s) to the extent CONTRACTOR’s cost and/or time of performance have been adversely impacted by the presence of Hazardous Materials.

.5 Notwithstanding the preceding provisions of this Section 4.1, OWNER is not responsible for Hazardous Materials introduced to the Site by CONTRACTOR, Subcontractors or anyone for whose acts they may be liable. CONTRACTOR shall indemnify, defend and hold harmless OWNER and OWNER’s officers, directors, employees and agents from and against all claims, losses, damages, liabilities and expenses, including attorneys’ fees and expenses, arising out of or resulting from those hazardous materials introduced to the site by CONTRACTOR, Subcontractors or anyone for whose acts they may be liable.

4.4.5 CONTRACTOR shall be responsible for use, storage and remediation of any hazardous materials brought to the Site by CONTRACTOR, Subcontractors, Suppliers or anyone else for whom CONTRACTOR is responsible.

ARTICLE 5 - BONDS AND INSURANCE

5.1 Surety and Insurance Companies: All bonds and insurance required by the Contract Documents shall be obtained from solvent surety or insurance companies that are duly licensed by the State of Texas and authorized to issue bonds or insurance policies for the limits and coverages required by the Contract Documents. The bonds shall be in a form acceptable to OWNER and shall be issued by a surety which complies with the requirements of Texas Insurance Code, Title 12, Chapter 3503. The surety must obtain reinsurance for any portion of the risk that exceeds 10% of the surety's capital and surplus. For bonds exceeding $100,000, the surety must also hold a certificate of authority from the U.S. Secretary of the Treasury or have obtained reinsurance for any liability in excess of $1,000,000 from a reinsurer that is authorized as a reinsurer in Texas or holds a certificate of authority from the U.S. Secretary of the Treasury. In the event that the proposed surety for a contract award in excess of $100,000 does not hold a certificate of authority from the U.S. Secretary of the Treasury and/or its proposed reinsurer does not hold a certificate of authority from the U.S. Secretary of the Treasury, the OWNER may require additional financial solvency information from the Bidder/Contractor and the proposed surety company and/or reinsurer as part of the 00400 Statement of Bidders Experience and determination of bidder responsibility in the award of the Contract.

5.2 Workers' Compensation Insurance Coverage:

5.2.1 Definitions:

.1 Certificate of coverage ("certificate") - A copy of a certificate of insurance, a certificate of authority to self-insure issued by the commission, or a coverage agreement (DWC-81, DCW-82, DCW-83, or DCW84), showing statutory workers' compensation insurance coverage for the person's or entity's employees providing services on the Project, for the duration of the Project.

.2 Duration of the Project - includes the time from the beginning of the Work on the Project until the CONTRACTOR's/ person's Work on the Project has been completed and accepted by OWNER.

.3 Persons providing services on the Project ("subcontractor" in Texas Labor Code, Section 406.096) - includes all persons or entities performing all or part of the services the CONTRACTOR has undertaken to perform on the Project, regardless of whether that person contracted directly with the CONTRACTOR and regardless of whether that person has employees. This includes, without limitation, independent contractors, Subcontractors, leasing companies, motor carriers, owner-operators, employees of any such entity, or employees of any entity which furnishes persons to provide services on the Project. "Services" include, without limitation, providing, hauling, or delivering equipment or materials, or providing labor, transportation, or other service related to a project. "Services" does not include activities unrelated to the Project, such as food/beverage vendors, office supply deliveries, and delivery of portable toilets.

5.2.2 CONTRACTOR shall provide coverage, based on proper reporting of classification codes and payroll amounts and filing of any coverage agreements, which meets the statutory requirements of Texas Labor Code, Section 401.011(44) for all

employees of the CONTRACTOR providing services on the Project, for the duration of the Project.

5.2.3 CONTRACTOR must provide a certificate of coverage to OWNER prior to being awarded the Contract.

5.2.4 If the coverage period shown on the CONTRACTOR's current certificate of coverage ends during the duration of the Project, the CONTRACTOR must, prior to the end of the coverage period, file a new certificate of coverage with OWNER showing that coverage has been extended.

5.2.5 CONTRACTOR shall obtain from each person providing services on the Project, and provide to OWNER:

.1 A certificate of coverage, prior to that person beginning Work on the Project, so OWNER will have on file certificates of coverage showing coverage for all persons providing services on the Project; and

.2 No later than seven (7) days after receipt by CONTRACTOR, a new certificate of coverage showing extension of coverage, if the coverage period shown on the current certificate of coverage ends during the duration of the Project.

5.2.6 CONTRACTOR shall retain all required certificates of coverage for the duration of the Project and for one (1) year thereafter.

5.2.7 CONTRACTOR shall notify OWNER in writing by certified mail or personal delivery, within ten (10) days after CONTRACTOR knew or should have known, of any change that materially affects the provision of coverage of any person providing services on the Project.

5.2.8 CONTRACTOR shall post on each Project site a notice, in the text, form and manner prescribed by the Texas Workers' Compensation Commission, informing all persons providing services on the Project that they are required to be covered, and stating how a person may verify coverage and report lack of coverage.

5.2.9 CONTRACTOR shall contractually require each person with whom it contracts to provide services on a Project, to:

.1 Provide coverage, based on proper reporting of classification codes and payroll amounts and filing of any coverage agreements, which meets the statutory requirements of Texas Labor Code, Section 401.011(44) for all of its employees providing services on the Project, for the duration of the Project;

.2 Provide to CONTRACTOR, prior to that person beginning Work on the Project, a certificate of coverage showing that coverage is being provided for all employees of the person providing services on the Project, for the duration of the Project;

.3 Provide CONTRACTOR, prior to the end of the coverage period, a new certificate of coverage showing extension of coverage, if the coverage period shown on the current certificate of coverage ends during the duration of the Project;

.4 Obtain from each other person with whom it contracts, and provide to CONTRACTOR: a) a certificate of coverage, prior to the other person beginning Work on the Project; and b) a new certificate of coverage showing extension of coverage, prior to the end of the coverage period, if the coverage period shown on the current certificate of coverage ends during the duration of the Project;

.5 Retain all required certificates of coverage on file for the duration of the Project and for one (1) year thereafter;

.6 Notify OWNER in writing by certified mail or personal delivery, within ten (10) days after the person knew or should have known, of any change that materially affects the provision of coverage of any person providing services on the Project; and

.7 Contractually require each person with whom it contracts, to perform as required by paragraphs 5.2.9.1 - 5.2.9.7, with the certificates of coverage to be provided to the person for whom they are providing services.

5.2.10 By signing this Contract or providing or causing to be provided a certificate of coverage, CONTRACTOR is representing to OWNER that all employees of the CONTRACTOR who will provide services on the Project will be covered by workers' compensation coverage for the duration of the Project, that the coverage will be based on proper reporting of classification codes and payroll amounts, and that all coverage agreements will be filed with the appropriate insurance carrier or, in the case of a self-insured, with the Texas Worker's Compensation Commission's Division of Self- Insurance Regulation. Providing false or misleading information may subject CONTRACTOR to administrative penalties, criminal penalties, civil penalties, or other civil actions.

5.2.11 CONTRACTOR's failure to comply with any of these provisions is a breach of Contract by CONTRACTOR which entitles OWNER to declare the Contract void if CONTRACTOR does not remedy the breach within ten (10) days after receipt of notice of breach from OWNER.

5.3 Other Bond and Insurance Requirements: For additional insurance requirements, refer to the Supplemental General Conditions.

5.4 Bonds:

5.4.1 General.

.1 Bonds, when required, shall be executed on forms furnished by or acceptable to OWNER. All bonds signed by an agent must be accompanied by a certified copy of such agent's authority to act.

.2 If the surety on any bond furnished by CONTRACTOR is declared bankrupt or becomes insolvent or its right to do business is terminated in the State of Texas or it ceases to meet the requirements of the preceding paragraph, CONTRACTOR shall within ten (10) days thereafter substitute another bond and surety, both of which must be acceptable to OWNER.

.3 When Performance Bonds and/or Payment Bonds are required, each shall be issued in an amount of one hundred percent (100%) of the Contract Amount as security for the faithful performance and/or payment of all CONTRACTOR's obligations under the Contract Documents. Performance Bonds and Payment Bonds shall be issued by a solvent surety company authorized to do business in the State of Texas, and shall meet any other requirements established by law or by OWNER pursuant to applicable law. Any surety duly authorized to do business in Texas may write Performance and Payment Bonds on a project without reinsurance to the limit of ten percent (10%) of its capital and surplus. Such a surety must reinsure any obligations over ten percent (10%).

5.4.2 Performance Bond.

.1 If the Contract Amount exceeds $100,000, CONTRACTOR shall furnish OWNER with a Performance Bond in the form set out in Section 00610.

.2 If the Contract Amount exceeds $25,000 but is less than or equal to $100,000, CONTRACTOR shall furnish OWNER with a Performance Bond in the form set out in Section 00610, unless the original Contract Time is 60 Calendar

Days/40 Working Days or less, in which case CONTRACTOR can agree to the following terms and conditions for payment in lieu of providing a Performance Bond: no moneys will be paid to CONTRACTOR until completion and acceptance of the Work by OWNER; CONTRACTOR shall be entitled to receive 95% of the Contract Amount following Final Completion, and the remaining 5% of the Contract Amount following the one (1) year warranty period.

.3 If the Contract Amount is less than or equal to $25,000, CONTRACTOR will not be required to furnish a Performance Bond; provided that no moneys will be paid to CONTRACTOR until completion and acceptance of the Work by OWNER under the following terms and conditions: CONTRACTOR shall be entitled to receive 95% of the Contract Amount following Final Completion, and the remaining 5% of the Contract Amount following the one (1) year warranty period.

.4 If a Performance Bond is required to be furnished, it shall extend for the one (1) year warranty period.

5.4.3 Payment Bond.

.1 If the Contract Amount exceeds $50,000, CONTRACTOR shall furnish OWNER with a Payment Bond in the form set out in Section 00620.

.2 If the Contract Amount is less than or equal to $50,000, CONTRACTOR will not be required to furnish a Payment Bond; provided that no moneys will be paid to CONTRACTOR until completion and acceptance of the Work by OWNER under the terms and conditions specified in paragraph 5.4.2.3.

5.4.4 **Maintenance Bond:** If the Contract Documents contemplate a period of maintenance beyond the one (1) year contractual warranty period, OWNER agrees that any bond to be required for such maintenance work will be in the amount of the maintenance work during any extended maintenance period.

ARTICLE 6 - CONTRACTOR'S RESPONSIBILITIES

6.1 Supervision and Superintendence:

6.1.1 CONTRACTOR shall supervise, inspect and direct the Work competently and efficiently, devoting such attention thereto and applying such skills and expertise as may be necessary to perform the Work in accordance with the Contract Documents. CONTRACTOR shall be solely responsible for the means, methods, techniques, sequences and procedures of construction. CONTRACTOR shall be responsible to see that the completed Work complies accurately with the Contract Documents.

6.1.2 CONTRACTOR shall have an English-speaking, competent Superintendent on the Work at all times that work is in progress. The Superintendent will be CONTRACTOR's representative on the Work and shall have the authority to act on the behalf of CONTRACTOR. All communications given to the Superintendent shall be as binding as if given to CONTRACTOR. Either CONTRACTOR or the Superintendent shall provide a cellular telephone number and an emergency and home telephone number at which one or the other may be reached if necessary when work is not in progress. The Superintendent must be an employee of the CONTRACTOR, unless such requirement is waived in writing by the Owner's Representative. If the CONTRACTOR proposes a management structure with a Project Manager supervising, directing, and managing construction of the work in addition to or in substitution of a Superintendent, the requirements of these Construction Documents with respect to the Superintendent shall likewise apply to any such Project Manager.

.1 CONTRACTOR shall present the resume of the proposed Superintendent to the Owner's Representative showing evidence of experience and successful superintendence and direction of work of a similar scale and complexity. If, in the opinion of the Owner's Representative, the proposed Superintendent does not indicate sufficient experience in line with the Work, he/she will not be allowed to be the designated Superintendent for the Work.

.2 The Superintendent shall not be replaced without Written Notice to Owner's Representative. If CONTRACTOR deems it necessary to replace the Superintendent, CONTRACTOR shall provide the necessary information for approval, as stated above, on the proposed new Superintendent.

.3 A qualified substitute Superintendent may be designated in the event that the designated Superintendent is temporarily away from the Work, but not to exceed a time limit acceptable to the Owner's Representative. CONTRACTOR shall replace the Superintendent upon OWNER's request in the event the Superintendent is unable to perform to OWNER's satisfaction.

6.2 Labor, Materials and Equipment:

6.2.1 CONTRACTOR shall maintain a work force adequate to accomplish the Work within the Contract Time. CONTRACTOR agrees to employ only orderly and competent workers, skillful in performance of the type of Work required under this Contract. CONTRACTOR, Subcontractors, Sub-subcontractors, and their employees may not use or possess any alcoholic or other intoxicating beverages, illegal drugs or controlled substances while on the job or on OWNER's property, nor may such workers be intoxicated, or under the influence of alcohol or drugs, on the job. Subject to the applicable provisions of Texas law, CONTRACTOR, Subcontractors, Sub-subcontractors, and their employees may not use or possess any firearms or other weapons while on the job or on OWNER'S property. If OWNER or Owner's Representative notifies CONTRACTOR that any worker or representative of Contractor is incompetent, disorderly, abusive, or disobedient, has knowingly or repeatedly violated safety regulations, has possessed any firearms in contravention of the applicable provisions of Texas law, or has possessed or was under the influence of alcohol or drugs on the job, CONTRACTOR shall immediately remove such worker or representative, including an officer or owner of CONTRACTOR, from performing Contract Work, and may not employ such worker or representative again on Contract Work without OWNER's prior written consent. CONTRACTOR shall at all times maintain good discipline and order on or off the site in all matters pertaining to the Project. Workers on Project shall be paid not less than wage rates, including fringe benefits, as published by the Department of Labor (DOL) for Building Construction and Heavy and Highway Trades "AS APPLICABLE" and/or the $13.03 minimum Wage required by City of Austin Ordinance No. 20160324-015, whichever is higher. The Total Minimum Wage required can be met using any combination of cash and non-cash qualified fringe benefits provided the cash component meets or exceeds the $13.03 minimum wage required.

6.2.2 Unless otherwise specified in Division 1, CONTRACTOR shall provide and pay for all materials, equipment, labor, transportation, construction equipment and machinery, tools, appliances, fuel, power, light, heat, telephone, water, sanitary facilities, temporary facilities and all other facilities and incidentals necessary for the furnishing, performance, testing, start-up and completion of the Work.

6.2.3 All materials and equipment shall be of good quality and new (including new products made of recycled materials, pursuant to Section 361.426 of the Texas Health & Safety Code), except as otherwise provided in the Contract Documents. If required by Owner's Representative, CONTRACTOR shall furnish satisfactory evidence (reports of required tests, manufacturer's certificates of compliance with

material requirements, mill reports, etc.) as to the kind and quality of materials and equipment. All materials and equipment shall be applied, installed, connected, erected, used, cleaned and conditioned in accordance with instructions of the applicable Supplier, except as otherwise provided in the Contract Documents.

6.2.4 Substitutes and "Approved Equal" Items:

.1 Whenever an item of material or equipment is specified or described in the Contract Documents by using the name of a proprietary item or the name of a particular Supplier, the specification or description is intended to establish the type, function and quality required. Unless the specification or description contains words reading that no like, equivalent or "approved equal" item or no substitution is permitted, other items of material or equipment of other Suppliers may be submitted by CONTRACTOR, at CONTRACTOR'S sole risk, including disruptions to the Critical Path of the Progress Schedule, to E/A through Owner's Representative under the following circumstances:

.1.1 "Approved Equal": If in E/A's sole discretion an item of material or equipment proposed by CONTRACTOR is functionally equal to that named and sufficiently similar so that no change in related Work will be required, it may be considered by E/A as an "approved equal" item, in which case review of the proposed item may, in E/A's sole discretion, be accomplished without compliance with some or all of the requirements for evaluation of proposed substitute items. CONTRACTOR shall provide E/A with the documentation required for E/A to make its determination.

.1.2 Substitute Items: If in E/A's sole discretion an item of material or equipment proposed by CONTRACTOR does not qualify as an "approved equal" item under subparagraph 6.2.4.1.1, it will be considered a proposed substitute item. CONTRACTOR shall submit sufficient information as provided in Division 1 to allow E/A to determine that the item of material or equipment proposed is essentially equivalent to that named and a substitute therefor.

.2 Substitute Construction Methods and Procedures: If a specific means, method, technique, sequence or procedure of construction is shown or indicated in and expressly required by the Contract Documents, CONTRACTOR may, at CONTRACTOR'S sole risk, including disruptions to the Critical Path of the Progress Schedule, with prior approval of E/A furnish or utilize a substitute means, method, technique, sequence, or procedure of construction. CONTRACTOR shall submit sufficient information to Owner's Representative to allow E/A, in E/A's sole discretion, to determine that the substitute proposed is equivalent to that expressly called for by the Contract Documents. The procedure for review by E/A will be same as that provided for substitute items in Division 1.

.3 E/A's Evaluation: E/A will be allowed a reasonable time within which to evaluate each proposal or submittal made pursuant to subparagraphs 6.2.4.1.1 and 6.2.4.1.2. E/A will be the sole judge of acceptability. No "approved equal" or substitute shall be ordered, installed, or utilized until E/A's review is complete, which will be evidenced by either a Change Order or completion of the Shop Drawing review procedure. OWNER may require CONTRACTOR to furnish at CONTRACTOR's expense a special performance guarantee or other surety bond with respect to any "approved equal" or substitute or for any other delay or disruption to the Critical Path of the Project Schedule attributable to any such substitution. OWNER shall not be responsible for any delay due to review time for any "approved equal" or substitute.

.4 CONTRACTOR's Expense: All data and documentation to be provided by CONTRACTOR in support of any proposed "approved equal" or substitute item will be at CONTRACTOR's expense.

.5 The approval of the E/A will not relieve the CONTRACTOR from primary responsibility and liability for the suitability and performance of any proposed substitute item, method or procedure and will not relieve CONTRACTOR from its primary responsibility and liability for curing defective Work and performing warranty work, which the CONTRACTOR shall cure and perform, regardless of any claim the CONTRACTOR may choose to advance against the E/A or manufacturer.

6.2.5 CONTRACTOR agrees to assign to OWNER any rights it may have to bring antitrust suits against its Suppliers for overcharges on materials incorporated in the Project growing out of illegal price fixing agreements. CONTRACTOR further agrees to cooperate with OWNER should OWNER wish to prosecute suits against Suppliers for illegal price fixing.

6.3 Progress Schedule: Unless otherwise provided in Division 1, CONTRACTOR shall adhere to the Baseline Schedule established in accordance with paragraph 2.6 as it may be adjusted from time to time as provided below:

6.3.1 CONTRACTOR shall submit to Owner's Representative for review and approval any proposed adjustments in the Progress Schedule that will not change the Contract Times or Milestones on a monthly basis. Any such proposed adjustments must be substantiated with documentation of any changes to the underlying logic of the Progress Schedule. CONTRACTOR's Progress Schedule must show how the CONTRACTOR will consistently advance the progress of the Work in accordance with the Critical Path of the Work and the Contract Time or Milestones. Such adjustments will conform generally to the Progress Schedule then in effect and additionally will comply with any provisions of Division 1 applicable thereto.

6.3.2 Proposed adjustments in the Progress Schedule that will change the Contract Times or Milestones shall be submitted in accordance with the requirements of Article 12. Any such proposed adjustments must be substantiated with documentation of any changes to the underlying logic of the Progress Schedule. Such adjustments may only be made by a Change Order or Time Extension Request in accordance with Article 12.

6.4 Concerning Subcontractors, Suppliers and Others:

6.4.1 Assignment: CONTRACTOR agrees to retain direct control of and give direct attention to the fulfillment of this Contract. CONTRACTOR agrees not to, by Power of Attorney, or otherwise, assign said Contract without the prior written consent of OWNER. In addition, without OWNER'S written consent, the CONTRACTOR will not subcontract the performance of the entire Work or the supervision and direction of the Work.

6.4.2 Award of Subcontracts for Portions of the Work: CONTRACTOR shall not employ any Subcontractor, Supplier or other person or organization, whether initially or as a substitute, against whom OWNER may have reasonable objection. OWNER will communicate such objections by Written Notice. If OWNER requires a change without good cause of any Subcontractor, person or organization previously accepted by OWNER, the Contract Amount shall be increased or decreased by the difference in the cost occasioned by any such change, and appropriate Change Order shall be issued. CONTRACTOR shall not substitute any Subcontractor, person or organization that has been accepted by OWNER, unless the substitute has been accepted in writing by OWNER. No acceptance by OWNER of any Subcontractor,

Supplier or other person or organization shall constitute a waiver of any right of OWNER to reject defective Work.

6.4.3 CONTRACTOR shall enter into written agreements with all Subcontractors and Suppliers which specifically binds the Subcontractors or Suppliers to the applicable terms and conditions of the Contract Documents for the benefit of OWNER and E/A. The OWNER reserves the right to specify that certain requirements shall be adhered to by all Subcontractors and Sub-subcontractors as indicated in other portions of the Contract Documents and these requirements shall be made a part of the agreement between CONTRACTOR and Subcontractor or Supplier. Subject to and in accordance with the above requirements, the CONTRACTOR must provide and will be deemed for all purposes to have provided in its contracts with major Subcontractors or Suppliers on the Project (those contracts of more than $10,000) the following specific provision: alternative dispute resolution (paragraphs 16.2 and 16.3), which shall be mandatory in the event of a subcontractor or supplier claim and a prerequisite for the submission of any derivative claim. The CONTRACTOR's standard subcontract form is subject to the OWNER's review and approval. The OWNER may request and the CONTRACTOR will provide within five (5) working days a copy of any subcontract requested by the OWNER.

6.4.4 CONTRACTOR shall be fully responsible to OWNER for all acts and omissions of the Subcontractors, Suppliers and other persons and organizations performing or furnishing any of the Work under a direct or indirect contract with CONTRACTOR just as CONTRACTOR is responsible for CONTRACTOR's own acts and omissions. Nothing in the Contract Documents shall create for the benefit of any such Subcontractor, Supplier or other person or organization any contractual relationship between OWNER and any such Subcontractor, Supplier or other person or organization, nor shall it create any obligation on the part of OWNER or E/A to pay or to see to the payment of any moneys due any such Subcontractor, Supplier or other person or organization except as may otherwise be required by laws and regulations.

6.4.5 CONTRACTOR shall be solely responsible for efficiently scheduling and coordinating the Work of Subcontractors, Suppliers and other persons and organizations performing or furnishing any of the Work under a direct or indirect contract with CONTRACTOR in order to avoid any delays or inefficiencies in the prosecution of the Work. CONTRACTOR shall require all Subcontractors, Suppliers and such other persons and organizations performing or furnishing any of the Work to communicate with Owner's Representative through CONTRACTOR.

6.4.6 The divisions and sections of the Specifications and the identifications of any Drawings shall not control CONTRACTOR in dividing or delineating the Work to be performed by any specific trade.

6.4.7 CONTRACTOR shall pay each Subcontractor and Supplier their appropriate share of payments made to CONTRACTOR not later than ten (10) Calendar Days of CONTRACTOR's receipt of payment from OWNER. Upon request from Owner, the CONTRACTOR has two (2) Working Days to provide documentation verifying Payment to Subcontractor(s). The CONTRACTOR is required to notify the Subcontractor(s) in writing of rejection of Application for Payment within two (2) Working Days following notification by Owner. Failure of CONTRACTOR to make payments to Subcontractors or for labor, materials or equipment in accordance to this contract, may be cause to reject future Bids by the CONTRACTOR in accordance with Section 00100 9.B.4 and may be cause to reject payment in accordance with 00700 14.4.1.3.

6.4.8 To the extent allowed by Texas law, the OWNER shall be deemed to be a third party beneficiary to each subcontract and may, if OWNER elects, following a termination of the CONTRACTOR, require that the Subcontractor(s) perform all or a portion of

unperformed duties and obligations under its subcontract(s) for the benefit of the OWNER, rather than the CONTRACTOR; however, if the OWNER requires any such performance by a Subcontractor for the OWNER's direct benefit, then the OWNER shall be bound and obligated to pay such Subcontractor the reasonable value for all Work performed by such Subcontractor to the date of the termination of the CONTRACTOR, less previous payments, and for all Work performed thereafter. In the event that the OWNER elects to invoke its right under this section, OWNER will provide notice of such election to the CONTRACTOR and the affected Subcontractor(s).

6.5 Patent Fees and Royalties:

6.5.1 CONTRACTOR shall be responsible at all times for compliance with applicable patents or copyrights encompassing, in whole or in part, any design, device, material, or process utilized, directly or indirectly, in the performance of the Work or the formulation or presentation of its Bid.

6.5.2 CONTRACTOR shall pay all royalties and license fees and shall provide, prior to commencement of Work hereunder and at all times during the performance of same, for lawful use of any design, device, material or process covered by letters, patent or copyright by suitable legal agreement with the patentee, copyright holder, or their duly authorized representative whether or not a particular design, device, material, or process is specified by OWNER.

6.5.3 CONTRACTOR shall defend all suits or claims for infringement of any patent or copyright and shall save OWNER harmless from any loss or liability, direct or indirect, arising with respect to CONTRACTOR's process in the formulation of its Bid or the performance of the Work or otherwise arising in connection therewith. OWNER reserves the right to provide its own defense to any suit or claim of infringement of any patent or copyright in which event CONTRACTOR shall indemnify and save harmless OWNER from all costs and expenses of such defense as well as satisfaction of all judgments entered against OWNER.

6.5.4 OWNER shall have the right to stop the Work and/or terminate this Agreement at any time in the event CONTRACTOR fails to disclose to OWNER that CONTRACTOR's work methodology includes the use of any infringing design, device, material or process.

6.6 Permits, Fees: Unless otherwise provided in the Supplemental General Conditions, CONTRACTOR shall obtain and pay for all construction permits, licenses and fees required for prosecution of the Work.

6.7 Laws and Regulations:

6.7.1 CONTRACTOR shall give all notices and comply with all laws and regulations applicable to furnishing and performing the Work, including arranging for and obtaining any required inspections, tests, approvals or certifications from any public body having jurisdiction over the Work or any part thereof. Except where otherwise expressly required by applicable laws and regulations, neither OWNER nor E/A shall be responsible for monitoring CONTRACTOR's compliance with any laws and regulations.

6.7.2 Maintaining clean water, air and earth or improving thereon shall be regarded as of prime importance. CONTRACTOR shall plan and execute its operations in compliance with all applicable Federal, State and local laws and regulations concerning control and abatement of water pollution and prevention and control of air pollution.

6.7.3 If CONTRACTOR performs any Work knowing or having reason to know that it is contrary to laws or regulations, CONTRACTOR shall bear all claims, costs, losses and damages arising therefrom; however, it shall not be CONTRACTOR's primary

responsibility to make certain that the Specifications and Drawings are in accordance with laws and regulations, but this does not relieve CONTRACTOR of CONTRACTOR's obligations under Article 3.

6.8 Taxes:

6.8.1 CONTRACTOR shall pay only those sales, consumer, use and other similar taxes required to be paid by CONTRACTOR in accordance with the laws and regulations of the State of Texas in the performance of this public works contract.

6.8.2 OWNER is an exempt organization as defined by Chapter 11 of the Property Tax Code of Texas and is thereby exempt from payment of Sales Tax under Chapter 151, Limited Use Sales, Excise and Use Tax, Texas Tax Code, and Article 1066 (C), Local Sales and Use Tax Act, Revised Civil Statutes of Texas.

6.9 Use of Premises:

6.9.1 CONTRACTOR shall confine construction equipment, the storage of materials and equipment and the operations of workers to the site and land and areas identified in and permitted by the Contract Documents and other land and areas permitted by laws and regulations, right-of-way, permits and easements, and shall not unreasonably encumber the premises with construction equipment or other materials or equipment. CONTRACTOR shall assume full responsibility for any damage to any such land or area, or to the owner or occupant thereof or of any adjacent land or areas, resulting from the performance of the Work. Should any claim be made by any such owner or occupant because of or in connection with the performance of the Work, CONTRACTOR shall promptly settle with such other party by negotiation or otherwise resolve the claim by arbitration or other dispute resolution proceeding or at law. CONTRACTOR shall indemnify, defend and hold harmless OWNER, E/A, E/A'S Consultants and anyone directly or indirectly employed by any of them from and against all claims, costs, losses and damages (including court costs and reasonable attorney's fees) arising out of or resulting from any claim or action, legal or equitable, brought by any such owner or occupant against OWNER, E/A or any other party indemnified hereunder to the extent caused by or based upon performance of the work or failure to perform the Work.

6.9.2 During the progress of the Work and on a daily basis, CONTRACTOR shall keep the premises free from accumulations of waste materials, rubbish and other debris resulting from the Work. At the completion of the Work, CONTRACTOR shall remove all waste materials, rubbish and debris from and about the premises as well as all tools, appliances, construction equipment and machinery and surplus materials. CONTRACTOR shall leave the site clean and ready for occupancy by OWNER at Substantial Completion of the Work. CONTRACTOR shall, at a minimum, restore to original condition all property not designated for alteration by the Contact Documents. If the CONTRACTOR fails to clean up at the completion of the Work, OWNER may do so and the cost thereof will be charged against the CONTRACTOR.

6.9.3 CONTRACTOR shall not load nor permit any part of any structure to be loaded in any manner that will endanger the structure, nor shall CONTRACTOR subject any part of the Work or adjacent property to stresses or pressures that will endanger it.

6.10 Record Documents: CONTRACTOR shall maintain in a safe place at the site, or other location acceptable to OWNER, one (1) record copy of all Drawings, Specifications, Addenda, Change Orders, Change Directives, Field Orders and written interpretations and clarifications (issued pursuant to paragraph 9.5) in good order and annotated to show all changes made during construction. These record documents together with all final samples and all final Shop Drawings will be available to OWNER and E/A for reference during performance of the Work. Upon Substantial Completion of the Work, these record documents, samples and Shop Drawings shall be promptly delivered to Owner's Representative.

6.11 Safety and Protection:

6.11.1 CONTRACTOR shall be responsible for initiating, maintaining and supervising all safety precautions and programs in connection with the Work. Upon request, and prior to installation of measures, CONTRACTOR shall submit a site security plan for approval by OWNER. By reviewing the plan or making recommendations or comments, OWNER will not assume liability nor will CONTRACTOR be relieved of liability for damage, injury or loss. CONTRACTOR shall take all necessary precautions for the safety of and shall provide the necessary protection to prevent damage, injury or loss to:

.1 all persons on the Work site or who may be affected by the Work;

.2 all the Work and materials and equipment to be incorporated therein, whether in storage on or off the site; and

.3 other property at the site or adjacent thereto, including, but not limited to, trees, shrubs, lawns, walks, pavements, roadways, structures, utilities and underground facilities not designated for removal, relocation or replacement in the course of construction.

6.11.2 CONTRACTOR shall comply with all applicable laws and regulations of any public body having jurisdiction for safety of persons or property or to protect them from damage, injury or loss; and shall erect and maintain all necessary safeguards for such safety and protection. CONTRACTOR shall notify owners of adjacent property and of underground facilities, and utility owners when prosecution of the Work may affect them, and shall cooperate with them in the protection, removal, relocation and replacement of their property. All damage, injury or loss to any property referred to in paragraph 6.11.1.2 and 6.11.1.3 caused, directly or indirectly, in whole or in part, by CONTRACTOR, Subcontractor, Supplier or any person or organization directly or indirectly employed by any of them to perform or furnish any of the Work or anyone for whose acts any of them may be liable, shall be remedied by CONTRACTOR (except damage or loss attributable to the fault of Drawings or Specifications or to the acts or omissions of OWNER, or E/A, or E/A's consultant or anyone employed by any of them or anyone for whose acts any of them may be liable, and not attributable, directly or indirectly, in whole or in part, to the faults or negligence of CONTRACTOR or any Subcontractor, Supplier or other person or organization directly or indirectly employed by any of them). CONTRACTOR's duties and responsibilities for safety and protection of the Work shall continue until such time as all the Work is completed and Owner's Representative has issued a notice to OWNER and CONTRACTOR in accordance with Article 14 that the Work is acceptable (except as otherwise expressly provided in connection with Substantial Completion). Without limitation, CONTRACTOR shall comply with the following specific provisions:

It shall be the duty and responsibility of CONTRACTOR and all of its subcontractors to be familiar with and comply with 29 USC Section 651, et seq., the Occupational Safety and Health Act of 1970, as amended ("OSHA") and to enforce and comply with all provisions of this Act.

The CONTRACTOR and all of its subcontractors shall comply with all applicable requirements of Subpart P of Part 1926 of 29 C.F.R, OSHA Safety and Health Standards, Texas Health and Safety Code Section 756.023, as amended, and shall submit a unit price for the particular excavation safety systems to be utilized by the Contractor for all excavations which exceed a depth of five feet (5').

Before commencing any excavation which will exceed a depth of five feet (5'), the CONTRACTOR shall provide the Owner with detailed plans and specifications regarding the safety systems to be utilized. Said plans and specifications shall

include a certification from a Texas licensed professional engineer indicating full compliance with the OSHA provisions cited above.

6.11.3 Safety Representative: CONTRACTOR shall designate in writing a qualified and experienced safety representative (the "Safety Representative") at the site whose duties and responsibilities shall include safety training; identifying and mitigating hazardous conditions and unsafe work practices; and developing, maintaining and supervising the implementation of safe work practices and safety programs as deemed necessary and appropriate for the Project. The term "Safety Representative" includes any designated Safety Supervisor, Superintendent or Safety Manager. The Safety Representative shall exercise due diligence in the execution of all Project related safety duties. The Safety Representative shall report directly to a company executive, not an on site project manager. Upon request of OWNER, CONTRACTOR shall provide certifications or other acceptable documentation of the Safety Representative's qualifications. The following requirements will be effective as of September 1, 2010:

.1 The Safety Representative shall present certification of completion of the OSHA 30-hour Construction Industry Training Outreach Program described at: http://www.osha.gov/dte/outreach/construction_generalindustry/construction.html

.2 The Safety Representative shall verify that all construction workers (defined as persons covered by a prevailing wage determination) on the job site, whether employed by the CONTRACTOR or subcontractors, have completed the OSHA 10-hour Construction Industry Training Outreach Program described at: http://www.osha.gov/dte/outreach/construction_generalindustry/construction.html. The Safety Representative must receive a certificate of training completion before allowing a worker on site and shall have all such certificates available for inspection by the OWNER.

.3 The Safety Representative shall ensure that workers, including designated competent persons, have completed all applicable OSHA specific or other training needed to perform their job assignments. Training topics applicable to the scope of the current Project may include, but are not limited to, scaffolds, fall protection, cranes, excavations, electrical safety, tools, concrete and masonry construction, steel erection, operation of motor vehicles and mechanized equipment.

.4 The Safety Representative shall post notice on the site of the Work stating that all workers shall have completed OSHA Construction Industry Training. The Owner may require, and the Safety Representative should consider providing a means of readily identifying workers who have completed the required training to monitor compliance with these requirements.

.5 The Safety Representative shall ensure that all required OSHA and Workers Compensation notices to workers are posted in English and Spanish at one or more conspicuous locations on the work site.

6.11.4 Hazard Communication Programs: CONTRACTOR shall be responsible for coordinating any exchange of material safety data sheets or other hazard communication information required to be made available to or exchanged between or among employers at the site in accordance with laws and regulations.

6.11.5 Emergencies:

.1 In emergencies affecting the safety or protection of persons or the Work at the site or adjacent thereto, CONTRACTOR, without special instruction or authorization from OWNER or E/A, is obligated to act reasonably to prevent threatened damage, injury or loss and to mitigate damage or loss to the Work.

CONTRACTOR shall give Owner's Representative telephone notification as soon as reasonably practical and a prompt written notice if CONTRACTOR believes that any significant changes in the Work or variations from the Contract Documents have been caused thereby. If Owner's Representative determines that a change in the Contract Documents is required because of the action taken by CONTRACTOR in response to such an emergency, a Change Directive or Change Order will be issued to document the consequences of such action; otherwise OWNER will not be responsible for CONTRACTOR's emergency action.

.2 Authorized agents of CONTRACTOR shall respond immediately to call-out at any time of any day or night when circumstances warrant the presence on Project site of CONTRACTOR or his agent to protect the Work or adjacent property from damage, restriction or limitation or to take such action or measures pertaining to the Work as may be necessary to provide for the safety of the public. Should CONTRACTOR and/or their agent fail to respond and take action to alleviate such an emergency situation, OWNER may direct other forces to take action as necessary to remedy the emergency condition, and OWNER will deduct any cost of such remedial action from the funds due CONTRACTOR under this Contract.

.3 In the event there is an accident involving injury to any individual or damage to any property on or near the Work, CONTRACTOR shall provide to Owner's Representative verbal notification within one (1) hour and written notification within twenty-four (24) hours of the event and shall be responsible for recording the location of the event and the circumstances surrounding the event through photographs, interviewing witnesses, obtaining medical reports, police accident reports and other documentation that describes the event. Copies of such documentation shall be provided to Owner's Representative, for OWNER's and E/A's records, within forty-eight (48) hours of the event. Contractor shall cooperate with OWNER on any OWNER investigation of any such incident.

6.11.6 Rest Breaks:

.1 Except as provided in subsection 6.11.6.2 below, an employee performing construction activity at a construction site is entitled to a rest break of not less than ten (10) minutes for every four (4) hours worked. No employee may be required to work more than 3.5 hours without a rest break. A rest break means a break from work within working hours, excluding meal breaks, during which an employee may not work. A rest break shall be scheduled as near as possible to the midpoint of the work period.

.2 An employee is not entitled to a rest break under subsection 6.11.6.1 on any day the employee works less than 3.5 hours or spends more than half of his or her work time engaged in non-strenuous labor in a climate controlled environment.

.3 A sign describing the requirements of this Section 6.11.6 in English and Spanish shall be posted by the employer in each establishment subject to the requirement of a rest break in a conspicuous place or places where notices to employees are customarily posted, in accordance with the OWNER's then current rules for size, content, and location of such signage.

.4 The violation of Ordinance No. 20100729-047, enacted July 29, 2010, which establishes the rest break requirements set forth above, may be enforced with criminal penalties and civil remedies, as set forth in the Ordinance.

6.11.7 If the Contractor fails to carry out the Work in accordance with the Contract Documents so that a safety violation has occurred, the Owner may order the Contractor to stop the Work or any portion thereof, until the cause for such order has been eliminated. However, the right of the Owner to stop the Work under this paragraph shall not give rise to a duty on the part of the Owner to supervise the Contractor's Work or to control the Contractor's means and methods or to exercise this right for the benefit of the Contractor or any other person or entity. All time lost due to Project shut down will be the Contractor's sole responsibility, will be charged against the Contract Time, and the Contractor will be responsible for any and all expenses incurred. This provision is in addition to and supplemental to the applicable provisions of the Project's ROCIP Safety Manual.

6.11.8 Confined Space Program

.1 Contractor acknowledges and agrees that the Owner is temporarily transferring management and control of the site of the Work to the Contractor for the purpose of constructing the Project. The Contractor's responsibilities to manage the Work includes the responsibility to manage the property for purposes of compliance with 29 CFR 1926 subpart AA. To the best of Owner's knowledge and belief, Owner has provided the following information in the plans and specifications and other Contract Documents: (i) the location of each known permit space, (ii) the hazards or potential hazards in each space or the reason it is a permit space; and (iii) any precautions that the Owner or any previous contractor has implemented for the protection of employees in the permit space. This transfer will result in the Contractor being both the host employer and the controlling contractor for this portion of the Work.

6.12 Continuing the Work: CONTRACTOR shall carry on the Work and adhere to the Progress Schedule during all disputes or disagreements with OWNER. No Work shall be delayed or postponed pending resolution of any disputes or disagreements, except as OWNER and CONTRACTOR may otherwise agree in writing.

6.13 CONTRACTOR's General Warranty and Guarantee:

6.13.1 CONTRACTOR warrants and guarantees to OWNER that all Work will conform to the plans and specifications, be performed in a good and workmanlike manner in accordance with the Contract Documents and will not be defective. This warranty will survive the termination or expiration of the Contract. CONTRACTOR's warranty and guarantee hereunder excludes defects or damage caused by:

.1 abuse, modification or improper maintenance or operation by persons other than CONTRACTOR, Subcontractors or Suppliers; or

.2 normal wear and tear under normal usage.

6.13.2 CONTRACTOR's obligation to perform and complete the Work in a good and workmanlike manner in accordance with the Contract Documents shall be absolute. None of the following will constitute an acceptance of Work that is not in accordance with the Contract Documents or a release of CONTRACTOR's obligation to perform the Work in accordance with the Contract Documents:

.1 observations by Owner's Representative and/or E/A;

.2 recommendation of any progress or final payment by Owner's Representative;

.3 the issuance of a certificate of Substantial Completion or any payment by OWNER to CONTRACTOR under the Contract Documents;

.4 use or occupancy of the Work or any part thereof by OWNER;

.5 any acceptance by OWNER or any failure to do so;

.6 any review of a Shop Drawing or sample submittal;

.7 any inspection, test or approval by others; or

.8 any correction of defective Work by OWNER.

6.14 INDEMNIFICATION:

6.14.1 CONTRACTOR shall defend, indemnify and hold harmless OWNER, E/A, E/A'S Consultants and Sub consultants and their respective officers, directors, partners, employees, agents and other Consultants and any of them (the "INDEMNIFIED PARTIES") from and against all claims, costs, losses and damages (including but not limited to all fees and charges of engineers, architects, attorneys and other professionals and all court or arbitration or other dispute resolution costs) arising out of or resulting from the performance of the Work, provided that any such claim, cost, loss or damage:

.1 Is attributable to bodily injury, sickness, disease or death, or to injury to or destruction of tangible property (other than the work itself), including the loss of use resulting therefrom, and

.2 Is caused in whole or in part by any negligent act or omission of CONTRACTOR, any Subcontractor, any Supplier, any person or organization directly or indirectly employed by any of them to perform or furnish any of the work or anyone for whose acts any of them may be liable, regardless of whether or not caused in part by any negligence or omission of the INDEMNIFIED PARTIES hereunder or whether liability is imposed upon such INDEMNIFIED PARTY by laws and regulations regardless of the negligence of any such person or entity.

In the event that indemnification of the INDEMNIFIED PARTIES is prohibited by law, CONTRACTOR shall nonetheless be solely responsible for any liability arising out of or resulting from the performance of the Work, subject to the limitations set forth above, and shall indemnify and hold harmless the remaining INDEMNIFIED PARTIES, who may be legally indemnified, from such liability of the CONTRACTOR and the associated costs described above.

6.14.2 The indemnification obligation under paragraph 6.14.1 shall not be limited in any way by any limitation on the amount or type of damages, or compensation or benefits payable by or for CONTRACTOR or any such Subcontractor, Supplier or other person or organization under workers' compensation acts, disability benefit acts or other employee benefit acts.

6.14.3 The obligations of CONTRACTOR under paragraph 6.14.1 shall not extend to the liability of OWNER, E/A, E/A's consultants, and their officers, directors, partners, employees or agents caused primarily by negligent preparation of maps, drawings, surveys, designs or specifications upon which is placed the applicable state-authorized design professional seal of OWNER's, E/A's or E/A's consultant's officers, directors, partners, employees or agents.

6.14.4 In the event CONTRACTOR fails to follow OWNER's directives concerning use of the site, scheduling or course of construction, or engages in other conduct which proximately causes damage to property based on inverse condemnation or otherwise, then and in that event, CONTRACTOR shall indemnify OWNER against all costs resulting from such claims.

6.14.5 In the event CONTRACTOR unreasonably delays progress of the work being done by others on the site so as to cause loss for

which OWNER becomes liable, then CONTRACTOR shall indemnify OWNER from and reimburse OWNER for such loss.

6.15 Survival of Obligations: All representations, indemnifications, warranties and guarantees made in, required by or given in accordance with the Contract Documents, as well as all continuing obligations indicated in the Contract Documents, will survive final payment, completion and acceptance of the Work and termination or completion of the Agreement.

6.16 Losses from Natural Causes: Unless otherwise specified, all loss or damage to CONTRACTOR arising out of the nature of the Work to be done or from action of the elements, floods or from unforeseeable circumstances in prosecution of the Work or from unusual obstructions or difficulties which may be encountered in prosecution of the Work, shall be sustained and borne by CONTRACTOR at its own cost and expense.

6.17 Notice of Claim: Should CONTRACTOR suffer injury or damage to person or property because of any error, omission or act of OWNER or of any of OWNER's employees or agents or others for whose acts OWNER is liable, a Claim must be made to the other party within thirty (30) calendar days of the event giving rise to such injury or damage. The provisions of this paragraph 6.17 shall not be construed as a substitute for or a waiver of the provisions of any applicable statute of limitations or statute of repose.

6.18 Liquidated Damages: CONTRACTOR or its Surety shall be liable for liquidated damages for the failure of the CONTRACTOR to timely complete the Work or any portion thereof within the Contract Time.

ARTICLE 7 - OTHER WORK

7.1 OWNER may perform other work related to the Project at the site by OWNER's own forces, or let other contracts therefor, or have other work performed by utility owners. CONTRACTOR and OWNER agree to and shall use best efforts to cooperate and coordinate the Work with others performing work and other work related to the Project in order to avoid conflicts and delays in the Work. If CONTRACTOR believes that delay or additional cost is involved because of such action by OWNER, CONTRACTOR may make a Claim as provided in Article 11 or 12.

7.2 CONTRACTOR shall afford other contractors who are in a contract with OWNER and each utility owner (and OWNER, if OWNER is performing the additional work with OWNER's employees) proper and safe access to the site and a reasonable opportunity for the introduction and storage of materials and equipment and the execution of such other work and shall properly connect and coordinate the Work with theirs. Unless otherwise provided in the Contract Documents, CONTRACTOR shall do all cutting, fitting and patching of the Work that may be required to make its several parts come together properly and integrate with such other work. CONTRACTOR shall not endanger any work of others by cutting, excavating or otherwise altering their work and will only cut or alter their work with the written consent of Owner's Representative and the other contractors whose work will be affected. CONTRACTOR shall promptly remedy damage wrongfully caused by CONTRACTOR to completed or partially completed construction or to property of the OWNER or separate contractors.

7.3 If the proper execution or results of any part of CONTRACTOR's Work depends upon work performed by others under this Article 7, CONTRACTOR shall inspect such other work and promptly report to Owner's Representative in writing any delays, defects or deficiencies in such other work that render it unavailable or unsuitable for the proper execution and results of CONTRACTOR's Work. CONTRACTOR's failure to report will constitute an acceptance of such other work as fit and proper for integration with CONTRACTOR's Work except for latent or non-apparent defects and deficiencies in such other work.

7.4 OWNER shall provide for coordination of the activities of the OWNER's own forces and of each separate contractor with the Work of CONTRACTOR, who shall cooperate with them. CONTRACTOR shall participate with other separate contractors and Owner's Representative in reviewing their construction Progress Schedules when directed to do so. On the basis of such review, CONTRACTOR shall make any revisions to the construction Progress Schedule deemed necessary after a joint review and mutual agreement. The agreed upon construction Progress Schedules shall then constitute the Progress Schedules to be used by CONTRACTOR, separate contractors and OWNER until subsequently revised.

7.5 Costs caused by delays or by improperly timed activities or defective construction shall be borne by the party responsible therefor.

ARTICLE 8 - OWNER'S RESPONSIBILITIES

8.1 Prior to the start of construction, OWNER will designate in writing a person or entity to act as Owner's Representative during construction. Except as otherwise provided in these General Conditions, OWNER shall issue all communications to CONTRACTOR through Owner's Representative.

8.2 OWNER will not supervise, direct, control or have authority over or be responsible for CONTRACTOR's means, methods, techniques, sequences or procedures of construction or the safety precautions and programs incident thereto. OWNER is not responsible for any failure of CONTRACTOR to comply with laws and regulations applicable to furnishing or performing the Work. OWNER is not responsible for CONTRACTOR's failure to perform or furnish the Work in accordance with the Contract Documents. Failure or omission of OWNER to discover, or object to or condemn any defective Work or material shall not release CONTRACTOR from the obligation to properly and fully perform the Contract.

8.3 OWNER is not responsible for the acts or omissions of CONTRACTOR, or of any Subcontractor, any Supplier, or of any other person or organization performing or furnishing any of the Work. CONTRACTOR acknowledges and agrees that OWNER'S direction to perform Work in accordance with the approved Progress Schedule is not a demand for acceleration or a dictation of CONTRACTOR'S means or methods.

8.4 Information or services under the OWNER's control shall be furnished by the OWNER with reasonable promptness to avoid delay in orderly progress of the Work. The OWNER shall have a reasonable amount of time to investigate site conditions, review submittals, analyze requests for changes, and to make other decisions in the orderly administration of the Contract. CONTRACTOR must notify the OWNER in writing, if the time for the investigation, review, analysis of any submittals, required for changes or otherwise required for OWNER'S decision, impacts in any way the Critical Path of the approved Progress Schedule.

8.5 The foregoing are in addition to other duties and responsibilities of the OWNER enumerated herein and especially those in respect to Article 4 (Availability of Lands; Subsurface and Physical Conditions; Reference Points), Article 7 (Other Work) and Article 14 (Payments to CONTRACTOR and Completion).

8.6 **Notice of Claim:** Should OWNER suffer injury or damage to person or property because of any error, omission or act of CONTRACTOR or of any of CONTRACTOR's employees or agents or others for whose acts CONTRACTOR is liable, a Claim will be made to the other party within thirty (30) calendar days of receipt of actual or constructive notice of the event giving rise to such injury or damage. The provisions of this paragraph 8.6 shall not be construed as a substitute for or a waiver of the provisions of any applicable statute of limitations or statute of repose.

ARTICLE 9 - ENGINEER/ARCHITECT'S STATUS DURING CONSTRUCTION

9.1 E/A's Authority and Responsibilities:

9.1.1 The duties and responsibilities and the limitations of authority of E/A during construction, as set forth in the Contract Documents, may be assigned or assumed by the OWNER, but shall not be extended without written consent of OWNER and/or E/A. The assignment of any authority, duties or responsibilities to E/A under the Contract Documents, or under any agreement between OWNER and E/A, or any undertaking, exercise or performance thereof by E/A, is intended to be for the sole and exclusive benefit of OWNER and not for the benefit of CONTRACTOR, Subcontractor, Supplier, or any other person or organization, or for any surety or employee or agent of any of them.

9.1.2 E/A will not supervise, direct, control or have authority over or be responsible for CONTRACTOR's means, methods, techniques, sequences or procedures of construction, or the safety precautions and programs incident thereto. E/A is not responsible for any failure of CONTRACTOR to comply with laws and regulations applicable to the furnishing or performing the Work. E/A is not responsible for CONTRACTOR's failure to perform or furnish the Work in accordance with the Contract Documents. Failure or omission of E/A to discover, or object to or condemn any defective Work or material shall not release CONTRACTOR from the obligation to properly and fully perform the Contract.

9.1.3 E/A is not responsible for the acts or omissions of CONTRACTOR, or of any Subcontractor, any Supplier, or of any other person or organization performing or furnishing any of the Work.

9.1.4 If OWNER and E/A agree, E/A will review the final Application for Payment and accompanying documentation and all maintenance and operating instructions, schedules, guarantees, bonds and certificates of inspection, tests and approvals and other documentation required to be delivered by Article 14, but only to determine generally that their content complies with the requirements of, and in the case of certificates of inspections, tests and approvals that the results certified indicate compliance with, the Contract Documents.

9.1.5 The limitations upon authority and responsibility set forth in this paragraph 9.1 shall also apply to E/A's Consultants, Resident Project Representative and assistants.

9.2 E/A as Owner's Representative: E/A may be designated as the Owner's Representative under paragraph 8.1.

9.3 Visits to Site: If OWNER and E/A agree, E/A will make visits to the site at intervals appropriate to the various stages of construction as E/A deems necessary in order to observe as an experienced and qualified design professional the progress that has been made and the quality of the various aspects of CONTRACTOR's executed Work. Based on information obtained during such visits and observations, E/A will endeavor for the benefit of OWNER to determine, in general, if the Work is proceeding in accordance with the Contract Documents. E/A will not be required to make exhaustive or continuous on-site inspections to check the quality or quantity of the Work. E/A's efforts will be directed toward providing for OWNER a greater degree of confidence that the completed Work will conform generally to the Contract Documents. On the basis of such visits and on-site observations, E/A will keep OWNER informed of the progress of the Work and will endeavor to guard OWNER against defective Work. E/A's visits and on-site observations are subject to all the limitations on E/A's authority and responsibility set forth in paragraph 9.1.

9.4 Resident Project Representative: If OWNER and E/A agree, E/A will furnish a Resident Project Representative to assist E/A in providing more continuous observation of the Work. The responsibilities and authority and limitations of any such Resident Project Representative and assistants will be as provided in paragraph 9.1 and in the Supplemental General Conditions. OWNER may designate another representative or agent to represent OWNER at the site who is not E/A, E/A's consultant, agent or employee.

9.5 Clarifications and Interpretations: E/A may determine that written clarifications or interpretations of the requirements of the Contract Documents (in the form of drawings or otherwise) are necessary. Such written clarifications or interpretations will be consistent with the intent of and reasonably inferable from the Contract Documents, will be issued with reasonable promptness by Owner's Representative and will be binding on OWNER and CONTRACTOR. If OWNER or CONTRACTOR believes that a written clarification or interpretation justifies an adjustment in the Contract Amount or the Contract Times, OWNER or CONTRACTOR may make a Claim therefor as provided in Article 11 or 12.

9.6 Rejecting Defective Work: E/A will recommend that OWNER disapprove or reject Work which E/A believes to be defective, or believes will not produce a completed Project that conforms to the Contract Documents or will prejudice the integrity of the design concept of the completed Project as a functioning whole as indicated by the Contract Documents.

9.7 Shop Drawings: Refer to Division 1 for E/A's authority concerning Shop Drawings.

ARTICLE 10 - CHANGES IN THE WORK

10.1 Changes:

10.1.1 Without invalidating the Contract and without notice to any surety, OWNER may, at any time or from time to time, order additions, deletions or revisions in the Work. Such changes in the Work will be authorized by Change Order, Change Directive or Field Order. In the event that the OWNER and the CONRACTOR are unable to negotiate the terms of a Change Order for the performance of additional Work, the OWNER may, at its election, perform such additional Work with its own forces or with another contractor and such work will be considered "Other Work" in accordance with Article 7.

10.1.2 Changes in the Work shall be performed under applicable provisions of the Contract Documents, and CONTRACTOR shall proceed promptly, unless otherwise provided in the Change Order, Change Directive or Field Order. CONTRACTOR's proposals for changes in the Contract Amount and/or Contract Time shall be submitted within ten (10) Calendar Days of request by Owner's Representative, including impacts to the approved Progress Schedule, unless Owner's Representative grants an extension. OWNER will review each proposal and respond to CONTRACTOR within ten (10) Calendar Days. After review by OWNER, CONTRACTOR shall provide any supporting data requested by Owner's Representative within seven (7) Calendar Days, unless Owner's Representative grants an extension. OWNER will determine within seven (7) Calendar Days whether to pursue the change in Work.

10.1.3 CONTRACTOR shall not be entitled to an increase in the Contract Amount or an extension of the Contract Times with respect to any Work performed that is not required by the Contract Documents as amended, modified and supplemented as provided in paragraphs 3.3.1 and 3.3.2, except in the case of an emergency as provided in paragraph 6.11.5 or in the case of uncovering Work as provided in paragraph 13.4.

10.1.4 Except in the case of an emergency as provided in paragraph 6.11.5, a Change Order or Change Directive is required before CONTRACTOR commences any activities associated with a change in the Work which, in CONTRACTOR 's opinion, will result in a change in the Contract Amount and/or Contract Times.

10.1.5 If notice of any change affecting the general scope of the Work or the provisions of the Contract Documents (including, but not limited to, Contract Amount or Contract Times) is required by the provisions of any Bond to be given to a surety, the giving of any such notice will be CONTRACTOR's responsibility, and the amount of each applicable Bond will be adjusted accordingly.

10.2 Change Orders:

10.2.1 OWNER and CONTRACTOR shall execute appropriate written Change Orders covering:

.1 a change in the Work;

.2 the amount of the adjustment in the Contract Amount, if any; and

.3 the extent of the adjustment in the Contract Time, if any.

10.2.2 An executed Change Order shall represent the complete, equitable, and final amount of adjustment in the Contract Amount and/or Contract Time owed to CONTRACTOR or OWNER as a result of the occurrence or event causing the change in the Work encompassed by the Change Order.

10.3 Change Directives:

10.3.1 Without invalidating the Contract, OWNER may, by written Change Directive, using the Force Account method, order changes in the Work within the general scope of the Contract consisting of additions, deletions or other revisions, the Contract Amount and Contract Time being adjusted as necessary. “Force Account” means a basis of payment for the direct performance of Work with payment based on the actual cost of the labor, equipment and materials furnished and consideration for overhead and profit as set forth in Section 11.5, below. A Change Directive shall be used in the absence of complete and prompt agreement on the terms of a Change Order. Where practicable, any items of Work that may be agreed upon, prior to the performance of Work under this Section, will be included in a separate Change Order. For example, the cost of the installation of additional asphalt may be agreed upon based on the unit prices in the Bid.

10.3.2 If the Change Directive provides for an adjustment to the Contract Amount, the adjustment shall be based on the method provided in paragraph 11.5.

10.3.3 A Change Directive shall be effective immediately and shall be recorded later by preparation and execution of an appropriate Change Order.

10.3.4 Upon receipt of a Change Directive, CONTRACTOR shall promptly proceed with the change in the Work involved, provided, prior to the commencement of any Work under this section, the CONTRACTOR must submit its proposed Work plan, anticipated schedule, and a list of its work force and equipment proposed to be used in the Work for OWNER’S approval. Upon such approval, CONTRACTOR must promptly commence and make continuous progress in the Work. The OWNER reserves the right to withhold payment for low production or lack of progress.

10.4 Field Order:

10.4.1 Owner's Representative may authorize minor variations in the Work from the requirements of the Contract Documents which do not involve an adjustment in the Contract Amount or the Contract Times and are compatible with the design concept of the completed Project as a functioning whole as indicated by the

Contract Documents. These shall be accomplished by written Field Order and shall be binding on OWNER and on CONTRACTOR who shall perform the Work involved promptly.

10.4.2 If CONTRACTOR believes that a Field Order would require an adjustment in the Contract Amount and/or Contract Times, CONTRACTOR shall make a prompt written request to Owner's Representative for a Change Order. Any request by CONTRACTOR for an adjustment in Contract Amount and/or Contract Times must be made in writing prior to beginning the work covered by the Field Order.

10.5 **No Damages for Delay:** CONTRACTOR shall receive no compensation for delays or hindrances to the Work, except when direct and unavoidable extra cost to CONTRACTOR is caused by failure of OWNER to provide information or material, if any, which is to be furnished by OWNER or access to the Work and only to the extent that such acts continue after the CONTRACTOR furnishes OWNER with written notice of such failure. When such extra compensation is claimed a written statement thereof shall be presented by CONTRACTOR to OWNER and if by OWNER found correct shall be approved. If delay is caused by specific orders given by OWNER to stop work or by performance of extra Work or by failure of OWNER to provide material or necessary instructions for carrying on the Work, then such delay will entitle CONTRACTOR to an equivalent extension of time, CONTRACTOR's application for which shall, however, be subject to approval of OWNER. No such extension of time shall release CONTRACTOR or surety on its performance bond from all CONTRACTOR's obligations hereunder which shall remain in full force until discharge of the Contract. In no event shall the CONTRACTOR be entitled to any compensation or recovery of any special damages in connection with any delays, including without limitation: consequential damages, lost opportunity costs, impact damages, or other similar damages. The OWNER'S exercise of any of its rights or remedies under the Contract Documents (including without limitation ordering changes in the Work, or directing suspension, rescheduling, or correction of the Work), regardless of the extent or frequency of the OWNER'S exercise of such rights or remedies, shall not be construed as active interference in the CONTRACTOR'S performance of the Work. Except as otherwise provided herein, an extension of Contract Time, to the extent permitted under Article 12, shall be the sole remedy of the CONTRACTOR for any acknowledged delays.

ARTICLE 11 - CHANGE OF CONTRACT AMOUNT

11.1 The Contract Amount is stated in the Agreement and, including authorized adjustments, is the total amount payable by OWNER to CONTRACTOR for performance of the Work under the Contract Documents.

11.2 The original Contract Amount may not be increased by more than twenty-five percent (25%) and it may not be decreased more than twenty-five percent (25%) without the consent of the CONTRACTOR to such decrease, except in the event of a termination for convenience under paragraph 15.2 or the failure of the City Council to appropriate sufficient funding for the Project, in which events it is agreed that the consent of the CONTRACTOR will not be required.

11.3 The Contract Amount shall only be changed by a Change Order. Any claim for an adjustment in the Contract Amount shall be made by Written Notice delivered by the party making the Claim to the other party promptly (but in no event later than thirty (30) calendar days) after the start of the occurrence or event giving rise to the Claim and stating the general nature of the Claim. Notice of the amount of the Claim with supporting data shall be delivered within thirty (30) calendar days after Written Notice of Claim is delivered by claimant, and shall represent that the adjustment claimed covers all known amounts to which claimant is entitled as a result of said occurrence or event. If OWNER and

CONTRACTOR cannot otherwise agree, all Claims for adjustment in the Contract Amount shall be determined as set out in Article 16.

11.4 Determination of Value of Work:

11.4.1 The value of any Work covered by a Change Order for an adjustment in the Contract Amount will be determined by one or more of the following methods:

.1 by application of unit prices contained in the Contract Documents to the quantities of the items involved.

.2 by a mutually agreed lump sum properly itemized and supported by sufficient substantiating data, including documentation by subcontractors performing the work, to permit evaluation.

.3 by cost of Work plus CONTRACTOR's fee for all overhead costs and profit (determined as provided in paragraph 11.5).

.4 No cost will be included in the change order for time spent preparing the change order, nor will costs be included for an estimate of time to negotiate the change order costs for machinery, tools, or equipment as described in subparagraph 11.5.3

11.4.2 Before using the method described in paragraph 11.4.1.3, OWNER and CONTRACTOR agree to negotiate a Change Order using the methods identified in paragraphs 11.4.1.1 and 11.4.1.2, as appropriate, to determine the adjustment in the Contract Amount.

11.5 Cost of Work: If neither of the methods defined in paragraphs 11.4.1.1 nor 11.4.1.2 can be agreed upon before a change in the Work is commenced which will result in an adjustment in the Contract Amount, then the change in the Work will be performed by Change Directive, using the Force Account method, and payment will be made as follows:

11.5.1 For all personnel, CONTRACTOR will receive actual field cost wage rates for each hour that said personnel are actually engaged in such Work, as substantiated by its certified payroll, to which will be added an amount equal to twenty-five percent (25%) of the sum thereof as compensation for CONTRACTOR's and any effected Subcontractor's total overhead and profit. No separate charge will be made by CONTRACTOR or its Subcontractor(s) for organization or overhead expenses. In no case will the rate of wage be less than the minimum shown in the Contract for a particular category. CONTRACTOR will also receive an amount equal to 55% of the wages paid personnel, excluding the 25% compensation provided above, for CONTRACTOR’s and any effected Subcontractor’s cost of premiums on public liability insurance, workers' compensation insurance, social security and unemployment insurance. The actual cost of CONTRACTOR's bond(s) on the extra Work will be paid based on invoices from surety. No charge for superintendence will be made unless considered necessary and ordered by OWNER.

11.5.2 CONTRACTOR will receive the actual cost, including freight charges, of the materials used and installed on such Work, to which costs will be added a sum equal to twenty-five percent (25%) thereof as compensation for CONTRACTOR's and any effected Subcontractor's total overhead and profit. In case material invoices indicate a discount may be taken, the actual cost will be the invoice price minus the discount.

11.5.3 For machinery, trucks, power tools, or other similar equipment (the “equipment”) agreed to be necessary by OWNER and CONTRACTOR, OWNER will allow CONTRACTOR the Regional and Model Year adjusted Monthly Ownership Cost divided by 176 plus the Hourly Estimated Operating Costs as given in the latest edition of the "Rental Rate Blue Book" as published by EquipmentWatch (1-800-

669-3282) for each hour that said equipment is in use on such work. The established equipment rates will be paid for each hour that the equipment is utilized in the Work. In the event that the equipment is used intermittently during the Work, full payment for an eight-hour day will be made if the equipment is not idle more than four (4) hours of the day. If the equipment is idle more than four (4) hours in a day, then payment will be made only for the actual hours worked. No additional compensation will be allowed on the equipment for CONTRACTOR's or any affected Subcontractor's overhead and profit. OWNER may accept an actual rental invoice in lieu of the method of calculation set forth in paragraph 11.5.3 for equipment rented exclusively for Force Account Work or for equipment not included in the Rental Rate Blue Book.

11.5.4 The compensation, as herein provided for, shall be received by CONTRACTOR and any affected Subcontractor as payment in full for work done by Change Directive and will include use of small tools, and total overhead expense and profit. CONTRACTOR and Owner's Representative shall compare records of work done by Change Directive at the end of each day. Copies of these records will be made upon forms provided for this purpose by OWNER and signed by both Owner's Representative and CONTRACTOR, with one copy being retained by OWNER and one by CONTRACTOR. Refusal by CONTRACTOR to sign these records within two (2) working days of presentation does not invalidate the accuracy of the record.

11.6 Unit Price Work:

11.6.1 Where the Contract Documents provide that all or part of the Work is to be unit price Work, initially the Contract Amount will be deemed to include for all unit price work an amount equal to the sum of the established unit price for each separately identified item of unit price work times the estimated quantity of each item as indicated in the Bid. The estimated quantities of items of unit price work are not guaranteed and are solely for the purpose of comparison of Bids and determining an initial Contract Amount. Determinations of the actual quantities and classifications of unit price work performed by CONTRACTOR will be made by Owner's Representative. Owner's Representative will review with CONTRACTOR the preliminary determinations on such matters before rendering a written decision thereon (by recommendation of an Application for Payment or otherwise).

11.6.2 When "plan quantity" is indicated for a Bid item, CONTRACTOR shall be paid amount specified in the Contract Documents without any measurements.

11.6.3 Each unit price will be deemed to include an amount considered by CONTRACTOR to be adequate to cover CONTRACTOR's overhead and profit for each separately identified item.

11.6.4 A Major Item is any individual Bid item in the Bid that has a total cost equal to or greater than five percent (5%) of the original Contract Amount or $50,000, whichever is greater, computed on the basis of Bid quantities and Contract unit prices.

11.6.5 OWNER or CONTRACTOR may make a Claim for an adjustment in the Contract Amount in accordance with Article 11 if:

.1 the actual quantity of any Major Item should become as much as twenty percent (20%) more than or twenty percent (20%) less than that in the Bid; or

.2 CONTRACTOR presents documentation contesting accuracy of "plan quantity" and Owner's Representative verifies quantity and determines original value is in error by five percent (5%) or more;

Provided, however, in the event a Major Item is reduced by twenty percent (20%) or more of the amount in the Bid, no additional Article 11 profit or overhead will be added, if, due to other additions in the Work, the net value of the Contract Amount is not reduced.

ARTICLE 12 - CHANGE OF CONTRACT TIMES

12.1 Working Day and Calendar Day Contracts:

12.1.1 The Contract Times (or Milestones) may only be changed by Change Order or Time Extension Request duly executed by both CONTRACTOR and Owner's Representative. Any claim for an adjustment of the Contract Times (or Milestones) shall be made by Written Notice delivered by the party making the Claim to the other party promptly (but in no event later than thirty (30) calendar days after the start of the occurrence or event giving rise to the delay) and stating the general nature of the delay. Notice of the extent of the delay with supporting data shall be delivered within thirty (30) calendar days after Written Notice of Claim is delivered by claimant, and shall represent that the adjustment claimed is the entire adjustment to which claimant is entitled as a result of said occurrence or event. If OWNER and CONTRACTOR cannot otherwise agree, all Claims for adjustment in the Contract Times (or Milestones) shall be determined as set out in Article 16. No Claim for an adjustment in the Contract Times (or Milestones) will be valid if not submitted in accordance with the requirements of this paragraph.

12.1.2 When CONTRACTOR is at fault and OWNER stops the Work, so that corrections in the Work can be made by CONTRACTOR, no extension in time will be allowed.

12.1.3 When CONTRACTOR is prevented from completing any part of the Work within the Contract Times (or Milestones) due to delay beyond the control of both OWNER and CONTRACTOR, an extension of the Contract Times (or Milestones) in an amount equal to the time lost due to such delay shall be CONTRACTOR's sole and exclusive remedy for such delay. If performance by the CONTRACTOR or OWNER is interrupted by any occurrence not occasioned by its own conduct, whether such occurrence be an act of god or the result of war, riot, civil commotion, sovereign conduct, or the conduct of a third party, then such performance will be excused for a period of time necessary to remedy its effects, provided, however, in such an event, a conference will be held within three (3) business days to establish a proposed new Progress Schedule for the Project.

12.1.4 OWNER will consider time extension requests and may grant CONTRACTOR an extension of time because of:

.1 Changes ordered in the work which justify additional time.

.2 Failure of materials or products being at the Project site due to delays in transportation or failures of Suppliers, which are not the result of CONTRACTOR's, Subcontractor's or Supplier's negligence. The request for an extension of time shall be supported by a citation of acts demonstrating that the delays are beyond CONTRACTOR's control, including, but not limited to, CONTRACTOR's efforts to overcome such delays documented as follows:

a) Copy of purchase order for delayed item(s) indicating date ordered by CONTRACTOR/ Subcontractor and date purchase order received by Supplier.

b) If item(s) require Shop Drawings or other submittal information in accordance with the Contract Documents, provide record of date

submittal(s) forwarded to Owner's Representative, date submittal(s) returned to CONTRACTOR, and date submittal(s) forwarded to Supplier.

c) Copy of document(s) from Supplier, on Supplier's letterhead, indicating date(s) item(s) would be ready for shipment and/or actual shipment date(s).

d) Copies of all correspondence between CONTRACTOR / Subcontractor and Supplier indicating CONTRACTOR / Subcontractor's efforts to expedite item(s).

e) If item(s) are being purchased by a Subcontractor, provide correspondence, meeting notes, etc., that reflect CONTRACTOR's efforts with the Subcontractor to expedite delivery of the item(s).

.3 When acts of OWNER, E/A, utility owners or other contractors employed by OWNER delay progress of work through no fault of CONTRACTOR. The CONTRACTOR will only be entitled to an extension of time for delays that affect the Critical Path of the Work and that are not caused by the CONTRACTOR.

.4 When CONTRACTOR is delayed by strikes, lockouts, fires, losses from natural causes, or other unavoidable cause or causes beyond CONTRACTOR's control.

12.2 Calendar Day Contracts:

12.2.1 Under a Calendar Day Contract, CONTRACTOR may be granted an extension of time because of unusual inclement weather, including but not limited to unusual rainfall events, which are beyond the normal rainfall recorded and expected for Austin, Texas. However, the CONTRACTOR will not be granted an extension of time for “normal rainfall”, as described below.

12.2.2 "Unusual Inclement Weather" is defined as a rain event or other weather related event which occurs at the site and is of sufficient magnitude to prevent CONTRACTOR from performing units of Work critical to maintaining the Progress Schedule.

12.2.3 Baseline Rain Day Determination. “Normal rainfall” compiled by the State climatologist, based on U.S. Weather Bureau Records for Austin, Texas, is considered a part of the Calendar Day Contract, and is not a justification for an extension of time. Listed below are the number of days in each month for which no compensatory days for rainfall events (“Rain Days”) in such months may be claimed:

January..... 8 days

February..... 8 days

March..... 7 days

April..... 7 days

May..... 9 days

June..... 6 days

July..... 5 days

August..... 5 days

September..... 7 days

October..... 7 days

November..... 7 days

December..... 7 days

Rain Days in addition to the baseline Rain Day determination described above will be measured with the Owner's Representative's approval at the nearest operational public weather data collection facility to the site, including but not limited to the OWNER's early warning flood gauge system.

12.2.4 CONTRACTOR may receive credit in any month for Unusual Inclement Weather, and specifically for any Rain Days in that month which exceed the number of Rain Days allocated to that month, if a Claim is made in accordance with paragraph 12.1.1 and the weather event meets the definition for "Unusual Inclement Weather", and as applicable, "Rain Day" and such claimed day is a day on which Work critical to maintaining the Progress Schedule is scheduled to be performed and is otherwise capable of being performed.

ARTICLE 13 - TESTS AND INSPECTIONS; CORRECTION, REMOVAL OR ACCEPTANCE OF DEFECTIVE WORK

13.1 Notice of Defects: Prompt notice of all defective Work of which OWNER or E/A has actual knowledge will be given to CONTRACTOR. All defective Work may be rejected, corrected or accepted as provided in Article 13. CONTRACTOR must give OWNER and E/A prompt notice of any defective Work of which CONTRACTOR has actual knowledge.

13.2 Access to Work: OWNER, E/A, E/A's Consultants, other representatives and personnel of OWNER, independent testing laboratories and governmental agencies having jurisdiction will have access to the Work at reasonable times for observing, inspecting and testing. CONTRACTOR shall provide them proper and safe conditions for such access, and advise them of CONTRACTOR's site safety procedures and programs so that they may comply therewith as applicable.

13.3 Tests and Inspections:

13.3.1 CONTRACTOR shall give timely notice of readiness of the Work for all required inspections, tests or approvals, and shall cooperate with inspection and testing personnel to facilitate required inspections or tests.

13.3.2 OWNER shall employ and pay for services of an independent testing laboratory to perform all inspections, tests or approvals required by the Contract Documents except:

.1 for inspections, tests or approvals covered by paragraphs 13.3.3 and 13.3.4 below;

.2 that costs incurred for tests or inspections conducted pursuant to paragraph 13.4.3 shall be paid as provided in paragraph 13.4.3;

.3 for reinspecting or retesting defective Work, including any associated costs incurred by the testing laboratory for cancelled tests or standby time; and

.4 as otherwise specifically provided in the Contract Documents.

13.3.3 If laws or regulations of any public body having jurisdiction require any Work (or part thereof) specifically to be inspected, tested or approved by an employee or other representative of such public body, CONTRACTOR shall assume full responsibility for arranging and obtaining such inspections, tests or approvals, pay

all costs in connection therewith and furnish Owner's Representative the required certificates of inspection or approval.

13.3.4 CONTRACTOR shall also be responsible for arranging and obtaining and shall pay all costs in connection with any inspections, tests or approvals required for OWNER's and E/A's review of submittals covering materials, equipment, and mix designs to be incorporated in the Work.

13.3.5 All testing laboratories shall meet the requirements of ASTM E-329.

13.4 Uncovering Work:

13.4.1 If any Work (or the work of others) that is to be inspected, tested or approved is covered by CONTRACTOR without written concurrence of Owner's Representative, or if any Work is covered contrary to the written request of Owner's Representative, it must, if requested by Owner's Representative, be uncovered and recovered at CONTRACTOR's expense.

13.4.2 Uncovering Work as provided in paragraph 13.4.1 shall be at CONTRACTOR's expense unless CONTRACTOR has given Owner's Representative timely notice of CONTRACTOR's intention to cover the same and Owner's Representative has not acted within five (5) working days to such notice.

13.4.3 If Owner's Representative considers it necessary or advisable that covered Work be observed, inspected or tested, CONTRACTOR shall uncover, expose or otherwise make available for observation, inspection or testing that portion of the Work in question, furnishing all necessary labor, material and equipment. If it is found that such Work is defective, CONTRACTOR shall pay all claims, costs, losses and damages caused by, arising out of or resulting from such uncovering, exposure, observation, inspection and testing and of satisfactory replacement or reconstruction (including but not limited to all costs of repair or replacement of work of others); and OWNER shall be entitled to an appropriate decrease in the Contract Amount, and may make a Claim therefor as provided in Article 11. If, however, such Work is not found to be defective, CONTRACTOR shall be allowed an increase in the Contract Amount or an extension of the Contract Times (or Milestones), or both, directly attributable to such uncovering, exposure, observation, inspection, testing, replacement and reconstruction; and CONTRACTOR may make a Claim therefor as provided in Articles 11 and 12.

13.5 OWNER May Stop the Work:

13.5.1 If the Work is defective, or CONTRACTOR fails to supply sufficient skilled workers, suitable materials, and/or equipment; or fails to furnish or perform the Work in such a way that the Work in progress or the completed Work will conform to the Contract Documents, OWNER may order CONTRACTOR to stop the Work, or any portion thereof, until the cause for such order has been eliminated; however, this right of OWNER to stop the Work shall not give rise to any duty on the part of OWNER to exercise this right for the benefit of CONTRACTOR or any surety or other party.

13.5.2 If CONTRACTOR fails to correct defective Work or submit a satisfactory plan to take corrective action, with procedure and time schedule, OWNER may order CONTRACTOR to stop the Work, or any portion thereof, until cause for such order has been eliminated, or take any other action permitted by this Contract. A notice to stop the Work, based on defects, shall not stop calendar or working days charged to the Project.

13.6 Correction or Removal of Defective Work: If required by OWNER, CONTRACTOR shall promptly, as directed, either correct all defective Work, whether or not fabricated, installed or completed, or, if the Work has been rejected by Owner's Representative, remove it from the site and replace it with Work that is not defective. CONTRACTOR shall correct or remove and replace defective Work, or submit a plan of action detailing how the deficiency will be corrected, within the time frame identified in the notice of defective Work. CONTRACTOR shall pay all claims, costs, losses and damages caused by or resulting from such correction or removal (including but not limited to all costs of repair or replacement of work of others).

13.7 Warranty period:

13.7.1 If within one year after the date of Substantial Completion or such longer period of time as may be prescribed by laws or regulations or by the terms of any applicable special guarantee required by the Contract Documents or by any specific provision of the Contract Documents (e.g. paragraph 14.11.2), any Work, including work performed after the Substantial Completion date, is found to be defective, CONTRACTOR shall promptly, without cost to OWNER and in accordance with OWNER's written instructions:

(i) correct such defective Work, or, if it has been rejected by OWNER, remove it from the site and replace it with Work that is not defective, and

(ii) satisfactorily correct or remove and replace any damage to other Work or the work of others resulting therefrom.

If CONTRACTOR does not promptly comply with the terms of such instructions, or in an emergency where delay would cause serious risk of loss or damage, OWNER may have the defective Work corrected or the rejected Work removed and replaced, and all claims, costs, losses and damages caused by or resulting from such removal and replacement (including but not limited to all costs of repair or replacement of work of others) will be paid by CONTRACTOR. The warranty period will be deemed to be renewed and recommenced in connection with the completed items of Work requiring correction.

13.7.2 In special circumstances where a particular item of equipment is placed in continuous service before Substantial Completion of all the Work, the warranty period for that item may start to run from an earlier date if so provided in the Contract Documents.

13.7.3 If correction of defective Work will affect the function or use of the facility CONTRACTOR shall not proceed with correction of defective Work without prior coordination and approval of OWNER.

13.7.4 The obligations of the CONTRACTOR to perform warranty work will survive the acceptance of the Work and any termination of the Contract.

13.8 Acceptance of Defective Work: If, instead of requiring correction or removal and replacement of defective Work, OWNER decides to accept it, OWNER may do so. CONTRACTOR shall pay all claims, costs, losses and damages attributable to OWNER's evaluation of and determination to accept such defective Work. If any such acceptance occurs prior to recommendation of final payment, a Change Order will be issued incorporating the necessary revisions in the Contract Documents and compensating OWNER for the diminished value of the defective Work. If the acceptance occurs after such recommendation, an appropriate amount will be paid by CONTRACTOR to OWNER after a calculation by OWNER of the diminution in value of the defective Work.

13.9 OWNER May Correct Defective Work: If CONTRACTOR fails within a reasonable time after Written Notice of OWNER to correct defective Work, or to remove and replace rejected Work, or if CONTRACTOR fails to perform the Work in accordance with the Contract Documents, or if CONTRACTOR fails to comply with any other provision of the Contract

Documents, OWNER may, after seven (7) calendar days' Written Notice to CONTRACTOR, correct and remedy any such deficiency. If, in the opinion of the Owner's Representative, significant progress has not been made during this seven (7) calendar day period to correct the deficiency, the OWNER may exercise any actions necessary to remedy the deficiency. In exercising the rights and remedies under this paragraph, OWNER shall proceed expeditiously. In connection with such corrective and remedial action, OWNER may exclude CONTRACTOR from all or part of the site, take possession of all or part of the Work, and suspend CONTRACTOR's services related thereto, and incorporate in the Work all materials and equipment stored at the site or for which OWNER has paid CONTRACTOR but which are stored elsewhere. CONTRACTOR shall allow OWNER, its agents and employees, OWNER's other contractors, E/A and E/A's consultants access to the site to enable OWNER to exercise the rights and remedies under this paragraph. All claims, costs, losses and damages incurred or sustained by OWNER in exercising such rights and remedies will be charged against CONTRACTOR and a Change Order will be issued incorporating the necessary revisions in the Contract Documents with respect to the Work. Such claims, costs, losses and damages will include but not be limited to all costs of repair or replacement of work of others destroyed or damaged by correction, removal or replacement of CONTRACTOR's defective Work. CONTRACTOR shall not be allowed an extension of the Contract Times (or Milestones), or claims of damage because of any delay in the performance of the Work attributable to the exercise by OWNER of OWNER's rights and remedies hereunder.

ARTICLE 14 - PAYMENTS TO CONTRACTOR AND COMPLETION

14.1 Application for Progress Payment:

14.1.1 No more often than once a month, CONTRACTOR shall submit to Owner's Representative for review an Application for Payment, in a form acceptable to OWNER, filled out and signed by CONTRACTOR covering the Work completed as of the date of the Application and accompanied by such supporting documentation as is required by the Contract Documents.

14.1.2 Such applications shall not include requests for payment on account of changes in the Work which have been properly authorized by Change Directives but not yet included in Change Orders.

14.1.3 Such applications shall not include requests for payment of amounts the CONTRACTOR does not intend to pay to a Subcontractor or Supplier because of a dispute or other reason.

14.1.4 If payment is requested on the basis of materials or equipment not incorporated in the Work but delivered and suitably stored at the site or at another location agreed to in writing, the Application for Payment shall be accompanied by such bills of sale, data and other procedures satisfactory to OWNER substantiating OWNER's title to such materials or equipment or otherwise protecting OWNER's interest. Payment on account of such materials or equipment will not include any amount for CONTRACTOR's overhead or profit or relieve CONTRACTOR of its obligation to protect and install such materials or equipment in accordance with the requirements of the Contract and to restore damaged or defective Work. If materials or equipment are stored at another location, at the direction of the OWNER they shall be stored in a bonded and insured facility, accessible to E/A and OWNER, and shall be clearly marked as property of OWNER. Title to materials delivered to the site of the Work or a staging area will pass to OWNER upon payment by OWNER without the necessity for further documentation. Risk of loss will not pass to OWNER until acceptance.

14.1.5 Where the original Contract Amount is less than $400,000, OWNER will pay CONTRACTOR total amount of approved Application for Payment, less ten percent (10%) of amount thereof, which ten percent (10%) will be retained until final payment, less all previous payments and less all other sums that may be retained by OWNER under the terms of this Agreement. Where the original Contract Amount is $400,000 or more, OWNER will pay CONTRACTOR total amount of approved Application for Payment, less five percent (5%) of amount thereof, which five percent (5%) will be retained until final payment, less all previous payments and less all other sums that may be retained by OWNER under the terms of this Agreement. In either case, if the Work is near completion and delay occurs due to no fault or neglect of CONTRACTOR, OWNER may pay a portion of the retained amount to CONTRACTOR. CONTRACTOR, at OWNER's option, may be relieved of the obligation to complete the Work and, thereupon, CONTRACTOR shall receive payment of the balance due under the Contract subject to the conditions stated under paragraph 15.2. A Subcontractor may submit a written request to the CONTRACTOR and Project Manager requesting release of retainage for work by the Subcontractor that has been completed and approved. The Project Manager will evaluate the request and if it is approved, the Project Manager will request the CONTRACTOR to include the request for release of an appropriate amount of retainage in the next Pay Application.

14.1.6 Applications for Payment shall include the following documentation:

.1 updated Progress Schedule;

.2 monthly subcontractor report;

.3 any other documentation required under the Supplemental General Conditions.

14.2 CONTRACTOR's Warranty of Title: CONTRACTOR warrants and guarantees that title to all Work, materials and equipment covered by any Application for Payment, whether incorporated in the Project or not, will pass to OWNER free and clear of all Liens no later than the time of payment to CONTRACTOR.

14.3 Review of Applications for Progress Payment:

14.3.1 Owner's Representative will, within seven (7) calendar days after receipt of each Application for Payment, either indicate a recommendation for payment and forward the Application for processing by OWNER, or return the Application to CONTRACTOR indicating Owner's Representative's reasons for refusing to recommend payment. In the latter case, CONTRACTOR shall make the necessary corrections and resubmit the Application.

14.3.2 Owner's Representative's recommendation of any payment requested in an Application for Payment will constitute a representation by Owner's Representative, based upon Owner's Representative's on-site observations of the executed Work and on Owner's Representative's review of the Application for Payment and the accompanying data and schedules, that to the best of Owner's Representative's knowledge, information and belief:

.1 the Work has progressed to the point indicated; and

.2 the quality of the Work is generally in accordance with the Contract Documents (subject to an evaluation of the Work as a functioning whole prior to or upon Substantial Completion, to the results of any subsequent tests called for in the Contract Documents, to a final determination of quantities and classifications for unit price Work, and to any other qualifications stated in the recommendation).

14.3.3 By recommending any such payment, Owner's Representative will not thereby be deemed to have represented that:

.1 exhaustive or continuous on-site inspections have been made to check the quality or the quantity of the Work;

.2 examination has been made to ascertain how or for what purpose CONTRACTOR has used money previously paid on account of the Contract Amount;

.3 CONTRACTOR's construction means, methods, techniques, sequences or procedures have been reviewed; or

.4 that there may not be other matters or issues between the parties that might entitle CONTRACTOR to be paid additionally by OWNER or entitle OWNER to withhold payment to CONTRACTOR.

14.4 Decisions to Withhold Payment:

14.4.1 OWNER may withhold or nullify the whole or part of any payment to such extent as may be necessary on account of:

.1 defective Work not remedied;

.2 third party Claims filed or reasonable evidence indicating probable filing of such Claims;

.3 failure of CONTRACTOR to make payments properly to Subcontractors for labor, materials or equipment;

.4 reasonable evidence that the Work cannot be completed for the unpaid balance of the Contract Amount;

.5 damage to OWNER or another contractor;

.6 reasonable evidence that the Work will not be completed within the Contract Time, and that the unpaid balance would not be adequate to cover actual or liquidated damages for the anticipated delay;

.7 failure of CONTRACTOR to submit a schedule of values in accordance with the Contract Documents;

.8 failure of CONTRACTOR to submit a submittal schedule in accordance with the Contract Documents;

.9 failure of CONTRACTOR to submit and update a construction Progress Schedule in accordance with the Contract Documents;

.10 failure of CONTRACTOR to maintain a record of changes on drawings and documents;

.11 failure of CONTRACTOR to maintain weekly payroll reports and, as applicable, provide copies of reports in a timely manner upon request of OWNER;

.12 failure of CONTRACTOR to submit monthly subcontractor reports;

.13 CONTRACTOR's neglect or unsatisfactory prosecution of the Work, including failure to clean up;

.14 failure of CONTRACTOR to comply with the Austin City Code, Chapter 2-9-A, as amended, “Minority-Owned and Women-Owned Business Enterprise Procurement Program;” or

.15 failure of CONTRACTOR to comply with any provision of the Contract Documents.

14.4.2 When the above reasons for withholding payment are removed, CONTRACTOR shall resubmit a statement for the value of Work performed. Payment will be made within thirty (30) calendar days of receipt of approved Application for Payment.

14.4.3 Subcontractors may request Partial Payment when the OWNER withholds payment of an invoice to the CONTRACTOR for any reason listed in Section 14.4.1. If payment is withheld by the OWNER, the CONTRACTOR shall notify all affected Subcontractors within two (2) working days of notice that payment is being withheld. Upon notification, Subcontractors may submit a formal written request for Partial Payment to the CONTRACTOR and OWNER. If directed by the OWNER, the CONTRACTOR shall within three (3) working days resubmit to the OWNER an invoice for the same period that includes only the work performed by the requesting Subcontractors during this period. The OWNER will review this resubmitted invoice in accordance with Section 14.3.1. Upon receipt of payment for the resubmitted invoice, CONTRACTOR shall pay the subcontractor within ten (10) Calendar Days in accordance with Section 6.4.7.

14.5 Delayed Payments: Should OWNER fail to make payment to CONTRACTOR of sum named in any Application for Payment within thirty (30) calendar days after the day on which OWNER received the mutually acceptable Application for Payment, then OWNER will pay to CONTRACTOR, in addition to sum shown as due by such Application for Payment, interest thereon at the rate specified in Government Code, Section 2251.025(b) from date due until fully paid, which shall fully liquidate any injury to CONTRACTOR growing out of such delay in payment.

14.6 Arrears: No money shall be paid by OWNER upon any claim, debt, demand or account whatsoever, to any person, firm or corporation who is in arrears to City for taxes; and City shall be entitled to counterclaim and automatically offset against any such debt, claim, demand or account in the amount of taxes so in arrears and no assignment or transfer of such debt, claim, demand or account after said taxes are due, shall affect the right of OWNER to so offset said taxes, and associated penalties and interest if applicable, against the same.

14.7 Substantial Completion:

14.7.1 When the CONTRACTOR considers that the Work, or a portion thereof which the OWNER agrees to accept separately, is substantially complete, the CONTRACTOR shall notify Owner's Representative and request a determination as to whether the Work or designated portion thereof is substantially complete. If Owner's Representative does not consider the Work substantially complete, Owner's Representative will notify CONTRACTOR giving reasons therefor. After performing any required Work, CONTRACTOR shall then submit another request for Owner's Representative to determine Substantial Completion. If Owner's Representative considers the Work substantially complete, Owner's Representative will prepare and deliver a certificate of Substantial Completion which shall establish the date of Substantial Completion, shall include a punch list of items to be completed or corrected before final payment, shall establish the time within which CONTRACTOR shall finish the punch list, and shall establish responsibilities of the OWNER and CONTRACTOR for security, maintenance, heat, utilities, damage to the Work, warranty and insurance. Failure to include an item on the punch list does not alter the responsibility of CONTRACTOR to complete all Work in accordance with the Contract Documents. If a Certificate of Occupancy is required by public authorities having jurisdiction over the Work, said certificate shall be issued before the Work or any portion thereof is considered substantially complete. The certificate of Substantial Completion shall be signed by OWNER and CONTRACTOR to evidence acceptance of the responsibilities assigned to them in such certificate.

14.7.2 OWNER shall have the right to exclude CONTRACTOR from the Work after the date of Substantial Completion, but OWNER will allow CONTRACTOR reasonable access to complete or correct items on the punch list and complete warranty work.

14.8 Partial Utilization: Use by OWNER, at OWNER's option, of any substantially completed part of the Work which: (i) has specifically been identified in the Contract Documents, or (ii) OWNER and CONTRACTOR agree constitutes a separately functioning and usable part of the Work that can be used by OWNER for its intended purpose without significant interference with CONTRACTOR's performance of the remainder of the Work, may be accomplished prior to Substantial Completion of all the Work in accordance with the following:

14.8.1 OWNER at any time may request CONTRACTOR to permit OWNER to use any such part of the Work which OWNER believes to be ready for its intended use and substantially complete. If CONTRACTOR agrees that such part of the Work is substantially complete, CONTRACTOR shall certify to Owner's Representative that such part of the Work is substantially complete and request Owner's Representative to issue a certificate of substantial Completion for that part of the Work. CONTRACTOR at any time may notify Owner's Representative that CONTRACTOR considers any such part of the Work ready for its intended use and substantially complete and request Owner's Representative to issue a certificate of Substantial Completion for that part of the Work. The provisions of paragraphs 14.7.1 and 14.7.2 will apply with respect to certification of Substantial Completion of that part of the Work and the division of responsibility in respect thereof and access thereto.

14.8.2 Such partial utilization is authorized by public authorities having jurisdiction over the Work.

14.9 Final Inspection: Upon Written Notice from CONTRACTOR that the entire Work or an agreed portion thereof is complete, Owner's Representative will make a final inspection with CONTRACTOR and provide Written Notice of all particulars in which this inspection reveals that the Work is incomplete or defective. CONTRACTOR shall immediately take such measures as are necessary to complete such Work or remedy such deficiencies.

14.10 Final Application for Payment: CONTRACTOR may make application for final payment following the procedure for progress payments after CONTRACTOR has completed all such corrections to the satisfaction of Owner's Representative and delivered the following documents:

14.10.1 Affidavit by CONTRACTOR certifying the payment of all debts and claims;

14.10.2 Three (3) complete operating and maintenance manuals, each containing maintenance and operating instructions, schedules, guarantees, and other documentation required by the Contract Documents;

14.10.3 Record documents (as provided in paragraph 6.10);

14.10.4 Consent of surety, if any, to final payment. If surety is not provided, complete and legally effective releases or waivers (satisfactory to OWNER) of all claims arising out of or filed in connection with the Work;

14.10.5 Certificate evidencing that insurance required by the Supplemental General Conditions will remain in force after final payment and through the warranty period;

14.10.6 Non-Use of Asbestos Affidavit (After Construction);

14.10.7 Subcontractor report and all other documentation necessary for evaluation of CONTRACTOR's fulfillment of the Contract MBE/WBE or DBE goals;

14.10.8 Documentation of notice to claimants, to the extent applicable and subject to subparagraph 14.11.4; and

14.10.9 Any other documentation called for in the Contract Documents.

14.11 Final Payment and Acceptance:

14.11.1 If, on the basis of observation of the Work during construction, final inspection, and review of the final Application for Payment and accompanying documentation as required by the Contract Documents, Owner's Representative is satisfied that the Work has been completed and CONTRACTOR's other obligations under the Contract Documents have been fulfilled and there are no outstanding claims, Owner's Representative will recommend the final Application for Payment and thereby notify the OWNER, who will pay to CONTRACTOR the balance due CONTRACTOR under the terms of the Contract. If the sole remaining unfinished item to complete the Work is the reestablishment of vegetation, CONTRACTOR may execute a revegetation letter with fiscal posted (letter of credit) to ensure completion of this item. This Work must be accomplished within one hundred twenty (120) Calendar Days of the date of Final Completion of the Work. When the permanent erosion control has been established, OWNER will initiate an inspection for final acceptance of the erosion controls. If the revegetation is not completed within the one hundred twenty (120) Calendar Days, OWNER, at its option, may complete the Work using the posted fiscal.

14.11.2 If the Contract measures Contract Time to Final Completion, rather than Substantial Completion, Owner's Representative will issue a letter of final acceptance to CONTRACTOR which establishes the Final Completion date and initiates the one-year warranty period. If the sole remaining unfinished item to complete the Work is the reestablishment of vegetation and CONTRACTOR has executed a revegetation letter with fiscal posted (letter of credit) to ensure completion of this item, the Owner’s Representative will issue a letter of conditional acceptance to CONTRACTOR which established the Final Completion date and initiates the one-year warranty period.

14.11.3 Final payment is considered to have taken place when CONTRACTOR or any of its representatives negotiates OWNER's final payment check, whether labeled final or not, for cash or deposits check in any financial institution for its monetary return.

14.11.4 The OWNER will withhold funds sufficient to cover the amount of any unresolved contract claims from final payment for six months under the following limited conditions:

.1 CONTRACTOR must provide written notice to the claimant (via certified mail or hand delivery) that (i) OWNER will hold funds in the amount of the disputed claim for six (6) months from the date of the receipt of the notice and (ii) CONTRACTOR and the claimant have certain alternative dispute resolution rights; and

.2 CONTRACTOR must provide OWNER with a copy of the receipted notice.

Provided the claimant has received notice under this section, OWNER will release the withheld funds, if the CONTRACTOR provides a bond in substantial compliance with the provisions of Section 52.231 of the Texas Property Code; when the OWNER receives a settlement or release of the claim with accompanying instructions regarding payment; upon resolution of the claim in litigation, if suit is filed within such six (6) month period and the OWNER receives written notice of such filing; or when such six (6) month period has passed, if no such bond, settlement, release, or notice of filing of suit have been received. The above provisions notwithstanding, if efforts to timely resolve a disputed claim are not

being made to OWNER'S reasonable satisfaction, OWNER may, in its complete discretion, file an interpleader action and deposit the withheld funds in the registry of a court of competent jurisdiction. In addition, CONTRACTOR must include a provision in each of its subcontracts that the prevailing party in any litigation arising thereunder will be entitled to recover its costs of court and reasonable attorney's fees.

14.12 Waiver of Claims: The making and acceptance of final payment will constitute:

14.12.1 a waiver of claims by OWNER against CONTRACTOR, except claims arising from unsettled claims, from defective Work appearing after final inspection, from failure to comply with the Contract Documents or the terms of any warranty specified therein, or from CONTRACTOR's continuing obligations under the Contract Documents; and

14.12.2 a waiver of all claims by CONTRACTOR against OWNER other than those previously made in writing and still unsettled.

ARTICLE 15 - SUSPENSION OF WORK AND TERMINATION

15.1 OWNER May Suspend Work Without Cause: At any time and without cause, OWNER may suspend the Work or any portion thereof for a period of not more than ninety (90) calendar days by Written Notice to CONTRACTOR which will fix the date on which the Work will be resumed. CONTRACTOR shall resume the Work on the date so fixed. CONTRACTOR shall be allowed an adjustment in the Contract Amount or an extension of the Contract Times, or both, directly attributable to any such suspension if CONTRACTOR makes an approved Claim therefor as provided in Articles 11 and 12.

15.2 OWNER May Terminate Without Cause: Upon seven (7) calendar days' Written Notice to CONTRACTOR, OWNER may, without cause and without prejudice to any right or remedy of OWNER, elect to terminate the Agreement. In such case, CONTRACTOR shall be paid (without duplication of any items):

15.2.1 for completed and acceptable Work executed in accordance with the Contract Documents prior to the effective date of termination;

15.2.2 for reasonable demobilization costs;

15.2.3 for anticipated profits on completed and accepted Work not previously paid and not included in separate pay items calculated to date of termination but not for anticipated profit on the entire Contract not previously paid, unabsorbed overhead, or lost opportunity; and

15.2.4 for all claims incurred in settlement of terminated contracts with Subcontractors, Suppliers and others, including for anticipated profits on completed and accepted Work not previously paid and not included in separate pay items calculated to date of termination but not for anticipated profit on the entire Contract not previously paid, unabsorbed overhead, or lost opportunity. CONTRACTOR agrees to negotiate in good faith with Subcontractors, Suppliers and others to mitigate OWNER's cost.

15.3 OWNER May Terminate With Cause:

15.3.1 Upon the occurrence of any one or more of the following events:

.1 if CONTRACTOR persistently fails to perform the Work in accordance with the Contract Documents;

.2 if CONTRACTOR disregards laws or regulations of any public body having jurisdiction;

.3 if CONTRACTOR disregards the authority of Owner's Representative;

.4 if CONTRACTOR makes fraudulent statements;

.5 if CONTRACTOR fails to maintain a work force adequate to accomplish the Work within the Contract Time;

.6 if CONTRACTOR fails to make adequate progress and endangers successful completion of the Contract; or

.7 if CONTRACTOR otherwise violates in any substantial way any provisions of the Contract Documents;

OWNER may, after giving CONTRACTOR (and the surety, if any) seven (7) calendar days Written Notice terminate the services of CONTRACTOR. OWNER, at its option, may proceed with negotiation with surety for completion of the Work. Alternatively, OWNER may under these circumstances exclude CONTRACTOR from the site and take possession of the Work (without liability to CONTRACTOR for trespass or conversion), incorporate in the Work all materials and equipment stored at the site or for which OWNER has paid CONTRACTOR but which are stored elsewhere, and finish the Work as OWNER may deem expedient. In such case CONTRACTOR shall not be entitled to receive any further payment until the Work is finished. If the unpaid balance of the Contract Amount exceeds all claims, costs, losses and damages sustained by OWNER arising out of or resulting from completing the Work, such excess will be paid to CONTRACTOR. If such claims, costs, losses and damage exceed such unpaid balance, CONTRACTOR or surety shall pay the difference to OWNER. In the event that a termination for cause is found to be wrongful, the termination shall be converted to a termination without cause as set forth in Section 15.2 and CONTRACTOR'S remedy for wrongful termination is limited to the recovery of the payments permitted for termination without cause as set forth in Section 15.2.

15.3.2 Where CONTRACTOR's services have been so terminated by OWNER, the termination will not affect any rights or remedies of OWNER against CONTRACTOR and surety then existing or which may thereafter accrue. Any retention or payment of moneys due CONTRACTOR by OWNER will not release CONTRACTOR from liability. In the event OWNER terminates Contract with cause, OWNER may reject any and all Bids submitted by CONTRACTOR for up to three (3) years after the date of such termination. These Progressive Sanctions will be administered in accordance with the City of Austin Purchasing Office Probation, Suspension, and Debarment Procedures for Vendors, which include notice and an opportunity for a hearing.

15.4 CONTRACTOR May Stop Work or Terminate: If through no act or fault of CONTRACTOR, the Work is suspended for a period of more than ninety (90) calendar days by OWNER or under an order of court or other public authority, or (except during disputes) Owner's Representative fails to forward for processing any mutually acceptable Application for Payment within thirty (30) calendar days after it is submitted, or (except during disputes) OWNER fails for sixty (60) calendar days after it is submitted to pay CONTRACTOR any sum finally determined by OWNER to be due, then CONTRACTOR may, upon seven (7) calendar days' Written Notice to OWNER, and provided OWNER does not remedy such suspension or failure within that time, terminate the Agreement and recover from OWNER payment on the same terms as provided in paragraph 15.2. In lieu of terminating the Agreement and without prejudice to any other right or remedy, if (except during disputes) Owner's Representative has failed to forward for processing any mutually acceptable Application for Payment within thirty (30) calendar days after it is submitted, or (except during disputes)

OWNER has failed for sixty (60) calendar days after it is submitted to pay CONTRACTOR any sum finally determined by OWNER to be due, CONTRACTOR may upon seven (7) calendar days' Written Notice to OWNER stop the Work until payment of all such amounts due CONTRACTOR, including interest thereon. The provisions of this paragraph 15.4 are not intended to preclude CONTRACTOR from making a Claim under Articles 11 and 12 for an increase in Contract Amount or Contract Times or otherwise for expenses or damage directly attributable to CONTRACTOR's stopping Work as permitted by this paragraph.

15.5 Discretionary Notice to Cure: In its complete discretion, OWNER may, but is not required to, provide a Notice to Cure to CONTRACTOR and its surety to cure an event of default described above and/or an anticipatory breach of contract and, if required by OWNER, to attend a meeting with OWNER, regarding the Notice to Cure, the event of default, and/or the anticipatory breach of contract. The Notice to Cure will set forth the time limit in which the cure is to be completed or commenced and diligently prosecuted. Upon receipt of any Notice to Cure, CONTRACTOR shall prepare a report describing its program and measures to affect the cure of the event of default and/or anticipatory breach of contract within the time required by the Notice to Cure. The CONTRACTOR'S report must be delivered to OWNER at least three (3) days prior to any requested meeting with the OWNER and surety.

15.6 Bankruptcy: If CONTRACTOR declares bankruptcy or is adjudged bankrupt or makes an assignment for the benefit of creditors or if a receiver is appointed for the benefit of creditors or if a receiver is appointed by reason of CONTRACTOR'S insolvency, CONTRACTOR may be unable to perform this Contract in accordance with the Contract requirements. In such an event, OWNER may demand CONTRACTOR or its successor in interest provide OWNER with adequate assurance of CONTRACTOR'S future performance in accordance with the terms and conditions of the Contract. If CONTRACTOR fails to provide adequate assurance of future performance to OWNER'S reasonable satisfaction within ten (10) days of such a request, OWNER may terminate the CONTRACTOR'S services for cause or without cause, as set forth above. If CONTRACTOR fails to provide timely adequate assurance of its performance and actual performance, OWNER may prosecute the Work with its own forces or with other contractors on a time and material or other appropriate basis and the cost of which will be charged against the Contract balance.

15.7 Duty to Mitigate: In the event of any termination or suspension under this Contract, the CONTRACTOR agrees to and shall take all reasonable actions to mitigate its damages and any and all claims which may be asserted against the OWNER.

15.8 Responsibility during Demobilization: While demobilizing, the CONTRACTOR will take all necessary and reasonable actions to preserve and protect the Work, the site and other property of the OWNER or others at the site.

ARTICLE 16 - DISPUTE RESOLUTION

16.1 Filing of Claims:

16.1.1 Claims arising from the circumstances identified in paragraphs 3.2, 4.1, 4.2.2, 4.2.4, 6.4.2, 6.11.5.2, 6.17, 7.5, 8.6, 9.5, 10.4.2, 13.4.3, 13.8, 13.9, 15.1, 15.2, 15.3, or 15.4, or other occurrences or events, shall be made by Written Notice delivered by the party making the Claim to the other party within thirty (30) calendar days after the start of the occurrence or event giving rise to the Claim and stating the general nature of the Claim. Notice of the amount of the Claim with supporting data shall be delivered in writing within thirty (30) calendar days after Written Notice of Claim is delivered by claimant and shall represent that the adjustment claimed covers all known amounts and/or extensions of time to which claimant is entitled.

16.1.2 Within thirty (30) calendar days of receipt of notice of the amount of the Claim with supporting data, Owner's Representative and CONTRACTOR shall meet to discuss the Claim, after which an offer of settlement or notification of no settlement offer will be made to claimant. If claimant is not satisfied with the proposal presented, claimant shall have thirty (30) calendar days in which to: (i) submit additional supporting data requested by the other party; (ii) modify the initial Claim; or (iii) request Alternative Dispute Resolution.

16.2 Alternative Dispute Resolution:

16.2.1 If a dispute exists concerning a Claim, the parties agree to use the following procedure prior to pursuing any other available remedies. OWNER reserves the right to include the E/A as a party.

16.2.2 Negotiating with Previously Uninvolved Personnel: Either party may make a written request for a meeting to be held between representatives of each party within fourteen (14) Calendar Days of the request or such later period that the parties may agree to. Each party shall endeavor to include, at a minimum, one (1) previously uninvolved senior level decision maker (an owner, officer, or employee of each organization) empowered to negotiate on behalf of their organization. If a previously uninvolved senior level decision maker is unavailable due to the size of the CONTRACTOR'S organization or any other reason, the CONTRACTOR shall nonetheless provide an appropriate senior level decision maker for the meeting. The purpose of this and any subsequent meetings will be good faith negotiations of the matters constituting the dispute. Negotiations shall be concluded within thirty (30) Calendar Days of the first meeting, unless mutually agreed otherwise. This step may be waived by a written agreement signed by both parties, in which event the parties may proceed directly to mediation as described below.

16.2.3 Mediation:

.1 If the procedure described in 16.2.2 proves unsuccessful or is waived pursuant to its terms, the parties shall initiate the mediation process. OWNER and CONTRACTOR agree to select within thirty (30) calendar days a mediator trained in mediation skills, to assist with resolution of the dispute. OWNER and CONTRACTOR agree to act in good faith in the selection of the mediator and to give consideration to qualified individuals nominated to act as mediator. Nothing in this agreement prevents the parties from relying on the skills of a person who also is trained in the subject matter of the dispute and/or a contract interpretation expert. Should the parties fail to agree on a mediator within thirty (30) calendar days of initiation of the mediation process, the parties agree to ask the Travis County Dispute Resolution Center to select a qualified individual, which selection shall be binding on the parties.

.2 Mediation is a forum in which an impartial person, the mediator, facilitates communication between parties to promote reconciliation, settlement, or understanding among them. The parties hereby agree that mediation, at a minimum, shall provide for (i) conducting an on-site investigation, if appropriate, by the mediator for fact gathering purposes, (ii) a meeting of all parties for the exchange of points of view and (iii) separate meetings between the mediator and each party to the dispute for the formulation of resolution alternatives. The parties agree to participate in mediation in good faith for up to thirty (30) calendar days from the date of the first mediation session, unless mutually agreed otherwise. Should the parties fail to reach a resolution of the dispute through mediation, then each party is released to pursue other remedies available to them.

16.3 Resolution of Disputes between Contractor and Subcontractor or Supplier: If a dispute exists concerning a claim between a CONTRACTOR and a Subcontractor or Supplier, the CONTRACTOR agrees to participate with such Subcontractor and/or Supplier in a process substantially paralleling the steps set out in paragraphs 16.1 and 16.2 above, including the delivery of written notices, submission of supporting data, negotiation with previously uninvolved personnel, and, if such alternative dispute resolution process is unsuccessful, mediation between the parties to the claim. If the CONTRACTOR and Subcontractor or Supplier agreement provides an alternative dispute resolution process, which provides substantially equivalent rights to those set forth herein, it may be followed, unless the CONTRACTOR and affected Subcontractor or Supplier agree to follow the process outlined above. The OWNER is not a party to the alternative dispute resolution process between the CONTRACTOR and Subcontractor or Supplier and will not pay any costs incurred in the process. Each party will be responsible for its own expenses incurred in the process, which will include an equal share of the mediation expenses, unless otherwise determined by the mediator. NOTICE: THE PROCESS SET FORTH HEREIN IS NOT A SUBSTITUTE FOR THE STATUTORY PAYMENT BOND CLAIM PROCESS.

16.4 Claim Calculation:

16.4.1 Delay Claims: The intent of paying for delay damages is to reimburse the CONTRACTOR for actual expense arising out of a compensable delay. No profit or force account markups, other than labor burden, will be allowed for delay claims by the CONTRACTOR seeking reimbursement for expenses arising out of an alleged event of delay. No consequential damages will be allowed to the CONTRACTOR in connection with any claimed delays. If the CONTRACTOR requests compensation for delay damages and the delay is determined to be compensable, then standby equipment costs and project overhead compensation will be based on the duration of the compensable delay and the following:

.1 Standby equipment costs will not be allowed during periods when the equipment would have otherwise been idle. Standby equipment time will not exceed more than eight (8) hours per twenty-four (24) hour day, forty (40) hours per week, and one hundred seventy-six (176) hours per month. Standby equipment costs will be paid at 50 percent (50%) of the applicable Rental Rate Blue Book rates and calculated by dividing the monthly rate by one hundred seventy-six (176), multiplying the result by the number of standby hours and multiplying that number by the regional adjustment factor and the rate adjustment factor contained in the Blue Book. Operating costs will not be allowed.

.2 Project overhead will be determined from actual costs that the CONTRACTOR will be required to document. Project overhead is defined as the administrative and supervisory expenses incurred at the work site and will not include home office overhead.

16.4.2 General: Except as limited with respect to delay claims, as set forth above, the criteria set forth in Section 11.4.1 may be used as a basis to calculate an adjustment in the Contract Amount in the resolution of a claim, provided that there will be no compensation for home office overhead.

16.5 MBE/WBE Program Progressive Sanctions: CONTRACTOR is subject to progressive sanctions for failure of CONTRACTOR to comply with Austin City Code, Chapter 2-9A, as amended: “Minority-owned and Women-owned Business Enterprise Procurement Program.” Available sanctions for Program violations are set forth in Program rules adopted by the Small and Minority Business Resources Department (SMBR), as amended, and may include the following progressive sanctions for Program violations within a rolling 24-month period: (i) a period of probation for up to six (6) months for the first violation (ii) a period of suspension from bidding for up to 24 months for the second violation, and (iii) a period of

debarment for up to five (5) years for the third violation. If the CONTRACTOR engages in more than one of the violations listed below at any given time, OWNER has the discretion to determine whether such actions should be counted as multiple violations of the MBE/WBE Ordinance. Program violations include:

.1 providing false or misleading information to the OWNER in connection with the submission of a Bid, responses to request for qualifications or Proposals, Good Faith Efforts documentation, post award compliance or other Program operations;

.2 substituting M/WBE Subcontractors without first receiving approval for such substitutions;

.3 failure to comply with the approved Compliance Plan without an approved request for a change, an approved Change Order or other approved change to the Contract;

.4 violation of any other provision of the "Minority-owned and Women-owned Business Enterprise Procurement Program";

.5 providing false or misleading information to the OWNER in connection with an application for or challenge to certification, recertification or decertification as a MBE/WBE; and

.6 bid shopping.

The Progressive Sanctions will be administered in accordance with the City of Austin Purchasing Office Probation, Suspension, and Debarment Procedures for Vendors, which includes notice and an opportunity for a hearing.

ARTICLE 17 – MISCELLANEOUS

17.1 Venue: In the event of any suit at law or in equity involving the Contract, venue shall be exclusively in Travis County, Texas and the laws of the State of Texas shall apply to the interpretation and enforcement of the Contract.

17.2 Extent of Agreement: This Contract represents the entire and integrated agreement between the OWNER and CONTRACTOR with respect to the subject matter hereof and supersedes all prior negotiations, representations or agreements, either written or oral.

17.3 Cumulative Remedies: The rights and remedies available to the parties are not to be construed in any way as a limitation of any rights and remedies available to any or all of them which are otherwise imposed or available by laws or regulations, by special warranty or guarantees or by other provisions of the Contract Documents, and the provisions of this paragraph will be as effective as if repeated specifically in the Contract Documents in connection with each particular duty, obligation, right and remedy to which they apply. Specifically, the OWNER is not required to only assess liquidated damages, and OWNER may elect to pursue its actual damages resulting from the failure of the CONTRACTOR to complete the Work in accordance with the requirements of the Contract Documents.

17.4 Severability: If any word, phrase, clause, sentence or provision of the Contract, or the application of same to any person or set of circumstances is for any reason held to be unconstitutional, invalid or unenforceable, that finding shall only effect such word, phrase, clause, sentence or provision, and such finding shall not affect the remaining portions of this Contract; this being the intent of the parties in entering into the Contract; and all provisions of the Contract are declared to be severable for this purpose.

17.5 Independent Contractor: The Contract shall not be construed as creating an employer/employee relationship, a partnership, or a joint venture. CONTRACTOR is an independent contractor and CONTRACTOR's services shall be those of an independent contractor. CONTRACTOR agrees and understands that the Contract does not grant any rights or privileges established for employees of OWNER.

17.6 Prohibition of Gratuities: OWNER may, by Written Notice to CONTRACTOR, terminate the Contract without liability if is determined by OWNER that gratuities were offered or given by CONTRACTOR or any agent or representative of CONTRACTOR to any officer or employee of OWNER with a view toward securing the Contract or securing favorable treatment with respect to the awarding or amending or the making of any determinations with respect to the performing of such Contract. In the event the Contract is terminated by OWNER pursuant to this provision, OWNER shall be entitled, in addition to any other rights and remedies, to recover or withhold the amount of the cost incurred by CONTRACTOR in providing such gratuities.

17.7 Prohibition Against Personal Interest in Contracts: No officer, employee, independent consultant, or elected official of OWNER who is involved in the development, evaluation, or decision-making process of the performance of any solicitation shall have a financial interest, direct or indirect, in the Contract resulting from that solicitation. Any violation of this provision, with the knowledge, expressed or implied, of CONTRACTOR shall render the Contract voidable by OWNER.

17.8 OWNER'S Right to Audit:

17.8.1 Records means all records generated by or on behalf of CONTRACTOR and each Subcontractor and Supplier of CONTRACTOR, whether paper, electronic, or other media, which are in any way related to performance of or compliance with this Contract, including, without limitation:

.1 accounting records;

.2 written policies and procedures;

.3 subcontract files (including proposals of successful and unsuccessful Bidders, Bid recaps, etc.);

.4 original estimates and estimating work sheets;

.5 correspondence;

.6 Change Order files (including documentation covering negotiated settlements);

.7 back charge logs and supporting documentation;

.8 general ledger entries detailing cash and trade discounts earned, insurance rebates and dividends;

.9 lump sum agreements between CONTRACTOR and any Subcontractor or Supplier;

.10 records necessary to evaluate: Contract compliance, Change Order pricing, and any Claim submitted by CONTRACTOR or any of its payees; and

.11 any other CONTRACTOR record that may substantiate any charge related to this Contract.

17.8.2 CONTRACTOR shall allow OWNER'S agent or its authorized representative to inspect, audit, and/or reproduce, or all three, all Records generated by or on behalf of CONTRACTOR and each Subcontractor and Supplier, upon OWNER'S written request. Further, CONTRACTOR shall allow OWNER'S agent or authorized

representative to interview any of CONTRACTOR'S employees, all Subcontractors and all Suppliers, and all their respective employees.

17.8.3 CONTRACTOR shall retain all its Records, and require all its Subcontractors and Suppliers to retain their respective Records, during this Contract and for three (3) years after final payment, until all audit and litigation matters that OWNER has brought to the attention of CONTRACTOR are resolved, or as otherwise required by law, whichever is longer. OWNER'S right to inspect, audit, or reproduce Records, or interview employees of CONTRACTOR or its respective Subcontractors or Suppliers exists during this Contract, and for three (3) years after final payment, until all audit and litigation matters that OWNER has brought to CONTRACTOR'S attention are resolved, or as otherwise required by law, whichever is longer, and at no cost to OWNER, either from CONTRACTOR or any of its Subcontractors or Suppliers that may furnish Records or make employees available for interviewing.

17.8.4 CONTRACTOR must provide sufficient and accessible facilities during its normal business hours for OWNER to inspect, audit, or reproduce Records, or all three, and to interview any person about the Records.

17.8.5 CONTRACTOR shall insert these requirements in each written contract between CONTRACTOR and any Subcontractor or Supplier and require each Subcontractor and Supplier to comply with these provisions.

17.9 Survival: The terms and conditions of this Contract, which contemplate a period of time beyond completion or termination will survive such completion or termination and not be merged therein or otherwise terminated.

17.10 No Waiver: The waiver of any provision of this Contract will not be deemed to be a waiver of any other provision of this Contract. No waiver of any provision of this Contract will be deemed to constitute a continuing waiver unless expressly provided in writing, nor will a waiver of any default be deemed a waiver of any subsequent defaults of the same type. The failure at any time to enforce this Contract, whether the default is known or not, shall not constitute a waiver or estoppel of the right to do so.

17.11 Conditions Precedent to Right to Sue: Notwithstanding anything herein to the contrary, the CONTRACTOR will have at least 90 days to give notice of a claim for damages as a condition precedent to the right to sue on the Contract, subject to the contractual claim and alternative dispute resolution processes set forth herein.

17.12 Waiver of Trial by Jury: OWNER and CONTRACTOR agree that they have knowingly waived the right to trial by jury and have instead agreed that, in the event of any litigation arising out of or connected to this Contract, to proceed with a trial before the court, unless both parties subsequently agree otherwise in writing.

17.13 Contractor Evaluation: The Owner will review and evaluate the Contractor's Work and performance on the Project and provide the Contractor with a written Contractor Evaluation Report in accordance with City of Austin Administrative Rule R161-13.37. Rule R161-13.37 provides an appeal process.

http://www.austintexas.gov/department/contract-management

End

The Supplemental General Conditions contained herein amend or supplement the General Conditions, Section 00700.

ARTICLE 1 - DEFINITIONS

1.11 Contract: Add the following: "This Contract is an indefinite delivery/indefinite quantity (IDIQ) service contract that contains an indefinite quantity of Work and components of the Work and indefinite delivery dates.

1.1.2 Contract Amount: Add the following: "The final Contract Amount is equal to the aggregate of all executed Work Assignments not to exceed the amount authorized by Austin City Council."

1.18 Drawings: Add the following: "Drawings for Work Assignments to be completed during this Contract period are not included in the Bid Documents. Drawings for individual Work Assignments will be provided to the CONTRACTOR with Work Assignments throughout the Contract period as Work Assignments are issued on an as-needed basis."

1.20 Engineer/Architect (E/A): Add the following:

"Name: John Routh P.E. City of Austin (Austin Energy)

Add the following definitions:

1.51 Work Assignment: " The OWNER will initiate work under this IDIQ contract as individual Work Assignments. Each individual Work Assignment will define the scope, identify the subcontractors and confirm the Contract Time for the specific Work Assignment to be performed. Given the context of the scope of Work under this Contract and the method of determining the Contract Amount and Contract Time for each Work Assignment, each Work Assignment will be considered to be the equivalent of a negotiated Change Order based upon the unit prices and other applied factors."

1.52 Allowance: Allowance is defined as "a not-to-be-exceeded amount", either individually or in the aggregate, which is established between the OWNER and the CONTRACTOR as part of the bid documents when the precise scope of a particular line item(s) has not been defined to a level which is adequate for the CONTRACTOR to provide a definitive line item pricing for that particular scope of Work. The use of any Allowances by the CONTRACTOR will be subject to the OWNER's sole approval and it is the OWNER's intent to minimize the use of Allowances to the fullest extent possible. The aggregate amount of all Work Assignment payments for Mobilization will not exceed the Allowance. An allowance for CONTRACTOR's mobilization has been established by the OWNER, as mobilization requirements may vary from Work site to Work site. The CONTRACTOR will be paid for mobilization of personnel, equipment and materials to the Work site from this allowance. Typically, only one mobilization will be paid per Work Assignment, and the amount to be paid for mobilization for a given Work Assignment is defined in Section 01020-IDIQ, Mobilization.

1.53 Contract Time: The duration of time to complete each Work Assignment. The Contract Time will be included in each Work Assignment and must be completed within that time. For all Work Assignments not completed within the Contract Time, liquidated damages will be assessed per day and will be calculated separately for each Work Assignment.

ARTICLE 2 – PRELIMINARY MATTERS

2.3 Commencement of Contract Time: Notice To Proceed ("NTP"): Delete in its entirety and replace with the following:

"The date that the Work Assignment is signed by the OWNER and delivered to the CONTRACTOR with an accompanying Notice to Proceed will be the commencement date for the purposes of the measurement of Contract Time for that individual Work Assignment."

"The OWNER will issue a written NTP for each Work Assignment describing the Work to be performed and the time allowed for the completion of the Work, as described in Section 01010-IDIQ, Summary of Work. CONTRACTOR agrees to commence each Work Assignment within the time set forth in subsequently issued NTP describing such Work Assignment and to substantially complete such Work Assignment within the time set forth in such NTP. Contract Time for specific Work Assignments is of the essence and all Work shall be completed within the stated duration of each assignment. "

2.4 Before Starting Construction:

Delete 2.4.2.1 and replace with the following (changes to the original text are identified by underlining):

"**.1** to the extent not sufficiently set forth in the NTP and as required by OWNER's Representative, a preliminary progress schedule indicating the times (number of days or dates) for starting and completing the various stages of the Work, including any Milestones specified in the Contract Documents, identifying the critical path for completing the Work, identifying when all Subcontractors will be utilized, and taking into consideration any limitations on Working Hours;"

ARTICLE 3 – CONTRACT DOCUMENTS: INTENT, AMENDING, REUSE

3.1 Intent: Add the following:

"3.1.3 Federal Aid - Assurances: In the event that a Work Assignment is federally funded, the federal contracting provisions set forth in Section 00810A, and any additional requirements from the funding agency, will be required contract provisions and will be part of the Work Assignment for all purposes. The provisions of Section 00810A are intended to supplement and supersede and be controlling over the City's standard 00700 General Conditions and other Contract Document provisions to the extent of any conflict with Section 00810A. The CONTRACTOR/Bidder acknowledges and agrees that CONTRACTOR/Bidder has the obligation to comply with the attached federal-aid assurances and contract provisions. This Section 3.1.3 will constitute the CONTRACTOR's/Bidder's accepted proposal and agreement with respect to the attached federal-aid assurances and contract provisions.

In the event of any ambiguity or inconsistency between the Section 00810A federal aid assurances and the Contract Documents, the federal provision will control to the extent consistent with the overall intent of the respective Work Assignment. Notice of a federal award will be specified in the Work Assignment. The prevailing wage rates, Section 00830, will be replaced with the current wage rates at the time of the federal assignment. Additional federal requirements, if applicable, will be provided to CONTRACTOR with the respective Work Assignment. If the CONTRACTOR/Bidder has any questions as to the applicability of a Section 00700 or Section 00810A provision or any federal requirement, the CONTRACTOR/Bidder shall submit a request for information to the OWNER. The OWNER will have three (3) business days in which to respond."

ARTICLE 4 - AVAILABILITY OF LANDS; SUBSURFACE AND PHYSICAL CONDITIONS; REFERENCE POINTS

4.1 Availability of Lands: Add the following:

"CONTRACTOR shall contact OWNER's Transportation Department to obtain a Temporary Use of Right-of-Way Permit prior to beginning construction on any sidewalk/driveway or occupying any parking area/meters within the public right-of-ways."

ARTICLE 5 - BONDS AND INSURANCE

"5.3 Insurance:

5.3.1 CONTRACTOR Provided Insurance

5.3.1.1 General Requirements.

.1 CONTRACTOR shall carry insurance in the types and amounts indicated below for the duration of the Contract, which shall include items owned by OWNER in the care, custody and control of CONTRACTOR prior to and during construction and warranty period.

.2 CONTRACTOR must complete and forward the Certificate of Insurance, Section 00650, to OWNER before the Contract is executed as verification of coverage required below. CONTRACTOR shall not commence Work until the required insurance is obtained and until such insurance has been reviewed by OWNER. Approval of insurance by OWNER shall not relieve or decrease the liability of CONTRACTOR hereunder and shall not be construed to be a limitation of liability on the part of CONTRACTOR. CONTRACTOR must also complete and forward the Certificate of Insurance, Section 00650, to OWNER whenever a previously identified policy period has expired as verification of continuing coverage.

.3 CONTRACTOR's insurance coverage is to be written by companies licensed to do business in the State of Texas at the time the policies are issued and shall be written by companies with A.M. Best ratings of B+VII or better, except for hazardous material insurance which shall be written by companies with A.M. Best ratings of A- or better.

.4 All endorsements naming the OWNER as additional insured, waivers, and notices of cancellation endorsements as well as the Certificate of Insurance shall indicate: City of Austin, Capital Contracting Office, P.O. Box 1088, Austin, Texas 78767.

.5 The "other" insurance clause shall not apply to the OWNER where the OWNER is an additional insured shown on any policy. It is intended that policies required in the Contract, covering both OWNER and CONTRACTOR, shall be considered primary coverage as applicable.

.6 If insurance policies are not written for amounts specified below, CONTRACTOR shall carry Umbrella or Excess Liability Insurance for any differences in amounts specified. If Excess Liability Insurance is provided, it shall follow the form of the primary coverage.

.7 OWNER shall be entitled, upon request and without expense, to receive certified copies of policies and endorsements thereto and may make any reasonable requests for deletion or revision or modification of particular policy terms, conditions, limitations, or exclusions except where policy provisions are established by law or regulations binding upon either of the parties hereto or the underwriter on any such policies.

.8 OWNER reserves the right to review the insurance requirements set forth during the effective period of this Contract and to make reasonable adjustments to insurance coverage, limits, and exclusions when deemed necessary and prudent by OWNER based upon changes in statutory law, court decisions, the claims history of the industry or financial condition of the insurance company as well as CONTRACTOR.

.9 CONTRACTOR shall not cause any insurance to be canceled nor permit any insurance to lapse during the term of the Contract or as required in the Contract.

.10 CONTRACTOR shall be responsible for premiums, deductibles and self-insured retentions, if any, stated in policies. All deductibles or self-insured retentions shall be disclosed on the Certificate of Insurance.

.11 CONTRACTOR shall provide OWNER thirty (30) days written notice of erosion of the aggregate limits below occurrence limits for all applicable coverages indicated within the Contract.

.12 If OWNER owned property is being transported or stored off-site by CONTRACTOR, then the appropriate property policy will be endorsed for transit and storage in an amount sufficient to protect OWNER's property.

.13 The insurance coverages required under this contract are required minimums and are not intended to limit the responsibility or liability of CONTRACTOR.

5.3.1.2 Business Automobile Liability Insurance. Provide coverage for all owned, non-owned and hired vehicles. The policy shall contain the following endorsements in favor of OWNER:

a) Waiver of Subrogation endorsement CA 0444;

b) 30 day Notice of Cancellation endorsement CA 0244; and

c) Additional Insured endorsement CA 2048.

Provide coverage in the following types and amounts:

.2 A minimum combined single limit of $<1,000,000 minimum> per occurrence for bodily injury and property damage.

5.3.1.3 Workers' Compensation And Employers' Liability Insurance. Coverage shall be consistent with statutory benefits outlined in the Texas Workers' Compensation Act (Section 401). CONTRACTOR shall assure compliance with this Statute by submitting two (2) copies of a standard certificate of coverage (e.g. ACCORD form) to OWNER's Representative for every person providing services on the Project as acceptable proof of coverage. The Certificate of Insurance, Section 00650, must be presented as evidence of coverage for CONTRACTOR. Workers' Compensation Insurance coverage written by the Texas Workers Compensation Fund is acceptable to OWNER. CONTRACTOR's policy shall apply to the State of Texas and include these endorsements in favor of OWNER:

a) Waiver of Subrogation, form WC 420304; and

b) 30 day Notice of Cancellation, form WC 420601.

The minimum policy limits for Employers' Liability Insurance coverage shall be as follows:

.1 $1,000,000 bodily injury per accident, $1,000,000 bodily injury by disease policy limit and $1,000,000 bodily injury by disease each employee.

5.3.1.4 Commercial General Liability Insurance. The Policy shall contain the following provisions:

a) Contractual liability coverage for liability assumed under the Contract and all contracts relative to this Project.

b) Completed Operations/Products Liability for the duration of the warranty period.

c) Explosion, Collapse and Underground (X, C & U) coverage.

d) Independent Contractors coverage (Contractors/ Subcontractors work).

e) Aggregate limits of insurance per project, endorsement CG 2503.

f) OWNER listed as an additional insured, endorsement CG 2010.

g) 30 day notice of cancellation in favor of OWNER, endorsement CG 0205.

h) Waiver of Transfer of Recovery Against Others in favor of OWNER, endorsement CG 2404.

Provide coverages A&B with minimum limits as follows:

.2 A combined bodily injury and property damage limit of $1,000,000 minimum per occurrence.

5.3.1.5 Builders' Risk Insurance. CONTRACTOR shall maintain Builders' Risk Insurance or Installation Insurance on an all risk physical loss form in the Contract Amount. Coverage shall continue until the Work is accepted by OWNER. OWNER shall be a loss payee on the policy. If off-site storage is permitted, coverage shall include transit and storage in an amount sufficient to protect property being transported or stored.

5.3.1.7 Professional Liability Insurance. For Work which requires professional engineering or professional survey services to meet the requirements of the Contract, including but not limited to excavation safety systems, traffic control plans, and construction surveying, the CONTRACTOR or Subcontractors, responsible for performing the professional services shall provide Professional Liability Insurance with a minimum limit of $500,000 per claim and in the aggregate to pay on behalf of the assured all sums which the assured shall become legally obligated to pay as damages by reason of any negligent act, error, or omission committed with respect to all professional services provided in due course of the Work of this Contract.

ARTICLE 6 - CONTRACTOR'S RESPONSIBILITIES

6.6 Permits, Fees: Add the following:

"OWNER will obtain and pay for the following permits, licenses and/or fees:

.2 Building Permit(s). OWNER's responsibility for obtaining and paying for the Building Permit(s) shall be limited to the following where applicable: the required Electrical Service (Aid of Construction) Fee, Water and Wastewater Tap Fees, Water and Wastewater Capital Recovery Fees, and Septic Permit Fee. The OWNER's responsibility for obtaining and paying for the Building Permit(s) excludes securing and paying for the following where applicable: Driveway Permit (Concrete) Fee, Electrical Permit, Mechanical Permit, Plumbing Permit, Water Engineering Inspection Fee, Temporary Use of Right-of Way Permit, the gas company's Gas Yard Line Contribution Fee, and any other permits/fees not listed above.

.3 Texas Department of Transportation permit for Work in State right-of-way.

6.11 Safety and Protection: Add the following to paragraph 6.11.3:

"6.11.3 At the minimum, the safety representative will be certified in personal protective equipment, hazard communication, demolition and blasting, trench/excavation, hand and power tools, welding/cutting, cranes/derricks/hoists/conveyors/, scaffolding, confined space, CPR and first aid."

ARTICLE 10 – CHANGE IN THE WORK: Add the following:

10.6 Actual Quantities:

This Contract is a unit-price IDIQ contract. Final quantities of materials and items of Work will vary depending upon the subsequently issued Work Assignments and actual conditions encountered through the term of the Contract. No "change" will occur unless the total Contract Amount is increased. The Contract Amount is not a guarantee of an amount of available Work. The amount of Work will be dependent upon subsequently issued Work Assignments and actual site conditions. Reduction of the Units used from those shown in the 00300U-IDIQ Bid Form or the total Contract Amount will not constitute a change. The optional terms are dependent upon funding by the City of Austin City Council for each such each year. In addition, the actual quantities to be used are unknown and depend upon actual site conditions and quantities of specific items will vary from those used in the bid. CONTRACTOR will accept and perform the quantities of Work necessary to complete individual Work Assignments, as determined by the OWNER.

ARTICLE 11 - CHANGE OF CONTRACT AMOUNT

11.4 Determination of Value of Work: Add the following to paragraph 11.4.1.2:

".2 In the case of a Change Order determined by a mutually agreed lump sum properly itemized and supported by sufficient substantiating data, including documentation by subcontractors performing the work, to permit evaluation, use the following method:

COMPONENT ONE

1a - the cost of labor (base rate, including fringe benefits),

1b - the cost of material and equipment to be incorporated in the Work, and

1c - the cost of tools, equipment and facilities necessary to accomplish the Work described in the change.

COMPONENT TWO - The cost of payroll taxes and insurance, Liability and Builder's Risk Insurance, shall be calculated as follows:

2a - Payroll taxes and Workers' Compensation Insurance - 25% of payroll (Item 1a)

2b - Liability and Builder's Risk Insurance -2% of "total costs" (Items 1a, 1b, 1c, and 2a)

COMPONENT THREE - Overhead and profit shall be calculated as follows:

3a - For Subcontractors and for those portions of the Work performed by CONTRACTOR'S own forces:

- 15% of the first $10,000.00 of costs and 10% of the balance over $10,000.00.
- ("costs" = Items 1a, 1b, and 1c, above, broken down into Contractor and Subcontractor costs).

3b - For the CONTRACTOR for that portion of the Work performed by Subcontractors:

- 10% of the first $10,000.00 of the Subcontractor costs and 7.5% of the balance over $10,000.00.
- ("costs" = Items 1a, 1b, and 1c, above, broken down into Subcontractor costs)

COMPONENT FOUR - Bonds

Performance and Payment Bond according to the following table ("TOTAL COST" = Items 1a, 1b, 1c, 2a, 2b, 3a and 3b,):

DOLLAR VALUE OF CONTRACT			% OF TOTAL COST OF CHANGE ORDER ADDED FOR BOND EXPENSE
100,000	or	less	2.5
100,001	thr	500,000	1.5
500,001	thr	2,500,000	1.0
2,500,00	thr	5,000,000	0.75
5,000,00	thr	7,500,000	0.70
OVER 7,500,000			0.65

The total costs for the change, whether additive or deductive, shall be the sum total of COMPONENTS ONE - FOUR.

11.4 Determination of Value of Work: Add the following to paragraph to the end of the list:

".5 Contract Extension Price Adjustment:

The OWNER may exercise its option by notice to the successful bidder/CONTRACTOR prior to the expiration of the initial term. The unit prices bid by the successful bidder/CONTRACTOR shall remain firm throughout the initial term of the Contract. Bid prices may be adjusted for Contract extensions on the basis of an increase or decrease of the existing prices upwards or downwards in accordance with the 20 City average Engineering News Record Construction Cost Index (CCI) (at the time of the notice of contract extension) divided by the current area CCI at the time of bid. The adjusted prices will be included in a change order and will remain firm throughout the Contract extension period. Upon receipt of the notice of the exercise of the option for an additional contract term by the OWNER, the CONTRACTOR must request a Bid price adjustment in writing or the then current Bid prices will remain in force and effect. The prevailing wage rates, Section 00830, will be replaced at the time of an adjusted bid increase with the then current prevailing wage rates."

Unit Price Work: Delete 11.6.1, 11.6.4, and 11.6.5 and replace with the following:

"11.6.1 While the Contract Documents provide that all or part of the Work is to be unit price Work, quantities used in 00300U-IDIQ are indefinite, and are therefore not guaranteed, and are solely for the purpose of the evaluation

and comparison of Bids. Determinations of the actual quantities and classifications of unit price work performed by CONTRACTOR will be made by OWNER's Representative. OWNER's Representative will review with CONTRACTOR the preliminary determinations on such matters before rendering a written decision thereon (by recommendation of an Application for Payment or otherwise)."

"11.6.4 Except as otherwise provided at the exercise of an additional one year option term, neither the OWNER nor CONTRACTOR may make any claim for adjustment in unit prices for differences in actual quantities relative to the bid quantities."

"11.6.5 Deleted."

ARTICLE 13 - TESTS AND INSPECTIONS; CORRECTION, REMOVAL OR ACCEPTANCE OF DEFECTIVE WORK

13.7 Warranty Period: Add the following:

"**13.7.5** OWNER will utilize a "Warranty Item Form" (attached at the end of this Section) for the purpose of providing Written Notice of warranty defects to CONTRACTOR. CONTRACTOR shall date, sign, complete and return the form to OWNER when the defect is corrected, including such information on or attached to the form to describe the nature of the repairs or corrections that were made. If the defect cannot be corrected in seven (7) Calendar Days, CONTRACTOR shall provide a written explanation to the OWNER's Representative describing the repairs needed and the time required completing the repairs."

ARTICLE 14 - PAYMENTS TO CONTRACTOR AND COMPLETION

14.1 Application for Progress Payment: Add the following to the list of items required with applications for payment:

".4 Pre-Construction and Construction Progress Photos."

14.7 Substantial Completion:

Reference 14.7.1, and add the following provision:

"**14.7.1.1** For water and wastewater lines construction, Substantial Completion means that the Work, including all testing and disinfection, has been completed and accepted and the line(s) placed into service. A certificate of Substantial Completion will not be issued. Work that remains after Substantial Completion could include the final pavement of roadways, adjustment of structures to final grade and re-vegetation. Owner's Representative will issue a notice specifying what portion of the Work is partially completed for the purpose of payment and what Work remains to be done on the portion being accepted as Substantially Complete. This subsection 14.7.1.1 changes the 00700 General Conditions definition of

Substantial Completion."

Add the following:

"**14.7.3** Individual Work Assignments, as issued by the OWNER to the CONTRACTOR, will define Substantial Completion for individual projects."

14.8 Partial Utilization: Delete 14.8.1 and replace with the following (changes to the original text are identified by underlining):

".1 OWNER at any time may request CONTRACTOR to permit OWNER to use any such part of the Work which OWNER believes to be ready for its intended use and substantially complete. If CONTRACTOR agrees that such part of the Work is substantially complete, CONTRACTOR will certify to OWNER's Representative that such part of the Work is substantially complete and request OWNER's Representative to issue a <u>notice specifying what portion of the Work is substantially complete for the purpose of payment and what Work remains to be done on the portion being accepted</u>. CONTRACTOR at any time may notify OWNER's Representative that CONTRACTOR considers any such part of the Work ready for its intended use and substantially complete and request OWNER's Representative to issue a <u>notice specifying what portion of the Work is partially completed for the purpose of payment and what Work remains to be done on the portion being accepted</u>. The provisions of paragraphs 14.7.1 and 14.7.2 will apply with respect to <u>the notice specifying what portion of the Work is partially completed for the purpose of payment and what Work remains to be done on the portion being accepted.</u>"

WARRANTY ITEM NO. _____

(PROJECT NAME)

The General Conditions of the Contract require that Warranty Defects be corrected within 7 days after written notice is received.

TO: _____
contractor name address / telephone / fax / email

ATTENTION OF: _____

FROM: _____
project manager name / address / telephone / fax / email

PROJECT: _____
name / location / CIP ID number

END OF ONE YEAR WARRANTY:_____

SUBJECT: _____

[ ] If checked, the damage requires immediate attention. The CONTRACTOR has been called.
[ ] If checked, the Consultant has been asked to consult with the CONTRACTOR on the problem.

PLEASE CORRECT OR REPAIR THE FOLLOWING ITEM(S):

DATE OF REQUEST_____ **SIGNATURE** _____
Project Manager

xc:
[ ]_____Phone No._____ [
]_____Phone No. _____ [
]_____Phone No._____ [
]_____Phone No._____

RESPONSE FROM CONTRACTOR: DATE CORRECTION WAS MADE:_____

The CONTRACTOR must endeavor to correct the defect within 7 calendar days after written notice is given. If the defect cannot be corrected in that time, CONTRACTOR shall provide a written explanation to the OWNER's Representative describing the repairs needed and the time required to complete the repairs.

Description of corrections made:

DATE OF REPLY_____SIGNATURE_____

When the repair is complete, the CONTRACTOR should return a copy to each of the following:

[ ]_____Phone No._____ [
]_____Phone No. _____ [
]_____Phone No._____ [
]_____Phone No._____

SECTION 00100 – INSTRUCTIONS TO BIDDERS

2. Estimates of Quantities (Unit Price Contracts Only)

Delete paragraph and replace with the following:

"The estimated quantities of the line item components of the Work set forth in Bid Form Section 00300U-IDIQ are included solely for the purpose of providing a reasonable basis for the calculation of bid amounts based upon the unit prices bid. The actual quantities of Work under the Contract will vary from the estimated quantities set forth above and will be dependent upon the scope of Work for each Work Assignment. There is no representation or guarantee of any set amount of any Bid item. Payment to CONTRACTOR will only be made for actual quantities of Work performed or materials furnished in accordance with each Work Assignment. It is agreed and understood that quantities may be increased or decreased as required by subsequently issued Work Assignments and as provided in Section 00700, General Conditions, and as may be modified by Section 00810-IDIQ, Supplemental General Conditions."

12. Award and Execution of Contract

Add as the third sentence of first paragraph:

"The initial Contract Amount will not exceed **$6,000,000** for the initial Contract Term and **$3,000,000.** for each extension option for a total potential Contract Amount not to exceed **$15,000,000 for a total of 5 years**, which may be increased subject to the availability of funding and further approval of the Austin City Council."

END

I. Payment

A. Classification Definitions, Building and Heavy and Highway

Definitions for Building Construction and Heavy and Highway classifications shall conform to the current "Dictionary of Occupational Titles" as published by the U.S. Department of Labor.

B. Minimum Wages

Workers on Project shall be paid not less than wage rates, including fringe benefits, as published by the Department of Labor (DOL) or the $13.03 minimum wage required by City of Austin Ordinance No. 20160324-015, whichever is higher. The Total Minimum Wage required can be met using any combination of cash and non-cash qualified fringe benefits provided the cash component meets or exceeds the $13.03 minimum wage required.

Such wage rates shall be used throughout the Contract. If a classification is to be used, which is not listed in the attached wage rates, CONTRACTOR shall submit to OWNER rates and classification proposed for use, for approval, **prior** to performance of the Work.

All laborers and mechanics working upon the Work for this Project shall be paid unconditionally and without subsequent deduction or rebate on any account (except such payroll deductions as are permitted by regulations issued by Secretary of Labor under the Copeland Act, Title 29 CFR, Part 3) full wages accrued and when due, computed at rates not less than wage rates bound herein pertaining to type of Work being performed. When Work is of such a nature that both Building and Heavy and Highway wage scales are incorporated into contract, CONTRACTOR shall pay wage rates to mechanics or laborers performing Work in more than one classification at the rate indicated for each classification for time actually worked as determined by area practice applicable to type (Site Construction Crafts or Building Construction Crafts) of Work being performed without regards to skill. Salaried specialists (project superintendent and administrative personnel only) in the permanent employment of CONTRACTOR do not fall under any Wage Classification. A supervisor/foreman who is not exempt under 29CFR Part 541 and who spends more than a substantial amount of time (20 percent) in a given workweek as a laborer or mechanic must be paid the applicable Wage Rate for the classification of work performed for all hours engaged in such work as a laborer or mechanic.

Wage rates shall be posted by CONTRACTOR at site(s) of Work in prominent, easily accessible places where they can be seen by all workers. The following shall also be posted by the CONTRACTOR: City of Austin wage contact posters (English and Spanish), City of Austin Equal Employment Opportunity posters (English and Spanish), Workers' Compensation Notice (English and Spanish), Texas Payday Law (English and Spanish), City Rest Break Ordinance (English

and Spanish), City of Austin Non-Discrimination Statement (related to Title VI of the Civil Rights Act), and Federal Notices, as appropriate.

C. Overtime Requirements

No CONTRACTOR, Subcontractor, or Sub-subcontractor contracting for any part of contract Work which may require or involve the employment of laborers or mechanics shall require or permit any laborer or mechanic in any workweek in which he is employed on such Work, to work in excess of forty hours in such workweek unless such laborer or mechanic receives compensation at a rate not less than one and one-half times their basic rate of pay for all hours in excess of forty hours in such workweek.

Overtime wages must be calculated using the Adjusted Wage Rate specified in the Wage Rate Determination or the actual basic rate of pay, whichever is higher.

II. Apprentices

Locally & Federally Funded Projects

The terms journeyman and apprentice apply to both union and independent workers, and are not intended to imply that these positions are union workers only.

Apprentices and Trainees will be permitted to work as such only when they are registered, individually, under a bonafide Apprenticeship or Trainee program registered with the Bureau of Apprenticeship and Training, United States Department of Labor. The allowable ratio of Apprentices or Trainees to journeymen in any craft classification shall not be greater than the ratio permitted to CONTRACTOR as stated in the registered apprenticeship program standards. Any employee listed on a payroll at an Apprentice or Trainee wage rate, who is not registered as above, shall be paid the wage rate provided in Contract for Work employee actually performed. CONTRACTOR, Subcontractor, or Sub-subcontractor shall furnish to OWNER written evidence of registration of his program for Apprentices and Trainees as well as of the appropriate ratios and wage rates, for the area of construction **prior** to using any Apprentices or Trainees on this Contract.

III. Withholding of Payments

OWNER may withhold or cause to be withheld from CONTRACTOR as much of the accrued payments as necessary to pay laborers and mechanics employed by CONTRACTOR, Subcontractors, or Sub-subcontractors the amount of wages required to comply with the Contract. In the event of nonpayment of wages to laborers or mechanics working on the site of the Work of this Contract, OWNER may, after Written Notice to CONTRACTOR, take such action as may be necessary to cause suspension of any further payments or advance of funds to CONTRACTOR until such violations have ceased and until restitution has been made. Payments may also be withheld if CONTRACTOR fails to maintain weekly payroll reports or fails to provide copies in a timely manner upon request of Owner.

IV. Payrolls

A. CONTRACTOR shall keep records showing:

1. the name, address and occupation of each worker employed by the CONTRACTOR or subcontractor(s) in the construction of the public work.

2. the actual per diem wages paid to each worker.

3. Employee Certification. CONTRACTOR, all levels of Subcontractors shall identify in writing, the classification agreed to by all laborers and mechanics employed by them in the execution of the Contract, and pay not less than rates specified in the attached Wage Rate Determination(s). Contractor shall prepare a completed form for the signature of Employee and a witness shall sign the form in the presence of Employee. If work performed by worker is different than the trade classification agreed upon, the worker shall be paid for that work no less than the minimum prevailing wage for that specified trade.

4. Payroll Deduction Authorization Form. CONTRACTOR, Subcontractor, and Subsubcontractor shall prepare for employee signature a payroll deduction authorization form to identify all payroll deductions excluding those required by statute, such as federal income taxes, medicare and social security.

B. The record shall be open at all reasonable hours to inspection by the officers and agents of the Owner as requested. CONTRACTOR will be responsible to provide copies of records as requested by the Owner within two (2) working days. Payrolls relating to this Work shall be maintained during term of Contract and preserved for a period of three (3) years thereafter by CONTRACTOR for all laborers and mechanics working on the Work.

C. A Statement of Compliance, a letter signed and dated by party responsible for supervising the payment of persons employed by CONTRACTOR or subcontractor shall accompany payrolls required by Owner. The Statement of Compliance letter shall identify but is not limited to:

1. name of signatory party and title,
2. name of project, payroll period and
3. name of CONTRACTOR or Subcontractor.

The signed letter attests that the payroll complies with 29CFR issued by the Secretary of Labor.

D. Federal Funding

In the event that federal funding is used:

1. Contractor and all levels of Subcontractors shall submit weekly certified payroll reports and signed wage compliance statements to the Owner's designated office no later than seven (7) calendar days after the scheduled payday.

2. Contractors and all levels of Subcontractors shall pay all "mechanics and laborers" not less often than once per week, for work performed the previous week.

3. Submit to the Owner's designated office Standard Form 1413, Statement and Acknowledgement, from each subcontractor prior to the subcontractor performing work on the project.

V. Noncompliance

According to Chapter 2258 Texas Government Code Title 10A, a CONTRACTOR or subcontractor(s) who violates this section shall pay to the political subdivision on whose behalf the contract is made, $60 for each worker employed for each calendar day or part of the day that the worker is paid less than the wage rates stipulated in the contract. A public body shall use any money collected under this section to offset the costs incurred in the administration of this chapter.

Confirmed Disciplinary action taken by CONTRACTOR against employees who provide information during an interview or investigation by the Owner on wages received, may result in suspension or debarment from consideration of award of City contracts.

VI. Area Practice

A. Heavy and Highway Construction Rates shall be used on this Project, unless the Project consists primarily of Building Construction and Building Construction Rates are to be used.

1. Building Construction consists generally of all aspects of construction of buildings, which are sheltered enclosures with walk-in access for the purpose of housing persons, machinery, equipment or supplies, including without limitation the installation of utilities and equipment, both above and below grade level, as well as incidental demolition, grading, utilities, paving and other site work. Buildings need not be "habitable" to be classified as Building Construction and the installation of heavy machinery and/or equipment will not generally change a Building Construction project's classification.

2. The determination of Building Construction Wage Rates includes all construction trades and work necessary to complete a building, regardless of the number of contracts involved, so long as all such contracts are closely related in purpose, time and place.

B. For projects that involve both Building Construction and Heavy and Highway trades, the following classifications shall be used:

1. A multiple classification shall be used if Building Construction items are more than 20% of the Heavy and Highway project cost.

2. A multiple classification shall be used if Heavy and Highway Construction items are more than 20% of the Building Construction Project cost.

C. Split classifications/multiple wage rate schedules: When construction work requires that an employee perform work under multiple classifications or multiple wage scales, the employer must pay that worker (at least) the

highest prevailing wage or the employer payroll records must accurately set forth the times spent performing the work of each classification and under each scale. For those projects that involve both Building Construction and Heavy and Highway trades, the Heavy and Highway wage rates may only be applied to workers when engaged in site work at least five (5) feet beyond the building.

VII. Texas Open Records Act

Unless covered by an exception to mandatory disclosure under the Texas Public Information Act, Chapter 552, Texas Government Code, any and all documents submitted to the City of Austin become Public Records and are, therefore, subject to public disclosure.

Wage Rates For This Project Are Attached

End

WAGE RATE DETERMINATION

BUILDING CONSTRUCTION TYPE

COUNTY NAME : TRAVIS

Wages based on DOL Prevailing Wage Rate General Decision:TX160323 5/27/2016 TX323 and City of Austin Ordinance #20160324-015

DOL Rate column is for information only. The Total Minimum Wage Rate is derived from the Adjusted Wage Rate Required pursuant to City Ordinance plus the DOL Fringes and can be met using any combination of cash and non-cash qualified fringe benefits, provided the cash component is at least $13.03/hour.

CLASSIFICATION	DOL RATE for info only	ADJUSTED WAGE RATE REQUIRED pursuant to City Ordinance	DOL FRINGES	TOTAL MINIMUM WAGE RATE REQUIRED
Asbestos Worker/Heat & Frost Insulator (Duct, Pipe, and Mechanical System Insulation)	$ 21.57	$ 21.57	$ 10.02	$ 31.59
Boilermaker	$ 23.14	$ 23.14	$ 21.55	$ 44.69
Bricklayer	$ 20.07	$ 20.07	$ -	$ 20.07
Carpenter	$ 20.75	$ 20.75	$ 7.30	$ 28.05
Carpenter (Acoustical Ceiling Installation only)	$ 14.00	$ 14.00	$ -	$ 14.00
Carpenter (Form Work Only)	$ 15.62	$ 15.62	$ 0.05	$ 15.67
Cement Mason/Concrete Finisher	$ 15.71	$ 15.71	$ -	$ 15.71
Drywall Finisher/Taper	$ 17.06	$ 17.06	$ 4.43	$ 21.49
Drywall Hanger and Metal Stud Installer	$ 17.47	$ 17.47	$ 3.45	$ 20.92
Electrical Installer (Sound and Communication Systems, Excluding Wiring)	$ 18.00	$ 18.00	$ 2.30	$ 20.30
Electrician (Excludes Installation of Sound and Communication Systems)	$ 27.15	$ 27.15	$ 7.88	$ 35.03
Elevator Mechanic <5 years experience	$ 37.76	$ 37.76	$ 32.25	$ 70.01
Elevator Mechanic >5 years experience	$ 37.76	$ 37.76	$ 33.01	$ 70.77
Floor Layer (Carpet)	$ 21.88	$ 21.88	$ -	$ 21.88
Glazier	$ 12.83	$ 13.03	$ -	$ 13.03
HVAC Mechanic (HVAC Unit Installation Only)	$ 23.78	$ 23.78	$ 6.89	$ 30.67
Ironworker, Ornamental	$ 23.02	$ 23.02	$ 6.35	$ 29.37
Ironworker, Reinforcing	$ 12.27	$ 13.03	$ -	$ 13.03
Ironworker, Structural	$ 20.73	$ 20.73	$ 5.24	$ 25.97
*Lead Paint or Asbestos Abatement Worker	*	$ 13.03	$ -	$ 13.03
Laborer, Common or General	$ 11.44	$ 13.03	$ -	$ 13.03
Laborer, Mason Tender - Brick	$ 12.22	$ 13.03	$ -	$ 13.03
Laborer, Mason Tender - Cement/Concrete	$ 11.85	$ 13.03	$ -	$ 13.03
Laborer, Pipelayer	$ 12.45	$ 13.03	$ -	$ 13.03
Laborer, Roof Tearoff	$ 11.28	$ 13.03	$ -	$ 13.03

Operator, Backhoe/Excavator/Trackhoe	$ 19.43	$ 19.43	$ 3.49	$ 22.92
Operator, Bobcat/Skid Steer/Skid Loader	$ 13.00	$ 13.03	$ -	$ 13.03
Operator, Bulldozer	$ 14.00	$ 14.00	$ -	$ 14.00
Operator, Crane	$ 34.85	$ 34.85	$ 9.85	$ 44.70
Operator, Drill	$ 14.50	$ 14.50	$ -	$ 14.50
Operator, Forklift	$ 16.64	$ 16.64	$ 6.26	$ 22.90
Operator, Grader/Blade	$ 19.30	$ 19.30	$ -	$ 19.30
Operator, Loader	$ 14.00	$ 14.00	$ -	$ 14.00
Operator, Mechanic	$ 18.75	$ 18.75	$ 5.12	$ 23.87
Operator, Paver (Asphalt, Aggregate, and Concrete)	$ 16.03	$ 16.03	$ -	$ 16.03
Operator, Roller	$ 11.25	$ 13.03	$ -	$ 13.03
Painter (Brush, Roller, and Spray, Excludes Drywall Finishing/Taping)	$ 18.76	$ 18.76	$ 6.35	$ 25.11
Pipefitter (Including HVAC Pipe Installation)	$ 28.03	$ 28.03	$ 12.43	$ 40.46
Plumber, Excludes HVAC Pipe Installation	$ 23.57	$ 23.57	$ 6.37	$ 29.94
Roofer	$ 12.00	$ 13.03	$ -	$ 13.03
*Roofer, Metal	$ 14.05	$ 14.05	$ -	$ 14.05
Sheet Metal Worker (Including HVAC Duct Installation)	$ 24.38	$ 24.38	$ 13.74	$ 38.12
Sprinkler Fitter (Fire Sprinklers)	$ 27.43	$ 27.43	$ 22.52	$ 49.95
Tile Finisher	$ 11.32	$ 13.03	$ -	$ 13.03
Tile Setter	$ 16.35	$ 16.35	$ -	$ 16.35
Truck Driver, Dump Truck	$ 12.39	$ 13.03	$ 1.18	$ 14.21
Truck Driver, Flatbed Truck	$ 19.65	$ 19.65	$ 8.57	$ 28.22
Truck Driver, Semi-Trailer Truck	$ 12.50	$ 13.03	$ -	$ 13.03
Truck Driver, Water Truck	$ 12.00	$ 13.03	$ 4.11	$ 17.14
Waterproofer	$ 16.30	$ 16.30	$ 0.06	$ 16.36

http://www.wdol.gov/wdol/scafiles/davisbacon/tx.html

See below for Additional Wage Information.

Note: *Lead Paint & Asbestos Abatement and Roofer, Metal Classifications have been added to this Prevailing Wage Rate Determination pursuant to a City of Austin Prevailing Wage Survey (trades absent from DOL).

The Wage Compliance information detailed below was excerpted from DOL General Decision TX160323 or other sources.

1. **Additional Trade information:**

Electricians** - Including low voltage wiring for computers, fire/smoke alarms.
Elevator Mechanics*** - also must be paid for 7 holidays - New Years Day, Memorial Day, Independence Day, Labor Day, Thanksgiving Day, the Friday after Thanksgiving Day, Christmas Day, and Veterans Day.
Welders - Receive rate prescribed for craft performing operation to which welding is incidental.

Unlisted classifications needed for work not included within the scope of the classifications listed may be added upon the advance approval of City of Austin Contract Administration. CONTRACTOR shall submit to City of Austin Contract Administration for review the classification, a bona fide definition of work to be performed and a proposed wage with sample payrolls conforming to area practice **prior** to the start of the job for that type of work.

2. **Wages**

The Total Wage may be met by any combination of cash wages and credible "bona fide" fringe benefits paid for by the employer. Overtime wages must be calculated using the Adjusted Wage Rate specified in the Wage Rate Determination or the actual basic rate of pay, whichever is higher.

City of Austin Ordinance No. 20160324-015 requires that construction workers are paid a Minimum Wage of at least $13.03/hour. The cash portion of their compensation must meet or exceed this amount.

3. **Crediting fringe benefit contributions to meet DBA/DBRA and City of Austin requirements:**

The Davis-Bacon Act (and 29 CFR 5.23), list fringe benefits to be considered. Examples are:

> Life Insurance
> Health Insurance
> Pension
> Vacation
> Holidays
> Sick Leave

Note: The use of a truck is not a fringe benefit; a Thanksgiving turkey or Christmas bonus is not a fringe benefit. No credit may be taken for any benefit required by federal, state, or local law such as: workers compensation, unemployment compensation; or social security contributions.

Contributions to fringe benefit plans must be made regularly, e.g. daily, weekly, etc. They must be more frequent than quarterly. (see 29 CFR 5.5 (a)(1)(I)) A periodic bonus may not be counted as a fringe benefit.

4. Annualization of Benefit Costs

If a firm provides an electrician with $200 per month medical insurance, to calculate allowable fringe benefit credit contributions per hour, the formula ([$200 x 12 months] divided by 2080 hours = $1.15 per hour) should be used.

5. Proper Designation of Trade

A work classification on the wage decision for each worker must be made based on the actual type of work he/she performed and each worker must be paid no less than the wage rate on the wage decision for that classification **regardless** of his or her level of skill.

6. Split Classification

If a firm has employees that perform work in more than one classification, it can pay the wage rates specified for each classification ONLY if it maintains accurate time records showing the amount of time spent in each classification. If accurate time records are not maintained, these employees must be paid the highest wage rate of all the classifications of work performed by each worker. Accurate time records tracking how many hours a worker performed the work of one trade and then switched to another trade must be accounted for on a daily basis and reflected on Employer Certified Payroll accordingly.

WELDERS - Receive rate prescribed for craft performing operation to which welding is incidental.

==========

Unlisted classifications needed for work not included within the scope of the classifications listed may be added after award only as provided in the labor standards contract clauses (29CFR 5.5 (a) (1) (ii)).

In the listing above, the "SU" designation means that rates listed under the identifier do not reflect collectively bargained wage and fringe benefit rates. Other designations indicate unions whose rates have been determined to be prevailing.

WAGE DETERMINATION APPEALS PROCESS

1.) Has there been an initial decision in the matter? This can be:

* an existing published wage determination
* a survey underlying a wage determination
* a Wage and Hour Division letter setting forth a position on a wage determination matter
* a conformance (additional classification and rate) ruling

On survey related matters, initial contact, including requests for summaries of surveys, should be with the Wage and Hour Regional Office for the area in which the survey was conducted because those Regional Offices have responsibility for the Davis-Bacon survey program. If the response from this initial

contact is not satisfactory, then the process described in 2.) and 3.) should be followed.

With regard to any other matter not yet ripe for the formal process described here, initial contact should be with the Branch of Construction Wage Determinations. Write to:

Branch of Construction Wage Determinations
Wage and Hour Division
U.S. Department of Labor
200 Constitution Avenue, N.W.
Washington, DC 20210

2.) If the answer to the question in 1.) is yes, then an interested party (those affected by the action) can request review and reconsideration from the Wage and Hour Administrator (See 29 CFR Part 1.8 and 29 CFR Part 7). Write to:

Wage and Hour Administrator
U.S. Department of Labor
200 Constitution Avenue, N.W.
Washington, DC 20210

The request should be accompanied by a full statement of the interested party's position and by any information (wage payment data, project description, area practice material, etc.) that the requestor considers relevant to the issue.

3.) If the decision of the Administrator is not favorable, an interested party may appeal directly to the Administrative Review Board (formerly the Wage Appeals Board). Write to:

Administrative Review Board
U.S. Department of Labor
200 Constitution Avenue, N.W.
Washington, DC 20210

4.) All decisions by the Administrative Review Board are final.

==========

WAGE RATE DETERMINATION

HEAVY AND HIGHWAY CONSTRUCTION

COUNTY NAME: TRAVIS

Wages based on DOL General Decision:TX160016 1/8/2016 TX16 and City of Austin Ordinance #20160324-015

DOL Rate column is for information only. The Total Minimum Wage Rate is derived from the Adjusted Wage Rate Required pursuant to City Ordinance, and can be met using any combination of cash and non-cash qualified fringe benefits, provided the cash component is at least $13.03/hour.

CLASSIFICATION	DOL RATE for info only	ADJUSTED WAGE RATE REQUIRED pursuant to City Ordinance	TOTAL MINIMUM WAGE RATE REQUIRED
Agricultural Tractor Operator	$ 12.69	$ 13.03	$ 13.03
Asphalt Distributor Operator	$ 15.55	$ 15.55	$ 15.55
Asphalt Paving Machine Operator	$ 14.36	$ 14.36	$ 14.36
Asphalt Raker	$ 12.12	$ 13.03	$ 13.03
Boom Truck Operator	$ 18.36	$ 18.36	$ 18.36
Broom or Sweeper Operator	$ 11.04	$ 13.03	$ 13.03
Cement Mason/Concrete Finisher	$ 12.56	$ 13.03	$ 13.03
Concrete Pavement Finishing Machine Operator	$ 15.48	$ 15.48	$ 15.48
Crane, Hydraulic, 80 tons or less	$ 18.36	$ 18.36	$ 18.36
Crane, Lattice Boom, 80 tons or less	$ 15.87	$ 15.87	$ 15.87
Crane, Lattice Boom, over 80 tons	$ 19.38	$ 19.38	$ 19.38
Crawler Tractor	$ 15.67	$ 15.67	$ 15.67
Directional Drilling Locator	$ 11.67	$ 13.03	$ 13.03
Directional Drilling Operator	$ 17.24	$ 17.24	$ 17.24
Electrician	$ 26.35	$ 26.35	$ 26.35
Excavator 50,000 lbs. or less	$ 12.88	$ 13.03	$ 13.03
Excavator, over 50,000 lbs.	$ 17.71	$ 17.71	$ 17.71
Flagger	$ 10.15	$ 13.03	$ 13.03
Form Builder/Form Setter - Paving & Curb	$ 12.94	$ 13.03	$ 13.03
Form Builder/Form Setter - Structures	$ 12.87	$ 13.03	$ 13.03
Foundation Drill Operator, Truck Mounted	$ 16.93	$ 16.93	$ 16.93
Front End Loader Operator, 3CY or less	$ 13.04	$ 13.04	$ 13.04
Front End Loader, over 3CY	$ 13.21	$ 13.21	$ 13.21
Laborer, Common	$ 10.50	$ 13.03	$ 13.03
Laborer, Utility	$ 12.27	$ 13.03	$ 13.03
Loader/Backhoe Operator	$ 14.12	$ 14.12	$ 14.12
Mechanic	$ 17.10	$ 17.10	$ 17.10
Milling Machine	$ 14.18	$ 14.18	$ 14.18
Motor Grader Operator - Fine Grade	$ 18.51	$ 18.51	$ 18.51
Motor Grader Operator, Rough	$ 14.63	$ 14.63	$ 14.63

Painter - Structures	$ 18.34	$ 18.34	$ 18.34
Pavement Marking Machine Operator	$ 19.17	$ 19.17	$ 19.17
Pipelayer	$ 12.79	$ 13.03	$ 13.03
Reclaimer/Pulverizer	$ 12.88	$ 13.03	$ 13.03
Reinforcing Steel Setter	$ 14.00	$ 14.00	$ 14.00
Roller Operator, Asphalt	$ 12.78	$ 13.03	$ 13.03
Roller Operator, Other	$ 10.50	$ 13.03	$ 13.03
Scraper Operator	$ 12.27	$ 13.03	$ 13.03
Servicer	$ 14.51	$ 14.51	$ 14.51
Spreader Box Operator	$ 14.04	$ 14.04	$ 14.04
Structural Steel Worker	$ 19.29	$ 19.29	$ 19.29
Traffic Signal Installer/Light Pole Worker	$ 16.00	$ 16.00	$ 16.00
Trenching Machine Operator, Heavy	$ 18.48	$ 18.48	$ 18.48
Truck Drick Tandem Axle Semi-Trailer	$ 12.81	$ 13.03	$ 13.03
Truck Driver, Lowboy/Float	$ 15.66	$ 15.66	$ 15.66
Truck Driver, Single Axle	$ 11.79	$ 13.03	$ 13.03
Truck Driver, Off Road Hauler	$ 11.88	$ 13.03	$ 13.03
Truck Driver, Single or Tandem Axle Dump Truck	$ 11.68	$ 13.03	$ 13.03
Welder	$ 15.97	$ 15.97	$ 15.97
Work Zone Barricade Servicer	$ 11.85	$ 13.03	$ 13.03

http://www.wdol.gov/wdol/scafiles/davisbacon/tx.html

The Wage Compliance information detailed below was excerpted from DOL General Decision TX160016 or other sources.

1. Additional Trade information:

Unlisted classifications needed for work not listed within the scope of the classifications listed may be added upon the advance approval of Contract Procurement. CONTRACTOR shall submit to City of Austin Contract Procurement the following: classification, a bona fide definition of work to be performed and a proposed wage with sample payrolls conforming to area practice **prior** to the start of the job for that type of work. Proposed trade may not be performed by any trade already listed.

2. Wages

The Total Minimum Wage Rate may be met by any combination of cash wages and credible "bona fide" fringe benefits paid for by the employer. Overtime must be used in computing overtime pay.wages must be calculated using the Total Minimum Wage Rate specified in the Wage Rate Determination or the actual basic rate of pay, whichever is higher.

City of Austin Ordinance No. 2016324-015 requires that construction workers are paid a minimum Wage of at least $13.03/hour. The cash portion of their compensation must meet or exceed this amount.

3. Proper Designation of Trade

A work classification from the Prevailing Wage Poster for each worker must be made based on the actual type of work he/she performed on the job. In summary the work performed, not the "title" determines the correct worker classification and wage. Each worker must be paid no less than the adjusted wage rate on the wage decision for that classification **regardless** of his/her level of skill (exclusive of a bona fide apprentice currently registered in a DOL approved apprentice program - proof of individual registration must be supplied in advance to the City of Austin).

4. Split Classification

If a firm has employees that perform work in more than one classification, it can pay the adjusted wage rates specified for each classification ONLY if it maintains accurate time records showing the amount of time spent in each classification. If accurate time records are not maintained, these employees must be paid the highest adjusted wage rate of all the classifications of work performed by each worker. Accurate time records tracking how many hours a worker performed the work of one trade and then switched to another trade must be accounted for on a daily basis and reflected on Employer Certified Payroll accordingly.

WELDERS - Receive rate prescribed for craft performing operation to which welding is incidental.

==========

Unlisted classifications needed for work not included within the scope of the classifications listed may be added after award only as provided in the labor standards contract clauses (29CFR 5.5 (a) (1) (ii)).

In the listing above, the "SU" designation means that rates listed under the identifier do not reflect collectively bargained wage and fringe benefit rates. Other designations indicate unions whose rates have been determined to be prevailing.

WAGE DETERMINATION APPEALS PROCESS

1.) Has there been an initial decision in the matter? This can be:

* an existing published wage determination
* a survey underlying a wage determination
* a Wage and Hour Division letter setting forth a position on a wage determination matter
* a conformance (additional classification and rate) ruling

On survey related matters, initial contact, including requests for summaries of surveys, should be with the Wage and Hour Regional Office for the area in which the survey was conducted because those Regional Offices have responsibility for the Davis-Bacon survey program. If the response from this initial contact is not satisfactory, then the process described in 2.) and 3.) should be followed.

With regard to any other matter not yet ripe for the formal process described here, initial contact should be with the Branch of Construction Wage Determinations. Write to:

Branch of Construction Wage Determinations
Wage and Hour Division
U.S. Department of Labor
200 Constitution Avenue, N.W.
Washington, DC 20210

2.) If the answer to the question in 1.) is yes, then an interested party (those affected by the action) can request review and reconsideration from the Wage and Hour Administrator (See 29 CFR Part 1.8 and 29 CFR Part 7). Write to:

Wage and Hour Administrator
U.S. Department of Labor
200 Constitution Avenue, N.W.
Washington, DC 20210

The request should be accompanied by a full statement of the interested party's position and by any information (wage payment data, project description, area practice material, etc.) that the requestor considers relevant to the issue.

3.) If the decision of the Administrator is not favorable, an interested party may appeal directly to the Administrative Review Board (formerly the Wage Appeals Board). Write to:

Administrative Review Board
U.S. Department of Labor
200 Constitution Avenue, N.W.
Washington, DC 20210

4.) All decisions by the Administrative Review Board are final.

==========

1.1 Scope of Work

A. This section describes the Contract in general and provides an overview of the extent of the Work to be performed by the CONTRACTOR. Detailed requirements and extent of Work are stated in the Project Manual and applicable Work Assignments. CONTRACTOR shall, except as otherwise specifically stated herein or in any other applicable part of the Contract Documents, provide and pay for all labor, materials, equipment, tools, construction equipment, and other facilities and services necessary for proper execution, testing, and completion of the Work.

B. Any part or item of the Work which is reasonably implied or normally required to complete the Work Assignments shall be performed by the CONTRACTOR and the expense thereof shall be included in the applicable unit prices or lump sum prices bid for the Work. All miscellaneous appurtenances and other items of Work that are required by the Specifications in order to complete the Work Assignments are considered as having been included in the applicable unit prices or lump sum prices bid for the Work even though these appurtenances and items may not be specifically called for in the Bid Documents.

C. The Work shall include furnishing all tools, labor, materials, equipment, and miscellaneous items necessary for the complete construction of each Work Assignment.

D. The Work of this Contract includes sustainability requirements as shown in the Division 1 Sections 01352 and/or 01505 and all other applicable specification sections. It is the intent of the OWNER to work in partnership with the CONTRACTOR in implementing sustainable construction practices to the greatest extent possible.

1.2 Location of Project and Work Assignment Process

A. Each Work Assignment will include a specific location. The OWNER will issue a Work Assignment to the CONTRACTOR providing the scope of Work. The Work Assignment will contain a site drawing, estimated quantities, estimated time of completion and a time/date for a site visit. The CONTRACTOR is required to meet the Project Manager at the site within 14 calendar days of the issued Work Assignment.

B. The Work Assignment may include more than one geographical location but within the limits of construction outlined in Section 00020-IDIQ.

C. During the site visit, the CONTRACTOR will confirm the estimated quantities provided by the OWNER and ask for any additional clarifications. Within 7 calendar days after the CONTRACTOR's questions are answered, the quantities are confirmed and a final site drawing is forwarded to the CONTRACTOR, the CONTRACTOR will complete and submit a signed Work Assignment Form with comfirnation of the Contract Time and a completed Subcontractor Utilization Form. A Work Assignment Form and Subcontractor Utilization Form are attached to this Section 01010-IDIQ.

D. The pricing for each item must be based on the line item pricing in Section 00300U-IDIQ, Additional items not previously in the Section 00300U-IDIQ must be added to the contract by Change Order in accordance with Sections 00700 and 00810-IDIQ.

E. Once counter-signed by the OWNER, a Work Assignment Form becomes a part of the Contract subject to all terms and conditions of the Contract and shall serve as a Notice to Proceed. The CONTRACTOR is not authorized to perform work until the specific Work Assignment is approved and the Notice to Proceed is issued. Work for each Work Assignment will be authorized under a separate Notice to Proceed. Mobilization must begin within 5_calendar days of Notice To Proceed for each Work Assignment.

F. The date that a Work Assignment is signed by the OWNER and delivered to the CONTRACTOR with an accompanying Notice to Proceed will be the commencement date for the purposes of the measurement of Contract Time for that individual Work Assignment. Sample Work Assignment packets are included in the Bid Documents as examples of the Work to be bid.

G. The CONTRACTOR will pay liquidated damages for each consecutive day after the agreed time of completion for each separate Work Assignment unless otherwise adjusted by OWNER. If time of completion cannot be agreed upon, the CONTRACTOR will proceed with the Work Assignment and within 5_ calendar days submit a detailed schedule outlining the work items and time of completion for the OWNER's review. If an agreement still cannot be made, the CONTRACTOR may submit a claim as outlined in Item 16.1 of Section 0700, General Conditions of the Contract.

H. CONTRACTOR may be required to work on up to 5 work assignments at a time unless otherwise agreed to in writing by the OWNER. Work must be continuous on each Work Assignment. CONTRACTOR shall work all locations within the scheduled days and hours required in each Work Assignment.

I. The CONTRACTOR will invoice on a monthly basis. The invoice will contain separate payment estimate sheets for each Work Assignment with a roll-up summary outlining the remaining quantities. Upon completion of each Work Assignment the CONTRACTOR will stamp the invoice for that Work Assignment as FINAL and will provide a lien waiver/release for any future changes to that assignment. Retainage for each Work Assignment will be released with Final Payment for the Work Assignment.

1.3 Contractor's Responsibilities

A. Execute all Work, as defined in each Work Assignment. The Work of this Contract is specified in the City of Austin Standard Specifications, Special Provisions and Special Specifications listed in the Table of Contents.

B. Secure all construction-related permits, other than those provided by OWNER as described in paragraph 6.6 of Section 00810-IDIQ, Supplemental General Conditions, and pay for the same.

C. Arrange for any necessary temporary facilities as indicated in Section 01500 – Temporary Facilities.

D. Emergency Response - the CONTRACTOR will be required to have management personnel and crew available and on-call at all times during the Contract to provide emergency on-call services. Refer to Section 01100, "Special Project Procedures" for details.

1.4 Easements and Rights-Of-Way

CONTRACTOR shall confine his construction operations within the limits indicated on the Drawings, and shall use due care in placing construction tools, equipment, excavated materials, and pipeline materials and supplies so as to cause the least possible damage to property and interference with traffic. If the CONTRACTOR requires additional easement for his operations, the CONTRACTOR is solely responsible for acquisition and maintenance of the easement. No additional compensation will be provided by the OWNER.

A. Easements

Easements across private property are indicated on the Drawings. CONTRACTOR shall set stakes to mark the boundaries of construction easement across private property. The stakes shall be protected and maintained until completion of construction and cleanup.

B. Rights-of-Way

Permits for Work in rights-of-way shall be obtained by the CONTRACTOR. All Work performed and all operations of CONTRACTOR, his employees, or subcontractors, within the limits of railroad and highway rights-of-way, shall be in conformity with the requirements and be under the control (through OWNER) of the railroad or highway authority owning, or having jurisdiction over and control of, the right-of-way in each case.

1.5 Operation of Existing Facilities

Existing water and wastewater facilities shall be kept in continuous operation throughout the construction period. No interruption will be permitted which adversely affects the degree of service provided. Provided permission is obtained from OWNER in advance, portions of the existing facilities may be taken out of service for short periods corresponding with periods of minimum service demands.

CONTRACTOR shall provide temporary facilities and make temporary modifications as necessary to keep the existing facilities in operation during the construction period.

1.6 Connections to Existing Facilities

Unless otherwise specified or indicated, CONTRACTOR shall make all necessary connections to existing facilities including structures, drain lines, and utilities. In each case, CONTRACTOR shall receive permission from OWNER or the owning utility prior to undertaking connections. CONTRACTOR shall protect facilities against deleterious substances and damage.

Connections to existing facilities which are in service shall be thoroughly planned in advance, and all required equipment, materials and labor shall be on hand at the time of undertaking the connection. Work shall proceed continuously (around the clock) if necessary to complete connections in the minimum time. Operation of valves or other appurtenances on existing utilities, when required, shall be by or under the direct supervision of the owning utility.

1.7 Unfavorable Construction Conditions

No portion of the Work shall be constructed under conditions which adversely affect the quality or efficiency thereof, unless special means or precautions are taken by CONTRACTOR to perform the Work in a proper and satisfactory manner.

End

IDIQ WORK ASSIGNMENT & INCORPORATED CHANGE ORDER FORM

Contract No.:_____

WORK ASSIGNMENT NO.:_____

TO: _____
contractor name address / telephone / fax / email

FROM: _____
project manager name / address / telephone / fax / email

PROJECT NAME: _____
name / CIP ID number

Fund: _____ Dept: _____ Unit: _____ Object Code: _____ Activity: _____ Rept: _____
Fund: _____ Dept: _____ Unit: _____ Object Code: _____ Activity: _____ Rept: _____
Federal Funds: Yes ☐ No ☐

SCOPE OF WORK: _____
_____
_____

PROJECT LOCATION: _____

DATE OF ISSUANCE: _____

SUBSTANTIAL COMPLETION (IF NEEDED): _____

FINAL COMPLETION: _____

Bid Items per Section 00300U-IDIQ:

Item #	Description	Quantity	Unit	Unit Cost	Amount
Subtotal					

Change Order in accordance with Sections 00700 and 00810-IDIQ of the Contract

Proposed Item #	**Description**	Assignment *Quantity Only	**Unit**	**Unit Cost**	**Amount**
Subtotal					

***Quantity will vary for future assignments.**

(Bid Items and Change Order Items) Total $:_____

The Change Order agreed to herein constitutes a complete and equitable adjustment to the referenced Contract for the portion of the Work addressed herein and the CONTRACTOR hereby releases the OWNER from any and all liability under the Contract for further equitable adjustments, including additional time for performance, attributable to such facts or circumstances giving rise to this Change Order. Once agreed to by both parties as indicated by the execution of this Work Assignment and incorporated Change Order, the Items in the Change Order will become a part of the Contract referenced above. This Change Order does not change the not to exceed Contract Amount.

Signatures

CONTRACTOR agrees that this Work Assignment is a Contract Document and that work performed and payments made pursuant to this Work Assignment shall be subject to the terms and conditions of all other Contract Documents for the Contract referenced above, unless otherwise noted. The CONTRACTOR shall be paid for work described in this Work Assignment, in whole or in part, based on the unit/unit costs as provided in the Bid Form, Section 00300-IDIQ and all Change Orders.

CONTRACTOR: _____Title _____ Date_____

Notice to Proceed

When executed by the OWNER and delivered to the CONTRACTOR, the CONTRACTOR is authorized to proceed with Work as described in this Work Assignment, for the amount indicated above, in accordance with the contract referenced above and incorporated herein.

OWNER:

City of Austin

Project Manager: _____Date_____

The Work of this Contract includes Mobilization as an Allowance to be paid as a percentage of each individual Work Assignment.

PART 1 - GENERAL

1.01 Description

An Allowance is provided with this Contract for the mobilization of personnel, equipment and materials at the Work site for other contract items that will be performed by the CONTRACTOR. Mobilization shall include, but not be limited to the movement of equipment, personnel, material, supplies, etc. to and from the Work site; and the installation of necessary facilities (when not paid for separately) prior to the initiation of the Work and their removal at the completion of the Work.

1.02 References

Section 00300U-IDIQ, Bid Form

1.03 Measurement and Payment

Each individual Work Assignment will typically include one (1) mobilization and, depending on site conditions, may require that the CONTRACTOR demobilize and re-mobilize multiple times to complete the work on a given Work Assignment. Regardless of the number of demobizations and re-mobilizations only one (1) mobilization payment will be made per assignment based on the approved amount of the individual Work Assignment as follows:

Work Assignment Amount	Mobilization (% of Work Assignment)
Less than $5,000	10%
$5,000 - $25,000	8%
$25,001 - $50,000	7%
$50,001 - $100,000	6%
$100,001 - $250,000	5%
$250,001 - $500,000	4%
Greater than $500,000	3%

In the event that a single Work Assignment is completed by the CONTRACTOR within one pay period (i.e., 30 days), mobilization will be paid by the OWNER as a lump sum at the end of the Work Assignment, and shall be calculated using the table above. In the event that a single Work Assignment is to be paid over multiple pay periods, then the CONTRACTOR shall be paid for mobilization as follows:

A. The CONTRACTOR and OWNER will estimate the total Work Assignment amount based on quantities provided in the Work Assignment and associated bid prices established in 00300U-IDIQ, Bid Form;
B. 50% of the mobilization payment will be calculated based on the table above and will be provided, at the CONTRACTOR's request, within the first pay period of that Work Assignment;
C. The remainder of the mobilization payment will be based on the actual Work Assignment amount, and will be paid upon completion of the Work. If a credit is required, due to reduction on a Work Assignment amount, it will be deducted from payments to the CONTRACTOR.

The aggregate amount of all Work Assignment payments for Mobilization will not exceed the Allowance. Payment for this Allowance will be made from the Allowance Item on Section 00300U-IDIQ.

End

1. CONTRACTOR shall perform all layout work to transfer all controls for grades, lines, levels and measurements from a minimum of two reference points provided by OWNER. All survey work will be performed under the direct supervision of a Texas Registered Professional Land Surveyor (RPLS).

2. Within 5 work days of the Notice To Proceed date, or within 10 Working Days of initiating work based on the approved Schedule in a new area of the Project, the CONTRACTOR shall survey and stake the locations of all proposed improvements behind the curb and within the ROW (examples: manholes, storm inlets, fire hydrants, etc.), or any other improvements identified by the OWNER'S REPRESENTATIVE, for the purpose of identifying the nature and location of these improvements to the adjacent property owner(s). The OWNER'S REPRESENTATIVE will identify to the CONTRACTOR the improvements to be staked.

3. OWNER will not stake for construction and will not be on site for survey layout activities, except to perform quality control checks.

4. CONTRACTOR shall be required to set elevation hubs (blue tops) for subgrade and base course on centerline, at quarter points and curb lines or edge of pavement at intervals not exceeding 50 feet.

5. The construction plans will include horizontal and vertical control points. References to approved COA benchmarks used in establishing controls on the drawings will be provided by the Owner's E/A. In addition, on building projects and/or projects not built within an existing public ROW, a boundary survey will be supplied together with a legal description of the property and all easements where Work will take place.

6. CONTRACTOR shall submit construction staking layout sheets sealed by a Professional Engineer or Registered Professional Land Surveyor registered in the State of Texas. CONTRACTOR shall use a qualification based selection process consistent with the Professional Services Procurement Act, Chapter 2254.004 of the Texas Government Code, when securing the services of a Professional Engineer or Registered Professional Land Surveyor. It is a violation of State Law to solicit bids for the services of a Professional Engineer of Registered Professional Land Surveyor.

   6.1 Any discrepancies found with the construction documents' dimensional layout will be corrected. CONTRACTOR shall assure that the Owner's Representative and E/A are notified so that the appropriate actions are taken to correct the Contract drawings.

   6.2 All Work shall be done to the lines, grades and elevations indicated on the drawings. Information concerning basic horizontal and vertical control points will be provided by the E/A, **that will be from the City's Engineering Rotation List**. These points shall be used as the datum basis under this Contract.

   6.3 All work to transfer all controls for grades, lines, levels, layout and measurements shall be performed under the supervision of a Texas Registered Professional Land Surveyor, provided by the CONTRACTOR. Such work shall conform to the standards for construction staking in the most recent edition of the Texas Society

of Professional Surveyors Manual of Practice for Land Surveying, Category 5, Sections 1-12 inclusive.

6.4 The **centerline and** offset centerline stakes will be set at no greater than fifty (50) foot intervals **on both sides of the right-of-way and at points of alignment or grade changes**. References to lines and grades as established by the CONTRACTOR's surveyor shall be in reference to these stake lines. The CONTRACTOR is required to provide a sealed statement from his RPLS that the controls are correct and the site layout has been done by their professional staff.

6.5 The CONTRACTOR shall place grade stakes and submit construction staking layout sheets. The CONTRACTOR shall allow a minimum of ten (10) days after submission to the Owner's Representative for review of construction staking layout sheets. Construction staking layout sheets shall include, at a minimum, the information contained in the form included at the end of this section. No Work shall be performed without Owner's Representative review and return to CONTRACTOR of construction staking layout sheets. The Owner's Representative, E/A and the CONTRACTOR shall review the survey controls on the ground.

6.6 Prior to any excavation, the CONTRACTOR shall establish the elevation to top of ground at **centerline of the pipe as well as cuts and** offset stakes at the distance deemed appropriate by the CONTRACTOR to preclude disturbance of offset stakes during construction. **The CONTRACTOR shall set all blue tops for subgrade and base courses on centerline at quarter points, at curb lines or edge of pavement, and other points that may be indicated on the Drawings, all at intervals not to exceed 50 feet.**

6.7 The CONTRACTOR shall furnish, without charge, experienced personnel and such calibrated survey equipment, tools, stakes, and other materials that the Owner's Representative may require in establishing or checking control points, or in checking survey, layout, and measurement work performed by the CONTRACTOR.

6.8 The CONTRACTOR shall keep the Owner's Representative informed in a reasonable time in advance of the times and places at which he wishes to do work, so that any checking deemed necessary by the OWNER may be done with minimum inconvenience to the E/A and minimum delay to the CONTRACTOR. Surveying will be coordinated between the Owner's Representative and CONTRACTOR in a manner convenient to both.

6.9 During layout, CONTRACTOR shall field verify the elevation and alignment of all tie-in points to existing infrastructure. This work shall be performed sufficiently in advance of construction so that any conflicts may be resolved without delay. Any work done without being properly located may be ordered removed and replaced at the CONTRACTOR's expense.

6.10 The CONTRACTOR shall carefully preserve all monuments, benchmarks, reference points, and stakes. In case of the destruction thereof, the CONTRACTOR shall bear the cost of replacement and shall be responsible for any mistake or loss of time that may be caused. Permanent monuments or benchmarks, which must be removed or disturbed, shall be protected until properly referenced for relocation. The CONTRACTOR shall furnish materials and assistance for the proper replacement of such monuments or benchmarks.

6.11 The CONTRACTOR shall satisfy himself before commencing work as to the meaning and correctness of all survey control stakes, marks, etc., and no claim will be entertained by the OWNER for or on account of any alleged inaccuracies,

unless the CONTRACTOR notifies the OWNER in writing before commencing the affected Work.

7. As needed for necessary documentation of the work progress, the CONTRACTOR shall maintain and/or protect offset or survey staking for the duration of the project. Any re-staking required to meet this requirement shall be done at the CONTRACTOR'S expense.

8. This item is subsidiary to the work as a whole.

9. Upon completion of construction, or at intervals specified in the Contract, CONTRACTOR shall provide a record survey of the work in progress or completed. This information will be submitted to the Owner's Representative and shall be supplied electronically and on a separate full size plan sheet to be transmitted to the E/A for evaluation and merging into the Record Drawings.

End See attached "Construction Staking Layout Sheet"

CONSTRUCTION STAKING LAYOUT SHEET

Project Name: _____ **Date:** _____
C.I.P. ID#: _____ **Instrument No.:** _____
Person Recording: _____ **Weather Conditions:** _____
Crew Members: _____
General Purpose & Scope of Survey: _____

STATION	B.S.	H.I.	F.S.	LEVEL LOOP ELEVATION	ROD READING	HUB ELEVATION AT STATION	(TARGET) (eg., pipe invert) ELEVATION	C - CUT OR F - FILL	% GRADE	NOTES: INDICATE WHETHER CENTERLINE HUB OR _____ FT. OFFSET HUB

DEFINITIONS

General: Basic Contract definitions are included in the General Conditions, Section 00700 included herein.

Approved: The term approved, when used in conjunction with the Owner's Representative's action on the CONTRACTOR'S submittals, applications, and requests, is limited to the Owner's Representative's duties and responsibilities as stated in the Conditions of the Contract. A stamp reading "No Exceptions Taken" shall have the same intent as "Approved".

Furnish: The term furnish means supply and deliver to the Project site, ready for unloading, unpacking, assembly, installation, and similar operations.

Indicated: The term indicated refers to graphic representations, notes, or schedules on the Drawings, or other paragraphs or schedules in the Specifications, and similar requirements in the Contract Documents. Terms such as shown, noted, scheduled, and specified are used to help the reader locate the reference. There is no limitation on location.

Install: The term install describes operations at the Project site including the actual unloading, unpacking, assembly, erecting, placing, anchoring, applying, working to dimension, finishing, curing, protecting, cleaning, and similar operations.

Installer: An Installer is the CONTRACTOR or another entity engaged by the CONTRACTOR, either as an employee, subcontractor, or contractor of lower tier, to perform a particular construction activity, including installation, erection, application, and similar operations. Installers are required to be experienced in operations they are engaged to perform.

Project Site: The space available to the CONTRACTOR for performing construction activities either exclusively or in conjunction with others performing other work as part of the Project. The extent of the Project site is shown on the Drawings and may or may not be identical with the description of the land on which the Project is to be built.

Provide: The term provide means to furnish and install, complete and ready for the intended use.

Regulations: The term regulations includes laws, ordinances, statutes, and lawful orders issued by authorities having jurisdiction, as well as rules, conventions, and agreements within the construction industry that control performance of the Work.

Trades: Using terms such as carpentry is not intended to imply that certain construction activities must be performed by accredited or unionized individuals of a corresponding generic name, such as carpenter. It also does not imply that requirements specified apply exclusively to trades persons of the corresponding generic name.

INDUSTRY STANDARDS

Applicability of Standards: Except where the Contract Documents include more stringent requirements, applicable construction industry standards have the same force and effect as if bound or copied directly into the Contract Documents to the extent referenced. Such standards are made a part of the Contract Documents by reference.

Publication Dates: Comply with the standards in effect as of the date of the Contract Documents.

Conflicting Requirements: Where compliance with two or more standards is specified and where the standards may establish different or conflicting requirements for minimum quantities or quality levels, refer to the Owner's Representative for a decision before proceeding.

Copies of Standards: Each entity engaged in construction on the Project is required to be familiar with industry standards applicable to its construction activity. Copies of applicable standards are not bound with the Contract Documents.

Abbreviations and Names: Trade association names, titles of general standards, and names and titles of government agencies are frequently abbreviated. Where such acronyms or abbreviations are used in the

Specifications or other Contract Documents, they mean the recognized name of the trade association, standards-generating organization, authority having jurisdiction, or other entity applicable to the context of the text provision. Refer to the "Encyclopedia of Associations," published by Gale Research Co., available in most libraries.

AA	Aluminum Association
AABC	Associated Air Balance Council
AAMA	American Architectural Manufacturer's Association
AAN	American Association of Nurserymen.
AASHTO	American Association of State Highway and Transportation Officials.
AATCC	American Association of Textile Chemists and Colorists
ACI	American Concrete Institute
ACIL	American Council of Independent Laboratories
ACPA	American Concrete Pipe Association
ADC	Air Diffusion Council
AFBMA	Anti-Friction Bearing Manufacturers Association
AGA	American Gas Association
AGC	Associated General Contractors of America
AGMA	American Gear Manufacturers Association
AHA	American Hardboard Association
AHAM	Association of Home Appliance Manufacturers
AI	Asphalt Institute
AIA	American Institute of Architects
AIHA	American Industrial Hygiene Association
AISC	American Institute of Steel Construction
AISI	American Iron and Steel Institute
AITC	American Institute of Timber Construction.
ALCA	Associated Landscape Contractors of America
ALI	Associated Laboratories, Inc.
ALSC	American Lumber Standards Committee
AMCA	Air Movement and Control Association
ANSI	American National Standards Institute.
AOAC	Association of Official Analytical Chemists

AOSA	Association of Official Seed Analysts
APA	American Plywood Association
API	American Petroleum Institute.
AREA	American Railroad Engineers Association
ARI	Air Conditioning and Refrigeration Institute
ARMA	Asphalt Roofing Manufacturers Association
ASA	Acoustical Society of America
ASA	American Standards Association.
ASC	Adhesive and Sealant Council
ASCE	American Society of Civil Engineers
ASHRAE	American Society of Heating, Refrigerating & Air Conditioning Engineers
ASME	American Society of Mechanical Engineers
ASPE	American Society of Plumbing Engineers
ASSE	American Society of Sanitary Engineering
ASTM	American Society for Testing and Materials.
AWCMA	American Window Covering Manufacturers Association
AWG	American Wire Gage
AWI	Architectural Woodwork Institute
AWPA	American Wood Preservers Association
AWPB	American Wood Preservers Bureau
AWPI	American Wood Preservers Institute
AWS	American Welding Society
AWWA	American Water Works Association
BHMA	Builders Hardware Manufacturers Association
BIA	Brick Institute of America
BIFMA	Business and Institutional Furniture Manufacturers Association
CAGI	Compressed Air and Gas Institute
CAUS	Color Association of the United States
CBM	Certified Ballast Manufacturers
CCC	Carpet Cushion Council

CDA	Copper Development Association
CE	Corps of Engineers
CFR	Code of Federal Regulations
CGA	Compressed Gas Association
CISCA	Ceiling and Interior Systems Construction Association
CISPI	Cast Iron Soil Pipe Institute
CPSC	Consumer Product Safety Commission
CRI	Carpet and Rug Institute
CRSI	Concrete Reinforcing Steel Institute
CS	Commercial Standard of NBS (U.S. Dept. of Commerce)
CTI	Ceramic Tile Institute
DFPA	Douglas Fir Plywood Association
DHI	Door and Hardware Institute
DLPA	Decorative Laminate Products Association
DOC	U.S. Department of Commerce
DOT	Department of Transportation
ECSA	Exchange Carriers Standards Association
EIA	Electronic Industries Association
EIMA	Exterior Insulation Manufacturers Association
EJMA	Expansion Joint Manufacturers Association
EPA	Environmental Protection Agency
FAA	Federal Aviation Administration
FCC	Federal Communications Commission
FGMA	Flat Glass Marketing Association
FHA	Federal Housing Administration
FM	Factory Mutual Research Organization
FS	Federal Specifications
FSC	Forest Stewardship Council
FTI	Facing Tile Institute
GA	Gypsum Association
GSA	General Services Administration

HEI	Heat Exchange Institute
HI	Hydronics Institute
H.I.	Hydraulic Institute
HMA	Hardwood Manufacturers Association
HPMA	Hardwood Plywood Manufacturers Association
IBD	Institute of Business Designers
ICEA	Insulated Cable Engineers Association, Inc.
IEEE	Institute of Electrical and Electronic Engineers, Inc.
IESNA	Illuminating Engineering Society of North American
IGCC	Insulating Glass Certification Council
ILI	Indiana Limestone Institute of America
IMSA	International Municipal Signal Association
IRI	Industrial Risk Insurers
ISA	Instrument Society of America
ITE	Institute of Transportation Engineers
LEED™	Leadership in Energy and Environmental Design
LIA	Lead Industries Association, Inc.
LPI	Lightning Protection Institute
MBMA	Metal Building Manufacturer's Association
MCAA	Mechanical Contractors Association of America
MFMA	Maple Flooring Manufacturers' Association
MIA	Marble Institute of America
ML/SFA	Metal Lath/Steel Framing Association
MSS	Manufacturers Standardization Society of the Valve and Fittings Industry
MUTCD	Texas Department of Transportation Manual on Uniform Traffic Control Devices
NAAMM	National Association of Architectural Metal Manufacturers
NAIMA	North American Insulation Manufacturers Association
NAPA	National Asphalt Pavement Association
NBFU	National Board of Fire Underwriters

NBGQA	National Building Granite Quarries Association
NBS	National Bureau of Standards (U.S. Dept. of Commerce)
NCMA	National Concrete Masonry Association
NCRPM	National Council on Radiation Protection and Measurements
NCSPA	National Corrugated Steel Pipe Association
NEC	National Electrical Code (Published by NFPA)
NECA	National Electrical Contractors Association
NEII	National Elevator Industry, Inc.
NEMA	National Electrical Manufacturers Association
NETA	International Electrical Testing Association
N.F.P.A.	National Forest Products Association
NFPA	National Fire Protection Association
NHLA	National Hardwood Lumber Association
NIST	National Institute of Standards and Technology
NLGA	National Lumber Grades Authority
NOFMA	National Oak Flooring Manufacturers Association
NPA	National Particleboard Association
NPCA	National Paint and Coatings Association
NRCA	National Roofing Contractors Association
NWMA	National Woodwork Manufacturers Association
OSHA	Occupational Safety and Health Administration
PCA	Portland Cement Association
PCI	Precast/Prestressed Concrete Institute
PDI	Plumbing and Drainage Institute
PE	Professional Engineer
REA	Rural Electrification Administration
RFCI	Resilient Floor Covering Institute
RMA	Rubber Manufacturing Association
RPLS	Registered Professional Land Surveyor
SDI	Steel Deck Institute
S.D.I.	Steel Door Institute

SFPA	Southern Forest Products Association
SGCC	Safety Glazing Certification Council
SIGMA	Sealed Insulating Glass Manufacturers Association
SJI	Steel Joist Institute
SMACNA	Sheet Metal and Air Conditioning Contractors National Association
SPIB	Southern Pine Inspection Bureau
SPRI	Single Ply Roofing Institute
SSPC	Steel Structures Painting Council
SSPMA	Sump and Sewage Pump Manufacturers Association
SWI	Steel Window Institute
SWPA	Submersible Wastewater Pump Association
TCA	Tile Council of America
TEX TEST	TxDOT Laboratory Test
TIMA	Thermal Insulation Manufacturers Association
TPI	Truss Plate Institute
TxDOT	Texas Department of Transportation
UL	Underwriters Laboratory, Inc.
USDA	U. S. Department of Agriculture
USGBC	U. S. Green Building Council
USPS	U. S. Postal Service
WCLIB	West Coast Lumber Inspection Bureau
WCMA	Wallcovering Manufacturers Association
WIC	Woodwork Institute of California
WLPDIA	Western Lath, Plaster, Drywall Industries Association
WRI	Wire Reinforcement Institute
WSC	Water Systems Council
WSFI	Wood and Synthetic Flooring Institute
WWPA	Western Wood Products Association
W.W.P.A.	Woven Wire Products Association

END

EMERGENCY RESPONSE

PART 1 – GENERAL

1.1 Description

In the event that City of Austin maintenance crews are unable to perform emergency response and repairs for the chilled water distribution system, the CONTRACTOR may be called upon to perform these services. In such an event, the work will include providing on-call, emergency services. Emergencies will be unplanned events, and will require that the CONTRACTOR provide immediate response to repair/ replace one or more components of the distribution system due to failure, breakage, etc. The CONTRACTOR shall furnish and install all material and equipment required to complete the Work in compliance with all applicable provisions of the Contract Documents. Anticipated waterline sizes include 2-in thru 30-in diameter.

Activities by the CONTRACTOR for emergency waterline repairs may include, but are not limited to:

A. Setup, maintenance, and operation of temporary traffic controls in accordance with Texas Manual on Uniform Traffic Control Devices (MUTCD) and to the satisfaction of City of Austin Right-of-Way Management Division (ROWMAN);

B. Removal, repair and/or replacement of existing gate, butterfly or plug valves, and valve bypass systems;

C. Removal, repair and/or replacement of damaged pipeline. Anticipated pipeline materials include cast iron, ductile iron, AC, PVC, CSC (bar-wrapped and pre-stressed type), or welded steel;

D. On waterlines up to 12-inches in diameter, installing Team Industrial Insert Valve or EZ Valve technology, or approved equal, as needed for water flow isolation;

E. On waterlines between 4-inches and 72-inches in diameter, incorporating approved line stop technology as needed to stop waterline flow or provide isolation of existing water valves;

F. Welding plate steel repair plates or butt straps to CSC or welded steel pipe;

G. Dewatering excavations with suitable size and number of pumps to promptly provide a safe working environment while making necessary repairs;

H. Installation and removal of temporary jumper systems to provide uninterrupted water service to customers during a repair;

I. Having the ability to provide available workforce to work around the clock as needed to eliminate the emergency condition. Work on other, non-emergency projects under this contract may be temporarily suspended to divert the CONTRACTOR's resources to the emergency project, if needed;

J. Temporary or permanent restoration/replacement of roadway pavement materials, curb and gutter, sidewalk, driveways, vegetation, plants, etc. as directed by the OWNER's designated representative;

K. Hauling and disposal of unused materials.

1.2 References

Section 00300U-IDIQ – Bid Form

Section 00400 – Statement of Bidder's Experience

Sections 01020-IDIQ – Allowances

Section 01200 – Project Meetings

TMUTCD – Texas Manual on Uniform Traffic Control Devices

1.3 Definitions

A. Emergency: Emergencies shall be designated by the OWNER, but will generally consist of a problem with the water distribution system which requires the CONTRACTOR to immediately mobilize and provide a remedy. An emergency is not planned in advance and is a direct result of a water distribution system failure, breakage, etc.

1.4 CONTRACTOR's Qualifications

The CONTRACTOR's "Emergency Response Experience" must be submitted as required by Section 00400, Statement of Bidder's Experience, Attachment B (Statement of Experience).

PART 2 – PRODUCTS – (NOT USED)

PART 3 – EXECUTION

3.1 Submittals

A. The CONTRACTOR shall submit primary and secondary contact information for their designated Emergency Response Contacts as required by Section 01200, Paragraph 1.4.C.

3.2 Materials

Where applicable, all materials used on this contract shall comply with all requirements established within the Project Manual, the City of Austin Standard Products List, and any Standard or Special Details as provided to the CONTRACTOR as part of the Work. The CONTRACTOR may be required to pre-purchase and store certain materials that are not readily available and are anticipated to be needed during certain repairs.

3.3 Construction Methods

A. The CONTRACTOR shall have the project Superintendent, Project Manager, Safety Representative or other approved employee on call at all times prepared to respond to an emergency.

B. Construction methods for emergency response items will vary on a case by case basis, depending on the nature of the emergency. Upon notification by the OWNER that an emergency repair is needed, the CONTRACTOR and OWNER will meet immediately to coordinate an efficient response strategy and subsequent construction methods. An emergency may require that only the prime CONTRACTOR respond, or may require that the CONTRACTOR and sub-contractors respond as well.

C. To the extent possible, all existing adjacent utilities shall be located by the CONTRACTOR and protected to insure further damage does not occur to other utilities.

3.4 CONTRACTOR Response Time

A. Once an emergency occurs, the OWNER will immediately notify the CONTRACTOR's primary contact via telephone. In the event the primary contact is not able to be reached, the OWNER will phone the CONTRACTOR's secondary contact. The CONTRACTOR must be prepared to comply with the following maximum response times:

1. When the CONTRACTOR is notified of an emergency on a Working Day between the hours of 7:00 am and 6:00 pm, the CONTRACTOR shall have a crew foreman or higher dispatched to the Work site within one (1) hour of initial notification to evaluate the emergency and coordinate the Work with City staff.
2. When the CONTRACTOR is notified of an emergency at any time on a non-Working Day, or between the hours 6:00 pm and 7:00 am, the CONTRACTOR shall have a crew foreman or higher dispatched to the Work site within four (4) hours of initial notification to evaluate the emergency and coordinate the Work with City staff.
3. The CONTRACTOR is required to be mobilized to the Work site and begin productive work towards resolution of the emergency condition within eight (8) hours of meeting on site.
4. At the sole discretion of the OWNER, the CONTRACTOR's response time may be adjusted on a case by case basis to accommodate site specific conditions or specialized equipment requirements.

3.5 Measurement and Payment

All work performed as a result of an emergency notification will be paid for using the Pay Items in the Bid Form. The CONTRACTOR's mobilization for emergency waterline repairs will be paid for by the Mobilization Allowance as defined by Sections 01020-IDIQ, Allowances and 00300U-IDIQ, Bid Form of the Contract Documents.

No separate payment will be made for the CONTRACTOR being "on-call", for preparatory efforts, or for equipment and material purchases made that were not used for a specific emergency project.

End

PART 1 - GENERAL

1.1 RELATED DOCUMENTS

Documents related to this section will include the construction drawings and general provisions of the Contract, including the General Conditions, Section 00700, Supplemental General Conditions, Section 00810, and other Division 1 requirements.

1.2 SUMMARY

A. This section describes the preconstruction conference and other Project related meetings which may be held on a routine schedule throughout the duration of the Project.

B. The CONTRACTOR, or his authorized representative(s), shall attend all Project related meetings as indicated herein. The CONTRACTOR's representatives, as a minimum, shall include his Project Manager and Superintendent. Other CONTRACTOR's representatives may attend Project related meetings; however, there shall be a maximum of four (4) CONTRACTOR's representatives at any one meeting unless the ENGINEER/ARCHITECT approves a larger number.

C. The CONTRACTOR shall provide all pertinent reports, copies of reports, etc., for each meeting as may be required by this or other sections of the Contract.

1.3 PARTNERING WORKSHOP

A. To complete this work most beneficially for all parties, the Owner desires to form a Partnering Team among the Owner, Engineer/Architect, Contractor, and Subcontractor(s). This relationship will draw on the strength of all parties to identify and achieve mutual goals. The objectives are effective and efficient contract performance, intended to achieve completion within budget, on schedule, and in accordance with the drawings and specifications.

B. The Owner will schedule a Partnering Workshop independent of or in conjunction with the Preconstruction Conference, to facilitate the project objectives. The partnering relationship will be multilateral in makeup and participation will be totally voluntary.

1.4 PRECONSTRUCTION CONFERENCE

A. Attendees

A preconstruction conference shall be held as soon after the award and execution of the Contract as possible and before any Work at the site is started. The conference will be held at a location selected by the Owner's Project Manager. The Owner's Project Manager shall prepare and distribute the meeting agenda, preside over the conference, and may distribute meeting minutes. The conference shall be attended by:

1. CONTRACTOR's Project Manager.
2. CONTRACTOR's Superintendent.
3. Any Subcontractors' and/or Suppliers' representatives whom the CONTRACTOR may desire to invite or whom the ENGINEER/ARCHITECT or OWNER may request to attend.
4. ENGINEER/ARCHITECT's representative.
5. OWNER's Project Manager.
6. OWNER's REPRESENTATIVE

7. OWNER's Sponsor Department Representative.
8. Representative from the City of Austin, Transportation Department if a traffic management plan is required.
9. Representative from the City of Austin, Watershed Protection and Development Review Department, Environmental Inspection Division, if site erosion / sedimentation controls are required.
10. Representative from the City of Austin, Transportation Department if utility coordination has occurred through the Austin Utility Location and Coordination Committee.
11. Representative from the City of Austin, Contract Management Department, Contract Administration Division, to discuss wage.
12. Representative from the City of Austin, Small and Minority Business Resources Department to discuss M/WBE compliance.

B. Meeting topics

The topics to be discussed may include, but will not be limited to, the following items:

1. Introduction of persons attending the meeting.
2. General project description, including length of contract and liquidated damages.
3. Key personnel associated with the construction (may include, but is not limited to the following):
   - CONTRACTOR's Project Manager
   - CONTRACTOR's Superintendent
   - OWNER's Project Manager
   - ENGINEER/ARCHITECT's representative
   - OWNER's Sponsor Department Representative.
   - Representatives of the various utilities.
4. Lines of communication and chains of command.
5. Wage and personnel records and reporting requirements.
6. Subcontractors and suppliers.
7. Submittal review and approval procedure. Submittals may include, but are not limited to the following:
   - Letter stating the name and qualifications of the CONTRACTOR's Superintendent
   - Letter(s) from the Subcontractor(s) listing their salaried specialists
   - If applicable, a letter designating the Registered Professional Land Surveyor
   - If applicable, a letter designating the Safety Representative (for general project safety) and the "Competent Person" for excavation safety
   - Excavation Safety Systems Plan
   - Schedule of Values
   - Schedule for submittals
   - Shop drawings
   - Construction schedule (The schedule shall indicate the phases of work in which subcontractors will be participating. Subcontractors shall be indicated by name.)
   - Payroll reports
   - Substitution of subcontractors
   - Non-use of asbestos materials affidavit

- Appropriate safety training certificates for workers that will initially be on site
- Documentation for all workers initially on site who are governed by a prevailing wage classification as described in Section 00830.
- Construction Equipment Emissions Reduction Plan

8. Job and traffic safety.
9. Permits.
10. Utility coordination report.
11. Notification of property owners and other affected by the project
12. Job meetings.
13. Use of the site for construction, storage, staging, etc., and interrelationship with other contracts.
14. Equal opportunity requirements.
15. Laboratory testing of material requirements.
16. Inventory of materials stored on site provisions.
17. Progress estimate and payment procedure.
18. Posting of signs.
19. Project safety.
20. Prompt payment procedure.
21. Review of contract - addenda, supplementary general conditions, special provisions, special specifications, and other unique project items.
22. Other

1.5 JOB MEETINGS

A. General

Job meetings shall be held as deemed necessary by the ENGINEER/ARCHITECT or OWNER or as requested by the CONTRACTOR throughout the duration of the Project. The meetings shall be held at a location selected by or approved by the Owner's Representative. The OWNER's REPRESENTATIVE or CONTRACTOR, as agreed to, shall preside over the meeting and issue meeting minutes.

B. Attendees

Job meetings will be attended by the following:

1. CONTRACTOR's Project Manager, when requested to attend.
2. CONTRACTOR's Construction Superintendent.
3. Any subcontractors' and/or suppliers' representatives whom the CONTRACTOR may desire to invite or whom the ENGINEER/ARCHITECT or OWNER requests to attend.
4. OWNER's REPRESENTATIVE
5. ENGINEER/ARCHITECT's representative(s), if needed or required.
6. OWNER's PROJECT MANAGER, if needed or required
7. OWNER's Sponsor Department representative(s), if needed or required.

C. Meeting topics

The topics will include, but not necessarily be limited to, the following subjects:

1. Review of previous meetings' notes and update of pertinent information and Project status.
2. Identification and discussion of new job related construction problems. Such discussion will be toward resolving identified problems.
3. Review work accomplished to date and establish proposed construction activities for the upcoming week(s).
4. Discuss the status of or need for change orders.
5. Check of required bonds and insurance certificates (including Workers' Compensation Insurance verification for CONTRACTOR's, Subcontractor's, and Sub-Subcontractor's employees as stated in Section 00700, General Conditions, 5.2 Workers' Compensation).
6. Status of pay requests.
7. Work in progress.
8. Review and update construction schedule.
9. Review of submittals schedule and status of submittals.
10. Status of SMBR Compliance Plan.
11. Status of Safety Training certificates for all new workers on project.
12. Other.

1.6 OTHER MEETINGS

Other meetings shall be held from time to time as may be requested by the CONTRACTOR, the ENGINEER/ARCHITECT, or the OWNER. The time and place of the meetings shall be as mutually agreed upon. The attendance at the meetings shall be as requested by the party requesting the meeting.

END

PART 1 - GENERAL

1.1 RELATED DOCUMENTS:

The Contractor prepares submittals. Drawings and general provisions of Contract, including Section 00700, "General Conditions"; Section 00810, "Supplemental General Conditions"; Division 1 requirements and City of Austin Technical Specifications and Special Provisions thereto, should be used as the related documents for this requirement. Attachment 1 lists the submittals that have been identified for this project.

1.2 SUMMARY

A. This Section includes administrative and procedural requirements for submittals required for performance of the Work, including the following:

1. Security plan.
2. Contractor's construction schedule.
3. Submittal schedule.
4. Shop drawings.
5. Product data.
6. Samples.
7. Quality assurance and quality control submittals, including calculations, mix designs and substantiating test results.

B. Administrative Submittals: Refer to other Division 1 Sections and other Contract Documents for requirements for administrative submittals. Such submittals include, but are not limited to, the following:

1. Permits.
2. Applications for Payment.
3. Performance and Payment bonds.
4. Insurance certificates.
5. Monthly Subcontractors expense report.
6. Non-use of asbestos affidavits

C. Related Sections: The following Sections contain requirements that relate to this Section:

1. Section 00700, "General Conditions"; Section 00810, "Supplemental General Conditions"; and/or Division 1, Section 01025, "Measurement and Payment" specifies requirements for submittal of the Schedule of Values.

2. Division 1, Section 01200, "Project Meetings" specifies requirements for submittal and distribution of meeting and conference minutes.

3. Section 00700, "General Conditions"; Section 00810, "Supplemental General Conditions"; and/or Division 1, Section 01700, "Contract Close-out" specifies requirements for submittal of Project Record Documents and warranties at project close-out.

4. Section 00700, "General Conditions" Article 6.2.4 specifies requirements for Substitutes and "Approved Equal" Items.

PART 2 - PRODUCTS - not used

PART 3 - EXECUTION

3.1 SUBMITTAL PROCEDURES

Contractor shall be responsible for the following:

A. Coordination: Coordinate preparation and processing of submittals with performance of construction activities. Transmit each submittal sufficiently in advance of performance of related construction activities to avoid delay.

1. Coordinate each submittal with fabrication, purchasing, testing, delivery, other submittals, and related activities that require sequential activity.

2. Coordinate transmittal of different types of submittals for related elements of the Work so processing will not be delayed by the need to review submittals or resubmittals concurrently.

   a. The E/A reserves the right to withhold action on a submittal requiring coordination with other submittals until all related submittals are received.

3. Processing: To avoid the need to delay installation as a result of the time required to process submittals, allow sufficient time for submittal review, including time for resubmittals.

   a. Allow fourteen (14) calendar days for initial review. Allow additional time if the Engineer must delay processing to permit coordination with subsequent submittals.

   b. If an intermediate submittal is necessary, process the same as the initial submittal.

   c. Allow fourteen (14) calendar days for processing each resubmittal.

   d. No extension of Contract Time will be authorized because of failure to transmit submittals to the E/A sufficiently in advance of the Work to permit processing.

B. Submittal Preparation: Place a permanent label or title block on each submittal for identification. Indicate the name of the entity that prepared each submittal on the label or title block.

1. Provide a space approximately 4 inches by 5 inches (100 by 125 mm) on the label or beside the title block on Shop Drawings to record the Contractor's review and approval markings and the action taken.

2. Include the following information on the label for processing and recording action taken.

   a. Project name.
   b. Date.
   c. Name and address of the Contractor’s Engineer.
   d. Name and address of the Contractor.
   e. Name and address of the subcontractor.
   f. Name and address of the supplier.
   g. Name of the manufacturer.
   h. Number and title of appropriate Specification Section.
   i. Drawing number and detail references, as appropriate.

C. Number of Copies:

1. Two (2) copies of the proposed Construction schedule and subsequent revision are required.

2. Two (2) copies of the proposed Submittal schedule and subsequent revision are required.

3. Nine (9) copies of Shop Drawings, Product, Product Samples, Quality Assurance and Quality Control submittals are required.

D. Submittal Transmittal: Package each submittal appropriately for transmittal and handling. Transmit each submittal from the Contractor to the E/A through the Owner's Representative using a transmittal form (An example Transmittal Form is provided at the end of this section). The E/A will not accept submittals received from sources other than the Contractor.

1. On the transmittal, record relevant information and requests for data. On the form, or separate sheet, record deviations from Contract Document requirements, including variations and limitations. Include Contractor's certification that information complies with Contract Document requirements.

2. Number transmittals in sequence for each Series of the Specifications thus: x-xxx. The number after the dash indicates the Section of the Specifications, and the number before the dash is the sequence number of the transmittal. For example, the first item submitted related to Specification Item No. 506, "Manholes" would be labeled **1-506**, the second item submitted would be labeled **2-506**, etc. If the submittal item relates to a Special Provision or Special Specification, use **SP506** or **SS5061**, for example, to indicate the applicable Specification Section. Identify resubmittals with a letter of the alphabet following the original sequence number, using "A" for the first resubmittal, "B" for the second resubmittal, etc. For example, the first resubmittal of the second item submitted for Specification SP506 would be labeled **2A-SP506**.

3.2 CONTRACTOR'S CONSTRUCTION SCHEDULE

A. Construction Schedule: As described in Section 2.4.2 of Section 00700 "General Conditions", prepare a fully developed Contractor's construction schedule ("Baseline Schedule") using Microsoft Project© software unless otherwise approved by Owner's Representative. Submit Baseline Schedule prior to or at the preconstruction conference, and submit updated schedules as specified by the E/A, usually at each regularly scheduled Project Meeting and with each pay application.

1. Detail each significant construction activity and use a weekly timeframe for the schedule. Use the same breakdown of units of the Work as indicated in the "Schedule of Values."

2. With each update, revise task completion percentage and mark completed tasks.

3. Prepare the schedule on a sheet, or series of sheets, of stable transparency, or other reproducible media, of sufficient width to show data for the entire construction period.

4. Secure time commitments for performing critical elements of the Work from parties involved. Coordinate each element on the schedule with other construction activities; include minor elements involved in the sequence of the Work. Show each activity in proper sequence. Indicate graphically the critical path items and the sequences necessary for completion of related portions of the Work.

5. Indicate the phases of work in which subcontractors will be participating. Subcontractors shall be indicated by name.

6. Coordinate the Contractor's Construction Schedule with the Schedule of Values, list of subcontracts, Submittal Schedule, progress reports, payment requests, and other schedules.

7. Indicate substantial completion in advance of the date established for Final Completion to allow time for the E/A's procedures necessary for certification of Substantial and Final Completion.

B. Work Stages: Indicate important stages of construction for each major portion of the Work, including submittal review, testing, and installation.

C. Cost Correlation: Within the Baseline Schedule, provide cost information indicating planned and actual costs. On the appropriate task line(s), show dollar volume of Work performed as of the dates used for preparation of applications for payment. Refer to Section 00700, "General Conditions", Article 14 Payment to Contractor and Completion for cost reporting and payment procedures.

D. Distribution: Following response to the Baseline Schedule submittal, distribute electronic copies to the E/A, subcontractors, suppliers, and other parties required to comply with scheduled dates. Keep a copy at the Project Site at all times.

1. When revisions are made, distribute to the same parties and post in the same locations. Delete parties from distribution when they have completed their assigned portion of the Work and are no longer involved in construction activities.

E. Schedule Updating: Revise the schedule after each meeting, event, or activity where revisions have been recognized or made and as requested by the E/A. Issue the updated schedule concurrently with the report of each meeting, or as requested by the E/A.

3.3 SUBMITTAL SCHEDULE

A. Concurrently with the development of the Contractor's Construction Schedule, prepare a complete schedule of submittals. Submit the initial Submittal Schedule along with the Construction Schedule, at, or prior to, the Pre-construction Conference.

1. Coordinate Submittal Schedule with the list of subcontractors, Schedule of Values, and the list of products as well as the Contractor's Construction Schedule.

2. Prepare the schedule in chronological order. Provide the following information:

a. Scheduled date for the first submittal.
b. Related Section number or Specification number.
c. Submittal category (Shop Drawings, Product Data, Calculations, Test Results, or Samples).
d. Name of the subcontractor.
e. Description of the part of the Work covered.
f. Scheduled date for resubmittal.
g. Scheduled date for completion of the E/A's review.

B. Distribution: Following Owner's response to the initial submittal, print and distribute copies to the Owner's Representative, E/A, Owner, subcontractors, suppliers, and other parties required to comply with submittal dates indicated. Keep copies at the Project Site at all times.

1. When revisions are made, distribute to the same parties and post in the same locations. Delete parties from distribution when they have completed their assigned portion of the Work and are no longer involved in construction activities.

C. Schedule Updating: Revise the schedule after each meeting or activity where revisions have been recognized or made. Issue the updated schedule concurrently with the report of each meeting, or as requested by the E/A.

3.4 CONSTRUCTION SEQUENCE PLANS

The Contractor is required to submit construction sequence plans to the City at, or prior to, the pre-construction conference for approval. The Project shall be divided into phases according to the sequence of construction given in the Drawings and traffic control plans. The Contractor shall arrange his/her work schedule to complete all Work on each phase, including street repair, any valve casting or manhole adjustments, and street overlay before moving on to the next work area.

3.5 SHOP DRAWINGS

A. Submit newly prepared information drawn accurately to scale. Highlight, circle, or otherwise indicate deviations from the Contract Documents. Do not reproduce Contract Documents or copy standard information as the basis of Shop Drawings. Standard information prepared without specific reference to the Project is not a Shop Drawing.

B. Shop Drawings include fabrication and installation Drawings, setting diagrams, schedules, patterns, templates and similar Drawings. Include the following information:

1. Dimensions;
2. Identification of products and materials included by sheet and detail number;
3. Compliance with specified standards;
4. Notation of coordination requirements; and
5. Notation of dimensions established by field measurement.
6. Sheet Size: Except for templates, patterns and similar full-size Drawings, submit Shop Drawings on sheets at least 8-1/2 inches by 11 inches but no larger than 24 inches by 36 inches.
7. Do not use Shop Drawings without an appropriate stamp indicating action taken.

3.6 PRODUCT DATA

A. Collect Product Data into a single submittal for each element of construction or system. Product Data includes printed information, such as manufacturer's installation instructions, catalog cuts, standard color charts, roughing-in diagrams and templates, standard wiring diagrams, applicable certifications and performance curves.

1. Mark each copy to show applicable choices and options. Where printed Product Data includes information on several products that are not required, mark copies to indicate the applicable information. Include the following information:

   a. Manufacturer's printed recommendations;
   b. Compliance with trade association standards;
   c. Compliance with recognized testing agency standards;
   d. Application of testing agency labels and seals;
   e. Notation of dimensions verified by field measurement; and
   f. Notation of coordination requirements.

2. Do not submit Product Data until compliance with requirements of the Contract Documents has been confirmed.

3. Distribution: Furnish copies of final submittal to installers, subcontractors, suppliers, manufacturers, fabricators, and others required for performance of construction activities. Show distribution on transmittal forms.

   a. Do not proceed with installation until a copy of the final submission of Product Data is in the Installer's possession.

   b. Do not permit use of unmarked copies of Product Data in connection with construction.

4. Potable Water, Reclaimed Water, and Wastewater Items or Projects: The Contractor shall submit descriptive information and evidence that the materials and equipment the Contractor proposes for incorporation into the Work is of the kind and quality that satisfies the specified functions and quality. **Austin Water Utility Standard Products Lists (SPL)** are a part of the Specifications. Contractors shall use products specified in the Contract Documents, listed on the SPLs, or approved by AWU through the process in Section 2.4.0 of the Utilities Criteria Manual. Products contained in the SPL cannot be substituted for items shown on the Drawings, or called for in the specifications, unless approved by the E/A in conjunction with the Austin Water Utility Standards Committee. **Unless otherwise specified,** products current at the time of solicitation shall be installed except where an updated List has been issued to remove a product because of quality or performance issues.

3.7 SAMPLES

A. Submit full-size, fully fabricated Samples cured and finished when specified and physically identical with the material or product proposed. Samples include partial sections of manufactured or fabricated components, cuts or containers of materials, color range sets, and swatches showing color, texture, and pattern.

1. Mount or display Samples in the manner to facilitate review of qualities indicated. Include the following:

   a. Specification Section number and reference;
   b. Generic description of the Sample;
   c. Sample source;
   d. Product name or name of the manufacturer;
   e. Compliance with recognized standards; and
   f. Availability and delivery time.

2. Submit Samples for review of size, kind, color, pattern, and texture. Submit Samples for a final check of these characteristics with other elements and a comparison of these characteristics between the final submittal and the actual component as delivered and installed.

   a. Where variation in color, pattern, texture, or other characteristic is inherent in the material or product represented, submit at least 3 multiple units that show approximate limits of the variations.

   b. Refer to other Specification Sections for requirements of Samples that illustrate workmanship, fabrication techniques, details of assembly, connections, operation, and similar construction characteristics.

   c. Refer to other Sections for Samples to be returned to the Contractor for incorporation in the Work. Such Samples must be undamaged at time of use. On the transmittal, indicate special requests regarding disposition of Sample submittals.

   d. Samples not incorporated into the Work, or otherwise designated as the Owner's property, are the property of the Contractor and shall be removed from the site prior to Substantial Completion.

3. Maintain sets of Samples, as returned, at the Project Site, for quality comparisons throughout the course of construction.

   a. Unless noncompliance with Contract Document provisions is observed, the submittal may serve as the final submittal.

   b. Sample sets may be used by Owner for final acceptance of the construction associated with each set.

B. Distribution of Samples: Prepare and distribute additional sets to subcontractors, manufacturers, fabricators, suppliers, installers, and others as required for performance of the Work. Show distribution on transmittal forms.

3.8 QUALITY ASSURANCE AND QUALITY CONTROL SUBMITTALS

A. Submit quality assurance and quality control submittals, including design data, certifications, manufacturer's instructions, manufacturer's field reports, materials test results, field testing and inspection reports, and other quality-control submittals as required under other Sections of the Specifications.

B. Certifications: Where other Sections of the Specifications require certification that a product, material, or installation complies with specified requirements, submit a certification from the manufacturer or responsible Engineer certifying compliance with specified requirements.

   1. Signature: Certification shall be signed by an officer of the corporation or other individual authorized to sign documents on behalf of the company.

C. Calculations: When required in the technical specification, calculations shall be prepared and stamped by a Professional Engineer registered in the State of Texas.

D. Concrete, Controlled Low Strength Material, Asphalt Stabilized Base and Hot Mix Asphaltic Concrete Mix Designs and Substantiating Test Data: Requirements for submittal of mix designs and substantiating test data are specified in the applicable Technical Specification Section. Each separate batch plant supplying ASB, HMAC and/or concrete shall submit mix designs to the Owner's Representative for review.

3.9 TECHNICAL SUBMITTALS REQUIRED

A. Technical submittals required include, but are not limited to, the following list. This list is provided as an aid to the Contractor, but is not intended to be all inclusive. The Contractor shall refer to the Technical Specifications for additional requirements.

   1. Construction work schedule
   2. Certificate of compliance with regulatory authorities and organizations, as c sections.
   3. Construction Equipment Emissions Reduction Plan.
   4. Pipe and pipe fittings.
   5. Valves, strainers, related accessories.
   6. Pipe and equipment insulation.
   7. Pipe supports.
   8. Hydronic accessories, including air release valves, thermometers, pressure gauges, pressure temperature test ports, pipe hangers and support structures, pipe rollers, Stainless Steel nipples, Stainless Steel impulse tubing, etc.
   9. Controlled low strength material flow able fills, material Data, mix Designs

10. Shop drawings for piping layouts, valve riser, piping support, etc.
11. Underground boxes and vaults, manholes, and related shop drawings.
12. Frames, Grates, Rings and Covers.
13. Cleaning and Flushing Plan.
14. Fiber optic cabling.
15. Electrical and controls wiring and conduit.
16. PVC telecomm conduit.
17. Controls, controls enclosures, and all control elements.
18. Electrical equipment and materials, including conduit, wiring, etc.
19. Pull boxes.
20. Gravel and/or sand and/or other fill material.
21. Valve box assembly and related ancillary items.
22. Inner duct and related accessories.
23. Box tunnel materials, work schedule/plan, and related work safety plan.
24. Box tunnel materials, work schedule/plan, and related work safety plan.
25. Excavation Safety Systems, Excavation Safety Systems Plan, Calculations.
26. Barricades, Signs, and Traffic Handling Plan.
27. Asphalts, Oils, and Emulsions.
28. Concrete Pavement , Material Data, Mix Designs, Test Results.

3.10 ENGINEER/ARCHITECT'S ACTION

A. Except for submittals, for the record, or for information where action and return is not required, the E/A will review each submittal, mark to indicate action taken, and return within the time frame specified in Paragraph 3.1.A.3.

   1. Compliance with specified characteristics is the Contractor's responsibility.

B. Action Stamp: The E/A will stamp each submittal with a uniform, action stamp. The E/A will mark the stamp appropriately to indicate the action taken, as follows:

   1. “Reviewed”: the Work covered by the submittal may proceed provided it complies with requirements of the Contract Documents. Final payment depends on that compliance.

   2. "Reviewed with Comments”: the Work covered by the submittal may proceed provided it complies with notations or corrections on the submittal and requirements of the Contract Documents. Final payment depends on that compliance.

   3. "Revise and Resubmit” or “Rejected": do not proceed with Work covered by the submittal, including purchasing, fabrication, delivery, or other activity. Revise or prepare a new submittal according to the notations and resubmit without delay. Repeat if necessary to obtain different action mark.

      a. Do not use, or allow others to use, submittals marked "Revise and Resubmit" or “Rejected” at the Project Site or elsewhere where Work is in progress.

   4. Other Action: Where a submittal is for information, or for record purposes, or for special processing, or for other activity, the E/A will return the submittal marked “Record Copy”, “Action Not Required” or “No Action Taken."

C. Unsolicited Submittals: The E/A will return unsolicited submittals to the sender without action.

3.11 PREPARATION AND SUBMITTAL OF CONSTRUCTION RECORD DRAWINGS

The Owner's Representative and the Contractor's Superintendent will each maintain a set of bluelines noting any changes in ink during construction of the Project. The Owner's Representative and the Contractor's Superintendent will compare bluelines at least weekly (at a time mutually acceptable to both) to exchange information and compare notes to ensure all items installed and changes are documented. The following is a recommended minimum of items to be noted:

GENERAL

1. Notes should be sufficiently clear to allow a draftsperson to easily make the necessary changes without the need for field checks and interpretation.
2. One complete set of Construction Record bluelines will be submitted prior to the final pay request and forwarded to the Owner.

STREET RECONSTRUCTION AND OVERLAY PROJECTS

1. Location, type, and quantity of all work added or deleted from the Project including repair areas, milled areas, sidewalk, ramps, curb and gutter, etc.
2. Deviations in street, sidewalk, curb and gutter location and grades from Drawings.

WATER/WASTEWATER PROJECTS

1. Type, name and model numbers of all valves (with # of turns to open/close), air release valves, drain and fire hydrants noted at locations installed.
2. Installed locations of all assignments, appurtenances and elevations which differ from those indicated on the Drawings.
3. Pipe manufacturer type and classification noted in sufficient detail to determine location and extent of each type or classification installed.
4. Modification to any standard or special details noted.
5. Location and description of pipe closures.
6. Thrust blocking locations and restrained pipe lengths, approximate dimensions and quantities noted.
7. Location, type and quantity of all addition and deletions.
8. Changes in grade.

The above list is not intended to be complete. Any information noted which could be used for future maintenance, location and construction projects is encouraged to be noted on the bluelines.

3.12 CONSTRUCTION DIARIES

The Contractor shall prepare a daily construction diary recording as a minimum the following information concerning events at the site and submit duplicate copies to the Owner's Representative at weekly intervals. The copies are to be signed by the project Superintendent as defined in Section 00700, Article 6.1.2.

1. Work performed;
2. Approximate count of Contractor's personnel, by classification, on the site;
3. List by classification, of all Subcontractors, personnel and any professionals on the site that day;
4. List of all equipment on the site by make and model;
5. High and low temperatures together with general weather conditions;
6. Start time and finish time of day's work;
7. Accidents and / or unusual events;
8. Meetings and significant decisions made;
9. Stoppages, delays, shortages and / or losses;
10. Meter readings and / or similar recordings;
11. Emergencies procedures that may have been needed;

12. Orders and requests of governing authorities;
13. Change Orders received and implemented;
14. Services connected and / or disconnected;
15. Installed equipment and / or system tests and / or startups and results;
16. Partial completions and / or occupancies; and
17. Date of substantial completion certified.

Shop Drawing Transmittal

Month XX, 2008

Transmittal No. _____
Previous Transmittal No. _____
Previous Submittal Date _____

City of Austin
Construction Inspection Division
Public Works Department
P.O. Box 1088
Austin, Texas 78767

Project Name: Austin Lakeside Drive

Attention: Owner's Representative

Enclosed are nine (9) copies of the following items for your review:

Item No.	Description	Submittal Type	Specification Section	Subcontractor/Supplier
1.	6" DI Pipe	Produce Data	510	ABC Company
2.	8" Resilient Seat Gate Valve	Product Data	511	DEF Company

Example

NOTE: Item 1 above contains a deviation from the Specifications as indicated on the item

Submitted by: _____
XYZ Company
101 Ranch Road 2974
Austin, Texas 78759

END

CONSTRUCTION EQUIPMENT EMISSIONS REDUCTION PLAN
Section 01353

1. GENERAL

1.1. RELATED DOCUMENTS

A. This Section applies to Drawings and all provisions of Contract.

1.2. SUMMARY – CONSTRUCTION EQUIPMENT EMISSIONS PLAN

A. The OWNER, as part of the Council Resolution No. 20100211-019, has decided to take steps to reduce emissions associated with construction process including Nitrogen Oxides (NOx), particulate matter and greenhouse gas. Construction activity is a source of large quantities of particulate matter and ozone forming Nitrogen Oxides that adversely affect the health of our community and the natural environment.

B. The CONTRACTOR shall employ practices and take actions that reduce emissions from NOx, particulate matter (black soot) and greenhouse gases resulting from activities associated with new construction and demolition Projects.

C. The CONTRACTOR shall maximize the use of equipment and vehicles with advanced emission controls in support of the City's goals, utilizing equipment that meets defined EPA emissions standards.

1.3. DEFINITIONS

A. "Construction Equipment" means equipment powered by an internal combustion engine and used for performing or otherwise advancing the Work on the Project, other than motor vehicles intended for use on public highways and registered pursuant to Section 502.002 of the Texas Transportation Code.

B. The list of applicable Construction Equipment includes, but is not limited to excavators, backhoes, loaders, bulldozers, graders, rock saws, generators, and other similar equipment.

C. "EPA" means the United States Environmental Protection Agency.

D. "Low-Use Equipment" means any piece of construction equipment which is used for less than ten (10) hours per week on site for a single construction contract.

E. "Greenhouse Gases" are emissions that absorb and emit radiation within the atmosphere. Greenhouse Gases can be one or a combination of, these gases: carbon dioxide, methane, nitrous oxide and three groups of fluorinated gases (sulfur hexafluoride, hydro fluorocarbons, and perfluorocarbons)

1.4. REQUIREMENTS – Not Used

1.5. SUBMITTALS

A. CONSTRUCTION EQUIPMENT EMISSIONS REDUCTION PLAN:

1. The CONTRACTOR agrees to prepare a draft Emissions Reduction Plan (referred to as PLAN) prior to start of construction. This PLAN shall include an inventory report

containing identifying data for each piece of equipment to be used on the worksite and shall include the following:

- Vehicle/Equipment: Make & Model Year
- Vehicle/Equipment: Engine Make & Model Year
- Vehicle/Equipment: Fuel Type
- Vehicle/Equipment: Expected gallons or hours used for project duration

a) The OWNER will provide Emissions Reduction Toolkit to help the CONTRACTOR in preparation of the PLAN and inventory.

2. The CONTRACTOR shall develop a list of strategies to be used in this Project in order to reduce emissions from NOx, particulate matter and greenhouse gas (CO_2 equivalent). Once prepared, the agreed upon strategies shall be incorporated into the PLAN. The PLAN will then be signed by the CONTRACTOR and made ready for implementation. Implementation progress will be reviewed once a month in regularly scheduled project progress meetings. The PLAN may be modified during construction if changes are made to the Project, but adjustments shall be approved by the OWNER prior to implementation.

3. This PLAN may be used by the Owner's Representative or Inspector to conduct site inspections and/or verify compliance with specification elements.

4. If additional equipment is brought on-site after construction begins, the Contractor shall provide this same inventory information to the Owner's Representative for the new equipment on or before the day it begins work on-site. All additional equipment shall conform to the PLAN.

5. Reports shall be provided for all equipment used on-site.

B. EQUIPMENT EMISSIONS CLOSEOUT DOCUMENTATION:

1. Submit the following prior to final payment:

a) Record of changes made to the original PLAN and reasons.

b) Provide a summary and documentation of strategies used and estimated reductions in fuel & emissions.

c) Provide documentation of amount and % of alternative fuel used.

2. PRODUCTS

Not used

3. EXECUTION

3.1. GENERAL

A. Implement the submitted PLAN. Provide personnel, documentation, equipment, signage, transportation, and other items as required to implement the PLAN during the entire duration of the Contract.

3.2. EQUIPMENT EMISSIONS PLAN IMPLEMENTATION

A. Plan Coordinator (Could be same as superintendent): Designate an on-site person responsible for instructing workers on the Owner's intent to reduce emissions, overseeing implementation and documenting results of the PLAN for the Project.

B. Plan Review: Review the PLAN in monthly progress meeting and include comments in the meeting notes.

C. Instruction: Provide on-site instructions to all subcontractors of emissions reduction methods to be used by all parties for the appropriate activities of the Project.

D. Discuss Owner's goals and requirements at the following meetings:

1. Pre-bid conference.

2. Pre-construction conference.

3. Progress meetings (monthly).

3.3 EQUIPMENT EMISSIONS REDUCTION TOOLKIT

A. Equipment Emissions Reduction Toolkit available at:

1. Website: (http://austintexas.gov/department/capital-improvement-program)

2. City of Austin Public Works Department, Project Management Division, One Texas Center, Suite 900

3. Construction Job Site Office (after contract award)

B. Equipment Emissions Reduction Toolkit consists of:

1. A list of Construction Equipment Emissions Reduction Strategies

2. EPA fuel savings calculator by idling reductions

3. Posting of Anti-idling signs

4. Memorandum of Agreement by Local Area Governments

5. Equipment Inventory Form

3.4 A LIST OF EQUIPMENT EMISSIONS REDUCTION STRATEGIES

The following are suggested emissions reduction strategies and references. As per the specification section 01353, 1.5 Submittals, the CONTRACTOR shall develop a list of strategies to be used in this Project at the start of construction.

C-1 Anti-Idling Strategies:

1. Implement and enforce anti-idling practices for all equipment and vehicles on and adjacent to the site and associated with the project. City will provide a construction site sign and stickers for vehicles and equipment. (http://www.engineoff.org/)

2. Limit all idling of project associated vehicles and equipment operations to five (5) minutes unless the idling is applicable to one or more of the following exceptions:

a) Idling is being used for emergency response purposes;

b) Idling is necessary for component of mechanical operation, maintenance, or diagnostic purposes; or

c) Idling is for the health or safety of the equipment operator.

3. Provide education to all staff, vendors and subcontractors about emissions hazards and anti-idling practices and encourage use of EPA calculator for fuel savings.

4. To the extent possible, do not stop or idle haulage trucks directly under tree limbs and foliage overhanging the street along the haul route. Further avoid such damage from truck exhaust by means of exhaust diversion devices to redirect or diffuse exhaust from being directed in a concentrated manner to tree limbs and foliage.

5. Avoid vehicle loitering or queuing outside or inside the gates of the work area to minimize degradation of localized air quality.

   (http://data.capcog.org/air-quality/engineoff/AntiIdlingBrochure(2).pdf)

   (http://data.capcog.org/air-quality/engineoff/template-1/HowtoOrderSign.html)

   (http://data.capcog.org/air-quality/engineoff/smartwaycalculator.xls)

   (http://austintexas.gov/airquality/)

C-2 Alternative Fuels:

6. Utilize **alternative fuels** including, Texas LED Compliant B20 (or higher) biodiesel, Compressed Natural Gas (CNG), propane and electric. (Refer to EPA Energy Policy Act for full list).

7. Avoid unnecessary fuel use by providing on-site fuelling for alternate fuels.

   (http://www.tceq.texas.gov/airquality/mobilesource/txled/cleandiesel.html)

   (http://www.eere.energy.gov/cleancities)

   (http://lonestarcfa.org)

C-3 Vehicle/Equipment Improvements:

8. Eliminate use of vehicles in tier 0 and 1 categories per EPA and rent or purchase tier 2 and 3 or (4) compliant vehicles.

9. It is recommended that CONTRACTOR takes advantage of the **Texas Emission Reduction Plan (TERP)** grant incentives to upgrade (replace or repower) vehicles with retrofitted emission reduction technologies. (http://www.tceq.texas.gov/airquality/terp/index.html) or (www.terpgrants.com)

10. Utilize **battery powered and/or solar powered equipment** where available. This strategy can be combined with anti-idling strategies by using this technology for sign boards. (evtransportal.org/dieselengineidlereduction.pdf)

C-4 Maintenance Program:

11. Establish a preventative **maintenance program** addressing issues including but not limited to, fuel use, air emissions, tire pressure, smoke from exhaust and noise.

12. Make all efforts to **prevent oil/fuel spillage** on to site surfaces.

C-5 Resource Management:

13. Utilize equipment companies that are located closest to the construction site.

14. Store equipment on site during construction use or arrange for closest overnight storage including **temporary use of the Right of Way** if possible.

15. To the extent possible, CONTRACTOR shall maximize use of **local and regional materials** to reduce transportation emissions.

16. CONTRACTOR shall maximize **salvage and reuse** of appropriate on-site materials. (http://www.usgbc.org/ShowFile.aspx?DocumentID=1095)

17. To the greatest extent possible, stage equipment and vehicles away from, and minimize operation near, sensitive receptors including, but not limited to, operable windows, fresh air intakes, hospitals, schools, licensed day care facilities, residences and areas where people congregate.

END

PART 1 - GENERAL

1.1 Related Documents:

Drawings and general provisions of Contract, including General Conditions, Section 00700,and Supplemental General Conditions, Section 00810, and Division 1 requirements.

PART 2 - PRODUCTS (NOT USED)

PART 3 - EXECUTION

3.1 Office at the Work Site (Job Shack)

During the performance of this Contract, CONTRACTOR shall maintain a suitable office at or near the site of the Work which shall be the headquarters of his superintendent. Any communication given to the superintendent or delivered to CONTRACTOR's office at the site of the Work in his absence shall be deemed to have been delivered to CONTRACTOR.

In addition, CONTRACTOR shall provide a suitable field office with at least 200 square feet of floor space, for use by Owner's Representative in the Austin Area. The office shall be provided with outside entrance door with a substantial lock, glazed windows suitable for light and ventilation, and adequate heating, air conditioning, and lighting facilities. CONTRACTOR shall pay all electricity and heating bills and shall provide telephone services with a telephone as specified hereinafter. The office shall be furnished with a desk, two four-drawer filing cabinets, a table, two chairs, a plan rack, and a locker for storage of surveying instruments. The doors on the locker shall be equipped for padlocking. The general arrangement of the office and facilities provided shall be acceptable to Owner's Representative.

3.2 Water for Construction

All water required for and in connection with the Work to be performed shall be furnished by and at the expense of the CONTRACTOR through meters installed on hydrants, except for water used in the "disinfection of potable water lines" process per Specification 510.3(29). All water used in the disinfection process shall not be metered, but rather shall be measured by calculation. Such water use does not require a meter, but a double-check valve assembly is required when connecting to a fire hydrant or a City main. CONTRACTOR shall submit a written plan for the disinfection process for review and approval by OWNER prior to commencing Work. The written plan shall include the CONTRACTOR's plan for final flushing and discharge of chlorinated water, and shall specify the quantities of potable water that will be required for the procedure and dosage plan proposed by the CONTRACTOR. Water used in the disinfection process shall be supplied by the OWNER through hydrants or connection through a City main at no charge to the CONTRACTOR for the initial disinfection procedure up to the quantities agreed to in the written plan for the disinfection process. Should the initial disinfection procedure fail to produce acceptable bacteriological sample test results, the cost of water at standard rates used for subsequent disinfection procedures shall be the responsibility of the CONTRACTOR with quantities determined through calculations.

For all water required for and in connection with the Work to be performed other than for the disinfection process, water and meters will be available from OWNER at standard rates. All costs for obtaining a water meter shall be the responsibility of the CONTRACTOR. The CONTRACTOR shall contact the Austin Water Utility and arrange to pick up the meter. CONTRACTOR shall install a double-check valve assembly on the fire hydrant between the hydrant and the meter, to prevent backflow in the event of pressure failure. CONTRACTOR shall supply all necessary tools, hose and pipe, and shall make necessary arrangements for securing and transporting such water and shall take water in such a manner, and at such

times, that will not produce a harmful drain or decrease of pressure in the OWNER's water system. It shall be the CONTRACTOR's responsibility to make arrangements with the Austin Water Utility for the metering and reporting of the amount of water used. Water shall not be used in a wasteful manner. Standard hydrant wrenches shall be used for opening and closing of fire hydrants. In no case shall pipe wrenches be used for this purpose. Temporary lines shall be removed when no longer required.

"If applicable, after the installation of the City of Austin's water meter(s) for the Project, the CONTRACTOR has the option to utilize the water available from this service at the CONTRACTOR's expense. An adjustment to the Contract amount will be made by Change Order at the end of the Project for the costs incurred by the City of Austin for the water."

3.4 Sanitary Facilities

CONTRACTOR shall furnish temporary sanitary facilities at the site, as provided herein, for the needs of all construction workers and others performing Work or furnishing services on the Project.

Sanitary facilities shall be of reasonable capacity, properly maintained throughout the construction period, and obscured from public view to the greatest practical extent. If toilets of the chemically treated type are used, at least one toilet shall be furnished for each 20 employees. CONTRACTOR shall enforce the use of such sanitary facilities by all personnel at the site.

3.5 Protection of Public and Private Property

CONTRACTOR shall protect, shore, brace, support and maintain all underground pipes, conduits, drains, and other underground construction uncovered or otherwise affected by the CONTRACTOR's operations. All pavement, surfacing, driveways, curbs, walks, buildings, utility poles, guy wires, fences, and other surface structures affected by construction operations, together with all sod and shrubs in yards, parkways, and medians, shall be restored to their original condition, whether within or outside the easement/right-of-way. All replacements shall be made with new materials.

CONTRACTOR shall be responsible for all damage to streets, roads, curbs, sidewalks, highways, shoulders, ditches, embankments, culverts, bridges, or other public or private property, which may be caused by transporting equipment, materials, or men to or from the Work, whether by him or his Subcontractors. CONTRACTOR shall make satisfactory and acceptable arrangements with the owner of, or the agency having jurisdiction over, the damaged property concerning its repair or replacement or payment of costs incurred in connection with the damage.

All fire hydrants and water control valves shall be kept free from obstruction and available for use at all times.

3.6 Tree and Plant Protection

All trees and other vegetation which must be removed to perform the Work shall be removed and disposed of by the CONTRACTOR; however, no trees or cultured plants shall be unnecessarily removed unless their removal is indicated on the Drawings. All trees and plants not removed shall be protected against injury from construction operations.

No tree shall be removed outside of permanent easement(s), except where authorized by the E/A. Whenever practicable, CONTRACTOR shall tunnel beneath trees in yards and parking lots when on or near the line of trenching operations. Hand excavations shall be employed as necessary to prevent injury to trees. Care shall be taken with exposed roots, unearthed during construction, so that roots do not dehydrate causing tree damage.

Trees considered by the E/A to have any significant effect on construction operations are indicated on the Drawings and those which are to be preserved are so indicated.

CONTRACTOR shall take extra measures to protect trees designated to be preserved, using methods shown on the Drawings and as specified in Standard Specification Item No. 610S "Preservation of Trees and other Vegetation".

3.7 Security

CONTRACTOR shall be responsible for protection of the site, and all Work, materials, equipment, and existing facilities hereon, against vandals and other unauthorized persons.

No claim shall be made against OWNER by reason of any act of an employee or trespasser, and CONTRACTOR shall make good all damage to the OWNER's property resulting from CONTRACTOR's failure to provide security measures as specified.

Security measures shall be at least equal to those usually provided by OWNER to protect existing facilities during normal operations, and shall also include such additional security fencing, barricades, lighting, and other measures as required to protect the site. When required, the CONTRACTOR shall provide a security plan to the OWNER for review as to appropriateness of the security measures proposed.

3.8 Access Roads

CONTRACTOR shall establish and maintain temporary access roads to various parts of the site as required to complete the Project. Such roads shall be available for the use of all others performing Work or furnishing services in connection with the Project.

3.9 Parking

CONTRACTOR shall provide and maintain suitable parking areas for the use of all construction workers and others performing Work or furnishing services in connection with the Project, as required, to avoid any need for parking personal vehicles where they may interfere with public traffic, the OWNER's operations, or construction activities.

3.10 Dust Control

Dust Control during construction of this Project shall conform to Standard Specifications Item No. 220S, "Sprinkling for Dust Control". No direct payment will be made for dust control. Dust Control shall be considered subsidiary work relating to various Bid items of the Contract.

3.11 Temporary Drainage Provisions

CONTRACTOR shall be responsible for providing for the drainage of stormwater and such water as may be applied or discharged on the site in performance of the Work. CONTRACTOR shall obtain E/A approval for temporary drainage facilities which will handle, carry through, or divert around his Work all drainage flow, including storm flow and flows created by construction activity, to prevent silting of waterways or flooding damage to the property and adjacent property.

3.12 Erosion Control

CONTRACTOR shall prevent erosion of soil on the site and adjacent property resulting from his construction activities. Effective measures shall be initiated prior to the commencement of clearing, grading, excavation, or other operations which will disturb the natural protection.

CONTRACTOR shall use controls found in "Environmental Criteria Manual" or developed from successful techniques elsewhere as approved by E/A. Siltation and/or sedimentation controls shall include dams, berms, and dikes as recommended in the "Environmental Criteria Manual".

3.13 Pollution Control

CONTRACTOR shall prevent the pollution of drains and watercourses by sanitary wastes, sediment, debris and the substances resulting from construction activities. No sanitary wastes will be permitted to enter any drain or watercourse. No sediment, debris or other

substance will be permitted to enter sanitary sewers and reasonable measures shall be taken by CONTRACTOR to prevent such materials from entering any drain or watercourse.

CONTRACTOR shall observe the rules and regulations of the State of Texas and agencies of the U.S. Government prohibiting the pollution of any lake, stream, river, or wetland by the dumping of any refuse, rubbish, dredge material, or debris therein.

CONTRACTOR is specifically cautioned that disposal of materials into any water of the State must conform to the requirements of the Texas Commission on Environmental Quality (TCEQ), and any applicable permit from the U.S. Army Corps of Engineers.

3.14 Noise Control

CONTRACTOR shall comply with the City of Austin's Noise Ordinance. CONTRACTOR shall take reasonable measures to avoid unnecessary noise. Such measures shall be appropriate for the normal ambient sound level in the area during working hours. All construction machinery and vehicles shall be equipped with practical sound-muffling devices, and operated in a manner to cause the least noise consistent with efficient performance of the Work.

3.15 CIP Sign

CONTRACTOR shall erect install and maintain CIP signs as specified. Signs shall be constructed in accordance with City Standard Specification Item No. 802S "Project Signs," as indicated on the Drawings.

3.16 Fences

All existing fences affected by the Work shall be maintained by the CONTRACTOR until completion of the Work. Fences which interfere with construction operations shall not be relocated or dismantled until written permission is obtained from the owner of the fence, and the period the fence may be left relocated or dismantled has been agreed upon. Where fences must be maintained across any construction easement, adequate gates shall be installed. Gates shall be kept closed and locked at all times when not in use.

Upon completion of the Work across any tract of land, CONTRACTOR shall restore all fences to preconstruction, or to a better, condition and to their preconstruction location.

3.17 Mail Boxes

CONTRACTOR shall remove, reset temporarily, and relocate permanently all mail boxes that are within construction site limits conforming to requirements of United States Postal Service. Mailboxes shall not be laid on the ground, but shall be temporarily reset the same day as removed. Payment for removing and resetting of mail boxes will not be paid for directly, but will be considered subsidiary to the various Bid items. Any damage to mail boxes or posts shall be the responsibility of the CONTRACTOR.

3.18 Emergency Facilities

Free access shall be maintained at all times to fire lanes and emergency and utility control facilities such as fire hydrants, fire alarm boxes, police call boxes, and utility valves, manholes, junction boxes, etc. In the event that it is necessary to make one of these facilities temporarily inaccessible, CONTRACTOR shall obtain approval of such action and schedule of Work from the OWNER. CONTRACTOR shall also provide at least 24 hours prior notice to the Fire Department, Police Department, and City Department governing the affected utility. The same Department(s) shall be promptly notified by the CONTRACTOR when such facilities are placed back in unobstructed service.

3.19 Notification of Owners

Unless otherwise indicated, the OWNER will notify property owners abutting the right-of-way of impending construction. The CONTRACTOR shall exercise diplomacy and tact with individual property owners.

3.20 Maintenance of Traffic

CONTRACTOR shall conduct his Work to interfere as little as possible with public travel, whether vehicular or pedestrian. Whenever it is necessary to cross, obstruct, or close roads, driveways, and walks whether public or private, the CONTRACTOR shall provide and maintain suitable safe bridges, detours or other temporary measures to accommodate public and private travel, and shall provide reasonable notice to owners of private drives before interfering with them. Such maintenance of traffic will not be required when CONTRACTOR has obtained written permission from the owner and the tenant of the private property, or from the authority having jurisdiction over public property involved, to obstruct traffic at the designated point. A copy of the initial written permission shall be provided to the Owner's Representative.

Safety and conveyance of traffic shall be regarded as prime importance. Unless otherwise directed, all portions of streets associated with this Project shall be kept open and provided a dust free, smooth and comfortable ride to traffic. It shall be the responsibility of the CONTRACTOR to ensure that two-way traffic may safely bypass the construction site and that access is provided to abutting private property. In making open cut street crossings, the CONTRACTOR shall not block more than one-half of the street at one time without approval of the OWNER. Whenever possible, CONTRACTOR shall widen the shoulder on the opposite side to facilitate traffic control. Temporary surfacing shall be provided as necessary on shoulders.

Prior to beginning Work, CONTRACTOR shall designate, in writing, a competent person who will be responsible and available on the Project site, or in the immediate area, to ensure compliance with the traffic control plan. CONTRACTOR shall provide documentation to demonstrate the sufficient training in Traffic Control for his competent person. Owner will designate a qualified person to observe implementation and who will have authority to assure compliance with the traffic control plan.

The CONTRACTOR shall perform the necessary cleanup and finishing immediately after all or a portion of the Work is completed. When the Work includes paving operations, the entire site shall be kept clean to facilitate placement of required traffic control devices. Temporary and permanent striping lay-out shall be approved by the Transportation Department prior to placement, when included in the Work.

1. Detours

Where indicated on the traffic control plan CONTRACTOR shall erect and maintain detours around construction activities. Should CONTRACTOR desire to propose a detour, not already included in the traffic control plan, it shall be his responsibility to prepare a revised traffic control plan showing the detour, and obtain approval of the revised traffic control plan from the Transportation Department, prior to implementation of the detour. The Transportation Department has final authority as to the acceptability of any proposed revisions to the traffic control plan. The CONTRACTOR shall bear all costs for revising the traffic control plan and for maintaining the proposed detour.

2. Barricades and lights

CONTRACTOR shall place and maintain in good condition, standard barricades at each end of the Project and at other locations where traffic is rerouted or blocked from using regular traffic lanes. Barricades and warning signs shall be in accordance with the Texas Manual on Uniform Traffic Control Devices (MUTCD) and City of Austin Standard Specification Item No. 803S, "Barricades, Signs and Traffic Handling". Signs, barricades, and warning devices informing the public of construction features will be placed and maintained by the CONTRACTOR, who shall be solely responsible for their maintenance. The decision to use a particular device at a particular location as indicated in the traffic control plan or as determined by the CONTRACTOR, shall be the sole responsibility of the CONTRACTOR.

All open trenches and other excavations shall have suitable barricades, signs, and lights to provide adequate protection to the public. Obstructions, such as material piles and equipment shall be provided with similar warning signs and lights.

All barricades and obstructions shall be illuminated with warning lights from sunset to sunrise. Material storage and conduct of the Work on, or along side, public streets and highways shall cause a minimum obstruction and inconvenience of the traveling public.

3.21 Required Job Site Postings and Notices

CONTRACTOR shall post the following postings and notices in English and Spanish at one or more conspicuous locations on the job site. In the case of Projects with multiple sites, the notices and postings must be displayed at each site. In the case of Projects that do not have a job shack or other temporary facility on the site, CONTRACTOR shall post all notices on a temporary bulletin board. Other special conditions are noted below.

Required for all Projects	
Poster	Available at:
Baseline Schedule for Project identifying when all subcontractors will be used	N/A (as required under Section 00700, paragraph 2.4.2.1.)
Wage Rates as required under Section 00830.	Section 00830BC and/or Section 008300HH
City of Austin Wage Contact posters	Provided at Pre-Construction meeting (English and Spanish)
City of Austin Equal Employment Opportunity posters	http://austintexas.gov/department/wage-compliance (English and Spanish)
Texas Commission on Environmental Quality "Construction Site Notice" form, if applicable, as required or the required TPDES information	http://www.tceq.state.tx.us/assets/public/permitting/waterquality/attachments/stormwater/txr152d2.pdf (Option 1 – as required under Section 00810, 6.7.4.2 N/A (Option 2 – as required under Section 00810, 2.6.7.4.3)
OSHA poster "Job Safety and Health: It's the Law"	http://www.osha.gov/Publications/osha3165.pdf (English) http://www.osha.gov/Publications/osha3167.pdf (Spanish)
City of Austin Rest Break Ordinance Signs	http://austintexas.gov/department/wage-compliance (English and Spanish) As required to be posted in English and Spanish under Ordinance No. 20100729-047
Texas Payday Law Poster	http://www.twc.state.tx.us/ui/lablaw/ll10.pdf (English) http://www.twc.state.tx.us/ui/lablaw/ll10s.pdf (Spanish)
Texas Workers Compensation notice that the employer does or does not carry Workers Compensation insurance	Does not carry Workers Compensation Insurance: http://www.tdi.state.tx.us/forms/dwc/notice5.pdf (English) http://www.tdi.state.tx.us/forms/dwc/notice5s.pdf (Spanish) Does carry Workers Compensation Insurance: http://www.tdi.state.tx.us/forms/dwc/notice6.pdf (English) http://www.tdi.state.tx.us/forms/dwc/notice6s.pdf (Spanish)
TWC Employer's Notification of the Ombudsman Program to Employees	http://www.oiec.state.tx.us/documents/Employer_Notice_of_O.pdf (both versions)

DOL – The Uniformed Services Employment and Reemployment Rights Act (USERRA)	http://www.dol.gov/vets/programs/userra/USERRA_Private.pdf
EEOC Equal Employment Act and the Americans with Disabilities Act (ADA)	http://www.dol.gov/ofccp/regs/compliance/posters/pdf/eeopost.pdf (English) http://www.dol.gov/ofccp/regs/compliance/posters/pdf/eeosp.pdf (Spanish)
Fair Labor Standards Act (FLSA) Minimum Wage Poster	http://www.dol.gov/whd/regs/compliance/posters/flsa.htm (English) http://www.dol.gov/whd/regs/compliance/posters/flsaspan.htm (Spanish)
If applicable: Employee Rights for Workers with Disabilities/Special Minimum Wage Poster – Employment Standards	http://www.dol.gov/whd/regs/compliance/posters/disabc.pdf http://www.dol.gov/whd/regs/compliance/posters/disabspanc3p.pdf
"Your Rights Under the Family and Medical Leave Act (FLMA)"	http://www.dol.gov/whd/regs/compliance/posters/fmlaen.pdf (English) http://www.dol.gov/whd/regs/compliance/posters/fmlasp.pdf (Spanish)
Title VI Rights Poster	http://austintexas.gov/department/wage-compliance
Additional Postings Required for Federally Funded Projects	
"Employee Rights Under the Davis-Bacon Act"	http://www.dol.gov/whd/regs/compliance/posters/fedprojc.pdf (English) http://www.dol.gov/whd/regs/compliance/posters/davispan.pdf (Spanish)
Applies to USDOT/FHWA funded projects: "Notice of False Statements Concerning Highway Projects"	http://www.mdt.mt.gov/publications/docs/forms/dbe/eeo_board/false_statements.pdf (as required in Section 00810A Standard Federal-Aid Assurances)
Applies to USDOT/FHWA funded projects; "Contractors EEO Policy"	N/A (as required in Section 00810A Standard Federal-Aid Assurances)

END

SECTION 01505.3

Non-Building Projects – Water/Wastewater and Street Reconstruction

PART 1 – GENERAL

1.1 RELATED DOCUMENTS

1. Division 01 Section 01200 "Project Meetings"
2. Division 01 Section 01500 "Temporary Facilities"
3. Division 01 Section 01700 "Contract Closeout"

1.2 SUMMARY

A. The Owner has established that the Project shall minimize the creation of construction and demolition waste on the Project site and shall recycle and/or salvage non-hazardous construction, demolition, and land clearing debris to divert waste from Landfills. See 1.5 Waste Management Goals.

1. All profits resulting from salvaging and recycling shall go to the Contractor.
2. Where there is little cost difference between recycling/salvaging and land-filling of items, the Contractor is directed to recycle/salvage.

B. Hazardous materials are an exception to this Section. Comply with applicable requirements of Local, State and Federal regulations.

C. This Section includes administrative and procedural requirements for recycling, salvaging and disposing of non-hazardous demolition and construction waste

1.3 REFERENCES

A. The standards listed below form a part of this Section to extent referenced. Standards are referred to in the text by basic reference only.

1. Sustainable Building Sourcebook – Austin Energy Green Building:www.austinenergy.com/Energy%20Efficiency/Programs/Green%20Building/Sourcebook/constructionWasteManagement.htm
2. Resource Exchange Network for Eliminating Waste (RENEW), TCEQ (MC-112), Biannual catalog lists materials available and wanted; serves Texas and surrounding states; lists are posted on the Internet: http://www.tceq.state.tx.us/assistance/P2Recycle/renew/renew.html
3. Recycle Texas Online, A service of the Texas Commission on Environmental Quality. Contains information on about 1000 businesses and local governments handling materials from Texas. Organizations' information is self-reported and listings are free of charge. www.tceq.state.tx.us/assistance/P2Recycle/rtol/rtol.html

1.4 DEFINITIONS

A. Chemical Waste: Includes petroleum products, bituminous materials, salts, acids, alkalis, herbicides, pesticides, organic chemicals, and inorganic wastes.

B. Clean: Untreated, unpainted, not contaminated with oils, solvents, caulk, or other materials.

C. Disposal: Acceptance of solid wastes at legally permitted and operating facility for the purposes of land-filling.

D. Diversion: Avoidance of demolition and construction waste sent for disposal to landfill or incineration. Diversion does not include using materials for landfill, alternate daily cover on landfills, or materials used as fuel in waste-to-energy processes.

E. Hazardous Waste: Byproducts of society that can pose a substantial or potential hazard to human health or the environment when improperly managed, and possessing at least 1 of 4 of the following characteristics, or appearing on a special Environmental Protection Agency (EPA) list.

1. Ignitability.

2. Corrosivity.

3. Reactivity.

4. Toxicity.

F. Landfill: Authorized land waste disposal site that is located to minimize waste pollution from runoff and leaching.

G. Recycling: The process of sorting, cleansing, treating, and reconstituting solid waste and other discarded materials for the purpose of using the altered form. Recycling does not include burning, incinerating, or thermally destroying waste.

H. Return: To give back reusable items or unused products to vendors for credit.

I. Reuse: A strategy to return materials to active use in the same or a related capacity.

J. Salvage: To remove a waste material from the Project site to another site for resale or reuse by others.

K. Source Separation: The act of keeping different types of waste materials separate beginning from the first time they become a waste.

L. Toxic: Poisonous to living beings either immediately or after a long period of exposure.

M. Trash: Any product or material unable to be reused, returned, recycled, or salvaged.

N. Waste: Extra material or material that has reached the end of its useful life in its intended use. Waste includes all materials removed from the Project site to be land-filled, recycled, or salvaged for reuse. Pallets, containers, packaging and packing materials in which construction products are delivered to the Project site are considered waste materials.

1.5 WASTE MANAGEMENT GOALS

A. The Owner has established that as much as is economically feasible of the "waste" materials produced as a result of the Work, shall be employed, salvaged, reused, or recycled in order to minimize the impact of construction and demolition waste on landfills and reducing disposal costs.

B. Contractor shall employ and encourage practices that ensure the generation of as little waste as possible due to error, poor planning, breakage, mishandling, contamination, or other factors.

C. Contractor is responsible for knowing and complying with regulatory requirements, including but not limited to Federal, State and local, pertaining to legal disposal of all construction waste materials.

D. Contractor shall recycle and divert materials for secondary uses whenever economically feasible.

E. Acceptable methods of diversion include:
Recycling, reuse and salvage
Donation to nonprofit organizations
Removal from jobsite by staff or subcontractors for use (not disposal)
Return to supplier
Sale to organizations or individuals

F. The Contractor shall develop a Construction and Demolition Waste Management Plan of non-hazardous construction and demolition waste. The plan shall identify the materials to be diverted from disposal and define the materials to be separated on-site or off-site. Calculations can be done by weight or volume, but must be consistent throughout.

1.6 SUBMITTALS

A. ***Waste Management Plan:*** A Project-specific plan for the collection, transportation, and disposal of the waste generated at the construction site, shall be submitted for approval within 14 calendar days after notice to proceed, or prior to any waste removal, whichever occurs first. The approved Plan shall be distributed to all subcontractors and the owner and will not relieve the Contractor's responsibility for compliance with applicable environmental regulations.

An example template is included as "Appendix A" to this section.

1. The Waste Management Plan shall include the following:

a. Identify each type of waste material produced as a result of the Work on the Project Site.

b. Identify each type and quantity of demolished and waste material intended to be recycled, salvaged or reused.

c. Identify material separation requirements.

e. Identify location of temporary on-Site storage for recycled and reused materials.

f. Identify final destination means of transportation for each recycled and reused material.

h. Identify the name/phone number of the Contractor's on-site coordinator of the Waste Management Plan.

i. Indicate permit or license and the location of the municipal solid waste landfills and other disposal area(s) to be used.

j. List of materials that cannot be recycled or reused.

B. ***Construction Waste Management Closeout Documentation:*** Submit the following upon the completion of The Work and prior to final payment:

a. A Summary of Solid Waste Disposal and Diversion (refer example template "Appendix B") prepared and maintained through Project duration, demonstrating that 100% of all non-hazardous construction wastes were recycled, salvaged or disposed of properly and includes as a minimum the following information:

1. Dates
2. Materials Description and Quantity
3. Indicate whether recycled, salvaged, reused of sent to landfill for disposal.
4. Destination or Name and location of accepting facility.

b. Copies of all receipts, manifests, weight tickets, and other documentation that identify all materials recycled, salvaged, land-filled or incinerated.

PART 2 - PRODUCTS

Not used

PART 3 – EXECUTION

3.1 GENERAL

A. Implement the Waste Management Plan as approved by the City of Austin Project Manager. Provide handling, containers, storage, signage, transportation, and other items as required to implement Waste Management Plan during the entire duration of the Contract.

B. Satisfy the requirements outlined in Subsection 1.5, Waste Management Goals.

3.2 WASTE MANAGEMENT PLAN IMPLEMENTATION

A. Plan Coordinator: Designate an on-site party (or parties) responsible for instructing workers, overseeing implementation and documenting results of the Waste Management Plan for the Project.

B. Plan Distribution: Provide copies of the Waste Management Plan to the Contractor's superintendent, each Subcontractor, the Owner, and the Engineer.

C. Meetings: Include Construction Waste Management in progress meetings to maintain the Plan for achieving the owners waste management goals:

D. Carefully order materials to avoid over supply.

E. Protect materials from contamination during handling, storage and transport to meet the requirements of the accepting facilities.

F. Assign and label a specific area to facilitate separation of materials for potential recycling, salvage, reuse, return and disposal. This area shall be kept neat and clean and clearly marked in order to avoid contamination of materials.

3.3 RECYCLING REQUIREMENTS

A. Materials: In general the contractor is encouraged to recycle the following types of construction waste materials generated during the course of this project, that are not salvaged or reused:

a. Asphalt concrete pavement.

b. Concrete materials.

c. Metals, including the following.

i. Banding straps.
ii. Reinforcing steel.
iii. Iron.
iv. Steel pipe.
v. Galvanized steel pipe.

d. Clean dimensional lumber.

e. Wood crates and pallets.

f. Glass and glass containers.

g. Plastics.

h. Electrical wiring.

i. Cardboard, paper, and packaging.

j. Beverage containers.

B. Methods: The following recycling methods, or a combination of, may be used.

1. On-site separation: Each material to be recycled shall be separated at the Project site and delivered to the recycling markets or directly from the Project site.

   a. If on-site separation method is used, designate a specific area or areas to facilitate separation of materials for potential reuse, salvage, recycling, and return.

   b. Maintain recycling and waste bin areas neat and clean and clearly marked, both in Spanish and in English, in order to avoid co-mingling of materials.

   c. Protect materials from contamination.

2. Off-site separation: Materials to be recycled are delivered unsorted from the Project site to a materials recovery facility or transfer station where recyclable materials are separated from other waste.

   a. Contractor shall verify that the entity responsible for the off-site separation has a market for all materials required to be recycled from the Project site.

   b. The same Submittals procedures shall apply.

   c. Protect materials from contamination.

3.4 REUSE

A. Contractor is encouraged to reuse as many demolished and waste materials as possible.

B. Reuse of waste materials includes the following:

a. Salvaging materials scheduled for disposal.

b. Off-Site storage of waste materials for future reuse by Contractor on other projects.

c. Returning unused and reusable materials, packaging and pallets, to vendor.

e. Assemble designated reuse items in a single location safe from damage, for review and approval by the owner's representative.

3.5 SALVAGE

A. Salvage Guidelines:

1. The contractor is encouraged to salvage as many items as deemed economically possible, considering reduction of land filling fees and possible use by others.

2. Assemble potentially salvageable items in one area and donate or sell to the public after review by the City of Austin Project Manager.

3. All proceeds from the sale of salvaged items shall go to the contractor.

Appendix A. Sample Construction Waste Management Plan

Construction Waste Management Plan

Project:
Contractor:
Date:
Contact:
Phone:
Prepared by:

Diversion Goal: Recycle, reuse and/or salvage as much land-clearing and construction waste as is economically feasible.

I. Coordination and Training

a. Name of Contractor's representative responsible for CWM implementation & coordination.

b. Describe method(s) of waste recycling management – on-site and/or off-site.

c. Describe how Contractor's staff and subcontractors will be informed regarding proper recycling and separation procedures

d. Describe and/or show on an attached site map where the temporary waste material storage area(s) will be located, and how will contamination of separated waste materials will be prevented?

II. Waste Minimization

a. What waste minimization techniques will be employed during the construction phase?

_____
_____
_____
_____

b. Which employees and / or subcontractors will be involved with each technique?

_____
_____
_____
_____

III. Construction Waste Analysis (including site / land-clearing materials, as applicable)

a. ***Diverted Materials***: For each material anticipated to be reused or recycled (diverted from the landfill), provide information to complete the table below. (Note: Whenever possible, attempt to use or donate construction waste materials rather than recycling.)

Material or Item	Storage Method (roll-off, bin, area, on pallet, etc.)	Quantity estimate (no., linear ft., square ft., etc.)	Proposed Recipient

Add rows (or paper pages) as required

b. ***Landfill***: For construction phase trash and materials / items that will not be diverted, complete the following table:

Quantity estimate (weight or volume)	Number and size of roll offs anticipated	Proposed landfill site

Appendix B. Summary of Solid Waste Disposal and Diversion

Project name _____ Project Number _____
Contractor Name _____ License Number_____
Contractor Address_____

Solid Waste Material	**Recycled, Reused, salvaged or disposed**	**Date Material Disposed** or diverted	**Amount Disposed/ Diverted** (Ton or cubic yd.)	**Municipal Solid Waste Facility** (Name, address, Phone)	**Recycling/Reuse Facility** Name Address Phone	**Comment** (If disposed state why not diverted)
Vegetation						
Soil						
Trench spoils						
Rock						
Asphalt						
Concrete						
Metal						
Wood						
Debris						
Glass						
Trash						
Other						

Signature _____ Date _____

Page / of / total pages

END SECTION 01505.3

CONSTRUCTION INDOOR AIR QUALITY MANAGEMENT PLAN
Section 01510

PART 1 – GENERAL

1.1 RELATED DOCUMENTS

A. Drawings and general provisions of Contract, including General and Supplementary Conditions and Division 1 Specification Sections, apply to this Section.

1.2 SUMMARY

A. This Section includes requirements for construction indoor air quality, including:

1. Construction Indoor Air Quality Management Purpose
2. Construction Indoor Air Quality Procedures
3. Construction Indoor Air Quality Submittals

B. This section includes references to the following external documents:

1. "IAQ Guidelines for Occupied Buildings Under Construction", Sheet Metal and Air Conditioning Contractors' National Association (SMACNA), www.smacna.org, (703) 803-2980.
2. "ANSI/AHSRAE 52.2-1999: Method of Testing General Ventilation Air-Cleaning Devices for Removal Efficiency by Particle Size", American Society of Heating, Refrigerating and Air-Conditioning Engineers (ASHRAE), www.ashrae.org, (800) 527-4723.

1.3 PURPOSE

A. The intent of Construction IAQ (Indoor Air Quality) management is to reduce indoor air quality problems resulting from the construction process in order to help sustain the health and well-being of construction workers and building occupants.

1.4 PROCEDURES

A. The Contractor shall make every effort to reduce pollutants throughout the construction process in order to achieve compliance with IAQ testing maximum concentrations discussed below. The most significant method for achieving success is through source control, that is:

1. Install products and materials that are low- or zero-VOC, do not contain added formaldehyde, and are free of particulates
2. Request in-factory flush-out from manufacturers wherever possible, to flush out pollutants before products arrive at the site

B. The Contractor shall adopt an IAQ management plan to protect the HVAC system during construction, control pollutant sources, and interrupt contamination pathways.

C. Contractor shall sequence the installation of materials to avoid contamination of absorptive materials such as insulation, carpeting, ceiling tile, and gypsum wallboard.

D. Temporary HVAC units (independent of permanent ductwork and distribution systems) are recommended as the optimal method for achieving the Construction IAQ requirements. This allows permanent HVAC equipment to be fully protected. If contractor is utilizing permanent HVAC equipment for fresh air, heating, or cooling during construction, all air intakes shall be protected from incoming construction debris. Contractor shall use filtration media in all permanent air handling equipment during construction, and replace this media immediately before occupancy.

1. Regularly occupied spaces: Filtration media during and after construction shall have a Minimum Efficiency Reporting Value (MERV) of 13 as determined by ANSI/ASHRAE 52.2-1999. Obtain a diagram from MEP Engineer indicating location of all regularly occupied spaces.
2. All other spaces: Filtration media during and after construction shall have a Minimum Efficiency Reporting Value (MERV) of 8 as determined by ANSI/ASHRAE 52.2- 1999.

E. The Contractor shall employ Green Housekeeping methods wherever practicable.

1. Use non-toxic cleaners per Green Seal: http://www.greenseal.org/
2. Conserve energy by shutting off lights and HVAC in all areas except those currently being cleaned.

F. AFTER all finishes are installed, but BEFORE occupancy, the Contractor shall coordinate testing for Indoor Air Quality by a qualified testing agency. Testing shall be performed per LEED-NC Version 2.2 IEQ Credit 3.2. The testing agency shall employ the following procedures:

1. One testing point per 25,000 sq. ft., or for each contiguous floor area, whichever is less.
2. Test for the following contaminants, and demonstrate that the maximum concentrations listed below are not exceeded.
   - **a.** Formaldehyde: 50 parts per billion
   - **b.** Particulates (PM10): 50 micrograms per cubic meter
   - **c.** Total Volatile Organic Compounds (TVOC): 500 micrograms per cubic meter.
   - **d.** 4-Phenylcyclohexane (4-PCH): 6.5 micrograms per cubic meter (only required if carpets and fabrics with styrene butadiene rubber (SBR) latex backing material are installed as part of the base building systems).
   - **e.** Carbon Monoxide (CO): 9 parts per million and no greater than 2 parts per million above outdoor levels
3. All measurements shall be conducted prior to occupancy, but during normal occupied hours, and with the building ventilation system starting at the normal daily start time and operated at the minimum outside air flow rate for the occupied mode throughout the duration of air testing.
4. The building shall have all interior finishes installed, including but not limited to millwork, doors, paint, carpet and acoustic tiles. Non-fixed furnishings such as workstations and partitions are not required, to be in place for the testing. Better results will be achieved without furniture.
5. The number of sampling locations will vary depending upon the size of the building and number of ventilation systems. For each portion of a building served by a separate ventilation system, the number of points shall not be less than one per 25,000 sq. ft., or for each contiguous floor are, whichever is larger, and include areas with the least ventilation and the greatest presumed pollutant source strength.

6. Air samples shall be collected between 3 feet and 6 feet from the floor to represent the breathing zone of occupants, and over a minimum 4-hour period.

7. For each sampling point where the maximum concentration limits are exceeded, conduct additional flush-out with outside air and retest the specific parameters exceeded to indicate the requirements are achieved. When re-testing non-complying building areas, take samples from the same locations as in the first test.

1.5 SUBMITTALS

A. With first Application for Payment, the General Contractor is to submit a draft Construction IAQ Management Plan. Architect will return plan with revisions or approval, to be resubmitted as many times as necessary for Architect's final approval. The plan shall be divided into 6 parts, addressing each of the following topics per "IAQ Guidelines for Occupied Buildings Under Construction", Sheet Metal and Air Conditioning Contractors' National Association (SMACNA); http://www.smacna.org/ ; (703) 803-2980. The plan shall also include requirements described in "Procedures" above.

1. HVAC protection
2. Source Control
3. Pathway Interruption
4. Housekeeping
5. Filter Maintenance Schedule
6. Scheduling

B. With subsequent Applications for Payment, the General Contractor is to submit documentation of IAQ procedures as follows:

1. Provide cut sheets of filtration media used during construction with MERV values highlighted (per ANSI/ASHRAE 52.2-1999). Fresh clean filters must be installed immediately prior to occupancy.

2. During construction, take photographs of Construction IAQ Management procedures, such as protection of ducts, physical barriers protecting areas under construction, and the sequencing of installation for absorptive materials.

C. The Contractor shall provide a report from the Indoor Air Quality Testing Agency, describing the testing process, reporting results for every testing point, and indicating compliance with the pollutant maximum concentration levels.

END

PART 1 - GENERAL

1.1 Related Documents:

Drawings and general provisions of Contract, including General Conditions, Section 00700, and Supplemental General Conditions, Section 00810, and Division 1 requirements.

PART 2 - PRODUCTS (NOT USED)

PART 3 - EXECUTION

3.1 General

CONTRACTOR shall maintain reasonable local vehicular and pedestrian dust free traffic, including use of driveways, to proceed safely with minimum inconvenience, except during actual construction operations. CONTRACTOR provided flaggers shall assist traffic when a street is operating under a single lane. Two-way traffic shall be maintained at all other times unless otherwise authorized by Owner.

CONTRACTOR shall provide, at the work zone location during temporary traffic control installation, a designated Competent Traffic Control Person to ensure compliance with the traffic control plans and the provisions of the Contract. Training Certificates for the designated Competent Person shall be provided with submittals at the Precon. Training certificates for competent persons shall be good for four (4) years from the date of training. After such time the competent person must show that additional training or re-certification has been completed to maintain competent person status.

CONTRACTOR shall maintain a smooth and safe ride for traffic by placing steel plates with Asphaltic concrete berms, temporary fill or bridging and temporary surfacing with cold or hot-mix Asphaltic concrete paving in accordance with applicable City Standards.

Sidewalks shall not be obstructed, except by special permission of Owner or E/A. Access to private dwelling and to commercial establishments shall be provided at all times.

CONTRACTOR shall plan and execute his operations in a manner that will cause a minimum interference with traffic. The CONTRACTOR shall place and maintain in good condition, standard barricades at each end of the Project and at other locations where traffic is rerouted or blocked from using regular traffic lanes. Barricades and warning signs shall be in accordance with Texas Manual on Uniform Traffic Control Devices (MUTCD) and the City of Austin Transportation Criteria Manual.

Signs, barricades and warning devices informing public of construction features shall be placed and maintained by the CONTRACTOR who shall be solely responsible for their maintenance.

Unless otherwise specified elsewhere in Division 1, neither explosives nor blasting shall be permitted on this Project.

3.2 Traffic Control

3.2.1 It shall be the sole responsibility of the CONTRACTOR to furnish, install, maintain and remove barricades, detour signs, warning signs, lights and all regulatory traffic

control devices of the size and type specified, at locations indicated, or as directed or approved by the OWNER in accordance with the Texas Manual on Uniform Traffic Control Devices, (MUTCD), Part VI, Traffic Control for Street and Highway Construction and Maintenance Operations and the City of Austin Transportation Criteria Manual. Upon phase completion, the Contractor shall immediately revise the temporary traffic devices to reflect the next phase or if the project is complete remove them from the public right of way.

3.2.2 Throughout the life of the Contract, all existing roads and Traffic Control devices included in the Work shall be maintained by the CONTRACTOR to a condition, in the opinion of the OWNER, which is equal to or better than that which existed when Work commenced. Maintenance of existing roads and devices shall take priority over all other Work items and shall be subject to a seven-day-a-week, 24-hours-per-day time frame. The CONTRACTOR shall provide a smooth and safe riding surface for all vehicles along the route of this Project. This could include, but not be limited to, small cars, motorcycles, mopeds and bicycles. If the condition of the street surface deteriorates, for any reason, CONTRACTOR shall take necessary steps to insure immediate restoration.

3.2.3 During construction of streets, drainage, and utility projects, if conditions of existing street surface require maintenance to upgrade from their state when the Work began, a separate pay item may be included in Bid. Otherwise, maintenance work will not be paid for directly but will be considered subsidiary to various Bid items of this Contract.

3.2.4 In the event that CONTRACTOR fails, in opinion of OWNER, to maintain a smooth surface for public comfort, fails to provide ingress and egress to private property, and/or does not provide and maintain proper traffic control devices, OWNER may provide these services and deduct any cost thereof, including overtime and administrative expenses, from all estimates thereafter due the CONTRACTOR. Such action by the OWNER shall not relieve the CONTRACTOR of his liability to protect the public at construction site. Owner may also assess an investigation fee, as established by separate Fee Ordinance, for violations resulting in more than one deficiency report issued to Contractor.

3.2.5 A permit must be obtained from Texas Department of Transportation (TxDOT), prior to Work being performed on state highway routes passing through the City.

3.2.6 CONTRACTOR shall notify the Owner's Representative, Police Department, Fire Department, EMS, and Right of Way Management Division at least seven Calendar Days in advance of beginning proposed Work, with intention to close or partially block any street or any part thereof, or of any construction affecting free flow of traffic. The CONTRACTOR shall plan and adequately provide barricades and warning devices. The same parties shall be notified when normal traffic flow is restored.

3.2.7 Should the CONTRACTOR, in his operations, reduce an existing two-way roadway to less than 20 feet in width, CONTRACTOR shall provide a route through or around the narrowed area as approved by Owner or E/A.

3.2.8 The CONTRACTOR's Flaggers shall be required any time it is necessary for the CONTRACTOR's equipment to move into or across an open traffic lane, or at other such times as directed by the Owner's Representative. A flagger shall be utilized to aid exit of hauling equipment from open traffic lanes to the Work area, and entry of hauling equipment from Work area to open traffic lanes. Flaggers shall be dressed and conduct operations in accordance with Texas Manual on Uniform Traffic Control Devices and the Transportation Criteria Manual. Flagging operations shall be the sole responsibility of the CONTRACTOR.

3.2.9 The CONTRACTOR and Subcontractors shall confine their activities to the immediate area of the construction site and provide the following:

a. Appropriate temporary fences, barricades, and/or Metal Beam Guard Fence if required, for site work involving excavation, utility extensions, remote construction work or other circumstances involving safety of public or protection of the work in progress.

b. Warning lights at open trenches, excavations, etc., during hours from dusk to dawn each day. Protection of structures, utilities, sidewalks, pavements, and other facilities immediately adjacent to excavations, from damages caused by settlement, lateral movement, undermining, washout and other hazards.

3.3 Spoil Disposal

CONTRACTOR may make other arrangements for spoil disposal subject to E/A evaluation of the CONTRACTOR-supplied proof that the Owner(s) of the proposed site(s) has a valid fill permit issued by the appropriate governmental agency. Finally, the CONTRACTOR shall submit a haul route plan including a map of the proposed route(s) for the E/A and Owner's approval.

3.4 Restoration

WATER AND WASTEWATER CONSTRUCTION REQUIREMENTS

3.4.1 In order to minimize environmental and potential flood impacts, the sum of the amount of trench opened in advance of the completed line and the amount of trench left unfilled at any time shall be restricted to one (1) full block or 300 linear feet, whichever is less.

3.4.2 Restoration shall be an on-going process during construction operations and shall immediately precede completion of construction of each successive section of the line, which shall not exceed 1,200 linear feet without approval of the E/A.

3.5 Street Markers and Traffic Control Signs

It shall be responsibility of the CONTRACTOR to remove, preserve and reset, as required, Street Marker and Traffic Control Signs that are within construction limits to the line and heights as described in Texas Manual on Uniform Traffic Control Devices before any sidewalks or street excavation is begun. Signs shall not be laid on the ground. No payment will be made for this work but shall be considered subsidiary to the various Bid items. Traffic Sign Activity Section of the Transportation Department (457-4850) shall be notified a minimum of five Working Days prior to completion of the Project so that signs may be checked for damage. Any damage to signs or posts shall be paid for by the CONTRACTOR.

3.6 Burning Permit

Open burning within City limits will not be allowed. Trench burning shall require a permit from the Fire Marshal. Burning permits outside City limits shall be obtained from the appropriate authority.

The CONTRACTOR shall secure and pay for all burning permits.

3.7 Driveways

Unless otherwise indicated, the approach grade of existing driveways shall be modified as indicated and as directed by the Owner's Representative. The OWNER will contact property owners whose driveways require grade modification beyond street right-of-way and the OWNER will obtain their concurrence for approach grade modification. Within the right-of-way, all driveways shall be replaced with concrete driveways. Outside the right-of-way, when approach grade modifications are required, flexible base shall be placed by the CONTRACTOR to resurface existing dirt or gravel driveways; asphalt and concrete drives shall be replaced in kind by the CONTRACTOR. Excavation, Flexible Base, Portland Cement Concrete and Asphaltic Concrete, used for driveways as prescribed above shall not be

measured for payment but shall be considered subsidiary to various Bid items in the Contract unless payment is included as a separate Contract pay item.

3.8 Removal or Relocation of Fences and Sprinkler Systems

Removal or relocation of privately owned fences and sprinkler systems not specified in Bid, and within public right-of-way is the primary responsibility of the property owner. OWNER will cause property owners to be aware of any known conflicts and encourage them to make desired adjustments in advance of construction. In the event the property owner does not, or will not, make adjustments necessary for construction of improvements to be made under this Contract, CONTRACTOR, after receiving written approval from the OWNER, shall remove those portions that interfere with the Work, as follows:

3.8.1 Fences shall be disassembled, by hand, into hand manageable sizes and placed on the private property.

3.8.2 For sprinkler systems, the CONTRACTOR, after assuring that electrical and/or mechanical controls are disconnected, shall remove sprinkler heads, valves, controls, and any other miscellaneous items, including distribution pipe, or wire, saw cut from the system. The CONTRACTOR shall present these materials to the property owner. Where piping is cut, the pipe shall be permanently capped or plugged, unless otherwise directed by the OWNER.

Work for removal or relocation of fences and sprinkler systems shall not be paid for directly but shall be subsidiary to the various Bid items.

End

PART 1 - GENERAL

1.1 RELATED DOCUMENTS

A. Drawings and general provisions of the Contract, including General and Supplementary Conditions and other Division 1 Specification Sections, apply to this Section.

1.2 SUMMARY

A. This Section includes the following administrative and procedural requirements: selection of products for use in Project; product delivery, storage, and handling; manufacturers' standard warranties on products; special warranties; product substitutions; and comparable products.

1.3 DEFINITIONS

A. Products: Items purchased for incorporating into the Work, whether purchased for Project or taken from previously purchased stock. The term "product" includes the terms "material," "equipment," "system," and terms of similar intent.

1. Named Products: Items identified by manufacturer's product name, including make or model number or other designation, shown or listed in manufacturer's published product literature, that is current as of date of the Contract Documents.
2. New Products: Items that have not previously been incorporated into another project or facility. Products salvaged or recycled from other projects are not considered new products.
3. Comparable Product: Product that is demonstrated and approved through submittal process, or where indicated as a product substitution, to have the indicated qualities related to type, function, dimension, in-service performance, physical properties, appearance, and other characteristics that equal or exceed those of specified product.

B. Substitutions: Changes in products, materials, equipment, and methods of construction from those required by the Contract Documents and proposed by Contractor.

C. Basis-of-Design Product Specification: Where a specific manufacturer's product is named and accompanied by the words "basis of design," including make or model number or other designation, to establish the significant qualities related to type, function, dimension, in-service performance, physical properties, appearance, and other characteristics for purposes of evaluating comparable products of other named manufacturers.

D. Manufacturer's Warranty: Preprinted written warranty published by individual manufacturer for a particular product and specifically endorsed by manufacturer to Owner.

E. Special Warranty: Written warranty required by or incorporated into the Contract Documents, either to extend time limit provided by manufacturer's warranty or to provide more rights for Owner.

1.4 PRODUCT DELIVERY, STORAGE, AND HANDLING

A. Deliver, store, and handle products using means and methods that will prevent damage, deterioration, and loss, including theft. Comply with manufacturer's written instructions.

1. Schedule delivery to minimize long-term storage at Project site and to prevent overcrowding of construction spaces.
2. Coordinate delivery with installation time to ensure minimum holding time for items that are flammable, hazardous, easily damaged, or sensitive to deterioration, theft, and other losses.
3. Deliver products to Project site in an undamaged condition in manufacturer's original sealed container or other packaging system, complete with labels and instructions for handling, storing, unpacking, protecting, and installing.
4. Inspect products on delivery to ensure compliance with the Contract Documents and to ensure that products are undamaged and properly protected.
5. Store products to allow for inspection and measurement of quantity or counting of units.
6. Store materials in a manner that will not endanger Project structure.
7. Store products that are subject to damage by the elements, under cover in a weathertight enclosure above ground, with ventilation adequate to prevent condensation.
8. Comply with product manufacturer's written instructions for temperature, humidity, ventilation, and weather-protection requirements for storage.
9. Protect stored products from damage.

B. Storage: Provide a secure location and enclosure at Project site for storage of materials and equipment by Owner's construction forces. Coordinate location with Owner.

1.5 PRODUCT WARRANTIES

A. Warranties specified in other Sections shall be in addition to, and run concurrent with, other warranties required by the Contract Documents. Manufacturer's disclaimers and limitations on product warranties do not relieve Contractor of obligations under requirements of the Contract Documents.

B. In no case shall product warranty be less than one year from time of installation, or less than the standard warranty period offered by manufacturer, whichever is greater.

C. Special Warranties: Prepare a written document that contains appropriate terms and identification, ready for execution. Submit a draft for approval before final execution.

1. Manufacturer's Standard Form: Modified to include Project-specific information and properly executed.
2. Specified Form: Forms are included with the Specifications. Prepare a written document using appropriate form properly executed.
3. Refer to Divisions 2 through 16 Sections for specific content requirements and particular requirements for submitting special warranties.

PART 2 - PRODUCTS

2.1 PRODUCT OPTIONS

A. General Product Requirements: Provide products that comply with the Contract Documents, that are undamaged, and unless otherwise indicated, that are new at time of installation.

1. Provide products complete with accessories, trim, finish, fasteners, and other items needed for a complete installation and indicated use and effect.
2. Standard Products: If available, and unless custom products or nonstandard options are specified, provide standard products of types that have been produced and used successfully in similar situations on other projects.
3. Owner reserves the right to limit selection to products with warranties not in conflict with requirements of the Contract Documents.
4. Where products are accompanied by the term "as selected," Architect will make selection.
5. Where products are accompanied by the term "match sample," sample to be matched is Architect's.
6. Descriptive, performance, and reference standard requirements in the Specifications establish "salient characteristics" of products.
7. Or Equal: Where products are specified by name and accompanied by the term "or equal" or "or approved equal" or "or approved," comply with provisions in "Comparable Products" Article to obtain approval for use of an unnamed product.

2.2 PRODUCT SUBSTITUTIONS

A. Subject to compliance with requirements, provide products by the manufacturers listed.

B. Substitution Requests:

1. Architect will consider requests for substitution if received at least 10 days prior to bid date. Requests received after that time will not be accepted.

2. Submit three copies of each request for consideration. Identify product or fabrication or installation method to be replaced. Include Specification Section number and title and Drawing numbers and titles.
3. Show compliance with requirements for substitutions and the following, as applicable:

    a. Contractor's certification that proposed substitution will not increase the Contract Sum.
    b. Contractor's certification that proposed substitution complies with requirements in the Contract Documents and is appropriate for applications indicated.
    c. Coordination information, including a list of changes or modifications needed to other parts of the Work and to construction performed by Owner and separate contractors, that will be necessary to accommodate proposed substitution.
    d. Detailed comparison of significant qualities of proposed substitution with those of the Work specified. Significant qualities may include attributes such as performance, weight, size, durability, visual effect, and specific features and requirements indicated.
    e. Product Data, including drawings and descriptions of products and fabrication and installation procedures.
    f. Samples, where applicable or requested.
    g. List of similar installations for completed projects with project names and addresses and names and addresses of architects and owners.
    h. Material test reports from a qualified testing agency indicating and interpreting test results for compliance with requirements indicated.
    i. Detailed comparison of Contractor's Construction Schedule using proposed substitution with products specified for the Work, including effect on the overall Contract Time. If specified product or method of construction cannot be provided within the Contract Time, include letter from manufacturer, on manufacturer's letterhead, stating lack of availability or delays in delivery.
    j. Contractor's waiver of rights to additional payment or time that may subsequently become necessary because of failure of proposed substitution to produce indicated results.

C. Conditions: Architect will consider Contractor's request for substitution when the following conditions are satisfied. If the following conditions are not satisfied, Architect will return requests without action, except to record noncompliance with these requirements:

1. Requested substitution offers Owner a substantial advantage in cost, time, energy conservation, or other considerations, after deducting additional responsibilities Owner must assume. Owner's additional responsibilities may include compensation to Architect for redesign and evaluation services, increased cost of other construction by Owner, and similar considerations.
2. Requested substitution does not require extensive revisions to the Contract Documents.
3. Requested substitution is consistent with the Contract Documents and will produce indicated results.
4. Substitution request is fully documented and properly submitted.

5. Requested substitution will not adversely affect Contractor's Construction Schedule.
6. Requested substitution has received necessary approvals of authorities having jurisdiction.
7. Requested substitution is compatible with other portions of the Work.
8. Requested substitution has been coordinated with other portions of the Work.
9. Requested substitution provides specified warranty.
10. If requested substitution involves more than one contractor, requested substitution has been coordinated with other portions of the Work, is uniform and consistent, is compatible with other products, and is acceptable to all contractors involved.

PART 3 - EXECUTION (Not Used)

END OF SECTION 01600

PART 1 - GENERAL

1.1 RELATED DOCUMENTS

A. Drawings and general provisions of the Contract, including General and Supplementary Conditions and other Division 1 Specification Sections, apply to this Section.

1.2 SUMMARY

A. This Section includes administrative and procedural requirements for contract closeout including, but not limited to, the following:

1. Inspection procedures.
2. Project record document submittal.
3. Operation and maintenance manual submittal.
4. Submittal of warranties.
5. Final cleaning.

1.3 SUBSTANTIAL COMPLETION

A. Preliminary Procedures: Before requesting inspection for determining date of Substantial Completion, complete the following. List items below that are incomplete in request.

1. Prepare a list of items to be completed and corrected (punch list), the value of items on the list, and reasons why the Work is not complete.
2. Submit specific warranties, workmanship bonds, maintenance service agreements, final certifications, and similar documents.
3. Obtain and submit releases permitting Owner unrestricted use of the Work and access to services and utilities. Include occupancy permits, operating certificates, and similar releases.
4. Deliver tools, spare parts, extra materials, and similar items to location designated by Owner. Label with manufacturer's name and model number where applicable.
5. Complete startup testing of systems.
6. Terminate and remove temporary facilities from Project site, along with mockups, construction tools, and similar elements.

B. Inspection Procedures: Submit a written request for inspection for Substantial Completion. On receipt of a request for inspection, the Engineer will either proceed with inspection or advise the Contractor of unfilled requirements. The Engineer will prepare the Certificate of Substantial Completion following inspection or advise the Contractor of construction that must be completed or corrected before the certificate will be issued.

1. The Engineer will repeat inspection when requested and assured that the Work is substantially complete.
2. Results of the completed inspection will form the basis of requirements for final acceptance.

1.4 FINAL ACCEPTANCE

A. Preliminary Procedures: Before requesting final inspection for certification of final acceptance and final payment, complete the following. List exceptions in the request.

1. Submit the final payment request with releases and supporting documentation not previously submitted and accepted. Include insurance certificates for products and completed operations where required.
2. Submit an updated final statement, accounting for final additional changes to the Contract Sum.
3. Submit consent of surety to final payment.
4. Submit Record Drawings and Record Survey Drawings.
5. Submit a final liquidated damages settlement statement, if applicable.

B. Inspection and Re-inspection Procedure:

1. Submit a written request for final inspection for acceptance. Submit a copy of the Punch List with item-by-item signed certification that each item has been completed. Where work is not complete and cannot be completed expeditiously for reasons beyond Contractor control, list reasons why such work items are not complete.
2. The Engineer will re-inspect the Work upon receipt of notice that the Work, including inspection list items from earlier inspections, has been completed, except for items whose completion is delayed under circumstances acceptable to the Engineer.
3. Upon completion of first re-inspection, if all deficiencies have been adequately corrected, the Engineer will prepare a certificate of final acceptance. If the Work is incomplete, the Engineer will advise the Contractor of Work that is incomplete or of obligations that have not been fulfilled but are required for final acceptance.

1.5 RECORD DOCUMENT SUBMITTALS

A. Record Documents are of critical importance. Drawings must are updated on a daily basis when construction is taking place, and must be made available for Owner and Engineer review at any time.

B. General: Do not use record documents for construction purposes. Protect record documents from deterioration and loss in a secure, fire-resistant location. Provide access to record documents for the Engineer's reference during normal working hours.

C. Record Drawings:

1. Maintain a clean, undamaged set of blue or black line white-prints of Contract Drawings and Shop Drawings. Mark the set to show the actual installation where the installation varies substantially from the Work as originally shown. Mark which drawing is most capable of showing conditions fully and accurately. Mark record sets with red erasable pencil. Use other colors to distinguish between variations in separate categories of the Work.
2. Mark new information that is important to the Owner but was not shown on

Contract Drawings or Shop Drawings. Give particular attention to concealed elements that would be difficult to measure and record at a later date.

3. Note related change-order numbers where applicable.
4. Initial Submittal: Submit one set of marked-up Record Prints. Architect will initial and date and mark whether general scope of changes, additional information recorded, and quality of drafting are acceptable. Architect will return prints for organizing into sets, printing, binding, and final submittal.
5. Final Submittal: Submit marked-up Record Prints, two paper sets of Record CAD Drawing plots, and two CD's containing Autocad (2010 version) and pdf electronic copies of Record Drawing plots.

D. Record Specifications: Submit one copy of Project's Specifications, including addenda and contract modifications.

E. Record Survey Drawings:

1. Engage services of a professional survey company, certified and registered by the State of Texas, to produce Record Survey Drawings.

   a. A survey of existing conditions will be provided to Contractor with original construction documents. Contractor's surveyor and Contractor must verify accuracy of verify the design survey, correcting any inaccuracies in final Record Drawings.
   b. Surveys must be accurate and carried out according to the 'Professional And Technical Standards' and 'General Rules and Procedures' of the Texas Board of Professional Land Surveying.
   c. Elevations, locations, orientations, sizes, and designations of all new and existing utilities and structures, including piping, valves, conduits, communications lines, are to be indicated in Record Drawings, benchmark-referenced to the State plane. Accuracy is to be within 0.25 foot.

2. Initial Submittal:
   a. Submit one paper set of survey documentation. Architect will initial and date and mark whether general scope of changes, additional information recorded, and quality of drafting are acceptable. Architect will return prints for organizing into sets, printing, binding, and final submittal.

3. Final Submittal:
   a. Submit two paper sets of Record Survey plots, and two CD's containing Autocad (2010 version) and pdf electronic copies of Record Survey plots.

      1.) Final survey is to be stamped by professional survey company, certified by the State of Texas.

   b. Format: DWG, Autocad 2010, operating in Microsoft Windows operating system; and in Acrobat PDF format.
   c. Content: Types of items requiring marking include, but are not limited to, the following:

      1) Locations and depths of underground utilities.

2) Actual routing and sizes of piping and conduits.
3) Actual locations of equipment, vault, manhole, valve, conduit, and other important construction elements. Identify all elements by name.
4) Locations of concealed internal utilities.

F. Maintenance Manuals: Organize operation and maintenance data into suitable sets of manageable size. Bind properly indexed data in individual, heavy-duty, 2-inch (51-mm), 3-ring, vinyl-covered binders, with pocket folders for folded sheet information. Mark appropriate identification on front and spine of each binder. Include the following types of information:

1. Emergency instructions.
2. Spare parts list.
3. Copies of warranties.
4. Wiring diagrams.
5. Inspection procedures.
6. Shop Drawings and Product Data.

PART 2 - PRODUCTS (Not Applicable)

PART 3 - EXECUTION

3.1 CLOSEOUT PROCEDURES

A. Operation and Maintenance Instructions: Arrange for each Installer of equipment that requires regular maintenance to meet with the Owner's personnel to provide instruction in proper operation and maintenance. Provide instruction by manufacturer's representatives if installers are not experienced in operation and maintenance procedures. Include a detailed review of the following items:

1. Maintenance manuals.
2. Record documents.
3. Spare parts and materials.
4. Tools.
5. Lubricants.
6. Identification systems.
7. Hazards.
8. Warranties and bonds.
9. Maintenance agreements and similar continuing commitments.

3.2 FINAL CLEANING

A. General: Provide final cleaning. Conduct cleaning and waste-removal operations to comply with local laws and ordinances and Federal and local environmental and antipollution regulations.

B. Cleaning: Employ experienced workers or professional cleaners for final cleaning.

1. Complete the following cleaning operations before requesting inspection for certification of Substantial Completion for entire Project or for a portion of Project:

a. Clean Project site, yard, and grounds, in areas disturbed by construction activities, including landscape development areas, of rubbish, waste material, litter, and other foreign substances.
b. Sweep paved areas broom clean. Remove petrochemical spills, stains, and other foreign deposits.
c. Rake grounds that are neither planted nor paved to a smooth, eventextured surface.
d. Remove tools, construction equipment, machinery, and surplus material from Project site.
e. Clean exposed exterior and interior hard-surfaced finishes to a dirt-free condition, free of stains, films, and similar foreign substances. Avoid disturbing natural weathering of exterior surfaces. Restore reflective surfaces to their original condition.
f. Remove debris and surface dust from limited access spaces, including roofs, plenums, shafts, trenches, equipment vaults, manholes, attics, and similar spaces.
g. Sweep concrete floors broom clean in unoccupied spaces.
h. Remove labels that are not permanent.
i. Touch up and otherwise repair and restore marred, exposed finishes and surfaces. Replace finishes and surfaces that cannot be satisfactorily repaired or restored.
j. Wipe surfaces of mechanical and electrical equipment, and similar equipment. Remove excess lubrication, paint and mortar droppings, and other foreign substances.
k. Provide touch-up paint to scratched or marred surfaces. Do not paint over "UL" and similar labels, including mechanical and electrical nameplates.
l. Replace parts subject to unusual operating conditions.

C. Comply with safety standards for cleaning. Do not burn waste materials. Do not bury debris or excess materials on Owner's property. Do not discharge volatile, harmful, or dangerous materials into drainage systems. Remove waste materials from Project site and dispose of lawfully.

END OF SECTION 01700

PART 1 - GENERAL

1.1 RELATED DOCUMENTS

A. Drawings and general provisions of the Contract, including General and Supplementary Conditions and other Division 1 Specification Sections, apply to this Section.

1.2 SUMMARY

A. This Section includes administrative and procedural requirements for preparing operation and maintenance manuals, including the following:

1. Operation and maintenance documentation directory.
2. Operation manuals for systems, subsystems, and equipment.
3. Maintenance manuals for the care and maintenance of products, materials, finishes, systems and equipment.

1.3 DEFINITIONS

A. System: An organized collection of parts, equipment, or subsystems united by regular interaction.

B. Subsystem: A portion of a system with characteristics similar to a system.

1.4 SUBMITTALS

A. Initial Submittal: Submit draft copy of each manual at least 15 days before requesting inspection for Substantial Completion. Include a complete operation and maintenance directory. Engineer will return draft and mark whether general scope and content of manual are acceptable.

B. Final Submittal: Submit 1 copy of each manual in final form at least 15 days before final inspection. Engineer will return copy with comments within 15 days after final inspection.

1. Correct or modify each manual to comply with Engineer's comments. Submit 2 copies of each corrected manual within 15 days of receipt of Engineer's comments.

1.5 COORDINATION

A. Where operation and maintenance documentation includes information on installations by more than one factory-authorized service representative, assemble and coordinate information furnished by representatives and prepare manuals.

PART 2 - PRODUCTS

2.1 OPERATION AND MAINTENANCE DOCUMENTATION DIRECTORY

A. Organization: Include a section in the directory for each of the following:

1. List of documents.
2. List of systems.
3. List of equipment.
4. Table of contents.

B. List of Systems and Subsystems: List systems alphabetically. Include references to operation and maintenance manuals that contain information about each system.

C. List of Equipment: List equipment for each system, organized alphabetically by system. For pieces of equipment not part of system, list alphabetically in separate list.

D. Tables of Contents: Include a table of contents for each emergency, operation, and maintenance manual.

E. Identification: In the documentation directory and in each operation and maintenance manual, identify each system, subsystem, and piece of equipment with the same designation used in the Contract Documents. If no designation exists, assign a designation according to ASHRAE Guideline 4, "Preparation of Operating and Maintenance Documentation for Building Systems."

2.2 MANUALS, GENERAL

A. Provide project information on manual cover and on spine of manual. Information may be stick-on adhesive or inserted behind clear plastic cover. Include:

1. Title ("O&M Manual")
2. Name of project.
3. Owner's name.
4. Project number.
5. Date of project (use Substantial Completion date).

B. Organization: Unless otherwise indicated, organize each manual into a separate section for each system and subsystem, and a separate section for each piece of equipment not part of a system. Each manual shall contain the following materials, in the order listed:

1. Title page.
2. Table of contents.
3. Manual contents.

C. Title Page: Enclose title page in transparent plastic sleeve. Include the following information:

1. Subject matter included in manual.
2. Name and address of Project.
3. Name and address of Owner.
4. Date of submittal.
5. Name, address, and telephone number of Contractor.
6. Name and address of Engineer.
7. Cross-reference to related systems in other operation and maintenance manuals.

D. Table of Contents: List each product included in manual, identified by product name, indexed to the content of the volume, and cross-referenced to Specification Section number in Project Manual.

1. If operation or maintenance documentation requires more than one volume to accommodate data, include comprehensive table of contents for all volumes in each volume of the set.

E. Manual Contents: Organize into sets of manageable size. Arrange contents alphabetically by system, subsystem, and equipment. If possible, assemble instructions for subsystems, equipment, and components of one system into a single binder.

1. Binders: Heavy-duty, 3-ring, vinyl-covered, loose-leaf binders, in thickness necessary to accommodate contents, sized to hold 8-1/2-by-11-inch paper; with clear plastic sleeve on spine to hold label describing contents and with pockets inside covers to hold folded oversize sheets.

   a. If two or more binders are necessary to accommodate data of a system, organize data in each binder into groupings by subsystem and related components. Cross-reference other binders if necessary to provide essential information for proper operation or maintenance of equipment or system.
   b. Identify each binder on front and spine, with printed title "OPERATION AND MAINTENANCE MANUAL," Project title or name, and subject matter of contents. Indicate volume number for multiple-volume sets.

2. Dividers: Heavy-paper dividers with plastic-covered tabs for each section. Mark each tab to indicate contents. Include typed list of products and major components of equipment included in the section on each divider, cross-referenced to Specification Section number and title of Project Manual.
3. Protective Plastic Sleeves: Transparent plastic sleeves designed to enclose diagnostic software diskettes for computerized electronic equipment.
4. Supplementary Text: Prepared on 8-1/2-by-11-inch white bond paper.
5. Drawings: Attach reinforced, punched binder tabs on drawings and bind with text.

   a. If oversize drawings are necessary, fold drawings to same size as text pages and use as foldouts.

b. If drawings are too large to be used as foldouts, fold and place drawings in labeled envelopes and bind envelopes in rear of manual. At appropriate locations in manual, insert typewritten pages indicating drawing titles, descriptions of contents, and drawing locations.

2.3 OPERATION MANUALS

A. Content: In addition to requirements in this Section, include operation data required in individual Specification Sections and the following information:

1. System, subsystem, and equipment descriptions.
2. Performance and design criteria if Contractor is delegated design responsibility.
3. Operating standards.
4. Operating procedures.
5. Operating logs.
6. Wiring diagrams.
7. Control diagrams.
8. Precautions against improper use.
9. License requirements including inspection and renewal dates.

B. Descriptions: Include the following:

1. Product name and model number.
2. Manufacturer's name.
3. Equipment identification with serial number of each component.
4. Equipment function.
5. Operating characteristics.
6. Limiting conditions.
7. Performance curves.
8. Engineering data and tests.
9. Complete nomenclature and number of replacement parts.

C. Operating Procedures: Include the following, as applicable:

1. Startup procedures.
2. Equipment or system break-in procedures.
3. Routine and normal operating instructions.
4. Regulation and control procedures.
5. Instructions on stopping.
6. Normal shutdown instructions.
7. Seasonal and weekend operating instructions.
8. Required sequences for electric or electronic systems.
9. Special operating instructions and procedures.

D. Systems and Equipment Controls: Describe the sequence of operation, and diagram controls as installed.

E. Piped Systems: Diagram piping as installed, and identify color-coding where required for identification.

2.4 PRODUCT MAINTENANCE MANUAL

A. Content: Organize manual into a separate section for each product, material, and finish. Include source information, product information, maintenance procedures, repair materials and sources, and warranties and bonds, as described below.

B. Source Information: List each product included in manual, identified by product name and arranged to match manual's table of contents. For each product, list name, address, and telephone number of Installer or supplier and maintenance service agent, and cross-reference Specification Section number and title in Project Manual.

C. Product Information: Include the following, as applicable:

1. Product name and model number.
2. Manufacturer's name.
3. Color, pattern, and texture.
4. Material and chemical composition.
5. Reordering information for specially manufactured products.

D. Maintenance Procedures: Include manufacturer's written recommendations and the following:

1. Inspection procedures.
2. Types of cleaning agents to be used and methods of cleaning.
3. List of cleaning agents and methods of cleaning detrimental to product.
4. Schedule for routine cleaning and maintenance.
5. Repair instructions.

E. Repair Materials and Sources: Include lists of materials and local sources of materials and related services.

F. Warranties and Bonds: Include copies of warranties and bonds and lists of circumstances and conditions that would affect validity of warranties or bonds.

1. Include procedures to follow and required notifications for warranty claims.

2.5 SYSTEMS AND EQUIPMENT MAINTENANCE MANUAL

A. Content: For each system, subsystem, and piece of equipment not part of a system, include source information, manufacturers' maintenance documentation, maintenance procedures, maintenance and service schedules, spare parts list and source information, maintenance service contracts, and warranty and bond information, as described below.

B. Source Information: List each system, subsystem, and piece of equipment included in the manual, identified by product name and arranged to match manual's table of contents. For each product, list name, address, and telephone number of Installer

or supplier and maintenance service agent, and cross-reference Specification Section number and title in Project Manual.

C. Manufacturers' Maintenance Documentation: Manufacturers' maintenance documentation including the following information for each component part or piece of equipment:

1. Standard printed maintenance instructions and bulletins.
2. Drawings, diagrams, and instructions required for maintenance, including disassembly and component removal, replacement, and assembly.
3. Identification and nomenclature of parts and components.
4. List of items recommended to be stocked as spare parts.

D. Maintenance Procedures: Include the following information and items that detail essential maintenance procedures:

1. Test and inspection instructions.
2. Troubleshooting guide.
3. Precautions against improper maintenance.
4. Disassembly; component removal, repair, and replacement; and reassembly instructions.
5. Aligning, adjusting, and checking instructions.
6. Demonstration and training videotape, if available.

E. Maintenance and Service Schedules: Include service and lubrication requirements, list of required lubricants for equipment, and separate schedules for preventive and routine maintenance and service with standard time allotment.

1. Scheduled Maintenance and Service: Tabulate actions for daily, weekly, monthly, quarterly, semiannual, and annual frequencies.
2. Maintenance and Service Record: Include manufacturers' forms for recording maintenance.

F. Spare Parts List and Source Information: Include lists of replacement and repair parts, with parts identified and cross-referenced to manufacturers' maintenance documentation and local sources of maintenance materials and related services.

G. Warranties and Bonds: Include copies of warranties and bonds and lists of circumstances and conditions that would affect validity of warranties or bonds.

1. Include procedures to follow and required notifications for warranty claims.

PART 3 - EXECUTION

3.1 MANUAL PREPARATION

A. Product Maintenance Manual: Assemble a complete set of maintenance data indicating care and maintenance of each product, material, and finish incorporated into the Work.

B. Operation and Maintenance Manuals: Assemble a complete set of operation and maintenance data indicating operation and maintenance of each system, subsystem, and piece of equipment not part of a system.

1. Engage a factory-authorized service representative to assemble and prepare information for each system, subsystem, and piece of equipment not part of a system.
2. Prepare a separate manual for each system and subsystem, in the form of an instructional manual for use by Owner's operating personnel.

C. Manufacturers' Data: Where manuals contain manufacturers' standard printed data, include only sheets pertinent to product or component installed. Mark each sheet to identify each product or component incorporated into the Work. If data include more than one item in a tabular format, identify each item using appropriate references from the Contract Documents. Identify data applicable to the Work and delete references to information not applicable.

1. Prepare supplementary text if manufacturers' standard printed data are not available and where the information is necessary for proper operation and maintenance of equipment or systems.

D. Drawings: Prepare drawings supplementing manufacturers' printed data to illustrate the relationship of component parts of equipment and systems and to illustrate control sequence and flow diagrams. Coordinate these drawings with information contained in Record Drawings to ensure correct illustration of completed installation.

1. Do not use original Project Record Documents as part of operation and maintenance manuals.
2. Comply with requirements of newly prepared Record Drawings in Division 1 Section "Project Record Documents."

E. Comply with Division 1 Section "Closeout Procedures" for the schedule for submitting operation and maintenance documentation.

END OF SECTION 01730

ARTICLE 1 - GENERAL

1.1 RELATED DOCUMENTS

The following documents are a part of this section:

All documents in Bidding Requirements, Contract Forms and Conditions of the Contract.

Other sections of Division 1 - General Requirements apply to this section.

1.2 DESCRIPTION AND INTENT OF THE WORK

No asbestos containing material (ACM) shall be brought onto the Project site, and/or incorporated into the Project construction without the written consent of the OWNER. Any asbestos containing material found at any time including after contract completion, to have been brought onto the site or incorporated into the Project construction by the CONTRACTOR, or any Subcontractors, Sub-Subcontractors or Suppliers, shall be removed and disposed of in accordance with the then current governmental regulatory standards.

All costs associated with the inspection, sampling, testing, removal and disposal of ACM as described above shall be paid by the CONTRACTOR.

1.3 DEFINITIONS

ASBESTOS: The asbestiform varieties of serpentine (chrysotile), riebeckite (crocidolite) cummingtonite-grunerite (amosite), anthophyllite, actinolite and tremolite.

ASBESTOS CONTAINING MATERIAL (ACM): Any material containing more than one percent (1%) by weight of asbestos of any type or mixture of types.

ASBESTOS CONTAINING BUILDING MATERIAL (ACBM): Any material used in the construction of, or incorporated into the construction of, any building that contains more than one percent (1%) by weight of asbestos of any type or mixture of types.

MSDS: A material safety data sheet (MSDS) is a form containing data regarding the properties of component substances that comprise a manufactured product. They are a basic hazard communication tool that gives details on chemical and physical dangers, safety procedures, and emergency responses for chemicals.

1.4 QUALITY ASSURANCE

PROHIBITION OF ASBESTOS CONTAINING MATERIALS

The E/A has been instructed to not permit any asbestos containing materials to be specified, requested or approved for use in conjunction with this Project.

The E/A has signed the following:

A. 01900A Statement of Non-Inclusion of Asbestos Containing Material (E/A, Prior to Design): stating that the Engineer/Architect shall not specify, request or approve any ACM in this Project without prior written approval of OWNER.

B. 01900B Statement of Non-Inclusion of Asbestos Containing Material (E/A, After Design): stating that the Engineer/Architect has not specified, requested or approved any ACM in this Project

without the prior written approval of the OWNER, and that any ACM allowed in this Project is identified in the Statements.

These Statements are included in the Construction Documents.

ASBESTOS CONTAINING MATERIALS PROHIBITED FROM SITE

No asbestos containing materials will be permitted as part of the Project construction. The following list is intended to be used as a general guide to show which types of materials are suspected to contain asbestos:

- Cement Pipes
- Cement Wallboard
- Cement Siding
- Asphalt Floor Tile
- Vinyl Floor Tile
- Vinyl Sheet Flooring/vinyl wall coverings
- Flooring Backing
- Construction Mastics (floor tile, carpet, ceiling tile, etc.)
- Acoustical Plaster
- Decorative Plaster / stucco
- Textured Paintings/Coatings
- Ceiling Tiles and Lay-in Panels
- Spray-Applied Insulation
- Blown-in Insulation
- Fireproofing Materials
- Taping Compounds (thermal)
- Packing Materials (for wall/floor penetrations)
- High Temperature Gaskets
- Laboratory Gloves
- Fire Blankets
- Fire Curtains
- Elevator Equipment Panels
- Elevator Brake Shoes
- HVAC Duct Insulation
- Boiler Insulation
- Breeching Insulation
- Ductwork Flexible Fabric Connections
- Cooling Towers
- Pipe Insulation (corrugated air-cell, block, etc.)
- Heating and Electrical Ducts
- Electrical Panel Partitions
- Electric Cloth
- Electric Wiring Insulation
- Chalkboards
- Roofing Shingles / tiles / membranes
- Roofing Felt
- Roof Coatings
- Base Flashing
- Thermal Paper Products
- Fire Doors
- Caulking/Putties
- Adhesives / mastics
- Wallboard
- Joint Compounds
- Spackling Compounds
- Laboratory hoods/tabletops
- CMU block fill materials

If any of these suspect materials are specified for use on the Project, and if they do not have specific labelling identifying them as asbestos free, then the CONTRACTOR shall notify the OWNER immediately. Laboratory analysis of the material by an OWNER-approved laboratory shall be performed at CONTRACTOR's expense in order to warrant that the material does not contain asbestos. A copy of the package labelling or results of laboratory testing must be provided to the OWNER prior to inclusion of the specified material during construction. Contractor's construction submittals must include MSDSs for all new materials used in construction of buildings, facilties and infrastructure.

1.5 SUBMITTALS

NON-USE OF ASBESTOS AFFIDAVITS

At the time that the CONTRACTOR signs the Agreement, they shall sign a Non-Use of Asbestos Affidavit (Contractor Prior to Construction), Contract Document 00680. This Affidavit certifies that the CONTRACTOR agrees that they will not allow any asbestos containing materials to be incorporated into the construction of the Project or allow any asbestos containing building materials on the site for which the OWNER has not given prior written approval.

Prior to final payment, the CONTRACTOR will provide to the OWNER a Non-Use of Asbestos Affidavit (Contractor After Construction), Contract Document 00681. This Affidavit certifies that the CONTRACTOR did not allow asbestos containing materials to be incorporated into the construction or allowed any

asbestos containing building materials on the site for which the OWNER of the Project did not give prior written approval.

ASBESTOS CONTAINING MATERIALS: When any asbestos containing materials are used on the Project, provide the following information:

A detailed description of the material containing the asbestos.

The type and percent of asbestos contained in the material.

The quantity of the materials used, including the square footage, or in the case of pipe insulation, the size and linear footage.

A drawing showing the exact location of any asbestos containing materials.

Final payment shall be withheld until the above described Affidavits, submittals and/or information are received and approved.

END

CITY OF AUSTIN

STATEMENT OF NON-INCLUSION OF ASBESTOS CONTAINING MATERIAL

STATE OF TEXAS
COUNTY OF TRAVIS

ENGINEER/ARCHITECT PRIOR TO DESIGN

"My name is John Routh, PE, PMP, hereinafter known as Authorized Representative.

"I am over the age of 18 years and I have never been convicted of a crime. I am the Employee of City of Austin hereinafter known as ENGINEER/ARCHITECT.

"I am fully competent to make this statement. I have personal knowledge of the facts set forth below and they are all true and correct.

"WHEREAS ENGINEER/ARCHITECT has been selected to provide designs, to prepare the bid and construction documents, and to assist the City of Austin, Texas, hereinafter known as OWNER, during the construction of Chilled Water Piping Construction in the Right of Way, located at Various locations throughout City of Austin ETJ, Austin, Texas, hereinafter known as Project, and

"WHEREAS asbestos in a dust form is a recognized health hazard, and
"WHEREAS the OWNER desires not to have any asbestos containing materials used or incorporated into the construction of the Project;
"THEREFORE the ENGINEER/ARCHITECT affirms that to the best of its knowledge and belief:

1. The ENGINEER/ARCHITECT, any person, firm or organization representing or represented by the ENGINEER/ARCHITECT, shall not knowingly specify, request, or approve for use in conjunction with the Project, any asbestos containing materials or any other materials defined as containing asbestos by any laws, rules or regulations promulgated by the United States Government, the State of Texas or any governmental organization or agency operating under the authority of either of those entities.
2. Realizing that there might be materials required in which a satisfactory non-asbestos containing material cannot be obtained, the ENGINEER/ARCHITECT will do the following before specifying any asbestos containing material:
   A. Inform the OWNER's Project Manager for this Project, in writing, of any intent to specify asbestos containing materials.
   B. Receive written approval from the City of Austin Project Manager for the specifying of any asbestos containing materials.
   C. At the completion of the design phase, and before the OWNER receives any bids for this Project, provide to the Project Manager, in writing, the proposed location of any asbestos containing materials, the type of asbestos they contain, and the percent of asbestos by types.
3. The ENGINEER/ARCHITECT states its understanding that if any asbestos containing materials not approved by the OWNER for inclusion into the Project, are determined, as a result of any inspection and sample analysis performed by an individual(s) and/or firm(s) certified and/or licensed to perform such inspection by the United States Government and/or the State of Texas, to have been knowingly specified, requested and/or approved by the ENGINEER/ARCHITECT for inclusion in the Project, the OWNER shall look to the ENGINEER/ARCHITECT for reimbursement of any and all costs incurred in the removal and/or other abatement of said asbestos containing materials.
4. ENGINEER/ARCHITECT further understands that OWNER shall also look to the ENGINEER/ARCHITECT for any and all damages to OWNER which result from the inability of the OWNER to use any portion or all of the Project due to the incorporation of asbestos containing materials that have been knowingly specified, requested and/or approved by the ENGINEER/ARCHITECT.
5. ENGINEER/ARCHITECT further understands that OWNER will pursue reimbursement of any said cost and compensation for any said damages from the ENGINEER/ARCHITECT by any and every means within OWNER's right and power.

Signature of Authorized Representative: John Routh

STATE OF TEXAS
COUNTY OF TRAVIS

ON May 2, 2016, 2016 personally appeared John Routh, PE PMP and been duly sworn by me, subscribed to the foregoing statement and has stated that the facts stated therein are true and correct.

Notary Public, State of Texas Carol A. Debish

Printed Name of Notary CAROL A. DEBISH

My Commission Expires: Aug. 3, 2016

NOTARY PUBLIC STATE OF TEXAS
CAROL A. DEBISH
MY COMMISSION EXPIRES
August 3, 2016

01605A.00/110392

CITY OF AUSTIN

STATEMENT OF NON-INCLUSION OF ASBESTOS CONTAINING MATERIAL

ENGINEER/ARCHITECT AFTER DESIGN

STATE OF TEXAS
COUNTY OF TRAVIS

"My name is John Routh, PE, PMP, hereinafter known as Authorized Representative.

"I am over the age of 18 years and I have never been convicted of a crime. I am the Employee of City of Austin hereinafter known as ENGINEER/ARCHITECT.

"I am fully competent to make this statement. I have personal knowledge of the facts set forth below and they are all true and correct.

"WHEREAS ENGINEER/ARCHITECT has been selected to provide designs, to prepare the bid and construction documents, and to assist the City of Austin, Texas, hereinafter known as OWNER, during the construction of Chilled Water Piping Construction in the Right of Way, located at Various locations throughout City of Austin ETJ Austin, Texas, hereinafter known as Project, and

"WHEREAS asbestos in a dust form is a recognized health hazard, and
"WHEREAS the OWNER desires not to have any asbestos containing materials used or incorporated into the construction of the Project;
"THEREFORE the ENGINEER/ARCHITECT affirms that to the best of its knowledge and belief:

1. The ENGINEER/ARCHITECT, any person, firm or organization representing or represented by the ENGINEER/ARCHITECT, shall not knowingly specify, request, or approve for use in conjunction with the Project, any asbestos containing materials or any other materials defined as containing asbestos by any laws, rules or regulations promulgated by the United States Government, the State of Texas or any governmental organization or agency operating under the authority of either of those entities.
2. The only exceptions to the above statement are the following materials that are required because a satisfactory non-asbestos containing material cannot be obtained. The inclusion of these materials has been approved by the OWNER's Project Manager for this Project.

   _____

   _____

   _____

   _____

3. The ENGINEER/ARCHITECT states its understanding that if any asbestos containing materials not approved by the OWNER for inclusion into the Project, are determined, as a result of any inspection and sample analysis performed by an individual(s) and/or firm(s) certified and/or licensed to perform such inspection by the United States Government and/or the State of Texas, to have been knowingly specified, requested and/or approved by the ENGINEER/ARCHITECT for inclusion in the Project, the OWNER shall look to the ENGINEER/ARCHITECT for reimbursement of any and all costs incurred in the removal and/or other abatement of said asbestos containing materials.
4. ENGINEER/ARCHITECT further understands that OWNER shall also look to the ENGINEER/ARCHITECT for any and all damages to OWNER which result from the inability of the OWNER to use any portion or all of the Project due to the incorporation of asbestos containing materials that have been knowingly specified, requested and/or approved by the ENGINEER/ARCHITECT.
5. ENGINEER/ARCHITECT further understands that OWNER will pursue reimbursement of any said cost and compensation for any said damages from the ENGINEER/ARCHITECT by any and every means within OWNER's right and power.

Signature of Authorized Representative: John Routh PE, PMP

STATE OF TEXAS
COUNTY OF TRAVIS

ON May 16, 2016, personally appeared John Routh, PE, PMP and been duly sworn by me, subscribed to the foregoing statement and has stated that the facts stated therein are true and correct.

Notary Public, State of Texas Travis County

Printed Name of Notary Carol A. Debish

My Commission Expires: August 3, 2016

NOTARY PUBLIC STATE OF TEXAS
CAROL A. DEBISH
MY COMMISSION EXPIRES
August 3, 2016

01605B/110392

Item No. 110S
Street Excavation

110S.1 Description

This item shall govern: (1) the excavation and proper utilization or otherwise satisfactory disposal of all excavated material, of whatever character, within the right of way or other limits of the work indicated and (2) the construction, compaction, shaping and finishing of all earthwork on the entire project in accordance with the specification requirements herein outlined, in conformity with the required lines, grades and typical cross sections indicated on the Drawings or as directed by the Engineer or designated representative. When not otherwise included in the Contract Documents, this item shall include the Work described in specification Item Nos. 101S, "Preparing Right of Way", 102S, "Clearing and Grubbing", 104S, "Removing Portland Cement Concrete", 132S, "Embankment", 201S, "Subgrade Preparation" and 236S, “Proof Rolling”.

This specification is applicable for projects or work involving either inch-pound or SI units. Within the text inch-pound units are given preference followed by SI units shown within parentheses.

110S.2 Submittals

The submittal requirements of this specification item may include:

A. A permit when utility adjustments are made in the right-of-way,

B. A plan for removal and deposition of all 'Waste' materials, and

C. A Blasting Permit if blasting is required and allowed on the project.

110S.3 Classification

All excavation shall be unclassified and shall include all materials encountered regardless of their nature or the manner in which they are removed.

110S.4 Construction Methods

Prior to commencement of this work, all required erosion control and tree protection measures shall be in place. The existing utilities shall be located and protected as specified in the Standard Contract Documents, Section 00700, "General Conditions" and/or indicated on the Drawings. A permit shall be required when utility adjustments are to be made in preparation for construction in the right-of-way, as specified in Section 5.2.0 of the City of Austin Utilities Criteria Manual.

Construction equipment shall not be operated nor construction materials stockpiled under the canopies of trees, unless otherwise indicated on the Drawings. Excavation or embankment materials shall not be placed within the drip line of trees until tree wells are constructed, that conform to Item No. 610S, " Preservation of Trees and Other Vegetation ".

All street excavation shall be performed as specified herein and shall conform to the established alignment, grades and cross sections. The Contractor will be required to set blue-tops for the subgrade along centerlines, at quarter points and curb lines or edge of

pavement at intervals not exceeding 50 feet (15 meters). Suitable excavated materials shall be utilized, insofar as practicable, in constructing any required embankments. The construction of all embankments shall conform to Item No. 132S, "Embankment".

All earth cuts for base and/or pavement structure construction shall be scarified to a uniform depth of at least 6 inches (150 millimeters) below the required finished subgrade elevation for the entire roadbed width. The material shall be mixed, reshaped by blading, sprinkled and then rolled in accordance with Section 2 of the City of Austin Specification Item 132S, "Embankment".

High PI materials (i.e. PI $\geq$ 20 %) which exhibit a Plasticity Index (PI) greater by 5 % than the surrounding materials or any materials with a moisture content greater than 2 percent (%) in excess of optimum moisture shall be classified as unsuitable and must be removed or manipulated to meet the above criteria before use.

Unsuitable excavated materials or excavation in excess of that needed for construction shall be known as "Waste" and shall become the property of the Contractor. Unsuitable material encountered below the subgrade elevation in roadway cuts, when declared “Waste” by the Engineer, shall be replaced with material from the roadway excavation or with other suitable material as approved by the Engineer or designated representative. It shall become the Contractor’s responsibility to dispose of this material off the limits of the right of way in an environmentally sound manner at a permitted disposal site.

All blasting shall conform to the General Notes on the Drawings and to the Standard Contract Document Section 01550, "Public Safety and Convenience". In all cases where blasting is permitted, a Blasting Permit must be obtained in advance from the City of Austin Department of Public Works and Transportation.

110S.5 Measurement

All accepted street excavation will be measured by either Method A or B as follows:

A. Method A

Measurement of the volume of excavation in cubic yards (cubic meters: 1 cubic meter is equal to 1.308 cubic yards) by the average end areas. Cross sectional areas shall be computed from the existing ground surface to the established line of the subgrade over the limits of the right of way or other work limits shown on the Drawings, including parkway slopes and sidewalk areas.

B. Method B

Measurement of the volume of excavation in cubic yards (cubic meters: 1 cubic meter is equal to 1.308 cubic yards), based upon the average end areas taken from pre-construction cross sections and planned grades. The planned quantities for street excavation will be used as the measurement for payment of this item.

110S.6 Payment

This item will be paid for at the contract unit bid price for "Street Excavation", as provided under measurement Method A or B as included in the bid. The bid price shall include full compensation for all work herein specified, including subgrade preparation, unless specified otherwise, and the furnishing of all materials, equipment, tools, labor and incidentals necessary to complete the work.

Payment will be made under one of the following:

Pay Item No. 110S-A:	Street Excavation	Per Cubic yard.
Pay Item No. 110S-B:	Street Excavation, Plan Quantity	Per Cubic yard.

End

SPECIFIC CROSS REFERENCE MATERIALS
Specification Item 110S, "STREET EXCAVATION"

City of Austin Standard Contract Documents

Designation	Description
00700	General Conditions
01550	Public Safety and Convenience

City of Austin Utilities Criteria Manual

Designation	Description
Section 5.2.0	Permit for Excavation in the Public Right-of-Way

City of Austin Standard Specifications

Designation	Description
Item No. 101S	Preparing Right of Way
Item No. 102S	Clearing and Grubbing
Item No. 104S	Removing Portland Cement Concrete
Item No. 132S	Embankment
Item No. 201S	Subgrade Preparation
Item No. 236S	Proof Rolling
Item No. 610S	Preservation of Trees and Other Vegetation

RELATED CROSS REFERENCE MATERIALS

City of Austin Standard Contract Documents

Designation	Description
01500	Temporary Facilities

The Code of the City of Austin, Code of Ordinances, Volume 1

Designation	Description
Article 14-11-181	Permit Required
Article 14-11-189	Conditions for Permit Issuance
Article 14-11-190	Excavation Sequence and Permit Term

City of Austin Standard Specifications

Designation	Description
Item No. 111S	Excavation
Item No. 120S	Channel Excavation
Item No. 203S	Lime Treatment for Materials In Place
Item No. 204S	Portland Cement Treatment for Materials In Place
Item No. 230S	Rolling (Flat Wheel)
Item No. 232S	Rolling (Pneumatic Tire)
Item No. 234S	Rolling (Tamping)
Item No. 602S	Sodding for Erosion Control
Item No. 604S	Seeding for Erosion Control
Item No. 610S	Preservation of Trees and Other Vegetation
Item No. 622S	Diversion Dike
Item No. 628S	Sediment Containment Dikes
Item No. 642S	Silt Fence

RELATED CROSS REFERENCE MATERIALS - Continued
Specification Item 110S, "STREET EXCAVATION"

City of Austin Standard Details

Designation	Description
610S-1	Tree Protection Fence Locations
610S-2	Tree Protection Fence, Type B Chainlink
610S-3	Tree Protection Fence, Type B Wood
610S-4	Tree Protection Fence, Modified Type A
610S-5	Tree Protection Fence, Modified Type B
610S-6	Tree Protection, Tree Wells
621S-1	Diversion
622S-1	Diversion Dike
624S-1	Earth Outlet Sediment Trap
625S-1	Grade Stabilization Structure
627S-1	Grass Lined Swale
627S-2	Grass Lined Swale With Stone Center
628S	Triangular Sediment Filter Dike
628S-1	Hay Bale Dike
629S-1	Brush Berm
630S-1	Interceptor Dike
631S-1	Interceptor Swale
632S-1	Storm Inlet Sediment Trap
633S-1	Landgrading
634S-1	Level Spreader
635S-1	Perimeter Dike
636S-1	Perimeter Swale
637S-1	Pipe Slope Drain (Flexible)
637S-2	Pipe Slope Drain (Rigid)
638S-1	Pipe Outlet Sediment Trap
639S-1	Rock Berm
641S-1	Stabilized Construction Entrance
642S-1	Silt Fence
643S-1	Stone Outlet Structure
644S-1	Stone Outlet Sediment Trap

Texas Department of Transportation: Standard Specifications for Construction and Maintenance of Highways, Streets, and Bridges

Designation	Description
Item No. 100	Preparing Right of Way
Item No. 110	Excavation
Item No. 112	Subgrade Widening
Item No. 132	Embankment
Item No. 150	Blading
Item No. 158	Specialized Excavation Work
Item No. 160	Furnishing and Placing Topsoil
Item No. 164	Seeding for Erosion Control
Item No. 204	Sprinkling
Item No. 210	Rolling (Flat Wheel)
Item No. 211	Rolling (Tamping)
Item No. 213	Rolling (Pneumatic Tire)
Item No. 260	Lime Treatment for Materials Used as Subgrade (Road Mixed)
Item No. 265	Lime-Fly Ash (LFA) Treatment for Materials Used as Subgrade

RELATED CROSS REFERENCE MATERIALS - Continued
Specification Item 110S, "STREET EXCAVATION"

Texas Department of Transportation:
Manual of Testing Procedures

Designation	Description
Tex-103-E	Determination of Moisture Content of Soil Materials
Tex-104-E	Determination of Liquid Limit of Soils
Tex-105-E	Determination of Plastic Limit of Soils
Tex-106-E	Method of Calculating the Plasticity Index of Soils
Tex-114-E	Laboratory Compaction Characteristics and Moisture-Density Relationship of Subgrade & Embankment Soil
Tex-115-E	Field Method for Determination of In-Place Density of Soils and Base Materials

Item No. 301S
Asphalts, Oils and Emulsions

301S.1 Description

This item includes the requirements for cutback asphalts, emulsified asphalts, polymer modified asphalt cements, performance graded asphalt binders and other miscellaneous asphaltic materials and latex additives.

This specification is applicable for projects or work involving either inch-pound or SI units. Within the text the inch-pound units are given preference followed by SI units shown within parentheses.

301S.2 Submittals

Submittals shall include test results for each the materials described herein when specifically identified on the Drawings and/or referenced in associated standard specification items and standard details.

Submittals may include samples of the base asphalt cement and polymer additives.

301S.3 Materials

When tested in accordance with designated TxDoT, AASHTO and/or ASTM Test Methods, the various materials shall meet the applicable requirements of this specification.

A. Acronyms

The acronyms used in this specification are defined in the following table.

Table 1: Acronyms

Acronym	Definition	Acronym	Definition
Test Method Prefix Tex T D	 TxDOT AASHTO ASTM	Polymer Modifier SBR or L SBS TR P	 Styrene-Butadiene Rubber (Latex) Styrene-Butadiene-Styrene Block Copolymer Tire Rubber, from ambient temperature grinding of truck and passenger tires Polymer Modified
AC	Asphalt Cement	SS	Slow Setting
RC	Rapid Curing	H-suffix	Harder Residue (Lower Penetration)
MC	Medium Curing	AE	Asphalt Emulsion
SCM	Special Cutback Material	S-suffix	Stockpile Usage
HF	High Float	AE-P	Asphalt Emulsion Prime
C	Cationic	EAP&T	Emulsified Asphalt Prime and Tack
RS	Rapid Setting	PCE	Prime, Cure, and Erosion Control
MS	Medium Setting	PG	Performance Grade

B. Asphalt Cement

The material shall be homogeneous, free from water, shall not foam when heated to 350°F (177°C) and shall meet the requirements in Table 2.

Table 2: Asphalt Cement Requirements

Viscosity Grade		AC-10		AC-20		AC-30	
Property	Test Method	Min	Max	Min	Max	Min	Max
Viscosity: 140°F, poises (60°C, pascals)	T202	800 (80)	1200 (120)	1600 (160)	2400 (240)	2400 (240)	3600 (360)
Viscosity: 275°F, stokes (135°C, pascals)	T202	1.9 (.19)	-	2.5 (.25)	-	3.0 (.30)	-
Penetration: 77°F (25°C), 100g, 5s	T49	85	-	55	-	45	-
Flash Point, C.O.C. °F (°C)	T48	450 (232)	-	450 (232)	-	450 (232)	-
% Solubility trichloroethylene	T44	99.0	-	99.0	-	99.0	-
Spot test	Tex 509-C						
Viscosity: 140°F stokes (60°C pascals)	T202	-	3000 (300)	-	6000 (600)	-	9000 (900)
Ductility 77°F (25°C), 5 cm/min, cm	T202	100	-	70	-	50	-

C. Polymer Modified Asphalt Cement.

Polymer modified asphalt cement must be smooth, homogeneous, and shall comply with the requirements listed in Table 3.

Table 3: Polymer Modified Asphalt Cement Requirements

Polymer Modified Viscosity Grade		AC-5		AC-10		AC-15P		AC-45P*	
Polymer Type		SBR		SBR		SBS		SBS	
Property	Test Method	Min	Max	Min	Max	Min	Max	Min	Max
Polymer in % (solids basis)	Tex-533-C	2.0	-	2.0	-	3.0	-	3.0	-
Viscosity									
140ºF, poise (60°C, pascals)	T 202	700 (70)	- -	1300 (130)	- -	1500 (150)	- -	4500 (450)	- -
275ºF, poise (135°C, pascals)	T 202	- -	7.0 (0.7)	- -	8.0 (0.8)	- -	8.0 (0.8)	14.0 (1.4)	
Penetration, 77ºF (25°C), 100 g, 5 s.	T 49	120	-	80	-	100	150	50	74
Ductility, 5cm/min., 39.2ºF, cm	T 51	70	-	60	-	-	-	15	-
Elastic Recovery, 50ºF (10°C), %	Tex-539-C	-	-	-	-	55	-		-
Polymer Separation, 48 hrs**.	Tex-540-C	None		None		None		None	
Flash Point, C.O.C., ºF (°C),	T 48	425 (218)	- -	425 (218)	- -	425 (218)	- -	425 (218)	- -
Tests on Residue from Thin Film Oven Test: (T179)									
Retained Penetration Ratio, 77ºF (25°C), % original	T 49	-	-	-	-	0.60	1.00	0.60	0.90

* The SBS block copolymer may be pre-blended with a polymer processing oil (up to a 1:1 ratio of polymer to oil) to aid the solution of the polymer in the asphalt.

** A 350-gram (0.77 pound) sample of the asphalt-SBS blend is stored for 48 hours at 325°F (163°C). Upon completion of the storage time, the sample is visually examined for separation of the SBS from the asphalt (smoothness and homogeneity). If a question still exists about the separation of the SBS, samples shall be taken from the top and bottom of the sample for Infrared Spectroscopy analysis. A difference of 0.4% or more in the concentration of the SBS between the top and bottom samples shall constitute separation.

D. Cutback Asphalt

Cutback Asphalt shall meet the requirements presented in tables 4, and 5 for the specified type and grade.

Table 4: RAPID CURING TYPE CUTBACK ASPHALT Requirements

Type-Grade		RC-250		RC-800		RC-3000	
Properties	Test Method	Min	Max	Min	Max	Min	Max
Water, percent	T55	-	0.2	-	0.2	-	0.2
Flash Point, T.O.C.,°F [°C]	T79	80 (27)	-	80 (27)	-	80 (27)	-
Kinematic viscosity @ 140°F, cst [60°C, mm²/s]	T201	250	400	800	1600	3000	6000
Distillation Test:	T78						
Distillate, % by volume of total distillate to 680°F [360°C]:							
to 437°F [225°C]:		40	75	35	70	20	55
to 500°F [260°C]:		65	90	55	85	45	75
to 600°F [316°C]:		85	-	80	-	70	-
Residue from Distillation, Volume %		70	-	75	-	82	-
Tests of Distillation Residue:							
Penetration, 100g, 5 sec., 77°F [25°C], cm	T49	80	120	80	120	80	120
Ductility, 5 cm/min., 77°F, 5 cm/min., cm	T51	100	-	100	-	100	-
[25°C, 50 mm/min., mm]		1000	-	1000	-	1000	-
Solubility in trichloroethylene, % T44		99.0	-	99.0	-	99.0	-
Spot Test	Tex 509-C	ALL NEGATIVE					

Table 5: MEDIUM CURING TYPE CUTBACK ASPHALT Requirements

Type		MC-30		MC-70		MC-250		MC-800		MC-3000	
Properties	Test Method	Min	Max	Min	Max	Min	Max	Min	Max	Min	Max
Water, %	T55	-	0.2	-	0.2	-	0.2	-	0.2	-	0.2
Flash Point, T.O.C.,°F [°C]	T79	100 [38]	-	100 [38]	-	150 [65]	-	150 [65]	-	150 [65]	-
Kinematic viscosity. @ 140°F. cst [60°C, mm²/s]	T201	30	60	70	140	250	500	800	1600	3000	6000
Distillation Test:	T78										
Distillate, as % by volume to total distillate to 680°F[360°C]:, shall be as follows:											
to 437°F [225°C]:		-	25	-	20	-	10	-	-	-	-
to 500°F [260°C]:		40	70	20	60	15	55	-	35	-	15
to 600°F [316°C]:		75	93	65	90	60	87	45	80	15	75
Residue from 80°F [225°C] distillation											
Volume Percent		50	-	55	-	67	-	75	-	80	-
Tests on Distillation Residue:											
Penetration @ 77°F [25°C], 100g, s, 01mm:	T49	120	250	120	250	120	250	120	250	120	250
Ductility @ 77°F, 5 cm/min, cms	T51	100*	-	100*	-	100*	-	100*	-	100*	-
[25°C, 50 mm/min., mm]		1000*	-	1000*	-	1000*	-	1000*	-	1000*	-
% Solubility in trichloroethylene	T44	99.0	-	99.0	-	99.0	-	99.0	-	99.0	-
Spot Test	Tex 509-C	ALL NEGATIVE									

* If penetration of residue is more than 200 and the ductility at 77°F [25°C] is less than 100 cm [1000 mm], the material will be acceptable if its ductility at 60°F [16°C] is more than 100cm [1000 mm].

E. Emulsified Asphalt

The material shall be homogenous. It shall show no separation of asphalt after thorough mixing and shall meet the requirements for the specified type and grade presented in Tables 6, 7 and 8.

Table 6: ANIONIC EMULSION Requirements

	Type	Medium Setting		Slow Setting			
	Grade	MS-2		SS-1		SS-1h	
Property	Test Method	Min	Max	Min	Max	Min	Max
Furol Viscosity @ 77°F [25°C], sec.	T72	-	-	20	100	30	100
@ 122°F[50°C], sec		100	300	-	-	-	-
Sieve Test, %.	T59	-	0.1	-	0.1	-	0.1
Miscibility (Standard Test)	T59	-	-	Passing		Passing	
Cement Mixing, %	T59	-	-	-	2.0	-	2.0
% Demulsibility: 35 cc 0.02N $CaCl_2$	T59	-	30	-	-	-	-
Storage Stability 1 day, %	T59	-	1	-	1	-	1
Freezing Test, 3 Cycles*	T59	Passing		Passing		Passing	
Distillation Test	T59						
Distillation Residue, %		65	-	60	-	60	-
Distillate Oil Portion, %		-	½	-	½	-	½
Tests of Residue from Distillation:							
Penetration @ 77°F [25°C], 100g, 5s	T49	120	160	120	160	70	100
Solubility in Trichloroethylene, %	T44	97.5	-	97.5	-	97.5	-
Ductility @ 77F, 5 cm/min., cm	T51	100	-	100	-	80	-
[@ 25°C, 50 mm/min., mm]		1000	-	1000	-	800	-

* Applies only when Engineer or designated representative specifies the material for winter use.

Table 7: HIGH FLOAT ANIONIC EMULSION Requirements

	Type	Rapid Setting		Medium Setting	
	Grade	HFRS-2		AES-300	
Property	Test Method	Min	Max	Min	Max
Viscosity, Saybolt Furol	T72				
@ 77°F [25°C], sec.		-	-	75	400
@ 122°F [50°C], sec.		150	400	-	-
Oil Portion of Distillate, %	T59	-	2	-	7
Sieve Test, %	T59	-	0.1	-	0.1
Particle Charge	T59	positive		positive	
Coating Ability and Water Resistance:	T59				
Coating, dry aggregate		-	-	good	
Coating, after spraying		-	-	fair	
Coating, wet aggregate				fair	
Coating, after spraying				fair	
% Demulsibility: 35 ml 0.02 N $CaCl_2$	T59	50	-	-	-
Storage Stability Test, 1 day, %	T59	-	1	-	1
Distillation Test	T59				
Residue by Distillation, % by weight		65	-	65	-
Oil Distillate, by volume of emulsion, %		-	1/2	-	5
Tests on Residue from Distillation:					
Penetration at 77°F [25°C], 100 g, 5s	T49	100	140	300	-
Solubility in Trichloroethylene, %	T44	97.5	-	97.5	-
Ductility @ 77°F., 5 cm/min, cms	T51	100	-	-	-
[25°C., 50 mm/min, mm]		[1000}			

Float Test at 140°F [60°C], sec.	Tex 509-C	1200	-	1200	-

Table 8: CATIONIC EMULSION Requirements

Type		Rapid Setting				Medium Setting				Slow Setting			
Grade		CRS-2		CRS-2h		CMS-2		CMS-2s		CSS-1		CSS-1h	
Property	Test Method	Min	Max	Min	Max	Min.	Max	Min	Max	Min	Max	Min	Max
Viscosity, Saybolt Furol	T72												
@ 77°F [25°C], sec.		-	-	-	-	-	-	-	-	20	100	20	100
@ 122°F [50°C],sec.		150	400	150	400	100	300	100	300	-	-	-	-
Storage stability test, 1 day %	T59	-	1	-	1	-	1	-	1	-	1	-	1
% Demulsibility: *,**	T59	40	-	40	-	-	-	-	-	-	-	-	-
Coating, ability & water resistance	T59												
Coating, dry aggregate		-	-	-	-	good		good		-	-	-	-
Coating, after spraying		-	-	-	-	fair		fair		-	-	-	-
Coating, wet aggregate		-	-	-	-	fair		fair		-	-	-	-
Coating, after spraying		-	-	-	-	fair		fair		-	-	-	-
Particle charge test	T59	Positive		Positive		Positive		Positive		Positive		Positive	
Sieve test, %	T59	-	0.10	-	0.10	-	0.10	-	0.10	-	0.10	-	0.10
Cement Mixing test, %	T59	-	-	-	-	-	-	-	-	-	2.0	-	2.0
Distillation Test:	T59												
% Oil distillate, vol. of emulsion		-	1/2	-	1/2	-	7	-	5	-	1/2	-	1/2
Residue by Distillation,% by wgt		65	-	65	-	65	-	65	-	60	-	60	-
Tests on Residue from Distillation:													
Penetration,77°F [25°C], 100g, 5s.	T49	120	160	80	110	120	200	300	-	120	160	80	110
Ductility,	T51												
77°F, 5 cm/min, cm		100	-	80	-	100	-	-	-	100	-	80	-
[25°C, 50 mm/min, mm]		1000	-	800	-	1000	-	-	-	1000	-	800	-
% Solubility in trichloroethylene	T44	97.5	-	97.5	-	97.5	-	97.5	-	97.5	-	97.5	-

* At a level of 35 ml 0.8% sodium dioctyl sulfosuccinate.

** The demulsibility test shall be made within 30 days from date of shipment.

F. Polymer Modified Emulsions

The material shall be homogenous. It shall show no separation of asphalt after thorough mixing and shall meet the requirements for the specified type and grade presented in Tables 9 and 10.

G. Specialty Emulsions.

Specialty emulsions may be either asphaltic-based or resin-based and must meet the requirements included in Table 11.

H. Recycling Agent.

Recycling agent and emulsified recycling agent must meet the requirements of table 12. Additionally, recycling agent and residue from emulsified recycling agent, when added in the specified proportions to the recycled asphalt, must meet the properties specified on the drawings.

Table 9: Polymer Modified Emulsified Asphalt Requirements

Type-Grade		Rapid Setting				Medium Setting						Slow Setting	
		RS-1P		HFRS-2P		AES-150P		AES-300P		AES-300S		SS-1P	
Property	Test Method	Min	Max	Min	Max	Min	Max	Min	Max	Min	Max	Min	Max
Viscosity, Saybolt Furol	T 72												
77ºF, sec.		-	-	-	-	75	400	75	400	75	400	30	100
122ºF, sec.		50	200	150	400	-	-	-	-	-	-	-	-
Sieve Test, %	T 59	-	0.1	-	0.1	-	0.1	-	0.1	-	0.1	-	0.1
Miscibility	T 59	-		-		-		-		-		pass	
Coating Ability and Water Resistance:	T59												
dry aggregate/after spray		-		-		good/fair		good/fair		good/fair		-	
wet aggregate/after spray		-		-		fair/fair		fair/fair		fair/fair		-	
Demulsibility, 35 ml of 0.02 N $CaCl_2$, %	T 59	60	-	50	-	-	-	-	-	-	-	-	-
Storage Stability, 1 day, %	T 59	-	1	-	1	-	1	-	1	-	1	-	1
Breaking Index, g	Tex-542-C	-	80	-	-	-	-	-	-	-	-	-	-
Distillation Test:[1]	T 59												
Residue by Distillation, % by wt.		65	-	65	-	65	-	65	-	65	-	60	-
Oil Distillate, % by vol of emulsion		-	3	-	0.5	-	3	-	5	-	7	-	0.5
Tests: Residue from Distillation:													
Polymer Content, wt. % (solids basis)	Tex-533-C	-	-	3.0	-	-	-	-	-	-	-	3.0	-
Penetration, 77ºF, (25ºC) 100 g, 5 sec.	T 49	225	300	90	140	150	300	300	-	300	-	100	140
Solubility in Trichloroethylene, %	T 44	97.0	-	97.0	-	97.0	-	97.0	-	97.0	-	97.0	-
Viscosity, 140ºF, poise 60ºC, Pa-s	T 202	-	-	1500	-	-	-	-	-	-	-	1300	-
Float Test, 140ºF, sec.	T 50	-	-	1200	-	1200	-	1200	-	1200	-	-	-
Ductility[2], 39.2ºF, 5 cm/min., cm (4ºC, 5 cm/min., mm)	T 51	-	-	50 500	-	-	-	-	-	-	-	50 500	-
Elastic Recovery[2], 50ºF,(10ºC), %	Tex-539-C	55	-	55	-	-	-	-	-	-	-	-	-
Tests on RTFO Curing of Distillation Residue:	Tex-541-C												
Elastic Recovery, 50ºF,(10ºF) %	Tex-539-C	-	-	-	-	50	-	50	-	30	-	-	-

[1] Exception to AASHTO T 59: Bring the temperature on the lower thermometer slowly to 350ºF +/- 10ºF. Maintain at this temperature for 20 min. Complete total distillation in 60 +/- 5 min. from the first application of heat.

[2] HFRS-2P must meet one of either the Ductility or Elastic Recovery.

Table 10: Polymer Modified Cationic Emulsified Asphalt Requirements

Type-Grade		Rapid Setting				Slow Setting	
		CRS-1P		CRS-2P		CSS-1P	
Property	Test Method	Min	Max	Min	Max	Min	Max
Viscosity, Saybolt Furol	T 72						
77ºF (25ºC), sec.		-	-	-	-	20	100
122ºF (50ºC), sec.		50	150	150	400	-	-
Sieve Test, %	T 59	-	0.1	-	0.1	-	0.1
Demulsibility, 35 ml of 0.8% sodium dioctyl sulfosuccinate, %	T 59	60	-	70	-	-	-
Storage Stability, 1 day, %	T 59	-	1	-	1	-	1
Breaking Index, g	Tex-542-C	-	80	-	-	-	-
Particle Charge	T 59	positive		positive		positive	
Distillation Test:[1]	T 59						
Residue by Distillation, % by wt.		65	-	65	-	62	-
Oil Distillate, % by volume of emulsion		-	3	-	0.5	-	0.5
Tests on Residue from Distillation:							
Polymer Content, wt. % (solids basis)	Tex-533-C	-	-	3.0	-	3.0	-
Penetration, 77ºF (25ºC), 100 g, 5 sec.	T 49	225	300	90	150	55	90
Viscosity, 140ºF, poise (60ºC, Pa-s)	T 202	-	-	1300	-	-	-
Solubility in Trichloroethylene, %	T 44	97.0	-	97.0	-	97.0	-
Softening Point, ºF	T 53	-	-	-	-	135	-
Ductility, 77ºF, 5 cm/min., cm (25ºC, 5 cm/min., mm)	T 51	-	-	-	-	70 700	-
Ductility[2], 39.2ºF, 5 cm/min., cm (4ºC, 5 cm/min., mm)	T 51	-	-	50	-	-	-
Elastic Recovery[2], 50ºF (10ºC), %	Tex-539-C	45	-	55	-	-	-

[1] Exception to AASHTO T 59: Bring the temperature on the lower thermometer slowly to 350ºF +/- 10ºF. Maintain at this temperature for 20 min. Complete total distillation in 60 +/- 5 min. from the first application of heat.

[2] CRS-2P must meet one of either the Ductility or Elastic Recovery.

Table 11: Specialty Emulsion Requirements

Type-Grade		Medium Setting				Slow Setting	
		AE-P		EAP&T		PCE[1]	
Property	Test Method	Min	Max	Min	Max	Min	Max
Viscosity, Saybolt Furol	T 72						
77ºF (25ºC), sec.		-	-	-	-	10	100
122ºF (50ºC), sec.		15	150	-	-	-	-
Sieve Test, %	T 59	-	0.1	-	0.1	-	0.1
Miscibility[2]	T 59	-		pass		pass	
Demulsibility, 35 ml of 0.10 N $CaCl_2$, %	T 59	-	70	-	-	-	-
Storage Stability, 1 day, %	T 59	-	1	-	1	-	-
Particle Size[3], % by volume < 2.5 □m	Tex-238-F	-	-	90	-	-	-
Asphalt Emulsion Distillation to 500ºF (260ºC) followed by Cutback Asphalt Distillation of Residue to 680ºF (360ºC):	T 59 & T 78						
Residue after both Distillations, % by wt.		40	-	-	-	-	-
Total Oil Distillate from both distillations, % by volume of emulsion		25	40	-	-	-	-
Distillation:	T 59						
Residue by Distillation, % by wt.		-	-	60	-	-	-
Evaporation:[4]	T 59						
Residue by Evaporation, % by wt.		-	-	-	-	60	-
Tests on Residue after all Distillation(s):							
Viscosity, 140ºF, poise (60ºC, Pa-s)	T 202	-	-	800	-	-	-
Kinematic Viscosity, 140ºF, cSt [60°C, mm^2/s]	T 201	-	-	-	-	100	350
Flash Point, C.O.C., ºF [°C]	T 48	-	-	-	-	400 204	-
Solubility in Trichloroethylene, %	T 44	97.5	-	-	-	-	-
Float Test, 122ºF (50ºC), sec.	T 50	50	200	-	-	-	-

[1] Supply with each shipment of PCE:

a) a copy of a lab report from an approved analytical lab, signed by a lab official, indicating the PCE formulation does not meet any characteristics of a Resource Conservation Recovery Act (RCRA) hazardous waste;

b) a certification from the producer that the formulation supplied does not differ from the one tested and that no listed RCRA hazardous wastes or PCB's have been mixed with the product; and

c) a Materials Safety Data Sheet.

[2] Exception to AASHTO T 59: In dilution, use 350 ml of distilled or deionized water and a 1000-ml beaker.

[3] Tex-238-F, beginning at "Particle Size Analysis by Laser Diffraction," "Procedure" (using - medium: distilled or deionized water and dispersant: none), or other approved method.

[4] Exception to AASHTO T 59: Leave sample in the oven until foaming ceases, then cool and weigh.

Table 12: Recycling Agent and Emulsified Recycling Agent Requirements

Property	Test Method	Recycling Agent		Emulsified Recycling Agent	
		Min	Max	Min	Max
Viscosity, Saybolt Furol, 77ºF, sec.	T 72	-	-	15	100
Sieve Test, %	T 59	-	-	-	0.1
Miscibility[1]	T 59	-		No Coagulation	
Evaporation Test:[2]	T 59				
Residue by Evaporation, % by wt.		-	-	60	-
Tests on Recycling Agent or Residue from Evaporation:					
Flash Point, C.O.C., ºF	T 48	400	-	400	-
Kinematic Viscosity,	T 201				
140ºF, cSt		75	200	75	200
275ºF, cSt		-	10.0	-	10.0

[1]Exception to AASHTO T 59: Use 0.02 N $CaCl_2$ solution in place of water.

[2]Exception to AASHTO T 59: Maintain sample at 300ºF until foaming ceases, then cool and weigh.

I. Crack Sealer

This section sets forth the requirements for a polymer modified emulsion suitable for sealing fine cracks, and a rubber asphalt compound suitable for sealing cracks of 1/8 inch [3 mm] or greater width.

1. Polymer Modified Asphalt Emulsion Crack Sealer

For cracks on the order of 1/8 inch [3 mm] width, HFRS-2P polymer modified emulsion as described in the table included in Section F, Polymer Modified Emulsions of this item may be used. Requirements for the polymer modified emulsion and rubber-asphalt crack-sealing compound are presented in Table 13.

Table 13: Polymer Modified Asphalt Emulsion Crack Sealer Requirements

Property	Test Methods	Min	Max
Rotational Viscosity, 77ºF, cP	ASTM D 2196, Method A	10,000	25,000
Sieve Test, %	T 59	-	0.1
Storage Stability, 1 day, %	T 59	-	1
Evaporation	Tex-543-C		
Residue by Evaporation, % by wt.		65	-
Tests on Residue from Evaporation:			
Penetration, 77ºF, 100 g, 5 sec.	T 49	35	75
Softening Point, ºF	T 53	140	-
Ductility, 39.2ºF, 5 cm/min., cm	T 51	100	-

2. Rubber-Asphalt Crack Sealing Compound

This specification item may be a proprietary product. The compound shall be capable of being melted and applied at a temperature of 400°F [200°C] or less by a suitable oil jacketed kettle equipped with a pressure pump, a hose and a nozzle. It shall contain no water or highly-volatile matter. It shall not be tracked by vehicular traffic once it cools to road pavement temperature.

The rubber-asphalt crack sealing compound shall meet requirements in Table 14.

Table 14: Rubber-Asphalt Crack Sealer Requirements

Property	Test Methods	Class A		Class B	
		Min	Max	Min	Max
CRM Content, Grade A or B, % by wt.	Tex-544-C	22	26	-	-
CRM Content, Grade B, % by wt.	Tex-544-C	-	-	13	17
Virgin Rubber Content[1], % by wt.		-	-	2	-
Flash Point[2], COC, ºF	T 48	400	-	400	-
Penetration[3], 77ºF, 150g, 5 sec.	T 49	30	50	30	50
Penetration[3], 32ºF, 200g, 60 sec.	T 49	12	-	12	-
Softening Point, ºF	T 53	-	-	170	-
Bond[4], 3 cycles, 20ºF	Tex-525-C	-		Pass	

1 Provide certification that the min. % virgin-rubber was added.

2 Before passing the test flame over the cup, agitate the sealing compound with a 3/8 to 1/2 in. (9.5 to 12.7 mm) wide, square-end metal spatula in a manner so as to bring the material on the bottom of the cup to the surface, i.e., turn the material over. Start at one side of the thermometer, move around to the other, and then return to the starting point using 8 to 10 rapid circular strokes. Accomplish agitation in 3 to 4 sec. Pass the test flame over the cup immediately after stirring is completed.

3 Exception to AASHTO T 49: Substitute the cone specified in ASTM D 217 for the penetration needle.

4 No crack in the crack sealing materials or break in the bond between the sealer and the mortar blocks over 1/4 in. deep for any specimen after completion of the test.

a. Properties of Rubber Used in Sealer. The rubber shall be one of the following types;

1) Type I - Ground tire rubber.

2) Type II - A mixture of ground tire rubber and high natural reclaimed scrap rubber. The natural rubber content, determined by ASTM D 297, shall be a minimum of 25 percent.

b. Ground Rubber. The ground rubber shall comply with the following gradation requirements when tested by TxDoT Test Method Tex-200-F, Part I.

Table 15: Ground Rubber Gradation Requirements

Sieve Size		Percent Retained	
U.S.	SI	Type I	Type II
No. 8	2.36 mm	0	-
No. 10	2.00 mm	0-5	0
No. 30	600µm	90-100	50-70
No. 50	300µm	95-100	70-95
No. 100	150µm	-	95-100

The ground rubber shall be free from fabric, wire, cord or other contaminating materials.

c. Packaging. The rubber-asphalt crack sealing compound shall be packaged in boxes, which contain two (2) 30-35 pound [14-16 kilogram] blocks that are individually packaged in a liner made of polyethylene, or other packaging approved by the Engineer or designated representative.

J. Performance Graded Binders.

Performance graded binders must be smooth, homogeneous, show no separation when tested in accordance with Test Method Tex-540-C, and must meet the requirements in the following table.

Separation testing is not required if:

- a modifier is introduced separately at the mix plant either by injection in the asphalt line or mixer, or
- the binder is blended on site in continuously agitated tanks, or
- binder acceptance is based on field samples taken from an in-line sampling port at the hot mix plant after the addition of modifiers.

Table 16 Performance Graded Binder Requirements

Performance Grade	PG 58			PG 64				PG 70				PG 76				PG 82		
	-22	-28	-34	-16	-22	-28	-34	-16	-22	-28	-34	-16	-22	-28	-34	-16	-22	-28
Average 7-day Max Pavement Design Temperature, ºC[1]	58			64				70				76				82		
Min Pavement Design Temperature, ºC[1]	>-22	>-28	>-34	>-16	>-22	>-28	>-34	>-16	>-22	>-28	>-34	>-16	>-22	>-28	>-34	>-16	>-22	>-28
ORIGINAL BINDER																		
Flash Point, AASHTO T 48: Min,	230ºC																	
Viscosity, AASHTO TP 48:[2, 3] Max, 3.0 Pas, Test Temperature,	135ºC																	
Dynamic Shear, AASHTO TP 5:[4] G*/sin (δ), Min, 1.00 kPa Test Temperature @ 10 rad/sec.,	58ºC			64ºC				70ºC				76ºC				82ºC		
Elastic Recovery, ASTM D 6084, 50ºF, % Min	-	-	30	-	-	30	50	-	30	50	60	30	50	60	70	50	60	70
ROLLING THIN FILM OVEN (Tex-541-C)																		
Mass Loss, Max, %	1.0																	
Dynamic Shear, AASHTO TP 5: G*/sin (δ), Min, 2.20 kPa Test Temperature @10 red/sec.,	58ºC			64ºC				70ºC				76ºC				82ºC		
PRESSURE AGING VESSEL (PAV) RESIDUE (AASHTO PP 1)																		
PAV Aging Temperature	100ºC																	
Dynamic Shear, AASHTO TP 5: G*/sin (δ), Max, 5000 kPa Test Temperature10 rad/sec., ºC	25	22	19	28	25	22	19	28	25	22	19	28	25	22	19	28	25	22
Creep Stiffness, AASHTO TP 1:[5, 6] S, Max, 300 mPa, M - value, Min, 0.300 Test Temperature @ 60 sec., ºC	-12	-18	-24	-6	-12	-18	-24	-6	-12	-18	-24	-6	-12	-18	-24	-6	-12	-18
Direct Tension, AASHTO TP 3:[6] Failure Strain, Min, 1.0% Test Temperature @1.0 mm/min., ºC	-12	-18	-24	-6	-12	-18	-24	-6	-12	-18	-24	-6	-12	-18	-24	-6	-12	-18

[1] Pavement temperatures are estimated from air temperatures using an algorithm contained in the PGEXCEL3.xls software program, may be provided by the Department or by following the procedures as outlined in AASHTO MP 2 and PP 28.

[2] This requirement may be waived at the Department's discretion if the supplier warrants that the asphalt binder can be adequately pumped, mixed and compacted at temperatures that meet all applicable safety, environmental, and constructability requirements. At test temperatures where the binder is a Newtonian fluid, any suitable standard means of viscosity measurement may be used, including capillary (AASTHO T 201 or T 202) or rotational viscometry (AASHTO TP 48).

[3] Viscosity at 135ºC is an indicator of mixing and compaction temperatures that can be expected in the lab and field. High values may indicate high mixing and compaction temperatures. Additionally, significant variation can occur from batch to batch. Contractors should be aware that variation could significantly impact their mixing and compaction operations. Contractors are therefore responsible for addressing any constructability issues that may arise.

[4] For quality control of unmodified asphalt binder production, measurement of the viscosity of the original asphalt binder may be substituted for dynamic shear measurements of G*/sin (□) at test temperatures where the asphalt is a Newtonian fluid. Any suitable standard means of viscosity measurement may be used, including capillary (AASHTO T 201 or T 202) or rotational viscometry (AASHTO TP 48).

[5] Silicone beam molds, as described in AASHTO TP 1-93, are acceptable for use.

[6] If creep stiffness is below 300 mPa, direct tension test is not required. If creep stiffness is between 300 and 600 mPa, the direct tension failure strain requirement can be used instead of the creep stiffness requirement. The m-value requirement must be satisfied in both cases.

301S.4 Equipment.

All equipment necessary to transport, store, sample, heat, apply, and incorporate asphalts, oils, and emulsions shall be provided.

301S.5 Construction

Typical materials used for specific applications are identified in table 17. These are typical uses only and circumstances may require use of other material.

Table 17: Typical Material Use

Material Application	Typically Used Materials
Hot-Mixed, Hot-Laid Asphalt Mixtures	PG Binders, Modified PG Binders
Surface Treatment	AC-5, AC-10, AC-5 w/2% SBR, AC-10 w/2% SBR, AC-15P, AC-15-5TR, HFRS-2, MS-2, CRS-2, CRS-2H, HFRS-2P, CRS-2P,
Surface Treatment (Cool Weather)	RS-1P, CRS-1P, RC-250, RC-800, RC-3000, MC-250, MC-800, MC-3000, MC-2400L
Precoating	AC-5, AC-10, PG 64-22, SS-1, SS-1H, CSS-1, CSS-1H
Tack Coat	RC-250, SS-1, SS-1H, CSS-1, CSS-1H, EAP&T
Fog Seal	SS-1, SS-1H, CSS-1, CSS-1H
Hot-Mixed, Cold-Laid Asphalt Mixtures	AC-0.6, AC-1.5, AC-3, AES-300, AES-300P, CMS-2, CMS-2S
Patching Mix	MC-800, SCM I, SCM II, AES-300S
Recycling	AC-3, AES-150P, AES-300P, Recycling Agent, Emulsified Recycling Agent
Crack Sealing	SS-1P, Polymer Mod AE Crack Sealant, Rubber Asphalt Crack Sealers (Class A, Class B)
Prime	MC-30, AE-P, EAP&T, PCE
Curing Membrane	SS-1, SS-1H, CSS-1, CSS-1H, PCE
Erosion Control	SS-1, SS-1H, CSS-1, CSS-1H, PCE

301S.6 Storage, Heating and Application Temperatures

Asphaltic materials should be applied at the temperature, which provides proper and uniform distribution. Within practical limits higher temperatures than necessary to produce the desired results shall be avoided. Satisfactory application usually should be obtained within the recommended ranges shown below.

No material shall be heated above the following maximum temperatures:

Table:18 Recommended Temperature Ranges

	Recommended Range; °F [°C]	Maximum Temperature; °F [°C] for	
Type-Grade	Application/Mixing	Allowable Application	Storage
AC-5, 10,20,30	275-350 [135-177]	375 [191]	400 [204]
AC-5 or AC-10 + 2% SBR	300-375 [142-191]	390* [199]	375 [191]
AC-10 + 3% SBR, AC-45P	300-350 [142-191]	350 [177]	360 [182]
RC-250	125-180 [52-82]	200 [93]	200 [93]
RC-800	170-230 [77-110]	260 [127]	260 [127]
RC-3000	215-275 [102-135]	285 [141]	285 [141]
MC-30, AEP	70-150 [21-66]	175 [79]	175 [79]
MC-70	125-175 [52-79]	200 [93]	200 [93]
MC-250	125-210 [52-99]	240 [116]	240 [116]
MC-800, SCM I, SCM II	175-260 [79-127]	275 [135]	275 [135]
MC-3000 & MC-2400 Latex	225-275 [107-135]	290 [143]	290 [143]
HFRS-2, MS-2, CRS-2, CRS-2H, HFRS-2P, CRS-2P, CMS-2, CMS-2S, AES-300, AES-300S, AES-150P, AES-300P	120 - 160	180	180
SS-1, SS-1h, SS-1P, CSS-1, CSS-1h, PCE, EAP & T, SS-1P, RS-1P, CRS-1P, CSS-1P, recycling agent, emulsified recycling agent, polymer modified AE crack sealant.	50-130 [10-54]	140 [60]	140 [60]
RS-2, RS-2h, MS-2, CRS-2, CRS-2h, CRS-2p, CMS-2, CMS-2S, HFRS-2, HFRS-2p, AES-300	110-160 [43-71]	170 [77]	170 [77]
Special Precoat Material	125-250 [52-121]	275 [135]	275 [135]
PG Binders, Modified PG Binders	275 - 350	350	350
Rubber Asphalt Crack Sealers (Class A, Class B)	350 - 375	400	-
Rubber-Asphalt Crack Sealer	350-375 [177-191]	400 [204]	-

* AC-5 + 2% SBR and AC-10 + 2% SBR, which is designated for surface treatment work, may be heated to a maximum temperature of 390°F [200°C] by the supplier loading through an in-line heater, or with the permission of the Engineer or designated representative, these materials may be heated to maximum of 390°F [200°C] by the Contractor just prior to application. When any of the SBR-modified asphalt cements are used in asphaltic concrete, the storage temperature at the mix plant should not exceed 350°F [177°C].

Attention is called to the fact that asphaltic materials (except emulsions) are very flammable and constitute fire hazards. Proper precautions should be used in all cases, especially with RC cutbacks.

Utmost care shall be taken to prevent open flames from coming in contact with the asphaltic material or the gases of it. The Contractor shall be responsible for any fires or accidents, which may result from heating the asphaltic materials.

301S.7 Measurement and Payment

All asphaltic materials included in this specification will not be paid for directly but shall be included in the unit price bid for the item of construction in which this item is used.

End

Specific CROSS REFERENCE MATERIALS
Specification Item 301S "Asphalts, Oils and Emulsions"

American Association of State Highway and Transportation Officials (AASHTO)

Designation	Description
AASHTO T-44	Solubility Of Bituminous Materials in Organic Solvents
AASHTO T-48	Flash and Fire Points By Cleveland Open Cup
AASHTO T-49	Penetration of Bituminous Materials
AASHTO T-50	Float Test for Bituminous Materials
AASHTO T-51	Ductility of Bituminous Materials
AASHTO T-53	Distillation of Road Tar
AASHTO T-55	Water in Petroleum Products and Bituminous Materials by Distillation
AASHTO T-59	Testing Emulsified Asphalt
AASHTO T-72	Saybolt Viscosity
AASHTO T-78	Distillation of Cut-Back Asphaltic (Bituminous) Products
AASHTO T-79	Flash Point With Tag Open-Cup Apparatus
AASHTO T-201	Kinematic Viscosity of Asphalts
AASHTO T-202	Viscosity of Asphalts by Vacuum Capillary Viscometer
AASHTO TP-1	Creep Stiffness
AASHTO TP-3	Direct Tension
AASHTO TP-5	Dynamic Shear
AASHTO TP-48	Rotational Viscometry

Texas Department of Transportation: Manual of Testing Procedures

Designation	Description
Tex-200-F	Sieve Analysis of Fine and Coarse Aggregates
Tex-238-F	Laser Diffraction Particle Size Distribution Analyzer
Tex-509-C	Spot Test of Asphaltic Materials
Tex-525-C	Tests for Asphalt and Concrete Joint Sealers
Tex-533-C	Determination of Polymer Additive Percentages in Polymer Modified Asphalt Cements
Tex-539-C	
Tex-540-C	
Tex-541-C	
Tex-542-C	
Tex-543-C	
Tex-544-C	

American Society for Testing and Materials (ASTM)

Designation	Description
D 217	Test Methods for Cone Penetration of Lubricating Grease
D 297	Test Methods for Rubber Products-Chemical Analysis
D 2186 Method A	Test Methods for Deposit-Forming Impurities in Steam
D 6084	Test Method for Elastic Recovery of Bituminous Materials by Ductilometer

RELATED CROSS REFERENCE MATERIALS
Specification Item 301S "Asphalts, Oils and Emulsions"

City of Austin Standard Specifications

Designation	Description
Item No. 206S	Asphalt Stabilized Base

Item No. 210S	Flexible Base
Item No. 302S	Aggregates for Surface Treatments
Item No. 306S	Prime Coat
Item No. 307S	Tack Coat
Item No. 310S	Emulsified Asphalt Treatment
Item No. 311S	Emulsified Asphalt Repaving

RELATED CROSS REFERENCE MATERIALS - Continued
Specification Item 301S "Asphalts, Oils and Emulsions"

City of Austin Standard Specifications

Designation	Description
Item No. 312S	Seal Coat
Item No. 313S	Rubber Asphalt Joint and Crack Sealant
Item No. 315S	Milling Asphaltic Concrete Paving
Item No. 320S	Two Course Surface Treatment
Item No. 340S	Hot Mix Asphaltic Concrete Pavement
Item No. 341S	Paving Fabric
Item No. 350S	Heating, Scarifying and Repaving
Item No. 351S	Recycling Agent

City of Austin Standard Details

Designation	Description
1000S-10	Local Street Sections
1000S-11(1)	Residential and Neighborhood collector Street Sections
1000S-11(2)	Industrial and Collector Street Sections
1000S-12(1)	Primary Collector Street Sections
1000S-12(2)	Primary Arterial Street Sections
1000S-13(1)	Minor Arterial Street Sections (4 Lanes)
1000S-13(2)	Minor Arterial Street Sections- (4 Lanes divided)
1000S-14	Major Arterial Street

Texas Department of Transportation: Standard Specifications for Construction And Maintenance of Highways, Streets, and Bridges

Designation	Description
Item 300	Asphalts, Oils and Emulsions
Item 301	Asphalt Antistripping Agents
Item 310	Prime Coat (Cutback Asphaltic Materials)
Item 314	Emulsified Asphalt Treatment
Item 316	Surface Treatments
Item 345	Asphalt Stabilized Base (Plant Mixed)
Item 354	Planing and/or Texturing Pavement
Item 520	Weighing and Measuring Equipment

Texas Department of Transportation: Manual of Testing Procedures

Designation	Description
Tex-126-E	Molding, Testing and Evaluation of Bituminous Black Base Materials
Tex-207-F	Determination of Density of Compacted Bituminous Mixtures
Tex-211-F	Recovery of Asphalt From Bituminous Mixtures By Abson
Tex-215-	Determination of Asphalt Content of Rock Asphalt Process by Hot Solvent Method
Tex-217-F	Determination of Deleterious Material and Decantation Test For Coarse Aggregates
Tex-224-F	Determination of Flakiness
Tex-400-A	Method of Sampling Stone, Gravel, Sand and Mineral Aggregates
Tex-410-A	Abrasion of Coarse Aggregate Using the Los Angeles Machine
Tex-411-A	Soundness of Aggregate by Use of Sodium Sulfate or Magnesium Sulfate
Tex-438-A	Accelerated Polish Test for Aggregate
Tex-460-A	Determination of Crushed Face Particle

Tex-501-C	Test for Water in Petroleum Products and Other Bituminous Materials
Tex-502-C	Test for Penetration of Bituminous Material
Tex-503-C	Test for Ductility of Bituminous Materials
Tex-504-C	Test for Flash and Fire Points of Petroleum Materials by Cleveland Open Cup

RELATED CROSS REFERENCE MATERIALS - Continued
Specification Item 301S "Asphalts, Oils and Emulsions"

Texas Department of Transportation: Manual of Testing Procedures

Designation	Description
Tex-505-C	Test for Softening Point of Bituminous Materials by Ring-and-Ball Method
Tex-506-C	Test for Loss on Heating of Oils and Asphaltic Compounds
Tex-507-C	Proportion of Bitumen Soluble in Trichloroethylene
Tex-510-C	Determining the Effect of Heat and Air on Asphaltic Materials when Exposed in Thin Films
Tex-512-C	Test for Flash Points of Volative Flammable Materials By Tag Open-Cup Apparatus
Tex-513-C	Test for Saybolt Viscosity
Tex-515-C	Distillation of Cut-Back Asphalt Products
Tex-519-C	Float Test for Bituminous Materials
Tex-520-C	Test for Residue of Specified Penetration
Tex-521-C	Testing Emulsified Asphalts
Tex-528-C	Test for Absolute Viscosity of Asphalt Cements
Tex-529-C	Test for Kinematic Viscosity of Asphalts

Item No. 402S
Controlled Low Strength Material

402S.1 Description

This item governs Controlled Low Strength Material (CLSM) used for trench backfill and for filling abandoned culverts, pipes, other enclosures, and for other uses as indicated on the drawings, Standard Details or as approved by the Engineer or designated representative. CLSM is a low strength, self-compacting, flowable, cementitious material used in lieu of soil backfill. It is intentionally prepared at low strength to allow for future removal using conventional excavation equipment.

The CLSM shall be composed of Portland cement or fly ash, or both, filler aggregate and water. The CLSM, specified for use in filling abandoned culverts, pipes, or other enclosures, shall contain a settlement compensator, in addition to the other ingredients, to minimize settlement of the CLSM within the enclosure.

Normal Set CLSM shall be specified whenever the material will remain uncovered or will not be subjected to traffic or other loads within 24 hours after placement. Fast Set CLSM shall be specified whenever the material will be covered, subjected to traffic or other loads within 24 hours, or needed to expedite construction.

CLSM can be used for permanent subgrade repairs below the base layer, but shall not be used for permanent pavement repairs. For temporary traffic applications, a minimum 2 inch (50 mm) cap composed of Hot Mix-Cold Laid Asphaltic Concrete (TxDoT Standard Specification Item 334) shall be placed on the CLSM.

This specification is applicable for projects or work involving either inch-pound or SI units. Within the text and accompanying tables, the inch-pound units are given preference followed by SI units shown within parentheses.

402S.2 Submittals

The submittal requirements of this specification item include:

A. A mix design submittal including the results of unconfined compressive strength tests, air entrainment (if applicable), flow consistency, hardened unit weight, and timed Ball Drop and corresponding Penetrometer tests.

B. Certifications and test results for the cement fly ash, and admixtures.

C. Particle-size gradation and specific gravity tests on the filler aggregate.

402S.3 Materials

A. Cement.

Portland cement shall conform to ASTM C 150, Type I (General Purpose).

Portland cement manufactured in a cement kiln fueled by hazardous waste shall be considered as an approved product if the production facility is authorized to operate under regulation of the Texas Natural Resource Conservation Commission

(TNRCC) and the U. S. Environmental Protection Agency (EPA). Supplier shall provide current TNRCC and EPA authorizations to operate the facility.

B. Fly Ash

Fly ash shall conform to the requirements of Standard Specification Item No. 405, "Concrete Admixtures" and TxDOT Specification Item 437.

C. Filler Aggregate.

Filler aggregate shall consist of sand, stone screenings, pavement milling cuttings or other granular material that is compatible with the other mixture components. The filler aggregate shall be fine enough to stay in suspension to the extent required for proper flow without segregation, and, in the case of filling of enclosures, for minimal settlement. Filler aggregate shall have a Plasticity Index (TxDOT Test Method Tex-106-E) less than 15 and shall conform to the following gradation:

Sieve Designation US	(SI)	Percent Passing
No. 200	(75μm)	0 - 10

D. Mixing Water.

Mixing water shall conform to the requirements of Standard Specification Item No. 403, "Concrete for Structures".

E. Settlement Compensator

An air entraining admixture with a higher than usual dosage, which meets the requirements of Standard Specification Item No. 405, "Concrete Admixtures", shall be used as a settlement compensator. The settlement compensator may be introduced to the CLSM at the job site by placement of prepackaged admixture in capsules or bags in the mixing drum in accordance with the admixture manufacturer's recommendations.

402S.4 Mix Design

The proportioning of CLSM shall be the responsibility of the Contractor. The Contractor shall furnish a mix design conforming to the requirements herein, for review and approval by the Engineer or designated representative. The mix design shall be prepared by a qualified commercial laboratory and then reviewed and signed by a registered Professional Engineer licensed in the State of Texas.

The Mix Design submittal must include:

A. Test results for unconfined compressive strength, air entrainment (if applicable), flow consistency, hardened unit weight, and timed Ball Drop (ASTM C-360) and corresponding Penetrometer tests (with a concrete pocket penetrometer),

B. Certifications and test results for the cement, fly ash, and admixtures, and

C. Results of particle-size gradation and specific gravity tests on the filler aggregate. The submittal shall include Penetrometer tests performed every thirty minutes

until the Ball Drop test shows a 2-inch (50 mm) indentation, as well as the predicted Penetrometer reading that corresponds to a 3-inch (75 mm) Ball Drop indentation. Particle-size gradation shall be determined using a series of sieves that gives no fewer than five uniformly spaced points for graphing the entire range of particle sizes larger than a No. 200 sieve (75-µm).

The Contractor shall perform the work required to substantiate the design at no cost to the City, including all testing. Approved mix designs shall be valid for one year, provided there are no changes in the type, source, or characteristics of the materials during that year.

At the end of one year, the mix design may be submitted for renewal, provided that:

A. field tests of the CLSM during the year have been satisfactory,
B. there have been no changes in type or source of the materials of the mix, and
C. the characteristics of the materials have not changed significantly since the original submittal.

The Contractor shall also submit certifications and test results for the cement, fly ash and admixtures, and particle-size gradation and specific gravity test results for the filler aggregate. The Contractor shall compare results of tests made on the filler aggregate at the end of the year to the results of tests reported in the original submittal. Gradation changes less than ten percent in percent passing any sieve and specific gravity changes less than five percent shall not be considered significant.

402S.5 Strength

The CLSM mix designs shall meet the unconfined compressive strength requirements outlined in the table below. The compression tests shall be conducted in accordance with TxDOT Method Tex-418-A, using approved unbonded caps on specimens with four-inch (100 mm) diameter and eight-inch (200 mm) height [or three-inch (75 mm) diameter by six-inch (150 mm) high specimens if a smaller capacity loading device gives more accurate results].

Unconfined Compressive Strength, psi (mPa)		
Age	Normal Set CLSM	Fast Set CLSM
3 hours	—	35 (0.24) minimum
24 hours	35 (0.24) minimum	—
28 days	300 (2.1) maximum	300 (2.1) maximum

402S.6 Flow Consistency

Flow consistency shall be established in tests involving the use of a six-inch (150 mm) length by three-inch (75 mm) diameter open-ended straight tubing made of steel, plastic or other non-absorbent material that is non-reactive with cement or fly ash. The tube shall be placed with one end on a horizontal flat surface and held in a vertical position. The tube shall then be filled to the top with CLSM. The top surface shall be struck off with a suitable straight edge and any spillage shall be removed from the base of the tube. Within five seconds thereafter the tube shall be raised carefully, using a steady

upward lift with no lateral or torsional motion. The entire test, from the start of filling until removal of the tube, shall be completed within 1½ minutes without interruption.

After removal of the tube, the spread of the CLSM shall be measured immediately along two diameters that are perpendicular to one another. The average of those two measurements is defined as the flow consistency of the mix. The flow consistency of the CLSM shall be considered satisfactory if a circular-type spread of the mix occurs without segregation and a flow consistency (average diameter of spread) of 8 inches (200 mm) or more is achieved.

402S.7 Air Entrainment

Air entraining admixture shall be added as a settlement compensator, whenever the CLSM will be used to fill an enclosure (Section 402S-1). The dosage shall be sufficient to result in an air content of 15 to 25 percent (as determined by TxDOT Method Tex-416-A) at the time of placement of the CLSM.

402S.8 Field Strength Tests

Ball Drop or Penetrometer tests shall be used to determine, when the CLSM has developed sufficient strength to be covered or subjected to traffic or other loads as approved by the Engineer or designated representative.

The Ball Drop test shall be performed according to the latest version of ASTM C-360. An indentation diameter of three inches (75 mm) or less, and the absence of a sheen or any visible surface water in the indentation area shall indicate that the CLSM has achieved the desired strength. Because trench width and depth may affect the test results, the Contractor may perform this test on a control sample of CLSM in a two-foot (600 mm) square by six-inch (150 mm) deep container.

Penetrometer tests using a hand-held, spring reaction-type device commonly called a concrete pocket penetrometer, shall be performed on the surface of the CLMS. A Penetrometer reading, equal to or greater than the value established in the mix design (Section 402S.4) for a Ball Drop test indentation of 3-inches (75 mm), shall indicate that the CLSM has achieved the desired strength.

402S.9 Construction Methods

A. General

The height of free fall placement of the CLSM shall not exceed four feet (1.2 meters). Since CLSM is considered to be self-compacting, a vibrator shall not be allowed. The CLSM shall not be covered with any overlying materials or subjected to traffic or other loads until the Ball Drop test or the Penetrometer test shows acceptable results (Section 402S.8) or until the CLSM has been in place a minimum of 24 hours for Normal Set CLSM and a minimum of 3 hours for Fast Set CLSM. Curing of the CLSM will not be required.

B. Utility Line Backfill

After the utility pipe has been placed and the proper bedding material placed in accordance with the details on the drawings, the trench may be immediately backfilled with the CLSM to the subgrade level shown on the drawings, Standard Details 1100S-6A, B, C & D, 430S-4, 511S-13A and 511S-13B or as directed by the Engineer or designated representative.

C. Culvert Backfill

Care shall be taken to prevent movement of the structure. If the pipe or structure moves either horizontally or vertically, the CLSM and the structure shall be immediately removed and the pipe or structure re-laid to proper line and grade.

D. Other Backfill

CLSM may be used for backfill material in lieu of soil as shown on the drawings, Standard Details or as approved by the Engineer or designated representative.

E. Filling Abandoned Culverts, Pipe, or other Enclosures

The CLSM shall be placed in a manner that allows all air or water, or both, to be displaced readily as the CLSM fills the enclosure.

402S.10 Acceptance Testing During Construction

The Engineer or designated representative may perform flow consistency, air entrainment, and unconfined compressive strength tests to determine if the CLSM meets the specification requirements. The number and frequency of acceptance tests will be determined by the Engineer or designated representative.

402S.11 Measurement and Payment

The work and materials presented herein will generally not be paid for directly, but shall be included in the unit price bid for the item of construction in which this item is used.

When specified in the contract bid form as a separate pay item, the item will be paid for at the contract unit bid price(s) for "Controlled Low Strength Material". The bid prices shall include full compensation for all Work herein specified, including the furnishing of all materials, equipment, tools, labor and incidentals necessary to complete the Work.

Payment will be made under the following:

Pay Item No. 402S-A: Controlled Low Strength Material Per Cubic Yard.

End

SPECIFIC CROSS REFERENCE MATERIALS
Standard Specification Item 402S, “Controlled Low Strength Material”

City of Austin Standard Details

Designation	Description
430S-4	Concrete Backfill Under Curb & Gutter
506S-14	Control or Mini Manhole
511S-13A	Water Valve Box Adjustment to Grade W/ Full Depth Concrete
511S-13B	Water Valve Box Adjustment to Grade W/ Concrete and H.M.A.C.

1100S-6A	Narrow Excavation Next to C&G - Trench Width 0.3 M (12") & Less
1100S-6B	Narrow Excavations - Trench Width 0.3 M (12") & Less
1100S-6C	Excavation Next to C&G - Trench Width Greater than 0.3 M (12")
1100S-6D	Excavations - Trench Width Greater than 0.3 M (12")

City of Austin Standard Specification Items

Designation	Description
Item No 403S	Concrete for Structures
Item No 405S	Concrete Admixtures

Texas Department of Transportation: Standard Specifications for Construction and Maintenance of Highways, Streets, and Bridges

Designation	Description
Item No. 334	Hot Mix-Cold Laid Asphaltic Concrete Pavement
Item No. 420	Concrete Structures
Item No. 421	Portland Cement Concrete
Item No. 437	Concrete Admixtures

RELATED CROSS REFERENCE MATERIALS
Standard Specification Item 402S, “Controlled Low Strength Material”

Texas Department of Transportation: Manual of Testing Procedures

Designation	Description
Tex-106-E	Method Of Calculating the Plasticity Index of Soils
Tex-416-A	Air Content of Freshly Mixed Concrete By The Pressure Method
Tex-418-A	Compressive Strength of Cylindrical Concrete

American Society for Testing and Materials (ASTM)

Designation	Description
ASTM C 150	Portland Cement
ASTM C 360	Ball Penetration in Fresh Portland Cement Concrete
ASTM C 403	Time of Setting of Concrete Mixtures by Penetration Resistance

City of Austin Standard Specification Items

Designation	Description
Item No. 504S	Adjusting Structures
Item No. 506S	Manholes
Item No. 508S	Miscellaneous Structures and Appurtenances
Item No. 510	Pipe

430S.1 Description

This item shall govern Portland Cement (p.c.) concrete curb, p.c. concrete curb and gutter with reinforcing steel or p.c. concrete laydown curb as required, that is constructed in accordance with this specification on an approved subgrade and base in conformity with Standard Detail Series 430S and the lines, grades, section indicated on the Drawings or as established by the Engineer or designated representative.

This specification is applicable for projects or work involving either inch-pound or SI units. Within the text, the inch-pound units are given preference followed by SI units shown within parentheses.

430S.2 Submittals

The submittal requirements of this specification item include:

A. Class A p.c. concrete mix design,

B. Type of Installation (i.e. P.C. Concrete Curb and Gutter or P.C. Concrete Curb or P.C. Concrete Laydown Curb) and construction details (i.e. base, reinforcing steel, joints, curing membrane),

C. Identification of the type, source, mixture, Pure Live Seed (PLS) and rate of application of the seeding.

430S.3 Materials

A. Concrete

The Portland cement (p.c.) concrete shall conform to Class A Concrete, Section 403S.7 (Table 4) of Standard Specification Item No. 403S, "Concrete for Structures" or Sections 360S.4 and 360S.6 of Standard Specification Item No. 360S, "Concrete Pavement" when curb and gutter is to be constructed integral with the pavement.

B. Reinforcing Steel

Reinforcing steel shall conform to Standard Specification Item No. 406S, "Reinforcing Steel".

C. Expansion Joint Materials

Expansion joint materials shall conform to Standard Specification Item No. 408S, "Expansion Joint Materials".

D. Membrane Curing Compound

Membrane curing compound shall conform to Standard Specification Item No. 409S, "Membrane Curing".

E. Flexible Base

Aggregate shall conform to Standard Specification Item No. 210S, "Flexible Base".

430S.4 Construction Methods

A. Subgrade and Base Preparation

Subgrade for curb and gutter shall be excavated and prepared to depth and width requirements indicated on the Drawings, including a minimum of 12 inches (300 mm) behind the curb, unless a greater width is indicated on the Drawings. The subgrade shall be shaped to the line, grades, cross section and dimensions indicated on the Drawings. A minimum of 4 inches (100 mm) of flexible base shall be spread, wetted and thoroughly compacted under curb and gutter as specified in Standard Specification Item No. 210S, "Flexible Base". If dry, the base shall be sprinkled lightly with water before p.c. concrete is deposited thereon.

B. C & G Forms

Forms shall be of metal, well-seasoned wood or other approved material. The length of the forms shall be a minimum of 10 feet (3 meters). Flexible or curved forms shall be used for curves of 100-foot (30 meter) radius or less. Wood forms for straight sections shall be not less than 2 inches (50 mm) in thickness. Forms shall be a section, that is satisfactory to the Engineer or designated representative, of the depth required and clean, straight, free from warp and, if required, oiled with a light form oil. All forms shall be securely staked to line and grade and maintained in a true position during the placement of p.c. concrete.

C. Reinforcing Steel

The reinforcing steel, if required, shall be placed as shown on the typical section of the Drawings. Care shall be exercised to keep all steel in its proper location during p.c. concrete placement.

D. Joints

Joints shall be of the type and spacing shown on the Drawings. Expansion joint material, 3/4 inch (19 mm) in thickness, shall be provided at intervals not to exceed 40 feet (12 meters) and shall extend the full width and depth of the p.c. concrete. Weakened plane joints shall be made 3/4 inch (19 mm) deep at 10-foot (3 meters) intervals. All joint headers shall be braced perpendicular and at right angles to the curb.

Two round smooth dowel bars, 1/2 inch (12.5 mm) in diameter and 24 inches (600 mm) in length, shall be installed at each expansion joint. Sixteen inches (400 mm) of one end of each dowel shall be thoroughly coated with hot oil, asphalt or red lead, so that it will not bond to the concrete. The dowels shall be installed with a dowel sleeve on the coated end as indicated on the Drawings or equivalent method as directed by the Engineer or designated representative.

E. P.C. Concrete Placement and Form Removal

Concrete shall be placed in the forms and properly consolidated. Within 1 hour after p.c. concrete placement, a thin coating, that is no more than 1/2 inch (12.5 mm) nor less than 1/4 inch (6.25 mm) thick of finish mortar, composed of 1 part Portland Cement to 2 parts fine aggregate, shall be worked into the exposed faces of the curb and gutter by means of a "mule". After the p.c. concrete has become sufficiently set, the exposed edges shall be rounded by the use of an edging tool to the radii indicated on Standard Detail 430S-1. The entire exposed surface of the curb and gutter shall be floated to a uniform smooth surface, and then finished with

a camel hairbrush to a gritty texture. The forms shall remain in place a minimum of 24 hours unless approved otherwise by the Engineer or designated representative.

After removal of the forms, any minor honeycombed surfaces shall be plastered with a mortar mix as described above. Excessively honeycombed curb and gutter, as determined by the Engineer or designated representative, shall be completely removed and replaced when directed.

F. Curing

Immediately after finishing the curb, concrete shall be protected by a membrane curing conforming to Standard Specification Item No. 409S, "Membrane Curing".

After a minimum of 3 days curing and before placement of the final lift of the base course, the curb shall be backfilled to the full height of the p.c. concrete, tamped and sloped as directed by the Engineer or designated representative. The upper 4 inches (100-mm) of backfill shall be of clean topsoil that conforms to Standard Specification Item No. 130S, "Borrow" and is free of stones and debris.

G. Seeding in Turf Areas

When turf is to be established, preparation of the seedbed shall conform to Item No. 604S, "Seeding for Erosion Control".

430S.5 Measurement

Accepted work as prescribed by this item will be measured by the lineal foot (lineal meter: 1 lineal meter equals 3.281 lineal feet) of p.c. concrete curb and gutter, p.c. concrete curb and/or p.c. concrete laydown curb, complete in place.

430S.6 Payment

The work performed as prescribed by this item will be paid for at the unit bid price per lineal foot for "P.C. Concrete Curb and Gutter" or P.C. Concrete Curb. The price shall include full compensation for all work as set forth and described under payment Method A and/or B.

A. Method A (Pay Item No. 430S-A)

This payment method shall include all the work performed for "P.C. Concrete Curb and Gutter" complete, at the unit bid price. The unit bid price shall include full compensation for excavation, preparation of the subgrade, furnishing and placing all concrete and base material, reinforcing steel, dowels, expansion joint material, curing material, backfill and for all other materials, manipulations, labor, tools, equipment and incidentals necessary to complete the work.

B. Method B (Pay Item No. 430S-B)

This payment method includes all the work performed for "P.C. Concrete Curb and Gutter", complete, at the unit bid price. The unit bid price shall include full compensation for fine grading, furnishing and placing concrete and reinforcing steel, dowels, expansion joint material, curing material, backfill and for all other materials, manipulations, labor, tools, equipment and incidentals necessary to complete the work.

C. Method C (Pay Item No. 430S-C)

This payment method includes all the work performed for " P.C. Concrete Curb" complete, at the unit bid price. The unit bid price shall include full compensation for excavation, furnishing and placing all concrete and base material, reinforcing steel, dowels, expansion joint material, curing material, backfill and for all other materials, manipulations, labor, tools, equipment and incidentals necessary to complete the work.

D. Method D (Pay Item No. 430S-D)

This payment method includes all the work performed for "P.C. Concrete Curb" complete, at the unit bid price. The unit bid price shall include full compensation for fine grading, furnishing and placing concrete and reinforcing steel, dowels, expansion joint material, curing material, backfill and for other materials, manipulations, labor, tools, equipment and incidentals necessary to complete the work.

E. Method E (Pay Item No. 430S-E)

This payment method shall include all the work performed for "P.C. Concrete Laydown Curb" complete, at the unit bid price. The unit bid price shall include full compensation for excavation, preparation of the subgrade, furnishing and placing all concrete and base material, reinforcing steel, dowels, expansion joint material, curing material, backfill and for all other materials, manipulations, labor, tools, equipment and incidentals necessary to complete the work

F. Method F (Pay Item No. 430S-F)

This payment method includes all the work performed for "P.C. Concrete Laydown Curb" complete, at the unit bid price. The unit bid price shall include full compensation for fine grading, furnishing and placing concrete and reinforcing steel, dowels, expansion joint material, curing material, backfill and for other materials, manipulations, labor, tools, equipment and incidentals necessary to complete the work.

Payment will be made under one of the following:

Pay Item No. 430S-A:	P.C. Concrete Curb and Gutter (Excavation)	Per Lineal Foot.
Pay Item No. 430S-B:	P.C. Concrete Curb and Gutter (Fine Grading)	Per Lineal Foot.
Pay Item No. 430S-C:	P.C. Concrete Curb (Excavation)	Per Lineal Foot.
Pay Item No. 430S-D:	P.C. Concrete Curb (Fine Grading)	Per Lineal Foot.
Pay Item No. 430S-E:	P.C. Concrete Laydown Curb (Excavation)	Per Lineal Foot.
Pay Item No. 430S-F:	P.C. Concrete Laydown Curb (Fine Grading)	Per Lineal Foot.

End

SPECIFIC CROSS REFERENCE MATERIALS
Specification Item No. 430S, “P.C. Concrete Curb and Gutter”

City of Austin Standard Specifications

Designation	*Description*

Item No 130S	Borrow
Item No 210S	Flexible Base
Item No. 360S	Concrete Pavement
Section 360S.4 of Item 360S	Proportioning of Concrete
Section 360S.6 of Item 360S	Concrete Mixing and Placing
Item No. 403S	Concrete for Structures
Section 403S.7 of Item No. 403S	(Table 4)
Item No. 406S	Reinforcing Steel
Item No. 408S	Expansion Joint Materials
Item No. 409S	Membrane Curing
Item No. 604S	Seeding for Erosion Control

City of Austin Standard Details

Designation	*Description*
430S-1	Curb and Gutter Section
430S-3	Curb Expansion Joint Dowel Detail
430S-4	Concrete Backfill Under Curb & Gutter
430S-5	Reinforcing Bar Detail at Existing Curb and Gutter

RELATED CROSS REFERENCE MATERIALS
Specification Item No. 430S, “P.C. Concrete Curb and Gutter”

City of Austin Standard Specifications

Designation	*Description*
Item No. 301S	Asphalts, Oils and Emulsions
Item No. 302S	Aggregates for Surface Treatments
Item No. 340S	Hot Mix Asphaltic Concrete Pavement
Item No. 431S	Machine Laid PCC Curb and Gutters
Item No. 433S	P.C. Concrete Driveways
Item No. 434S	P.C. Concrete Medians and Islands
Item No. 436S	P.C. Concrete Valley Gutters
Item No. 606S	Fertilizer

Item No. 432S
Portland Cement Concrete Sidewalks

432S.1 Description

This item shall govern the construction of Portland cement concrete sidewalks (Standard Detail No. 432S-1), as herein specified, on an approved subgrade and in conformance with the lines, grades and details indicated on the Drawings or as established by the Engineer or designated representative.

This specification is applicable for projects or work involving either inch-pound or SI units. Within the text inch-pound units are given preference followed by SI units shown within parentheses.

432S.2 Submittals

The submittal requirements of this specification item include:

A. Class A portland cement (p.c). concrete mix design,

B. Type of Installation (i.e. Type I, Type II, etc.) and construction details (i.e. cushion layer, base, reinforcing steel, joints, curing membrane),

C. Identification of the type, source, mixture, Pure Live Seed (PLS) and rate of application of the seeding.

D. Number, manufacturer, model, construction, finish and installation details of streetscape appurtenances of bicycle racks, benches, chairs, trash receptacles, streetlights, tree wells and above grade tree planters [for sidewalks, 12 feet (3.66 meters) or wider].

432S.3 Materials

A. Portland Cement Concrete

Portland cement concrete shall be Class A conforming to Specification Item No. 403S, "Concrete for Structures" or Specification Item No. 407S, "Fibrous Concrete".

B. Reinforcement

Reinforcement shall conform to Specification Item No. 406S, "Reinforcing Steel" or Specification Item No. 407S, "Fibrous Concrete".

C. Expansion Joint Materials

Expansion joint materials shall conform to Specification Item No. 408S, "Expansion Joint Materials".

D. Membrane Curing Compound

Membrane curing compound shall conform to Specification Item No. 409S, "Membrane Curing".

432S.4 Construction Methods

The subgrade shall be excavated in accordance with Specification Item No. 111S, “Excavation”, prepared in accordance with Specification Item No. 201S, “Subgrade Preparation”, shaped to the lines, grades and cross section as indicated on the Drawings or as directed by the Engineer or designated representative and thoroughly compacted in accordance with Specification Item No. 201S. A granular cushion of a minimum thickness of 2 inches (50 mm) but maximum thickness of 5 inches (125 mm), composed of crusher screenings, gravel and sand, crushed rock or coarse sand,

shall be spread, wetted thoroughly, tamped and leveled. The granular cushion shall be moist at the time the Portland cement concrete is placed.

If the subgrade is undercut by more than 4 inches (100 mm) or the elevation of the natural ground is more than 4 inches (100 mm) below "top of subgrade", then a necessary backfill/embankment layer of an approved material shall be placed and compacted with a mechanical tamper. Hand tamping will not be permitted.

Where the subgrade is rock or gravel, 70 percent of which is rock; the 2-inch (50 mm) cushion need not be used. The Engineer or designated representative will determine if the subgrade meets the above requirements.

Sidewalk forms shall be constructed of metal or well-seasoned wood not less than 2 inches (50 mm) in thickness, with a section satisfactory to the Engineer or designated representative. The forms shall be clean, straight, and free from warp with a depth equal to the thickness of the finished work. All forms shall be securely staked to line and grade and maintained in a true position during the deposition of Portland cement concrete. Before p.c. concrete is placed, the forms shall be thoroughly oiled with a light form oil.

Expansion joint material 3/4 inch (19 mm) thick, shall be provided where the new construction abuts an existing structure, sidewalk or driveway. Similar expansion material shall be placed around all obstructions protruding through the sidewalk. The expansion joint material shall be placed vertically and shall extend the full depth of the p.c. concrete. Maximum spacing of expansion joints shall be 40 feet (12 meters) as indicated on the Drawings or as directed by the Engineer or designated representative. Weakened plane joints shall be spaced at 5 feet (1.5 meters) on center. Normal dimensions of the weakened plane joints shall be 1/4 inch wide and 3/4 inch deep (6 mm wide and 19 mm deep). All joints shall be constructed perpendicular (90 degrees) to the centerline of walk and shall match any previously placed concrete joints. For sidewalks with widths exceeding 6 feet (1.83 meters) longitudinal weakened-plane tooled joints shall be provided as indicated on the Drawings or as directed by the Engineer or designated representative.

Reinforcement for sidewalks shall consist either of polypropylene fibrillated fibers or 6” x 6” x W1.4 x W1.4 (150mm x 150mm x MW9 x MW9) welded wire fabric or one layer #3 (10M) reinforcing bars, placed no more than 18 inches (450 mm) on center both directions. All reinforcement shall be accurately placed at slab mid-depth, equidistant from the top and bottom of the p.c. concrete and held firmly in place by means of bar supports of adequate strength and number that will prevent displacement and keep the steel at its proper position during the placement of the p.c concrete. In no instance shall the steel be placed directly on the subgrade or sand cushion layer.

Prior to placement of the concrete, the reinforcement installation shall be inspected by the Engineer or designated representative to insure conformance with the drawings, specifications and this item. In addition care shall be exercised to keep all steel in its proper position during placement of the p.c. concrete. If during placement of the concrete, the reinforcement is observed to loose bar support, float upward or move in any direction, the placement shall be stopped until corrective action is taken.

Splices in wire fabric shall overlap sufficiently to allow two pairs of transverse wires to be tied together and no splice of less than 6 inches (150 mm) will be permitted. Splices in the #3 (10M) bars shall have a minimum lap of 12 inches (300 mm).

Where driveways cross sidewalks, additional reinforcing shall be placed in the sidewalk as indicated on the Drawings.

Portland cement concrete shall be placed in the forms and spaded, tamped and thoroughly consolidated until it covers the entire surface with a monolithic finish. The top surface shall be floated and troweled to a uniform smooth surface; then finished with a broom or wood float to a gritty texture unless indicated otherwise on the Drawings or as directed by the Engineer or designated representative. The outer edges and joints shall be rounded with approved tools to a

1/4-inch (6 mm) radius. Care will be exercised to prevent loss of dummy joints or rounded edges when applying the brush finish.

Portland cement concrete sidewalk ramps shall be formed to produce a finished surface with detectable warnings (Standard Detail 432S-2A) in accordance with the requirements of the American Disabilities Act and Texas Accessibility Standards (TAS), including Sections 4.29.2 and A4.29.2. The p.c. concrete sidewalk ramps shall be constructed in accordance with appropriate City of Austin Standard Details (Standard Details 432S-3, 432S-3A through 432S-3H, 432S-5, 432S-5A, 432S-5B, etc.).

Detectable warning for the ramps shall consist of raised truncated domes with a diameter of nominal 0.9 inch (23 mm), a height of nominal 0.2 inch (5 mm) and center-to-center spacing of nominal 2.35 inches (60 mm) and shall contrast visually with adjoining surfaces, either light on dark or dark-on-light. The material used to provide contrast shall be an integral part of the walking surface.

When indicated on the Drawings or as directed by the Engineer or designated representative, the construction of the sidewalk ramp shall include the installation of interlocking concrete paving units (Standard Specification Item No. 480S, "Concrete Paving Units"). The concrete paving units shall be constructed in accordance in accordance with Standard Specification Item No. 485S, "Concrete Paving Units for Sidewalk Ramps) and appropriate City of Austin Standard Details (Standard Details 432S-2A, 432S-3, 432S-3A through 432S-3H, 432S-5, 432S-5A and 432S-5B).

At the proper time after finishing, the surface shall be protected by a membrane, compound curing agent or by wetted cotton or burlap mats, conforming to Item No.409S, "Membrane Curing". The sides of the p.c. concrete shall be cured in the forms. If the forms are removed during the curing process, the curing shall be continued by the placement of fill against the exposed concrete edges or by other procedures conforming to Item No. 410S, "Concrete Structures". The top 4 inches (100 mm) of fill shall be clean topsoil conforming to Item No. 604S, "Seeding for Erosion Control".

Existing sidewalk that is scheduled for removal and replacement shall be removed and the underlying material shaped to the lines, grades and cross section as indicated in the drawings or as directed by the Engineer or designated representative. The removal and/or relocation of obstructions, including but not limited to signs, trash cans and benches on concrete pads, abandoned manholes, sprinkler control valves and landscaping, shall be performed, as indicated on the drawings, in a manner acceptable to the Engineer or designated representative. Removal and/or relocation of obstructions will be considered incidental work to this item and will not be paid for directly.

Existing PVC pipe drains in and behind curb shall be removed and replaced as required in new sidewalk and/or curb and gutter. In areas of proposed sidewalk construction, where curb and gutter is to remain in place, existing PVC pipe shall be cut far enough behind the back of curb to allow sufficient room for joint fittings to connect to new or salvaged PVC pipe.

The Contractor shall be responsible for removing and replacing mailboxes that are located in the construction area, while assuring that mail delivery will not be interrupted as a result of the construction activities. Mailboxes shall not be laid on the ground.

All necessary excavation, filling and grading of the slopes adjacent to the completed concrete sidewalks will be considered incidental work pertaining to this item and will not be paid for directly. The adjacent excavation and grading of the slopes shall be done in a manner acceptable to the Engineer or designated representative.

432S.5 Streetscape Furniture Installation Requirements

A. General General

Bicycle racks, benches and chairs, trash receptacles, tree wells and above grade tree wells and planters shall only be installed in sidewalks that are 12 feet (3.66 meters) or wider. When installation is indicated on the Drawings or directed by the Engineer or designated representative, these items shall be permanently installed as indicated in Standard Details 710S-4 and 710S-5; 432S-9B; 432S-7C, and 432S-7F; and 432S-8B. Above grade tree wells shall be installed in conformance with Standard Detail 432S-7E, while above grade tree planters shall be installed in conformance with Standard Detail Nos. 432S-7D and 432S-7G.

B. Location Requirements

1. Benches.

   Benches shall be placed either perpendicular to the curb with the center of the bench on line with trees and light poles and facing toward the building entry, or parallel to the building and within 6” (150 mm) of the building wall, facing out to the street.

   Bench siting shall be in conformance with Standard Detail No. 432S-9C in 12’ (3.6 M) or wider sidewalks and Standard Detail No. 432S-9D in sidewalks of width between 12’ (3.6 M) and 18’ (5.4 M).

2. Bike Racks.

   Bike racks are to be placed perpendicular to the curb with the centerline of the rack on line with trees and light poles.

   Bike rack siting shall be in conformance with Standard Detail No. 710S-6A in 12’ (3.6 M) or wider sidewalks and Standard Detail No. 710S-6B in sidewalks of width between 12’ (3.6 M) and 18’ (5.4 M).

3. Trash Receptacles.

   Trash receptacles shall either be placed along the curb, with the center line of the receptacle on line with the trees and light poles, or shall be located at the building entry in alignment with the structural bay system of the building. If located at the entry there shall be no more than 1 foot (300 mm) clearance between the receptacle and the building wall.

   Trash receptacle siting adjacent to curb ramps within an intersection shall be in conformance with Standard Detail No. 432S-8C in 12’ (3.6 M) or wider sidewalks.

P432S.6 Pedestrian Railing

When a pedestrian railing installation is required along sidewalks for pedestrian protection as indicated on the Drawings or directed by the Engineer or designated representative, this type of pedestrian railing shall be permanently installed in conformance with one of the following designated Standard Details: 707S-1, 707S-2, 707S-3 or 707S-4.

When a pedestrian railing installation is required along portions of sidewalks identified as ‘ramps’ for ADA accessibility purposes as indicated on the Drawings or directed by the Engineer or designated representative, this type of pedestrian railing shall be permanently installed in conformance with one of the following designated Standard Details: 707S-2, 707S-3 or 707S-4.

432S.7 Measurement

Accepted work performed as prescribed by this item will be measured by the square foot (square meter: 1 square meter is equal to 10.764 square feet) of surface area of "Concrete Sidewalk".

Accepted work performed as prescribed by "Sidewalk Ramps" will be measured per each for the type of ramp indicated on the Drawings.

Accepted work performed as prescribed by "Streetscape Appurtenances" will be measured per each for the type of appurtenance indicated on the Drawings.

Accepted work performed as prescribed by "Pedestrian Railing" will be measured per lineal foot of the type of railing indicated on the Drawings.

432S.8 Payment

The work performed as prescribed by this item for concrete sidewalk will be paid for at the unit bid price per square foot for "Concrete Sidewalk" and/or "Sidewalks Reconstruction"; per each for "Concrete Sidewalk Ramps" and "Streetscape Appurtenances" or per lineal foot for "Pedestrian Railing".

The unit bid price for new sidewalk shall include full compensation for excavating and/or removal and/or relocating obstructions, vegetating adjacent areas disturbed by sidewalk construction, preparing the subgrade; for furnishing and placing all materials including cushion material, all reinforcement, bar supports, joints, expansion joint materials, and for any other materials, manipulations, labor, tools, equipment, finishing, curing and incidentals necessary to complete the work.

The unit bid price for sidewalk reconstruction shall include full compensation for excavating and/or removal of existing sidewalk and other obstructions, relocating obstructions, replacing PVC drain pipe, re-vegetating adjacent areas disturbed by sidewalk construction, preparing the subgrade; for furnishing and placing all materials including cushion material, all reinforcement, bar supports, joints, expansion joint materials, and for any other materials, manipulations, labor, tools, equipment, finishing, curing and incidentals necessary to complete the work.

The unit bid price for ramps shall include full compensation for preparing the subgrade when not included as a separate item; for furnishing and placing all materials, manipulation, labor, tools, equipment and incidentals necessary to complete the work. All necessary excavation, filling and grading of the slopes adjacent to the completed concrete paver units will be included in the unit price bid for the item of construction in which this item is used, unless included as a separate pay item in the Contract bid form.

The unit bid price for streetscape appurtenances shall include full compensation for the individual item (i.e. bench, chair, bicycle rack, trash receptacle, street light or above grade tree planter), as well as the removal of existing sidewalk, preparation of footings, furnishing and placing all materials, manipulation and finishing, labor, tools, equipment and incidentals necessary to complete the work.

The unit bid price for pedestrian railing shall include full compensation for the complete installation of the specific pedestrian railing including but not limited to preparation of footings or curb, furnishing and placing all materials, manipulation and finishing, labor, tools, equipment and incidentals necessary to complete the work.

Payment will be made under one of the following:

New Sidewalks

Pay Item 432S-4:	New P.C. Concrete Sidewalks, 4 Inch thickness	Per Square Foot.
Pay Item 432S-5:	New P.C. Concrete Sidewalks, 5 Inch thickness	Per Square Foot.
Pay Item 432S-6:	New P.C. Concrete Sidewalks, 6 Inch thickness	Per Square Foot.
Pay Item 432S-7:	New P.C. Concrete Sidewalks, 7 Inch thickness	Per Square Foot.

Sidewalks Reconstruction

Pay Item 432SR-4:	Reconstruct Concrete Sidewalks to 4 Inch thickness, including removal of existing sidewalk	Per Square Foot.
Pay Item 432SR-5:	Reconstruct Concrete Sidewalks to 5 Inch thickness, including removal of existing sidewalk	Per Square Foot.
Pay Item 432SR-6:	Reconstruct Concrete Sidewalks to 6 Inch thickness, including removal of existing sidewalk	Per Square Foot.
Pay Item 432SR-7:	Reconstruct Concrete Sidewalks to 7 Inch thickness, including removal of existing sidewalk	Per Square Foot.

Ramps

Pay Item 432S - RP-1:	P.C. Sidewalk Curb Ramp with Pavers (Type I)	Per Each.
Pay Item 432S-RP-1A:	P.C. Sidewalk Curb Ramp with Pavers (Type IA)	Per Each.
Pay Item 432S-RP-1B:	P.C. Sidewalk Curb Ramp with Pavers (Type IB)	Per Each.

Streetscape Appurtenances

Pay Item 432S-SAC-1	Streetscape Bench (____ inches in length)	Per Each.
Pay Item 432S-SAC-2	Streetscape Chair	Per Each.
Pay Item 432S-SAC-3	Streetscape Bicycle Rack	Per Each.
Pay Item 432S-SAC-4	Streetscape Trash Receptacle	Per Each.
Pay Item 432S-SAC-5	Streetscape Street Light	Per Each.
Pay Item 432S-SAC-7C	Streetscape Tree Well for Concrete Sidewalks	Per Each.
Pay Item 432S-SAC-7D	Streetscape Above Grade Tree Planters with Bench	Per Each.
Pay Item 432S-SAC-7E	Streetscape Above Grade Tree Well with Seat	Per Each.
Pay Item 432S-SAC-7F	Streetscape Tree Well without Grate	Per Each.
Pay Item 432S-SAC-7G	Streetscape Above Grade Galvanized Steel Tree Planters	Per Each

Pedestrian Railing

Pay Item 432S-PRC-1	Pedestrian Railing (Standard 707S-1)	Per LF.
Pay Item 432S-PRC-2	Pedestrian ADA Railing – Option 1 (Standard 707S-2)	Per LF.
Pay Item 432S-PRC-3	Pedestrian ADA Railing – Option 2 (Standard 707S-3)	Per LF.
Pay Item 432S-PRC-4	Pedestrian ADA Railing – Option 3 (Standard 707S-4)	Per LF.

End

SPECIFIC CROSS REFERENCE MATERIALS
Specification 432S, “P. C. Concrete Sidewalks”

City of Austin Standard Specifications

Designation	Description
Item No. 111S	Excavation
Item No. 201S	Subgrade Preparation
Item No. 403S	Concrete for Structures
Item No. 406S	Reinforcing Steel
Item No. 407S	Fibrous Concrete
Item No. 408S	Expansion Joint Materials
Item No. 409S	Membrane Curing
Item No. 410S	Concrete Structures
Item No. 480S	Concrete Paving Unit
Item No. 485S	Concrete Paving Units for Sidewalk Ramps
Item No. 604S	Seeding for Erosion Control

City of Austin Standard Details

Designation	Description
432S-1	Sidewalk
432S-2A	Detectable Warning-Paver
432S-3	Type I Curb Ramps-Full Intersection
432S-3A	Type I Curb Ramps-T Intersection
432S-3B	Type IA/IB Curb Ramps-Full Intersection
432S-3C	Type IA/IB Curb Ramps-T Intersection
432S-3D	Combined Curb Ramps-Full Intersection
432S-3E	Combined Curb Ramps-T Intersection
432S-3F	Combined Sidewalk Curb Ramp with Pavers
432S-3G	Combined Sidewalk Curb Ramp with Pavers within Limited ROW
432S-3H	Type I Curb Ramps within PC/PT of Curb and Gutter
432S-5	Type I Sidewalk Curb Ramp
432S-5A	Type IA Sidewalk Curb Ramp
432S-7C	Tree Well for New Trees Planted Within Concrete Sidewalk 3.6 M (12') or Greater
432S-7D	Above Grade Tree Planters
432S-7E	Above Grade Tree Well with Bench
432S-7F	Tree Well Without Grate
432S-7G	Above Grade Galvanized Steel Tree Planters
432S-8B	Trash Receptacle Installation in Concrete Sidewalk
432A-8C	Furnishing Location in 12' (3.6 M) or greater Trash Receptacle Siting
432S-9B	Bench/Chair Installation in Sidewalks
432S-9C	Furnishing Location in 12' (3.6 M) or greater Sidewalks-Bench Siting
432S-9D	Furnishing Location in Greater than 12' (3.6 M) or Less than 18' (5.4 M) Sidewalks-Bench Siting
707S-1	Pedestrian Railing
707S-2	Pedestrian ADA Railing – Option 1
707S-3	Pedestrian ADA Railing – Option 2
707S-4	Pedestrian ADA Railing – Option 3
710S-4	Bicycle Rack Installation in Concrete Sidewalks (Alternate 1)
710S-5	Bicycle Rack Installation in Concrete Sidewalks (Alternate 2)

710S-6A	Furnishing Location in 12' (3.6 M) or greater Sidewalks-Bicycle Rack Siting
710S-6B	Furnishing Location in Greater than 12' (3.6 M) or Less than 18' (5.4 M) Sidewalks-Bicycle Rack Siting

American Disabilities Act, Federal Register; Volume 56, No. 144; July 26, 1991
ADA Accessibility Guidelines For Building And Facilities

Designation	Description
Section 4.29	Detectable Warnings on Walking Surfaces
Section A4.29.2	Detectable Warnings on Walking Surfaces

Architectural Barriers; Texas Civil Statutes, Article 9102; June 14, 1995
Texas Accessibility Standards (TAS)

Designation	Description
Section 4.29	Detectable Warnings on Walking Surfaces
Section A4.29.2	Detectable Warnings on Walking Surfaces

RELATED CROSS REFERENCE MATERIALS

City of Austin Standard Contract Documents

Designation	Description
00700	General Conditions
01500	Temporary Facilities
01550	Public Safety and Convenience

City of Austin Utilities Criteria Manual

Designation	Description
Section 5.2.3	Utility Adjustments For Roadway Construction Projects

City of Austin Standard Specifications

Designation	Description
Item No. 102S	Clearing and Grubbing
Item No. 104S	Removing Portland Cement Concrete
Item No. 110S	Street Excavation
Item No. 132S	Embankment
Item No. 203S	Lime Treatment for Materials In Place
Item No. 204S	Portland Cement Treatment for Materials In Place
Item No. 230S	Rolling (Flat Wheel)
Item No. 232S	Rolling (Pneumatic Tire)
Item No. 234S	Rolling (Tamping)
Item No. 236S	Rolling (Proof)
Item No. 360S	Concrete Pavement
Item No. 402S	Controlled Low Strength Material
Item No. 404S	Pneumatically Placed Concrete
Item No. 405S	Concrete Admixtures
Item No. 411S	Surface Finishes for Concrete

Item No. 501S
Jacking or Boring Pipe

501S.1 Description

This item shall govern furnishing and installing of encasement pipe by methods of jacking or boring as indicated on the Drawings and in conformity with this specification. This item shall also include, but not be limited to other constructions activities such as traffic control measures, excavation, removal of all materials encountered in jacking or boring pipe operations, disposal of all material not required in the work, grouting, end seal installation, backfilling and re-vegetation.

This specification is applicable for projects or work involving either inch-pound or SI units. Within the text and accompanying tables, the inch-pound units are given preference followed by SI units shown within parentheses.

501S.2 Submittals

The submittal requirements for this specification item shall include:

A. Shop drawings identifying proposed jacking or boring method complete in assembled position

B. Excavation Safety Plan including pits, trenches and sheeting or bracing if necessary,

C. Design for jacking or boring head,

D. Installation of jacking or boring supports or back stop,

E. Arrangement and position of jacks and pipe guides, and

F. Grouting plan,

501S.3 Materials

A. Pipe

Carrier pipe and encasement pipe shall conform to Standard Specification Item Nos. 505S, "Concrete Encasement and Encasement Pipe" and 510, "Pipe" and shall be size, type materials, thickness and class indicated on the Drawings, unless otherwise specified.

B. Grout

Grout for void areas shall consist of 1 part Portland cement and 4 parts fine, clean sand mixed with water.

501S.4 Construction Methods

A. General

The Contractor is responsible for:

1. Adequacy of jacking and boring operations,
2. Installation of support systems as indicated on the Drawings,
3. Provision of encasement and carrier pipe, and
4. Execution of work involving the jacking operation, the wet or dry method of boring and the installation of encasement pipe simultaneously.

The Contractor shall have sole responsibility for the safety of the jacking and boring operations and for persons engaged in the work. The Contractor's attention is directed to the Construction Industry Occupational Safety and Health Administration (OSHA) Standards (29 FR 1926/1920) as published in U.S. Department of Labor publication OSHA 2207, latest revision, with particular attention to Subpart S. The Contractor shall conform to the requirements in accordance with Standard Specification Item 509S, "Excavation Safety System" and shall provide an appropriate Trench Safety Plan.

When the grade of the pipe at the jacking or boring end is below the ground surface, suitable pits or trenches shall be excavated to provide sufficient room to conduct the jacking or boring operations and for placement of end joints of the pipe. In order to provide a safe and stable work area, the excavated area shall be securely sheeted and braced to prevent earth caving in accordance with the Trench Safety Plan.

The location of the work pit and associated traffic control measures required for the jacking or boring operations shall conform to the requirements of the City of Austin Transportation Criteria Manual and TxDoT Manual on Uniform Traffic Control Devices.

Where installation of pipe is required under railroad embankments, highways, streets, or other facilities by jacking or boring methods, construction shall be undertaken in such a manner that it will not interfere with operation of any railroad, street, highway, utility or other facility and shall not weaken or damage any embankment or structure. All appropriate permits shall be acquired prior to the initiation of the work.

During construction operations, and until the work pits are backfilled and fill material compacted, traffic barricades and warning lights to safeguard traffic and pedestrians shall be furnished and maintained by the Contractor. The Contractor shall submit the proposed pit location and traffic control plan for review by the Engineer or designated representative. The Review by the Engineer or designated representative, however, will not relieve the Contractor of the responsibility to obtain specified results in a safe, professional manner.

When grade of pipe at jacking or boring end is below ground surface, suitable pits or trenches shall be excavated for the purpose of conducting the jacking or boring operations and for joining pipe. Work shall be securely sheeted and braced as indicated on the Excavation Safety Plan to prevent earth caving and to provide a safe and stable work area.

The pipe shall be jacked or bored from the low or downstream end, if possible. Minor lateral or vertical variation in the final position of pipe from line and grade established by Engineer or designated representative will be permitted at the

discretion of Engineer or designated representative provided that such variation is regular and occurs only in one direction and that the final grade of the flow line conforms to the specified direction.

When conforming to details indicated on the drawings, but the bottom of the work pit is unstable or excessively wet or the installation of water and wastewater pipe will result in less than 30 inches (750 mm) of cover, the Contractor shall notify the Engineer or designated representative. The Engineer or designated representative may require the Contractor to install a concrete seal, cradle, cap or encasement or other appropriate action.

Immediately after jacking or boring is complete and the encasement pipe is accurately positioned and approved for line and grade, the clear space between the pipe and the surrounding excavated material shall be completely filled by pressure grouting for entire length of installation if the encasement pipe is 36 inches or larger in diameter.

After placement of the carrier pipe is complete, the ends of the encasement pipe shall be sealed with end seals meeting SPL WW-575A.

As soon as possible after the carrier pipe(s) and end seals are completed, the work pits or trenches, which are excavated to facilitate these operations, shall be backfilled. The backfill in the street ROW shall be compacted to not less than 95 percent of the maximum density conforming to TxDOT Test Method Tex-114-E, “Laboratory Compaction Characteristics & Moisture-Density Relationship of Subgrade & Embankment Soil”. Field density measurements will be made in accordance with TxDOT Test Method Tex-115-E, “Field Method for Determination of In-Place Density of Soils and Base Materials”.

Where the characteristics of soil, size or size of proposed pipe dictate that tunneling is more satisfactory than jacking or boring, a tunneling method may be submitted for acceptance by Engineer or designated representative

B. Jacking

Heavy duty jacks suitable for forcing the pipe through the embankment shall be provided. In operating the jacks, an even pressure shall be applied to all jacks used so that the pressure will be applied to the pipe uniformly around the ring of the pipe. A suitable jacking frame or back stop shall be provided. The pipe to be jacked shall be set on guides properly braced together, to support the section of the pipe and to direct it in the proper line and grade. The complete jacking assembly shall be placed in order to line up with the direction and grade of the pipe. In general, the embankment material shall be excavated just ahead of the pipe, the material removed through the pipe and the pipe forced through embankment by jacking, into the space thus provided.

The excavation for the underside of the pipe, for at least 1/3 of the circumference of the pipe, shall conform to the contour and grade of the pipe. A clearance of no more than 2 inches (50 mm) may be provided for the upper half of the pipe. This clearance shall be tapered to zero at the point where excavation conforms to contour of pipe.

The distance that excavation shall extend beyond the end of the pipe depends on the character of material encountered, but it shall not exceed 2 feet (0.6 meter) in any case. This distance shall be decreased, when directed by the Engineer or designated representative, if the character of the material being excavated makes it desirable to keep the advance closer to the end of the pipe.

The Contractor may use a cutting edge of steel plate around head end of the pipe extending a short distance beyond the end of pipe with inside angles or lugs to keep cutting edge from slipping back onto the pipe.

When jacking of the pipe is begun, all operations shall be carried on without interruption, insofar as practical, to prevent the pipe from becoming firmly set in the embankment.

Any pipe damaged in jacking operations shall be removed and replaced by the Contractor at its entire expense.

C. Boring

The boring shall proceed from a work pit provided for the boring equipment and workers. Excavation for the work pits and the installation of shoring shall be as outlined in the Trench Safety Plan. The location of the pit shall be approved by the Engineer or designated representative. The boring shall be done mechanically using either a pilot hole or the augur method.

In the pilot hole method an approximate 2 inch (50 mm) pilot hole shall be bored the entire length of the crossing and shall be checked for line and grade on the opposite end of the bore from the work pit. This pilot hole shall serve as the centerline of the larger diameter hole to be bored.

When the augur method is used, a steel encasement pipe of the appropriate diameter equipped with a cutter head to mechanically perform the excavation shall be used. Augurs shall be of sufficient diameter to convey the excavated material to the work pit.

Excavated material will be removed from the working pit and disposed of properly. The use of water or other fluids in connection with the boring operation will be permitted only to the extent to lubricate cuttings. Water jetting will not be permitted.

In unstable soil formations, a gel-forming colloidal drilling fluid, that consists of at least 10 percent of high grade carefully processed bentonite, may be used to consolidate the drill cuttings, seal the walls of the hole and furnish lubrication to facilitate removal of the cuttings from the bore.

D. Tunneling

Where the characteristics of the soil, the size of the proposed pipe, or the use of monolithic sewer would make the use of tunneling more satisfactory than jacking or boring; or when indicated on the drawings, a tunneling method may be used, with the approval of the Engineer or designated representative.

E. Joints
If reinforced concrete pipe is used, the joints shall be in accordance with TxDOT Specification Item 464, “Reinforced Concrete Pipe”.

501S.5 Measurement

Jacking or boring pipe will be measured by the linear foot (meter: 1 meter equals 3.281 feet) of pipe complete in place. Such measurement will be made between the ends of the pipe along the central axis as installed.

501S.6 Payment

The work performed and materials furnished as prescribed by this item and measured as provided under "Measurement" will be paid for at the unit bid price per linear foot for "Jacking or Boring Pipe" as the case may be, of type, size and class of encasement pipe indicated on the Drawings. The price shall include full compensation for furnishing, preparing, hauling and installing required materials, encasement pipe, end seals, for grouting and for labor, tools, equipment and incidentals necessary to complete work, including excavation, backfilling and disposal of surplus material.

The Carrier pipe shall be paid at the unit price bid for Standard Specification Item 510, "Pipe".

Payment when included as a contract pay item, will be made under one of the following:

Pay Item No. 501S: Jacking or Boring __ In. Pipe, Class ___ Per Linear Foot.

End

SPECIFIC Cross Reference Materials
Specification Item 501S, "Jacking or Boring Pipe"

City of Austin Standard Specification Items

Designation	Description
Item No. 505S	Concrete Encasement and Encasement Pipe
Item No. 509S	Excavation Safety Systems
Item No. 510	Pipe

TxDOT Standard Specifications For Construction And Maintenance Of Highways, Streets, And Bridges

Designation	Description
Item 464	Reinforced Concrete Pipe

TxDOT Testing Procedures

Designation	Description
Tex-114-E	Laboratory Compaction Characteristics & Moisture Density Relationship of Subgrade & Embankment Soil

Tex-115-E	Field Method for Determination of In-Place Density of Soils and Base Materials

TxDOT Manual on Uniform Traffic Control Devices (MUTCD)

Designation	Description
MUTCD Part VI	Traffic Controls for Street and Highway Construction, Maintenance, Utility and Incident Management Operations
MUTCD Section 6C	Channelizing Devices
MUTCD Section 6C-8	Barricade Design
MUTCD Section 6C-9	Barricade Application
MUTCD Section 6E	Lighting Devices
MUTCD Section 6F	Control of Traffic Through Work Areas

City of Austin Transportation Criteria Manual

Designation	Description
Section 8	Traffic Control
Section 8.5.5.E	Typical Applications/Bore Pits

RELATED Cross Reference Materials
Specification Item 501S, "Jacking or Boring Pipe"

City of Austin Standard Details

Designation	Description
Detail 501S-1	Encasement Detail w/ Casing Spacers

TxDOT Standard Specifications

Designation	Description
Item 476	Jacking, Boring or Tunneling Pipe
Item 502	Barricades, Signs and Traffic Handling

Item No. 503S
Frames, Grates, Rings and Covers

503S.1 Description

This item shall govern furnishing and installation of frames, grates, rings and covers for inlets, manholes and other structures indicated on the Drawings.

This specification is applicable for projects or work involving either inch-pound or SI units. Within the text, the inch-pound units are given preference followed by SI units shown within parentheses.

503S.2 Submittals

The submittal requirements of this specification item include manufacturer, model number, description, painting requirements and characteristics of frames, grates, rings, covers, height adjustment insert and nuts and bolts required for completion of the work.

503S.3 Materials

The Contractor shall submit descriptive information and evidence that the materials and equipment the Contractor proposes for incorporation in the Work is the kind and quality that satisfies the specified functions and quality. The City of Austin Water and Wastewater Utility Standard Products Lists (SPLs) form a part of these Specifications. Contractors may, when appropriate, elect to use products from the SPLs; however, submittal to the Engineer or designated representative is still required. If the Contractor elects to use any materials from these lists, each product shall be completely and clearly identified by its corresponding SPL number when making the product submittal.

The purpose of the SPLs is to expedite the review by the Engineer or designated representative and, if necessary, the City of Austin Water and Wastewater Utility Standard Products Committee of Contractor product submittals. The SPL's should not be interpreted as being a pre-approved list of products necessarily meeting the requirements for a given construction Project. Items contained in the SPL cannot be substituted for items that are shown on the Drawings, called for in the specifications, or specified in the Bidding Requirements, Contract Forms and Conditions of Contract, unless approved by the Engineer or designated representative in conjunction with the Water and Wastewater Utility Standard Products Committee. The Standard Product List current at the time of plan approval will govern.

A. Welded Steel

Welded steel grates and frames shall conform to the number; size, dimensions and details indicated on the Drawings and shall be welded into an assembly in accordance with those details. Steel shall conform to the requirements of ASTM A 36/A 36M, "Specification for Structural Steel".

B. Castings

Castings, whether Carbon-Steel, Gray Cast Iron or Ductile Iron shall conform to the shape and dimensions indicated on the Drawings and shall be clean substantial castings, free from sand or blowholes or other defects. Surfaces of the castings shall be free from burnt on sand and shall be reasonably smooth. Runners, risers, fins and other cast on pieces shall be removed from the castings and such areas ground smooth. Bearing surfaces between manhole rings and covers or grates and frames shall be cast or machined with such precision that uniform bearing shall be provided throughout the perimeter area of contact. Pairs of machined castings shall be matchmarked to facilitate subsequent identification at installation with the exception of water and wastewater manhole and valve castings. These manhole and valve castings shall be fabricated with such draft, tolerances, bolt hole spacing, etc., that all rings and covers of a particular type or class are interchangeable and match-marking will not be required.

Steel castings shall conform to ASTM A 27/27M, “Specifications for Steel Castings, Carbon, for General Application”. Grade 70-36 (480-250) shall be furnished unless otherwise specified on the Drawings.

Cast iron castings shall conform to ASTM A 48, “Specification for Gray Iron Castings”, Class 30.

Ductile Iron castings shall conform to ASTM A 536, “Specification for Ductile Iron Castings”. Grade 60-40-18 (415-275-125) shall be used unless otherwise indicated on the Drawings.

C. Manhole Cover Riser Rings

Height-adjustment inserts for wastewater manhole rings, which are used for raising standard manhole covers, shall be those models listed in Water and Wastewater Standard Products List item QPL WW-330.

D. Nuts and Bolts

Nuts and bolts shall be hex head 5/8” x 2.5” (16 mm x 63.5 mm) #11 National Coarse Thread, Type 316 stainless steel. For bolted manhole covers, a thin film of an approved "Anti-freeze" compound, approved by the Engineer or designated representative, shall be applied to all bolts.

E. Mortar

Unless otherwise specified or approved by the Engineer or designated representative, the mortar for bedding castings shall consist of one (1) part Portland cement and three (3) parts sand and sufficient water to provide the desired consistency. The gradation of the fine aggregate shall meet the requirements for Grade No. 1, Item No. 403, "Concrete for Structures".

503S.4 Construction Methods

Frames, grates, rings and covers shall be constructed of the specified materials in accordance with the details indicated on the Drawings or in the City of Austin Standard

Details. The Frames, grates, rings and covers shall be placed carefully to the lines or grades indicated on the Drawings or as directed by the Engineer or designated representative.

All welding shall conform to the requirements of the ANSI/AWS Structural Welding Code D1.1. Welded frames, grates, rings and covers shall be given 1 coat of a commercial grade red lead oil paint and 2 coats of commercial grade aluminum paint. All coats shall be a minimum of 1.5 mils (0.4 mm), dry.

Painting of gray iron castings will not be required, except when used in conjunction with structural steel shapes.

503S.5 Measurement and Payment

Frames, grates, rings and covers will not be measured and payment for furnishing all materials, tools, equipment, labor and incidentals to complete the Work will be included in the Bid Items which constitute the complete structures.

End

SPECIFIED Cross Reference Materials
Standard Specification Item Number 503S, "Frames, Grates, Rings and Covers"

City of Austin Standard Specifications

Designation	Description
Item No. 403S	Concrete for Structures

City of Austin Water and Wastewater Standard Products List

Designation	Description
QPL WW-330	Manhole Cover Riser Rings for raising City of Austin Standard Manhole Covers

American Society for Testing Materials (ASTM)

Designation	Description
A36/A36M	Specification for Structural Steel
A27/A27M	Specification for Steel Castings, Carbon, for General Application
A48	Specification for Gray Iron Castings
A536	Specification for Ductile Iron Castings

ANSI/AWS

Designation	Description
Code D 1.1	Structural Welding Code

RELATED Cross Reference Materials
Standard Specification Item Number 503S, "Frames, Grates, Rings and Covers"

City of Austin Standard Specifications

Designation	Description
Item No. 504S	Adjusting Structures
Item No. 510	Pipe

City of Austin Standard Details

Designation	Description
No. 503S-1	457mm (18") Cover and Frame
No. 503S-2S	Storm Sewer Manhole Ring and 610 mm (24") Cover
No. 503S-2W	Sanitary Sewer Manhole Ring and 610 mm (24") Cover
No. 503S-3S	Bolted Storm Sewer Manhole Ring and 610 mm (24") Cover
No. 503S-3W	Bolted Sanitary Sewer Manhole Ring and 610 mm (24") Cover
No. 503S-4S	Storm Sewer Manhole Ring and 813 mm (32") Cover
No. 503S-4W	Sanitary Sewer Manhole Ring and 813 mm (32") Cover
No. 503S-5S	Bolted Storm Sewer Manhole Ring and 813 mm (32") Cover
No. 503S-5W	Watertight Manhole Ring and 813 mm (32") Cover
No. 506S-2	Major Manhole Adjustment
No. 506S-11	Storm Sewer Manhole Details

TxDOT Specifications

Designation	Description
Item 421	Portland Cement Concrete

Item No. 505S
Concrete Encasement and Encasement Pipe

505S.1 Description

This item shall govern the furnishing of materials and the methods of constructing a Portland cement concrete encasement or encasement pipe in a trench.

This specification is applicable for projects or work involving either inch-pound or SI units. Within the text and accompanying tables, the inch-pound units are given preference followed by SI units shown within parentheses.

505S.2 Submittals

The submittal requirements of this specification item include:

A. Type, of pipe, construction methods and sequence,

B. Aggregate types, gradations and physical characteristics for the Portland cement concrete mix,

C. Proposed proportioning of materials for the mortar mix.

505S.3 Materials

A. Portland Cement Concrete

The Portland cement concrete shall conform to Class D Concrete, Item No. 403S, "Concrete for Structures".

B. Pipe

Portland Cement concrete pipe shall conform to ASTM C-76, Class III or better.

Corrugated Metal Pipe (CMP) shall conform to Section 510.2 (8) (o) of the City of Austin Standard Specification Item No. 510, "Pipe".

Steel Pipe shall conform to ASTM A134 with a minimum thickness of 3/8 inch (9.5 mm) for pipe with a diameter of 16 inches (400 mm) and greater.

C. Grout

Grout shall consist of not less than 6 sacks Portland cement per cubic yard (335 kilograms Portland cement per cubic meter) and clean washed sand mixed with water. The grout shall have a consistency such that the grout will flow into and completely fill all voids. If allowed by the Engineer or designated representative, an air entraining admixture may be added to facilitate placement.

505S.4 Construction Methods

When indicated on the Drawings or acceptable to Engineer or designated representative, concrete encasement shall be placed to protect the pipe. Pipe or bedding shall not be placed where:

(a) the top of the pipe would have less than 30 inches (750 mm) of cover from finish grade,

(b) the ground water invades the trench, or

(c) the trench bottom is of unstable material.

If either of these conditions is encountered, the Engineer or designated representative shall be notified and may direct the Contractor to:

(a) encase the pipe with concrete,

(b) change pipe material, or

(c) use a higher strength class of pipe.

Concrete encasement shall extend from 6 inches (150 mm) below to 6 inches (150 mm) above the outer projections of the pipe over the entire width of the trench in accordance with the City of Austin Standard Detail 501S-1," Encasement Detail w/ Casing Spacers".

The ends of the encasement pipe shall be bulkheaded (Standard Specification Item No. 507S) with concrete blocks, bricks or stones, dry-stacked without mortar, sufficient to prevent the intrusion of trench backfill material into the encasement, but fitted loosely enough to facilitate the escape of water from the encasement should carrier pipe leakage or failure occur.

505S. 5 Measurement

Concrete encasement will be measured by the lineal foot (meter: 1 meter equals 3.281 feet), for size of pipe being encased, complete in place. The measurement will be made between ends of the encasement, along the central axis as installed.

Encasement pipe installed by open cut will be measured by size of encasement installed, complete in place. The measurement will be made between the ends of the pipe, along the central axis as installed.

505S.6 Payment

Work performed and materials furnished as prescribed by this item will be included in a unit price bid item from Standard Specification Item No. 510, "Pipe" unless included as a separate pay item in the contract.

When included for payment, it shall be measured as provided under "Measurement" and will be paid at the unit bid price per lineal foot for "Concrete Encasement" or "Encasement Pipe" of the size indicated on the Drawings. The unit bid price shall include full compensation for furnishing all materials, pipe for all preparation, hauling, installation and for all labor, tools, equipment and incidentals necessary to complete the work, including bench excavation and disposal of surplus material.

Payment, when included as a contract Pay Item, will be made under one of the following:

Pay Item No. 505*S*-A:	Concrete Encasement for ___ Dia. Pipe -	Per Lineal Foot.
Pay Item No. 505*S*-B:	Encasement Pipe ___ Dia., Type ___, -	Per Lineal Foot.

End

SPECIFIC Cross Reference Materials
Standard Specification Item No. 505S, “Encasement and Encasement Pipe"

City of Austin Standard Specification Items

Designation	Description
Item 403S	Concrete For Structures
Item 507S	Bulkheads
Item 510	Pipe
Section 510.2(8)(o)	Corrugated Metal Pipe (CMP)

City of Austin Standard Details

Designation	Description
Detail 501S-1	Encasement Detail w/ Casing Spacers

American Society for Testing and Materials (ASTM)

Designation	Description
A-134	Specification for Pipe, Steel, Electric-Fusion (Arc)-Welded (Sizes NPS 16 and Over)
C-76/C-76M	Specification for Reinforced Concrete Culvert, Storm Drain, and Sewer Pipe

RELATED Cross Reference Materials
Standard Specification Item No. 505S, “Encasement and Encasement Pipe"

TxDOT Specifications

Designation	Description
Item 421	Portland Cement Concrete
Section 421.9	Quality of Concrete
Section 421.2(8)	Mortar and Grout

City of Austin Standard Specification Items

Designation	Description
Item No. 501S	Jacking or Boring Pipe
Item No. 506	Manholes
Section 510.2(8)(c)	Concrete pipe
Section 510.2(8)(m)	Steel Pipe
Item No. 593S	Concrete Retards

Item No. 506
Manholes

506.1 Description

This item governs construction of pre-cast and cast-in-place wastewater manholes, storm water manholes, storm water junction boxes and cast-in-place wastewater junction boxes, complete in place, including excavation, installation, backfilling and surface restoration; required items including rings, covers, coatings, and appurtenances; and incidental work such as pumping and drainage necessary to complete the work. Contractor-performed acceptance testing is required for wastewater manholes.

506.2 Qualifications

Applicators of coatings to the interior surfaces of wastewater manholes, as specified in 506S.4.R and 506S.5.J, shall be listed on Standard Products List WW-511.

506.3 Project Submittals

A. Products and Materials

The Contractor shall submit descriptive information and evidence that the materials the Contractor proposes for incorporation in the Work are of the kind and quality that satisfy the requirements in the Contract Documents. The City of Austin Water Utility Standard Products Lists are considered a part of the Specifications for the Work. The Contractor shall use products from the SPLs for all water and wastewater construction unless alternative products are shown on the Drawings; called for in the specifications; or specified in the Bidding Requirements, Contract Forms and Conditions of the Contract.

The products included in the Standard Products Lists current at the time of plan approval shall govern; unless a specific product or products on the lists have subsequently been removed from those SPLs because of quality or performance issues. Products and materials that are not covered by SPLs shall meet the requirements in the contract documents.

Submittals for the products and materials covered by this specification shall include manufacturer catalog sheets, technical data sheets, shop drawings, product or material test results, requirements listed below, and any other information needed to adequately describe the product or material. For products covered by SPLs, the submittal shall include a copy of the applicable SPL with the proposed product identified. An SPL by itself is not considered an adequate submittal.

The submittal requirements of this specification item include:

1. For pre-cast manholes and junction boxes: shop drawings for each structure showing, at a minimum, the Project and Contractor's name: manufacturer's name and plant location; applicable specifications; list of materials (such as adjusting rings, boots, gaskets, and pre-cast sections) by type and quantity; elevation view showing diameter or size, ring and cover size and elevation, ring type (bolted or unbolted, flared top or flared bottom) wall thickness,

elevations of transitions from large diameter sections to smaller diameter sections, base width and thickness, total depth, size of openings, reinforcement, and length of each pre-cast section; structure identification number and station location; pipe line identification; pipe material and size; pipe flowline elevations; plan view showing azimuthal orientation (based on 360 degrees clockwise) of the pipes relative to the outflow pipe; technical data sheets covering pipe-to-manhole or pipe-to-junction box connectors, and gaskets

2. For cast-in-place manholes and junction boxes: formwork drawings sealed by a registered Professional Engineer licensed in the State of Texas with documented experience in formwork design for wall pours that exceed 4 feet in height and slabs that are not ground supported

3. For hydraulic cement concrete; mix components and proportions, material sources, materials test results

4. For mortar: mix components and proportions, material sources, materials test results

5. For non-shrink grout: technical data sheet indicating ASTM type and containing instructions on surface preparation, mixing, placing, and curing procedures

6. For wastewater manhole coatings and linings: technical data sheets that include instructions on surface preparation, mixing, placing, and curing procedures

B. Acceptance Test Records

Submittal of acceptance test records is required for wastewater manholes and shall include as a minimum the following items:

Name of the manhole manufacturer

Interior surface coating type and application method

Model and manufacturer of vacuum tester

Date tested/date re-tested

Indication of whether test passed or failed and statement of corrective action taken if test failed

Test Method Used

Location/station of manhole

Type of base: Precast/cast-in-place

Type of repairs made to the joints

The test records shall also be included as part of the Project records turned in with the acceptance package.

506.4 Materials

A. Concrete

All cast-in-place concrete shall conform to City of Austin Standard Specification Item No. 403S, "Concrete for Structures." Cast in place concrete shall be Class A or as specified on the Drawings. Concrete used in precast concrete manhole base sections, riser sections and appurtenances shall conform to the requirements of Texas Department of Transportation Item 421, Hydraulic Cement Concrete. Concrete for backfill of over-excavated areas shall be City of Austin Class A, or Class J (City of Austin Standard Specification Item 403S, Concrete For Structures) or Controlled Low Strength Material (City of Austin Standard Specification Item 402S) as indicated on the Drawings.

B. Mortar

Mortar shall be composed of one part Portland cement, one part masonry cement (or 1/4 part hydrated lime), and sand equal to 2-1/2 to 3 times the sum of the volumes of the cements and lime used. The sand shall meet the requirements for "Fine Aggregate" as given in Standard Specification Item No. 403S "Concrete For Structures." Mortar shall not be used for any purpose on the inside of wastewater manholes.

C. Grout

Grout shall be the non-shrink type conforming to ASTM C 1107, Packaged, Dry, Hydraulic Cement Grout (Nonshrink), Grade C. Grout shall be used as packaged, with the mixed ingredients requiring only the addition of water.

D. Reinforcement

The reinforcing steel shall conform to the requirements of Standard Specification Item No. 406S, "Reinforcing Steel." Secondary, non-structural steel in cast-in-place stormwater manholes may be replaced by collated fibrillated polypropylene fibers, if approved by the Engineer or designated representative.

E. Brick

The brick for ring adjustment courses and for stormwater manholes shall be of first quality, sound, hard burned, perfectly shaped brick conforming to the requirements of ASTM C 62, Grade SW, or concrete brick meeting the requirements of ASTM C 55, Grade N-1.

F. Rings and Covers

Rings and covers shall conform to the requirements of City of Austin Standard Specification Item No. 503S, "Frames, Grates, Rings and Covers."

1. Replacement Rings and Covers, 24 in Diameter Lids

   This ring and cover shall be used for the replacement of broken rings and covers, minor manhole adjustment, or as otherwise directed by the Engineer or designated representative.

2. Rings and Covers, 32 in. Diameter Lids

This ring and cover shall be used for all new manhole construction, except as otherwise directed by the Engineer or designated representative.

G. Bulkheads

Bulkheads shall meet the requirements of City of Austin Standard Specification Item No. 507S "Bulkheads."

H. Precast Base Sections, Riser Sections, Flat-top Slabs and Cones

Precast concrete base sections, riser sections, flat-top slabs, and cones shall conform to the requirements of ASTM C 478. The width of the invert shall be specifically sized for the connecting pipes. Inverts shall be "U" shaped channels. The channel depth at the point where a pipe connects to the manhole wall, for pipes 24 inches in diameter and smaller, shall be a minimum of three fourths of the diameter of the pipe, with the top of the channel being a smooth transition between the inlet and outlet pipe connection points. For manholes connecting to pipes larger than 24 inches in diameter, the channel depth at the point where a pipe connects to the manhole wall shall be at least equal to the full pipe diameter. Changes in flow direction in the inverts of manholes shall be made by constructing smooth, long-radius sweeps to minimize splashing, turbulence, and eddies. The manhole invert grade shall 1) be a continuation of the inlet and outlet pipe grades carried through to the centerline of the manhole, or 2) have a minimum slope of 2.5 percent between the inlet and outlet pipe inverts, or 3) have a minimum difference of 0.10 feet between the inlet and outlet pipe inverts, whichever provides the maximum difference in invert elevation between the inlet and outlet pipes. In all cases, the bottom(s) of the channel(s) shall provide a smooth transition between the inlet and outlet pipes. Where wastewater lines enter a manhole above the flowline of the outlet, the invert shall be filleted to prevent splashing and solids deposition.

Joints for wastewater base sections, riser sections, and cones shall conform to the requirements of ASTM C 443. Additionally, joint dimensions for 48-inch inside diameter wastewater manhole sections and cones shall comply with City of Austin Standard No. 506S-13, "Wedge Seal Joint Detail, Precast Manhole Section." Joint dimensions for wastewater manhole sections and cones larger than 48-inch inside diameter shall comply with City of Austin Standard No. 506S-12, " O-Ring Joint Detail Precast Manhole Section" or City of Austin Standard No. 506S-13, "Wedge Seal Joint Detail, Precast Manhole Section". Precast bases for 48 inch inside diameter manholes shall have preformed inverts. Inserts acceptable to the Engineer or designated representative shall be embedded in the concrete wall of the manhole sections to facilitate handling; however, through-wall holes for lifting will not be permitted.

I. Precast Junction Boxes

Precast junction boxes shall be allowed only where indicated on the Drawings or acceptable to the Engineer or designated representative.

J. Pipe-to-Manhole and Pipe-to-Junction-Box Connectors

Resilient connectors, ring waterstops, and seals at connections of wastewater pipes to pre-cast and cast-in-place manholes and junction boxes shall be watertight, flexible, resilient and non-corrosive, conforming to ASTM C 923.

Metallic mechanical devices for securing the connectors, ring waterstops, and seals in place shall be Type 304 stainless steel.

K. Precast Flat-Slab Transition/Junction Box Lids

Precast slab transitions and lids shall be designed to safely resist pressures resulting from loads which might result from any combination of forces imposed by an HS-20 loading as defined by the American Association of State Highway and Transportation Officials (AASHTO). The joints of precast slab transitions and of lids for wastewater applications shall conform to the requirements of ASTM C443.

L. Precast-Prefabricated Tee Manholes

Tee manholes shall be allowed only where indicated on the Drawings or as directed by the Engineer or designated representative. The main pipe section shall conform to the requirements of City of Austin Standard Specification Item No. 510, "Pipe." The vertical manhole portion (tee) above the main pipe shall conform to the requirements of the precast components.

The manhole tee shall have a minimum inside diameter of 48 inches and shall rise vertically centered or tangent to the main pipe, as indicated on the Drawings or as directed by the Engineer or designated representative. An access hole less than 48-inches in diameter shall be cut into the main pipe to allow a ledge for support of access ladders. Unless otherwise specified on the Drawings, the main pipe portion of the tee manhole shall be included in the unit price bid for the unit tee manhole price.

M. Precast Grade Rings

Rings shall be reinforced Class A concrete

1. Precast Grade Rings, 24-1/2 inches Inside Diameter

   This adjustment ring shall be used only for adjusting existing manholes with 24 inch diameter lids and for Wastewater Access Device. Inside to outside diameter dimension of ring shall be 6 inches with a thickness of 3 inches to 6 inches.

2. Precast Grade Rings, 35 inches Inside Diameter

   This adjustment ring shall be used for all new manhole construction with 32 inch diameter lids. Inside to outside diameter dimension of ring shall be 6 inches with a thickness of 2 inches to 6 inches.

N. High Density Polyethylene Grade Rings

Plastic grade (adjusting) rings shall be injection molded from high density polyethylene identified according to ASTM D4976. Reprocessable and recyclable ethylene plastic materials are allowed. Manufacturers of HDPE adjusting rings shall be listed on SPL WW-703.

O. Controlled Low Strength Material

Controlled low strength material (CLSM) shall meet Standard Specification Item 402S, Controlled Low Strength Material.

P. Cement Stabilized Sand

Cement stabilized sand for bedding or backfilling shall contain 2 bags of Portland cement per cubic yard. The sand shall meet the requirements for "Fine Aggregate" in Standard Specification Item 403S, Concrete for Structures.

Q. Waterproofing Joint Materials

O-rings and wedge seals for the joints of all wastewater manholes, and for stormwater manholes when indicated on the Drawings, shall conform to the requirements of ASTM C443. Cold applied preformed plastic gaskets for stormwater manholes shall be as specified in City of Austin Standard Specification Item No. 510, “Pipe.” Plastic seals wrapped around manholes at joints, and hydrophillic waterstops installed in joints, shall be listed on SPL WW-146A. PVC waterstops installed in joints and waterproofing compounds applied to the exterior surfaces of manholes and junction boxes shall be as specified in the Contract Documents.

R. Interior Surface Coatings for Wastewater Manholes

Interior surface coatings for wastewater manholes shall be either: as specified on the Drawings, as designated in writing by the Engineer or designated representative, or as included on SPL WW-511, which lists acceptable products, uses and applicators.

S. Structural Lining Systems for Wastewater Manholes

Structural lining systems for wastewater manholes shall be either: as specified on the Drawings, as designated in writing by the Engineer or designated representative, or as included on SPL WW-511A.

506.5 Construction

A. General

A minimum horizontal separation of 12 inches shall be maintained between adjacent pipes inside and outside a manhole or junction box. Pipe ends within the base section or junction box walls shall not be relied upon to support overlying manhole dead and live load weights. All wastewater branch connections to new or existing mains shall be made at manholes, with the branch pipe crown installed at an elevation no lower than the elevation of the effluent pipe crown. Changes in flow direction in the inverts shall be made by constructing smooth, long-radius sweeps to minimize splashing, turbulence, and eddies. Where wastewater lines enter the manhole up to 24 inches above the flowline of the outlet, the invert shall be sloped upward in a U-shaped channel three-fourths of the diameter of the incoming pipe to receive the flow, thus preventing splashing or solids deposition. A drop pipe shall be provided for a wastewater pipe entering a manhole whenever the invert cannot be constructed to prevent splashing and solids deposition. Construction of extensions to existing systems shall require placement of bulkheads at locations indicated or directed by the Engineer or designated representative.

Unless otherwise indicated on the Drawings, stormwater manholes shall have eccentric cones and wastewater manholes shall have concentric cones, except on manholes over large mains where an eccentric cone shall be situated to provide access to an invert ledge. Eccentric cones may be used where conflicts with other

utilities dictate. Flat-slab tops may be used only where clearance problems are encountered or where specified on the Drawings. Cast-in-place wastewater junction boxes shall be allowed only where indicated on the Drawings or where accepted by the Engineer or designated representative.

B. Foundation Support

Manholes shall be founded at the established elevations on uniformly stable subgrade. Unstable subgrade shall be over-excavated a minimum of 12 inches and replaced with a material acceptable to the Engineer or designated representative. Precast base units shall be founded and leveled on a 6 inch thick layer of coarse aggregate bedding. A pipe section with a prefabricated tee manhole and half the length of the adjoining pipe sections on each side shall be founded on a minimum of 6 inch thick layer of unreinforced Class A concrete (City of Austin Standard Specification Item No. 403S, “Concrete For Structures”). The cast-in-place concrete cradle shall be placed against undisturbed trench walls up to the pipe’s springline.

C. Cast-in-Place Concrete

Structural concrete work shall conform to Standard Specification Item No. 410S, Concrete for Structures. Forms shall be used for all slabs that are not ground supported and for all vertical surfaces above the foundation level. Formwork shall be designed according to American Concrete Institute ACI 347, Guide to Formwork for Concrete. Outside forms on vertical surfaces may be omitted where concrete can be cast against the surrounding earthen material that can be trimmed to a smooth vertical face.

D. Manhole Bases

Pre-cast bases shall conform to requirements in 506.4.H.

Cast-in-place bases shall have a minimum thickness of 12 inches at the invert flowline. The widths of all manhole inverts shall be specifically sized for the connecting pipes. Inverts shall be “U” shaped channels. The channel depth at the point where a pipe connects to the manhole wall, for pipes 24 inches in diameter and smaller, shall be a minimum of three-fourths of the pipe diameter, with the top of the channel being a smooth transition between the inlet and outlet pipe connection points. For manholes connecting to pipes greater than 24 inches in diameter, the channel depth at the point where a pipe connects to the manhole wall shall be equal to the full pipe diameter. The manhole invert grade shall

1) be a continuation of the inlet and outlet pipe grades carried through to the centerline of the manhole, or
2) have a minimum slope of 2.5 percent between the inlet and outlet pipe inverts, or
3) have a minimum difference of 0.10 feet between the inlet and outlet pipe inverts,

whichever provides the maximum difference in invert elevation between the inlet and outlet pipes. In all cases, the bottom(s) of the channel(s) shall provide a smooth transition between the inlet and outlet pipes. Changes in flow direction in the inverts of manholes shall be made by constructing smooth, large-radius sweeps to prevent splashing, turbulence, and eddies. The lowermost riser section

may be set in the Portland cement concrete, while still plastic, after which the base shall be cured a minimum of 24 hours prior to proceeding with construction of the manhole up to 12 feet in depth. The base shall be cured an additional 24 hours prior to continuing construction above the 12-foot level.

Wastewater manholes having cast-in-place bases may be constructed over existing wastewater pipes and the top half of the pipe removed to facilitate invert construction, except where the existing pipe is PVC, in which case, the entire pipe shall be removed from inside the manhole. The manhole floor shall rise outwardly from the springline elevation of the pipe, approximately one inch for each 12 inch of run (8 percent slope). The floors of stormwater manholes, also, shall rise outwardly from the springline elevation of the pipe, approximately one inch for each 12 inches of run (8 percent slope).

Wastewater manholes with lines larger than 18 inches shall require pre-cast bases; manholes constructed over in-service mains however, may be built on cast-in-place bases if the flow cannot be interrupted.

E. Pipe Connections to Manholes and Junctions Boxes

Wastewater pipe connections to manholes and junction boxes shall be made using flexible, resilient, and non-corrosive watertight boot connectors or ring waterstops acceptable to the Engineer and conforming to the requirements of ASTM C-923. Any voids in the annular space between the pipe and boot connector or ring waterstop and the inside of the manhole wall shall be filled with non-shrink grout to prevent solids collection.

F. Pipe Connections to Existing Manholes and Junction Boxes

Wastewater pipe connections to existing manholes and junction boxes shall be made by removing the wall section by coring or alternative method approved by the Engineer or designated representative; installing flexible, resilient, and non-corrosive boot connectors or ring waterstops acceptable to the Engineer or designated representative and conforming to the requirements of ASTM C-923; filling any voids in the annular space between the pipe and boot connector or ring waterstop and the inside of the manhole or junction box wall with non-shrink grout; rebuilding the invert to conform to Section 506S.5.D; rehabilitating the interior walls with structural lining material listed on SPL WW-511A, and coating the interior of the manhole with material listed on SPL WW-511.

G. Waterproofing

PVC waterstops, hydrophillic waterstops, joint wrapping, and waterproofing compounds shall be installed as specified. Material wrapped around manholes at joints shall be listed on SPL WW-146A regardless of whether installation of the material is required by the Contract for waterproofing or is volunteered by the Contractor for ensuring acceptance of the manhole joints.

H. Backfilling

Backfilling of manholes shall conform to the density requirements of City of Austin Standard Specification Item No.510, Pipe. Manhole construction in roadways may be staged to facilitate pavement base construction. Manholes constructed to interim elevations to facilitate interim construction shall be covered with steel plates

that conform to the requirements of City of Austin Standard 804S-4, sheets 5, 6 and 7, Steel Plating. Steel plates on wastewater manholes shall be set in mortar to minimize inflow of storm water runoff. Manholes shall be completed to finish elevation prior to placement of the roadway's finish surface except on pavement reconstruction projects, where castings may be adjusted after paving is completed. The excavation for completion of manhole construction shall be backfilled in accordance with City of Austin Standards for Trench Repair.

I. Height Adjustment of Manholes

1. General

All adjustments shall be completed prior to the placement of the final roadway surface except on pavement reconstruction projects, where castings may be adjusted after paving is completed.

Brick shall not be used in making height adjustments to wastewater manholes. Mortar shall not be used for any purpose on the inside of wastewater manholes.

Manhole components to be reused shall be carefully removed and the contact areas shall be cleaned of all mortar, concrete, grease and sealing compounds. Any items broken in the process of removal and cleaning shall be replaced in kind by the Contractor at its expense.

If the adjustment involves lowering the top of a manhole, a sufficient depth of pre-cast concrete rings or brick courses shall be removed to permit reconstruction. Existing mortar shall be cleaned from the top surface remaining in place and from all brick or concrete rings to be reused and the manhole rebuilt to the required elevation. The manhole ring and cover shall then be installed with the top surface conforming to the proposed grade.

If the adjustment involves raising the elevation of the top of the manhole in accordance with Minor Manhole Height Adjustment," the top of brick or concrete ring shall be cleaned and built up vertically to the new elevation, using new or salvaged concrete rings or bricks and the ring and cover installed with the top surface conforming to the proposed grade.

After rings and covers are set to grade, the inside and outside of the precast concrete grade rings shall be wiped with non-shrink grout to form a durable surface and water-tight joints. The grouted surface shall be smooth and even with the manhole cone section. Grout shall not be placed when the atmospheric temperature is at or below 40F. If a sudden drop in temperature below 40F occurs or tempartures below 40F are predicted, the grouted surfaces shall be protected against freezing for at least 24 hours.

2. Minor Manhole Height Adjustment (New and Existing Manholes)

Minor manhole height adjustments shall be performed as indicated on City of Austin Standard 506S-4, "Minor Manhole Height Adjustment", and shall consist of adding precast reinforced concrete rings to adjust new and existing manholes to final grade. Brick shall not be used in making height adjustments to wastewater manholes.

If the adjustment involves raising the elevation of the top of the manhole, the top of brick or concrete ring shall be cleaned and built up vertically to the new elevation, using new or salvaged concrete rings or bricks and the ring and cover installed with the top surface conforming to the proposed grade.

For new manhole construction, the maximum allowable throat or chimney height, including the depth of the ring casting, shall be limited to 21 inches of vertical face on the interior surface. For adjustments of existing manholes that fall within the limits of overlay and street reconstruction projects, the maximum vertical allowable height, including the depth of the ring casting, shall be limited to 27 inches of vertical face on the interior surface. All other existing manholes shall have a maximum allowable throat or chimney height adjustment, including the depth of the ring casting, of 12 inches of vertical face on the interior surface. Any adjustment that will exceed these requirements shall be accomplished as indicated on City of Austin Standard 506S-2, Major Manhole Height Adjustment and as described below. Manholes not located in paved areas shall have bolted covers. Manholes located within paved areas (street right of way only) shall be standard non-bolted unless otherwise noted on the drawings.

3. Major Manhole Height Adjustment (Existing Manholes Only)

Any adjustment that exceeds the requirements of Minor Manhole Adjustments, shall be accomplished as indicated on City of Austin Standard 506S-2, Major Manhole Height Adjustment, and shall consist of any combination of removing the concrete rings, and/or the manhole cone section, and/or the straight riser section of the manhole in order to bring the manhole to final grade. Major manhole adjustments shall apply only to existing manholes. Manholes not located in paved areas shall have bolted covers. Manholes located within paved areas (street right of way only) shall be standard non-bolted unless otherwise noted on the drawings.

J. Interior Coatings of Wastewater Manholes and Junction Boxes

The interior surfaces of all Portland cement concrete wastewater manholes and junction boxes shall be coated with products specified either on the Drawings, designated in writing by the Engineer or representative, or listed on SPL WW-511. Product selection shall conform to usage described in that SPL. Surface preparation shall follow the product manufacturer's recommended procedures contained in technical data sheets unless otherwise specified in the contract documents. The Contractor shall measure the coating thickness according to ASTM D 6132, Nondestructive Measurement of Dry Film Thickness of Applied Organic Coatings Over Concrete Using an Ultrasonic Gage. Thickness measures shall be made at locations designated by the Engineer or designated representative. All thickness measurements shall be witnessed by the Engineer or designated representative.

K. Structural Linings of Existing Wastewater Manholes

The interior surfaces of existing wastewater manholes and junction boxes at locations shown in the Drawings or as designated by the Engineer shall be strengthened by application of structural lining systems either as specified on the Drawings, directed in writing by the Engineer or designated representative, or listed

on SPL WW-511A. Selection of products for coating the interior of existing manholes shall be based on the condition of the manholes. Surface preparation shall follow the product manufacturer's recommended procedures contained in technical data sheets unless otherwise specified in the contract documents.

L. Abandonment of Existing Manholes

Manholes designated on the Drawings for abandonment, shall be removed to a level not less than four feet below grade. Two-foot long sections of the inlet and outlet pipes shall be cut and removed on the outside of the manhole, the ends of the remaining pipe and the pipe sections penetrating the manhole wall shall be securely plugged, and the structure filled with material in accordance with Standard 506S-15 or as directed by the Engineer or designated representative.

506.6 Acceptance Testing of Wastewater Manholes

Manholes shall be tested separately and independently of the wastewater lines.

A. Test by the Vacuum Method

A vacuum test shall be performed by the Contractor prior to backfilling those manholes that fall within the right-of-way that require detouring of vehicular traffic. A second vacuum test will not be required after backfilling and compaction is complete unless there is evidence that the manhole has been damaged or disturbed subsequent to the initial vacuum test.

For manhole installations which do not require detouring of vehicular traffic, the vacuum method is recommended and may be used by the Contractor prior to backfilling the manhole to insure proper installation so that defects may be located and repaired; however, a vacuum test shall be performed after backfilling, and compaction are complete. Testing after backfill and compaction are complete will be the basis for acceptance of the manhole.

1. Equipment

   a) The manhole vacuum tester shall be a device approved for use by the Engineer or designated representative.

   b) Pipe sealing plugs shall have a load resisting capacity equal to or greater than that required for the size of the connected pipe to be sealed.

2. Procedures - applicable to new 48-inch diameter manholes

   a) Manhole section interiors shall be carefully inspected; units found to have through-wall lift holes, or any penetration of the interior surface by inserts provided to facilitate handling, will not be accepted. Coating shall be applied after the testing unless coating is applied before installation or unless it is applied at the factory. All lift holes and exterior joints shall be plugged with an acceptable non-shrink grout. No grout shall be placed in horizontal joints. Tests shall be performed before grouting the invert or around pipe penetrations and before coating the interior surfaces of the manhole or junction box.

b) After cleaning the interior surfaces of the manhole, the Contractor shall place and inflate pneumatic plugs in all of the connecting pipes to isolate the manhole; sealing pressure within the plugs shall be as recommended by the plug manufacturer. Plugs and the ends of pipes connected by flexible boots shall be blocked to prevent their movement during the vacuum test.

c) The vacuum test head shall be placed on the top of the cone section or, inside of the top of the manhole cone section, and the compression seal band inflated to the pressure recommended by its manufacturer. The vacuum pump shall be connected to the outlet port with the valve open. When a vacuum of 10 inches of mercury (-5 psig) has been attained, the valve shall be closed and the time noted. Tampering with the test equipment will not be allowed.

d) The manhole shall have passed the test if the vacuum does not drop below 9 inches of mercury (-4.5 psig) within 3 minutes of the time the valve was closed. The actual vacuum shall be recorded at the end of the 3 minutes during which the valve was closed.

e) When the standard vacuum test cannot be performed because of design or material constraints (examples: T-Type manholes, T-Lock Liners, or other reasons acceptable to the Engineer or designated representative), testing of individual joints shall be performed as directed by the Engineer or designated representative.

B. Test by the Exfiltration Method

At the discretion of the Engineer or designated representative, the Contractor may substitute the Exfiltration Method of testing for the Vacuum test described in Section 506.6. A. above. This method may only be used when ground water is not present. If ground water is present a Vacuum Test shall be used unless otherwise directed by the Engineer or designated representative. All backfilling and compaction shall be completed prior to the commencement of testing.

The procedures for the test shall include the following:

1. Manhole section interiors shall be carefully inspected; units found to have through-wall lift holes, or any penetration of the interior surface by inserts provided to facilitate handling, will not be accepted. Coating shall be applied after the testing unless coating is applied before field assembly, or at the factory. All lift holes and exterior joints shall be plugged with an acceptable non-shrink grout. No grout shall be placed in horizontal joints. Tests shall be performed before grouting the invert or around pipe penetrations and before coating the interior surfaces of the manhole or junction box.

2. After cleaning the interior surface of the manhole, the Contractor shall place and inflate pneumatic plugs in all of the connecting pipes to isolate the manhole; sealing pressure within the plugs shall be as recommended by the plug manufacturer.

3. Concrete manholes shall be filled with water or otherwise thoroughly wetted for a period of 24 hours prior to testing.

4. At the start of the test, the manhole shall be filled to the top with water. The test time shall be 1 hour. The Construction Inspector must be present for observation during the entire time of the test. Permissible loss of water in the 1-hour test time is 0.025 gallons per diameter foot, per foot of manhole depth. For a 4-foot diameter manhole, this quantity converts to a maximum permissible drop in the water level (from the top of the manhole cone) of 0.1 inches per foot of manhole depth or 1.0 inches for a 10-foot deep manhole.

C. Failure to Pass the Test – Records of Tests

If the manhole fails to pass the initial test method as described in (A) Test by the Vacuum Method and, if allowed, (B) Test by the Exfiltration Method, or if visible groundwater leakage into the manhole is observed, the Contractor shall locate the leak, if necessary by disassembly of the manhole. The Contractor shall check the gaskets and replace them if necessary. The Contractor may re-lubricate the joints and re-assemble the manhole, or the Contractor may install an acceptable exterior joint sealing product (see City of Austin Standard Products List Item SPL WW-146A) on all joints and then retest the manhole. If any manhole fails the vacuum and/or exfiltration test twice, the Contractor shall consider replacing that manhole. If the Contractor chooses to attempt to repair that manhole, the manhole must be retested until it passes. In no case shall cold applied preformed plastic gaskets be used for repair. Records of all manhole testing shall be made available to the Engineer or designated representative at the close of each working day, or as otherwise directed by the Engineer or designated representative. Any damaged or visually defective products, or any products out of acceptable tolerance shall be removed from the site.

D. Inspection

The Engineer or designated representative shall make a visual inspection of each manhole after it has passed the testing requirements and is considered to be in its final condition. The inspection shall determine the completeness of the manhole; any defects shall be corrected to the satisfaction of Engineer or designated representative.

506.7 Measurement

A "Junction Box" and "Box Manholes" will be measured by each structure of the indicated size regardless of depth.

A "Standard Pre-cast Manhole with Pre-cast Base", "Standard Pre-cast Manhole with Cast-in-Place (CIP) Base", “Special Manhole", "Drop Manhole with Pre-cast Base", "Drop Manhole with Cast-in-Place (CIP) Base”, "Centered Tee Manhole", or "Tangent Tee Manhole" will be measured by each structure of the indicated size for the first 8 feet of depth.

An "Extra Depth Manhole" will be measured by linear vertical foot of Standard Pre-cast Manhole with Pre-cast Base, Standard Pre-cast Manhole with CIP Base, Drop Manhole with Pre-cast Base, Drop Manhole with CIP Base, Special Manhole, Centered Tee Manhole, or Tangent Tee Manhole of the indicated size in excess of eight feet of depth.

Manhole depth will be measured from the invert flow line to the finished surface elevation.

"Minor Manhole Height Adjustment" and "Major Manhole Height Adjustment" will be measured by each unit for the indicated size. Only existing manholes will be measured for minor or major manhole height adjustment.

"Connection to Existing Manhole or Junction Box" will be measured per each for the indicated type of structure and location.

"Structural Lining" will be measured by the linear vertical foot for the indicated structure.

New manholes constructed to interim elevations to facilitate stage construction shall be measured as one unit regardless of the number of interim elevations constructed. All labor, materials and other expenses necessary for the stage construction shall be included in the unit price bid for the completed unit. Cost of abandonment of existing manholes shall be included in the unit price bid for the completed unit, unless Pay Item No. 506 AB is indicated on the Drawings and identified in Standard Contract Bid Form 00300U.

506.8 Payment

Payment for completed junction boxes and manholes of the type indicated on the Drawings shall be made at the appropriate unit bid price. The unit bid price shall include all labor, equipment, materials, (including but not limited to frames and grates, rings and covers, adjusting rings, cone sections, riser sections, gaskets, drop piping and fittings, bases, pipe-to-manhole connectors, concrete, reinforcing steel, non-shrink grout, mortar, joint wrap where specified, and, for wastewater manholes, interior coatings), time and incidentals necessary to complete the work.

Payment for a "Junction Box" and "Box Manhole" will be made at the unit price bid for the indicated size, complete in place.

Payment for the first 8 feet of a "Standard Pre-cast Manhole with Pre-cast Base", "Standard Pre-cast Manhole with Cast-in-Place (CIP) Base", "Special Manhole", "Drop Manhole with Pre-cast Base", "Drop Manhole with Cast-in-Place (CIP) Base","Centered Tee Manhole", or "Tangent Tee Manhole" will be made at the unit price bid for the indicated type and size, complete in place.

Payment for that portion of a Standard Pre-cast Manhole with Pre-cast Base, Standard Pre-cast Manhole with CIP Base, Drop Manhole with Pre-cast Base, Drop Manhole with CIP Base, Special Manhole, Centered Tee Manhole, or Tangent Tee Manhole in excess of 8 feet in depth will be made at the unit price bid for "Extra Depth Manhole" of the indicated type and size, complete in place.

Payment for "Minor Manhole Height Adjustment" and "Major Manhole Height Adjustment" will be made at the unit bid price, complete in place.

Payment for "Structural Lining" will be made at the unit price per linear vertical foot, which will include surface preparation, environmental adjustments, lining application, and curing, as required.

Payment for "Connection to Existing Manhole or Junction Box" shall be made at the unit price per connection and will include removing the wall section by coring or alternative method approved by the Engineer or designated representative, rehabilitating the interior walls, rebuilding the invert, and preparing and coating the interior surfaces of the structure.

When indicated in the Drawings, abandonment of existing manholes shall be made at the unit price for abandonment.

The intended use of each item shall be designated by a two-letter code (Wastewater = WW; Stormwater = SW) in the spaces provided after the pay item number:

Pay Item No. 506S M__:	Standard Pre-cast Manhole w/Pre-cast Base, ___ Dia.	Per Each.
Pay Item No. 506S M1__:	Standard Pre-Cast Manhole w/CIP Base, ___ Dia.	Per Each.
Pay Item No. 506S S__:	Special Manhole, ___ Dia.	Per Each.
Pay Item No. 506S D__:	Drop Manhole w/Pre-cast Base, ___ Dia.	Per Each.
Pay Item No. 506S D1__:	Drop Manhole w/CIP Base, ___ Dia.	Per Each.
Pay Item No. 506S C__:	Centered Tee Manhole, __ Dia. x ___ Dia.	Per Each.
Pay Item No. 506S T__:	Tangent Tee Manhole, ___ Dia. x ___ Dia.	Per Each.
Pay Item No. 506S J__:	Junction Box, ___ Ft. x ___ Ft.	Per Each.
Pay Item No. 506S B__:	Box Manhole ___ Ft. x ___ Ft.	Per Each.
Pay Item No. 506S 2__:	Major Manhole Height Adjustment, ___ Dia.	Per Each.
Pay Item No. 506S 4__:	Minor Manhole Height Adjustment, ___ Dia.	Per Each.
Pay Item No. 506S AB__:	Abandonment of existing Manholes:	Per Each.
Pay Item No. 506S EDM__	Extra Depth of Manhole, ___ Dia.	Per Linear Vert. Foot.
Pay Item No. 506S SL__:	Structural Lining of _____:	Per Linear Vert. Foot.
Pay Item No. 506S CN__:	Connection to Existing _____:	Per Each.

End

***SPECIFIC* CROSS REFERENCE MATERIALS**
Standard Specification Item No. 506, "Manholes"

City of Austin Standard Specifications

Designation	Description
Item 403S	Concrete For Structures
Item 406S	Reinforcing Steel
Item 402S	Controlled Low Strength Material
Item 410S	Concrete Structures
Item 503S	Frames, Grates, Rings and Covers
Item 504S	Adjusting Structures
Item 507S	Bulkheads
Item 510	Pipe

Texas Department of Transportation Standard Specifications
For Construction and Maintenance of Highways, Streets and Bridges

Designation	Description
Item 421	Hydraulic Cement Concrete

City of Austin Utilities Criteria Manual

Designation	Description
Section 2.8.0	Abandonment of Facilities
Subsection 2.8.2	Manholes

City of Austin Water Utility Documents

Designation	Description
SPL WW-146A	Manhole Seals, Plastic, Watertight
SPL WW-511	Lining System for Wastewater Manholes
SPL WW-511A	Structural Lining System for Wastewater Manholes
SPL WW-703	Adjusting (grade) rings for manhole chimney sections

City of Austin Standard

Designation	Description
506S-2	Major Manhole Height Adjustment
506S-4	Minor Manhole Height Adjustment
506S-15	Abandoned Manhole
506S-12	O-Ring Joint Detail, Precast Manhole Section
506S-13	Wedge Seal Joint Detail, Precast Manhole Section Adjustment
506S-15	Abandoned Manhole
804S-4, 5, 6 and 7 of 9	Steel Plating

City of Austin Standard Contract

Designation	Description
00300U	Bid Form (Unit Prices)

American Society for Testing and Materials (ASTM)

Designation	Description
ASTM C 55	Specification for Concrete Building Brick
ASTM C 62	Specification for Building Brick Solid Masonry Units Made from Clay of Shale
ASTM C478/C478M	Standard Specification for Precast Concrete Manhole
ASTM C443/C443M	Specification for Joints for Circular Concrete Sewer and Culvert Pipe, Using Rubber Gaskets
ASTM C923/C923M	Specification for Resilient Connectors Between Reinforced Concrete Manhole Structures Pipes
ASTM C1107	Specification for Packaged Dry, Hydraulic-Cement Grout (Nonshrink)
ASTM D6132	Specification for Polyethylene Plastics Molding and Extrusion Materials
D4976	Test Method for Nondestructive Measurement of Dry Film Thickness of Applied Organic Coating Over Concrete Using an Ultrasonic Gage

American Concrete Institute

Designation	Description

Item 347	Guide to Formwork for Concrete

***RELATED* CROSS REFERENCE MATERIALS**
Standard Specification Item No. 506, "Manholes"

City of Austin Utilities Criteria Manual

Designation	Description
Section 2	Water and Wastewater Design Criteria

City of Austin Standards

Designation	Description
1100S-1	Casting Adjustments
503S-4S	Storm Sewer Manhole Ring and 32" Cover
503S-4W	Sanitary Sewer Manhole Ring and 32" Cover
503S-5S	Bolted Storm Sewer Manhole Ring and 32" Cover
503S-5W	Watertight Manhole Ring and 32" Cover (W&WW)
506S-1	Manhole Invert Plan
506S-5	Typical Box Manhole 30" and Larger Pipe
506S-7	Precast Manhole with Drop Inlet on Cast in Place Foundation
506S-8	Precast Manhole with Drop Inlet on Precast Base
506S-9	Precast Manhole On Cast-In-Place Foundation
506S-10	Wastewater Manhole on Precast Base
506S-11	Storm Sewer Manhole Details

American Association of State Highway and Transportation Officials (AASHTO)

Designation	Description
M306	Standard Specifications for Drainage Structure Castings

509S.1 Description

This item shall govern the designing, furnishing, installing, maintaining and removing or abandoning of temporary Excavation Safety Systems consisting of trench shields, aluminum hydraulic shoring, timber shoring, trench jacks, tieback or braced sheeting, tieback slurry walls, soil nailing, rock bolting, tieback or braced soldier piles and lagging, and other systems for protecting workers in excavations. This item shall also govern the designing and constructing of sloping and benching systems for protecting workers in excavations.

At a minimum, the Excavation Safety Systems shall conform to United States Department of Labor Rules 29 CFR, Occupational Safety and Health Administration, Part 1926 Safety and Health Regulations for Construction, Subpart P, Excavation (hereinafter called OSHA).

This specification is applicable for projects or work involving either inch-pound or SI units. Within the text, the inch-pound units are given preference followed by SI units shown within parentheses.

509S.2 Definitions

"Competent Person" shall mean one who is capable of identifying existing and predictable hazards in the surroundings, or working conditions which are unsanitary, hazardous, or dangerous to employees, and who has authorization to take prompt corrective measures to eliminate them. The competent person shall be capable of interpreting the manufacturer's data sheets and interpreting and implementing the Excavation Safety System Plan.

An "Excavation" shall mean any cut, cavity, trench, or depression in an earth surface, formed by earth removed by the Contractor. The Contractor shall provide an Excavation Safety System for all excavations except when 1) the excavation is in stable rock as determined by the Texas-licensed Professional Engineer who prepared the Contractor's Excavation Safety System Plan or 2) the excavation is less than 5 feet (1.52 m) in depth and examination of the ground by the Contractor's competent person provides no indication of a potential cave-in.

"Trench" (trench excavation) shall mean any narrow excavation (in relation to its length) made below the surface of the ground. In general, the depth shall be greater than the width, but the width of a trench (measured at the bottom) shall not be greater than 15 feet (4.56 m). Excavation Safety Systems for such trenches shall be defined as "Trench Excavation Safety Protective Systems".

If the Contractor installs or constructs forms or other structures in an excavation such that the dimension measured from the forms or structures to the sides of the excavation is reduced to 15 feet (4.6 m) or less (measured at the bottom of the excavation), those excavations shall also be defined as a Trench if workers must enter it. Excavation Safety Systems for such trenches shall also be defined as "Trench Excavation Safety Protective Systems".

509S.3 Excavation Safety System Submittals

A. The Notice to Proceed with construction may be issued by the Owner before the Contractor has submitted the necessary Excavation Safety Plan(s); however, excavation shall not proceed until the Owner has received the Contractor's Excavation Safety Plan(s) for the Project.

B. Prior to Starting Excavation

Prior to starting any Excavation, the Contractor shall submit to the Owner:

1. A certificate indicating that the Contractor's Competent Person(s) has completed training in an excavation safety program based on OSHA regulations within the past 5 years.
2. Manufacturer's tabulated data or other tabulated data for Excavation Safety Systems consisting of pre-engineered protective systems such as trench shields, aluminum hydraulic shoring, timber shoring, pneumatic shoring, or trench jacks, or benching or sloping or other protective systems that are not designed specifically for the Project.

   Manufacturer's tabulated data shall meet the requirements in OSHA and shall describe the specific equipment to be used on the Project. Tabulated data must bear the seal of the licensed professional engineer who approved the data. Manufacturer's tabulated data shall be an attachment to the Contractor's Excavation Safety System Plan described below.

509S.4 Excavation Safety System Plan

The Contractor shall prepare an Excavation Safety System Plan (hereafter called the "Plan") specifically for the Project. The Contractor shall retain a Texas-licensed Professional Engineer to prepare the Plan. On City-funded projects, the Contractor must follow qualifications-based procedures to procure the required Professional Engineering services, according to Chapter 2254 of the Texas Government Code.

The Contractor shall be responsible for obtaining geotechnical information necessary for design of the Excavation Safety System. If geotechnical information for design of the Project has been acquired by the Owner or designated representative, it shall be provided to the Contractor for information purposes subject to the provisions of City of Austin Standard Contract Section 00220, "Geotechnical Data."

A. The Plan for Excavation Safety Systems consisting of pre-engineered protective systems such as trench shields, aluminum hydraulic shoring, timber shoring, pneumatic shoring, or trench jacks, or benching or sloping or other protective systems that are not designed specifically for the Project shall include:

   1. Detailed Drawings of the Excavation Safety System(s) that will provide worker protection conforming to OSHA. The Drawings shall note the required load carrying capacity, dimensions, materials, and other physical properties or characteristics in sufficient detail to describe thoroughly and completely the Excavation Safety System(s).
   2. Drawings, notes, or tables clearly detailing the specific areas of the Project in which each Excavation Safety System shall be used, the permissible size of the excavation, the length of time that the excavation shall remain open, the means of egress from the excavation, the location of material storage sites in relation to the excavation, the methods for placing/compacting bedding/backfill within the safety of the system, any excavation safety equipment restrictions and subsequent removal of the system.
   3. Recommendations and limitations for using the Excavation Safety Systems.
   4. A Certificate of Insurance of the Excavation Safety System Engineer's Professional Liability Insurance coverage. For City-funded projects, coverage meeting the requirements of Standard Contact Documents Section 00810 shall be provided. For privately funded projects the coverage shall be at least $1,000,000.

B. The Plan for Excavation Safety Systems consisting of tieback or braced sheeting, tieback or braced soldier piles and lagging, slurry walls, soil nailing, rock bolting or other protective systems that are designed specifically for the Project shall include:

1. Detailed Drawings of the Excavation Safety System(s) that will provide worker protection conforming to OSHA. The Drawings shall note the design assumptions, design criteria, factors of safety, applicable codes, dimensions, components, types of materials, and other physical properties or characteristics in sufficient detail to describe thoroughly and completely the Excavation Safety System(s).
2. Detailed technical specifications for the Excavation Safety System addressing the properties of the materials, construction means and methods, quality control and quality assurance testing, performance monitoring, and monitoring of adjacent features, as appropriate.
3. Drawings that clearly detail the specific areas of the Project in which each type of system shall be used and showing the plan and elevation (vertical profile) views.
4. Drawings, notes or tables clearly detailing the length of time that the excavation shall remain open, the means of egress from the excavation, the location of material storage sites in relation to the excavation, the methods for placing/compacting bedding/backfill within the safety of the system, any excavation safety equipment restrictions and subsequent removal or abandonment of the system or parts thereof.
5. Recommendations and limitations for using the Excavation Safety Systems.
6. A Certificate of Insurance of the Excavation Safety System Engineer's Professional Liability Insurance coverage. For City-funded projects, coverage meeting the requirements of Standard Contract Documents Section 00810 shall be provided. For privately funded projects the coverage shall be at least $1,000,000.

509S.5 Excavation Safety System Submittal Review

Review of the Excavation Safety System submittal conducted by the Owner or designated representative shall only relate to conformance with the requirements herein. The Owner's failure to note exceptions to the submittal shall not relieve the Contractor of any or all responsibility or liability for the adequacy of the Excavation Safety System. The Contractor shall remain solely and completely responsible for all Excavation Safety Systems and for the associated means, methods, procedures, and materials.

509S.6 Contractor’s Responsibility

The Contractor shall be responsible for implementing the Excavation Safety System Plan and for confirming that the Excavation Safety System(s) used on the Project meets the requirements of the Plan.

The Contractor’s Competent Person(s) shall be on the Project whenever workers are in an excavation meeting the definitions of a Trench given in 509S.2.

509S.7 Construction Methods

The Contractor's Competent Person(s) shall maintain a copy of appropriate OSHA regulations onsite and shall implement OSHA excavation safety regulations at the work site. The Contractor shall perform all excavation in a safe manner and shall maintain the Excavation Safety Systems to prevent death or injury to personnel or damage to structures, utilities or property in or near excavation.

If evidence of possible cave-ins or earthen slides is apparent or an installed Excavation Safety System is damaged, the Contractor shall immediately cease work in the excavation, evacuate

personnel from any potentially hazardous areas and notify the Owner. Personnel shall not be allowed to re-enter the excavation until necessary repairs or replacements are completed and are inspected and approved by the Contractor's Competent Person(s). Repair and replacement of damaged Excavation Safety System shall be at the Contractor's sole expense.

509S.8 Changed Conditions

When changed conditions require modifications to the Excavation Safety System, the Contractor shall provide to the Owner or designated representative a new design or an alternate Excavation Safety System Plan that is proposed by the Contractor's Excavation Safety System Engineer to address the changed conditions. Copies of the new design or alternate system shall be provided to the Owner or designated representative in accordance with the requirements of section 509S.3, "Excavation Safety System Plan Submittals". A copy of the most current Excavation Safety System Plan shall be maintained on site and made available to inspection and enforcement officials at all times.

Any changes to the Excavation Safety System Plan that are initiated by the Contractor for operational efficiency or as a result of changed conditions, that could be reasonably anticipated, will not be cause for contract time extension or cost adjustment. When changes to the Excavation Safety System Plan are necessitated by severe and uncharacteristic natural conditions or other conditions not reasonably within the control of the Contractor, the Contractor may make a written request to the Owner for a Change Order to address the anticipated work. The Contractor shall notify the Owner in writing within 24 hours of the occurrence of changed conditions that the Contractor anticipates the submittal of a claim for additional compensation. Under 'Changed Conditions" the work deemed immediately necessary by the Contractor to protect the safety of workers and public, equipment or materials may only be accomplished until the Owner or designated representative has a reasonable opportunity to investigate the Contractor's written request for a Change Order and respond in writing to the request.

509S.9 Measurement

Trench Excavation Safety Protective Systems will only be measured and paid for those trenches that workers would reasonably be expected to enter.

Trench Excavation Safety Protective Systems for Trenches excavated to a final width (measured at the bottom of the excavation) not exceeding 15 feet (4.56 m) shall be measured by the linear foot (meter: 1 meter equals 3.281 feet) through manholes, bore pits, receiving pits, and other appurtenances along the centerline of the trench. This method of measurement shall apply to any and all protective systems, including but not limited to tieback or braced sheeting, tieback or braced soldier piles and lagging, slurry walls, soil nails, rock bolts, shoring, trench boxes, and sloping or benching as used to provide a Trench Excavation Safety Protective System in accordance with the Excavation Safety System Plan.

Trench Excavation Safety Protective Systems for Trenches created by installation or construction of forms or other structures in an excavation whose width is greater than 15 feet (4.56 m) such that the dimension measured from the forms or structures to the sides of the excavation is reduced to 15 feet (4.56 m) or less (measured at the bottom of the excavation) shall be measured by the linear foot along the centerline of the Trench. Where forms or structures create multiple Trenches in one excavation, each Trench shall be measured separately. This method of measurement shall apply to any and all protective systems, including but not limited to tieback or braced sheeting, tieback or braced soldier piles and lagging, slurry walls, soil nails, rock bolts, shoring, trench boxes, and sloping or benching as used to provide a Trench Excavation Safety Protective System in accordance with the Excavation Safety System Plan.

509S.10 Payment

Payment for Trench Excavation Safety Protective Systems, measured as prescribed above, will be made at unit bid price per centerline linear foot of Trench. The unit bid price shall include full compensation for designing, furnishing, installing the system; for dewatering, and for maintaining, replacing, repairing and removing the Trench Excavation Safety Protective System and for sloping, special clearing, and excavation necessary to safely implement the Excavation Safety System Plan. No payment will be made for Trench Excavation Safety Protective Systems made necessary by the Contractor's selection of an optional design or sequence of work that creates the need for the Trench Excavation Safety Protective System.

Payment will be made under the following:

Pay Item No. 509S-1: Trench Excavation Safety Protective Systems, (all depths) Per Linear Foot.

END

SPECIFIC Cross Reference Materials
Standard Specification Item No. 509S, "Excavation Safety Systems"

City of Austin Standard Contract Documents

Designation	Description
Section 00020	Invitation for Bids
Section 00220	Geotechnical Data
Section 00650	Certificate of Insurance
Section 00700, Article 6.11	Safety and Protection
Section 810	Supplemental General Conditions

29 CFR, Occupational Safety and Health Administration, Part 1926 Safety and Health Regulations for Construction, Subpart P, Excavation
Texas Health and Safety Code Title 9 Chapter 756 Subchapter C
Texas Government Code Chapter 2254

RELATED Cross Reference Materials
Standard Specification Item No. 509S, "Excavation Safety Systems"

Texas Department of Transportation Standard Specifications
For Construction and Maintenance of Highways, Streets, and Bridges

Designation	Description
Item 104	Removing Concrete
Item 110	Excavation
Item 402	Trench Excavation Protection

City of Austin Standard Specification Items

Designation	Description
Item No. 101S	Preparing Right of Way
Item No. 102S	Clearing and Grubbing
Item No. 110S	Street Excavation
Item No. 111S	Excavation
Item No. 130S	Borrow

Item No. 132S	Embankment
Item No. 201S	Subgrade Preparation
Item No. 402S	Controlled Low Strength Material
Item No. 501S	Jacking or Boring Pipe
Item No. 503S	Frames, Grates, Rings and Covers
Item No. 504S	Adjusting Structures
Item No. 505S	Concrete Encasement and Encasement Pipe
Item No. 506	Manholes
Item No. 507S	Bulkheads
Item No. 510	Pipe
Item No. 511S	Water Valves
Item No. 593S	Concrete Retards
Item No. 594S	Gabions and Revet Mattresses

Item No. 510
Pipe

510.1 Description

This item governs the furnishing and installing of all pipe and/or materials for constructing pipe mains, sewers, laterals, stubs, inlet leads, service connections, culverts, temporary service lines and temporary diversion lines, including all applicable Work such as excavating, bedding, jointing, backfilling materials, tests, concrete trench cap, concrete cap and encasement, etc., prescribed under this item in accordance with the provisions of the Edwards Aquifer Protection Ordinance, when applicable, and City of Austin Utility Criteria Manual, Section 5, "Working in Public Rights-of-Way". The pipe shall be of the sizes, types, class and dimensions indicated or as designated by the E/A and shall include all joints or connections to new or existing mains, pipes, sewers, manholes, inlets, structures, etc., as may be required to complete the Work in accordance with specifications and published standard practices of the trade associations for the material specified and to the lines and grades indicated. This item shall include any pumping, bailing, and drainage when indicated or applicable. Unless otherwise provided, this item shall consist of the removal and disposition of trees, stumps and other obstructions, old structures or portions thereof such as house foundations, old sewers, masonry or concrete walls, the plugging of the ends of abandoned piped utilities cut and left in place and the restoration of existing utilities damaged in the process of excavation, cutting and restoration of pavement and base courses, the furnishing and placing of select bedding, backfilling and cement or lime stabilized backfill, the hauling and disposition of surplus materials, bridging of trenches and other provisions for maintenance of traffic or access as indicated.

510.2 Materials

The Contractor shall submit descriptive information and evidence that the materials and equipment the Contractor proposes for incorporation into the Work are of the kind and quality that satisfies the specified functions and quality. Austin Water Utility Standard Products Lists (SPL) form a part of the Specifications. Contractors may, when appropriate, elect to use products from the SPL; however, submittal to the E/A is still required. Should the Contractor elect to use any materials from these lists, each product shall be completely and clearly identified by its corresponding SPL number when making the product submittal. This will expedite the review process in which the E/A, and, if necessary, the Austin Water Utility Standard Products Committee, decides whether the products meet the Contract requirements and the specific use foreseen by the E/A in the design of this engineered Project. The purpose of the SPL's is to expedite review, by the E/A and, if necessary, the Austin Water Utility Standard Products Committee, of Contractor product submittals. The SPL's shall not be considered as being a pre-approved list of products necessarily meeting the requirements of the Project. Items contained in the SPL cannot be substituted for items shown on the Drawings, or called for in the specifications, or specified in the Bidding Requirements, Contract Forms and Conditions of Contract, unless approved by the E/A in conjunction with the Austin Water Utility Standard Products Committee. The Standard Product List current at the time of plan approval will govern.

(1) Concrete

Concrete shall conform to Item No. 403S, "Concrete for Structures".

(2) Coarse Aggregate

Coarse aggregate shall conform to Item No. 403S, "Concrete for Structures" or one of the following:

(a) Pipe Bedding Stone

Pipe bedding stone shall be clean gravel, crushed gravel or crushed limestone, free of mud, clay, vegetation or other debris, conforming to ASTM C 33 for stone quality. Size gradation shall conform to ASTM C-33 No. 57 or No. 67 or the following Table:

SIEVE SIZE	% RETAINED BY WEIGHT
1-1/2"	0
1"	0-10
1/2"	40-85
#4	90-100
#8	95-100

(b) Foundation Rock

Foundation rock shall be well graded coarse aggregate ranging in size from 2 to 8 inches.

(c) Flexible Base

Flexible base shall conform to Item No. 210S, "Flexible Base".

(3) Fine Aggregate

(a) Concrete and Mortar Sand

Fine aggregate shall conform to Item No. 403S, "Concrete for Structures".

(b) Bedding Sand

Sand for use as pipe bedding shall be clean, granular and homogeneous material composed mainly of mineral matter, free of mud, silt, clay lumps or clods, vegetation or debris. The material removed by decantation TxDOT Test Method Tex-406-A, plus the weight of any clay lumps, shall not exceed 4.5 percent by weight.

The resistivity shall not be less than 3000 ohms-cm as determined by TxDOT Test Method Tex-129-E. Size gradation of sand for bedding shall be as follows:

GRADATION TABLE	
SIEVE SIZE	% RETAINED BY WEIGHT
1/4"	0
#60	75-100
#100	95-100

(c) Stone Screenings

Stone screenings shall be free of mud, clay, vegetation or other debris, and shall conform to the following Table:

SIEVE SIZE	% PASSING
3/8"	100
No. 4	95 to 100
No. 8	80 to 100
No. 16	50 to 85
No. 30	25 to 60
No. 50	10 to 30
No. 100	2 to 10

All screenings shall be the result of a rock crushing operation.

(4) Controlled Low Strength Material

Controlled Low Strength Material (CLSM) shall conform to Item 402S, "Controlled Low Strength Material.

(5) Pea Gravel

Pea gravel bedding shall be clean washed material, hard and insoluble in water, free of mud, clay, silt, vegetation or other debris. Stone quality shall meet ASTM C 33. Size gradation shall be as follows:

SIEVE SIZE	% RETAINED BY WEIGHT
3/4"	0
1/2"	0-25
1/4"	90-100

(6) Select Backfill or Borrow

This material shall consist of borrow or suitable material excavated from the trench. It shall be free of stones or rocks over 8 inches and shall have a plasticity index of less than 20. The moisture content at the time of compaction shall be within 2 percent of optimum as determined by TxDOT Test Method Tex-114-E. Sandy loam borrow will not be allowed unless shown on the Drawings or authorized by the E/A.

All suitable materials from excavation operations not required for backfilling the trench may be placed in embankments, if applicable. All unsuitable materials that cannot be made suitable shall be considered surplus excavated materials as described in 510.3(13). The Contractor may, if approved by the engineer, modify unsuitable materials to make them suitable for use. Modification may include drying, removal or crushing of over-size material, and lime or cement treatment.

(7) Cement Stabilized Backfill

When indicated or directed by the E/A, all backfill shall be with cement-stabilized backfill rather than the usual materials. Unless otherwise indicated, cement stabilized backfill material shall consist of a mixture of the dry constituents described for Class J Concrete. The cement and aggregates shall be thoroughly dry mixed with no water added to the mixture except as may be directed by the E/A.

(8) Pipe

General

Fire line leads and fire hydrant leads shall be ductile iron. Domestic water services shall not be supplied from fire service leads, unless the domestic and fire connections are on separately valved branches with an approved backflow prevention device in the fire service branch. All wastewater force mains shall be constructed of ductile iron pipe Pressure Class 250 minimum for pipe greater than 12-inch size and Pressure Class 350 for pipe 12-inch size and smaller. Wastewater pipe shall be in accordance with Austin Water Utility's Standard Products List SPL WW-534 and shall have a corrosion resistant interior lining acceptable to the Owner.

All water pipe within utility easements on private property shall be Ductile Iron Pipe, Pressure Class 350 minimum for pipe 12-inch size and smaller and Pressure Class 250 minimum for pipe greater than 12-inch size wrapped as indicated. For sizes over 24 inches, Concrete Pressure Pipe, steel cylinder type, conforming to the requirements of AWWA C-301 will be acceptable.

There may be no service connections to Concrete Pressure Pipe installed in utility easements on private property. Approved service clamps or saddles shall be used when tapping ductile iron pipe 12 inch size and smaller. All service tubing (3/4 inch thru 2 inches) installed in utility easements on private property shall be 150 psi annealed seamless Type K copper tubing with no sweat or soldered joints.

All reclaimed water mains shall be constructed of ductile iron pipe, Pressure Class 350 minimum for pipe 12-inch size and smaller and Pressure Class 250 for pipe

greater than 12-inch size. For mains 12-inch size and smaller, PVC pipe, conforming to the requirements of AWWA C-900, DR 14 shall be acceptable. Reclaimed water pipe shall be manufactured purple, painted purple, or wrapped in purple polyethylene film wrap.

Manufacturers of concrete pipe and pipe larger than 24-inch diameter shall have a quality control program consisting of one or more of the following:

1) a quality management system certified by the American National Standards Institute (ANSI) or National Sanitation Foundation (NSF) to comply with ISO 9001:2000,

2) a quality management system certified by the QCast Program following the requirements of the ACPA Plant Certification Manual,

3) a quality management system certified by the National Precast Concrete Association

4) a quality control program approved by the OWNER prior to submittal of bids for the PROJECT, or

5) an independent, third party quality control testing and inspection firm for testing and inspecting pipe produced for the PROJECT and approved by the OWNER prior to submittal of bids for the PROJECT.

All such quality control programs shall be paid for by the manufacturer. It is the intent of this requirement that the manufacturer will document all appropriate tests and inspections with sampling and inspection criteria, frequency of testing and inspection, date of testing and inspection and date on which every piece was manufactured. Required testing and inspection, including that by an independent, third party, shall be performed full-time during production of pipe for the PROJECT. When requested by the OWNER, the manufacturer will provide copies of test data and results and inspection reports with the shipment of pipe for the PROJECT. Test data and results and inspection reports shall be traceable to specific pipe lots or pieces. Owner approval of the manufacturer's quality control program will expire after three years, at which time the manufacturer must present a current quality control program for approval in order to retain listing on the applicable SPL. Owner approval of the Concrete Pipe manufacturer's quality control program will expire after three years, at which time the manufacturer must present a current quality control program for approval.

The quality of materials, the process of manufacture and the finished pipe shall be subject to inspection and approval by the E/A at the pipe manufacturing plant and at the project site prior to and during installation. Plant inspections shall be conducted at the discretion of the City Representative. Only manufacturers having a quality control program of the type described above will be considered as approved providers of concrete pipe and pipe products as listed in the Standard Products List (SPL).

All water distribution pipe and fittings shall be listed in the Fire Protection Equipment Directory published by the Underwriter's Laboratories, Inc., or shall be Factory Mutual approved for fire service. All water pipe and related products shall be registered by the National Sanitation Foundation as having been certified to meet NSF/ANSI Standard 61.

(a) Reserved

(b) Iron Pipe

Iron pipe shall be ductile iron pipe meeting all requirements of standards as follows:

-For push-on and mechanical joint pipe: AWWA C-151

-For flanged pipe: AWWA C-115

Barrels shall have a nominal thickness required by Table 1 of AWWA C-115, which thickness corresponds to Special Class 53 in sizes through 54 inch, and Class 350 in 60 and 64-inch sizes. Flanges shall be ductile iron (gray iron is not acceptable); they shall be as shown in ANSI/AWWA C115/A21.15 and shall conform to dimensions shown in Table 2 and Figure 1 of AWWA C115. These flanges are the same in all respects as flanges shown in ANSI/AWWA C110/A21.10 for fittings and are standard for all flanges used with pipe, valve, and equipment units in the City of Austin water distribution and wastewater force main systems. Flanges shall be fabricated and attached to the pipe barrels by U.S. fabricators using flanges and pipe barrels of U.S. manufacture. If fabrication is to be by other than the pipe barrel manufacturer, a complete product submittal and approval by the Austin Water Utility will be required. Additionally, such fabricator shall furnish certification that each fabricated joint has been satisfactorily tested hydrostatically at a minimum pressure of 300 psi.

-Linings and Coating:

Interior surfaces of all iron potable or reclaimed water pipe shall be cement-mortar lined and seal coated as required by AWWA C104. Interior surfaces of all iron wastewater line and force main pipe shall be coated with a non-corrosive lining material as indicated on Austin Water Utility's Standard Products List SPL WW-534. Pipe exteriors shall be coated as required by the applicable pipe specification. The type and brand of interior lining shall be clearly marked on the outside of the pipe and fittings. Except as authorized by the E/A, only one type and brand of pipe lining shall be used on a given project.

Except as described above for flanged pipe (Thickness Class 53) and where not otherwise indicated, ductile iron pipe shall be minimum Class 250 as defined by ANSI/AWWA C150/A21.50-current; all ductile iron pipe and flanges shall meet the following minimum physical requirements:

Grade 60-42-10:

-Minimum tensile strength: 60,000 psi (414 mPa).

-Minimum yield strength: 42,000 psi (290 mPa).

-Minimum elongation: 10 percent.

The flanges for AWWA C115 pipe may be also be made from:

Grade 70-50-05:

-Minimum tensile strength: 70,000 psi (483 map).

-Minimum yield strength: 50,000 psi (345 mPa).

-Minimum elongation: 5 percent.

1. Ductile Iron Fittings:

   Fittings shall be push-on, flanged or mechanical joint as indicated or approved and shall meet all requirements of standards as follows:

   -Sizes 4 inch through 24 inch: AWWA C-110 or AWWA C-153

   -Sizes larger than 24 inch: AWWA C-110.

   -Lining and Coating:

   Interior surfaces or all iron potable/reclaimed water pipe fittings shall be lined with cement- mortar and seal coated as required by AWWA C104. Interior surfaces of all iron wastewater and force main fittings shall be coated with a non-corrosive lining material acceptable to Owner. Fitting exteriors shall be coated as required by the applicable pipe specification.

2. Joint Materials

   Gaskets for mechanical joints shall conform to ANSI/AWWA A21.11/C-111.

   Joining of slip joint iron pipe shall, without exception, be accomplished with the natural or synthetic rubber gaskets of the manufacturer of that particular pipe being used. A joint lubricant shall be used and applicable recommendations of the manufacturer shall be followed.

   Gaskets for flanged joints shall be continuous full face gaskets, of 1/8 inch minimum thickness of natural or synthetic rubber, cloth-reinforced rubber or neoprene material, preferably of deformed cross section design and shall meet all applicable requirements of ANSI/AWWA

A21.11/C-111 for gaskets. They shall be manufactured by, or satisfy all recommendations of, the manufacturer of the pipe/fittings being used and be fabricated for use with Class 125 ANSI B16.1 flanges.

Tee-head bolts, nuts and washers for mechanical joints shall be high strength, low alloy, corrosion resistant steel stock equal to "COR-TEN A" having UNC Class 2 rolled threads or alloyed ductile iron conforming to ASTM A 536; either shall be fabricated in accordance with ANSI/AWWA A21.11/C-111.

Hex head bolts and nuts shall satisfy the chemical and mechanical requirements of ASTM A449 SAE Grade 5 plain, and shall be fabricated in accordance with ASTM B 18.2 with UNC Class 2 rolled threads.

Either Tee-Head or Hex-Head bolts, nuts and washers as required, shall be protected with bonded fluoro-polymer corrosion resistant coating where specifically required by the E/A.

All threaded fasteners shall be marked with a readily visible symbol cast, forged or stamped on each nut and bolt, which will identify the fastener material and grade. The producer and the supplier shall provide adequate literature to facilitate such identification; painted markings are not acceptable.

3. Polyethylene Film Wrap

All iron pipe, fittings and accessories shall be wrapped with standard 8 mil (minimum) low density polyethylene film or 4-mil (minimum) cross laminated high-density polyethylene conforming to AWWA C-105, with all edges overlapped and taped securely with duct tape to provide a continuous wrap to prevent contact between the piping and the surrounding backfill. Repair all punctures of the polyethylene, including those caused in the placement of bedding aggregates, with duct tape to restore the continuous protective wrap before backfilling. Polyethylene film wrap for reclaimed water pipe shall be purple.

4. Marking

Each pipe joint and fitting shall be marked as required by the applicable AWWA specification. This includes in all cases: Manufacturer's identification, Country where cast, year of casting, and "DUCTILE" or "DI". Barrels of flanged pipe shall show thickness class; others shall show pressure class. The flanges of pipe sections shall be stamped with the fabricators identification; fittings shall show pressure rating, the nominal diameter of openings and the number of degrees for bends. Painted markings are not acceptable.

5 Warning Tape

Warning tape for identifying restrained joint pipe and fittings shall be yellow and shall have black lettering at least 2 inches high that reads "Restrained Joint / Junta de Restriccion" at intervals not exceeding 24 inches. The warning tape shall be polypropylene having a minimum thickness of 2 mils, a minimum width of 3 inches, and adhesive backing on the side opposite the lettering.

(c) Concrete

1. General

Pipe shall conform to ASTM C 76 for Circular Pipe. Concrete pipe smaller than 12 inches in diameter shall conform to ASTM C 14, Extra Strength. All pipe shall be machine made or cast by a process which will provide uniform placement of the concrete in the form and compaction by mechanical devices, which will assure a dense concrete. Concrete shall be mixed in a central batch plant or other approved batching facility from which the quality and uniformity of the concrete can be assured. Transit mixed concrete shall not be acceptable for use in precast pipe. The pipe shall be Class III or the class indicated. Storm sewer pipe shall be of the tongue and groove or 0-ring joint design. Wastewater pipe shall be of the 0-ring joint design; it shall be acceptably lined for corrosion protection.

2. Marking

Each joint of pipe shall be marked with the pipe class, the date of manufacture, the manufacturer's name or trade mark, diameter of pipe and orientation, if required.

Pipe marking shall be waterproof and conform to ASTM C 76.

3. Minimum Age for Shipment

Pipe shall be considered ready for shipment when it conforms to the tests specified in ASTM C 76.

4. Joint Materials

When installing storm sewers (or storm drains), the Contractor shall have the option of using joints with preformed flexible joint sealants or with rubber gaskets. Preformed flexible joint sealants for storm drain joints shall comply with ASTM C990, and rubber gaskets for storm drain joints shall comply with ASTM C 1619**.** Mortar shall not be used to seal pre-fabricated joints. Pipe manufacturer shall be responsible for submitting to the Owner a detailed design of the joint upon request. The pipe manufacturer shall be responsible for submitting to the Owner a complete list of joint sizes showing the minimum size of material to be used with each size joint, along with complete instructions on recommended installation procedures. Quality control testing at the

manufacturing plant shall be in accordance with Texas Department of Transportation (TxDOT) Departmental Materials Specifications (DMS) 7310, “Reinforced Concrete Pipe And Machine-Made Precast Concrete Box Culvert Fabrication And Plant Qualification”. The pipe manufacturer shall be verified as compliant with TxDOT DMS 7310 at time of pipe delivery to the jobsite.

a. Mortar

Mortar for joints shall meet the requirements set forth below in "Mortar".

b. Cold Applied Preformed Plastic Gaskets

Cold Applied Plastic Gaskets shall be suitable for sealing joints of tongue and groove concrete pipe. The gasket sealing the joint shall be produced from blends of refined hydrocarbon resins and plasticizing compounds reinforced with inert mineral filler and shall contain no solvents, irritating fumes or obnoxious odors. The gasket joint sealer shall not depend on oxidizing, evaporating or chemical action for its adhesive or cohesive strength and shall be supplied in extruded rope form of suitable cross section. The size of the plastic gasket joint sealer shall be in accordance with the manufacturer's recommendations and sufficient to obtain squeeze-out around the joint. The gasket joint sealer shall be protected by a suitable removable wrapper that may be removed longitudinally without disturbing the joint sealer to facilitate application.

The chemical composition of the gasket joint sealing compound as shipped shall meet the following requirements:

Composition (% by weight)	Test Method	Typical Analysis
Bitumen (petroleum plastic content)	ASTM D 4	50-70
Ash-inert Mineral Water	Tex-526-C	30-50
Volatile Matter (at 325 F)	Tex-506-C	2.0 Maximum

The gasket joint sealing compound when immersed for 30 days at ambient room temperature separately in 5 percent solution of caustic potash, a mixture of 5 percent hydrochloric acid, a 5 percent solution of sulfuric acid and a saturated H2S solution shall show no visible deterioration.

The physical properties of the gasket joint sealing compound as shipped shall meet the following requirements:

Property	Test Method	Typical Analysis	
		Minimum	Maximum
Specific Gravity at 77 F	ASTM D 71	1.20	1.35
Ductility at 77F (cm) Minimum	Tex-503-C	5.0	
Softening point	Tex-505-C	275 F	
Penetration:			
32 F (300 g) 60 sec	Tex-502-C	75	
77 F (150 g) 5 sec	Tex-502-C	50	120
115 F (150 g) 5 sec	Tex-502-C		150
Flashpoint C.O.C. F	Tex-504-C	600 F	
Fire Point C.O.C. F	Tex-504-C	625 F	

When constructing wastewater lines, the Contractor shall use 0-ring gasket joints conforming to ASTM C 443. Just before making a joint, the ends of the pipe shall be clean, dry, free of blisters or foreign matter and shall be wire brushed. For O-ring joints, the gasket and the inside surface of the bell shall be lubricated with a light film of soft vegetable soap compound to facilitate assembly of the joint. The rubber O-ring gasket shall be stretched uniformly in the joint. Wedge seal type ("Forsheda" pre-lubricated) gaskets may be used if joint details submitted are approved; installation of such gaskets shall be in strict accordance with the manufacturer's recommendations, and shall be the sole element depended upon to make the joint flexible and watertight.

In wastewater lines no horizontal or vertical angles in the alignment of pipes shall be permitted unless indicated. The spigot shall be centered in the bell, the pipe pushed uniformly home and brought into true alignment. Bedding material shall be placed and tamped against pipe to secure the joint.

5. Bends

When horizontal or vertical angles in the alignment of storm sewers are indicated, the bend or angle shall be constructed by cutting on a bias one or both pipes as may be required for the alignment indicated. The pipe cut shall be sufficiently long to allow exposing the reinforcement, which shall be bent, welded and incorporated into the pipe bend and reinforced concrete collar to maintain the structural integrity. The collar shall be 6 inches minimum, reinforced with #4 bars on a 1 foot center both directions. Builder's hardware cloth may be used on the outside of the joint to aid in holding cementing materials in place. Plywood, fiberboard or other materials placed on the inside of the pipe as formwork shall be removed as soon as the joint materials have obtained initial set, after which the inside surface of the pipe joint shall be finished smooth and true to the line and grade established. The Contractor may

use prefabricated bends meeting the specification requirements in lieu of field fabricated bends. All bends shall be watertight, have a smooth flow line and be equal or greater in strength to the adjacent pipe.

Horizontal or vertical changes in alignment in wastewater lines shall be accomplished by use of manholes. With the E/A's approval, horizontal changes in alignment may be made by the "Joint Deflection" method. Joint deflection is limited by regulations of the Texas Commission on Environmental Quality (TCEQ) to 80 percent of the maximum recommended by the manufacturer; such deflection may not exceed 5 degrees at any joint. Changes in alignment using pipe flexure shall not be allowed.

6. Sulfide and Corrosion Control

All concrete pipe used for wastewater installations shall be protected from sulfide and corrosion damage by using limestone aggregate.

(d) Concrete Steel Cylinder (CSC) Pipe

1. General Requirements

The Contractor shall submit to the E/A for approval along with other required data a tabulated layout schedule with reference to the stationing and grade lines to be used.

The manufacturer shall furnish all fittings and special pieces required for closures, bends, branches, manholes, air valves, blow offs and connections to main line valves and other fittings as indicated.

Each pipe length, fitting and special joint shall have plainly marked on the bell end of the pipe, the head condition for which it is designed. In addition, marking shall be required to indicate the location of each pipe length or special joint in the line and such markings will be referenced to the layout schedules and drawings and submitted for approval.

Concrete steel cylinder fittings shall be tested as required by the applicable AWWA Standards.

2. Design and Inspection

Where not otherwise indicated, concrete steel cylinder pipe shall be Class 150, designed to withstand a vacuum of not less than 28 feet of water. Valve reducers, tees and outlets from a pipe run shall be designed and fabricated so that all stresses are carried by the steel forming the fitting or outlet.

Concrete steel cylinder pipe shall meet one of the following specifications:

AWWA C-301 - Any Size

AWWA C-303 - 24-inch maximum size

All pipe flanges shall conform to AWWA C-207, requirements for standard steel flanges of pressure classes corresponding to the pipe class.

Pipe to be installed in a tunnel or encasement shall be manufactured with 1 inch thick by 24-inch wide skid bands of mechanically impacted mortar in addition to the normal coating.

All concrete steel cylinder fittings shall be constructed of steel plate of adequate strength to withstand both internal pressure and external loading. Rod reinforcing shall not be used to figure the required steel area. The fittings shall have a concrete lining and 1 inch minimum coating of cement mortar, except that centrifugally spun lining need not be reinforced.

Minimum lining thickness shall be 1/2 inch for 16-inch pipe and 3/4 inch for sizes larger than 16-inch pipe. Where it is impractical to place such concrete protection on interior surfaces of small outlets, 2 coats of "Bitumastic Tank Solution" shall be applied.

No fitting shall be made by cutting of standard pipe, except that outlets of less than 75 percent of the pipe diameter may be placed in a standard pipe. Beveled spigots may be placed on standard pipe.

3. Joint Materials

Joints shall be of the rubber gasket type conforming to the applicable standards. The inside and outside recesses between the bell and spigot shall be completely filled with Cement Grout in accordance with the pipe manufacturer's recommendations. Grout materials for jointing such pipe, unless otherwise indicated, shall be as described herein.

(e) Reserved

(f) Polyethylene Tubing

1. General

All polyethylene (PE) tubing shall be high density, high molecular weight plastic tubing meeting ASTM D 2737; it shall be pressure rated at 200 psi working pressure and must bear the National Sanitation Foundation seal of approval for potable water service. Pipe manufacturers shall be listed on SPL WW-65.

2. Materials

Polyethylene plastics shall be Designation PE3408 (Grade P34 with hydrostatic design stress of 800 psi).

3. Markings

Permanent marking on the tubing shall include the following at intervals of not more than 5 feet:

Nominal tubing size.

Type of plastic material, i.e., PE 3408.

Dimension Ratio (DR) and pressure rating in psi for water at 73.4 F (e.g., SDR-9, 200 psi).

ASTM D 2737 designation.

Manufacturer's name or trademark, code and seal of approval (NSF mark) of the National Sanitation Foundation.

Polyethylene tubing for reclaimed service lines shall be purple.

4. Tube Size

PE tubing shall be standard copper tube size outside diameter, with Standard Dimension Ratio (SDR) of 9.

(g) Copper Tubing

All copper service tubing shall be annealed seamless Type K water tube meeting ASTM B88 and rated at 150 psi working pressure. The tubing shall be homogenous throughout and free from cracks, holes, crimping, foreign inclusions or other defects. It shall be uniform in density and other physical properties. Copper tubing for reclaimed water shall be wrapped in purple polyethylene film wrap. Pipe manufacturers shall be listed on SPL WW-613.

(h) Service Connection Fittings

All fittings used in customer service connection - tapping mains, connecting meters, etc. - must be currently listed on the applicable Water and Wastewater Standard Products List (SPL WW-68), or called for in the City of Austin Standard Details (520 - series).

(i) Brass Goods

All brass valves, couplings, bends, connections, nipples and miscellaneous brass pipe fittings and accessories used in meter connections, service lines, air release piping assemblies, and wherever needed in the water distribution system, shall conform to the City of Austin Standards, Austin Water Utility Standard Products Lists, and AWWA C-800, except as herein modified or supplemented.

Unless otherwise noted, the goods described herein shall be fabricated of standard Red Brass (Waterworks Brass) meeting ASTM B62 or B584, alloy

83600, consisting of 85 percent copper and 5 percent each of tin, lead and zinc.

Exposed threads shall be covered with plastic caps or sheeting to protect the threads.

Brass goods of each type and class shall be compatible with other fittings in common usage for similar purposes. Where not otherwise indicated, all such materials shall meet the following requirements:

Inlet threads of corporation valves shall be AWWA iron pipe (IP) thread (male); outlets of service saddles shall be tapped with AWWA IP thread (female). AWWA IP threads shall conform to ANSI/ASME B1.20.1 as required by AWWA C800 for “General Purpose (Inch) Pipe Threads”. For 3/4” and 1” sizes only, corporation valve inlet threads, and the internal threads of saddles may be the AWWA taper thread conforming to AWWA C800 Figure 1 and Table 6. External threads of corporation valve inlet must be compatible with internal threads of the service saddle.

Connections of all new tubing, and of tubing repairs wherever possible, shall be by compression fittings. Compression connections shall be designed to provide a seal and to retain the tubing, without slippage, at a working water pressure of 150 psig.

Flanges shall conform to ANSI B16.1, Class 125, as to dimensions, drillings, etc. Copper tubing, when used, shall be Type K tubing having dimensions and weights given in Table A.1 of AWWA C800.

Brass pipe shall conform to the weights and dimensions for Extra Strong pipe given in Table A.2 of AWWA C800.

All fittings shall be suitable for use at hydrostatic working pressures up to 150 psig (hydrostatic testing of installed systems is at 200 psig).

(j) Reserved

(k) Polyvinyl Chloride Potable/Reclaimed Water Pipe

1. General

All polyvinyl chloride (PVC) potable/reclaimed water pipe shall be of the rigid (UNPLASTICIZED) type and must bear the National Sanitation Foundation seal of approval for potable water pipe. Each joint of pipe shall consist of single continuous extrusion; bells or other components attached by solvent welding are not acceptable. Pipe shall be pressure rated at 200 psi (SDR-14).

Pipe shall have push-on, rubber gasket joints of the bell and spigot type with thickened integral bells with rubber gasket joints. The wall thickness of each pipe bell and joint coupling must be greater than the standard pipe barrel thickness. Clearance must be provided in every

gasket joint for both lateral pipe deflection and for linear expansion and contraction. Concrete thrust blocking shall be placed behind bends and tees. Concrete support cradles or blocking shall be required for support of all fire hydrants, valves and AWWA C110 fittings; such support shall be provided for AWWA C153 fittings when required by the E/A.

2. Applicable Specifications

Except as modified or supplemented herein, PVC pipe shall meet the following standards:

AWWA C-900, SDR 14 for PVC Pressure Pipe, in 4, 6, 8 and 12 inch nominal sizes, having Cast Iron Pipe size outside diameters.

Fittings used with PVC Pressure pipe shall be AWWA C-110 or AWWA C-153 compact ductile iron fittings.

All pipe 4 inches and larger must be approved Underwriter's Laboratories for use in buried water supply and fire protection systems.

3. Material Requirements

All pipe and fittings shall be made from clean, virgin, NSF certified, Class 12454B PVC. Clean reworked materials generated from the manufacturers own production may be used within the current limits of the referenced AWWA C-900.

4. Marking

PVC for reclaimed piping shall be purple or wrapped in purple polyethylene film wrap.

Permanent marking on each joint of pipe shall include the following at intervals of not more than 5 feet:

Nominal pipe size and OD base (e.g., 4 CIPS).

Type of plastic material (e.g., PVC 12454B).

Standard Dimension Ratio and the pressure rating in psi for water at 73 F (e.g., SDR 14, 200 psi).

AWWA designation with which the pipe complies (e.g., AWWA C-900).

Manufacturer's name or code and the National Sanitation Foundation (NSF) mark.

5. Tracer Tape

Inductive Tracer Detection Tape shall be placed directly above the centerline of all non-metallic pipe a minimum of 12 inches below

subgrade or, in areas outside the limits of pavement, a minimum of 18 inches below finished grade. The tracer tape shall be encased in a protective, inert, plastic jacket and color coded according to American Public Works Association Uniform Color Code. Except for minimum depth of cover, the tracer tape shall be placed according to manufacturer's recommendations. Manufacturers must be listed on SPL WW-597.

(l) Polyvinyl Chloride (PVC) Pipe (Nonpressure) and Fittings

1. General

PVC sewer and wastewater pipe and fittings 6 through 15 inch diameter shall conform to ASTM D 3034. Pipe shall have minimum cell classification of 12364 or 12454. Fittings shall have cell classification of 12454 or 13343. Pipe stiffness shall be at least 115 psi as determined by ASTM D 2412. Pipe manufacturers shall be on SPL WW-227, and fitting manufacturers shall be on SPL WW-227B.

PVC sewer and wastewater pipe and fittings 18 through 27 inch diameter shall conform to ASTM F 679. Pipe shall have minimum cell classification of 12364 or 12454. Pipe stiffness shall be at least 72 psi as determined by ASTM D 2412. Pipe manufacturers shall be on SPL WW-227A, and fitting manufacturers shall be on SPL WW-227B.

2. Joints

PVC pipe and fitting shall have elastomeric gasket joints conforming to ASTM D 3212. Gaskets shall conform to ASTM F 477.

3. Pipe Markings

Pipe meeting ASTM D 3034 shall have permanent marking on the pipe that includes the following at intervals of not more than 5 feet:

Manufacturer's name and/or trademark and code.

Nominal pipe size.

PVC cell classification per ASTM D 1784

The legend "SDR-_ _ PVC Sewer Pipe" (SDR 26, 23.5. or less is required)

The designation "ASTM D 3034"

Pipe meeting ASTM F 679 shall have permanent marking that includes the following at intervals of not more than 5 feet:

Manufacturer's name or trademark and code

Nominal pipe size

PVC cell classification per ASTM D 1784

Pipe stiffness designation “PS _ _ PVC Sewer Pipe” (PS of at least 72 is required

The designation “ASTM F 679”

4. Fitting Markings

Fittings meeting ASTM D 3034 shall have permanent marking that includes the following:

Manufacturer's name or trademark,

Nominal size

The material designation "PVC"

The designation, "ASTM D 3034"

Fittings meeting ASTM F 679 shall have permanent marking that includes the following:

Manufacturer’s name or trademark and code

Nominal size

The material designation “PVC”

The designation “ASTM F 679”

5. Tracer Tape

Inductive Tracer Detection Tape shall be placed directly above the centerline of all non-metallic pipe a minimum of 12 inches below subgrade or, in areas outside the limits of pavement, a minimum of 18 inches below finished grade. The tracer tape shall be encased in a protective, inert, plastic jacket and color coded according to American Public Works Association Uniform Color Code. Except for minimum depth of cover, the tracer tape shall be placed according to manufacturer’s recommendations. Manufacturers must be listed on SPL WW-597.

(m) Steel Pipe

1. Standard Weight

ASTM A 53, Schedule 40.

2. Extra Heavy Weight

Seamless ASTM A 53, Schedule 80.

3. Encasement Pipe

   a. For direct-bury installations, pipe shall conform to ASTM A134 with minimum thickness of 3/8 inch (9.5 mm).

   b. For jacked installations, pipe shall conform to requirements on drawings.

4. Fittings

   Nipples and fittings extra strong Federal Specification WW-N 351 or WW-P 521.

5. Coatings

   Black or galvanized as indicated.

(n) Welded Steel Pipe and Fittings for Water-Pipe

1. General Reference Standards Specification.

   Specifications of the American Water Works Association (AWWA) listed below shall apply to this Section.

   C-200 Steel Water Pipe 6 inches and larger.

   C-205 Cement-Mortar Protective Lining and Coating for Steel Water Pipe, 4 inches and larger, Shop Applied.

   C-206 Field Welding of Steel Water Pipe.

   C-207 Steel Pipe Flanges for Waterworks Services, Sizes 4 inches through 144 inches.

   C-208 Dimensions for Steel Water Pipe Fittings.

   C-602 Cement-Mortar Lining of Water Pipelines, 4 inches and larger in Place.

2. Submittals

   Furnish Shop Drawings, product data, design calculations and test reports as described below:

   a. Certified copies of mill tests confirming the type of materials used in steel plates, mill pipe flanges and bolts and nuts to show compliance with the requirements of the applicable standards.

   b. Complete and dimensional working drawings of all pipe layouts. Shop Drawings shall include the grade of material, size, wall

thickness of the pipe and fittings, type and location of fittings and the type and limits of the lining and coating systems of the pipe and fittings.

c. Product data to show compliance of all couplings, supports, fittings, coatings and related items.

3. Job Conditions

a. The internal design pressure of all steel pipe and fittings shall be as indicated.

b. The interior of all steel pipe for potable water, 4 inches and larger, shall be cement-mortar lined.

4. Manufacturing

a. Description

Pipe shall comply with AWWA C-200.

(1) Circumferential deflection of all pipe in-place shall not exceed 2.0 percent of pipe diameter.

(2) Diameter

Nominal pipe diameter shall be the inside diameter of lining or pipe barrel, unless otherwise designated in Job Conditions.

b. Wall Thickness

(1) Steel pipe wall thickness shall be designed for the internal and external loads specified in this section. The cylinder thickness needed to resist internal pressure shall be based on an allowable stress in the steel equal to 1/2 the minimum yield stress of the material used.

5. Fittings

a. Welded

Fabricated steel fittings shall be of the same material as pipe and shall comply with AWWA C-208.

6. Flanges

a. Flanges shall comply with the requirements of AWWA C-207, Class D or Class E. The class shall be based on operating conditions and mating flanges of valves and equipment.

b. Gaskets shall be cloth-inserted rubber, 1/8 inch thick.

c. Flanges shall be flat faced with a serrated finish.

7. Pipe Joints

a. Lap Joints for Field Welding

(1) Lap joints for field welding shall conform to AWWA C-206. This item applies only to pipes 72 inches in diameter and larger.

(2) The bell ends shall be formed by pressing on a hydraulic expander or a plug die. After forming, the minimum radius of curvature of the bell end at any point shall not be less than 15 times the thickness of the steel shell. Bell ends shall be formed in a manner to avoid impairment of the physical properties of the steel shell. Joints shall permit a lap at least 1 1/2 inches when assembled. The longitudinal or spiral weld on the inside of the bell end and the outside of the spigot end on each section of pipe shall be ground flush with the plate surface. The inside edge of the bell and the outside edge of the spigot shall be scarfed or lightly ground to remove the sharp edges or burrs.

b. Bell and Spigot Joints with O-Ring Gasket

(1) Bell and spigot joints with rubber gasket shall conform to AWWA C-200.

(2) The bell and spigot ends shall be so designed that when the joint is assembled, it will be self-centered and the gasket will be confined to an annular space in such manner that movement of the pipe or hydrostatic pressure cannot displace it. Compression of the gasket when the joint is completed shall not be dependent upon water pressure in the pipe and shall be adequate to ensure a watertight seal when subjected to the specified conditions of service. Bell and spigot ends shall be welded on preformed shapes. The bell and spigot ends shall conform to the reviewed Shop Drawings.

8. Interior and Exterior Protective Surface Coatings

a. Exterior Surface to be mortar coated shall conform to AWWA C-205 for shop application and AWWA C-602 for field application. Pipe materials shall be the product of an organization, which has had not less than 5 years successful experience manufacturing pipe materials, and the design and manufacture of the pipe, including all materials, shall be the product of one company.

b. All surfaces except as noted in c and d below shall receive shop application of mortar lining and coating.

c. Field Welded Joints. After installation, clean, line and coat unlined or uncoated ends adjacent to welded field joints, including the weld proper, as specified for pipe adjacent to the weld. Potable water only shall be used in the preparation of any cement, mortar, or grout lining.

d. Machined Surfaces. Shop coat machined surfaces with a rust preventative compound. After jointing surfaces, remaining exposed surfaces shall be coated per a) and b) above.

(o) Corrugated Metal Pipe

1. General

Pipe shall be corrugated continuous lock or welded seam helically corrugated pipe. Corrugated metal pipe may be galvanized steel, aluminized steel or aluminum conforming to the following:

Galvanized Steel	AASHTO M 218
Aluminized Steel	AASHTO M 274
Aluminum	AASHTO M 197

Where reference is made herein to gage of metal, the reference is to U.S. Standard Gage for uncoated sheets. Tables in AASHTO M 218 and AASHTO M 274 list thickness for coated sheets in inches. The Tables in AASHTO M 197 list thickness in inches for clad aluminum sheets.

Sampling and testing of metal sheets and coils used for corrugated metal pipe shall be in accordance with TXDOT Test Method Tex-708-I.

Damaged spelter coating shall be repaired by thoroughly wire brushing the damaged area and removing all loose, cracked or weld-burned spelter coating. The cleaned area shall be painted with a zinc dust-zinc oxide paint conforming to Federal Specifications TT-P 641b. Damaged pipe shall be rejected and removed from the project.

Damaged aluminized coating shall be repaired in accordance with the manufacturer's recommendations.

The following information shall be clearly marked on each section of pipe:

Thickness and corrugations

Trade Mark of the manufacturer

Specification compliance

2. Fabrication

a. Steel Pipe

Galvanized or aluminized steel pipe shall be full circle or arch pipe conforming to AASHTO M 36, Type I or Type II as indicated.

It may be fabricated with circumferential corrugations; lap joint construction with riveted or spot welded seams or it may be fabricated with helical corrugations with continuous helical lock seam or ultra high frequency resistance butt-welded seams.

b. Aluminum Pipe

Pipe shall conform to AASHTO M 196, Type I, circular pipe or Type II, pipe arch as indicated. It may be fabricated with circumferential corrugations; lap joint construction with riveted or spot welded seams or it may be fabricated with helical corrugations with a continuous helical lock seam.

Portions of aluminum pipe that are to be in contact with high chloride concrete or metal other than aluminum, shall be insulated from these materials by a coating of bituminous material. The coating applied to the pipe or pipe arch to provide insulation between the aluminum and other material shall extend a minimum distance of 1 foot beyond the area of contact.

3. Selection of Gages

The pipe diameter, permissible corrugations and required gauges for circular pipe shall be as indicated on the drawings.

For pipe arch, the span, rise, gage, corrugation size and coating thickness shall be as shown on the drawings. A tolerance of plus or minus 1 inch or 2 percent of equivalent circular diameter, whichever is greater, will be permissible in span and rise, with all dimensions measured from the inside crests of the corrugations.

4. Joint Material

Except as otherwise indicated, coupling bands and other hardware for galvanized or aluminized steel pipe shall conform to AASHTO M 36 for steel pipe and AASHTO M 196 for aluminum pipe. Field joints for each type of corrugated metal pipe shall maintain pipe alignment during construction and prevent infiltration of soil material during the life of the installation.

Coupling bands shall be not more than 3 nominal sheet thickness lighter than the thickness of the pipe to be connected and in no case lighter than 0.052 inch for steel or 0.048 inch for aluminum.

Coupling bands shall be made of the same base metal and coating (metallic or otherwise) as the pipe.

Coupling bands shall lap equally on each of the pipes being connected to form a tightly closed joint after installation.

Pipes furnished with circumferential corrugations shall be field jointed with corrugated locking bands. This includes pipe with helical corrugations, which has reformed circumferential corrugations on the ends. The locking bands shall securely fit into at least one full circumferential corrugation on each of the pipe ends being coupled. The minimum width of the corrugated locking bands shall be as shown below for the corrugation which corresponds to the end circumferential corrugations on the pipes being joined:

10 1/2 inches wide for 2 2/3 inches x 1/2-inch corrugations.

12 inches wide for 3 inches x 1 inch or 5 inches x 1-inch corrugations.

Helical pipe without circumferential end corrugations will be permitted only when it is necessary to join a new pipe to an existing pipe, which was installed with no circumferential end corrugations. In this event pipe furnished with helical corrugations at the ends shall be field jointed with either helically corrugated bands or with bands with projections or dimples. The minimum width of helically corrugated bands shall conform to the following:

12 inches wide for pipe diameters up to and including 72 inches.

14 inches wide for 1 inch deep helical end corrugations.

Bands with projections shall have circumferential rows of projections with one projection for each corrugation. The width of bands with projections shall be not less than the following:

12 inches wide for pipe diameters up to and including 72 inches.

The bands shall have 2 circumferential rows of projections.

16 1/4 inches wide for pipe diameters of 78 inches and greater.

The bands shall have 4 circumferential rows of projections.

Unless otherwise indicated, all bolts for coupling bands shall be 1/2-inch diameter. Bands 12 inches wide or less shall have a minimum of 2 bolts and bands greater than 12 inches wide shall have a minimum of 3 bolts.

Galvanized bolts may be hot dip galvanized conforming to AASHTO M 232, mechanically galvanized to provide the same requirements as AASHTO M 232 or electro-galvanized per ASTM A 164 Type RS.

5. Additional Coatings or Linings

a. Bituminous Coated

Bituminous Coated pipe or pipe arch shall be as indicated both as to base metal and fabrication and in addition shall be coated inside and out with a bituminous coating which shall meet the performance requirements set forth herein. The bituminous coating shall be 99.5 percent soluble in carbon bisulphide. The pipe shall be uniformly coated inside and out to a minimum thickness of 0.05 inch, measured on the crests of the corrugations.

The bituminous coating shall adhere to the metal tenaciously, shall not chip off in handling and shall protect the pipe from deterioration as evidenced by samples prepared from the coating material successfully meeting the Shock Test and Flow Test in accordance with Test Method Tex-522-C.

b. Paved Invert

Where a Paved Invert is indicated, the pipe or pipe arch, in addition to the fully coated treatment described above, shall receive additional bituminous material of the same specification as above, applied to the bottom quarter of the circumference to form a smooth pavement with a minimum thickness of 1/8 inch above the crests of the corrugations.

c. Cement Lined

(1) General

Except as modified herein, pipe shall conform to AASHTO M 36 for lock seam or welded helically corrugated steel pipe. Pipe shall be of full circle and shall be fabricated with two annular corrugations for purposes of joining pipes together with band couplers. Lock seams shall develop the seam strength as required in Table 3 of AASHTO M 36. Concrete lining shall conform to the following:

Composition

Concrete for the lining shall be composed of cement, fine aggregate and water that are well mixed and of such

consistency as to produce a dense, homogeneous, non-segregated lining.

Cement

Portland Cement shall conform to AASHTO M 85.

Aggregate

Aggregates shall conform to AASHTO M 6 except that the requirements for gradation and uniformity of gradation shall not apply.

Mixture

The aggregates shall be sized, graded, proportioned and thoroughly mixed with such proportions of cement and water as will produce a homogenous concrete mixture of such quality that the pipe will conform to the design requirements indicated. In no case, however, shall the proportions of Portland Cement, blended cement or Portland Cement plus pozzolanic admixture be less than 470 lb/cu. yd of concrete.

Thickness

The lining shall have a minimum thickness of 1/8 inch above the crest of the corrugations.

Lining Procedures

The lining shall be plant applied by a machine traveling through a stationary pipe. The rate of travel of the machine and the rate of concrete placement shall be mechanically regulated so as to produce a homogenous nonsegregated lining throughout.

Surface Finish

The lining machine shall also mechanically trowel the concrete lining as the unit moves through the pipe.

Certification

Furnish manufacturer's standard certification of compliance upon request of the purchaser.

Joints

Pipe shall be joined together with coupling bands made from steel sheets to an indicated thickness of 0.064 inch (12 ga.). Coupling bands shall be formed with two corrugations that

are spaced to provide seating in the third corrugation of each pipe end without creating more than 1/2 inch ± annular space between pipe ends when joined together.

Bands shall be drawn together by two 1/2 inch galvanized bolts through the use of a bar and strap suitably welded to the band.

When O-ring gaskets are indicated they shall be placed in the first corrugation of each pipe and shall be compressed by tightening the coupling band. Rubber O-ring gaskets shall conform to Section 5.9, ASTM C 361.

(2) Causes for Rejection

Pipe shall be subject to rejection on account of failure to conform to any of the indications. Individual sections of pipe may be rejected because of any of the following:

Damaged ends, where such damage would prevent making satisfactory joint.

Defects that indicate poor quality of work and could not be easily repaired in the field.

Severe dents or bends in the metal itself.

If concrete lining is broken out, pipe may be rejected or at the discretion of the E/A, repaired in the field in accordance with the manufacturer's recommendation.

Hairline cracks or contraction cracks in the concrete lining are to be expected and does not constitute cause for rejection.

d. Fiber Bonded

Where fiber bonded pipe is indicated, the pipe or pipe arch shall be formed from sheets whose base metal shall be as indicated. In addition, the sheets shall have been coated with a layer of fibers, applied in sheet form by pressing them into a molten metallic bonding. If a paved invert is indicated it shall be in accordance with the procedure outlined above. The test for spelter coating above is waived for fiber bonded pipe.

6. Slotted Drain Storm Sewers

The pipes for the slotted drain and slotted drain outfall shall be helically corrugated, lock seam or welded seam pipe. Materials and fabrication shall be in accordance with the above. The metal thickness shall be a minimum 16 gage.

The chimney assemblies shall be constructed of 3/16 inch welded plate or machine formed 14 gage galvanized steel sheets. The height of the chimney required shall be as indicated. Metal for the welded plate slot shall meet the requirements of ASTM A 36 and the completed plate slot shall be galvanized after fabrication in accordance with ASTM A 123.

Weld areas and the heat affected zones where the slot is welded to the corrugated pipe shall be thoroughly cleaned and painted with a good quality asphalt base aluminum paint.

7. Mortar

Mortar shall be composed of 1 part Type I Portland Cement and 2 parts clean, sharp mortar sand suitably graded for the purpose and conforming in other respects to the provisions for fine aggregate of Item No. 403, "Concrete for Structures". Hydrated lime or lime putty may be added to the mix, but in no case shall it exceed 10 percent by weight of the total dry mix.

(9) Geotextile Filter Fabric for Pipe Bedding Material

Geotextile filter fabric for pipe bedding material shall be Hanes Geo Components - TerraTex NO4.5 (AOS US Standard Sieve 70) geotextile fabric or approved equal.

510.3 Construction Methods

(1) General

Prior to commencing this Work, all erosion control and tree protection measures required shall be in place and all utilities located and protected as set forth in "General Conditions". Clearing the site shall conform to Item No. 102S, "Clearing and Grubbing". Maintenance of environmental quality protection shall comply with all requirements of "General Conditions" and Item No. 601S, "Salvaging and Placing Topsoil".

The Contractor shall Work such that a reasonable minimum of disturbance to existing utilities will result. Particular care shall be exercised to avoid the cutting or breakage of all existing utilities. If at any time the Contractor’s operations damage the utilities in place, the Contractor shall immediately notify the owner of the utility to make the necessary repairs. When active wastewater sewer lines are cut in the trenching operations, temporary flumes shall be provided across the trench while open and the lines shall be restored when the backfilling has progressed to the original bedding lines of the sewer so cut.

The Contractor shall inform utility owners sufficiently in advance of the Contractor's operations to enable such utility owners to reroute, provide temporary detours or to make other adjustments to utility lines in order that the Contractor may Work with a minimum of delay and expense. The Contractor shall cooperate with all utility owners concerned in effecting any utility adjustments necessary and shall not hold

the City liable for any expense due to delay or additional Work because of conflicts arising from existing utilities.

The Contractor shall do all trenching in accordance with the provisions and the directions of the E/A as to the amount of trench left unfilled at any time. All excavation and backfilling shall be accomplished as indicated and in compliance with State Statutes.

Where excavation for a pipe line is required in an existing City street, a street cut permit is required and control of traffic shall be as indicated in accordance with the Texas Manual on Uniform Traffic Control Devices.

Wherever existing utility branch connections, sewers, drains, conduits, ducts, pipes or structures present obstructions to the grade and alignment of the pipe, they shall be permanently supported, removed, relocated or reconstructed by the Contractor through cooperation with the owner of the utility, structure or obstruction involved. In those instances where their relocation or reconstruction is impractical, a deviation from line and grade will be ordered by the E/A and the change shall be made in the manner directed.

Adequate temporary support, protection and maintenance of all underground and surface utility structures, drains, sewers and other obstructions encountered in the progress of the Work shall be furnished by, and at the expense of, the Contractor and as approved by the E/A.

Where traffic must cross open trenches, the Contractor shall provide suitable bridges in conformance with Standard 804S-4. Adequate provisions shall be made for the flow of sewers; drains and watercourses encountered during construction and any structures, which may have been disturbed, shall be satisfactorily restored upon completion of Work.

When rainfall or runoff is occurring or is forecast by the U.S. Weather Service, the Contractor shall not perform or attempt any excavation or other earth moving Work in or near the flood plain of any stream or watercourse or on slopes subject to erosion or runoff, unless given specific approval by the E/A. When such conditions delay the Work, an extension of time for working day contracts will be allowed in accordance with "General Conditions".

(2) Water Line/New Wastewater Line Separation

Separation between water, reclaimed water, and wastewater lines shall be provided as shown in the Drawings.

Crossings of water, reclaimed water, and wastewater lines shall conform to details in the Drawings.

Wastewater manholes within 9 feet of water and reclaimed water lines shall be made watertight according to details in the Drawings.

(3) Utility and Storm Sewer Crossings

When the Contractor installs a pipe that crosses under a utility or storm sewer structure and the top of the pipe is within 18 inches of the bottom of the structure, the pipe shall be backfilled as shown in the Drawings. When the Contractor installs a pipe that crosses under a utility or storm sewer structure that is not shown in the Drawings, the pipe shall be backfilled as directed by the Engineer. Payment for backfilling pipe at utility or storm sewer structures not shown in the Drawings shall be by Change Order.

(4) Trench Excavation

Excavation in a paved street shall be preceded by saw cutting completely through any asphaltic cement concrete or portland cement concrete surface, base, or subbase to the underlying subgrade. This requirement shall not apply to excavations made with trenching machines that use a rotating continuous belt or chain for cutting and removing of material.

Underground piped utilities shall be constructed in an open cut in accordance with Federal regulations, applicable State Statutes conforming to Item No. 509S, "Excavation Safety Systems" and with a trench width and depth described below. When pipe is to be constructed in fill above the natural ground, Contractor shall construct embankment to an elevation not less than one foot above the top of the pipe, after which trench is excavated. Required vertical sides shall be sheeted and braced as indicated to maintain the sides of the required vertical excavation throughout the construction period. Adequacy of the design of sheeting and bracing shall be the responsibility of the Contractor's design professional. The Contractor shall be responsible for installation as indicated. After the pipe has been laid and the backfill placed and compacted to 12 inches above the top of the pipe, any sheeting, shoring and bracing required may be removed with special care to insure that the pipe is not disturbed. As each piece of sheeting is removed, the space left by its removal must be thoroughly filled and compacted with suitable material and provisions made to prevent the sides of the trench from caving until the backfill has been completed. Any sheeting left in place will not be paid for and shall be included in the unit price bid for pipe.

(5) Trench Width

Trenches for water, reclaimed, and wastewater lines shall have a clear width on each side beyond the outside surfaces of the pipe bell or coupling of not less than 6 inches nor more than 12 inches.

Trenches for Storm Sewers up to 42 inches shall have a width of 1 foot on each side beyond the outside surfaces of the pipe. Pipes more than 42 inches shall have a trench width not to exceed 18 inches on each side beyond the outside surfaces of the pipe.

If the trench width within the pipe zone exceeds this maximum, the entire pipe zone shall be refilled with approved backfill material, thoroughly compacted to a minimum of 95 percent of maximum density as determined by TxDOT Test Method Tex-114-E and then re-excavated to the proper grade and dimensions. Excavation along curves and bends shall be so oriented that the trench and pipe are

approximately centered on the centerline of the curve, using short lengths of pipe and/or bend fittings if necessary.

For all utilities to be constructed in fill above natural ground, the embankment shall first be constructed to an elevation not less than 1 foot above the top of the utility after which excavation for the utility shall be made.

(6) Trench Depth and Depth of Cover

All pipe and in-line appurtenances shall be laid to the grades indicated. The depth of cover shall be measured from the established finish grade, natural ground surface, subgrade for staged construction, street or other permanent surface to the top or uppermost projection of the pipe.

(a) Where not otherwise indicated, all potable/reclaimed water piping shall be laid to the following minimum depths:

1. Potable/reclaimed water piping installed in undisturbed ground in easements of undeveloped areas, which are not within existing or planned streets, roads or other traffic areas shall be laid with at least 36 inches of cover.

2. Potable/reclaimed water piping installed in existing streets, roads or other traffic areas shall be laid with at least 48 inches of cover below finish grade.

3. Unless approved by the E/A, installation of potable/reclaimed water piping in proposed new streets will not be permitted until paving and drainage plans have been approved and the roadway traffic areas excavated to the specified or standard paving subgrade, with all parkways and sidewalk areas graded according to any applicable provisions of the drainage plans or sloped upward from the curb line to the right of way line at a minimum slope of 1/4 inch per foot. Piping and appurtenances installed in such proposed streets shall be laid with at least 36 inches of cover below the actual subgrade.

(b) Where not otherwise indicated, all wastewater piping shall be laid to the following minimum depths:

1. Wastewater piping installed in natural ground in easements or other undeveloped areas, which are not within existing or planned streets, roads or other traffic areas shall be laid with at least 42 inches of cover.

2. Wastewater piping installed in existing streets, roads or other traffic areas shall be laid with at least 66 inches of cover.

3. Wastewater piping installed in such proposed streets shall be laid with at least 48 inches of cover below the actual subgrade.

(7) Classification of Excavation

Excavation will not be considered or paid for as a separate item of Work, so excavated material will not be classified as to type or measured as to quantity. Full payment for all excavation required for the construction shall be included in the various unit or lump sum Contract prices for the various items of Work installed, complete in place. No extra compensation, special treatment or other consideration will be allowed due to rock, pavement, caving, sheeting and bracing, falling or rising water, working under and in the proximity of trees or any other handicaps to excavation.

(8) Dewatering Excavation

Underground piped utilities shall not be constructed or the pipe laid in the presence of water. All water shall be removed from the excavation prior to the pipe placing operation to insure a dry firm granular bed on which to place the underground piped utilities and shall be maintained in such unwatered condition until all concrete and mortar is set. Removal of water may be accomplished by bailing, pumping or by a well-point installation as conditions warrant.

In the event that the excavation cannot be dewatered to the point where the pipe bedding is free of mud, a seal shall be used in the bottom of the excavation. Such seal shall consist of Class B concrete, conforming to Item No. 403, "Concrete for Structures", with a minimum depth of 3 inches.

(9) Trench Conditions

Before attempting to lay pipe, all water, slush, debris, loose material, etc., encountered in the trench must be pumped or bailed out and the trench must be kept clean and dry while the pipe is laid and backfilled. Where needed, sump pits shall be dug adjoining the trench and pumped as necessary to keep the excavation dewatered.

Backfilling shall closely follow pipe laying so that no pipe is left exposed and unattended after initial assembly. All open ends, outlets or other openings in the pipe shall be protected from damage and shall be properly plugged and blocked watertight to prevent the entrance of trench water, dirt, etc. The interior of the pipeline shall at all times be kept clean, dry and unobstructed.

Where the soil encountered at established footing grade is a quicksand, saturated or unstable material, the following procedure shall be used unless other methods are indicated:

All unstable soils shall be removed to a depth of a minimum 2 feet below bottom of piped utility or as required to stabilize the trench foundation. Such excavation shall be carried out for the entire trench width.

All unstable soil so removed shall be replaced with a concrete seal, foundation rock or coarse aggregate materials placed across the entire trench width in uniform layers not to exceed 6 inches, loose measure and compacted by mechanical tamping or other means which shall provide a stable foundation for the utility.

Forms, sheathing and bracing, pumping, additional excavation and backfill required in unstable trench conditions shall be included in the unit price bid for pipe.

(10) Blasting

All blasting shall conform to the provisions of the "General Conditions" and/or "Public Safety and Convenience".

(11) Removing Old Structures

When out of service masonry structures or foundations are encountered in the excavation, such obstructions shall be removed for the full width of the trench and to a depth of 1 foot below the bottom of the trench. When abandoned inlets or manholes are encountered and no plan provision is made for adjustment or connection to the new sewers, such manholes and inlets within the construction limits shall be removed completely to a depth 1 foot below the bottom of the trench. In each instance, the bottom of the trench shall be restored to grade by backfilling and compacting by the methods provided above. Where the trench cuts through storm or wastewater sewers which are known to be abandoned, these sewers shall be cut flush with the sides of the trench and blocked with a concrete plug in a manner satisfactory to the E/A. When old structures are encountered, which are not visible from the existing surface and are still in service, they shall be protected and adjusted as required to the finished grade.

(12) Lines and Grades

Grades, lines and levels shall conform to the General Conditions and/or "Grades, Lines and Levels". Any damage to the above by the Contractor shall be re-established at the Contractor's expense. The Contractor shall furnish copies of all field notes and "cut sheets" to the City.

The location of the lines and grades indicated may be changed only by direction of the E/A. It is understood that the Contractor will be paid for Work actually performed on the basis of the unit Contract prices and that the Contractor shall make no claim for damages or loss of anticipated profits due to the change of location or grade.

All necessary batter boards or electronic devices for controlling the Work shall be furnished by, and at the expense of, the Contractor. Batter boards shall be of adequate size material and shall be supported substantially. The boards and all location stakes must be protected from possible damage or change of location. The Contractor shall furnish good, sound twilled lines for use in achieving lines and grades and the necessary plummets and graduated poles.

The Contractor shall submit to the Engineer at least six copies of a detailed pipe laying schedule for review and approval. The laying schedule shall list all types of pipe, fittings, valves, hydrants, flanged outlets, and other appurtenances required for construction. The Contractor shall submit the laying schedule at least 30 days in advance of construction on the project. The Engineer will forward review comments to the Contractor for revisions. The Contractor shall make revisions and forward to

the Engineer for review. Prior to start of construction on the Project, the Engineer will send a reviewed final laying schedule marked for construction to the Contractor. Should the Contractor's procedures not produce a finished pipe placed to grade and alignment, the pipe shall be removed and relayed and the Contractors procedures modified to the satisfaction of the E/A. No additional compensation shall be paid for the removal and relaying of pipe required above.

(13) Surplus Excavated Materials

Excess material or material which cannot be made suitable for use in embankments will be declared surplus by the E/A and shall become the property of the Contractor to dispose of off site at a permitted fill site, without liability to the City or any individual. Such surplus material shall be removed from the Work site promptly following the completion of the portion of the utility involved.

(14) Pipe Bedding Envelope

Pipe shall be installed in a continuous bedding envelope of the type shown on the drawings or as described herein. The envelope shall extend the full trench width, to a depth of at least 6 inches (150 mm) below the pipe and to a depth of the springline of storm water pipe and at least 12 inches (300 mm) above water, reclaimed, and wastewater pipe.

Standard Bedding Materials

USE / PIPE MATERIAL	Cement Stabilized Backfill	Natural or Mf'd Sand	Pea Gravel	PIPE BEDDING STONE			
				Uncrushed Gravel	Crushed Gravel	Crushed Stone	Stone Screenings
WATER and RECLAIMED WATER							
Welded Steel	X					X	
Service Tubing 3/4" to 2-1/2"		X	X				X
WATER and RECLAIMED WATER (Ductile Iron)							
Up to 15 Inch ID		X	X	X			X
Larger Than 15 Inch ID			X	X			
WATER and RECLAIMED WATER (PVC only) and WASTEWATER							
Up to 15 Inch ID		X	X	X	X	X	X
Larger Than 15 Inch ID			X	X	X	X	
STORMWATER							

Concrete		X	X	X	X	X	X
Metal		X	X	X			X

(b) General requirements and limitations governing bedding selection.

1. Crushed gravel or crushed stone shall not be used with polyethylene tubing or polyethylene film wrap.

2. Uncrushed gravel may be used with polyethylene film wrap in trenches up to 6 feet deep and in deeper trenches where ample trench width, a tremmie, or conditions will allow controlled placement of the gravel without damaging the polyethylene wrap.

3. Bedding shall be placed in lifts not exceeding 8 inches loose thickness and compacted thoroughly to provide uniform support for the pipe barrel and to fill all voids around the pipe.

4. Pea Gravel or bedding stone shall be used in blasted trenches.

(c) Requirements to prevent particle migration.

Bedding material shall be compatible with the materials in the trench bottom, walls and backfill so that particle migration from, into or through the bedding is minimized. The E/A may require one or more of the following measures to minimize particle migration: use of impervious cut-off collars; selected bedding materials, such as pea gravel or bedding stone mixed with sand; filter fabric envelopment of the bedding; cement stabilized backfill; or other approved materials or methods. Measures to minimize particle migration will be shown on the Drawings or designated by the E/A, and, unless provisions for payment are provided in the contract documents, the cost of these measures shall be agreed by change order. The following limitations shall apply.

1. groundwater is present, or in trenches with grades greater than 5 percent.

2. Pea gravel or bedding stone, alone, shall not be used in the street right-of-way within 5 feet of subgrade elevation in trenches that are 3 feet or wider.

3. each gravel or bedding stone, alone, shall not be used where the trench bottom, sides, or backfill is composed of non-cementitious, silty or sandy soils having plasticity indices less than 20, as determined by the E/A.

4. Sand, alone, shall not be used for installation of concrete storm water pipe unless the bedding envelope is wrapped with a geotextile membrane and the joints of the stormdrain conduit are wrapped to

prevent the migration of fines into the bedding envelope and into the stormdrain conduit

5. For concrete storm water pipe, if pea gravel, uncrushed gravel, crushed gravel, crushed stone, or combination thereof is used for pipe bedding material, a geotextile filter fabric shall be placed around the perimeter of the joint

(15) Laying Pipe

No pipe shall be installed in the trench until excavation has been completed, the bottom of the trench graded and the trench completed as indicated.

Laying of corrugated metal pipes on the prepared foundation shall be started at the outlet end with the separate sections firmly joined together, with outside laps of circumferential joints pointing upstream and with longitudinal laps on the sides. Any metal in joints, which is not protected by galvanizing, shall be coated with suitable asphaltum paint. Proper facilities shall be provided for hoisting and lowering the sections of pipe into the trench without damaging the pipe or disturbing the prepared foundation and the sides of the trench. Any pipe which is not in alignment or which shows any undue settlement after laying or damage shall be taken up and re-laid without extra compensation.

Multiple installations of corrugated pipe or arches shall be laid with the centerlines of individual barrels parallel. When not otherwise indicated, clear distances of 2 feet between outer surfaces of adjacent pipes shall be maintained.

No debris shall remain in the drainways or drainage structures.

All recommendations of the manufacturer shall be carefully observed during handling and installation of each material. Unless otherwise indicated, all materials shall be delivered to the project by the manufacturer or agent and unloaded as directed by the Contractor. Each piece shall be placed facing the proper direction near to where it will be installed.

The interior of all pipe, fittings and other accessories shall be kept free from dirt and foreign matter at all times and stored in a manner that will protect them from damage. Stockpiled materials shall be stacked so as to minimize entrance of foreign matter.

The interior of all pipeline components shall be clean, dry and unobstructed when installed.

Piping materials shall not be skidded or rolled against other pipe, etc. and under no circumstances shall pipe, fittings or other accessories be dropped or jolted.

During handling and placement, materials shall be carefully observed and inspected and any damaged, defective or unsound materials shall be marked, rejected and removed from the job site. Minor damage shall be marked and

repaired in a manner satisfactory to the E/A. Joints, which have been placed, but not joined, backfilled, etc., shall be protected in a manner satisfactory to the E/A.

(16) Assembling of Pipe

Angular spacing of all joints shall meet the manufacturer's recommendations for the pipe and accessories being used. Side outlets shall be rotated so that the operating stems of valves shall be vertical when the valves are installed. Pressure pipe shall be laid with bell ends facing the direction of pipe installation. Pipe end bells shall be placed upgrade for all wastewater lines.

Orientation marks, when applicable, shall be in their proper position before pipe is seated.

Before joining any pipe, all foreign matter, lumps, blisters, excess coal tar coating, oil or grease shall be removed from the ends of each pipe and the pipe ends shall then be wire brushed and wiped clean and dry. Pipe ends shall be kept clean until joints are made.

Every precaution shall be taken to prevent foreign material from entering the pipe during installation. No debris, tools, clothing or other materials shall be placed in the pipe.

(17) Joints

(a) Mortar (Storm Drain joints only)

Pipe ends shall be clean, free of asphalt or other contaminants, which will inhibit the bond of the mortar to the pipe. The pipe ends shall be moistened immediately prior to placing the mortar in the joint.

(b) Cold Applied Preformed Plastic Gaskets (Storm Drain joints only)

The pipe ends shall be clean and the joint material applied to the dry pipe. In cold weather, the joint material shall be heated to facilitate the seal of the joint.

(c) O-Ring and Push-on Joints

Just before making a joint the ends of the pipe shall be clean, dry, free of any foreign matter, lump blisters, excessive coal tar coating and grease or oil and shall be wire brushed. The gasket and the inside surface of the bell shall be lubricated with a light film of soft vegetable soap compound (Flax Soap) to facilitate telescoping the joints. The rubber gasket if not factory installed shall be stretched uniformly as it is placed in the spigot groove to insure a uniform volume of rubber around the circumference of the groove. The spigot shall be centered in the bell, the pipe pushed home uniformly and brought into true alignment. Bedding material shall be placed and tamped against pipe to secure the joint. Care should be taken to prevent dirt or foreign matter from entering the joint space.

(d) Bolted Joints

All flanged, mechanical or other bolted joints shall be joined with nuts and bolts and be coated as indicated above in Iron Pipe.

(e) Storm Drain Joints

Storm drain joints sealed with preformed flexible joint sealants shall be provided and installed in compliance with ASTM C990. Storm drain joints sealed with rubber gaskets shall comply with ASTM C443. Install joint sealants in accordance with the pipe and joint sealant manufacturers' recommendations. Place the joint sealer so that no dirt or other deleterious materials come in contact with the joint sealing material. Pull or push home the pipe with enough force to properly seal the joint with the final joint opening (gap) on the inside of the installed pipe being less than or equal to the pipe manufacturer's recommended dimensions. Protrusion of joint material greater than 1/8" into the interior of the pipe will not be accepted. Excess joint material will be removed to within 1/8''of pipe surface. Observe joint sealant manufacturer's recommendations for installation temperature of the joint sealant. Apply joint sealant to pipe joint immediately before placing pipe in trench, and then connect pipe to previously laid pipe.

If inspection (video or other means) reveal C-990 joints that show signs of backfill infiltration, or where joints or conduits exhibit excessive joint gap or are otherwise defective, then the contractor has the following options:

1. Conduits less than 36-inches in any dimension**:** pour a concrete collar around the joint or wrap joint with a wrap meeting requirements of ASTM C-877 or approved equal
2. Conduits greater than or equal to 36-inches in all dimensions: repair joints using joint repair techniques recommended by the manufacturer to achieve a completed system that meets all Contract requirements.

(18) Pressure Pipe Laying

(a) Grout for Concrete Steel Cylinder Pipe (CSC) and Welded Steel Pipe

Aggregate, cement, etc., shall be as indicated in "Mortar" herein. Potable water shall be used in the preparation of any cement, mortar, or grout lining.

Grout shall be poured into the recess between the bell and spigot on the outside of the pipe and contained by a joint wrapper ("diaper") recommended by the pipe manufacturer. The wrapper shall have a minimum width of 7 inches for 30 inch and smaller and 9 inches for larger pipe, secured to the pipe by "Band Iron" steel straps. The grout shall be poured in one continuous operation in such manner that after shrinkage and curing the joint recess shall be completely filled.

Mortar for the inside recess shall be of the consistency of plaster. The inside recess between the bell and spigot shall be filled with mortar after the pipe joint on either side of the recess has been backfilled and well tamped with no less than one pipe joint installed ahead of the pipe forming the recess. The mortar shall completely fill the recess and shall be trowelled and packed into place and finished off smooth with the inside of the pipe.

The Contractor shall inspect the joint after the mortar has set and make repairs of any pockets, cracks or other defects caused by shrinkage to the satisfaction of the E/A. The inside surface shall be cleared of any mortar droppings, cement, water, slurry, etc., before they have become set and shall be cleared of any other foreign matter. The inside surface of the pipe shall be left clean and smooth.

Pipe shall be handled at all times with wide non abrasive slings, belts or other equipment designed to prevent damage to the coating and all such equipment shall be kept in such repair that its continued use is not injurious to the coating. The use of tongs, bare pinch-bars, chain slings, rope slings without canvas covers, canvas or composition belt slings with protruding rivets, pipe hooks without proper padding or any other handling equipment, which the E/A deems to be injurious to the coating, shall not be permitted. The spacing of pipe supports required to handle the pipe shall be adequate to prevent cracking or damage to the cement mortar lining.

(19) Placing Pipe in Tunnels

Piping installed as a carrier pipe in a tunnel, encasement pipe, etc., shall have uniform alignment, grade, bearing and conform to the reviewed Shop Drawings. All necessary casing spacers, bedding material, grout cradle or paving, bracing, blocking, etc., as stipulated by the Contract or as may be required to provide and maintain the required pipe alignment and grade, shall be provided by the Contractor at no cost except as provided by the Bid Items. This shall include casing spacers acceptable to the Owner attached to the carrier pipe in accordance with the manufacturer's recommendations. The insertion pushing forces shall not exceed the pipe manufacturer's recommendation. Such carrier piping shall have flexible bolted or gasketed push-on joints or Concrete Steel Cylinder pipe installed as follows:

(a) 21 Inch Pipe and Smaller

Prior to placing the pipe in the tunnel, the inside joint recess at the bell shall be buttered with cement mortar.

After the joint is engaged, the excess mortar shall be smoothed by pulling a tight fitting swab through the joint. Cement mortar protection shall then be placed in the normal manner to the exterior of the joint and allowed to harden sufficiently to avoid dislodgment during installation. If time is of the essence, a quick setting compound may be used.

(b) 24 Inch Pipe and Larger

Each length of pipe shall be pushed into the tunnel as single units. A flexible mastic sealer shall be applied to the exterior of the joint prior to joint engagement. The surfaces receiving the mastic sealer shall be cleaned and primed in accordance with the manufacturer's recommendation. Sufficient quantities of the mastic sealer shall be applied to assure complete protection of all steel in the joint area. The interior of the joint shall be filled with cement mortar in the normal manner after the pipe is in its final position within the tunnel.

(20) Temporary Pipe Plugs, Caps, Bulkheads and Trench Caps

Temporary plugs, caps or plywood bulkheads shall be installed to close all openings of the pipe and fittings when pipeline construction is not in progress.

All temporary end plugs or caps shall be secured to the pipe as provided under Item No. 507, "Bulkheads".

Trench caps shall be reinforced Class D concrete as indicated.

(21) Corrosion Control

(a) Protective Covering

Unless otherwise indicated, all flanges, nuts, bolts, threaded outlets and all other iron or steel components buried and in contact with earth or backfill shall be wrapped with 8-mil (minimum) polyethylene film meeting ANSI/AWWA C-105 to provide a continuous wrap.

(22) Pipe Anchorage, Support and Protection

Pressure pipeline tees, plugs, caps and bends exceeding 22-1/2 degrees; other bends as directed shall be securely anchored by suitable concrete thrust blocking or by approved metal harness. Unless otherwise indicated, on 24 inch or larger piping, all bends greater than 11 1/4 degrees shall be anchored as described herein.

Storm sewers on steep grades shall be lugged as indicated.

(a) Concrete Thrust Blocking

Concrete for use as reaction or thrust blocking shall be Class B conforming to Item No. 403, "Concrete for Structures".

Concrete blocking shall be placed between solid ground and the fitting to be anchored. The area of bearing on the pipe and on the ground shall be as indicated or directed by the E/A. The blocking shall, unless otherwise indicated, be so placed that the pipe, fittings and joints will be accessible for repair.

The trench shall be excavated at least 6 inches outside the outermost projections of the pipe or appurtenance and the trench walls shaped or

undercut according to the detail Drawings or as required to provide adequate space and bearing area for the concrete.

The pipe and fittings shall be adequately weighted and laterally braced to prevent floating, shifting or straining of the pipeline while the concrete is being placed and taking initial set. The Contractor shall be solely responsible for the sufficiency of such restraints.

(b) Metal Thrust Restraint

Fabricated thrust restraint systems such as those described below may be approved for use instead of concrete blocking. To obtain approval, the project Drawings must include sufficient drawings, notes, schedules, etc., to assure that the proposed restraints as installed will be adequate to prevent undesirable movement of the piping components. Such restraint systems may only be used where and as specifically detailed and scheduled on approved Project Drawings.

1. Thrust Harness

A metal thrust harness of tie rods, pipe clamps or lugs, turnbuckles, etc., may be approved. All carbon steel components of such systems, including nuts and washers, shall be hot-dip galvanized; all other members shall be cast ductile iron. After installation, the entire assembly shall be wrapped with 8-mil polyethylene film, overlapped and taped in place with duct tape to form a continuous protective wrap.

2. Restrained Joints

Piping or fitting systems utilizing integral mechanically restrained joints may be approved. All components of such systems shall be standard manufactured products fabricated from cast ductile iron, hot-dip galvanized steel, brass or other corrosion resistant materials and the entire assembly shall be protected with a continuous film wrap as described for 1. above. Manufacturers of pipe with restrained joints integral to the pipe shall be listed on SPL WW-27F. All pipe and fitting systems with restrained joints shall be identified by applying an adhesive-backed warning tape to the top of the pipe and for the full length of the pipe, regardless of the type of pipe. For plastic pipes the warning tape shall be applied directly to the top of the pipe. For metal pipes and fittings the warning tape shall be applied to the top of the polyethylene film wrap. The warning tape shall conform to 510.2(8)(b)5.

Location, configuration and description of such products shall be specifically detailed on the Drawings. (Add-on attachments such as retainer glands, all-thread rods, etc., are not acceptable.)

(c) Concrete Encasement, Cradles, Caps and Seals

When trench foundation is excessively wet or unstable or installation of water or wastewater pipe will result in less than 30 inches of cover, Contractor shall notify E/A. E/A may require Contractor to install a concrete seal, cradle, cap, encasement or other appropriate action.

All concrete cap, etc., shall be continuous and begin and end within 6 inches of pipe joints. Concrete cap, cradle and encasement shall conform to City of Austin Standard No. 510S-1, “Concrete Trench Cap”. The pipe shall be well secured to prevent shifting or flotation while the concrete is being placed.

(d) Anchorage Bulkheads

Concrete bulkheads keyed into the undisturbed earth shall be placed as indicated to support and anchor the pipe and/or backfill against end thrust, slippage on slopes, etc. Concrete material and placement shall be Class A, Item No. 403, "Concrete for Structures".

(e) Trench Caps, Concrete Rip-Rap and Shaped Retards

Where called for by the Contract or as directed by the E/A, concrete trench caps, concrete rip-rap and/or shaped retards shall be placed as detailed by the Drawings as protection against erosion. Concrete material and placement shall be Class B, Item No. 403, "Concrete for Structures".

(23) Wastewater Connections

(a) Connections to Mains 12 Inches and Smaller

All branch connections of new main lines shall be made by use of manholes.

Service stubs shall be installed as indicated. Minimum grade shall be 1 percent downward to main and minimum cover shall be 4 1/2 feet at the curb. Standard plugs shall be installed in the dead end before backfilling.

Where a service connection to a main 12 inches or smaller is indicated, a wye, tee or double wye shall be installed.

Where a service connection to a main 15 inches or larger is indicated, a field tap may be made with the pipes installed crown to crown. The tap should be made conforming to the pipe manufacturer's recommendations with the E/A’s approval.

Where not otherwise indicated, (wastewater) service connections shall be installed so that the outlet is at an angle of not more than 45 degrees above horizontal at the main line.

(b) Connections to the Existing System

Unless otherwise specified by the E/A, all connections made to existing mains shall be made at manholes with the crown of the inlet pipe installed at the same elevation as the crown of the existing pipe. Service stubs installed

on the existing system shall be installed by use of tapping saddles unless otherwise approved by the E/A. Extreme care shall be exercised to prevent material from depositing in the existing pipe as the taps are being made.

When connections to existing mains are made, a temporary plug approved by the E/A must be installed downstream in the manhole to prevent water and debris from entering the existing system before Final Completion. These plugs shall be removed after the castings are adjusted to finish grade or prior to Final Completion.

(c) Connecting Existing Services to New Mains

Where wastewater services currently exist and are being replaced from the main to the property line, those services shall be physically located at the property line prior to installing any new mains into which the services will be connected. Where wastewater services currently exist but are not being replaced to the property line, those services shall be physically located at the point of connection between the new and existing pipes prior to installing any new mains into which the services will be connected.

(24) Potable or Reclaimed Water System Connections

All necessary connections of new piping or accessories to the existing potable or reclaimed water system shall be made by, and at the expense of, the Contractor. To minimize any inconvenience from outages, the Contractor shall schedule all such connections in advance and such schedule must be approved by the E/A before beginning any Work.

(a) Shutoffs

The City will make all shutoffs on existing potable or reclaimed water mains. The Contractor shall be required to notify the E/A's field representative on the job at least 72 hours prior to the desired time for any shutoff. The E/A's field representative will notify any affected utility customers at least 48 hours prior to the shutoff. The Water Utility will make the shutoff after ensuring that all appropriate measures have been taken to protect the potable or reclaimed water system, customers and employees.

The City will operate all valves to fill existing mains. Where a newly constructed main has not been placed in service and has only one connection to the potable or reclaimed system, the Contractor may operate one valve to fill the main after approval has been obtained from the Water Utility. The operation of the valve is to be conducted under the immediate supervision of the E/A's field representative.

Water for the Work shall be metered and furnished by the Contractor in accordance with Section 01500 of the Standard Contract Documents.

(b) Wet Connections to Existing Water Potable or Reclaimed System

The Contractor shall make all wet connections called for by the Contract or required to complete the Work. Two connections to an existing line performed during the same shutout, at the same time and at a distance less than 50 linear feet apart, will be considered one wet connection. Two connections to an existing line performed during the same shutout, at the same time and at a distance equal to, or greater than 50 linear feet will be considered two wet connections. A wet connection shall include draining and cutting into existing piping and connecting a new pipeline or other extension into the existing pressure piping, forming an addition to the potable or reclaimed water transmission and distribution network.

The Contract price for wet connections shall be full payment for all necessary shutoffs, excavation, removing plugs and fittings, pumping water to drain the lines, cutting in new fittings, blocking and anchoring piping, bedding and backfilling, placing the lines and service and all site cleanup.

No water containing detectable amounts of chlorine may be drained, released or discharged until specific planning and appropriate preparations to handle, dilute and dispose of such chlorinated water are approved in advance by the City and the disposal operations will be witnessed by an authorized representative from the City.

(c) Pressure Taps to Existing Potable or Reclaimed Water System

The Contractor shall make all pressure taps called for by the Contract Documents or required to complete the Work. A pressure tap shall consist of connecting new piping to the existing potable or reclaimed water system by drilling into the existing pipe while it is carrying water under normal pressure without taking the existing piping out of service.

Unless otherwise provided by the Contract, the Contractor shall, at the Contractor's expense, perform all necessary excavation, furnish and install the tapping sleeve, valve and accessories, provide the tapping machine, drill the tap and shall block, anchor and backfill the piping, valve and all accessories, place the new piping in service and perform all site cleanup. When the City makes the tap, City forces are not obligated or expected to perform any Work except to provide tapping machine and drill the actual hole. If City crews are to make the tap, fiscal arrangements must be made in advance at the Taps Office, Waller Creek Center, 625 East 10th Street.

If a private Contractor makes the tap, an Austin Water Utility Inspector must be present. "Size on size" taps will not be permitted, unless made by use of an approved full circle gasket tapping sleeve. Concrete blocking shall be placed behind and under all tap sleeves 24 hours prior to making the wet tap.

(d) Service Connections

Service connection taps into PVC or AC pipe or into CI or DI pipe 12 inches or smaller shall be made using either a service clamp or saddle or a tapping

sleeve as recommended by the pipe manufacturer and as approved by the E/A. Direct tapping of these pipes will not be permitted.

All potable or reclaimed water service connections shall be installed so that the outlet is at an angle of not more than 45 degrees above horizontal at the main line.

Precautions should be taken to ensure that the tapping saddle or sleeve is placed on the pipe straight to prevent any binding or deformation of the PVC pipe. The mounting chain or U-bolt strap must be tight.

Tapping shall be performed with a sharp shell type cutter so designed that it will smoothly penetrate heavy walled PVC DR14 and 200 psi AC and will retain and extract the coupon from the pipe.

(25) Backfilling

(a) General

Special emphasis is placed upon the need to obtain uniform density throughout the backfill material. The maximum lift of backfill shall be determined by the compaction equipment selected and in no case shall it exceed 18 inches, loose measurement.

No heavy equipment, which might damage pipe, will be allowed over the pipe until sufficient cover has been placed and compacted. All internal pipe bracing installed or recommended by the manufacturer shall be kept in place until the pipe bedding and trench backfill have been completed over the braced pipe section. Testing of the completed backfill in streets and under and around structures shall meet the specified density requirements. Initial testing shall not be at Contractor's expense and shall conform to the "General Conditions."

(b) General Corrugated Metal Pipe

After the corrugated metal pipe structure has been completely assembled on the proper line and grade and headwalls constructed where indicated; selected material free from rocks over 8 inches in size from excavation or borrow, as approved by the E/A, shall be placed along both sides of the completed structures equally, in uniform layers not exceeding 6 inches in depth (loose measurement), sprinkled if required and thoroughly compacted between adjacent structures and between the structures and the sides of the trench.

Backfill material shall be compacted to the same density requirements as indicated for the adjoining sections of embankment in accordance with the governing specifications thereof. Above the 3/4 point of the structure, the fill shall be placed uniformly on each side of the pipe in layers not to exceed 12 inches, loose measure.

Prior to adding each new layer of loose backfill material, until a minimum of 12 inches of cover is obtained over the crown of the pipe, an inspection will be made of the inside periphery of the corrugated metal structure to determine if any floating, local or unequal deformation has occurred as a result of improper construction methods.

(c) Backfill Materials

The E/A may approve any of the following well graded materials:

1. Select trench material
2. Sand
3. Crushed rock cuttings
4. Rock cuttings
5. Foundation Rock
6. Blasted material with fines and rock
7. Cement stabilized material
8. Borrow

Within the 100-year flood plain, sand will not be permitted for backfilling. The E/A will approve the topsoil for areas to be seeded or sodded.

(d) Backfill in Street Right of Way

Placement of backfill under existing or future pavement structures and within 2 feet of any structures shall be compacted to the required density using any method, type and size of equipment, which will give the required compaction without damaging the pipe or bedding. Placement of backfill greater than 2 feet beyond structures in Right of Way shall be conform to (g) below. The depth of layers, prior to compaction, shall depend upon the type of sprinkling and compacting equipment used and the test results thereby obtained. Prior to and in conjunction with the compaction operation, each layer shall be brought to the moisture content necessary to obtain the required density and shall be kept level to insure uniform compaction over the entire layer. Testing for density shall be in accordance with Test Method Tex-114-E and Test Method Tex-115-E.

Each layer of backfill must provide the density as required herein. Swelling soils (soils with plasticity index of 20 or more) shall be sprinkled as required to provide not less than optimum moisture nor more than 2 percent over optimum moisture content and compacted to the extent necessary to provide not less than 95 percent nor more than 102 percent of the density as determined in accordance with Test Method Tex-114-E. Non-swelling soils (soils with plasticity index less than 20) shall be sprinkled as required and

compacted to the extent necessary to provide not less than 95 percent of the density as determined in accordance with Test Method Tex-114-E.

After each layer of backfill is complete, tests may be made by the E/A. If the material fails to meet the density indicated, the course shall be reworked as necessary to obtain the indicated compaction and the compaction method shall be altered on subsequent Work to obtain indicated density.

At any time, the E/A may order proof rolling to test the uniformity of compaction of the backfill layers. All irregularities, depressions, weak or soft spots that develop shall be corrected immediately by the Contractor.

Should the backfill, due to any reason, lose the required stability, density or finish before the pavement structure is placed, it shall be recompacted and refinished at the sole expense of the Contractor. Excessive loss of moisture in the subgrade shall be prevented by sprinkling, sealing or covering with a subsequent backfill layer or granular material. Excessive loss of moisture shall be construed to exist when the subgrade soil moisture content is more than 4 percent below the optimum of compaction ratio density. Backfill shall be placed from the top of the bedding material to the existing grade, base course, subgrade or as indicated. The remainder of the street backfill shall be Flexible Base, Concrete or Hot Mix Asphalt Concrete as indicated or to replaced in kind to the surface removed to construct the pipe.

(e) Backfill in County Street or State Highway Right of Way

All Work within the right of way shall meet the requirements of (d) above, as a minimum and shall meet the requirements of the permit issued by the County when their requirements are more stringent. Prior to the start of construction, the Contractor shall be responsible for contacting the appropriate TxDOT office or County Commissioner's Precinct Office and following the operating procedures in effect for utility cut permits and pavement repair under their jurisdiction. Approval for all completed Work in the State or County right of way shall be obtained from the appropriate Official prior to final payment by the Owner.

(f) Backfill in Railroad Right of Way

All Work within the railroad right of way shall meet the requirements of (d) above, as a minimum and shall meet the requirements of the permit issued by the Railroad Owner when their requirements are more stringent. Approval for all completed Work in the railroad right of way shall be obtained from the Railroad prior to Final Completion.

(g) Backfill in Easements

Where not otherwise indicated, Contractor may select whatever methods and procedures may be necessary to restore entire Work area to a safe, useful and geologically stable condition with a minimum density of 85 percent or a density superior to that prior to construction.

In and near flood plain of all streams and watercourses, under or adjacent to utilities, structures, etc. all backfill shall be compacted to a density of not less than 95 percent conforming to TxDOT Test Method Tex-114-E, unless otherwise directed by E/A.

All soil areas disturbed by construction shall be covered with top soil and seeded conforming to Item No. 604, "Seeding for Erosion Control". All turf, drainways and drainage structures shall be constructed or replaced to their original condition or better. No debris shall remain in the drainways or drainage structures.

(h) Temporary Trench Repair/Surfacing

If details of temporary trench repair/surfacing are not provided in the contract documents, the Contractor shall submit for approval of the E/A (1) a plan for temporary trench repair for areas that will be open to traffic but will be excavated later for full depth repair, and (2) a proposed method for covering trenches to maintain access to properties. The temporary surfacing shall afford a smooth riding surface and shall be maintained by the Contractor the entire time the temporary surface is in place.

(i) Permanent Trench Repair

The Contractor shall install permanent trench repairs conforming to details in the drawings.

(26) Quality Testing for Installed Pipe

(a) Wastewater Pipe Acceptance Testing

After wastewater pipe has been backfilled, the Contractor shall perform infiltration tests, exfiltration tests, or low pressure air tests as determined by the E/A. In addition. the Contractor shall perform deflection tests and shall assist OWNER'S personnel, as directed, in performing pipeline settlement tests. The Contractor shall be responsible for making appropriate repairs to those element that do not pass any of these tests.

(b) Exfiltration Test

Water for the Work shall be metered and furnished by the Contractor in accordance with Section 01500 of the Standard Contract Documents.

Exfiltration testing shall be performed by the Contractor when determined by the E/A to be the appropriate test method. Exfiltration testing shall conform to requirements of the Texas Commission on Environmental Quality given in the Texas Administrative Code Title 30 Part 1 Chapter 317 Rule §317.2.

(c) Infiltration Test

Infiltration testing shall be performed by the Contractor when determined by the E/A to be the appropriate test method. Infiltration testing shall conform to

requirements of the Texas Commission on Environmental Quality given in the Texas Administrative Code Title 30 Part 1 Chapter 317 Rule §317.2.

(d) Pipeline Settlement Test

During the infiltration test or after the exfiltration test, the pipe will be TV inspected for possible settlement. When air testing has been used, water shall be flowed into the pipe to permit meaningful observations. Any pipe settlement which causes excessive ponding of water in the pipe shall be cause for rejection. Excessive ponding shall be defined as a golf ball (1-5/8" dia.) submerged at any point along the line.

(e) Low Pressure Air Test of Gravity Flow Wastewater Lines

1. General

Wastewater lines up to 24-inch diameter shall be air tested between manholes. Wastewater lines 30-inch in diameter shall be air tested between manholes or at pipe joints. Wastewater lines 36-inch diameter and larger shall be air tested at joints. Backfilling to grade shall be completed before the test and all laterals and stubs shall be capped or plugged by the Contractor so as not to allow air losses, which could cause an erroneous test result. Manholes shall be plugged so they are isolated from the pipe and cannot be included in the test.

All plugs used to close the sewer for the air test shall be capable of resisting the internal pressures and must be securely braced. Place all air testing equipment above ground and allow no one to enter a manhole or trench where a plugged sewer is under pressure. Release all pressure before the plugs are removed. The testing equipment used must include a pressure relief device designed to relieve pressure in the sewer under test at 10 psi or less and must allow continuous monitoring of the test pressures in order to avoid excessive pressure. Use care to avoid the flooding of the air inlet by infiltrated ground water. (Inject the air at the upper plug if possible.) Use only qualified personnel to conduct the test.

2. Ground Water

Since the presence of ground water will affect the test results, test holes shall be dug to the pipe zone at intervals of not more than 100 feet and the average height of ground water above the pipe (if any) shall be determined before starting the test.

3. Test Procedure

The E/A may, at any time, require a calibration check of the instrumentation used. Use a pressure gauge having minimum divisions of 0.10 psi and an accuracy of 0.0625 psi. (One ounce per square inch.) All air used shall pass through a single control panel. Clean the sewer

to be tested and remove all debris where indicated. Wet the sewer prior to testing. The average backpressure of any ground water shall be determined (0.433 psi) for each foot of average water depth (if any) above the sewer.

Add air slowly to the section of sewer being tested until the internal air pressure is raised to 3.5 psig greater than the average backpressure of any ground water that may submerge the pipe. After the internal test pressure is reached, allow at least 2 minutes for the air temperature to stabilize, adding only the amount of air required to maintain pressure. After the temperature stabilization period, disconnect the air supply. Determine and record the time in seconds that is required for the internal air pressure to drop from 3.5 psig to 2.5 psig greater than the average backpressure of any ground water that may submerge the pipe.

For pipe less than 36-inch diameter, compare the time recorded with the time computed using the following equation:

$T = (0.0850 \times D \times K) \div Q$, where

T = time for pressure to drop 1.0 pounds per square inch gauge in seconds;

$K = 0.000419 \times D \times L$, but not less than 1.0

D = nominal inside diameter, in inches, as marked on the pipe;

L = length of line of same pipe size in feet; and

Q = rate of loss, 0.0015 cubic feet per minute per square foot of internal surface area (ft3/min/ft sq) shall be used.

Because a K value of less than 1.0 shall not be used, there are minimum test times for each pipe diameter as shown in the following table:

Table For Low Pressure Air Testing of Pipe

Pipe Diameter (inches)	Minimum Time (seconds)	Minimum Time applies to All Pipes Shorter than (feet)	Time for Longer Pipes (seconds)
8	454	298	1.520 × L
10 (See Note 1)	567	239	2.374 × L
12	680	199	3.419 × L
15	850	159	5.342 × L
18	1020	133	7.693 × L
21	1190	114	10.471 × L
24	1360	100	13.676 × L
30	1700	80	21.369 × L

Note 1. 10 inch diameter pipe to be used only by Austin Water Utility maintenance personnel.

Any drop in pressure, from 3.5 psig to 2.5 psig (adjusted for groundwater level), in a time less than that required by the above equation or table shall be cause for rejection. When the line tested includes more than one size pipe, the minimum time shall be that given for the largest size pipe included.

Lines that are 36 inches or larger inside diameter must be air tested at each joint. Lines that are 30-inch diameter may be air tested at each joint. The minimum time allowable for the pressure to drop from 3.5 pounds per square inch to 2.5 pounds per square inch gauge during a joint test, regardless of pipe size, shall be twenty (20) seconds. A drop in pressure from 3.5 psig to 2.5 psig (adjusted for groundwater level) in less than twenty seconds shall be cause for rejection.

Manholes must be tested separately and independently. All manholes must be hydrostatically tested with a maximum loss allowance of 0.025 gallon per foot diameter per foot of head per hour.

When lines are air tested, manholes are to be tested separately by exfiltration or vacuum method (see Standard Specification Item No. 506S, “Manholes”).

(f) Deflection Test

Deflection tests shall be performed by the Contractor on all flexible and semi-rigid wastewater pipes. The tests shall be conducted after the final backfill has been in place at least 30 days. Testing for in-place deflection shall be with a pipe mandrel at 95% of the inside diameter of the pipe. A second test of flexible and semi-rigid wastewater pipes 18 inch size and larger, also with a pipe mandrel sized at 95% of the inside diameter of the pipe, shall be conducted by the Contractor 30 days before the warranty expires on the Contractor’s Work.

Contractor shall submit proposed pipe mandrels to the E/A or the E/A’s designated representative for concurrence prior to testing the line.

Test(s) must be performed without mechanical pulling devices and must be witnessed by the E/A or the E/A’s designated representative.

Any deficiencies noted shall be corrected by the Contractor and the test(s) shall be redone.

(g) Inspection of Installed Storm Drain Conduits

1. General
All storm drain conduits (pipe and box culvert) shall be inspected for conformance to the requirements of this specification. Smart Housing,

low/moderate income housing, and projects that are 100-percent privately funded are exempt from the cost of the initial video inspection. All deficiencies revealed by inspection shall be corrected. Video re-inspection meeting the requirements of this specification shall be provided at the Contractor's expense to show that deficiencies have been corrected satisfactorily. Further, the contractor shall provide video in complete segments (manhole to manhole) versus specific deficiency locations.

Projects that are not exempt from the cost of the initial video inspection are also subject to the following constraints:

- All inspectors utilized by the Contractor for video inspection shall be NASSCO-PACP certified for a minimum of 3 years.
- The Contractor will be required to inspect, assess, and record the condition of the storm drain pipe using National Association of Sewer Service Companies (NASSCOs) Pipeline Assessment Certification Program (PACP) coding standards.

2. Video Inspection of Installed Storm Drain Conduits

Contractor shall provide all labor, equipment, material and supplies and perform all operations required to conduct internal closed-circuit television and video recording of all storm drain conduits. Video recording of each storm drain conduit section shall be conducted after the trench has been backfilled and prior to placement of permanent pavement repairs or permanent pavement reconstruction. The video recording shall be provided to the Owner for review. Contractor shall not place permanent pavement repairs or permanent pavement reconstruction over the storm drain conduit until Owner has reviewed the video and agrees that there are no defects in the storm drain conduit installation shown in the video submitted by the Contractor or shown in any video acquired by the Owner through other means. Placement of permanent pavement repair or permanent pavement reconstruction over the installed storm drain conduit before the Owner acknowledges no defects shall be at the Contractor's risk. Any defects revealed by the video inspection shall be corrected at the Contractor's expense and a new video submitted to the Owner for review prior to acceptance of the conduit.

All video work shall be conducted under the direct full-time supervision of a NASSCO-PACP certified operator.

The conduit inspection camera shall have the capability of panning plus/minus 275 degrees and rotating 360 degrees. The television camera shall be specifically designed and constructed for such use. The camera shall be operative in 100% humidity conditions. Camera shall have an accurate footage counter that displays on the monitor the exact distance of the camera (to the nearest tenth of a foot) from the centerline of the starting manhole or access point. Camera shall have height adjustment so that the camera lens is always centered within plus/minus 10% of the center axis of the conduit being videoed. Camera shall provide a minimum of 460 lines of horizontal

resolution and 400 lines of vertical resolution. Camera shall be equipped with a remote iris to control the illumination range for an acceptable picture. Geometrical distortion of the image shall not exceed one percent (1%). The video image produced by each camera shall be calibrated using a Marconi Resolution Chart No. 1 or equivalent.

Lighting for the camera shall be sufficient to allow a clear picture of the entire periphery of the conduit without loss of contrast, flare out of picture or shadowing. A reflector in front of the camera may be required to enhance lighting in dark or large sized conduit. The video camera shall be capable of showing on the digital display the Owner's name, Project name, Contractor name, date, line size and material, conduit identification, and ongoing footage counter. The camera, television monitor, and other components of the video system shall be capable of producing a picture quality satisfactory to the satisfaction of the Owner. The recording of the internal condition of the storm drain conduit shall be clear, accurate, focused and in color. If the recording fails to meet these requirements, the, equipment shall be removed and replaced with equipment that is suitable. No payment will be made for an unsatisfactory recording.

If during video inspection, water is encountered inside the conduit, the conduit shall be dewatered by the Contractor. The storm drain section must be dry. Video recording conducted while the camera is floating is not acceptable unless approved by the Owner.

If during video inspection, debris is encountered that prohibits a proper inspection of the conduit, the Contractor shall remove the debris before proceeding.

All video shall be documented using a data logger and reporting system that are PACP compliant and which use codes as established by the National Association of Sewer Service Companies (NASSCO)s - Pipeline Assessment and Certification Program (PACP).

Computer printed location records shall be kept by the Contractor and shall clearly show the location and orientation of all points of significance such as joints, conduit connections, connections at manholes and inlets, and defects. Copy of all records shall be supplied to the Owner. Noted defects shall be documented as color digital files and color hard copy print-outs. Photo logs shall accompany each photo submitted.

The video recording shall supply a visual and audio record of the storm drain conduits that may be replayed. Video recordings shall include an audio track recorded by the video technician during the actual video work describing the parameters of the storm drain conduit being videoed (i.e. location, depth, diameter, pipe material), as well as describing connections, defects and unusual conditions observed during the video work. Video recording playback shall be at the same speed that it was recorded. Slow motion or stop-motion playback features may be supplied at the option of the Contractor. Once

videoed, the CDs/DVDs shall be labeled and become the property of the Owner. The Contractor shall have all video and necessary playback equipment readily accessible for review by the Owner while the project is under construction.

Post-installation video shall not be completed until all work is completed on a section of storm drain conduit. Post-installation video work shall be completed by the Contractor in the presence of the Owner. The post-installation video work shall be completed to confirm that the storm drain conduits are free of defects. Provide a color video showing the completed work. Prepare and submit video logs providing location of storm drain conduit along with location of any defects. Manhole and inlet work shall be complete prior to post-installation video work.

For post-installation video, exercise the full capabilities of the camera equipment to document the completion and conformance of the storm drain installation work with the Contract Documents. Provide a full 360-degree view of conduit, all joints, and all connections. The camera shall be moved through the storm drain conduit in either direction at a moderate rate, stopping and slowly panning when necessary to permit proper documentation of the conduit condition at each pipe connection, joint, and defect. In no case shall the camera be pulled at a speed greater than 30 feet per minute. Manual winches, power winches, TV cable, and powered rewinds or other devices that do not obstruct the camera view or interfere with proper documentation of the storm drain conditions shall be used to move the camera through the storm drain conduit. When manually operated winches are used to pull the camera through the conduit, telephones or other suitable means of communication shall be set up between the two access points of the conduit being videoed to insure good communication between members of the video crew.

Distance measurements shall be provided to an accuracy of one tenth of a foot.

Video shall be continuous for each storm drain conduit segment. Do not show a single segment on more than one CD/DVD, unless specifically allowed by the Owner."

Contractor shall submit to Owner the following:

A. National Association of Sewer Service Companies (NASSCO) Pipeline Assessment and Certification Program (PACP) certification of operators who will be performing video work.

B. Compact Disc (CD) or Digital Video Disc (DVD) of recording of storm drain conduits (concrete storm water pipe or box culvert).
   a. The color CD or DVD shall include a digital color key map in a format acceptable to the Owner with each segment of storm

drain conduit labeled with the appropriate inspection ID on the map.

b. The file folder for each segment of the storm drain conduit shall have a unique name based on the Owner's approved inspection naming convention and shall contain the following:
   i. Video files
   ii. Video inspection logs with information coded in accordance with the PACP
   iii. Photo logs
   iv. A report summarizing the results of the video inspection
   v. A proposed method of repair for any defects discovered.

3. Time commitments from City for projects that are exempt from the cost of the initial video inspection

Projects that are exempt from the cost of the initial video inspection are afforded the following time commitments from the City.

A. Initial inspection – contractor must inform the City of Austin construction inspector assigned to the project in writing that all stormdrain infrastructure for the project has been completed according to the permit and is ready for inspection. The inspector will then notify the Watershed Protection Department (WPD) in writing that the all of the stormdrain infrastructure for the project has been completed and is ready for inspection. The WPD is allowed 15-days to complete inspection from written notification by the inspector. The outcome of this item does not impact the one-year warranty requirements.

B. Video re-inspection by the contractor for deficient installed stormdrain infrastructure. The contractor must submit the video inspection data as defined in this specification to the City of Austin construction inspector assigned to the project along with a written letter of transmittal certified by a professional engineer stating that all identified stormdrain infrastructure installation deficiencies for the project have been corrected. The inspector will then notify the Watershed Protection Department (WPD) in writing and convey the video inspection data to the WPD. The WPD is allowed 15-days to complete review of the data from the date of delivery by the inspector.

(27) Pressure Pipe Hydrostatic Testing

After the pipe has been installed and backfilled and all service laterals, fire hydrants and other appurtenances installed and connected, a pressure test, followed by a leakage test, will be conducted by the City. The City will furnish the pump and gauges for the tests. The Contractor shall be present and shall furnish all necessary assistance for conducting the tests. The specified test pressures will be based on the elevation of the lowest point of the line or section under test.

Before applying the specified test pressure, all air shall be expelled from the pipe. If permanent air vents are not located at all high points, the Contractor shall install corporation cocks at such points.

All drain hydrant and fire hydrant leads, with the main 6-inch gate valve open and the hydrant valve seats closed and nozzle caps removed, shall be included in the test.

(a) Pressure Test

The entire project or each valved section shall be tested, at a constant pressure of 200 psi for a sufficient period (approximately 10 minutes) to discover defective materials or substandard work. The Contractor assumes all risks associated with testing against valves. Repairs shall be made by the Contractor to correct any defective materials or substandard work. The Contractor shall pre-test new lines before requesting pressure tests by City Forces. The Contractor shall have new lines pressurized to a minimum of 100 psi, on the date of testing, prior to arrival of City Forces.

(b) Leakage Test

A leakage test will follow the pressure test and will be conducted on the entire project or each valved section. The Contractor assumes all risks associated with testing against valves. The leakage test shall be conducted at 150 psi for at least 2 hours. The test pressure shall not vary by more than ±5 psi for the duration of the test.

(1) Allowable Leakage

Leakage shall be defined as the quantity of water that must be supplied into any test section of pipe to maintain the specified leakage test pressure after the air in the pipeline has been expelled and the pipe has been filled with water.

No pipe installation will be accepted if leakage exceeds the amount given by the following formula:

$$\text{Allowable leakage (gal / hr)} = [L \times D] \div 10{,}875$$

Where L = length of pipe tested, in feet

D = nominal pipe diameter, in inches, as marked on the pipe

(2) Location and Correction of Leakage

If such testing discloses leakage in excess of this specified allowable, the Contractor, at the Contractor's expense, shall locate and correct all defects in the pipeline until the leakage is within the indicated allowance.

All visible leakage in pipe shall also be corrected by Contractor at the Contractor's expense.

(28) Service Charges for Testing

Initial testing performed by City forces for the Contractor will be at the City's expense. Retesting, by City forces, of Contractor's work that fails initial testing will be at the Contractor's expense. The City's charge for retests will be $265.00, plus $50.00 for each hour over four hours. On City-funded projects, the charges incurred by the City for retesting will be deducted from funds due the Contractor. On non-City-funded projects, the charges incurred by the City for retesting will be billed to the Contractor. The City will withhold acceptance of the Contractor's work until the Contractor has paid the City for the retesting costs.

(29) Disinfection of Potable Water Lines

(a) Preventing Contamination

The Contractor shall protect all piping materials from contamination during storage, handling and installation. Prior to disinfection, the pipeline interior shall be clean, dry and unobstructed. All openings in the pipeline shall be closed with watertight plugs when pipe laying is stopped at the close of the day's work.

(b) Cleaning

Prior to disinfection the Contractor shall clean the pipeline to remove foreign matter. For pipelines 16" in diameter or smaller, cleaning shall consist of flushing the pipeline. For pipelines greater than 16" in diameter, cleaning shall be performed by operating hydrants and blow-offs located at low points in the pipeline, or by mechanical means (sweeping or pigging. Water for the Work shall be metered and furnished by the Contractor in accordance with Section 01500 of the Standard Contract Documents.

(c) Procedure and Dosage

The Contractor, at its expense, will supply the test gauges and the Sodium Hypochlorite conforming to ANSI/AWWA B300, which contains approximately 5 percent to fifteen percent available chlorine, and will submit for approval a written plan for the disinfection process. Calcium Hypochlorite conforming to ANSI/AWWA B300, which contains approximately 65 percent available chlorine by weight, may be used in granular form or in 5 g tablets for 16" diameter or smaller lines, if it is included as part of the written plan of disinfection that is approved by the City of Austin. The Contractor, at its expense, shall provide all other equipment, supplies and the necessary labor to perform the disinfection under the general supervision of the City.

One connection to the existing system will be allowed with a valve arranged to prevent the strong disinfecting dosage from flowing back into the existing water supply piping. The valve shall be kept closed and locked in a valve box

with the lid painted red. No other connection shall be made until the disinfection of the new line is complete and the water samples have met the established criteria. The valve shall remain closed at all times except when filling or flushing the line and must be staffed during these operations. Backflow prevention in the form of a reduced pressure backflow assembly must be provided if the valve is left unattended. The new pipeline shall be filled completely with disinfecting solution by feeding the concentrated chlorine and approved water from the existing system uniformly into the new piping in such proportions that every part of the line has a minimum concentration of 50 mg/liter available chlorine.

The disinfecting solution shall be retained in the piping for at least 24 hours and all valves, hydrants, services, stubs, etc. shall be operated so as to disinfect all their parts. After this retention period, the water shall contain no less than 25 mg/liter chlorine throughout the treated section of the pipeline.

For pipelines larger than 16” in diameter, the Contractor may use the AWWA C-651 “Slug Method” for disinfecting the pipeline. Chlorine shall be fed at a constant rate and at a sufficient concentration at one end of the pipeline to develop a slug of chlorinated water having not less than 100 mg/liter of free chlorine. The Contractor shall move the slug through the main so that all interior surfaces are exposed to the slug for at least three (3) hours. The chlorine concentration in the slug shall be measured as it moves through the pipeline. If the chlorine concentration drops below 50 mg/liter, the Contractor shall stop the slug and feed additional chlorine to the head of the slug to restore the chlorine concentration to at least 100 mg/liter before proceeding. As the slug flows past fittings and valves, related valves and hydrants shall be operated so as to disinfect appurtenances and pipe branches.

Unless otherwise indicated, all quantities specified herein refer to measurements required by the testing procedures included in the current edition of “Standard Methods”. The chlorine concentration at each step in the disinfection procedure shall be verified by chlorine residual determinations.

(d) Final Flushing

The heavily chlorinated water shall then be carefully flushed from the potable water line until the chlorine concentration is no higher than the residual generally prevailing in the existing distribution system. Proper planning and appropriate preparations in handling, diluting, if necessary, and disposing of this strong chlorine solution is necessary to insure that there is no injury or damage to the public, the water system or the environment. The plans and preparations of the Contractor must be approved by the City before flushing of the line may begin. Additionally the flushing must be witnessed by an authorized representative of the City.

Approval for discharge of the diluted chlorine water or heavily chlorinated water into the wastewater system must be obtained from the Austin Water Utility. The line flushing operations shall be regulated by the Contractor so as not to overload the wastewater system or cause damage to the odor feed

systems at the lift stations. The City shall designate its own representative to oversee the work.

Daily notice of line discharging must be reported to the Austin Water Utility Dispatch office.

(e) Bacteriological Testing

After final flushing of the strong disinfecting solution, two (2) sets of water samples from the line, that are taken at least twenty-four (24) hours apart, will be tested for bacteriological quality by the City and must be found free of coliform organisms before the pipeline may be placed in service. Each set shall consist of one (1) sample that is drawn from the end of the main and additional samples that are collected at intervals of not more than 1000 feet along the pipeline. All stubs shall be tested before connections are made to existing systems.

The Contractor, at its expense, shall install sufficient sampling taps at proper locations along the pipeline. Each sampling tap shall consist of a standard corporation cock installed in the line and extended with a copper tubing gooseneck assembly. After samples have been collected, the gooseneck assembly may be removed and retained for future use.

Samples for bacteriological analysis will only be collected from suitable sampling taps in sterile bottles treated with sodium thiosulfate. Samples shall not be drawn from hoses or unregulated sources. The City, at its expense, will furnish the sterile sample bottles and may, at its discretion, collect the test samples with City personnel.

If the initial disinfection fails to produce acceptable sample test results, the disinfection procedure shall be repeated at the Contractor's expense. Before the piping may be placed in service, two (2) consecutive sets of acceptable test results must be obtained.

An acceptable test sample is one in which: (1) the chlorine level is similar to the level of the existing distribution system; (2) there is no free chlorine and (3) total coliform organisms are absent. An invalid sample is one, which has excessive free chlorine, silt or non-coliform growth as defined in the current issue of the "Standards Methods." If unacceptable sample results are obtained for any pipe, the Contractor may, with the concurrence of the Inspector, for one time only flush the lines and then collect a second series of test samples for testing by the City. After this flushing sequence is completed, any pipe with one or more failed samples must be disinfected again in accordance with the approved disinfection procedure followed by appropriate sampling and testing of the water.

The City of Austin Water Quality Laboratory will notify the assigned City of Austin Inspector in writing of all test results. The Inspector will subsequently notify the Contractor of all test results. The Water Quality Laboratory will not release test results directly to the Contractor.

(30) Cleanup and Restoration

It shall be the Contractor's responsibility to keep the construction site neat, clean and orderly at all times. Cleanup shall be vigorous and continuous to minimize traffic hazards or obstructions along the streets and to driveways. Trenching, backfill, pavement repair (as necessary), and cleanup shall be coordinated as directed by the City. The E/A will regulate the amount of open ditch and may halt additional trenching if cleanup is not adequate to allow for orderly traffic flow and access.

Materials at the site shall be stored in a neat and orderly manner so as not to obstruct pedestrian or vehicular traffic. All damaged material shall be removed from the construction site immediately and disposed of in a proper manner. All surplus excavated materials shall become the property of the Contractor for disposal at the Contractor’s expense. After trenching, the Contractor shall immediately remove all excavated materials unsuitable for or in excess of, backfill requirements. Immediately following the pipe laying Work as it progresses, the Contractor shall backfill, grade and compact all excavations as provided elsewhere. The backfill placed at that time shall meet all compaction test requirements. The Contractor shall immediately clean up and remove all unused soil, waste and debris and restore all surfaces and improvements to a condition equal or superior to that before construction began and to an appearance which complements the surroundings. The Contractor shall grade and dress the top 6 inches of earth surfaces with soil or other material similar and equal to the surrounding, fill and smooth any visible tracks or ruts, replace and re-establish all damaged or disturbed turf or other vegetation and otherwise make every effort to encourage the return of the entire surface and all improvements to a pleasant appearance and useful condition appropriate and complementary to the surroundings and equal or similar to that before construction began.

Placement of the final lift of permanent pavement, if a pavement is required, shall begin immediately after all testing of each segment of piping is satisfactorily completed.

510.4 Measurement

Pipe will be measured by the linear foot for the various types, sizes and classes. Parallel lines will be measured individually.

Where a line ties into an existing system, the length of the new line will be measured from the visible end of the existing system at the completed joint. Unless otherwise indicated, the length of water, reclaimed, and wastewater lines will be measured along pipe horizontal centerline stationing through fittings, valves, manholes, and other appurtenances.

Ductile iron fittings, whether standard mechanical joint or integral factory restrained joint type, will be measured by the ton and paid for in accordance with the schedule in Standard Products List WW-27C. Bolts, glands and gaskets will not be measured for

payment. Steel cylinder concrete pipe fittings and welded steel pipe fittings will not be measured separately and are included in the unit price for the respective pipe bid items.

Factory restrained joint pipe meeting the requirements of Standard Products List WW-27F will be measured by the linear foot. The estimated quantity on the bid form is only for restrained joint pipe having integral mechanically restrained joints.

Connecting a new water, wastewater, or reclaimed water service to an existing, comparable type of private service will be measured by each connection. Service pipe from the main to the service connection will be measured by the linear foot.

The Contractor shall be responsible for removing and treating ground water flowing into a trench up to a baseline flow rate of 350 gpm of sustained flow for each mainline open trench (no more that 300 linear feet open trench per work zone segment is allowed at one time). This baseline flow rate is not a prediction of ground water conditions to be expected on the Project. Rather, it establishes contract terms regarding the quantity of ground water for which the contractor is responsible without extra or separate compensation. The flow rate must exceed 350 gpm continuously for at least 4 consecutive hours to be considered sustained flow. It is expected that trench dewatering for this baseline rate may be accomplished with a single 3-inch trash-type pump per open trench; however, measured flow rate, not pump size, type or characteristics shall be used to determine if the baseline rate has been exceeded. Flow rate shall be determined by measurements made at the discharge point of the water treatment facilities. Surface storm water flowing into a trench shall be the Contractor's responsibility to remove and treat without compensation, regardless of inflow rate or volume.

Adjustment of elevations during construction resulting in changes in flow line elevations of plus or minus two feet or less will not be considered for credit or additional compensation and no measurement for payment will be made.

Stormwater pipe will be measured along the slope of the pipe. Where drainage pipe ties into inlets, headwalls, catch basins, manholes, junction boxes or other structures that length of pipe tying into the structure wall will be included for measurement but no other portion of the structure length or width will be so included.

Excavation and backfill, when included as pipe installation will not be measured as such but shall be included in the unit price bid for constructing pipe and measured as pipe complete in place including excavation and backfill.

When pay items are provided for the other components of the system, measurement will be made as addressed hereunder.

Video inspection of newly installed box culverts and storm drain pipe will be measured per linear foot of pipe videoed.

510.5 Payment

Payment for pipe, measured as prescribed above, will be made at the unit price bid per linear foot for the various sizes of pipe, of the materials and type indicated, unless unstable material is encountered or trench excavation and backfill is bid as a separate item.

The concrete seal, foundation rock or coarse aggregate when used as directed in unstable material will be paid for at the unit price bid per cubic yard, which shall be full payment for all excavation and removal of unsuitable material and furnishing, placing and compacting the foundation rock, coarse aggregate or other approved material all complete in place.

Excavation and backfill, when included as a separate pay item, will be paid for by Pay Item No. 510-E or 510-F.

No separate payment will be made for dewatering a trench with ground water inflow of less than the baseline rate of 350 gpm of sustained flow as described above. Dewatering of those trenches shall be included in the contract unit price of the Pipe pay item. Payment for dewatering a trench with ground water inflow exceeding 350 gpm of sustained flow shall be agreed by change order. Dewatering of bore pits shall be included in the contract unit price for Bore Entry Pit or Exit Pit regardless of inflow rate or volume unless specified otherwise in the bid item for Bore Entry Pit or Exit Pit.

(1) Pipe

Payment for pipe, measured as prescribed above, will be made at the unit price bid per linear foot complete-in-place as designed and represented in the Drawings and other Contract documents. Restrained joint pipe meeting the requirements of Standard Products List WW-27F will be paid for separately at the unit price bid per linear foot. Unless otherwise provided herein, as separate pay item(s), the bid price per linear foot of pipe shall include the following:

clearing

constructing any necessary embankment

excavation

disposal of surplus or unusable excavated material

furnishing, hauling and placing pipe

field constructed joints, collars, temporary plugs, caps or bulkheads

all necessary lugs, rods or braces

pipe coatings and protection

connections to existing systems or structures, concrete blocking and thrust blocks and restrained joints

preparing, shaping, pumping for dewatering, and shoring of trenches

bedding materials

backfill materials

hauling, placing and preparing bedding materials

particle migration measures

hauling, moving, placing and compacting backfill materials

temporary pavement repairs and maintenance

temporary and permanent removal and replacement of pavement, curb, drainage structures, driveways, sidewalks and any other improvements damaged or removed during construction

cleanup

vertical stack on deep wastewater services

all other incidentals necessary to complete the pipe installation as indicated.

pipe joint restraint devices, where specified or allowed, meeting Standard Products Lists WW-27A or WW-27G .

No separate payment will be made for thrust restraint measures.

Steel cylinder concrete pipe fittings and welded steel pipe fittings will not be paid for separately. These will be including in the unit price bid for the bid item Pipe.

(2) Concrete Cradles and Seals

When called for in the Bid, concrete cradles and seals will be paid for at the unit Contract price bid per linear foot for the size of pipe specified, complete in place.

(3) Concrete Retards

When called for in the Bid, Concrete retards will be paid under Item No. 593S, “Concrete Retards".

(4) Boring or Jacking

When called for in the Bid, boring or jacking will be paid under Item 501S, "Jacking or Boring Pipe”.

(5) Wet Connections to Water Mains

When called for in the bid, wet connections will be paid at the unit price bid per each, complete in place, according to the size of the main that is in service and shall be full compensation for all Work required to make the connection and place the pipe in service. (See subsection 510.3 'Construction Methods' part (24) (b) 'Wet Connections to Existing Water System').

(6) Fittings

Ductile iron fittings, furnished in accordance with these specifications, will be paid for at the unit price bid per ton, complete in place, according to the schedule of weights in Standard Products List WW-27C. Bolts, glands, and gaskets will not be paid for separately and shall be included in the contract unit price for fittings.

(7) Concrete Trench Cap and Encasement

Where the distance between the top of the concrete encasement and the top of the trench cap is less than 36 inches, the concrete cap and encasement shall be poured as one unit and paid for under this bid item at the Contract price bid per linear foot. When the distance above is greater than 36 inches or when the trench cap is placed separately, the trench cap shall be paid for as a separate item, per linear foot, complete in place.

(8) Cement-Stabilized Backfill

Cement-stabilized backfill will be paid for at the unit price bid per linear foot and shall be full payment to the Contractor for furnishing and installing the required material, mixed, placed and cured complete in place.

(9) Concrete Encasement

When called for in the Bid, Concrete Pipe Encasement will be paid under Item No. 505S, "Encasement and Encasement Pipe".

(10) Pressure Taps

Pressure taps will be paid for at the unit price bid, complete in place, according to the size tap made and the size main tapped and shall be full payment for furnishing all necessary materials, including tapping sleeve and valve, making the tap, testing and placing the connection in service.

(11) Excavation Safety Systems

When called for in Bid, Trench Safety Systems shall conform to Item No. 509S, "Excavation Safety Systems".

(12) Connecting a New Water, Wastewater, or Reclaimed Water Service to an existing, comparable type of private service will be paid for at the unit price bid, complete in place, according to the size of new service and size of existing private service, and shall be full payment for furnishing and installing all necessary materials, such as cleanouts, pipe, couplings, and fittings, and including excavation and backfill.

(13) Video Inspection

Video Inspection of Newly Installed Box Culverts and Storm Drain Pipe will be paid for at the unit price bid per linear foot and shall be full payment for all labor, equipment, and materials required for video inspection per this specification, including all submittals of CD/DVD as required.

Payment, when included as a Contract pay item, will be made under one of the following:

Pay Item No. 510-AR __Dia.	Pipe, __Dia. _____Type (all depths), including Excavation and Backfill	Per Linear Foot.
Pay Item No. 510-ARRJ-__Dia.:	Factory Restrained Joint Pipe, __Dia. Class____ Ductile Iron, (all depths) including Excavation and Backfill	Per Linear Foot.
Pay Item No. 510-BR___x___Dia.:	Connecting New_____Service to Existing Private Service (____Dia. New Service to ____Dia. Private Service)	Per Each.
Pay Item No. 510 - CR:	Pipe Excavation, ____Ft. Width	Per Linear Foot.
Pay Item No. 510 - DR:	Pipe Trench Backfill, ____Ft. Width	Per Linear Foot.
Pay Item No. 510 - ER:	Concrete Seal or Cradle, ____Dia. Pipe	Per Linear Foot.
Pay Item No. 510 - FR:	Concrete Trench Cap, ____Ft. Width	Per Linear Foot.
Pay Item No. 510 - GR:	Concrete Cap and Encasement, ____Dia. Pipe	Per Linear Foot.
Pay Item No. 510 - HR:	Cement Stabilized Backfill, ___Dia. Pipe	Per Linear Foot.
Pay Item No. 510 - IR___x___Dia.:	Pressure Taps, ___ Dia. X ___ Dia.	Per Each.
Pay Item No. 510 - JR___x___Dia.:	Wet Connections, ___ Dia. x ___ Dia.	Per Each.
Pay Item No. 510 - KR:	Ductile Iron Fittings	Per Ton.
Pay Item No. 510-ASD___Dia.:	Pipe, __Dia. Type (all depths), including Excavation and Backfill	Per Linear Foot.
Pay Item No. 510-CSD:	Pipe Excavation, ____Ft. Width	Per Linear Foot.
Pay Item No. 510-DSD:	Pipe Trench Backfill, ____Ft. Width	Per Linear Foot.
Pay Item No. 510-ESD:	Concrete Seal or Cradle, ____Dia. Pipe	Per Linear Foot.
Pay Item No. 510-FSD:	Concrete Trench Cap, ____Ft. Width	Per Linear Foot.

Pay Item No. 510-GSD	Concrete Cap and Encasement, __Dia. Pipe	Per Linear Foot.
Pay Item No. 510-HSD:	Cement Stabilized Backfill, ___Dia. Pipe	Per Linear Foot.
Pay Item No. 510-AW___Dia.:	Pipe, __Dia. Type (all depths), including Excavation and Backfill	Per Linear Foot.
Pay Item No. 510-AWRJ___Dia.:	Factory Restrained Joint Pipe, ___Dia., Class____ Ductile Iron, (all depths) including Excavation and Backfill	Per Linear Foot.
Pay Item No. 510-BW___x___Dia.:	Connecting New_____Service to Existing Private Service (____Dia. New Service to ____Dia. Private Service)	Per Each.
Pay Item No. 510-CW:	Pipe Excavation, ____Ft. Width	Per Linear Foot.
Pay Item No. 510-DW:	Pipe Trench Backfill, ____Ft. Width	Per Linear Foot.
Pay Item No. 510-EW:	Concrete Seal or Cradle, ____Dia. Pipe	Per Linear Foot.
Pay Item No. 510-FW:	Concrete Trench Cap, ____Ft. Width	Per Linear Foot.
Pay Item No. 510-GW:	Concrete Cap and Encasement, __Dia. Pipe	Per Linear Foot.
Pay Item No. 510-HW:	Cement Stabilized Backfill, ___Dia. Pipe	Per Linear Foot.
Pay Item No. 510-IW___x___Dia.	Pressure Taps, ___ Dia. X ___ Dia.	Per Each.
Pay Item No. 510-JW___x___Dia.:	Wet Connections, ___ Dia. x ___ Dia.	Per Each.
Pay Item No. 510-KW:	Ductile Iron Fittings	Per Ton.
Pay Item No. 510-AWW___Dia.:	Pipe, __Dia. ___Type (all depths), including Excavation and Backfill	Per Linear Foot.
Pay Item No. 510-AWWRJ___Dia.	Factory Restrained Joint Pipe, ___Dia., Class Ductile Iron, (all depths) including Excavation and Backfill	Per Linear Foot.
Pay Item No. 510-BWW___x___Dia.:	Connecting New_____Service to Existing Private Service (____Dia. New Service to ____Dia. Private Service)	Per Each.
Pay Item No. 510-CWW:	Pipe Excavation, ____Ft. Width	Per Linear Foot.
Pay Item No. 510-	Pipe Trench Backfill, ____Ft. Width	Per Linear Foot.

DWW:

Pay Item No. 510-EWW:	Concrete Seal or Cradle, ____Dia. Pipe	Per Linear Foot.
Pay Item No. 510-FWW:	Concrete Trench Cap, ____Ft. Width	Per Linear Foot.
Pay Item No. 510-GWW:	Concrete Cap and Encasement, _Dia. Pipe	Per Linear Foot.
Pay Item No. 510-HWW:	Cement Stabilized Backfill, ___Dia. Pipe	Per Linear Foot.
Pay Item No. 510-KWW:	Ductile Iron Fittings	Per Ton.
Pay Item No. 510-VIDEO	Video Inspection of Newly Installed Box Culverts and Storm Drain Pipe	Per Linear Foot.

An “R” after the pay item indicates the use for reclaimed water.

An “SD” after the pay item indicates the use for storm drain.

A "W" after the pay item indicates the use for water.

A "WW" after the pay item indicates the use for wastewater.

End

Applicable References:

Standard Specifications Manual: Item Nos. Ref: 102S, 210S, 402S, 403S, 501S, 505S, 506, 507S, 509S, 593S, 601S, 604S

Standards Manual: Standard Detail Nos. 510S-1, (520 - series).

Design Criteria Manuals: Utilities Criteria Manual, Section 5.

Item No. 610S
Preservation of Trees and Other Vegetation

610S.1 Description and Definitions

This item shall govern the proper care, protection and treatment of trees and other vegetation in the vicinity of the permitted development activity (as defined in Land Development Code 25-1-21(27)). All work shall be performed in accordance with the City approved drawings and specifications (e.g. Standard Series 600) or as approved by the City Arborist (as defined below). Tree pruning and/or treatments shall be performed under the direct supervision of a qualified arborist (as defined below) or as allowed by the City Arborist.

Definitions

City Arborist – City official designated by the Director of the Planning and Development Review Department (Land Development Code 25-8-603) or as designated by the City Arborist.

Oak wilt - a tree disease caused by a fungus "Ceratocystis fagacearum" that infects the vascular system of Oak "genus Quercus" trees and prevents water transport through the trunk and canopy of the tree. This usually fatal tree disease can be spread by certain insects that come into contact with tree wounds or by interconnected tree roots. February through June is a high risk period due to the stage of the fungus and insect activity. See section 610S.4(H) for additional requirements for preventing Oak wilt infection.

Qualified Arborist – an individual engaged in the profession of arboriculture or closely related field who, through experience, education, and related training, possesses the competence to provide for, or supervise, the management of trees and other woody plants (as defined in the most current version of ANSI A300 (Part 1)-2001, section 4.1).

This specification is applicable for projects or work involving either inch-pound or SI units. Within the text and accompanying tables, the inch-pound units are given preference followed by SI units shown within parentheses.

610S.2 Submittals

The following is a list of the minimum submittal requirements for this specification item shall include:

A. Identification of the location, type of protective fencing (i.e. A, B or C), materials of construction and installation details;

B. Qualified Arborist credentials (i.e. proof of certification from the International Society of Arboriculture, licenses, resume and/or references);

C. Type, location and construction details for proposed tree wells;

D. Location, type, materials of construction and installation details for permeable paving;

E. Proposed nutrient mix specifications and when required by the City Arborist, soil and/or foliar analysis for fertilizer applications.

610S.3 Materials

A. Protective Fencing and Signage

Protective fencing is designated as the materials used to protect the root zones of trees as illustrated in City of Austin Standard Detail 610S-1. Three basic types of protective fencing materials are allowed by the City of Austin. Type A and Type B are typical applications and shall be installed where damage potential to a tree root system is high, while Type C shall be installed where damage potential is minimal. The specific type of protective fencing for the work shall be as indicated on the drawings. Type C fence materials shall be subject to approval by the City Arborist. Type C fencing shall be replaced by Type A or Type B fencing as directed by the City Arborist if it fails to perform the necessary function.

1. Type A Chain Link fence (Typical Application-high potential damage)

Type A protective fencing shall be installed in accordance with City of Austin Standard Details 610S-2 and 610S-4 and shall consist of a minimum five-foot (1.5 meters) high chain link fencing with tubular steel support poles or "T" posts.

2. Type B Wood Fence (Typical Application-high potential damage)

Type B protective fencing shall be installed in accordance with City of Austin Standard Details 610S-3 and 610S-5 and shall consist of any vertical planking attached to 2x4-inch (50 x 100 mm) horizontal stringers which are supported by 2x4-inch (50 x 100 mm) intermediate vertical supports and a 4x4-inch (100 x 100 mm) at every fourth vertical support .

3. Type C Other Materials (Limited Application-minimal potential damage)

The following materials may be permitted as alternates for limited or temporary applications (3 days or less) where tree damage potential is minimal (as determined by the City Arborist):

(a) High visibility plastic construction fencing.

The fabric shall be 4 feet (1.2 meters) in width and made of high density polyethylene resin, extruded and stretched to provide a highly visible international orange, non-fading fence. The fabric shall remain flexible from -60oF to 200oF (-16oC to 93oC) and shall be inert to most chemicals and acid. The fabric pattern may vary from diamond to circular with a minimum unit weight of 0.4 lbs./Ft. (0.6 kilograms per meter).

The fabric shall have a 4 foot (1.2 meters) width minimum tensile yield strength (Horizontal) of 2000 psi [13.9 megaPascals], ultimate tensile

strength of 2680 psi [18.5 megaPascals] (Horizontal) and a maximum opening no greater than 2 inches (50 mm).

(b) Other approved equivalent restraining material.

The fencing materials, identified in (a) and (b) above, shall be supported by steel pipe, tee posts, U posts or 2" x 4" (50 mm x 100 mm) timber posts that are a minimum of 5-1/2 feet (1.68 meters) in height and spaced no more than 8 feet (2.44 meters) on centers. The fabric shall be secured to post by bands or wire ties.

4. Signage

A laminated sign, no smaller than 8.5 X 11 inches, shall be posted on each tree protective device, and at least every 100 linear feet on protective fencing, identifying the following information: Tree & Root Protection Zone, Per City of Austin code (Chapter 25-8, Subchapter B, Article 1) this protective device is to remain in place for the entirety of the development project and illegal removal is subject to fines and work suspensions. Additional information can be obtained at the City Arborist (512-974-1876) web site (http://www.ci.austin.tx.us/trees). Zona de Protección del Árbol y las Raíces: el dispositivo protector debe quedarse en el lugar para la totalidad del proyecto de la construcción. Para información adicional, contacta la Arborista Municipal (512) 974-1876 o http://www.ci.austin.tx.us/trees/trees_spanish.htm.

B. Trunk Protection (Limited Application)

When indicated on the drawings or directed by the City Arborist tree trunk protection shall be provided in accordance with City of Austin Standard Details 610S-4 and 610S-5. Tree trunk protection shall consist of any 2 x 4-inch (50 x 100 mm) or 2 x 6-inch (50 x 150 mm) planking or plastic strapping and shall be attached in a manner that does not damage the tree.

C. Tree Dressing

Wound treatments should not be used to cover wounds or pruning cuts, except when recommended for disease (see section 610S.4 (H)), insect, mistletoe, or sprout control (from ANSI A300 (Part 1)-2001, section 5.4.1).

D. Tree Wells for Raised Grades

When existing grades are raised by more than 4 inches (10.16 cm), the tree root system shall be protected by the installation of tree wells in accordance with City of Austin Standard Detail 610S-6. Native stone or non-toxic timber shall be used for the separator wall of the well and PVC conforming to ASTM D-2729, SDR-35 shall be used for the aeration systems in fill areas.

E. Permeable Paving (Environmental Criteria Manual Section 3.5.A.1)

Permeable segmented pavers in conjunction with PVC pipe aeration system or concrete on gravel base with cored holes shall be used to protect existing tree root zones when indicated on the drawings or directed by the City Arborist.

F. Fertilizer

Humate/nutrient solutions with mycorrhizae components or soil injection at recommended rates are to be used when appropriate. Construction which will be completed in less than 90 days may use materials at half the recommended rates. Alternative organic fertilizer materials are acceptable when approved by the City Arborist.

610S.4 Construction Methods

A. Protective Fencing

All trees and shrubs in the proximity of the construction site shall be carefully checked for damage prior to initiation of the permitted development activity.

All individual or groups of trees, shrubs, and natural areas shown to be protected on the drawings or identified to be protected by the City Arborist, shall be protected during construction with temporary fencing as indicated on the drawings or as directed by the City Arborist.

Protective fences (section 610S.4.A) shall be installed prior to the start of any site preparation work (clearing, grubbing, or grading), and shall be maintained in functioning condition throughout all phases of the construction project.

Protective fence locations in close proximity to intersecting streets or drives shall adhere to the sight distance (Section 1.3.1.C.6) and desirable sight triangle (Figure 1-6 criteria found in the City of Austin Transportation Criteria Manual).

1. Protective fences shall be constructed at the locations (typically the outer limits of the critical root zone) and with materials indicated on the drawings to prevent the following (Environment Criteria Manual, Appendix P-2, Note 6):

   (a) Soil compaction in the root zone area resulting from vehicular traffic or storage of equipment or materials.

   (b) Critical root zone disturbances due to grade changes [greater than 4" (10.16 cm) cut or fill] or trenching not reviewed and authorized by the City Arborist.

   (c) Damage to exposed roots, trunks or limbs by mechanical equipment.

   (d) Other activities detrimental to trees such as chemical storage, concrete truck cleaning, and fires.

2. Exceptions to the installation of protective fences at the tree drip lines may be permitted in the following cases:

   (a) Where there is to be an approved grade change, impermeable paving surface, tree well, or other such site development, the fence shall be erected no more than 2 feet (0.6 meters) beyond the area of disturbance unless approved by the City Arborist;

   (b) When permeable paving is to be installed within a tree's critical root zone, the fence shall be erected at the outer limits of the permeable paving area (prior to any site grading so that this enclosed area is graded separately to minimize root damage);

(c) When trees are located close to a proposed building or other construction activity (Environment Criteria Manual, Appendix P-2, Note 6.c), the fence shall be erected up to 10 feet (3 meters) to allow work space between the fence and the structure. Apply organic mulch to a depth of 8 inches [30.48 cm] in the unprotected root zone area;

(d) When there are street-side pedestrian walkways, fences shall be constructed in a manner that does not obstruct safe passage;

(e) When there are severe space constraints due to tract size or other special requirements, the Contractor shall contact the City Arborist to discuss alternatives.

When any of the exceptions listed above will result in a fence being located closer than five (5) feet (1.5 meters) to a tree trunk, the Contractor shall also protect the trunk with strapped-on planking to a height of 8 feet [2.4 meters] (or to the limits of lower branching) in addition to the fencing requirement (City of Austin Standard Details 610S-4 and 610S-5).

B. Pruning and Repair of Damage

Tree pruning, to provide clearance for the work and/or to remove hazards, shall be performed under the direct supervision of a qualified arborist and shall follow standards identified in ANSI A300 (Part 1), “Pruning”. A minimum clearance height of eight (8) feet (2.4 meters) above the street level must be provided and maintained for all existing trees if adjacent to a sidewalk. However, if the limbs of trees overhang the curb line or edge of travel lane of any street, a minimum clearance height of fourteen (14) feet (4.2 meters) is required (Transportation Criteria manual section 6.2.3,A, 4, “Clearance Height”). Pruning shall provide the minimum clearance needed to perform the work or remove a hazard unless otherwise directed by the City Arborist to comply with transportation criteria or to mitigate for damage.

If tree damage compromises a tree’s structural integrity then the area shall be adequately secured until a qualified arborist makes an assessment of the tree and corrective actions are completed with approval from the City Arborist. Damage to oak trees shall be treated immediately, with consideration for site safety, to reduce the risk of Oak Wilt infection (See 610S.4.H, “Oak Wilt Prevention”). Tree root wounds shall be treated to remove loose, damaged tissue from in and around the wound or if necessary the root shall be cut cleanly and covered with topsoil, or other material approved by the City Arborist, to prevent drying of root tissue and to create a favorable environment for root sprouting. Trunk wounds shall also be treated to remove loose, damaged tissue around the wound. Tree canopy repairs shall be performed in accordance with the most current version of ANSI A300 (Part 1), “Pruning”, to prevent further damage to the tree and to promote recovery of the tree to sound condition. The ANSI standard describes proper pruning methods for limb removal and for making finish pruning cuts.

Trees damaged or removed without prior approval or where minimum design criteria is exceeded due to failure to maintain approved tree protection shall be mitigated (Environmental Criteria Manual section 3.5.4, “Mitigation Measures”) in accordance with Land Development Code Chapter 25-8, Subchapter B, Article 1.

All trees damaged during construction shall receive an application of fertilizer within the drip line conforming to Standard Specification Item No. 606S, "Fertilizer" at the rate of 4 pounds per caliper inch (.07 kilograms per caliper mm).

C. Cutting and Filling Around Trees

When the depth of an excavation or embankment exceeds 4 inches (10.16 cm) within the critical root zone of any tree with a trunk diameter greater than 8 inches (200 mm), the City Arborist may require a tree well to be constructed per the City of Austin approved specifications and details (Section 610S.3.D and City of Austin Standard Detail 610S-6).

D. Paving Around Trees

Where new paving within the ½ critical root zone of any tree greater than a 8 inches (10.16 cm) diameter is approved, a permeable pavement and aeration system may be required by the City Arborist per the City of Austin Standard Detail (Section 610S.3.E, Environmental Criteria Manual Section 3.5.3.A.1 and Figure 3-8) must be installed as indicated on the Drawings, except for street construction.

E. Tree Removal

Tree removal shall comply with Land Development Code Chapter 25-8, Subchapter B, Article 1. An approved permit, or an approved site plan is required for removal of trees 8” and larger (see Environmental Criteria manual section 3.3.2.A.2 and figure 3-1 for measurement standards) with additional requirements for City Parkland properties and for Hill Country Roadway Corridor sites. Trees 19 inches in diameter and greater are defined as protected trees and require specific review from the City Arborist to approve a permit or site plan for removal. In addition heritage trees require a more extensive evaluation by the City Arborist and may require rulings from boards and commissions.

All trees to be removed shall be performed in a manner that does not damage the canopies, trunks or root systems of remaining trees and that protects all existing facilities, improvements and vegetation. Removal of oak trees shall follow the Oak Wilt Prevention procedures per the City of Austin Standards (Section 610S.4,(H)). All tree material shall be removed from the site unless authorized by the City Arborist or if it will be used as wood chips or mulch.

When a tree or shrub is scheduled for removal, it shall be cut to a maximum depth of 12 inches (30.5 cm) below the surrounding grade (the tree(s) should be removed at grade, and with hand saws, in situations where other tree root systems are present which are to be preserved). When applicable, after tree removal, soil shall be placed in the hole to a depth matching the existing grade.

All damage resulting from tree removal or pruning shall be repaired at the Contractor's own expense and shall follow guidelines in this specification.

F. Final Cleanup

All temporary tree and shrub preservation and protection measures shall be removed when the construction has been completed and any mulch applications shall be removed or reduced to no more than 3 inches (7.62 cm) depth.

G. Root Zone Aeration and Fertilization

As a component of an effective remedial tree care program per Environmental Criteria Manual section 3.5.4, preserved trees within the limits of construction may require soil aeration and supplemental nutrients. Soil and/or foliar analysis should be used to determine the need for supplemental nutrients. The City Arborist may require these analyses as part of a comprehensive tree care plan. Soil pH shall be considered when determining the fertilization composition as soil pH influences the tree's ability to uptake nutrients from the soil. If analyses indicate the need for supplemental nutrients, then humate/nutrient solutions with mycorrhizae components are highly recommended. In addition, soil analysis may be needed to determine if organic material or beneficial microorganisms are needed to improve soil health. Materials and methods are to be approved by the City Arborist (512-974-1876) prior to application. The owner or general contractor shall select a fertilization contractor and ensure coordination with the City Arborist.

Pre-construction treatment should be applied in the appropriate season; ideally the season preceding the proposed construction. Minimally, areas to be treated include the entire critical root zone of trees as depicted on the City approved plans. Treatment should include, but not limited to, fertilization, soil treatment, mulching, and proper pruning.

Post-construction treatment should occur during final revegetation or as determined by a qualified arborist after construction. Construction activities often result in a reduction in soil macro and micro pores and an increase in soil bulk density. To ameliorate the degraded soil conditions, aeration via water and/or air injected into the soil is needed or by other methods as approved by the City Arborist. The proposed nutrient mix specifications and soil and/or foliar analysis results need to be provided to and approved by the City Arborist prior to application (Fax # 512-974-3010). Construction which will be completed in less than 90 days may use materials at ½ recommended rates. Alternative organic fertilizer materials are acceptable when approved by the City Arborist. Within 7 days after fertilization is performed, the contractor shall provide documentation of the work performed to the City Arborist, Planning and Development Review Department. P.O. Box 1088, Austin, TX 78767. This note should be referenced as item #1 in the Sequence of Construction.

H. Oak Wilt Prevention Policy

1. Purpose and Scope

The purpose of this Oak Wilt Prevention Policy is to identify measures that city staff and city-hired contractors and their sub-contractors, who perform the services of removing or trimming trees, will take to prevent the spread of oak wilt.

2. Definitions

Oak Wilt Disease: A tree disease caused by the fungus, Ceratocystis fagacearum. The fungus infects the vascular system of a tree. The vascular system contains vessels which transport moisture throughout the tree. The vessels of an infected tree effectively become blocked by the infection of the fungus, and cannot transport adequate moisture to sustain a healthy or living tree. In most cases, the end result is tree mortality.

3 Prevention Policy

(a) Prior to beginning field work, all city staff associated with projects involving potential contact with oak trees shall be made aware of the city's official Oak Wilt Policy by receiving and reading a written copy of this policy. Staff receiving a written copy of the policy shall include, but not limited to, project managers, equipment operators responsible for removing or trimming trees, or operators using heavy equipment which could cause wounding of susceptible oaks in the use of the equipment. In addition, individual city departments will provide a written copy of the Oak Wilt Policy to contractors participating in city projects in areas where oak trees are present before initiating field work.

(b) When possible, city staff and contractors should avoid trimming, pruning, or wounding Live Oaks and Red Oaks (Spanish, Shumard, Texas Red, and Blackjack oaks) from February through June.

(c) At all times and irrespective of limb size, all cuts and wounds to oak trees shall be dressed immediately using a non-phytotoxic tree wound dressing. Stump cuts and damaged roots (both above and below ground) shall also be dressed.

(d) Disinfection of pruning tools, saws, and related equipment is mandatory during the trimming or pruning of oak trees. Disinfection of tree removal and trimming equipment shall occur before work begins in a project area, between work in individual oak trees, and again prior to leaving a project area. Acceptable disinfectants include either aerosol disinfectant or a 10 percent bleach-water solution.

*NOTE: Although this policy would require the disinfection of pruning equipment before and between oak trees as a precaution, research does not substantiate disinfection as a means of preventing the transmission of the oak wilt disease.

4. Disposal Policy

(a) Chipping or shredding the wood from infected trees to use as mulch is an acceptable means of recycling the wood. Chipping or shredding allows the wood to dry out quickly, thereby killing the fungus.

(b) Burning diseased wood is an acceptable means of disposal. Burning diseased logs will kill the fungus, and the fungus will not spread with the smoke.

(c) Logs from diseased Red Oaks, that are not chipped, shredded, or burned shall be disposed of at a landfill.

(d) Firewood from diseased Red Oak trees shall not be stored near healthy trees where fungal spores or insects that carry the spores have the potential to spread the fungus to healthy trees. It is recommended to store oak firewood under a sheet of clear plastic, tightly sealing the edges of plastic with soil or bricks. Doing so will prevent any spore carrying beetles from escaping and will solarize and heat the stored firewood to speed the drying process. It is also recommended to use

clear plastic, as black plastic will reveal any escape holes to the beetles.

(e) In situations where diseased Red Oak trees are identified and are not accessible for chipping, shredding, or removal, the trunk of the diseased tree should be girdled, and the stem treated with an appropriate herbicide to deaden the tree and hasten the desiccation and drying of the wood below the minimum moisture content that could support the development of fungal spores.

610S.5 Measurement

Tree and shrub pruning, fencing, drains, fertilization, etc. will not be measured for payment unless included as a contract pay item. Tree wells for tree protection will be measured by the units, complete in place, conforming to the Drawings and City of Austin Standard Detail 610S-6, "Tree Protection, Tree Wells".

Removal of existing trees will be measured per each tree.

610S.6 Payment

The work and materials prescribed herein with the exception of the Protective Fencing and Tree Well (Tree Protection) will not be paid for directly but shall be included in the unit price bid for the item of construction in which this activity is used, unless a payment item is included as a contract pay item.

Payment will be made under:

Pay Item 610S-A:	Protective Fencing Type A Chain Link fence (Typical Application-high damage potential)	Per Lineal Foot
Pay Item 610S-B:	Protective Fencing Type B Wood Fence (Typical Application-high damage potential)	Per Lineal Foot
Pay Item 610S-C:	Protective Fencing Type C Other Materials (Limited Application-minimal damage potential)	Per Lineal Foot
Pay Item 610S-D:	Tree Well (Tree Protection)	Per Each
Pay Item 610S-E:	Tree Trunk Protection, Wood Planking	Per Each
Pay Item 610S-R:	Removal of Existing Trees	Per Each

End

SPECIFIC CROSS REFERENCE MATERIALS
Specification Item 610S, “Preservation of Trees and Other Vegetation”

City of Austin Standard Specification Items

Designation	Description
Item No. 606S	Fertilizer

City of Austin Standard Details

Designation	Description
Item No. 610S-1	Tree Protection Fence Locations
Item No. 610S-2	Tree Protection Fence, Type A, Chainlink
Item No. 610S-3	Tree Protection Fence, Type B, Wood
Item No. 610S-4	Tree Protection Fence, Modified Type A, Chainlink
Item No. 610S-5	Tree Protection Fence, Modified Type B, Wood
Item No. 610S-6	Tree Protection, Tree Wells

City of Austin Transportation Criteria Manual

Designation	Description
Section 1.3.1.C.6	Sight Distance
Section 6.2.3.A.4	Clearance Height
Figure 1-6	Desirable Sight Triangle

City of Austin Environmental Criteria Manual

Designation	Description
Appendix P-2, Note 6	Exceptions to Installing Fences
Appendix P-2, Note 6c	Trees close to proposed buildings-----
Appendix P-6	Remedial Tree Care Notes
Section 3.3.2.A.2	Diameter of trees------
Section 3.5.0	Design Criteria
Section 3.5.3.A.1	Permeable Paving
Figure 3-8	Example of Minimum Design Criteria Applied to Permeable Parking

City of Austin Land Development Code

Designation	Description
Section 25-8-603	Tree Protection Administration
Section 25-8-623	Inspection by City Arborist

ASTM, American Society for Testing and Materials

Designation	Description
D-2729	Specification for Poly (Vinyl Chloride) (PVC) Sewer Pipe and Fittings

***RELATED* CROSS REFERENCE MATERIALS**
Specification 610S, "Preservation of Trees and Other Vegetation"

City of Austin Standard Specification Items

Designation	Description
Item No. 101S	Preparing Right of Way
Item No. 102S	Clearing and Grubbing
Item No. 111S	Excavation
Item No. 120S	Channel Excavation
Item No. 132S	Embankment
Item No. 608S	Planting

Texas Department of Transportation: Standard Specifications for Construction and Maintenance of Highways, Streets, and Bridges

Designation	Description
Item No. 100	Preparing Right of Way
Item No. 110	Excavation
Item No. 132	Embankment
Item No. 158	Specialized Excavation Work
Item No. 160	Furnishing and Placing Topsoil
Item No. 166	Fertilizer
Item No. 168	Vegetative Watering

Item No. 628S
Sediment Containment Dikes

628S.1 Description

This item shall govern the provision and placement of temporary filtration dikes along or across such areas as indicated on the Drawings. This method shall be used during construction only and its purpose shall be to temporarily control erosion by intercepting and retaining sediment.

This specification is applicable for projects or work involving either inch-pound or SI units. Within the text, the inch-pound units are given preference followed by SI units shown within parentheses.

628S.2 Submittals

The submittal requirements for this specification item shall include:

A. Locations and Types of containment dikes (Hay Bales or Triangular Sediment Filter Dike).

B. Seeding

1. Identification of the type, source, mixture, pure live seed (PLS) and rate of application of the seeding.

2. Type of mulch.

3. Type of tacking agent.

4. Type and rate of application of fertilizer.

628S.3 Materials

A. Hay Bales

"Hay Bales" shall be free of Johnson Grass or other nocuous weeds. The bales shall consist of either hay or straw in good condition and be securely tied with wire. Stakes for anchoring bales shall be #4 (10M) reinforcing bars, 1/2 inch (12.5 mm) steel pickets, or 2 x 2 inch (50 x 50 mm) wooden stakes. Hay bales shall be limited to drainage areas less than 2,500 square feet (0.02 hectares).

B. Filter Dike

"Filter Dike" shall be prefabricated from 6x6-D2.9xD2.9 (150x150-MW19xMW19) WWF and 4.5 oz. (127 grams) non-woven polyester filter fabric securely fastened to WWF with galvanized shoat rings or j-clips. A 12-inch (300-mm) skirt shall be a continuous extension of the filter fabric on the upstream face.

The filter fabric shall extend beyond the dike joints to provide a 3-inch (75-mm) overlap. Ends of dike not lapped with filter fabric shall be plugged with filter fabric.

628S.4 Construction Methods

The Contractor may select the material for the dikes, unless otherwise indicated, conforming to the details on the Drawings and Standard Detail Numbers 628S and 628S-1.

Bales shall be placed with ends tightly abutting the adjacent bales. Each bale shall be embedded in the soil a minimum of 4 inches (100 mm) and a maximum of 6 inches (150 mm). Bales shall be securely anchored in place by a minimum of 2 stakes per bale. The first stake in each bale shall be angled toward the previously placed bale to force the bales together. Stakes shall be embedded in the soil a minimum of 1 1/2 feet (0.45 meters). Bales that are not able to be imbedded and are place on impervious cover should be placed level with the concrete and have all bales butted end to end with no voids or gaps between them. Bales shall be bound by either wire or nylon string. Bales shall be replaced every 2 months or more often during wet periods.

For filter dikes, the filters shall be placed with ends tightly abutting the adjacent filter. Each filter and skirt shall be securely anchored in place using 6 inch (150 mm) staples at a maximum spacing of 12 inches (300 mm) on center. Anchoring on impervious areas shall be accomplished with gravel bags placed at 18 inches (450 mm) on center or with a nominal 1 inch by 4 inch (25 mm by 100 mm) board nailed at 18 inches (450 mm) on center.

Silt accumulation behind hay bales and triangular sediment filter dikes shall be removed at a maximum depth of 6 inches (150 mm) or when, in the opinion of the Engineer or designated representative, the structure ceases to function as intended.

All dikes shall be inspected by the Contractor at least monthly and after each rainfall. Dikes shall be repaired or replaced when necessary or as directed by the Engineer or designated representative.

After completion of construction or when directed by the Engineer or designated representative the dike shall be removed and the site re-graded to the final grades. Any depression shall be filled and any accumulations of silt shall be spread or removed to a permitted disposal area. After removal of the dike the area shall be graded and seeded conforming to Item No. 604S, "Seeding for Erosion Control".

628S.5 Measurement

The work performed and the materials furnished as prescribed by this item will be measured by the lineal foot (lineal meter: 1 lineal meter equals 3.281 lineal feet) of "Sediment Containment Dikes", complete in place.

628S.6 Payment

The work performed and materials furnished and measured as provided under "Measurement" will be paid for at the unit bid price per lineal foot of "Sediment Containment Dikes" indicated on the Drawings. The Unit bid price shall include full compensation for: (a) furnishing, hauling and placing all materials including all labor, tools, equipment and incidentals needed to complete the work, (b) the repair and/or replacement of materials, (c) the removal and disposal of all silt and debris and (d) the removal of all dikes, silt and debris after completion of construction or when directed by the Engineer or designated representative.

When indicated on the Drawings, payment for sediment containment will be made under:

Pay Item No. 628S-A:	Sediment Containment Dikes with hay bales	Per Lineal Foot.
Pay Item No. 628S-B:	Sediment Containment Dikes with filter fabric	Per Lineal Foot.

End

SPECIFIC CROSS REFERENCE MATERIALS
Specification 628S, “Sediment Containment Dike"

City of Austin Standard Details

Designation	Description
Number 628S	Triangular Sediment Filter Dike
Number 628S-1	Hay Bale Dike

City of Austin Standard Specifications

Designation	Description
Item No. 604S	Seeding for Erosion Control

City of Austin Standard Contract

Section	Description
00300U	Bid Form (Unit Prices)

RELATED CROSS REFERENCE MATERIALS
Specification 628S, “Sediment Containment Dike"

City of Austin Standard Specifications

Designation	Description
Item No. 101S	Preparing Right of Way
Item No. 102S	Clearing and Grubbing
Item No. 111S	Excavation
Item No. 120S	Channel Excavation
Item No. 401S	Structural Excavation and Backfill
Item No. 406S	Reinforcing Steel
Item No. 602S	Sodding for Erosion Control
Item No. 605S	Soil Retention Blanket
Item No. 606S	Fertilizer
Item No. 608S	Planting
Item No. 610S	Preservation of Trees and Other Vegetation
Item No. 620S	Filter Fabric

RELATED CROSS REFERENCE MATERIALS (Continued)
Specification 628S, “Sediment Containment Dike"

Texas Department of Transportation: Standard Specifications for Construction and Maintenance of Highways, Streets, and Bridges

Designation	Description
Item No. 100	Preparing Right of Way
Item No. 110	Excavation
Item No. 132	Embankment
Item No. 158	Specialized Excavation Work
Item No. 166	Fertilizer
Item No. 168	Vegetative Watering
Item No. 169	Soil Retention Blanket
Item No. 204	Sprinkling

803S.1 Description

This item shall govern for providing, installing, moving, replacing, maintaining, cleaning and removing upon completion of the work, all temporary or permanent street closure barricades, signs, cones, lights or other devices required to handle the traffic in conformance with the current edition of the Texas Manual of Uniform Traffic Control Devices for Street and Highways and as indicated on the Drawings or directed by the Engineer or designated representative.

Constructing A Detour, if required, shall conform to Standard Specification Item No. 801S, " Constructing A Detour". Capital Improvement Project Signs shall conform to Standard Specification Item No. 802S, " Project Signs".

This item shall also include the installation of all required safety fencing as described in the latest adopted version of Standard Detail 804S-4.

This specification is applicable for projects or work involving either inch-pound or SI units. Within the text, the inch-pound units are given preference followed by SI units shown within parentheses.

803S.2 Submittals

The submittal requirements of this specification item include:

A. Type of Barricade and proposed materials and Construction of the barricade,

B. Test results for Retro-Reflective sheeting.

803S.3 Materials

All barricades, signs, cones, lights and other types of devices to handle traffic, as indicated on the Drawings or directed by the Engineer or designated representative, shall conform to details shown on the Drawings or those indicated in the Texas Manual on Uniform Traffic Control Devices (TMUTCD).

803S.4 Construction Methods

Prior to commencement of construction, suitable "Barricades, Signs and Traffic Handling" devices shall be installed to protect the workers and the public.

The Contractor shall be responsible for the installation of all markers, signs and barricades in accordance with the Drawings and in conformance with the Texas Manual on Uniform Traffic Control Devices (TMUTCD) and/or as indicated on the Drawings or directed by the Engineer or designated representative. If, in the opinion of the Engineer or designated representative, additional markers, signs or barricades are needed in the interest of safety, the Contractor will install such as are required or as directed by the Engineer or designated representative. All changes and/or revisions to the detour/traffic control plan shall be approved by the Engineer or designated representative.

Lumber shall be painted with 2 coats of paint as indicated on the Drawings.

803S.5 Maintenance

It shall be the Contractor's responsibility to maintain, clean, move and replace if necessary, barricades, signs and traffic handling devices during the time required for construction of the project. Permanent barricades shall be constructed as required after the completion of the street by drilling holes to place the posts and concrete foundations. Foundation concrete shall be cured before the rails are attached. When no longer needed, all temporary Barricades, Signs and Traffic Handling Devices shall be removed and the area restored to its original condition or as directed by the Engineer or designated representative.

803S.6 Measurement

The work performed and material furnished as prescribed by this item, City of Austin Standard Details, details included on the Drawings or indicated in the TMUTCD shall be measured as follows:

A. Pavement Markings.

All pavement marking required for proper installation of the designated Traffic Control Plans and Details, as well as required removal of existing pavement marking, shall be measured and paid for under Standard Specification Item No. 870S, “Work Zone Pavement Markings” and Standard Specification Item No. 874S, “Eliminating Existing Pavement Markings”.

B. Barricades, Signs and Traffic Handling.

All work performed and material furnished as prescribed by this item, City of Austin Standard Details, details shown on the Drawings or indicated in the TMUTCD, that are not included in the above paragraph, shall be measured by the number of calendar days, working days or months of actual service.

Traffic control for the project will be measured and paid for once per contract defined time period, i.e. either per Calendar Day, Working day or Month at the contract rate, regardless of the number of set-ups, locations or streets under construction.

C. Safety Fencing

Safety fencing will be measured by the lineal foot.

803S.7 Payment

The work performed and materials furnished as prescribed by this item, measured as provided under section “803S.6 Measurement” shall be paid for at the contract unit price for barricades, signs and traffic handling. This unit price shall include full compensation for furnishing, placement and removal of all materials and for all labor, tools, equipment, and incidentals necessary to complete the work.

Payment will be made under:

Pay Item No. 803S -CD:	Barricades, Signs, and Traffic Handling	Per Calendar Day.
Pay Item No. 803S-WD:	Barricades, Signs, and Traffic Handling	Per Working Day.
Pay Item No. 803S-MO:	Barricades, Signs, and Traffic Handling	Per Month.
Pay Item No. 803S-SF:	Safety Fence	Per Lineal Foot.
Pay Item No. 803S -D-CD:	Barricades, Signs and Traffic Handling	Per Calendar Day-Dbl. Lane
Pay Item No. 803S -D-WD:	Barricades, Signs and Traffic Handling	Per Working Day - Dbl. Lane
Pay Item No. 803S -D-MO:	Barricades, Signs and Traffic Handling	Per Month Dbl. Lane

End

SPECIFIC CROSS REFERENCE MATERIALS
Specification Item No. 803S, "Barricades, Signs and Traffic Handling"

City of Austin Standard Specifications

Designation	Description
Item No. 801S	Constructing A Detour
Item No. 802S	Project Signs
Item No. 870S	Work Zone Pavement Markings
Item No. 874S	Eliminating Existing Pavement Markings and Markers

Texas Technical Documents:

Designation	Description
(TMUTCD)	Texas Manual on Uniform Traffic Control Devices

RELATED CROSS REFERENCE MATERIALS
Specification Item No. 803S, "Barricades, Signs and Traffic Handling"

City of Austin Standard Specifications

Designation	Description
Item No. 403S	Concrete for Structures
Item No. 860S	Pavement Marking Paint (Reflectorized)
Item No. 863S	Reflectorized Pavement Markers
Item No. 864S	Abbreviated Pavement Markings
Item No. 867S	Epoxy Adhesive
Item No. 871S	Reflectorized Pavement Markings
Item No. 875S	Pavement Surface Preparation For Markings

City of Austin Standard Details

Designation	Description
803S-1	Street-End Barricades

Texas Department of Transportation: Standard Specifications for Construction and Maintenance of Highways, Streets, and Bridges

Designation	Description
Item No. 502	Barricades, Signs and Traffic Handling
Item No. 508	Constructing Detours
Item No. 510	One-Way Traffic Control
Item No. 512	Portable Concrete Traffic Barrier
Item No. 514	Permanent Concrete Traffic Barrier
Item No. 662	Work Zone Pavement Markings
Item No. 666	Reflectorized Pavement Markings
Item No. 667	Prefabricated Pavement Markings
Item No. 672	Raised Pavement Markers
Item No. 677	Eliminating Existing Pavement Markings and Markers
Item No. 678	Pavement Surface Preparation For Markings

SPECIAL PROVISION
TO
ITEM NO. 501S JACKING OR BORING PIPE

For this Project, Item No. 501S, "Jacking or Boring Pipe" 09/26/12, of the Standard Specifications is hereby amended with respect to the clauses cited below and no other clauses or requirements of this section are waived or changed hereby.

501S.1 Description

INSERT the following at the end of section 501S.1 Description:

This item shall also include tunneling. Contractor has the option of employing Jacking or Boring, or Tunneling, as specified herein, at his discretion.

501S.2 Submittals

G. Tunneling submittals. Provide description of proposed tunnel methodology for review. Description should be sufficient to convey following:

1. Hoisting plan for placement of tunnel shield, jacking equipment and pipe, and for muck removal.
2. Proposed method of tunnel construction and type of face support and lining system.
3. Manufacturer and type of tunneling equipment proposed; type of lighting and ventilation systems.
4. Number and duration of shifts planned to be worked each day.
5. Sequence of operations.
6. Location of access shafts and work sites.
7. Method of spoil transportation from face, surface storage, and disposal location including water that separates from the muck.
8. Method of installing pipe and verifying tunnel and pipe line and grade.
9. Identification of critical utility crossings and special precautions proposed.
    a. The Contractor's selection of means and methods is integral to the planning and execution of the work under this Contract. Accordingly, the Engineer or Owner will review and may offer comments for the Contractor's consideration. However, for this specific submittal, neither response nor lack of response by the Engineer or Owner shall be considered to represent approval or rejection of the Contractor's means and methods for accomplishing tunnel construction for the project or any specific work site. Neither the Engineer nor owner accept any responsibility for the adequacy of the Contractor's means and methods nor for any damages to public or private property resulting there from, such responsibilities remaining with the Contractor.
10. Provide Drawings and Calculations. Submit drawings and calculations for tunnel support system designed by Contractor. Drawings shall be adequate for construction, and include installation details. Documents must be signed and sealed by Professional Engineer registered in State of Texas. Include calculations with clear statement of criteria used for design, as described in Paragraph 1.06, Design Criteria.
11. Quality Control. Submit for review a description of quality control methods including:
    a. Method and frequency of survey control.
    b. Example of tunnel daily log.
    c. Instrumentation plan showing location and frequency of monitoring relative to critical structures within zone of active excavation.
    d. Settlement survey plan (may be included in instrumentation plan).

12. Monitoring Plans:
    a. Instrumentation Monitoring Plan. Submit for review, prior to construction, monitoring plan that includes schedule of instrumentation design, layout of instrumentation points, equipment installation details, manufacturer's catalog literature, and monitoring report forms.
    b. Surface Settlement Monitoring Plan. Submit settlement monitoring plan for review prior to construction. Identify location of settlement monitoring points, reference benchmarks, survey frequency and procedures, and reporting formats on plan.
13. Structures Assessment. Submit preconstruction and post-construction assessment reports for critical structures, namely those located within zone of active excavation from proposed tunnel centerline. Include photographs or video of existing damage to structures in vicinity of piping in assessment reports.
14. Submit monitor readings to Owner and Engineer.
15. Daily Reports. Maintain shift log, Tunneling Data, and make available to City Engineer on request.

501S.3 Materials

A. Pipe

REPLACE the entire section with the following:

Encasement pipe shall conform to Standard Specification Item Nos. 505S, "Concrete Encasement and Encasement Pipe" and 510, "Pipe" and shall be size, type materials, thickness and class indicated on the Drawings, unless otherwise specified.

Pre-insulated chilled water pipe materials shall conform to "Pre-Insulated Chilled Water Piping – SS232114" Specification.

B. Grout

REPLACE the entire section with the following:

Grout shall conform to AE Specification "Low Density Cellular Grout - SS02426."

501S.4 Construction Methods

INSERT the following at the end of section 501S4.D. Tunneling:

1. Reference Standards
    a. American Association of State Highway and Transportation Officials (AASHTO).
    b. American Railway Engineering and Maintenance-of-Way Association (AREMA) Manual for Railway Engineering.
    c. American Society for Testing and Materials (ASTM).
    d. ASTM A 36 - Standard Specifications for Carbon Structural Steel.
    e. ASTM A 283 - Standard Specifications for Low and Intermediate Tensile Strength Carbon Steel Plates.
    f. ASTM A 307 - Standard Specifications for Carbon Steel Bolts and Studs, 60,000 PSI Tensile Strength.
    g. Occupational Safety and Health Administration (OSHA).

2. Definitions
   a. Primary liner: First tunnel support installed by Contractor.
   b. Zone of Active Excavation. Area located within radial distance about surface point immediately above face of excavation equal to depth to bottom of excavation.
   c. Critical Structure: Building, structure, bridge, pier, or similar construction partially or entirely located within zone of active excavation.
   d. Tunneling Methodology: Written description, together with supporting documentation that defines Contractor's plans and procedures for tunneling operations.
   e. Shield: Fabricated ground support, circular in section, providing 360-degree protection to those working in it. Shield will have cutting edge d. Liner is erected within tail attached to shield.
   f. Open Face: Face of heading or tunnel, which is unsupported during excavation (e.g., in hand mining or shield excavation).
   g. Closed Face: Face of heading or tunnel which is supported during excavation process, where cutter head allows both partial exposure of face and full closure.
3. Tunnel Shield
   a. The Tunnel shield shall be affixed to the lead pipe with an arc length equal to the full pipe circumference, and create no more than a one inch annular overcut. If steering head section is attached to the pipe, the shield may be incorporated into the head or fabricated to abut against it. The shield must be capable of being jacked into the soil.
   b. The tunnel shield shall be fabricated with enough strength and rigidity to provide support of those soils above and adjacent to the shield.
   c. The shield shall be equipped with breasting tables or baffles (or equivalent) for ballast support of running or unstable soils at the tunnel face.
   d. Compatibility with pipe jacking and structural capacity of the jacked pipe support system when trusting or reacting against it.
   e. Capable of controlling the advance of the heading to maintain line and grade with specified tolerances.
   f. Capability of preventing soil and water infiltration between excavation at the face and installation of the pipe being jacked.
   g. Capability of installing the jacked pipe at the tail of the shield.
   h. Full capability of meeting the construction needs of the project.
4. Muck Removal System
   a. Provide method or system for handing and transport of excavated material from the tunnel face, through the jacked pipe, to the disposal area, with a capacity to sustain peak hourly penetration, peak shift, and peak daily advance rates.
   b. The muck removal system shall be able to handle all excavated material.
5. Ventilation System
   a. Ventilation system should be designed to provide a required minimum fresh air at the face of tunnel, per 29 CFR 1926.
6. Illumination System
   a. The Contractor shall illuminate the entire tunnel in accordance with the requirements of 29 CFR 1926.
7. Equipment
   a. Provide equipment and components that are sturdy, resistant to water leakage and to deterioration and corrosion under the conditions of the project.
   b. Materials shall be adequate for the purposes intended and shall satisfy all the requirements of the various codes and regulations pertaining to the system and types of construction.
   c. All electrical components shall bear Underwriters Laboratory (U.L.) labels where applicable.
   d. Ground electrical tools and equipment following latest requirement of the National Electrical Code (NEC).

8. Liner Plate
   a. Provide primary liner designed by Contractor's Professional Engineer for appropriate loading conditions and deflection criteria, including but not limited to: overburden and lateral earth pressures; handling and installation stresses; loads imposed by tunnel shield or tunnel boring machine thrust jacks; subsurface soil and water loads; grouting; and other conditions of service. Assume responsibility for design of primary liner to carry construction loads in combination with overburden, earth and hydrostatic loads.
   b. At railroad crossings conform to Cooper E-80 locomotive loading distributions in accordance with AREMA specifications for culverts. In design, account for additive loadings due to multiple tracks. Provide liner type for railroad crossings as specified or as shown on Drawings.
   c. For truck loading use HS-20 vehicle loading distributions in accordance with AASHTO.
   d. Use liner system compatible with special requirements shown on Drawings.
   e. In locations shown on Drawings, manufacture liner plate (2-flange or 4-flange) certified by manufacturer for compliance with Specifications.
   f. Provide bolts and nuts conforming to ASTM A 307, Grade A.
   g. Punch plates for bolting on both longitudinal and circumferential seams and fabricate to permit complete erection from inside tunnel. Provide plates of uniform fabrication. Plates intended for one size tunnel shall be interchangeable.
   h. Material used for construction of liner plates shall be in good condition.
   i. Provide sufficient number of bolted steel liner plates with approximately 2-inch diameter grout holes furnished with plugs. Locate holes near plate center.
9. Preparation
   a. Use methods for tunneling operations that will minimize ground settlement. Select method, which will control flow of water, prevent loss of soil into tunnel, and provide stability of face under anticipated conditions.
   b. Conduct tunneling operations in accordance with applicable safety rules and regulations, OSHA standards, and Contractor's safety plan. Use methods, which include due regard for safety of workmen, adjacent structures, utilities, and public.
   c. Maintain clean working conditions inside tunnel and shafts.
   d. For tunneling under railroad embankments, highways, or streets, perform installation so as to avoid interference with operation of railroads, highways, or streets, except as approved by owner of facility.
   e. Support ground continuously in manner to prevent loss of ground and keep perimeters and faces of tunnel stable.
   f. Completed primary tunnel lining shall have full bearing against ground. Grout peripheral space between support elements and excavated surface or close by expanding support elements against ground to achieve full bearing as tunnel advances.
   g. Be aware that various existing soil borings, piezometers, or instrument wells, where indicated on Drawings, may coincide with proposed tunnel alignment. These may or may not have been backfilled with grout and, therefore, caution should be used in tunneling through these locations. Contractor shall take mitigating measures to counter effect these boreholes, piezometers, or instrument wells may have on tunneling operations.
10. Ground Water Control
   a. Provide necessary ground water control measures to perform work and to provide safe working conditions, as per standard City of Austin specification 510 PIPE, para 510.4.
   b. Anticipate that portions of tunnel excavation may be below ground water table and in cohesionless soils, even when not indicated on soil borings, and in conditions, which may require ground water control system for tunneling operations. Install filter fabrics, backer rods and other means as necessary to prevent piping of fines into tunnel.

c. When Contractor chooses pumping installations to control ground water level or installs pervious liner through water bearing layers, install and maintain instrumentation system to monitor water level and to detect movement in adjacent structures and property.
d. Operate dewatering system for tunnels until carrier pipe has been installed and annular space is fully grouted, or until watertight liner designed for hydrostatic pressures is installed.
e. Do not proceed with tunneling for which ground water control is necessary until monitoring data indicates that ground water control system is operating in accordance with Contractor's plan.

11. Equipment
    a. Assume responsibility for selection of tunneling equipment which, based on past experience, has proven to be satisfactory for excavation of soils to be encountered.
    b. Employ tunneling equipment that will be capable of handling various anticipated ground conditions and which minimizes loss of soil ahead of face and allows satisfactory support of excavated face.
    c. TBM or shield shall conform to shape of tunnel with uniform perimeter that is free of projections that could produce over excavation or voids. An appropriately sized over cutting head may be provided to facilitate steering. In addition it shall:
        i) Be capable of full directional guidance.
        ii) Be capable of full-face closure, or permit ready installation of breasting boards.
        iii) Be equipped with appropriate tail in which liner is erected.
        iv) Be capable of correcting roll.
        v) Be designed to handle adverse ground conditions including ground water ingress.
        vi) Be equipped with visual display to show operator actual position of shield relative to design reference.
    d. Air Quality. Provide equipment to maintain proper air quality of tunnel operations during construction in accordance with OSHA requirements.
    e. Enclose light fixtures in watertight enclosures with suitable guards. Provide separate circuits for lighting and other equipment.
    f. Conform to requirements of National Electrical Code - NFPA70 for Electrical systems.
    g. Contractor shall provide rubber skids in tunnel floor to assist with installing piping.
12. Tunneling Data
    a. Maintain shift logs of construction events and observations. Owner and Engineer shall have access to Contractor's logs with regard to the following information:
        vii) Location of face by station and progress of tunnel drive during shift.
        viii) Hours worked per shift on tunneling operations.
        ix) Completed field forms for checking line and grade of tunneling operation, showing achieved tolerance relative to design alignment.
        x) Location, elevation and brief soil descriptions of soil strata and strata boundaries.
        xi) Ground water control operations and piezometric levels, ground water inflow location and rates.
        xii) Observation of lost ground or other ground movement.
        xiii) Unusual conditions or events.
        xiv) Reasons for operational shutdown in event drive is halted.
    b. Clearly mark primary liner with paint every 20 feet along tunnel with distance in feet from centerline of preceding shaft.

13. Tunnel Excavation and Primary Liner Installation
    a. Tunnel Excavation.
        i) Conduct tunneling operations in accordance with applicable safety rules and regulations, and Contractor's safety plan. Use methods, which include due regard for safety of workmen, adjacent structures, utilities, and public.
        ii) Maintain tunnel excavation within easements and rights-of-way indicated on Drawings, to lines and grades shown on Drawings. Excavation shall be of sufficient size to allow installation of pipe to lines and grades indicated on Drawings.
        iii) Open-face excavations:
            - Keep face breasted or otherwise supported and prevent falls, excessive raveling, or erosion. Maintain standby face supports for immediate use when needed.
            - During shut-down periods, support face of excavation by positive means; do not rely solely on hydraulic pressure for support.
        iv) Closed-face excavation:
            - Control volume of spoil removed. Determine that advance rate and excavation rate are compatible to avoid over excavation or loss of ground.
            - When cutting head is withdrawn, keep excavated face supported and stabilized.
            - When face of machine is open for maintenance, monitor conditions that might threaten stability of heading. Take appropriate action to prevent or limit influx of soils and water, which would threaten stability of heading.
            - Whenever condition is identified which could endanger tunnel excavation or adjacent structures, operate continually for 24 hours day, including weekends and holidays, without intermission until condition no longer exists.
    b. Determination of primary liner size and section shall be sole responsibility of Contractor, to match construction methods and equipment described in tunneling methodology submittal. Provide tunnels of sufficient size to permit efficient excavation operations, sufficient working space for placing primary tunnel liner, and to allow for installation of chilled water pipe.
    c. Primary Liner Installation:
    d. Provide method to ensure full bearing of soil against primary liner without significant settlement or movement of surrounding soil. To fill void behind primary liner, either expandable liner (e.g., ring beams and timber lagging) or non-expandable liner (e.g., bolted steel liner plates) may be used provided grout is placed behind non-expandable liner. Box tunnel where ground is excavated to true shape may be ungrouted.
    e. When using TBM or tunnel shield, advance equipment only far enough to permit construction of one primary liner set, entirely within equipment shield.
    f. Install filter fabric around exterior of primary liner when using steel ribs and lagging. Install backer rods at ribs as required to control migration of fines. Close windows in lagging.
    g. After grouting, ensure deflection of liner is no more than allowable, nor liner is distorted by excessive pressure.
    h. Seal blind headings with temporary bulkhead.
14. Control Of Tunnel Line and Grade
    a. Construction Control.
        i) Engineer’s Surveyor will establish baselines and benchmarks indicated on Drawings. Contractor’s Surveyor to check baselines and benchmarks at beginning of Work and report errors or discrepancies to Owner and Engineer.
        ii) Use baselines and benchmarks established by Engineer to establish and maintain construction control points, reference lines, and grades for locating tunnel.
        iii) Establish control points sufficiently far from face so as not to be affected by tunneling operations.

b. Line and Grade.
   i) Maintain means sufficient to check alignment and grade continuously.
   ii) Check survey control for tunneling against aboveground undisturbed reference at least once each week and once for each 250 feet of tunnel constructed.
   iii) When excavation is off line or grade, make alignment corrections to avoid reverse grades in gravity sewers.
   iv) Construct primary liner to such tolerances that permit installation of chilled water pipe per grades established in drawings.

c. Earth Movement. Assume responsibility for damages due to settlement from construction-induced activities or occurrences.
   i) Survey crown, invert, and springline on each side of primary liner at 50-foot intervals, or minimum of once per shift, or more frequently when line and grade tolerances have been exceeded, to ensure alignment is within tolerances specified. Conduct survey immediately behind tunnel excavation to allow immediate correction of misalignment.

15. Monitoring

a. Instrumentation Monitoring. Instrumentation requirements are shown on Drawings. Ensure instrumentation specified is accessible to Owner and Engineer. Submit readings promptly to Owner and Engineer.
   i) Install and maintain instrumentation system to monitor and detect movement of ground surface and adjacent structures. Establish vertical control points at distance from construction areas that avoids disturbance due to ground settlement.
   ii) Installation of instrumentation shall not preclude Owner/Engineer, through independent contractor or consultant, from installing instrumentation in, on, near, or adjacent to construction work. Provide access to work for such independent installations.
   iii) Install instruments in accordance with Drawings and manufacturer's recommendations.

b. Surface Settlement Monitoring
   i) Establish monitoring points on all critical structures.
   ii) Record location of settlement monitoring points with respect to construction baselines and elevations. Record elevations to accuracy of 0.01 feet for each monitoring point location. Monitoring points should be established at locations and by methods that protect them from damage by construction operations, tampering, or other external influences.
   iii) Ground surface elevations must be recorded on centerline ahead of tunneling operations at minimum of 100-foot intervals or at least three locations per tunnel drive. For primary lined tunnels greater than 60 inches cut diameter also record similar data at approximately 20 feet each side of centerline. Clearly mark settlement monitoring points by studs or paint for ease of locating.
   iv) Railroads. Monitor ground settlement of track subbase at centerline of each track.
   v) Utilities and Pipelines. Monitor ground settlement directly above and 10 feet before and after utility or pipeline intersection.

c. Reading Frequency and Reporting. Submit to Owner and Engineer, records of readings from various instruments and survey points.
   i) Instrumentation monitoring results to be read at frequency specified, unless otherwise specified. Start monitoring before zone of active excavation is passed and until no further detectable movement occurs.
   ii) Record surface settlement monitoring readings:
      - Prior to zone of active excavation reaching that point,
      - When tunnel face reaches monitoring point (in plan), and
      - When zone of active excavation has passed and no further movement is detected.
   iii) Submit monitoring readings promptly to Owner and Engineer.

iv) Immediately report to Owner and Engineer movement, cracking, or settlement, which is detected.
v) Following substantial completion, but prior to final completion, perform final survey of monitoring points.

16. Tunnel Cleanup
    a. Prior to pipe placement in tunnel, remove temporary tunnel utilities, such as electrical and ventilation. Remove loose material, dirt, standing water, and debris prior to pipe placement.
    b. Temporary steel construction tracks or steel pipe skids may be left in place when they do not interfere with alignment of pipe or interfere with final placement of annular grout.
    c. Remove spoil from job site and dispose in City of Austin approved location.

501S.6 Payment

REPLACE the entire section with the following:

A. The work performed and materials furnished as prescribed by this item and measured as provided under "Measurement" will be paid for at the unit bid price per linear foot for "Jacking or Boring Pipe" OR for "Tunneling", as the case may be, of lengths and in soils types indicated, to include full compensation for furnishing, preparing, hauling and installing required materials, safety provisions, ***including pre-insulated chilled water supply and return pipe of sizes indicated*** *(in accordance with specifications SS 232114 PRE-INSULATED CHILLED WATER PIPING)****, two 4" communications conduits*** *(as per AE Standard Trench Detail R3 and in accordance with specifications SS260533 RACEWAYS AND BOXES, and as described in Pay Item No. 260533-PVCCond-Trenchless: 3 Single Raceway Fiber Optic Inner Ducts installed within non-metallic conduit and tubing, installed within tunnel or jack & bore casement)*, grouting, and for labor, tools, equipment and incidentals necessary to complete work, including excavation, backfilling and disposal of surplus material.

1. In Rock: Base Unit Price upon any of the following rock types, as defined in *Tunnelman's Ground Classification for Soils*: stratified, blocky & seamy, and moderately jointed.

Excerpts from Tunnelman's Ground Classification for Rock (Terzaghi, 1946)

Class	Description
Stratified	Consists of individual strata with little or no resistance against separation along the boundaries between the strata. The strata may or may not be weakened by transverse joints. In such rock the spalling condition is quite common.
Moderately Jointed	Contains joints and hair cracks, but the blocks between joints are locally grown together or so intimately interlocked that vertical walls do not require lateral support. In rocks of this type, both spalling and popping conditions may be encountered.
Blocky and Seamy	Consists of chemically intact or almost intact rock fragments which are entirely separated from each other and imperfectly interlocked. In such rock, vertical walls may require lateral support.

2. In Soil: Base Unit Price upon any of the following soil types, as defined in *Tunnelman's Ground Classification for Soils*: Firm, Slow Raveling, Fast Raveling, Cohesive Running, Running.

Excerpts from Tunnelman's Ground Classification for Soils (after Heuer, 1974)

Classification		Behavior	Typical Soil Types
Firm		Heading can be advanced without initial support and final lining can be constructed before ground starts to move.	Loess above water table; hard clay, marl, cemented sand, and gravel when not highly overstressed.
Raveling	Slow Raveling	Chunks or flakes of material begin to drop out of the arch or walls some time after the ground has been exposed, due to loosening or to overstress and brittle fracture. In fast raveling ground, the process starts within a few minutes; otherwise the ground is slow raveling.	Residual soils or sand with small amounts of binder may be fast raveling below the water table; slow raveling above. Stiff fissure clays may be slow or fast raveling depending upon degree of overstress.
	Fast Raveling		
Squeezing		Ground squeezes or extrudes plastically into tunnel, without visible fracturing or loss of continuity, and without perceptible increase in water content. Ductile, plastic yield and flow due to overstress.	Ground with low frictional strength. Rate of squeeze depends on degree of overstress. Occurs at shallow to medium depth in clay or very soft to medium consistency. Stiff to hard clay under high cover may move in combination of raveling at execution surface and squeezing at depth behind surface.
Running	Cohesive Running	Granular materials without cohesion are unstable at a slope greater than their angle of repose (30-35 degrees). When exposed at steeper slopes they run like granulated sugar or dune sand until the slope flattens to the angle of repose.	Clean, dry granular materials. Apparent cohesion in moist sand or weak cementation in any granular soil may allow the material to stand for a brief period of raveling, before it breaks down and runs. Such behavior is cohesive-running.
	Running		

3. Dewatering of bore pits shall be included in the contract unit price for Bore Entry Pit or Exit Pit regardless of inflow rate or volume unless specified otherwise in the bid item for Bore Entry Pit or Exit Pit.

B. Jacking & Boring:

1. In addition to work described in A. above, include full compensation for encasement pipe, tunnel lining, manufactured spacers required for carrying, separating, and sliding pipe and conduit within encasement pipe.

   1) Encasement pipe dimensions may be chosen by contractor, in accordance with other requirements of these specifications, as required to contain pre-insulated pipe of sizes indicated, along with two 4” communications conduits.

   2) Construct in accordance with standard City of Austin specification section 505S Concrete Encasement and Encasement Pipe, and with standard Austin Energy Detail R11 “Typical Casing Spacer Detail”. Provide Casing Spacers for chilled water piping and conduits.

C. Tunnel excavation and primary liner:

1. In addition to work described in A. above, include full compensation for underground hand excavation, liner, pipe within tunnel, instrumentation and surface settlement monitoring.

2. Tunnel dimensions: Tunnel dimension are to be determined by contractor based upon specified equipment/materials installation requirements.

B. Payment, when included as a Contract pay item, will be made under one of the following:

Pay Item SP501S-SOIL-__	Underground dig via tunnel or jack & bore method, minimum 40 feet and up to 300 feet long, min. 12 feet and up to 20 feet cover depth above top of excavation, **IN SOIL**, __" CHS and CHR pipes, two 4" conduits, grout.	Per Linear Foot.
Pay Item SP501S-ROCK-__	Underground dig via tunnel or jack & bore method, minimum 40 feet and up to 300 feet long, min. 12 feet and up to 20 feet cover depth above top of excavation, **IN ROCK**, __" CHS and CHR pipes, two 4" conduits, grout.	Per Linear Foot.
Pay Item SP501S-SOIL-SMALLPIT	Excavation pit for tunnel or jack & bore head and/or access to existing CHS and CHR pipes for hot tap, IN SOIL, up to 10'x22' by 20' deep, including shoring, excavation, debris haul off, backfill & compaction, CLSM.	Per Cubic Yard.
Pay Item SP501S-SOIL-LARGEPIT	Excavation pit for tunnel or jack & bore head and/or access to existing CHS and CHR pipes for hot tap, IN SOIL, up to 12'x35' by 20' deep, including shoring, excavation, debris haul off, backfill & compaction, CLSM.	Per Cubic Yard.
Pay Item SP501S-ROCK-SMALLPIT	Excavation pit for tunnel or jack & bore head IN ROCK, up to 10'x22' by 20' deep, including shoring, excavation, debris haul off, backfill & compaction, CLSM.	Per Cubic Yard.

Pay Item SP501S-ROCK-LARGEPIT	Excavation pit for tunnel or jack & bore head IN ROCK, up to 12'x35' by 20' deep, including shoring, excavation, debris haul off, backfill & compaction, CLSM.	Per Cubic Yard.

End

SPECIAL PROVISION To
Standard Specification Item 506 (Version 3-15-11)
MANHOLES

For this project, Item No. 506 Manholes, dated 3-15-11, of the City of Austin Standard Technical Specifications is hereby amended with respect to the clauses cited below. No other clauses or requirements of this Section of the City of Austin Standard Specifications are waived or changed.

506.1 Description
INSERT the following as first paragraph:

Specification includes communications manhole, per Austin Energy Standard Detail R3 COMMUNICATION VAULT.

506.2 Qualifications
DELETE the entire section.

506.4 Materials
DELETE the following sections entirely.

D. Reinforcement
G. Bulkheads
N. High Density Polyethylene Grade Rings
O. Controlled Low Strength Material
P. Cement Stabilized Sand
Q. Waterproofing Joint Materials
R. Interior Surface Coatings for Wastewater Manholes
S. Structural Lining Systems for Wastewater Manholes

506.5 Construction
DELETE the following sections entirely.

A. General
E. Pipe Connections to Manholes and Junctions Boxes
F. Pipe Connections to Existing Manholes and Junction Boxes
G. Waterproofing
J. Interior Coatings of Wastewater Manholes and Junction Boxes
K. Structural Linings of Existing Wastewater Manholes
L. Abandonment of Existing Manholes

506.6 Acceptance Testing of Wastewater Manholes
DELETE the entire section.

506.7 Measurement
REPLACE the entire section with the following:

A "Communication Vault" or "Communications Manhole" will be measured by each structure of the indicated size.

506.8 Payment

REPLACE the entire section with the following:

Payment for completed "Communication Vault" or "Communications Manhole" of the type indicated on the Drawings shall be made at the appropriate unit bid price. The unit bid price shall include all labor, equipment, materials, (including but not limited to frames and grates, rings and covers, bases, concrete, reinforcing steel, non-shrink grout, mortar, wall hook for fiber optic cable), hot mix asphalt and road base required for street repair, time and incidentals necessary to complete the work.

It is expected that, in most instances, any required excavation for a communications manhole will already have been performed as a part of work required for hand excavation, jacking & boring, or open trenching, as priced in items 501S-SMALLPIT or 501S-LARGEPIT. Therefore, excavation specifically for communications manhole is listed as a separate line item for those instances where manhole will *not* be installed in the excavated pit covered in 501S-SMALLPIT or 501S-LARGEPIT.

Pay Items SP	**Description**	**units**
Pay Item No. SP506S:	Communications manhole, per Austin Energy Standard Detail R3 "COMMUNICATION VAULT".	Per Each.
Pay Item No. SP506S-MHCV:	Excavation for Communications manhole, per Austin Energy Standard Detail R3 "COMMUNICATION VAULT".	Per Each.

End

SPECIAL PROVISION
TO
ITEM NO. 510 PIPE

For this Project, Item No. 510, "Pipe" 10/03/13, of the Standard Specifications is hereby amended with respect to the clauses cited below and no other clauses or requirements of this section are waived or changed hereby.

510.2 Materials
(8) Pipe

REPLACE the entire section with the following:

All pre-insulated chilled water pipe materials shall be per "Pre-Insulated Chilled Water Piping SS 232114" Specification. All non pre-insulated chilled water pipe materials shall be per specification "SS 232113 Hydronic Piping".

510.3 Construction Methods
(5) Trench Width

INSERT the following as first paragraph:

Trenches for pre-insulated chilled water piping shall have a clear width on each side beyond the outside of the pipe of 12 to 16 inches per Austin Energy Standard Trench Detail R1.

(26) Quality Testing for Installed Pipe

REPLACE the entire section with the following:

All pre-insulated chilled water pipe shall be tested per "Pre-Insulated Chilled Water Piping – SS 232114" Specification. All non pre-insulated chilled water pipe materials shall be tested per specification "SS 232113 Hydronic Piping".

510.5 Payment

REPLACE the entire section with the following:

A. Trench installed with pre-insulated chilled water pipe

1. Payment for pipe, measured as prescribed above, will be made at the Unit Price bid per linear foot for the specified sizes of pipe, of lengths and in soils types indicated, installed within trench as per AE Standard Trench Detail R1 to include full compensation for furnishing, preparing, hauling and installing required materials, safety provisions, clearing, pumping for dewatering, shoring of trenches, particle migration measures, temporary pavement repairs and maintenance, backfill and compaction, hot mix asphalt and road base required for street repair, and for labor, tools, equipment and incidentals necessary to complete work, including excavation, bedding, and disposal of surplus material, ***chilled water supply and return pipe*** *of sizes indicated (in accordance with specifications SS 232114 PRE-INSULATED CHILLED WATER PIPING for piping 24" diameter or less or SS 232113 HYDRONIC PIPING for piping greater than 24" diameter), and* ***two 4" communications conduits*** *(in accordance with specifications SS 260533 RACEWAYS AND BOXES, and as described in Pay Item No. SS 260533-Multiduct-OpenTrench)*.

a. Soil Conditions: Base Unit Price upon any of the soil types A and B, as defined in OSHA's "Classification of Soils for Excavations" (A-tights soils, B-sandy clays).

- Type A means cohesive soils with an unconfined, compressive strength of 1.5 ton per square foot (tsf) (144 kPa) or greater. Examples of cohesive soils are: clay, silty clay, sandy clay, clay loam and, in some cases, silty clay loam and sandy clay loam. Cemented soils such as caliche and hardpan are also considered Type A. However, no soil is Type A if:
  a. The soil is fissured; or
  b. The soil is subject to vibration from heavy traffic, pile driving, or similar effects; or
  c. The soil has been previously disturbed; or
  d. The soil is part of a sloped, layered system where the layers dip into the excavation on a slope of four horizontal to one vertical (4H:1V) or greater; or
  e. The material is subject to other factors that would require it to be classified as a less stable material.
- Type B means:
  a. Cohesive soil with an unconfined compressive strength greater than 0.5 tsf (48 kPa) but less than 1.5 tsf (144 kPa); or
  b. Granular cohesionless soils including: angular gravel (similar to crushed rock), silt, silt loam, sandy loam and, in some cases, silty clay loam and sandy clay loam.
  c. Previously disturbed soils except those which would otherwise be classed as Type C soil.
  d. Soil that meets the unconfined compressive strength or cementation requirements for Type A, but is fissured or subject to vibration; or
  e. Dry rock that is not stable; or
  f. Material that is part of a sloped, layered system where the layers dip into the excavation on a slope less steep than four horizontal to one vertical (4H:1V), but only if the material would otherwise be classified as Type B.

b. Payment for dewatering a trench with ground water inflow exceeding 350 gpm of sustained flow shall be agreed by change order.

c. Depth of Cover is as measured from ground surface to top of pipe insulation.

B. Payment, when included as a Contract pay item, will be made under one of the following:

Pay Item SP-510-SOIL-12	Open trench, minimum 30 feet and up to 100 feet long, 8 feet cover depth (above pipes), Type A or B soil conditions, 12" CHS and CHR pipes, two 4" conduits, excavation & backfill.	Per Linear Foot.
Pay Item SP-510-SOIL-18	Open trench, minimum 100 feet and up to 200 feet long, up to 18 feet cover depth (above pipes), Type A or B soil conditions, 18" CHS and CHR pipes, two 4" conduits, excavation & backfill.	Per Linear Foot.

Pay Item SP-510-SOIL-24	Open trench, minimum 100 feet and up to 200 feet long, up to 18 feet cover depth (above pipes), Type A or B soil conditions, 24" CHS and CHR pipes, two 4" conduits, excavation & backfill.	Per Linear Foot.
Pay Item SP-510-ROCK-12	Open trench, minimum 30 feet and up to 100 feet long, up to 18 feet cover depth (above pipes), thru rock, 12" CHS and CHR pipes, two 4" conduits, excavation & backfill.	Per Linear Foot.
Pay Item SP-510-ROCK18	Open trench, minimum 100 feet and up to 200 feet long, up to 18 feet cover depth (above pipes), thru rock, 18" CHS and CHR pipes, two 4" conduits, excavation & backfill.	Per Linear Foot.
Pay Item SP-510-ROCK-24	Open trench, minimum 100 feet and up to 200 feet long, up to 18 feet cover depth (above pipes), thru rock, 24" CHS and CHR pipes, two 4" conduits, excavation & backfill.	Per Linear Foot.

End

PART 1 - GENERAL

1.1 SUMMARY

A. Low density cellular grout for filling annular space, by pumping, between chilled water pipe and primary tunnel liner, casing, or ground, or significant voids surrounding jack & bore casing.

1.2 SUBMITTALS

A. Conform to requirements of Submittal Procedures.

B. Product Data: Submit grout mix design report, including:

1. Grout type and designation.
2. Grout mix constituents and proportions, including materials by weight and volume.
3. Grout densities and viscosities, including wet density at point of placement.
4. Initial set time of grout.
5. Bleeding, shrinkage/expansion.
6. Compressive strength.
7. Detailed description of grout pressure limiting equipment.
8. For annular space grouting, buoyant force calculations and bulkhead designs.

PART 2 - PRODUCTS

2.1 LOW DENSITY CELLULAR GROUT

A. Description:

1. Manufacturer: Pacific International Grout Company - LDB 662 annular backfill.
2. Mix number: 65.0-500C
3. Cement, ASTM C15O, Type I/II
4. Slurry Density, ASTM C138, 104.3 pcf
5. Insitu Density, ASTM C138: 55.00 pcf
6. Flow, ASTM C939: 20 seconds
7. Shrinkage, ASTM: <I %
8. Bleeding, ASTM C232: No Bleed
9. Set Time, ASTM C403: 3-6 hours (depending upon temperature and site conditions)
10. Compressive Strength, ASTM C495: @ 28 Days 150 PSI Minimum

B. Submit description of materials, grout mix, equipment and operational procedures to accomplish grouting operation. Description may include sketches as appropriate, indicating type and location of mixing equipment, pumps, injection points, venting

method, flow lines, pressure measurement, volume measurement, grouting sequence, schedule, and stage volumes. Tests and certifications shall have been performed within last 12 months prior to date of submittal.

PART 3 - EXECUTION

3.1 INSTALLATION

A. Install in strict accordance with manufacturer's instructions.

B. Grout mix is to be mixed on site to meet requirements of particular installation.

C. Fill tunnels with low density cellular grout after installation of pipes and conduits. Fill air voids within tunnel.

1. PVC conduit or other materials subject to damage from heat of hydration produced by grout curing must be protected from such damage. Circulate water within conduit at rate required to maintain surface temperature well below the melting point of the PVC installed.

D. Fill significant voids surrounding jack and bore casing.

3.2 PAYMENT

A. Grout:

1. Work performed under this Section will not be paid as a separate line item. Provision of grout will be paid for under unit pricing as described in Section 501S JACKING OR BORING PIPE.

END OF SECTION

PART 1 - GENERAL

1.01 SUMMARY

A. It is the intent of this project that the Contractor may provide either a fusion-bonded epoxy dual coating system or a polyurethane coating system. This Section includes the following:

1. Factory surface preparation and application of fusion-bonded epoxy dual coating system on the exterior of pipe and fittings. Dual coating system means fusion-bonded epoxy base coating system with abrasion resistant overlay top coat.

2. Factory surface preparation and application of polyurethane coating system on the exterior of pipe and fittings.

3. Minimum coating thicknesses are specified in the Coating Schedule contained within this Section.

4. Requirements for repair of damaged coating.

B. Related Work Described Elsewhere.

1. Hydronic Piping, SS 232113

1.02 DEFINITIONS

A. DFT: Dry-film thickness.

B. Min.: Minimum

1.03 REFERENCES

A. American Society for Testing and Materials (ASTM) Publications:

1. D2240: Standard Test Method for Rubber Property—Durometer Hardness

2. D4060: Standard Test Method for Abrasion Resistance of Organic Coatings by the Taber Abraser

3. D4541: Standard Test Method for Pull-Off Strength of Coatings Using Portable Adhesion Testers

4. G14: Standard Test Method for Impact Resistance of Pipeline Coatings (Falling Weight Test)

B. American Water Works Association (AWWA):

1. C213: Fusion-Bonded Epoxy Coating for the Interior and Exterior of Steel Water Pipelines.

2. C222: Polyurethane Coatings for the Interior and Exterior of Steel Water Pipe and Fittings

C. NACE International (Formerly The National Association of Corrosion Engineers) (NACE):

1. Standard RP0490-95 Standard Recommended Practice - Holiday Detection of Fusion-Bonded Epoxy External Pipeline Coatings of 250 to 760 um (10 to 30 mils)

D. The Society for Protective Coatings (SSPC):

1. PA 2, Measurement of Dry Coating Thickness with Magnetic Gages.

2. SP 1: Solvent Cleaning

3. SP 10: Near White Metal Blast

1.04 SUBMITTALS

A. Manufacturer Data:

1. Product data for each coating system specified.

a. Provide the manufacturer's technical information, including label analysis and instructions for handling, storing, and applying each material proposed for use.

b. Certification from the manufacturer that products supplied meet the specifications referenced within this Section.

c. Certification by the manufacturer that products supplied comply with local regulations controlling use of volatile organic compounds (VOCs).

B. Quality Assurance/Control Submittals

1. Manufacturer's certified statements of compliance that products supplied meet the specifications referenced within this Section

a. Include documentation of inspection and testing of all pipe and fittings as required by referenced standards.

b. Include a copy of the manufacturer's quality management program to be implemented during manufacture and application, all references to the applicable standard that will govern the inspection or test, and the applicable acceptance criteria of the standard.

2. Results of all dimensional, thickness, and visual inspections and measurements conducted during the application process.

1.05 QUALITY ASSURANCE

A. Applicator Qualifications: Engage an experienced applicator who has successfully completed coating system applications similar in material and extent to those specified within this Section.

B. Certified test reports that the line pipe sections pass the electrical holiday tests specified in Paragraph 3.02.

1.06 STORAGE AND HANDLING

A. Coating materials shall be plainly and permanently marked, stored, and applied in accordance with the manufacturer's recommendations.

B. Fusion-bonded epoxy powder shall be no more than six months old and shall be protected from any moisture contamination and stored at a temperature between 50˚ and 80˚F.

C. The coated pipe sections shall be handled with proper equipment, including slings at least eight inches wide, to prevent distortion or damage to the pipe, and to prevent damage to the pipe coating. The pipe shall not be stacked more than four units high, and shall be supported with suitable cradles to prevent chaffing and damage.

PART 2 - PRODUCTS

2.01 MATERIALS

A. Fusion-Bonded Epoxy Dual Coating System: The fusion-bonded epoxy dual coating system shall meet the requirements of AWWA C213 and shall be by a single manufacturer. The use of reclaimed and reconditioned fusion-bonded epoxy or abrasion resistant overlay powder is not permitted.

1. The fusion-bonded epoxy dual coating system shall be Skotchkote 6352 as manufactured by 3M, or Engineer approved equal.

B. Polyurethane Coating System: The polyurethane coating system shall meet the requirements of AWWA C222 and shall be by a single manufacturer.

1. The polyurethane coating system shall be Durashield 210, as manufactured by Lifelast, or Engineer approved equal.

2.02 EQUIPMENT

A. Compressed Air System: The compressed air system for blasting shall be equipped with adequate separators and traps and the compressed air shall be free of water and oil. Forty to eighty mesh silica abrasive shall be discharged from a blast nozzle at no less than 100 psi pressure.

B. Powder Application Equipment: All powder application equipment shall be inspected and approved by the Coating Applicator prior to coating application. An operative

moisture trap and desiccator shall be provided between the air supply and fluidized bed. Water shall be bled frequently from the trap.

PART 3 - EXECUTION

3.01 SURFACE PREPARATION

A. Fusion-Bonded Epoxy Dual Coating System or Polyurethane Coating System: The exterior of the steel pipe and fittings shall be prepared prior to application of coating in accordance with the surface preparation requirements contained in AWWA C213, Section 4.4.2 for Fusion-Bonded Epoxy or AWWA C222 Section 4.4.2 for Polyurethane Coating, as applicable, and manufacturer requirements.

1. All weld splatter, rough welds, burns, and sharp steel surfaces shall be ground smooth prior to blasting.

2. Prior to blast cleaning, surfaces shall be inspected and pre-cleaned according to SSPC-SP1 to remove oil, grease, and loosely adhering deposits. Visible oil and grease spots shall be removed by solvent wiping. Only approved safety solvents, which do not leave a residue, shall be used.

3. Blast cleaning operations shall not be conducted on surfaces that are less than 5˚F above dew point, or when the relative humidity of the air is greater than 80%. Coating Applicator shall ensure that the blasted surfaces remain dry and clean after blasting and before coating.

4. The nozzle distance from the steel should be no more than 10 inches. Air source shall provide a minimum of 200 CFM per blast nozzle.

5. The exterior pipe surface shall be blast cleaned to NACE No. 2/ SSPC-SP10 near-white metal blast cleaning using steel grit or steel grit-shot mixture after pre-heating of pipe to sufficient temperature to remove all moisture. Near-white finish is interpreted to mean that all metal surfaces shall be blasted to remove all dirt, mill scale, rust, corrosion products, oxides, paint and other foreign matter. Very light shadows, very slight streaks or slight discoloration shall be acceptable; however, at least 95% of the surface shall have the uniform gray appearance of a white-metal blast cleaned surface. The surface, when viewed without magnification, should be found free of visible rust, corrosion products or stains, paint, or foreign matter.

6. The cleaning media shall be selected to achieve an anchor pattern profile of not less than 1.5 mils (40 µm) or more than 4 mils (100µm.). A 3 mil minimum profile is required for the polyurethane coating system. The contractor shall make available standards for comparison. For consistent surface finish, a stabilized working mix of the cleaning media shall be maintained by frequent small additions of new grit or shot commensurate with consumption; infrequent large additions shall be avoided. The cleaning media working mix shall be maintained clean of contaminants by continuous and effective operation of blasting machine scalping and air wash separators.

7. Any raised slivers, scabs, laminations or bristles of steel remaining on the newly cleaned surface shall be removed using abrasive grinders or by hand filing. This cleaning operation shall not burnish or destroy the anchor pattern.

8. All blasting residue shall be removed by brush, air blast, or vacuum cleaner prior to applying coating. The cleaned pipe shall be inspected to ensure that all cleaning steps have been adequately performed. Presence of contaminants indicates a malfunction of the cleaning equipment, which shall be corrected immediately.

9. The prepared surfaces shall be kept free of any contaminants such as high humidity, surface moisture, water, mud, or tire marks (e.g., from support carriages for heating and coating application equipment). The pipe surface shall not be allowed to flash rust before coating. Blasted surfaces which become contaminated shall be recleaned as stated in this Section.

3.02 COATING APPLICATION

A. Fusion-Bonded Epoxy Dual Coating System: The exterior of the steel pipe and fittings shall be coated in accordance with the coating application requirements contained in AWWA C213, Section 4.4.3 for Fusion-Bonded Epoxy. The application of the coating to the exterior of the pipe shall be as follows:

1. Clean pipe shall be preheated so the pipe temperature at the entrance to the base coating station is between 405°F - 490°F (207°C - 254°C). The heat source shall not leave a residue or contaminant on the pipe surface. Blueing of the steel during preheating shall not be acceptable. If blueing occurs, the pipe shall be cooled to room temperature and recleaned. Graduated Tempilstik crayons may be used to measure the temperature. Only a small spot of pipe shall be touched with the Tempilstik. Optical pyrometers or infrared sensing devices may be used in addition to, or in lieu of, Tempilstik. The calibration of the optical pyrometer shall be checked at least twice daily.

2. Infrared sensing devices shall be used to monitor temperature of the applied coating. Do not use on uncoated/bare steel. IR temperature measurements on coating are usually 20°F - 30°F cooler than actual steel temperature. Check temperature variance with Tempilstik.

3. Apply base per instruction, then apply top coat before base coat has cured.

4. Following application of Dual Coating System 6352 epoxy top coating, follow cure guide for time before force cooling.

5. During the period of coating and curing, the pipe shall be handled so as to avoid damage to the coating. After the coating has cured, it shall be cooled with air or water spray prior to inspection and repair.

6. Pipe Ends

a. Coating shall be held back a minimum of 2.5 inches +/- 0.5 inches from the ends of pipe sections to be joined by welding. Contractor is responsible for selecting holdback to avoid damage to the coating system during welding. Coating material on the bevel or holdback is not acceptable.

B. Polyurethane Coating System: The exterior of the steel pipe and fittings shall be coated in accordance with the coating application requirements contained in AWWA C222, Section 4.4.3 for Polyurethane Coating. The application of the coating to the exterior of the pipe shall be as follows:

1. Thinning is not allowed.

2. The coating thickness shall be as specified in this Section. The applicator shall measure and record coating thickness using a thickness gauge that is acceptable to the Owner.

3. The relative humidity, dew point and steel surface temperature shall conform to the recommended parameters outlined in the DuraShield 210 and DuraShield 210-61 Technical Data Sheets (or approved equal manufacturer data sheets). Ensure that the resin (Part A) and activator (Part B) components are within the recommended product Application Temperatures for the chosen application method as listed on the respective Technical Data Sheet. The applicator shall use a contact thermometer, a psychrometer and psychrometric charts, or equipment that provides equivalent accuracy, to monitor these environmental requirements.

4. Apply the coating in strict conformance to the manufacturer'sr requirements. Application shall be done in a professional manner, mitigating runs and sags and pro-viding complete coverage on all surfaces, including difficult to spray areas like welds, seams and angles. Application shall be accomplished in a manner that achieves as smooth and uniform of a coat as possible.

C. COATING SCHEDULE

1. The following schedule contains the minimum dry film thickness requirements for the coatings specified in this Section:

Surface	Coating	Min. DFT (mils)
Exterior Surface of Steel Pipe	Fusion-Bonded Epoxy	16
Exterior Surface of Steel Pipe	Abrasion Resistant Overlay	30
Exterior Surface of Steel Pipe	Polyurethane	40

3.03 INSPECTION

A. General: All work done under this Section shall be inspected by the Coating Applicator's Quality Control inspector and shall be subject to inspection and acceptance by the Owner. All parts of Coating Applicator's facilities associated with this work shall be accessible to the Owner. The Coating Applicator shall correct work which is found defective under this Section or within the obvious intent of this specification.

B. The Coating Applicator's quality control inspector shall advise the Applicator's foreman when conditions exist which adversely affect the coating operation with respect to cleaning, application, or material performance, so that immediate corrective measures can be taken.

C. The fusion-bonded epoxy shall be subjected to the following inspection:

1. Coating thickness checks shall be made at ambient temperature with a magnetic pull-off film thickness gauge which has been calibrated within the previous 24 hours, using a U.S. Bureau of Standards certified coating calibration standard. The thickness of the calibration standard shall be within 20% of the minimum required coating thickness. Thickness measurements shall be made in accordance with SSPC-PA2, Section 2. The thickness measurements shall be made at the 12 o'clock, 3 o'clock, 6 o'clock, and 9 o'clock position.

2. Prior to storage, the coating shall be inspected for continuity utilizing the voltage calculation methodology of NACE Standard RP0490-95. Use approximately 4000 volts. The search electrode shall be steel spring or conductive rubber.

3. Coating shall meet the following requirements:

a. The cured lining and coating shall be smooth and glossy, with no graininess or roughness. The lining and coating shall have no blisters, cracks, bubbles, underfilm voids, mechanical damage, discontinuities, or holidays.

D. The polyurethane coating shall be subjected to the following inspection:

1. Visual

a. Coating shall be uniform in color. The coating shall be visually inspected and found to be free of blisters, cracks, pinholes, missed areas and excessive roughness.

b. Sags and runs shall be kept to a minimum. Excessive runs can be sanded smooth and overcoated with a layer of DuraShield 210 or DuraShield 310 (or approved equal manufacturer recommended product).

2. Coating Thickness

    a. During continuous spray operations, the coating thickness shall be measured using a wet film thickness gage whenever feasible. The dry film coating thickness shall be tested using a properly calibrated magnetic pull off or eddy current equipment after completion of each pipe. In either measure, if the thickness of the coating is below the minimum specified millage anywhere along the length of the pipe, then adjustments must be made to the spray system to account for this.

3. Holiday Testing

    a. Holiday testing will be conducted on the completed coating after cure or 24 hours, whichever is less, using a high voltage spark test in accordance with NACE Standard RP-0188.

    b. Coating shall be at 75% or greater of its fully cured hardness value prior to holiday testing.

    c. Coating thickness used for holiday detection shall be the minimum specified coating thickness.

    d. All holidays shall be plainly marked immediately after detection and shall be repaired according to this Section.

    e. Holiday testing will be performed in such a way as to mitigate possible damage to the coating by performing as few of passes as required over the coating.

3.04 REPAIRS

A. All damage detected by the holiday detector or visual inspection shall be repaired by the Applicator.

B. Scars, dents, damaged areas, and large holidays shall be cleaned by removing all rust, scale, dirt, or other foreign material and loose coating by using hand- or power-driven wire brushes. The area to be patched (holiday plus at least 3/4 inch of surrounding coating) shall be suitably roughened before patching (preferably by 120 grit "wet" or "dry" sandpaper). Files may not be used. Dust generated by the sanding is to be removed with a clean, dry cloth or brush prior to patching.

C. Areas not meeting hardness requirements shall be removed using a method that will not damage the primary coating or pipe.

D. Products used for repair in coating systems shall match the properties of the original coating system and shall be recommended by the manufacturer for use in repairs. Repairs shall be made in accordance with manufacturer requirements.

E. Coating Manufacturer approved melt sticks shall be used for patching holidays and damaged areas of the epoxy coating. The surface to be patched shall be heated with a small torch until the patch stick just starts to melt; then the stick shall be rubbed over the heated surface, building up a small puddle of patching compound over the area. The patches shall overlap the surrounding undamaged coating by a minimum of 3/4 inch. The repair shall be re-jeeped in accordance with the requirement of this section.

3.05 STORAGE, HANDLING, AND SHIPPING

A. Pipe shall be handled and stored in a manner to prevent damage to pipe walls, beveled ends and coating. Pipe or coating damaged in handling or other operations shall be satisfactorily repaired.

B. Stacking in the yard shall be in accordance with good safety practices or in accordance with Purchaser's specifications. Sufficient spacers and padding shall be used to prevent damage to coating.

C. Pipe shall be shipped using sufficient dunnage to adequately protect the pipe and its external coating. Chains or wire rope shall not be used without sufficient padding to prevent damage to the coating.

PART 4 - MEASUREMENT AND PAYMENT

4.01 Measurement and Payment

A. Work required in this section shall not be measured separately for payment, but shall be considered subsidiary to the cost of the pay item to which it relates.

End

1.0 GENERAL

This specification covers the internal inspection of Piping System through the use of visual records.

2.0 SUBMITTALS

Contractor shall submit to Owner the following:

2.1 Compact Disc (CD) or Digital Video Disc (DVD) of recording of chilled water piping.

3.0 EXECTION

3.1 Video Recording of Installed Chilled Water Piping

Contractor shall provide all labor, equipment, material and supplies and perform all operations required to conduct internal closed-circuit television and video recording of all chilled water piping. Video recording of each chilled water piping section shall be completed and submitted to Owner **prior to completion** of backfill of chilled water piping. Contractor shall not place backfill until Owner has reviewed the video and agrees that there are no defects in the chilled water piping installation. Placement of backfill prior to Owner review of video and agreement of no defects in the chilled water piping installation shall be at the Contractor's risk. Any defects observed through the video inspection shall be corrected at the Contractor's expense and new video submitted to the Owner prior to acceptance of the pipe.

All video work shall be performed under the direct full-time supervision of operator qualified to operate the televising equipment and provide a quality video for review by the Owner.

Closed circuit television shall produce a color CD or DVD.

Camera shall produce a video using a pan-and-tilt, radial viewing, conduit inspection camera that pans plus/minus 275 degrees and rotates 360 degrees. The television camera shall be specifically designed and constructed for such use. The camera shall be operative in 100% humidity conditions. Camera shall have an accurate footage counter that displays on the monitor the exact distance of the camera (to the nearest tenth of a foot) from the centerline of the starting point.

Camera shall have height adjustment so that the camera lens is always centered within plus/minus 10% of the center axis of the conduit being videoed. Camera shall provide a minimum of 460 lines of horizontal resolution and 400 lines of vertical resolution. Camera shall be equipped with a remote iris to control the illumination range for an acceptable picture. Geometrical distortion of the image shall not exceed one percent (1%). The video image produced by each camera shall be calibrated using a Marconi Resolution Chart No. 1 or equivalent.

Lighting for the camera shall be suitable to allow a clear picture of the entire periphery of the conduit without loss of contrast, flare out of picture or shadowing. A reflector in front of the camera may be required to enhance lighting in dark or large size conduit. The video camera shall be capable of showing on the digital display the Owner's name, Project name, Contractor name, date, line size and material, conduit identification, and ongoing footage counter. The camera, television monitor, and other components of the video system shall be capable of producing picture quality to the satisfaction of the Owner that is a clear, accurate, in-focus color recording of the chilled water piping's internal condition. If picture quality is unsatisfactory, equipment shall be removed and replaced with adequate equipment.

If during video of the chilled water piping section, water is encountered inside the pipe, the pipe must be dewatered. The chilled water piping section must be dry. Video performed while floating the camera is not acceptable.

Computer printed location records shall be kept by the Contractor and shall clearly show the location and amounts of any debris, materials, or equipment left in the pipe. A copy of all records shall be supplied to the Owner. Noted defects shall be documented as color digital files and color hard copy print-outs. Photo logs shall accompany each photo submitted.

The video recording shall supply a visual and audio record of the chilled water piping that may be replayed. Video recordings shall include an audio track recorded by the video technician during the actual video work describing the parameters of the chilled water piping being videoed (i.e. location, depth, diameter, pipe material), as well as describing connections, defects and unusual conditions observed during the video work. Video recording playback shall be at the same speed that it was recorded. Slow motion or stop-motion playback features may be supplied at the option of the Contractor. Once videoed, the CDs/DVDs shall be labeled and become the property of the Owner. The Contractor shall have all video and necessary playback equipment readily accessible for review by the Owner during the project.

4.0 Payment

Payment, when included as a Contract pay item, will be made under one of the following:

Pay Item SS230190-VIDEO:	Video Inspection of Newly Installed Chilled Water	Each

End

PART 1 - GENERAL

1.1 RELATED DOCUMENTS

A. Drawings and general provisions of the Contract, including General and Supplementary Conditions and Division 01 Specification Sections, apply to this Section.

1.2 SUMMARY

A. Section Includes:

1. Sleeves.
2. Sleeve-seal systems.
3. Sleeve-seal fittings.
4. Grout.

1.3 SUBMITTALS

A. Product Data: For each type of product indicated.

PART 2 - PRODUCTS

2.1 SLEEVES

A. Sleeves will be furnished and installed by Austin Energy's customer in wall of customer's mechanical room.

2.2 SLEEVE-SEAL FITTINGS

A. Manufacturers:

1. "Link-Seal" by Enpro Industries.
2. Advance Products & Systems, Inc.
3. CALPICO, Inc.
4. Metraflex Company (The).
5. Proco Products, Inc.

B. Description:

1. Manufactured modular mechanical seal, rubber links shaped to fit annular space between pipe and wall opening.
2. Seal Element: EPDM (Black).
3. Pressure Plates: Composite.

4. Bolts & Nuts: Carbon steel with 2-part Zinc Dichromate per ASTM B633, corrosion inhibiting proprietary organic coating (passes 1470 hour salt spray test).
5. Temp. Range: -40 to +250F. (-40 to +121C.)*

2.3 GROUT

A. Standard: ASTM C 1107/C 1107M, Grade B, post-hardening and volume-adjusting, dry, hydraulic-cement grout.

B. Characteristics: Non-shrink; recommended for interior and exterior applications.

C. Design Mix: 5000-psi (34.5-MPa), 28-day compressive strength.

D. Packaging: Premixed and factory packaged.

2.4 SLEEVE-SEAL SYSTEMS

A. Manufacturers:

1. Enpro Industries.
2. Advance Products & Systems, Inc.
3. CALPICO, Inc.
4. Metraflex Company (The).
5. Proco Products, Inc.
6. Link Seal; Pipeline and Insulator, Inc.

B. Description: Modular sealing-element unit, designed for field assembly, for filling annular space between piping and sleeve.

1. Sleeves: Galvanized steel sleeves large enough for pipe, insulation, and sleeve seal.
2. Sealing Elements: EPDM-rubber interlocking links shaped to fit surface of pipe. Include type and number required for pipe material and size of pipe.
3. Pressure Plates: Carbon steel.
4. Connecting Bolts and Nuts: Carbon steel, with corrosion-resistant coating of length required to secure pressure plates to sealing elements.

PART 3 - EXECUTION

3.1 SLEEVE INSTALLATION

A. Sleeves for piping passing through penetrations in floors, partitions, roofs, and walls will be furnished and installed by Austin Energy's customer.

B. Sleeves will be selected and installed by others. Coordinate to determine final size of sleeves.

3.2 SLEEVE-SEAL-SYSTEM INSTALLATION

A. Install sleeve-seal systems in sleeves in exterior concrete walls and slabs-on-grade at service piping entries into building.

1. Select type, size, and number of sealing elements required for piping material, pipe up to 14" steel pipe diameter (plus typical 2" insulation thickness), and for sleeve ID or hole size.
2. Position piping in center of sleeve.
3. For walls 12” and thicker, provide dual sets of sealing elements in annular space between sleeve and pipe: one set on interior building side of penetration, one set on exterior side. For walls less than 12” thick, provide only a single set of sealing elements.
4. Tighten bolts against pressure plates that cause sealing elements to expand and make a watertight seal.

3.3 PAYMENT

A. Pipe Seals

1. Pipe seals will be paid for at the unit bid price for pipe sizes; up to 12” and up to 18” pre-insulated pipe sizes, including sleeve seal fitting wall sleeve. Wall sleeve through mechanical room wall to be provided by Austin Energy’s customer.

B. Payment, when included as a Contract pay item, will be made under one of the following:

Pay Item No. SS230517-1:	Pipe Seals up to 12" pipe size.	Per Each.
Pay Item No. SS230517-2:	Pipe Seals 13" to 18"pipe size.	Per Each.

END OF SECTION SS 230517

PART 1 - GENERAL

1.1 DESCRIPTION:

This item shall govern the valves furnished and installed as indicated on the Drawings. Unless otherwise indicated on the Drawings, all butterfly valves 4 inches (102 mm) and larger shall be bi-directional, bubble-tight resilient seated butterfly type valves of suitable design and fully equipped for service in chilled water systems, without need for further modification; all ball valves shall be lead free full port bronze valves of suitable design and fully equipped for service in chilled water systems, without need for further modification.

This specification is applicable for projects or work involving either inch-pounds or SI units. Within the text, inch-pound units are given preference followed by SI units shown within parentheses.

1.2 QUALITY ASSURANCE

A. MSS Compliance: Comply with the various MSS Standard Practice documents referenced.

B. ASME Compliance: Comply with ASME B31.9 for building services piping and ASME B31.1 for power piping.

C. Coating applicator qualifications: Engage an experienced applicator who has successfully completed coating system applications similar in material and extent to those specified within this Section. Representative for coating manufacturer shall be on site for two days, minimum, to instruct Contractor in application of product and ensure manufacturer's installation specifications are being met.

1.3 SUBMITTALS

A. Product Data: For each type of valve indicated.

1. Include flow and pressure drop curves based on manufacturer's testing for calibrated-orifice balancing valves and automatic flow-control valves.
2. Include valve diagram cut sheet: Cut sheet shall include item number, quantity, description, materials, reorder part number.

1.4 DELIVERY, STORAGE, AND HANDLING

A. Prepare valves for shipping as follows:

1. Protect internal parts against rust and corrosion.
2. Protect threads, flange faces, grooves, and weld ends.
3. Set angle, gate, and globe valves closed to prevent rattling.
4. Set ball and plug valves open to minimize exposure of functional surfaces.
5. Set butterfly valves closed or slightly open.
6. Block check valves in either closed or open position.

B. Use the following precautions during storage:

1. Maintain valve end protection.
2. Store valves indoors and maintain at higher than ambient dew point temperature. If outdoor storage is necessary, store valves off the ground in water-tight enclosures.

C. Use sling to handle large valves; rig sling to avoid damage to exposed parts. Do not use hand wheels or stems as lifting or rigging points.

PART 2 - PRODUCTS

2.1 BASIC, COMMON FEATURES

A. Pressure and Temperature Ratings: As required to suit system pressures and temperatures.

B. Sizes: Same size as upstream pipe, unless otherwise indicated.

C. Gear Operators: For quarter-turn butterfly valves, with 2" square nut on shaft of gear operator to fit socket connection of extension stem.

D. Extension Stems: Galvanized steel, female socket end at bottom, 2" square nut at top, of length required as per AE Standard Detail R6 'VALVE BOX DETAIL'.

E. Bypass and Drain Connections: Comply with MSS SP-45 bypass and drain connections.

F. Threads: ASME B1.20.1.

2.2 BUTTERFLY VALVES

A. Manufacturers: Subject to compliance with requirements, provide products by:

1. Bray Controls; a division of Bray International. Series 31H or 36H valves.

B. Description:

1. Standard: MSS SP-67.
2. CWP Rating:
   a. For Valves 20" and below: 250 psig at 100 deg F.
   b. For Valves greater than 20": 232 psig at 100 deg F.

3. Body Design: polyester coated ductile iron lug type body, flange size for 150 lb companion flanges; suitable for bidirectional dead-end service at rated pressure without use of downstream flange.
4. Seat: Resilient, EPDM.
5. Stem: 316 or 416 stainless steel.
6. Disc: Nylon 11 coated ductile iron or aluminum-bronze.
7. Service: Bidirectional.
8. Gear operator: Permanently lubricated, self locking carbon steel worm and stainless steel gear input shaft, coated cast iron gear housing, meeting NEMA 4, 4x and IP 65 specifications, Teflon bushing, FKM O-Ring body seal, vertical shaft from gear operator with 2" square nut on shaft to fit socket connection of extension stem. Operator shaft must be of sufficient length to accommodate connection to the valve riser.

2.3 BALL VALVES

A. Manufacturers: Subject to compliance with requirements, provide products by the following:

1. Conbraco Industries, Inc.; Apollo Valves, 76F-100A series.
2. Kitz Corporation.
3. Crane Energy / Stockham.

B. Description:

1. Threaded, 1000 psig cold non-shock, stainless steel body, full port.
2. 316 SS ball and stem.
3. RPTFE Seats and stuffing box ring.
4. Adjustable packing gland.
5. Investment cast components.
6. Reinforced seats.
7. Blow-out-proof stem design.
8. Stem bearing: RPTFE.
9. Stem packing: MPTFE.
10. Adjustable packing gland.
11. 304 or 316 stainless steel lever with vinyl grip, stainless steel lever nut.
12. Federal Specification: WW-V-35C, Type: II, Composition: SS, Style: 3.

2.4 AUTOMATIC AIR VENT VALVES

A. Manufacturers:

1. ITT Hoffman No. 792.

B. Description:

1. ITT Hoffman 792
2. Body: Cast iron.
3. Internal Parts: Stainless steel.
4. 3/4" NPT inlet and 1/2" NPT outlet.

5. Maximum operating pressure: 250 psi.
6. 10 CFM air discharge capacity at 100 psig water pressure.

2.5 VALVE BOXES AND RISERS

A. Valve Stem Extension Assembly: Construct per AE Standard Details R5, R6, R6A, R16 and R16A for valve box, valve box cover, valve box riser, and valve operator extension.

B. Description:

1. Manufactured assembly, extra heavy duty, round, minimum 2-piece.
2. Material: Cast Iron Per ASTM A48 Class 30B.
3. Adjustable screw type top with inner lugs.
4. Min. 5-1/4" riser inner clear opening.
5. Min. 10" inner diameter base.
6. Round flat lid, traffic rated.
7. Centering guide within riser to ensure riser stays centered over valve or valve operator.
8. Gate wrench extension stem, constructed of 1-1/4" schedule 40 galvanized steel pipe, with 2" nut socket on lower end and 2" nut on upper.

C. Provide “Debris Cap” by SW Services, 800-462-2773, www.debriscaps.com, at top of each valve box riser.

D. Provide Quality Water Products’ “Box-Seat” at stems of all direct buried valves.

2.6 BURIED VALVE AND COMPANION FLANGE COATING

A. Buried valves and companion flanges shall be covered with the STAC Coating System products including STACprime, STACfill, STACwrap and STACguard. Coating materials shall be plainly and permanently marked, stored, and applied in accordance with the manufacturer’s recommendations.

PART 3 - EXECUTION

3.1 EXAMINATION

A. Examine piping system for compliance with requirements for installation tolerances and other conditions affecting performance of valves. Do not proceed with installation until unsatisfactory conditions have been corrected.

B. Examine valve interior for cleanliness, freedom from foreign matter, and corrosion. Remove special packing materials, such as blocks, used to prevent disc movement during shipping and handling.

C. Operate valves from fully open to fully closed positions. Examine guides and seats made accessible by such operation.

D. Examine threads on valve and mating pipe for form and cleanliness.

E. Examine mating flange faces for conditions that might cause leakage. Check bolting for proper size, length, and material. Check gasket material for proper size, material composition suitable for service, and freedom from defects and damage.

F. Do not attempt to repair defective valves; replace with new valves.

3.2 VALVE INSTALLATION

A. Install valves as indicated, according to manufacturer's written instructions.

B. Install valves with unions or flanges at each piece of equipment arranged to allow servicing, maintenance, and equipment removal without system shutdown.

C. Locate valves for easy access and provide separate support where necessary.

D. Install valves in a position to allow full stem movement.

1. **Ball valves must be installed within air release valve assembly boxes such that valve opens to flow with handle pulled UP**. Installation where handle is pushed down to open will not be accepted.
2. Gear operator shaft must be long enough to allow base of valve box to fit completely over square nut operator without adjacent pipe / butterfly valve obstructing. Provide gear operator shaft extension piece if/as required to meet this requirement.

E. Apply STACprime, STACfill, STACwrap and STACguard to all direct buried valves. Install in strict accordance with manufacturer's instructions. Representative for sleeve manufacturer shall be on site for two days, minimum, to instruct Contractor in application of product and ensure manufacturer's installation specifications are being met.

3.3 VALVE BOX INSTALLATION

A. Install in strict accordance with manufacturer's recommendations.

B. Adjust screwable riser top to flush with pavement.

C. Coordinate top riser dimensions with Austin Energy to verify proper fit of AE-provided lid. [Note: Height of valve box street-level lids (reference AE Standard Details R7 and R8) is 2.5".]

D. Coordinate length of gate wrench extension stem with elevation requirements of site such that top nut is 12 -20 inches below street surface.

E. Provide centering guide within riser, attached to valve or valve operator shaft, to ensure riser stays centered over valve or valve operator.

1. Provide “Box-Seat” by Quality Water Products at stems of all direct buried valves. Box Seat may serve as centering guide.

F. Provide “Debris Cap” by SW Services, 800-462-2773, www.debriscaps.com, at top of each valve box riser above underground valves.

G. Verify risers are installed perfectly vertically, centered on valve or gear nut. Do not backfill around riser until inspected and approved by representative of AE and/or Engineer.

3.4 THREADED CONNECTIONS

A. Note the internal length of threads in valve ends and proximity of valve internal seat or wall to determine how far pipe should be threaded into valve.

B. Align threads at point of assembly.

C. Apply appropriate tape or thread compound to the external pipe threads, except where dry seal threading is specified.

D. 7Assemble joint, wrench tight. Wrench on valve shall be on the valve end into which the pipe is being threaded.

3.5 AIR RELEASE VALVE ASSEMBLIES

A. Install air release valve assemblies, complete with all components such as shutoff valves, air release valves, nipples, tubing, concrete ground box, AASHTO-20 rated lid, etc, in accordance with AE Standard Detail R2 “Air Release Valve Assembly”.

3.6 APPLICATION SCHEDULE

A. General Application: Use ball valves for shutoff duty and for throttling duty.

B. Refer to drawings for valve type required in particular locations.

3.7 ADJUSTING

A. Adjust or replace packing after piping systems have been tested and put into service, but before final adjusting and balancing. Replace valves if leak persists.

3.8 PAYMENT

A. Butterfly Valves:

1. Valves will be paid for at the unit bid price for the size and type direct-buried valve installed, including valve, thrust blocking, valve insulation/wrap, all flanges, unions, and fittings required along with related bolts, valve insulation, gear operator and gear operator stem top nut, valve boxes referencing

standard Austin Energy Details, and other appurtenances necessary for proper operation.

a. Unit pricing assumes top nut of valve or valve gear operator is not more than 8 feet below grade.

B. Air release valve assembly:

1. Air release valve assembly will be paid for at the unit bid price for an entire assembly, per AE Standard Detail R2 “Air Release Valve Assembly”, including underground box and lid, 2” pipe risers, tubing and all pipe fittings, ball valves, pipe and valve insulation, and air release valve. Riser pipe to include all lengths up to 20 feet, measured from main chilled water line tap to ball valve.

C. Payment, when included as a Contract pay item, will be made under one of the following:

Pay Item No. SS-230524-BFV-8:	8" Butterfly valve	Per Each.
Pay Item No. SS-230524-BFV-10:	10" Butterfly valve	Per Each.
Pay Item No. SS-230524-BFV-12:	12" Butterfly valve	Per Each.
Pay Item No. SS-230524-BFV-18:	18" Butterfly valve	Per Each.
Pay Item No. SS-230524-BFV-24:	24" Butterfly valve	Per Each.
Pay Item No. SS-230524-BFV-30:	30" Butterfly valve	Per Each.
Pay Item No. SS-230524-AIR:	Air release assembly per AE Standard Detail R2.	Per Each.

END OF SECTION SS 230524

PART 1 - GENERAL

1.1 SUMMARY

A. This Specification includes pipe and fitting materials and joining methods for the following:

1. Chilled water transmission piping larger than 24” in diameter.

2. Short lengths of hydronic piping, 2” and less, for miscellaneous items such as fittings in air release pipe riser, outlet and inlet piping from air releases, etc.

3. Refer to Pre-insulated Chilled Water Piping specification SS232114 for pipe 24” diameter and smaller.

1.2 REFERENCES

A. Design, drawings, welding details, fabrication, non destructive examinations and general provisions of the Contract, including General and Supplementary Conditions and Division 01 Specification Sections, apply to this Section.

B. ASME B31.1 – Power Piping

C. ASME Section IX – Qualification Standard for Welding and Brazing Procedures, Welders, Brazers, and Welding and Brazing Operations.

D. ASME B1.20.1 – Pipe Threads, General Purpose, Inch

E. ASME B16.3 – Malleable Iron Threaded Fittings Class 150 and 300.

F. ASME B16.47 - Large Diameter Steel Flanges: NPS 26 through NPS 60 Metric/Inch Standard

G. ASME B16.5 – Pipe Flanges and Flanged Fittings

H. ASME B16.9 – Factory Made Wrought Steel Buttwelding Fittings

I. ASME B16.21 – Non Metallic Flat Gaskets for Pipe Flanges

J. ASME B18.2.1 - Square, Hex, Heavy Hex, and Askew Head Bolts and Hex, Heavy Hex, Hex Flange, Lobed Head, and Lag Screws (Inch Series)

K. ASTM A53 – Pipe, Steel, Black and Hot-Dipped, Zinc-Coated, Welded and Seamless.

L. ASTM A105 – Carbon Steel Forgings for Piping Applications

M. ASTM A106 – Seamless Carbon Steel Pipe for High Temperature Service

N. ASTM 193 - Alloy-Steel and Stainless Steel Bolting for High Temperature or High Pressure Service and Other Special Purpose Applications

O. ASTM 194 - Carbon and Alloy Steel Nuts for Bolts for High Pressure or High Temperature Service, or Both

P. ASTM A234 - Piping Fittings of Wrought Carbon Steel and Alloy Steel for Moderate and High Temperature Service

Q. ASTM A312 – Seamless, Welded, and Heavily Cold Worked Austenitic Stainless Steel Pipes

R. ASNT TC-1A - Personnel Qualification and Certification in Nondestructive Testing

1.3 SUBMITTALS

A. Product Data: For each type of the following, provide manufacturer's catalog and additional supporting information as required to show compliance with specifications and standards.

1. Pressure-seal fittings
2. Air control devices
3. Pipe Material and Fittings – Additionally, include certified copies of mill tests and, in catalog data, mark specific model, type, sizes, etc. as applicable.
4. Pipe supports or pipe rollers utilized for temporary pipe support while placing pipe in tunnel, if applicable.
5. Pipe spool drawings showing weld location. All welds to have unique number.
6. Casing spacers.

B. Welding procedure specifications (WPS) and procedure qualification records (PQR), including lab test data, complying with Section IX of the ASME Boiler and Pressure Vessel Code as referenced in B31.1 specific to the project and prepared by a Senior Certified Weld Inspector per WPS's and PQR's must be supplied by the Contractor for review and approval by City personnel before commencing any welding work.

C. Welders' Performance Qualifications (WPQ), including lab test data and certification of compliance with ASME Section IX of the ASME Boiler and Pressure Vessel Code as referenced in B31.1 specific to the project. **City will not accept welder's performance qualifications from welders performing welding on other projects under different WPS's and PQR's from other Employers.**

D. Provide calculations signed and sealed by an engineer licensed in the state of Texas showing that the proposed pipe support and conveyance system is adequate to handle the dead loads from the pipe and water and live loads caused by conveyance of pipe into tunnel.

E. Submit documentation illustrating how the pipe will be conveyed into the tunnel and supported/blocked during grouting operations. Submittal shall be in accordance with this Section. Submittal should take into account protection of the pipe coating, spacing of supports to prevent stress on pipe from exceeding ASME B31.1 allowable stress, access for AE personnel to all joints during leakage test, and maintenance of alignment of pipes as shown in

the Drawings. Calculations for support/conveyance structure shall be signed and sealed by an engineer licensed in the state of Texas and shall show that the support/conveyance system is adequate to handle the anticipated dead and live loads for installation and hydrostatic testing.

F. Shop Drawings: Detail at 1/2" scale or larger, indicating piping layout, fabrication, weld map. Also show:
   1. Pipe supports and conveyance system for placing pipe in tunnel from launch shaft.
   2. System to prevent flotation of conduits and piping during grouting of tunnel.

G. Field quality-control test reports.

H. Operation and Maintenance Data: For air control devices, hydronic specialties, and special-duty valves to include emergency, operation, and maintenance manuals.

1.4 QUALITY ASSURANCE

A. Contractor shall provide their own quality assurance inspector on site to assure compliance with ASME B31.1.

B. Welding:
   1. Contractor shall maintain qualified welding procedures and welders according to ASME Section IX Boiler and Pressure Vessel Code.
   2. Comply with provisions set forth in ASME B31.1 Pressure Piping Code.
   3. Certify that each welder has passed ASME Section IX qualification tests for welding processes and positions, and that certification is current.
   4. City will provide an independent inspector to perform both visual inspections and volumetric testing in accordance with ASME B31.1 and this contract. Nondestructive testing personnel, methods, and procedures will be qualified to ASNT-TC1A latest revision. Inspectors shall be certified to AWS – CWI with a valid AWS certification number. Independent inspectors shall not have contracts for services with the Contractor for the Project.
   5. The City shall provide an independent ASNT-TC-1A Level III Inspector to review and approve all inspection and test reports.
   6. In cases where Contractor is under contract with a Developer and not the City to complete construction on the City's behalf, the Developer shall provide independent inspection services. City shall review inspector's qualifications and procedures to assure compliance with applicable codes.

C. Coating applicator qualifications: Engage an experienced applicator who has successfully completed coating system applications similar in material and extent to those specified within this Section. Representative for coating manufacturer shall be on site for two days, minimum, to instruct Contractor in application of product and ensure manufacturer's installation specifications are being met.

PART 2 - PRODUCTS

2.1 PIPE

A. Steel Pipe, up to and including 26”; ASTM A53, Type S, seamless, Grade B or ASTM A106, Grade B; Standard Weight; and plain ends, unless otherwise indicated

B. Steel Pipe, larger than 26”: ASTM A106, Grade B; Standard Weight; and plain ends, unless otherwise indicated.

C. Steel Pipe, 0.5" NPS to 2" NPS: ASTM A53, seamless, Schedule 80.

D. Stainless Steel Pipe: ASTM A 312, Type 304 or 316 stainless steel, Schedule 80, NPT threaded.

2.2 PIPE FITTINGS

A. Steel Flanges: ASTM A105, ASME B16.5, steel Class 250, or ASME B16.47 Grade A, Class 250; butt welded end connection flat face.

1. Bolts: ASTM A193/A193M, Grade B7. Extend minimum of two full threads beyond nut with bolts tightened to required torque.
2. Nuts: ASTM A194/194M, Grade 7, with Teflon coated threads.
3. Washers: Galvanized steel flat circular washers under bolt heads and nuts.

B. Steel Welding Fittings: ASTM A234, wrought steel. Tees, reducers and elbows (long radius only).

C. Screwed and Socket Weld Fittings: ASTM A105 Grade II, forged steel, Class 300 for use with Schedule 80 pipe.

D. Socket Outlet Fittings: ASTM A105/ASME 16.9 – Class 300 forged steel. Use for drain and vent connections to main only.

2.3 JOINING MATERIALS

A. Pipe-Flange Gasket Materials: Suitable for chemical and thermal conditions of piping system contents, and type suitable for fluid to be handled and working temperatures and pressures.

1. ASME B16.21, nonmetallic, flat, asbestos free, 1/8-inch maximum thickness unless thickness or specific material is indicated.

a. Full-Face Type: For flat-face, Class 250,

B. Flange Bolts and Nuts: ASTM A193 B7 and ASME B18.2.1, carbon steel, unless otherwise indicated.

C. Welding Filler Metals: Comply with AWS and ASME Section IX classifications for welding materials.

2.4 STEEL PIPE COATING

A. Provide coating system per requirements of Section 09900 COATINGS FOR CARBON STEEL PIPE AND FITTINGS.

B. Uncoated pipe shall be coated with STAC Coating System including STACprime, STACfill, STACwrap, and STACguard. Coating materials shall be plainly and permanently marked, stored, and applied in accordance with the manufacturer's recommendations.

2.5 RNC CONDUIT

A. Rigid non metallic conduit shall be per Section 260533 RACEWAYS AND BOXES.

PART 3 - EXECUTION

3.1 PIPING APPLICATIONS

A. Air vent riser piping from main chilled water pipe takeoffs to shutoff ball valves within air vent assembly boxes: 2", ASTM A53, seamless, carbon steel pipe, Schedule 80, socket weld fittings.

B. Within air vent assembly boxes, all piping above shutoff ball valves: 316 stainless steel, Schedule 80, NPT threaded. See detail Air Release Valve Assembly R2.

3.2 PIPING INSTALLATIONS

A. Drawing plans, schematics, and diagrams indicate general location and arrangement of piping systems. Install piping as indicated unless deviations to layout are approved by Engineer.

B. Provide factory coated pipe per requirements of Section 09900 COATINGS FOR CARBON STEEL PIPE AND FITTINGS for buried, non-insulated pipe larger than 24".

C. Install piping at a uniform grade of 0.2 percent upward in direction of flow, or as indicated in drawings.

D. Install piping free of sags and bends.

E. Install fittings for changes in direction and branch connections.

F. Apply STAC Coating System to un-coated steel pipe in welded main pipe sections, air vent riser piping, branch pipe welds, valves and flanges in accordance with manufacturer's instructions. Representative for sleeve manufacturer shall be on site for two days, minimum, to

instruct Contractor in application of product and ensure manufacturer's installation specifications are being met.

G. Select system components with pressure rating equal to or greater than system operating pressure.

H. Install groups of pipes parallel to each other, spaced to permit applying insulation and servicing of valves.

I. Install branch connections to mains using tee fittings in main pipe, with the branch connected to the bottom of the main pipe. For up-feed risers, connect the branch to the top of the main pipe.

J. Install valves according to Section 230523 GENERAL-DUTY VALVES FOR HVAC PIPING.

K. Install flanges in piping, NPS 2-1/2 and larger, at final connections of equipment and elsewhere as indicated.

L. Backfill per details in the drawings.

M. Support pipe in tunnel per contractor's approved submittal until grouting operations are complete.

3.3 PIPE JOINT CONSTRUCTION

A. Ream ends of pipes and tubes and remove burrs. Bevel plain ends of steel pipe.

B. Remove scale, slag, dirt, and debris from inside and outside of pipe and fittings before assembly.

C. Threaded Joints: Thread pipe with tapered pipe threads according to ASME B1.20.1. Cut threads full and clean using sharp dies. Ream threaded pipe ends to remove burrs and restore full ID. Join pipe fittings and valves with thread compound.

D. Damaged Threads: Do not use pipe or pipe fittings with threads that are corroded or damaged. Do not use pipe sections that have cracked or open welds.

E. Welded Joints: Comply with ASME B31.1 and ASME Boiler and Pressure Vessel Code, Section IX, using qualified processes and welding operators according to welding codes.

F. Apply heat shrink sleeve or coating (subject to Owner approval) at each joint upon completion of welding and testing, per requirements of Section 09910 SPECIAL FIELD COATINGS.

G. Flanged Joints: Select appropriate gasket material, size, type, and thickness for service application. Install gasket concentrically positioned. Use suitable lubricants on bolt threads.

3.4 FIELD QUALITY CONTROL

A. Owner shall provide for inspections and testing of welds.

1. Hydronic Piping:
   a. Third part testing firm shall have an American Welding Society-Certified Welding Inspector (CWI) to provide visual inspections (VT) per B31.1 on staff or included as a sub-contractor.
   b. Third party testing firm shall have an American Society of Nondestructive Testing (ASNT-TC-1A) Level III Inspector certified for the type of additional NDE selected for the project (i.e.; magnetic testing, radiographic, and ultrasonic testing methods) on staff or included as a sub-contractor.
   c. Inspectors performing field tests shall be certified at a minimum as an AWS-CWI to perform B31.1 visual inspections (VT) and as an ASNT-TC-1A Level II inspector for the type of NDE selected for the project. It is preferred to have one inspector with both certifications, but it may be necessary to have two inspectors if an inspector cannot be hired with both qualifications.
   d. A QA/QC or CWI Inspector working for the third-party testing firm shall review and approve Contractor's WPS, PQR and WPQ submittals. The qualified inspector shall also confirm that the PQR's include the tensile testing results and that the testing laboratory has specific lab identification numbers assigned to the test results and traceable to the WPS's and the PQR's. **AE OSER will not accept welder's performance qualifications from welders performing welding on other projects under different WPS's and PQR's from other Employers.**
   e. Per ASME B31.1, the CWI certified third party inspector will perform VT on 100% of the **completed** welds.
   f. In-process VT as defined by ASME B31.1 is optional. The CWI will perform in-process VT on the initial four (4) welds. If the weld passes the in-process and final VT as well as following volumetric testing, typically recordable UT, no additional in-process welds will be performed with two exceptions:
      1) A weld fails the completed weld VT or volumetric testing, in which case, AE shall increase volumetric testing and may also require additional in-process VT, and
      2) When contractor's welder has successfully welded without any failed welds to the same welding procedure on a previous AE project within the last 3 months, no in-process VT will be performed until such point as the welder fails inspection.
   g. AE OSER will perform enhanced volumetric inspections using ASME B31.1 standards.
      1) 10% of the welds passing visual examination will be examined using ultrasonic (UT) with recordable equipment. This allows for permanent records of the examinations and follow-up QA/QC. These records will serve as documentation within the final reports and verification of compliance with ASME B31.1.
      2) When in-process VT is performed on the initial four (4) welds, the completed welds shall be included in the 10% UT examination.

3) The UT frequency shall be increased to 100% in portions of the pipe that will be inaccessible after completion of construction and on a case by case basis, with approval from the project manager.
4) On a case by case basis, radiography or X-rays (RT) can be used as an alternative to UT in which case; the radiographic films serve as the permanent examination record.
5) Should any of the 10% welds tested fail, 20% of all remaining welds will be tested.
6) Should any of the 20% tested welds fail, 100% of all remaining welds will be tested.
7) Owner's independent inspectors will document and approve in writing the visual and NDE UT/RT examinations.
8) Testing shall be done prior to pressure testing and field application of sleeve or coating at joints.

2. Cost of testing

a. Owner will arrange for independent testing company to inspect, test, and approve welds. Coordinate and cooperate with Owner and Owner's testing representatives in all aspects of testing procedures. Give adequate advance notice that work is ready for inspections, tests or approvals (48 hour minimum). Testing company will provide written and photographic report of results to Owner and Engineer. Do not fill system with water nor pressure test until Owner and Engineer have approved results of welding tests.

b. Failed tests, Hydronic Piping:

1) Should any joint fail the test, Contractor shall correct the deficiency using qualified processes and procedures per ASME Boiler and Pressure Vessel Code, Section IX. Cost for correction of deficiency shall be borne by Contractor at no additional cost to Owner.
2) Any and all additional testing required due to failure(s) in initial testing will be borne by Contractor, at no additional cost to Owner. Owner will deduct testing expenses from Contractor's payment.

B. Contractor shall pressure test the hydronic piping to current ASME B31.1 as follows:
1. Prepare hydronic piping as follows:
a. Leave joints, including welds, uncoated and uninsulated and exposed for examination and testing prior to shrink sleeve or insulation being applied.
b. Provide temporary restraints for expansion joints that cannot sustain reactions due to test pressure. If temporary restraints are impractical, isolate expansion joints from testing.
c. Flush hydronic piping systems with clean water; then remove and clean or replace strainer screens.
d. Fill system with clean ambient temperature water.
e. Isolate equipment from piping. If a valve is used to isolate equipment, its closure shall be capable of sealing against test pressure without damage to valve. Install blinds in flanged joints to isolate equipment.

f. Install safety valve, set at a pressure no more than one-third higher than test pressure, to protect against damage by expanding liquid or other source of overpressure during test.

2. Contractor shall adhere to the following sequence for pressure testing installed pipe.
   a. Contractor shall make joints accessible for inspection by Owner. Contractor shall install and remove necessary caps, bulkheads, blow-offs, or closure pieces to accomplish specified testing. Contractor shall test against welded caps or closure pieces. Flanges shall not be installed in the piping for purposes of testing except at locations called for in the Drawings.
   b. For trenchless piping installation methods, install piping in tunnel and pressure test prior to construction of riser pipes in shafts. Field welded joints in elbows and tees shown in Drawings at bottom of work shafts shall be visible during pressure tests. Section of piping shall pass pressure test prior to grouting the tunnel.
   c. Install riser pipes in shafts. It is Owner's preference that field welded joints in riser pipes remain visible during hydrostatic and pressure test, but not required.
   d. Install and pressure test elbows and tees shown in Drawings at top of work shafts. Field welded joints in pipe and fittings shall remain visible pressure testing. Section of piping shall pass pressure test as indicated in this section prior to placing backfill.

3. Perform pressure testing per ASME B31.1:
   a. Notify Owner a minimum of two business days prior to testing. Owner will have access to pipe during pressure test.
   b. The piping system shall be subjected to pressure test pressure of 225 psig for 15 minutes, followed by 150 psig for 24 hours.
   c. After pressure test pressure has been applied for 10 minutes, accessible piping, joints, and connections shall be examined and inspected for leakage. Maintain a chart of pressure and temperature on the test section. Pressure and temperature readings shall be taken prior to the start of the test and upon completion of the 8 hour test period. Leaks shall be eliminated by tightening, repairing or replacing components as appropriate and the pressure test shall be repeated until there are no leaks.
   d. Provide Engineer and Owner with a written report of test results.

C. Camera Inspection – Contractor shall inspect chilled water lines for debris per SS230190.

D.

3.5 CLEANING

A. Refer to specifications section 232500 CHILLED WATER FLUSH AND CHEMICAL TREATMENT.

PART 4 - MEASUREMENT AND PAYMENT

4.1 MEASUREMENT

A. Refer to SP 510 - Special Provision to Item No. 510 Pipe for measurement of chilled water pipe and related appurtenances installed via open cut.

B. Refer to SP 501S - Special Provision to Item No. 501S Jacking and Boring Pipe for measurement of chilled water pipe and related appurtenances installed in tunnel or shaft.

4.2 PAYMENT

A. Refer to SP 510 - Special Provision to Item No. 510 Pipe for payment of chilled water pipe and related appurtenances installed via open cut.

B. Refer to SP 501S - Special Provision to Item No. 501S Jacking and Boring Pipe for payment of chilled water pipe and related appurtenances installed in tunnel or shaft.

End

PART 1 - GENERAL

1.1 SUMMARY

A. This Section governs piping for hydronic distribution systems located outside a building. Piping as defined in this item shall include pre-insulated steel piping systems for 24" diameter and smaller piping and associated fittings, valves, insulation, and specialties.

1.2 REFERENCES

A. Design, drawings, welding details, fabrication, non destructive examinations and general provisions of the Contract, including General and Supplementary Conditions and Division 01 Specification Sections, apply to this Section.

B. ASME B31.1 – Power Piping

C. ASME Section IX – Qualification Standard for Welding and Brazing Procedures, Welders, Brazers, and Welding and Brazing Operations.

D. ASME B1.20.1 – Pipe Threads, General Purpose, Inch

E. ASME B16.3 – Malleable Iron Threaded Fittings Class 150 and 300.

F. ASME B16.47 - Large Diameter Steel Flanges: NPS 26 through NPS 60 Metric/Inch Standard

G. ASME B16.5 – Pipe Flanges and Flanged Fittings

H. ASME B16.9 – Factory Made Wrought Steel Buttwelding Fittings

I. ASME B16.21 – Non Metallic Flat Gaskets for Pipe Flanges

J. ASME B18.2.1 - Square, Hex, Heavy Hex, and Askew Head Bolts and Hex, Heavy Hex, Hex Flange, Lobed Head, and Lag Screws (Inch Series)

K. ASTM A53 – Pipe, Steel, Black and Hot-Dipped, Zinc-Coated, Welded and Seamless.

L. ASTM A105 – Carbon Steel Forgings for Piping Applications

M. ASTM A106 – Seamless Carbon Steel Pipe for High Temperature Service

N. ASTM 193 - Alloy-Steel and Stainless Steel Bolting for High Temperature or High Pressure Service and Other Special Purpose Applications

O. ASTM 194 - Carbon and Alloy Steel Nuts for Bolts for High Pressure or High Temperature Service, or Both

P. ASTM A234 - Piping Fittings of Wrought Carbon Steel and Alloy Steel for Moderate and High Temperature Service

Q. ASTM A312 – Seamless, Welded, and Heavily Cold Worked Austenitic Stainless Steel Pipes

R. ASNT TC-1A - Personnel Qualification and Certification in Nondestructive Testing

1.3 SUBMITTALS

A. Product Data: For each type of the following, provide manufacturer's catalog and additional supporting information as required to show compliance with specifications and standards.

1. Pressure-seal fittings
2. Air control devices
3. Pipe Material and Fittings – Additionally, include certified copies of mill tests and, in catalog data, mark specific model, type, sizes, etc. as applicable.
4. Pipe supports or pipe rollers utilized for temporary pipe support while placing pipe in tunnel, if applicable.
5. Pipe spool drawings showing weld location. All welds to have unique number.
6. Casing spacers.

B. Welding procedure specifications (WPS) and procedure qualification records (PQR), including lab test data, complying with Section IX of the ASME Boiler and Pressure Vessel Code as referenced in B31.1 specific to the project and prepared by a Senior Certified Weld Inspector per WPS's and PQR's must be supplied by the Contractor for review and approval by City personnel before commencing any welding work.

C. Welders' Performance Qualifications (WPQ), including lab test data and certification of compliance with ASME Section IX of the ASME Boiler and Pressure Vessel Code as referenced in B31.1 specific to the project. **City will not accept welder's performance qualifications from welders performing welding on other projects under different WPS's and PQR's from other Employers.**

D. Provide calculations signed and sealed by an engineer licensed in the state of Texas showing that the proposed pipe support and conveyance system is adequate to handle the dead loads from the pipe and water and live loads caused by conveyance of pipe into tunnel.

E. Submit documentation illustrating how the pipe will be conveyed into the tunnel and supported/blocked during grouting operations. Submittal shall be in accordance with this Section. Submittal should take into account protection of the pipe coating, spacing of supports to prevent stress on pipe from exceeding ASME B31.1 allowable stress, access for AE personnel to all joints during leakage test, and maintenance of alignment of pipes as shown in the Drawings. Calculations for support/conveyance structure shall be signed and sealed by an engineer licensed in the state of Texas and shall show that the

support/conveyance system is adequate to handle the anticipated dead and live loads for installation and hydrostatic testing.

F. Shop Drawings: Detail at 1/2" scale or larger, indicating piping layout, fabrication, weld map. Also show:
   1. Pipe supports and conveyance system for placing pipe in tunnel from launch shaft.
   2. System to prevent flotation of conduits and piping during grouting of tunnel.

G. Field quality-control test reports.

H. Operation and Maintenance Data: For air control devices, hydronic specialties, and special-duty valves to include emergency, operation, and maintenance manuals.

1.4 QUALITY ASSURANCE

A. Contractor shall provide their own quality assurance inspector on site to assure compliance with ASME B31.1.

B. Welding:
   1. Contractor shall maintain qualified welding procedures and welders according to ASME Section IX Boiler and Pressure Vessel Code.
   2. Comply with provisions set forth in ASME B31.1 Pressure Piping Code.
   3. Certify that each welder has passed ASME Section IX qualification tests for welding processes and positions, and that certification is current.
   4. City will provide an independent inspector to perform both visual inspections and volumetric testing in accordance with ASME B31.1 and this contract. Nondestructive testing personnel, methods, and procedures will be qualified to ASNT-TC1A latest revision. Inspectors shall be certified to AWS – CWI with a valid AWS certification number. Independent inspectors shall not have contracts for services with the Contractor for the Project.
   5. The City shall provide ASNT-TC-1A Level III Inspector to review and approve all inspection and test reports.
   6. In cases where Contractor is under contract with a Developer and not the City to complete construction on the City's behalf, the Developer shall provide independent inspection services. City shall review inspector's qualifications and procedures to assure compliance with applicable codes.

C. Coating applicator qualifications: Engage an experienced applicator who has successfully completed coating system applications similar in material and extent to those specified within this Section. Representative for coating manufacturer shall be on site for two days, minimum, to instruct Contractor in application of product and ensure manufacturer's installation specifications are being met.

PART 2 - PRODUCTS

2.1 BURIED PRE-INSULATED CHILLED WATER PIPING

A. Subject to compliance with requirements, products shall be provided by one of the following for all piping sizes 24” and smaller.

1. Insul-Pipe Systems, Inc.
2. Perma-Pipe, Inc.
3. Thermacor Process, Inc.

B. Casing: Seamless high density polyethylene (HDPE) 150 mil minimum thickness. Size the casing to provide nominal 2” thick insulation between pipe and casing.

C. Insulation: Foamed in place cellular polyurethane: ASTM C168.

1. Thermal Conductivity (k-value): 0.16 at 75 deg. F. per ASTM C-518.
2. Service Temperature: Minus 250 to 250 deg. F.
3. Moisture Absorption: ASTM D2842, maximum 0.054 percent by volume.
4. Water-Vapor Transmission: ASTM E96, 1.26 perm inches.
5. Compressive Strength: 30 psi.
6. Density: 2.0 lbs. per cubic foot minimum.

D. End Seals: Factory applied waterproof mastic or heat shrink seal covering the urethane insulation at each end of each joint of pipe and bonded to the carrier pipe and casing.

E. Fitting Insulation: Provide molded PVC fitting cover kit with field applied polyurethane foam insulation to provide nominal 2 inch thick insulation. Cover kit is to be the most premium quality of all options manufacturer.

2.2 PIPE AND TUBES

A. Steel Pipe, up to and including 24”; ASTM A53, Type S, seamless, Grade B or ASTM A106, Grade B; Standard Weight; and plain ends, unless otherwise indicated

B. Steel Pipe, 0.5" NPS to 2" NPS: ASTM A53, seamless, Schedule 80.

2.3 PIPE FITTINGS

A. Steel Flanges: ASTM A105, ASME B16.5, steel Class 250, or ASME B16.47 Grade A, Class 250; butt welded end connection flat face.

1. Bolts: ASTM A193/A193M, Grade B7. Extend minimum of two full threads beyond nut with bolts tightened to required torque.
2. Nuts: ASTM A194/194M, Grade 7, with Teflon coated threads.
3. Washers: Galvanized steel flat circular washers under bolt heads and nuts.

B. Steel Welding Fittings: ASTM A234, wrought steel. Tees, reducers and elbows (long radius only).

C. Screwed and Socket Weld Fittings: ASTM A105 Grade II, forged steel, Class 300 for use with Schedule 80 pipe.

D. Socket Outlet Fittings: ASTM A105/ASME 16.9 – Class 300 forged steel. Use for drain and vent connections to main only.

2.4 JOINING MATERIALS

A. Pipe-Flange Gasket Materials: Suitable for chemical and thermal conditions of piping system contents, and type suitable for fluid to be handled and working temperatures and pressures.

1. ASME B16.21, nonmetallic, flat, asbestos free, 1/8-inch maximum thickness unless thickness or specific material is indicated.

a. Full-Face Type: For flat-face, Class 250,

B. Flange Bolts and Nuts: ASTM A193 B7 and ASME B18.2.1, carbon steel, unless otherwise indicated.

C. Welding Filler Metals: Comply with AWS and ASME Section IX classifications for welding materials.

2.5 STEEL PIPE COATING

A. Short segments of pipe which are not pre-insulated or which have been exposed due to removal of insulation: cover with STAC Coating System products including STACprime, STACfill, STACwrap and STACguard. Coating materials shall be plainly and permanently marked, stored, and applied in accordance with the manufacturer's recommendations.

2.6 RNC CONDUIT

A. Rigid non metallic conduit shall be per Section 260533 RACEWAYS AND BOXES.

2.7 BURIED WARNING AND IDENTIFICATION TAPE

A. Provide detectable warning tape from those listed in the City Standard Product list. Tape shall have solid aluminum core laminated with protective clear film on both sides to protect graphics from underground moisture, acids and alkalis. Tape shall follow APWA uniform color code. Tape shall include continuously repeated graphics reading "Caution Buried Chilled Water Line" (blue). See Standard Detail R1.

PART 3 - EXECUTION

3.1 EXCAVATION, BACKFILLING AND PAVING

A. Excavation, backfilling and paving shall be in conformance with City of Austin Standard

Specification Item No. 510 “Pipe”.

3.2 PIPING INSTALLATIONS

A. Drawing plans, schematics, and diagrams indicate general location and arrangement of piping systems. Install piping as indicated unless deviations to layout are approved by Engineer.

B. Pre-insulated piping shall be installed in accordance with manufacturer’s installation manual.

C. Select system components with pressure rating equal to or greater than system operating pressure.

D. Install piping straight and true to bear on sand bedding material where indicated and as detailed on drawings for piping in trenches. Install piping on supports as detailed in box tunnels.

E. Install piping at a uniform grade of 0.2 percent upward in direction of flow, or as indicated in drawings.

F. Install piping free of sags and bends.

G. Welding of steel piping including qualification of welders shall be in accordance with ASME B31.1 and ASME Section IX, metallic arc process.

H. Install vent piping and water vent valve where shown and as detailed on drawings

I. Install fittings for changes in direction and branch connections.

J. Install groups of pipes parallel to each other, spaced to permit applying insulation and servicing of valves.

K. Install branch connections to mains using tee fittings in main pipe, with the branch connected to the bottom of the main pipe. For up-feed risers, connect the branch to the top of the main pipe.

L. Install valves according to Section 230523 GENERAL-DUTY VALVES FOR HVAC PIPING.

M. Install flanges in piping, NPS 2-1/2 and larger, at final connections of equipment and elsewhere as indicated.

N. Utilize standard weight seamless welding fittings including long radius elbows, tees, reducing tees and reducers.

O. Apply STAC Coating System to un-coated steel pipe in welded main pipe sections, air vent riser piping, branch pipe welds, valves and flanges in accordance with manufacturer’s instructions. Representative for sleeve manufacturer shall be on site for two days, minimum, to instruct Contractor in application of product and ensure manufacturer’s installation specifications are being met.

P. Provide detectable warning tape above pipe in direct buried applications per standard detail.

Q. Backfill per details in the drawings.

R. Support pipe in tunnel per contractor's approved submittal until grouting operations are complete.

3.3 PIPE JOINT CONSTRUCTION

A. Ream ends of pipes and tubes and remove burrs. Bevel plain ends of steel pipe.

B. Remove scale, slag, dirt, and debris from inside and outside of pipe and fittings before assembly.

C. Threaded Joints: Thread pipe with tapered pipe threads according to ASME B1.20.1. Cut threads full and clean using sharp dies. Ream threaded pipe ends to remove burrs and restore full ID. Join pipe fittings and valves with thread compound.

D. Damaged Threads: Do not use pipe or pipe fittings with threads that are corroded or damaged. Do not use pipe sections that have cracked or open welds.

E. Welded Joints: Comply with ASME B31.1 and ASME Boiler and Pressure Vessel Code, Section IX, using qualified processes and welding operators according to welding codes.

F. Apply heat shrink sleeve or coating (subject to Owner approval) at each joint upon completion of welding and testing, per requirements of Section 09910 SPECIAL FIELD COATINGS.

G. Flanged Joints: Select appropriate gasket material, size, type, and thickness for service application. Install gasket concentrically positioned. Use suitable lubricants on bolt threads.

3.4 PIPING SUPPORTS

A. Piping support must account for expansion and contraction, vibration, dead load of piping and its contents, and seismic-bracing requirements.

B. Support devices will be required only for piping installed within tunnels, used to assist insertion of pipe in tunnel without damaging pipe insulation cover, and to keep pipe off floor of tunnel. Any acceptable means, as approved by Project, may be used.

C. Comply with the following requirements for maximum spacing of supports.
1. NPS 6: Maximum span, 17 feet.
2. NPS 8: Maximum span, 19 feet.
3. NPS 10: Maximum span, 20 feet.
4. NPS 12: Maximum span, 23 feet.
5. NPS 14: Maximum span, 25 feet.
6. NPS 16: Maximum span, 27 feet.
7. NPS 18: Maximum span, 28 feet.
8. NPS 20 and larger: Maximum span, 30 feet.

3.5 FIELD QUALITY CONTROL

A. Owner shall provide for inspections and testing of welds.

1. Hydronic Piping:
   a. Third part testing firm shall have an American Welding Society-Certified Welding Inspector (CWI) to provide visual inspections (VT) per B31.1 on staff or included as a sub-contractor.
   b. Third party testing firm shall have an American Society of Nondestructive Testing (ASNT-TC-1A) Level III Inspector certified for the type of additional NDE selected for the project (i.e.; magnetic testing, radiographic, and ultrasonic testing methods) on staff or included as a sub-contractor.
   c. Inspectors performing field tests shall be certified at a minimum as an AWS-CWI to perform B31.1 visual inspections (VT) and as an ASNT-TC-1A Level II inspector for the type of NDE selected for the project. It is preferred to have one inspector with both certifications, but it may be necessary to have two inspectors if an inspector cannot be hired with both qualifications.
   d. A QA/QC or CWI Inspector working for the third-party testing firm shall review and approve Contractor's WPS, PQR and WPQ submittals. The qualified inspector shall also confirm that the PQR's include the tensile testing results and that the testing laboratory has specific lab identification numbers assigned to the test results and traceable to the WPS's and the PQR's. **AE OSER will not accept welder's performance qualifications from welders performing welding on other projects under different WPS's and PQR's from other Employers.**
   e. Per ASME B31.1, the CWI certified third party inspector will perform VT on 100% of the **completed** welds.
   f. In-process VT as defined by ASME B31.1 is optional. The CWI will perform in-process VT on the initial four (4) welds. If the weld passes the in-process and final VT as well as following volumetric testing, typically recordable UT, no additional in-process welds will be performed with two exceptions:
      1) A weld fails the completed weld VT or volumetric testing, in which case, AE shall increase volumetric testing and may also require additional in-process VT, and
      2) When contractor's welder has successfully welded without any failed welds to the same welding procedure on a previous AE project within the last 3 months, no in-process VT will be performed until such point as the welder fails inspection.
   g. AE OSER will perform enhanced volumetric inspections using ASME B31.1 standards.
      1) 10% of the welds passing visual examination will be examined using ultrasonic (UT) with recordable equipment. This allows for permanent records of the examinations and follow-up QA/QC. These records will serve as documentation within the final reports and verification of compliance with ASME B31.1.
      2) When in-process VT is performed on the initial four (4) welds, the completed welds shall be included in the 10% UT examination.
      3) The UT frequency shall be increased to 100% in portions of the pipe that will be inaccessible after completion of construction and on a case by case basis, with approval from the project manager.

4) On a case by case basis, radiography or X-rays (RT) can be used as an alternative to UT in which case; the radiographic films serve as the permanent examination record.
5) Should any of the 10% welds tested fail, 20% of all remaining welds will be tested.
6) Should any of the 20% tested welds fail, 100% of all remaining welds will be tested.
7) Owner's independent inspectors will document and approve in writing the visual and NDE UT/RT examinations.
8) Testing shall be done prior to pressure testing and field application of sleeve or coating at joints.

2. Cost of testing

a. Owner will arrange for independent testing company to inspect, test, and approve welds. Coordinate and cooperate with Owner and Owner's testing representatives in all aspects of testing procedures. Give adequate advance notice that work is ready for inspections, tests or approvals (48 hour minimum). Testing company will provide written and photographic report of results to Owner and Engineer. Do not fill system with water nor pressure test until Owner and Engineer have approved results of welding tests.

b. Failed tests, Hydronic Piping:

1) Should any joint fail the test, Contractor shall correct the deficiency using qualified processes and procedures per ASME Boiler and Pressure Vessel Code, Section IX. Cost for correction of deficiency shall be borne by Contractor at no additional cost to Owner.
2) Any and all additional testing required due to failure(s) in initial testing will be borne by Contractor, at no additional cost to Owner. Owner will deduct testing expenses from Contractor's payment.

3. Hot tap piping: Reference specifications section SS 232115 HYDRONIC PIP HOT TAPS for testing requirements.

B. Contractor shall pressure test the hydronic piping to current ASME B31.1 as follows:

1. Prepare hydronic piping as follows:

a. Leave joints, including welds, uncoated and uninsulated and exposed for examination and testing prior to shrink sleeve or insulation being applied.
b. Provide temporary restraints for expansion joints that cannot sustain reactions due to test pressure. If temporary restraints are impractical, isolate expansion joints from testing.
c. Flush hydronic piping systems with clean water; then remove and clean or replace strainer screens.
d. Fill system with clean ambient temperature water.

e. Isolate equipment from piping. If a valve is used to isolate equipment, its closure shall be capable of sealing against test pressure without damage to valve. Install blinds in flanged joints to isolate equipment.
f. Install safety valve, set at a pressure no more than one-third higher than test pressure, to protect against damage by expanding liquid or other source of overpressure during test.

2. Contractor shall adhere to the following sequence for pressure testing installed pipe.

a. Contractor shall make joints accessible for inspection by Owner. Contractor shall install and remove necessary caps, bulkheads, blowoffs, or closure pieces to accomplish specified testing. Contractor shall test against welded caps or closure pieces. Flanges shall not be installed in the piping for purposes of testing except at locations called for in the Drawings.
b. For trenchless piping installation methods, install piping in tunnel and pressure test prior to construction of riser pipes in shafts. Field welded joints in elbows and tees shown in Drawings at bottom of work shafts shall be visible during pressure tests. Section of piping shall pass pressure test prior to grouting the tunnel.
c. Install riser pipes in shafts. It is Owner's preference that field welded joints in riser pipes remain visible during hydrostatic and pressure test, but not required.
d. Install and pressure test elbows and tees shown in Drawings at top of work shafts. Field welded joints in pipe and fittings shall remain visible pressure testing. Section of piping shall pass pressure test as indicated in this section prior to placing backfill.

3. Perform pressure testing per ASME B31.1:

a. Notify Owner a minimum of two business days prior to testing. Owner will have access to pipe during pressure test.
b. The piping system shall be subjected to pressure test pressure of 225 psig for 15 minutes, followed by 150 psig for 24 hours.
c. After pressure test pressure has been applied for 10 minutes, accessible piping, joints, and connections shall be examined/inspected for leakage. Maintain a chart of pressure and temperature on the test section. Pressure and temperature readings shall be taken prior to the start of the test and upon completion of the 8 hour test period. Leaks shall be eliminated by tightening, repairing or replacing components as appropriate and the pressure test shall be repeated until there are no leaks.
d. Provide Engineer and Owner with a written report of test results.

C. Camera Inspection – Contractor shall inspect chilled water lines for debris per specification SS 230190 PIPE INSPECTIONS INTERNAL.

3.6 CLEANING

A. Refer to specifications SS 232500 CHILLED WATER FLUSH AND CHEMICAL TREATMENT.

PART 4 - MEASUREMENT AND PAYMENT

4.1 MEASUREMENT

A. Refer to SP 510 - Special Provision to Item No. 510 Pipe for measurement of chilled water pipe and related appurtenances installed via open cut.

B. Refer to SP 501S - Special Provision to Item No. 501S Jacking and Boring Pipe for measurement of chilled water pipe and related appurtenances installed in tunnel or shaft.

4.2 PAYMENT

A. Refer to SP 510 - Special Provision to Item No. 510 Pipe for payment of chilled water pipe and related appurtenances installed via open cut.

B. Refer to SP 501S - Special Provision to Item No. 501S Jacking and Boring Pipe for payment of chilled water pipe and related appurtenances installed in tunnel or shaft.

End

PART 1 - GENERAL

1.1 SUMMARY

A. This Specification includes pipe, fitting materials, and installation methods for hot taps used in hydronic piping systems.

1.2 REFERENCES

A. Design, drawings, welding details, fabrication, nondestructive examinations and general provisions of the Contract, including General and Supplementary Conditions and Division 01 Specification Sections, apply to this Section.

B. ASME B31.1 – Power Piping

C. ASME Section IX – Qualification Standard for Welding and Brazing Procedures, Welders, Brazers, and Welding and Brazing Operations.

D. ASME B1.20.1 – Pipe Threads, General Purpose, Inch

E. ASME B16.3 – Malleable Iron Threaded Fittings Class 150 and 300

F. ASME B16.47 - Large Diameter Steel Flanges: NPS 26 through NPS 60 Metric/Inch Standard

G. ASME B16.5 – Pipe Flanges and Flanged Fittings

H. ASME B16.9 – Factory Made Wrought Steel Buttwelding Fittings

I. ASME B16.21 – Non Metallic Flat Gaskets for Pipe Flanges

J. ASME B18.2.1 - Square, Hex, Heavy Hex, and Askew Head Bolts and Hex, Heavy Hex, Hex Flange, Lobed Head, and Lag Screws (Inch Series)

K. ASTM A53 – Pipe, Steel, Black and Hot-Dipped, Zinc-Coated, Welded and Seamless.

L. ASTM A105 – Carbon Steel Forgings for Piping Applications

M. ASTM A106 – Seamless Carbon Steel Pipe for High Temperature Service

N. ASTM 193 - Alloy-Steel and Stainless Steel Bolting for High Temperature or High Pressure Service and Other Special Purpose Applications

O. ASTM 194 - Carbon and Alloy Steel Nuts for Bolts for High Pressure or High Temperature Service, or Both

P. ASTM A234 - Piping Fittings of Wrought Carbon Steel and Alloy Steel for Moderate and High Temperature Service

Q. ASTM A312 – Seamless, Welded, and Heavily Cold Worked Austenitic Stainless Steel Pipes

R. ASNT TC-1A - Personnel Qualification and Certification in Nondestructive Testing

1.3 SUBMITTALS

A. Product Data: For each type of the following, provide manufacturer's catalog and additional supporting information as required to show compliance with specifications and standards.

1. Pressure-seal fittings.
2. Air control devices.
3. Pipe Material and Fittings – Additionally, include certified copies of mill tests reports and, in catalog data, mark specific model, type, sizes, etc. as applicable.
4. Gate valves: data sheets, dimensions, construction materials and features.

   a. Contractor must verify opening of temporary hot tap gate valve is large enough to permit entry of hot tap machine cutter.
   b. Standard hot tap cutter sizes (outer diameter) are assumed to be:

Nominal Tap Size	Cutter O.D.		Nominal Tap Size	Cutter O.D.
1”	3/4”		18”	15-1/16”
2”	1-3/4”		20”	17”
3”	2-1/2”		22”	19”
4”	2-7/32”		24”	21”
6”	5-15/32"		26”	23”
8”	7-5/16"		28”	25”
10”	9-1/2"		30”	27”
12”	11-1/2"		32”	29”
14”	12-3/4"		34”	31”
16”	14-9/16”		36”	33”

5. Hot tap: Procedures, data sheets, shop drawings, fabrication details, weld maps, and job plans, must be submitted for review and approval by AE personnel.

B. Welding procedure specifications (WPS) and procedure qualification records (PQR), including lab test data, complying with Section IX of the ASME Boiler and Pressure Vessel Code as referenced in B31.1 specific to the project and prepared by a Senior Certified Weld Inspector per WPS's and PQR's must be supplied by the Contractor for review and approval by City personnel before commencing any welding work.

C. Welders' performance qualifications (WPQ), including lab test data and certification of compliance with ASME Section IX of the ASME Boiler and Pressure Vessel Code as referenced in B31.1 specific to the project. **City will not accept welder's performance qualifications from welders performing welding on other projects under different WPS's and PQR's from other Employers.** .

D. Shop Drawings: Detail at 1/2" scale or larger, indicating piping layout, fabrication, hot tap fittings, hot tap tee, pipe supports and conveyance system for placing hot tap and pipe.

E. Field quality-control test reports.

F. Welding test reports, including, but not limited to: ultrasonic, mag. particle, x-ray test reports with pictures and/or films as applicable.

G. Operation and Maintenance Data: For valves to include emergency, operation, and maintenance manuals.

1.4 QUALITY ASSURANCE

A. Contractor shall provide their own quality assurance inspector on site during the Hot Tap Operation.

B. Contractor shall provide certification from the Hot Tap Machine Manufacturer for the applicable hot tap size.

C. Welding:
1. Contractor shall maintain qualified welding procedures and welders according to ASME Section IX Boiler and Pressure Vessel Code.
2. Comply with provisions set forth in ASME B31.1 Pressure Piping Code.
3. Certify that each welder has passed ASME Section IX qualification tests for welding processes and positions, and that certification is current.
4. City will provide an independent inspector to perform both visual inspections and volumetric testing in accordance with ASME B31.1 and this contract. Nondestructive testing personnel, methods, and procedures will be qualified to ASNT-TC1A latest revision. Inspectors shall be certified to AWS – CWI with a valid AWS certification number. Independent inspectors shall not have contracts for services with the Contractor for the Project.
5. The City shall provide an independent ASNT-TC-1A Level III Inspector to review and approve all inspection and test reports.
6. In cases where Contractor is under contract with a Developer and not the City to complete construction on the City's behalf, the Developer shall provide independent inspection services. City shall review inspector's qualifications and procedures to assure compliance with applicable codes.

D. Coating applicator qualifications: Engage an experienced applicator who has successfully completed coating system applications similar in material and extent to those specified within this Section. Representative for coating manufacturer shall be on site for two days, minimum, to instruct Contractor in application of product and ensure manufacturer's installation specifications are being met.

PART 2 - PRODUCTS

2.1 PIPE

A. Steel Pipe, up to and including 26”; ASTM A53, Type S, seamless, Grade B or ASTM A106, Grade B; Standard Weight; and plain ends, unless otherwise indicated.

B. Steel Pipe, larger than 26”: ASTM A106, Grade B; Standard Weight; and plain ends, unless otherwise indicated.

C. Stainless Steel Pipe: 304 or 316 stainless steel, Schedule 80, NPT threaded.

2.2 PIPE FITTINGS

A. Steel Flanges: ASTM A105, ASME B16.5, steel Class 250, or ASME B16.47 Grade A, Class 250; butt welded end connection flat face.

1. Bolts: ASTM A193/A193M, Grade B7. Extend minimum of two full threads beyond nut with bolts tightened to required torque.
2. Nuts: ASTM A194/194M, Grade 7, with Teflon coated threads.
3. Washers: Galvanized steel flat circular washers under bolt heads and nuts.

B. Steel Welding Fittings: ASTM A234, wrought steel. Tees, reducers and elbows (long radius only).

C. Screwed and Socket Weld Fittings: ASTM A105 Grade II, forged steel, Class 300 for use with Schedule 80 pipe.

D. Socket Outlet Fittings: ASTM A105/ASME 16.9 – Class 300 forged steel. Use for drain and vent connections to main only.

E. Hot tap saddles:

1. Hot taps attached to host pipe using reinforcement pads are only allowed when the hot tap branch diameter is less than 50% or less of the diameter of the host pipe. A full encirclement, split tee saddle is required when the hot tap branch diameter is 50% or greater of the host pipe diameter.
2. Reinforcing pad: Construct per AE Standard Detail R14 ”HOT TAP SADDLE WELDING” and AE Standard Detail R15 “HOT TAP WITH TAPPING TEE AND GATE VALVE.”
   a. Reinforcing pad is to be round (concentric around nozzle base), and field-formed, rolled, or pre-manufactured such that inside diameter of pad matches outside diameter of main pipe being tapped.
   b. Bevel interior bottom edge of reinforcing pad to allow room for weld where nozzle is welded to main pipe.
   c. Provide either one 1/4" NPT threaded weep hole, for one piece reinforcing pad, or two weep holes for split reinforcing pad. The weep hole/holes may be used to pressure test reinforcing pads.

3. Full Encirclement, Split Tee: Construct per AE Standard Detail R15 "HOT TAP WITH TAPPING TEE AND GATE VALVE", meet steel pipe specifications (Section 2.1), of minimum length required for hot tap machine; flange at top for mounting temporary gate valve, side chilled water outlet; bottom cut to fit main pipe diameter. Contractor shall provide design details sealed by PE in State of Texas for Hot Tap Full Encirclement Saddle.

2.3 GATE VALVES

A. Gate valves will be used only on a temporary basis for purposes of making hot taps. For this reason no performance or materials specification is included here. Provide gate valve as required to fulfill hot tap requirements with no leakage, and full bore opening to accommodate hot tap machine.

2.4 JOINING MATERIALS

A. Pipe-Flange Gasket Materials: Suitable for chemical and thermal conditions of piping system contents, and type suitable for fluid to be handled and working temperatures and pressures.

1. ASME B16.21, nonmetallic, flat, full-face, Class 250, asbestos free, 1/8-inch maximum thickness unless thickness or specific material is indicated.

B. Flange Bolts and Nuts: ASTM A193, B7 and ASME B18.2.1, carbon steel, unless otherwise indicated.

C. Welding Filler Metals: Comply with AWS, and ASME Section IX and Section II Part C classifications for welding materials.

2.5 STEEL PIPE COATING

A. The host pipe and hot tap tee shall be coated with STAC Coating System including STACprime, STACfill, STACwrap, and STACguard in areas that cannot be insulated per OSER Standard Details. Coating materials shall be plainly and permanently marked, stored, and applied in accordance with the manufacturer's recommendations.

PART 3 - EXECUTION

3.1 PIPING APPLICATIONS

A. This section applies to the installation of hot taps. Procedures for joining pipe are found in specifications SS 232114 HYDRONIC PIPING and SS 232114 PRE-INSULATED CHILLED WATER PIPING

3.2 HOT TAP INSTALLATION PROCEDURES

A. Construct and inspect welded joints according to ASME B31.1 and ASME Section IX, using qualified welding procedures, welders and welding operators according to Part 1 "Quality Assurance" Article.

B. Verify opening size of tap-valve from supplier, during submittal process, and immediately upon receipt, to ensure hot tap machine cutter fits through valve bore.

C. Contractor shall test / check Hot Tap machine:

1. Cutter to be dye inspected and sharpness of cutter inspected, including quantity and condition of cutter teeth. (also inspect spare cutter).
2. Pilot drill dye checked and sharpness of drill checked, (also inspect spare drill).
3. Verify type of "U" pins (material, size and spares).
4. Check lube oil PSV setting on hot tap machine.
5. Check travel and turns of hot tap machine. Determine depth of cut and number of turns necessary.
6. Verify the hot tap machine has travel indicator.
7. Strength-test the nozzle and valve by hydrostatic or pneumatic means.

D. Checklist of valve and hot tap machine after installed on nozzle.

1. Ensure proper orientation of valve. If the tap is to be performed in the horizontal plane, the valve shall turn horizontal.
2. Check nozzle, valve and hot tap machine alignment.
3. Verify diametrical clearance.

E. Ensure valve will close when cutter is in retracted position. Ensure valve is open prior to initiating tap.

F. Notify Austin Energy Chilled Water Personnel when the hot tap is ready to begin, and when hot tap is complete.

G. Document hot tap procedure with photographs per Section 01380 CONSTRUCTION PHOTOGRAPHY & VIDEOS.

H. Weld hot tap connections:

1. Pre-heat entire weld area as required to maintain minimum 200°F surface temperature **at all times during welding process**. Verify surface temperature using infrared sensing device / digital pyrometer.
2. Weld hot tap nozzle and saddles to the main chilled water pipe being tapped. Have welds tested per weld test and inspection section. Ensure minimum 200°F surface temperature during welding.

I. Provide a 1/4" NPT tapped and threaded weep holes where called for use in pressure testing. Inject minimum 8 psi air into weep hole, and bubble test for leaks. After approval from Owner’s representative(s), provide water tight cap in threading of hole.

J. Replace insulation and coat exposed areas with STAC Coating System in accordance with manufacturer's instructions. Representative for sleeve manufacturer shall be on site for two days, minimum, to instruct Contractor in application of product and ensure manufacturer's installation specifications are being met.

K. After Hot Tap is complete, prepare and submit report on results.

3.3 FIELD QUALITY CONTROL

A. Hot tap piping connections:

1. Provide hot tap of chilled water mains per drawings and specifications and in accordance with Austin Energy Standard Detail R14 "HOT TAP REINFORCEMENT PAD WELDING DETAIL" and R15 "HOT TAP WITH TAPPING TEE AND GATE VALVE". For Full-encirclement Tee, Contractor shall complete Hot Tap per the Hot Tap engineer's specifications and drawings.
2. Leave joints, including welds, uninsulated and exposed for examination and testing prior to insulation being applied.

B. Welding Tests and Inspections

1. Hot tap piping connections:
   a. Owner's AWS-CWI certified independent inspector will visually examine (VT) 100% of the welds.

   b. Contractor shall not insulate, fill system with water, or otherwise make welds unavailable for examination until Owner's independent inspector has documented and certified results of visual and NDE examinations demonstrating that welds comply with ASME B31.1 and Owner or Owner's representative has approved in writing the visual and NDE examinations.

C. Owner shall provide for inspections and testing of welds.

1. Hydronic Piping:
   a. Third part testing firm shall have an American Welding Society-Certified Welding Inspector (CWI) to provide visual inspections (VT) per B31.1 on staff or included as a sub-contractor.
   b. Third party testing firm shall have an American Society of Nondestructive Testing (ASNT-TC-1A) Level III Inspector certified for the type of additional NDE selected for the project (i.e.; magnetic testing, radiographic, and ultrasonic testing methods) on staff or included as a sub-contractor.
   c. Inspectors performing field tests shall be certified at a minimum as an AWS-CWI to perform B31.1 visual inspections (VT) and as an ASNT-TC-1A Level II inspector for the type of NDE selected for the project. It is preferred to have one inspector with both certifications, but it may be necessary to have two inspectors if an inspector cannot be hired with both qualifications.
   d. A QA/QC or CWI Inspector working for the third-party testing firm shall review and approve Contractor's WPS, PQR and WPQ submittals. The qualified inspector shall also confirm that the PQR's include the tensile testing results and

that the testing laboratory has specific lab identification numbers assigned to the test results and traceable to the WPS's and the PQR's. **AE OSER will not accept welder's performance qualifications from welders performing welding on other projects under different WPS's and PQR's from other Employers.**

e. Per ASME B31.1, the CWI certified third party inspector will perform VT on 100% completed welds.

f. In-process VT as defined by ASME B31.1 is optional. For hot taps, the CWI will perform in-process VT on 100% of the in-process welds.

g. Owner's ASNT-TC-1A Level II or Level III certified independent inspector shall examine 100% of the welds, both at nozzle and at reinforcing pad, before insulating and placing pipe in location not open to visual inspection, using following methods:

   1) The root welding pass will be tested using dry magnetic particle testing.
   2) The following two welding passes will be tested using dry magnetic particle testing.
   3) All completed welds as final inspection will be tested using wet fluorescent magnetic particle testing.
   4) Full penetration weld joints other than 90 degree Tees or 45 degree laterals or fillet welds will be examined by recordable UT.

h. On a case by case basis, radiography or X-rays (RT) can be used as an alternative to UT in which case; the radiographic films serve as the permanent examination record.

i. Should any of the 10% welds tested fail, 20% of all remaining welds will be tested.

j. Should any of the 20% tested welds fail, 100% of all remaining welds will be tested.

k. Owner's independent inspectors will document and approve in writing the visual and NDE UT/RT examinations.

l. Testing shall be done prior to pressure testing and field application of sleeve or coating at joints.

2. Cost of testing

   a. Owner will arrange for independent testing company to inspect, test, and approve welds. Contractor shall coordinate and cooperate with Owner and Owner's testing representatives in all aspects of testing procedures and give adequate advance notice (a minimum of 48 hours) that work is ready for inspections, tests or approvals. Failed tests, Hot tap piping connections:

      1) Should any weld in hot tap connection fail test, Contractor will be required to remedy installation in strict accordance with directions provided by Owner and Owner's testing company.
      2) Cost of additional hot tap work required, up to and including redoing the entire hot tap, and cost of all additional hot tap welding tests, will be borne by Contractor, at no additional cost to Owner. Owner will deduct testing expenses from Contractor's payment.

PART 4 - MEASUREMENT AND PAYMENT

4.1 MEASUREMENT

A. Hot tap:

1. Hot taps will be paid for at the unit bid price for the size and type valve installed, including insulation of tap take off, all testing, and tapping into 24”-30” diameter pipe. Hot taps attached to host pipe using reinforcement pads are only allowed when the hot tap branch diameter is less than 50% or less of the diameter of the host pipe. A full encirclement, split tee saddle is required when the hot tap branch diameter is 50% or greater of the host pipe diameter. Austin Energy Standard Detail R14 “HOT TAP REINFORCEMENT PAD WELDING DETAIL” and R15 “HOT TAP WITH TAPPING TEE AND GATE VALVE”. **For Full-encirclement Tee, Contractor shall complete Hot Tap per the Contractor’s Hot Tap engineer’s specifications and drawings.**

a. **Excavation is specifically excluded from hot tap price.** Excavation will be included in the price of hand excavation, jacking & boring, or open trenching, as priced in the items SP-501S-SMALLPIT and SP-501S-LARGEPIT.

4.2 PAYMENT

When included as a Contract pay item, will be made under one of the following:

Pay Item No. SS-232115-HT-8:	Hot tap for 8” pipes onto 24” to 30” pipe, to include both chilled water supply and return piping.	Per Each
Pay Item No. SS-232115-HT-10:	Hot tap for 10” pipes onto 24” to 30” pipe, to include both chilled water supply **and** return piping.	Per Each
Pay Item No. SS-232115-HT-12 on 18:	Hot tap for 12” pipes onto 18” pipe, to include both chilled water supply and return piping.	Per Each
Pay Item No. SS-232115-HT-12 on 24:	Hot tap for 12” pipes onto 24” pipe, to include both chilled water supply **and** return piping.	Per Each
Pay Item No. SS-232115-HT-12 on 30:	Hot tap for 12” pipes onto 30” pipe, to include both chilled water supply **and** return piping.	Per Each

Pay Item No. SS-232115-HT-18 on 24:	Hot tap for 18” pipes onto 24” pipe, to include both chilled water supply **and** return piping.	Per Each
Pay Item No. SS-232115-HT-18 on 30:	Hot tap for 18” pipes onto 30” pipe, to include both chilled water supply **and** return piping.	Per Each
Pay Item No. SS-232115-HT-24 on 24:	Hot tap for 24” pipes onto 24” pipe, to include both chilled water supply **and** return piping.	Per Each
Pay Item No. SS-232115-HT-24 on 30 :	Hot tap for 24” pipes onto 30” pipe, to include both chilled water supply **and** return piping.	Per Each

END OF SECTION SS 232115

PART 1 - GENERAL

1.1 DESCRIPTION

A. This section governs water and chemical circulation for Pre-Operational Cleaning and Flushing activities for chilled water system piping. The design, installation, and operation of a pump circulation system for purposes of flushing and passivation of chilled water lines prior to service shall be the sole responsibility of the contractor.

B. The contractor shall contract with the Owner's preferred Chemical Treatment Vendor for all items associated with the Chemical Treatment Vendor's scope of work. The contractor shall coordinate circulation pump size and connection details, chemical pump size and connection details, administration of chemicals, testing locations and ports, sample acquisition, and recommendation of water discharge with the Owner's preferred Chemical Treatment Vendor.

C. The contractor shall demonstrate or employ the services of a vendor who can demonstrate to the Engineer that he specializes in the design and operation of temporary pumping systems. The Contractor or vendor shall provide a minimum of five (5) references of projects of a similar size and complexity as this project performed by his firm within the past three years.

1.2 RELATED DOCUMENTS

A. Drawings and general provisions of the Contract, including General and Supplementary Conditions and Division 01 Specification Sections, apply to this Section.

1.3 SUBMITTALS

A. Pumping flushing plan including: pump staging location, water source location, water discharge location, pump size and pump sizing calculations, pump capacity, and number of pumps to be on-site.

B. Pumps shall have cleaning certificate along with serial numbers marked on the pump. Hoses shall be in a bagged, wrapped and sealed package with cleaning certificate. Pumps and hoses must be cleaned of all residues from previous jobs. Owner reserves the right to have all pumps and hoses swabbed for determining their cleanliness.

C. Calculations of friction losses, discharge, and flow velocity, pump curves, and method of sampling discharge velocity in pumps and/or main piping.

D. Number, size, material, and connection method of all suction and discharge piping, and suction and discharge manifolds.

E. Containment plan for isolating circulation system from unauthorized discharges to

storm sewer.

F. Capture plan for capturing accidental discharges of flushing water.

G. Disposal plan for water used in flushing.

H. Detailed schedule for installation of circulation system.

I. A schematic drawing or sketch of the piping and the pump connections that will be cleaned, flushed and treated.

PART 2 - PRODUCTS

2.1 EQUIPMENT REQUIREMENTS

A. Engine driven equipment or devices shall be sound attenuated to operate below 70db or current city ordinance db level whichever is lower.

B. All pumps, piping, hoses, valves, manifolds, connections, and miscellaneous appurtenances in contact with circulation water shall be certified clean by steam cleaning methods prior to mobilization of equipment to the site. Equipment cleaned by methods other than steam will not be accepted.

C. All pumps, piping, hoses, valves, manifolds, connections, and miscellaneous appurtenances shall be 100% leak proof. Adequate equipment and materials for capturing spills or releases of any kind shall be on hand and available for immediate use. The use of non-leaking secondary containment for pumps and hose connections shall be used.

2.2 CHEMICAL REQUIREMENTS

A. Utilize Owner's preferred Chemical Treatment Vendor:

NALCO
John Davis
(512) 818-7234

PART 3 - EXECUTION

3.1 GENERAL REQUIREMENTS

A. Contractor shall schedule and attend an on-site meeting with Owner, Contractor's pump vendor, Owner's preferred Chemical Treatment Vendor, and Owner's engineer to coordinate logistics, piping connections, pump and hose placement, etc.

B. Inspection of pumps and hoses delivered shall be approved by Owner's appointed Inspector before pumps and hoses are connected and placed into service. If

pump(s) and/or hose(s) fail inspection and/or flow rate physical measurement, all project delay costs resulting from these failure(s) shall be assessed to the Contractor.

C. Staging and testing of pumps and hoses shall be completed 24-hours prior to start of cleaning and passivation. Circulation system shall be pressure tested prior to operation to ensure leak-proof construction.

D. Contractor shall provide on-site 24-hour pump watch for the entirety of the flushing operation.

E. Pump watch may be required to obtain water sample every 4-6 hours in lieu of Owner's preferred Chemical Treatment Vendor. Pump watch shall store samples taken on-site for testing by Owner's preferred Chemical Treatment Vendor.

3.2 SYSTEM DESIGN REQUIREMENTS

A. System shall be capable of circulating water in the largest pipe at a minimum flow rate of 5 feet per second. The design shall include a method of measuring velocity in the system that can be directly related to the velocity in the main piping.

B. System shall include a chemical pump and connection point for injection of chemicals by the Owner's preferred Chemical Treatment Vendor. Sizing of the chemical pump and injection point shall be coordinated with the Chemical Treatment Vendor.

C. System shall be 100% leak-proof and shall be hydrostatically tested prior to operation at 1.5 times the system operating pressure. Contractor shall flush hoses prior to connection to chilled water piping system.

D. System shall feature a containment system to isolate pumps, pipes, hoses, equipment, etc. in the event of an unplanned discharge of circulation water.

3.3 SERVICES PERFORMED BY CHEMICAL TREATMENT VENDOR

A. Chemical treatment will be provided by the Owner's preferred Chemical Treatment Vendor. The Chemical Treatment Vendor will provide the following:

1. Submittals for chemicals and calculation for quantity of chemicals to be used.

2. Chemicals and injection of chemicals after initial flushing and re-filling of pipe by Contractor.

3. Personnel to take samples of water during normal working hours. Contractor is responsible for taking sample every 4-6 hours outside of normal working hours. Sampling bottles are to be provided by Owner (Austin Energy Lab Services).

4. Tests of the water in sample bottles shall be performed at least twice a day. These field test results shall be sent to the Owner's designated

representative.

5. Once the iron levels have stabilized, the water sample shall be sent to an approved testing laboratory. The laboratory shall provide water testing reports.

6. A recommendation to Austin Energy as to when water used in the flushing operation is safe to discharge to the sanitary sewer.

7. Addition of post-cleaning and final operational chemicals.

8. Written documentation of all cleaning and flushing procedures and results.

9. Do they also have the permit for discharge?

3.4 SERVICES PERFORMED BY CONTRACTOR

A. Contractor will provide the following:

1. Coordination with Chemical Treatment Vendor.

2. Install piping and valves per contract drawings and specifications in such a manner as to facilitate installation of chemicals by the Chemical Treatment Vendor. Install, delay installation of, or temporarily remove, flanges, valves, fittings, etc. as required to facilitate cleaning and flushing connections and activities.

3. Deployment of equipment or material as needed to contain spills or releases of any kind.

4. A piped source of city water, at local city water pressure, with shutoff valve, meter, and certified backflow preventer in location to allow filling of piping system by contractor.

5. Filling of piping system with water. Circulation of water through pipe for 2-4 hours or longer as needed until water flows clear to remove dirt, sand, silt, gravel, welding slag, construction debris, etc. Flow rate shall be sufficient to suspend any settled debris to discharge.

6. Discharge of initial circulation water directly to the sanitary sewer at a rate not to exceed that specified by the Owner. No testing is required for discharging of water used in the initial flushing of the facilities.

7. Re-fill pipe with water and coordinate with Chemical Treatment Vendor for injection of initial cleaning chemicals.

8. Circulate water for a minimum of 48-hours. Following the 48-hour circulation period and confirmation from Chemical Treatment Vendor that water is safe to discharge, discharge water to sanitary sewer at a rate not to exceed that specified by the Owner.

9. Before discharge of water to sanitary sewer, Owner shall determine if submitted disposal plan is sufficient for current conditions. If current conditions require an alternative disposal plan, Owner shall determine best method for disposal and Contractor shall implement Owner's altered disposal plan.

10. Immediately following discharge of cleaning water, fill pipe with water and circulate water for 1-hour. Following 1-hour of circulation, discharge the water to the sanitary sewer. Flow rate shall be sufficient to suspend any settled debris to discharge.

11. Re-fill system with water and circulate for an additional 1-hour. Following 1-hour of circulation, discharge water to the sanitary sewer.

12. Re-fill system with water and coordinate with Chemical Treatment Vendor for injection of final operational chemicals.

13. No pumps or hoses shall be removed without the consent of Owner's preferred Chemical Treatment Vendor or Owner's designated representative.

14. Re-install flanges, valves, piping, etc. that were removed for flushing operation to the final condition as specified in the drawings and specifications.

3.5 PARAMETERS OF DISCHARGED WATER

A. Discharge of flushing water to the City's sanitary system is subject to the prohibitions described in Chapter 15-10 of the Austin City Code.

B. Owner's preferred treatment vendor shall be required to acquire an Austin Water Utility (AWU) permit and shall provide the Owner with a valid permit number to Owner's designated representative.

C. Discharges must be approved by the Special Services Division prior to any and all discharges related to the flushing operation. The following parameters are required to be analyzed on all samples collected from the activities described herein:

PARAMETER	LIMIT
pH	6.0 – 11.5 std. units
Copper	1.1 mg/L
Lead	0.4 mg/L
Manganese	6.1 mg/L
Zinc	2.3 mg/L

3.6 PAYMENT

A. Chilled water chemical treatment

1. Pay Item Nos. SS232500-RCHEMa, SS232500-RCHEMb, and SS232500-RCHEMc: Services included herein will be paid for at the unit bid price for each cleaning, flushing and chemical treatment dependent on the volume of water being treated. Payment shall include compensation for design, installation, maintenance, and operation of the circulation system, as well as all materials, equipment, labor, power, fuel, supervision, maintenance, and coordination with Owner's preferred Chemical Treatment Vendor, etc., for a full and working final installation as per the intent of the drawings and specifications.

2. Pay Item No. SS232500-RCHEM1: Services for continuous monitoring and inspection of pumps used when contractor is **not** performing cleaning and flushing per pay items in 3.6 A. 1.

3. Pay Item Nos. SS232500-RCHEM2 and SS232500-RCHEM2: Services for chemical treatment vendor in 3.3 A. used when contractor is **not** performing cleaning and flushing per pay items in 3.6 A.1.

B. Payment, when included as a Contract pay item, will be under the following:

ROW

Pay Item No. SS232500-RCHEMa:	Cleaning and Flushing for 12" Pipe and lower	**Per 100 Gallons**
Pay Item No. SS232500-RCHEMb:	Cleaning and Flushing for 14" to 20" pipe	**Per 100 Gallons**
Pay Item No. SS232500-RCHEMc:	Cleaning and Flushing for 22" Pipe and up	**Per 100 Gallons**
Pay Item No. SS232500-RCHEM1:	Pump Watch	**Per Hour**
Pay Item No. SS232500-RCHEM2:	Chemistry from 0 to 5,000 gallons of treated water	**Per 1 Gallon**
Pay Item No. SS232500-RCHEM3:	Chemistry from 5,001 to 80,000 gallons of treated water	**Per 1 Gallon**

End

PART 1 - GENERAL

1.1 RELATED DOCUMENTS

A. Drawings and general provisions of the Contract, including General and Supplementary Conditions and Division 1 Specification Sections, apply to this Section.

1.2 DEFINITIONS

A. RNC: Rigid nonmetallic conduit.

1.3 SUBMITTALS

A. Product Data: For raceways and fittings.

1.4 QUALITY ASSURANCE

A. Listing and Labeling: Provide raceways and boxes specified in this Section that are listed and labeled.

1. The Terms "Listed" and "Labeled": As defined in NFPA 70, Article 100.

B. Comply with NECA's "Standard of Installation."

C. Comply with NFPA 70.

1.5 COORDINATION

A. Coordinate layout and installation of raceways and boxes with other construction elements to ensure adequate headroom, working clearance, and access.

PART 2 - PRODUCTS

2.1 NONMETALLIC CONDUIT

A. Available Manufacturers: Subject to compliance with requirements, manufacturers offering products that may be incorporated into the Work include, but are not limited to, the following:

1. AFC Cable Systems, Inc.
2. Anamet Electrical, Inc.; Anaconda Metal Hose.
3. Arnco Corporation.
4. CANTEX Inc.

5. CertainTeed Corp.; Pipe & Plastics Group.
6. Condux International, Inc.
7. ElecSYS, Inc.
8. Electri-Flex Co.
9. Lamson & Sessions; Carlon Electrical Products.
10. Manhattan/CDT/Cole-Flex.
11. RACO; a Hubbell Company.
12. Thomas & Betts Corporation.

B. RNC: NEMA TC 2, Type EPC-40-PVC, 4.5" outside diameter, unless otherwise indicated.

C. Fittings for RNC: NEMA TC 3; match to conduit or tubing type and material.

2.2 OPTICAL FIBER/COMMUNICATIONS CABLE RACEWAY AND FITTINGS

A. Single Raceway Fiber Optic Inner Duct

1. Manufacturers: Subject to compliance with requirements, available manufacturers offering products that may be incorporated into the Work include, but are not limited to, the following:

   a. Petroflex North America, Ltd.
   b. Lamson & Sessions; Carlon Electrical Products.
   c. Endot Industries Inc.
   d. IPEX Inc.
   e. Arnco Corporation.

2. Description:

   a. Flexible type, approved for general-use installation.
   b. HDPE, 1" Single Wall Outside Plant Corrugated, 1.00" I.D. min, 1.35" O.D., Fiber Innerduct with pre-installed, color-coded, minimum 900 lb rated pull tape.
   c. Conduits indelibly labeled.
   d. Comply with UL 2024 and ASTM D-4216
   e. Meets material and dimensional requirements of ASTM D3035.
   f. Material Properties in accordance with ASTM D 4216.
   g. Tensile Modulus: > 377,000 psi re ASTM D638.
   h. Tensile strength: > 6500 psi re ASTM D638.
   i. ASTM D2737-Standard for Polyethylene (PE) Plastic Tubing.
   j. Duct plugs:

      1) Expandable Plug.
      2) High-impact plastic components, combined with durable elastic gaskets.
      3) Corrosion proof and effective as long-term or temporary seals.
      4) Water-tight and gas-tight.
      5) Equipped with a rope tie device to allow the securing of pull rope to the plug's back compression plate.
      6) Removable and reusable.

PART 3 - EXECUTION

3.1 EXAMINATION

A. Examine surfaces to receive raceways for compliance with installation tolerances and other conditions affecting performance of raceway installation. Do not proceed with installation until unsatisfactory conditions have been corrected.

3.2 WIRING METHODS

A. Communications Raceways:
   1. RNC, minimum 4-inch trade size, with three 1" single raceway fiber optic inner duct.

B. Raceway Fittings: Compatible with raceways and suitable for use and location.

3.3 INSTALLATION

A. General

1. Install in strict accordance with manufacturer's recommendations.
2. Arrange stub-ups so curved portions of bends are not visible. Install no more than the equivalent of three 90-degree bends in any conduit run except for communications conduits, for which fewer bends are allowed.
3. Keep raceways at least 6 inches (150 mm) away from parallel runs of flues and steam or hot-water pipes. Install horizontal raceway runs above water and steam piping.
4. Install pull wires or pull tapes in all empty innerduct raceways, including multi-duct systems. Leave at least 12 inches of slack at each end of pull wire.
5. Install raceway sealing fittings at suitable, approved, and accessible locations and fill them with listed sealing compound. For concealed raceways, install each fitting in a flush steel box with a blank cover plate having a finish similar to that of adjacent plates or surfaces.

B. Raceways for Optical Fiber and Communications Cable:

1. General

a. Do not install elbows with turning radius less than 60 inches.
b. Gasketed fittings are required each time the pipe is terminated seals the system by preventing any foreign material from entering the space between the inner walls of the outer duct and the outer walls of the inner ducts.
c. Install using manufacturer's recommended practices, using cable pulling lubricants recommended by the innerduct manufacturer and pull ropes
d. Install in continuous runs between communication pull boxes and splice vaults without splices or joints.
e. Ends must be smooth to prevent scraping of cables.
f. Dynamometers must be used to record installation tensions and tension limiting devices must be used to prevent exceeding maximum pulling tensions during installation.
g. Breakaway devices must be used to limit pulling tensions. One device must be placed in series with every element rated for less than maximum pulling tensions of that element.
h. Innerducts must not be stressed beyond the minimum-bending radius allowed by the innerduct or fiber optic cable manufacturer.
i. Tension must be set to the manufacturer's maximum limit. Maximum pulling tension must be recorded for each innerduct run.
j. Immediately prior to installing cables, innerducts must be blown out with compressed air until foreign material is removed.
k. Provide Stamped Stainless Steel Tags on fiber cables leaving/entering all innerduct, in each manhole and pull box, and at all termination

points. Identify on tag the origin and destination of cable with text on 2" square stainless steel tag. Securely fasten to each cable.

2. RNC:

   a. Minimum 4" size.
   b. Where PVC raceway will be embedded within grout or other material where heat of hydration may impact integrity of raceway, circulate cool water through raceway until heat of hydration process is nearly complete and surrounding material has cooled well below the temperature at which damage to raceway may occur.

3. Single Raceway Fiber Optic Inner Duct:

   a. Owner included payment options for both Owner-supplied and Contractor-supplied innerduct.
   b. Install duct plugs at all duct ends.
   c. Install three single innerducts per 4" raceway.

3.4 CLEANING

A. On completion of installation, including outlet fittings and devices, inspect exposed finish. Remove burrs, dirt, and construction debris and repair damaged finish, including chips, scratches, and abrasions.

3.5 PAYMENT

A. Conduit: Payment for conduit, whether in tunnel, open trench, or jack & boring casement, will be included in under specifications section SP 510 “PIPE”, or section SP 501S “JACKING OR BORING PIPE”.

B. Inner ducts:

1. **Pay Item No. SS 260533-Innerduct-a:** Inner duct <u>installation</u> of **three** single raceway inner ducts **SUPPLIED BY OWNER** within conduit with pull string for installation of fiber optic cable (cable priced separately) will be paid for at the unit bid price per linear foot. The 4" conduit into which inner duct is installed is to be assumed existing (priced and included under specifications section SP 501S JACKING OR BORING PIPE or SP 510 PIPE).

   .

2. **Pay Item No. SS 260533-Innerduct-b:** Inner duct <u>installation</u> of **three** single raceway inner ducts SUPPLIED BY CONTRACTOR within conduit with pull string for installation of fiber optic cable (cable priced separately) will be paid for at the unit bid price per linear foot. The 4" conduit into which inner duct is installed is to be assumed existing (priced and included under specifications section SP 501S JACKING OR BORING PIPE or SP 510 PIPE).

3.

C. Payment, when included as a Contract pay item, will be made under one of the following:

Pay Item No. SS 260533-Innerduct -a:	Installation of 3 single raceway Owner-provided inner ducts within 4" non-metallic conduit.	Per Lineal Foot.
Pay Item No. SS 260533-Innerduct -b:	Installation of 3 single raceway Contractor-provided inner ducts within 4" non-metallic conduit.	Per Lineal Foot.

END OF SECTION SS 260533

PART 1 - GENERAL

1.1 RELATED DOCUMENTS

A. Drawings and general provisions of the Contract, including General and Supplementary Conditions and Division 01 Specification Sections, apply to this Section.

1.2 SUMMARY

A. Section Includes:

1. OM1 62.5/125 µm (micron) multimode, optical fiber cabling.

1.3 DEFINITIONS

A. BICSI: Building Industry Consulting Service International.

B. Cross-Connect: A facility enabling the termination of cable elements and their interconnection or cross-connection.

C. IDC: Insulation displacement connector.

D. LAN: Local area network.

E. RCDD: Registered Communications Distribution Designer.

1.4 BACKBONE CABLING DESCRIPTION

A. Backbone cabling system shall provide interconnections between communications equipment rooms, main terminal space, and entrance facilities in the telecommunications cabling system structure. Cabling system consists of backbone cables, intermediate and main cross-connects, mechanical terminations, and patch cords or jumpers used for backbone-to-backbone cross-connection.

B. Backbone cabling cross-connects may be located in communications equipment rooms or at entrance facilities. Bridged taps and splitters shall not be used as part of backbone cabling.

1.5 PERFORMANCE REQUIREMENTS

A. General Performance: Backbone cabling system shall comply with transmission standards in TIA/EIA-568, when tested according to test procedures of this standard.

1.6 SUBMITTALS

A. Product Data: For each type of product indicated.

B. Shop Drawings:

1. System Labeling Schedules: Electronic copy of labeling schedules, in software and format selected by Owner.
2. Cabling administration drawings and printouts.

C. Qualification Data: For installer, qualified layout technician, installation supervisor, and field inspector.

D. Source quality-control reports.

E. Maintenance Data: For splices and connectors to include in maintenance manuals.

1.7 QUALITY ASSURANCE

A. Installer Qualifications: Cabling Installer must have personnel certified by BICSI on staff.

B. Surface-Burning Characteristics: As determined by testing identical products according to ASTM E 84 by a qualified testing agency. Identify products with appropriate markings of applicable testing agency.

1. Flame-Spread Index: 25 or less.
2. Smoke-Developed Index: 50 or less.

C. Electrical Components, Devices, and Accessories: Listed and labeled as defined in NFPA 70, by a qualified testing agency, and marked for intended location and application.

D. Telecommunications Pathways and Spaces: Comply with TIA/EIA-569-A.

1.8 DELIVERY, STORAGE, AND HANDLING

A. Test cables upon receipt at Project site.

1. Test optical fiber cable while on reels. Use an optical time domain reflectometer to verify cable length, dB loss/kM, and locate cable defects, including the loss value of each. Retain test data and include the record in maintenance data.

1.9 PROJECT CONDITIONS

A. Environmental Limitations: Do not deliver or install cables and connecting materials until wet work in spaces is complete and dry, and temporary HVAC

system is operating and maintaining ambient temperature and humidity conditions at occupancy levels during the remainder of the construction period.

1.10 COORDINATION

A. Coordinate layout and installation of telecommunications pathways and cabling with Owner's telecommunications and LAN equipment and service suppliers.

PART 2 - PRODUCTS

2.1 PATHWAYS

A. General Requirements: Comply with TIA/EIA-569-C.

B. Cable Support: NRTL labeled for support of Category 6 cabling, designed to prevent degradation of cable performance and pinch points that could damage cable.

1. Support brackets with cable tie slots for fastening cable ties to brackets.
2. Lacing bars, spools, J-hooks, and D-rings.
3. Straps and other devices.

C. Conduit and Boxes: Comply with requirements in Division 26 Section "Raceway and Boxes for Electrical Systems." Flexible metal conduit shall not be used.

2.2 OPTICAL FIBER CABLE (Owner to furnish)

A. Manufacturers: Subject to compliance with requirements, provide products by one of the following:

1. Berk-Tek; a Nexans company.
2. Corning Cable Systems.
3. Draka Communications

B. Description: Multimode, 12 pair (24 fiber), all-dielectric, loose tube, outside plant optical fiber cable.

1. Comply with ICEA S-87-640 for mechanical properties.
2. Comply with TIA/EIA-568 for performance specifications.
3. Comply with TIA/EIA-492AAAA-B for detailed specifications.
4. Gel-free cable, fully water-blocked using water-swellable materials.
5. Color coded buffer tubes and fibers conforming to TIA/EIA-598-C.
6. Twelve fibers/buffer tube, 62.5um/125um fibers with a 250um fiber coating.
7. Maximum Attenuation: 3.40 dB/km at 850 nm; 1.0 dB/km at 1300 nm.
8. Minimum Modal Bandwidth: 220 MHz-km at 850 nm.

C. Jacket:

1. Outside plant cable rated jacket.
2. Cable cordage jacket.
3. Imprinted with fiber count, fiber type, and aggregate length at regular intervals not to exceed 4 feet.

PART 3 - EXECUTION

3.1 INSTALLATION OF PATHWAYS

A. Comply with TIA/EIA-569-C for pull-box sizing and length of conduit and number of bends between pull points.

B. Comply with requirements in Division 26 Section "Raceway and Boxes for Electrical Systems" for installation of conduits and wireways.

C. Install manufactured conduit sweeps of no less than 60 inch radius elbows.

3.2 INSTALLATION OF CABLES

A. Install cables within innerduct in raceways (Owner to furnish cable).

B. Plug all unused innerduct and unused conduit.

C. Cable within Manholes: Provide 20 feet slack length of cable in each manhole. Provide cable hook on side of manhole. Loop slack cable within manhole and hang on hook.

D. Comply with NECA 1.

E. General Requirements for Cabling:

1. Comply with TIA/EIA-568-C.1.
2. Comply with BICSI ITSIM, Ch. 6, "Cable Termination Practices."
3. Install 110-style IDC termination hardware unless otherwise indicated.
4. Terminate all conductors; no cable shall contain unterminated elements. Make terminations only at indicated outlets, terminals, cross-connects, and patch panels.
5. Cables may not be spliced. Secure and support cables at intervals not exceeding 30 inches (760 mm) and not more than 6 inches (150 mm) from cabinets, boxes, fittings, outlets, racks, frames, and terminals.
6. Install lacing bars to restrain cables, to prevent straining connections, and to prevent bending cables to smaller radii than minimums recommended by manufacturer.
7. Bundle, lace, and train conductors to terminal points without exceeding manufacturer's limitations on bending radii, but not less than radii specified in

BICSI ITSIM, "Cabling Termination Practices" Chapter. Use lacing bars and distribution spools.

8. Do not install bruised, kinked, scored, deformed, or abraded cable. Do not splice cable between termination, tap, or junction points. Remove and discard cable if damaged during installation and replace it with new cable.
9. Cold-Weather Installation: Bring cable to room temperature before de-reeling. Heat lamps shall not be used for heating.
10. **In communications equipment rooms, install a 50-foot long service loop on each end of cable.**
11. Pulling Cable: Comply with BICSI ITSIM, Ch. 4, "Pulling Cable." Monitor cable pull tensions.

F. Optical Fiber Cable Installation:

1. Comply with TIA/EIA-568-C.3.
2. Cable may be terminated on connecting hardware that is rack, wall, or cabinet mounted.
3. Do not pull cable at lengths longer than 500 feet without an intermediate pull assist.

3.3 IDENTIFICATION

A. Identify system components, wiring, and cabling complying with TIA/EIA-606-A. Comply with requirements for identification specified in Division 26 Section "Identification for Electrical Systems."

B. Cable Identification:

1. Tag all fiberoptic cables at all points of free access, including but not limited to, end terminations, entering and exiting manholes.

   a. In manholes: 2" square, 304 Stainless Steel tag with 3/16" top hole, 4.5" long No. 6 stainless steel beaded chain fastener, and 1/4" high stamped letters. By Seton or approved equal.

3.4 FIELD QUALITY CONTROL

A. Tests and Inspections:

1. Visually inspect optical fiber jacket materials for NRTL certification markings. Inspect cabling terminations in communications equipment rooms for compliance with color-coding for pin assignments, and inspect cabling connections for compliance with TIA/EIA-568-C.1.
2. Visually inspect cable placement, cable termination, grounding and bonding, equipment and patch cords, and labeling of all components.

3. Optical Fiber Cable Tests:

   a. Test instruments shall meet or exceed applicable requirements in TIA/EIA-568-C.1. Use only test cords and adapters that are qualified by test equipment manufacturer for channel or link test configuration.
   b. Link End-to-End Attenuation Tests:

      1) Horizontal and multimode backbone link measurements: Test at 850 or 1300 nm in 1 direction according to TIA/EIA-526-14-B, Method B, One Reference Jumper.
      2) Attenuation test results shall be less than that calculated according to equation in TIA/EIA-568-C.1.

B. Data for each measurement shall be documented. Test data should include at a minimum, OTDR traces and Optical Loss Test Set (OLTS) data for each fiber. Test data shall include date and time test were performed, event table and fiber length (for OTDR traces) and port-to-port loss data (OLTS) at 850nm and 1300nmData for submittals shall be printed in a summary report that is formatted similar to Table 10.1 in BICSI TDMM, or transferred from the instrument to the computer, saved as text or .pdf files, and printed and submitted.

C. Remove and replace cabling where test results indicate that they do not comply with specified requirements.

D. End-to-end cabling will be considered defective if it does not pass tests and inspections.

E. Prepare test and inspection reports.

3.5 PAYMENT

A. Optical Fiber Cable Installation:

   1. Optical Fiber Cable Installation will be paid for at the unit bid price per linear foot. Price shall include installation of fiberoptic cable within innerduct (inner duct pricing addressed separately) and manholes, testing of and reporting on cable quality, identification tagging of cable. Making final terminations of cable at control panels is not included in unit price.

      a. OWNER WILL FURNISH FIBEROPTIC CABLE. CONTRACTOR WILL INSTALL.

B. Payment, when included as a Contract pay item, will be made under one of the following:

Pay Item No. SS 271300-Fiberoptic:	Fiber Optic Cable installed within innerduct and manholes	Per Lineal Foot

END OF SECTION SS 271300

MISCELLANEOUS REPAIRS AROUND UTILITY CASTINGS (UCM SECTION 5.8.3)

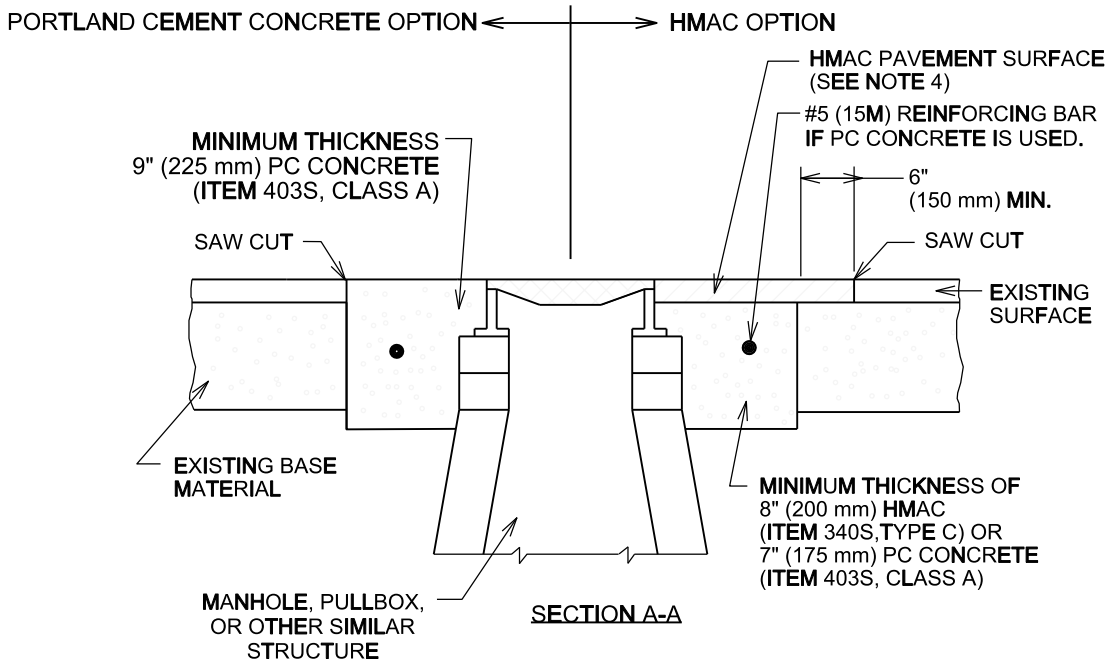

SECTION A-A

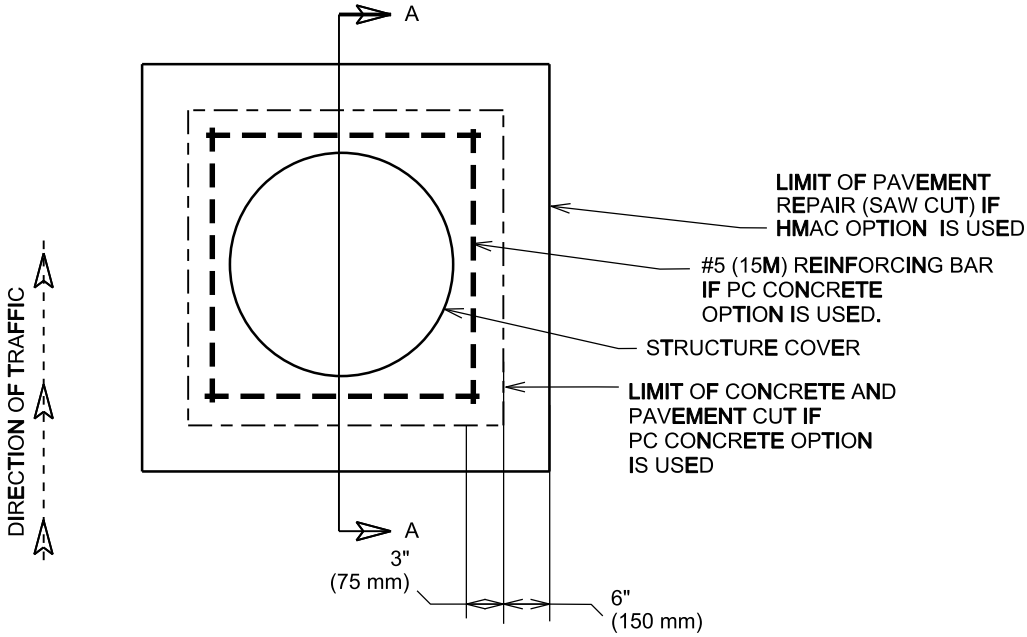

PLAN OF STRUCTURE IN ROADWAY

NOTES:

1. IF PC CONCRETE IS USED AROUND THE MANHOLE, THE CONCRETE SHALL BE REINFORCED WITH #5 (15M) BARS AS SHOWN. THE CONCRETE SHALL EXTEND TO EDGE OF SAW CUT PAVEMENT EDGE.
2. REQUIREMENTS FOR NEW MANHOLE CONSTRUCTION AND MINOR MANHOLE ADJUSTMENTS IN NEW, RECONSTRUCTION AND REPAVING PROJECTS ARE INCLUDED IN STANDARD NO. 506S-4 AND 506S-4A.
3. REQUIREMENTS FOR WATER VALVE ADJUSTMENTS ARE INCLUDED IN STANDARD DETAILS 511S-13A AND 511S-13B.
4. REPLACEMENT HMAC SURFACE LAYER SHALL BE OF THE TYPE AND THICKNESS BASED ON FUNCTIONAL CLASSIFICATION.
   a) MIN. 2" (50 mm) HMAC TYPE "D" FOR TRENCH REPAIR IN LOCAL/RESIDENTIAL STREETS.
   b) MIN. 3" (75 mm) HMAC TYPE "C" FOR TRENCH REPAIR IN COLLECTOR/ARTERIAL STREETS. SEE ITEM 340S, SECTION 340S.4.
5. REFER TO UCM SECTION 5.8.3 FOR ADDITIONAL BACKFILL REQUIREMENTS.

CITY OF AUSTIN DEPARTMENT OF PUBLIC WORKS		CASTING ADJUSTMENT	
RECORD COPY SIGNED BY SAM ANGOORI	*01/04/10* ADOPTED	THE ARCHITECT/ENGINEER ASSUMES RESPONSIBILITY FOR APPROPRIATE USE OF THIS STANDARD.	STANDARD NO. 1100S-1

TRENCH REPAIR IN ASPHALTIC SURFACE OVER FLEXIBLE BASE
(UCM SECTION 5.8.0)

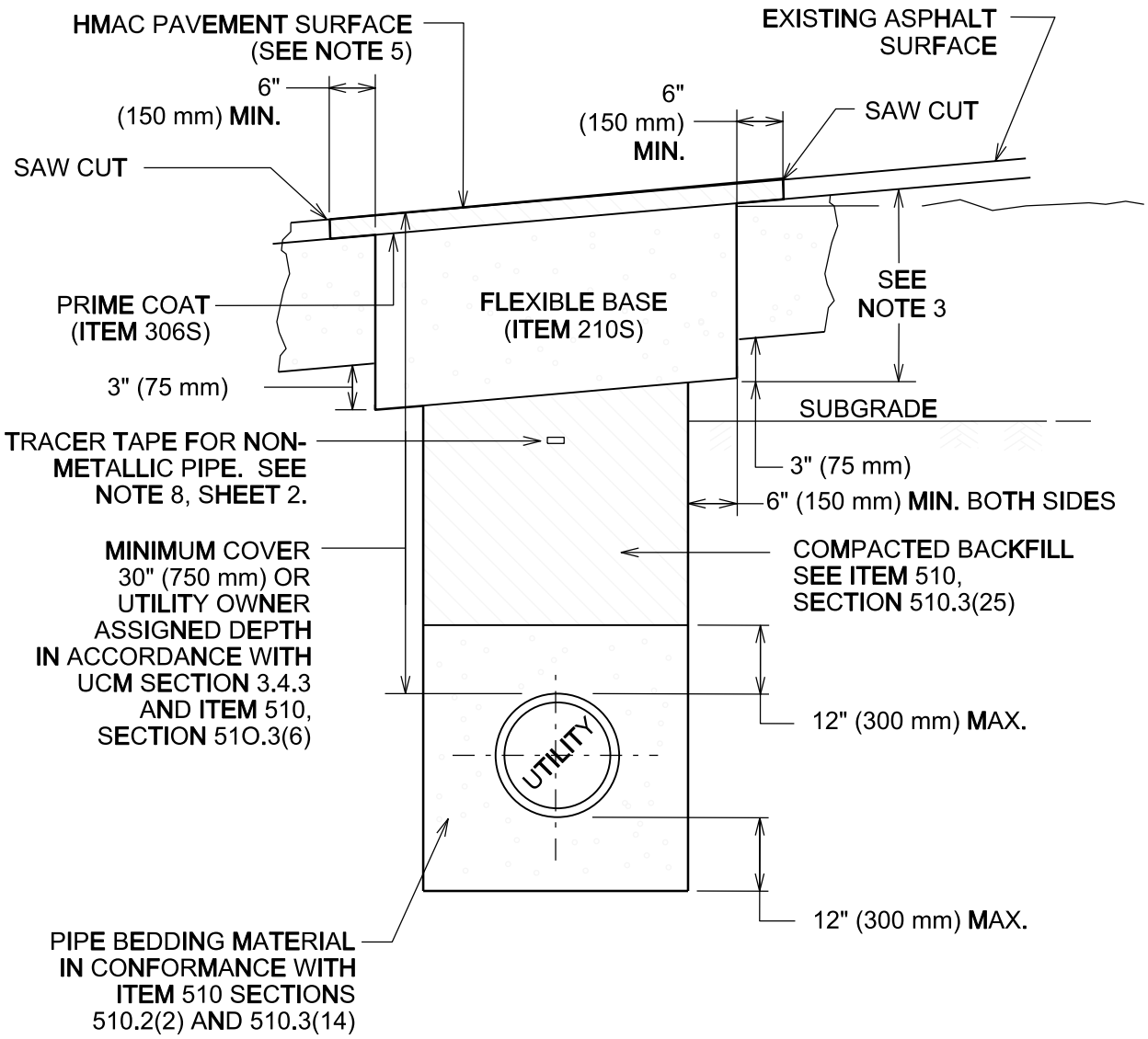

CITY OF AUSTIN DEPARTMENT OF PUBLIC WORKS		FLEXIBLE BASE WITH ASPHALT SURFACE TRENCH REPAIR-EXISTING PAVEMENT	
RECORD COPY SIGNED BY KERI JUAREZ	01/04/11 ADOPTED	THE ARCHITECT/ENGINEER ASSUMES RESPONSIBILITY FOR APPROPRIATE USE OF THIS STANDARD.	STANDARD NO. 1100S-2 1 OF 2

NOTES:

1. THE EXISTING PAVING SURFACE SHALL BE SAW CUT IN A STRAIGHT LINE, A MINIMUM OF 12" (300 mm) WIDER THAN UNDISTURBED SIDES OF THE TRENCH AND SYMMETRICAL ABOUT THE CENTER LINE OF THE EXCAVATION.

2. IF EXCAVATION AREA IS OPEN FOR TEMPORARY PUBLIC USE, THE SURFACE SHALL BE MAINTAINED LEVEL WITH ADJACENT RIDING SURFACE WITH COLD MIX AC OR TEMPORARY HMAC. TEMPORARY MIX SHALL BE PLACED OVER FLEXIBLE BASE.

3. ROAD BASE SHALL BE REPLACED IN KIND WITH BASE THICKNESS EQUAL TO EXISTING BASE THICKNESS PLUS 3" (75 mm), BUT IN NO CASE LESS THAN 12" (300 mm).

4. DAMAGED PAVEMENT OUTSIDE THE TRENCH CUT SHALL BE REMOVED AND REPLACED WITH A BASE THICKNESS OF 10" (250 mm) OR A THICKNESS MATCHING EXISTING, WHICHEVER IS GREATER.

5. REPLACEMENT AC SURFACE LAYER SHALL BE OF THE TYPE AND THICKNESS BASED ON FUNCTIONAL CLASSIFICATION.
   a) MIN. 2" (50 mm) HMAC TYPE "D" FOR TRENCH REPAIR IN LOCAL/RESIDENTIAL STREETS.
   b) MIN. 3" (75 mm) HMAC TYPE "C" FOR TRENCH REPAIR IN COLLECTOR/ARTERIAL STREETS.

   SEE ITEM 340S, SECTION 340S.4.

6. CLASS "J" PC CONCRETE (ITEM 403S) OR CONTROLLED LOW STRENGTH MATERIAL (CLSM) MAY BE SUBSTITUTED IN THESE REPAIRS FOR THE FLEXIBLE BASE AND COMPACTED BACKFILL. PC CONCRETE GREATER THAN A 2 SACK MIX WILL NOT BE ALLOWED.

7. TACK COAT ALL EXPOSED EDGES AND SURFACES (SPEC ITEM 307S).

8. AS PER CITY OF AUSTIN STANDARD SPECIFICATION 510, SECTION 510.2(8)(K)5, FOR ALL NON-METALLIC PIPE, DIRECTLY ABOVE THE CENTERLINE OF THE PIPE AND A MINIMUM OF 12" (300 mm) BELOW THE SUBGRADE, OR A MINIMUM OF 18" (450 mm) BELOW FINISHED GRADE ON AREAS OUTSIDE THE LIMITS OF PAVEMENT, SHALL BE PLACED INDUCTIVE TRACER TAPE IN ACCORDANCE WITH THE MANUFACTURER'S REQUIREMENTS. THE TAPE SHALL BE ENCASED IN A PROTECTIVE, INERT, PLASTIC JACKET AND COLOR CODED IN ACCORDANCE WITH APWA UNIFORM COLOR CODE.

CITY OF AUSTIN DEPARTMENT OF PUBLIC WORKS		FLEXIBLE BASE WITH ASPHALT SURFACE TRENCH REPAIR-EXISTING PAVEMENT	
RECORD COPY SIGNED BY KERI JUAREZ	01/04/11 ADOPTED	THE ARCHITECT/ENGINEER ASSUMES RESPONSIBILITY FOR APPROPRIATE USE OF THIS STANDARD.	STANDARD NO. 1100S-2 2 OF 2

TRENCH REPAIR IN EXISTING PAVEMENTS
(UCM SECTION 5.5.10, 5.5.11, & 5.5.12)

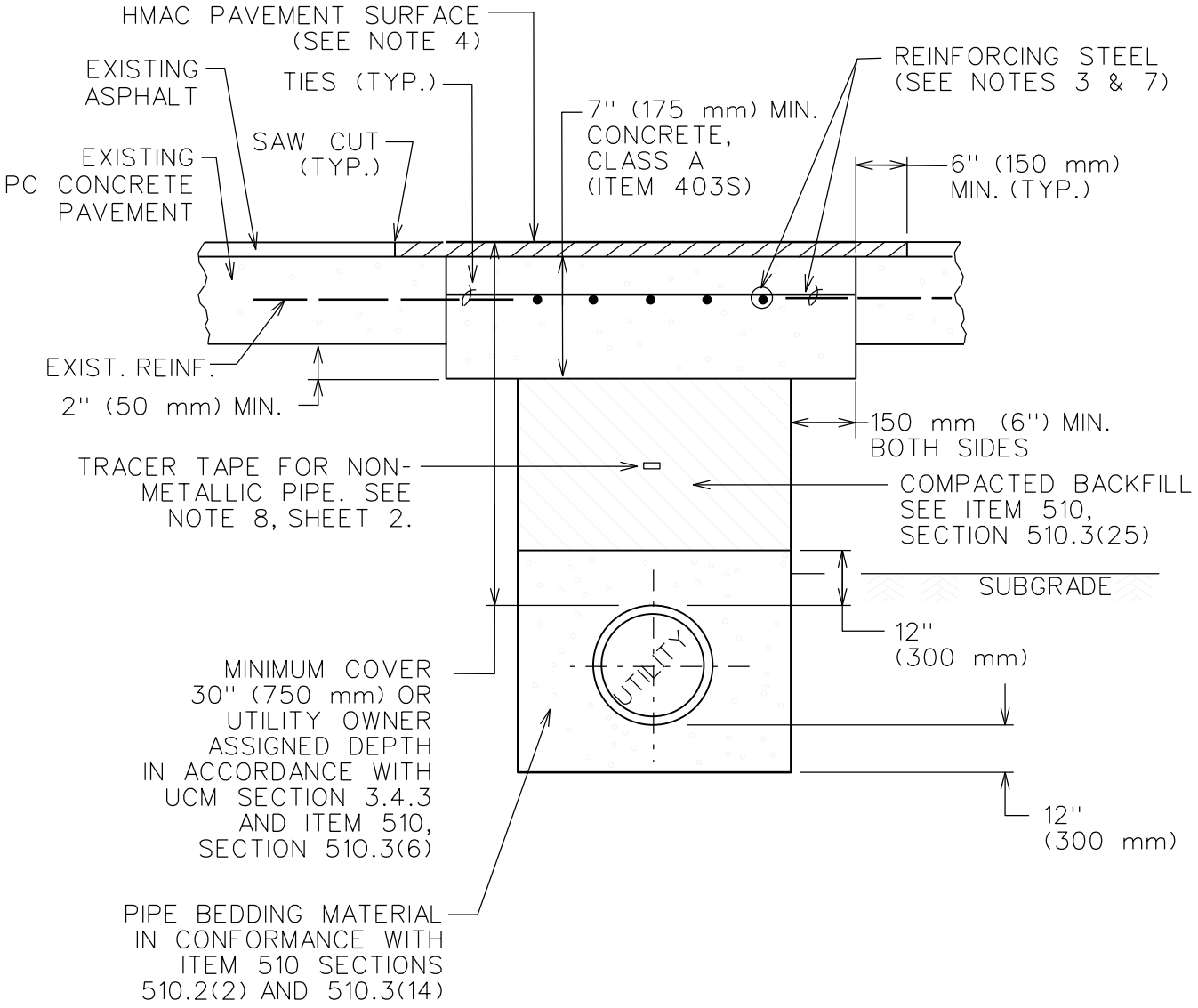

CITY OF AUSTIN DEPARTMENT OF PUBLIC WORKS		ASPHALT OVERLAY OF REINFORCED AND NON-REINFORCED PC PVT.-TRENCH REPAIR	
RECORD COPY SIGNED BY BILL GARDNER	*9/14/05* ADOPTED	THE ARCHITECT/ENGINEER ASSUMES RESPONSIBILITY FOR APPROPRIATE USE OF THIS STANDARD.	STANDARD NO. 1100S-3 1 OF 2

NOTES:

1. EXISTING REINFORCED CONCRETE SHALL BE SAW CUT TO A MINIMUM DEPTH OF 1½" (40 mm) AT A MINIMUM DISTANCE OF 6" (150 mm) BACK OF THE VERTICAL WALL OF THE UTILITY TRENCH.
2. REPLACEMENT REINFORCED CONCRETE SHALL BE CLASS A AND SHALL MATCH EXISTING FINISH AND THICKNESS, BUT THE THICKNESS SHALL NOT BE LESS THAN 7" (175 mm).
3. REINFORCING STEEL IN THE REPLACEMENT SLAB SHALL BE AT LEAST #5 (15M) BARS. REINFORCING STEEL SHALL BE LAP SPLICED ACCORDING TO ITEM NO. 406S. IF LENGTH OF LAP CAN NOT BE ACHIEVED, BARS SHALL BE OVERLAPPED AND WELDED A MINIMUM LENGTH OF 6" (150 mm).
4. IF EXISTING PAVEMENT SECTION HAS AN ASPHALT SURFACE THE FOLLOWING APPLIES: REPLACEMENT AC SURFACE LAYER SHALL BE OF THE TYPE AND THICKNESS BASED ON FUNCTIONAL CLASSIFICATION.
   a) MIN. 2" (50 mm) HMAC TYPE "D" FOR TRENCH REPAIR IN LOCAL/RESIDENTIAL STREETS.
   b) MIN. 3" (75 mm) HMAC TYPE "C" FOR TRENCH REPAIR IN COLLECTOR/ARTERIAL STREETS.

   SEE ITEM 340S, SECTION 340S.4.
5. CLASS "J" PC CONCRETE (ITEM 403S) OR CONTROLLED LOW STRENGTH MATERIAL (CLSM) MAY BE SUBSTITUTED IN THESE REPAIRS FOR THE FLEXIBLE BASE AND COMPACTED BACKFILL. PC CONCRETE GREATER THAN A 2 SACK MIX WILL NOT BE ALLOWED.
6. TACK COAT (ITEM 307S) ALL EXPOSED EDGES AND SURFACES.
7. ON EXISTING PC CONCRETE PAVEMENT WITHOUT REINFORCING STEEL, USE 4" TO 6" (100 mm TO 150 mm), #5 (15M) DOWELS AT 12" (300 mm) ON CENTER FOR PAVEMENT THICKNESS 6" (150 mm) OR GREATER.
8. AS PER CITY OF AUSTIN STANDARD SPECIFICATION 510, SECTION 510.2(8)(K)5, FOR ALL NON-METALLIC PIPE, DIRECTLY ABOVE THE CENTERLINE OF THE PIPE AND A MINIMUM OF 12" (300 mm) BELOW THE SUBGRADE, OR A MINIMUM OF 18" (450 mm) BELOW FINISHED GRADE ON AREAS OUTSIDE THE LIMITS OF PAVEMENT, SHALL BE PLACED INDUCTIVE TRACER TAPE IN ACCORDANCE WITH THE MANUFACTURER'S REQUIREMENTS. THE TAPE SHALL BE ENCASED IN A PROTECTIVE, INERT, PLASTIC JACKET AND COLOR CODED IN ACCORDANCE WITH APWA UNIFORM COLOR CODE.

CITY OF AUSTIN DEPARTMENT OF PUBLIC WORKS		ASPHALT OVERLAY OF REINFORCED AND NON-REINFORCED PC PVT.-TRENCH REPAIR	
RECORD COPY SIGNED BY BILL GARDNER	*9/14/05* ADOPTED	THE ARCHITECT/ENGINEER ASSUMES RESPONSIBILITY FOR APPROPRIATE USE OF THIS STANDARD.	STANDARD NO. 1100S-3 2 OF 2

TEMPORARY TRENCH REPAIR IN ASPHALTIC SURFACE
ITEM 510 SECTION 510.3 (25)(h)

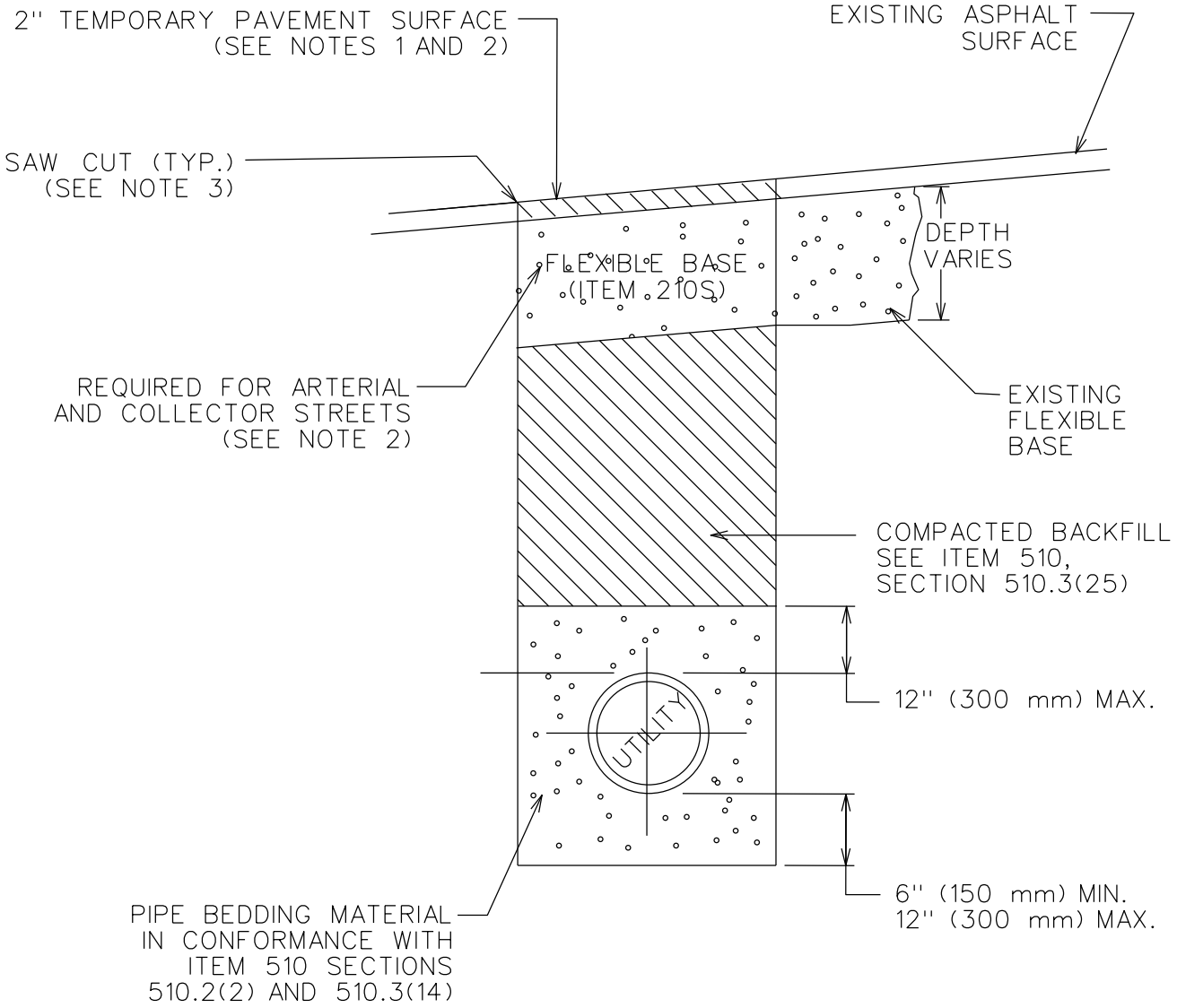

FINISHED SURFACE SHALL PROVIDE A SMOOTH AND SAFE RIDING SURFACE (SEE NOTE 6)

CITY OF AUSTIN DEPARTMENT OF PUBLIC WORKS	TEMPORARY TRENCH REPAIR- ASPHALT SURFACE	
RECORD COPY SIGNED BY BILL GARDNER — *12/09/08* ADOPTED	THE ARCHITECT/ENGINEER ASSUMES RESPONSIBILITY FOR APPROPRIATE USE OF THIS STANDARD.	STANDARD NO. 1100S-4 1 OF 2

1. TEMPORARY PAVEMENT REPAIRS SHALL BE ALLOWED NO LONGER THAN 90 DAYS AFTER PASSING THE WATER PRESSURE AND/OR WASTEWATER MANDREL TESTS. IF TEMPORARY PAVEMENT REPAIRS ARE TO REMAIN IN PLACE FOR A PERIOD EXCEEDING 90 DAYS, ON ANY SINGLE TRENCH LINE OR INDIVIDUAL STREET, SUCH TEMPORARY PAVEMENT SHALL BE HMAC, PLACED AND COMPACTED SUFFICENTLY TO WITHSTAND THE ANTICIPATED TRAFFIC LOADS OVER THE DURATION OF THE TEMPORARY REPAIR.
2. IF EXCAVATION AREA IS OPEN FOR TEMPORARY PUBLIC USE, THE SURFACE SHALL BE MAINTAINED LEVEL WITH ADJACENT RIDING SURFACE USING COLD MIX AC IN ACCORDANCE WITH TxDOT "DMS-9203, RAPID CURING ASPHALT CONCRETE PATCHING MATERIAL" OR TEMPORARY HMAC PER COA ITEM "340S HOT MIX ASPHALTIC CONCRETE PAVEMENT". A MINIMUM OF TWO INCHES (2") OF TEMPORARY COLD MIX OR HMAC SHALL BE PLACED OVER COMPACTED BACKFILL. FLEXIBLE BASE SHALL ALSO BE REQUIRED, FOR ALL COLLECTOR OR ARTERIAL STREETS.
3. THE EXISTING CONCRETE OR ASPHALT PAVING SURFACE SHALL BE SAW CUT. SAW CUTS SHALL BE IN A STRAIGHT LINE, ALONG THE SIDES OF THE TRENCH (OR MANHOLE EXCAVATION) AND SYMMETRICAL ABOUT THE CENTER LINE OF THE EXCAVATION. ANY DAMAGED EDGES SHALL BE RE-SAW CUT IF REQUIRED BY THE OWNER.
4. HMAC OR COLD MIX SHALL BE FREE OF CONTAMINATION, AS DETERMINED BY A VISUAL INSPECTION BY THE OWNER'S REPRESENTATIVE, REFERENCE ITEM 340S SECTION 340S.10 A.
5. TEMPORARY PAVING MATERIAL MUST BE COMPACTED WITH A SMOOTH DRUM VIBRATORY ROLLER.
6. THE FINISHED SURFACE SHALL BE MAINTAINED DUST FREE AND PROVIDE A SMOOTH AND SAFE RIDING SURFACE FOR ALL VEHICLES ALONG THE ROUTE, INCLUDING, BUT NOT LIMITED TO SMALL CARS, MOTORCYCLES, MOPEDS AND BICYCLES. THE TEMPORARY SURFACE SHALL BE MAINTAINED BY THE CONTRACTOR THE ENTIRE TIME THE TEMPORARY SURFACE IS IN PLACE. DAILY MAINTENANCE SHALL BE PERFORMED BASED ON FIELD CONDITIONS AND AT THE DIRECTION OF THE OWNER'S REPRESENTATIVE, UNTIL THE FINAL PAVEMENT SURFACE IS PLACED.
7. THE TEMPORARY PAVEMENT SURFACE SHALL HAVE A MAXIMUM ALLOWABLE DEVIATION OF $\frac{1}{4}$" ABOVE OR BELOW THE EXISTING PAVEMENT SURFACE DIRECTLY ADJACENT TO THE PATCH.
8. ANY PORTIONS OF THE TEMPORARY PAVEMENT SURFACE THAT HAVE SETTLED, BECOME DAMAGED, OR DETERIORATED MUST BE REPAIRED BY REMOVING THE EXISTING TEMPORARY SURFACE MATERIAL TO A MINIMUM DEPTH OF 2" BELOW THE SURFACE ELEVATION PRIOR TO REPLACING AND RECOMPACTING NEW COLD MIX/HOT MIX IN THE EXCAVATION AREA.
9. IF IT IS DETERMINED DURING CORRECTIVE ACTION THAT SOFT, SATURATED AND/OR UNSTABLE SUBSURFACE SOILS ARE CONTRIBUTING TO THE FAILURE OF THE TEMPORARY PAVEMENT SECTION, THE UNSUITABLE MATERIALS MUST BE REMOVED AND REPLACED WITH BACKFILL SOILS FREE OF ORGANICS, STONES OR ROCKS OVER 8 INCHES, AND HAVING A PLASTICITY INDEX OF 20 OR LESS, AND SHALL HAVE A MC WITHIN 2% OF OPTIMUM, PRIOR TO REPLACING THE TEMPORARY PAVEMENT SURFACE.
10. CLASS "J" PC CONCRETE (ITEM 403S) OR CONTROLLED LOW STRENGTH MATERIAL (CLSM) MAY BE SUBSTITUTED IN THESE REPAIRS FOR THE FLEXIBLE BASE AND COMPACTED BACKFILL. PC CONCRETE GREATER THAN A 2 SACK MIX WILL NOT BE ALLOWED.
11. ALL EXISTING ROADWAY STRIPING AND PAVEMENT MARKINGS REMOVED OR DAMAGED BY THE CONTRACTOR'S WORK SHALL BE RESTORED PRIOR TO OPENING THE STREET TO TRAFFIC.

CITY OF AUSTIN DEPARTMENT OF PUBLIC WORKS	TEMPORARY TRENCH REPAIR- ASPHALT SURFACE	
RECORD COPY SIGNED BY BILL GARDNER — *12/09/08* ADOPTED	THE ARCHITECT/ENGINEER ASSUMES RESPONSIBILITY FOR APPROPRIATE USE OF THIS STANDARD.	STANDARD NO. 1100S-4 2 OF 2

REPAIR OF FULL DEPTH ASPHALTIC CONCRETE (UCM SECTION 5.5.13)

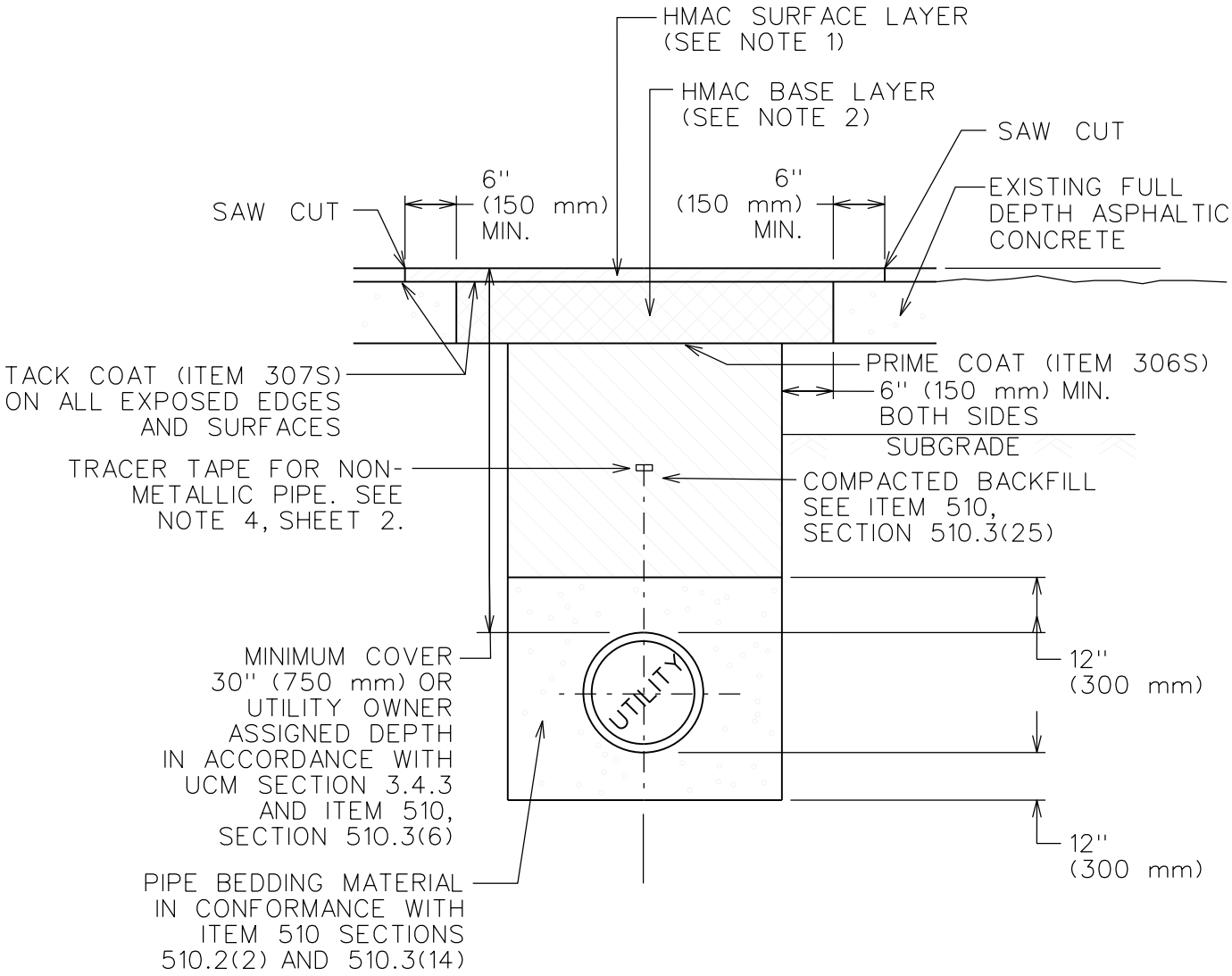

CITY OF AUSTIN DEPARTMENT OF PUBLIC WORKS		FULL DEPTH ASPHALTIC CONCRETE PAVEMENT TRENCH REPAIR	
RECORD COPY SIGNED BY BILL GARDNER	*9/14/05* ADOPTED	THE ARCHITECT/ENGINEER ASSUMES RESPONSIBILITY FOR APPROPRIATE USE OF THIS STANDARD.	STANDARD NO. 1100S-5 1 OF 2

NOTES:

1. REPLACEMENT AC SURFACE LAYER SHALL BE OF THE TYPE AND THICKNESS BASED ON FUNCTIONAL CLASSIFICATION.
   a) MIN. 2" (50 mm) HMAC TYPE "D" FOR TRENCH REPAIR IN LOCAL/RESIDENTIAL STREETS.
   b) MIN. 3" (75 mm) HMAC TYPE "C" FOR TRENCH REPAIR IN COLLECTOR/ARTERIAL STREETS.

   SEE ITEM 340S, SECTION 340S.4.
2. THE COMBINED THICKNESS OF THE REPLACEMENT AC SURFACE AND BASE LAYERS SHALL MATCH THE THICKNESS OF EXISTING FULL DEPTH AC LAYER. HOWEVER, THE REPLACEMENT AC BASE LAYER SHALL BE A MINIMUM THICKNESS OF 6" (150 mm) OF TYPE A OR B HMA. A BASE LAYER TYPE THAT MATCHES THE NEW HMA SURFACE LAYER (SEE NOTE 1) MAY BE USED, IF THE TOTAL REPAIR AREA IS LESS THAN 300 SQUARE YARDS (250 SQUARE METERS).
3. CLASS "J" PC CONCRETE (ITEM 403S) OR CONTROLLED LOW STRENGTH MATERIAL (CLSM) MAY BE SUBSTITUTED IN THESE REPAIRS FOR THE FLEXIBLE BASE AND COMPACTED BACKFILL. PC CONCRETE GREATER THAN A 2 SACK MIX WILL NOT BE ALLOWED.
4. AS PER CITY OF AUSTIN STANDARD SPECIFICATION 510, SECTION 510.2(8)(K)5, FOR ALL NON-METALLIC PIPE, DIRECTLY ABOVE THE CENTERLINE OF THE PIPE AND A MINIMUM OF 12" (300 mm) BELOW THE SUBGRADE, OR A MINIMUM OF 18" (450 mm) BELOW FINISHED GRADE ON AREAS OUTSIDE THE LIMITS OF PAVEMENT, SHALL BE PLACED INDUCTIVE TRACER TAPE IN ACCORDANCE WITH THE MANUFACTURER'S REQUIREMENTS. THE TAPE SHALL BE ENCASED IN A PROTECTIVE, INERT, PLASTIC JACKET AND COLOR CODED IN ACCORDANCE WITH APWA UNIFORM COLOR CODE.

CITY OF AUSTIN DEPARTMENT OF PUBLIC WORKS		FULL DEPTH ASPHALTIC CONCRETE PAVEMENT TRENCH REPAIR	
RECORD COPY SIGNED BY BILL GARDNER	*9/14/05* ADOPTED	THE ARCHITECT/ENGINEER ASSUMES RESPONSIBILITY FOR APPROPRIATE USE OF THIS STANDARD.	STANDARD NO. 1100S-5 2 OF 2

REPAIR OF EXCAVATIONS PARALLEL TO THE CURB
(UCM SECTION 5.5.7.1)

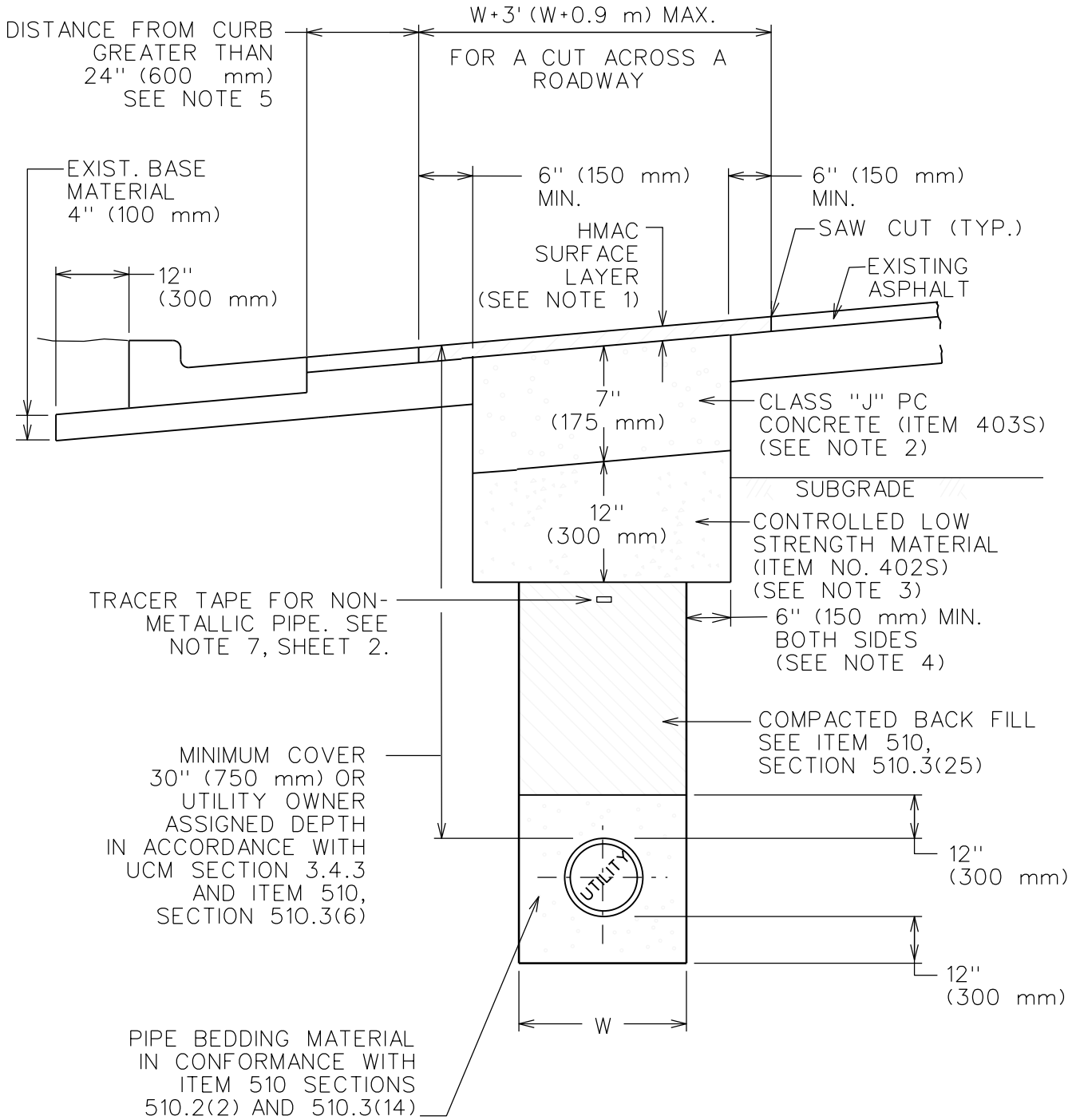

CITY OF AUSTIN DEPARTMENT OF PUBLIC WORKS	EXCAVATIONS PARALLEL TO THE CURB	
RECORD COPY SIGNED BY BILL GARDNER — *9/14/05* — ADOPTED	THE ARCHITECT/ENGINEER ASSUMES RESPONSIBILITY FOR APPROPRIATE USE OF THIS STANDARD.	STANDARD NO. 1100S-6B 1 OF 2

NOTES:

1. REPLACEMENT AC SURFACE LAYER SHALL BE OF THE TYPE AND THICKNESS BASED ON FUNCTIONAL CLASSIFICATION.
   a) MIN. 2" (50 mm) HMAC TYPE "D" FOR TRENCH REPAIR IN LOCAL/RESIDENTIAL STREETS.
   b) MIN. 3" (75 mm') HMAC TYPE "C" FOR TRENCH REPAIR IN COLLECTOR/ARTERIAL STREETS.

   SEE ITEM 340S, SECTION 340S.4.
2. PC CONCRETE GREATER THAN A 2 SACK MIX WILL NOT BE ALLOWED.
3. CLASS "J" CONCRETE, ITEM 403S OR CONTROLLED LOW STRENGTH MATERIAL (CLSM), MAY BE SUBSTITUTED IN THESE REPAIRS FOR THE FLEXIBLE BASE AND COMPACTED BACKFILL.
4. FOR TRENCH WIDTHS 6" (150 mm) OR LESS, WIDENING OF THE BASE BEYOND THE TRENCH FACE MAY BE ELIMINATED IF THE EXISTING PAVEMENT STRUCTURE (INCLUDING THE BASE) REMAINS INTACT AND STABLE AFTER COMPLETION OF EXCAVATION.
5. IF ANY DIMENSION IN THIS AREA IS LESS THAN 24" (600 mm), THE ENTIRE AREA WILL BE REMOVED AND PAVED WITH NEW PAVEMENT.
6. TACK COAT, ITEM 307S, ALL EXPOSED EDGES AND SURFACES.
7. AS PER CITY OF AUSTIN STANDARD SPECIFICATION 510, SECTION 510.2(8)(K)5, FOR ALL NON-METALLIC PIPE, DIRECTLY ABOVE THE CENTERLINE OF THE PIPE AND A MINIMUM OF 12" (300 mm) BELOW THE SUBGRADE, OR A MINIMUM OF 18" (450 mm) BELOW FINISHED GRADE ON AREAS OUTSIDE THE LIMITS OF PAVEMENT, SHALL BE PLACED INDUCTIVE TRACER TAPE IN ACCORDANCE WITH THE MANUFACTURER'S REQUIREMENTS. THE TAPE SHALL BE ENCASED IN A PROTECTIVE, INERT, PLASTIC JACKET AND COLOR CODED IN ACCORDANCE WITH APWA UNIFORM COLOR CODE.

CITY OF AUSTIN DEPARTMENT OF PUBLIC WORKS		EXCAVATIONS PARALLEL TO THE CURB	
RECORD COPY SIGNED BY BILL GARDNER	*9/14/05* ADOPTED	THE ARCHITECT/ENGINEER ASSUMES RESPONSIBILITY FOR APPROPRIATE USE OF THIS STANDARD.	STANDARD NO. 1100S-6B 2 OF 2

REPAIR OF TRANSVERSE EXCAVATIONS
(UCM SECTIONS 5.5.7.1 and 5.5.7.2)

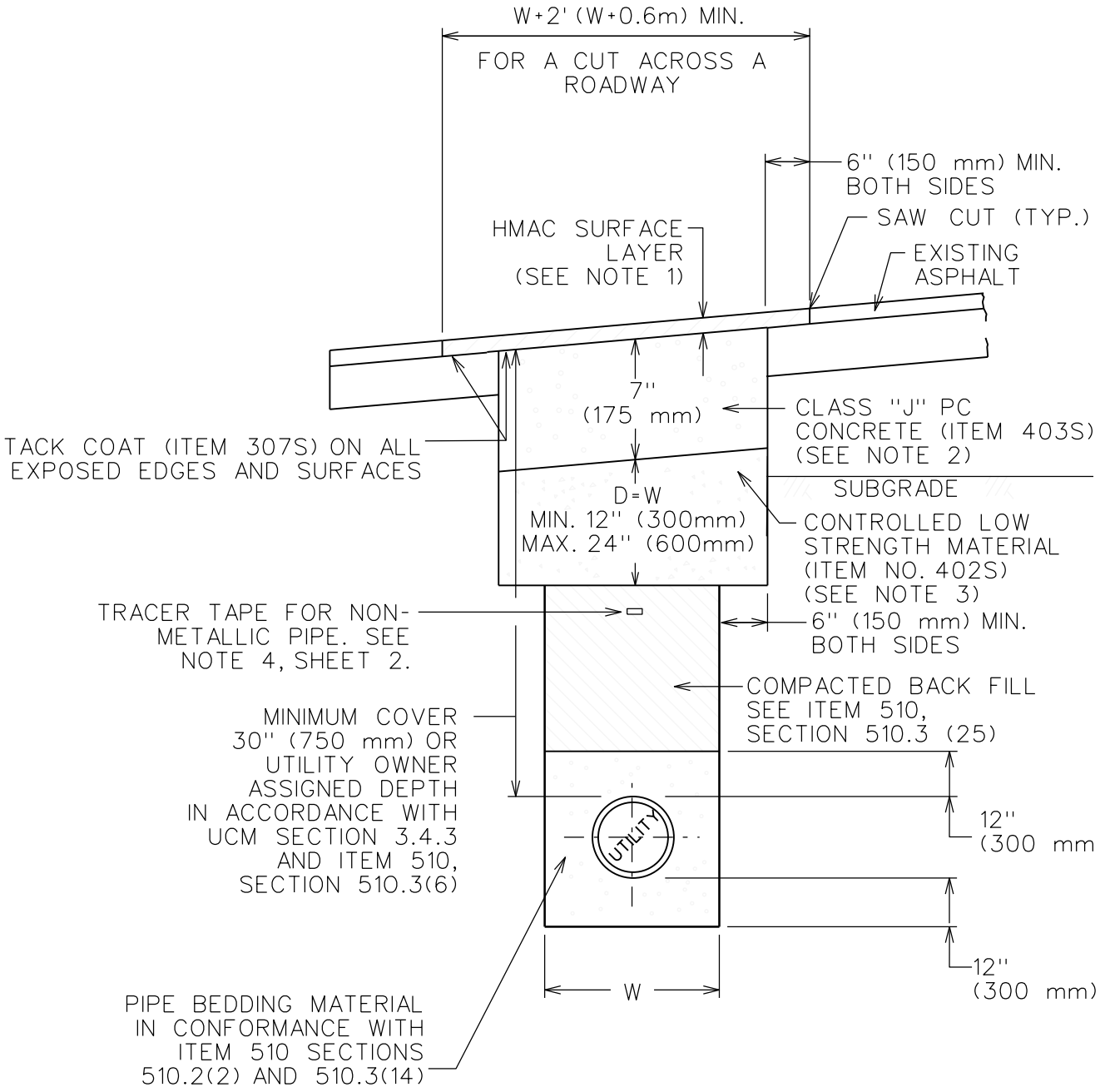

CITY OF AUSTIN DEPARTMENT OF PUBLIC WORKS		TRANSVERSE EXCAVATIONS	
RECORD COPY SIGNED BY BILL GARDNER	*9/14/05* ADOPTED	THE ARCHITECT/ENGINEER ASSUMES RESPONSIBILITY FOR APPROPRIATE USE OF THIS STANDARD.	STANDARD NO. 1100S-6D 1 OF 2

NOTE:

1. REPLACEMENT AC SURFACE LAYER SHALL BE OF THE TYPE AND THICKNESS BASED ON FUNCTIONAL CLASSIFICATION.
   a) MIN. 2" (50 mm) HMAC TYPE "D" FOR TRENCH REPAIR IN LOCAL/RESIDENTIAL STREETS.
   b) MIN. 3" (75 mm) HMAC TYPE "C" FOR TRENCH REPAIR IN COLLECTOR/ARTERIAL STREETS.

   SEE ITEM 340S, SECTION 340S.4.

2. BASE LAYER ALTERNATIVES:
   a) 7" (175 mm) CLASS "J" PC CONCRETE (ITEM 403s). (A PC CONCRETE GREATER THAN A 2 SACK MIX WILL NOT BE ALLOWED.)
   b) 10" (250 mm) CONTROLLED LOW STRENGTH MATERIAL (ITEM 402S); OR
   c) FLEXIBLE BASE (ITEM 210S) THICKNESS TWICE THE EXISTING BASE THICKNESS BUT A MINIMUM OF 18" (450 mm).
3. CLASS "J" (2 SACK MIX) MAY BE SUBSTITUTED FOR CONTROLLED LOW STRENGTH MATERIAL, IF APPROVED BY THE ENGINEER OR DESIGNATED REPRESENTATIVE. PC CONCRETE GREATER THAN A 2 SACK MIX WILL NOT BE ALLOWED.
4. AS PER CITY OF AUSTIN STANDARD SPECIFICATION 510, SECTION 510.2(8)(K)5, FOR ALL NON-METALLIC PIPE, DIRECTLY ABOVE THE CENTERLINE OF THE PIPE AND A MINIMUM OF 12" (300 mm) BELOW THE SUBGRADE, OR A MINIMUM OF 18" (450 mm) BELOW FINISHED GRADE ON AREAS OUTSIDE THE LIMITS OF PAVEMENT, SHALL BE PLACED INDUCTIVE TRACER TAPE IN ACCORDANCE WITH THE MANUFACTURER'S REQUIREMENTS. THE TAPE SHALL BE ENCASED IN A PROTECTIVE, INERT, PLASTIC JACKET AND COLOR CODED IN ACCORDANCE WITH APWA UNIFORM COLOR CODE.

CITY OF AUSTIN DEPARTMENT OF PUBLIC WORKS		TRANSVERSE EXCAVATIONS	
RECORD COPY SIGNED BY BILL GARDNER	*9/14/05* ADOPTED	THE ARCHITECT/ENGINEER ASSUMES RESPONSIBILITY FOR APPROPRIATE USE OF THIS STANDARD.	STANDARD NO. 1100S-6D 2 OF 2

REPAIR OF NEW STREETS and ARTERIAL STREETS in GOOD CONDITION
(UCM SECTION 5.3.3 and 5.3.4)

TYPICAL RESTORATION FOR EXCAVATION IN INTERSECTIONS

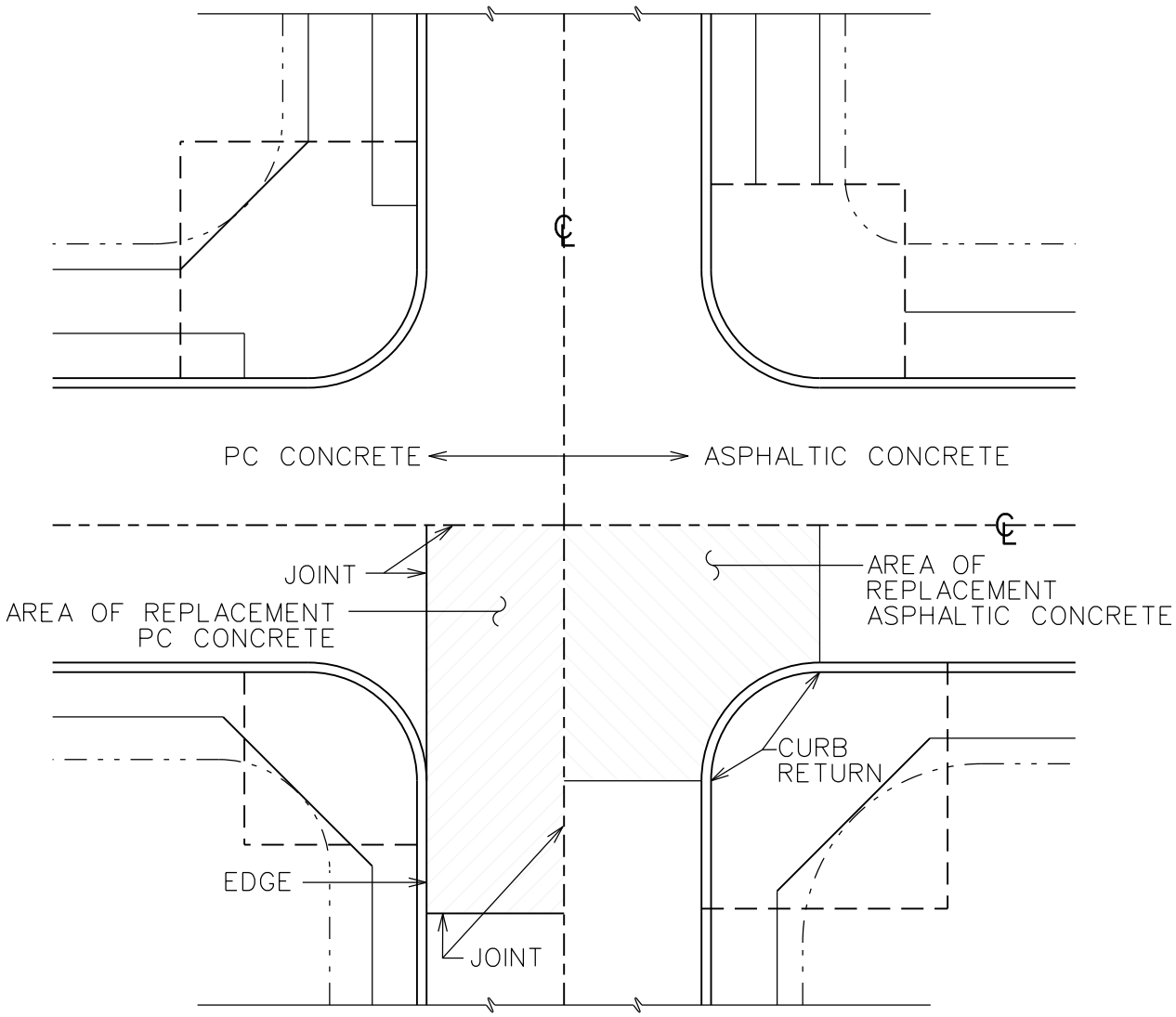

TYPICAL PLAN

TRENCH REPAIRS WITHIN PORTLAND CEMENT CONCRETE PAVEMENTS NOTE:

IF ANY PART OF THE TRENCH REPAIR FALLS WITHIN AN INTERSECTION, THEN THE ENTIRE CONCRETE SLAB FROM JOINT TO JOINT AND JOINT TO EDGE SHALL BE REPLACED, UNLESS OTHERWISE DIRECTED IN WRITING BY THE DIRECTOR.

TRENCH REPAIRS WITHIN ASPHALTIC CONCRETE PAVEMENTS NOTES:

1. IF ANY PART OF THE TRENCH REPAIR FALLS WITHIN AN INTERSECTION, DEFINED FROM CURB RETURN TO CURB RETURN, THE ENTIRE QUADRANT OF THE EXISTING SURFACE SHALL BE REPLACED, UNLESS OTHERWISE DIRECTED IN WRITING BY THE ENGINEER OR DESIGNATED REPRESENTATIVE.
2. A QUADRANT IS DEFINED AS THE CROSS-HATCHED AREA IN THE ABOVE DETAIL.

CITY OF AUSTIN DEPARTMENT OF PUBLIC WORKS		STREET REPAIR REQUIREMENTS	
RECORD COPY SIGNED BY BILL GARDNER	*9/14/05* ADOPTED	THE ARCHITECT/ENGINEER ASSUMES RESPONSIBILITY FOR APPROPRIATE USE OF THIS STANDARD.	STANDARD NO. 1100S-7 1 OF 3

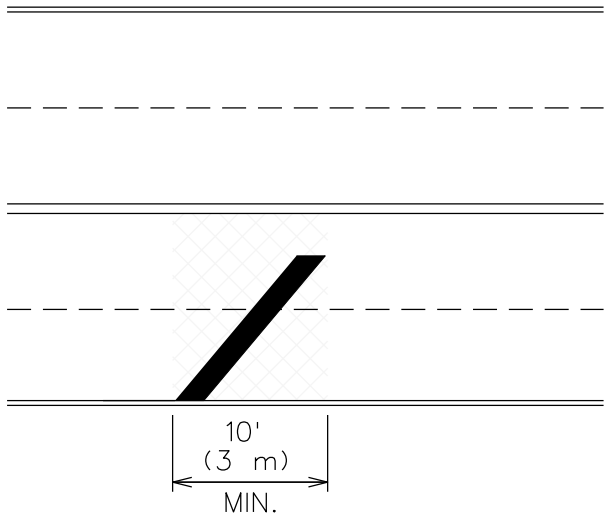

TRANSVERSE EXCAVATION AND RESTORATION

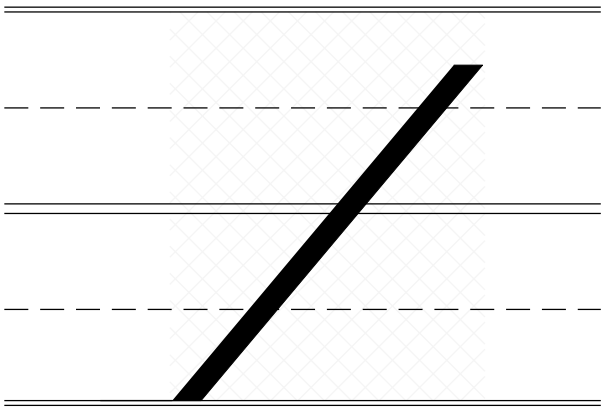

TRANSVERSE EXCAVATION AND RESTORATION

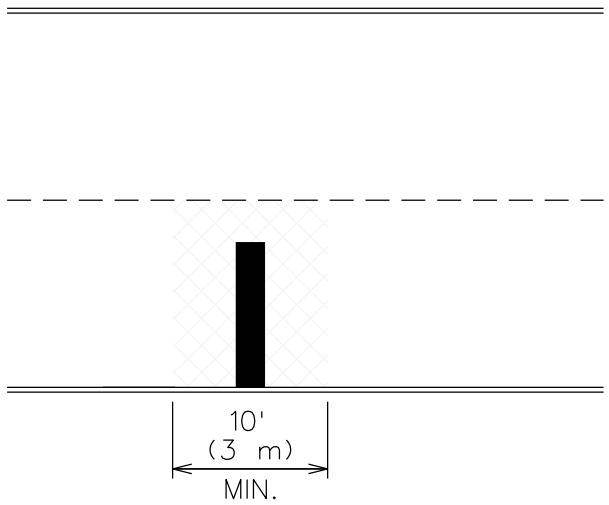

SINGLE LANE EXCAVATION AND RESTORATION

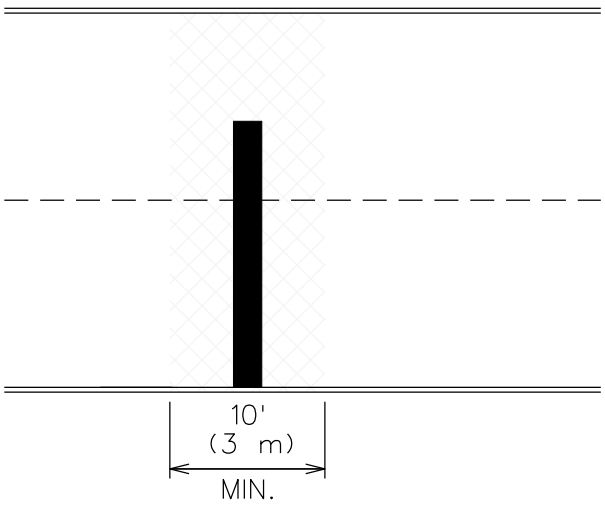

DOUBLE LANE EXCAVATION AND RESTORATION

AREA OF EXCAVATION

LIMITS OF RESTORATION

NOTE: IN ASPHALT, RESTORATION MUST BE A MINIMUM OF 10' (3 m) CURB LENGTH BY THE WIDTH OF EACH LANE EXCAVATED.

TYPICAL RESTORATION FOR EXCAVATION IN STREETS

CITY OF AUSTIN
DEPARTMENT OF PUBLIC WORKS

RECORD COPY SIGNED BY BILL GARDNER

9/14/05

ADOPTED

STREET REPAIR REQUIREMENTS

THE ARCHITECT/ENGINEER ASSUMES RESPONSIBILITY FOR APPROPRIATE USE OF THIS STANDARD.

STANDARD NO.
1100S-7
2 OF 3

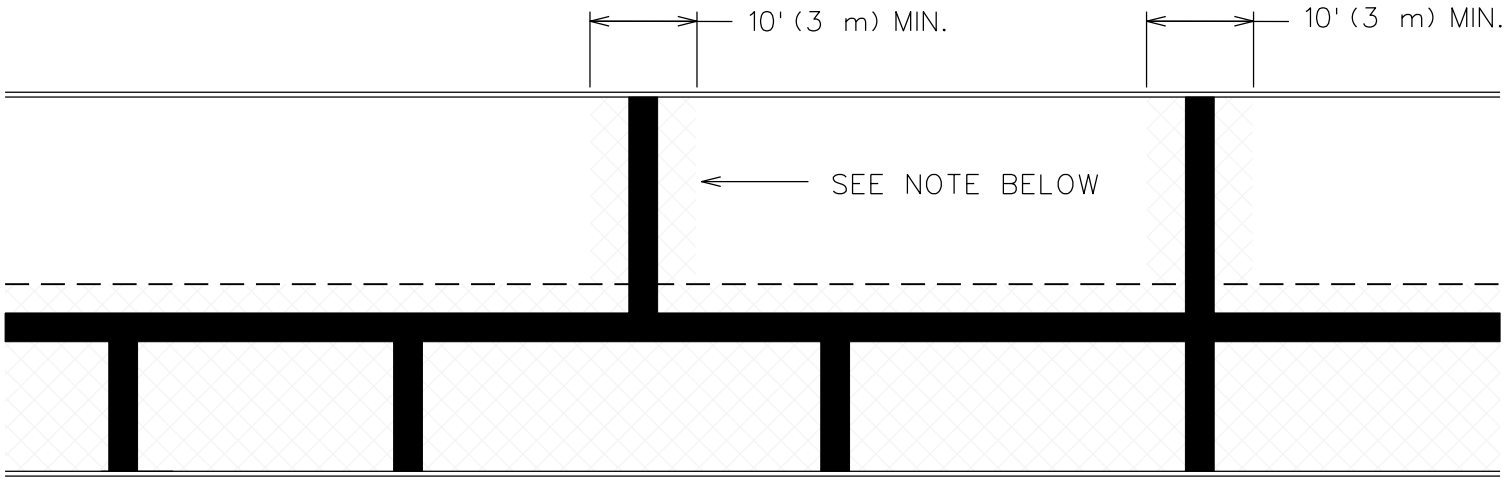

MULTIPLE EXCAVATIONS AND RESTORATION IN ASPHALT

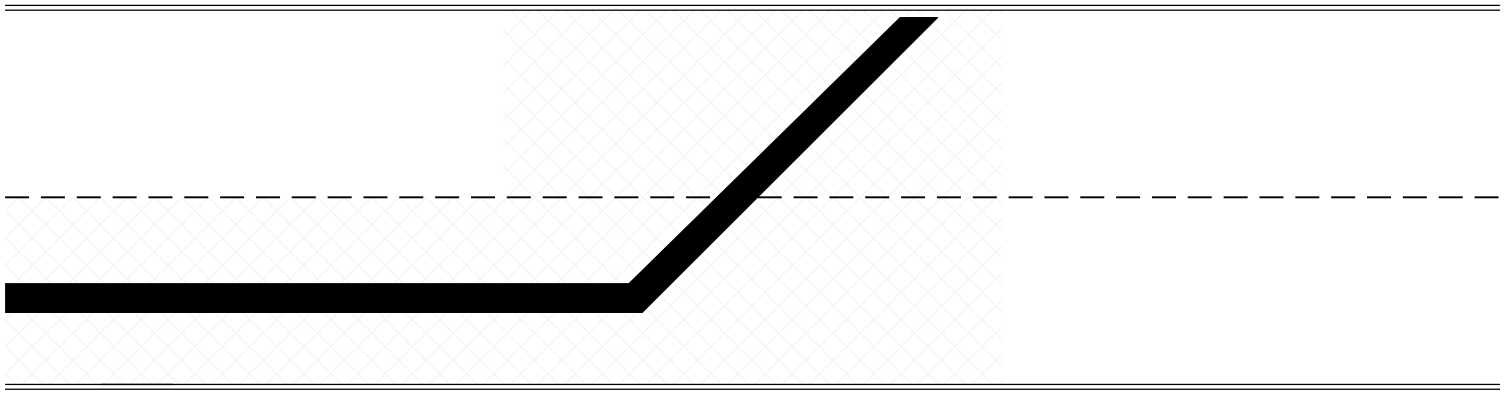

EXCAVATION AND RESTORATION IN CONCRETE

AREA OF EXCAVATION

LIMITS OF RESTORATION

NOTE: ACTUAL RESTORATION LIMITS ARE DETERMINED BY JOINT LOCATIONS. IN ASPHALT, RESTORATION MUST BE A MINIMUM OF 10' (3 m) CURB LENGTH BY THE WIDTH OF EACH LANE EXCAVATED.

TYPICAL RESTORATION FOR EXCAVATION IN STREETS

CITY OF AUSTIN
DEPARTMENT OF PUBLIC WORKS

RECORD COPY SIGNED BY BILL GARDNER

9/14/05

ADOPTED

STREET REPAIR REQUIREMENTS

THE ARCHITECT/ENGINEER ASSUMES RESPONSIBILITY FOR APPROPRIATE USE OF THIS STANDARD.

STANDARD NO.
1100S-7
3 OF 3

REPAIR OF NEW STREETS and ARTERIAL STREETS IN GOOD CONDITION AND EXCAVATIONS MORE THAN 300' (91 m) IN LENGTH (UCM SECTION 5.9.8)

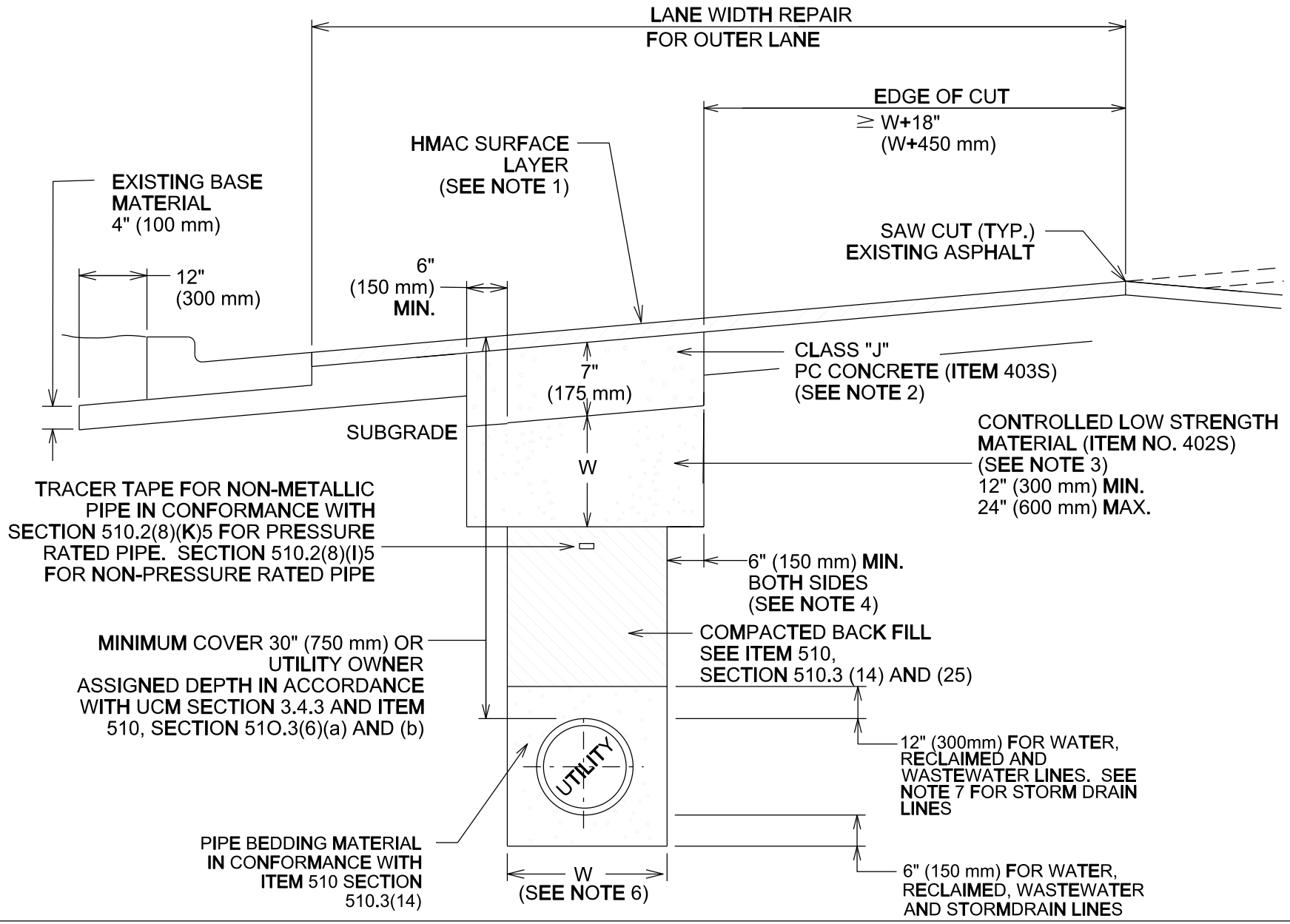

CITY OF AUSTIN
DEPARTMENT OF PUBLIC WORKS

RECORD COPY SIGNED BY CUONG TRAN

02/24/10

ADOPTED

THE ARCHITECT/ENGINEER ASSUMES RESPONSIBILITY FOR APPROPRIATE USE OF THIS STANDARD.

TRAFFIC LANE REPLACEMENT
FOR OUTER LANE EXCAVATIONS

STANDARD NO.
1100S-8A
1 OF 2

NOTES:

1. REPLACEMENT AC SURFACE LAYER SHALL BE OF THE TYPE AND THICKNESS BASED ON FUNCTIONAL CLASSIFICATION.
   a) MIN. 2" (50 mm) HMAC TYPE "D" FOR TRENCH REPAIR IN LOCAL/RESIDENTIAL STREETS.
   b) MIN. 3" (75 mm) HMAC TYPE "C" FOR TRENCH REPAIR IN COLLECTOR/ARTERIAL STREETS. SEE ITEM 340S, SECTION 340S.4.

2. PC CONCRETE GREATER THAN A 2 SACK MIX WILL NOT BE ALLOWED.

3. CLASS "J" (2 SACK MIX) MAY BE SUBSTITUTED FOR CONTROLLED LOW STRENGTH MATERIAL, IF APPROVED BY THE ENGINEER OR DESIGNATED REPRESENTATIVE. PC CONCRETE GREATER THAN A 2 SACK MIX WILL NOT BE ALLOWED.

4. FOR TRENCH WIDTHS 6" (150 mm) OR LESS, WIDENING OF THE BASE BEYOND THE TRENCH FACE MAY BE ELIMINATED IF THE EXISTING PAVEMENT STRUCTURE (INCLUDING THE BASE) REMAINS INTACT AND STABLE AFTER COMPLETION OF EXCAVATION.

5. TACK COAT (ITEM 307S) ALL EXPOSED EDGES AND SURFACES.

6. FOR WATER, RECLAIMED AND WASTEWATER LINE TRENCHES REFER TO 510.3(5) W=TRENCH WIDTH.

7. FOR STORM DRAINS, THE PIPE BEDDING ENVELOPE SHALL EXTEND THE FULL TRENCH WIDTH TO A DEPTH OF 6" (150 mm) BELOW THE PIPE, AND SHALL RISE AT LEAST TO THE SPRING LINE OF THE PIPE. THE DESIGN OF STORM DRAIN PIPES SUBJECTED TO VEHICULAR TRAFFIC OR OTHER LOADING SHALL BE SUPPORTED BY STRUCTURAL ENGINEERING CALCULATIONS OR REFERENCED TO ENGINEERING STANDARDS. IN ADDITION TO THE PIPE SELECTION, THE DESIGN INCLUDES THE PIPE BEDDING ENVELOPE, DEPTH OF COVER AND COMPACTION REQUIREMENTS.

REPAIR OF NEW STREETS and ARTERIAL STREETS IN GOOD CONDITION AND EXCAVATION MORE THAN 300' (91 m) IN LENGTH (UCM SECTION 5.9.8)

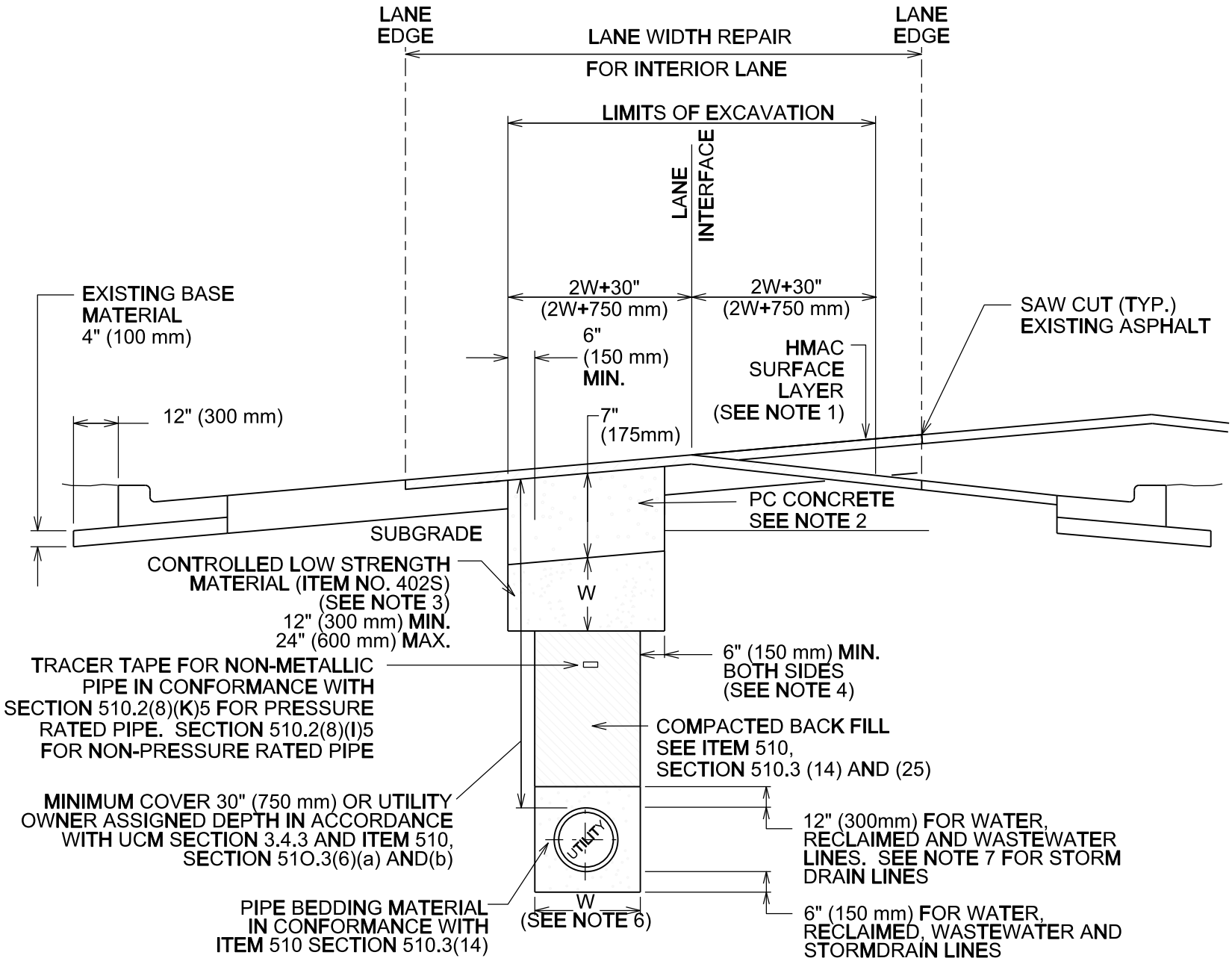

CITY OF AUSTIN
DEPARTMENT OF PUBLIC WORKS

RECORD COPY SIGNED BY CUONG TRAN

02/24/10

ADOPTED

THE ARCHITECT/ENGINEER ASSUMES RESPONSIBILITY FOR APPROPRIATE USE OF THIS STANDARD.

TRAFFIC LANE REPLACEMENT
FOR INTERIOR LANE EXCAVATIONS

STANDARD NO.
1100S-8B
1 OF 2

NOTES:

1. REPLACEMENT AC SURFACE LAYER SHALL BE OF THE TYPE AND THICKNESS BASED ON FUNCTIONAL CLASSIFICATION.
   a) MIN. 2" (50 mm) HMAC TYPE "D" FOR TRENCH REPAIR IN LOCAL/RESIDENTIAL STREETS.
   b) MIN. 3" (75 mm) HMAC TYPE "C" FOR TRENCH REPAIR IN COLLECTOR/ARTERIAL STREETS. SEE ITEM 340S, SECTION 340S.4.

2. CLASS "J" PC CONCRETE (ITEM 403S). PC CONCRETE GREATER THAN A 2 SACK MIX WILL NOT BE ALLOWED.

3. 12" (300 mm) MIN. 24" (600 mm) MAX. CONTROLLED LOW STRENGTH MATERIAL (ITEM 40SS). CLASS "J" (2 SACK MIX) MAY BE SUBSTITUTED FOR CONTROLLED LOW STRENGTH MATERIAL, IF APPROVED BY THE ENGINEER OR DESIGNATED REPRESENTATIVE. PC CONCRETE GREATER THAN A 2 SACK MIX WILL NOT BE ALLOWED.

4. FOR TRENCH WIDTHS 6" (150 mm) OR LESS, WIDENING OF THE BASE BEYOND THE TRENCH FACE MAY BE ELIMINATED IF THE EXISTING PAVEMENT STRUCTURE (INCLUDING THE BASE) REMAINS INTACT AND STABLE AFTER COMPLETION OF EXCAVATION.

5. TACK COAT (ITEM 307S) ALL EXPOSED EDGES AND SURFACES.

6. FOR WATER, RECLAIMED AND WASTEWATER LINE TRENCHES REFER TO 510.3(5) W=TRENCH WIDTH.

7. FOR STORM DRAINS, THE PIPE BEDDING ENVELOPE SHALL EXTEND THE FULL TRENCH WIDTH TO A DEPTH OF 6" (150 mm) BELOW THE PIPE, AND SHALL RISE AT LEAST TO THE SPRING LINE OF THE PIPE. THE DESIGN OF STORM DRAIN PIPES SUBJECTED TO VEHICULAR TRAFFIC OR OTHER LOADING SHALL BE SUPPORTED BY STRUCTURAL ENGINEERING CALCULATIONS OR REFERENCED TO ENGINEERING STANDARDS. IN ADDITION TO THE PIPE SELECTION, THE DESIGN INCLUDES THE PIPE BEDDING ENVELOPE, DEPTH OF COVER AND COMPACTION REQUIREMENTS.

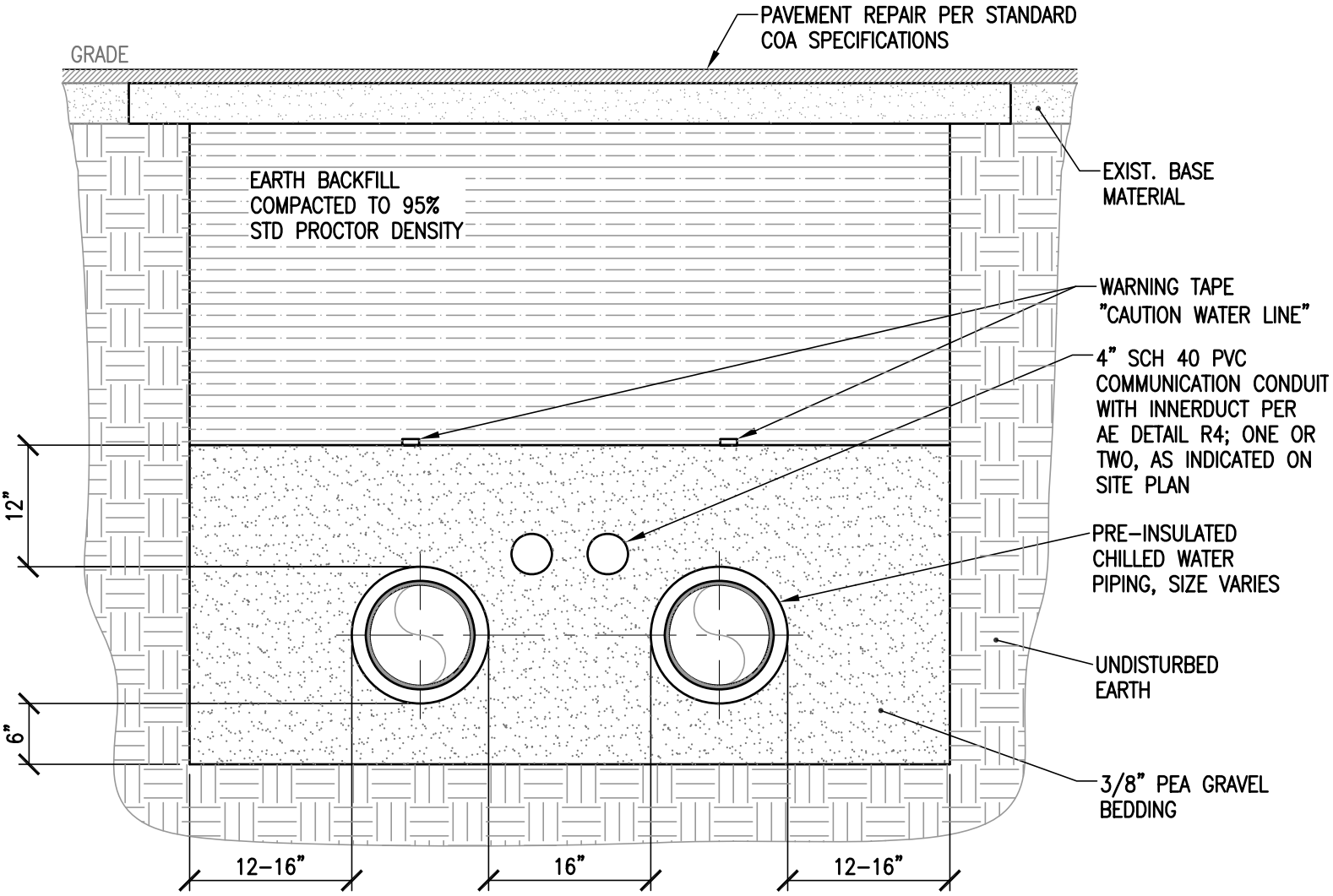

GENERAL NOTES:

1. THE EXISTING PAVING SURFACE SHALL BE SAW CUT IN A STRAIGHT LINE A MINIMUM OF 12" WIDER THAN THE UNDISTURBED SIDES OF THE TRENCH, SYMMETRICAL ABOUT THE CENTER LINE OF THE EXCAVATION.

2. ANY CONCRETE PAVING SHALL BE SAW CUT 6" WIDER THAN UNDISTURBED SIDES OF EXCAVATION.

3. IF EXCAVATION AREA IS OPEN FOR TEMPORARY PUBLIC USE THE SURFACE SHALL BE MAINTAINED LEVEL WITH ADJACENT RIDING SURFACE WITH COLD MIX OR TEMPORARY HOT MIX.

4. ROAD BASE AND SURFACE MATERIALS IN THE TRENCH CUT SHALL BE REPLACED IN KIND OF EQUAL THICKNESS, OR MINIMUM BASE THICKNESS OF 10 INCHES, WHICHEVER IS GREATER.

5. ALL DAMAGED AREAS OF PAVEMENT OUTSIDE THE TRENCH CUT SHALL BE REMOVED AND REPLACED WITH MINIMUM OF 8 INCHES OF BASE OR MATCH EXISTING, WHICHEVER IS GREATER.

6. SURFACE PAVEMENT SHALL BE OF THE KIND AND THICKNESS AS EXISTING, OR MINIMUM 2 INCHES, WHICHEVER IS GREATER.

STANDARD TRENCH DETAIL

R1

SCALE: 3/4"=1'-0"

11/5/13

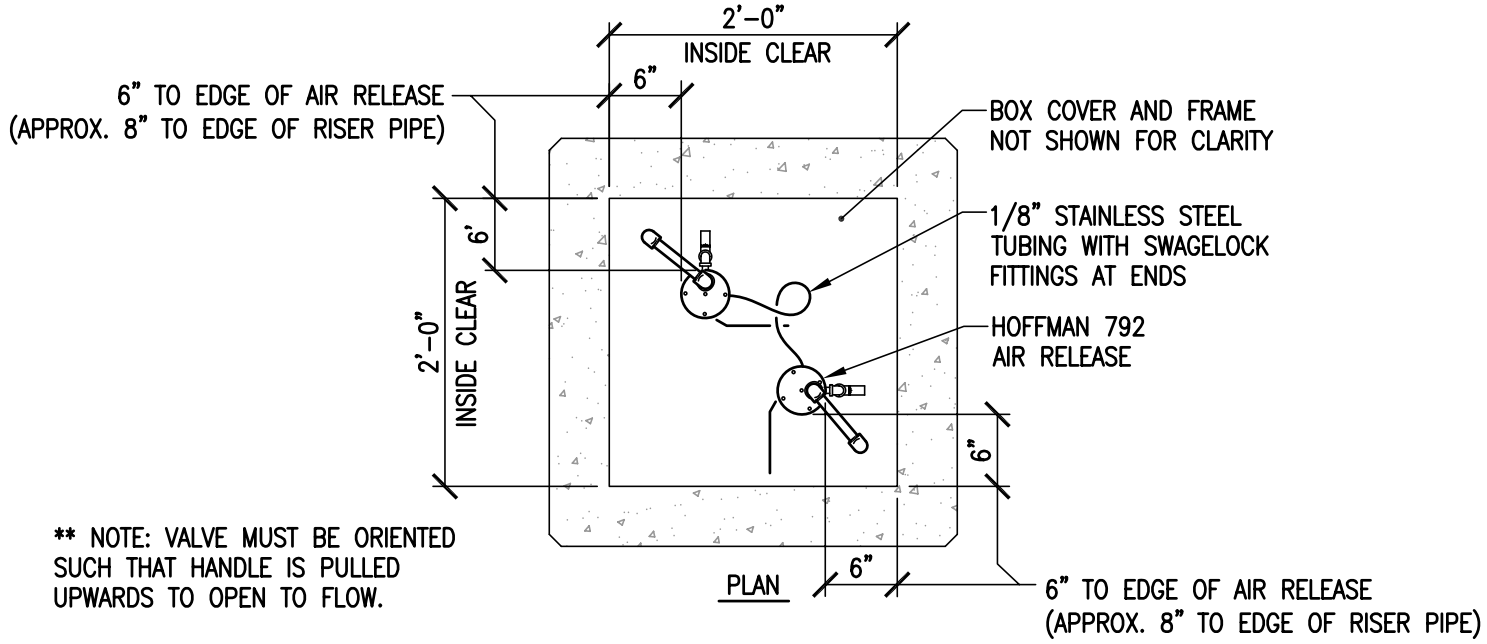

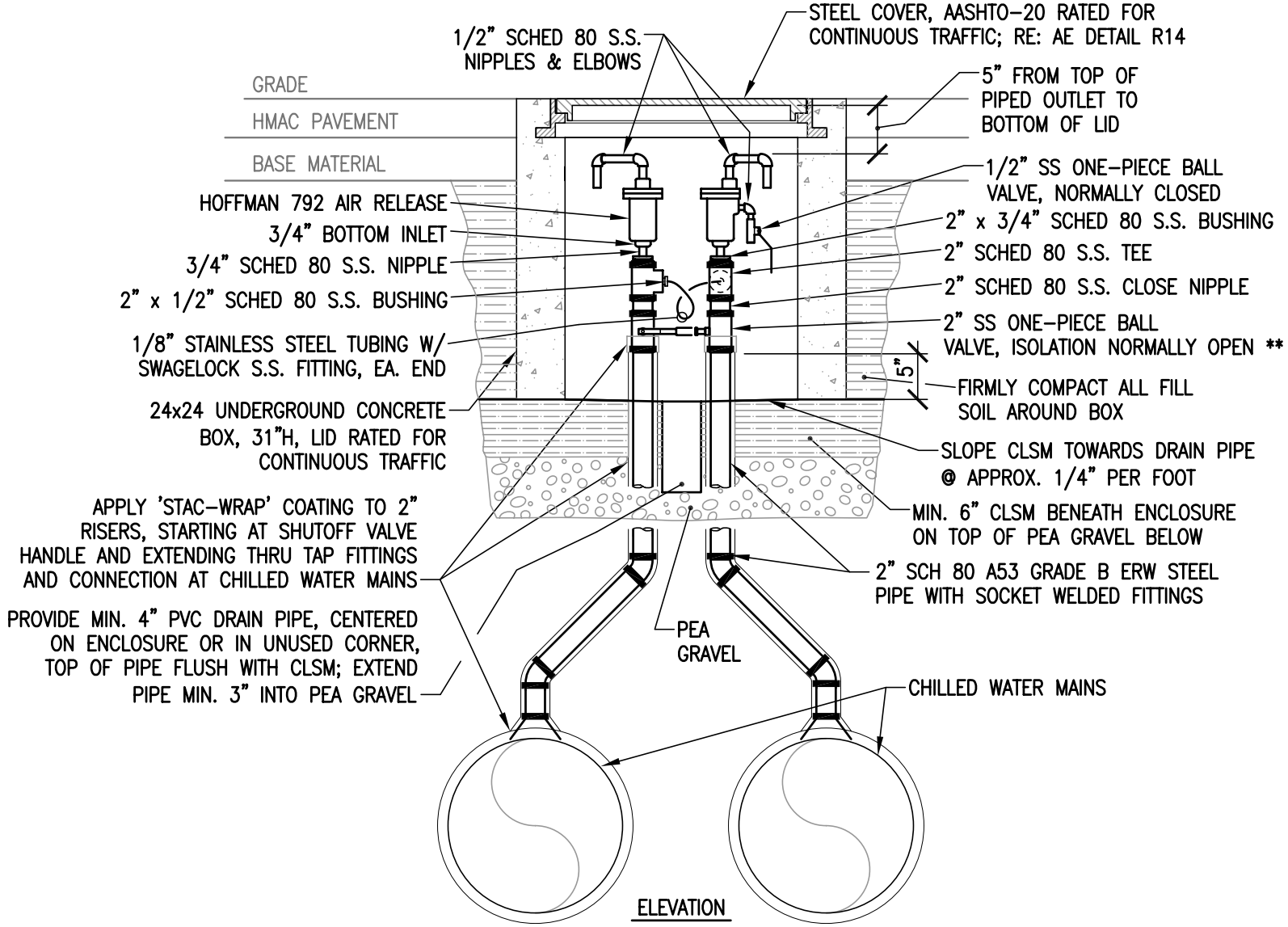

AIR RELEASE VALVE ASSEMBLY

11/15/13

R2

SCALE: 3/4"=1'-0"

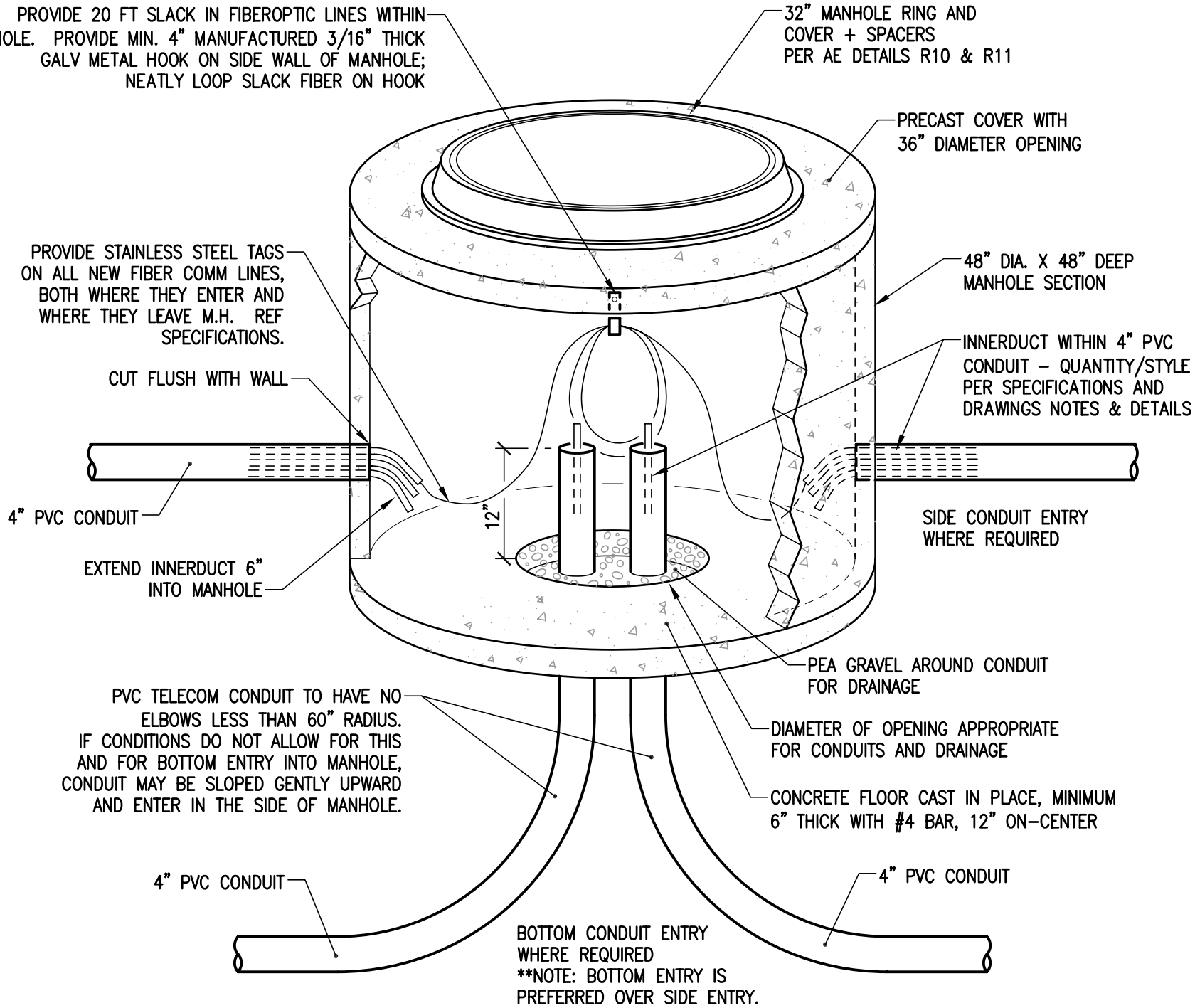

COMMUNICATION VAULT

R3

SCALE: NONE

11/15/13

OPTION 1:
4" PVC CONDUIT WITH THREE
SINGLE RACEWAY INNERDUCTS

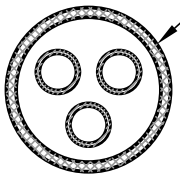

COMMUNICATION CONDUIT
SCHEDULE 40 PVC,
4.5" OD x 3.998" ID

3 – 1" HDPE CORRUGATED
INNERDUCT PER CONDUIT

NOTE: OWNER TO FURNISH
INNERDUCT, CONTRACTOR
TO INSTALL.

OPTION 2:
4–CELL COMBINATION CONDUIT/
MULTI–DUCT SYSTEM

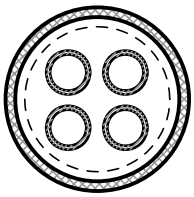

FEMALE COUPLING

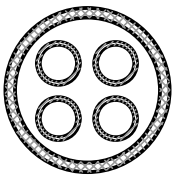

MALE COUPLING

COMMUNICATION CONDUIT INNERDUCT

R4

SCALE: NONE

11/13/15

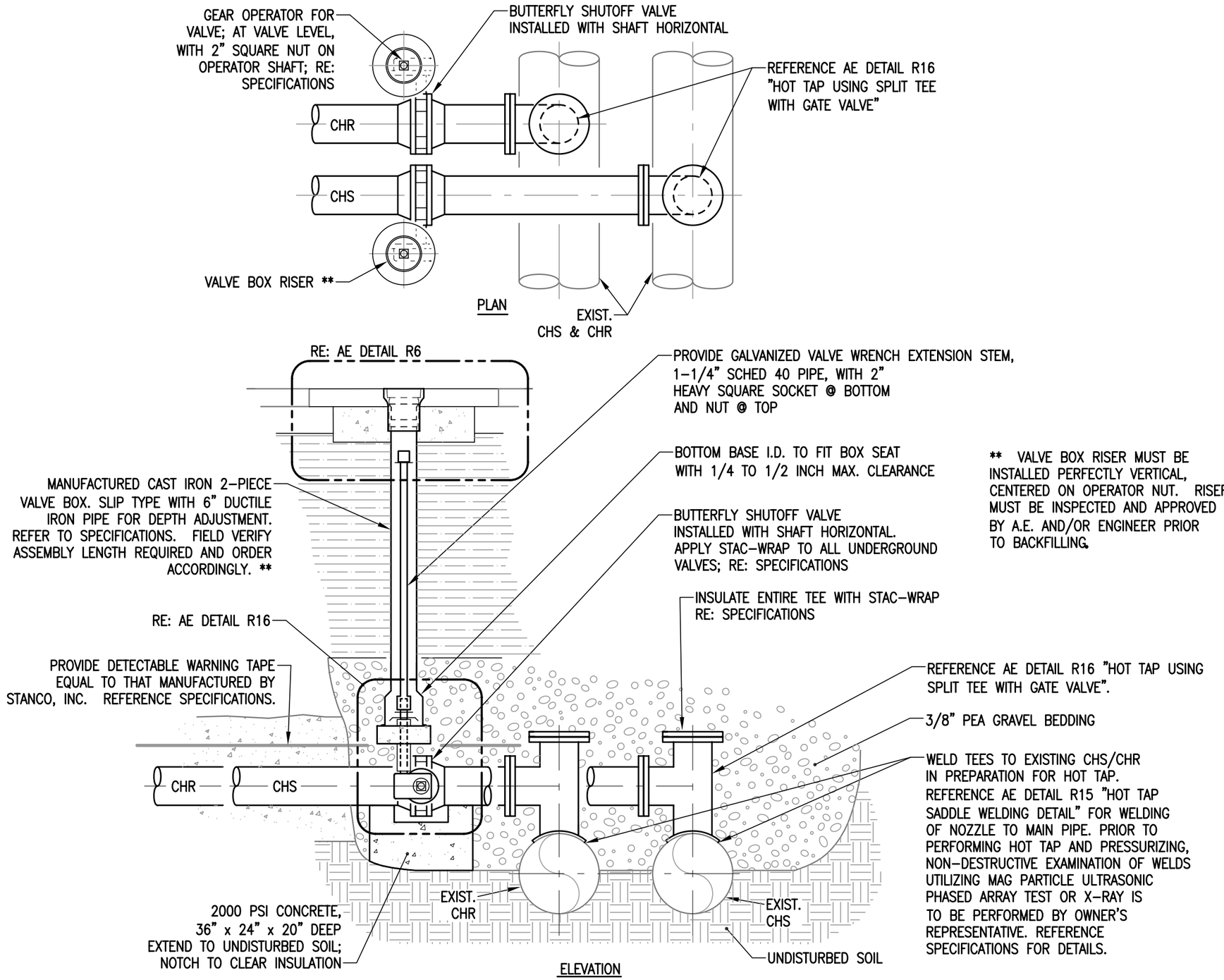

01/27/14

CHILLED WATER CONNECTION HORIZONTAL VALVE SHAFT

R5

SCALE: NONE

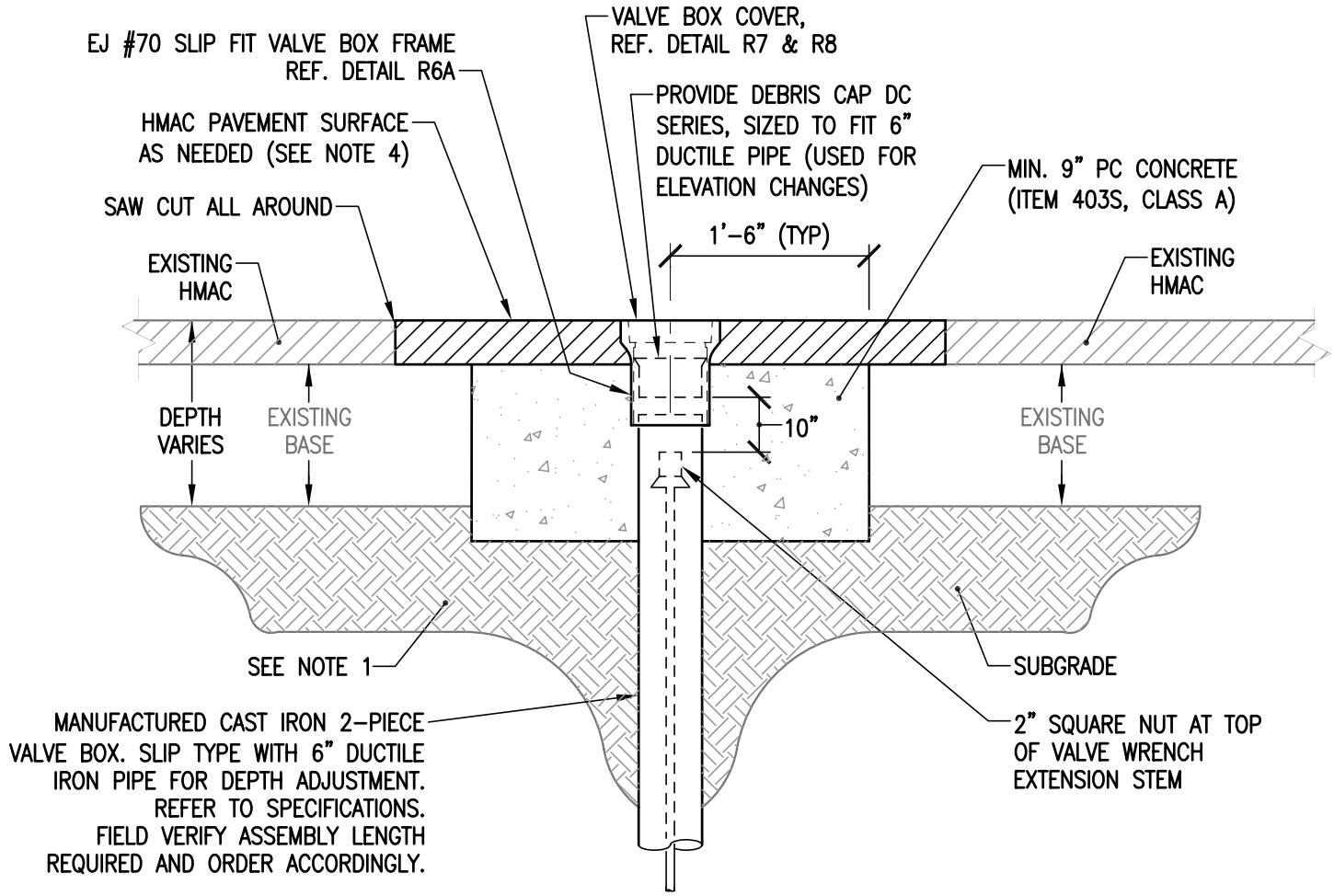

SECTION B-B

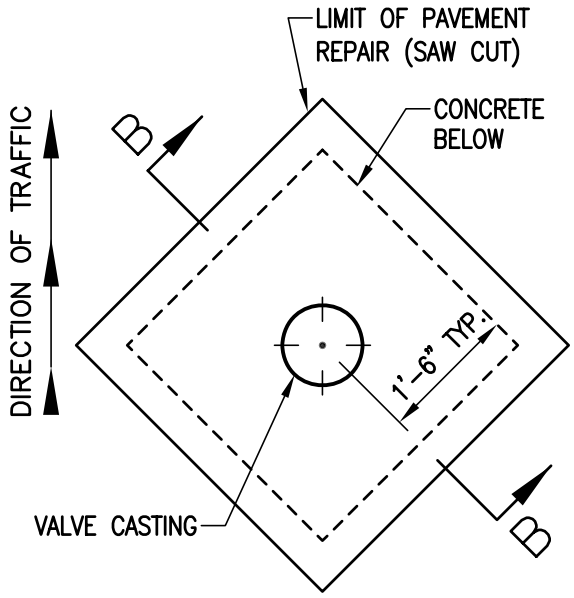

PLAN VIEW

NOTES:

1. SUBGRADE SHALL BE COMPACTED AS PER ITEM 201, SUBGRADE PREPARATION.

2. VALVE CASTINGS SHALL BE ADJUSTED TO GRADE DETERMINED BY ENGINEER.

3. CLEAN CASTINGS OF ALL DEBRIS DOWN TO THE BASE OF THE VALVE, OR VALVE GEAR OPERATOR.

4. REPLACEMENT HMAC SURFACE LAYER SHALL BE OF THE TYPE AND THICKNESS BASED ON FUNCTIONAL CLASSIFICATION.
   a) MIN. 2" HMAC TYPE "D" FOR TRENCH REPAIR IN LOCAL/RESIDENTIAL STREETS.
   b) MIN. 3" HMAC TYPE "C" FOR TRENCH REPAIR IN COLLECTOR/ARTERIAL STREETS. SEE ITEM 340S, SECTION 340S.4.

5. SET PATCH ELEVATION TO LEVEL OF NEW OVERLAY AS DIRECTED BY ENGINEER.

6. "ITEMS" REFER TO REFERENCE ITEM NUMBERS FROM THE "STANDARD SPECIFICATION AND STANDARD DETAILS ADOPTED BY THE CITY OF AUSTIN, DEPARTMENT OF PUBLIC WORKS"

VALVE BOX DETAIL

R6

SCALE: NONE

01/27/14

#70 Valve Box Frame BF

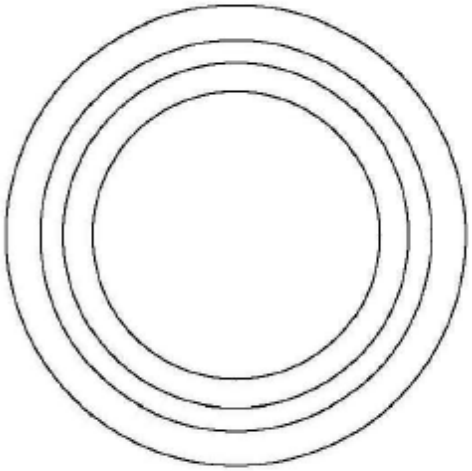

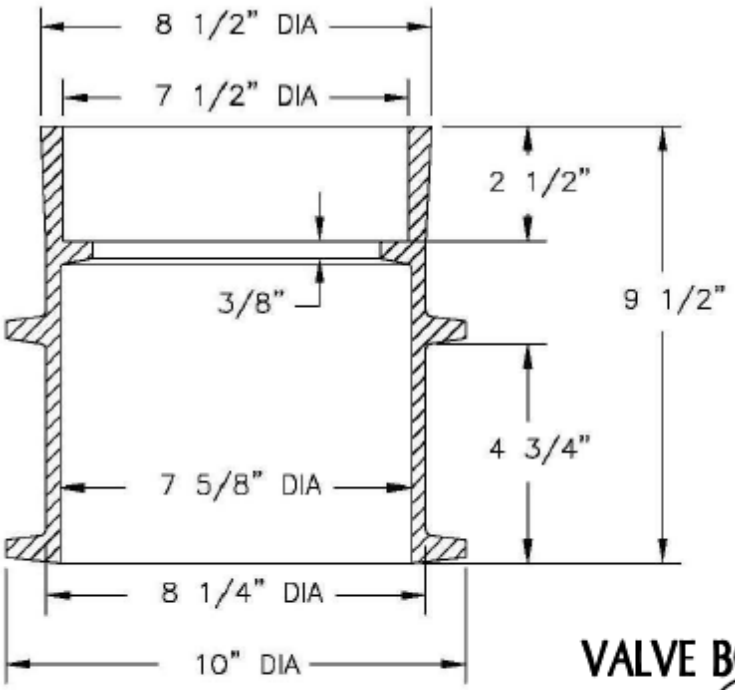

VALVE BOX SECTION

VALVE BOX FRAME

R6A

SCALE: NONE

01/17/14

70 Valve Box Cover

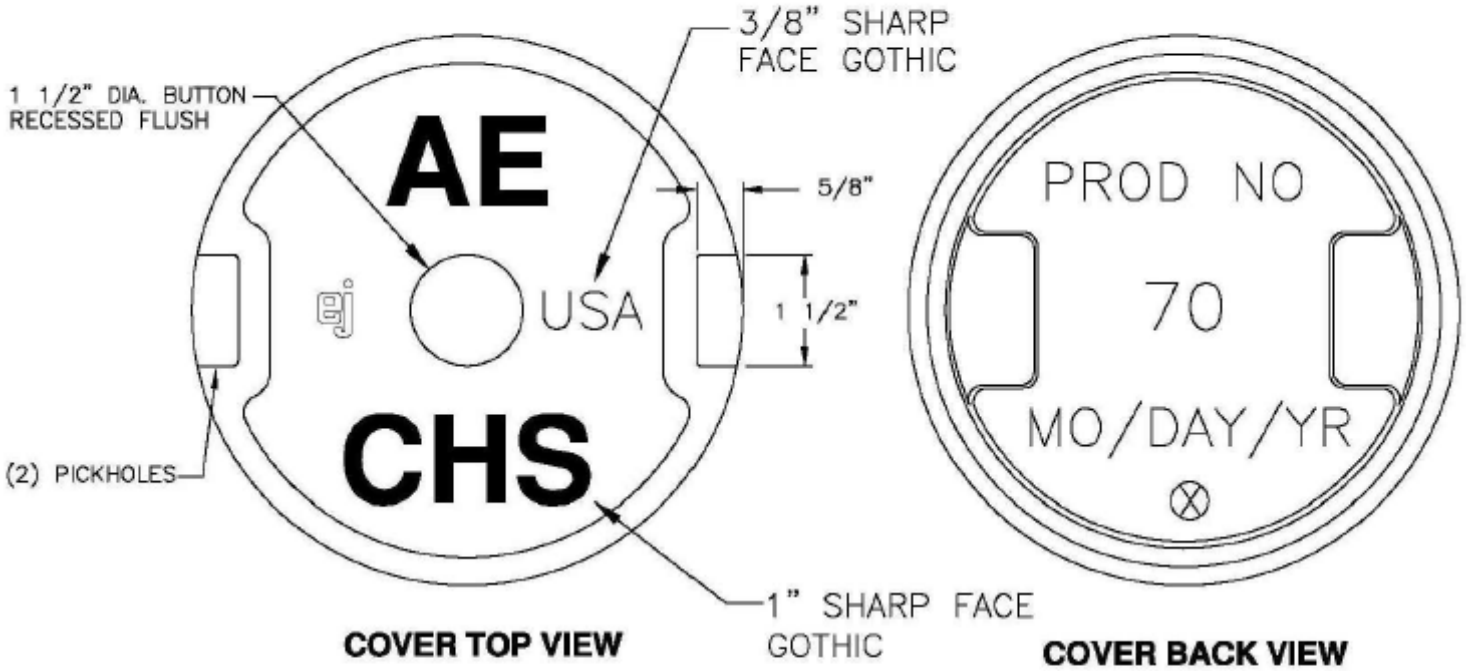

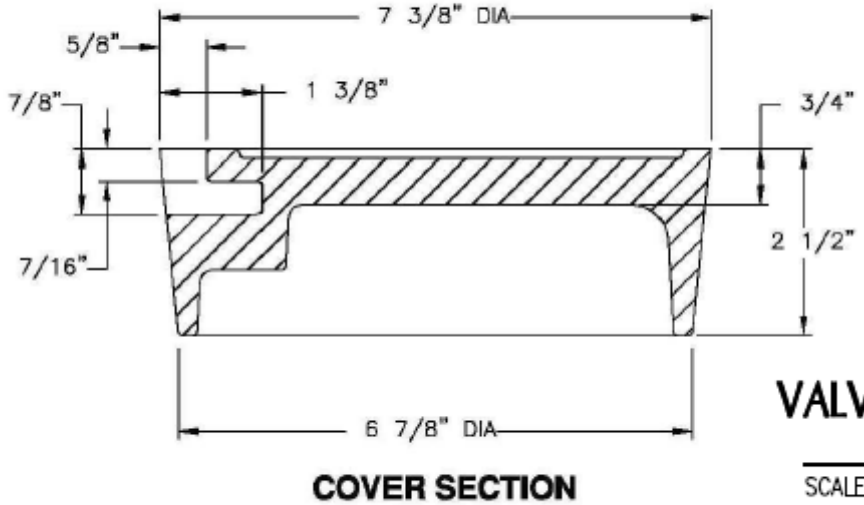

VALVE BOX COVER - SUPPLY

SCALE: R7 NONE

01/17/14

70 Valve Box Cover

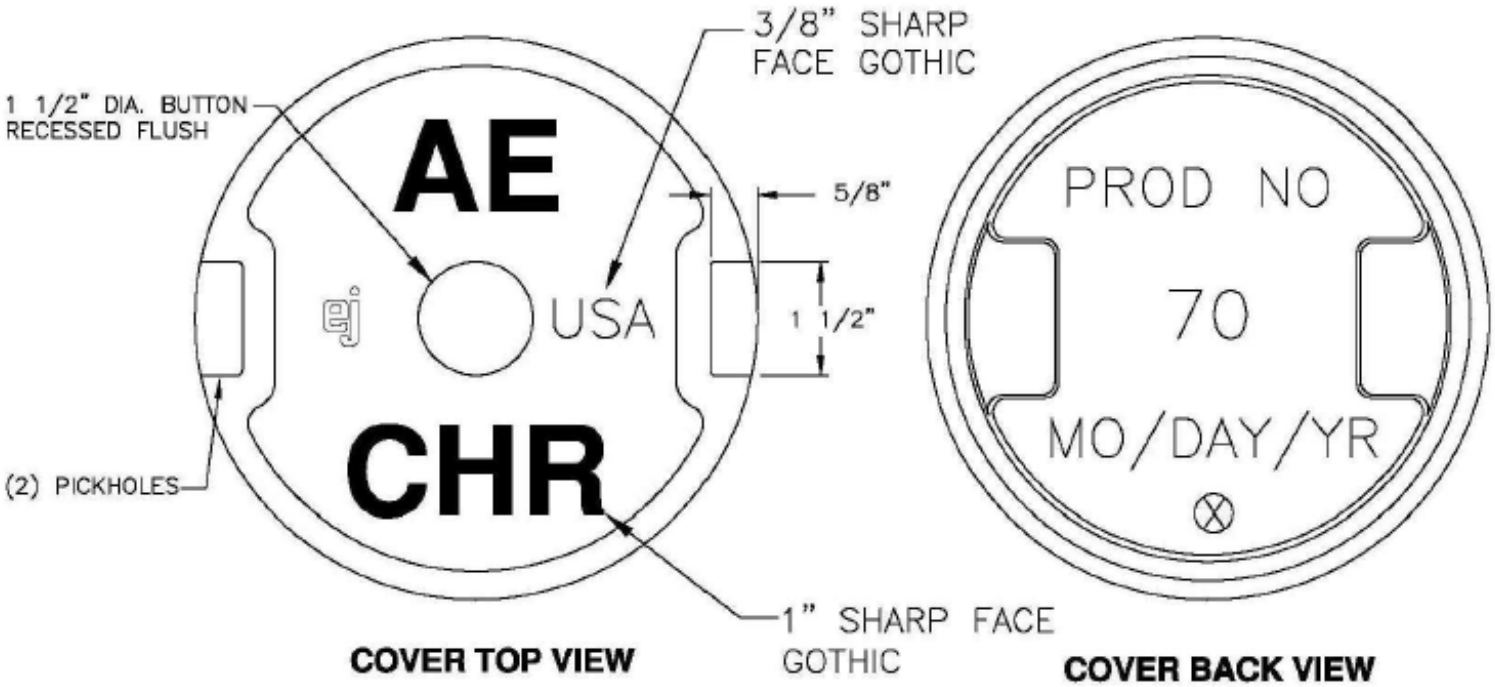

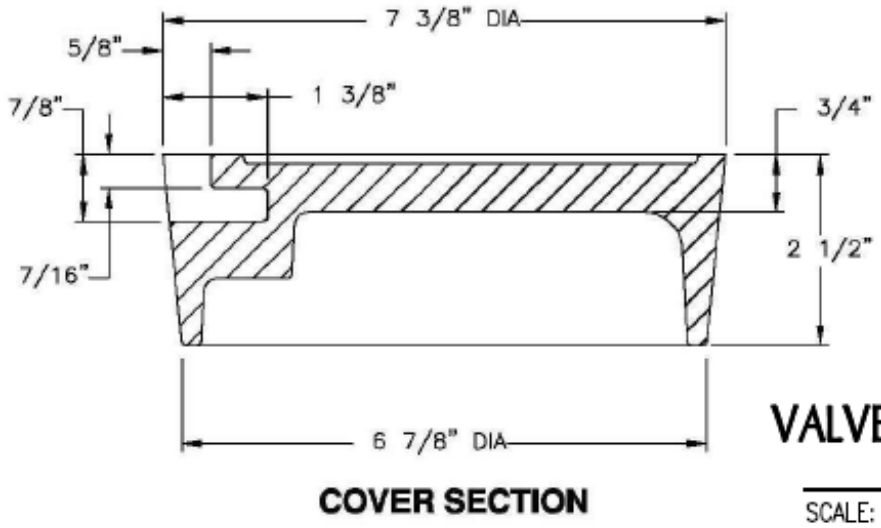

VALVE BOX COVER - RETURN

SCALE: R8 NONE

01/17/14

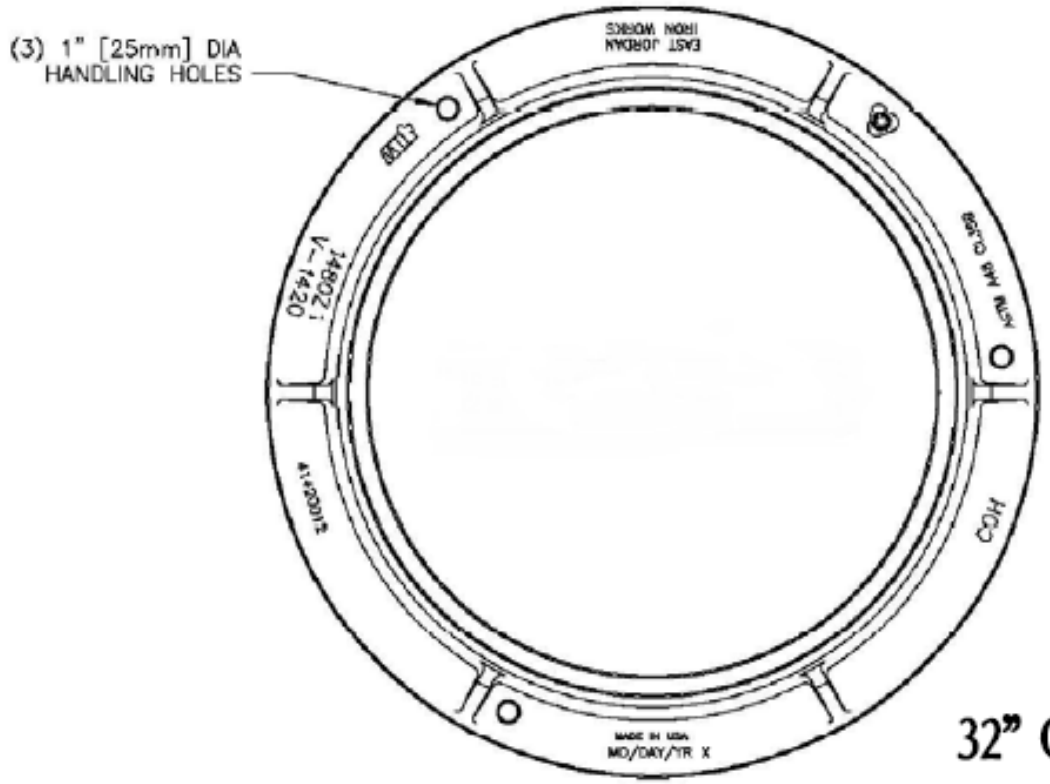

32" CI RING DETAIL

SCALE: R9 NONE

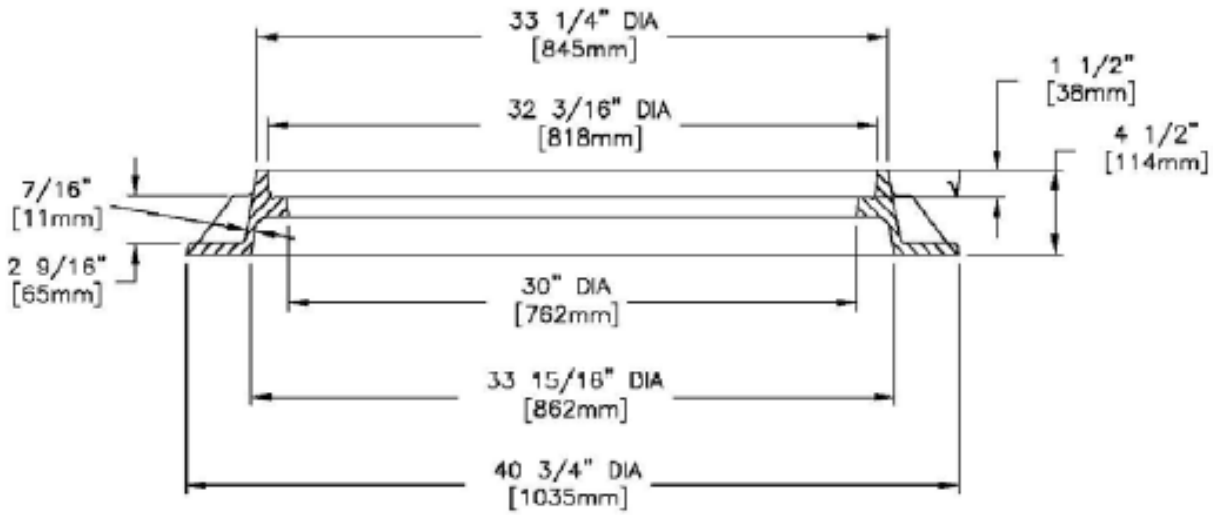

FRAME SECTION

11/15/13

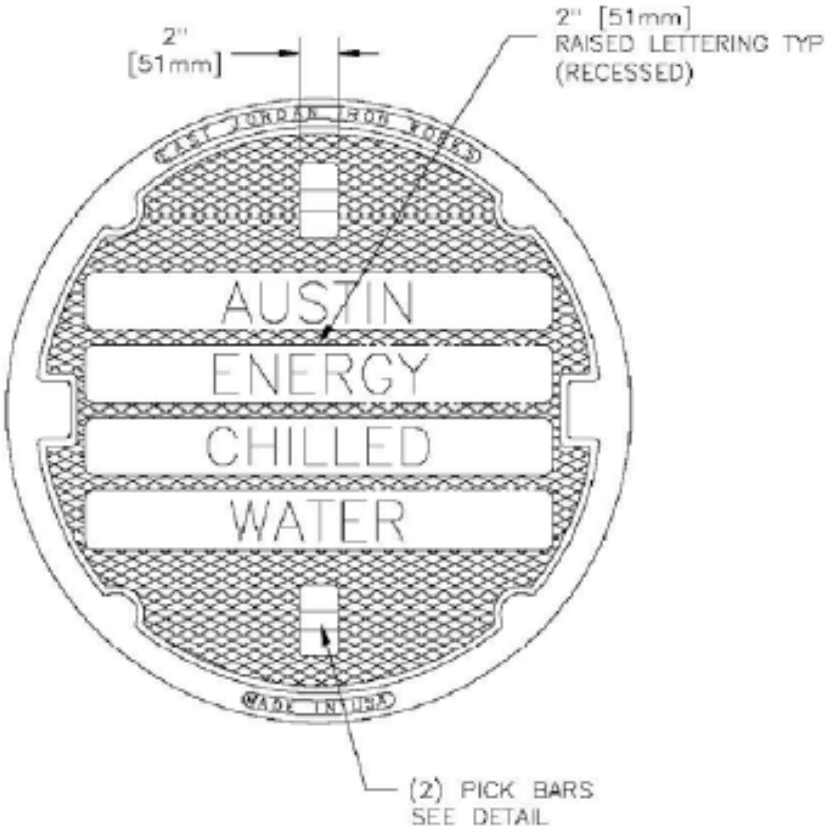

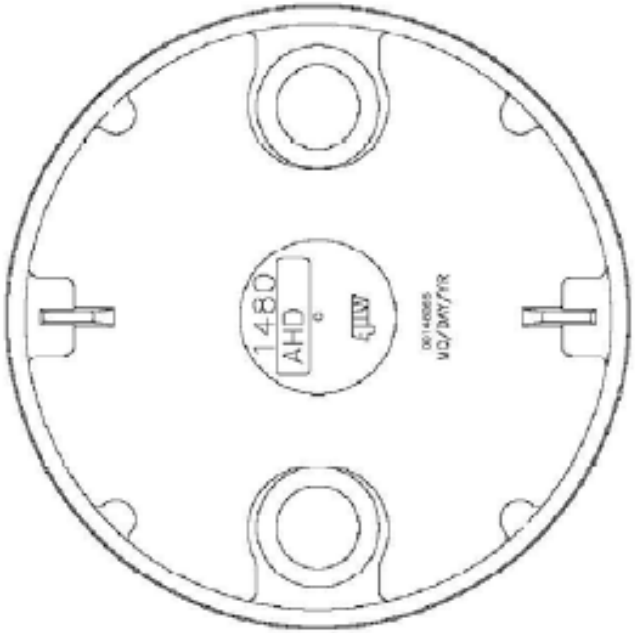

BOTTOM VIEW OF COVER

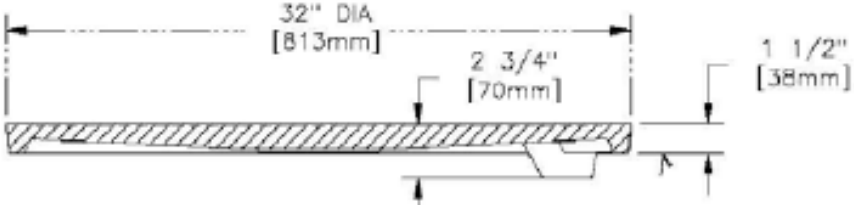

SECTION

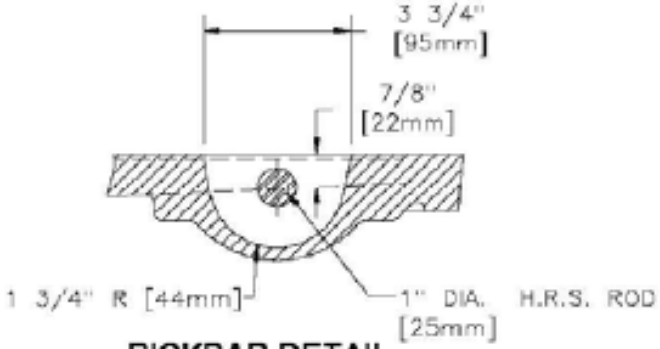

PICKBAR DETAIL

32" CI COVER DETAIL

11/15/13

R10

SCALE: NONE

√ MACHINED SURFACE

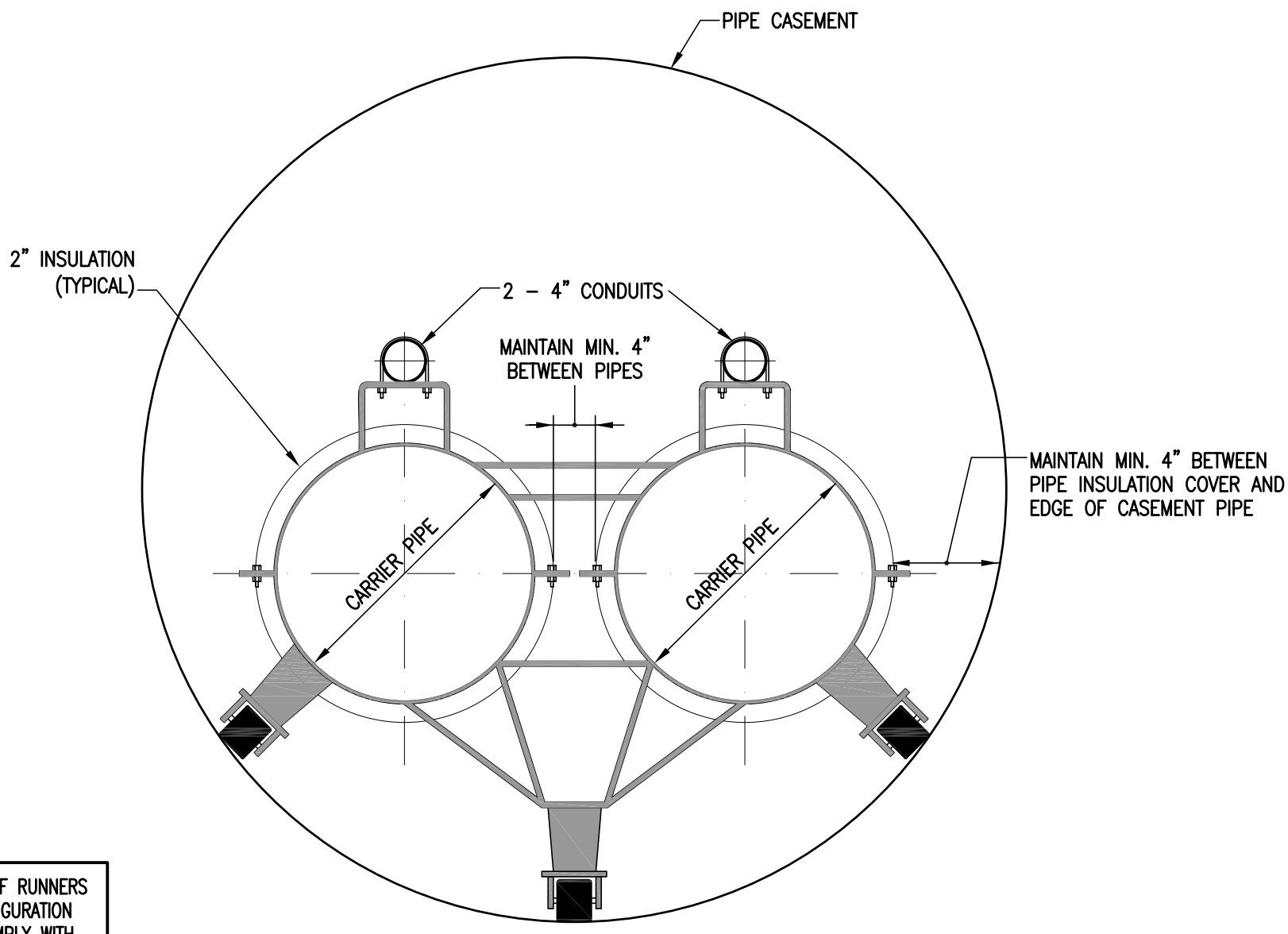

END VIEW

NUMBER OF RUNNERS AND CONFIGURATION SHALL COMPLY WITH MANUFACTURER'S APPROVED SHOP SUBMITTAL.

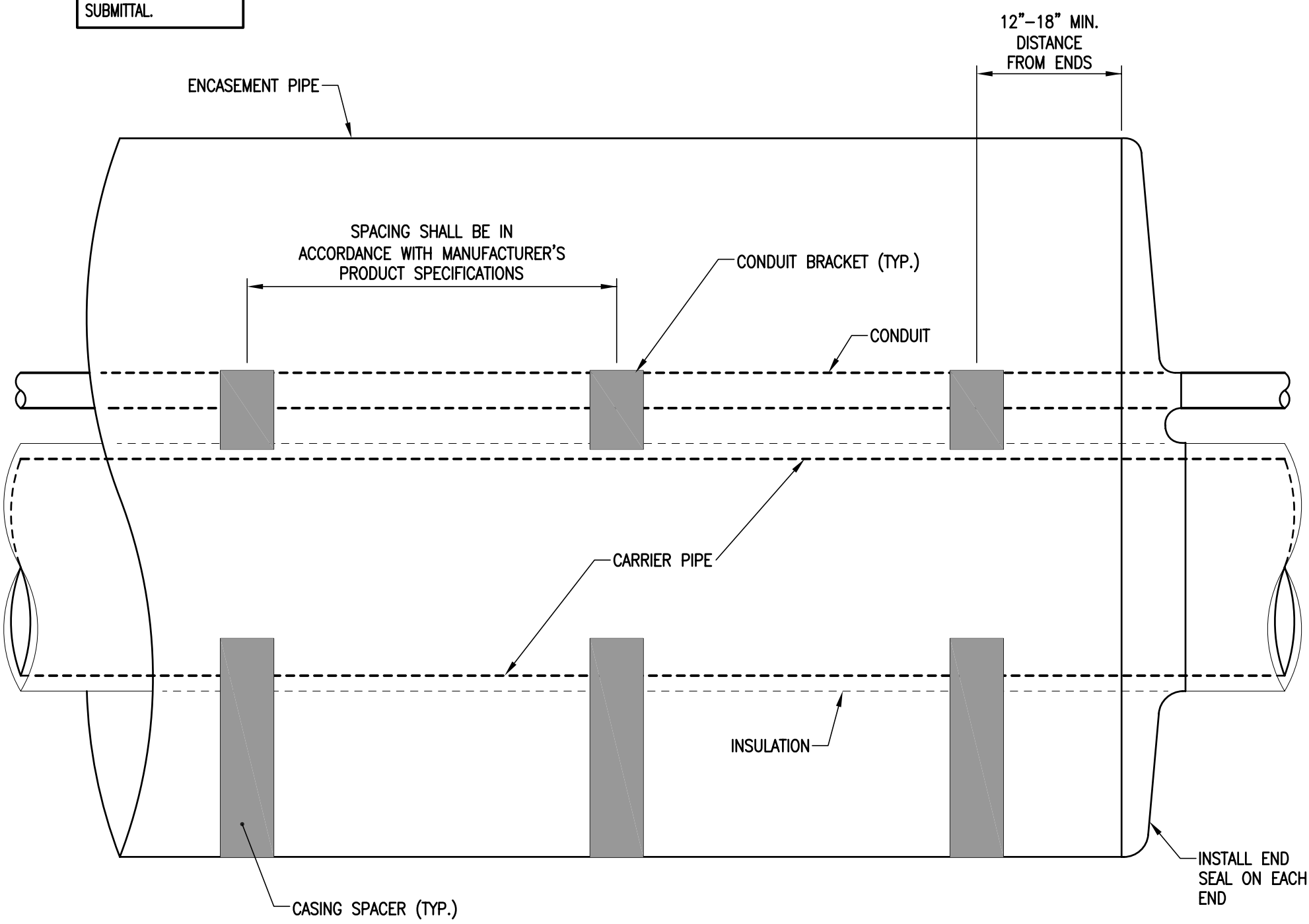

ELEVATION

TYPICAL CASING SPACER DETAIL

SCALE: R11 NONE

11/15/13

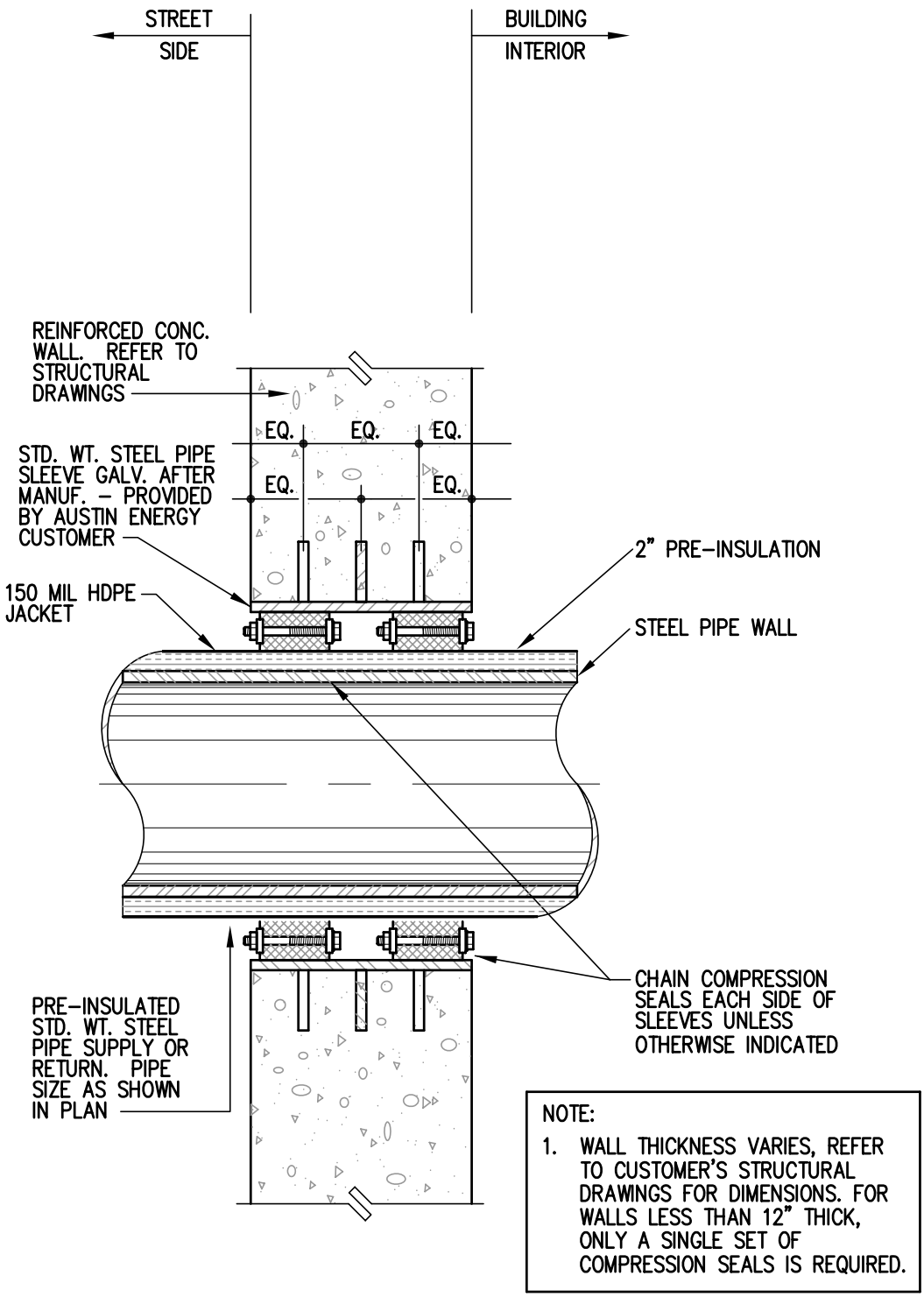

NOTE:

1. WALL THICKNESS VARIES, REFER TO CUSTOMER'S STRUCTURAL DRAWINGS FOR DIMENSIONS. FOR WALLS LESS THAN 12" THICK, ONLY A SINGLE SET OF COMPRESSION SEALS IS REQUIRED.

PIPE PENETRATION THROUGH EXTERIOR WALL

SCALE: R12 NONE

1/28/14

8208A Cover

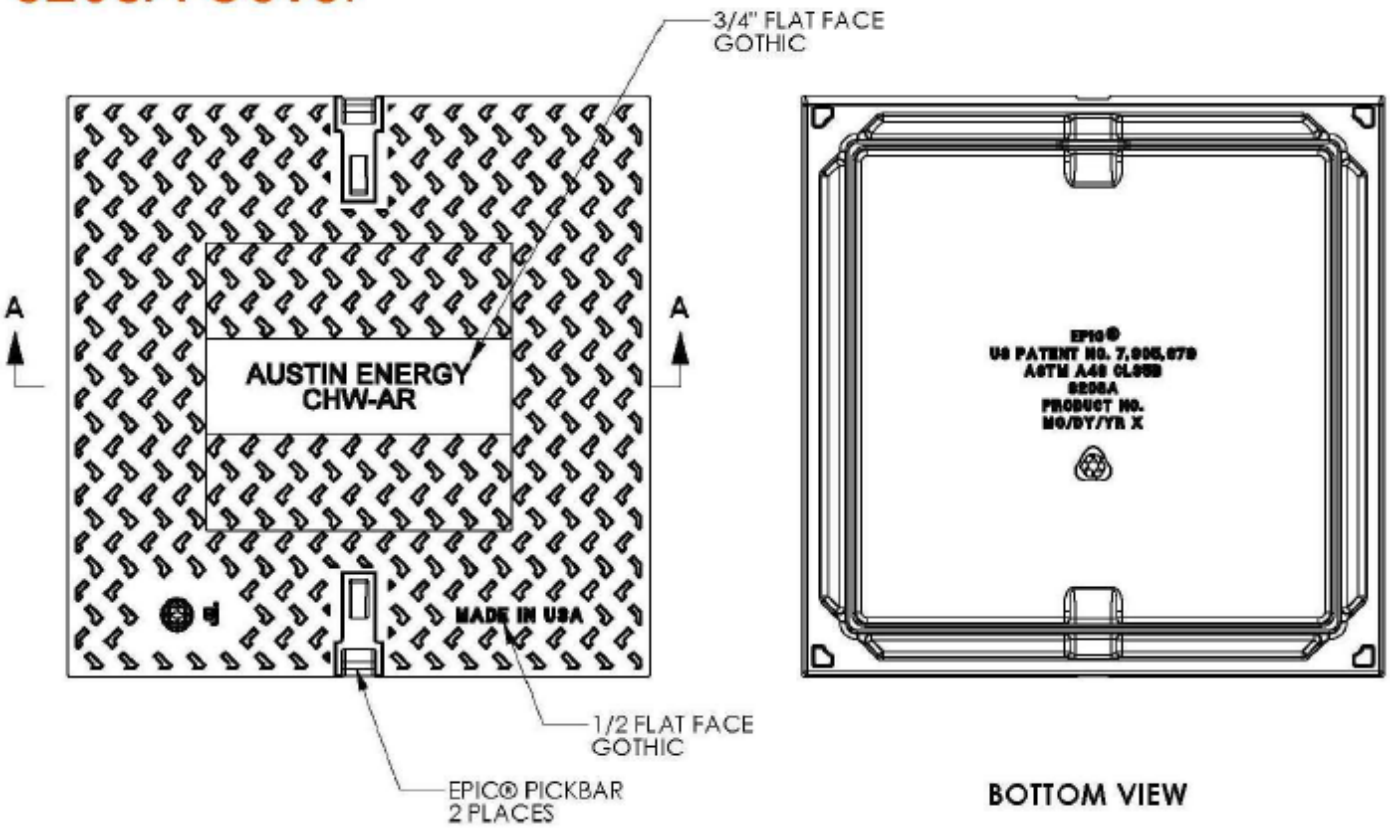

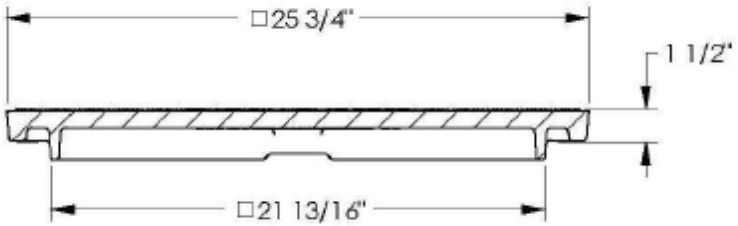

SECTION A-A

AIR RELEASE VALVE ASSEMBLY LID AND FRAME

01/17/14

SCALE: R13 NONE

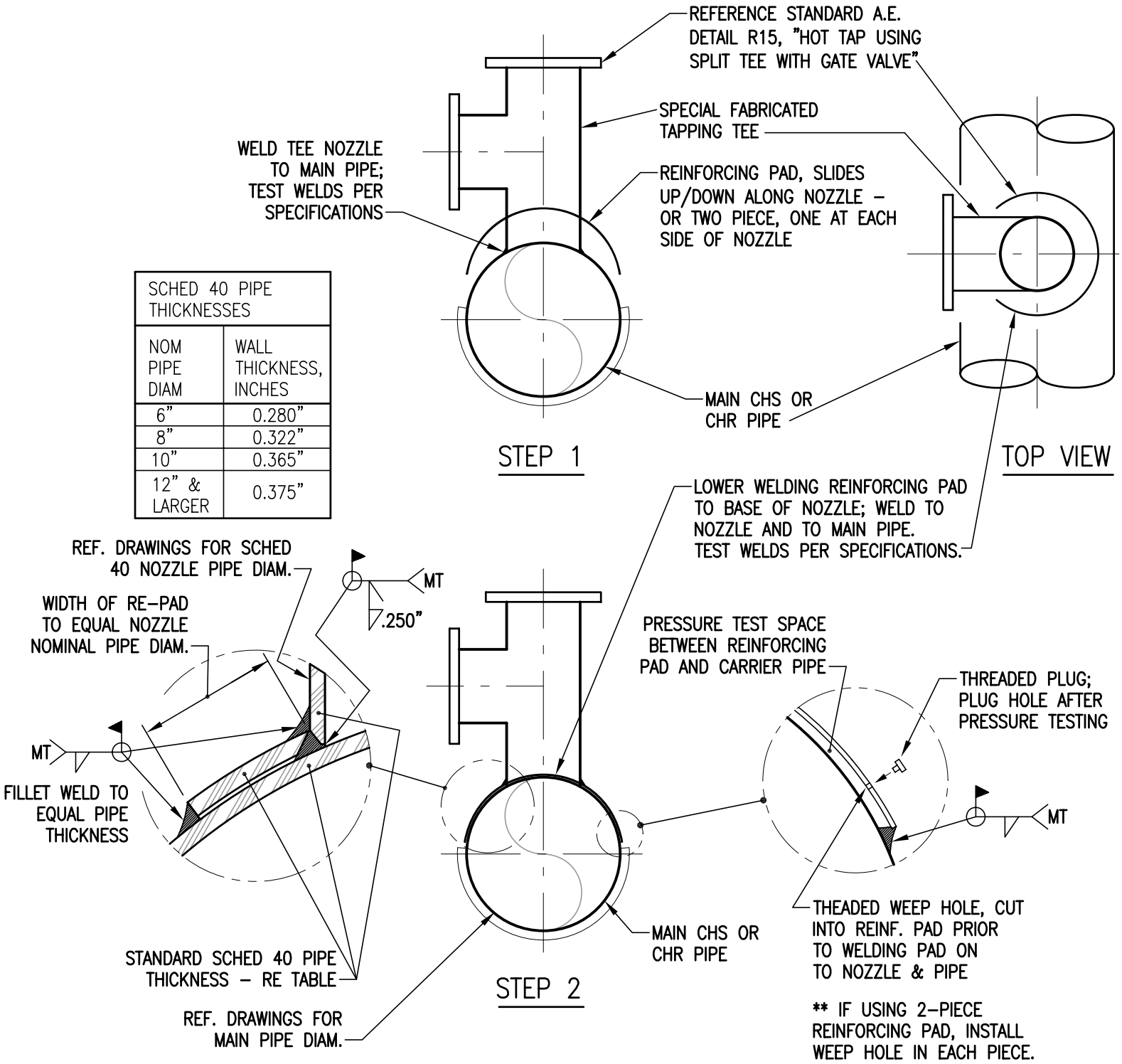

SCHED 40 PIPE THICKNESSES	
NOM PIPE DIAM	WALL THICKNESS, INCHES
6"	0.280"
8"	0.322"
10"	0.365"
12" & LARGER	0.375"

HOT TAP SADDLE WELDING DETAIL

SCALE: R14 NONE

11/15/13

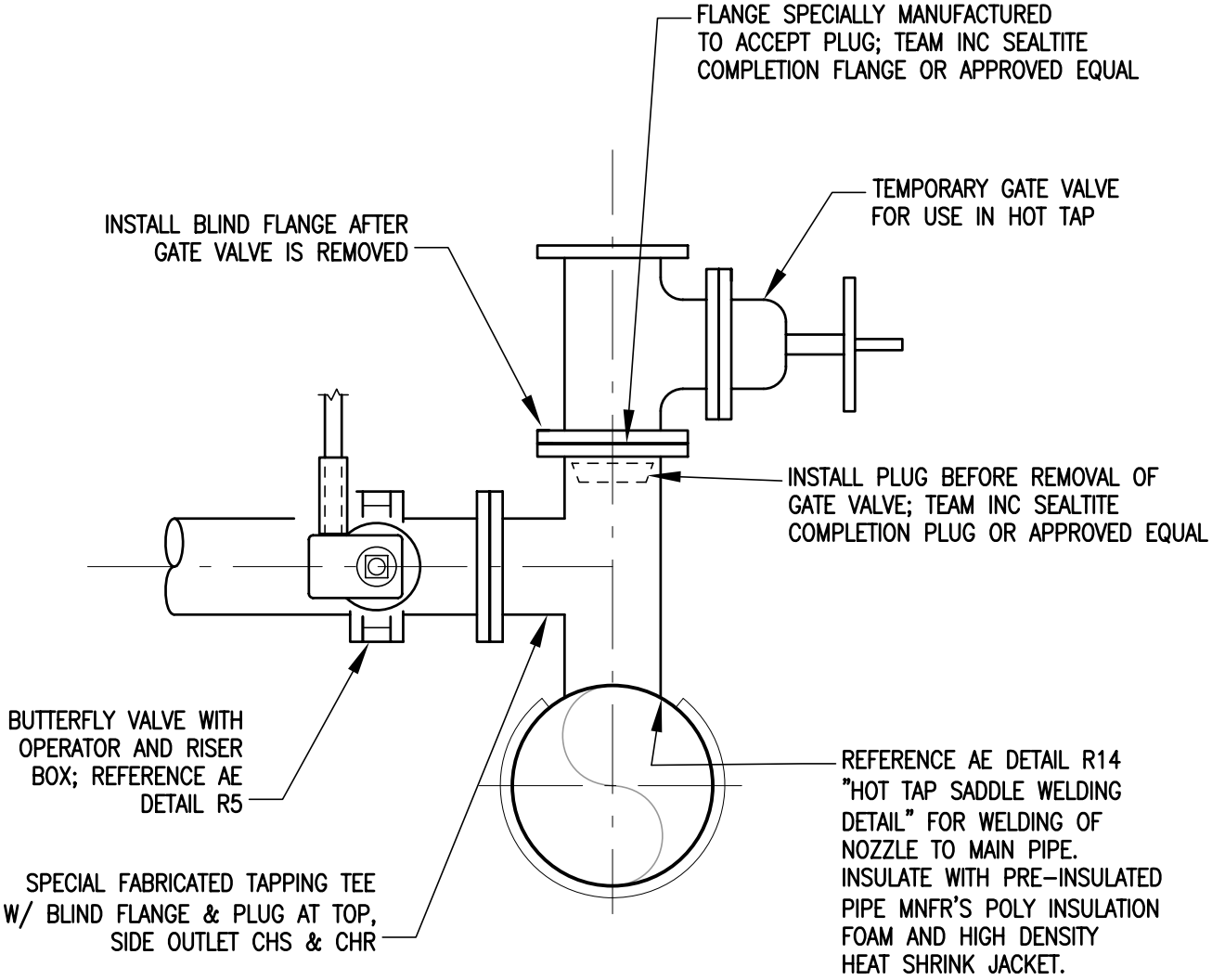

HOT TAP USING SPLIT TEE WITH GATE VALVE

R15

SCALE: NONE

1/28/14

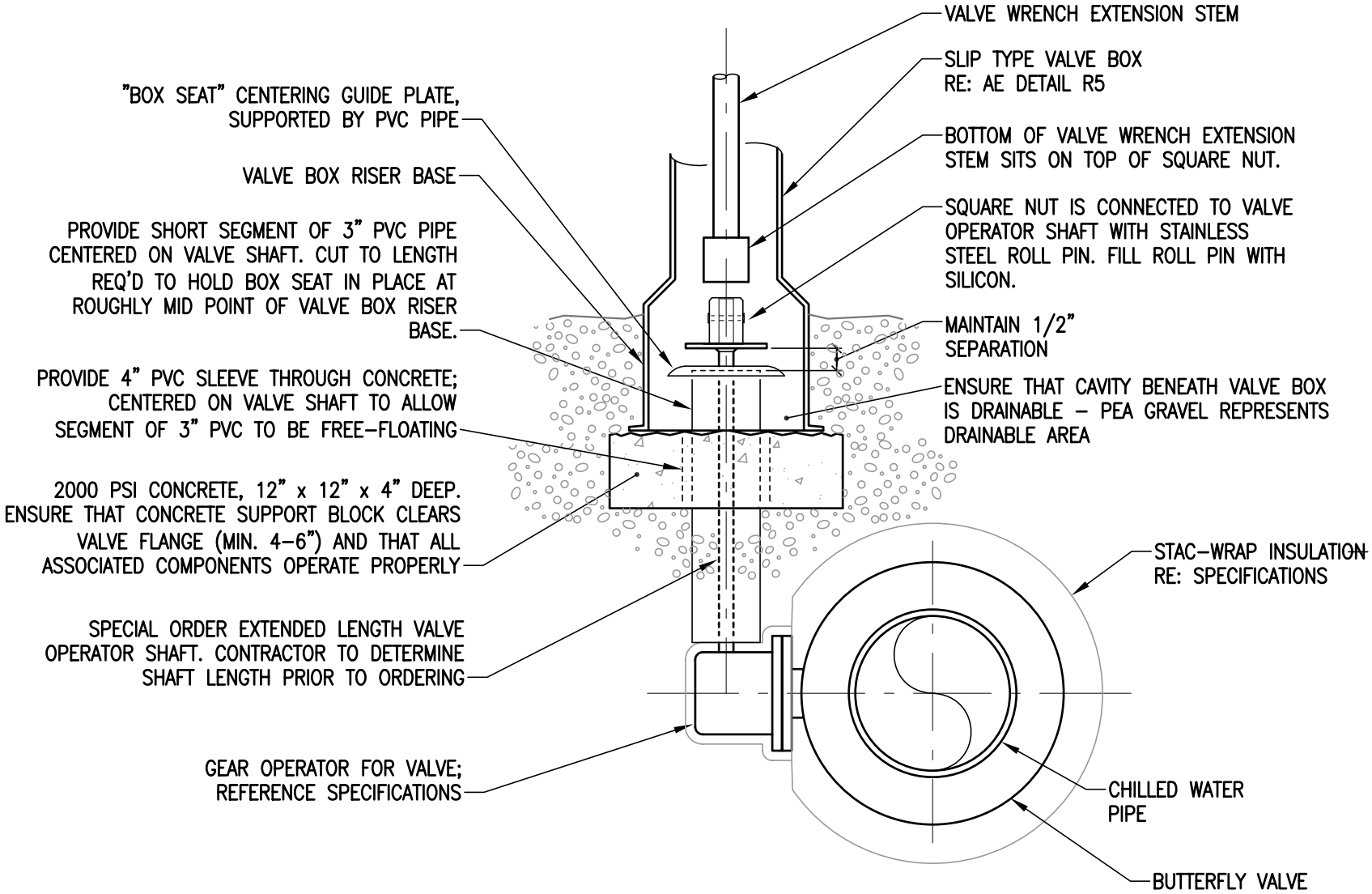

GEAR OPERATOR/VALVE BOX CONNECTION DETAIL HORIZONTAL VALVE SHAFT

R16

SCALE: NONE

01/17/14

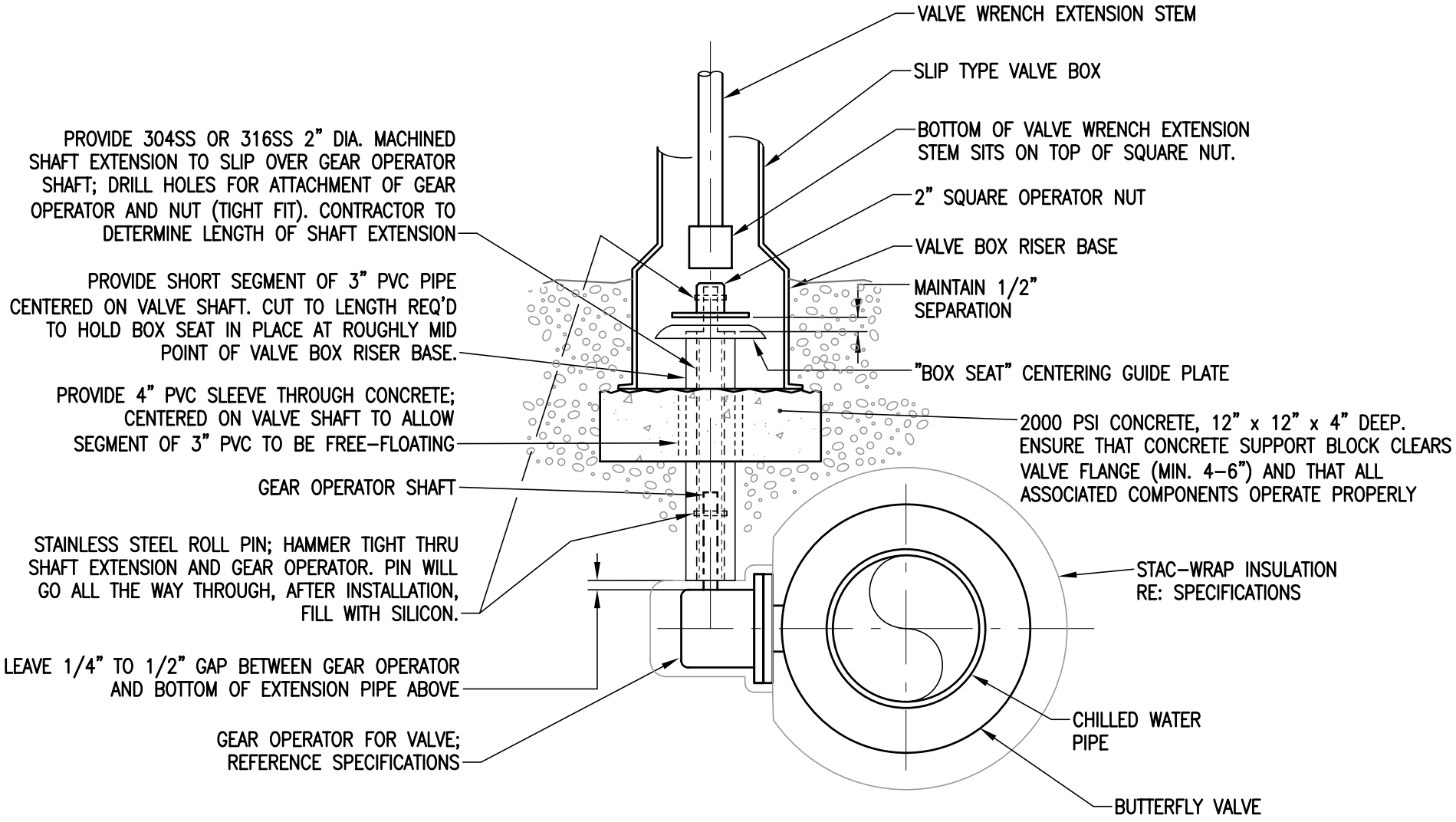

VALVE BOX BASE / GEAR OPERATOR DETAIL

SCALE: R16A NONE

01/27/14